Operation & Maintenance Manual
Arsenic Water Treatment Plant (AsWTP)

Prepared by:
Agnico Eagle Mines Limited – Meadowbank Division – Whale Tail Pit Project

EXECUTIVE SUMMARY

Agnico Eagle has prepared the following document which summarizes the operational and maintenance procedures to be followed at the Arsenic Water Treatment Plant (AsWTP).

This report documents the stand alone Operation & Maintenance Manual – Arsenic Water Treatment Plant, includes the following requirements:

- The manual was prepared in accordance with the "Guidelines for the Preparation of an Operation and Maintenance Manual for Sewage and Solid Waste Disposal Facilities in the Northwest Territories, 1996", and adapted for the use of a mechanical contact water treatment facility;
- The manual includes contingency measures in the event of a plant malfunction; and
- The manual includes sludge management procedures.

IMPLEMENTATION SCHEDULE

This Plan will be implemented upon Board approval and subject to any modifications proposed by the NWB as a result of the review and approval process.

DISTRIBUTION LIST

Agnico Eagle Internal:

- Process Plant Superintendent
- Process Plant General Foreman
- Energy & Infrastructures Services Superintendent
- Energy & Infrastructures Services General Foreman
- Environmental Superintendent
- Environmental Senior Coordinator
- Environmental Compliance Counselor
- Water Treatment Plant Operator

DOCUMENT CONTROL

Version	Date (YMD)	Section	Page	Revision
1	2018/11/23			Operation and Maintenance Manual

Prepared By:

Blandine Arseneault

Signature numérique de Blandine Arseneault
DN : cn=Blandine Arseneault
Date : 2018.11.23 09:26:30 -05'00'

Blandine Arseneault
Project Manager, Environment

Thomas Genty

Signature numérique de Thomas Genty
Date : 2018.11.22 16:27:06 -05'00'

Thomas Genty
Water treatment Specialist

REGISTERED PROFESSIONAL ENGINEER
I.L. GAGNON
LICENSEE
L3940

Israel Gagnon, P. Eng. MBA
Mechanical Eng.

Approved by:

Alain Parent

Signature numérique de Alain Parent
DN : cn=Alain Parent
Date : 2018.11.29 07:07:04 -05'00'

Alain Parent
Amaruq project Construction Manager

TABLE OF CONTENTS

1 INTRODUCTION 7

1.1 Purpose 7
1.2 Brief Description of the Project 7
1.3 Contact Information 10

2 DESCRIPTION 11

2.1 As water Treatment Plant (AsWTP) 11
2.1.1 Process summary for summer operation 11
2.1.2 Process description 14
2.1.3 Process summary for winter operation 16
2.1.4 Sludge Management Strategy 16
2.1.5 Service Water System 19
2.1.6 Reagents 19
2.1.7 Controls 20

3 OPERATION AND MAINTENANCE 22

3.1 Pumping 22
3.2 Reagent mixing 22
3.3 Centrifuges 22
3.4 Effluent Quality control 22
3.5 Troubleshooting and Maintenance Procedures 23
3.6 Record Keeping 24
3.7 Safety Procedures For Operators 24
3.8 Controlling Access to the AsWTP 24

4 EMERGENCY RESPONSE 25

4.1 Fire 25
4.2 Spill 25
4.3 Plant Malfunction 25

LIST OF FIGURES

Figure 1 – Location of ASWTP 8
Figure 2 – General Arrangement of ASWTP 9
Figure 3 – Flowsheet of AsWTP – As Removal Reactor 12
Figure 4 – Flowsheet of AsWTP – Actiflo 13
Figure 5 – Actiflo Process 15
Figure 6 – AsWTP Sludge Tank 17
Figure 7 – Centrifuge 18

LIST OF APPENDICES

Appendix A: MSDS Sheets
Appendix B: Drawings
Appendix C: Veolia Operations Manual

1 INTRODUCTION

1.1 PURPOSE

This Arsenic Water Treatment Plant (AsWTP) Operation and Maintenance Manual (OMM) for the Whale Tail Gold Project (the Project) has been prepared based on the "*Guidelines for the Preparation of an Operation and Maintenance Manual for Sewage and Solid Waste Disposal Facilities in the Northwest Territories, 1996, prepared by the Department of Municipal and Community Affairs, NWT*". The OMM has been adapted for the use of a mechanical contact water treatment facility.

This manual is a component of the Whale Tail Environmental Management System. The objectives of this plan are summarized as follows:

1. To define the location, design and operating procedures to be used in the treatment of contact water generated at the Project; and
2. To provide monitoring requirements for the AsWTP.

The AsWTP purpose is to treat water from the attenuation pond.

1.2 BRIEF DESCRIPTION OF THE PROJECT

Agnico Eagle Mines Limited—Meadowbank Division (Agnico Eagle) is developing Whale Tail Pit and Haul Road Project, on a satellite deposit located on the Amaruq property, to extend mine operations and milling at Meadowbank Mine. The proposed open-pit mine, mined by the truck-and-shovel operation, will produce 19 M tons of ore grading at 3.68 g/t for a total of 2.1 M ounces from 2019 to 2025.

The Amaruq Mineral Deposit is considered to be an extension of the currently operating Meadowbank mine and most positions will be filled by Meadowbank employees. A conventional open pit mining operation is forecasted on the Whale Tail deposit. Access to the site is via a 64-kilometre road from Meadowbank mine. On-site facilities will include a power plant, maintenance facilities, tank farm for fuel storage, Arsenic water treatment plant (AsWTP), sewage treatment plant, drinking water treatment plant, as well as accommodation and kitchen facilities for approximately 400 people.

The global concept for water treatment at Amaruq is based on the reuse of the two Actiflo® from Meadowbank. Actiflo® is designed to treat mainly suspended solids (TSS). In Amaruq, it is expected to have arsenic (As) in the surface water due to the leachability of the rock. Therefore, the Actiflo® will be integrated into a treatment chain able to remove As to acceptable levels.

Figures 1 and 2 illustrate the location and general arrangement of the AsWTP.

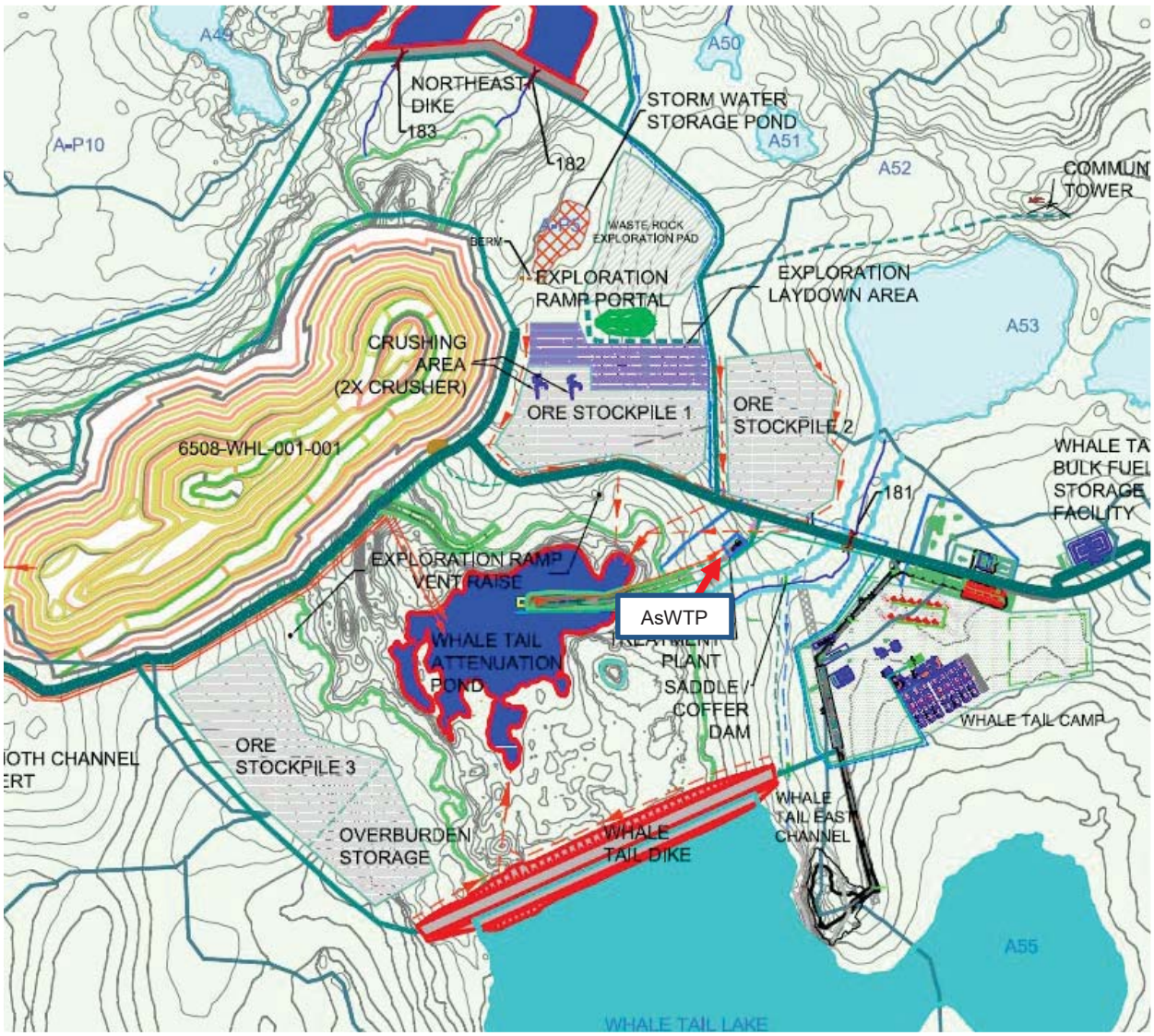

Figure 1 – Location of ASWTP

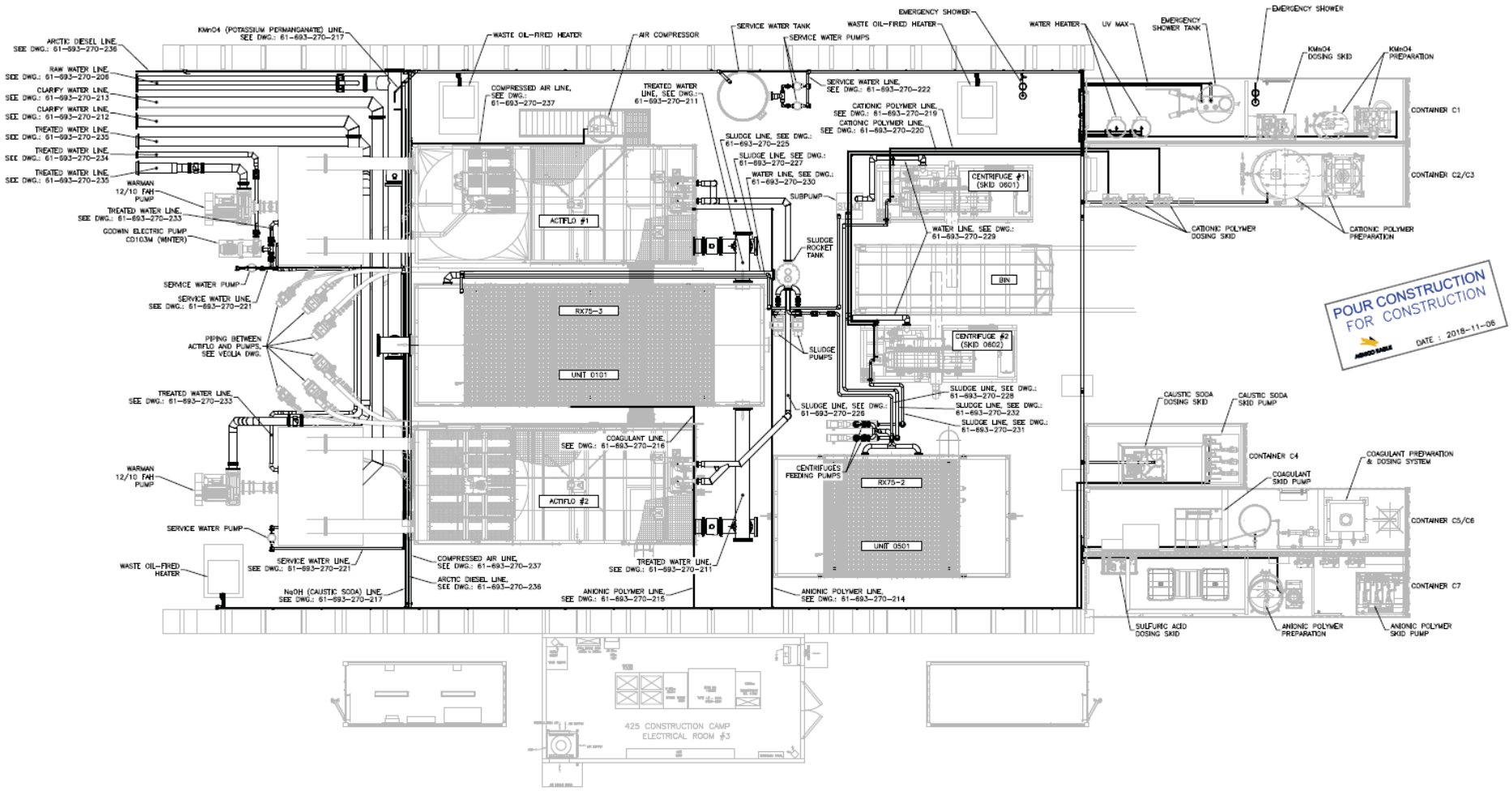

Figure 2 – General Arrangement of ASWTP

1.3 CONTACT INFORMATION

The individuals responsible for the operation of the As water treatment plant for the Project are the following:

Mill Superintendent	819-759-3555
Site Services Superintendent	819-759-3555
Site Services General Foreman	819-759-3555

2 DESCRIPTION

2.1 ARSENIC WATER TREATMENT PLANT (AsWTP)

As presented herein, the global strategy is based on the following steps:

- Oxidation to oxidize the arsenic from As (III) to As (V).
- pH adjustment.
- Coagulation using ferric sulfate in order to co-precipitate the As (V) as ferric-arsenate precipitate.
- Flocculation to enhance the settling of the precipitate formed in the coagulation step.
- Clarification to separate the treated water from the precipitate. High-rate ballasted floc clarifiers will be used for this step of the treatment process.
- Sludge thickening process to decrease storage requirements.

The design flow rate in summer is set at 1600 m^3/h and 84 m^3/h in winter.

2.1.1 Process summary for summer operation

The purpose of the AsWTP (using Actiflo ACP-700R) is to remove Total Suspended Solids (TSS) and As from the influent water pumped from the attenuation ponds. The equipment has an operational range of 6,250 to 38,400 m^3/d.

AsWTP is composed mainly of two treatment lines:

- One As Removal Reactors used for pH adjustment, As oxidation, As precipitation.
- Two Actiflo® treating the exit of the As Removal Reactor, with sludge recirculation.
- A sludge dewatering chain with two centrifuges (centrate is recirculating into the Actiflo®).

The AsWTP overflow is designed to meet the Type A Licence final effluent discharge criteria for TSS concentrations and As. The final effluent is monitored for pH and turbidity, which are monitored continuously. Flow rate is measured continuously.

The AsWTP general flow diagram is illustrated in Figure 3 and Figure 4 for summer operation. The following sections describe the AsWTP components.

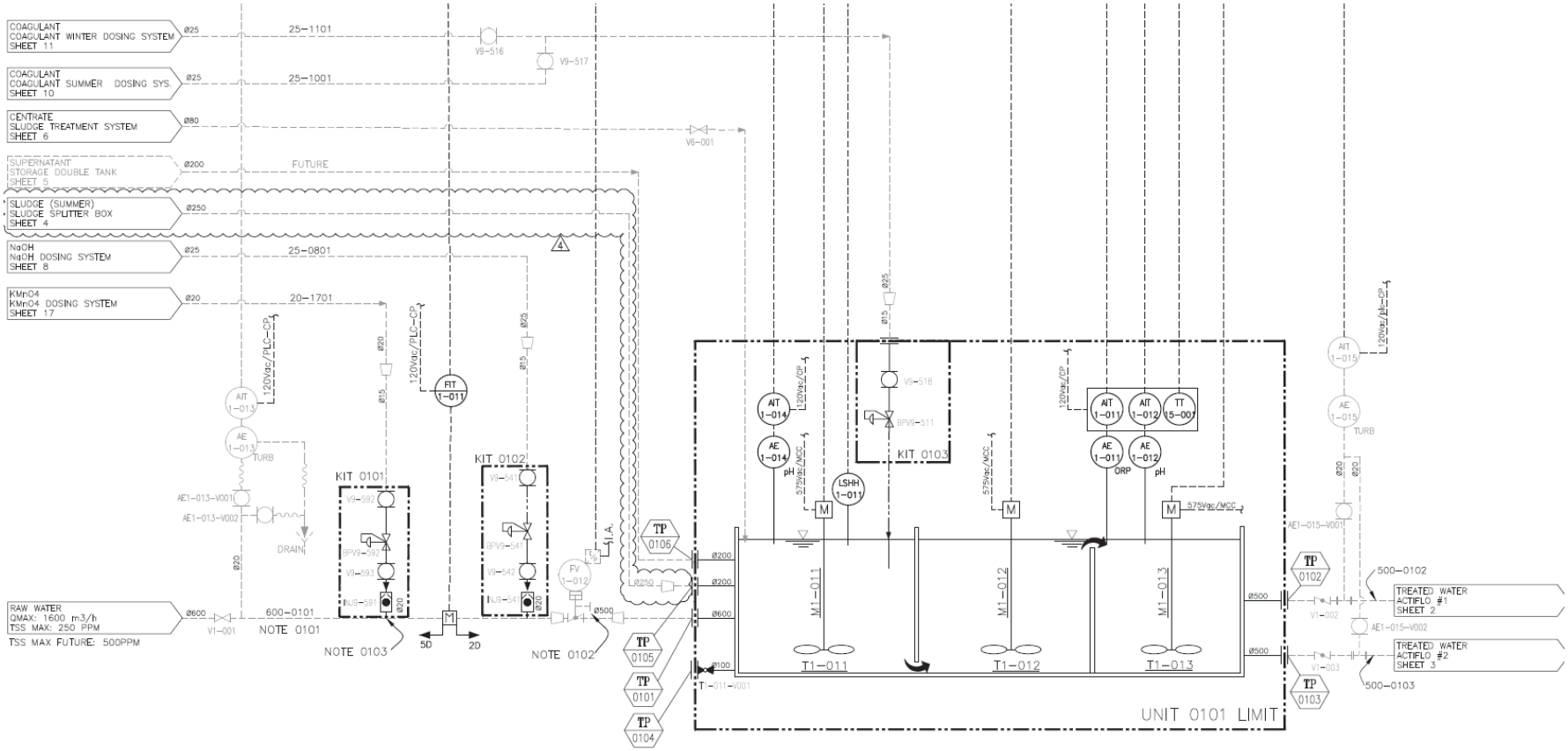

Figure 3 – Flowsheet of AsWTP – As Removal Reactor

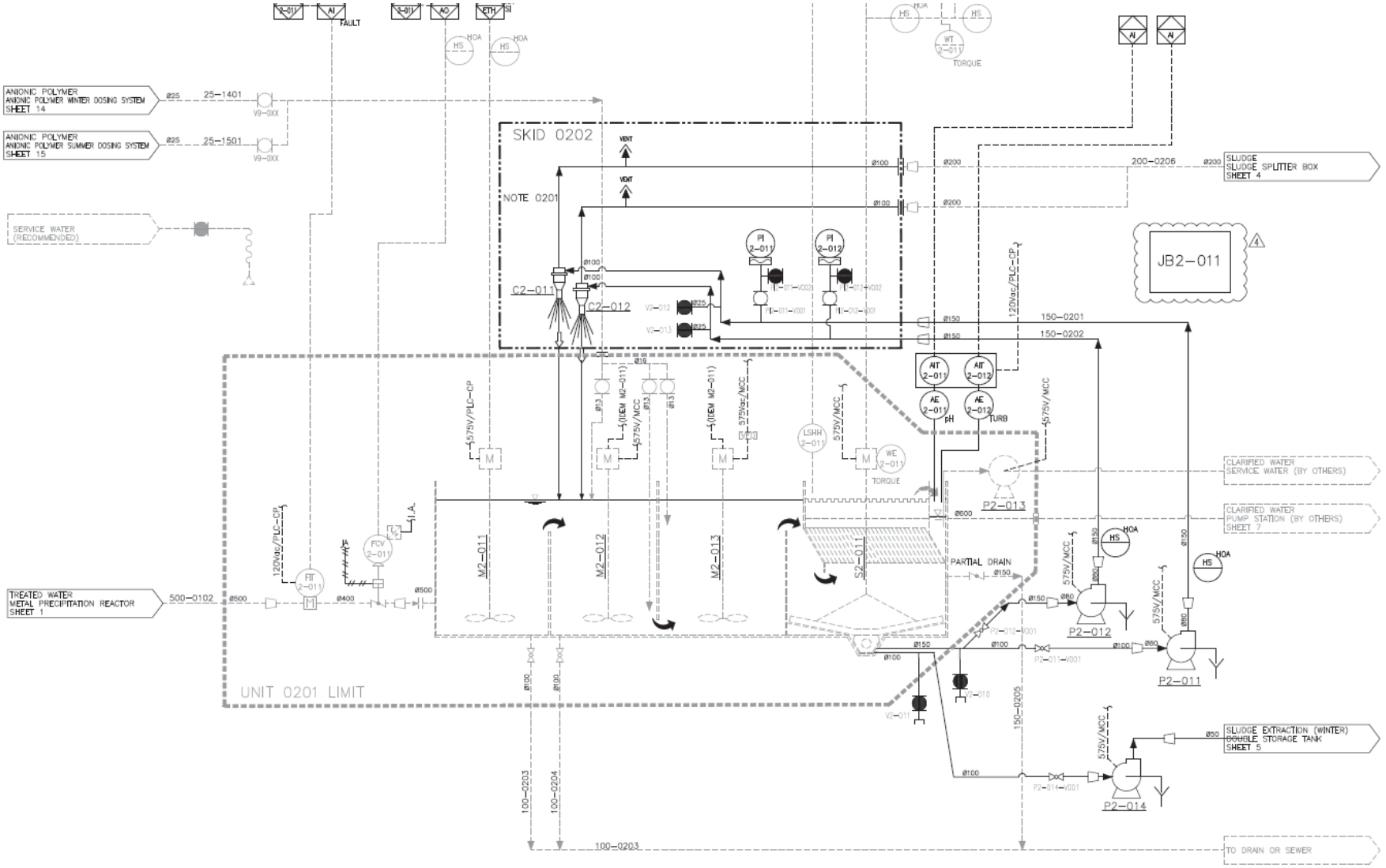

Figure 4 – Flowsheet of AsWTP – Actiflo

2.1.2 Process description

2.1.2.1 Arsenic Oxidation

Arsenic present in water can be found under two main speciations: As III (trivalent) and As V (pentavalent). Depending on the redox potential of water in the attenuation pond, As III could be oxidized into As V. Before entering the As Removal Reactor, a KMnO4 (potassium permanganate) solution will need to be added to ensure oxidizing the trivalent As to a pentavalent form.

2.1.2.2 pH Adjustment

To precipitate As, ferric sulfate has to be added. However, this reagent acidifies water. If inlet water does not have enough alkalinity, caustic soda has to be added to prevent pH decrease in the As Removal Reactor. A pH of 7 is targeted for As uptake.

2.1.2.3 Arsenic Co-precipitation

The influent will be sent to the As Removal Reactor (RX75-3 from Veolia). In this reactor, the influent will be mixed with ferric sulfate ($Fe_2 (SO_4)_3$) and recycled sludge to produce a slurry. The ferric sulfate forms a floc of ferric hydroxide ($Fe (OH)_3$) which acts both as a bridge to tie colloidal particles together and as an active surface which forms surface complexes with many metals, including As. The ferric sulfate will also lower the pH in the vicinity of 7.0 where the surface complexation is optimal for As V.

A part of the sludge collected in Actiflo® is recycled in the As Removal Reactor to allow a longer contact time between As and iron (Fe) hydroxide sludge (ratio of sludge recycling 4:1).

2.1.2.4 TSS Removal

The slurry from the As Removal Reactor will flow to two Actiflo® units (ACP-700R).The proposed Actiflo® is designed to remove suspended solids and TSS from the raw. To allow a good clarification (settling rate of 60 m/h), the maximum flow for each Actiflo® should be 800 m^3/h to respect the targeted settling rate (60 m/h).

Actiflo® are sand-ballasted settling units with a high-rate coagulation/flocculation/sedimentation process that utilizes microsand as a seed for floc formation. The microsand provides a surface area that enhances flocculation and acts as a ballast or weight. The resulting floc settles very fast, allowing for compact clarifier designs with high overflow rates and short retention times. The use of microsand also allows the unit to perform well under dramatically changing flow rates without impacting final effluent quality.

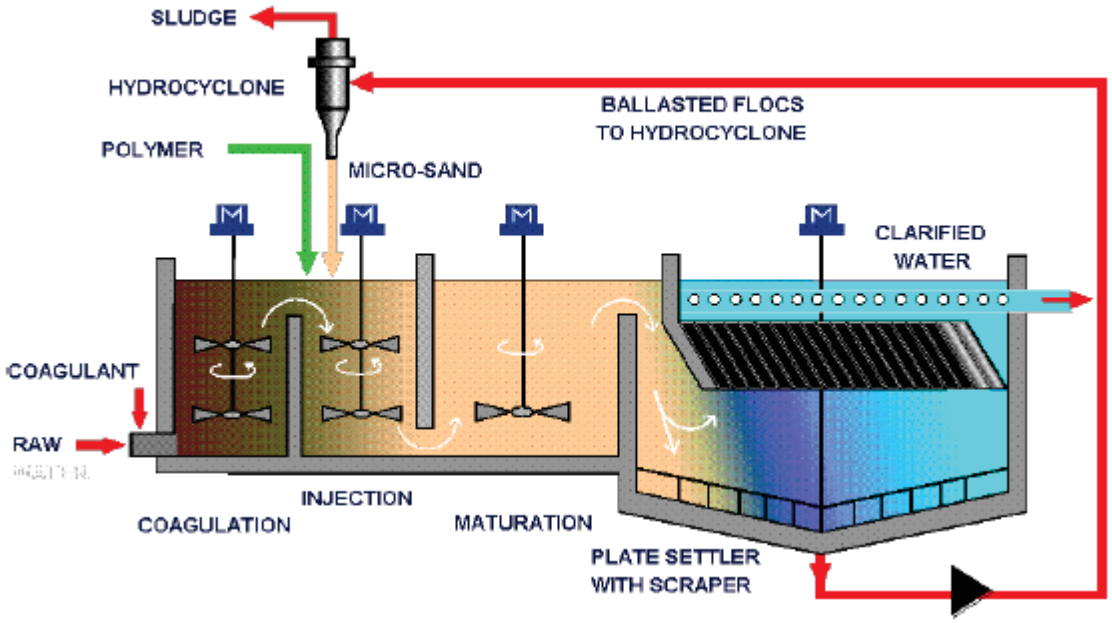

Figure 5 – Actiflo® Process

The slurry flows to the first tank section, the coagulation chamber, where the reaction is optimized. The coagulated water then overflows to a second tank section called the injection tank. There, the microsand and flocculent aid polymer are added. The microsand provides a large contact area for floc attachment and acts as ballast, thereby accelerating the settling of the flocs. The flocculent aid polymer binds the destabilized suspended solids to the microsand particles by forming polymer bridges. From the injection tank, the water underflows to a third tank section called the maturation tank. In this section, the microsand and sludge flocs agglomerate and grow into high-density flocs known as microsand ballasted flocs.

From the maturation zone, the water overflows to the settling section of the tank. In the settling zone, the microsand ballasted flocs settle quickly to the bottom of the unit. In the settling zone, the settling efficiency is further increased by the use of the lamella tubes. The clarified water exits the system via a series of collection troughs or wires. The clarified water is monitored for turbidity.

The sand-sludge mixture settles to the bottom of the clarifier. Scrapers force the sludge collected at the bottom of the clarifier into a centre cone from which it is continuously withdrawn and pumped to a hydrocyclone where the sludge and microsand are separated by centrifugal force. After separation, the higher density microsand is discharged from the bottom of the hydrocyclone and reinjected into the process for reuse. The lighter density sludge is discharged from the top of the hydrocyclone and directed to the sludge storage tank and recirculated into the As Removal Reactor or to the sludge management facilities.

Also, to maintain a good extraction of sludge and good sand recirculation, the recirculation pumps that are existing on both Actiflo® need to be upgraded. Indeed, the two pumps installed on each Actiflo® each have a pumping capacity of 34 m^3/h which does not address recirculation requirements. To address the pumping needs, pumping rate for the extraction pumps needs are 70 m^3/h each. This also means that the recirculation line and Hydrocyclone were changed (U10-gMAX-3037, Krebs).

The excess of sludge is then sent to the centrifuges (expected solid content at 3%).

2.1.3 Process summary for winter operation

During the winter months, the flow rate of the water to treat is significantly lower than in the summer months. These conditions require adjustments to the Actiflo® unit which is converted for the winter in a standard lamellar decanter also called Multiflo®. When in this mode, the system operates without microsand and without microsand recirculation.

To modify the Actiflo® unit into the Multiflo® mode, microsand needs to be purged from the system. This is done by a sludge extraction pump that is added to the system. Sludge treatment remains the same but centrifuge will operate less often than in the summer months. The sludge tank was designed to accept one day of water treatment at 84 m³/ h with a maximum concentration of 1000 ppm TSS (winter conditions, worse case TSS). Since the chemical dosage requirement is less (due to 10–15 times less flow to treat in the winter), different sets of skid/dosing pumps per chemical will be used to improve system robustness.

2.1.4 Sludge Management Strategy

The last step of the AsWTP system is the sludge dewatering, which aims to reduce sludge volume and produce a solid cake. The sludge from the Actiflo® is sent to a holding tank. As presented previously, a recirculation pump is added to recycle a portion of the sludge in the As Removal Reactor. The recycled sludge increases the reagent efficiency and promotes solid growth and thickens the sludge therefore avoiding the need to add a thickener equipment before the dewatering stage. The remaining sludge is pumped to a sludge storage tank which will feed the centrifuges inlet as shown on Figure 6.

The sludge from the sludge storage tank is pumped in two (2) centrifuges (Andritz D4L) in parallel, capable of producing a cake of about 25 ± 5% solid content. The sludge dryness is dependent on the dewatering method, TSS content in the influent, flow rate and nature of the solid particles. In addition to the solids included in raw water that enters the AsWTP, the sludge will contain adsorbed As and ferric hydroxides from the coagulant addition.

The centrifuge is fed continuously with constant solid content slurry. A cationic polymer is injected in the feed pipe to increase the cake dryness. The separation between liquid and solid is achieved using centrifugal forces 500 to 3000 times the force of gravity. Centrate contains cationic polymer and can be recycled upstream of the water treatment plant. The centrifuge is automatic such that minor manual operation is required.

The cake produced by the centrifuges will go into a container trailer, while the centrifuge filtrate is returned to the As Removal Reactor.

The volume of sludge will be 2–4 m^3/h approximately (depending on the TSS concentration which can vary from 250 to 500 ppm).

The cakes will be disposed at the WRSF.

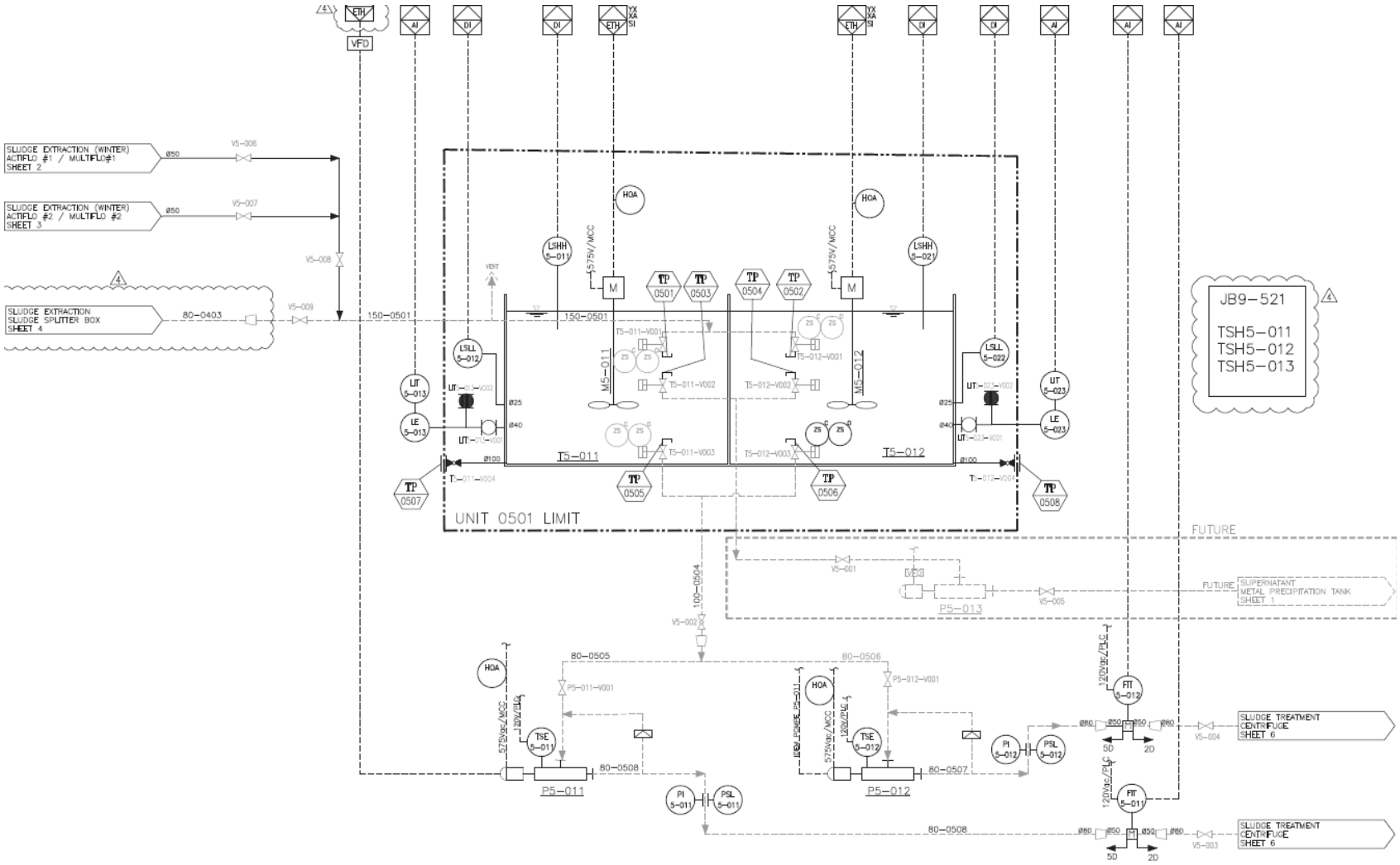

Figure 6 – AsWTP Sludge Tank

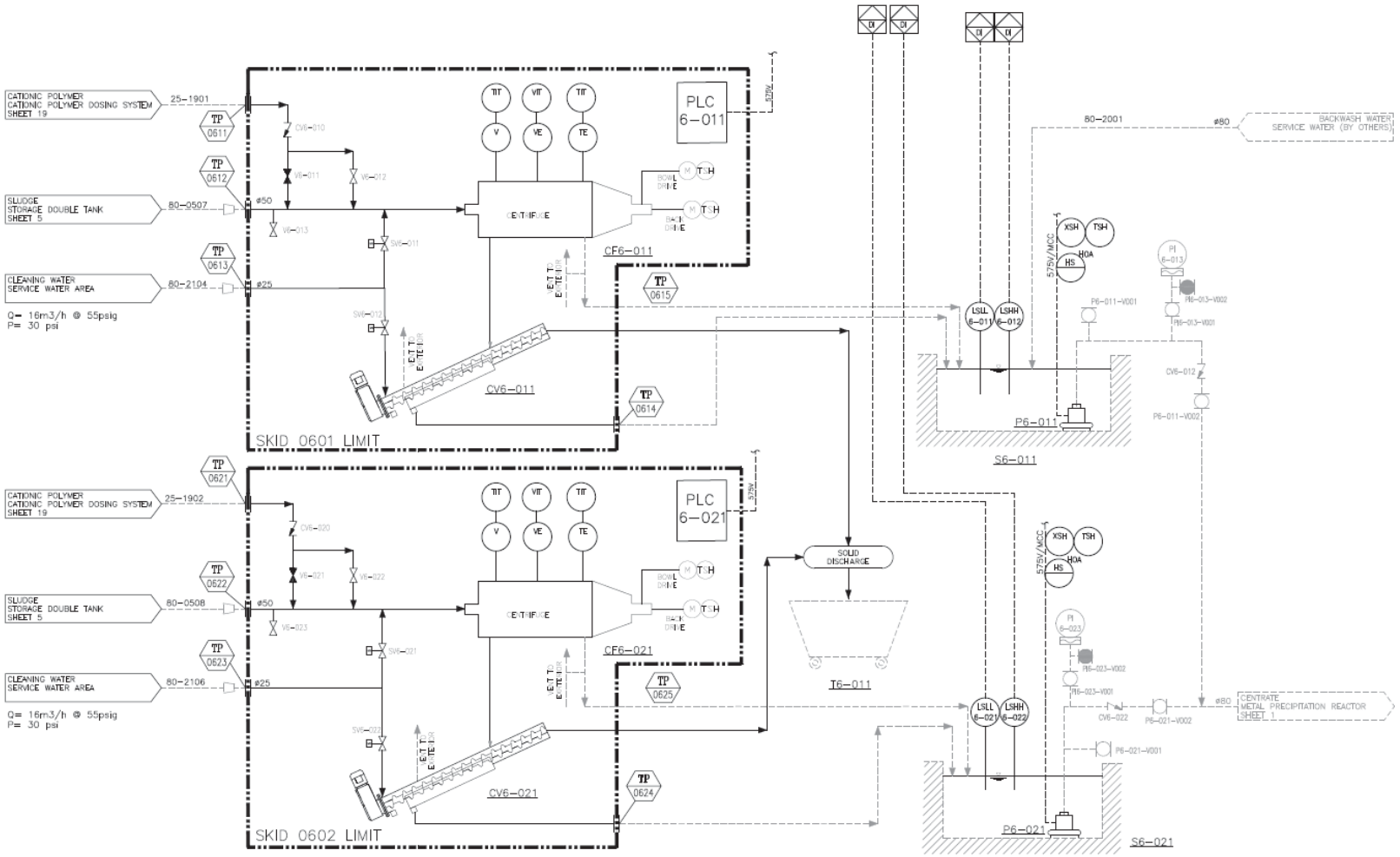

Figure 7 – Centrifuge

2.1.5 Service Water System

The service water system consists of two (2) multimedia filters, two (2) heaters, one (1) filtered water tank and two (2) service water pumps. Service water is used in the preparation of dry chemicals and for polymer makeup systems. Coagulant and polymer require filtered heated water. Treated water from the AsWTP is used to produce service water.

2.1.6 Reagents

The main chemicals used in the AsWTP are presented below:

- KMnO4

The potassium permanganate will oxidize the trivalent As (As III) to produce pentavalent As (As V) that is easier to precipitate and separate from water. The selected oxidant to oxide As is Hydrex 9571, it will delivered in a small bag of 25 kg (dosage 1 mg/L). The dosage is performed using a mechanical diaphragm metering pump.

- Coagulant

The selected coagulant is Hydrex 6266, a ferric sulfate coagulant. It will be received in bulk bags. The dosage will be performed using a mechanical diaphragm metering pump. Sulfuric acid is required for the solution preparation. The dosage of coagulant would be 30 mg/L.

- Sodium Hydroxide

The coagulant consumes alkalinity from the water. In the event that the water doesn't contain enough alkalinity, an alkali source, such as sodium hydroxide, is added. The sodium hydroxide will be received in 25 kg bags. The expected dosage is 10-15 mg/l.

- Polymer

The use of a flocculation agent is essential for a metal removal process. Polymer enables the attachment of the floc onto the microsand and as such is required in order to obtain good process performance. The polymer will be Hydrex 6105 at a dosage rate of 1 mg/L. It is a solid, anionic polymer used to enhance flocculation and will be received in 25 kg bags. One existing Hydra-Pol automatic preparation system will be supplied to prepare a 0.2 % solution. The water used for the polymer preparation need to be filtered water at 10-20 °C. The automatic polymer preparation/dilution system is an automatically controlled batching unit capable of preparing polymers. The system utilizes sequential batching from a high shear first stage wetting system into a mix tank with a low shear mixer.

A second automatic polymer preparation system is required for the sludge dewatering step. The polymer type (cationic type Hydrex 3613/6324) dosage will be approximately 8 g/kg TSS.

- Microsand

The presence of microsand allows:

  - An increase in the probability of encounters between particles;

- An increase in the exchange surface and consequently in the adsorption capacity compared to conventional flocculation;
- The formation of solid and dense ballasted flocs which will resist an energetic stirring followed by rapid settling.

These properties lead to very short residence times for flocculation as well as settling thus entailing great process. The microsand is recycled in the process but about 1 g/m^3 of raw water need to be added, depending on initial turbidity. ActisandTM, the microsand, will be supplied in 25 kg bags and will be added manually to the Actiflo® as required, approximately once or twice a week.

Every spring, to switch from Multiflo to Actiflo®, 5000 kg of actisand will need to be added.

- Sulphuric Acid

Sulphuric acid is used for ferric sulfate preparation. Sulphuric acid is a commodity and will be received in bulk containers of 1 m^3 at 93 % concentration. Sulfuric acid has a freezing point of -30 °C. It is a hazardous product (class 8-corrosive) and needs to be handled accordingly. The product can be used as is and the dosage is done in using mechanical diaphragm metering pumps (7 mg/l approximately).

The MSDS sheets are provided at Appendix A.

2.1.7 Controls

In the summer months (July to September), the AsWTP will treat a higher volume of water resulting from the snow and ice melts. The raw water pumping station is designed to provide a total flow rate of up to 1600 m^3/h with diesel pump. In the winter months (October to June), the AsWTP will treat a much lower flow coming primarily from pit seepages. The pumping station is designed to provide a maximum flow of 105 m^3/h with electrical pump. Both winter and summer pumps are working on an ON/OFF mode that allows the flow to be constant during ON mode.

The raw water TSS analyzer (turbidity sensor) is used to monitor the water quality. An alarm is triggered when a high-high turbidity is reached. The high-high turbidity alarm value is a setting that will be determined during the commissioning phase and will depend on the quality of the water to be treated.

TSS concentration (turbidity) and pH values in the effluent are monitored continuously with in-line instrumentation. If effluent concentrations reach a set point indicating that final effluent discharge criteria may be exceeded, an alarm is sent to the Operator, who will manage the system to meet effluent criteria. A second alarm is sent to the Operator if effluent concentrations reach a second set point that is just below the final effluent discharge criteria.

Addition of the required reagents is proportional to the influent water flow. Since this flow is constantly maintained, no manual adjustment is required. If the operator has to modify the influent water flow, adjustment of the reagent dosing system will be required to maintain the target dosage rate. The reagent dosing systems are equipped with pumps that maintain a constant flow rate when running at a constant frequency. The flow can be modified by changing the electric motor frequency.

The reagent dosing system is equipped with valves and graduated cylinders allowing the Operator to measure the addition rate of the reagent using a stop watch. The Operator will determine the required flow of a specific reagent by a formula based on influent flow rate. Based on this calculation, a manual adjustment to the reagent pump will be done in order to obtain the required dosage. Initially, the formula will be based on laboratory testing and will be adjusted accordingly to the treatment plant performance.

More information on instrumentation can be found in Appendix B.

3 OPERATION AND MAINTENANCE

3.1 PUMPING

The system includes mainly pumps for the operation of the AsWTP. Some of these pumps are equipped with a variable frequency drive (VFD) that could be adjusted by the Operator or by an automatic system. In all cases the pumps can only be started by the Operator.

All pumps are regularly inspected by the Operator who will ensure the pumps continue to operate efficiently and will address any deficiencies. If the pumps require maintenance, the Operator will report the situation and take appropriate action. Some of the pumps are installed with a standby unit that allows the Operator to switch from one pump to the other if necessary. In some situations, it may be necessary to temporarily shutdown the AsWTP for servicing of the equipment.

A preventative maintenance program, as recommended by the pump supplier, will be followed by the Maintenance Crew to ensure the pumps are always kept in good working order.

3.2 REAGENT MIXING

The reagent mixing system is fully automated system. The only requirement is to change the reagent bag when it is empty. Since one bag will last for many days, daily verification of the dry reagent level is sufficient to ensure stable operation of the process.

During the daily inspection, the Operator will monitor the different reagent systems and prepare additional reagent, as required, according to the reagent preparation procedures. The water levels in the mixing and distribution tanks are connected to the control system, which will ensure sufficient water is supplied to the reagent preparation systems. In the event of a lack of water supply, a low level alarm will occur to notify the Operator.

Preventive maintenance of the mechanical equipment will be performed according to the supplier operating manual specifications. Chemical dosage will be optimized to improve the AsWTP efficiency over the time.

3.3 CENTRIFUGES

Centrifuges will be operated when the sludge tank are full. In summer, the centrifuge will be operated in continuous. However, the frequency to use centrifuge will depend on the TSS concentration in the feed water.

3.4 EFFLUENT QUALITY CONTROL

The Operator will conduct regular inspections of the entire operating system to ensure it operates as intended. Any upset condition will be reported immediately by the Operator and corrective actions will be applied accordingly. The Operator will also record process key values that will allow the process to be optimized and any discrepancies between the process and expected performances to be detected.

The quality of the final effluent is monitored on a continuous basis by pH and turbidity (Nephelometric Turbidity Unit (NTU)) probes. The turbidity measurement is an indirect indication of the TSS in the water, and will be used to infer the effluent TSS. The output of these instruments will send an alarm indicating that the levels are higher than the set point, but lower than the maximum discharge criteria. This allows the Operator to act on the process before the limit is exceeded. In the event that the discharge limit is about to be reached, a second alarm will send a signal to the Operator. The system will be equipped with an uninterruptable power supply for instrumentation and controls.

The final effluent will be sampled for water quality following the frequency and parameters stipulated in the NWB Water License and the Metal and Diamond Mining Effluent Regulations (MDMER) and sent

to a certified laboratory for analysis. The results generated by the laboratory will be compared with those obtained with the plant instrumentation to detect any deviations. All the probes and instrumentation within the plant will be calibrated and serviced as per the preventative maintenance program.

As stipulated in the Type A Water License and the Metal Mining Effluent Regulations (MDMER), the final effluent discharged shall not exceed a pH range between 6.0 and 9.5 and a maximum average concentration for TSS of 15 mg/L, and for As of 0.1 mg/L. The following table presents the treatment requirement from Licence A. Note that only pH, TSS, As and Fe will be treated within the AsWTP.

Table 1: Water quality requirement

Parameters	Unit	Monthly Mean Concentration	Maximum Concentration in a Grab Sample
pH	-	6.0–9.5	6.0–9.5
Total Suspended Solids (TSS)	mg/l	15	30
Total Dissolved Solids (TDS)	mg/l	1400	1400
Total Ammonia (NH_3-N)	mg-N/l	16	32
Total Phosphorus (P)	mg-P/l	0.3	0.6
Aluminium (Al)	mg/L	0.5	1
Arsenic (As)	mg/L	0.1	0.2
Cadmium (Cd)	mg/L	0.002	0.004
Chromium (Cr)	mg/L	0.02	0.04
Copper (Cu)	mg/L	0.1	0.2
Iron (Fe)	mg/L	1	2
Lead (Pb)	mg/L	0.05	0.1
Mercury (Hg)	mg/L	0.004	0.008
Nickel (Ni)	mg/L	0.25	0.5
Zinc (Zn)	mg/L	0.1	0.2
Total Petroleum Hydrocarbons (TPH)	mg/L	3	6

3.5 TROUBLESHOOTING AND MAINTENANCE PROCEDURES

The sections below outline the general operational and maintenance procedures at the plant; further details are available in the manufacturer' operating manuals in Appendix C.

The operation of the Actiflo® process is relatively simple and a visual inspection will determine whether the process is performing as expected. A critical component of the process for monitoring is the maturation tank. The agitator of this tank is equipped with a VFD and the speed is adjusted to obtain a gentle mixing in this tank. When the process is operated correctly, big flocs of about 5 mm are visible in the tank and moving slowly. The agitation must be adjusted in a way that the flocs are maintained in

suspension and not broken down. The water between the flocs should look clear. If flocs are visible but the water is cloudy, it is an indication that the coagulant dosage is insufficient. If the water is clear but the flocs are small, it is an indication that the flocculant addition is insufficient.

The system must also contain enough micro-sand to obtain flocs that are heavy enough to sink in the clarifier section. If large flocs are visible but are present at the top of the clarifier, this is an indication of insufficient micro-sand. Usually, the micro-sand load is maintained by adding one bag at a time. The frequency of the addition of micro-sand is determined by trial and error. There is no environmental issue with an excessive addition since it would be compensated by an increased loss within the sludge.

The hydrocyclone is also an important part of the system since it allows the micro-sand to be recycled in the system. The underflow of the cyclone should never be blocked and the flow should have an umbrella shape.

Centrifuges have to be periodically inspected to evaluate the wear of rotating part. In case of premature wear, replacement of the part will be required to assure an efficient operation of the centrifuge.

3.6 RECORD KEEPING

Records of the operational and maintenance and sampling procedures will be accessible to assist in the evaluation of the AsWTP performance. Details of any maintenance undertaken at the AsWTP will also be recorded.

The volume, pH, turbidity and temperature of effluent discharged to environment will be recorded on a continuous basis. The data will be saved on a network data base.

3.7 SAFETY PROCEDURES FOR OPERATORS

Operators working in the AsWTP facility must be trained prior to work so that they are aware of the health and safety risks as well as the operational procedures associated with the AsWTP. The following are important safety considerations:

- Working within the plant, especially with chemicals, requires adequate personal protective equipment (PPE) for Operators. This includes wearing steel toed boots, hard hat, rubber aprons, safety glasses with side shields and gloves.
- Operators are required to conduct good housekeeping of the working area to minimize the risk of incidents.
- Lock-out/tag-out procedures must applied when servicing equipment.
- The MSDS for reagents used in the AsWTP will be readily available for the Operator at all times.
- Eyewash stations are located within proximity of reagent systems in the AsWTP.

3.8 CONTROLLING ACCESS TO THE ASWTP

Access to the AsWTP will be restricted to authorized personnel only. Signs will be posted at the AsWTP entrance.

4 EMERGENCY RESPONSE

4.1 FIRE

In case of fire at the AsWTP, the on-site emergency response team (ERT) will be notified as per Agnico Eagle's protocol. Instructions from the on-site emergency response team will be followed by all personnel at the AsWTP. Further details of fire response are provided in the "*Risk Management & Emergency Response Plan*". The AsWTP will include the necessary fire safety protection measures in accordance with the Nunavut and North West Territories Mine Act.

4.2 SPILL

Spill kits and the necessary secondary containment will be provided within the building of the AsWTP. In the event of a spill at the AsWTP, the Environment Department will be notified immediately and provide support, as required. In the event of a large spill, the on-site ERT will be notified as per Agnico Eagle's protocol. Instructions from the ERT will be followed by all personnel at the ASWTP. A spill kit will be available at the AsWTP. All spill will be reported and treated according to the "*Spill Contingency Plan".*

4.3 PLANT MALFUNCTION

If there is a major problem or failure in the AsWTP, it will be likely due to a problem with the reagent addition systems caused by the malfunction of the pump or due to a cyclone blockage on the sludge reclaim system.

In the case of an operational upset, the most likely consequence could be an increase of TSS and As in the effluent. This would be managed by adjusting the feed flow rate, dosage of chemical. Once the problem is resolved and the water quality returns to concentrations within discharge criteria, the valves will be re-opened to allow discharge to environment.

In the case of a cyclone underflow blockage, the micro-sand will be completely lost to the rejected sludge. New sand will then need to be added.

Two centrifuges will be operated in parallel. In case of one centrifuge malfunction, the other one can continue to be operated during the maintenance of the other.

Appendix A: Reagent MSDS Sheets

Hydrex

MATERIAL SAFETY DATA SHEET

1. Product and Company Identification

Product identifier	**Hydrex 6105**
Version #	01
Issue date	08-15-2014
CAS #	Mixture
Product use	Wastewater Flocculant
Manufacturer	
Supplier	VWS Canada
Address	2000 Argentia Road, Plaza IV, Suite 430 Mississauga, ON L5N 1W1 Canada
Contact Person	Hydrex Product Specialist
Telephone	(905) 286-4846
Fax	(905) 286-0488
e-mail	vwscanada.hydrex@veoliawater.com
24-Hour Emergency telephone	+1-760-476-3962 (Code:333239)

2. Hazards Identification

Potential health effects

Eyes	Health injuries are not known or expected under normal use.
Skin	Health injuries are not known or expected under normal use.
Inhalation	Health injuries are not known or expected under normal use.
Ingestion	Health injuries are not known or expected under normal use.

3. Composition / Information on Ingredients

The components are not hazardous or are below required disclosure limits.

4. First Aid Measures

First aid procedures

Eye contact	Rinse with water. Get medical attention if irritation develops and persists.
Skin contact	Rinse skin with water/shower. Get medical attention if irritation develops and persists.
Inhalation	If breathing is difficult, remove to fresh air and keep at rest in a position comfortable for breathing. Call a physician if symptoms develop or persist.
Ingestion	Rinse mouth. If ingestion of a large amount does occur, call a poison control center immediately.
General advice	If you feel unwell, seek medical advice (show the label where possible). Show this safety data sheet to the doctor in attendance.

5. Fire Fighting Measures

Flammable properties	Dust accumulation from this product may present an explosion hazard in the presence of an ignition source.
Extinguishing media	
Suitable extinguishing media	Water spray, fog, CO2, dry chemical, or alcohol resistant foam.
Protection of firefighters	
Protective equipment for firefighters	In the event of fire, wear self-contained breathing apparatus.
Fire fighting equipment/instructions	Use water spray to cool unopened containers. Dust may form an explosive mixture in the atmosphere.
Specific methods	Use water spray to cool unopened containers.

Explosion data

Sensitivity to static discharge	Not available.
Sensitivity to mechanical impact	Not available.

6. Accidental Release Measures

Personal precautions	Slippery when wet.
Environmental precautions	Prevent further leakage or spillage if safe to do so. Do not contaminate water.
Methods for cleaning up	Should not be released into the environment. Following product recovery, flush area with water. For waste disposal, see section 13 of the MSDS.

7. Handling and Storage

Handling	Avoid release to the environment. Material can be slippery when wet.
Storage	Store in a dry area. Store in closed original container at temperatures between 5°C and 30°C.

8. Exposure Controls / Personal Protection

Biological limit values	No biological exposure limits noted for the ingredient(s).

Personal protective equipment

Eye / face protection	Chemical goggles are recommended.
Skin protection	Normal work clothing (long sleeved shirts and long pants) is recommended.
Respiratory protection	No specific recommendation made, but protection against nuisance dust must be used when the general level exceeds 10 mg/m3.

9. Physical & Chemical Properties

Appearance	Not available.
Physical state	Solid.
Form	Not available.
Color	White
Odor	Not available.
pH	Not available.
Vapor pressure	0 hPa estimated
Vapor density	Not available.
Boiling point	Not available.
Melting point/Freezing point	Not available.
Solubility (water)	Not available.
Specific gravity	0.65 - 0.9
Flash point	Not available.
Auto-ignition temperature	Not available.
Ph Of 1% Solution	5 - 7

10. Chemical Stability & Reactivity Information

Chemical stability	Material is stable under normal conditions.
Conditions to avoid	None under normal conditions.
Incompatible materials	Not available.
Hazardous decomposition products	Upon decomposition, this product may yield oxides of nitrogen and ammonia, carbon dioxide, carbon monoxide and other low molecular weight hydrocarbons.

11. Toxicological Information

Toxicological data

Product	Species	Test Results
Hydrex 6105 (CAS Mixture)		
Acute		
Dermal		
LD50	Rabbit	> 10000 mg/kg
Oral		
LD50	Rat	> 5000 mg/kg

* Estimates for product may be based on additional component data not shown.

Chronic effects Not expected to be hazardous by WHMIS criteria.

12. Ecological Information

Ecotoxicological data

Product		Species	Test Results
Hydrex 6105 (CAS Mixture)			
Algae	IC50	Algae	2276 mg/l, 72 hr
Crustacea	EC50	Daphnia	> 100 mg/l, 48 hr
Other	LC50	Rainbow Trout	> 120 mg/l, 96 hr
Aquatic			
Fish	LC50	Zebra danio (Danio rerio)	> 100 mg/l, 96 hr

* Estimates for product may be based on additional component data not shown.

Ecotoxicity Contains a substance which causes risk of hazardous effects to the environment.

Environmental effects An environmental hazard cannot be excluded in the event of unprofessional handling or disposal

Persistence and degradability Not available.

13. Disposal Considerations

Disposal instructions Collect and reclaim or dispose in sealed containers at licensed waste disposal site. Do not allow this material to drain into sewers/water supplies. This product, in its present state, when discarded or disposed of, is not a hazardous waste according to Federal regulations (40 CFR 261.4 (b)(4)). Under RCRA, it is the responsibility of the user of the product to determine, at the time of disposal, whether the product meets RCRA criteria for hazardous waste. Dispose in accordance with all applicable regulations.

Contaminated packaging Empty containers should be taken to an approved waste handling site for recycling or disposal.

14. Transport Information

TDG

Not regulated as dangerous goods.

IATA

Not regulated as dangerous goods.

IMDG

Not regulated as dangerous goods.

15. Regulatory Information

Canadian regulations This product has been classified in accordance with the hazard criteria of the CPR and the MSDS contains all the information required by the CPR.

WHMIS status Non-controlled

Inventory status

Country(s) or region	Inventory name	On inventory (yes/no)*
Australia	Australian Inventory of Chemical Substances (AICS)	Yes
Canada	Domestic Substances List (DSL)	Yes

Country(s) or region	Inventory name	On inventory (yes/no)*
Canada	Non-Domestic Substances List (NDSL)	No
China	Inventory of Existing Chemical Substances in China (IECSC)	Yes
Europe	European Inventory of Existing Commercial Chemical Substances (EINECS)	No
Europe	European List of Notified Chemical Substances (ELINCS)	No
Japan	Inventory of Existing and New Chemical Substances (ENCS)	Yes
Korea	Existing Chemicals List (ECL)	Yes
New Zealand	New Zealand Inventory	Yes
Philippines	Philippine Inventory of Chemicals and Chemical Substances (PICCS)	Yes
United States & Puerto Rico	Toxic Substances Control Act (TSCA) Inventory	Yes

*A "Yes" indicates that all components of this product comply with the inventory requirements administered by the governing country(s)
A "No" indicates that one or more components of the product are not listed or exempt from listing on the inventory administered by the governing country(s).

16. Other Information

Further information
HMIS® is a registered trade and service mark of the NPCA.

HMIS® ratings
Health: 0
Flammability: 1
Physical hazard: 0

NFPA ratings
Health: 0
Flammability: 1
Instability: 0

Disclaimer
Veolia Water Solutions & Technologies is not able to anticipate all conditions under which this information and its product, or the products of other manufacturers in combination with its product, may be used. It is the user's responsibility to ensure safe conditions for handling, storage and disposal of the product, and to assume liability for loss, injury, damage or expense due to improper use and or non respect of Veolia Water Solutions & Technologies' requirement.

This data sheet contains changes from the previous version in section(s):
Product and Company Identification: Product and Company Identification

Hydrex

MATERIAL SAFETY DATA SHEET

1. Product and Company Identification

Product identifier	**Hydrex 6266**
Version #	01
Issue date	11-12-2013
CAS #	Mixture
Product use	Wastewater Coagulant
Manufacturer	
Supplier	VWS Canada
Address	2000 Argentia Road, Plaza IV, Suite 430 Mississauga, ON L5N 1W1 Canada
Contact Person	Hydrex Product Specialist
Telephone	(905) 286-4846
Fax	(905) 286-0488
e-mail	vwscanada.hydrex@veoliawater.com
24-Hour Emergency telephone	+1-760-476-3962 (Code:333239)

2. Hazards Identification

Emergency overview WARNING

Harmful in contact with skin.

Potential health effects

Routes of exposure	Inhalation. Ingestion. Skin contact. Eye contact.
Eyes	Harmful in contact with eyes. Do not get this material in contact with eyes.
Skin	Harmful in contact with skin. Do not get this material in contact with skin.
Inhalation	Prolonged inhalation may be harmful. Do not breathe dust/fume/gas/mist/vapors/spray.
Ingestion	Do not ingest.

3. Composition / Information on Ingredients

Non-hazardous components	CAS #	Percent
IRON, WATER-SOLUBLE SALTS, N.O.S.	10028-22-5	60 - 100
Other components below reportable levels		15 - 40

4. First Aid Measures

First aid procedures

Eye contact	Immediately flush eyes with plenty of water for at least 15 minutes. If a contact lens is present, DO NOT delay irrigation or attempt to remove the lens. Continue rinsing. Get medical attention immediately.
Skin contact	Remove and isolate contaminated clothing and shoes. Immediately flush skin with plenty of water. Get medical attention immediately. For minor skin contact, avoid spreading material on unaffected skin. Wash clothing separately before reuse.
Inhalation	Move to fresh air. Oxygen or artificial respiration if needed. Do not use mouth-to-mouth method if victim inhaled the substance. Induce artificial respiration with the aid of a pocket mask equipped with a one-way valve or other proper respiratory medical device. Call a physician or poison control center immediately.
Ingestion	IF SWALLOWED: Immediately call a POISON CENTER or doctor/physician. Rinse mouth thoroughly. Do not induce vomiting without advice from poison control center. If vomiting occurs, keep head low so that stomach content doesn't get into the lungs. Do not use mouth-to-mouth method if victim ingested the substance. Induce artificial respiration with the aid of a pocket mask equipped with a one-way valve or other proper respiratory medical device.

Notes to physician Symptoms may be delayed.

General advice Ensure that medical personnel are aware of the material(s) involved, and take precautions to protect themselves.

5. Fire Fighting Measures

Flammable properties Not flammable by WHMIS criteria.

Extinguishing media

Suitable extinguishing media Water fog. Foam. Dry chemical powder. Dry chemical, CO2, sand, earth, water spray or regular foam.

Fire fighting equipment/instructions In the event of fire, cool tanks with water spray.

Specific methods Cool containers exposed to flames with water until well after the fire is out.

Explosion data

Sensitivity to static discharge Not available.

Sensitivity to mechanical impact Not available.

6. Accidental Release Measures

Personal precautions Keep unnecessary personnel away. Keep upwind. Keep out of low areas. Ventilate closed spaces before entering them. For personal protection, see section 8 of the MSDS.

Methods for cleaning up Following product recovery, flush area with water. For waste disposal, see section 13 of the MSDS.

7. Handling and Storage

Handling Do not breathe dust/fume/gas/mist/vapors/spray. Do not get this material in contact with eyes. Do not get this material in contact with skin. Avoid prolonged exposure. Do not get this material on clothing. Do not use in areas without adequate ventilation. Wear personal protective equipment. Wash thoroughly after handling.

Storage Store in a closed container away from incompatible materials. Store in a well-ventilated place. Keep container dry. Store away from incompatible materials (see Section 10 of the MSDS).

8. Exposure Controls / Personal Protection

Occupational exposure limits

US. ACGIH Threshold Limit Values

Components	Type	Value
FERRIC SULFATE (CAS 10028-22-5)	TWA	1 mg/m3

Canada. Alberta OELs (Occupational Health & Safety Code, Schedule 1, Table 2)

Components	Type	Value
FERRIC SULFATE (CAS 10028-22-5)	TWA	1 mg/m3

Canada. British Columbia OELs. (Occupational Exposure Limits for Chemical Substances, Occupational Health and Safety Regulation 296/97, as amended)

Components	Type	Value
FERRIC SULFATE (CAS 10028-22-5)	STEL	2 mg/m3
	TWA	1 mg/m3

Canada. Manitoba OELs (Reg. 217/2006, The Workplace Safety And Health Act)

Components	Type	Value
FERRIC SULFATE (CAS 10028-22-5)	TWA	1 mg/m3

Canada. Ontario OELs. (Control of Exposure to Biological or Chemical Agents)

Components	Type	Value
FERRIC SULFATE (CAS 10028-22-5)	TWA	1 mg/m3

Canada. Quebec OELs. (Ministry of Labor - Regulation Respecting the Quality of the Work Environment)

Components	Type	Value
FERRIC SULFATE (CAS 10028-22-5)	TWA	1 mg/m3

Biological limit values No biological exposure limits noted for the ingredient(s).

Engineering controls Good general ventilation (typically 10 air changes per hour) should be used. Ventilation rates should be matched to conditions. If applicable, use process enclosures, local exhaust ventilation, or other engineering controls to maintain airborne levels below recommended exposure limits. If exposure limits have not been established, maintain airborne levels to an acceptable level. Ensure adequate ventilation, especially in confined areas.

Personal protective equipment

Eye / face protection Wear safety glasses with side shields (or goggles) and a face shield. Chemical goggles and face shield are recommended.

Skin protection Wear suitable protective clothing. Chemical resistant gloves.

Respiratory protection When workers are facing concentrations above the exposure limit they must use appropriate certified respirators.

9. Physical & Chemical Properties

Appearance Granular

Physical state Solid.

Form Solid.

Color Yellowish or Tan or Grey.

Odor Slight

Odor threshold Not available.

pH Not available.

Vapor pressure Not available.

Vapor density Not available.

Boiling point Not available.

Melting point/Freezing point > 572 °F (> 300 °C)

Solubility (water) Soluble

Specific gravity 3.1 estimated

Relative density Not available.

Flash point Not available.

Flammability limits in air, upper, % by volume Not available.

Flammability limits in air, lower, % by volume Not available.

Auto-ignition temperature Not available.

Other data

Density 3.10 g/cm3 estimated

10. Chemical Stability & Reactivity Information

Chemical stability Material is stable under normal conditions.

Conditions to avoid Contact with incompatible materials.

Incompatible materials Not available.

Hazardous decomposition products Not available.

Possibility of hazardous reactions Hazardous polymerization does not occur.

11. Toxicological Information

Toxicological data

Product	Species	Test Results
Hydrex 6266 (CAS Mixture)		
Acute		
Dermal		
LD50	Mouse	>= 200 mg/kg Calculation
Oral		
LD50	Rat	>= 650 mg/kg Calculation

* Estimates for product may be based on additional component data not shown.

Chronic effects Prolonged inhalation may be harmful. Not expected to be hazardous by WHMIS criteria.

12. Ecological Information

Ecotoxicological data

Product		Species	Test Results
Hydrex 6266 (CAS Mixture)			
Aquatic			
Acute			
Algae	EC50	Green algae (Scenedesmus acutus)	> 13 mg/l, 7 day
Fish	LC50	Mosquitofish (Gambusia affinis affinis)	>= 50 mg/l, 96 hours

* Estimates for product may be based on additional component data not shown.

Persistence and degradability Not available.

13. Disposal Considerations

Disposal instructions Collect and reclaim or dispose in sealed containers at licensed waste disposal site. Dispose in accordance with all applicable regulations.

Waste from residues / unused products Dispose of in accordance with local regulations. Empty containers or liners may retain some product residues. This material and its container must be disposed of in a safe manner (see: Disposal instructions).

Contaminated packaging Empty containers should be taken to an approved waste handling site for recycling or disposal. Since emptied containers may retain product residue, follow label warnings even after container is emptied.

14. Transport Information

TDG

- **UN number** UN3077
- **UN proper shipping name** ENVIRONMENTALLY HAZARDOUS SUBSTANCE, SOLID, N.O.S. (IRON, WATER-SOLUBLE SALTS, N.O.S.)
- **Transport hazard class(es)**
  - **Class** 9
  - **Subsidiary risk** -
- **Packing group** III
- **Environmental hazards** D
- **Special precautions for user** Read safety instructions, MSDS and emergency procedures before handling.

IATA

- **UN number** UN3077
- **UN proper shipping name** Environmentally hazardous substance, solid, n.o.s. (IRON, WATER-SOLUBLE SALTS, N.O.S.)
- **Transport hazard class(es)**
  - **Class** 9
  - **Subsidiary risk** -
- **Packing group** III
- **Environmental hazards** No.
- **ERG Code** 9L

Special precautions for user	Read safety instructions, MSDS and emergency procedures before handling.
Other information	
Passenger and cargo aircraft	Allowed.
Cargo aircraft only	Allowed.

IMDG

UN number	UN3077
UN proper shipping name	ENVIRONMENTALLY HAZARDOUS SUBSTANCE, SOLID, N.O.S.
Transport hazard class(es)	
Class	9
Subsidiary risk	-
Packing group	III
Environmental hazards	
Marine pollutant	No.
EmS	F-A, S-F
Special precautions for user	Read safety instructions, MSDS and emergency procedures before handling.

IATA; IMDG; TDG

15. Regulatory Information

Canadian regulations	This product has been classified in accordance with the hazard criteria of the CPR and the MSDS contains all the information required by the CPR.
WHMIS status	Controlled
WHMIS classification	D2B - Other Toxic Effects-TOXIC

WHMIS labeling

Inventory status

Country(s) or region	Inventory name	On inventory (yes/no)*
Australia	Australian Inventory of Chemical Substances (AICS)	Yes
Canada	Domestic Substances List (DSL)	Yes
Canada	Non-Domestic Substances List (NDSL)	No
China	Inventory of Existing Chemical Substances in China (IECSC)	Yes
Europe	European Inventory of Existing Commercial Chemical Substances (EINECS)	Yes
Europe	European List of Notified Chemical Substances (ELINCS)	No
Japan	Inventory of Existing and New Chemical Substances (ENCS)	Yes
Korea	Existing Chemicals List (ECL)	Yes
New Zealand	New Zealand Inventory	Yes
Philippines	Philippine Inventory of Chemicals and Chemical Substances (PICCS)	Yes

Country(s) or region	Inventory name	On inventory (yes/no)*
United States & Puerto Rico	Toxic Substances Control Act (TSCA) Inventory	Yes

*A "Yes" indicates that all components of this product comply with the inventory requirements administered by the governing country(s)
A "No" indicates that one or more components of the product are not listed or exempt from listing on the inventory administered by the governing country(s).

16. Other Information

HMIS® ratings

Health: 2
Flammability: 0
Physical hazard: 0

NFPA ratings

Health: 2
Flammability: 0
Instability: 0

Disclaimer

The information in the sheet was written based on the best knowledge and experience currently available. Veolia Water Solutions & Technologies is not able to anticipate all conditions under which this information and its product, or the products of other manufacturers in combination with its product, may be used. It is the user's responsibility to ensure safe conditions for handling, storage and disposal of the product, and to assume liability for loss, injury, damage or expense due to improper use and or non respect of Veolia Water Solutions & Technologies' requirement.

MATERIAL SAFETY DATA SHEET

1. Product and Company Identification

Product identifier	**Hydrex 6324**
Version #	01
Issue date	03-31-2016
CAS #	Mixture
Product use	Wastewater Flocculant
Manufacturer information	
Supplier	Veolia Water Technologies Canada Inc.
Address	2000 Argentia Road, Plaza IV, Suite 430 Mississauga, ON L5N 1W1 Canada
Contact Person	Hydrex Product Specialist
Telephone	(905) 286-4846
Fax	(905) 286-0488
e-mail	vwtcanada-hydrex@veolia.com
24-Hour Emergency telephone	+1-760-476-3962 (Code:333239)
Supplier	Not available.

2. Hazards Identification

Potential health effects

Routes of exposure	Eye contact. Ingestion. Inhalation. Skin contact.
Eyes	Health injuries are not known or expected under normal use.
Skin	Health injuries are not known or expected under normal use.
Inhalation	Health injuries are not known or expected under normal use.
Ingestion	Health injuries are not known or expected under normal use.
Potential environmental effects	May cause long-term adverse effects in the environment.

3. Composition / Information on Ingredients

Components	CAS #	Percent
ADIPIC ACID	124-04-9	1 - 5
Other components below reportable levels		60 - 100

Composition comments None by WHMIS criteria.

4. First Aid Measures

First aid procedures

Inhalation	If breathing is difficult, remove to fresh air and keep at rest in a position comfortable for breathing. Call a physician if symptoms develop or persist.
Skin contact	Rinse skin with water/shower. Get medical attention if irritation develops and persists.
Eye contact	Rinse with water. Get medical attention if irritation develops and persists.
Ingestion	Rinse mouth. If ingestion of a large amount does occur, call a poison control center immediately.
General advice	If you feel unwell, seek medical advice (show the label where possible). Show this safety data sheet to the doctor in attendance.

5. Fire Fighting Measures

Flammable properties Not flammable by WHMIS criteria.

Extinguishing media

Suitable extinguishing media	Not available.

Unsuitable extinguishing media	Not available.
Protection of firefighters	
Specific hazards arising from the chemical	Material can be slippery when wet.
Fire fighting equipment/instructions	Use water spray to cool unopened containers.
Explosion data	
Sensitivity to static discharge	Not available.
Sensitivity to mechanical impact	Not available.
Hazardous combustion products	Not available.

6. Accidental Release Measures

Personal precautions	Keep unnecessary personnel away. For personal protection, see section 8 of the MSDS. Slippery when wet.
Environmental precautions	Do not contaminate water.
Methods for cleaning up	Should not be released into the environment. This product is miscible in water. Following product recovery, flush area with water. For waste disposal, see section 13 of the MSDS.

7. Handling and Storage

Handling	Material can be slippery when wet. Avoid release to the environment.
Storage	Store in original tightly closed container. Store away from incompatible materials (see Section 10 of the MSDS).

8. Exposure Controls / Personal Protection

Occupational exposure limits

US. ACGIH Threshold Limit Values

Components	Type	Value
ADIPIC ACID (CAS 124-04-9)	TWA	5 mg/m3

Canada. Alberta OELs (Occupational Health & Safety Code, Schedule 1, Table 2)

Components	Type	Value
ADIPIC ACID (CAS 124-04-9)	TWA	5 mg/m3

Canada. British Columbia OELs. (Occupational Exposure Limits for Chemical Substances, Occupational Health and Safety Regulation 296/97, as amended)

Components	Type	Value
ADIPIC ACID (CAS 124-04-9)	TWA	5 mg/m3

Canada. Manitoba OELs (Reg. 217/2006, The Workplace Safety And Health Act)

Components	Type	Value
ADIPIC ACID (CAS 124-04-9)	TWA	5 mg/m3

Canada. Ontario OELs. (Control of Exposure to Biological or Chemical Agents)

Components	Type	Value
ADIPIC ACID (CAS 124-04-9)	TWA	5 mg/m3

Canada. Quebec OELs. (Ministry of Labor - Regulation Respecting the Quality of the Work Environment)

Components	Type	Value
ADIPIC ACID (CAS 124-04-9)	TWA	5 mg/m3

Biological limit values	No biological exposure limits noted for the ingredient(s).

Engineering controls	Not available.
Personal protective equipment	
Eye/face protection	Wear safety glasses with side shields (or goggles).
Skin protection	Wear suitable protective clothing. Chemical resistant gloves.
Respiratory protection	No personal respiratory protective equipment normally required. In case of insufficient ventilation, wear suitable respiratory equipment.
Hand protection	Chemical resistant gloves.

9. Physical & Chemical Properties

Appearance	Granular or Powder.
Physical state	Solid.
Form	Solid.
Color	White.
Odor	Odorless.
pH	Not available.
Vapor pressure	Not available.
Vapor density	Not available.
Boiling point	Not available.
Melting point/Freezing point	Not available.
Solubility (water)	Limited by viscosity
Specific gravity	Not available.
Flash point	Not available.
Flammability limits in air, upper, % by volume	Not available.
Flammability limits in air, lower, % by volume	Not available.
Auto-ignition temperature	Not available.
Bulk density	650 - 850 kg/m³
Other data	
pH in aqueous solution	7 - 9 in a 0.5% aq. sol.

10. Chemical Stability & Reactivity Information

Chemical stability	Material is stable under normal conditions.
Conditions to avoid	Contact with incompatible materials.
Incompatible materials	Not available.
Hazardous decomposition products	Not available.
Possibility of hazardous reactions	Not available.

11. Toxicological Information

Toxicological data

Product	Species	Test Results
Hydrex 6324		
Acute		
Dermal		
Presumed Non-Toxic	Rabbit	> 2000 mg/kg
Inhalation		
LC50	Rat	> 20 mg/l, 4 hours
Oral		
LD50	Rat	> 5000 mg/kg

Components	Species	Test Results
ADIPIC ACID (CAS 124-04-9)		
Acute		
Dermal		
LD50	Rabbit	> 5000 mg/kg
Inhalation		
NOEL	Rat	0.126 mg/l, 6 Hours
Oral		
LD50	Mouse	1900 mg/kg
	Rabbit	> 11000 mg/kg
	Rat	> 11000 mg/kg

Acute effects

Sensitization Not available.

Chronic effects Not expected to be hazardous by WHMIS criteria.

Carcinogenicity Not available.

Skin corrosion/irritation Not available.

Serious eye damage/irritation Not available.

Mutagenicity Not available.

Reproductive effects Not available.

Teratogenicity Not available.

Synergistic materials Not available.

12. Ecological Information

Ecotoxicological data

Product		Species	Test Results
Hydrex 6324			
Aquatic			
Acute			
Crustacea	EC50	Daphnia magna	> 100 mg/l, 48 hours
Fish	LC50	Danio rerio	> 100 mg/l, 96 hours

Components		Species	Test Results
ADIPIC ACID (CAS 124-04-9)			
Aquatic			
Algae	EC50	Algae	31.3 mg/l, 72 hours
Crustacea	EC50	Daphnia	85.6 mg/l, 48 hours
Fish	LC50	Fathead minnow (Pimephales promelas)	97 mg/l, 96 hours
Acute			
Fish	EC50	Rainbow trout,donaldson trout (Oncorhynchus mykiss)	> 100 mg/l, 48 hours

Ecotoxicity Contains a substance which causes risk of hazardous effects to the environment.

Environmental effects An environmental hazard cannot be excluded in the event of unprofessional handling or disposal.

Aquatic toxicity Not available.

Persistence and degradability Not available.

Partition coefficient

ADIPIC ACID 0.08

Mobility in environmental media This product is miscible in water.

13. Disposal Considerations

Disposal instructions	Collect and reclaim or dispose in sealed containers at licensed waste disposal site. Do not allow this material to drain into sewers/water supplies. Dispose in accordance with all applicable regulations.
Waste from residues / unused products	Dispose of in accordance with local regulations. Empty containers or liners may retain some product residues. This material and its container must be disposed of in a safe manner (see: Disposal instructions).
Contaminated packaging	Empty containers should be taken to an approved waste handling site for recycling or disposal. Since emptied containers may retain product residue, follow label warnings even after container is emptied.

14. Transport Information

TDG

Not regulated as dangerous goods.

IATA

Not regulated as dangerous goods.

IMDG

Not regulated as dangerous goods.

15. Regulatory Information

Canadian regulations	This product has been classified in accordance with the hazard criteria of the CPR and the MSDS contains all the information required by the CPR.
WHMIS status	Non-controlled

International Inventories

Country(s) or region	Inventory name	On inventory (yes/no)*
Australia	Australian Inventory of Chemical Substances (AICS)	Yes
Canada	Domestic Substances List (DSL)	Yes
Canada	Non-Domestic Substances List (NDSL)	No
China	Inventory of Existing Chemical Substances in China (IECSC)	Yes
Europe	European Inventory of Existing Commercial Chemical Substances (EINECS)	No
Europe	European List of Notified Chemical Substances (ELINCS)	No
Japan	Inventory of Existing and New Chemical Substances (ENCS)	Yes
Korea	Existing Chemicals List (ECL)	Yes
New Zealand	New Zealand Inventory	Yes
Philippines	Philippine Inventory of Chemicals and Chemical Substances (PICCS)	Yes
United States & Puerto Rico	Toxic Substances Control Act (TSCA) Inventory	Yes

*A "Yes" indicates that all components of this product comply with the inventory requirements administered by the governing country(s)
A "No" indicates that one or more components of the product are not listed or exempt from listing on the inventory administered by the governing country(s).

16. Other Information

Recommended restrictions	PROFESSIONAL USE ONLY
HMIS® ratings	Health: 0 Flammability: 0 Physical hazard: 0
NFPA ratings	Health: 0 Flammability: 0 Instability: 0
Disclaimer	Veolia Water Technologies is not able to anticipate all conditions under which this information and its product, or the products of other manufacturers in combination with its product, may be used. It is the user's responsibility to ensure safe conditions for handling, storage and disposal of the product, and to assume liability for loss, injury, damage or expense due to improper use and or non respect of Veolia Water Technologies' requirement.
Prepared by	Hydrex Global Platform

This data sheet contains changes from the previous version in section(s):	This document has undergone significant changes and should be reviewed in its entirety.

MATERIAL SAFETY DATA SHEET

1. Product and Company Identification

Material name	**Hydrex 9571**
Version #	01
Issue date	08-27-2013
Chemical name	POTASSIUM PERMANGANATE
Product use	Wastewater Metal Precipitant
Manufacturer	
Supplier	VWS Canada
Address	2000 Argentia Road, Plaza IV, Suite 430 Mississauga, ON L5N 1W1 Canada
Contact Person	Hydrex Product Specialist
Telephone	(905) 286-4846
Fax	(905) 286-0488
e-mail	vwscanada.hydrex@veoliawater.com
24-Hour Emergency telephone	+1-760-476-3962 (Code:333239)

2. Hazards Identification

Emergency overview

DANGER

Oxidizing material.

Causes skin and eye burns.

Potential health effects

Routes of exposure	Inhalation. Ingestion. Skin contact. Eye contact.
Eyes	Corrosive to the eyes and may cause severe damage including blindness. Causes chemical burns. Do not get this material in contact with eyes.
Skin	Causes chemical burns. Do not get this material in contact with skin.
Inhalation	Dust extremely irritating to the respiratory tract. Inhalation of dusts may cause respiratory irritation. Prolonged inhalation may be harmful. Do not breathe dust.
Ingestion	Harmful if swallowed. Ingestion causes burns of the upper digestive and respiratory tracts. Irritating. May cause nausea, stomach pain and vomiting. Do not ingest.
Chronic effects	Frequent or prolonged contact may defat and dry the skin, leading to discomfort and dermatitis.
Signs and symptoms	Contact with this material will cause burns to the skin, eyes and mucous membranes. Symptoms may include redness, edema, drying, defatting and cracking of the skin.
Potential environmental effects	Components of this product are hazardous to aquatic life. May cause long-term adverse effects in the environment.

3. Composition / Information on Ingredients

Components	CAS #	Percent
POTASSIUM PERMANGANATE	7722-64-7	60 - 100
Other components below reportable levels		1 - 5

4. First Aid Measures

First aid procedures

Eye contact	Immediately flush eyes with plenty of water for at least 15 minutes. If a contact lens is present, DO NOT delay irrigation or attempt to remove the lens. Continue rinsing. Get medical attention immediately.

Skin contact	Before washing use a dry brush to remove dust from skin. Remove and isolate contaminated clothing and shoes. Immediately flush skin with plenty of water. Get medical attention immediately. For minor skin contact, avoid spreading material on unaffected skin. Wash clothing separately before reuse.
Inhalation	Move to fresh air. If symptoms are experienced, remove source of contamination or move victim to fresh air. Get medical attention if symptoms persist.
Ingestion	IF SWALLOWED: Immediately call a POISON CENTER or doctor/physician. Never give anything by mouth to a victim who is unconscious or is having convulsions. Rinse mouth thoroughly. Do not induce vomiting without advice from poison control center. If vomiting occurs, keep head low so that stomach content doesn't get into the lungs. Induce artificial respiration with the aid of a pocket mask equipped with a one-way valve or other proper respiratory medical device.
General advice	If you feel unwell, seek medical advice (show the label where possible). Ensure that medical personnel are aware of the material(s) involved, and take precautions to protect themselves. Show this safety data sheet to the doctor in attendance. Do not use mouth-to-mouth method if victim ingested the substance.

5. Fire Fighting Measures

Flammable properties	Contact with combustible material may cause fire. These substances will accelerate burning when involved in a fire. Some will react explosively with hydrocarbons (fuels). Runoff may create fire or explosion hazard.
Extinguishing media	
Suitable extinguishing media	Water.
Unsuitable extinguishing media	Dry chemicals or foams.
Protection of firefighters	
Specific hazards arising from the chemical	Fire may produce irritating, corrosive and/or toxic gases. Some may decompose explosively when heated or involved in a fire.
Protective equipment for firefighters	Firefighters should wear full protective clothing including self contained breathing apparatus.
Fire fighting equipment/instructions	Do not move cargo or vehicle if cargo has been exposed to heat. If tank, rail car or tank truck is involved in a fire, ISOLATE for 800 meters (1/2 mile) in all directions; also consider initial evacuation for 800 meters (1/2 mile) in all directions. ALWAYS stay away from tanks engulfed in flame. Move containers from fire area if you can do so without risk. In the event of fire, cool tanks with water spray. For massive fire in cargo area, use unmanned hose holder or monitor nozzles, if possible. If not, withdraw and let fire burn out.
Specific methods	Cool containers exposed to flames with water until well after the fire is out.
Explosion data	
Sensitivity to static discharge	Not available.
Sensitivity to mechanical impact	Not available.

6. Accidental Release Measures

Personal precautions	Keep unnecessary personnel away. Do not touch damaged containers or spilled material unless wearing appropriate protective clothing. Keep people away from and upwind of spill/leak. Keep upwind. Ventilate closed spaces before entering them.
Environmental precautions	Prevent further leakage or spillage if safe to do so. Runoff from fire control or dilution water may cause pollution. Do not contaminate water.
Methods for containment	ELIMINATE all ignition sources (no smoking, flares, sparks or flames in immediate area). Stop leak if you can do so without risk. This material is classified as a water pollutant under the Clean Water Act and should be prevented from contaminating soil or from entering sewage and drainage systems which lead to waterways.

Methods for cleaning up

Should not be released into the environment.

Large Spills: Do not get water inside container. Use clean non-sparking tools to collect absorbed material. Following product recovery, flush area with water.

Small Spills: Clean surface thoroughly to remove residual contamination. Clean up in accordance with all applicable regulations. For waste disposal, see section 13 of the MSDS.

Other information

Clean up in accordance with all applicable regulations.

7. Handling and Storage

Handling

DO NOT handle, store or open near an open flame, sources of heat or sources of ignition. Protect material from direct sunlight. When using do not smoke. Do not get this material in contact with eyes. Do not get this material in contact with skin. Do not get this material on clothing. Avoid prolonged exposure. Avoid release to the environment.

Storage

Keep away from heat and sources of ignition. Store in a closed container away from incompatible materials. Keep out of the reach of children.

8. Exposure Controls / Personal Protection

Occupational exposure limits

US. ACGIH Threshold Limit Values

Material	Type	Value
Hydrex 9571	TWA	0.2 mg/m3

Canada. Alberta OELs (Occupational Health & Safety Code, Schedule 1, Table 2)

Material	Type	Value
Hydrex 9571	TWA	0.2 mg/m3

Canada. British Columbia OELs. (Occupational Exposure Limits for Chemical Substances, Occupational Health and Safety Regulation 296/97, as amended)

Material	Type	Value
Hydrex 9571	TWA	0.2 mg/m3

Canada. Ontario OELs. (Control of Exposure to Biological or Chemical Agents)

Material	Type	Value
Hydrex 9571	TWA	0.2 mg/m3

Canada. Quebec OELs. (Ministry of Labor - Regulation Respecting the Quality of the Work Environment)

Material	Type	Value	Form
Hydrex 9571	TWA	5 mg/m3	Dust.

US. OSHA Table Z-1 Limits for Air Contaminants (29 CFR 1910.1000)

Material	Type	Value
Hydrex 9571	Ceiling	5 mg/m3

Engineering controls

Good general ventilation (typically 10 air changes per hour) should be used. Ventilation rates should be matched to conditions. If applicable, use process enclosures, local exhaust ventilation, or other engineering controls to maintain airborne levels below recommended exposure limits. If exposure limits have not been established, maintain airborne levels to an acceptable level.

Personal protective equipment

Eye / face protection

Do not get in eyes. Chemical goggles are recommended.

Skin protection

Do not get this material in contact with skin. Chemical resistant gloves.

Respiratory protection

Use a positive-pressure air-supplied respirator if there is any potential for an uncontrolled release, exposure levels are not known, or any other circumstances where air-purifying respirators may not provide adequate protection. If ventilation is not sufficient to effectively prevent buildup of aerosols or mists, appropriate NIOSH/MSHA respiratory protection must be provided.

9. Physical & Chemical Properties

Physical state

Solid.

Form

Solid.

Color

Dark purple

Odor

Odorless.

Other data

Decomposition temperature	464 °F (240 °C) Decomp at about 240°C with evolution of oxygen; decomp by alcohol and many other org solvents, also by concn acids with liberation of oxygen; with hydrochloric acid, chlorine liberated; readily decomp by many reducing substances, such as ferrous salts, io
Density	1.45 - 1.60 g/cm³

10. Chemical Stability & Reactivity Information

Chemical stability	Decomposes on heating.
Conditions to avoid	Avoid temperatures exceeding the decomposition temperature.
Incompatible materials	Peroxides. Acids. Glycol. Avoid contact with oxidizers or reducing agents. Powdered metal.
Hazardous decomposition products	Irritating and/or toxic fumes and gases may be emitted upon the products decomposition.
Possibility of hazardous reactions	Hazardous polymerization does not occur.

11. Toxicological Information

Toxicological data

Product	Species	Test Results
Hydrex 9571		
Acute		
Oral		
LD50	Guinea pig	>= 800 mg/kg, Calculated
	Mouse	>= 700 mg/kg, Calculated
	Rat	525 - 780 mg/kg, 14 days, Calculated

* Estimates for product may be based on additional component data not shown.

Acute effects	Causes burns.
Chronic effects	Prolonged inhalation may be harmful. Not expected to be hazardous by WHMIS criteria.

12. Ecological Information

Ecotoxicological data

Product		Species	Test Results
Hydrex 9571			
Other	LC50	Rainbow Trout	1.8 mg/l, 96 hr
Aquatic			
Fish	LC50	Bluegill (Lepomis macrochirus)	2.3 mg/l, 96 hr
		Milkfish, salmon-herring (Chanos chanos)	> 1.4 mg/l, 96 hours

* Estimates for product may be based on additional component data not shown.

Ecotoxicity	Components of this product are hazardous to aquatic life.
Environmental effects	Harmful to aquatic organisms.
Persistence and degradability	Not available.

13. Disposal Considerations

Disposal instructions	Consult authorities before disposal. Incinerate the material under controlled conditions in an approved incinerator. Do not incinerate sealed containers. Do not allow this material to drain into sewers/water supplies. Dispose in accordance with all applicable regulations.
Contaminated packaging	Empty containers should be taken to an approved waste handling site for recycling or disposal.

14. Transport Information

TDG

UN number	UN1490

UN proper shipping name	Potassium Permanganate
Hazard class	5.1
Packing group	II
Special provisions	16

IATA

UN number	UN1479
UN proper shipping name	Oxidizing solid, n.o.s. (POTASSIUM PERMANGANATE)
Transport hazard class(es)	5.1
Packing group	III
ERG code	5L

IATA; TDG

15. Regulatory Information

Canadian regulations This product has been classified in accordance with the hazard criteria of the CPR and the MSDS contains all the information required by the CPR.

WHMIS status Controlled

WHMIS classification C - Oxidizing
D2B - Other Toxic Effects-TOXIC

WHMIS labeling

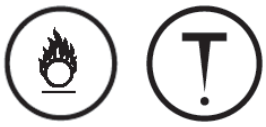

Inventory status

Country(s) or region	Inventory name	On inventory (yes/no)*
Australia	Australian Inventory of Chemical Substances (AICS)	Yes
Canada	Domestic Substances List (DSL)	Yes
Canada	Non-Domestic Substances List (NDSL)	No
China	Inventory of Existing Chemical Substances in China (IECSC)	Yes
Europe	European Inventory of Existing Commercial Chemical Substances (EINECS)	Yes
Europe	European List of Notified Chemical Substances (ELINCS)	No
Japan	Inventory of Existing and New Chemical Substances (ENCS)	Yes
Korea	Existing Chemicals List (ECL)	Yes
New Zealand	New Zealand Inventory	Yes
Philippines	Philippine Inventory of Chemicals and Chemical Substances (PICCS)	Yes
United States & Puerto Rico	Toxic Substances Control Act (TSCA) Inventory	Yes

*A "Yes" indicates that all components of this product comply with the inventory requirements administered by the governing country(s)

16. Other Information

Further information HMIS® is a registered trade and service mark of the NPCA.

HMIS® ratings	Health: 1 Flammability: 0 Physical hazard: 0 Personal protection: E
NFPA ratings	Health: 1 Flammability: 0 Instability: 0 Special hazards: OX
Disclaimer	Veolia Water Solutions & Technologies is not able to anticipate all conditions under which this information and its product, or the products of other manufacturers in combination with its product, may be used. It is the user's responsibility to ensure safe conditions for handling, storage and disposal of the product, and to assume liability for loss, injury, damage or expense due to improper use and or non respect of Veolia Water Solutions & Technologies' requirement.
This data sheet contains changes from the previous version in section(s):	Product and Company Identification: Product Review Toxicological Information: Toxicological Data Transport Information: Material Transportation Information

SAFETY DATA SHEET

SECTION 1: Identification of the substance/mixture and of the company/undertaking

1.1. Product identifier

Trade name or designation of the mixture	NaOH 1N
Registration number	-
Synonyms	None.
Issue date	02-February-2017
Version number	01

1.2. Relevant identified uses of the substance or mixture and uses advised against

Identified uses	Not available.
Uses advised against	None known.

1.3. Details of the supplier of the safety data sheet

Supplier	Veolia Water STI
Address	Z.A.C. du Haut de Wissous - 3, avenue Le Concorde 91325 Wissous Cedex - FRANCE www.veoliawatersti.fr
Contact person	Hydrex Product Manager
Telephone	+33 (0)1 69 75 25 75
Fax	+33 (0)1 69 75 27 01
e-mail	hydrex.vwtfr@veolia.com
1.4. Emergency telephone number	+1-760-476-3961 (Code: 333239)

SECTION 2: Hazards identification

2.1. Classification of the substance or mixture

The mixture has been assessed and/or tested for its physical, health and environmental hazards and the following classificatior applies.

Classification according to Regulation (EC) No 1272/2008 as amended

Health hazards

Skin corrosion/irritation	Category 1B	H314 - Causes severe skin burns and eye damage.
Serious eye damage/eye irritation	Category 2	H319 - Causes serious eye irritation.

Hazard summary Causes severe skin burns and eye damage. Causes serious eye irritation. Occupational exposure to the substance or mixture may cause adverse health effects.

2.2. Label elements

Label according to Regulation (EC) No. 1272/2008 as amended

Hazard pictograms

Signal word Danger

Hazard statements

H314	Causes severe skin burns and eye damage.
H315	Causes skin irritation.
H319	Causes serious eye irritation.

Precautionary statements

Prevention

P260	Do not breathe mist or vapour.
P264	Wash hands thoroughly after handling.
P280	Wear protective gloves/protective clothing/eye protection/face protection.

Response

P301 + P330 + P331	IF SWALLOWED: rinse mouth. Do NOT induce vomiting.
P303 + P361 + P353	IF ON SKIN (or hair): Take off immediately all contaminated clothing. Rinse skin with water/shower.
P304 + P340	IF INHALED: Remove person to fresh air and keep comfortable for breathing.
P305 + P351 + P338	IF IN EYES: Rinse cautiously with water for several minutes. Remove contact lenses, if present and easy to do. Continue rinsing.
P312	Call a POISON CENTER/doctor/paramedic if you feel unwell.
P337 + P313	If eye irritation persists: Get medical advice/attention.
P342 + P311	If experiencing respiratory symptoms: Call a poison center/doctorparamedic.
P363	Wash contaminated clothing before reuse.

Storage Not available.

Disposal

P501 Dispose of contents/container in accordance with local/regional/national/international regulations.

Supplemental label information None.

2.3. Other hazards None known.

SECTION 3: Composition/information on ingredients

3.2. Mixtures

General information

Chemical name	%	CAS-No. / EC No.	REACH Registration No.	INDEX No.	Notes
Sodium hydroxide	1 - < 5	1310-73-2 215-185-5	01-2119457892-27-xxxx	011-002-00-6	
Classification:	Skin Corr. 1A;H314				
Other components below reportable levels	90 - 100				

List of abbreviations and symbols that may be used above

#: This substance has been assigned Union workplace exposure limit(s).
M: M-factor
PBT: persistent, bioaccumulative and toxic substance.
vPvB: very persistent and very bioaccumulative substance.
All concentrations are in percent by weight unless ingredient is a gas. Gas concentrations are in percent by volume.

Composition comments The full text for all H-statements is displayed in section 16.

SECTION 4: First aid measures

General information Ensure that medical personnel are aware of the material(s) involved, and take precautions to protect themselves.

4.1. Description of first aid measures

Inhalation Move to fresh air. Call a physician if symptoms develop or persist.

Skin contact Take off immediately all contaminated clothing. Rinse skin with water/shower. Call a physician or poison control centre immediately. Chemical burns must be treated by a physician. Wash contaminated clothing before reuse.

Eye contact Immediately flush eyes with plenty of water for at least 15 minutes. Remove contact lenses, if present and easy to do. Continue rinsing. Call a physician or poison control centre immediately.

Ingestion Call a physician or poison control centre immediately. Rinse mouth. Do not induce vomiting. If vomiting occurs, keep head low so that stomach content doesn't get into the lungs.

4.2. Most important symptoms and effects, both acute and delayed Burning pain and severe corrosive skin damage. Causes serious eye damage. Symptoms may include stinging, tearing, redness, swelling, and blurred vision. Permanent eye damage including blindness could result.

4.3. Indication of any immediate medical attention and special treatment needed Provide general supportive measures and treat symptomatically. Chemical burns: Flush with water immediately. While flushing, remove clothes which do not adhere to affected area. Call an ambulance. Continue flushing during transport to hospital. Keep victim under observation. Symptoms may be delayed.

SECTION 5: Firefighting measures

General fire hazards No unusual fire or explosion hazards noted.

5.1. Extinguishing media

Suitable extinguishing media Water fog. Foam. Dry chemical powder. Carbon dioxide (CO2).

Unsuitable extinguishing media	Not available.
5.2. Special hazards arising from the substance or mixture	During fire, gases hazardous to health may be formed.
5.3. Advice for firefighters	
Special protective equipment for firefighters	Self-contained breathing apparatus and full protective clothing must be worn in case of fire.
Special fire fighting procedures	Move containers from fire area if you can do so without risk.
Specific methods	Use standard firefighting procedures and consider the hazards of other involved materials.

SECTION 6: Accidental release measures

6.1. Personal precautions, protective equipment and emergency procedures

For non-emergency personnel	Keep unnecessary personnel away. Keep people away from and upwind of spill/leak. Wear appropriate protective equipment and clothing during clean-up. Do not breathe mist or vapour. Do not touch damaged containers or spilled material unless wearing appropriate protective clothing. Ensure adequate ventilation. Local authorities should be advised if significant spillages cannot be contained. For personal protection, see section 8.
For emergency responders	Keep unnecessary personnel away. Use personal protection recommended in Section 8 of the SDS.
6.2. Environmental precautions	Avoid discharge into drains, water courses or onto the ground.
6.3. Methods and material for containment and cleaning up	Large Spills: Stop the flow of material, if this is without risk. Dike the spilled material, where this is possible. Absorb in vermiculite, dry sand or earth and place into containers. Following product recovery, flush area with water. Small Spills: Wipe up with absorbent material (e.g. cloth, fleece). Clean surface thoroughly to remove residual contamination. Never return spills to original containers for re-use.
6.4. Reference to other sections	For personal protection, see section 8. For waste disposal, see section 13 of the SDS.

SECTION 7: Handling and storage

7.1. Precautions for safe handling	Avoid forming spray/aerosol mists. Do not breathe mist or vapour. Do not get in eyes, on skin, or on clothing. Avoid prolonged exposure. Provide adequate ventilation. Wear appropriate personal protective equipment. Observe good industrial hygiene practices.
7.2. Conditions for safe storage, including any incompatibilities	Protect from sunlight. Store in original tightly closed container. Store away from incompatible materials (see Section 10 of the SDS). Store in cool, dry place.
7.3. Specific end use(s)	Not available.

SECTION 8: Exposure controls/personal protection

8.1. Control parameters

Occupational exposure limits

France. Threshold Limit Values (VLEP) for Occupational Exposure to Chemicals in France, INRS ED 984

Components	Type	Value
Sodium hydroxide (CAS 1310-73-2)	VME	2 mg/m3

Biological limit values	No biological exposure limits noted for the ingredient(s).
Recommended monitoring procedures	Follow standard monitoring procedures.
Derived no-effect level (DNEL)	Not available.
Predicted no effect concentrations (PNECs)	Not available.

8.2. Exposure controls

Appropriate engineering controls

Good general ventilation (typically 10 air changes per hour) should be used. Ventilation rates should be matched to conditions. If applicable, use process enclosures, local exhaust ventilation, or other engineering controls to maintain airborne levels below recommended exposure limits. If exposure limits have not been established, maintain airborne levels to an acceptable level. Eye wash facilities and emergency shower must be available when handling this product.

Individual protection measures, such as personal protective equipment

General information

Use personal protective equipment as required. Personal protection equipment should be chosen according to the CEN standards and in discussion with the supplier of the personal protective equipment.

Eye/face protection

Wear safety glasses with side shields (or goggles). Before any handling, wear protective glasses side-shields complying with the NF EN 166.

Skin protection

- Hand protection

Chemical resistant gloves. Suitable gloves can be recommended by the glove supplier.

- Other

Wear appropriate chemical resistant clothing. Chemical resistant gloves.

Respiratory protection

In case of insufficient ventilation, wear suitable respiratory equipment. Avoid forming spray/aerosol mists.

Thermal hazards

Wear appropriate thermal protective clothing, when necessary.

Hygiene measures

Always observe good personal hygiene measures, such as washing after handling the material and before eating, drinking, and/or smoking. Routinely wash work clothing and protective equipment to remove contaminants.

Environmental exposure controls

Environmental manager must be informed of all major releases.

SECTION 9: Physical and chemical properties

9.1. Information on basic physical and chemical properties

Appearance

Physical state: Liquid.

Form: Liquid.

Colour: Colourless.

Odour: Odourless.

pH: 12

Melting point/freezing point: Not available.

Initial boiling point and boiling range: Not available.

Flash point: Not available.

Flammability (solid, gas): Not applicable.

Vapour pressure: Not available.

Solubility(ies)

Solubility (water): Not available.

Solubility (other): Not available.

Partition coefficient (n-octanol/water): Not available.

Viscosity: Not available.

Explosive properties: Not explosive.

Oxidising properties: Not oxidising.

9.2. Other information

Density: 1,00 g/cm³

SECTION 10: Stability and reactivity

10.1. Reactivity

Reacts violently with strong acids. This product may react with oxidizing agents.

10.2. Chemical stability

Material is stable under normal conditions.

10.3. Possibility of hazardous reactions

No dangerous reaction known under conditions of normal use.

10.4. Conditions to avoid

Contact with incompatible materials. Do not mix with other chemicals.

10.5. Incompatible materials Strong acids. Acids. Oxidizing agents.

10.6. Hazardous decomposition products No hazardous decomposition products are known.

SECTION 11: Toxicological information

General information Occupational exposure to the substance or mixture may cause adverse effects.

Information on likely routes of exposure

Inhalation May cause irritation to the respiratory system. Prolonged inhalation may be harmful.

Skin contact Causes severe skin burns.

Eye contact Causes serious eye damage.

Ingestion Causes digestive tract burns.

Symptoms Burning pain and severe corrosive skin damage. Causes serious eye damage. Symptoms may include stinging, tearing, redness, swelling, and blurred vision. Permanent eye damage including blindness could result.

11.1. Information on toxicological effects

Components	Species	Test results
Sodium hydroxide (CAS 1310-73-2)		
Acute		
Dermal		
Solid		
LD50	Rabbit	1350 mg/kg
Oral		
Solid		
LD50	Rat	> 300 mg/kg
Liquid		
LD50	Rat	> 300 mg/kg

* Estimates for product may be based on additional component data not shown.

Skin corrosion/irritation Causes severe skin burns and eye damage.

Serious eye damage/eye irritation Causes serious eye damage.

Respiratory sensitisation Due to partial or complete lack of data the classification is not possible.

Skin sensitisation Due to partial or complete lack of data the classification is not possible.

Germ cell mutagenicity Due to partial or complete lack of data the classification is not possible.

Carcinogenicity Due to partial or complete lack of data the classification is not possible.

Reproductive toxicity Due to partial or complete lack of data the classification is not possible.

Specific target organ toxicity - single exposure Due to partial or complete lack of data the classification is not possible.

Specific target organ toxicity - repeated exposure Due to partial or complete lack of data the classification is not possible.

Aspiration hazard Due to partial or complete lack of data the classification is not possible.

Mixture versus substance information No information available.

Other information Not available.

SECTION 12: Ecological information

12.1. Toxicity Based on available data, the classification criteria are not met for hazardous to the aquatic environment.

Components		Species	Test results
Sodium hydroxide (CAS 1310-73-2)			
Aquatic			
Acute			
Crustacea	EC50	Water flea (Ceriodaphnia dubia)	34,59 - 47,13 mg/l, 48 hours
Fish	LC50	Western mosquitofish (Gambusia affinis)	125 mg/l, 96 hours

* Estimates for product may be based on additional component data not shown.

12.2. Persistence and degradability	No data is available on the degradability of this product.
12.3. Bioaccumulative potential	No data available.
Partition coefficient n-octanol/water (log Kow)	Not available.
Bioconcentration factor (BCF)	Not available.
12.4. Mobility in soil	No data available.
12.5. Results of PBT and vPvB assessment	Not available.
12.6. Other adverse effects	No other adverse environmental effects (e.g. ozone depletion, photochemical ozone creation potential, endocrine disruption, global warming potential) are expected from this component.

SECTION 13: Disposal considerations

13.1. Waste treatment methods

Residual waste	Dispose of in accordance with local regulations. Empty containers or liners may retain some product residues. This material and its container must be disposed of in a safe manner (see: Disposal instructions).
Contaminated packaging	Since emptied containers may retain product residue, follow label warnings even after container is emptied. Empty containers should be taken to an approved waste handling site for recycling or disposal.
EU waste code	The Waste code should be assigned in discussion between the user, the producer and the waste disposal company.
Disposal methods/information	Collect and reclaim or dispose in sealed containers at licensed waste disposal site. Dispose of contents/container in accordance with local/regional/national/international regulations.
Special precautions	Dispose in accordance with all applicable regulations.

SECTION 14: Transport information

ADR

14.1. UN number	UN3266
14.2. UN proper shipping name	Corrosive liquid, basic, inorganic, n.o.s.
14.3. Transport hazard class(es)	
Class	8
Subsidiary risk	-
Label(s)	8
Hazard No. (ADR)	80
Tunnel restriction code	E
14.4. Packing group	II
14.5. Environmental hazards	No.
14.6. Special precautions for user	Read safety instructions, SDS and emergency procedures before handling.

RID

14.1. UN number	UN3266
14.2. UN proper shipping name	Corrosive liquid, basic, inorganic, n.o.s.
14.3. Transport hazard class(es)	
Class	8
Subsidiary risk	-
Label(s)	8
14.4. Packing group	II
14.5. Environmental hazards	No.
14.6. Special precautions for user	Read safety instructions, SDS and emergency procedures before handling.

ADN

14.1. UN number	UN3266
14.2. UN proper shipping name	Corrosive Liquid, Inorganic, N.o.s.
14.3. Transport hazard class(es)	
Class	8

Subsidiary risk -
Label(s) 8

14.4. Packing group II

14.5. Environmental hazards No.

14.6. Special precautions for user Read safety instructions, SDS and emergency procedures before handling.

IATA

14.1. UN number UN3266

14.2. UN proper shipping name Corrosive liquid, basic, inorganic, n.o.s.

14.3. Transport hazard class(es)

Class 8
Subsidiary risk -

14.4. Packing group II

14.5. Environmental hazards No.

ERG Code 8L

14.6. Special precautions for user Read safety instructions, SDS and emergency procedures before handling.

Other information

Passenger and cargo aircraft Allowed with restrictions.
Cargo aircraft only Allowed with restrictions.

IMDG

14.1. UN number UN3266

14.2. UN proper shipping name CORROSIVE LIQUID, BASIC, INORGANIC, N.O.S.

14.3. Transport hazard class(es)

Class 8
Subsidiary risk -

14.4. Packing group II

14.5. Environmental hazards

Marine pollutant No.

EmS F-A, S-B

14.6. Special precautions for user Read safety instructions, SDS and emergency procedures before handling.

14.7. Transport in bulk according to Annex II of Marpol and the IBC Code Not established.

ADN; ADR; IATA; IMDG; RID

SECTION 15: Regulatory information

15.1. Safety, health and environmental regulations/legislation specific for the substance or mixture

EU regulations

Regulation (EC) No. 1005/2009 on substances that deplete the ozone layer, Annex I and II, as amended

Not listed.

Regulation (EC) No. 850/2004 On persistent organic pollutants, Annex I as amended

Not listed.

Regulation (EU) No. 649/2012 concerning the export and import of dangerous chemicals, Annex I, Part 1 as amended

Not listed.

Regulation (EU) No. 649/2012 concerning the export and import of dangerous chemicals, Annex I, Part 2 as amended

Not listed.

Regulation (EU) No. 649/2012 concerning the export and import of dangerous chemicals, Annex I, Part 3 as amended

Not listed.

Regulation (EU) No. 649/2012 concerning the export and import of dangerous chemicals, Annex V as amended

Not listed.

Regulation (EC) No. 166/2006 Annex II Pollutant Release and Transfer Registry

Not listed.

Regulation (EC) No. 1907/2006, REACH Article 59(10) Candidate List as currently published by ECHA

Not listed.

Authorisations

Regulation (EC) No. 1907/2006, REACH Annex XIV Substances subject to authorization, as amended

Not listed.

Restrictions on use

Regulation (EC) No. 1907/2006, REACH Annex XVII Substances subject to restriction on marketing and use as amended

Not listed.

Directive 2004/37/EC: on the protection of workers from the risks related to exposure to carcinogens and mutagens at work

Not listed.

Directive 92/85/EEC: on the safety and health of pregnant workers and workers who have recently given birth or are breastfeeding

Not listed.

Other EU regulations

Directive 2012/18/EU on major accident hazards involving dangerous substances

Not listed.

Directive 98/24/EC on the protection of the health and safety of workers from the risks related to chemical agents at work

Sodium hydroxide (CAS 1310-73-2)

Directive 94/33/EC on the protection of young people at work

Sodium hydroxide (CAS 1310-73-2)

Other regulations	The product is classified and labelled in accordance with EC directives or respective national laws This Safety Data Sheet complies with the requirements of Regulation (EC) No 1907/2006, as amended.
National regulations	Follow national regulation for work with chemical agents. Young people under 18 years old are not allowed to work with this product according to EU Directive 94/33/EC on the protection of young people at work, as amended.

France Classified Installations (ICPE): Listed substance/ICPE Number

Not listed.

15.2. Chemical safety assessment	No Chemical Safety Assessment has been carried out.

SECTION 16: Other information

List of abbreviations	Not available.
References	Not available.
Information on evaluation method leading to the classification of mixture	The classification for health and environmental hazards is derived by a combination of calculatior methods and test data, if available.
Full text of any H-statements not written out in full under Sections 2 to 15	H314 Causes severe skin burns and eye damage.
Revision information	None.
Training information	Follow training instructions when handling this material.
Disclaimer	Veolia Water Technologies is not able to anticipate all conditions under which this information and its product, or the products of other manufacturers in combination with its product, may be used. It is the user's responsibility to ensure safe conditions for handling, storage and disposal of the product, and to assume liability for loss, injury, damage or expense due to improper use and or non respect of Veolia Water Technologies' requirement.

SAFETY DATA SHEET

1. Identification

Product identifier	**VEOLIA ACTISAND**
Other means of identification	None.
Recommended use	Wastewater Treatment
Recommended restrictions	Workers (and your customers or users in the case of resale) should be informed of the potential presence of respirable dust and respirable crystalline silica as well as their potential hazards. Appropriate training in the proper use and handling of this material should be provided as required under applicable regulations. PROFESSIONAL USE ONLY

Manufacturer/Importer/Supplier/Distributor information

Manufacturer	
Supplier	Veolia Water Technologies Canada Inc.
Address	2000 Argentia Road, Plaza IV, Suite 430 Mississauga, ON L5N 1W1 Canada
Contact Person	Hydrex Product Specialist
Telephone	(905) 286-4846
Fax	(905) 286-0488
e-mail	vwtcanada-hydrex@veolia.com
24-Hour Emergency telephone	+1-760-476-3962 (Code:333239)
Supplier	Not available.

2. Hazard(s) identification

Physical hazards	Not classified.	
Health hazards	Carcinogenicity	Category 1A
Environmental hazards	Not classified.	

Label elements

Signal word	Danger
Hazard statement	May cause cancer.
Precautionary statement	
Prevention	Obtain special instructions before use. Do not handle until all safety precautions have been read and understood. Wear protective gloves/protective clothing/eye protection/face protection.
Response	IF exposed or concerned: Get medical advice/attention.
Storage	Not available.
Disposal	Dispose of contents/container in accordance with local/regional/national/international regulations.
Other hazards	None known.
Supplemental information	None.

3. Composition/information on ingredients

Mixtures

Chemical name	Common name and synonyms	CAS number	%
Crystalline sillica		14808-60-7	100

All concentrations are in percent by weight unless ingredient is a gas. Gas concentrations are in percent by volume.

4. First-aid measures

Inhalation	Move to fresh air. Call a physician if symptoms develop or persist.
Skin contact	Wash off with soap and water. Get medical attention if irritation develops and persists.
Eye contact	Rinse with water. Get medical attention if irritation develops and persists.
Ingestion	Rinse mouth. Get medical attention if symptoms occur.
Most important symptoms/effects, acute and delayed	Coughing.
Indication of immediate medical attention and special treatment needed	Provide general supportive measures and treat symptomatically. Keep victim under observation. Symptoms may be delayed.
General information	IF exposed or concerned: Get medical advice/attention. Ensure that medical personnel are aware of the material(s) involved, and take precautions to protect themselves.

5. Fire-fighting measures

Suitable extinguishing media	Water fog. Foam. Dry chemical powder. Carbon dioxide (CO2).
Unsuitable extinguishing media	Not available.
Specific hazards arising from the chemical	During fire, gases hazardous to health may be formed.
Special protective equipment and precautions for firefighters	Self-contained breathing apparatus and full protective clothing must be worn in case of fire.
Fire fighting equipment/instructions	Use water spray to cool unopened containers.
Specific methods	Use standard firefighting procedures and consider the hazards of other involved materials.
General fire hazards	No unusual fire or explosion hazards noted.

6. Accidental release measures

Personal precautions, protective equipment and emergency procedures	Keep unnecessary personnel away. Keep people away from and upwind of spill/leak. Wear appropriate protective equipment and clothing during clean-up. Ensure adequate ventilation. Local authorities should be advised if significant spillages cannot be contained. For personal protection, see section 8 of the SDS.
Methods and materials for containment and cleaning up	The product is immiscible with water and will spread on the water surface. Stop the flow of material, if this is without risk. Following product recovery, flush area with water. For waste disposal, see section 13 of the SDS.
Environmental precautions	Avoid discharge into drains, water courses or onto the ground.

7. Handling and storage

Precautions for safe handling	Obtain special instructions before use. Do not handle until all safety precautions have been read and understood. Keep formation of airborne dusts to a minimum. Provide appropriate exhaust ventilation at places where dust is formed. Do not breathe dust. Avoid prolonged exposure. Should be handled in closed systems, if possible. Wear appropriate personal protective equipment. Observe good industrial hygiene practices.
Conditions for safe storage, including any incompatibilities	Protect from sunlight. Store in original tightly closed container. Store away from incompatible materials (see Section 10 of the SDS). Store in cool, dry place.

8. Exposure controls/personal protection

Occupational exposure limits

US. ACGIH Threshold Limit Values

Material	Type	Value	Form
VEOLIA ACTISAND	TWA	0.025 mg/m3	Respirable fraction.

Components	Type	Value	Form
Crystalline sillica (CAS 14808-60-7)	TWA	0.025 mg/m3	Respirable fraction.

Canada. Alberta OELs (Occupational Health & Safety Code, Schedule 1, Table 2)

Material	Type	Value	Form
VEOLIA ACTISAND	TWA	0.025 mg/m3	Respirable particles.

Components	Type	Value	Form
Crystalline sillica (CAS 14808-60-7)	TWA	0.025 mg/m3	Respirable particles.

Canada. British Columbia OELs. (Occupational Exposure Limits for Chemical Substances, Occupational Health and Safety Regulation 296/97, as amended)

Material	Type	Value	Form
VEOLIA ACTISAND	TWA	0.025 mg/m3	Respirable fraction.

Components	Type	Value	Form
Crystalline sillica (CAS 14808-60-7)	TWA	0.025 mg/m3	Respirable fraction.

Canada. Manitoba OELs (Reg. 217/2006, The Workplace Safety And Health Act)

Components	Type	Value	Form
Crystalline sillica (CAS 14808-60-7)	TWA	0.025 mg/m3	Respirable fraction.

Canada. Ontario OELs. (Control of Exposure to Biological or Chemical Agents)

Material	Type	Value	Form
VEOLIA ACTISAND	TWA	0.1 mg/m3	Respirable.

Components	Type	Value	Form
Crystalline sillica (CAS 14808-60-7)	TWA	0.1 mg/m3	Respirable.

Canada. Quebec OELs. (Ministry of Labor - Regulation Respecting the Quality of the Work Environment)

Material	Type	Value	Form
VEOLIA ACTISAND	TWA	0.1 mg/m3	Respirable dust.

Components	Type	Value	Form
Crystalline sillica (CAS 14808-60-7)	TWA	0.1 mg/m3	Respirable dust.

Biological limit values No biological exposure limits noted for the ingredient(s).

Exposure guidelines Occupational exposure to nuisance dust (total and respirable) and respirable crystalline silica should be monitored and controlled.

Appropriate engineering controls Good general ventilation (typically 10 air changes per hour) should be used. Ventilation rates should be matched to conditions. If applicable, use process enclosures, local exhaust ventilation, or other engineering controls to maintain airborne levels below recommended exposure limits. If exposure limits have not been established, maintain airborne levels to an acceptable level.

Individual protection measures, such as personal protective equipment

Eye/face protection Wear safety glasses with side shields (or goggles).

Skin protection

Hand protection Chemical resistant gloves. Suitable gloves can be recommended by the glove supplier.

Other Use of an impervious apron is recommended. Chemical resistant gloves.

Respiratory protection Use a particulate filter respirator for particulate concentrations exceeding the Occupational Exposure Limit.

Thermal hazards Not available.

General hygiene considerations Observe any medical surveillance requirements. Always observe good personal hygiene measures, such as washing after handling the material and before eating, drinking, and/or smoking. Routinely wash work clothing and protective equipment to remove contaminants.

9. Physical and chemical properties

Appearance

Physical state Solid.

Form Solid.

Color Not available.

Odor	Not available.
Odor threshold	Not available.
pH	Not available.
Melting point/freezing point	Not available.
Initial boiling point and boiling range	Not available.
Flash point	Not available.
Evaporation rate	Not available.
Flammability (solid, gas)	Not available.
Upper/lower flammability or explosive limits	
Flammability limit - lower (%)	Not available.
Flammability limit - upper (%)	Not available.
Explosive limit - lower (%)	Not available.
Explosive limit - upper (%)	Not available.
Vapor pressure	< 0.0000001 kPa at 25 °C
Vapor density	Not available.
Relative density	Not available.
Solubility(ies)	
Solubility (water)	Insoluble
Partition coefficient (n-octanol/water)	Not available.
Auto-ignition temperature	Not available.
Decomposition temperature	Not available.
Viscosity	Not available.
Other information	
Explosive properties	Not explosive.
Heat of combustion (NFPA 30B)	0 kJ/g
Molecular formula	O2Si
Oxidizing properties	Not oxidizing.

10. Stability and reactivity

Reactivity	The product is stable and non-reactive under normal conditions of use, storage and transport.
Chemical stability	Material is stable under normal conditions.
Possibility of hazardous reactions	No dangerous reaction known under conditions of normal use.
Conditions to avoid	Contact with incompatible materials.
Incompatible materials	Powerful oxidizers. Chlorine.
Hazardous decomposition products	No hazardous decomposition products are known.

11. Toxicological information

Information on likely routes of exposure

Inhalation	Prolonged inhalation may be harmful.
Skin contact	No adverse effects due to skin contact are expected.
Eye contact	Direct contact with eyes may cause temporary irritation.
Ingestion	Expected to be a low ingestion hazard.

Symptoms related to the physical, chemical and toxicological characteristics	Coughing.

Information on toxicological effects

Acute toxicity	Not available.
Skin corrosion/irritation	Prolonged skin contact may cause temporary irritation.
Serious eye damage/eye irritation	Direct contact with eyes may cause temporary irritation.

Respiratory or skin sensitization

Respiratory sensitization	Not a respiratory sensitizer.
Skin sensitization	This product is not expected to cause skin sensitization.
Germ cell mutagenicity	No data available to indicate product or any components present at greater than 0.1% are mutagenic or genotoxic.
Carcinogenicity	In 1997, IARC (the International Agency for Research on Cancer) concluded that crystalline silica inhaled from occupational sources can cause lung cancer in humans. However in making the overall evaluation, IARC noted that "carcinogenicity was not detected in all industrial circumstances studied. Carcinogenicity may be dependent on inherent characteristics of the crystalline silica or on external factors affecting its biological activity or distribution of its polymorphs." (IARC Monographs on the evaluation of the carcinogenic risks of chemicals to humans, Silica, silicates dust and organic fibres, 1997, Vol. 68, IARC, Lyon, France.) In June 2003, SCOEL (the EU Scientific Committee on Occupational Exposure Limits) concluded that the main effect in humans of the inhalation of respirable crystalline silica dust is silicosis. "There is sufficient information to conclude that the relative risk of lung cancer is increased in persons with silicosis (and, apparently, not in employees without silicosis exposed to silica dust in quarries and in the ceramic industry). Therefore, preventing the onset of silicosis will also reduce the cancer risk..." (SCOEL SUM Doc 94-final, June 2003) According to the current state of the art, worker protection against silicosis can be consistently assured by respecting the existing regulatory occupational exposure limits. May cause cancer. Occupational exposure to respirable dust and respirable crystalline silica should be monitored and controlled.

ACGIH Carcinogens

Crystalline sillica (CAS 14808-60-7)	A2 Suspected human carcinogen.

Canada - Alberta OELs: Carcinogen category

Crystalline sillica (CAS 14808-60-7)	Suspected human carcinogen.

Canada - Manitoba OELs: carcinogenicity

SILICA, CRYSTALLINE-.ALPHA.-QUARTZ, RESPIRABLE FRACTION (CAS 14808-60-7)	Suspected human carcinogen.

Canada - Quebec OELs: Carcinogen category

Crystalline sillica (CAS 14808-60-7)	Suspected carcinogenic effect in humans.

IARC Monographs. Overall Evaluation of Carcinogenicity

Crystalline sillica (CAS 14808-60-7)	1 Carcinogenic to humans.

Reproductive toxicity	This product is not expected to cause reproductive or developmental effects.
Specific target organ toxicity - single exposure	Not classified.
Specific target organ toxicity - repeated exposure	Not classified.
Aspiration hazard	Not an aspiration hazard.
Chronic effects	Prolonged inhalation may be harmful. Prolonged exposure may cause chronic effects.

12. Ecological information

Ecotoxicity	The product is not classified as environmentally hazardous. However, this does not exclude the possibility that large or frequent spills can have a harmful or damaging effect on the environment.
Persistence and degradability	No data is available on the degradability of this product.
Bioaccumulative potential	No data available.
Mobility in soil	No data available.
Other adverse effects	No other adverse environmental effects (e.g. ozone depletion, photochemical ozone creation potential, endocrine disruption, global warming potential) are expected from this component.

13. Disposal considerations

Disposal instructions	Collect and reclaim or dispose in sealed containers at licensed waste disposal site. Dispose of contents/container in accordance with local/regional/national/international regulations.
Local disposal regulations	Dispose in accordance with all applicable regulations.
Hazardous waste code	The waste code should be assigned in discussion between the user, the producer and the waste disposal company.
Waste from residues / unused products	Dispose of in accordance with local regulations. Empty containers or liners may retain some product residues. This material and its container must be disposed of in a safe manner (see: Disposal instructions).
Contaminated packaging	Since emptied containers may retain product residue, follow label warnings even after container is emptied. Empty containers should be taken to an approved waste handling site for recycling or disposal.

14. Transport information

TDG

Not regulated as dangerous goods.

IATA

Not regulated as dangerous goods.

IMDG

Not regulated as dangerous goods.

Transport in bulk according to Annex II of MARPOL 73/78 and the IBC Code Not applicable.

15. Regulatory information

Canadian regulations

Controlled Drugs and Substances Act

Not regulated.

Export Control List (CEPA 1999, Schedule 3)

Not listed.

Greenhouse Gases

Not listed.

Precursor Control Regulations

Not regulated.

International regulations

Stockholm Convention

Not applicable.

Rotterdam Convention

Not applicable.

Kyoto protocol

Not applicable.

Montreal Protocol

Not applicable.

Basel Convention

Not applicable.

International Inventories

Country(s) or region	Inventory name	On inventory (yes/no)*
Australia	Australian Inventory of Chemical Substances (AICS)	Yes
Canada	Domestic Substances List (DSL)	Yes
Canada	Non-Domestic Substances List (NDSL)	No
China	Inventory of Existing Chemical Substances in China (IECSC)	Yes
Europe	European Inventory of Existing Commercial Chemical Substances (EINECS)	Yes
Europe	European List of Notified Chemical Substances (ELINCS)	No

Country(s) or region	Inventory name	On inventory (yes/no)*
Japan	Inventory of Existing and New Chemical Substances (ENCS)	Yes
Korea	Existing Chemicals List (ECL)	Yes
New Zealand	New Zealand Inventory	Yes
Philippines	Philippine Inventory of Chemicals and Chemical Substances (PICCS)	Yes
United States & Puerto Rico	Toxic Substances Control Act (TSCA) Inventory	Yes

*A "Yes" indicates that all components of this product comply with the inventory requirements administered by the governing country(s)
A "No" indicates that one or more components of the product are not listed or exempt from listing on the inventory administered by the governing country(s).

16. Other Information

Issue date 08-16-2016

Version # 01

Disclaimer Veolia Water Technologies is not able to anticipate all conditions under which this information and its product, or the products of other manufacturers in combination with its product, may be used. It is the user's responsibility to ensure safe conditions for handling, storage and disposal of the product, and to assume liability for loss, injury, damage or expense due to improper use and or non respect of Veolia Water Technologies' requirement.

Revision information Product and Company Identification: Product Review

SAFETY DATA SHEET

1. IDENTIFICATION OF THE SUBSTANCE/PREPARATION AND OF THE COMPANY/UNDERTAKING

Identification of the substance/preparation	**Sulphuric Acid 98%**
Use of the substance/preparation	Industrial Process Water Treatment; Water Treatment Chemical
Version #	01
Issue date	12-06-2016
CAS #	Mixture
Manufacturer	
Supplier	VWS, Saudi - Chemical Industries
Address	Prince Musaed Bin Abdul Aziz Street PO Box 58515, Riyadh 11515 Saudi Arabia
Contact Person	Product Manager
Telephone	+966 11 478 7721
Fax	+966 11 478 2560
e-mail	vwsme.hydrex@veolia.com
Global Emergency Contact	+1-760-476-3961 (Code:333239)

2. HAZARDS IDENTIFICATION

This preparation is classified as dangerous according to Directive 1999/45/EC and its amendments.

Classification	C;R35
Physical hazards	Not classified as a physical hazard.
Health hazards	Causes severe burns.
Environmental hazards	Not classified as an environmental hazard.
Specific hazards	Very toxic by inhalation. Causes severe burns. Prolonged exposure may cause chronic effects.
Main symptoms	Contact with this material will cause burns to the skin, eyes and mucous membranes.

3. COMPOSITION/INFORMATION ON INGREDIENTS

Components	CAS #	Percent	EC-No.	Classification
SULFURIC ACID	7664-93-9	50 - < 60	231-639-5	C;R35
Other components below reportable levels		40 - < 50		

Composition comments The full text for all R-phrases is displayed in Section 16 of the SDS.

4. FIRST AID MEASURES

Inhalation	Move to fresh air. For breathing difficulties, oxygen may be necessary. Get medical attention immediately.
Skin contact	Remove and isolate contaminated clothing and shoes. Immediately flush skin with plenty of water. Get medical attention immediately. Wash clothing separately before reuse.
Eye contact	Immediately flush eyes with plenty of water for at least 15 minutes. Get medical attention immediately.
Ingestion	IF SWALLOWED: Immediately call a POISON CENTER or doctor/physician. Rinse mouth thoroughly. Do not induce vomiting without advice from poison control center. Do not use mouth-to-mouth method if victim ingested the substance. Induce artificial respiration with the aid of a pocket mask equipped with a one-way valve or other proper respiratory medical device.
General advice	In case of shortness of breath, give oxygen. In the case of accident or if you feel unwell, seek medical advice immediately (show the label where possible). Ensure that medical personnel are aware of the material(s) involved, and take precautions to protect themselves. Keep victim warm. Do not use mouth-to-mouth method if victim ingested the substance.
Notes to physician	In case of shortness of breath, give oxygen. Keep victim warm.

5. FIRE-FIGHTING MEASURES

Suitable extinguishing media Foam. Powder. Carbon dioxide (CO2).

Extinguishing media which must not be used for safety reasons	DO NOT USE WATER. Alcohol resistant foam.
Unusual fire & explosion hazards	The product is not flammable.
Specific hazards	During fire, gases hazardous to health may be formed.
Special protective equipment for fire-fighters	Self-contained breathing apparatus and full protective clothing must be worn in case of fire.
Fire fighting equipment/instructions	Move containers from fire area if you can do so without risk.
Specific methods	Use standard firefighting procedures and consider the hazards of other involved materials.
Hazardous combustion products	sulfur

6. ACCIDENTAL RELEASE MEASURES

Containment procedures	Stop the flow of material, if this is without risk. Dike the spilled material, where this is possible. Prevent entry into waterways, sewer, basements or confined areas.
Personal precautions	Keep unnecessary personnel away. Keep upwind. Keep out of low areas. Do not touch damaged containers or spilled material unless wearing appropriate protective clothing. Ventilate closed spaces before entering them. For personal protection, see section 8 of the SDS.
Environmental precautions	Contact local authorities in case of spillage to drain/aquatic environment. Prevent further leakage or spillage if safe to do so. Avoid discharge into drains, water courses or onto the ground.
Methods for cleaning up	This product is miscible in water. Large Spills: Stop the flow of material, if this is without risk. Dike the spilled material, where this is possible. Use a non-combustible material like vermiculite, sand or earth to soak up the product and place into a container for later disposal. Following product recovery, flush area with water. Small Spills: Wipe up with absorbent material (e.g. cloth, fleece). Clean surface thoroughly to remove residual contamination. Never return spills to original containers for re-use. This material and its container must be disposed of as hazardous waste. For waste disposal, see section 13 of the SDS. Neutralize with slaked lime (calcium hydroxide) or soda ash (sodium carbonate) and flush with plenty of water.

7. HANDLING AND STORAGE

Handling	Never add water to this product. Avoid forming spray/aerosol mists. Do not breathe dust/fume/gas/mist/vapors/spray. Do not get this material in contact with eyes. Do not get this material in contact with skin.
Storage	Never allow product to get in contact with water during storage. Keep at temperature not exceeding 43 °C. Protect from sunlight. Store in original tightly closed container. Store away from incompatible materials (see Section 10 of the SDS). Store in accordance with local/regional/national/international regulation. Store in cool, dry place.

8. EXPOSURE CONTROLS/PERSONAL PROTECTION

Occupational exposure limits

US. ACGIH Threshold Limit Values

Components	Type	Value	Form
SULFURIC ACID (CAS 7664-93-9)	TWA	0.2 mg/m3	Thoracic fraction.

Bahrain. TLVs. Resolution No. 4 Regarding the Management of Hazardous Chemicals, Exposure Limits for Dangerous and Poisonous Chemicals, Annex. 3

Components	Type	Value
SULFURIC ACID (CAS 7664-93-9)	STEL	3 ppm
	TWA	1 mg/m3

Egypt. OELs. Threshold limits of air pollutants in the workplace (Decree No. 388, Annex 8)

Components	Type	Value
SULFURIC ACID (CAS 7664-93-9)	STEL	3 mg/m3
	TWA	1 mg/m3

Kuwait. OELs. Maximum Limits Allowance for Occupational Exposure to Chemical Substances (TVLs) (Decision No. 210/2001 Appendix No. (3-1))

Components	Type	Value
SULFURIC ACID (CAS 7664-93-9)	STEL	3 mg/m3
	TWA	1 mg/m3

UAE. OELs. Maximum Allowable Limits for Air Pollutants in Working Areas [Law to Protect the Air from Pollution, Resolution of the Cabinet of Ministers No. 12 of 2006]

Components	Type	Value
SULFURIC ACID (CAS 7664-93-9)	STEL	3 mg/m3
	TWA	1 mg/m3

UAE. Abu Dhabi. TLVs. Maximum Allowable Limits for Air Pollutants in Working Areas (AD EHSMS RF - Occupational Standards and Guideline Values, Schedule A)

Components	Type	Value	Form
SULFURIC ACID (CAS 7664-93-9)	TWA	0.2 mg/m3	Thoracic fraction.

UAE. Dubai. OELs. Maximum Allowable Limits for Indoor Air Pollutants. Industrial Operation Regulation IO-11.0: Appendix, Tables 2 & 2A

Components	Type	Value
SULFURIC ACID (CAS 7664-93-9)	STEL	1 mg/m3
	TWA	1 mg/m3

Biological limit values No biological exposure limits noted for the ingredient(s).

Recommended monitoring procedures

Additional exposure data Not available.

Engineering measures to reduce exposure General ventilation normally adequate. Ventilation should effectively remove and prevent buildup of any aerosols or mists generated from the handling of this product.

Personal protective equipment

Respiratory protection Use a particulate filter respirator for particulate concentrations exceeding the Occupational Exposure Limit. Avoid forming spray/aerosol mists. Personal protection equipment should be chosen according to the CEN standards and in discussion with the supplier of the personal protective equipment. Wear a disposable respiratory equipment against droplets or dust and which complies with NF EN 149, category FFP2.

Hand protection or Rubber (natural, latex). Polyvinyl chloride (PVC). Chemical resistant gloves. Nitrile rubber. Wear protective gloves which comply with the NF EN 374. Solvent-resistant gloves (butylrubber).

Eye protection Before any handling, wear protective glasses side-shields complying with the NF EN 166.

Skin and body protection Do not get this material in contact with skin. Wear suitable protective clothing. Chemical resistant gloves. Structural firefighters protective clothing provides limited protection in fire situations ONLY; it is not effective in spill situations. In case of splashing, wear protective chemical clothes (class 6) according to the NF EN 13034, in order to avoid any contact with skin.

General Avoid contact with skin. Avoid contact with eyes. Use personal protective equipment as required. Eye wash fountain is recommended. Keep working clothes separately. In case of splashing, wear protective chemical clothes (class 6) according to the NF EN 13034, in order to avoid any contact with skin.

Environmental exposure controls Environmental manager must be informed of all major releases.

Hygiene measures Wash hands after handling.

9. PHYSICAL AND CHEMICAL PROPERTIES

Appearance Liquid

Physical state Liquid.

Form Not available.

Color Colorless

Odor Not available.

pH < 1

Specific gravity Not available.

Boiling point 626 °F (330 °C)

Flash point Not available.

Flammability limits in air, upper, % by volume	Not available.
Flammability limits in air, lower, % by volume	Not available.
Vapor pressure	0 hPa estimated
Solubility (water)	100 % Exothermic decomp causes a dangerously fast pressure increase.
Partition coefficient (n-octanol/water)	Not available.
Viscosity	26.9 mPa·s (20°C)
Vapor density	Not available.
Evaporation rate	Not available.
Melting point/Freezing point	5 °F (-15 °C)
Auto-ignition temperature	Not available.
VOC	Not available.
Other data	
Density	1.40 - 1.84 g/cm³
Miscible (water)	100 %

10. STABILITY AND REACTIVITY

Conditions to avoid	Exposure to moisture. Reacts violently with strong alkaline substances. None under normal conditions. Avoid exposing to heat and contact with strong oxidizing substances. Do not allow water to get into container because of reaction.
Hazardous decomposition products	Sulphur oxides.
Stability	Material is stable under normal conditions. Material reacts with water.
Materials to avoid	Organic compounds. Metals. Reducing agents. Bases.

11. TOXICOLOGICAL INFORMATION

Toxicological data

Product	Species	Test Results
Sulphuric Acid 98%		
Acute		
Inhalation		
Liquid		
LC50	Rat	0.51 mg/l, 2 hours
Oral		
LD50	Rat	> 2140 mg/kg

* Estimates for product may be based on additional component data not shown.

Acute toxicity	Very toxic by inhalation. Toxic by inhalation. Causes severe burns.
Routes of exposure	Inhalation. Skin contact. Eye contact.
Toxicological information	Occupational exposure to the substance or mixture may cause adverse effects.
Chronic toxicity	Prolonged exposure may cause chronic effects.
Carcinogenicity	Risk of cancer cannot be excluded with prolonged exposure.

Egypt OELs Carcinogen rating

SULFURIC ACID (CAS 7664-93-9)	C2 Suspected human carcinogen.

IARC Monographs. Overall Evaluation of Carcinogenicity

SULFURIC ACID (CAS 7664-93-9)	1 Carcinogenic to humans.

Kuwait OELs (Decision No. 210/): Carcinogen Category

SULFURIC ACID (CAS 7664-93-9)	A2 Suspected human carcinogen.

UAE - Abu Dhabi TLVs: Carcinogen Category

SULFURIC ACID (CAS 7664-93-9)	GROUP A2 Suspected human carcinogen.

Mutagenicity	No data available to indicate product or any components present at greater than 0.1% are mutagenic or genotoxic.
Reproductivity	Not classified.
Epidemiology	No epidemiological data is available for this product.
Local effects	Very toxic by inhalation. Causes severe burns. Irritating to respiratory system. May produce corrosive solutions on contact with water.

Symptoms and target organs Contact with this material will cause burns to the skin, eyes and mucous membranes.

12. ECOLOGICAL INFORMATION

Ecotoxicological data

Product		Species	Test Results
Sulphuric Acid 98%			
Aquatic			
Acute			
Fish	LC50	Fish	> 42 mg/l, 96 hours

* Estimates for product may be based on additional component data not shown.

Ecotoxicity Because of the low pH of this product, it would be expected to produce significant ecotoxicity upon exposure to aquatic organisms and aquatic systems. Not expected to be harmful to aquatic organisms.

Environmental effects An environmental hazard cannot be excluded in the event of unprofessional handling or disposal.

Persistence / degradability

Bioaccumulation No data available.

Aquatic toxicity The product is not classified as environmentally hazardous. However, this does not exclude the possibility that large or frequent spills can have a harmful or damaging effect on the environment.

Mobility This product is miscible in water.

Other adverse effects No other adverse environmental effects (e.g. ozone depletion, photochemical ozone creation potential, endocrine disruption, global warming potential) are expected from this component.

13. DISPOSAL CONSIDERATIONS

Disposal instructions Consult authorities before disposal. This material and its container must be disposed of as hazardous waste. Do not discharge into drains, water courses or onto the ground. Dispose in accordance with all applicable regulations.

Waste from residues / unused products Dispose of in accordance with local regulations. Empty containers or liners may retain some product residues. This material and its container must be disposed of in a safe manner (see: Disposal instructions). Avoid discharge into water courses or onto the ground.

Contaminated packaging Since emptied containers may retain product residue, follow label warnings even after container is emptied. Empty containers should be taken to an approved waste handling site for recycling or disposal.

14. TRANSPORT INFORMATION

DOT

- **UN number** UN1830
- **UN proper shipping name** Sulfuric acid with more than 51 percent acid
- **Transport hazard class(es)**
  - **Class** 8
  - **Subsidiary risk** -
  - **Label(s)** 8
- **Packing group** II
- **Special precautions for user** Read safety instructions, SDS and emergency procedures before handling.
- **Special provisions** A3, A7, B3, B83, B84, IB2, N34, T8, TP2, TP12
- **Packaging exceptions** 154
- **Packaging non bulk** 202
- **Packaging bulk** 242

IATA

- **UN number** UN1830
- **UN proper shipping name** Sulphuric acid with more than 51% acid
- **Transport hazard class(es)**
  - **Class** 8
  - **Subsidiary risk** -
- **Packing group** II
- **Environmental hazards** No.
- **ERG Code** 8L
- **Special precautions for user** Read safety instructions, SDS and emergency procedures before handling.
- **Other information**
  - **Passenger and cargo aircraft** Allowed with restrictions.
  - **Cargo aircraft only** Allowed with restrictions.

IMDG

- **UN number** UN1830

UN proper shipping name	SULPHURIC ACID with more than 51% acid
Transport hazard class(es)	
Class	8
Subsidiary risk	-
Packing group	II
Environmental hazards	
Marine pollutant	No.
EmS	F-A, S-B
Special precautions for user	Read safety instructions, SDS and emergency procedures before handling.
Transport in bulk according to Annex II of MARPOL 73/78 and the IBC Code	Not established.

DOT

IATA; IMDG

15. REGULATORY INFORMATION

Labeling

Contains	SULFURIC ACID
Symbol(s)	

Corrosive

R-phrase(s)	R35 Causes severe burns.
S-phrase(s)	S26 In case of contact with eyes, rinse immediately with plenty of water and seek medical advice. S30 Never add water to this product. S36/37/39 Wear suitable protective clothing, gloves and eye/face protection. S45 In case of accident or if you feel unwell, seek medical advice immediately (show the label where possible). S60 This material and its container must be disposed of as hazardous waste.

Follow national regulation for work with chemical agents.

Bahrain. Chemicals Subject to the Prior Informed Consent Procedure under the Rotterdam Convention (Law No. 14 of 2012, Annex III)

Not listed.

Bahrain. CWC Chemical Substances (Decree No. 6 of 1997, Schedules 1, 2 and 3; Law No. 51 of 2009)

Not listed.

Bahrain. Prohibited Chemicals (Ministry of State for Municipal & Environmental Affairs, Resolution No 7 of 2002, On Control of Importing & Use of Prohibited & Restricted Chemicals, Table 1)

Not listed.

Bahrain. Severely Restricted Chemicals (Ministry of State for Municipal & Environmental Affairs, Resolution No 7 of 2002, On Control of Importing & Use of Prohibited & Restricted Chemicals, Table 2)

Not listed.

Regulatory information

The product is classified and labelled in accordance with EC directives or respective national laws. Young people under 18 years old are not allowed to work with this product according to EU Directive 94/33/EC on the protection of young people at work. This Safety Data Sheet complies with the requirements of Regulation (EC) No 1907/2006, as amended. Young people under 18 years old are not allowed to work with this product according to EU Directive 94/33/EC on the protection of young people at work, as amended.

16. OTHER INFORMATION

Wording of the R-phrases in sections 2 and 3

R35 Causes severe burns.

International Inventories

Country(s) or region	Inventory name	On inventory (yes/no)*
Europe	European Inventory of Existing Commercial Chemical Substances (EINECS)	Yes
Europe	European List of Notified Chemical Substances (ELINCS)	No

*A "Yes" indicates that all components of this product comply with the inventory requirements administered by the governing country(s)
A "No" indicates that one or more components of the product are not listed or exempt from listing on the inventory administered by the governing country(s).

Recommended use

Use in accordance with supplier's recommendations.

Recommended restrictions

PROFESSIONAL USE ONLY

Disclaimer

Veolia Water Technologies is not able to anticipate all conditions under which this information and its product, or the products of other manufacturers in combination with its product, may be used. It is the user's responsibility to ensure safe conditions for handling, storage and disposal of the product, and to assume liability for loss, injury, damage or expense due to improper use and or non respect of Veolia Water Technologies' requirement.

Revision information

This document has undergone significant changes and should be reviewed in its entirety.

Appendix B: Drawings

NO. DESSIN DRAWING NO. 61-693-270-200

FORMAT ARCH D

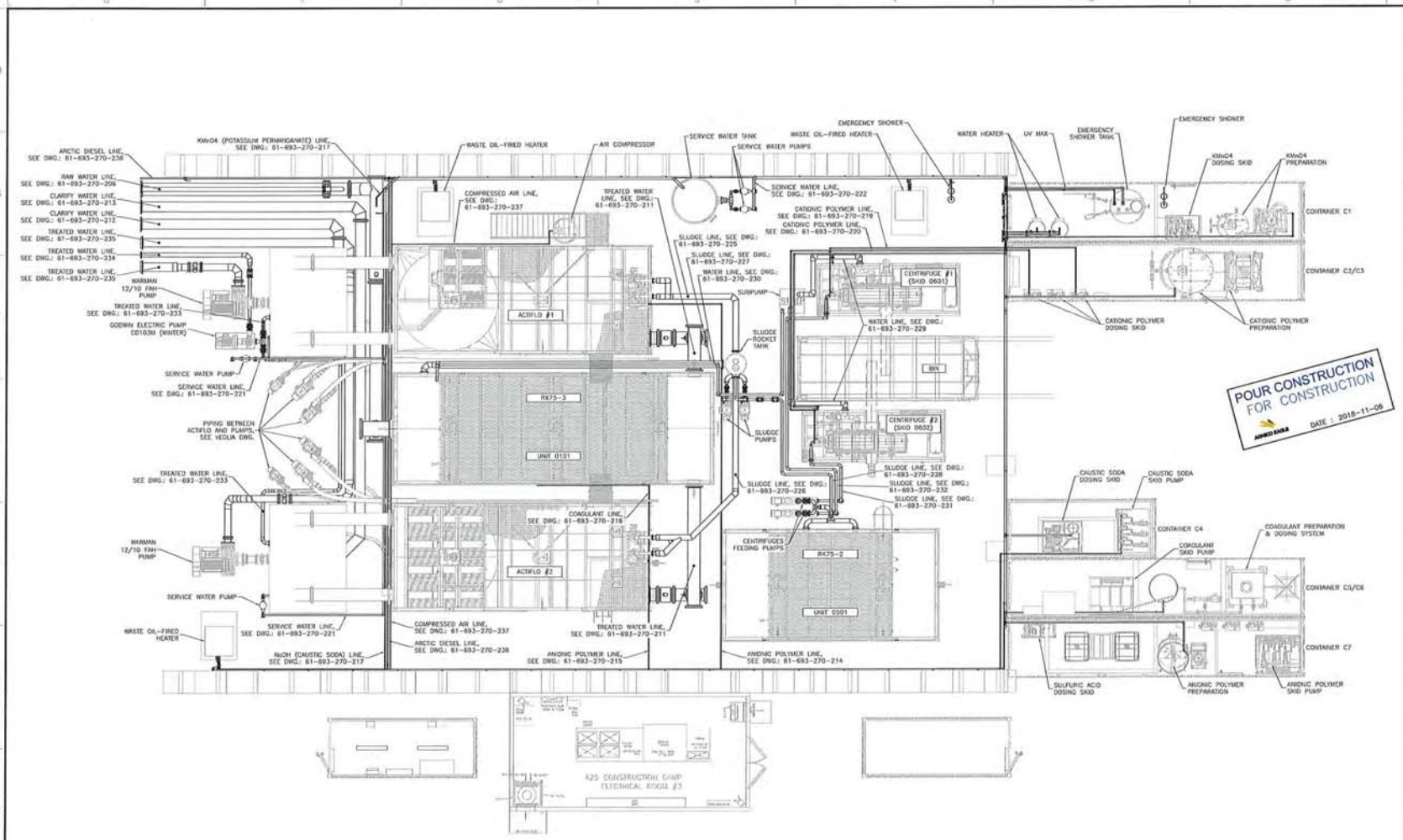

POUR CONSTRUCTION
FOR CONSTRUCTION
AGNICO EAGLE DATE : 2018-11-06

PLAN VIEW
SCALE : 1:75

NOTES GÉNÉRALES / GENERAL NOTES

DESSINS EN RÉFÉRENCE / REFERENCE DRAWINGS

ÉTAT / TITLE	# DWG
WTP – MECHANICAL EQP. LAYOUT	61-693-210-201
WTP – PIPING DETAILS	61-693-270-201B237

AGNICO EAGLE

B	2018-11-06	FOR CONSTRUCTION	S.L.	LGAD	D.LAF
A	2018-07-20	FOR COMMENTS	P.CUTZ	LGAD	D.LAF
REV.	DATE	DESCRIPTION	PAR/BY	APP.	CHAR

REVISIONS

PERMIT TO PRACTICE
SNC - LAVALIN STAVIBEL INC.
Signature
Date 2018-11-06
PERMIT NUMBER: P 718
NT/NU Association of Professional Engineers and Geoscientists

ÉTAT / TITLE
AGNICO EAGLE – AMARUQ DIVISION
693 – FINAL WATER TREATMENT PLANT
270 – PIPING
PLAN VIEW
GENERAL ARRANGEMENT
WTP DISTRIBUTION SYSTEM

DESSINÉ PAR DRAWN BY	PIERRE-OLIVIER CÔTÉ	2018-09-05
VÉRIFIÉ PAR CHECKED BY	ISRAËL SAGNON, P. ENG.	2018-MM-JJ
APPROUVÉ PAR APPROVED BY	ISRAËL SAGNON, P. ENG.	2018-MM-JJ
ÉCHELLE SCALE	1 : 75	DATE 2018-06-06

NO. DESSIN DRAWING NO. 61-693-270-200

NO. PROJET PROJECT NO.	RÉVISION	FEUILLE / SHT
6115	0	1 / 1

AC-CAM-ANSI B

FILE NO. 61-693-270-200-R0.dwg

NO. DESSIN / DRAWING NO. 61-693-210-201

FORMAT ARCH D

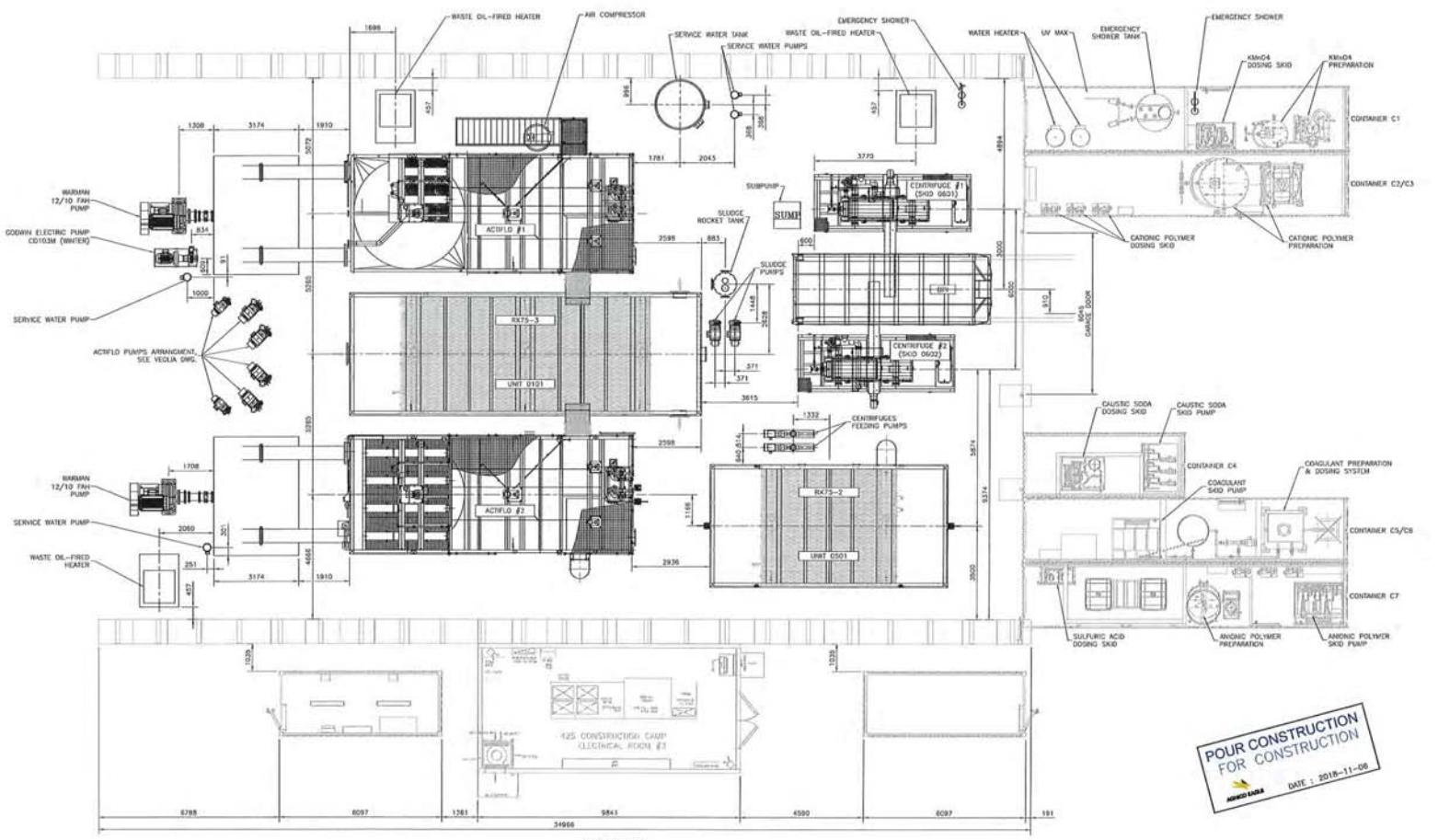

PLAN VIEW
SCALE : 1:75

POUR CONSTRUCTION
FOR CONSTRUCTION
AGNICO EAGLE
DATE : 2018-11-06

NOTES GÉNÉRALES / GENERAL NOTES

PERMIT TO PRACTICE
SNC-LAVALIN STAVIBEL INC.
Signature
Date 2018-11-06
PERMIT NUMBER: P 718
NTNU Association of Professional Engineers and Geoscientists

2018-11-06

DESSINS EN RÉFÉRENCE / REFERENCE DRAWINGS

SYNC / SYLE	# SNC

AGNICO EAGLE

NO.	DATE	DESCRIPTION	PAR/BY	APP. / QUALIF.
0	2018-11-06	PDA CONSTRUCTION	B.L.	S.L.

REVISIONS

SNC-LAVALIN

SNC-Lavalin Stavibel Inc.
550, Sir-Rue-Quad, Bureau 101
Amos (Québec) J9T 3A9
Tél.: 819 732-6356 Téléc.: 819 732-0259
www.snclavalin.com

Projet No. : 653281-0000

SYNC / SYLE
AGNICO EAGLE – AMARUQ DIVISION
693 – FINAL WATER TREATMENT PLANT
210 – GENERAL ARRANGEMENT
PLAN VIEW
MECHANICAL EQUIPMENTS LAYOUT

DESSINÉ PAR / DRAWN BY	BRUNO LEMIEUX, TECH.	2018/10/24
VÉRIFIÉ PAR / CHECKED BY	ISRAËL GAGNON, P. ENG.	2018/10/24
APPROUVÉ PAR / APPROVED BY	ISRAËL GAGNON, P. ENG.	2018/10/24

ÉCHELLE / SCALE 1 : 75 — DATE 2018-11-06

NO. DESSIN / DRAWING NO. 61-693-210-201

NO. PROJET / PROJECT NO. 6115 — REVISION 0 — FEUILLE / SHT 1/1

FILE NO. 61-693-210-201.dwg

NO DESIGN DRAWING NO. 61-695-270-203

FORMAT ARCH D (24x36)

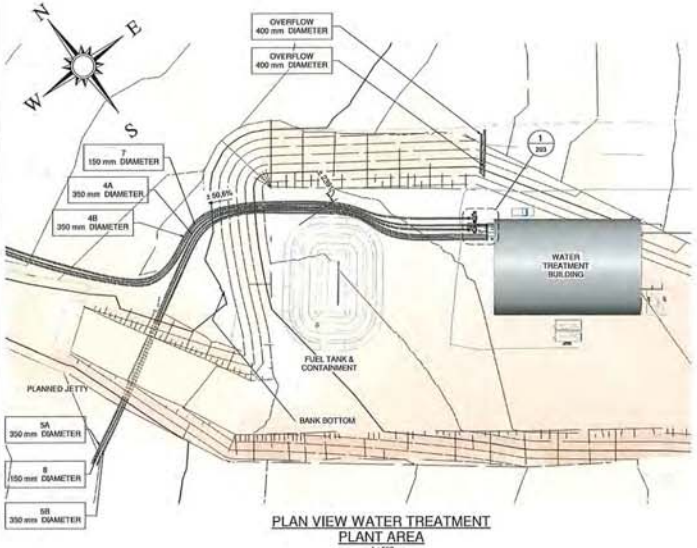

PLAN VIEW WATER TREATMENT PLANT AREA
1 : 500

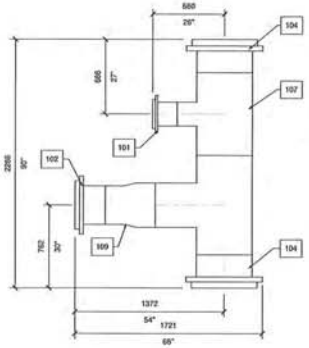

TOTAL WEIGHT OF SECTION = 329 KG

PIPE FITTING LIST			
MARK	COUNT	SIZE	DESCRIPTION
100	2	150 mma-150 mma	DR17 - BACK-UP RING (DI) - STUB END (HDPE)
101	1	200 mma-200 mma	DR17 - BACK-UP RING (DI) - STUB END (HDPE)
102	8	350 mma-350 mma	DR17 - BACK-UP RING (DI) - STUB END (HDPE)
103	2	400 mma-400 mma	DR17 - BACK-UP RING (DI) - STUB END (HDPE)
104	7	500 mma-500 mma	DR17 - BACK-UP RING (DI) - STUB END (HDPE)
105	1	200 mma	DR17 - BLIND FLANGE STEEL ISCO
106	2	500 mma	DR17 - BLIND FLANGE STEEL ISCO
107	1	500 mma-500 mma-200 mma	DR17 - BRANCH SADDLE - REDUCING TEE - HDPE
108	2	500 mma-500 mma-400 mma	DR17 - BRANCH SADDLE - REDUCING TEE - HDPE
109	2	400 mma-350 mma	DR17 - CONCENTRIC REDUCER HDPE
110	2	400 mma-400 mma	DR17 - ELBOW 45° HDPE
111	2	400 mma-400 mma	DR17 - ELBOW 90° HDPE
112	1	500 mma-500 mma-500 mma	DR17 - TEE FABRICATED HDPE
113	3	80 mm#-80 mma	SCHEDULE 40 PIPE THREADED ELBOW Dia 80

PIPE ACCESSORIES LIST			
MARK	COUNT	SIZE	DESCRIPTION
197	1		NPT MALE BRANCH Dia 80
198	1		NPT MALE BRANCH Dia 80
199	1		APCO COMBINATION AIR VALVE, MODEL 447, dia 80
200	8		THREADED ROD 3/4" X 10 UNC C/W 2 NUTS AND 2 LOCK WASHERS AND 2 WASHERS (ASTM 307 GR.B/ASTM A563 GR.A) 142 L.
201	16		THREADED ROD 3/4" X 10 UNC C/W 2 NUTS AND 2 LOCK WASHERS AND 2 WASHERS (ASTM 307 GR.B/ASTM A563 GR.A) 100 L.
202	40		THREADED ROD 1-1/8" X 7 UNC C/W 2 NUTS AND 2 LOCK WASHERS AND 2 WASHERS (ASTM 307 GR.B/ASTM A563 GR.A) 246 L.
203	24		THREADED ROD 1" X 8 UNC C/W 2 NUTS AND 2 LOCK WASHERS AND 2 WASHERS (ASTM 307 GR.B/ASTM A563 GR.A) 274 L.
204	32		THREADED ROD 1" X 8 UNC C/W 2 NUTS AND 2 LOCK WASHERS AND 2 WASHERS (ASTM 307 GR.B/ASTM A563 GR.A) 284 L.
205	60		THREADED ROD 1-1/8" X 7 UNC C/W 2 NUTS AND 2 LOCK WASHERS AND 2 WASHERS (ASTM 307 GR.B/ASTM A563 GR.A) 325 L.
206	24		THREADED ROD 1" X 8 UNC C/W 2 NUTS AND 2 LOCK WASHERS AND 2 WASHERS (ASTM 307 GR.B/ASTM A563 GR.A) 350 L.
207	3	500 mma-500 mma	GASKET 1/8" THICK
208	2	400 mma-400 mma	GASKET 1/8" THICK
209	2	350 mma-350 mma	GASKET 1/8" THICK
210	2	150 mma-150 mma	GASKET 1/8" THICK
211	2	350 mma-350 mma	BUTTERFLY VALVE HANDWHEEL CL-150
213	1		SADDLE ELECTROFUSION 20" IPS DR17 x 3" NPT MALE SS 304
214	1		DEZURICK ECCENTRIC PLUG VALVE, MODEL PEC,3,T1,C1,NIR WITH LEVER, Dia 80
215	1		STRAP 80 Dia 50mm X 6mm WITH MECHANICAL ANCHORS
216	5	80 mm#	THREADED PIPE SCHEDULE 40

NOTES: PIPES SEGMENTS ARE NOT INCLUDED IN THE LIST EXCEPT FOR AIR RELEASE VALVE SYSTEM PIPE.

2 / 203 HEADER SECTION DETAIL
1 : 20

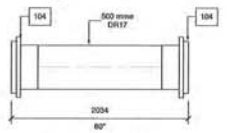

TOTAL WEIGHT OF SECTION = 188 kG

4 / 203 HEADER SECTION DETAIL
1 : 25

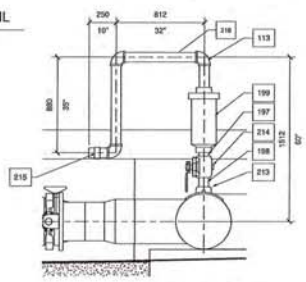

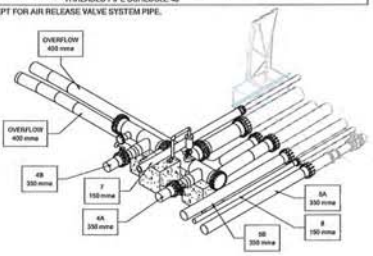

3D VIEW TIE-IN AREA

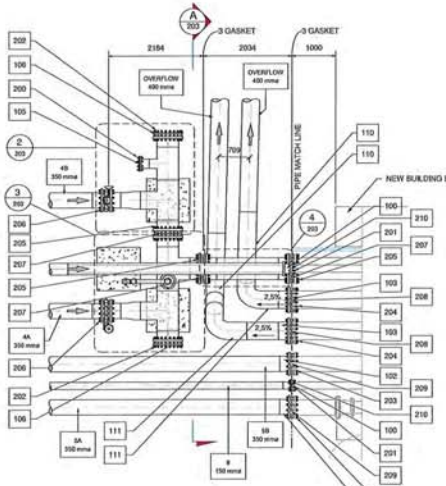

1 / 203 TIE IN DETAIL
1 : 50

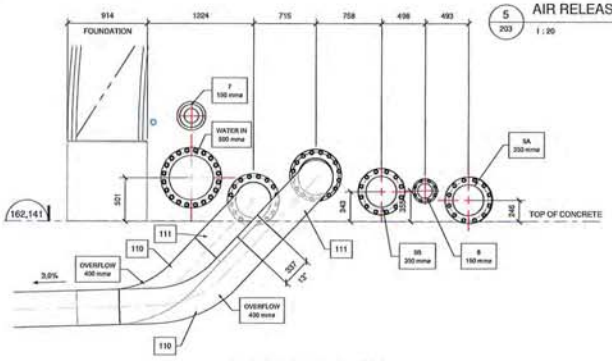

A / 203 SECTION TIE IN
1 : 25

5 / 203 AIR RELEASE DETAIL
1 : 20

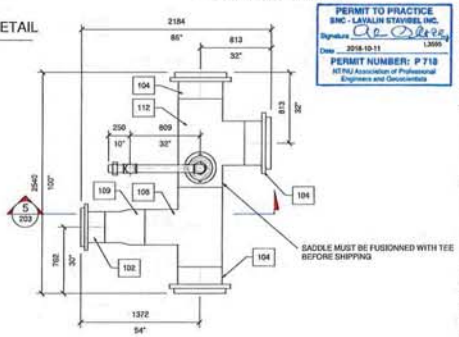

SADDLE MUST BE FUSIONNED WITH TEE BEFORE SHIPPING

TOTAL WEIGHT OF SECTION = 389 kG

3 / 203 HEADER SECTION DETAIL
1 : 25

PERMIT TO PRACTICE
SNC - LAVALIN STAVIBEL INC.
Signature
Date 2018-10-11
PERMIT NUMBER: P 718
NT PAU Association of Professional Engineers and Geoscientists

PLAN CLÉ
KEY PLAN

651298	8200	41,06	0004	01

NOTES GÉNÉRALES / GENERAL NOTES

FOR CONSTRUCTION
POUR CONSTRUCTION
DATE 2018-10-11 15:03:54

DESSINS EN RÉFÉRENCE / REFERENCE DRAWINGS

NUMÉRO / NUMBER	À MODIFIER

AGNICO EAGLE

REV	DATE	DESCRIPTION	PAR	APP.	CLIENT
1	2018-10-10	FOR CONSTRUCTION	F.P.	É.L.	
0	2018-08-29	FOR CONSTRUCTION	F.P.	É.L.	
RB	2018-07-18	CLIENT COMMENTS	F.P.	É.L.	
RA	2018-07-18	INTERNAL COMMENTS	F.P.	É.L.	

REVISIONS

AGNICO EAGLE - AMARULIQ DIVISION
600 - WATER MANAGEMENT
270 - PIPING
PLAN VIEW AND DETAILS
WTP TIE-INS FOR DEWATERING PHASE AND PHASE 1 OPERATION AND INLET HEADER DETAILS

DESIGNÉ PAR DESIGNED BY	F.POTVIN	2018-07-18
DESSINÉ PAR DRAWN BY	É.LEBEL	2018-07-18
APPROUVÉ PAR APPROVED BY	A.L. NGUYEN	2018-07-18
ÉCHELLE SCALE	As indicated	DATE 2018-07-18

61-695-270-203

NO. PROJET PROJECT NO.	RÉVISION	FEUILLE / SHT
6118	1	

NO. DESSIN
DRAWING NO. 61-693-245-201_R1

FORMAT ARCHD

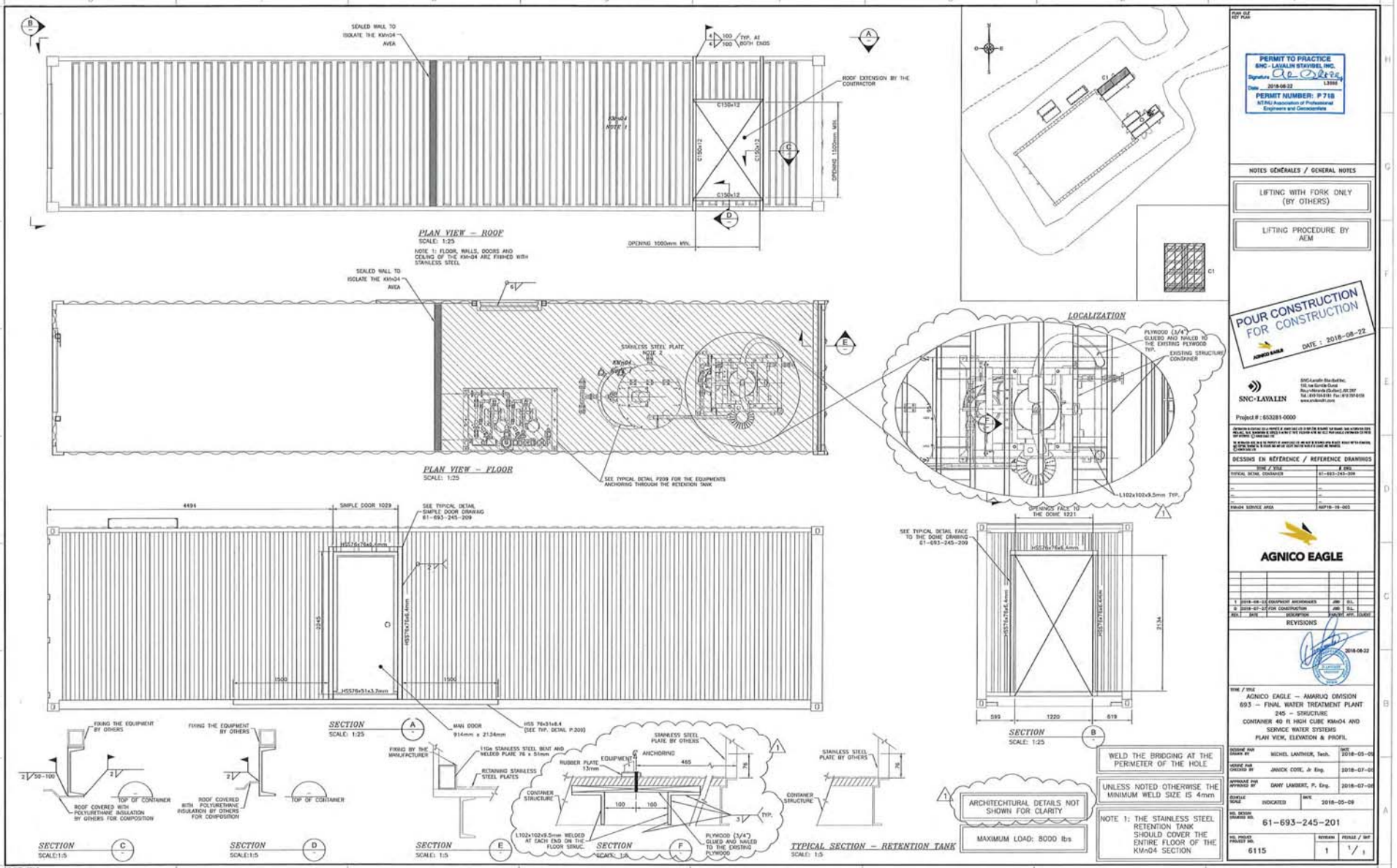

PLAN CLÉ
KEY PLAN

PERMIT TO PRACTICE
SNC - LAVALIN STAVIBEL INC.
Signature
Date 2018-08-22
PERMIT NUMBER: P 718
NT/NU Association of Professional Engineers and Geoscientists

NOTES GÉNÉRALES / GENERAL NOTES

LIFTING WITH FORK ONLY (BY OTHERS)

LIFTING PROCEDURE BY AEM

POUR CONSTRUCTION
FOR CONSTRUCTION
AGNICO EAGLE
DATE : 2018-08-22

SNC-LAVALIN
SNC-Lavalin Stavibel Inc.
110, rue Gamble Ouest
Rouyn-Noranda (Québec) J9X 2R7
Tél.: (819) 763-8181 Fax: (819) 797-4119
www.avalinenv.com

Project # : 653281-0000

DESSINS EN RÉFÉRENCE / REFERENCE DRAWINGS

DWG #	TITRE / TITLE
61-693-245-205	TYPICAL DETAIL CONTAINER
–	–
–	–
–	–
AGP18-19-003	KMnO4 SERVICE AREA

AGNICO EAGLE

REV.	DATE	DESCRIPTION	INITIALS	APP.	CLIENT
1	2018-08-22	EQUIPMENT ANCHORAGES	JMD	D.L.	
0	2018-07-27	FOR CONSTRUCTION	JMD	D.L.	

REVISIONS

2018-08-22

TITRE / TITLE
AGNICO EAGLE – AMARUQ DIVISION
693 – FINAL WATER TREATMENT PLANT
245 – STRUCTURE
CONTAINER 40 ft HIGH CUBE KMnO4 AND SERVICE WATER SYSTEMS
PLAN VIEW, ELEVATION & PROFIL

DESSINÉ PAR / DRAWN BY	MICHEL LANTHIER, Tech.	2018-05-09
VÉRIFIÉ PAR / CHECKED BY	JANICK CÔTÉ, Jr Eng.	2018-07-09
APPROUVÉ PAR / APPROVED BY	DANY LAMBERT, P. Eng.	2018-07-09

ÉCHELLE / SCALE: INDICATED
DATE: 2018-05-09

NO. DESSIN / DRAWING NO.: 61-693-245-201

NO. PROJET / PROJECT NO.	RÉVISION	FEUILLE / SHT
6115	1	1 / 1

FILE NO. 61-693-245-201_R1.dwg

NO. DESSIN / DRAWING NO. 61-693-245-202_R1

FORMAT ARCH D

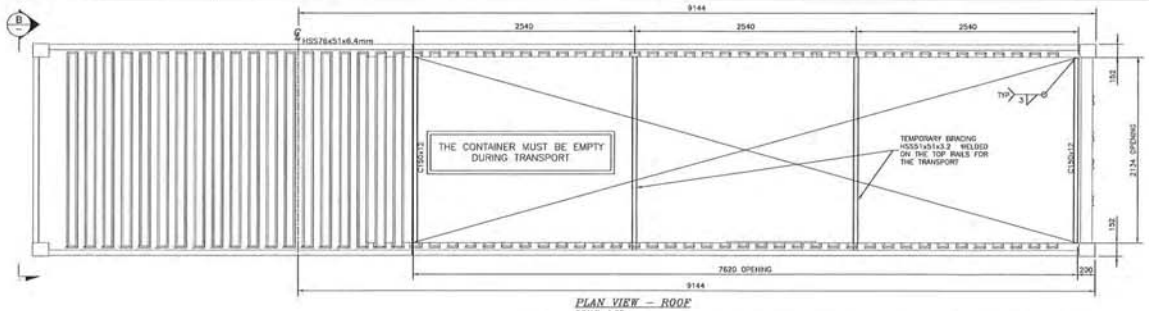

PLAN VIEW – ROOF
SCALE: 1:25

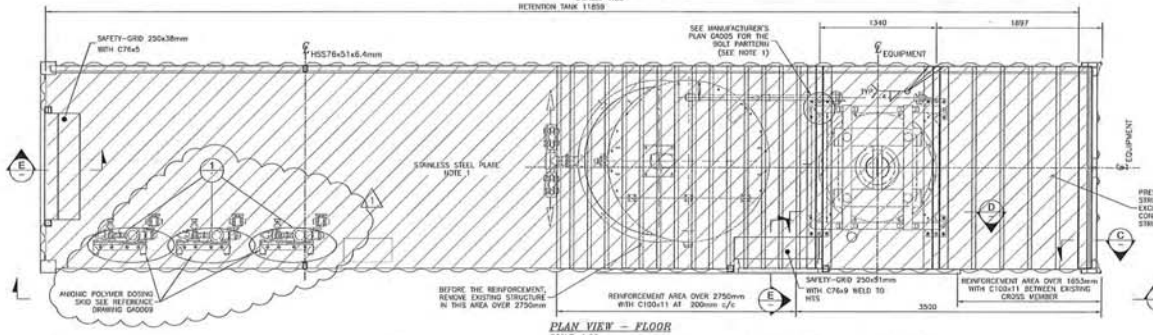

PLAN VIEW – FLOOR
SCALE: 1:25

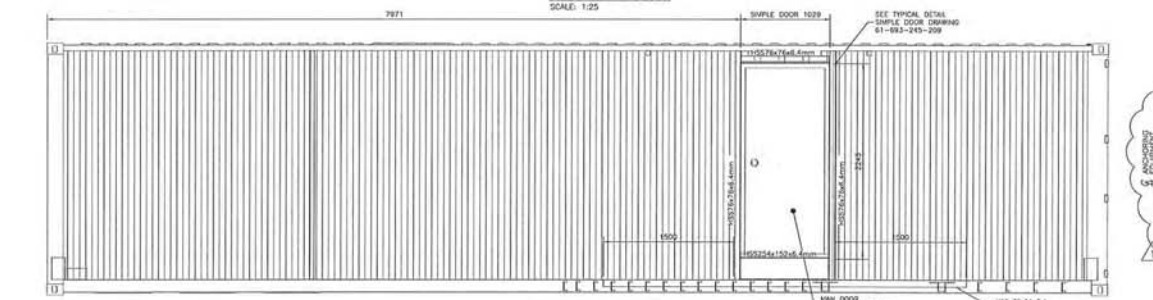

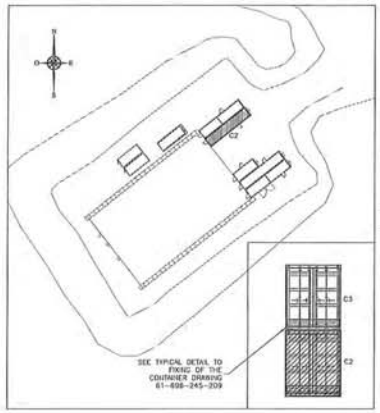

LOCALIZATION

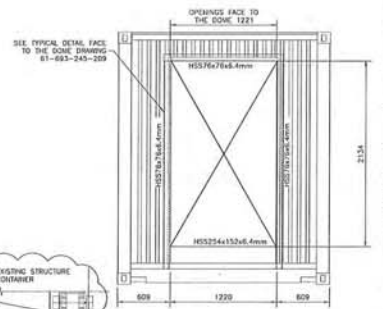

SECTION
SCALE: 1:25

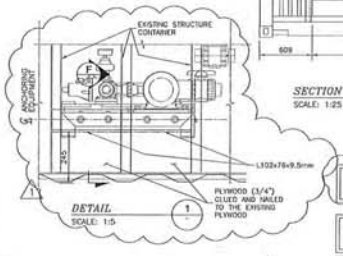

DETAIL
SCALE: 1:5

ARCHITECHTURAL DETAILS NOT SHOWN FOR CLARITY

UNLESS NOTED OTHERWISE THE MINIMUM WELD SIZE IS 4mm

NOTE 3:
BOLT MUST BE POSITIONNED AND SPOT WELDED IN PLACE BEFORE THE SHIPPING

NOTE 1: THE STAINLESS STEEL RETENTION TANK SHOULD COVER THE ENTIRE FLOOR OF THE CONTAINER

THE WELDING AND SEALING BETWEEN CONTAINER C2 AND C3 IS THE RESPONSIBILITY OF THE MANUFACTURER

SECTION
SCALE: 1:25

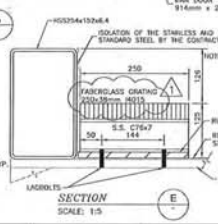

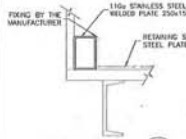

SECTION
SCALE: 1:5

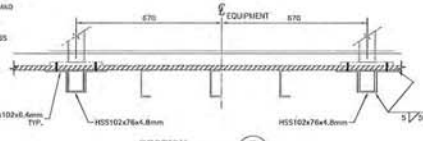

SECTION
SCALE: 1:10

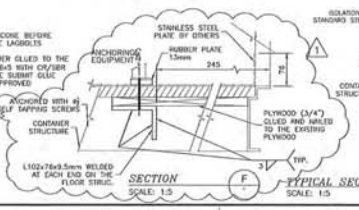

SECTION
SCALE: 1:5

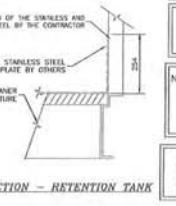

TYPICAL SECTION – RETENTION TANK
SCALE: 1:5

SECTION
SCALE: 1:5

SECTION
SCALE: 1:10

SECTION
SCALE: 1:5

SECTION
SCALE: 1:5

PERMIT TO PRACTICE
SNC-LAVALIN STAINBEL INC.
Signature
Date 2018-08-22 L3595
PERMIT NUMBER: P 718
INTNU Association of Professional Engineers and Geoscientists

NOTES GÉNÉRALES / GENERAL NOTES

LIFTING WITH FORK ONLY (BY OTHERS)

LIFTING PROCEDURE BY AEM

THE CONTAINER MUST BE EMPTY DURING TRANSPORT

POUR CONSTRUCTION
FOR CONSTRUCTION
AGNICO EAGLE
DATE : 2018-08-22

SNC-LAVALIN
SNC-Lavalin Stainbel Inc.
1751, rue Gerville-Quest
Rouyn-Noranda (Québec) J9X 2R7
Tel.: 819 764-5183 Fax.: 819 797-5158
www.snclavalin.com

Project # : 653281-0000

DESSINS EN RÉFÉRENCE / REFERENCE DRAWINGS

TYPE / TYPE	# DWG
TYPICAL DOWEL CONTAINER	61-693-245-209

AGNICO EAGLE

REV	DATE	DESCRIPTION	PAR/BY	APP.	CLIENT
1	2018-08-22	FOR CONSTRUCTION	JMD	D.L.	
0	2018-07-27	FOR CONSTRUCTION	JMD	D.L.	

REVISIONS

2018-08-22

TITRE / TITLE
AGNICO EAGLE – AMARUQ DIVISION
693 – FINAL WATER TREATMENT PLANT
245 – STRUCTURAL STEEL
40 FT CONTAINER HIGH CUBE CATIONIC POLYMER AND DOSING SYSTEMS
PLAN VIEW AND SECTION

DESSINÉ PAR / DRAWN BY	MICHEL LANTHIER, Tech.	DATE 2018-05-08
VÉRIFIÉ PAR / CHECKED BY	JANICK CÔTÉ, Jr. Eng	2018-07-06
APPROUVÉ PAR / APPROVED BY	DANY LAMBERT, P.Eng.	2018-05-08
ÉCHELLE / SCALE	INDICATED	DATE 2018-05-09

NO. DESSIN / DRAWING NO. 61-693-245-202

NO. PROJET / PROJECT NO. 6115

REVISION 1

FEUILLE / SHT 1 / 1

FILE NO. 61-693-245-202_R1.dwg

NO. DESSIN DRAWING NO. 61-693-245-205_R1

FORMAT ARCH D

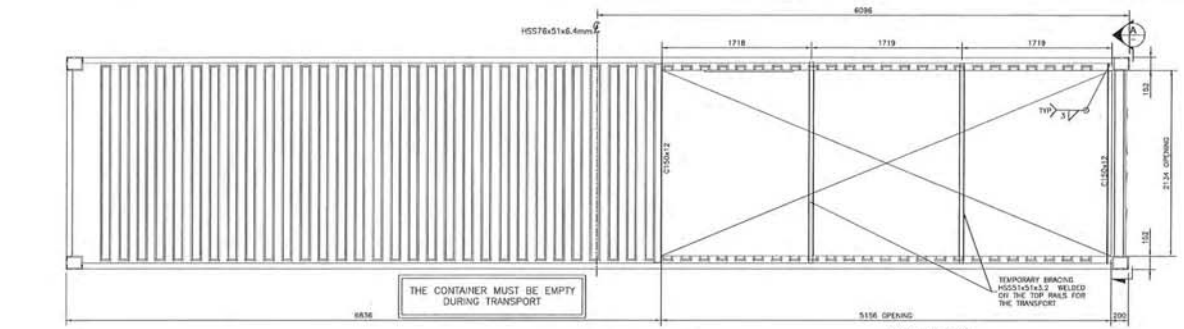

PLAN VIEW – ROOF
SCALE: 1:25

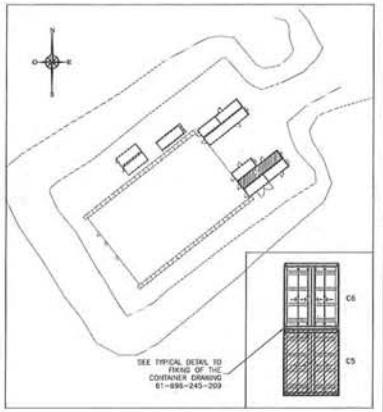

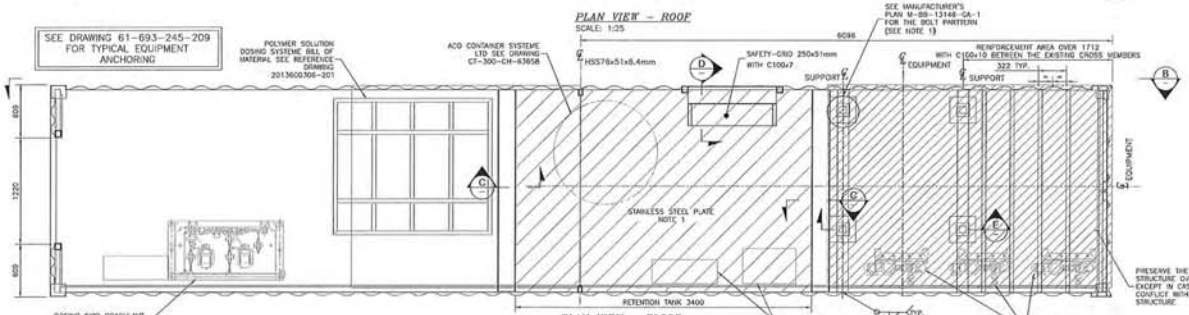

PLAN VIEW – FLOOR
SCALE: 1:25

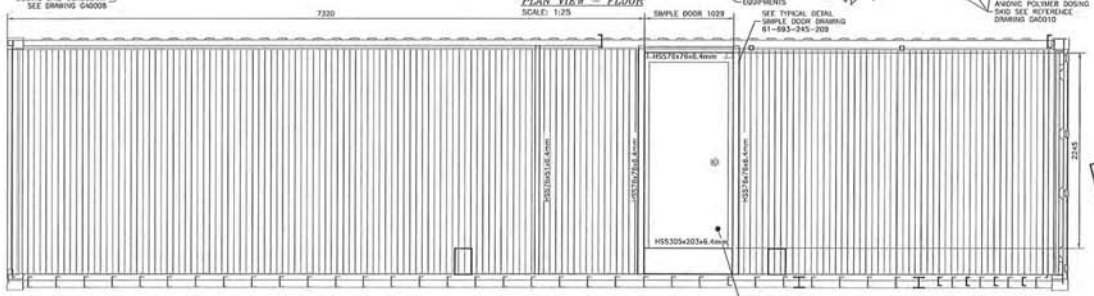

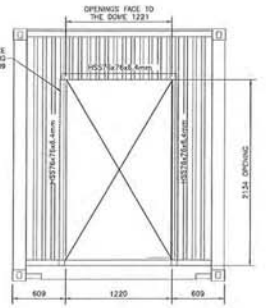

SECTION
SCALE: 1:25

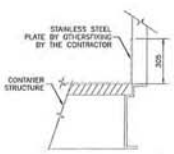

TYPICAL SECTION – RETENTION TANK
SCALE: 1:5

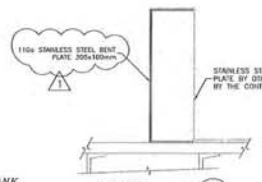

SECTION
SCALE: 1:5

SECTION
SCALE: 1:25

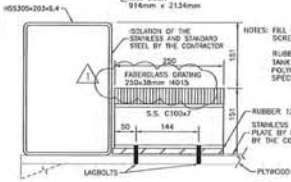

SECTION
SCALE: 1:5

SECTION
SCALE: 1:25

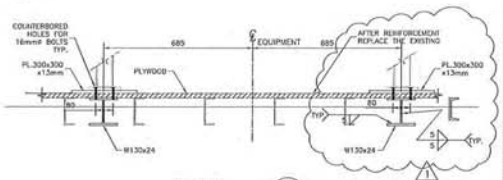

SECTION
SCALE: 1:10

POUR CONSTRUCTION
FOR CONSTRUCTION
AGNICO EAGLE
DATE : 2018-05-22

UNLESS NOTED OTHERWISE THE MINIMUM WELD SIZE IS 4mm

THE WELDIND AND SEALING BETWEEN CONTAINER C6 AND C5 IS THE RESPONSIBILITY OF THE MANUFACTURER

PLAN KEY PLAN

PERMIT TO PRACTICE
SNC-LAVALIN STAVIBEL INC.
Signature
Date 2018-05-22
L3095
PERMIT NUMBER: P 718
NT/NU Association of Professional Engineers and Geoscientists

NOTES GÉNÉRALES / GENERAL NOTES

LIFTING WITH FORK ONLY (BY OTHERS)

LIFTING PROCEDURE BY AEM

THE CONTAINER MUST BE EMPTY DURING TRANSPORT

UNLESS NOTED OTHERWISE THE MINIMUM WELD SIZE IS 4mm

NOTE 1:
WELD THE EQUIPMENT BASE PLATE TO THE 300x300x13mm PLATES

SNC·LAVALIN

SNC-Lavalin Stavibel Inc.
100, rue Gamble Ouest
Rouyn-Noranda (Québec) J9X 2R7
Tel.: 819 764-3161 Fax: 819 797-6159
www.snclavalin.com

Project # : 653281-0000

DESSINS EN RÉFÉRENCE / REFERENCE DRAWINGS

TITRE / TITLE	# DWG
TYPICAL BOWL CONTAINER	61-693-245-209
2.	
3.	
4.	
5.	
6.	

AGNICO EAGLE

NO.	DATE	DESCRIPTION	PAR / BY	VÉR / APP.
1	2018-05-22	FOR CONSTRUCTION	JBD	D.L.
0	2018-07-27	FOR CONSTRUCTION	JBD	D.L.

REVISIONS

2018-05-22

TITRE / TITLE
AGNICO EAGLE – AMARUQ DIVISION
693 – FINAL WATER TREATMENT PLANT
245 – STRUCTURAL STEEL
40 ft CONTAINER HIGH CUBE COAGULANT PREPARATION AND DOSING SYSTEM
PLAN VIEW AND SECTIONS

DESSINÉ PAR DRAWN BY	MICHEL LANDRIER, Tech.	DATE 2018-05-09
VÉRIFIÉ PAR CHECKED BY	JANICK CÔTÉ, Jr.Eng.	2018-07-06
APPROUVÉ PAR APPROVED BY	DANY LAMBERT, P.Eng.	2018-07-06
ÉCHELLE SCALE	INDICATED	DATE 2018-05-09

NO. DESSIN DRAWING NO. 61-693-245-205

NO. PROJET PROJECT NO.	RÉVISION	FEUILLE / SHT
6115	1	1 / 1

FILE NO. 61-693-245-205_R1.dwg

NO. DESSIN / DRAWING NO. 61-693-245-207_R1

FORMAT ARCH D

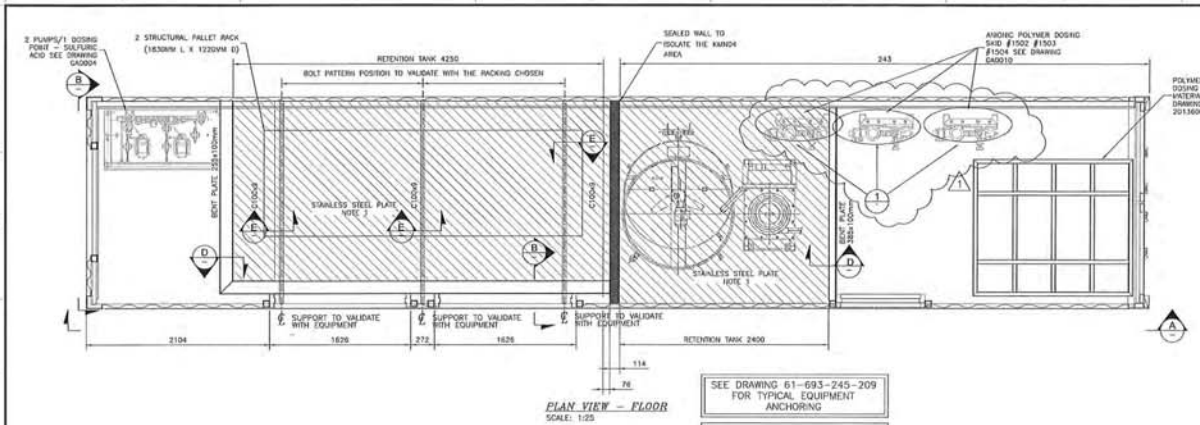

PLAN VIEW – FLOOR
SCALE: 1:25

SEE DRAWING 61-693-245-209 FOR TYPICAL EQUIPMENT ANCHORING

THE CONTAINER MUST BE EMPTY DURING TRANSPORT

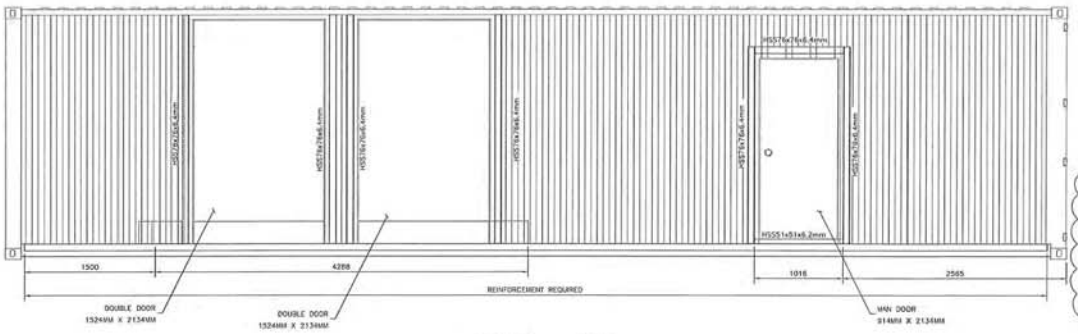

SECTION
SCALE: 1:25

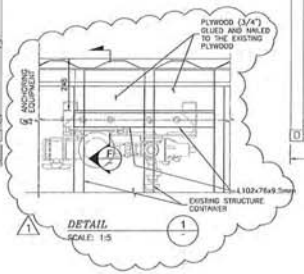

DETAIL
SCALE: 1:5

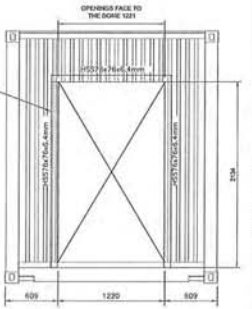

SECTION
SCALE: 1:25

POUR CONSTRUCTION
FOR CONSTRUCTION
AGNICO EAGLE
DATE : 2018-08-22

ARCHITECHTURAL DETAILS NOT SHOWN FOR CLARITY

NOTE 1: THE STAINLESS STEEL RETENTION TANK PLATE SHOULD COVER THE ENTIRE FLOOR OF THE CONTAINER

UNLESS NOTED OTHERWISE THE MINIMUM WELD SIZE IS 4mm

PAINT THE VISIBLE SIDE OF THE BENT PLATE IN YELLOW SAFETY

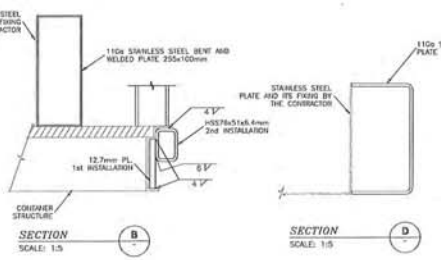

SECTION
SCALE: 1:5

SECTION
SCALE: 1:5

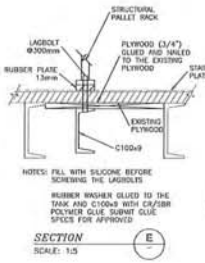

SECTION
SCALE: 1:5

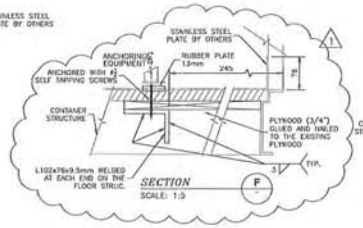

SECTION
SCALE: 1:5

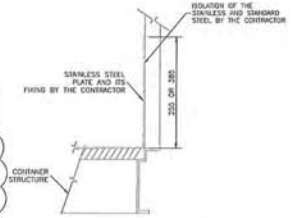

TYPICAL SECTION – RETENTION TANK
SCALE: 1:5

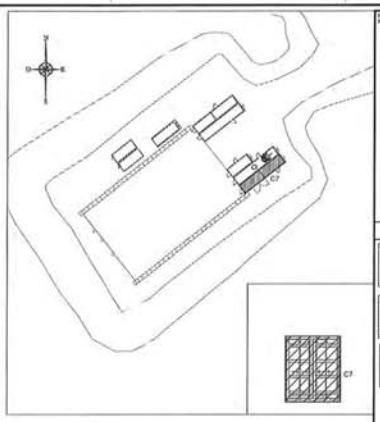

PERMIT TO PRACTICE
SNC-LAVALIN STAVIBEL INC.
Signature
Date 2018-08-22
PERMIT NUMBER: P 718
NT/NU Association of Professional Engineers and Geoscientists

NOTES GÉNÉRALES / GENERAL NOTES

LIFTING WITH FORK ONLY (BY OTHERS)

LIFTING PROCEDURE BY AEM

THE CONTAINER MUST BE EMPTY DURING TRANSPORT

SNC-LAVALIN

SNC-Lavalin Stavibel Inc.
100, rue Gerrie-Cuvil
Rouyn-Noranda (Québec) J9X 2R7
Tél.: (819) 764-5161 Fax: (819) 797-6139
www.snclavalin.com

Project # : 653281-0000

DESSINS EN RÉFÉRENCE / REFERENCE DRAWINGS

TITRE / TITLE	# DWG
TYPICAL DETAIL CONTAINER	61-693-245-209

AGNICO EAGLE

REV.	DATE	DESCRIPTION	PAR/BY	APP.	CLIENT
1	2018-08-22	EQUIPMENT ANCHORAGES	JMD	DJL	
0	2018-07-27	FOR COORDINATION	JMD	DJL	

REVISIONS

2018-08-22

TITRE / TITLE
AGNICO EAGLE – AMARUQ DIVISION
693 – FINAL WATER TREATMENT PLANT
245 – STRUCTURAL STEEL
40 IT CONTAINER HIGH CUBE KIM04 AND SERVICE WATER SYSTEM
PLAN VIEW AND SECTIONS

DESSINÉ PAR / DRAWN BY	MICHEL LANTHIER, Tech.	DATE 2018-05-09
VÉRIFIÉ PAR / CHECKED BY	JANICK ODTÉ, Jr.Eng.	2018-07-06
APPROUVÉ PAR / APPROVED BY	DANY LAMBERT, P.Eng.	2018-07-09
ÉCHELLE / SCALE	INDICATED	DATE 2018-05-09

NO. DESSIN / DRAWING NO. 61-693-245-207

NO. PROJET / PROJECT NO.	RÉVISION	FEUILLE / SHT
6115	1	1 / 1

FILE NO. 61-693-245-207_R1.dwg

NO. DESSIN DRAWING NO. 61-693-245-210_R0

FORMAT ARCH D

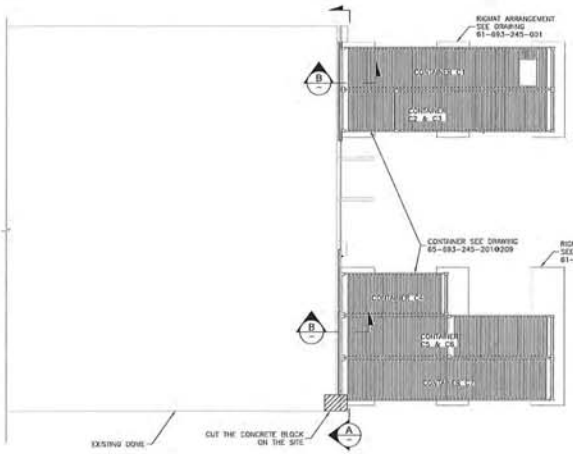

PLAN VIEW – GENERAL ARRANGEMENT
Scale: 1:125

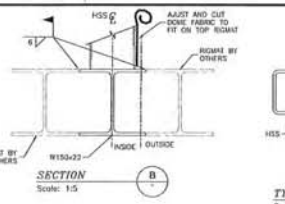

SECTION
Scale: 1:5

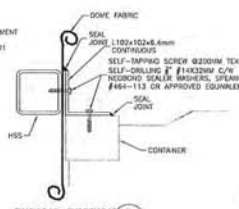

TYPICAL SECTION
Scale: 1:5

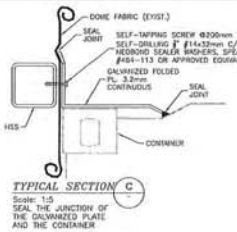

TYPICAL SECTION
Scale: 1:5
SEAL THE JUNCTION OF THE GALVANIZED PLATE AND THE CONTAINER

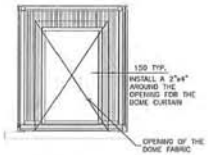

TYPICAL OPENING IN THE DOME
Scale: 1:50

1. GENERAL NOTES

1.1 FOR ALL CONSTRUCTION WORKS, REFER ONLY TO DRAWINGS LABELED AS « ISSUED FOR CONSTRUCTION ».

1.2 REFER ONLY TO DIMENSIONS INDICATED ON PLANS, DO NOT THE DRAWINGS SCALE.

1.3 ALL DIMENSIONS HAVE TO BE VERIFIED AND VALIDATED ON SITE PRIOR TO CONSTRUCTION COMMENCEMENT. IN ANY CASE, NO CONTRACTOR IS PERMITTED TO INTERPRET ERRORS OR OMISSIONS BETWEEN THE PLANS AND SPECIFICATIONS OF VARIOUS PROFESSIONALS. ONLY WRITTEN QUESTIONS ON BEHALF OF THE CONTRACTOR SHALL BE CONSIDERED FOR POTENTIAL ADDENDUMS DURING THE TENDERING PERIOD. THESE DRAWINGS SHALL BE READ IN CONJUNCTION WITH THE DRAWINGS AND SPECIFICATIONS OF ALL OTHER RELATED DISCIPLINES. ANY INTERPRETATIONS OR QUESTIONS RELATED TO PLANS DURING THE CONSTRUCTION PROCESS SHALL BE CLARIFIED BY PROFESSIONALS THROUGH WRITTEN QUESTIONS.

1.4 THE CONTRACTOR SHALL ENSURE A PRECISE CORRESPONDENCE AT THE JUNCTION OF A NEW AND EXISTING STRUCTURE. THE CONTRACTOR SHALL ENSURE A PRECISE FIT BETWEEN THE LEVEL OF A NEW FLOOR AND THAT OF AN EXISTING ONE.

1.5 THE PRESENT PLANS INDICATE IN A GENERAL MANNER, WORKS TO BE REALISED ACCORDING TO EXISTING SITE CONDITIONS. TO ESTABLISH FINAL BID PRICE, THE CONTRACTOR SHALL MAKE SITE VISITS SO AS TO QUANTIFY ANY FACTOR OR CONSTRAINT WICH MAY AFFECT WORK REALIZATION.

1.6 FLASHING AND SEALING PART FOR THE DOME FABRIC BY OTHERS

2. STRUCTURAL STEEL

2.1 STRUCTURAL STEEL MUST RESPECT CRITERIA LISTED IN CAN/CSA-G40.20 AND CAN/CSA-G40.21, GRADE 350 W WITH EXCEPTION OF C AND L SECTION WHICH ARE TO BE OF GRADE 300 W. HSS SECTION TO BE OF ASTM 500 TYPE C GRADE 345 W.

2.3 STEEL SURFACE PREPARATION PROCESS AND PAINT COATING FOR AGNICO EAGLE. THE STEEL MUST BE FREE FROM GREASE, OIL OR ANY OTHER CONTAMINANT DETRIMENTAL TO THE GRIP.

1) MAKE SSPC-SP1
2) MAKE SSPC-SP6
3) APPLY 1 LAYER OF PRIMER OF EPOXY COR-PRO 470 (2 MILS SECS) GREY
4) APPLY 2 LAYERS OF EPOXY COATING COR-PRO 475 (5 MILS SECS EACH) GREY

2.4 SURFACE PREPARATION BEFORE WELDING: SURFACE PREPARATION BY SANDBLAST AS PER SSPC-SP6 OR APPROVED EQUIVALENT.

2.5 REPAIRS AND TOUCH-UPS: ALL STRUCTURAL ELEMENTS (NEW AND EXISTING) WHICH HAVE BEEN DAMAGED DURING CONSTRUCTION SHALL BE REPAIRED ONSITE.

2.6 THE CONTRACTOR OR SUB-CONTRACTOR MUST PROCEED WITH ALL WELDING WORKS IN ACCORDANCE WITH W59-03(R2008). HE MUST ALSO BE CERTIFIED AS PER W47.1-09(R2014). THE ENGINEER/OWNER RESERVES THE RIGHT TO VERIFY THESE CERTIFICATIONS BEFORE AS WELL AS AFTER THE PROJECT COMMENCEMENT.

2.7 ALL STRUCTURAL MEMBERS MUST BE CLEANED BY GRINDING PRIOR TO ALL WELDING WORKS.

3.8 BOLTS, NUTS, LOCKNUTS, AND WASHERS AS PER ASTM-A325-14. ALL BOLTS ARE M20 (U.N.O.)

2.9 DEAD LOADS AND COLLATERAL LOADS
– STRUCTURAL STEEL (DENSITY) : 7850 kg/m3

2.10 DESIGN METHODOLOGY:

– STRUCTURAL STEEL: ULTIMATE STRENGTH DESIGN ACCORDING TO CAN/CSA-S16-14.

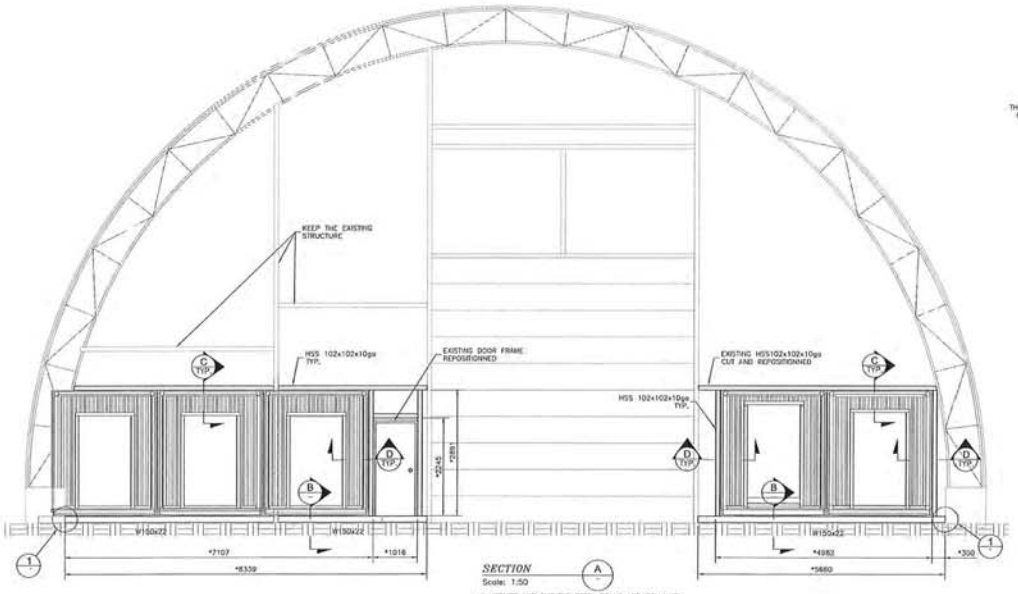

SECTION
Scale: 1:50
* VESURE AND CUT THE STEEL BEANS AND COLUMNS

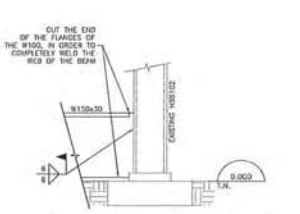

TYPICAL DETAIL – W150 VS EXIST. HSS
SCALE: 1:5

GROUND SETTLEMENT AND GROUND HEAVE RISK ASSUMED BY AEM

* TO BE VALIDATED

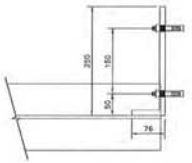

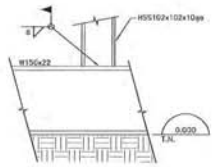

TYPICAL DETAIL – W150 VS HSS
SCALE: 1:5

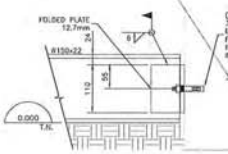

(+2) 16mm DIA. KWIK BOLT 3 FROM HILTI MIN. EMBEDMENT 120mm FOLLOW MANUFACTURER'S RECOMMENDATION FOR INSTALLATION

TYPICAL DETAIL – ANCHORS
SCALE: 1:5

PLAN DE LOCALISATION
KEY PLAN

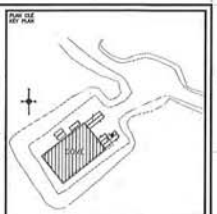

NOTES GÉNÉRALES / GENERAL NOTES

2018-08-17

POUR CONSTRUCTION
FOR CONSTRUCTION
AGNICO EAGLE
DATE : 2018-08-17

DESSINS EN RÉFÉRENCE / REFERENCE DRAWINGS

NUMÉRO / TITLE	# DWG
–	–
–	–
–	–
–	–
–	–

AGNICO EAGLE

NO	DATE	DESCRIPTION	PAR/APP.	CLIENT
0	2018-07-17	FOR CONSTRUCTION	JDB / EL	

REVISIONS

PERMIT TO PRACTICE
SNC-LAVALIN ETAVIBEL INC.
Signature
Date 2018-08-17
L3099
PERMIT NUMBER: P 718
NTAA Association of Professional Engineers and Geoscientists

TITRE / TITLE
AGNICO EAGLE – AMARUQ DIVISION
693 – FINAL WATER TREATMENT PLANT
245 – STRUCTURE
MODIFICATION OF THE DOME
DETAIL PLAN

DESSINÉ PAR / DRAWN BY	JORDANE B.D., Tech.	2018-08-07
VÉRIFIÉ PAR / CHECKED BY	JANICK CÔTÉ, Jr. Eng.	2018-08-10
APPROUVÉ PAR / APPROVED BY	DANY LAMBERT, P.Eng.	2018-08-15

ÉCHELLE / SCALE: INDICATED
DATE: 2018-08-07

NO. DESSIN / DRAWING NO.: 61-693-245-210

NO. PROJET / PROJECT NO.: 6115

REVISION: 0

FEUILLE / SHT: 1 / 1

FILE NO. 61-693-245-210_R0.dwg

NO. DESSIN / DRAWING NO. 61-693-245-203_R0

FORMAT ARCH D

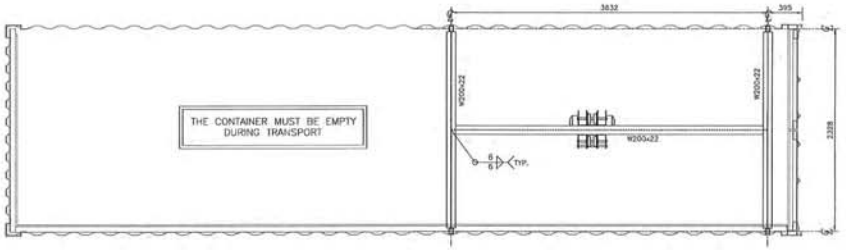

PLAN VIEW – TOP OF MONORAIL
SCALE: 1:25

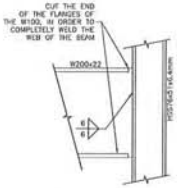

TYPICAL DETAIL – W200 VS HSS
SCALE: 1:5

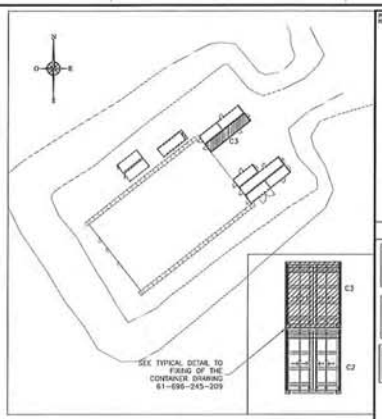

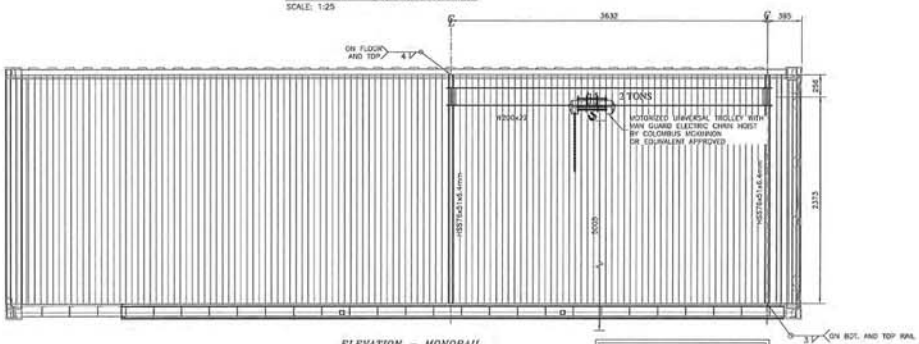

ELEVATION – MONORAIL
SCALE: 1:25

UNLESS NOTED OTHERWISE THE MINIMUM WELD SIZE IS 4mm

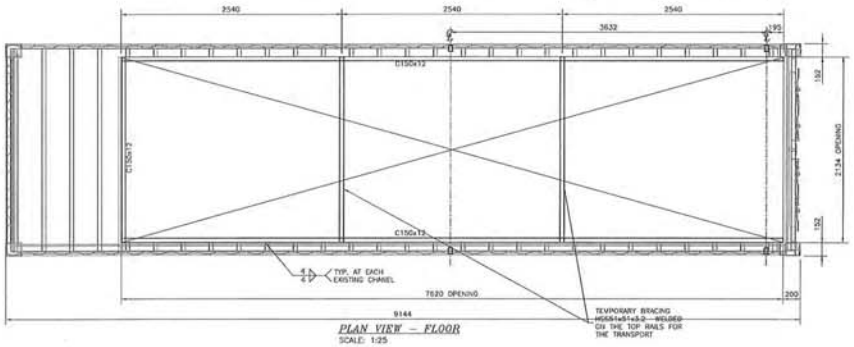

PLAN VIEW – FLOOR
SCALE: 1:25

MONORAIL NOTES

1. THE MAXIMUM RATED CAPACITY "2 TONS" SHALL BE PAINTED IN MIN. 150 MM. HIGH, BLACK LETTERS ON EACH SIDE OF THE WEB OF THE MONORAIL BEAM(S).
2. MONORAIL DESIGN CRITERIA:
   SAFE WORKING LOAD: 2 TONS
   MAXIMUM WHEEL LOAD: 5.1 KN
   MAXIMUM TROLLEY/HOIST WEIGHT: 90 KG
   VERTICAL IMPACT ALLOWANCE: 10%

PAINTING NOTES

a) "INTERSPEC" 3.12.F.2 (C5 STANDARD CURE) EPOXY PRIME/HIGH BUILD FINISH – NEW CONSTRUCTION SYSTEM FOR SEVERE (C5–I) EXPOSURES.
b) PRIMER: "INTERGARD" 345 SINGLE COAT APPLICATION AT 3–4 MILS (75–100 MICRONS) DRY FILM THICKNESS.
c) PRIMER COLOUR: GRAY OR RED OXIDE
d) COAT FINISH : "INTERGARD" 345 APPLIED AT 3–4 MILS (75–100 MICRONS) D.F.T.
e) COLOUR FINISH: SAFETY YELLOW (YE–3)

POUR CONSTRUCTION
FOR CONSTRUCTION
AGNICO EAGLE
DATE : 2018-07-27

THE CONTAINER MUST BE EMPTY DURING TRANSPORT

THE WELDING AND SEALING BETWEEN CONTAINER C2 AND C3 IS THE RESPONSIBILITY OF THE MANUFACTURER

PLAN CLÉ / KEY PLAN

NOTES GÉNÉRALES / GENERAL NOTES

LIFTING WITH FORK ONLY (BY OTHERS)

LIFTING PROCEDURE BY AEM

UNLESS NOTED OTHERWISE, THE MINIMUM WELD SIZE IS 4mm

SNC-Lavalin
SNC-Lavalin Stantec Inc.
100, rue Garnier Ouest,
Rouyn-Noranda (Québec) J9X 2X7
Tél.: 819 764-9191 Fax: 819 797-6119
www.snclavalin.com

Project # : 653281-0000

DESSINS EN RÉFÉRENCE / REFERENCE DRAWINGS

TITRE / TITLE	# DWG
TYPICAL SEISMIC CONTAINER	61-693-245-209
–	–
–	–
–	–
–	–

AGNICO EAGLE

NO.	DATE	DESCRIPTION	DESSINÉ PAR DRAWN BY	VÉRIFIÉ PAR CHECKED BY
0	2018-07-27	FOR CONSTRUCTION	JBD	D.L.

REVISIONS

2018-07-27

TITRE / TITLE
AGNICO EAGLE – AMARUQ DIVISION
693 – FINAL WATER TREATMENT PLANT
245 – STRUCTURAL STEEL
30 FT CONTAINER HIGH CUBE CATIONIC POLYMER AND DOSING SYSTEMS
PLAN VIEW AND SECTIONS

DESSINÉ PAR / DRAWN BY	MICHEL LANTHIER, Tech.	DATE 2018-05-08
VÉRIFIÉ PAR / CHECKED BY	JANICK ODIE, Jr.Eng.	2018-07-05
APPROUVÉ PAR / APPROVED BY	DANY LAMBERT, P.Eng.	2018-07-05
ÉCHELLE / SCALE	INDICATED	DATE 2018-05-08

NO. DESSIN / DRAWING NO. 61-693-245-203

NO. PROJET / PROJECT NO.	REVISION	FEUILLE / SHT
5115	0	1 / 1

FILE NO. 61-693-245-203_R0.dwg

NO. DESSIN
DRAWING NO. 61-693-245-204_R0

FORMAT ARCH D

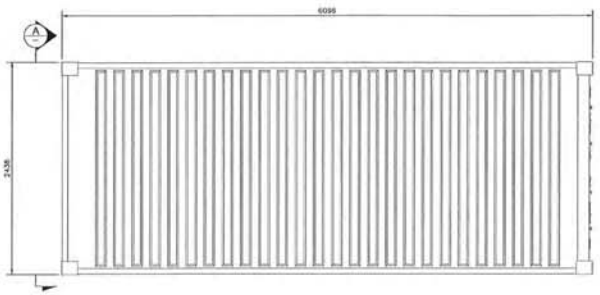

PLAN VIEW – ROOF CONTAINER 20pi.
SCALE: 1:25

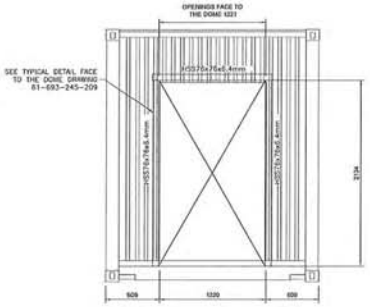

SECTION A
SCALE: 1:25

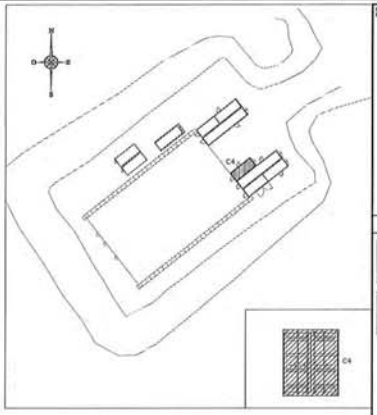

NOTES GÉNÉRALES / GENERAL NOTES

LIFTING WITH FORK ONLY (BY OTHERS)

LIFTING PROCEDURE BY AEM

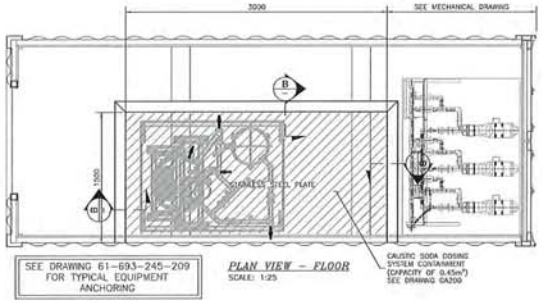

SEE DRAWING 61-693-245-209 FOR TYPICAL EQUIPMENT ANCHORING

PLAN VIEW – FLOOR
SCALE: 1:25

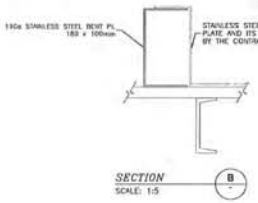

SECTION B
SCALE: 1:5

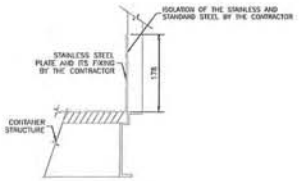

TYPICAL SECTION – RETENTION TANK
SCALE: 1:5

UNLESS NOTED OTHERWISE THE MINIMUM WELD SIZE IS 4mm

PAINT THE VISIBLE SIDE OF HSS 178x127X4.8mm IN YELLOW SAFETY

POUR CONSTRUCTION
FOR CONSTRUCTION
AGNICO EAGLE
DATE : 2018-07-27

SNC·LAVALIN

Project # : 653281-0000

DESSINS EN RÉFÉRENCE / REFERENCE DRAWINGS

SNC / SNC	# SNC
TYPICAL DOSAL CONTAINER	61-693-245-209

AGNICO EAGLE

REV.	DATE	DESCRIPTION	ANALYST	APP.	CLIENT
0	2018-07-27	FOR CONSTRUCTION	JMC	S.L.	

REVISIONS

2018-07-27

SNC / TITLE
AGNICO EAGLE – AMARUQ DIVISION
693 – FINAL WATER TREATMENT PLANT
245 – STRUCTURAL STEEL
20 ft CONTAINER HIGH CUBE CATIONIC POLYMER AND DOSING SYSTEMS
PLAN VIEW AND SECTIONS

DESSINÉ PAR / DRAWN BY	MICHEL LANTHIER, Tech.	DATE 2018-05-09
VÉRIFIÉ PAR / CHECKED BY	JANICK CÔTÉ, Jr. Eng.	2018-07-02
APPROUVÉ PAR / APPROVED BY	DAVY, LAMBERT P.Eng.	2018-07-05
ÉCHELLE / SCALE	INDICATED	DATE 2018-05-09

NO. DESSIN / DRAWING NO.
61-693-245-204

NO. PROJET / PROJECT NO.	REVISION	FEUILLE / SHT
6115	0	1 / 1

FILE NO. 61-693-245-204_R0.dwg

NO. DESSIN DRAWING NO. 61-693-245-206_R0

FORMAT ARCHD

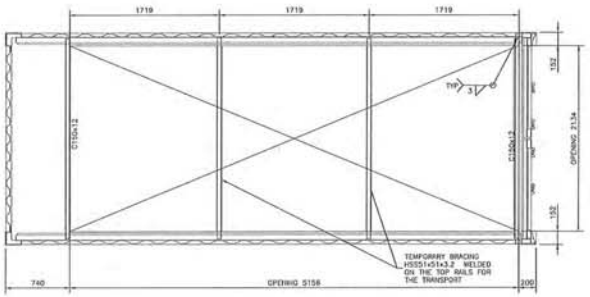

PLAN VIEW – FLOOR
SCALE: 1:25

THE CONTAINER MUST BE EMPTY DURING TRANSPORT

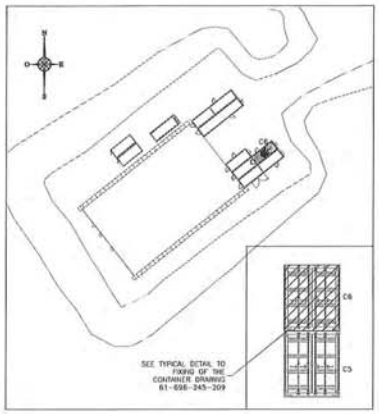

POUR CONSTRUCTION
FOR CONSTRUCTION
AGNICO EAGLE
DATE : 2018-07-27

THE WELDING AND SEALING BETWEEN CONTAINER C6 AND C5 IS THE RESPONSIBILITY OF THE MANUFACTURER

PLAN CLÉ
KEY PLAN

NOTES GÉNÉRALES / GENERAL NOTES

LIFTING WITH FORK ONLY (BY OTHERS)

LIFTING PROCEDURE BY AEM

THE CONTAINER MUST BE EMPTY DURING TRANSPORT

UNLESS NOTED OTHERWISE THE MINIMUM WELD SIZE IS 4mm

DESSINS EN RÉFÉRENCE / REFERENCE DRAWINGS

TITRE / TITLE	# DWG
TYPICAL DETAIL CONTAINER	61-693-245-209
–	–
–	–
–	–
–	–

AGNICO EAGLE

REV.	DATE	DESCRIPTION	PRA/BY	APP.	CLIENT
0	2018-07-27	FOR CONSTRUCTION	JBD	D.L.	

REVISIONS

2018-07-27

TITRE / TITLE
AGNICO EAGLE – AMARUQ DIVISION
693 – FINAL WATER TREATMENT PLANT
245 – STRUCTURAL STEEL
20 ft CONTAINER HIGH CUBE COAGULANT PREPARATION AND DOSING SYSTEMS
PLAN VIEW AND ELEVATION

DESSINÉ PAR / DRAWN BY	MICHEL LANTHIER, Tech.	DATE 2018-05-09
VÉRIFIÉ PAR / CHECKED BY	JANICK CÔTÉ, Jr.Eng	2018-07-13
APPROUVÉ PAR / APPROVED BY	DANY LAMBERT, P.Eng.	2018-07-13
ÉCHELLE / SCALE	INDICATED	DATE 2018-05-09

NO. DESSIN / DRAWING NO. 61-693-245-206

NO. PROJET / PROJECT NO.	REVISION	FEUILLE / SHT
6115	0	1/1

AC-CART-ARCH D

FILE NO. 61-693-245-206_R0.dwg

NO. DESSIN / DRAWING NO. 61-693-245-209_R0

FORMAT ARCH D

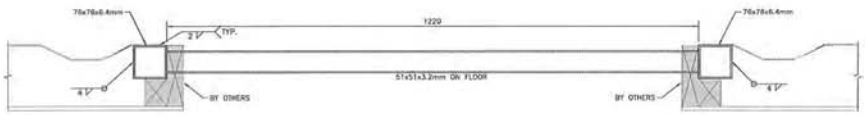

TYPICAL DETAIL – SIMPLE DOOR
SCALE: 1:5

TYPICAL DETAIL – FACE TO THE DOME
SCALE: 1:5

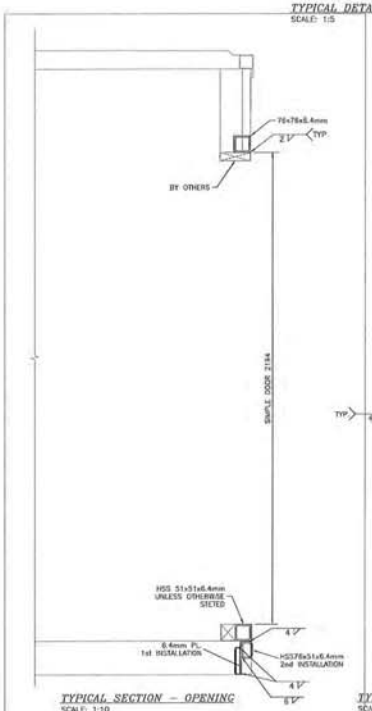

TYPICAL SECTION – OPENING
SCALE: 1:10

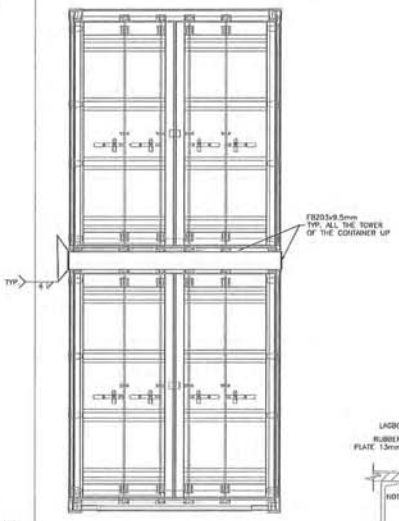

TYPICAL DETAIL TO FIXING OF THE CONTAINER
SCALE: 1:25

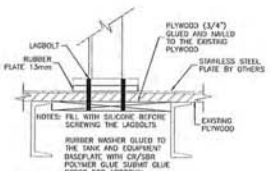

TYPICAL EQUIPMENT ANCHORING THROUGH THE RETENTION TANK
SCALE: 1:5

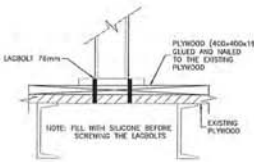

TYPICAL EQUIPMENT ANCHORING
SCALE: 1:5

GENERAL NOTES:

01- IN THE EVENT OF CONFLICT BETWEEN DESIGN STANDARDS, CONTRACT DOCUMENTS AND DRAWINGS, INFORMATION GIVEN ON DRAWINGS SHALL GOVERN.
02- THE CONTRACTOR SHALL VERIFY ALL DIMENSIONS ON SITE BEFORE STARTING WORK AND REPORT ALL ERRORS OR OMISSIONS TO THE ENGINEER.
03- THE CONTRACTOR SHALL CONSIDER THAT THE EXECUTION OF THE WORK DEPENDS ON THE SITE CONDITIONS. THE CONTRACTOR SHALL PROVIDE ALL MATERIALS NOT SPECIFICALLY SHOWN ON THE DRAWINGS BUT REQUIRED TO COMPLETE THE WORK TO THE SATISFACTION OF THE ENGINEER. ALL MATERIALS SHALL BE NEW, IN GOOD CONDITION AND PREMIUM QUALITY.
04- THE CONTRACTOR IS RESPONSIBLE FOR ANY DAMAGES CAUSED BY HIS EMPLOYEES OR HIS SUBCONTRACTORS. HE SHALL KEEP THE SITE CLEAN AND FREE OF ANY DEBRIS. THE CONTRACTOR MUST COMPLY WITH ALL LOCAL AND OWNER SAFETY RULES.
05- ALL TEMPORARY SUPPORTS ARE THE CONTRACTOR'S RESPONSIBILITY. HE SHALL APPLY ALL NECESSARY MEASURES AND INSTALL PROPER SUPPORTS TO ENSURE THE STABILITY OF THE STRUCTURES AND THE WORKER'S SAFETY.
06- DO NOT SCALE THE DRAWINGS.
07- ALL DIMENSIONS ARE SHOWN IN MILLIMETRES UNLESS NOTED OTHERWISE.
08- ALL OPENING MUST BE TEMPORARILY CLOSE FOR THE SHIPPING. (BY THE CONTRACTORS)

STRUCTURAL STEEL

09- STRUCTURAL STEEL MUST RESPECT CRITERIA LISTED IN CAN/CSA-G40.20 AND CAN/CSA-G40.21, GRADE 350 W WITH EXCEPTION OF C AND L PROFILES WHICH ARE TO BE OF GRADE 300 W.

10- REPAIRS AND TOUCH-UPS: ALL STRUCTURAL ELEMENTS (NEW AND EXISTING) WHICH HAVE BEEN DAMAGED DURING CONSTRUCTION SHALL BE REPAIRED ON SITE.

11- THE CONTRACTOR OR SUB-CONTRACTOR MUST PROCCED WITH ALL WELDING WORKS IN ACCORDANCE WITH W59-03(R2008). HE MUST ALSO BE CERTIFIED AS PER W47.1-09(R2014). THE ENGINEER/OWNER RESERVES THE RIGHT TO VERIFY THESE CERTIFICATIONS BEFORE AS WELL AS AFTER THE PROJECT COMMENCEMENT.

12- ALL STRUCTURAL MEMBERS MUST BE CLEANED BY GRINDING PRIOR TO ALL WELDING WORKS.

13- BOLTS, NUTS, LOCKNUTS, AND WASHERS AS PER ASTM-A325-14. ALL BOLTS ARE M20 (U.N.O.)

14- DEAD LOADS AND COLLATERAL LOADS

- STRUCTURAL STEEL (DENSITY) : 7850 KG/M3

15- LIVE LOADS

- MEZZANINE: 4,8 KPA

16- DESIGN METHODOLOGY:

- STRUCTURAL STEEL: ULTIMATE STRENGTH DESIGN ACCORDING TO CAN/CSA-S16-14.

PAINTING NOTES:

STEEL SURFACE PREPARATION PROCESS AND
PAINT COATING FOR AGNICO EAGLE.
THE STEEL MUST BE FREE FROM GREASE, OIL OR ANY OTHER
CONTAMINANT DETRIMENTAL TO THE GRIP.
1) WAKE SSPC-SP1
2) WAKE SSPC-SP6
3) APPLY 1 LAYER OF PRIMER OF EPOXY COR-PRO 470 (2 MILS SLCS) GRAY
4) APPLY 2 LAYERS OF EPOXY COATING COR-PRO 475 SAFETY YELLOW (5 MILS. SECS EACH)

PLAN DE SITE / SITE PLAN

NOTES GÉNÉRALES / GENERAL NOTES

POUR CONSTRUCTION
FOR CONSTRUCTION
AGNICO EAGLE
DATE : 2018-07-27

SNC-LAVALIN
SNC-Lavalin Inc.
Project # : 653281-0000

DESSINS EN RÉFÉRENCE / REFERENCE DRAWINGS

TITRE / TITLE	# DWG
KIVALIQ SERVICE AREA	AMP16-19-003

AGNICO EAGLE

NO	DATE	DESCRIPTION	PAR/APP.	CLIENT
0	2018-07-27	FOR CONSTRUCTION	JMC	D.L.

REVISIONS

2018-07-27

TITRE / TITLE
AGNICO EAGLE – AMARUQ DIVISION
593 – FINAL WATER TREATMENT PLANT
245 – STRUCTURE
CONTAINER 40 ft HIGH CUBE KM=04 AND SERVICE WATER SYSTEMS
PLAN VIEW, ELEVATION & PROFIL

DESSINÉ PAR / DRAWN BY	MICHEL LAVITHER, Tech.	DATE 2018-05-09
VÉRIFIÉ PAR / CHECKED BY	JANICK CÔTÉ, Ar Eng.	2018-07-02
APPROUVÉ PAR / APPROVED BY	DANY LAMBERT, P. Eng.	2018-07-06
ÉCHELLE / SCALE	INDICATED	DATE 2018-05-09

NO. DESSIN / DRAWING NO. 61-693-245-209

NO. PROJET / PROJECT NO.	REVISION	FEUILLE / SHT
6115	0	1 / 1

FILE NO. 61-693-245-209_R0.dwg

ABBREVIATIONS

A TO C – AIR TO CLOSE
A TO O – AIR TO OPEN
AVG – AVERAGE
B/EL – BOTTOM ELEVATION
CL – CENTER LINE
CFM – CUBIC FEET PER MINUTE
CW – CITY WATER (POTABLE)
DIA – DIAMETER
DWG – DRAWING
EL – ELEVATION
SID – FAIL CLOSED
F.O. – FAIL OPEN
FRL – FILTER\REGULATOR\LUBRICATOR
GAL – GALLONS
GPD – GALLONS PER DAY
GPH – GALLONS PER HOUR
GPM – GALLONS PER MINUTE
HB – HOSE BIB
HG – INCHES OF MERCURY
HI – HIGH
HOA – HAND/OFF/AUTO
HP – HORSEPOWER
IA – INSTRUMENT AIR
ID – INSIDE DIAMETER
INV – INVERT
LO – LOW
MH – MANHOLE
MW – MANWAY
N.C. – NORMALLY CLOSED
N.O. – NORMALLY OPEN
OAL – OVERALL LENGTH
O.D. – OUTSIDE DIAMETER
OF – OVERFLOW
PA – PLANT AIR
PSIG – POUNDS PER SQUARE INCH – GAUGE
PW – PLANT WATER
RED – REDUCER
RPM – REVOLUTIONS PER MINUTE
SCFM – STANDARD CUBIC FEET PER MINUTE
SCH – SCHEDULE
SG – SPECIFIC GRAVITY
SP – SETPOINT
SSH – STRAIGHT SIDE HEIGHT
STD – STANDARD
SW – SEAL WATER
SWD – SIDE WATER DEPTH
TDH – TOTAL DYNAMIC HEAD(FT OF FLUID)
T/EL – TOP ELEVATION
TYP – TYPICAL
VAC – VACUUM
VSD – VARIABLE SPEED DRIVE
WC – WATER COLUMN
WD – WATER DEPTH
WL – WATER LEVEL
WV – WORKING VOLUME (DOES NOT INCLUDE FREEBOARD OR HEEL)

PIPING AND TUBING MATERIALS

ABS – ACRYLONTRILE BUTADIENE STYRENE TRUSS PIPE
ALM – ALUMINUM PIPE OR TUBING
ARP – ALUMINUM REINFORCED PLASTIC PIPE
BL – BLACK IRON PIPE
BPT – BRAIDED PLASTIC TUBING–PVC
CI – CAST IRON PIPE
CISP – CAST IRON SOIL PIPE
CMCP – CORRUGATED METAL CULVERT PIPE
CMH – CHEMICAL HOSE
CMP – CORRUGATED METAL PIPE
COP – COPPER PIPE
PVC – CHLORINATED POLYVINYL CHLORIDE PIPE
CS – CARBON STEEL PIPE
DI – DUCTILE CAST IRON PIPE
ERP – EPOXY RESIN PIPE
FRP – FIBERGLASS REINFORCED PLASTIC PIPE
GS – GALVANIZED STEEL PIPE
HOSE – FLEXIBLE HOSE
HSI – HIGH SILICON IRON PIPE
KLS – PVDF LINED STEEL PIPE (KYNAR ® LINED TYPICAL)
KYN – PVDF (KYNAR ® TYPICAL)
MI – CARBON STEEL PIPE W/MALLEABLE IRON FITTINGS
NEO – NEOPRENE HOSE
NI – NICKEL ALLOY PIPE
NLS – NEOPRENE LINED STEEL PIPE
PEP – POLYETHYLENE PIPE
PETB – POLYETHYLENE TUBING
PLS – POLYPROPYLENE LINED STEEL PIPE
POP – POLYPROPYLENE PIPE
PRP – PHENOLIC RESIN PIPE
PVC – POLYVINYL CHLORIDE PIPE
PVC HOSE – POLYVINYL CHLORIDE HOSE
PVDF – POLYVINYLIDENE FLUORIDE PIPE
RBR – RUBBER HOSE
RCCP – REINFORCED CONCRETE CULVERT PIPE
RCP – REINFORCED CONCRETE PIPE
SAR – SARAN TUBING
SLH – SLUDGE HOSE
SLS – SARAN LINED STEEL PIPE
SS – STAINLESS STEEL PIPE OR TUBING
TEF – TEFLON TUBING
TI – TITANIUM ALLOY PIPE
TLS – TEFLON LINED STEEL PIPE
TYB – TYGON ® TUBING–BRAIDED
TYG – TYGON ® TUBING–UNBRAIDED

FLOWS AND LINES

NEW MAIN FLOW
EXISTING MAIN FLOW
FUTURE MAIN FLOW
NEW SECONDARY FLOW
EXISTING SECONDARY FLOW
FUTURE SECONDARY FLOW
CHEMICALS
BY OTHERS
CS SS – MATERIAL SPECIFICATION CHANGE
SUPPLIED BY VEOLIA

INSTRUMENTATION AND RELATED ITEMS

CAPILLARY TUBING
ELECTRICAL
HYDRAULIC
PNEUMATIC
DATA LINK

VALVE SYMBOLS

ANGLE
BALL
BUTTERFLY
CHECK VALVE
DIAPHRAGM
VALVE NOT SPECIFIED
GLOBE
KNIFE
NEEDLE
PINCH
PLUG
PRESSURE REDUCING
RELIEF ON LINE
RELIEF
SQUEEZE
THREE WAY
FOUR WAY
FLOAT VALVE
VACUUM BREAKER
AIR RELEASE
HOSE BIBB
INTEGRAL BLOCK & BLEED
PENSTOCK
WASTE PLUG
MULTI–FONCTION VALVE
CALIBRATION COLUMN
VENT
AIR TRAP

ACTUATORS

CYLINDER
DIAPHRAGM–SPRING
ELECTRO HYDRAULIC
ELECTRO PNEUMATIC
MOTOR
SOLENOID
POSITIONER * – TYPE

PIPING ACCESSORIES

FUNNEL
DIAPHRAGM SEAL
DRESSER COUPLING
EJECTOR/EDUCTOR
EXPANSION JOINT
FLANGED CONNECTION
FLEXIBLE HOSE
HOSE CONNECTION
PIPE TO TUBING ADAPTER
INSULATION
INSULATED PIPE WITH ELECTRIC HEAT TRACE
INSULATED PIPE WITH STEAM HEAT TRACE
VACUUM BREAKER
PULSATION DAMPENER
END CAP DISCONNECT
QUICK DISCONNECT
CONCENTRIC REDUCER
ECCENTRIC REDUCER
RUPTURE DISK
BASKET FILTER
MIXING VALVE
SIGHT FLOW INDICATOR
STRAINER
UNION
STEAM TRAP
AIR FILTER
AIR LUBRICATOR
AIR REGULATOR
COMB. AIR FILTER/ REGULATOR W/GAUGE
FLOW ORIFICE
SIGHT FLOW STRAINER
SPECTACLE BLIND OPEN
SPECTACLE BLIND CLOSE
PIGTAIL SIPHON
STATIC MIXER
INJECTION QUILL
STOP LOG
FLUME
MAGNETIC FLOW METER
SONIC FLOW METER
TURBINE FLOW METER
VENTURI
WEIR
VORTEX SENSOR
ROTAMETER
DRAIN
PLUG

ISA INSTRUMENT IDENTIFICATION TABLE

	FIRST LETTER		SUCCEEDING LETTERS	
	PROCESS VARIABLE	MODIFIER (IF NEEDED)	READOUT OR COMPUTER FUNCTION	MODIFIER (IF NEEDED)
A	ANALYSIS		ALARM	
B	BURNER, COMBUSTION		USER'S CHOICE	USER'S CHOICE
C	USER'S CHOICE		CONTROL	
D	USER'S CHOICE	DIFFERENTIAL		
E	VOLTAGE		SENSOR (PRIMARY ELEMENT)	
F	FLOW RATE	RATIO (FRACTION)		
G	USER'S CHOICE		GLASS, VIEWING DEVICE	
H	HAND			HIGH
I	CURRENT (ELECTRICAL)		INDICATE	
J	POWER	SCAN		
K	TIME, TIME SCHEDULE	TIME RATE OF CHANGE	CONTROL STATION	
L	LEVEL		LIGHT	LOW
M	USER'S CHOICE	MOMENTARY		MIDDLE, INTERMEDIATE
N	USER'S CHOICE		USER'S CHOICE	USER'S CHOICE
O	USER'S CHOICE		ORIFICE (RESTRICTION)	
P	PRESSURE, VACUUM		POINT (TEST CONNECTION)	
Q	QUANTITY	INTEGRATE, TOTALIZE		
R	RADIATION		RECORD	
S	SPEED, FREQUENCY	SAFETY	SWITCH	
T	TEMPERATURE		TRANSMIT	
U	MULTIVARIABLE		MULTIFUNCTION	MULTIFUNCTION
V	VIBRATION, MECH. ANALYSIS		VALVE, DAMPER, LOUVER	
W	WEIGHT, FORCE		WELL	
X	UNCLASSIFIED	X–AXIS	UNCLASSIFIED	UNCLASSIFIED
Y	EVENT, STATE OR PRESENCE	Y–AXIS	RELAY, COMPUTE, CONVERT	
Z	POSITION, DIMENSION	Z–AXIS	DRIVER, ACTUATOR, UNCLASSIFIED FINAL CONTROL ELEMENT	

LEGEND BASED ON ISA STANDARD S 5.1

INSTRUMENT TAG NUMBERS

TIC 103 – INSTRUMENTATION IDENTIFICATION OR TAG NUMBER
103 – LOOP NUMBER
TIC – FUNCTIONAL IDENTIFICATION
NOTE: HYPHENS ARE OPTIONAL AS SEPARATORS

ELECTRICAL AND RELATED ITEMS

S – SELECTOR SWITCHES
VFD – VARIABLE FREQUENCY DRIVE
EM – EMERGENCY POWER
– INTERLOCK
– PILOT LIGHT

LINE NUMBER IDENTIFICATION

25–XXYY–ZZZZ–0

- INSULATION (=I) OR INSULATION+ TRACING(=T)
- MATERIAL CLASS
- LINE NUMBER
- NUMBER ORIGINAL SHEET
- DIAMETER

NOTE : Refer to project pipe specifications for line codes

LINE CONTINUATIONS

INDICATES A LINE GOING TO OR COMING FROM BATTERY LIMITS (CONTRACT LIMITS)

5 A 2 – INDICATES CONTINUATION OF LINE IS ON SHEET NUMBER 5 (SAME DRAWING NUMBER) IN ZONE A 2

SHT 5 – INDICATES CONTINUATION OF A SIGNAL IS ON SHEET NUMBER 5

EQUIPMENT TAG NUMBERS

MXXXX AGITATORS, AERATORS
BXXXX AIR HANDLING–BLOWERS, COMPRESSORS, DRYERS
RXXXX CLARIFIERS, THICKENERS, SEPARATORS
FXXXX FILTERS–VACUUM, PRESSURE, CENTRIFUGES
PXXXX PUMPS
TXXXX TANKS
EXXXX HEAT EXCHANGER
IXXXXX SOFTENERS, DEMINERALIZERS
ROXXXX REVERSE OSMOSIS UNITS
SGXXXX STEAM GENERATORS

VALVE & ACCESSORY TAG

VXXXX VALVE
EJXXXX EXPANSION JOINT
HXXXX HOSE
FXXXX FILTER
SXXXX STRAINER
SBXXXX SPECTACLE BLIND
STXXXX STEAM TRAP

INSTRUMENT SYMBOLS

	PRIMARY LOCATION ***NORMALLY ACCESSIBLE TO OPERATOR	FIELD MOUNTED	AUXILIARY LOCATION ***NORMALLY ACCESSIBLE TO OPERATOR
DISCRETE INSTRUMENTS	1 * IP1**	2	3
SHARED DISPLAY, SHARED CONTROL	4	5	6
COMPUTER FUNCTION	7	8	9
PROGRAMMABLE LOGIC CONTROL	10	11	12

* SYMBOL SIZE MAY VARY ACCORDING TO THE USER'S NEEDS AND THE TYPE OF DOCUMENT. A SUGGESTED SQUARE AND CIRCLE SIZE FOR LARGE DIAGRAMS IS SHOWN ABOVE. CONSISTENCY IS RECOMMENDED.

** ABBREVIATIONS OF THE USER'S CHOICE SUCH AS IP1 (INSTRUMENT PANEL #1), IC2 (INSTRUMENT CONSOLE #2), CC3 (COMPUTER CONSOLE #3), ETC., MAY BE USED WHEN IT IS NECESSARY TO SPECIFY INSTRUMENT OR FUNCTION LOCATION.

*** NORMALLY INACCESSIBLE OR BEHIND–THE–PANEL DEVICES OR FUNCTIONS MAY BE DEPICTED BY USING THE SAME SYMBOL BUT WITH DASHED HORIZONTAL BARS, I.E.

REV.	DESCRIPTION	DATE	REVISÉ REVISED	VÉRIFIÉ CHECKED	APPROUVÉ APPROVED
4	FOR APPROVAL IV	2018–07–04	A.C.	G.P.	G.P.
3	FOR APPROVAL III	2018–05–31	A.C.	G.P.	G.P.
2	FOR APPROVAL II	2018–05–07	A.C.	G.P.	G.P.
1	FOR APPROVAL	2018–04–25	A.C.	G.P.	G.P.

DESSINÉ PAR/DRAWN BY A.C. DATE 2018–04–04
VÉRIFIÉ PAR/CHECKED BY G.P. DATE 2018–04–04
INGÉNIEUR PAR/ENGINEERING BY G.P. DATE 2018–04–04

VEOLIA WATER TECHNOLOGIES

CLIENT: AGNICO EAGLE MINING
AMARUQ, NU

TITRE / TITLE
WATER TREATMENT PLANT
PROCESS AND INSTRUMENTATION DIAGRAM
LEGEND

ÉCHELLE / SCALE: N.T.S.

PROJET / PROJECT: 5000218009 – PI0001
DESSIN No /DRAWING No: GEN
INTERNE / INTERVAL: 0/19
FEUILLET / SHEET: 4
RÉV./REV

Ce document est la propriété de VEOLIA et ne peut être reproduit sans son autorisation écrite / This document is the property of VEOLIA and cannot be reproduced without its written authorization

REF: N/A
SIZE ANSI D

Jul 20, 2018 11:19:39 – W:\2018\5000218009 Amaruq (Phase2&3)\15– Detailed execution\Drawings\Ip– PI\5000218009–PI0001_4.dwg – cardenas

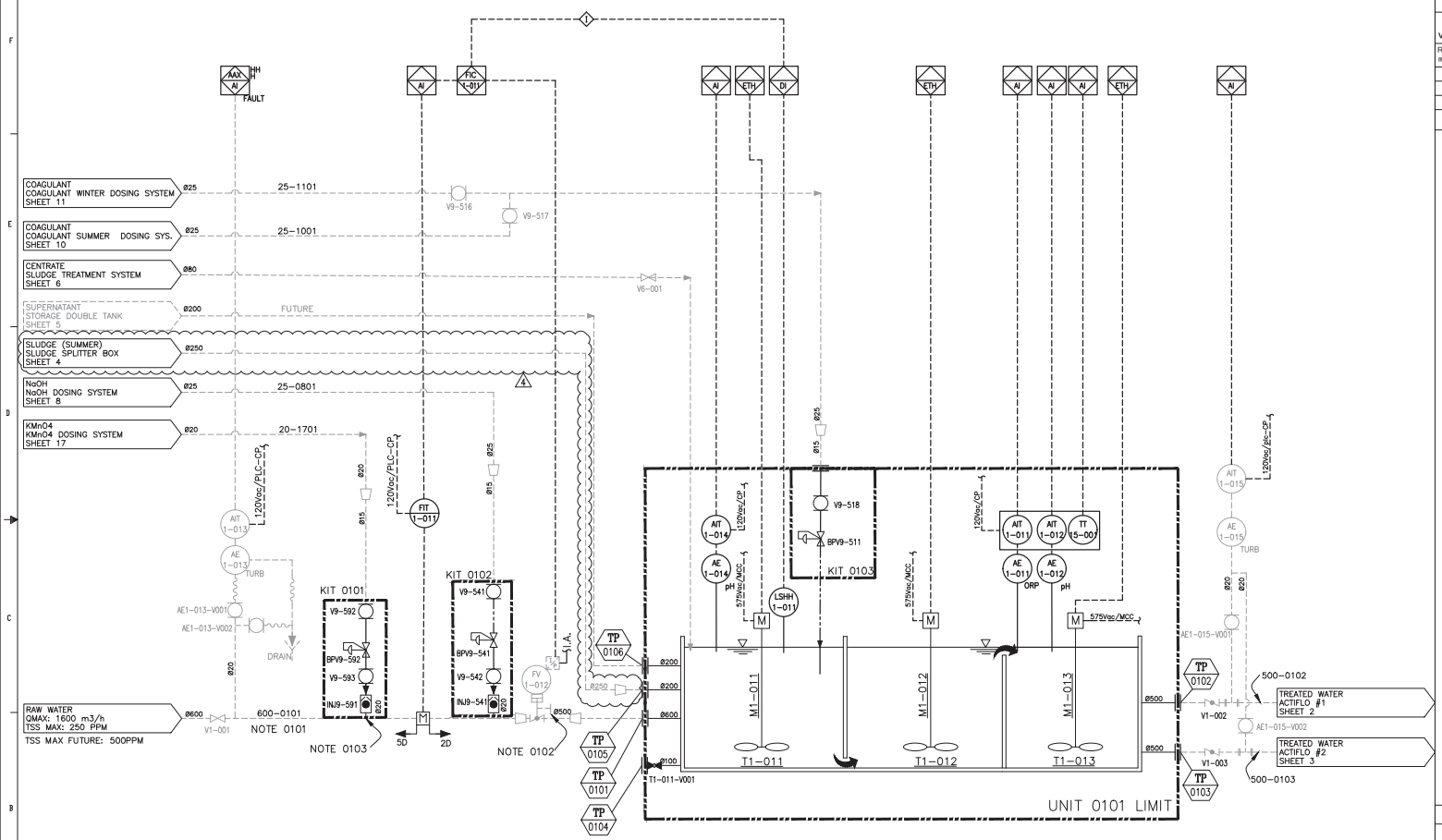

T1-011/012/013
METAL PRECIPITATION REACTOR
MODEL: RX75-3
MATERIAL: C.S.
VOLUME: 175 m3
CONTACT TIME: XXmin@XXm3/h

M1-011/012/013
METAL PRECIPITATION REACTOR MIXER
MIXER: EVGX6-5
DRIVER: 5 HP
575V/3Ph/60Hz
MATERIAL: SS304

Notes :

Note 0101 : Raw water Inlet pressure: 14 Psig.

Note 0102 : Flow control valve equipped with a declutchable gear and a handwheel

Note 0103 : Install as far as possible from reactor inlet

VWT Canada Scope of Supply limits:

RX-75-3 Reactors are pre-mounted as much as possible. However, for freight purposes or general practical reasons, the installation of some items needs to be completed on site by the Subcontractor.

REV. REV.	DESCRIPTION	DATE	REVISE REVISED	VERIFIE CHECKED	APPROUVE APPROVED
4	FOR APPROVAL IV	2018-07-04	A.C.	G.P.	G.P.
3	FOR APPROVAL III	2018-05-31	A.C.	G.P.	G.P.
2	FOR APPROVAL II	2018-05-07	A.C.	G.P.	G.P.
1	FOR APPROVAL	2018-04-25	A.C.	G.P.	G.P.

VEOLIA WATER TECHNOLOGIES

DESSINÉ PAR/DRAWN BY: A.C. — DATE: 2018-04-04
VÉRIFIÉ PAR/CHECKED BY: G.P. — DATE: 2018-04-04
INGÉNIERIE PAR/ENGINEERING BY: G.P. — DATE: 2018-04-04

CLIENT: AGNICO EAGLE MINING
AMARUQ, NU

TITRE / TITLE: WATER TREATMENT PLANT
PROCESS AND INSTRUMENTATION DIAGRAM
METAL PRECIPITATION REACTOR

ÉCHELLE / SCALE: N.T.S.

PROJET / PROJECT: 5000218009 — DESSIN No /DRAWING No: PI0001 — INTERNE / INTERNAL: GEN — FEUILLET / SHEET: 1/19 — REV./REV: 4

Ce document est la propriété de VEOLIA et ne peut être reproduit sans son autorisation écrite. / This document is the property of VEOLIA and cannot be reproduced without its written authorization

REF: N/A

SIZE ANSI D

Jul 20, 2018 11:19:44 – W:\2018\5000218009 Amaruq (TIH128505)\15– Dessins execution_Drawings\B– PI\5000218009–PI0001_4.dwg – cristeca

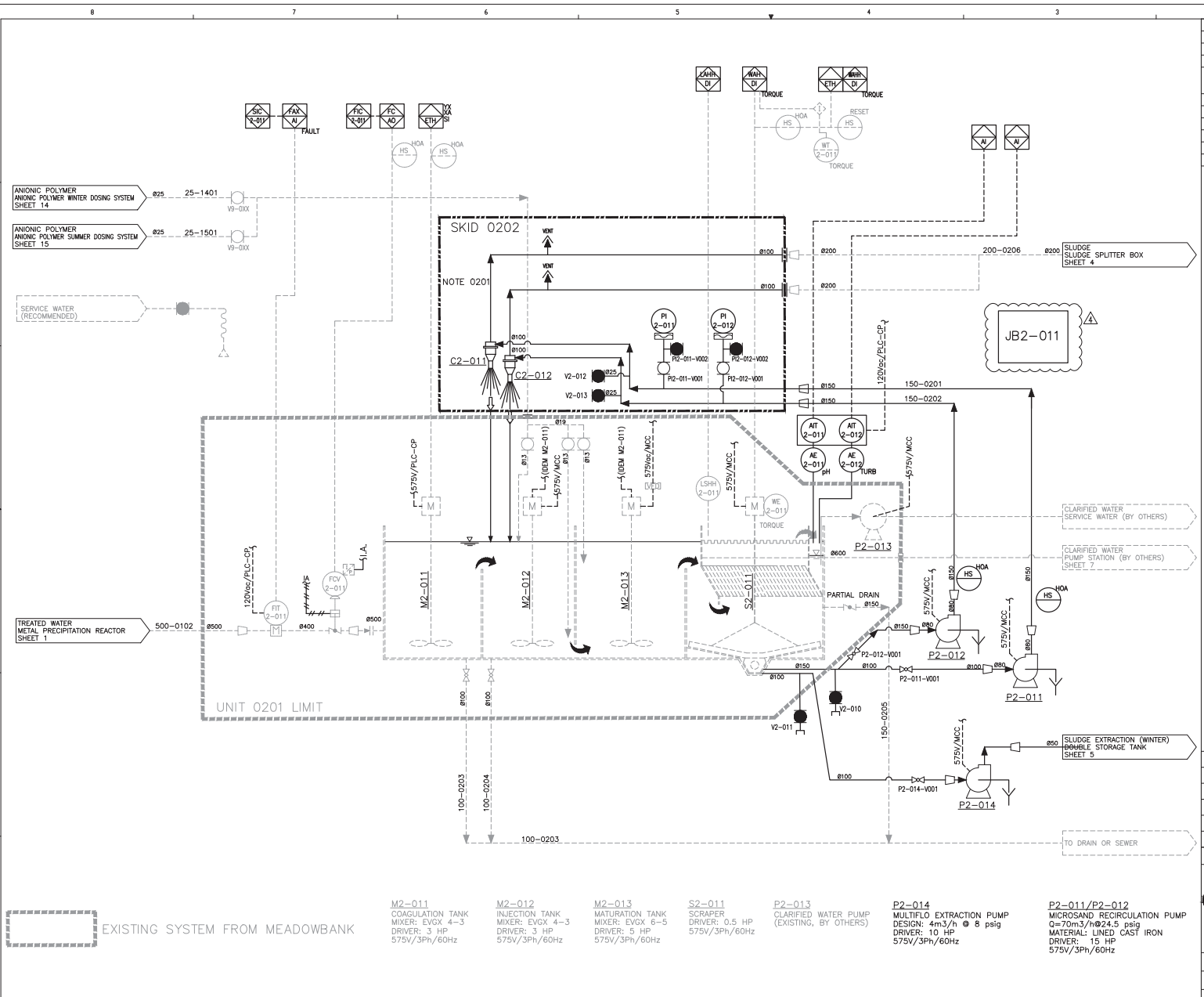

EXISTING SYSTEM FROM MEADOWBANK

M2-011
COAGULATION TANK
MIXER: EVOX 4-3
DRIVER: 3 HP
575V/3Ph/60Hz

M2-012
INJECTION TANK
MIXER: EVOX 4-3
DRIVER: 3 HP
575V/3Ph/60Hz

M2-013
MATURATION TANK
MIXER: EVOX 6-5
DRIVER: 5 HP
575V/3Ph/60Hz

S2-011
SCRAPER
DRIVER: 0.5 HP
575V/3Ph/60Hz

P2-013
CLARIFIED WATER PUMP
(EXISTING, BY OTHERS)

P2-014
MULTIFLO EXTRACTION PUMP
DESIGN: 4m3/h @ 8 psig
DRIVER: 10 HP
575V/3Ph/60Hz

P2-011/P2-012
MICROSAND RECIRCULATION PUMP
Q=70m3/h@24.5 psig
MATERIAL: LINED CAST IRON
DRIVER: 15 HP
575V/3Ph/60Hz

Notes :

Note 0201: Avoid backpressure at the outlet of the hydrocyclones, keep gravity draining.

VWT Canada Scope of Supply limits:

Actiflo units are pre-mounted as much as possible. However, for freight purposes or general practical reasons, the installation of some items needs to be completed on site by the Subcontractor.

REV.	DESCRIPTION	DATE	RÉVISÉ REVISED	VÉRIFIÉ CHECKED	APPROUVÉ APPROVED
4	FOR APPROVAL IV	2018-07-04	A.C.	G.P.	G.P.
3	FOR APPROVAL III	2018-05-31	A.C.	G.P.	G.P.
2	FOR APPROVAL II	2018-05-07	A.C.	G.P.	G.P.
1	FOR APPROVAL	2018-04-25	A.C.	G.P.	G.P.

DESSINÉ PAR/DRAWN BY: A.C. DATE: 2018-04-04
VÉRIFIÉ PAR/CHECKED BY: G.P. DATE: 2018-04-04
INGÉNIEUR PAR/ENGINEERING BY: G.P. DATE: 2018-04-04

CLIENT: AGNICO EAGLE MINING
AMARUQ, NU

VEOLIA WATER TECHNOLOGIES

TITRE / TITLE:
WATER TREATMENT PLANT
PROCESS AND INSTRUMENTATION DIAGRAM
ACTIFLO #1/ MULTIFLO #1

ÉCHELLE / SCALE: N.T.S.

PROJET / PROJECT	DESSIN No /DRAWING No	INTERNE / INTERVAL	FEUILLET / SHEET	REV./REV
5000218009 – PI0001		GEN	2/19	4

Ce document est la propriété de VEOLIA et ne peut être reproduit sans son autorisation écrite. / This document is the property of VEOLIA and cannot be reproduced without its written authorization

REF: N/A

SIZE ANSI D

Jul 20, 2018 11:19:49 – W:\2018\5000218009 Amaruq (Thiessen)\15- Detailed execution\Drawings\5- P\5000218009-P0001_4.dwg – cedanos

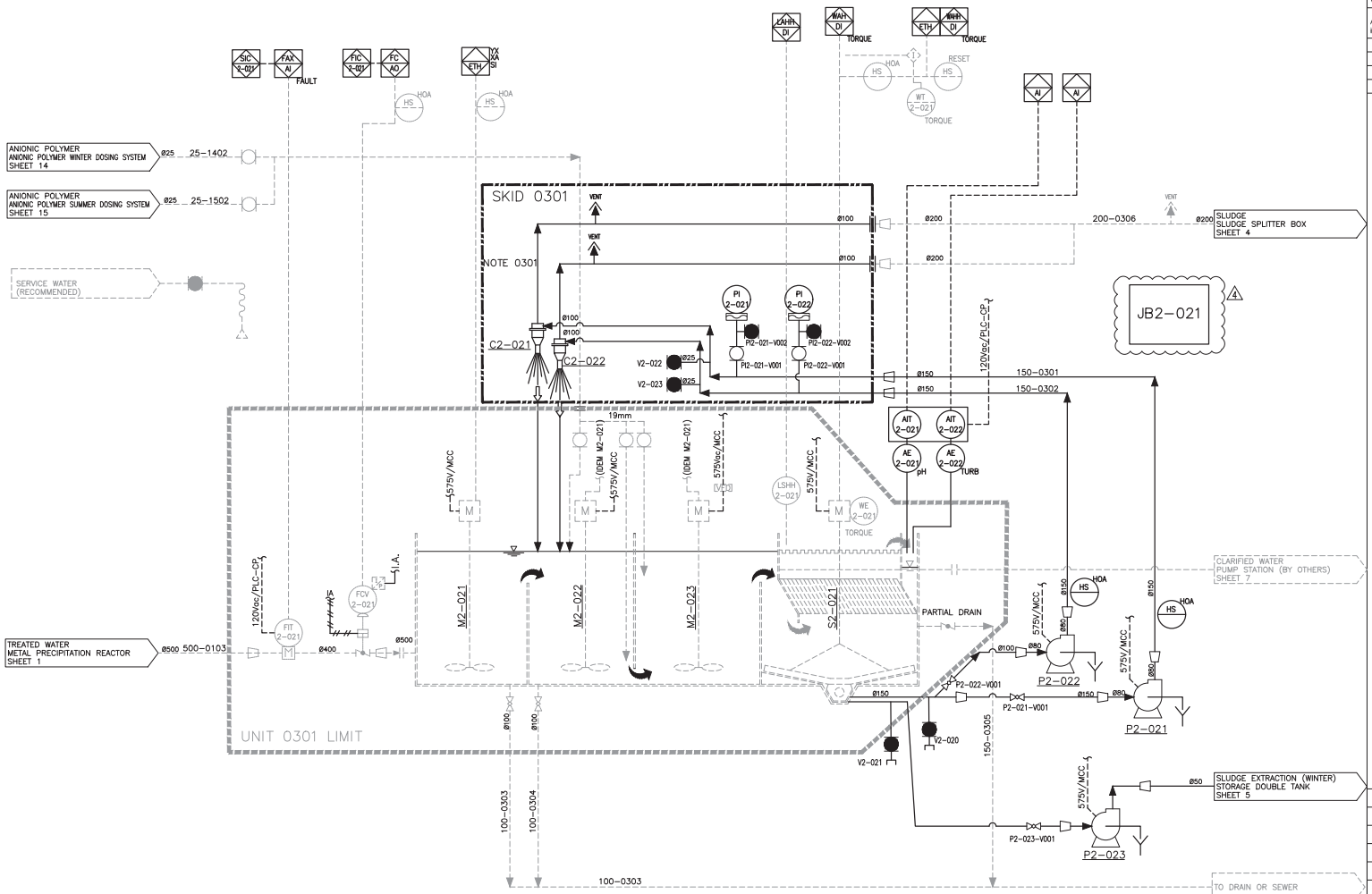

EXISTING SYSTEM FROM MEADOWBANK

M2-021
COAGULATION TANK
MIXER: EVGX 4-3
DRIVER: 3 HP
575V/3Ph/60Hz

M2-022
INJECTION TANK
MIXER: EVGX 4-3
DRIVER: 3 HP
575V/3Ph/60Hz

M2-023
MATURATION TANK
MIXER: EVGX 6-5
DRIVER: 5 HP
575V/3Ph/60Hz

S2-021
SCRAPER
DRIVER: 0.5 HP
575V/3Ph/60Hz

P2-023
MULTIFLO EXTRACTION PUMP
DESIGN: 4m3/h @ 8 psig
DRIVER: 10 HP
575V/3Ph/60Hz

P2-021/P2-022
MICROSAND RECIRCULATION PUMP
Q=70m3/h@24.5 psig
MATERIAL: LINED CAST IRON
DRIVER: 15 HP
575V/3Ph/60Hz

Notes :

Note 0301: Avoid backpressure at the outlet of the hydrocyclones, keep gravity draining.

VWT Canada Scope of Supply limits:

Actiflo units are pre-mounted as much as possible. However, for freight purposes or general practical reasons, the installation of some items needs to be completed on site by the Subcontractor.

REV. REV.	DESCRIPTION	DATE	REVISÉ REVISED	VÉRIFIÉ CHECKED	APPROUVÉ APPROVED
4	FOR APPROVAL IV	2018-07-04	A.C.	G.P.	G.P.
3	FOR APPROVAL III	2018-05-31	A.C.	G.P.	G.P.
2	FOR APPROVAL II	2018-05-07	A.C.	G.P.	G.P.
1	FOR APPROVAL	2018-04-25	A.C.	G.P.	G.P.

VEOLIA WATER TECHNOLOGIES

DESSINÉ PAR/DRAWN BY A.C.	DATE 2018-04-04	CLIENT AGNICO EAGLE MINING AMARUQ, NU
VÉRIFIÉ PAR/CHECKED BY G.P.	DATE 2018-04-04	
INGÉNIÉRÉ PAR/ENGINEERING BY G.P.	DATE 2018-04-04	

TITRE / TITLE
WATER TREATMENT PLANT
PROCESS AND INSTRUMENTATION DIAGRAM
ACTIFLO #2 / MULTIFLO #2

ÉCHELLE / SCALE: N.T.S.

PROJET / PROJECT	DESSIN No /DRAWING No	INTERNE / INTERNAL	FEUILLET / SHEET	REV./REV
5000218009	PI0001	GEN	3/19	4

Ce document est la propriété de VEOLIA et ne peut être reproduit sans son autorisation écrite. / This document is the property of VEOLIA and cannot be reproduced without its written authorization

REF: N/A

SIZE ANSI D

Jul 20, 2018 11:19:54 - W:\2018\5000218009 Amaruq (TH128505)\15- Dessins execution_Drawings\B- PI\5000218009-PI0001_4.dwg - cristeca

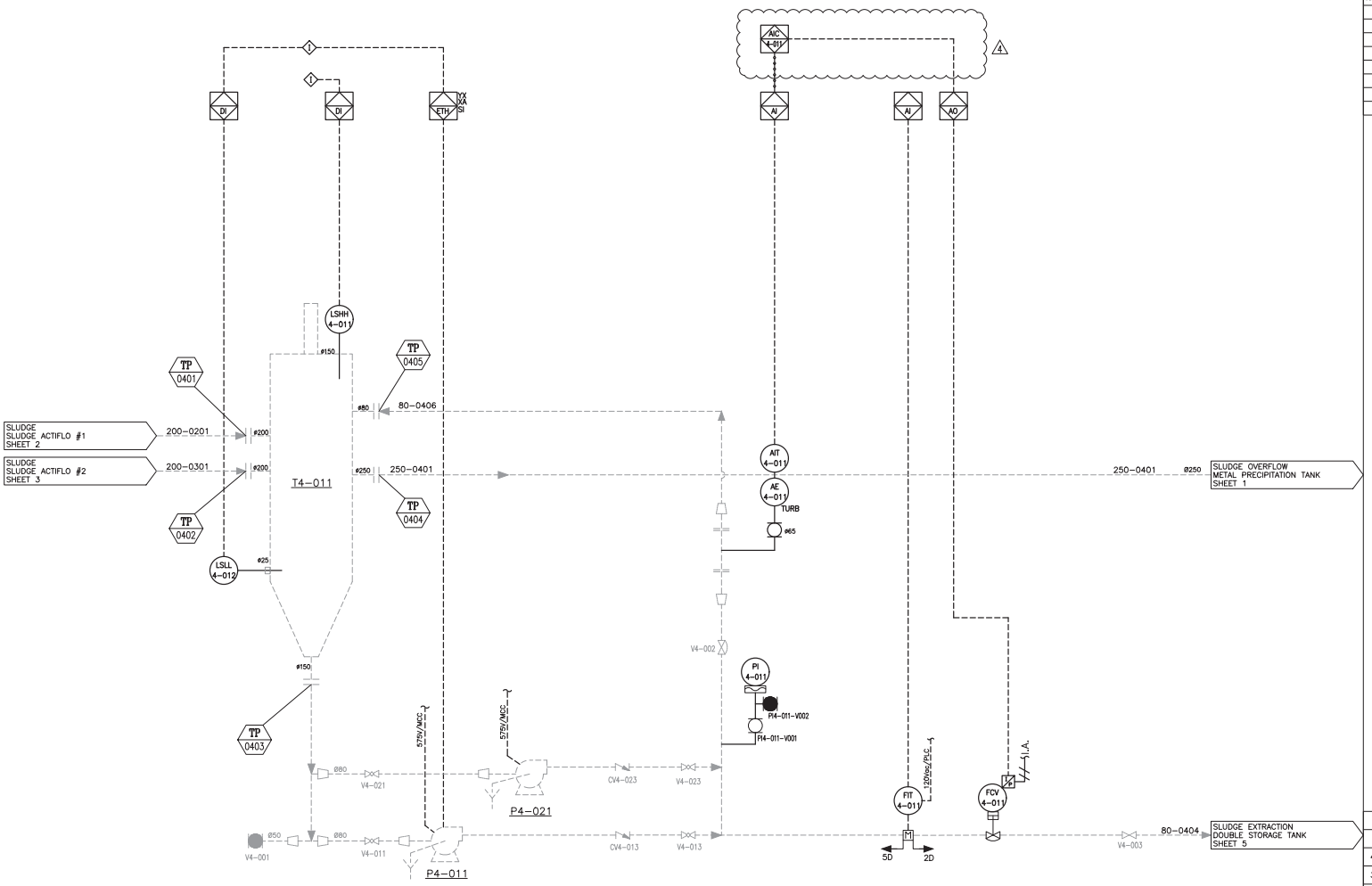
Notes :
Note 0401: Avoid backpressure at the outlet of the hydrocyclones, keep gravity draining.
SLUDGE SLUDGE ACTIFLO #1 SHEET 2
SLUDGE SLUDGE ACTIFLO #2 SHEET 3
200-0201
200-0301
T4-011
LSHH 4-011
LSLL 4-012
TP 0401
TP 0402
TP 0403
TP 0404
TP 0405
80-0406
250-0401
AIT 4-011
AE 4-011
TURB
PI 4-011
PI4-011-V002
PI4-011-V001
V4-002
V4-021
V4-001
V4-011
V4-003
CV4-023
CV4-013
P4-021
P4-011
575V/MCC
120Vac/PLC
FIT 4-011
FCV 4-011
I.A.
5D
2D
SLUDGE OVERFLOW METAL PRECIPITATION TANK SHEET 1
SLUDGE EXTRACTION DOUBLE STORAGE TANK SHEET 5
80-0404
T4-011
(BY OTHERS)
SLUDGE SPLITTER BOX
MATERIAL: SS304
VOLUME: 1.4 m3
P4-011/P4-021 (EXISTING)
SLUDGE EXTRACTION PUMP
CAP.: 42 (28+14) m3/h @ 5mTDH
POWER: 5 HP
575V/3Ph/60Hz
4 FOR APPROVAL IV 2018-07-04 A.C. G.P. G.P.
3 FOR APPROVAL III 2018-05-31 A.C. G.P. G.P.
2 FOR APPROVAL II 2018-05-07 A.C. G.P. G.P.
1 FOR APPROVAL 2018-04-25 A.C. G.P. G.P.
REV. DESCRIPTION DATE REVISÉ REVISED VÉRIFIÉ CHECKED APPROUVÉ APPROVED
VEOLIA WATER TECHNOLOGIES
DESSINÉ PAR/DRAWN BY A.C. 2018-04-04
VÉRIFIÉ PAR/CHECKED BY G.P. 2018-04-04
APPROUVÉ PAR/ENGINEERING BY G.P. 2018-04-04
CLIENT
AGNICO EAGLE MINING
AMARUQ, NU
TITRE / TITLE
WATER TREATMENT PLANT
PROCESS AND INSTRUMENTATION DIAGRAM
SLUDGE SPLITTER BOX
ÉCHELLE / SCALE: N.T.S.
PROJET / PROJECT DESSIN No /DRAWING No 5000218009 – PI0001
INTERNE / INTERNAL GEN
FEUILLET / SHEET 4/19
RÉV./REV 4
Ce document est la propriété de VEOLIA et ne peut être reproduit sans son autorisation écrite. / This document is the property of VEOLIA and cannot be reproduced without its written authorization
REF: N/A
SIZE ANSI D

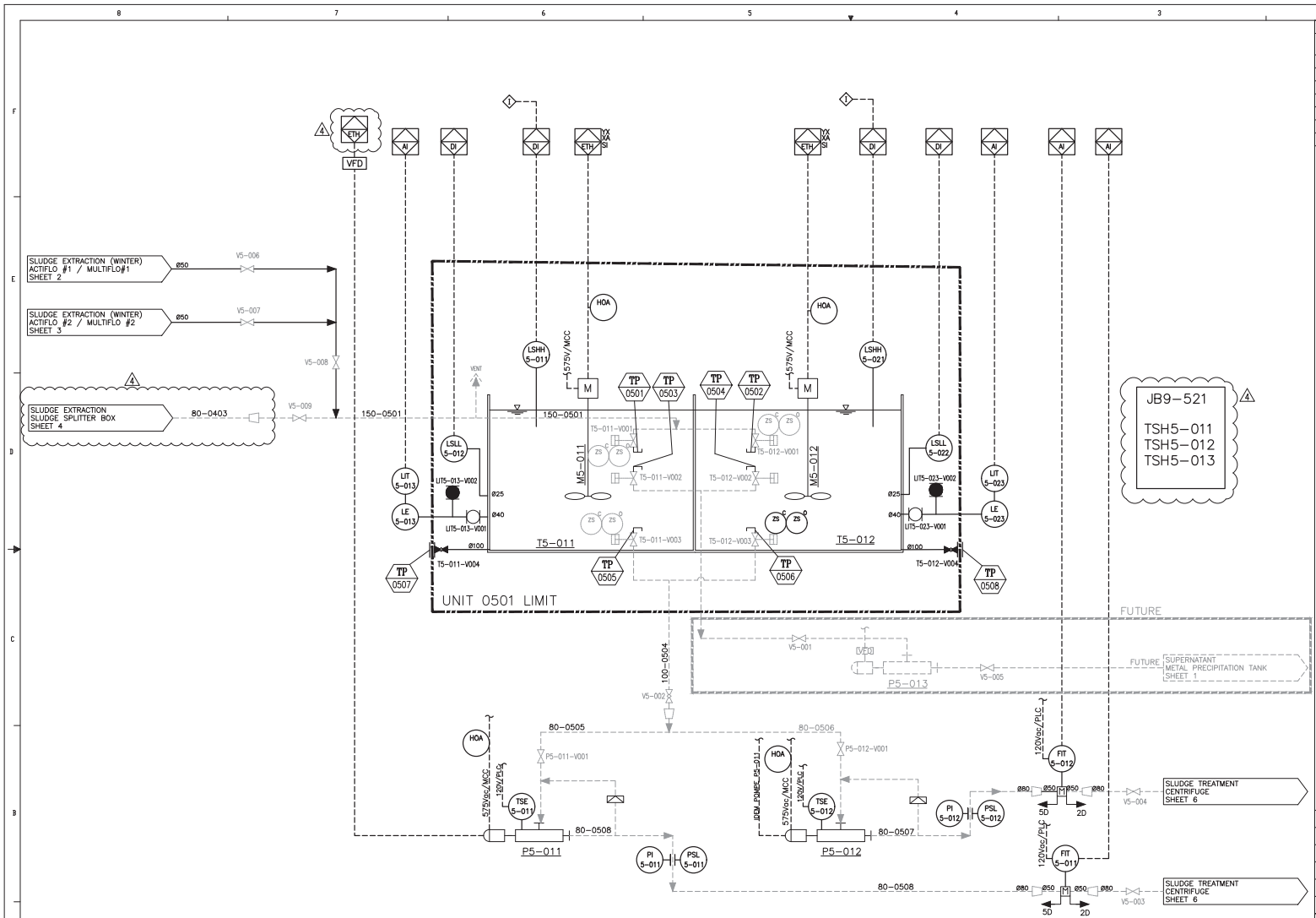

T5-011/012
DOUBLE STORAGE TANK
MODEL: RX75-2
MATERIAL: C.S.
VOLUME: XXX m3

M5-011/012
STORAGE TANK MIXER
MIXER: EVGX6-5
DRIVER: 5 HP
575V/3PH/60Hz
MATERIAL: SS304

P5-011/012
CENTRIFUGE FEEDING PUMP
TYPE: PROGRESSIVE CAVITY
CAP.: 20m3/h @ 50psig
POWER: 5 HP, 575/3/60

P5-013
PUMP (FUTURE)
TYPE: PROGRESSIVE CAVITY
CAP.: XXm3@50psig
POWER: XXHP, 575/3/60

VWT Canada Scope of Supply limits:

RX tanks are pre-mounted as much as possible. However, for freight purposes or general practical reasons, the installation of some items needs to be completed on site by the Subcontractor.

REV.	DESCRIPTION	DATE	RÉVISÉ REVISED	VÉRIFIÉ CHECKED	APPROUVÉ APPROVED
4	FOR APPROVAL IV	2018-07-04	A.C.	G.P.	G.P.
3	FOR APPROVAL III	2018-05-31	A.C.	G.P.	G.P.
2	FOR APPROVAL II	2018-05-07	A.C.	G.P.	G.P.
1	FOR APPROVAL	2018-04-25	A.C.	G.P.	G.P.

DESSINÉ PAR/DRAWN BY: A.C. DATE: 2018-04-04
VÉRIFIÉ PAR/CHECKED BY: G.P. DATE: 2018-04-04
INGÉNIEUR PAR/ENGINEERING BY: G.P. DATE: 2018-04-04

CLIENT: AGNICO EAGLE MINING
AMARUQ, NU

VEOLIA WATER TECHNOLOGIES

TITRE / TITLE:
WATER TREATMENT PLANT
PROCESS AND INSTRUMENTATION DIAGRAM
STORAGE DOUBLE TANK

ÉCHELLE / SCALE: N.T.S.

PROJET / PROJECT	DESSIN No /DRAWING No	INTERNE / INTERVAL	FEUILLET / SHEET	REV./REV
5000218009 – PI0001		GEN	5/19	4

Ce document est la propriété de VEOLIA et ne peut être reproduit sans son autorisation écrite / This document is the property of VEOLIA and cannot be reproduced without its written authorization

REF: N/A
SIZE ANSI D

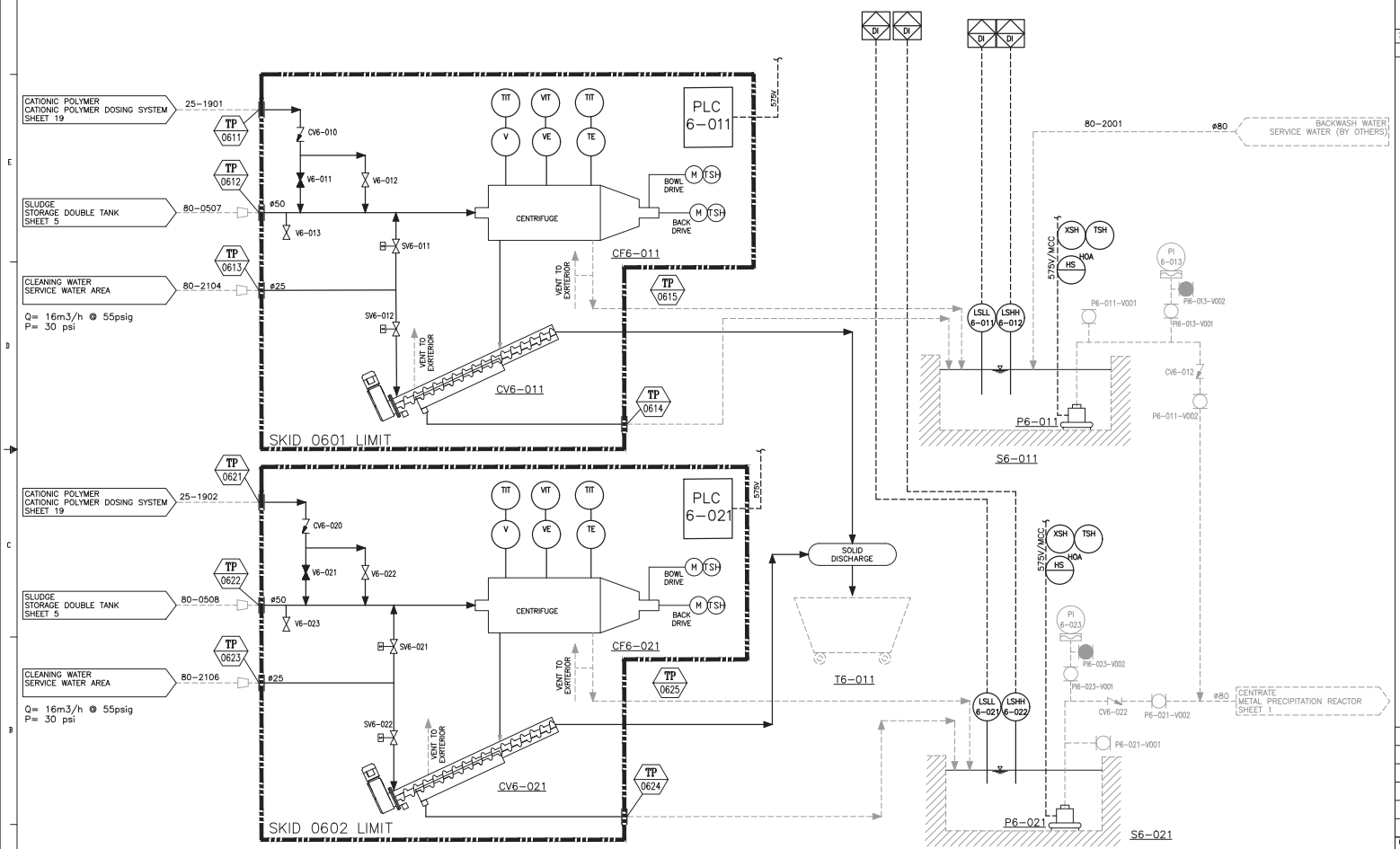

CV6-011 / CV6-021
CONVEYOR
POWER: 575V/3PH/60Hz

CF6-011 / CF6-021
CENTRIFUGE
BOWL DRIVE MOTOR
POWER: 575V/3PH/60Hz

T6-011
ROLL-OFF BIN
(BY OTHERS)

S6-011 / S6-021
SUMP PUMP PIT
VOL.: 5m3

P6-011 / P6-021
CENTRATE SUMP PUMP
TYPE: SUBMERSIBLE PUMP
CAP : 20 m3/h @ 8 mTDH
POWER: 5 HP 575V/3Ph/60Hz

Notes :

1. All piping to and from machine to be completed with flexible connections.
2. See foundation details for design loads and connection details.
3. All dimensions are in mm with inches in [ ].
4. Dry weight of machine 3059kg [6744 lbs].
5. Scroll weight 510 kg [1124 lbs].
6. Process requirements
   Washwater: 35.2-70.4GPM @ 43.5-58PSI
   Shutdown: 15min
   CIP: 10min
   Air flow: 118CFM
   Minimum sludge inlet pressure: 7.5PSI at centrifuge feed flange.
7. All chutes to be supported by others unless noted otherwise.

REV.	DESCRIPTION	DATE	RÉVISÉ REVISED	VÉRIFIÉ CHECKED	APPROUVÉ APPROVED
4	FOR APPROVAL IV	2018-07-04	A.C.	G.P.	G.P.
3	FOR APPROVAL III	2018-05-31	A.C.	G.P.	G.P.
2	FOR APPROVAL II	2018-05-07	A.C.	G.P.	G.P.
1	FOR APPROVAL	2018-04-25	A.C.	G.P.	G.P.

DESSINÉ PAR/DRAWN BY: A.C. DATE: 2018-04-04
VÉRIFIÉ PAR/CHECKED BY: G.P. DATE: 2018-04-04
INGÉNIEUR PAR/ENGINEERING BY: G.P. DATE: 2018-04-04

CLIENT: AGNICO EAGLE MINING
AMARUQ, NU

VEOLIA WATER TECHNOLOGIES

TITRE / TITLE:
WATER TREATMENT PLANT
PROCESS AND INSTRUMENTATION DIAGRAM
SLUDGE TREATMENT SYSTEM

ÉCHELLE / SCALE: N.T.S.

PROJET / PROJECT	DESSIN No /DRAWING No	INTERNE / INTERVAL	FEUILLET / SHEET	REV./REV
5000218009 –	PI0001	GEN	6/19	4

Ce document est la propriété de VEOLIA et ne peut être reproduit sans son autorisation écrite / This document is the property of VEOLIA and cannot be reproduced without its written authorization

REF: N/A
SIZE ANSI D

Jul 20, 2018 11:02:09 - W:\5\218\5000218009 Amaruq (Thiessen)\15- Detailed execution\Drawings\P- PI\5000218009-PI0001_4.dwg - cmbeau

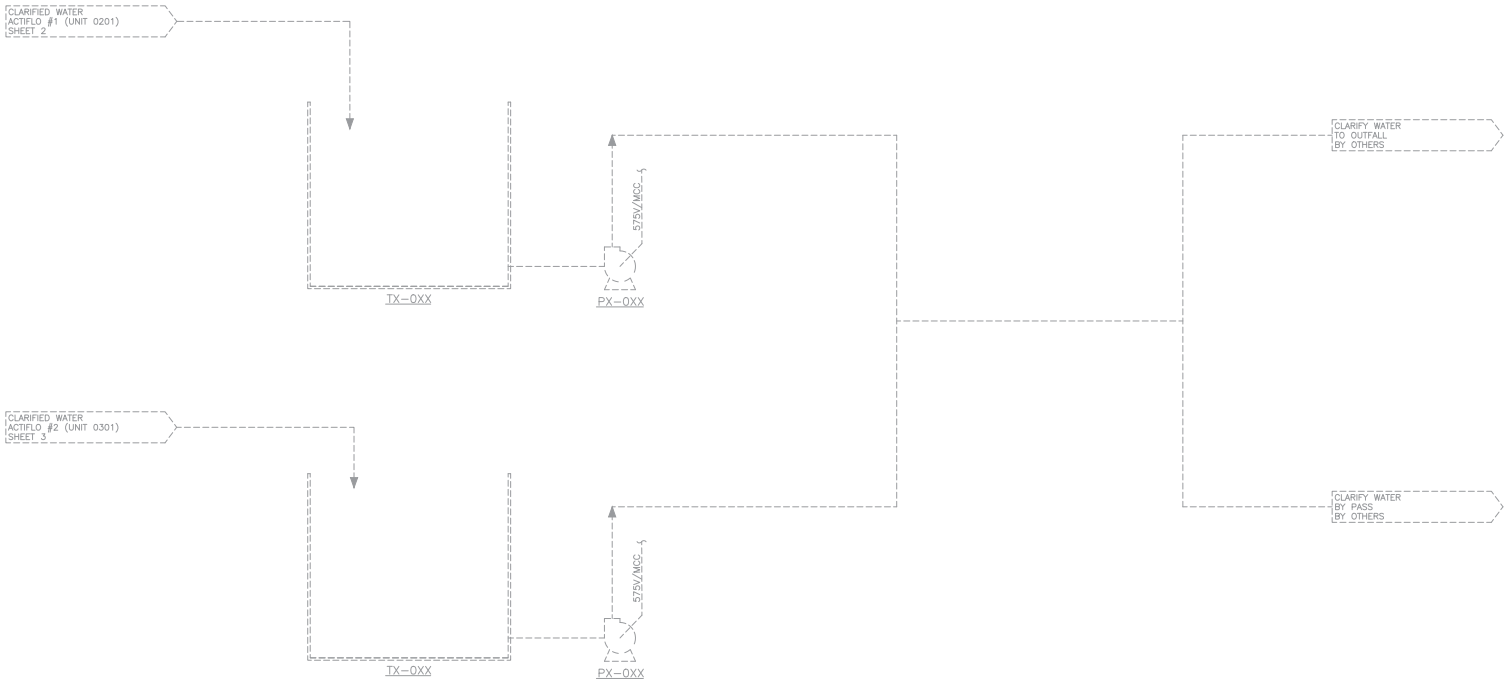

TX-0XX / TX-0XX
LIFTING TANK

PX-0XX / PX-0XX
LIFTING PUMP

Notes :

REV.	DESCRIPTION	DATE	RÉVISÉ REVISED	VÉRIFIÉ CHECKED	APPROUVÉ APPROVED
4	FOR APPROVAL IV	2018-07-04	A.C.	G.P.	G.P.
3	FOR APPROVAL III	2018-05-31	A.C.	G.P.	G.P.
2	FOR APPROVAL II	2018-05-07	A.C.	G.P.	G.P.
1	FOR APPROVAL	2018-04-25	A.C.	G.P.	G.P.

DESSINÉ PAR/DRAWN BY: A.C. — DATE: 2018-04-04
VÉRIFIÉ PAR/CHECKED BY: G.P. — DATE: 2018-04-04
INGÉNIEUR PAR/ENGINEERING BY: G.P. — DATE: 2018-04-04

CLIENT: AGNICO EAGLE MINING
AMARUQ, NU

VEOLIA WATER TECHNOLOGIES

TITRE / TITLE:
WATER TREATMENT PLANT
PROCESS AND INSTRUMENTATION DIAGRAM
PUMP STATION

ÉCHELLE / SCALE: N.T.S.

PROJET / PROJECT	DESSIN No /DRAWING No	INTERNE / INTERVAL	FEUILLET / SHEET	REV./REV
5000218009 – PI0001		GEN	7/19	4

Ce document est la propriété de VEOLIA et ne peut être reproduit sans son autorisation écrite. / This document is the property of VEOLIA and cannot be reproduced without its written authorization

REF: N/A

SIZE ANSI D

Jul 20, 2018 11:20:14 - W:\5\21\5\5000218009 Amaruq (Thiri)\5000218009-PI0001_4.dwg - cvickers

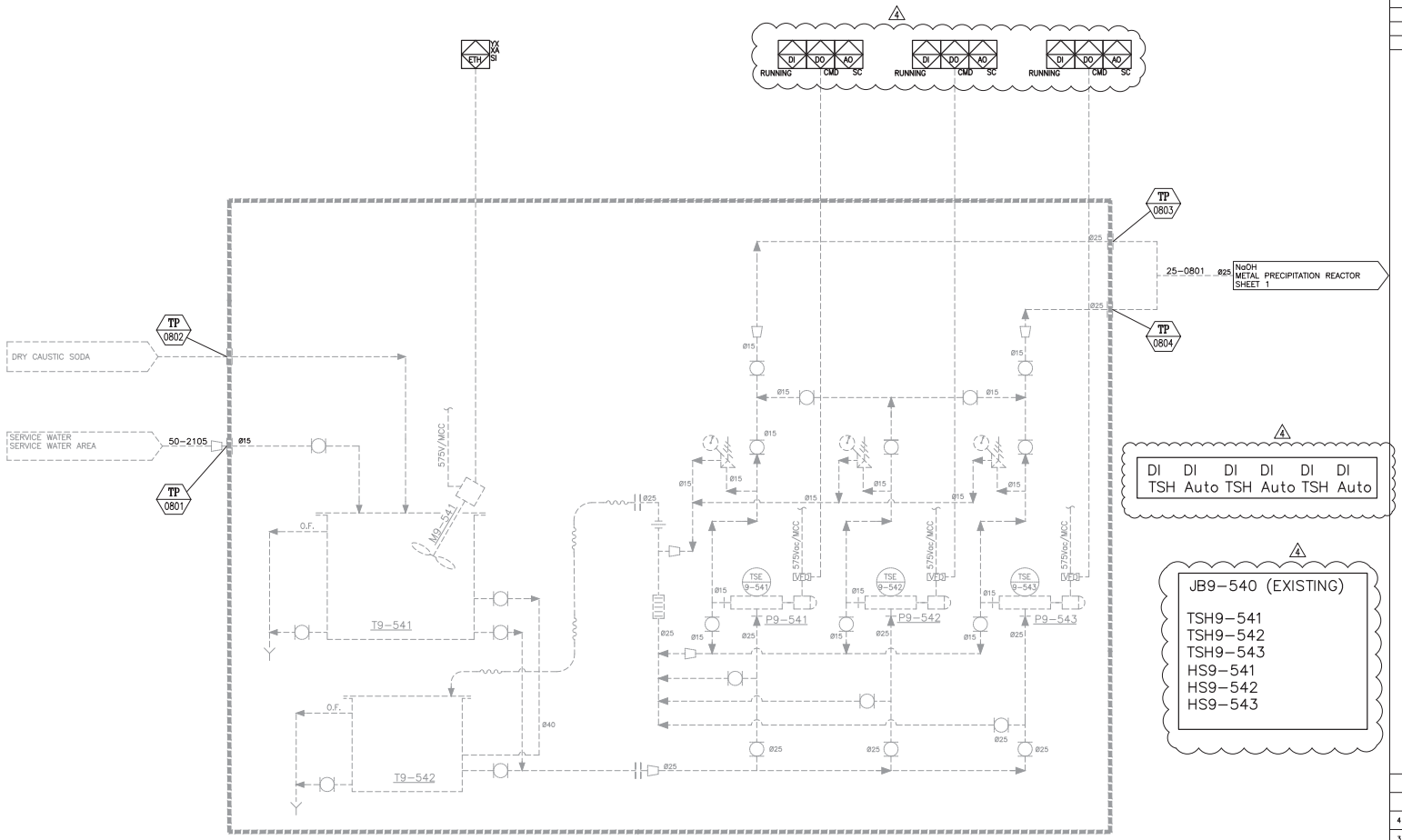

EXISTING SYSTEM FROM MEADOWBANK

T9-541
CAUSTIC SODA PREPARATION TANK
TOTAL CAP: 340 L
MATL: POLYETHYLENE

T9-542
CAUSTIC SODA DOSING TANK
TOTAL CAP: 70 L
MATL: POLYETHYLENE

M9-541
CAUSTIC SODA MIXER
DRIVER: 0.5HP
575V/3Ph/60Hz

P9-541/P9-542/P9-543
CAUSTIC SODA METERING PUMP
DESIGN: 3.3-50 L/h @7 BARS
MOTOR: 0.5HP
POWER SUPPLY: 575V/3PH/60Hz

Notes :

REV. REV.	DESCRIPTION	DATE	REVISÉ REVISED	VÉRIFIÉ CHECKED	APPROUVÉ APPROVED
4	FOR APPROVAL IV	2018-07-04	A.C.	G.P.	G.P.
3	FOR APPROVAL III	2018-05-31	A.C.	G.P.	G.P.
2	FOR APPROVAL II	2018-05-07	A.C.	G.P.	G.P.
1	FOR APPROVAL	2018-04-25	A.C.	G.P.	G.P.

VEOLIA WATER TECHNOLOGIES

DESSINÉ PAR/DRAWN BY A.C.	DATE 2018-04-04	CLIENT AGNICO EAGLE MINING AMARUQ, NU
VÉRIFIÉ PAR/CHECKED BY G.P.	DATE 2018-04-04	
INGÉNIERIE PAR/ENGINEERING BY G.P.	DATE 2018-04-04	

TITRE / TITLE
WATER TREATMENT PLANT
PROCESS AND INSTRUMENTATION DIAGRAM
CAUSTIC SODA PREPARATION AND DOSING SYSTEM

ÉCHELLE / SCALE: N.T.S.

PROJET / PROJECT	DESSIN No /DRAWING No	INTERNE / INTERNAL	FEUILLET / SHEET	REV./REV
5000218009	PI0001	GEN	8/19	4

Ce document est la propriété de VEOLIA et ne peut être reproduit sans son autorisation écrite. / This document is the property of VEOLIA and cannot be reproduced without its written authorization

REF: N/A

SIZE ANSI D

Jul 20, 2018 11:20:19 - W:\2018\5000218009 Amaruq (TIH128505)\15- Dessins execution_Drawings\8- P\5000218009-PI0001_4.dwg - cristeca

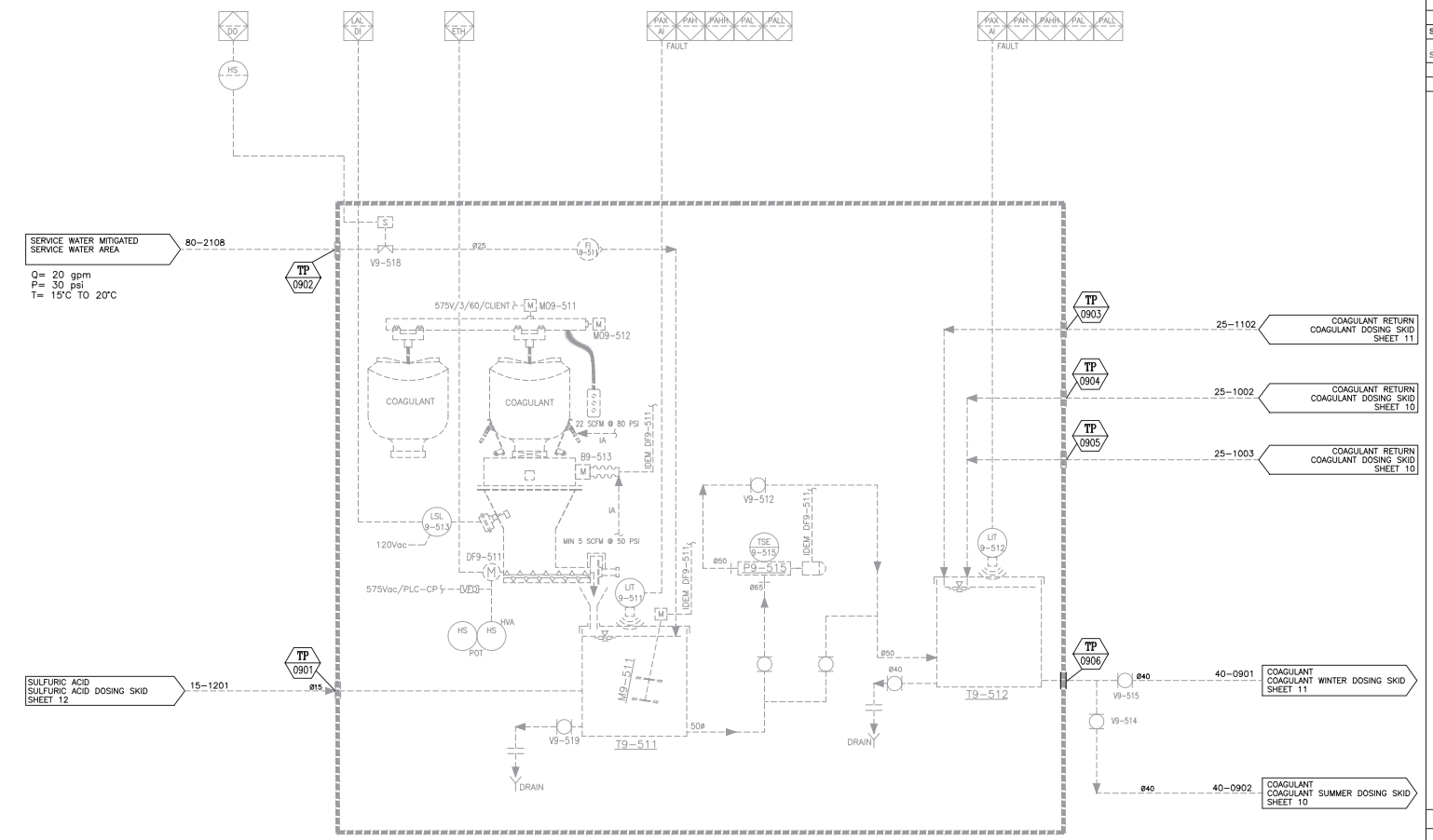

EXISTING SYSTEM FROM MEADOWBANK

P9-515
COAGULANT TRANSFER PUMP
CAPACITY: 5000 L/H @ 30 psi
MOTOR: 5HP, 1150 rpm
POWER SUPPLY: 575V/3Ph/60Hz

DF9-511
DRY FEEDER
CAPACITY: 200 KG/H
DRIVER: 0.75HP
POWER SUPPLY: 575V/3Ph/60Hz

T9-511
COAGULANT MATURATION TANK
CAP.TOTAL: 1000 L

T9-512
COAGULANT DOSING TANK
CAP: 1000L

M9-511
COAGULANT MIXER
DRIVER: 1HP
POWER SUPPLY: 575V/3Ph/60Hz

B9-513
BLOWER
DRIVER: 1.5HP
POWER SUPPLY: 575V/3Ph/60Hz

M09-511
TROLLEY
DRIVER: 0.5 HP
POWER SUPPLY: 575V/3Ph/60Hz

M09-512
HOIST
DRIVER: 2.4 HP
POWER SUPPLY: 575V/3Ph/60Hz

Notes :

Note 0901 : The vent must be higher than the storage tank.

Safety requirements :

Safety Shower must be provided in the immediate work area for emergency use (as per ANSI Z358.1)

REV. REV.	DESCRIPTION	DATE	REVISE REVISED	VERIFIE CHECKED	APPROUVE APPROVED
4	FOR APPROVAL IV	2018-07-04	A.C.	G.P.	G.P.
3	FOR APPROVAL III	2018-05-31	A.C.	G.P.	G.P.
2	FOR APPROVAL II	2018-05-07	A.C.	G.P.	G.P.
1	FOR APPROVAL	2018-04-25	A.C.	G.P.	G.P.

VEOLIA WATER TECHNOLOGIES

DESSINÉ PAR/DRAWN BY A.C.	DATE 2018-04-04	CLIENT AGNICO EAGLE MINING AMARUQ, NU
VÉRIFIÉ PAR/CHECKED BY G.P.	DATE 2018-04-04	
INGÉNIERIE PAR/ENGINEERING BY G.P.	DATE 2018-04-04	

TITRE / TITLE
WATER TREATMENT PLANT
PROCESS AND INSTRUMENTATION DIAGRAM
COAGULANT PREPARATION

ÉCHELLE / SCALE: N.T.S.

PROJET / PROJECT	DESSIN No /DRAWING No	INTERNE / INTERNAL	FEUILLET / SHEET	REV./REV
5000218009	PI0001	GEN	9/19	3

Ce document est la propriété de VEOLIA et ne peut être reproduit sans son autorisation écrite. / This document is the property of VEOLIA and cannot be reproduced without its written authorization

REF: N/A

SIZE ANSI D

Jul 20, 2018 11:20:24 - W:\2018\5000218009 Amaruq (TIH128505)\15- Dessins execution_Drawings\B- PI\5000218009-PI0001_4.dwg - cristeca

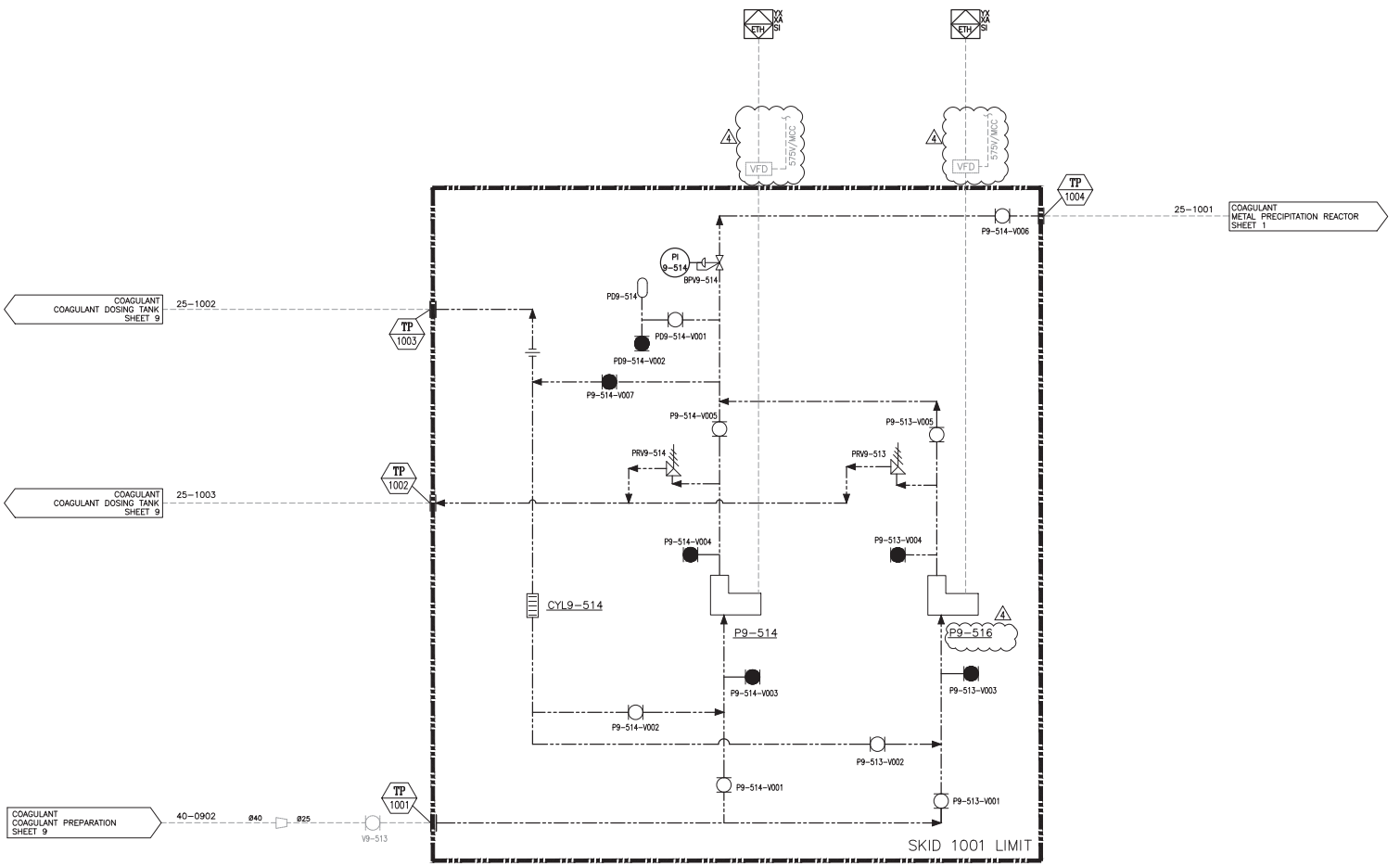

P9-514 / P9-516
COAGULANT METERING PUMP
DESIGN: 450LPH@80psig
MOTOR: XXHP
POWER SUPPLY: 575/3/60

Notes :

Safety requirements :

Safety Shower must be provided in the immediate work area for emergency use (as per ANSI Z358.1)

REV.	DESCRIPTION	DATE	RÉVISÉ / REVISED	VÉRIFIÉ / CHECKED	APPROUVÉ / APPROVED
4	FOR APPROVAL IV	2018-07-04	A.C.	G.P.	G.P.
3	FOR APPROVAL III	2018-05-31	A.C.	G.P.	G.P.
2	FOR APPROVAL II	2018-05-07	A.C.	G.P.	G.P.
1	FOR APPROVAL	2018-04-25	A.C.	G.P.	G.P.

VEOLIA WATER TECHNOLOGIES

DESSINÉ PAR/DRAWN BY	A.C.	DATE 2018-04-04
VÉRIFIÉ PAR/CHECKED BY	G.P.	DATE 2018-04-04
INGÉNIEUR PAR/ENGINEERING BY	G.P.	DATE 2018-04-04

CLIENT: AGNICO EAGLE MINING
AMARUQ, NU

TITRE / TITLE
WATER TREATMENT PLANT
PROCESS AND INSTRUMENTATION DIAGRAM
COAGULANT SUMMER DOSING SYSTEM

ÉCHELLE / SCALE: N.T.S.

PROJET / PROJECT	DESSIN No /DRAWING No	INTERNE / INTERVAL	FEUILLET / SHEET	REV./REV
5000218009 – PI0001		GEN	10/19	4

Ce document est la propriété de VEOLIA et ne peut être reproduit sans son autorisation écrite / This document is the property of VEOLIA and cannot be reproduced without its written authorization

REF: N/A

SIZE ANSI D

Jul 20, 2018 11:02:28 - W:\5000218009\Amarq (TM\128500)\15- Dossier execution_Drawings\En - P\5000218009-PI0001_4.dwg - cerbeau

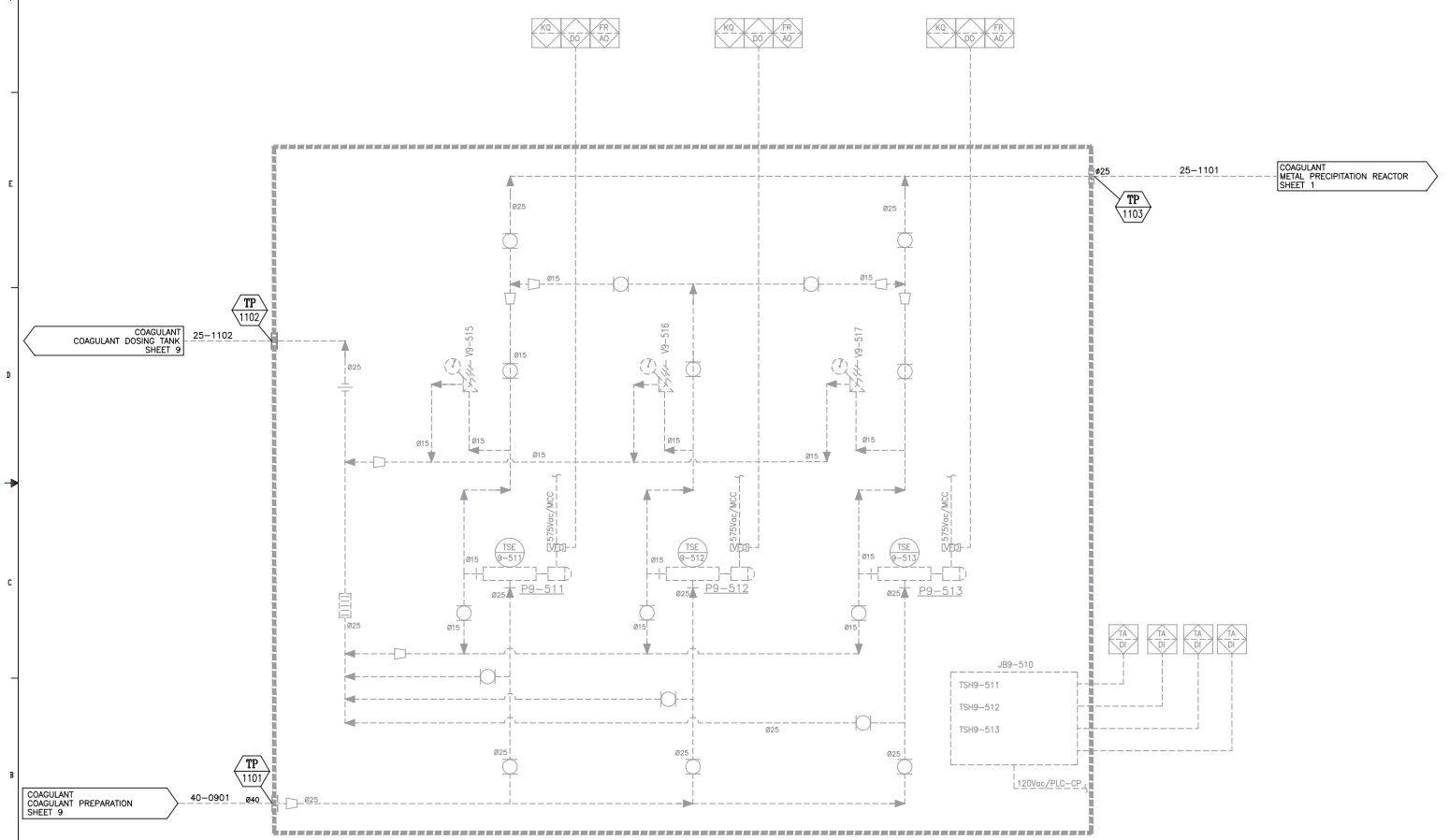

EXISTING SYSTEM FROM MEADOWBANK

P9-511/P9-512/P9-513
COAGULANT METERING PUMP
DESIGN: 87 L/h @2 BARS
MOTOR: 0.5HP
POWER SUPPLY: 575V/3PH/60Hz

Safety requirements :

Safety Shower must be provided in the immediate work area for emergency use (as per ANSI Z358.1)

REV. REV.	DESCRIPTION	DATE	REVISÉ REVISED	VÉRIFIÉ CHECKED	APPROUVÉ APPROVED
4	FOR APPROVAL IV	2018-07-04	A.C.	G.P.	G.P.
3	FOR APPROVAL III	2018-05-31	A.C.	G.P.	G.P.
2	FOR APPROVAL II	2018-05-07	A.C.	G.P.	G.P.
1	FOR APPROVAL	2018-04-25	A.C.	G.P.	G.P.

DESSINÉ PAR/DRAWN BY: A.C. — DATE: 2018-04-04
VÉRIFIÉ PAR/CHECKED BY: G.P. — DATE: 2018-04-04
INGÉNIERIE PAR/ENGINEERING BY: G.P. — DATE: 2018-04-04

CLIENT: AGNICO EAGLE MINING
AMARUQ, NU

VEOLIA WATER TECHNOLOGIES

TITRE / TITLE:
WATER TREATMENT PLANT
PROCESS AND INSTRUMENTATION DIAGRAM
COAGULANT WINTER DOSING SYSTEM

ÉCHELLE / SCALE: N.T.S.

PROJET / PROJECT	DESSIN No /DRAWING No	INTERNE / INTERNAL	FEUILLET / SHEET	REV./REV
5000218009 – PI0001		GEN	11/19	4

Ce document est la propriété de VEOLIA et ne peut être reproduit sans son autorisation écrite. / This document is the property of VEOLIA and cannot be reproduced without its written authorization

REF: N/A — SIZE ANSI D

Jul 20, 2018 - 11:25:33 - W:\5018\5000218009 Amaruq (TH\138501\15- Detailed execution_Drawings\P&ID - PI\5000218009-PI0001_4.dwg - cmclaren

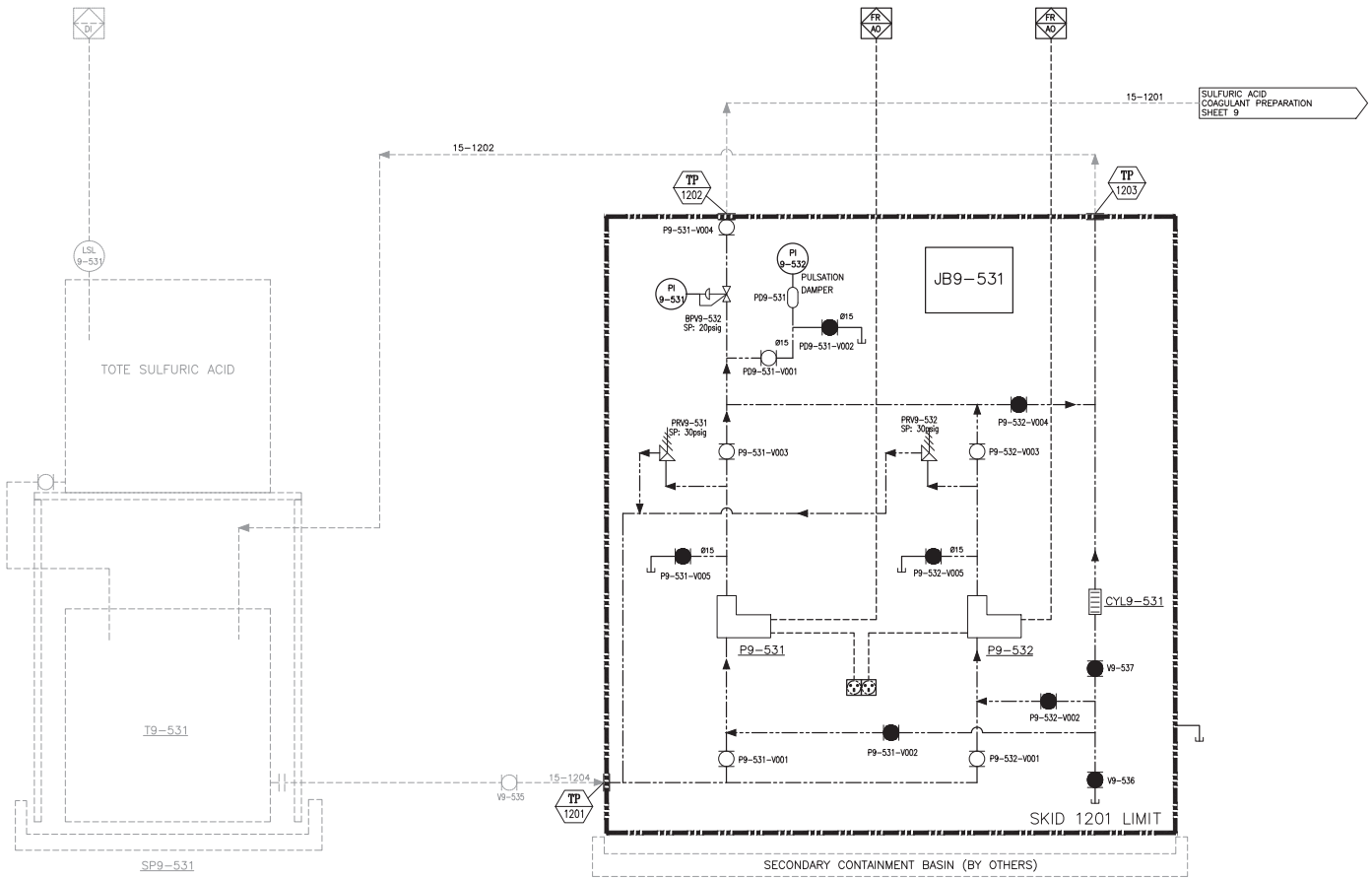

SP9-531 (BY OTHERS)
SECONDARY CONTAINMENT
CAPACITY : 1.8 m^3
MAT'L: HDPE

T9-531 (BY OTHERS)
STORAGE TANK
SULFURIC ACID
MAT'L: HDPE
CAPACITY: 1,5 m^3

P9-531/532
SULFURIC ACID METERING PUMP
TYPE: ELECTROMAGNETIC METERING PUMPS
CAP.: 9LPH@60psig
POWER SUPPLY: 120V/1Ph/60Hz

Safety requirements :

Safety Shower must be provided in the immediate work area for emergency use (as per ANSI Z358.1)

REV. REV.	DESCRIPTION	DATE	RÉVISÉ REVISED	VÉRIFIÉ CHECKED	APPROUVÉ APPROVED
4	FOR APPROVAL IV	2018-07-04	A.C.	G.P.	G.P.
3	FOR APPROVAL III	2018-05-31	A.C.	G.P.	G.P.
2	FOR APPROVAL II	2018-05-07	A.C.	G.P.	G.P.
1	FOR APPROVAL	2018-04-25	A.C.	G.P.	G.P.

VEOLIA WATER TECHNOLOGIES

DESSINÉ PAR/DRAWN BY A.C.	DATE 2018-04-04	CLIENT AGNICO EAGLE MINING AMARUQ, NU
VÉRIFIÉ PAR/CHECKED BY G.P.	DATE 2018-04-04	
INGÉNIERIE PAR/ENGINEERING BY G.P.	DATE 2018-04-04	

TITRE / TITLE
WATER TREATMENT PLANT
PROCESS AND INSTRUMENTATION DIAGRAM
SULFURIC ACID DOSING SYSTEM

ÉCHELLE / SCALE: N.T.S.

PROJET / PROJECT	DESSIN No /DRAWING No	INTERNE / INTERNAL	FEUILLET / SHEET	REV./REV
5000218009 –	PI0001	GEN	12/19	4

Ce document est la propriété de VEOLIA et ne peut être reproduit sans son autorisation écrite. / This document is the property of VEOLIA and cannot be reproduced without its written authorization

REF: N/A

SIZE ANSI D

Jul 20, 2018 11:20:38 – W:\2018\5000218009 Amaruq (TH128505)\15– Dessins execution_Drawings\8– PI\5000218009–PI0001_4.dwg – cristeca

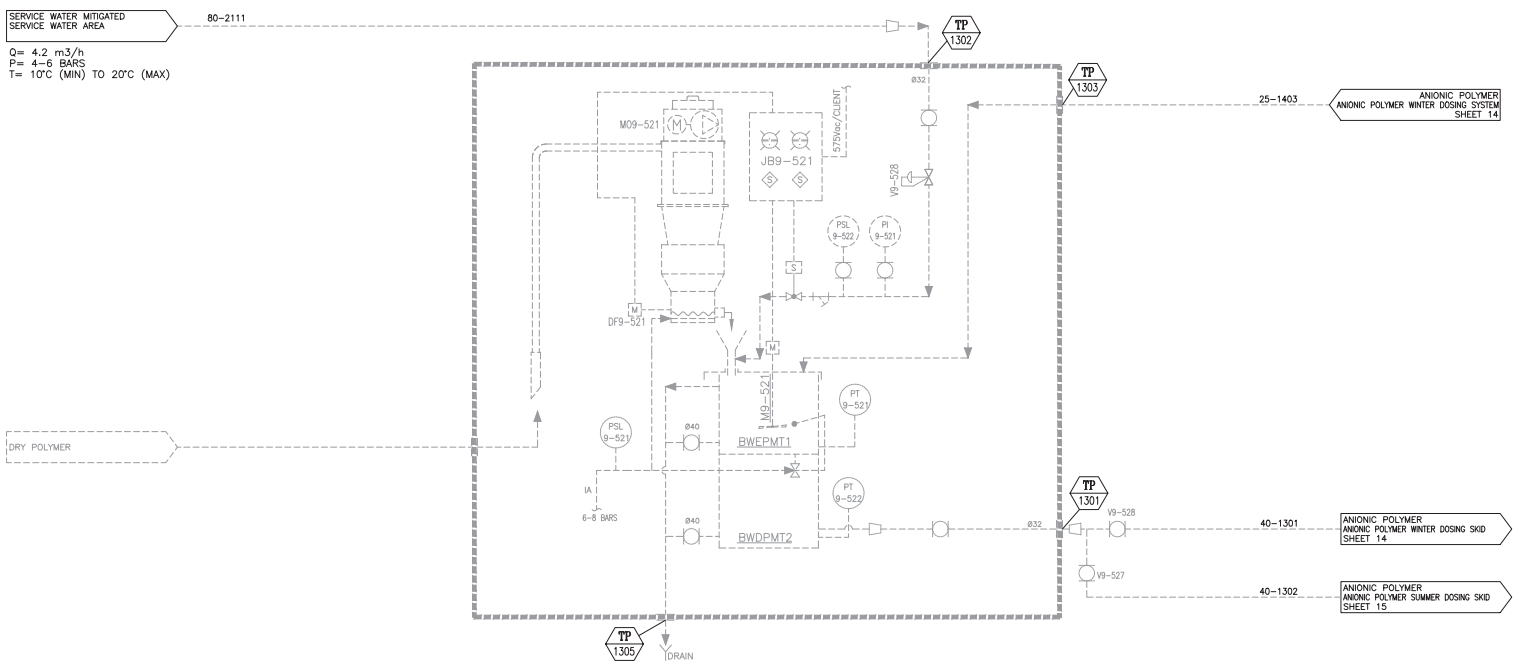

EXISTING SYSTEM FROM MEADOWBANK

BWEPMT1
POLYMER MATURATION TANK
CAP: 1000L

BWDPMT2
POLYMER STORAGE TANK
CAP: 1000L

DF9-521
DRY FEEDER
CAPACITY: 55 Kg/d
DRIVE : 0.25HP
POWER SUPPLY: 575V/3PH/60Hz

M9-521
POLYMER TANK MIXER
DRIVE: 1HP
POWER SUPPLY: 575V/3PH/60Hz

MO9-521
VACUUM CONVEYOR
DRIVE : 1.75HP
POWER SUPPLY: 575V/3PH/60Hz

P9-521/P9-522/P9-523
POLYMER METERING PUMP
DESIGN: 260 L/H @ 2 BARS
MOTOR: 2HP
POWER SUPPLY: 575V/3PH/60Hz

General Notes :

None

VWT Canada Supply limits:

Service water system is pre-mounted as much as possible. However, for freight purposes or general practical reasons, the installation of some items needs to be completed on site by the Subcontractor.

Safety requirements :

Safety Shower must be provided in the immediate work area for emergency use (as per ANSI Z358.1)

REV.	DESCRIPTION	DATE	RÉVISÉ REVISED	VÉRIFIÉ CHECKED	APPROUVÉ APPROVED
4	FOR APPROVAL IV	2018-07-04	A.C.	G.P.	G.P.
3	FOR APPROVAL III	2018-05-31	A.C.	G.P.	G.P.
2	FOR APPROVAL II	2018-05-07	A.C.	G.P.	G.P.
1	FOR APPROVAL	2018-04-25	A.C.	G.P.	G.P.

DESSINÉ PAR/DRAWN BY: A.C. DATE: 2018-04-04
VÉRIFIÉ PAR/CHECKED BY: G.P. DATE: 2018-04-04
INGÉNIEUR PAR/ENGINEERING BY: G.P. DATE: 2018-04-04

CLIENT: AGNICO EAGLE MINING
AMARUQ, NU

VEOLIA WATER TECHNOLOGIES

TITRE / TITLE:
WATER TREATMENT PLANT
PROCESS AND INSTRUMENTATION DIAGRAM
ANIONIC POLYMER PREPARATION

ÉCHELLE / SCALE: N.T.S.

PROJET / PROJECT	DESSIN No /DRAWING No	INTERNE / INTERVAL	FEUILLET / SHEET	REV./REV
5000218009 – PI0001		GEN	13/19	4

Ce document est la propriété de VEOLIA et ne peut être reproduit sans son autorisation écrite / This document is the property of VEOLIA and cannot be reproduced without its written authorization

REF: N/A

SIZE ANSI D

Jul 20, 2018 11:25:43 - W:\5\218\5000218009 Amaruq (Tbl\28500)\15- Detaile execution_Drawings\P- PI\5000218009-PI0001_4.dwg - orleanc

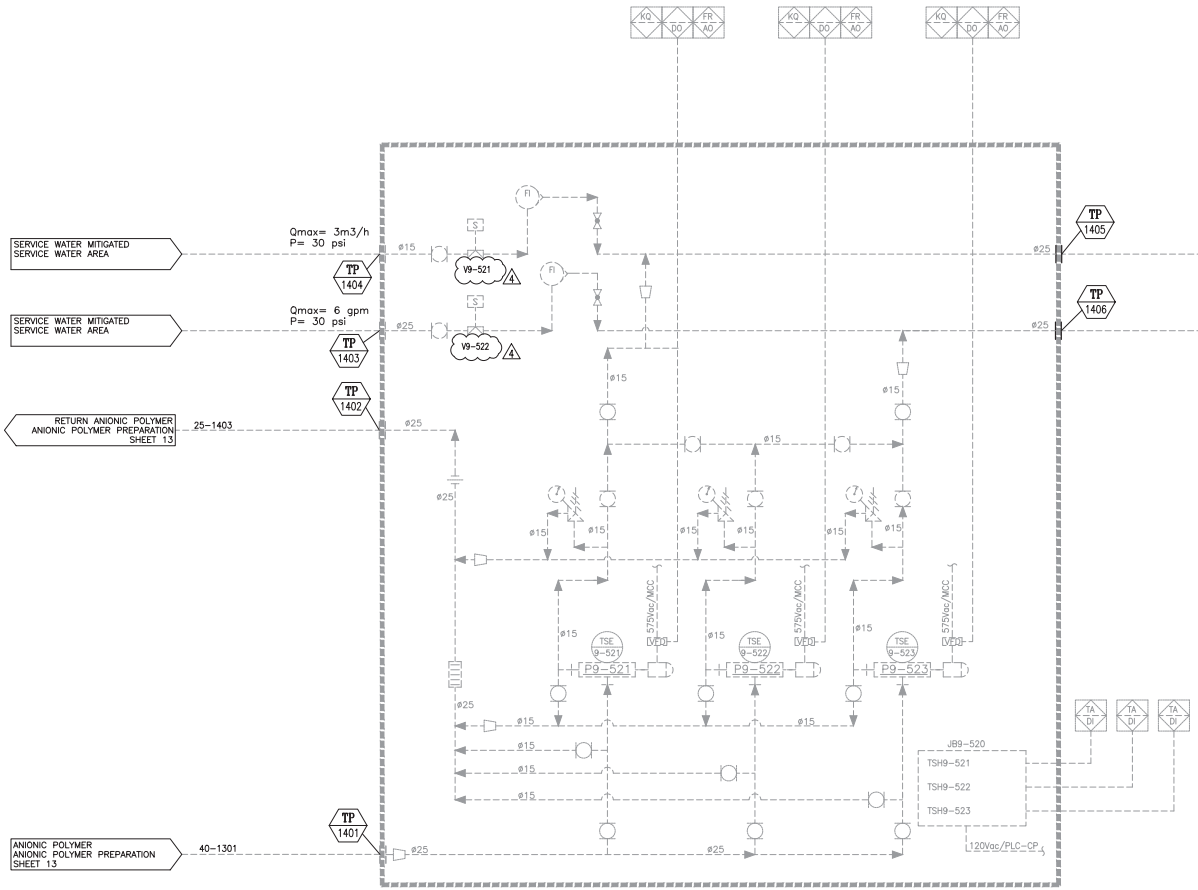

EXISTING SYSTEM FROM MEADOWBANK

P9-521/P9-522/P9-523
POLYMER METERING PUMP
DESIGN: 260 L/H @ 2 BARS
MOTOR: 2HP
POWER SUPPLY: 575V/3PH/60Hz

Notes :

Safety requirements :

Safety Shower must be provided in the immediate work area for emergency use (as per ANSI Z358.1)

REV.	DESCRIPTION	DATE	RÉVISÉ REVISED	VÉRIFIÉ CHECKED	APPROUVÉ APPROVED
4	FOR APPROVAL IV	2018-07-04	A.C.	G.P.	G.P.
3	FOR APPROVAL III	2018-05-31	A.C.	G.P.	G.P.
2	FOR APPROVAL II	2018-05-07	A.C.	G.P.	G.P.
1	FOR APPROVAL	2018-04-25	A.C.	G.P.	G.P.

DESSINÉ PAR/DRAWN BY: A.C. DATE: 2018-04-04
VÉRIFIÉ PAR/CHECKED BY: G.P. DATE: 2018-04-04
INGÉNIEUR PAR/ENGINEERING BY: G.P. DATE: 2018-04-04

CLIENT: AGNICO EAGLE MINING
AMARUQ, NU

VEOLIA WATER TECHNOLOGIES

TITRE / TITLE:
WATER TREATMENT PLANT
PROCESS AND INSTRUMENTATION DIAGRAM
ANIONIC POLYMER WINTER DOSING SYSTEM

ÉCHELLE / SCALE: N.T.S.

PROJET / PROJECT	DESSIN No /DRAWING No	INTERNE / INTERVAL	FEUILLET / SHEET	REV./REV
5000218009 – PI0001		GEN	14/19	4

Ce document est la propriété de VEOLIA et ne peut être reproduit sans son autorisation écrite / This document is the property of VEOLIA and cannot be reproduced without its written authorization

REF: N/A

SIZE ANSI D

Jul 20, 2018 11:20:48 – W:\5\218\5000218009 Amaruq (Thiess)\15- Detailed execution\Drawings\P-ID\5000218009-PI0001_4.dwg – cmilano

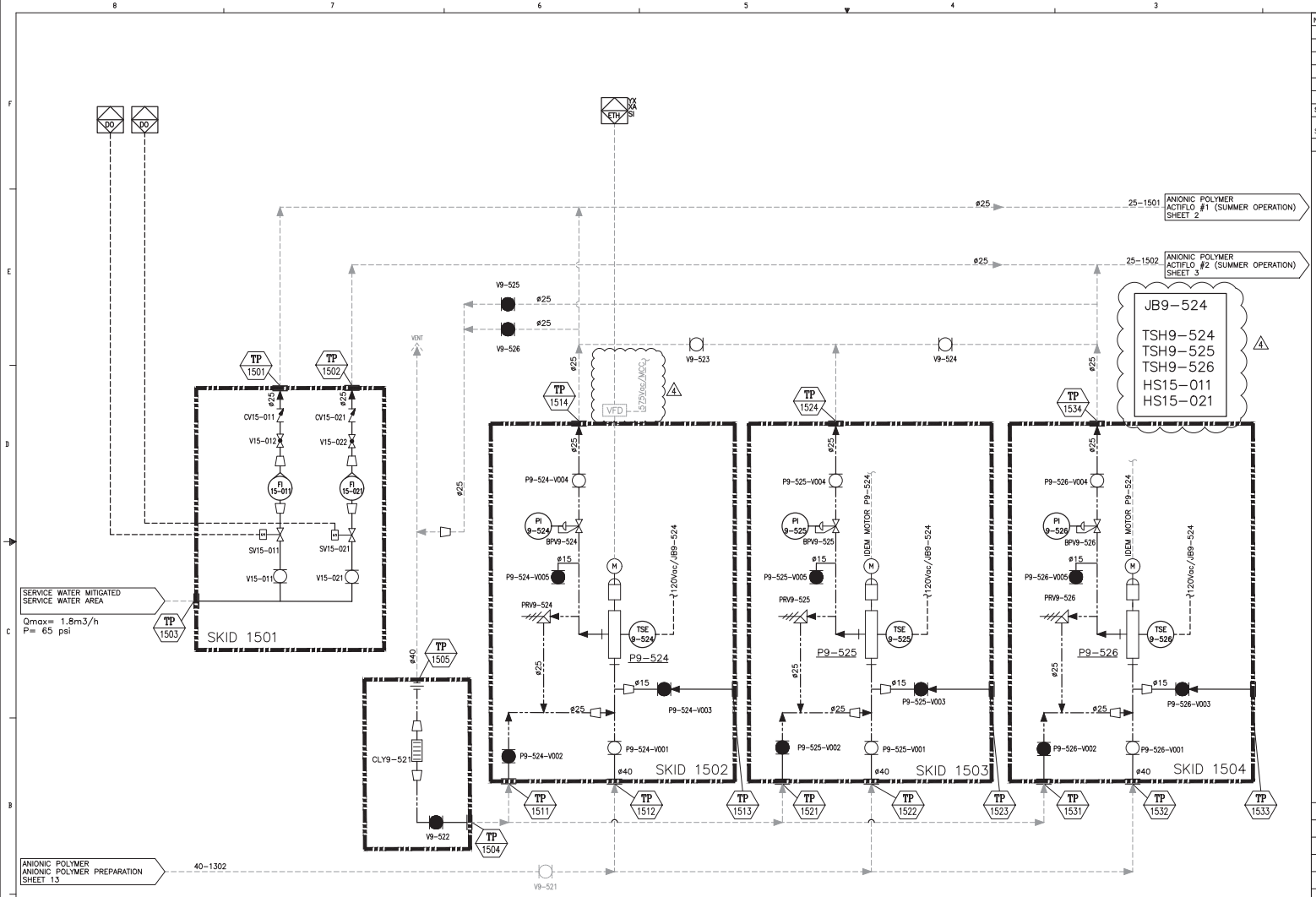

P9-524/P9-525/P9-526
ANIONIC POLYMER METERING PUMP
CAP.: 600LPH@85psig
POWER SUPPLY: 575V/3PH/60Hz

Notes :

Safety requirements :

Safety Shower must be provided in the immediate work area for emergency use (as per ANSI Z358.1)

REV. REV.	DESCRIPTION	DATE	REVISE REVISED	VERIFIE CHECKED	APPROUVE APPROVED
4	FOR APPROVAL IV	2018-07-04	A.C.	G.P.	G.P.
3	FOR APPROVAL III	2018-05-31	A.C.	G.P.	G.P.
2	FOR APPROVAL II	2018-05-07	A.C.	G.P.	G.P.
1	FOR APPROVAL	2018-04-25	A.C.	G.P.	G.P.

VEOLIA WATER TECHNOLOGIES

DESSINÉ PAR/DRAWN BY A.C.	DATE 2018-04-04	CLIENT AGNICO EAGLE MINING AMARUQ, NU
VÉRIFIÉ PAR/CHECKED BY G.P.	DATE 2018-04-04	
INGÉNIERIE PAR/ENGINEERING BY G.P.	DATE 2018-04-04	

TITRE / TITLE
WATER TREATMENT PLANT
PROCESS AND INSTRUMENTATION DIAGRAM
ANIONIC POLYMER SUMMER DOSING SYSTEM

ÉCHELLE / SCALE: N.T.S.

PROJET / PROJECT	DESSIN No /DRAWING No	INTERNE / INTERNAL	FEUILLET / SHEET	REV./REV
5000218009	PI0001	GEN	15/19	4

Ce document est la propriété de VEOLIA et ne peut être reproduit sans son authorisation écrite. / This document is the property of VEOLIA and cannot be reproduced without its written authorization

REF: N/A

SIZE ANSI D

Jul 20, 2018 11:20:53 - W:\2018\5000218009 Amaruq (TIH128505)\15- Dessins execution_Drawings\8- PI\5000218009-PI0001_4.dwg - cristeco

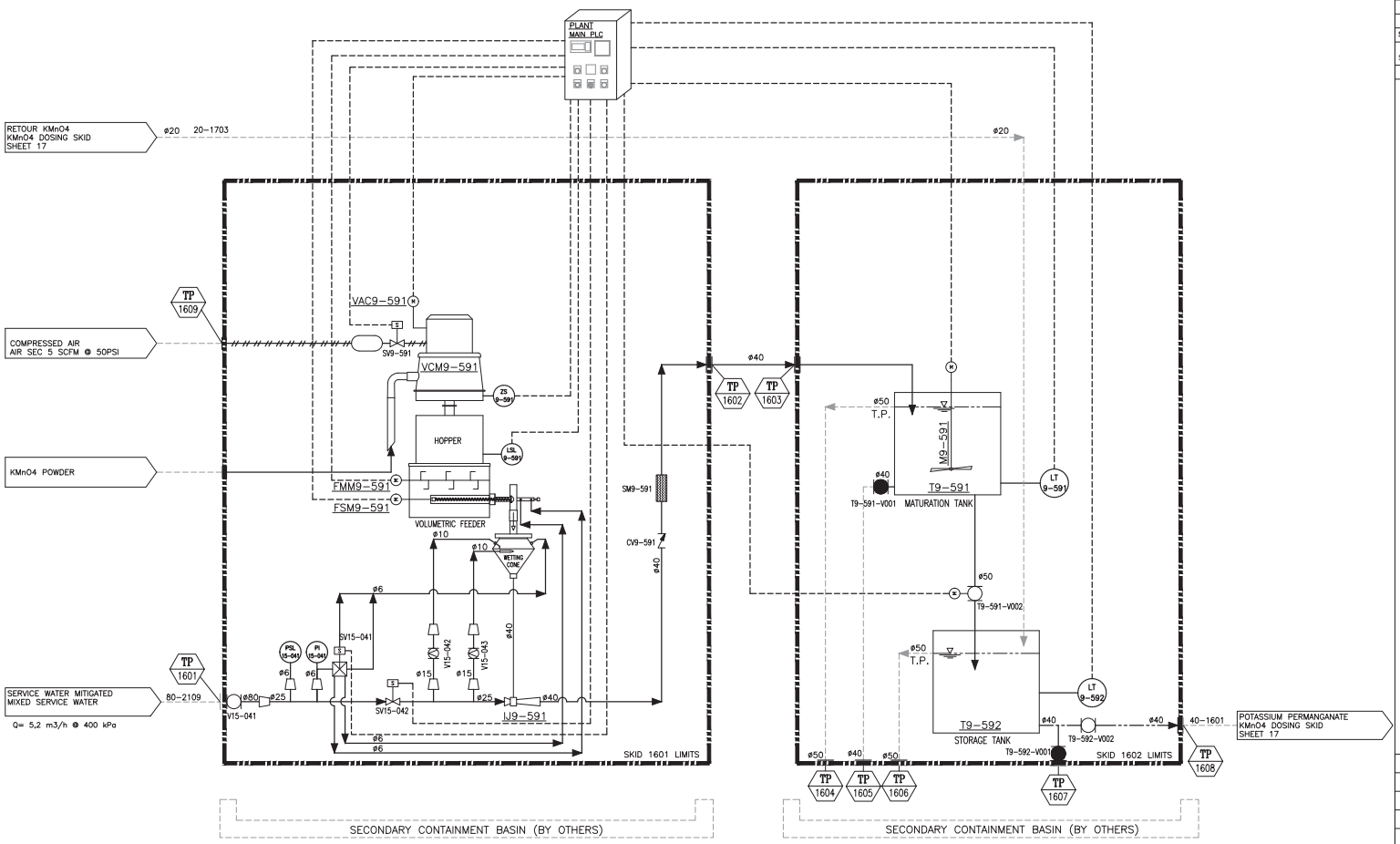

VAC9-591
CONVEYOR MOTOR
POWER Req.: 2.5HP
VOLTAGE: 575V/3Ph/60Hz

VCM9-591
PNEUMATIC CONVEYOR
CAPACITY:21Ft.cu/h (0.6m.cu/h)
MODEL: HAPMAN 16R

FSM9-591
FEEDER SCREW
POWER Req.: 0.5HP
VOLTAGE: 575V/3Ph/60Hz

FMM9-591
FEEDER HOPPER AGITATOR
POWER Req.: 0.75HP
VOLTAGE: 575V/3Ph/60Hz

T9-591
MATURATION TANK
VOLUME: 500L

T9-592
STORAGE TANK
VOLUME: 500L

M9-591
MATURATION TANK MIXER MOTOR
POWER Req.: 0.25Kw/0.33HP
VOLTAGE: 575V/3Ph/60Hz
MODEL: EVGO-0.33

Notes :

Safety requirements :

Safety Shower must be provided in the immediate work area for emergency use (as per ANSI Z358.1)

REV.	DESCRIPTION	DATE	RÉVISÉ REVISED	VÉRIFIÉ CHECKED	APPROUVÉ APPROVED
4	FOR APPROVAL IV	2018-07-04	A.C.	G.P.	G.P.
3	FOR APPROVAL III	2018-05-31	A.C.	G.P.	G.P.
2	FOR APPROVAL II	2018-05-07	A.C.	G.P.	G.P.
1	FOR APPROVAL	2018-04-25	A.C.	G.P.	G.P.

DESSINÉ PAR/DRAWN BY A.C. DATE 2018-04-04
VÉRIFIÉ PAR/CHECKED BY G.P. DATE 2018-04-04
RÉVISÉ PAR/ENGINEERING BY G.P. DATE 2018-04-04

CLIENT: AGNICO EAGLE MINING
AMARUQ, NU

VEOLIA WATER TECHNOLOGIES

TITRE / TITLE
WATER TREATMENT PLANT
PROCESS AND INSTRUMENTATION DIAGRAM
POTASSIUM PERMANGANATE PREPARATION

ÉCHELLE / SCALE N.T.S.

PROJET / PROJECT	DESSIN No /DRAWING No	INTERNE / INTERVAL	FEUILLET / SHEET	REV./REV
5000218009 – PI0001		GEN	16/19	4

Ce document est la propriété de VEOLIA et ne peut être reproduit sans son autorisation écrite / This document is the property of VEOLIA and cannot be reproduced without its written authorization

REF: N/A SIZE ANSI D

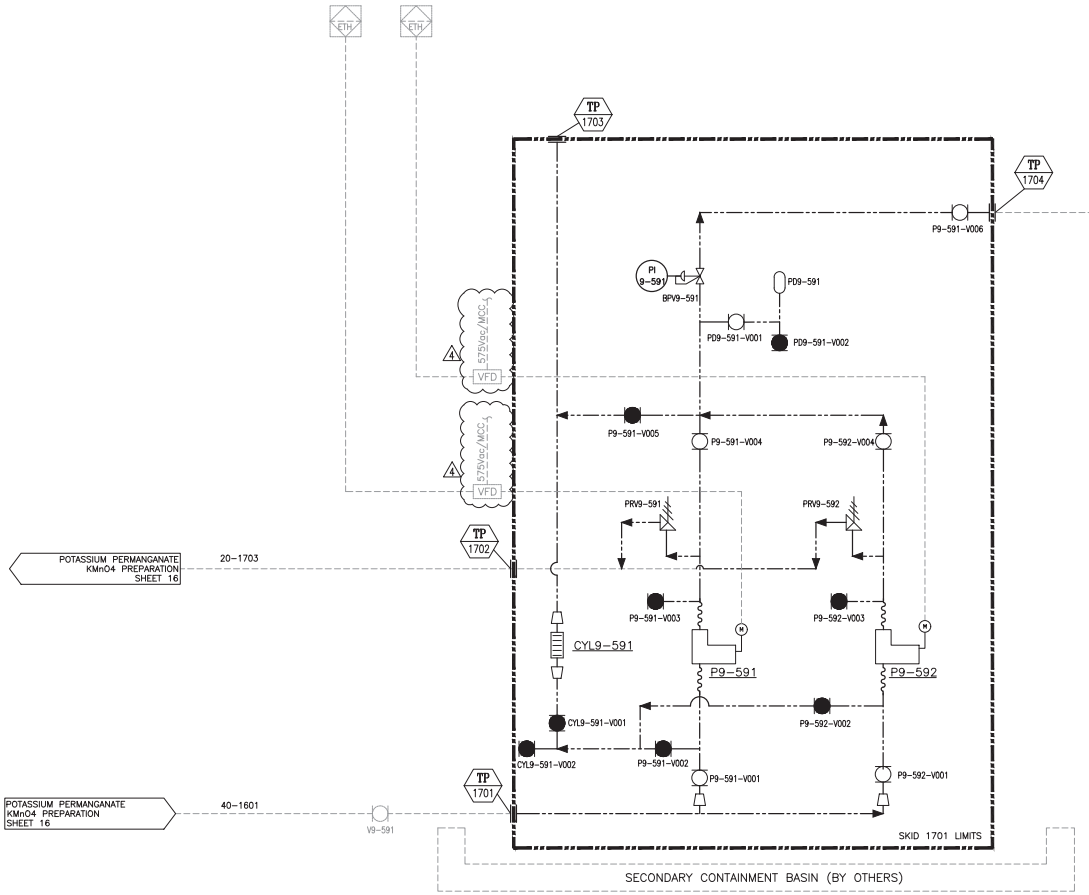

P9-591/P9-592
KMnO4 METERING PUMP
CAP.: 320LPH@80psig
POWER: XX HP, 575/3/60

Notes :

Safety requirements :

Safety Shower must be provided in the immediate work area for emergency use (as per ANSI Z358.1)

REV.	DESCRIPTION	DATE	RÉVISÉ REVISED	VÉRIFIÉ CHECKED	APPROUVÉ APPROVED
4	FOR APPROVAL IV	2018-07-04	A.C.	G.P.	G.P.
3	FOR APPROVAL III	2018-05-31	A.C.	G.P.	G.P.
2	FOR APPROVAL II	2018-05-07	A.C.	G.P.	G.P.
1	FOR APPROVAL	2018-04-25	A.C.	G.P.	G.P.

DESSINÉ PAR/DRAWN BY: A.C. DATE: 2018-04-04
VÉRIFIÉ PAR/CHECKED BY: G.P. DATE: 2018-04-04
INGÉNIEUR PAR/ENGINEERING BY: G.P. DATE: 2018-04-04

CLIENT: AGNICO EAGLE MINING
AMARUQ, NU

VEOLIA WATER TECHNOLOGIES

TITRE / TITLE:
WATER TREATMENT PLANT
PROCESS AND INSTRUMENTATION DIAGRAM
POTASSIUM PERMANGANATE DOSING SYSTEM

ÉCHELLE / SCALE: N.T.S.

PROJET / PROJECT	DESSIN No /DRAWING No	INTERNE / INTERNAL	FEUILLET / SHEET	REV./REV
5000218009 – PI0001		GEN	17/19	4

Ce document est la propriété de VEOLIA et ne peut être reproduit sans son autorisation écrite / This document is the property of VEOLIA and cannot be reproduced without its written authorization

REF: N/A

SIZE ANSI D

Jul 20, 2018 11:21:03 – W:\2018\5000218009 Amaruq (Thiess)\15- Detailed execution\Drawings\P&ID\5000218009-PI0001_4.dwg – cardenas

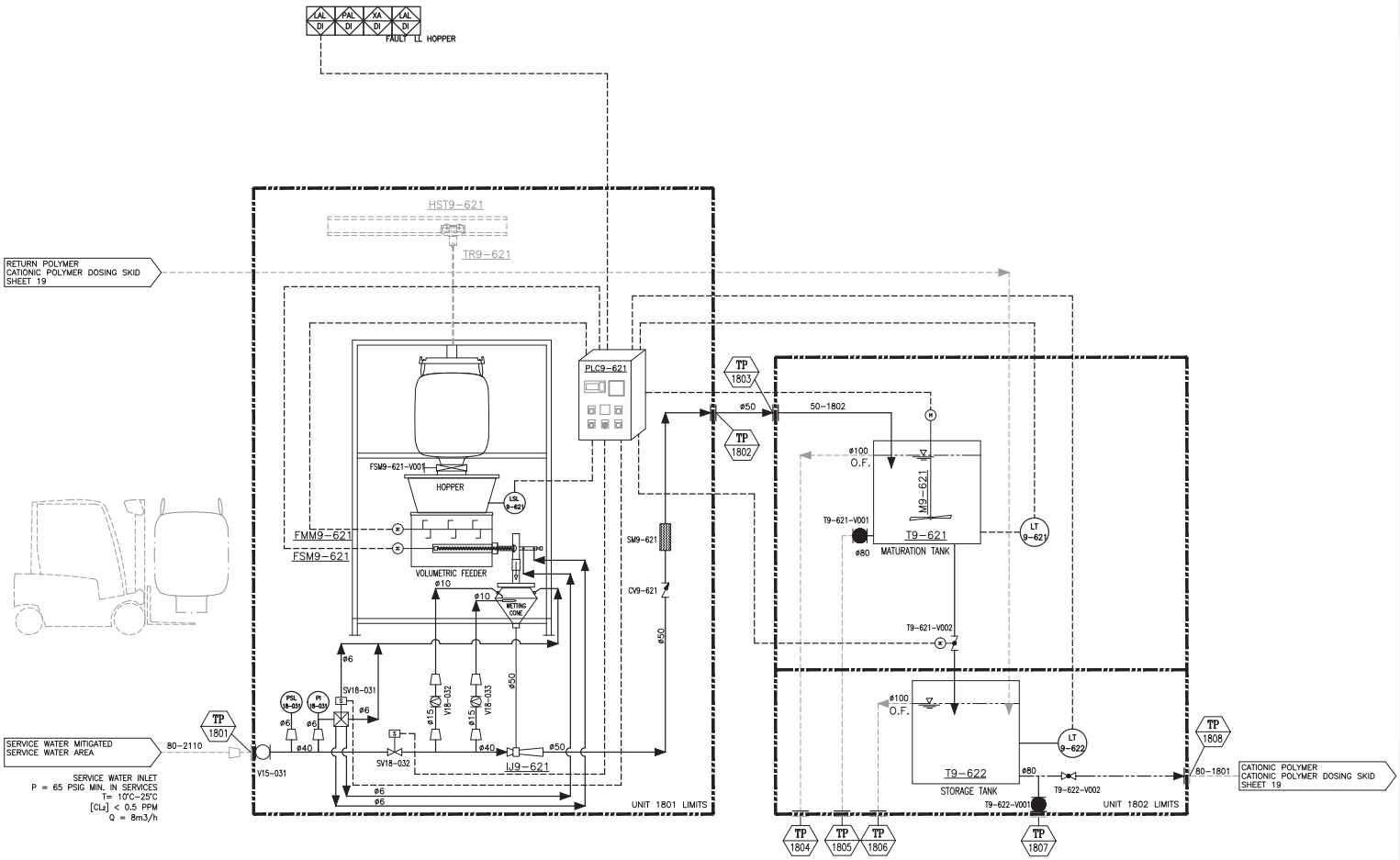

MODEL	INLET WATER FLOW RATE
HP 250	5.2 M3/H
HP 500	5.2 M3/H
HP 750	5.2 M3/H
HP 1000	5.2 M3/H
HP 1250	5.2 M3/H
HP 1500	5.2 M3/H
HP 1750	5.2 M3/H
HP 2000	8.0 M3/H
HP 2500	8.0 M3/H
HP 3000	8.0 M3/H
HP 3500	8.0 M3/H
HP 4000	8.0 M3/H

Notes :

Safety requirements :

Polymer is very slippery. Refer to spill response procedure.

A eye wash fountain must be provided in the immediate work area for emergency use.

HST9-621
HOIST
XX T (XXX Lbs)

TR9-621
TROLLEY

FSM9-621
FEEDER SCREW
POWER Req.: 0.5HP
VOLTAGE: 575V/3Ph/60Hz

FMM9-621
FEEDER HOPPER AGITATOR
POWER Req.: 0.75HP
VOLTAGE: 575V/3Ph/60Hz

T9-621
MATURATION TANK
VOLUME: 3500L

T9-622
STORAGE TANK
VOLUME: 3500L

M9-621
MATURATION TANK MIXER MOTOR
POWER Req.: 0.75HP
VOLTAGE: 575V/3Ph/60Hz
MODEL: EVG1-0.75

REV.	DESCRIPTION	DATE	RÉVISÉ REVISED	VÉRIFIÉ CHECKED	APPROUVÉ APPROVED
4	FOR APPROVAL IV	2018-07-04	A.C.	G.P.	G.P.
3	FOR APPROVAL III	2018-05-31	A.C.	G.P.	G.P.
2	FOR APPROVAL II	2018-05-07	A.C.	G.P.	G.P.
1	FOR APPROVAL	2018-04-25	A.C.	G.P.	G.P.

VEOLIA WATER TECHNOLOGIES

DESSINÉ PAR/DRAWN BY: A.C. — DATE: 2018-04-04
VÉRIFIÉ PAR/CHECKED BY: G.P. — DATE: 2018-04-04
INGÉNIEUR PAR/ENGINEERING BY: G.P. — DATE: 2018-04-04

CLIENT: AGNICO EAGLE MINING
AMARUQ, NU

TITRE / TITLE:
WATER TREATMENT PLANT
PROCESS AND INSTRUMENTATION DIAGRAM
CATIONIC POLYMER PREPARATION

ÉCHELLE / SCALE: N.T.S.

PROJET / PROJECT	DESSIN No /DRAWING No	INTERNE / INTERVAL	FEUILLET / SHEET	REV./REV
5000218009 – PI0001		GEN	18/19	4

Ce document est la propriété de VEOLIA et ne peut être reproduit sans son autorisation écrite / This document is the property of VEOLIA and cannot be reproduced without its written authorization

REF: N/A — SIZE ANSI D

Jul 20, 2018 11:21:08 – W:\5\218\5000218009 Amaruq (Thiri)\5000218009-PI0001_4.dwg – cmilano

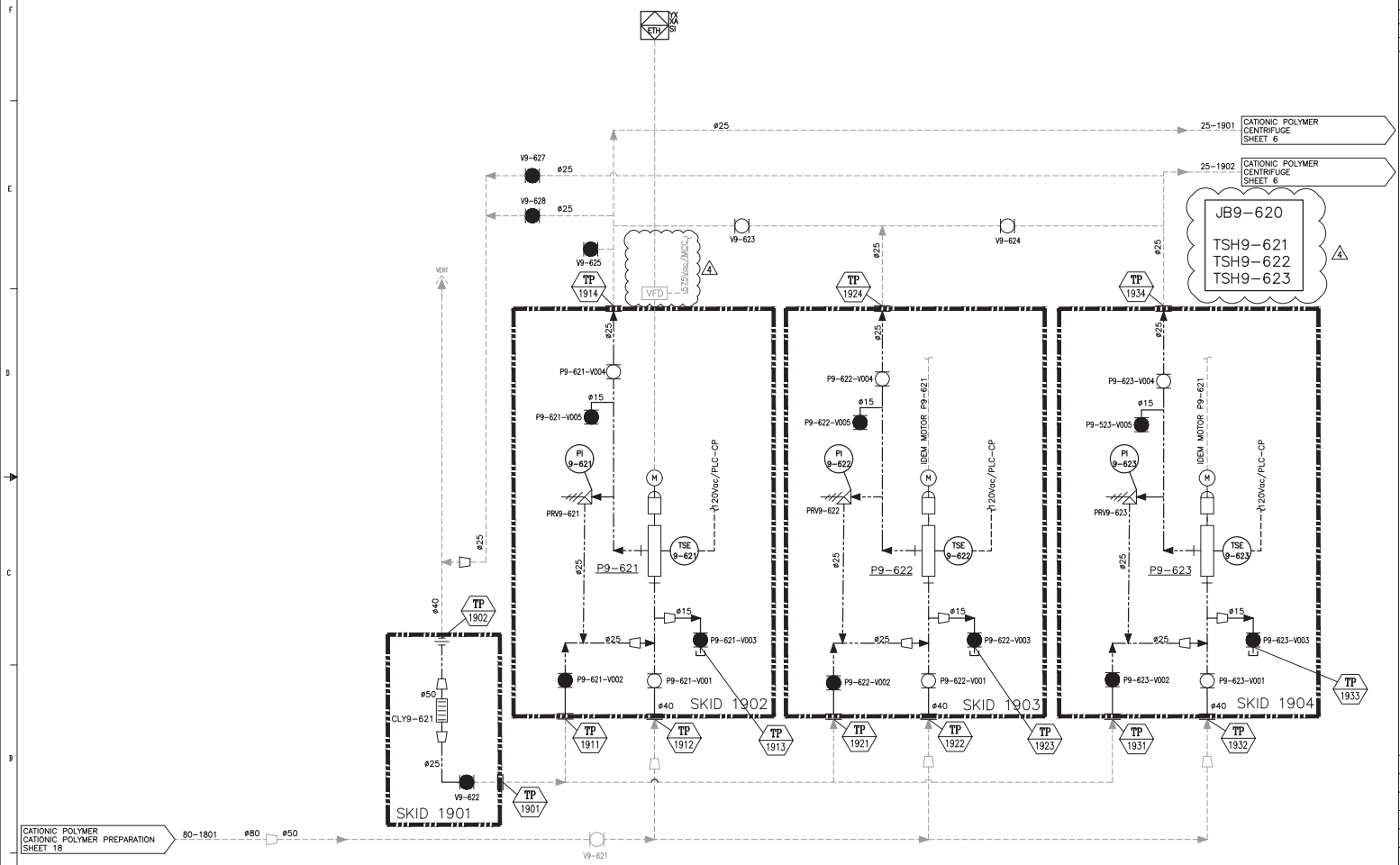

P9-621/P9-622/P9-623
CATIONIC POLYMER METERING PUMP
CAP.: 600LPH@85psig
POWER SUPPLY: 575V/3PH/60Hz

Notes :

Note 1901 : The vent must be higher than the storage tank.

Safety requirements :

Polymer is very slippery. Refer to spill response procedure.

A eye wash fountain must be provided in the immediate work area for emergency use.

REV.	DESCRIPTION	DATE	RÉVISÉ REVISED	VÉRIFIÉ CHECKED	APPROUVÉ APPROVED
2	FOR APPROVAL II	EN COURS			
1	FOR APPROVAL	2018-04-25	A.C.	G.P.	G.P.

DESSINÉ PAR/DRAWN BY: A.C. DATE: 2018-04-04
VÉRIFIÉ PAR/CHECKED BY: G.P. DATE: 2018-04-04
INGÉNIEUR PAR/ENGINEERING BY: G.P. DATE: 2018-04-04

CLIENT: AGNICO EAGLE MINING
AMARUQ, NU

VEOLIA WATER TECHNOLOGIES

TITRE / TITLE:
WATER TREATMENT PLANT
PROCESS AND INSTRUMENTATION DIAGRAM
CATIONIC POLYMER DOSING SYSTEM

ÉCHELLE / SCALE: N.T.S.

PROJET / PROJECT	DESSIN No /DRAWING No	INTERNE / INTERVAL	FEUILLET / SHEET	REV./REV
5000218009 – PI0001		GEN	19/19	4

Ce document est la propriété de VEOLIA et ne peut être reproduit sans son autorisation écrite. / This document is the property of VEOLIA and cannot be reproduced without its written authorization

REF: N/A

SIZE ANSI D

Jul 20, 2018 11:21:14 - \\CH1SRV03\5000218009 Amaruq (TH1SRV03)\15- Detailed execution_Drawings\Pl- P\5000218009-PI0001_4.dwg - cmbeau

NO. DESSIN DRAWING NO. 61-693-205-200-R0

FORMAT ARCH D

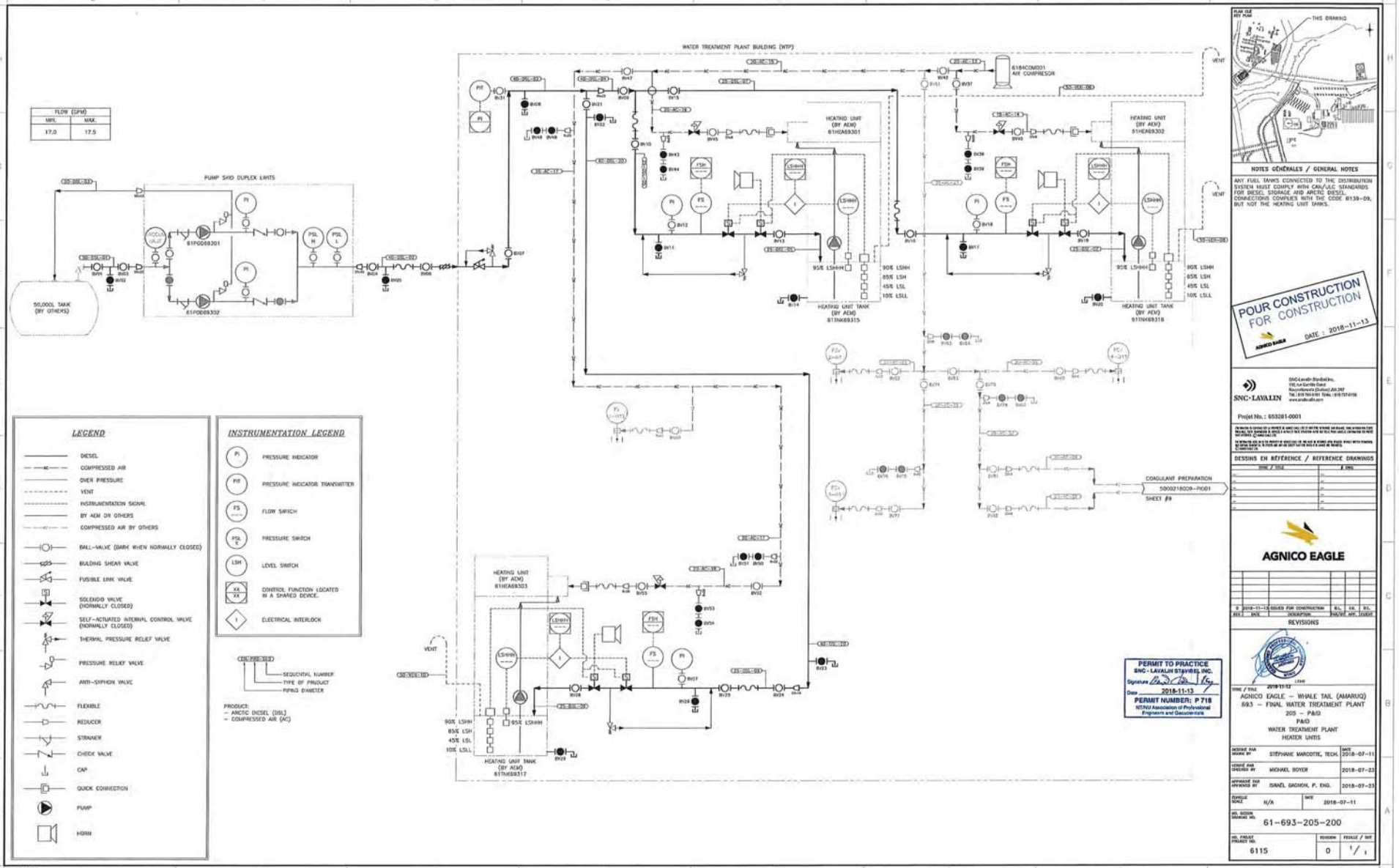

LEGEND

- DIESEL
- COMPRESSED AIR
- OVER PRESSURE
- VENT
- INSTRUMENTATION SIGNAL
- BY AEM OR OTHERS
- COMPRESSED AIR BY OTHERS
- BALL-VALVE (MARK WHEN NORMALLY CLOSED)
- BUILDING SHEAR VALVE
- FUSIBLE LINK VALVE
- SOLENOID VALVE (NORMALLY CLOSED)
- SELF-ACTUATED INTERNAL CONTROL VALVE (NORMALLY CLOSED)
- THERMAL PRESSURE RELIEF VALVE
- PRESSURE RELIEF VALVE
- ANTI-SYPHON VALVE
- FLEXIBLE
- REDUCER
- STRAINER
- CHECK VALVE
- CAP
- QUICK CONNECTION
- PUMP
- HORN

INSTRUMENTATION LEGEND

- PI — PRESSURE INDICATOR
- PIT — PRESSURE INDICATOR TRANSMITTER
- FS — FLOW SWITCH
- PSL — PRESSURE SWITCH
- LSH — LEVEL SWITCH
- XX — CONTROL FUNCTION LOCATED IN A SHARED DEVICE.
- I — ELECTRICAL INTERLOCK

AC-150-SEQ-19
- SEQUENTIAL NUMBER
- TYPE OF PRODUCT
- PIPING DIAMETER

PRODUCT:
- ARCTIC DIESEL (DSL)
- COMPRESSED AIR (AC)

PERMIT TO PRACTICE
SNC-LAVALIN STANTEC, INC.
Signature
Date 2018-11-13
PERMIT NUMBER: P 718
NT/NU Association of Professional Engineers and Geoscientists

PLAN CLÉ KEY PLAN

NOTES GÉNÉRALES / GENERAL NOTES

ANY FUEL TANKS CONNECTED TO THE DISTRIBUTION SYSTEM MUST COMPLY WITH CAN/ULC STANDARDS FOR DIESEL STORAGE AND ARCTIC DIESEL CONNECTIONS COMPLIES WITH THE CODE B139-09, BUT NOT THE HEATING UNIT TANKS.

POUR CONSTRUCTION
FOR CONSTRUCTION
AGNICO EAGLE
DATE : 2018-11-13

SNC·LAVALIN
SNC-Lavalin Stantec Inc.
Rouyn-Noranda (Québec) J9X 3N7
Tél. : 819 764-5101 Téléc. : 819 797-4106
www.snclavalin.com

Projet No.: 653281-0001

DESSINS EN RÉFÉRENCE / REFERENCE DRAWINGS

NUMÉRO / NUMBER	TITRE / TITLE
-	-
-	-
-	-
-	-
-	-
-	-

AGNICO EAGLE

REV.	DATE	DESCRIPTION	PAR/BY	APP.	CLIENT
0	2018-11-13	ISSUED FOR CONSTRUCTION	R.L.	I.G.	R.L.

REVISIONS

TITRE / TITLE 2018-11-13
AGNICO EAGLE – WHALE TAIL (AMARUQ)
693 – FINAL WATER TREATMENT PLANT
205 – P&ID
P&ID
WATER TREATMENT PLANT
HEATER UNITS

DESSINÉ PAR / DRAWN BY	STÉPHANIE MARCOTTE, TECH.	DATE 2018-07-11
VÉRIFIÉ PAR / CHECKED BY	MICHAEL BOYER	2018-07-23
APPROUVÉ PAR / APPROVED BY	ISRAEL DAGMON, P. ENG.	2018-07-23
ÉCHELLE / SCALE	N/A	DATE 2018-07-11

NO. DESSIN / DRAWING NO. 61-693-205-200

NO. PROJET / PROJECT NO.	RÉVISION	FEUILLE / SHT
6115	0	1/1

AE-D96-ARCH D

FILE NO. 61-693-205-200-R0.dwg

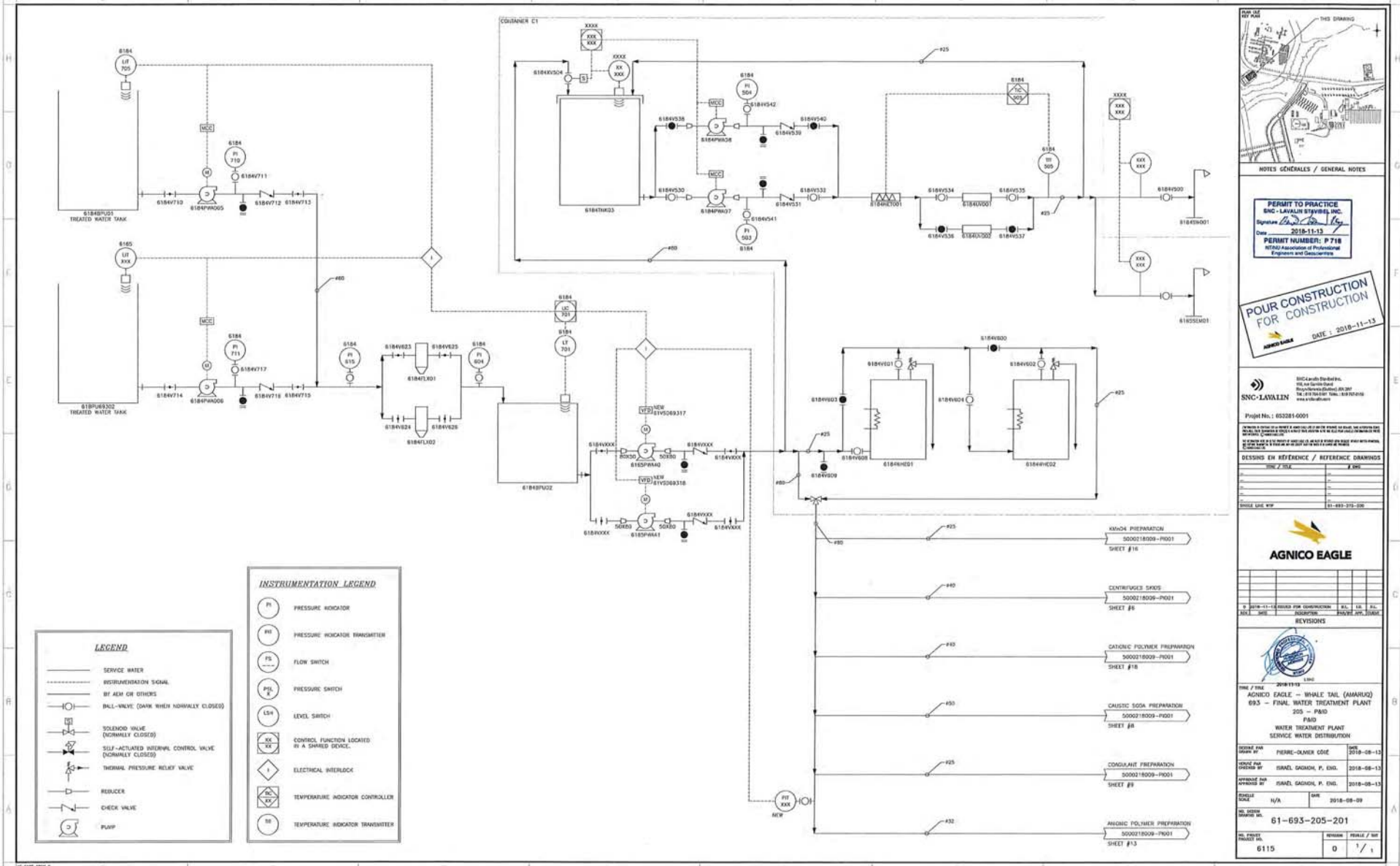

NO. DESSIN DRAWING NO. 61-693-205-201-R0
FORMAT ARCHD
COUTANIER C1
6184BPU01 TREATED WATER TANK
6184BPU69302 TREATED WATER TANK
6184BPU02
6184TNK03
6184HET001
6184SW001
6185SEM01
6184HXE01
6184HXE02
KMnO4 PREPARATION
5000218009-PI001
SHEET #16
CENTRIFUGES SKIDS
5000218009-PI001
SHEET #6
CATIONIC POLYMER PREPARATION
5000218009-PI001
SHEET #18
CAUSTIC SODA PREPARATION
5000218009-PI001
SHEET #8
COAGULANT PREPARATION
5000218009-PI001
SHEET #9
ANIONIC POLYMER PREPARATION
5000218009-PI001
SHEET #13
LEGEND
SERVICE WATER
INSTRUMENTATION SIGNAL
BY AEM OR OTHERS
BALL-VALVE (DARK WHEN NORMALLY CLOSED)
SOLENOID VALVE (NORMALLY CLOSED)
SELF-ACTUATED INTERNAL CONTROL VALVE (NORMALLY CLOSED)
THERMAL PRESSURE RELIEF VALVE
REDUCER
CHECK VALVE
PUMP
INSTRUMENTATION LEGEND
PRESSURE INDICATOR
PRESSURE INDICATOR TRANSMITTER
FLOW SWITCH
PRESSURE SWITCH
LEVEL SWITCH
CONTROL FUNCTION LOCATED IN A SHARED DEVICE.
ELECTRICAL INTERLOCK
TEMPERATURE INDICATOR CONTROLLER
TEMPERATURE INDICATOR TRANSMITTER
PLAN CLÉ KEY PLAN
THIS DRAWING
NOTES GÉNÉRALES / GENERAL NOTES
PERMIT TO PRACTICE
SNC - LAVALIN STAVIBEL INC.
Signature
Date 2018-11-13
PERMIT NUMBER: P 718
NT/NU Association of Professional Engineers and Geoscientists
POUR CONSTRUCTION
FOR CONSTRUCTION
DATE : 2018-11-13
SNC·LAVALIN
Projet No.: 653281-0001
DESSINS EN RÉFÉRENCE / REFERENCE DRAWINGS
AGNICO EAGLE
REVISIONS
TITRE / TITLE
AGNICO EAGLE – WHALE TAIL (AMARUQ)
693 – FINAL WATER TREATMENT PLANT
205 – P&ID
P&ID
WATER TREATMENT PLANT
SERVICE WATER DISTRIBUTION
DESSINÉ PAR DRAWN BY PIERRE-OLIVIER CÔTÉ 2018-08-13
VÉRIFIÉ PAR CHECKED BY ISRAËL GAGNON, P. ENG. 2018-08-13
APPROUVÉ PAR APPROVED BY ISRAËL GAGNON, P. ENG. 2018-08-13
ÉCHELLE SCALE N/A
DATE 2018-08-09
NO. DESSIN DRAWING NO. 61-693-205-201
NO. PROJET PROJECT NO. 6115
REVISION 0
FEUILLE / SHT 1/1
FILE NO. 61-693-205-201-R0.dwg

NO. DESSIN
DRAWING NO. 61-695-205-200

FORMAT ARCH D

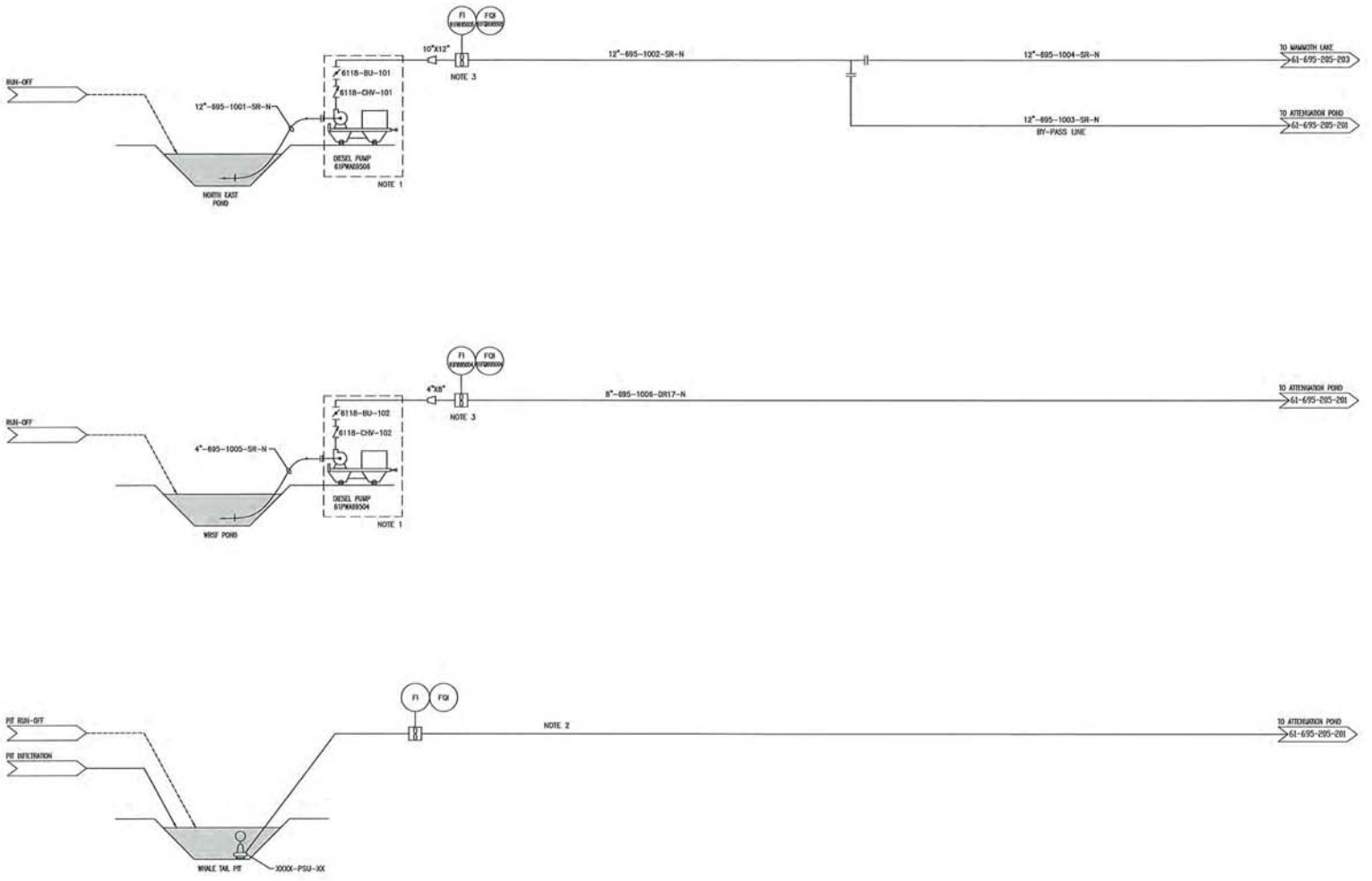

PERMIT TO PRACTICE
SNC-LAVALIN INC.
Signature
Date 2018-07-24
PERMIT NUMBER: P 260
The Association of Professional Engineers, Geologists and Geophysicists of NWT/NU

SNC·LAVALIN

PROJECT No	SUBDIVISION	SUBJECT	SERIAL	REV
651298	8200	49 D4	0001	E00

NOTES GÉNÉRALES / GENERAL NOTES

NOTES :
1. DIESEL PUMP MOUNTED ON A SKID.
2. WHALE TAIL PIT PUMPS & PIPING SYSTEM WILL BE DEFINED BY AEM DURING THE DEVELOPMENT OF THE OPEN PIT.
3. FLOWMETER INSTALLED TEMPORARILY TO DEVELOP FLOW VS PUMP CAPACITY SYSTEM CURVE.

LEGEND:

DESSINS EN RÉFÉRENCE / REFERENCE DRAWINGS

TYPE / TITLE	# DWG

AGNICO EAGLE

R2	2018-07-24	ISSUED FOR DESIGN	G.G.	A.L.H.	R.C.
R1	2018-06-18	ISSUED FOR COMMENTS	G.G.	A.L.H.	R.C.
R0	2018-05-30	ISSUED FOR COMMENTS	G.G.	A.L.H.	R.C.
REV.	DATE	DESCRIPTION	DESSINÉ PAR / DRAWN BY	VÉRIFIÉ PAR / CHECKED BY	APPROUVÉ PAR / APPROVED BY

REVISIONS

TYPE / TITLE
AGNICO EAGLE – AMARUQ DIVISION
695 – WATER MANAGEMENT

205–PIPING AND INSTRUMENTATION DIAGRAM
NE POND, WRSF POND AND WHALE TAIL PIT
PUMPING STATIONS

DESSINÉ PAR / DRAWN BY	M. MOVLA	DATE 2018-05-30
VÉRIFIÉ PAR / CHECKED BY	D. CHEN	2018-05-30
APPROUVÉ PAR / APPROVED BY	A.L. HOUYEN	2018-05-30
ÉCHELLE / SCALE	DATE	2018-05-30

NO. DESSIN / DRAWING NO. 61-695-205-200

NO. PROJET / PROJECT NO.	REVISION	FEUILLE / SHT
6118	R0	1 / 1

NC-CMT-ARCH D

FILE NO. 651298-8200-49D4-0001-00.dwg

NO. DESSIN DRAWING NO. 61-695-205-201

FORMAT ARCH D

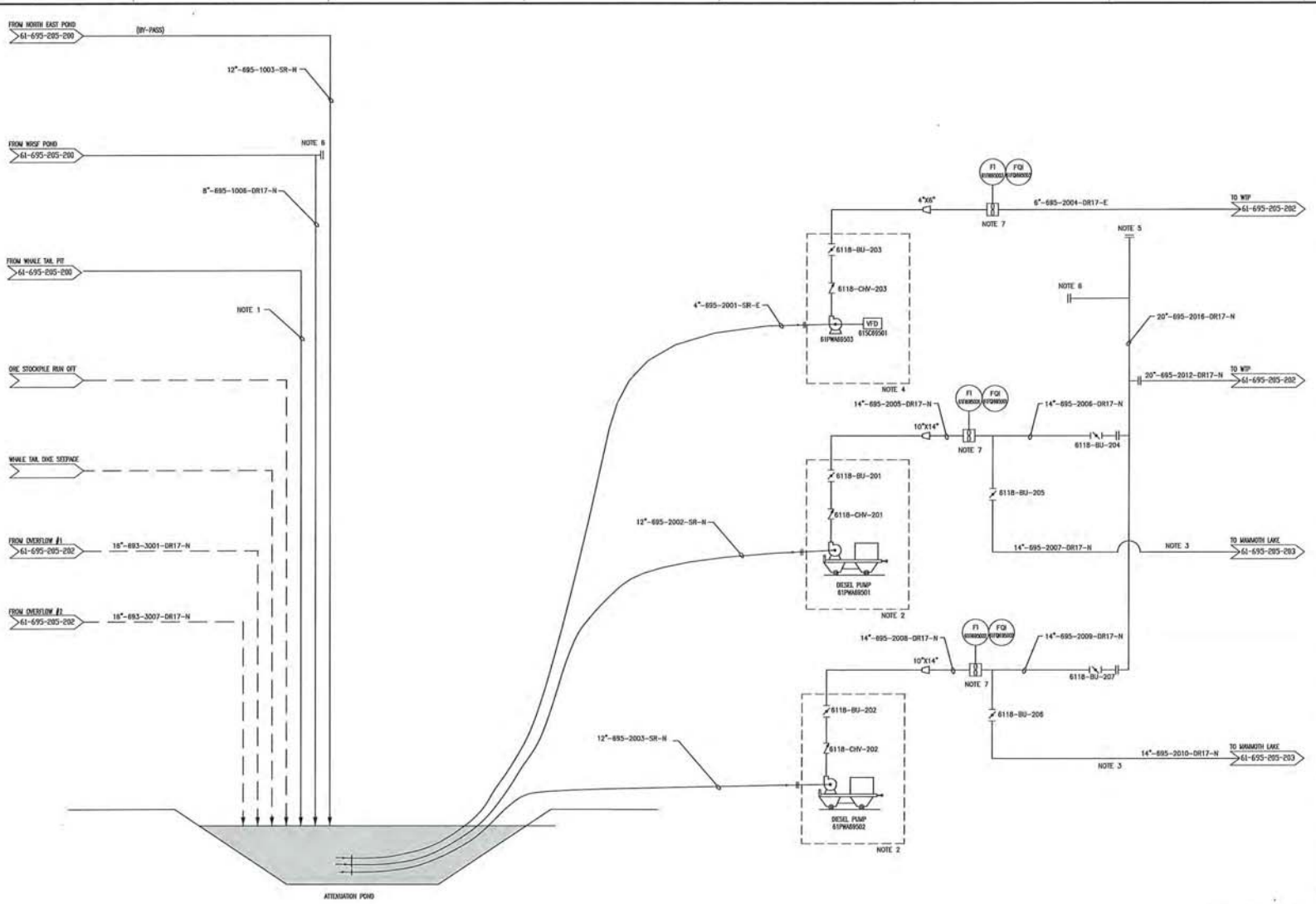

PLAN CLÉ
KEY PLAN

SNC·LAVALIN

PROJECT No	SUBDIVISION	SUBJECT	SERIAL	REV
651298	8200	49 D4	0002	E00

NOTES GÉNÉRALES / GENERAL NOTES

NOTES :
1. WHALE TAIL PIT PIPING SYSTEM TO BE CONFIRMED.
2. DIESEL PUMP MONTED ON A SKID.
3. BY-PASS TO MAMMOTH LAKE ONLY WHEN THE WATER MEETS THE DISCHARGE CRITERIA.
4. ELECTRIC PUMP ONLY USED DURING THE WINTER.
5. COMMON HEADER.
6. 8-IN CONNECTION THAT CAN BE USED AS A BY-PASS TO SEND RUNOFF FROM WRSF POND DIRECTLY TO THE WTP. NORMALLY, THIS OPENING IS CLOSED WITH A BLIND FLANGE.
7. FLOWMETER INSTALLED TEMPORARILY TO DEVELOP FLOW VS PUMP CAPACITY SYSTEM CURVE.

LEGEND:

DESSINS EN RÉFÉRENCE / REFERENCE DRAWINGS

SYMB. / TITLE	# DWG

AGNICO EAGLE

NO	DATE	DESCRIPTION	DES.	CHK.	APP.
R0	2018-05-30	ISSUED FOR DESIGN	D.C.	A.L.N.	R.C.
R0	2018-05-16	ISSUED FOR COMMENTS	D.C.	A.L.N.	R.C.
R0	2018-05-30	ISSUED FOR COMMENTS	D.C.	A.L.N.	R.C.

REVISIONS

TITLE
AGNICO EAGLE – AMARUQ DIVISION
695 – WATER MANAGEMENT

205 PIPING AND INSTRUMENTATION DIAGRAM
ATTENUATION POND AND PUMPING STATION

DESSINÉ PAR DRAWN BY	M. MOMLA	DATE 2018-05-30
VÉRIFIÉ PAR CHECKED BY	D. CHEN	2018-05-30
APPROUVÉ PAR APPROVED BY	A.L. NGUYEN	2018-05-30

ÉCHELLE SCALE: DATE 2018-05-30

NO. DESSIN DRAWING NO. 61-695-205-201

NO. PROJET PROJECT NO. 6118 | REVISION R0 | FEUILLE / SHT 1 / 1

PERMIT TO PRACTICE
SNC-LAVALIN INC.
Signature P.Eng.
Date 2018-05-30
PERMIT NUMBER: P 260
The Association of Professional Engineers, Geologists and Geophysicists of NWT/NU

FILE NO. 651298-8200-49D4-0002-00.dwg

NO. DESSIN DRAWING NO. 61-695-205-202

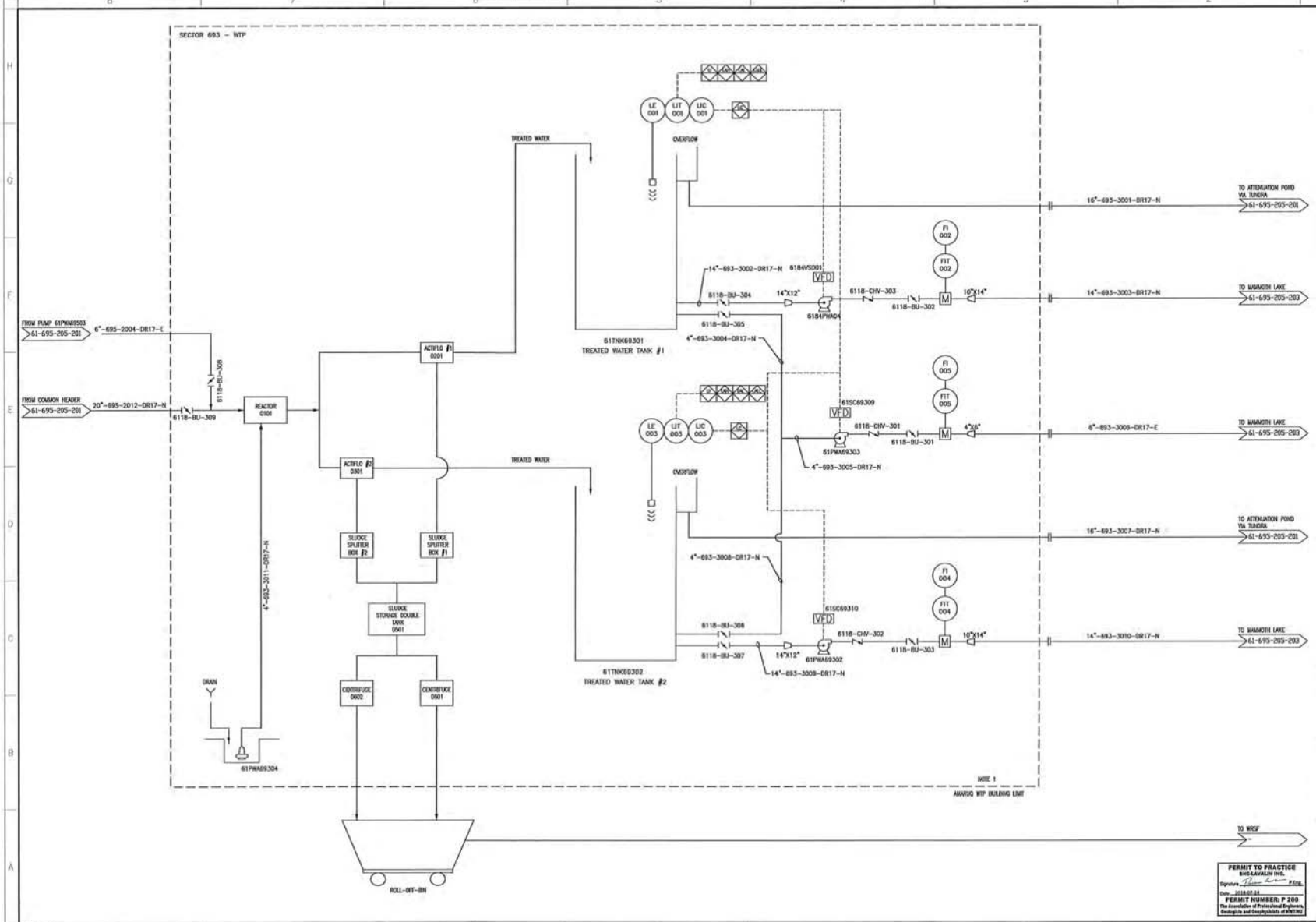

PLAN CLÉ
KEY PLAN

SNC·LAVALIN

PROJECT No	SUBDIVISION	SUBJECT	SERIAL	REV.
651298	8200	49 D4	0003	E00

NOTES GÉNÉRALES / GENERAL NOTES

NOTES :
1. REFER TO VEOLIA P&ID FOR DETAILS OF THE WTP PLANT.

LEGEND:

DESSINS EN RÉFÉRENCE / REFERENCE DRAWINGS

TYPE / TITLE	# DWG

AGNICO EAGLE

REV.	DATE	DESCRIPTION	PAR/BY	APP.	CLIENT
R0	2018-07-23	ISSUED FOR DESIGN	D.C.	A.L.N.	R.C.
R0	2018-08-18	ISSUED FOR COMMENTS	D.C.	A.L.N.	R.C.
RA	2018-05-30	ISSUED FOR COMMENTS	D.C.	A.L.N.	R.C.

REVISIONS

TITRE / TITLE
AGNICO EAGLE – AMARUQ DIVISION
695 – WATER MANAGEMENT

205 – PIPING AND INSTRUMENTATION DIAGRAM
TIE – INS TO AMARUQ WATER TREATMENT PLANT

DESSINÉ PAR DRAWN BY	M. MOVILA	DATE 2018-05-30
VÉRIFIÉ PAR CHECKED BY	D. CHEN	2018-05-30
APPROUVÉ PAR APPROVED BY	A.L. NGUYEN	2018-05-30
ÉCHELLE SCALE		DATE 2018-05-30

NO. DESSIN DRAWING NO. 61-695-205-202

NO. PROJET PROJECT NO.	REVISION	FEUILLE / SHT
6118	R0	1/1

PERMIT TO PRACTICE
SNC-LAVALIN INC.
Signature P.Eng.
Date 2018-07-24
PERMIT NUMBER: P 200
The Association of Professional Engineers, Geologists and Geophysicists of NWT/NU

FILE NO. 651298-8200-4804-0003-00.dwg

NO. DESSIN / DRAWING NO. 61-695-205-203

FORMAT ARCH D

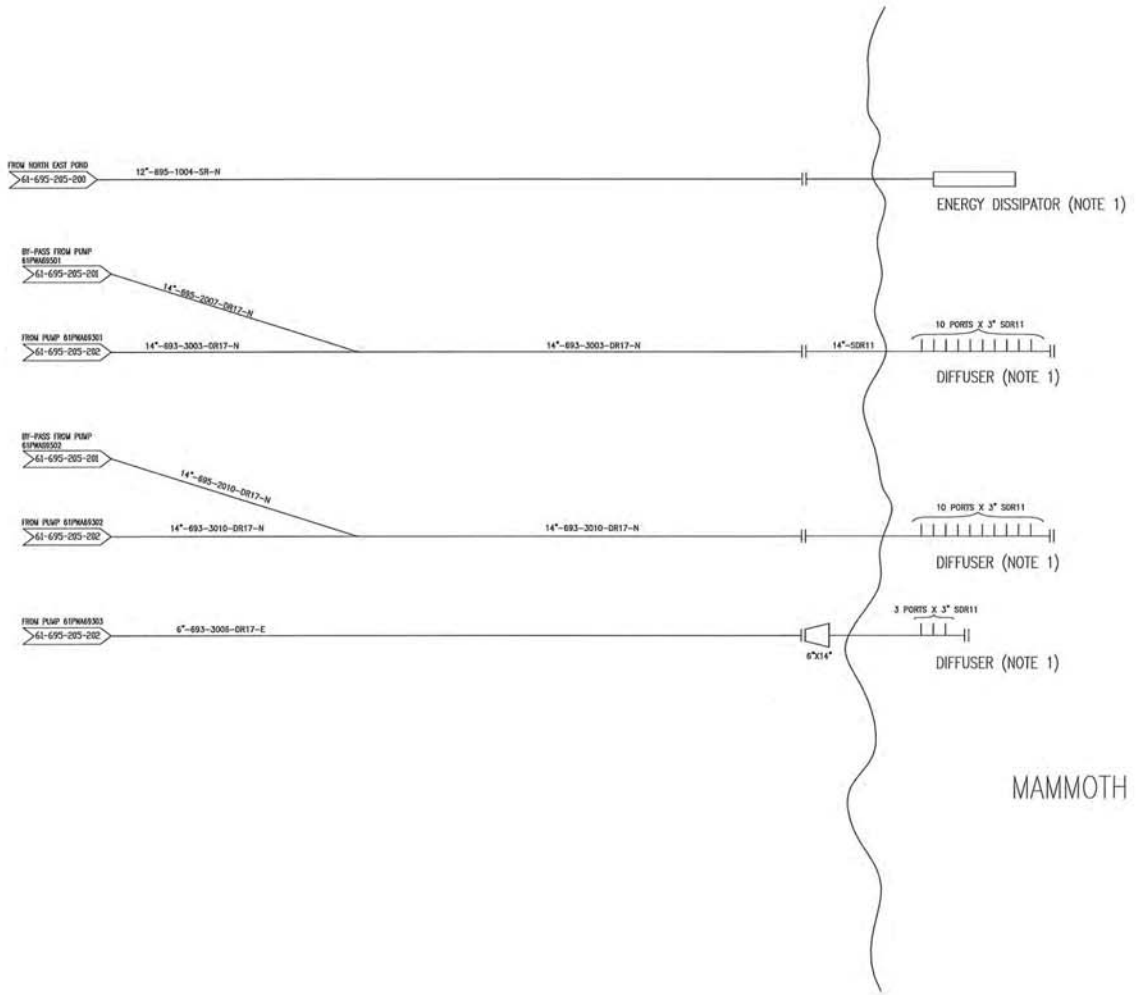

PLAN OLE
KEY PLAN

SNC-LAVALIN

PROJECT No.	SUBDIVISION	SUBJECT	SIGNAL	REV.
651298	8200	49 D4	0004	E00

NOTES GÉNÉRALES / GENERAL NOTES

NOTES :
1. DETAILS OF MAMMOTH LAKE DIFFUSERS & ENERGY DISSIPATOR TO BE CONFIRMED.

LEGEND:

DESSINS EN RÉFÉRENCE / REFERENCE DRAWINGS

TYPE / TITLE	# (No)

AGNICO EAGLE

NO	DATE	DESCRIPTION	DES.	A.L.N.	R.G.
R2	2018-07-24	ISSUED FOR DESIGN	D.G.	A.L.N.	R.G.
R1	2018-06-18	ISSUED FOR COMMENTS	D.G.	A.L.N.	R.G.
R0	2018-05-30	ISSUED FOR COMMENTS	D.G.	A.L.N.	R.G.

REVISIONS

TYPE / TITLE
AGNICO EAGLE – AMARUQ DIVISION
695 – WATER MANAGEMENT

205 – PIPING AND INSTRUMENTATION DIAGRAM TREATED WATER TO MAMMOTH LAKE

DESSINÉ PAR / DRAWN BY	M. MOMLA	DATE 2018-05-30
VÉRIFIÉ PAR / CHECKED BY	D. CHEN	2018-05-30
APPROUVÉ PAR / APPROVED BY	A.L. NGUYEN	2018-05-30
ÉCHELLE / SCALE	DATE	2018-05-30

NO. DESSIN / DRAWING NO. 61-695-205-203

NO. PROJET / PROJECT NO.	REVISION	ÉCHELLE / SCALE
6118	R0	1/1

PERMIT TO PRACTICE
SNC-LAVALIN INC.
Signature
Date 2018.07.24
PERMIT NUMBER: P 260
The Association of Professional Engineers, Geologists and Geophysicists of NWT/NU

FILE NO. 651298-8200-4904-0004-00.dwg

Appendix C: Veolia Operation and Maintenance Manual

PACKAGE NUMBER: 6115-S-265-001
PURCHASE ORDER NUMBER: OC-671670

AGNICO EAGLE MINES
AMARUQ WTP, NUNAVUT
VEOLIA Project 5000 218 009

Operation and Maintenance Manual
Volume 1

Prepared by:
Veolia Water Technologies Canada Inc.
4105, Sartelon
Montreal, Quebec, Canada
H4S 2B3
Tel.: 514-334-7230

Revision: 1
Date: August 2018

VEOLIA DOCUMENT NO: 5000218009_OMM_0001_GEN_VWT

LEFT BLANK

TABLE OF CONTENTS
Operation & Maintenance Manual
Amaruq WTP, Nunavut

1 INTRODUCTION ..... VOLUME 1

1.1 GENERAL DESCRIPTION

2 SAFETY ..... VOLUME 1

2.1 GENERAL RECOMMENDATIONS
2.2 SAFETY DATA SHEETS

3 DRAWINGS ..... VOLUME 1

3.1 PROCESS FLOW DIAGRAM
3.2 PROCESS AND INSTRUMENTATION DIAGRAM
3.3 HYDRAULIC PROFILE DRAWING
3.4 GENERAL ARRANGEMENT DRAWING
3.5 FIELD INSTALLATION DRAWING
3.6 GENERAL ARRANGEMENT LAYOUT

4 DETAILED TECHNICAL DOCUMENTATION ..... VOLUME 1

4.1 EQUIPMENT LISTS
- 4.1.1 Valve List
- 4.1.2 Instrumentation List
- 4.1.3 Detailed List

4.2 PRODUCT DATA SHEETS
4.3 SHOP DRAWINGS
- 4.3.1 Precipitation Reactor – RX75-3
- 4.3.2 Sludge Tank – RX75-2
- 4.3.3 Centrifuge
- 4.3.4 Sulfuric Acid Dosing Skid
- 4.3.5 Polymer Preparation System – Hydra-Pol 3500
- 4.3.6 $KMnO_4$ Preparation System – Hydra-Pol 500
- 4.3.7 $KMnO_4$ Dosing Skid

TABLE OF CONTENTS
Operation & Maintenance Manual
Amaruq WTP, Nunavut

4.3.8 Coagulant Dosing Skid
4.3.9 Cationic Polymer Dosing Skid
4.3.10 Anionic Polymer Dosing Skid
4.3.11 Actiflo Recirculation Line Modification
4.3.12 Raw Water
4.3.13 Sludge Tanks
4.4 COMMISSIONING REPORT
4.5 LIST OF SUPPLIERS

5 ELECTRICITY AND CONTROL ..... VOLUME 1

5.1 FUNCTIONAL DESCRIPTION
5.2 WIRING DIAGRAMS
5.3 CONTROL ARCHITECTURE
5.4 INPUT AND OUTPUT LIST
5.5 MOTOR LIST

6 OPERATION AND MAINTENANCE ..... VOLUME 1

6.1 ACTIFLO
6.2 HYDRA-POL POLYMER PREPARATION SYSTEM
6.3 SULFURIC ACID DOSING SKID
6.4 COAGULANT AND $KMnO_4$ DOSING SKID
6.5 POLYMER DOSING SKID

7 MANUFACTURER MAINTENANCE MANUAL ..... VOLUME 2

7.1 MANUFACTURER LIST
7.2 MANUFACTURER INSTALLATION, OPERATION AND MAINTENANCE MANUAL

The system was manufactured in Canada by:

Veolia Water Technologies Canada
4105, Sartelon
Saint-Laurent, Qc.
Canada H4S 2B3
Phone: 514-334-7230
Fax: 514-334-5070

For technical support or service needs, for spare parts or to get assistance during your warranty period, you may contact us at the following number during regular business hours or write us at:

Veolia Water Technologies Canada – After Sales Support
1-844-SER-VWT9 | 1-844-737-8989 | vwtservicecanada@veolia.com

Our business hours are from:
Monday to Friday
8:30am to 5pm (EST)

Have the following information on hand for each request or call:

Project Name:
VWTC Reference Number:

LEFT BLANK

OPERATION AND MAINTENANCE MANUAL

VOLUME 1

LEFT BLANK

1 – INTRODUCTION

1.1 – GENERAL DESCRIPTION

LEFT BLANK

GENERAL DESCRIPTION

AEM is currently developing the Amaruq Mine in Nunavut Canada as an open pit mine. With this new mine development AEM currently has a requirement to treat for TSS and Arsenic (As) concentration which is also expected to rise up. Therefore, an As and TSS treatment system is required before discharging the surface water to the environment.

The proposed treatment system includes:

- **A new metal precipitation reactor**. The purpose of this step is to precipitate the arsenic. The influent is sent to the Arsenic Removal Reactor. In this reactor, the influent water is mixed with ferric sulfate (Fe2(SO4)3). The ferric sulfate forms a floc of ferric hydroxide (Fe(OH)3) which acts both as a bridge to tie colloidal particles together and as an active surface which forms surface complexes with many metals, such as arsenic. The ferric sulfate also lowers the pH in the vicinity of 7.0 where the surface complexation is optimal for arsenate. In summer operation (ACTIFLO mode), some sludge from the sludge splitter box that collects the sludge from the ACTIFLO's is recycled to the metal precipitation reactor. This sludge recirculation makes it possible to increase the efficiency of the reactor and thereby reduce its size and especially prevent from having to use two units during the operation in ACTIFLO mode (high flow rate).

- **Two ACTIFLO's** (reused from the Meadowbank site). The water from the Metal Precipitation Reactor flows to the existing ACTIFLO's. The ACTIFLO is designed to remove suspended solids from the raw water. Sand-ballasted settling is a high-rate coagulation/flocculation/sedimentation process that utilizes microsand as a seed for floc formation. The microsand provides a surface area that enhances flocculation and acts as a ballast or weight. The resulting floc settles very fast, allowing for compact clarifier designs with high overflow rates and short detention times. The use of microsand also permits the unit to perform well under dramatically changing flow rates without impacting final effluent quality. The water flows to the first basin, the coagulation chamber where the reaction is optimized. The coagulated water then overflows to a second tank section called the injection tank. There, the microsand and flocculant aid polymer are added. The microsand provides a large contact area for floc attachment and acts as a ballast, thereby accelerating the settling of the flocs. The flocculant aid polymer binds the destabilized suspended solids to the microsand particles by forming polymer bridges. From the injection tank, the water underflows to a third tank section called the maturation tank. In this section, the microsand and sludge flocs agglomerate and grow into high-density flocs known as microsand ballasted flocs. From the maturation zone, the water overflows to the settling section of the tank. In the settling zone, the microsand ballasted flocs settle quickly to the bottom

of the unit. In the settling zone, the efficiency of settling is further increased by the use of the lamella tubes. The clarified water exits the system via a series of collection troughs or weirs. The clarified water is monitored for turbidity and is discharged by gravity to the clarified pump station. The sand-sludge mixture settles to the bottom of the clarifier. Scrapers force the sludge collected at the bottom of the clarifier into a centre cone from which it is continuously withdrawn and pumped to hydrocyclones where the sludge and microsand are separated by centrifugal force. After separation, the higher density microsand is discharged from the bottom of the hydrocyclone and reinjected into the process for reuse. The lighter density sludge is discharged from the top of the hydrocyclone and directed to the sludge management facilities. Also, to maintain a good extraction of sludge and good sand recirculation, the recirculation pumps on both existing ACTIFLO® units have been upgraded. The two 34 m^3/h each pumps installed on each ACTIFLO® from the Meadowbank project have been replaced by two new 70 m^3/h extraction pumps. This means that the recirculation line and hydrocyclones also had to be replaced.

- **A new sludge dewatering system.** The dewatering step aims to reduce sludge volume and produce a solid cake. In summer operation, the sludge from the two Actiflo's is sent to a sludge splitter box (existing tank reused). The sludge overflow of the splitter box flows back to the Metal Precipitation Reactor. The recycled sludge increases the reagent efficiency and promotes solid growth. It also helps to optimise the contact time between ferric hydroxide and arsenic to improve adsorption (this physical process is taking about an hour). It also thickens the sludge, so no thickener equipment is required before the dewatering stage. The remaining sludge is pumped to a storage double tank which is used as a feed tank to the centrifuges. In winter operation, the sludge from the Actiflo's (used as Multiflo's) is pumped directly to the storage double tank without going through the sludge splitter box and without being recirculated to the metal precipitation reactor. Then, both for summer and winter operation, the sludge from the storage double tank tank is pumped into two centrifuges capable of producing a cake of about 20±5 % dryness. The sludge dryness is dependent on the dewatering method, TSS content in the influent, flow rate and nature of the solid particles. In addition to the solids included in raw water, the sludge will contain adsorbed arsenic as well as ferric hydroxides from the coagulant addition. The lower the hydroxide fraction, the greater the dry solid content is achieved in the cake. The final cake dryness must be defined by carrying laboratory tests. The centrifuges are fed continuously with constant solid content slurry. A cationic polymer is injected in the feed pipe to increase the cake dryness. The separation between liquid and solid is achieved using centrifugal forces 500 to 3000 times the force of gravity. The thickened sludge produced by each centrifuge is carried away to a container for disposal through a screw conveyor. Centrate from the centrifuges and from the screw conveyors flows by gravity to sump pump pits. Centrate contains cationic polymer and can be recycled back upstream of the water treatment plant, in the metal precipitation reactor.

- **A new potassium permanganate ($KMnO_4$) preparation and dosing system**. $KMnO_4$ is used to oxidize the arsenic trivalent to produce arsenic pentavalent that is much easier to precipitate and separate from water. The selected oxidant to oxide As is Hydrex 9571. It is delivered dry in bags of 25 kg. The solution preparation is be made using a new manual make-up system. The dosage is performed using a new dosing skid equipped with mechanical diaphragm metering pumps. The $KMnO_4$ dosing point is located upstream from the precipitation reactor.

- **A coagulant dosing system.** The selected coagulant is Hydrex 6266, a ferric sulfate coagulant. It will be received in bulk bags. The existing coagulant preparation system from the Meadowbank site is reused. For summer operation, the dosage is performed using a new dosing skid equipped with mechanical diaphragm metering pumps. For winter operation, the existing dosing system with progressive cavity pumps from the Meadowbank site is reused. The coagulant dosing point is located in the metal precipitation reactor.

- **A sulphuric acid dosing system.** Sulphuric acid is used for ferric sulfate preparation (coagulant). Sulphuric acid is a commodity and will be received in bulk containers of 1 m3 at 93 % concentration. The product can be used as is and the dosage will be performed using a new dosing skid equipped with mechanical diaphragm metering pumps. The sulphuric acid dosing point is located in the maturation tank of the coagulant preparation system.

- **A caustic soda (NaOH) preparation and dosing system.** The coagulant consumes alkalinity from the water. In the event that the water doesn't contain enough alkalinity, an alkali source, such as sodium hydroxide, will need to be added. The sodium hydroxide will be received dry in 25 kg bags. The existing preparation and dosing systems from the Meadowbank site are reused. The NaOH dosing point is located upstream from the precipitation reactor.

- **An anionic polymer preparation and dosing system.** The use of a flocculation agent is essential for a metal removal process. Polymer enables the attachment of the floc onto the microsand and as such is required in order to obtain good process performance. The polymer will be Hydrex 6105 or equivalent. It is a solid anionic polymer used to enhance flocculation and will be received in 25 kg bags. The existing Hydra-Pol automatic preparation system from the Meadowbank site is reused to prepare a 0.25 % solution. The automatic polymer preparation/dilution system is an automatically controlled batching unit capable of preparing polymers. For winter operation, the anionic polymer dosing system from the Meadowbank site is reused. For summer operation, a new dosing system with 3 dosing skids is used. The existing polymer preparation from the Meadowbank site is also reused for summer operation. The anionic polymer liquid solution injection points are located in the injection and maturation tanks of the two ACTIFLO's.

- **A cationic polymer preparation and dosing system.** Cationic polymer is required for the sludge dewatering step. A new Hydra-Pol automatic preparation system is used to prepare a 0.3-0.5 % solution. The water used for the polymer preparation needs to be filtered water with temperature between 10- 20 °C. The automatic polymer preparation/dilution system is an automatically controlled batching unit capable of preparing polymers. A new dosing system with 3 dosing skids is used. The cationic polymer liquid solution injection points are located upstream from the two centrifuges.

2 – SAFETY

2.1 – GENERAL RECOMMENDATIONS

LEFT BLANK

SAFETY

VEOLIA WATER TECHNOLOGIES CANADA INC.

INDEX

1 GENERAL 3

2 OPERATION AND MAINTENANCE MANUEL 3

3 PLANT SAFETY PROCEDURES 3

4 UTILITY HAZARDS 4

4.1 Steam 4
4.2 Electrical 5
4.3 High Pressure Water 6
4.4 Plant Air 6

5 EQUIPMENT HAZARDS 6

5.1 Rotating parts, hazardous areas and confined spaces 6
5.2 Operation and Maintenance 7

6 CHEMICAL HAZARDS 8

6.1 Chemical Burns 8
6.2 Fire and Explosion 9
6.3 Toxic Exposure 9

7 SAMPLING AND LINE UNBLOCKING PROCEDURES 10

7.1 Sampling Procedures 10
7.2 Unblocking Procedures 11

APPENDIX 12

SAFETY

1 GENERAL

It should be recognized that potential hazards exist in any processing system. By including this section in the operating manual, Veolia Water Technologies Canada Inc. is in no way attempting to override the plant safety rules laid out to the employees by their employer. However, because of our concern for good, efficient operation of the equipment furnished, we recognize our obligation to point out certain hazards. We also recognize that this section cannot cover every possible hazard; rather, it merely points out some of the most common and important ones.

In each plant, the hazards vary slightly because of the particular chemical or material that is being processed. However, there are some safety recommendations that apply to all operations. These hazards can be broken down into three general areas, namely utility hazards (compressed air, electrical, etc.), equipment hazards, and chemical hazards. These three areas will be covered separately in the following sections.

One of the most important ways to avoid hazards is to have a good understanding of the process. Familiarity with the system and good common sense will enable operators to run the system smoothly and safely.

WHMIS Safety Data Sheets (SDS) should be available for each chemical product.

2 OPERATION AND MAINTENANCE MANUAL

It is important that the operator has understood the instructions of use, security and maintenance before using the Veolia Water Technologies Canada Inc. system. The manufacturer can not be held responsible for use or improper maintenance resulting from a breach or non-compliance with instructions. The Operation and Maintenance manual contents must be kept permanently close to Veolia Water Technologies Canada Inc. system in a safe place.

3 PLANT SAFETY PROCEDURES

As stated earlier, the safety rules and guidelines issued to the employees are the primary precautions that are necessary for the prevention of accidents. The employee should be very familiar with these rules. The safety pictograms used in the plant are to be respected at all times.

Operators should always wear the safety equipment that is provided or required by their management. Such items as hard hats, safety shoes, safety glasses, gloves, breathing protection, protective clothing, protection harness and hearing protection are very basic and go a long way in preventing accidents.

Operators should be aware of the location of fire extinguishers, eye wash stations, safety showers, self-contained breathing apparatus, first aid stations, and other safety equipment furnished for the plant.

Good housekeeping will also eliminate safety hazards such as tripping or slipping. When spills happen, the floor should be washed as soon as possible. When construction or maintenance is finished, removing debris also eliminates a hazard. Proper housekeeping is a good indication of safety attitude in general.

Management provided training can always help in making employees more safety conscious. In these seminars, potential hazards can be pointed out. Veolia Water Technologies Canada Inc. will be glad to assist these efforts by furnishing details on its equipment relating to safety as well as on its operation.

Investigation of an accident to determine its cause will help to prevent the same accident from occurring again and will aid in finding a way of correcting or eliminating the hazard.

Remember, safety rules provided by your employer are designed to protect you and should be strictly adhered to. However, as an operator, safety is your responsibility and you should voice any concerns you have and follow through until corrective action is taken.

4 UTILITY HAZARDS

Utility hazards that may exist in the plant may include high-pressure/high-temperature steam, high-voltage electricity, high-pressure water, and high pressure air. Care should be taken when utilizing any of the utilities.

4.1 Steam

Any time steam is used the potential for burns exist. The recommended first aid for burns is to first apply ice or cold water directly to the burn and then cover the area with cool, moist application gauze or bandage material to minimize blistering. If burns are critical (second and third degree), transport the injured person to a medical facility promptly.

Hot surfaces in areas frequented by personnel should be covered with insulation for protection. When hot surfaces must be left exposed, such as steam valves or sight glasses, operators should be warned of the potential hazard displaying pictograms, training, and supervision.

Steam valve packing, steam traps, and pipe fittings that are leaking should be brought to the attention of supervision and repaired as soon as possible. Instrumentation connections and pipeline for steam should be piped with good connections. Valves should be tagged and locked out on equipment that is being worked on where steam is used to prevent someone from opening the valve. At times, steam is used for cleaning lines. Operators should make sure that if hoses are used, they are designed for steam service. Make sure the connections are tight and do not leak.

Drain and sample connections should be suitably identified and piped with proper fittings. Rupture discs, pressure relief valves, and steam trap discharges should be suitably identified and piped in such a way that they do not release steam in an area of access. These must also be periodically checked to make sure that they are in good working order. Precautions should be taken to prevent accidental release of pressurization, which could injure personnel. Water or steam hammering in steam lines should be investigated for the source and stopped as soon as possible to prevent rupture.

4.2 Electrical

As with steam, electrical equipment should never be worked on unless it is turned off and locked and tagged out. The lockout system key should belong to the person doing the repair or the on-site electrician. This will remove the potential danger for electrical shock or accidental start-up.

Electrical hazards fall into three categories: shock, burn, and fire. The severity of electrical shock is dependent on several items, such as the nature of the electrical impulse and the path that the shock takes through the body. Burns are those caused by contact with electrical current. Fire is where a chemical or gas burns or explodes when it comes in contact with an electrical spark.

General first aid for electrical burns is as follows:

- Remove the victim from contact with the electrical current without coming into contact with the current yourself.
- Check for cardiac arrest or respiratory failure.
- Check for points of entry and exit of current.
- Cover burned surface with a clean dressing.
- Splint all fractures.
- Treat for physical shock.
- Transport to a medical facility promptly.

Except for very low voltage exposure (below 24 V) and very low body current (below 0.2 mA), it is difficult to state safe limits for electrical exposure. Even these low energy exposures can be traumatic for people with heart diseases.

Even though most electrical motors and switch boxes are designed to be water tight, it must be recognized that the presence of water around electrical equipment always presents a hazard and therefore should be used with care.

4.3 High Pressure Water

In the case of some pumps, cooling devices, and heat exchanger, high pressure water is used. As with steam, high pressure water can be a hazard if a small leak is not repaired.

Only the proper pressure fittings should be used in the piping system. As stated earlier, leaks should be repaired as soon as possible. Isolation valves on piping that are being repaired should be shut tight and locked out. As with electrical repairs, the lockout system key should be in the possession of the individual working on the piping.

Plant Air

Care should be taken when using plant air to clean equipment, unblock lines, or blow dust off personnel. High pressure air can be very dangerous to personnel, especially in the area of the face. Pressure should be reduced before using the air to blow dust off clothing. Make sure all fittings have good connections and cannot blow loose.

5 EQUIPMENT HAZARDS

5.1 Rotating parts, Hazardous Areas and Confined Spaces

Rotating parts

Since the system includes equipment with rotating parts (eg pumps, mixers, etc.) Operators should avoid wearing loose clothing and jewellery. Loose clothing can present one of the biggest safety hazards that exist when working near equipment in process.

Sharp or protruding surfaces are normally eliminated at areas frequented by personnel. When present in an operating area, the surface should be covered for protection and clearly marked to minimize the danger of contact.

Equipment that is likely to generate high noise levels should be insulated and/or isolated for personal access. If personnel must enter a high noise area, they will wear hearing protection.

Confined Spaces

Before entering or breaking the plane of any vessel, be sure to check if it is a potential Confined Space and if a permit is required for entrance. Vessels that require a Confined Space Entry Permit may include but are not limited to flash tanks, heaters, condensers, and storage tanks.

5.2 Operation and Maintenance

The equipment in its normal use can present a hazard if not operated or repaired in a safe manner. Example of equipment: pumps, valves, instruments, hoses, etc.

All equipment should only be operated and repaired according to the recommended procedures of the manufacturer, and by qualified individuals. For further information on equipment maintenance procedures, proper maintenance tools, and/or the Personal Protective Equipment required, Section 3 - Equipment of this manual should be referenced.

Only recommended spare parts should be used. For instance, when replacing a gasket, verify the proper gasket is selected (pressure steam, corrosive, etc.).

In the repair or replacement of Veolia Water Technologies Canada Inc. furnished equipment, Veolia Water Technologies Canada Inc. specifications should be checked to make sure the correct pressure rating is used.

Maintenance on pumps, piping, etc. should be performed only after valves are locked and tagged or slip blanks are installed to completely isolate the equipment being worked on. Instrumentation and controls should always be kept in good working order to help assure the safe operation of equipment. Never remove instruments or controls out of service until having communicated with the operator and have established a plan to define the operation maintenance steps. If air operated valves are used for isolation, the air line should be removed to prevent inadvertent operation of the valves. When possible the valve can also be locked in position.

When maintenance is finished on equipment, the protective caps provided must be reinstalled. If a protection must be left off, unwary personnel should be notified by using safety pictograms or installing temporary protection. Equipment should never be inspected or maintenance attempted while the equipment is operating. All pumps and various automatic valves may cause harm to an operator if care is not taken.

Before starting the equipment, the operator must verify if the maintenance staff has completed the work, if the pumps are not locked or frozen and whether bare electrical wires are present. He must also check the pipes to ensure there are no leaks and should clean all debris

6 CHEMICAL HAZARDS

WHMIS Safety Data Sheets (SDS) should be available for each chemical product.

Since chemicals or chemical dosage are used during normal operation of treatment facility, the risks of fire, explosion and exposure to toxic chemicals or chemical burns are present. Chemicals that may be used regularly or, for instance, during cleaning including, without limitation, acids, caustics, polymers, ozone, coagulant and microsand. Operators should be made aware of the following:

- All chemicals which are used and any potentially dangerous reaction that could occur.
- Toxicity of all chemicals that are used or could be formed via reactions.
- Acidic or basic properties of all materials used.
- Potential fire or explosion hazards posed by the chemicals.
- Antidotes for exposure to toxic materials.
- Protective clothing that is recommended.
- Any other information that helps make the operators aware of a hazard.

6.1 Chemical Burns

Some treatment plant chemicals can be very acidic or basic and cause serious burns if coming in contact with the skin or eyes. Operators should be careful when opening valves and working on lines and pumps. Safety glasses with side shields are always recommended when working around chemicals. Operators should familiarize themselves with the location and operation of safety showers and eye wash stations. These stations should be inspected and tagged acceptably with a date and signature on a regular basis.

Whenever a leak or spill is sighted, corrective action should be taken immediately and the spill should be cleaned up. It should never be assumed that someone else is aware of the problem or will take care of the spill.

Accordingly, chemical lines should be clearly identified by color coding or other suitable means. Routing of these lines should be in open areas and should avoid major work/access areas wherever possible. This is critical if the vessels and piping are overhead.

Plant areas where these materials are handled should be restricted. A safety briefing for all visitors and/or new personnel is recommended before access is granted.

All plant personnel should be required to wear proper protective clothing when handling or working near these chemicals. A minimum wardrobe should include, but not be limited to, a plastic hard hat, coat, boots and gloves of a resistant material as well as a pair of safety glasses. Safety glasses, even with shields, are not adequate for use in areas where very acidic or basic materials are handled.

Accidental contact with these chemicals should be avoided. Remember, most liquid chemicals resemble water. Good housekeeping practices should be a requirement in areas where these materials are handled.

6.2 Fire and Explosion

A combustible material will spontaneously start to burn when its temperature is raised to its ignition point in the presence of air. The ignition point of all chemicals used in the process should be known and posted for operators. In some cases, the mixture of vapor and air can burn violently in the form of an explosion.

Accordingly, chemicals should not be added to other materials if the effects of the addition are unknown. This includes disposal, which should only be into suitable containers. Sinks and/or sewers are not suitable for disposal.

WARNING: In systems with Actiflo® clarifier, the lamella pack is pre-installed in the settling tank section of the Actiflo®. It is made of a very flammable material. Do not expose it to open flames or sparks. Do not allow any welding works nearby unless special precautions have been taken.

6.3 Toxic Exposure

Since we are dealing with the effects on individuals who may react to various toxic materials to different degrees, it is difficult to establish an absolute evaluation of toxicity. However, most toxic materials do not have particularly adverse effects when present in small amounts. Consequently, the concept of the “threshold limit value” (TLV) has been developed and is defined as a concentration of toxic material below which it is believed nearly all individuals may be repeatedly exposed over a long duration without adverse effects. The TLV for all chemicals used should be on record and easily accessible.

7 SAMPLING AND LINE UNBLOCKING PROCEDURES

7.1 Sampling Procedures

In the course of startup and operation of Veolia Water Technologies Canada Inc. supplied equipment, sampling of the process fluid is generally conducted in order to:

- Verify system instrumentation.
- Adjust system to maintain desired stability of operation.
- Troubleshoot upset conditions.
- Verify system performance meets contractual guarantees.

Regardless of the process fluid being sampled, care should always be taken to assure samples are collected without placing personnel at risk of injury. Personnel who are collecting samples should always practice good safety habits in their collection routine. Personal protective equipment (PPE) should be selected and worn with respect to the type of sample being collected and its means of collection.

PPE required for sampling is dependent on the material, the temperature and pressure, the sampling point, the surrounding conditions, etc. An example of the varying level of PPE required for each given sample is given below. However, the person responsible for sampling should determine for him or herself if his or her level of PPE is adequate for the task. **Remember, YOU are responsible for your safety.**

<u>PPE required for general field work</u>

- Steel-toed work boots, safety glasses, hard hat, leather gloves, hearing protection, respirator, long-sleeved shirt.

<u>Additional PPE required for handling hot, non-hazardous material</u>

- Insulated rubber gloves and face shield with goggles.

<u>Additional PPE required for handling hazardous material</u>

- Consult SDS
- Full body suit, respirator, rubber gloves, face shield with goggles, protective sampling container.

The collector should study the pertinent sampling station specific to his/her process until comfortable he/she can collect a sample from the station in a safe manner that is also representative of the process conditions. The collector should then develop his/her own sampling procedure.

7.2 Unblocking Procedures

The systems processing highly viscous or slurry solutions are prone to produce blocked drains, valves, and/or sampling stations. The operator should expect blocked connections in these systems. As such, the operator will eventually be required to unblock a connection to access a sample or drain a vessel or line. In doing so, the operator should:

- Review the need for proper personal protective equipment (PPE).
- Develop a plan for unblocking the connection
- Obtain the proper equipment to unblock the connection
- Safely implement the unblocking plan

Selecting the proper PPE for use in unblocking a connection is very similar to the PPE required for sampling noted in the previous section. However, unblocking a connection can result in an instantaneous release of fluid or material at velocities or forces much greater than seen during normal sampling methods. The operator should consider "what if" scenarios such as excessive splashing or large volume release after unblocking the connection and determine his/her PPE with these "worst case" conditions in mind.

Before attempting to unblock a connection, the operator should study the situation and develop a safe procedure to unblock the connection. He/she should observe the area around the connection problem in case a quick "get-a-way" should be required. He/she should inform any personnel in the area that may be affected by unblocking the connection. The operator should learn what the material behind the plug is operating at: what temperature, what pH, what pressure, etc. and modify his/her plan accordingly to develop the safest method of releasing the connection. It might be better for him/her to perform an exercise to test the method of unblocking to validate the proposed method.

Any equipment used in the unblocking process should be reviewed for adequacy of use. Is the hose rated for the material, temperature, and pressure expected to be seen by its use? Are the hose and fittings in good condition? If not, replace the unfit equipment with new or adequate equipment. Make sure all connections are tight and proper for the job. In addition, the hose assembly utilized in the unblocking process should be equipped with a bleed-off valve to depressurize the system prior to the dismantling of the connection. If a bleed-off valve does not exist, special care should be taken when dismantling a hose connection because it may still be subject to internal pressure after the release.

Once the plan and the equipment are in place, the operator must focus on the task to be sure the line is unblocked in the safest manner possible. He/she should especially be concerned not only with his/her own safety, but also of others in the area. Cordoning off the area surrounding the blocked connection is advisable. Remember, whatever means is used be it with water, steam, or air, or mechanical means, BE READY FOR ANY CONSEQUENCES when the drain pipe.

Finally, when working with a partner, take special precaution to communicate your plan to avoid harming anyone due to miscommunication.

APPENDIX

Forbidden

Subject	Pictogram
No swimming	
Not drinking water	

Danger

Subject	Pictogram
Electrical hazard	
Keep guard in place	
This machine start automatically	
Corrosive material	
Risk of falling	

Pressure Piping	
Risk of slippage	
Flammable or high temperature	
Rotating part	
High temperature	
Confined space	
Risk of explosion	
Toxic	

Obligatory

Subject	Pictogram
Safety glasses	
Respiratory protection	
Hardhat	
Safety shoes	
Safety gloves	
Coverage of hearing	
Personal protective against fall	
Consult the manual	
Mandatory use of padlocks	

2 – SAFETY

2.2 – SAFETY DATA SHEETS

LEFT BLANK

Hydrex

MATERIAL SAFETY DATA SHEET

1. Product and Company Identification

Product identifier	**Hydrex 6266**
Version #	01
Issue date	11-12-2013
CAS #	Mixture
Product use	Wastewater Coagulant
Manufacturer	
Supplier	VWS Canada
Address	2000 Argentia Road, Plaza IV, Suite 430 Mississauga, ON L5N 1W1 Canada
Contact Person	Hydrex Product Specialist
Telephone	(905) 286-4846
Fax	(905) 286-0488
e-mail	vwscanada.hydrex@veoliawater.com
24-Hour Emergency telephone	+1-760-476-3962 (Code:333239)

2. Hazards Identification

Emergency overview WARNING

Harmful in contact with skin.

Potential health effects

Routes of exposure	Inhalation. Ingestion. Skin contact. Eye contact.
Eyes	Harmful in contact with eyes. Do not get this material in contact with eyes.
Skin	Harmful in contact with skin. Do not get this material in contact with skin.
Inhalation	Prolonged inhalation may be harmful. Do not breathe dust/fume/gas/mist/vapors/spray.
Ingestion	Do not ingest.

3. Composition / Information on Ingredients

Non-hazardous components	CAS #	Percent
IRON, WATER-SOLUBLE SALTS, N.O.S.	10028-22-5	60 - 100
Other components below reportable levels		15 - 40

4. First Aid Measures

First aid procedures

Eye contact	Immediately flush eyes with plenty of water for at least 15 minutes. If a contact lens is present, DO NOT delay irrigation or attempt to remove the lens. Continue rinsing. Get medical attention immediately.
Skin contact	Remove and isolate contaminated clothing and shoes. Immediately flush skin with plenty of water. Get medical attention immediately. For minor skin contact, avoid spreading material on unaffected skin. Wash clothing separately before reuse.
Inhalation	Move to fresh air. Oxygen or artificial respiration if needed. Do not use mouth-to-mouth method if victim inhaled the substance. Induce artificial respiration with the aid of a pocket mask equipped with a one-way valve or other proper respiratory medical device. Call a physician or poison control center immediately.
Ingestion	IF SWALLOWED: Immediately call a POISON CENTER or doctor/physician. Rinse mouth thoroughly. Do not induce vomiting without advice from poison control center. If vomiting occurs, keep head low so that stomach content doesn't get into the lungs. Do not use mouth-to-mouth method if victim ingested the substance. Induce artificial respiration with the aid of a pocket mask equipped with a one-way valve or other proper respiratory medical device.

Notes to physician Symptoms may be delayed.

General advice Ensure that medical personnel are aware of the material(s) involved, and take precautions to protect themselves.

5. Fire Fighting Measures

Flammable properties Not flammable by WHMIS criteria.

Extinguishing media

Suitable extinguishing media Water fog. Foam. Dry chemical powder. Dry chemical, CO2, sand, earth, water spray or regular foam.

Fire fighting equipment/instructions In the event of fire, cool tanks with water spray.

Specific methods Cool containers exposed to flames with water until well after the fire is out.

Explosion data

Sensitivity to static discharge Not available.

Sensitivity to mechanical impact Not available.

6. Accidental Release Measures

Personal precautions Keep unnecessary personnel away. Keep upwind. Keep out of low areas. Ventilate closed spaces before entering them. For personal protection, see section 8 of the MSDS.

Methods for cleaning up Following product recovery, flush area with water. For waste disposal, see section 13 of the MSDS.

7. Handling and Storage

Handling Do not breathe dust/fume/gas/mist/vapors/spray. Do not get this material in contact with eyes. Do not get this material in contact with skin. Avoid prolonged exposure. Do not get this material on clothing. Do not use in areas without adequate ventilation. Wear personal protective equipment. Wash thoroughly after handling.

Storage Store in a closed container away from incompatible materials. Store in a well-ventilated place. Keep container dry. Store away from incompatible materials (see Section 10 of the MSDS).

8. Exposure Controls / Personal Protection

Occupational exposure limits

US. ACGIH Threshold Limit Values

Components	Type	Value
FERRIC SULFATE (CAS 10028-22-5)	TWA	1 mg/m3

Canada. Alberta OELs (Occupational Health & Safety Code, Schedule 1, Table 2)

Components	Type	Value
FERRIC SULFATE (CAS 10028-22-5)	TWA	1 mg/m3

Canada. British Columbia OELs. (Occupational Exposure Limits for Chemical Substances, Occupational Health and Safety Regulation 296/97, as amended)

Components	Type	Value
FERRIC SULFATE (CAS 10028-22-5)	STEL	2 mg/m3
	TWA	1 mg/m3

Canada. Manitoba OELs (Reg. 217/2006, The Workplace Safety And Health Act)

Components	Type	Value
FERRIC SULFATE (CAS 10028-22-5)	TWA	1 mg/m3

Canada. Ontario OELs. (Control of Exposure to Biological or Chemical Agents)

Components	Type	Value
FERRIC SULFATE (CAS 10028-22-5)	TWA	1 mg/m3

Canada. Quebec OELs. (Ministry of Labor - Regulation Respecting the Quality of the Work Environment)

Components	Type	Value
FERRIC SULFATE (CAS 10028-22-5)	TWA	1 mg/m3

Biological limit values No biological exposure limits noted for the ingredient(s).

Engineering controls Good general ventilation (typically 10 air changes per hour) should be used. Ventilation rates should be matched to conditions. If applicable, use process enclosures, local exhaust ventilation, or other engineering controls to maintain airborne levels below recommended exposure limits. If exposure limits have not been established, maintain airborne levels to an acceptable level. Ensure adequate ventilation, especially in confined areas.

Personal protective equipment

Eye / face protection Wear safety glasses with side shields (or goggles) and a face shield. Chemical goggles and face shield are recommended.

Skin protection Wear suitable protective clothing. Chemical resistant gloves.

Respiratory protection When workers are facing concentrations above the exposure limit they must use appropriate certified respirators.

9. Physical & Chemical Properties

Appearance Granular

Physical state Solid.

Form Solid.

Color Yellowish or Tan or Grey.

Odor Slight

Odor threshold Not available.

pH Not available.

Vapor pressure Not available.

Vapor density Not available.

Boiling point Not available.

Melting point/Freezing point > 572 °F (> 300 °C)

Solubility (water) Soluble

Specific gravity 3.1 estimated

Relative density Not available.

Flash point Not available.

Flammability limits in air, upper, % by volume Not available.

Flammability limits in air, lower, % by volume Not available.

Auto-ignition temperature Not available.

Other data

Density 3.10 g/cm3 estimated

10. Chemical Stability & Reactivity Information

Chemical stability Material is stable under normal conditions.

Conditions to avoid Contact with incompatible materials.

Incompatible materials Not available.

Hazardous decomposition products Not available.

Possibility of hazardous reactions Hazardous polymerization does not occur.

11. Toxicological Information

Toxicological data

Product	Species	Test Results
Hydrex 6266 (CAS Mixture)		
Acute		
Dermal		
LD50	Mouse	>= 200 mg/kg Calculation
Oral		
LD50	Rat	>= 650 mg/kg Calculation

* Estimates for product may be based on additional component data not shown.

Chronic effects Prolonged inhalation may be harmful. Not expected to be hazardous by WHMIS criteria.

12. Ecological Information

Ecotoxicological data

Product		Species	Test Results
Hydrex 6266 (CAS Mixture)			
Aquatic			
Acute			
Algae	EC50	Green algae (Scenedesmus acutus)	> 13 mg/l, 7 day
Fish	LC50	Mosquitofish (Gambusia affinis affinis)	>= 50 mg/l, 96 hours

* Estimates for product may be based on additional component data not shown.

Persistence and degradability Not available.

13. Disposal Considerations

Disposal instructions Collect and reclaim or dispose in sealed containers at licensed waste disposal site. Dispose in accordance with all applicable regulations.

Waste from residues / unused products Dispose of in accordance with local regulations. Empty containers or liners may retain some product residues. This material and its container must be disposed of in a safe manner (see: Disposal instructions).

Contaminated packaging Empty containers should be taken to an approved waste handling site for recycling or disposal. Since emptied containers may retain product residue, follow label warnings even after container is emptied.

14. Transport Information

TDG

- **UN number** UN3077
- **UN proper shipping name** ENVIRONMENTALLY HAZARDOUS SUBSTANCE, SOLID, N.O.S. (IRON, WATER-SOLUBLE SALTS, N.O.S.)
- **Transport hazard class(es)**
  - **Class** 9
  - **Subsidiary risk** -
- **Packing group** III
- **Environmental hazards** D
- **Special precautions for user** Read safety instructions, MSDS and emergency procedures before handling.

IATA

- **UN number** UN3077
- **UN proper shipping name** Environmentally hazardous substance, solid, n.o.s. (IRON, WATER-SOLUBLE SALTS, N.O.S.)
- **Transport hazard class(es)**
  - **Class** 9
  - **Subsidiary risk** -
- **Packing group** III
- **Environmental hazards** No.
- **ERG Code** 9L

Special precautions for user	Read safety instructions, MSDS and emergency procedures before handling.
Other information	
Passenger and cargo aircraft	Allowed.
Cargo aircraft only	Allowed.

IMDG

UN number	UN3077
UN proper shipping name	ENVIRONMENTALLY HAZARDOUS SUBSTANCE, SOLID, N.O.S.
Transport hazard class(es)	
Class	9
Subsidiary risk	-
Packing group	III
Environmental hazards	
Marine pollutant	No.
EmS	F-A, S-F
Special precautions for user	Read safety instructions, MSDS and emergency procedures before handling.

IATA; IMDG; TDG

15. Regulatory Information

Canadian regulations	This product has been classified in accordance with the hazard criteria of the CPR and the MSDS contains all the information required by the CPR.
WHMIS status	Controlled
WHMIS classification	D2B - Other Toxic Effects-TOXIC

WHMIS labeling

Inventory status

Country(s) or region	Inventory name	On inventory (yes/no)*
Australia	Australian Inventory of Chemical Substances (AICS)	Yes
Canada	Domestic Substances List (DSL)	Yes
Canada	Non-Domestic Substances List (NDSL)	No
China	Inventory of Existing Chemical Substances in China (IECSC)	Yes
Europe	European Inventory of Existing Commercial Chemical Substances (EINECS)	Yes
Europe	European List of Notified Chemical Substances (ELINCS)	No
Japan	Inventory of Existing and New Chemical Substances (ENCS)	Yes
Korea	Existing Chemicals List (ECL)	Yes
New Zealand	New Zealand Inventory	Yes
Philippines	Philippine Inventory of Chemicals and Chemical Substances (PICCS)	Yes

Country(s) or region	Inventory name	On inventory (yes/no)*
United States & Puerto Rico	Toxic Substances Control Act (TSCA) Inventory	Yes

*A "Yes" indicates that all components of this product comply with the inventory requirements administered by the governing country(s)
A "No" indicates that one or more components of the product are not listed or exempt from listing on the inventory administered by the governing country(s).

16. Other Information

HMIS® ratings

Health: 2
Flammability: 0
Physical hazard: 0

NFPA ratings

Health: 2
Flammability: 0
Instability: 0

Disclaimer

The information in the sheet was written based on the best knowledge and experience currently available. Veolia Water Solutions & Technologies is not able to anticipate all conditions under which this information and its product, or the products of other manufacturers in combination with its product, may be used. It is the user's responsibility to ensure safe conditions for handling, storage and disposal of the product, and to assume liability for loss, injury, damage or expense due to improper use and or non respect of Veolia Water Solutions & Technologies' requirement.

Hydrex

MATERIAL SAFETY DATA SHEET

1. Product and Company Identification

Product identifier	**Hydrex 6105**
Version #	01
Issue date	08-15-2014
CAS #	Mixture
Product use	Wastewater Flocculant
Manufacturer	
Supplier	VWS Canada
Address	2000 Argentia Road, Plaza IV, Suite 430 Mississauga, ON L5N 1W1 Canada
Contact Person	Hydrex Product Specialist
Telephone	(905) 286-4846
Fax	(905) 286-0488
e-mail	vwscanada.hydrex@veoliawater.com
24-Hour Emergency telephone	+1-760-476-3962 (Code:333239)

2. Hazards Identification

Potential health effects

Eyes	Health injuries are not known or expected under normal use.
Skin	Health injuries are not known or expected under normal use.
Inhalation	Health injuries are not known or expected under normal use.
Ingestion	Health injuries are not known or expected under normal use.

3. Composition / Information on Ingredients

The components are not hazardous or are below required disclosure limits.

4. First Aid Measures

First aid procedures

Eye contact	Rinse with water. Get medical attention if irritation develops and persists.
Skin contact	Rinse skin with water/shower. Get medical attention if irritation develops and persists.
Inhalation	If breathing is difficult, remove to fresh air and keep at rest in a position comfortable for breathing. Call a physician if symptoms develop or persist.
Ingestion	Rinse mouth. If ingestion of a large amount does occur, call a poison control center immediately.
General advice	If you feel unwell, seek medical advice (show the label where possible). Show this safety data sheet to the doctor in attendance.

5. Fire Fighting Measures

Flammable properties	Dust accumulation from this product may present an explosion hazard in the presence of an ignition source.
Extinguishing media	
Suitable extinguishing media	Water spray, fog, CO2, dry chemical, or alcohol resistant foam.
Protection of firefighters	
Protective equipment for firefighters	In the event of fire, wear self-contained breathing apparatus.
Fire fighting equipment/instructions	Use water spray to cool unopened containers. Dust may form an explosive mixture in the atmosphere.
Specific methods	Use water spray to cool unopened containers.

Explosion data

Sensitivity to static discharge	Not available.
Sensitivity to mechanical impact	Not available.

6. Accidental Release Measures

Personal precautions	Slippery when wet.
Environmental precautions	Prevent further leakage or spillage if safe to do so. Do not contaminate water.
Methods for cleaning up	Should not be released into the environment. Following product recovery, flush area with water. For waste disposal, see section 13 of the MSDS.

7. Handling and Storage

Handling	Avoid release to the environment. Material can be slippery when wet.
Storage	Store in a dry area. Store in closed original container at temperatures between 5°C and 30°C.

8. Exposure Controls / Personal Protection

Biological limit values	No biological exposure limits noted for the ingredient(s).

Personal protective equipment

Eye / face protection	Chemical goggles are recommended.
Skin protection	Normal work clothing (long sleeved shirts and long pants) is recommended.
Respiratory protection	No specific recommendation made, but protection against nuisance dust must be used when the general level exceeds 10 mg/m3.

9. Physical & Chemical Properties

Appearance	Not available.
Physical state	Solid.
Form	Not available.
Color	White
Odor	Not available.
pH	Not available.
Vapor pressure	0 hPa estimated
Vapor density	Not available.
Boiling point	Not available.
Melting point/Freezing point	Not available.
Solubility (water)	Not available.
Specific gravity	0.65 - 0.9
Flash point	Not available.
Auto-ignition temperature	Not available.
Ph Of 1% Solution	5 - 7

10. Chemical Stability & Reactivity Information

Chemical stability	Material is stable under normal conditions.
Conditions to avoid	None under normal conditions.
Incompatible materials	Not available.
Hazardous decomposition products	Upon decomposition, this product may yield oxides of nitrogen and ammonia, carbon dioxide, carbon monoxide and other low molecular weight hydrocarbons.

11. Toxicological Information

Toxicological data

Product	Species	Test Results
Hydrex 6105 (CAS Mixture)		
Acute		
Dermal		
LD50	Rabbit	> 10000 mg/kg
Oral		
LD50	Rat	> 5000 mg/kg

* Estimates for product may be based on additional component data not shown.

Chronic effects Not expected to be hazardous by WHMIS criteria.

12. Ecological Information

Ecotoxicological data

Product		Species	Test Results
Hydrex 6105 (CAS Mixture)			
Algae	IC50	Algae	2276 mg/l, 72 hr
Crustacea	EC50	Daphnia	> 100 mg/l, 48 hr
Other	LC50	Rainbow Trout	> 120 mg/l, 96 hr
Aquatic			
Fish	LC50	Zebra danio (Danio rerio)	> 100 mg/l, 96 hr

* Estimates for product may be based on additional component data not shown.

Ecotoxicity Contains a substance which causes risk of hazardous effects to the environment.

Environmental effects An environmental hazard cannot be excluded in the event of unprofessional handling or disposal

Persistence and degradability Not available.

13. Disposal Considerations

Disposal instructions Collect and reclaim or dispose in sealed containers at licensed waste disposal site. Do not allow this material to drain into sewers/water supplies. This product, in its present state, when discarded or disposed of, is not a hazardous waste according to Federal regulations (40 CFR 261.4 (b)(4)). Under RCRA, it is the responsibility of the user of the product to determine, at the time of disposal, whether the product meets RCRA criteria for hazardous waste. Dispose in accordance with all applicable regulations.

Contaminated packaging Empty containers should be taken to an approved waste handling site for recycling or disposal.

14. Transport Information

TDG

Not regulated as dangerous goods.

IATA

Not regulated as dangerous goods.

IMDG

Not regulated as dangerous goods.

15. Regulatory Information

Canadian regulations This product has been classified in accordance with the hazard criteria of the CPR and the MSDS contains all the information required by the CPR.

WHMIS status Non-controlled

Inventory status

Country(s) or region	Inventory name	On inventory (yes/no)*
Australia	Australian Inventory of Chemical Substances (AICS)	Yes
Canada	Domestic Substances List (DSL)	Yes

Country(s) or region	Inventory name	On inventory (yes/no)*
Canada	Non-Domestic Substances List (NDSL)	No
China	Inventory of Existing Chemical Substances in China (IECSC)	Yes
Europe	European Inventory of Existing Commercial Chemical Substances (EINECS)	No
Europe	European List of Notified Chemical Substances (ELINCS)	No
Japan	Inventory of Existing and New Chemical Substances (ENCS)	Yes
Korea	Existing Chemicals List (ECL)	Yes
New Zealand	New Zealand Inventory	Yes
Philippines	Philippine Inventory of Chemicals and Chemical Substances (PICCS)	Yes
United States & Puerto Rico	Toxic Substances Control Act (TSCA) Inventory	Yes

*A "Yes" indicates that all components of this product comply with the inventory requirements administered by the governing country(s)
A "No" indicates that one or more components of the product are not listed or exempt from listing on the inventory administered by the governing country(s).

16. Other Information

Further information
HMIS® is a registered trade and service mark of the NPCA.

HMIS® ratings
Health: 0
Flammability: 1
Physical hazard: 0

NFPA ratings
Health: 0
Flammability: 1
Instability: 0

Disclaimer
Veolia Water Solutions & Technologies is not able to anticipate all conditions under which this information and its product, or the products of other manufacturers in combination with its product, may be used. It is the user's responsibility to ensure safe conditions for handling, storage and disposal of the product, and to assume liability for loss, injury, damage or expense due to improper use and or non respect of Veolia Water Solutions & Technologies' requirement.

This data sheet contains changes from the previous version in section(s):
Product and Company Identification: Product and Company Identification

MATERIAL SAFETY DATA SHEET

1. Product and Company Identification

Material name	**Hydrex 9571**
Version #	01
Issue date	08-27-2013
Chemical name	POTASSIUM PERMANGANATE
Product use	Wastewater Metal Precipitant
Manufacturer	
Supplier	VWS Canada
Address	2000 Argentia Road, Plaza IV, Suite 430 Mississauga, ON L5N 1W1 Canada
Contact Person	Hydrex Product Specialist
Telephone	(905) 286-4846
Fax	(905) 286-0488
e-mail	vwscanada.hydrex@veoliawater.com
24-Hour Emergency telephone	+1-760-476-3962 (Code:333239)

2. Hazards Identification

Emergency overview

DANGER

Oxidizing material.

Causes skin and eye burns.

Potential health effects

Routes of exposure	Inhalation. Ingestion. Skin contact. Eye contact.
Eyes	Corrosive to the eyes and may cause severe damage including blindness. Causes chemical burns. Do not get this material in contact with eyes.
Skin	Causes chemical burns. Do not get this material in contact with skin.
Inhalation	Dust extremely irritating to the respiratory tract. Inhalation of dusts may cause respiratory irritation. Prolonged inhalation may be harmful. Do not breathe dust.
Ingestion	Harmful if swallowed. Ingestion causes burns of the upper digestive and respiratory tracts. Irritating. May cause nausea, stomach pain and vomiting. Do not ingest.
Chronic effects	Frequent or prolonged contact may defat and dry the skin, leading to discomfort and dermatitis.
Signs and symptoms	Contact with this material will cause burns to the skin, eyes and mucous membranes. Symptoms may include redness, edema, drying, defatting and cracking of the skin.
Potential environmental effects	Components of this product are hazardous to aquatic life. May cause long-term adverse effects in the environment.

3. Composition / Information on Ingredients

Components	CAS #	Percent
POTASSIUM PERMANGANATE	7722-64-7	60 - 100
Other components below reportable levels		1 - 5

4. First Aid Measures

First aid procedures

Eye contact	Immediately flush eyes with plenty of water for at least 15 minutes. If a contact lens is present, DO NOT delay irrigation or attempt to remove the lens. Continue rinsing. Get medical attention immediately.

Skin contact	Before washing use a dry brush to remove dust from skin. Remove and isolate contaminated clothing and shoes. Immediately flush skin with plenty of water. Get medical attention immediately. For minor skin contact, avoid spreading material on unaffected skin. Wash clothing separately before reuse.
Inhalation	Move to fresh air. If symptoms are experienced, remove source of contamination or move victim to fresh air. Get medical attention if symptoms persist.
Ingestion	IF SWALLOWED: Immediately call a POISON CENTER or doctor/physician. Never give anything by mouth to a victim who is unconscious or is having convulsions. Rinse mouth thoroughly. Do not induce vomiting without advice from poison control center. If vomiting occurs, keep head low so that stomach content doesn't get into the lungs. Induce artificial respiration with the aid of a pocket mask equipped with a one-way valve or other proper respiratory medical device.
General advice	If you feel unwell, seek medical advice (show the label where possible). Ensure that medical personnel are aware of the material(s) involved, and take precautions to protect themselves. Show this safety data sheet to the doctor in attendance. Do not use mouth-to-mouth method if victim ingested the substance.

5. Fire Fighting Measures

Flammable properties	Contact with combustible material may cause fire. These substances will accelerate burning when involved in a fire. Some will react explosively with hydrocarbons (fuels). Runoff may create fire or explosion hazard.
Extinguishing media	
Suitable extinguishing media	Water.
Unsuitable extinguishing media	Dry chemicals or foams.
Protection of firefighters	
Specific hazards arising from the chemical	Fire may produce irritating, corrosive and/or toxic gases. Some may decompose explosively when heated or involved in a fire.
Protective equipment for firefighters	Firefighters should wear full protective clothing including self contained breathing apparatus.
Fire fighting equipment/instructions	Do not move cargo or vehicle if cargo has been exposed to heat. If tank, rail car or tank truck is involved in a fire, ISOLATE for 800 meters (1/2 mile) in all directions; also consider initial evacuation for 800 meters (1/2 mile) in all directions. ALWAYS stay away from tanks engulfed in flame. Move containers from fire area if you can do so without risk. In the event of fire, cool tanks with water spray. For massive fire in cargo area, use unmanned hose holder or monitor nozzles, if possible. If not, withdraw and let fire burn out.
Specific methods	Cool containers exposed to flames with water until well after the fire is out.
Explosion data	
Sensitivity to static discharge	Not available.
Sensitivity to mechanical impact	Not available.

6. Accidental Release Measures

Personal precautions	Keep unnecessary personnel away. Do not touch damaged containers or spilled material unless wearing appropriate protective clothing. Keep people away from and upwind of spill/leak. Keep upwind. Ventilate closed spaces before entering them.
Environmental precautions	Prevent further leakage or spillage if safe to do so. Runoff from fire control or dilution water may cause pollution. Do not contaminate water.
Methods for containment	ELIMINATE all ignition sources (no smoking, flares, sparks or flames in immediate area). Stop leak if you can do so without risk. This material is classified as a water pollutant under the Clean Water Act and should be prevented from contaminating soil or from entering sewage and drainage systems which lead to waterways.

Methods for cleaning up

Should not be released into the environment.

Large Spills: Do not get water inside container. Use clean non-sparking tools to collect absorbed material. Following product recovery, flush area with water.

Small Spills: Clean surface thoroughly to remove residual contamination. Clean up in accordance with all applicable regulations. For waste disposal, see section 13 of the MSDS.

Other information

Clean up in accordance with all applicable regulations.

7. Handling and Storage

Handling

DO NOT handle, store or open near an open flame, sources of heat or sources of ignition. Protect material from direct sunlight. When using do not smoke. Do not get this material in contact with eyes. Do not get this material in contact with skin. Do not get this material on clothing. Avoid prolonged exposure. Avoid release to the environment.

Storage

Keep away from heat and sources of ignition. Store in a closed container away from incompatible materials. Keep out of the reach of children.

8. Exposure Controls / Personal Protection

Occupational exposure limits

US. ACGIH Threshold Limit Values

Material	Type	Value
Hydrex 9571	TWA	0.2 mg/m3

Canada. Alberta OELs (Occupational Health & Safety Code, Schedule 1, Table 2)

Material	Type	Value
Hydrex 9571	TWA	0.2 mg/m3

Canada. British Columbia OELs. (Occupational Exposure Limits for Chemical Substances, Occupational Health and Safety Regulation 296/97, as amended)

Material	Type	Value
Hydrex 9571	TWA	0.2 mg/m3

Canada. Ontario OELs. (Control of Exposure to Biological or Chemical Agents)

Material	Type	Value
Hydrex 9571	TWA	0.2 mg/m3

Canada. Quebec OELs. (Ministry of Labor - Regulation Respecting the Quality of the Work Environment)

Material	Type	Value	Form
Hydrex 9571	TWA	5 mg/m3	Dust.

US. OSHA Table Z-1 Limits for Air Contaminants (29 CFR 1910.1000)

Material	Type	Value
Hydrex 9571	Ceiling	5 mg/m3

Engineering controls

Good general ventilation (typically 10 air changes per hour) should be used. Ventilation rates should be matched to conditions. If applicable, use process enclosures, local exhaust ventilation, or other engineering controls to maintain airborne levels below recommended exposure limits. If exposure limits have not been established, maintain airborne levels to an acceptable level.

Personal protective equipment

Eye / face protection

Do not get in eyes. Chemical goggles are recommended.

Skin protection

Do not get this material in contact with skin. Chemical resistant gloves.

Respiratory protection

Use a positive-pressure air-supplied respirator if there is any potential for an uncontrolled release, exposure levels are not known, or any other circumstances where air-purifying respirators may not provide adequate protection. If ventilation is not sufficient to effectively prevent buildup of aerosols or mists, appropriate NIOSH/MSHA respiratory protection must be provided.

9. Physical & Chemical Properties

Physical state Solid.

Form Solid.

Color Dark purple

Odor Odorless.

Other data

Decomposition temperature	464 °F (240 °C) Decomp at about 240°C with evolution of oxygen; decomp by alcohol and many other org solvents, also by concn acids with liberation of oxygen; with hydrochloric acid, chlorine liberated; readily decomp by many reducing substances, such as ferrous salts, io
Density	1.45 - 1.60 g/cm³

10. Chemical Stability & Reactivity Information

Chemical stability	Decomposes on heating.
Conditions to avoid	Avoid temperatures exceeding the decomposition temperature.
Incompatible materials	Peroxides. Acids. Glycol. Avoid contact with oxidizers or reducing agents. Powdered metal.
Hazardous decomposition products	Irritating and/or toxic fumes and gases may be emitted upon the products decomposition.
Possibility of hazardous reactions	Hazardous polymerization does not occur.

11. Toxicological Information

Toxicological data

Product	Species	Test Results
Hydrex 9571		
Acute		
Oral		
LD50	Guinea pig	>= 800 mg/kg, Calculated
	Mouse	>= 700 mg/kg, Calculated
	Rat	525 - 780 mg/kg, 14 days, Calculated

* Estimates for product may be based on additional component data not shown.

Acute effects	Causes burns.
Chronic effects	Prolonged inhalation may be harmful. Not expected to be hazardous by WHMIS criteria.

12. Ecological Information

Ecotoxicological data

Product		Species	Test Results
Hydrex 9571			
Other	LC50	Rainbow Trout	1.8 mg/l, 96 hr
Aquatic			
Fish	LC50	Bluegill (Lepomis macrochirus)	2.3 mg/l, 96 hr
		Milkfish, salmon-herring (Chanos chanos)	> 1.4 mg/l, 96 hours

* Estimates for product may be based on additional component data not shown.

Ecotoxicity	Components of this product are hazardous to aquatic life.
Environmental effects	Harmful to aquatic organisms.
Persistence and degradability	Not available.

13. Disposal Considerations

Disposal instructions	Consult authorities before disposal. Incinerate the material under controlled conditions in an approved incinerator. Do not incinerate sealed containers. Do not allow this material to drain into sewers/water supplies. Dispose in accordance with all applicable regulations.
Contaminated packaging	Empty containers should be taken to an approved waste handling site for recycling or disposal.

14. Transport Information

TDG

UN number	UN1490

UN proper shipping name	Potassium Permanganate
Hazard class	5.1
Packing group	II
Special provisions	16

IATA

UN number	UN1479
UN proper shipping name	Oxidizing solid, n.o.s. (POTASSIUM PERMANGANATE)
Transport hazard class(es)	5.1
Packing group	III
ERG code	5L

IATA; TDG

15. Regulatory Information

Canadian regulations This product has been classified in accordance with the hazard criteria of the CPR and the MSDS contains all the information required by the CPR.

WHMIS status Controlled

WHMIS classification C - Oxidizing
D2B - Other Toxic Effects-TOXIC

WHMIS labeling

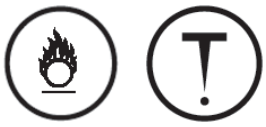

Inventory status

Country(s) or region	Inventory name	On inventory (yes/no)*
Australia	Australian Inventory of Chemical Substances (AICS)	Yes
Canada	Domestic Substances List (DSL)	Yes
Canada	Non-Domestic Substances List (NDSL)	No
China	Inventory of Existing Chemical Substances in China (IECSC)	Yes
Europe	European Inventory of Existing Commercial Chemical Substances (EINECS)	Yes
Europe	European List of Notified Chemical Substances (ELINCS)	No
Japan	Inventory of Existing and New Chemical Substances (ENCS)	Yes
Korea	Existing Chemicals List (ECL)	Yes
New Zealand	New Zealand Inventory	Yes
Philippines	Philippine Inventory of Chemicals and Chemical Substances (PICCS)	Yes
United States & Puerto Rico	Toxic Substances Control Act (TSCA) Inventory	Yes

*A "Yes" indicates that all components of this product comply with the inventory requirements administered by the governing country(s)

16. Other Information

Further information HMIS® is a registered trade and service mark of the NPCA.

HMIS® ratings	Health: 1 Flammability: 0 Physical hazard: 0 Personal protection: E
NFPA ratings	Health: 1 Flammability: 0 Instability: 0 Special hazards: OX
Disclaimer	Veolia Water Solutions & Technologies is not able to anticipate all conditions under which this information and its product, or the products of other manufacturers in combination with its product, may be used. It is the user's responsibility to ensure safe conditions for handling, storage and disposal of the product, and to assume liability for loss, injury, damage or expense due to improper use and or non respect of Veolia Water Solutions & Technologies' requirement.
This data sheet contains changes from the previous version in section(s):	Product and Company Identification: Product Review Toxicological Information: Toxicological Data Transport Information: Material Transportation Information

SAFETY DATA SHEET

1. Identification

Product identifier	**VEOLIA ACTISAND**
Other means of identification	None.
Recommended use	Wastewater Treatment
Recommended restrictions	Workers (and your customers or users in the case of resale) should be informed of the potential presence of respirable dust and respirable crystalline silica as well as their potential hazards. Appropriate training in the proper use and handling of this material should be provided as required under applicable regulations. PROFESSIONAL USE ONLY

Manufacturer/Importer/Supplier/Distributor information

Manufacturer	
Supplier	Veolia Water Technologies Canada Inc.
Address	2000 Argentia Road, Plaza IV, Suite 430 Mississauga, ON L5N 1W1 Canada
Contact Person	Hydrex Product Specialist
Telephone	(905) 286-4846
Fax	(905) 286-0488
e-mail	vwtcanada-hydrex@veolia.com
24-Hour Emergency telephone	+1-760-476-3962 (Code:333239)
Supplier	Not available.

2. Hazard(s) identification

Physical hazards	Not classified.	
Health hazards	Carcinogenicity	Category 1A
Environmental hazards	Not classified.	

Label elements

Signal word	Danger
Hazard statement	May cause cancer.
Precautionary statement	
Prevention	Obtain special instructions before use. Do not handle until all safety precautions have been read and understood. Wear protective gloves/protective clothing/eye protection/face protection.
Response	IF exposed or concerned: Get medical advice/attention.
Storage	Not available.
Disposal	Dispose of contents/container in accordance with local/regional/national/international regulations.
Other hazards	None known.
Supplemental information	None.

3. Composition/information on ingredients

Mixtures

Chemical name	Common name and synonyms	CAS number	%
Crystalline sillica		14808-60-7	100

All concentrations are in percent by weight unless ingredient is a gas. Gas concentrations are in percent by volume.

4. First-aid measures

Inhalation	Move to fresh air. Call a physician if symptoms develop or persist.
Skin contact	Wash off with soap and water. Get medical attention if irritation develops and persists.
Eye contact	Rinse with water. Get medical attention if irritation develops and persists.
Ingestion	Rinse mouth. Get medical attention if symptoms occur.
Most important symptoms/effects, acute and delayed	Coughing.
Indication of immediate medical attention and special treatment needed	Provide general supportive measures and treat symptomatically. Keep victim under observation. Symptoms may be delayed.
General information	IF exposed or concerned: Get medical advice/attention. Ensure that medical personnel are aware of the material(s) involved, and take precautions to protect themselves.

5. Fire-fighting measures

Suitable extinguishing media	Water fog. Foam. Dry chemical powder. Carbon dioxide (CO2).
Unsuitable extinguishing media	Not available.
Specific hazards arising from the chemical	During fire, gases hazardous to health may be formed.
Special protective equipment and precautions for firefighters	Self-contained breathing apparatus and full protective clothing must be worn in case of fire.
Fire fighting equipment/instructions	Use water spray to cool unopened containers.
Specific methods	Use standard firefighting procedures and consider the hazards of other involved materials.
General fire hazards	No unusual fire or explosion hazards noted.

6. Accidental release measures

Personal precautions, protective equipment and emergency procedures	Keep unnecessary personnel away. Keep people away from and upwind of spill/leak. Wear appropriate protective equipment and clothing during clean-up. Ensure adequate ventilation. Local authorities should be advised if significant spillages cannot be contained. For personal protection, see section 8 of the SDS.
Methods and materials for containment and cleaning up	The product is immiscible with water and will spread on the water surface. Stop the flow of material, if this is without risk. Following product recovery, flush area with water. For waste disposal, see section 13 of the SDS.
Environmental precautions	Avoid discharge into drains, water courses or onto the ground.

7. Handling and storage

Precautions for safe handling	Obtain special instructions before use. Do not handle until all safety precautions have been read and understood. Keep formation of airborne dusts to a minimum. Provide appropriate exhaust ventilation at places where dust is formed. Do not breathe dust. Avoid prolonged exposure. Should be handled in closed systems, if possible. Wear appropriate personal protective equipment. Observe good industrial hygiene practices.
Conditions for safe storage, including any incompatibilities	Protect from sunlight. Store in original tightly closed container. Store away from incompatible materials (see Section 10 of the SDS). Store in cool, dry place.

8. Exposure controls/personal protection

Occupational exposure limits

US. ACGIH Threshold Limit Values

Material	Type	Value	Form
VEOLIA ACTISAND	TWA	0.025 mg/m3	Respirable fraction.

Components	Type	Value	Form
Crystalline sillica (CAS 14808-60-7)	TWA	0.025 mg/m3	Respirable fraction.

Canada. Alberta OELs (Occupational Health & Safety Code, Schedule 1, Table 2)

Material	Type	Value	Form
VEOLIA ACTISAND	TWA	0.025 mg/m3	Respirable particles.
Components	**Type**	**Value**	**Form**
Crystalline sillica (CAS 14808-60-7)	TWA	0.025 mg/m3	Respirable particles.

Canada. British Columbia OELs. (Occupational Exposure Limits for Chemical Substances, Occupational Health and Safety Regulation 296/97, as amended)

Material	Type	Value	Form
VEOLIA ACTISAND	TWA	0.025 mg/m3	Respirable fraction.
Components	**Type**	**Value**	**Form**
Crystalline sillica (CAS 14808-60-7)	TWA	0.025 mg/m3	Respirable fraction.

Canada. Manitoba OELs (Reg. 217/2006, The Workplace Safety And Health Act)

Components	Type	Value	Form
Crystalline sillica (CAS 14808-60-7)	TWA	0.025 mg/m3	Respirable fraction.

Canada. Ontario OELs. (Control of Exposure to Biological or Chemical Agents)

Material	Type	Value	Form
VEOLIA ACTISAND	TWA	0.1 mg/m3	Respirable.
Components	**Type**	**Value**	**Form**
Crystalline sillica (CAS 14808-60-7)	TWA	0.1 mg/m3	Respirable.

Canada. Quebec OELs. (Ministry of Labor - Regulation Respecting the Quality of the Work Environment)

Material	Type	Value	Form
VEOLIA ACTISAND	TWA	0.1 mg/m3	Respirable dust.
Components	**Type**	**Value**	**Form**
Crystalline sillica (CAS 14808-60-7)	TWA	0.1 mg/m3	Respirable dust.

Biological limit values No biological exposure limits noted for the ingredient(s).

Exposure guidelines Occupational exposure to nuisance dust (total and respirable) and respirable crystalline silica should be monitored and controlled.

Appropriate engineering controls Good general ventilation (typically 10 air changes per hour) should be used. Ventilation rates should be matched to conditions. If applicable, use process enclosures, local exhaust ventilation, or other engineering controls to maintain airborne levels below recommended exposure limits. If exposure limits have not been established, maintain airborne levels to an acceptable level.

Individual protection measures, such as personal protective equipment

Eye/face protection Wear safety glasses with side shields (or goggles).

Skin protection

Hand protection Chemical resistant gloves. Suitable gloves can be recommended by the glove supplier.

Other Use of an impervious apron is recommended. Chemical resistant gloves.

Respiratory protection Use a particulate filter respirator for particulate concentrations exceeding the Occupational Exposure Limit.

Thermal hazards Not available.

General hygiene considerations Observe any medical surveillance requirements. Always observe good personal hygiene measures, such as washing after handling the material and before eating, drinking, and/or smoking. Routinely wash work clothing and protective equipment to remove contaminants.

9. Physical and chemical properties

Appearance

Physical state Solid.

Form Solid.

Color Not available.

Odor	Not available.
Odor threshold	Not available.
pH	Not available.
Melting point/freezing point	Not available.
Initial boiling point and boiling range	Not available.
Flash point	Not available.
Evaporation rate	Not available.
Flammability (solid, gas)	Not available.
Upper/lower flammability or explosive limits	
Flammability limit - lower (%)	Not available.
Flammability limit - upper (%)	Not available.
Explosive limit - lower (%)	Not available.
Explosive limit - upper (%)	Not available.
Vapor pressure	< 0.0000001 kPa at 25 °C
Vapor density	Not available.
Relative density	Not available.
Solubility(ies)	
Solubility (water)	Insoluble
Partition coefficient (n-octanol/water)	Not available.
Auto-ignition temperature	Not available.
Decomposition temperature	Not available.
Viscosity	Not available.
Other information	
Explosive properties	Not explosive.
Heat of combustion (NFPA 30B)	0 kJ/g
Molecular formula	O2Si
Oxidizing properties	Not oxidizing.

10. Stability and reactivity

Reactivity	The product is stable and non-reactive under normal conditions of use, storage and transport.
Chemical stability	Material is stable under normal conditions.
Possibility of hazardous reactions	No dangerous reaction known under conditions of normal use.
Conditions to avoid	Contact with incompatible materials.
Incompatible materials	Powerful oxidizers. Chlorine.
Hazardous decomposition products	No hazardous decomposition products are known.

11. Toxicological information

Information on likely routes of exposure

Inhalation	Prolonged inhalation may be harmful.
Skin contact	No adverse effects due to skin contact are expected.
Eye contact	Direct contact with eyes may cause temporary irritation.
Ingestion	Expected to be a low ingestion hazard.

Symptoms related to the physical, chemical and toxicological characteristics Coughing.

Information on toxicological effects

Acute toxicity Not available.

Skin corrosion/irritation Prolonged skin contact may cause temporary irritation.

Serious eye damage/eye irritation Direct contact with eyes may cause temporary irritation.

Respiratory or skin sensitization

Respiratory sensitization Not a respiratory sensitizer.

Skin sensitization This product is not expected to cause skin sensitization.

Germ cell mutagenicity No data available to indicate product or any components present at greater than 0.1% are mutagenic or genotoxic.

Carcinogenicity In 1997, IARC (the International Agency for Research on Cancer) concluded that crystalline silica inhaled from occupational sources can cause lung cancer in humans. However in making the overall evaluation, IARC noted that "carcinogenicity was not detected in all industrial circumstances studied. Carcinogenicity may be dependent on inherent characteristics of the crystalline silica or on external factors affecting its biological activity or distribution of its polymorphs." (IARC Monographs on the evaluation of the carcinogenic risks of chemicals to humans, Silica, silicates dust and organic fibres, 1997, Vol. 68, IARC, Lyon, France.) In June 2003, SCOEL (the EU Scientific Committee on Occupational Exposure Limits) concluded that the main effect in humans of the inhalation of respirable crystalline silica dust is silicosis. "There is sufficient information to conclude that the relative risk of lung cancer is increased in persons with silicosis (and, apparently, not in employees without silicosis exposed to silica dust in quarries and in the ceramic industry). Therefore, preventing the onset of silicosis will also reduce the cancer risk..." (SCOEL SUM Doc 94-final, June 2003) According to the current state of the art, worker protection against silicosis can be consistently assured by respecting the existing regulatory occupational exposure limits. May cause cancer. Occupational exposure to respirable dust and respirable crystalline silica should be monitored and controlled.

ACGIH Carcinogens

Crystalline sillica (CAS 14808-60-7)	A2 Suspected human carcinogen.

Canada - Alberta OELs: Carcinogen category

Crystalline sillica (CAS 14808-60-7)	Suspected human carcinogen.

Canada - Manitoba OELs: carcinogenicity

SILICA, CRYSTALLINE-.ALPHA.-QUARTZ, RESPIRABLE FRACTION (CAS 14808-60-7)	Suspected human carcinogen.

Canada - Quebec OELs: Carcinogen category

Crystalline sillica (CAS 14808-60-7)	Suspected carcinogenic effect in humans.

IARC Monographs. Overall Evaluation of Carcinogenicity

Crystalline sillica (CAS 14808-60-7)	1 Carcinogenic to humans.

Reproductive toxicity This product is not expected to cause reproductive or developmental effects.

Specific target organ toxicity - single exposure Not classified.

Specific target organ toxicity - repeated exposure Not classified.

Aspiration hazard Not an aspiration hazard.

Chronic effects Prolonged inhalation may be harmful. Prolonged exposure may cause chronic effects.

12. Ecological information

Ecotoxicity The product is not classified as environmentally hazardous. However, this does not exclude the possibility that large or frequent spills can have a harmful or damaging effect on the environment.

Persistence and degradability No data is available on the degradability of this product.

Bioaccumulative potential No data available.

Mobility in soil No data available.

Other adverse effects No other adverse environmental effects (e.g. ozone depletion, photochemical ozone creation potential, endocrine disruption, global warming potential) are expected from this component.

13. Disposal considerations

Disposal instructions	Collect and reclaim or dispose in sealed containers at licensed waste disposal site. Dispose of contents/container in accordance with local/regional/national/international regulations.
Local disposal regulations	Dispose in accordance with all applicable regulations.
Hazardous waste code	The waste code should be assigned in discussion between the user, the producer and the waste disposal company.
Waste from residues / unused products	Dispose of in accordance with local regulations. Empty containers or liners may retain some product residues. This material and its container must be disposed of in a safe manner (see: Disposal instructions).
Contaminated packaging	Since emptied containers may retain product residue, follow label warnings even after container is emptied. Empty containers should be taken to an approved waste handling site for recycling or disposal.

14. Transport information

TDG

Not regulated as dangerous goods.

IATA

Not regulated as dangerous goods.

IMDG

Not regulated as dangerous goods.

Transport in bulk according to Annex II of MARPOL 73/78 and the IBC Code Not applicable.

15. Regulatory information

Canadian regulations

Controlled Drugs and Substances Act

Not regulated.

Export Control List (CEPA 1999, Schedule 3)

Not listed.

Greenhouse Gases

Not listed.

Precursor Control Regulations

Not regulated.

International regulations

Stockholm Convention

Not applicable.

Rotterdam Convention

Not applicable.

Kyoto protocol

Not applicable.

Montreal Protocol

Not applicable.

Basel Convention

Not applicable.

International Inventories

Country(s) or region	Inventory name	On inventory (yes/no)*
Australia	Australian Inventory of Chemical Substances (AICS)	Yes
Canada	Domestic Substances List (DSL)	Yes
Canada	Non-Domestic Substances List (NDSL)	No
China	Inventory of Existing Chemical Substances in China (IECSC)	Yes
Europe	European Inventory of Existing Commercial Chemical Substances (EINECS)	Yes
Europe	European List of Notified Chemical Substances (ELINCS)	No

Country(s) or region	Inventory name	On inventory (yes/no)*
Japan	Inventory of Existing and New Chemical Substances (ENCS)	Yes
Korea	Existing Chemicals List (ECL)	Yes
New Zealand	New Zealand Inventory	Yes
Philippines	Philippine Inventory of Chemicals and Chemical Substances (PICCS)	Yes
United States & Puerto Rico	Toxic Substances Control Act (TSCA) Inventory	Yes

*A "Yes" indicates that all components of this product comply with the inventory requirements administered by the governing country(s)
A "No" indicates that one or more components of the product are not listed or exempt from listing on the inventory administered by the governing country(s).

16. Other Information

Issue date 08-16-2016

Version # 01

Disclaimer Veolia Water Technologies is not able to anticipate all conditions under which this information and its product, or the products of other manufacturers in combination with its product, may be used. It is the user's responsibility to ensure safe conditions for handling, storage and disposal of the product, and to assume liability for loss, injury, damage or expense due to improper use and or non respect of Veolia Water Technologies' requirement.

Revision information Product and Company Identification: Product Review

LEFT BLANK

MATERIAL SAFETY DATA SHEET

1. Product and Company Identification

Product identifier	**Hydrex 6324**
Version #	01
Issue date	03-31-2016
CAS #	Mixture
Product use	Wastewater Flocculant
Manufacturer information	
Supplier	Veolia Water Technologies Canada Inc.
Address	2000 Argentia Road, Plaza IV, Suite 430 Mississauga, ON L5N 1W1 Canada
Contact Person	Hydrex Product Specialist
Telephone	(905) 286-4846
Fax	(905) 286-0488
e-mail	vwtcanada-hydrex@veolia.com
24-Hour Emergency telephone	+1-760-476-3962 (Code:333239)
Supplier	Not available.

2. Hazards Identification

Potential health effects

Routes of exposure	Eye contact. Ingestion. Inhalation. Skin contact.
Eyes	Health injuries are not known or expected under normal use.
Skin	Health injuries are not known or expected under normal use.
Inhalation	Health injuries are not known or expected under normal use.
Ingestion	Health injuries are not known or expected under normal use.
Potential environmental effects	May cause long-term adverse effects in the environment.

3. Composition / Information on Ingredients

Components	CAS #	Percent
ADIPIC ACID	124-04-9	1 - 5
Other components below reportable levels		60 - 100

Composition comments None by WHMIS criteria.

4. First Aid Measures

First aid procedures

Inhalation	If breathing is difficult, remove to fresh air and keep at rest in a position comfortable for breathing. Call a physician if symptoms develop or persist.
Skin contact	Rinse skin with water/shower. Get medical attention if irritation develops and persists.
Eye contact	Rinse with water. Get medical attention if irritation develops and persists.
Ingestion	Rinse mouth. If ingestion of a large amount does occur, call a poison control center immediately.
General advice	If you feel unwell, seek medical advice (show the label where possible). Show this safety data sheet to the doctor in attendance.

5. Fire Fighting Measures

Flammable properties Not flammable by WHMIS criteria.

Extinguishing media

Suitable extinguishing media	Not available.

Unsuitable extinguishing media Not available.

Protection of firefighters

Specific hazards arising from the chemical Material can be slippery when wet.

Fire fighting equipment/instructions Use water spray to cool unopened containers.

Explosion data

Sensitivity to static discharge Not available.

Sensitivity to mechanical impact Not available.

Hazardous combustion products Not available.

6. Accidental Release Measures

Personal precautions Keep unnecessary personnel away. For personal protection, see section 8 of the MSDS. Slippery when wet.

Environmental precautions Do not contaminate water.

Methods for cleaning up Should not be released into the environment. This product is miscible in water. Following product recovery, flush area with water. For waste disposal, see section 13 of the MSDS.

7. Handling and Storage

Handling Material can be slippery when wet. Avoid release to the environment.

Storage Store in original tightly closed container. Store away from incompatible materials (see Section 10 of the MSDS).

8. Exposure Controls / Personal Protection

Occupational exposure limits

US. ACGIH Threshold Limit Values

Components	Type	Value
ADIPIC ACID (CAS 124-04-9)	TWA	5 mg/m3

Canada. Alberta OELs (Occupational Health & Safety Code, Schedule 1, Table 2)

Components	Type	Value
ADIPIC ACID (CAS 124-04-9)	TWA	5 mg/m3

Canada. British Columbia OELs. (Occupational Exposure Limits for Chemical Substances, Occupational Health and Safety Regulation 296/97, as amended)

Components	Type	Value
ADIPIC ACID (CAS 124-04-9)	TWA	5 mg/m3

Canada. Manitoba OELs (Reg. 217/2006, The Workplace Safety And Health Act)

Components	Type	Value
ADIPIC ACID (CAS 124-04-9)	TWA	5 mg/m3

Canada. Ontario OELs. (Control of Exposure to Biological or Chemical Agents)

Components	Type	Value
ADIPIC ACID (CAS 124-04-9)	TWA	5 mg/m3

Canada. Quebec OELs. (Ministry of Labor - Regulation Respecting the Quality of the Work Environment)

Components	Type	Value
ADIPIC ACID (CAS 124-04-9)	TWA	5 mg/m3

Biological limit values No biological exposure limits noted for the ingredient(s).

Engineering controls	Not available.
Personal protective equipment	
Eye/face protection	Wear safety glasses with side shields (or goggles).
Skin protection	Wear suitable protective clothing. Chemical resistant gloves.
Respiratory protection	No personal respiratory protective equipment normally required. In case of insufficient ventilation, wear suitable respiratory equipment.
Hand protection	Chemical resistant gloves.

9. Physical & Chemical Properties

Appearance	Granular or Powder.
Physical state	Solid.
Form	Solid.
Color	White.
Odor	Odorless.
pH	Not available.
Vapor pressure	Not available.
Vapor density	Not available.
Boiling point	Not available.
Melting point/Freezing point	Not available.
Solubility (water)	Limited by viscosity
Specific gravity	Not available.
Flash point	Not available.
Flammability limits in air, upper, % by volume	Not available.
Flammability limits in air, lower, % by volume	Not available.
Auto-ignition temperature	Not available.
Bulk density	650 - 850 kg/m³
Other data	
pH in aqueous solution	7 - 9 in a 0.5% aq. sol.

10. Chemical Stability & Reactivity Information

Chemical stability	Material is stable under normal conditions.
Conditions to avoid	Contact with incompatible materials.
Incompatible materials	Not available.
Hazardous decomposition products	Not available.
Possibility of hazardous reactions	Not available.

11. Toxicological Information

Toxicological data

Product	Species	Test Results
Hydrex 6324		
Acute		
Dermal		
Presumed Non-Toxic	Rabbit	> 2000 mg/kg
Inhalation		
LC50	Rat	> 20 mg/l, 4 hours
Oral		
LD50	Rat	> 5000 mg/kg

Components	Species	Test Results
ADIPIC ACID (CAS 124-04-9)		
Acute		
Dermal		
LD50	Rabbit	> 5000 mg/kg
Inhalation		
NOEL	Rat	0.126 mg/l, 6 Hours
Oral		
LD50	Mouse	1900 mg/kg
	Rabbit	> 11000 mg/kg
	Rat	> 11000 mg/kg

Acute effects

Sensitization Not available.

Chronic effects Not expected to be hazardous by WHMIS criteria.

Carcinogenicity Not available.

Skin corrosion/irritation Not available.

Serious eye damage/irritation Not available.

Mutagenicity Not available.

Reproductive effects Not available.

Teratogenicity Not available.

Synergistic materials Not available.

12. Ecological Information

Ecotoxicological data

Product		Species	Test Results
Hydrex 6324			
Aquatic			
Acute			
Crustacea	EC50	Daphnia magna	> 100 mg/l, 48 hours
Fish	LC50	Danio rerio	> 100 mg/l, 96 hours

Components		Species	Test Results
ADIPIC ACID (CAS 124-04-9)			
Aquatic			
Algae	EC50	Algae	31.3 mg/l, 72 hours
Crustacea	EC50	Daphnia	85.6 mg/l, 48 hours
Fish	LC50	Fathead minnow (Pimephales promelas)	97 mg/l, 96 hours
Acute			
Fish	EC50	Rainbow trout,donaldson trout (Oncorhynchus mykiss)	> 100 mg/l, 48 hours

Ecotoxicity Contains a substance which causes risk of hazardous effects to the environment.

Environmental effects An environmental hazard cannot be excluded in the event of unprofessional handling or disposal.

Aquatic toxicity Not available.

Persistence and degradability Not available.

Partition coefficient

ADIPIC ACID 0.08

Mobility in environmental media This product is miscible in water.

13. Disposal Considerations

Disposal instructions Collect and reclaim or dispose in sealed containers at licensed waste disposal site. Do not allow this material to drain into sewers/water supplies. Dispose in accordance with all applicable regulations.

Waste from residues / unused products Dispose of in accordance with local regulations. Empty containers or liners may retain some product residues. This material and its container must be disposed of in a safe manner (see: Disposal instructions).

Contaminated packaging Empty containers should be taken to an approved waste handling site for recycling or disposal. Since emptied containers may retain product residue, follow label warnings even after container is emptied.

14. Transport Information

TDG

Not regulated as dangerous goods.

IATA

Not regulated as dangerous goods.

IMDG

Not regulated as dangerous goods.

15. Regulatory Information

Canadian regulations This product has been classified in accordance with the hazard criteria of the CPR and the MSDS contains all the information required by the CPR.

WHMIS status Non-controlled

International Inventories

Country(s) or region	Inventory name	On inventory (yes/no)*
Australia	Australian Inventory of Chemical Substances (AICS)	Yes
Canada	Domestic Substances List (DSL)	Yes
Canada	Non-Domestic Substances List (NDSL)	No
China	Inventory of Existing Chemical Substances in China (IECSC)	Yes
Europe	European Inventory of Existing Commercial Chemical Substances (EINECS)	No
Europe	European List of Notified Chemical Substances (ELINCS)	No
Japan	Inventory of Existing and New Chemical Substances (ENCS)	Yes
Korea	Existing Chemicals List (ECL)	Yes
New Zealand	New Zealand Inventory	Yes
Philippines	Philippine Inventory of Chemicals and Chemical Substances (PICCS)	Yes
United States & Puerto Rico	Toxic Substances Control Act (TSCA) Inventory	Yes

*A "Yes" indicates that all components of this product comply with the inventory requirements administered by the governing country(s)
A "No" indicates that one or more components of the product are not listed or exempt from listing on the inventory administered by the governing country(s).

16. Other Information

Recommended restrictions PROFESSIONAL USE ONLY

HMIS® ratings
Health: 0
Flammability: 0
Physical hazard: 0

NFPA ratings
Health: 0
Flammability: 0
Instability: 0

Disclaimer Veolia Water Technologies is not able to anticipate all conditions under which this information and its product, or the products of other manufacturers in combination with its product, may be used. It is the user's responsibility to ensure safe conditions for handling, storage and disposal of the product, and to assume liability for loss, injury, damage or expense due to improper use and or non respect of Veolia Water Technologies' requirement.

Prepared by Hydrex Global Platform

This data sheet contains changes from the previous version in section(s):	This document has undergone significant changes and should be reviewed in its entirety.

SAFETY DATA SHEET

SECTION 1: Identification of the substance/mixture and of the company/undertaking

1.1. Product identifier

Trade name or designation of the mixture	NaOH 1N
Registration number	-
Synonyms	None.
Issue date	02-February-2017
Version number	01

1.2. Relevant identified uses of the substance or mixture and uses advised against

Identified uses	Not available.
Uses advised against	None known.

1.3. Details of the supplier of the safety data sheet

Supplier	Veolia Water STI
Address	Z.A.C. du Haut de Wissous - 3, avenue Le Concorde 91325 Wissous Cedex - FRANCE www.veoliawatersti.fr
Contact person	Hydrex Product Manager
Telephone	+33 (0)1 69 75 25 75
Fax	+33 (0)1 69 75 27 01
e-mail	hydrex.vwtfr@veolia.com
1.4. Emergency telephone number	+1-760-476-3961 (Code: 333239)

SECTION 2: Hazards identification

2.1. Classification of the substance or mixture

The mixture has been assessed and/or tested for its physical, health and environmental hazards and the following classificatior applies.

Classification according to Regulation (EC) No 1272/2008 as amended

Health hazards

Skin corrosion/irritation	Category 1B	H314 - Causes severe skin burns and eye damage.
Serious eye damage/eye irritation	Category 2	H319 - Causes serious eye irritation.

Hazard summary Causes severe skin burns and eye damage. Causes serious eye irritation. Occupational exposure to the substance or mixture may cause adverse health effects.

2.2. Label elements

Label according to Regulation (EC) No. 1272/2008 as amended

Hazard pictograms

Signal word Danger

Hazard statements

H314	Causes severe skin burns and eye damage.
H315	Causes skin irritation.
H319	Causes serious eye irritation.

Precautionary statements

Prevention

P260	Do not breathe mist or vapour.
P264	Wash hands thoroughly after handling.
P280	Wear protective gloves/protective clothing/eye protection/face protection.

Response

P301 + P330 + P331	IF SWALLOWED: rinse mouth. Do NOT induce vomiting.
P303 + P361 + P353	IF ON SKIN (or hair): Take off immediately all contaminated clothing. Rinse skin with water/shower.
P304 + P340	IF INHALED: Remove person to fresh air and keep comfortable for breathing.
P305 + P351 + P338	IF IN EYES: Rinse cautiously with water for several minutes. Remove contact lenses, if present and easy to do. Continue rinsing.
P312	Call a POISON CENTER/doctor/paramedic if you feel unwell.
P337 + P313	If eye irritation persists: Get medical advice/attention.
P342 + P311	If experiencing respiratory symptoms: Call a poison center/doctorparamedic.
P363	Wash contaminated clothing before reuse.

Storage Not available.

Disposal

P501 Dispose of contents/container in accordance with local/regional/national/international regulations.

Supplemental label information None.

2.3. Other hazards None known.

SECTION 3: Composition/information on ingredients

3.2. Mixtures

General information

Chemical name	%	CAS-No. / EC No.	REACH Registration No.	INDEX No.	Notes
Sodium hydroxide	1 - < 5	1310-73-2 215-185-5	01-2119457892-27-xxxx	011-002-00-6	
Classification:	Skin Corr. 1A;H314				
Other components below reportable levels	90 - 100				

List of abbreviations and symbols that may be used above

#: This substance has been assigned Union workplace exposure limit(s).
M: M-factor
PBT: persistent, bioaccumulative and toxic substance.
vPvB: very persistent and very bioaccumulative substance.
All concentrations are in percent by weight unless ingredient is a gas. Gas concentrations are in percent by volume.

Composition comments The full text for all H-statements is displayed in section 16.

SECTION 4: First aid measures

General information Ensure that medical personnel are aware of the material(s) involved, and take precautions to protect themselves.

4.1. Description of first aid measures

Inhalation Move to fresh air. Call a physician if symptoms develop or persist.

Skin contact Take off immediately all contaminated clothing. Rinse skin with water/shower. Call a physician or poison control centre immediately. Chemical burns must be treated by a physician. Wash contaminated clothing before reuse.

Eye contact Immediately flush eyes with plenty of water for at least 15 minutes. Remove contact lenses, if present and easy to do. Continue rinsing. Call a physician or poison control centre immediately.

Ingestion Call a physician or poison control centre immediately. Rinse mouth. Do not induce vomiting. If vomiting occurs, keep head low so that stomach content doesn't get into the lungs.

4.2. Most important symptoms and effects, both acute and delayed Burning pain and severe corrosive skin damage. Causes serious eye damage. Symptoms may include stinging, tearing, redness, swelling, and blurred vision. Permanent eye damage including blindness could result.

4.3. Indication of any immediate medical attention and special treatment needed Provide general supportive measures and treat symptomatically. Chemical burns: Flush with water immediately. While flushing, remove clothes which do not adhere to affected area. Call an ambulance. Continue flushing during transport to hospital. Keep victim under observation. Symptoms may be delayed.

SECTION 5: Firefighting measures

General fire hazards No unusual fire or explosion hazards noted.

5.1. Extinguishing media

Suitable extinguishing media Water fog. Foam. Dry chemical powder. Carbon dioxide (CO2).

Unsuitable extinguishing media	Not available.
5.2. Special hazards arising from the substance or mixture	During fire, gases hazardous to health may be formed.
5.3. Advice for firefighters	
Special protective equipment for firefighters	Self-contained breathing apparatus and full protective clothing must be worn in case of fire.
Special fire fighting procedures	Move containers from fire area if you can do so without risk.
Specific methods	Use standard firefighting procedures and consider the hazards of other involved materials.

SECTION 6: Accidental release measures

6.1. Personal precautions, protective equipment and emergency procedures

For non-emergency personnel	Keep unnecessary personnel away. Keep people away from and upwind of spill/leak. Wear appropriate protective equipment and clothing during clean-up. Do not breathe mist or vapour. Do not touch damaged containers or spilled material unless wearing appropriate protective clothing. Ensure adequate ventilation. Local authorities should be advised if significant spillages cannot be contained. For personal protection, see section 8.
For emergency responders	Keep unnecessary personnel away. Use personal protection recommended in Section 8 of the SDS.
6.2. Environmental precautions	Avoid discharge into drains, water courses or onto the ground.
6.3. Methods and material for containment and cleaning up	Large Spills: Stop the flow of material, if this is without risk. Dike the spilled material, where this is possible. Absorb in vermiculite, dry sand or earth and place into containers. Following product recovery, flush area with water. Small Spills: Wipe up with absorbent material (e.g. cloth, fleece). Clean surface thoroughly to remove residual contamination. Never return spills to original containers for re-use.
6.4. Reference to other sections	For personal protection, see section 8. For waste disposal, see section 13 of the SDS.

SECTION 7: Handling and storage

7.1. Precautions for safe handling	Avoid forming spray/aerosol mists. Do not breathe mist or vapour. Do not get in eyes, on skin, or on clothing. Avoid prolonged exposure. Provide adequate ventilation. Wear appropriate personal protective equipment. Observe good industrial hygiene practices.
7.2. Conditions for safe storage, including any incompatibilities	Protect from sunlight. Store in original tightly closed container. Store away from incompatible materials (see Section 10 of the SDS). Store in cool, dry place.
7.3. Specific end use(s)	Not available.

SECTION 8: Exposure controls/personal protection

8.1. Control parameters

Occupational exposure limits

France. Threshold Limit Values (VLEP) for Occupational Exposure to Chemicals in France, INRS ED 984

Components	Type	Value
Sodium hydroxide (CAS 1310-73-2)	VME	2 mg/m3

Biological limit values	No biological exposure limits noted for the ingredient(s).
Recommended monitoring procedures	Follow standard monitoring procedures.
Derived no-effect level (DNEL)	Not available.
Predicted no effect concentrations (PNECs)	Not available.

8.2. Exposure controls

Appropriate engineering controls Good general ventilation (typically 10 air changes per hour) should be used. Ventilation rates should be matched to conditions. If applicable, use process enclosures, local exhaust ventilation, or other engineering controls to maintain airborne levels below recommended exposure limits. If exposure limits have not been established, maintain airborne levels to an acceptable level. Eye wash facilities and emergency shower must be available when handling this product.

Individual protection measures, such as personal protective equipment

General information Use personal protective equipment as required. Personal protection equipment should be chosen according to the CEN standards and in discussion with the supplier of the personal protective equipment.

Eye/face protection Wear safety glasses with side shields (or goggles). Before any handling, wear protective glasses side-shields complying with the NF EN 166.

Skin protection

- Hand protection Chemical resistant gloves. Suitable gloves can be recommended by the glove supplier.

- Other Wear appropriate chemical resistant clothing. Chemical resistant gloves.

Respiratory protection In case of insufficient ventilation, wear suitable respiratory equipment. Avoid forming spray/aerosol mists.

Thermal hazards Wear appropriate thermal protective clothing, when necessary.

Hygiene measures Always observe good personal hygiene measures, such as washing after handling the material and before eating, drinking, and/or smoking. Routinely wash work clothing and protective equipment to remove contaminants.

Environmental exposure controls Environmental manager must be informed of all major releases.

SECTION 9: Physical and chemical properties

9.1. Information on basic physical and chemical properties

Appearance

Physical state Liquid.

Form Liquid.

Colour Colourless.

Odour Odourless.

pH 12

Melting point/freezing point Not available.

Initial boiling point and boiling range Not available.

Flash point Not available.

Flammability (solid, gas) Not applicable.

Vapour pressure Not available.

Solubility(ies)

Solubility (water) Not available.

Solubility (other) Not available.

Partition coefficient (n-octanol/water) Not available.

Viscosity Not available.

Explosive properties Not explosive.

Oxidising properties Not oxidising.

9.2. Other information

Density 1,00 g/cm³

SECTION 10: Stability and reactivity

10.1. Reactivity Reacts violently with strong acids. This product may react with oxidizing agents.

10.2. Chemical stability Material is stable under normal conditions.

10.3. Possibility of hazardous reactions No dangerous reaction known under conditions of normal use.

10.4. Conditions to avoid Contact with incompatible materials. Do not mix with other chemicals.

10.5. Incompatible materials Strong acids. Acids. Oxidizing agents.

10.6. Hazardous decomposition products No hazardous decomposition products are known.

SECTION 11: Toxicological information

General information Occupational exposure to the substance or mixture may cause adverse effects.

Information on likely routes of exposure

Inhalation May cause irritation to the respiratory system. Prolonged inhalation may be harmful.

Skin contact Causes severe skin burns.

Eye contact Causes serious eye damage.

Ingestion Causes digestive tract burns.

Symptoms Burning pain and severe corrosive skin damage. Causes serious eye damage. Symptoms may include stinging, tearing, redness, swelling, and blurred vision. Permanent eye damage including blindness could result.

11.1. Information on toxicological effects

Components	Species	Test results
Sodium hydroxide (CAS 1310-73-2)		
Acute		
Dermal		
Solid		
LD50	Rabbit	1350 mg/kg
Oral		
Solid		
LD50	Rat	> 300 mg/kg
Liquid		
LD50	Rat	> 300 mg/kg

* Estimates for product may be based on additional component data not shown.

Skin corrosion/irritation Causes severe skin burns and eye damage.

Serious eye damage/eye irritation Causes serious eye damage.

Respiratory sensitisation Due to partial or complete lack of data the classification is not possible.

Skin sensitisation Due to partial or complete lack of data the classification is not possible.

Germ cell mutagenicity Due to partial or complete lack of data the classification is not possible.

Carcinogenicity Due to partial or complete lack of data the classification is not possible.

Reproductive toxicity Due to partial or complete lack of data the classification is not possible.

Specific target organ toxicity - single exposure Due to partial or complete lack of data the classification is not possible.

Specific target organ toxicity - repeated exposure Due to partial or complete lack of data the classification is not possible.

Aspiration hazard Due to partial or complete lack of data the classification is not possible.

Mixture versus substance information No information available.

Other information Not available.

SECTION 12: Ecological information

12.1. Toxicity Based on available data, the classification criteria are not met for hazardous to the aquatic environment.

Components		Species	Test results
Sodium hydroxide (CAS 1310-73-2)			
Aquatic			
Acute			
Crustacea	EC50	Water flea (Ceriodaphnia dubia)	34,59 - 47,13 mg/l, 48 hours
Fish	LC50	Western mosquitofish (Gambusia affinis)	125 mg/l, 96 hours

* Estimates for product may be based on additional component data not shown.

12.2. Persistence and degradability	No data is available on the degradability of this product.
12.3. Bioaccumulative potential	No data available.
Partition coefficient n-octanol/water (log Kow)	Not available.
Bioconcentration factor (BCF)	Not available.
12.4. Mobility in soil	No data available.
12.5. Results of PBT and vPvB assessment	Not available.
12.6. Other adverse effects	No other adverse environmental effects (e.g. ozone depletion, photochemical ozone creation potential, endocrine disruption, global warming potential) are expected from this component.

SECTION 13: Disposal considerations

13.1. Waste treatment methods

Residual waste	Dispose of in accordance with local regulations. Empty containers or liners may retain some product residues. This material and its container must be disposed of in a safe manner (see: Disposal instructions).
Contaminated packaging	Since emptied containers may retain product residue, follow label warnings even after container is emptied. Empty containers should be taken to an approved waste handling site for recycling or disposal.
EU waste code	The Waste code should be assigned in discussion between the user, the producer and the waste disposal company.
Disposal methods/information	Collect and reclaim or dispose in sealed containers at licensed waste disposal site. Dispose of contents/container in accordance with local/regional/national/international regulations.
Special precautions	Dispose in accordance with all applicable regulations.

SECTION 14: Transport information

ADR

14.1. UN number	UN3266
14.2. UN proper shipping name	Corrosive liquid, basic, inorganic, n.o.s.
14.3. Transport hazard class(es)	
Class	8
Subsidiary risk	-
Label(s)	8
Hazard No. (ADR)	80
Tunnel restriction code	E
14.4. Packing group	II
14.5. Environmental hazards	No.
14.6. Special precautions for user	Read safety instructions, SDS and emergency procedures before handling.

RID

14.1. UN number	UN3266
14.2. UN proper shipping name	Corrosive liquid, basic, inorganic, n.o.s.
14.3. Transport hazard class(es)	
Class	8
Subsidiary risk	-
Label(s)	8
14.4. Packing group	II
14.5. Environmental hazards	No.
14.6. Special precautions for user	Read safety instructions, SDS and emergency procedures before handling.

ADN

14.1. UN number	UN3266
14.2. UN proper shipping name	Corrosive Liquid, Inorganic, N.o.s.
14.3. Transport hazard class(es)	
Class	8

Subsidiary risk -
Label(s) 8

14.4. Packing group II

14.5. Environmental hazards No.

14.6. Special precautions for user Read safety instructions, SDS and emergency procedures before handling.

IATA

14.1. UN number UN3266

14.2. UN proper shipping name Corrosive liquid, basic, inorganic, n.o.s.

14.3. Transport hazard class(es)

Class 8
Subsidiary risk -

14.4. Packing group II

14.5. Environmental hazards No.

ERG Code 8L

14.6. Special precautions for user Read safety instructions, SDS and emergency procedures before handling.

Other information

Passenger and cargo aircraft Allowed with restrictions.
Cargo aircraft only Allowed with restrictions.

IMDG

14.1. UN number UN3266

14.2. UN proper shipping name CORROSIVE LIQUID, BASIC, INORGANIC, N.O.S.

14.3. Transport hazard class(es)

Class 8
Subsidiary risk -

14.4. Packing group II

14.5. Environmental hazards

Marine pollutant No.

EmS F-A, S-B

14.6. Special precautions for user Read safety instructions, SDS and emergency procedures before handling.

14.7. Transport in bulk according to Annex II of Marpol and the IBC Code Not established.

ADN; ADR; IATA; IMDG; RID

SECTION 15: Regulatory information

15.1. Safety, health and environmental regulations/legislation specific for the substance or mixture

EU regulations

Regulation (EC) No. 1005/2009 on substances that deplete the ozone layer, Annex I and II, as amended

Not listed.

Regulation (EC) No. 850/2004 On persistent organic pollutants, Annex I as amended

Not listed.

Regulation (EU) No. 649/2012 concerning the export and import of dangerous chemicals, Annex I, Part 1 as amended

Not listed.

Regulation (EU) No. 649/2012 concerning the export and import of dangerous chemicals, Annex I, Part 2 as amended

Not listed.

Regulation (EU) No. 649/2012 concerning the export and import of dangerous chemicals, Annex I, Part 3 as amended

Not listed.

Regulation (EU) No. 649/2012 concerning the export and import of dangerous chemicals, Annex V as amended

Not listed.

Regulation (EC) No. 166/2006 Annex II Pollutant Release and Transfer Registry

Not listed.

Regulation (EC) No. 1907/2006, REACH Article 59(10) Candidate List as currently published by ECHA

Not listed.

Authorisations

Regulation (EC) No. 1907/2006, REACH Annex XIV Substances subject to authorization, as amended

Not listed.

Restrictions on use

Regulation (EC) No. 1907/2006, REACH Annex XVII Substances subject to restriction on marketing and use as amended

Not listed.

Directive 2004/37/EC: on the protection of workers from the risks related to exposure to carcinogens and mutagens at work

Not listed.

Directive 92/85/EEC: on the safety and health of pregnant workers and workers who have recently given birth or are breastfeeding

Not listed.

Other EU regulations

Directive 2012/18/EU on major accident hazards involving dangerous substances

Not listed.

Directive 98/24/EC on the protection of the health and safety of workers from the risks related to chemical agents at work

Sodium hydroxide (CAS 1310-73-2)

Directive 94/33/EC on the protection of young people at work

Sodium hydroxide (CAS 1310-73-2)

Other regulations	The product is classified and labelled in accordance with EC directives or respective national laws This Safety Data Sheet complies with the requirements of Regulation (EC) No 1907/2006, as amended.
National regulations	Follow national regulation for work with chemical agents. Young people under 18 years old are not allowed to work with this product according to EU Directive 94/33/EC on the protection of young people at work, as amended.

France Classified Installations (ICPE): Listed substance/ICPE Number

Not listed.

15.2. Chemical safety assessment	No Chemical Safety Assessment has been carried out.

SECTION 16: Other information

List of abbreviations	Not available.
References	Not available.
Information on evaluation method leading to the classification of mixture	The classification for health and environmental hazards is derived by a combination of calculatior methods and test data, if available.
Full text of any H-statements not written out in full under Sections 2 to 15	H314 Causes severe skin burns and eye damage.
Revision information	None.
Training information	Follow training instructions when handling this material.
Disclaimer	Veolia Water Technologies is not able to anticipate all conditions under which this information and its product, or the products of other manufacturers in combination with its product, may be used. It is the user's responsibility to ensure safe conditions for handling, storage and disposal of the product, and to assume liability for loss, injury, damage or expense due to improper use and or non respect of Veolia Water Technologies' requirement.

SAFETY DATA SHEET

1. IDENTIFICATION OF THE SUBSTANCE/PREPARATION AND OF THE COMPANY/UNDERTAKING

Identification of the substance/preparation	**Sulphuric Acid 98%**
Use of the substance/preparation	Industrial Process Water Treatment; Water Treatment Chemical
Version #	01
Issue date	12-06-2016
CAS #	Mixture
Manufacturer	
Supplier	VWS, Saudi - Chemical Industries
Address	Prince Musaed Bin Abdul Aziz Street PO Box 58515, Riyadh 11515 Saudi Arabia
Contact Person	Product Manager
Telephone	+966 11 478 7721
Fax	+966 11 478 2560
e-mail	vwsme.hydrex@veolia.com
Global Emergency Contact	+1-760-476-3961 (Code:333239)

2. HAZARDS IDENTIFICATION

This preparation is classified as dangerous according to Directive 1999/45/EC and its amendments.

Classification	C;R35
Physical hazards	Not classified as a physical hazard.
Health hazards	Causes severe burns.
Environmental hazards	Not classified as an environmental hazard.
Specific hazards	Very toxic by inhalation. Causes severe burns. Prolonged exposure may cause chronic effects.
Main symptoms	Contact with this material will cause burns to the skin, eyes and mucous membranes.

3. COMPOSITION/INFORMATION ON INGREDIENTS

Components	CAS #	Percent	EC-No.	Classification
SULFURIC ACID	7664-93-9	50 - < 60	231-639-5	C;R35
Other components below reportable levels		40 - < 50		

Composition comments The full text for all R-phrases is displayed in Section 16 of the SDS.

4. FIRST AID MEASURES

Inhalation	Move to fresh air. For breathing difficulties, oxygen may be necessary. Get medical attention immediately.
Skin contact	Remove and isolate contaminated clothing and shoes. Immediately flush skin with plenty of water. Get medical attention immediately. Wash clothing separately before reuse.
Eye contact	Immediately flush eyes with plenty of water for at least 15 minutes. Get medical attention immediately.
Ingestion	IF SWALLOWED: Immediately call a POISON CENTER or doctor/physician. Rinse mouth thoroughly. Do not induce vomiting without advice from poison control center. Do not use mouth-to-mouth method if victim ingested the substance. Induce artificial respiration with the aid of a pocket mask equipped with a one-way valve or other proper respiratory medical device.
General advice	In case of shortness of breath, give oxygen. In the case of accident or if you feel unwell, seek medical advice immediately (show the label where possible). Ensure that medical personnel are aware of the material(s) involved, and take precautions to protect themselves. Keep victim warm. Do not use mouth-to-mouth method if victim ingested the substance.
Notes to physician	In case of shortness of breath, give oxygen. Keep victim warm.

5. FIRE-FIGHTING MEASURES

Suitable extinguishing media Foam. Powder. Carbon dioxide (CO2).

Extinguishing media which must not be used for safety reasons	DO NOT USE WATER. Alcohol resistant foam.
Unusual fire & explosion hazards	The product is not flammable.
Specific hazards	During fire, gases hazardous to health may be formed.
Special protective equipment for fire-fighters	Self-contained breathing apparatus and full protective clothing must be worn in case of fire.
Fire fighting equipment/instructions	Move containers from fire area if you can do so without risk.
Specific methods	Use standard firefighting procedures and consider the hazards of other involved materials.
Hazardous combustion products	sulfur

6. ACCIDENTAL RELEASE MEASURES

Containment procedures	Stop the flow of material, if this is without risk. Dike the spilled material, where this is possible. Prevent entry into waterways, sewer, basements or confined areas.
Personal precautions	Keep unnecessary personnel away. Keep upwind. Keep out of low areas. Do not touch damaged containers or spilled material unless wearing appropriate protective clothing. Ventilate closed spaces before entering them. For personal protection, see section 8 of the SDS.
Environmental precautions	Contact local authorities in case of spillage to drain/aquatic environment. Prevent further leakage or spillage if safe to do so. Avoid discharge into drains, water courses or onto the ground.
Methods for cleaning up	This product is miscible in water. Large Spills: Stop the flow of material, if this is without risk. Dike the spilled material, where this is possible. Use a non-combustible material like vermiculite, sand or earth to soak up the product and place into a container for later disposal. Following product recovery, flush area with water. Small Spills: Wipe up with absorbent material (e.g. cloth, fleece). Clean surface thoroughly to remove residual contamination. Never return spills to original containers for re-use. This material and its container must be disposed of as hazardous waste. For waste disposal, see section 13 of the SDS. Neutralize with slaked lime (calcium hydroxide) or soda ash (sodium carbonate) and flush with plenty of water.

7. HANDLING AND STORAGE

Handling	Never add water to this product. Avoid forming spray/aerosol mists. Do not breathe dust/fume/gas/mist/vapors/spray. Do not get this material in contact with eyes. Do not get this material in contact with skin.
Storage	Never allow product to get in contact with water during storage. Keep at temperature not exceeding 43 °C. Protect from sunlight. Store in original tightly closed container. Store away from incompatible materials (see Section 10 of the SDS). Store in accordance with local/regional/national/international regulation. Store in cool, dry place.

8. EXPOSURE CONTROLS/PERSONAL PROTECTION

Occupational exposure limits

US. ACGIH Threshold Limit Values

Components	Type	Value	Form
SULFURIC ACID (CAS 7664-93-9)	TWA	0.2 mg/m3	Thoracic fraction.

Bahrain. TLVs. Resolution No. 4 Regarding the Management of Hazardous Chemicals, Exposure Limits for Dangerous and Poisonous Chemicals, Annex. 3

Components	Type	Value
SULFURIC ACID (CAS 7664-93-9)	STEL	3 ppm
	TWA	1 mg/m3

Egypt. OELs. Threshold limits of air pollutants in the workplace (Decree No. 388, Annex 8)

Components	Type	Value
SULFURIC ACID (CAS 7664-93-9)	STEL	3 mg/m3
	TWA	1 mg/m3

Kuwait. OELs. Maximum Limits Allowance for Occupational Exposure to Chemical Substances (TVLs) (Decision No. 210/2001 Appendix No. (3-1))

Components	Type	Value
SULFURIC ACID (CAS 7664-93-9)	STEL	3 mg/m3
	TWA	1 mg/m3

UAE. OELs. Maximum Allowable Limits for Air Pollutants in Working Areas [Law to Protect the Air from Pollution, Resolution of the Cabinet of Ministers No. 12 of 2006]

Components	Type	Value
SULFURIC ACID (CAS 7664-93-9)	STEL	3 mg/m3
	TWA	1 mg/m3

UAE. Abu Dhabi. TLVs. Maximum Allowable Limits for Air Pollutants in Working Areas (AD EHSMS RF - Occupational Standards and Guideline Values, Schedule A)

Components	Type	Value	Form
SULFURIC ACID (CAS 7664-93-9)	TWA	0.2 mg/m3	Thoracic fraction.

UAE. Dubai. OELs. Maximum Allowable Limits for Indoor Air Pollutants. Industrial Operation Regulation IO-11.0: Appendix, Tables 2 & 2A

Components	Type	Value
SULFURIC ACID (CAS 7664-93-9)	STEL	1 mg/m3
	TWA	1 mg/m3

Biological limit values No biological exposure limits noted for the ingredient(s).

Recommended monitoring procedures

Additional exposure data Not available.

Engineering measures to reduce exposure General ventilation normally adequate. Ventilation should effectively remove and prevent buildup of any aerosols or mists generated from the handling of this product.

Personal protective equipment

Respiratory protection Use a particulate filter respirator for particulate concentrations exceeding the Occupational Exposure Limit. Avoid forming spray/aerosol mists. Personal protection equipment should be chosen according to the CEN standards and in discussion with the supplier of the personal protective equipment. Wear a disposable respiratory equipment against droplets or dust and which complies with NF EN 149, category FFP2.

Hand protection or Rubber (natural, latex). Polyvinyl chloride (PVC). Chemical resistant gloves. Nitrile rubber. Wear protective gloves which comply with the NF EN 374. Solvent-resistant gloves (butylrubber).

Eye protection Before any handling, wear protective glasses side-shields complying with the NF EN 166.

Skin and body protection Do not get this material in contact with skin. Wear suitable protective clothing. Chemical resistant gloves. Structural firefighters protective clothing provides limited protection in fire situations ONLY; it is not effective in spill situations. In case of splashing, wear protective chemical clothes (class 6) according to the NF EN 13034, in order to avoid any contact with skin.

General Avoid contact with skin. Avoid contact with eyes. Use personal protective equipment as required. Eye wash fountain is recommended. Keep working clothes separately. In case of splashing, wear protective chemical clothes (class 6) according to the NF EN 13034, in order to avoid any contact with skin.

Environmental exposure controls Environmental manager must be informed of all major releases.

Hygiene measures Wash hands after handling.

9. PHYSICAL AND CHEMICAL PROPERTIES

Appearance Liquid

Physical state Liquid.

Form Not available.

Color Colorless

Odor Not available.

pH < 1

Specific gravity Not available.

Boiling point 626 °F (330 °C)

Flash point Not available.

Flammability limits in air, upper, % by volume	Not available.
Flammability limits in air, lower, % by volume	Not available.
Vapor pressure	0 hPa estimated
Solubility (water)	100 % Exothermic decomp causes a dangerously fast pressure increase.
Partition coefficient (n-octanol/water)	Not available.
Viscosity	26.9 mPa·s (20°C)
Vapor density	Not available.
Evaporation rate	Not available.
Melting point/Freezing point	5 °F (-15 °C)
Auto-ignition temperature	Not available.
VOC	Not available.
Other data	
Density	1.40 - 1.84 g/cm³
Miscible (water)	100 %

10. STABILITY AND REACTIVITY

Conditions to avoid	Exposure to moisture. Reacts violently with strong alkaline substances. None under normal conditions. Avoid exposing to heat and contact with strong oxidizing substances. Do not allow water to get into container because of reaction.
Hazardous decomposition products	Sulphur oxides.
Stability	Material is stable under normal conditions. Material reacts with water.
Materials to avoid	Organic compounds. Metals. Reducing agents. Bases.

11. TOXICOLOGICAL INFORMATION

Toxicological data

Product	Species	Test Results
Sulphuric Acid 98%		
Acute		
Inhalation		
Liquid		
LC50	Rat	0.51 mg/l, 2 hours
Oral		
LD50	Rat	> 2140 mg/kg

* Estimates for product may be based on additional component data not shown.

Acute toxicity	Very toxic by inhalation. Toxic by inhalation. Causes severe burns.
Routes of exposure	Inhalation. Skin contact. Eye contact.
Toxicological information	Occupational exposure to the substance or mixture may cause adverse effects.
Chronic toxicity	Prolonged exposure may cause chronic effects.
Carcinogenicity	Risk of cancer cannot be excluded with prolonged exposure.

Egypt OELs Carcinogen rating

SULFURIC ACID (CAS 7664-93-9)	C2 Suspected human carcinogen.

IARC Monographs. Overall Evaluation of Carcinogenicity

SULFURIC ACID (CAS 7664-93-9)	1 Carcinogenic to humans.

Kuwait OELs (Decision No. 210/): Carcinogen Category

SULFURIC ACID (CAS 7664-93-9)	A2 Suspected human carcinogen.

UAE - Abu Dhabi TLVs: Carcinogen Category

SULFURIC ACID (CAS 7664-93-9)	GROUP A2 Suspected human carcinogen.

Mutagenicity	No data available to indicate product or any components present at greater than 0.1% are mutagenic or genotoxic.
Reproductivity	Not classified.
Epidemiology	No epidemiological data is available for this product.
Local effects	Very toxic by inhalation. Causes severe burns. Irritating to respiratory system. May produce corrosive solutions on contact with water.

Symptoms and target organs Contact with this material will cause burns to the skin, eyes and mucous membranes.

12. ECOLOGICAL INFORMATION

Ecotoxicological data

Product		Species	Test Results
Sulphuric Acid 98%			
Aquatic			
Acute			
Fish	LC50	Fish	> 42 mg/l, 96 hours

* Estimates for product may be based on additional component data not shown.

Ecotoxicity Because of the low pH of this product, it would be expected to produce significant ecotoxicity upon exposure to aquatic organisms and aquatic systems. Not expected to be harmful to aquatic organisms.

Environmental effects An environmental hazard cannot be excluded in the event of unprofessional handling or disposal.

Persistence / degradability

Bioaccumulation No data available.

Aquatic toxicity The product is not classified as environmentally hazardous. However, this does not exclude the possibility that large or frequent spills can have a harmful or damaging effect on the environment.

Mobility This product is miscible in water.

Other adverse effects No other adverse environmental effects (e.g. ozone depletion, photochemical ozone creation potential, endocrine disruption, global warming potential) are expected from this component.

13. DISPOSAL CONSIDERATIONS

Disposal instructions Consult authorities before disposal. This material and its container must be disposed of as hazardous waste. Do not discharge into drains, water courses or onto the ground. Dispose in accordance with all applicable regulations.

Waste from residues / unused products Dispose of in accordance with local regulations. Empty containers or liners may retain some product residues. This material and its container must be disposed of in a safe manner (see: Disposal instructions). Avoid discharge into water courses or onto the ground.

Contaminated packaging Since emptied containers may retain product residue, follow label warnings even after container is emptied. Empty containers should be taken to an approved waste handling site for recycling or disposal.

14. TRANSPORT INFORMATION

DOT

- **UN number** UN1830
- **UN proper shipping name** Sulfuric acid with more than 51 percent acid
- **Transport hazard class(es)**
  - **Class** 8
  - **Subsidiary risk** -
  - **Label(s)** 8
- **Packing group** II
- **Special precautions for user** Read safety instructions, SDS and emergency procedures before handling.
- **Special provisions** A3, A7, B3, B83, B84, IB2, N34, T8, TP2, TP12
- **Packaging exceptions** 154
- **Packaging non bulk** 202
- **Packaging bulk** 242

IATA

- **UN number** UN1830
- **UN proper shipping name** Sulphuric acid with more than 51% acid
- **Transport hazard class(es)**
  - **Class** 8
  - **Subsidiary risk** -
- **Packing group** II
- **Environmental hazards** No.
- **ERG Code** 8L
- **Special precautions for user** Read safety instructions, SDS and emergency procedures before handling.
- **Other information**
  - **Passenger and cargo aircraft** Allowed with restrictions.
  - **Cargo aircraft only** Allowed with restrictions.

IMDG

- **UN number** UN1830

UN proper shipping name	SULPHURIC ACID with more than 51% acid
Transport hazard class(es)	
Class	8
Subsidiary risk	-
Packing group	II
Environmental hazards	
Marine pollutant	No.
EmS	F-A, S-B
Special precautions for user	Read safety instructions, SDS and emergency procedures before handling.
Transport in bulk according to Annex II of MARPOL 73/78 and the IBC Code	Not established.

DOT

IATA; IMDG

15. REGULATORY INFORMATION

Labeling

Contains	SULFURIC ACID
Symbol(s)	

Corrosive

R-phrase(s)	R35 Causes severe burns.
S-phrase(s)	S26 In case of contact with eyes, rinse immediately with plenty of water and seek medical advice. S30 Never add water to this product. S36/37/39 Wear suitable protective clothing, gloves and eye/face protection. S45 In case of accident or if you feel unwell, seek medical advice immediately (show the label where possible). S60 This material and its container must be disposed of as hazardous waste.

Follow national regulation for work with chemical agents.

Bahrain. Chemicals Subject to the Prior Informed Consent Procedure under the Rotterdam Convention (Law No. 14 of 2012, Annex III)

Not listed.

Bahrain. CWC Chemical Substances (Decree No. 6 of 1997, Schedules 1, 2 and 3; Law No. 51 of 2009)

Not listed.

Bahrain. Prohibited Chemicals (Ministry of State for Municipal & Environmental Affairs, Resolution No 7 of 2002, On Control of Importing & Use of Prohibited & Restricted Chemicals, Table 1)

Not listed.

Bahrain. Severely Restricted Chemicals (Ministry of State for Municipal & Environmental Affairs, Resolution No 7 of 2002, On Control of Importing & Use of Prohibited & Restricted Chemicals, Table 2)

Not listed.

Regulatory information

The product is classified and labelled in accordance with EC directives or respective national laws. Young people under 18 years old are not allowed to work with this product according to EU Directive 94/33/EC on the protection of young people at work. This Safety Data Sheet complies with the requirements of Regulation (EC) No 1907/2006, as amended. Young people under 18 years old are not allowed to work with this product according to EU Directive 94/33/EC on the protection of young people at work, as amended.

16. OTHER INFORMATION

Wording of the R-phrases in sections 2 and 3

R35 Causes severe burns.

International Inventories

Country(s) or region	Inventory name	On inventory (yes/no)*
Europe	European Inventory of Existing Commercial Chemical Substances (EINECS)	Yes
Europe	European List of Notified Chemical Substances (ELINCS)	No

*A "Yes" indicates that all components of this product comply with the inventory requirements administered by the governing country(s)
A "No" indicates that one or more components of the product are not listed or exempt from listing on the inventory administered by the governing country(s).

Recommended use

Use in accordance with supplier's recommendations.

Recommended restrictions

PROFESSIONAL USE ONLY

Disclaimer

Veolia Water Technologies is not able to anticipate all conditions under which this information and its product, or the products of other manufacturers in combination with its product, may be used. It is the user's responsibility to ensure safe conditions for handling, storage and disposal of the product, and to assume liability for loss, injury, damage or expense due to improper use and or non respect of Veolia Water Technologies' requirement.

Revision information

This document has undergone significant changes and should be reviewed in its entirety.

LEFT BLANK

3 – DRAWINGS

3.1 – PROCESS FLOW DIAGRAM

LEFT BLANK

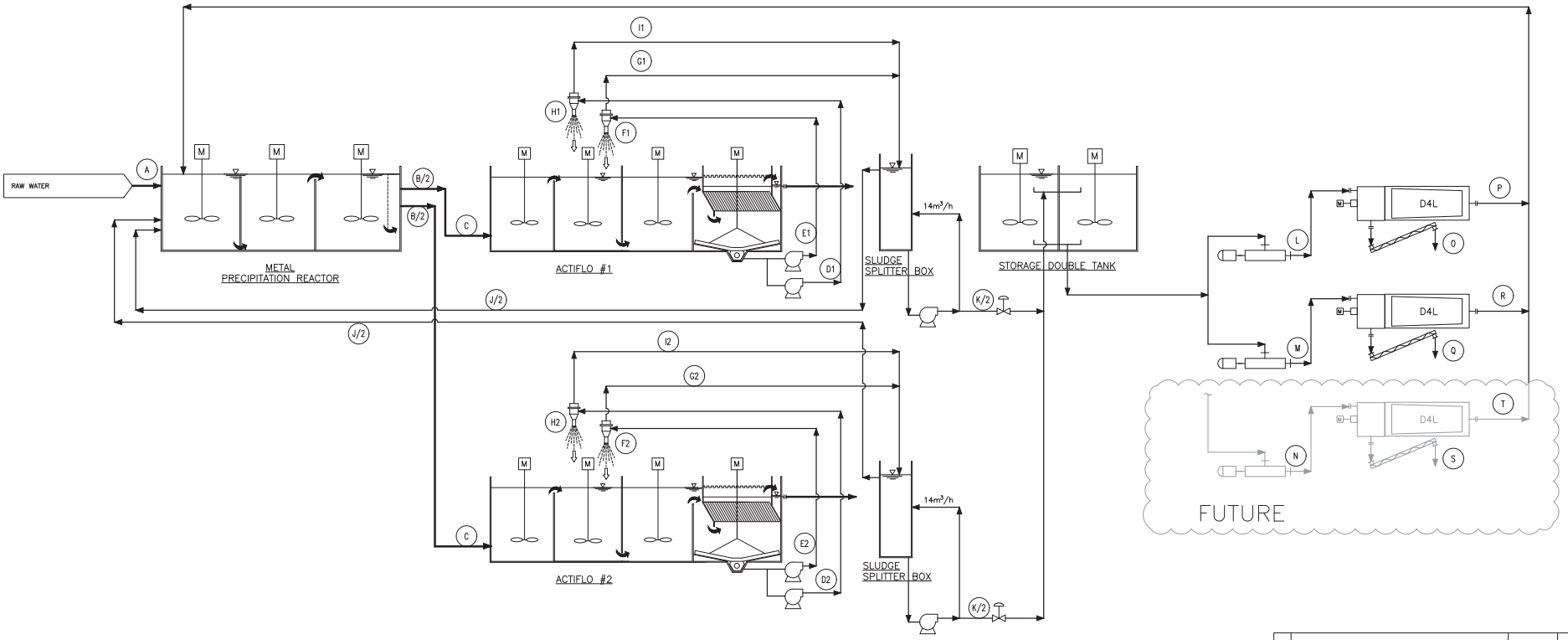

	<250 ppm			500 ppm		
	Flow (m3/h)	Conc (mg/L)	Solid (kgD/h)	Flow (m3/h)	Conc (mg/L)	Solid (kgD/h)
A	1600	250	400	1600	500	800
B	1710	984	1683	1820	1850	3367
C	855	984	841	910	1850	1683.5
D1 and D2	70	15000	1050	70	15000	1050
E1 and E2	**Just one sand recirculation pump/Actiflo**			70	15000	1050
F1 and F2	14	15000	210	14	15000	210
G1 and G2	56	15000	840	56	15000	840
H1 and H2	**Just one sand recirculation pump/Actiflo**			14	15000	210
I1 and I2	**Just one sand recirculation pump/Actiflo**			56	15000	840
J	84	15000	1260	168	15000	2520
K	28	15000	420	56	15000	840
L	14	15000	210	18.9	15000	283.5
M	14	15000	210	18.9	15000	283.5
N	**Only two centrifuges required**			18.9	15000	283.5
O	1	200000	200	1.33	200000	266.67
P	13	810	11	17.3	800	13.84
Q	1	200000	200	1.33	200000	266.67
R	13	810	11	17.3	800	13.84
S	**Only two centrifuges required**			1.33	200000	266.67
T	**Only two centrifuges required**			17.3	800	13.84

REV. REV.	DESCRIPTION	DATE	REVISÉ REVISED	VÉRIFIÉ CHECKED	APPROUVÉ APPROVED
1	FOR APPROVAL	2018-05-02	A.C.	G.P.	G.P.

VEOLIA WATER TECHNOLOGIES

DESSINÉ PAR/DRAWN BY A.C.	DATE 2018-04-04	CLIENT AGNICO EAGLE MINING AMARUQ, NU
VÉRIFIÉ PAR/CHECKED BY G.P.	DATE 2018-04-04	
INGÉNIERIE PAR/ENGINEERING BY G.P.	DATE 2018-04-04	

TITRE / TITLE
WATER TREATMENT PLANT
PROCESS FLOW DIAGRAM

ÉCHELLE / SCALE: N.T.S.

PROJET / PROJECT	DESSIN No /DRAWING No	INTERNE / INTERNAL	FEUILLET / SHEET	REV./REV
5000218009	PF0001	GEN	1/1	1

Ce document est la propriété de VEOLIA et ne peut être reproduit sans son autorisation écrite. / This document is the property of VEOLIA and cannot be reproduced without its written authorization

REF: N/A

SIZE ANSI D

May 02, 2018 17:14:35 - W:\2018\5000218009 Amaruq (TH128505)\15- Dessins execution_Drawings\8- P\5000218009-PF0001_1 en cours.dwg - cristeas

LEFT BLANK

3 – DRAWINGS

3.2 – PROCESS AND INSTRUMENTATION DIAGRAM

LEFT BLANK

ABBREVIATIONS

A TO C – AIR TO CLOSE
A TO O – AIR TO OPEN
AVG – AVERAGE
B/EL – BOTTOM ELEVATION
CL – CENTER LINE
CFM – CUBIC FEET PER MINUTE
CW – CITY WATER (POTABLE)
DIA – DIAMETER
DWG – DRAWING
EL – ELEVATION
SID – FAIL CLOSED
F.O. – FAIL OPEN
FRL – FILTER\REGULATOR\LUBRICATOR
GAL – GALLONS
GPD – GALLONS PER DAY
GPH – GALLONS PER HOUR
GPM – GALLONS PER MINUTE
HB – HOSE BIB
HG – INCHES OF MERCURY
HI – HIGH
HOA – HAND/OFF/AUTO
HP – HORSEPOWER
IA – INSTRUMENT AIR
ID – INSIDE DIAMETER
INV – INVERT
LO – LOW
MH – MANHOLE
MW – MANWAY
N.C. – NORMALLY CLOSED
N.O. – NORMALLY OPEN
OAL – OVERALL LENGTH
O.D. – OUTSIDE DIAMETER
OF – OVERFLOW
PA – PLANT AIR
PSIG – POUNDS PER SQUARE INCH – GAUGE
PW – PLANT WATER
RED – REDUCER
RPM – REVOLUTIONS PER MINUTE
SCFM – STANDARD CUBIC FEET PER MINUTE
SCH – SCHEDULE
SG – SPECIFIC GRAVITY
SP – SETPOINT
SSH – STRAIGHT SIDE HEIGHT
STD – STANDARD
SW – SEAL WATER
SWD – SIDE WATER DEPTH
TDH – TOTAL DYNAMIC HEAD(FT OF FLUID)
T/EL – TOP ELEVATION
TYP – TYPICAL
VAC – VACUUM
VSD – VARIABLE SPEED DRIVE
WC – WATER COLUMN
WD – WATER DEPTH
WL – WATER LEVEL
WV – WORKING VOLUME (DOES NOT INCLUDE FREEBOARD OR HEEL)

PIPING AND TUBING MATERIALS

ABS – ACRYLONTRILE BUTADIENE STYRENE TRUSS PIPE
ALM – ALUMINUM PIPE OR TUBING
ARP – ALUMINUM REINFORCED PLASTIC PIPE
BL – BLACK IRON PIPE
BPT – BRAIDED PLASTIC TUBING–PVC
CI – CAST IRON PIPE
CISP – CAST IRON SOIL PIPE
CMCP – CORRUGATED METAL CULVERT PIPE
CMH – CHEMICAL HOSE
CMP – CORRUGATED METAL PIPE
COP – COPPER PIPE
PVC – CHLORINATED POLYVINYL CHLORIDE PIPE
CS – CARBON STEEL PIPE
DI – DUCTILE CAST IRON PIPE
ERP – EPOXY RESIN PIPE
FRP – FIBERGLASS REINFORCED PLASTIC PIPE
GS – GALVANIZED STEEL PIPE
HOSE – FLEXIBLE HOSE
HSI – HIGH SILICON IRON PIPE
KLS – PVDF LINED STEEL PIPE (KYNAR ® LINED TYPICAL)
KYN – PVDF (KYNAR ® TYPICAL)
MI – CARBON STEEL PIPE W/MALLEABLE IRON FITTINGS
NEO – NEOPRENE HOSE
NI – NICKEL ALLOY PIPE
NLS – NEOPRENE LINED STEEL PIPE
PEP – POLYETHYLENE PIPE
PETB – POLYETHYLENE TUBING
PLS – POLYPROPYLENE LINED STEEL PIPE
POP – POLYPROPYLENE PIPE
PRP – PHENOLIC RESIN PIPE
PVC – POLYVINYL CHLORIDE PIPE
PVC HOSE – POLYVINYL CHLORIDE HOSE
PVDF – POLYVINYLIDENE FLUORIDE PIPE
RBR – RUBBER HOSE
RCCP – REINFORCED CONCRETE CULVERT PIPE
RCP – REINFORCED CONCRETE PIPE
SAR – SARAN TUBING
SLH – SLUDGE HOSE
SLS – SARAN LINED STEEL PIPE
SS – STAINLESS STEEL PIPE OR TUBING
TEF – TEFLON TUBING
TI – TITANIUM ALLOY PIPE
TLS – TEFLON LINED STEEL PIPE
TYB – TYGON ® TUBING–BRAIDED
TYG – TYGON ® TUBING–UNBRAIDED

FLOWS AND LINES

NEW MAIN FLOW
EXISTING MAIN FLOW
FUTURE MAIN FLOW
NEW SECONDARY FLOW
EXISTING SECONDARY FLOW
FUTURE SECONDARY FLOW
CHEMICALS
BY OTHERS
CS SS – MATERIAL SPECIFICATION CHANGE
SUPPLIED BY VEOLIA

INSTRUMENTATION AND RELATED ITEMS

CAPILLARY TUBING
ELECTRICAL
HYDRAULIC
PNEUMATIC
DATA LINK

VALVE SYMBOLS

ANGLE
BALL
BUTTERFLY
CHECK VALVE
DIAPHRAGM
VALVE NOT SPECIFIED
GLOBE
KNIFE
NEEDLE
PINCH
PLUG
PRESSURE REDUCING
RELIEF ON LINE
RELIEF
SQUEEZE
THREE WAY
FOUR WAY
FLOAT VALVE
VACUUM BREAKER
AIR RELEASE
HOSE BIBB
INTEGRAL BLOCK & BLEED
PENSTOCK
WASTE PLUG
MULTI–FONCTION VALVE
CALIBRATION COLUMN
VENT
AIR TRAP

ACTUATORS

CYLINDER
DIAPHRAGM–SPRING
ELECTRO HYDRAULIC
ELECTRO PNEUMATIC
MOTOR
SOLENOID
POSITIONER * – TYPE

PIPING ACCESSORIES

FUNNEL
DIAPHRAGM SEAL
DRESSER COUPLING
EJECTOR/EDUCTOR
EXPANSION JOINT
FLANGED CONNECTION
FLEXIBLE HOSE
HOSE CONNECTION
PIPE TO TUBING ADAPTER
INSULATION
INSULATED PIPE WITH ELECTRIC HEAT TRACE
INSULATED PIPE WITH STEAM HEAT TRACE
VACUUM BREAKER
PULSATION DAMPENER
END CAP DISCONNECT
QUICK DISCONNECT
CONCENTRIC REDUCER
ECCENTRIC REDUCER
RUPTURE DISK
BASKET FILTER
MIXING VALVE
SIGHT FLOW INDICATOR
STRAINER
UNION
STEAM TRAP
AIR FILTER
AIR LUBRICATOR
AIR REGULATOR
COMB. AIR FILTER/ REGULATOR W/GAUGE
FLOW ORIFICE
SIGHT FLOW STRAINER
SPECTACLE BLIND OPEN
SPECTACLE BLIND CLOSE
PIGTAIL SIPHON
STATIC MIXER
INJECTION QUILL
STOP LOG
FLUME
MAGNETIC FLOW METER
SONIC FLOW METER
TURBINE FLOW METER
VENTURI
WEIR
VORTEX SENSOR
ROTAMETER
DRAIN
PLUG

ISA INSTRUMENT IDENTIFICATION TABLE

	FIRST LETTER		SUCCEEDING LETTERS	
	PROCESS VARIABLE	MODIFIER (IF NEEDED)	READOUT OR COMPUTER FUNCTION	MODIFIER (IF NEEDED)
A	ANALYSIS		ALARM	
B	BURNER, COMBUSTION		USER'S CHOICE	USER'S CHOICE
C	USER'S CHOICE		CONTROL	
D	USER'S CHOICE	DIFFERENTIAL		
E	VOLTAGE		SENSOR (PRIMARY ELEMENT)	
F	FLOW RATE	RATIO (FRACTION)		
G	USER'S CHOICE		GLASS, VIEWING DEVICE	
H	HAND			HIGH
I	CURRENT (ELECTRICAL)		INDICATE	
J	POWER	SCAN		
K	TIME, TIME SCHEDULE	TIME RATE OF CHANGE	CONTROL STATION	
L	LEVEL		LIGHT	LOW
M	USER'S CHOICE	MOMENTARY		MIDDLE, INTERMEDIATE
N	USER'S CHOICE		USER'S CHOICE	USER'S CHOICE
O	USER'S CHOICE		ORIFICE (RESTRICTION)	
P	PRESSURE, VACUUM		POINT (TEST CONNECTION)	
Q	QUANTITY	INTEGRATE, TOTALIZE		
R	RADIATION		RECORD	
S	SPEED, FREQUENCY	SAFETY	SWITCH	
T	TEMPERATURE		TRANSMIT	
U	MULTIVARIABLE		MULTIFUNCTION	MULTIFUNCTION
V	VIBRATION, MECH. ANALYSIS		VALVE, DAMPER, LOUVER	
W	WEIGHT, FORCE		WELL	
X	UNCLASSIFIED	X–AXIS	UNCLASSIFIED	UNCLASSIFIED
Y	EVENT, STATE OR PRESENCE	Y–AXIS	RELAY, COMPUTE, CONVERT	
Z	POSITION, DIMENSION	Z–AXIS	DRIVER, ACTUATOR, UNCLASSIFIED FINAL CONTROL ELEMENT	

LEGEND BASED ON ISA STANDARD S 5.1

INSTRUMENT TAG NUMBERS

TIC 103 – INSTRUMENTATION IDENTIFICATION OR TAG NUMBER
103 – LOOP NUMBER
TIC – FUNCTIONAL IDENTIFICATION
NOTE: HYPHENS ARE OPTIONAL AS SEPARATORS

ELECTRICAL AND RELATED ITEMS

S – SELECTOR SWITCHES
VFD – VARIABLE FREQUENCY DRIVE
EM – EMERGENCY POWER
– INTERLOCK
– PILOT LIGHT

LINE NUMBER IDENTIFICATION

25–XXYY–ZZZZ–0

- INSULATION (=I) OR INSULATION+ TRACING(=T)
- MATERIAL CLASS
- LINE NUMBER
- NUMBER ORIGINAL SHEET
- DIAMETER

NOTE : Refer to project pipe specifications for line codes

LINE CONTINUATIONS

INDICATES A LINE GOING TO OR COMING FROM BATTERY LIMITS (CONTRACT LIMITS)

5 A 2 – INDICATES CONTINUATION OF LINE IS ON SHEET NUMBER 5 (SAME DRAWING NUMBER) IN ZONE A 2

SHT 5 – INDICATES CONTINUATION OF A SIGNAL IS ON SHEET NUMBER 5

EQUIPMENT TAG NUMBERS

MXXXX AGITATORS, AERATORS
BXXXX AIR HANDLING–BLOWERS, COMPRESSORS, DRYERS
RXXXX CLARIFIERS, THICKENERS, SEPARATORS
FXXXX FILTERS–VACUUM, PRESSURE, CENTRIFUGES
PXXXX PUMPS
TXXXX TANKS
EXXXX HEAT EXCHANGER
IXXXXX SOFTENERS, DEMINERALIZERS
ROXXXX REVERSE OSMOSIS UNITS
SGXXXX STEAM GENERATORS

VALVE & ACCESSORY TAG

VXXXX VALVE
EJXXXX EXPANSION JOINT
HXXXX HOSE
FXXXX FILTER
SXXXX STRAINER
SBXXXX SPECTACLE BLIND
STXXXX STEAM TRAP

INSTRUMENT SYMBOLS

	PRIMARY LOCATION ***NORMALLY ACCESSIBLE TO OPERATOR	FIELD MOUNTED	AUXILIARY LOCATION ***NORMALLY ACCESSIBLE TO OPERATOR
DISCRETE INSTRUMENTS	1 * IP1**	2	3
SHARED DISPLAY, SHARED CONTROL	4	5	6
COMPUTER FUNCTION	7	8	9
PROGRAMMABLE LOGIC CONTROL	10	11	12

* SYMBOL SIZE MAY VARY ACCORDING TO THE USER'S NEEDS AND THE TYPE OF DOCUMENT. A SUGGESTED SQUARE AND CIRCLE SIZE FOR LARGE DIAGRAMS IS SHOWN ABOVE. CONSISTENCY IS RECOMMENDED.

** ABBREVIATIONS OF THE USER'S CHOICE SUCH AS IP1 (INSTRUMENT PANEL #1), IC2 (INSTRUMENT CONSOLE #2), CC3 (COMPUTER CONSOLE #3), ETC., MAY BE USED WHEN IT IS NECESSARY TO SPECIFY INSTRUMENT OR FUNCTION LOCATION.

*** NORMALLY INACCESSIBLE OR BEHIND–THE–PANEL DEVICES OR FUNCTIONS MAY BE DEPICTED BY USING THE SAME SYMBOL BUT WITH DASHED HORIZONTAL BARS, I.E.

REV.	DESCRIPTION	DATE	REVISÉ REVISED	VÉRIFIÉ CHECKED	APPROUVÉ APPROVED
4	FOR APPROVAL IV	2018–07–04	A.C.	G.P.	G.P.
3	FOR APPROVAL III	2018–05–31	A.C.	G.P.	G.P.
2	FOR APPROVAL II	2018–05–07	A.C.	G.P.	G.P.
1	FOR APPROVAL	2018–04–25	A.C.	G.P.	G.P.

DESSINÉ PAR/DRAWN BY A.C. DATE 2018–04–04
VÉRIFIÉ PAR/CHECKED BY G.P. DATE 2018–04–04
INGÉNIEUR PAR/ENGINEERING BY G.P. DATE 2018–04–04

VEOLIA WATER TECHNOLOGIES

CLIENT: AGNICO EAGLE MINING
AMARUQ, NU

TITRE / TITLE
WATER TREATMENT PLANT
PROCESS AND INSTRUMENTATION DIAGRAM
LEGEND

ÉCHELLE / SCALE: N.T.S.

PROJET / PROJECT: 5000218009 – PI0001
DESSIN No /DRAWING No: GEN
INTERNE / INTERVAL: 0/19
FEUILLET / SHEET: 4
RÉV./REV

Ce document est la propriété de VEOLIA et ne peut être reproduit sans son autorisation écrite / This document is the property of VEOLIA and cannot be reproduced without its written authorization

REF: N/A
SIZE ANSI D

Jul 20, 2018 11:19:39 – W:\2018\5000218009 Amaruq (Phase2&3)\15– Detailed execution\Drawings\Ip– PI\5000218009–PI0001_4.dwg – cardenas

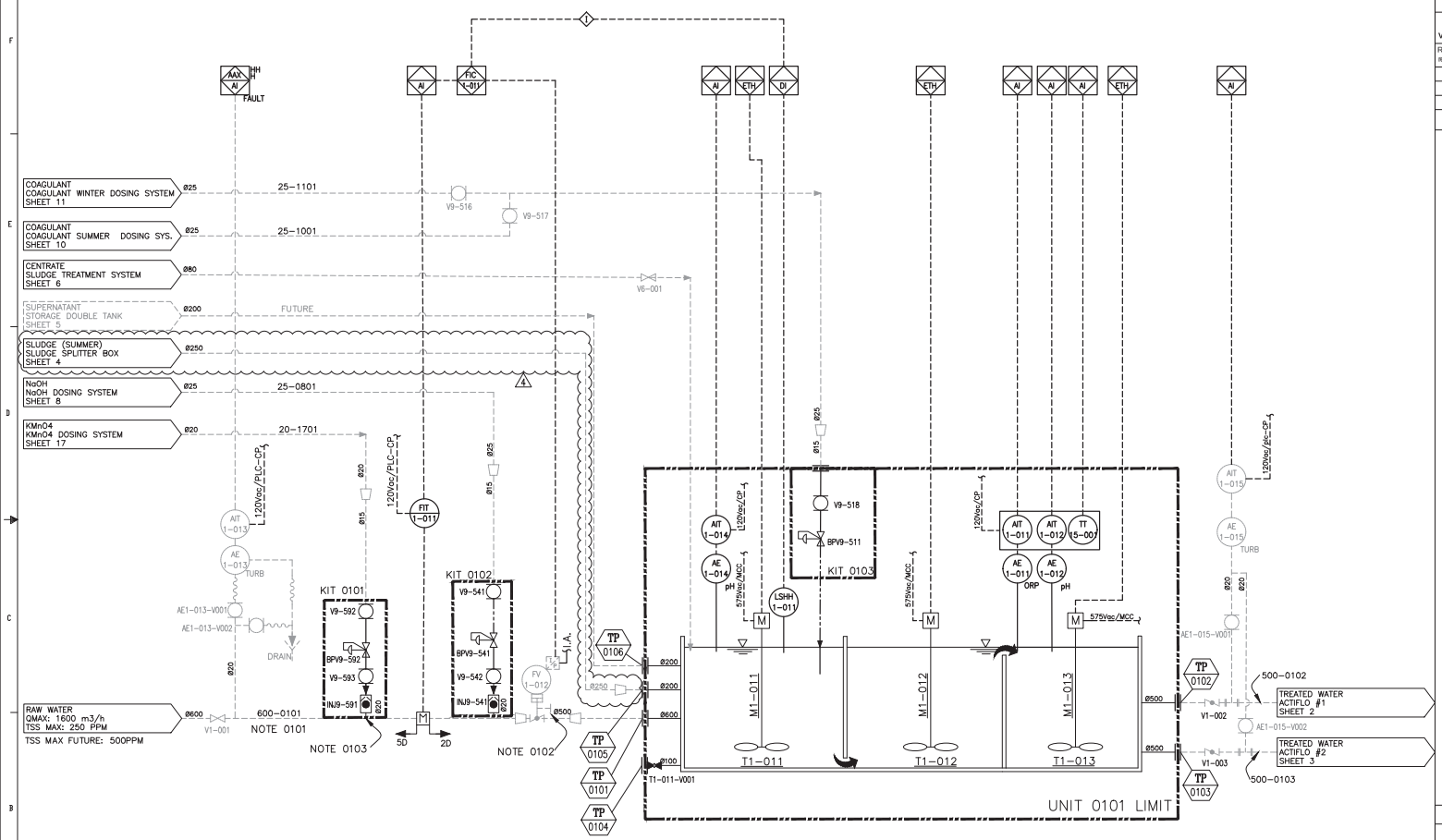

T1-011/012/013
METAL PRECIPITATION REACTOR
MODEL: RX75-3
MATERIAL: C.S.
VOLUME: 175 m3
CONTACT TIME: XXmin@XXm3/h

M1-011/012/013
METAL PRECIPITATION REACTOR MIXER
MIXER: EVGX6-5
DRIVER: 5 HP
575V/3Ph/60Hz
MATERIAL: SS304

Notes :

Note 0101 : Raw water inlet pressure: 14 Psig.

Note 0102 : Flow control valve equipped with a declutchable gear and a handwheel

Note 0103 : Install as far as possible from reactor inlet

VWT Canada Scope of Supply limits:

RX-75-3 Reactors are pre-mounted as much as possible. However, for freight purposes or general practical reasons, the installation of some items needs to be completed on site by the Subcontractor.

REV.	DESCRIPTION	DATE	RÉVISÉ REVISED	VÉRIFIÉ CHECKED	APPROUVÉ APPROVED
4	FOR APPROVAL IV	2018-07-04	A.C.	G.P.	G.P.
3	FOR APPROVAL III	2018-05-31	A.C.	G.P.	G.P.
2	FOR APPROVAL II	2018-05-07	A.C.	G.P.	G.P.
1	FOR APPROVAL	2018-04-25	A.C.	G.P.	G.P.

DESSINÉ PAR/DRAWN BY: A.C. DATE: 2018-04-04
VÉRIFIÉ PAR/CHECKED BY: G.P. DATE: 2018-04-04
RÉVISÉ PAR/ENGINEERING BY: G.P. DATE: 2018-04-04

CLIENT: AGNICO EAGLE MINING
AMARUQ, NU

VEOLIA WATER TECHNOLOGIES

TITRE / TITLE
WATER TREATMENT PLANT
PROCESS AND INSTRUMENTATION DIAGRAM
METAL PRECIPITATION REACTOR

ÉCHELLE / SCALE: N.T.S.

PROJET / PROJECT	DESSIN No /DRAWING No	INTERNE / INTERVAL	FEUILLET / SHEET	REV./REV
5000218009 – PI0001		GEN	1/19	4

Ce document est la propriété de VEOLIA et ne peut être reproduit sans son autorisation écrite / This document is the property of VEOLIA and cannot be reproduced without its written authorization

REF: N/A

SIZE ANSI D

Jul 20, 2018 11:19:44 - W:\2018\5000218009 Amaruq (Thiel)\8500\15- Detailed execution\Drawings\5- PI\5000218009-PI0001-4.dwg - cardenas

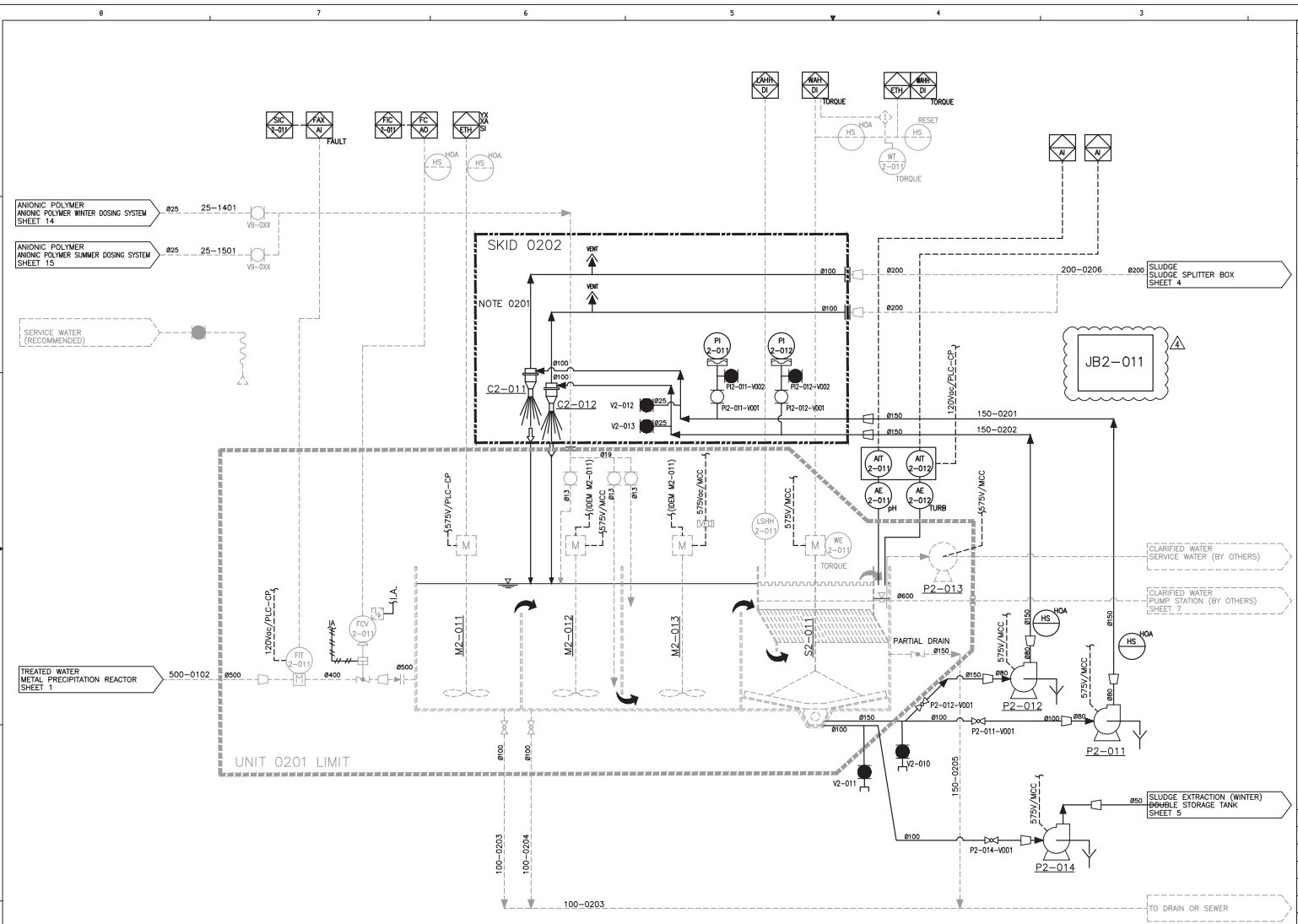

EXISTING SYSTEM FROM MEADOWBANK

M2-011
COAGULATION TANK
MIXER: EVGX 4-3
DRIVER: 3 HP
575V/3Ph/60Hz

M2-012
INJECTION TANK
MIXER: EVGX 4-3
DRIVER: 3 HP
575V/3Ph/60Hz

M2-013
MATURATION TANK
MIXER: EVGX 6-5
DRIVER: 5 HP
575V/3Ph/60Hz

S2-011
SCRAPER
DRIVER: 0.5 HP
575V/3Ph/60Hz

P2-013
CLARIFIED WATER PUMP
(EXISTING, BY OTHERS)

P2-014
MULTIFLO EXTRACTION PUMP
DESIGN: 4m3/h @ 8 psig
DRIVER: 10 HP
575V/3Ph/60Hz

P2-011/P2-012
MICROSAND RECIRCULATION PUMP
Q=70m3/h@24.5 psig
MATERIAL: LINED CAST IRON
DRIVER: 15 HP
575V/3Ph/60Hz

Notes :

Note 0201: Avoid backpressure at the outlet of the hydrocyclones, keep gravity draining.

VWT Canada Scope of Supply limits:

Actiflo units are pre-mounted as much as possible. However, for freight purposes or general practical reasons, the installation of some items needs to be completed on site by the Subcontractor.

REV. REV.	DESCRIPTION	DATE	REVISE REVISED	VERIFIE CHECKED	APPROUVE APPROVED
4	FOR APPROVAL IV	2018-07-04	A.C.	G.P.	G.P.
3	FOR APPROVAL III	2018-05-31	A.C.	G.P.	G.P.
2	FOR APPROVAL II	2018-05-07	A.C.	G.P.	G.P.
1	FOR APPROVAL	2018-04-25	A.C.	G.P.	G.P.

VEOLIA WATER TECHNOLOGIES

DESSINÉ PAR/DRAWN BY A.C.	DATE 2018-04-04	CLIENT AGNICO EAGLE MINING AMARUQ, NU
VÉRIFIÉ PAR/CHECKED BY G.P.	DATE 2018-04-04	
INGÉNIERIE PAR/DESIGNED BY G.P.	DATE 2018-04-04	

TITRE / TITLE
WATER TREATMENT PLANT
PROCESS AND INSTRUMENTATION DIAGRAM
ACTIFLO #1/ MULTIFLO #1

ÉCHELLE / SCALE: N.T.S.

PROJET / PROJECT	DESSIN No /DRAWING No	INTERNE / INTERNAL	FEUILLET / SHEET	REV./REV
5000218009	PI0001	GEN	2/19	4

Ce document est la propriété de VEOLIA et ne peut être reproduit sans son authorisation écrite. / This document is the property of VEOLIA and cannot be reproduced without its written authorization

REF: N/A

SIZE ANSI D

Jul 20, 2018 11:19:49 - W:\2018\5000218009 Amaruq (TH128505)\15- Dessins execution_Drawings\8- PI\5000218009-PI0001_4.dwg - cristeca

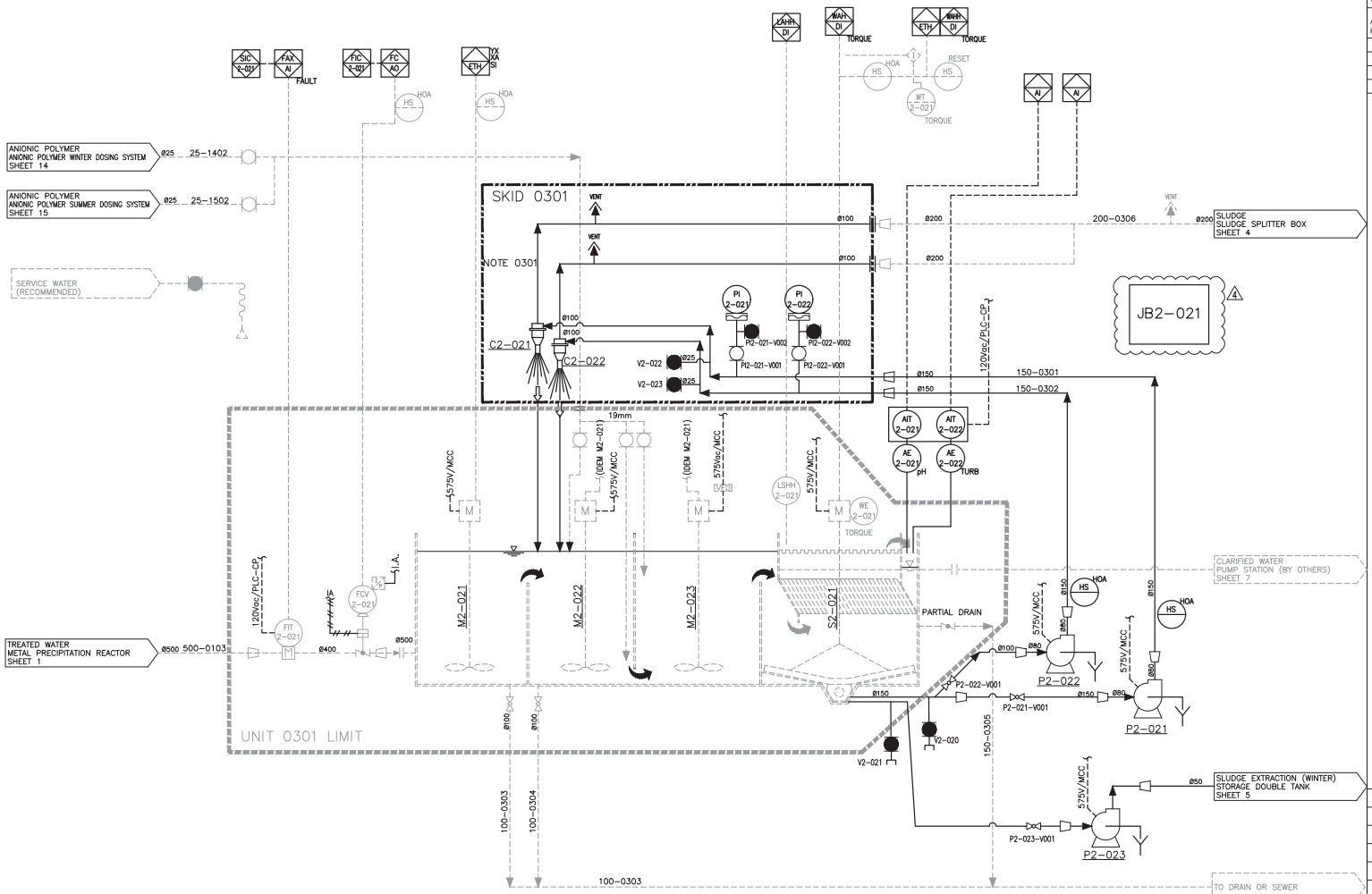

EXISTING SYSTEM FROM MEADOWBANK

M2-021
COAGULATION TANK
MIXER: EVGX 4-3
DRIVER: 3 HP
575V/3Ph/60Hz

M2-022
INJECTION TANK
MIXER: EVGX 4-3
DRIVER: 3 HP
575V/3Ph/60Hz

M2-023
MATURATION TANK
MIXER: EVGX 6-5
DRIVER: 5 HP
575V/3Ph/60Hz

S2-021
SCRAPER
DRIVER: 0.5 HP
575V/3Ph/60Hz

P2-023
MULTIFLO EXTRACTION PUMP
DESIGN: 4m3/h @ 8 psig
DRIVER: 10 HP
575V/3Ph/60Hz

P2-021/P2-022
MICROSAND RECIRCULATION PUMP
Q=70m3/h@24.5 psig
MATERIAL: LINED CAST IRON
DRIVER: 15 HP
575V/3Ph/60Hz

Notes :

Note 0301: Avoid backpressure at the outlet of the hydrocyclones, keep gravity draining.

VWT Canada Scope of Supply limits:

Actiflo units are pre-mounted as much as possible. However, for freight purposes or general practical reasons, the installation of some items needs to be completed on site by the Subcontractor.

REV.	DESCRIPTION	DATE	RÉVISÉ REVISED	VÉRIFIÉ CHECKED	APPROUVÉ APPROVED
4	FOR APPROVAL IV	2018-07-04	A.C.	G.P.	G.P.
3	FOR APPROVAL III	2018-05-31	A.C.	G.P.	G.P.
2	FOR APPROVAL II	2018-05-07	A.C.	G.P.	G.P.
1	FOR APPROVAL	2018-04-25	A.C.	G.P.	G.P.

VEOLIA WATER TECHNOLOGIES

DESSINÉ PAR/DRAWN BY	A.C. 2018-04-04
VÉRIFIÉ PAR/CHECKED BY	G.P. 2018-04-04
INGÉNIERIE PAR/ENGINEERING BY	G.P. 2018-04-04

CLIENT: AGNICO EAGLE MINING
AMARUQ, NU

TITRE / TITLE
WATER TREATMENT PLANT
PROCESS AND INSTRUMENTATION DIAGRAM
ACTIFLO #2 / MULTIFLO #2

ÉCHELLE / SCALE: N.T.S.

PROJET / PROJECT	DESSIN No /DRAWING No	INTERNE / INTERVAL	FEUILLET / SHEET	REV./REV
5000218009 – PI0001		GEN	3/19	4

Ce document est la propriété de VEOLIA et ne peut être reproduit sans son autorisation écrite / This document is the property of VEOLIA and cannot be reproduced without its written authorization

REF: N/A
SIZE ANSI D

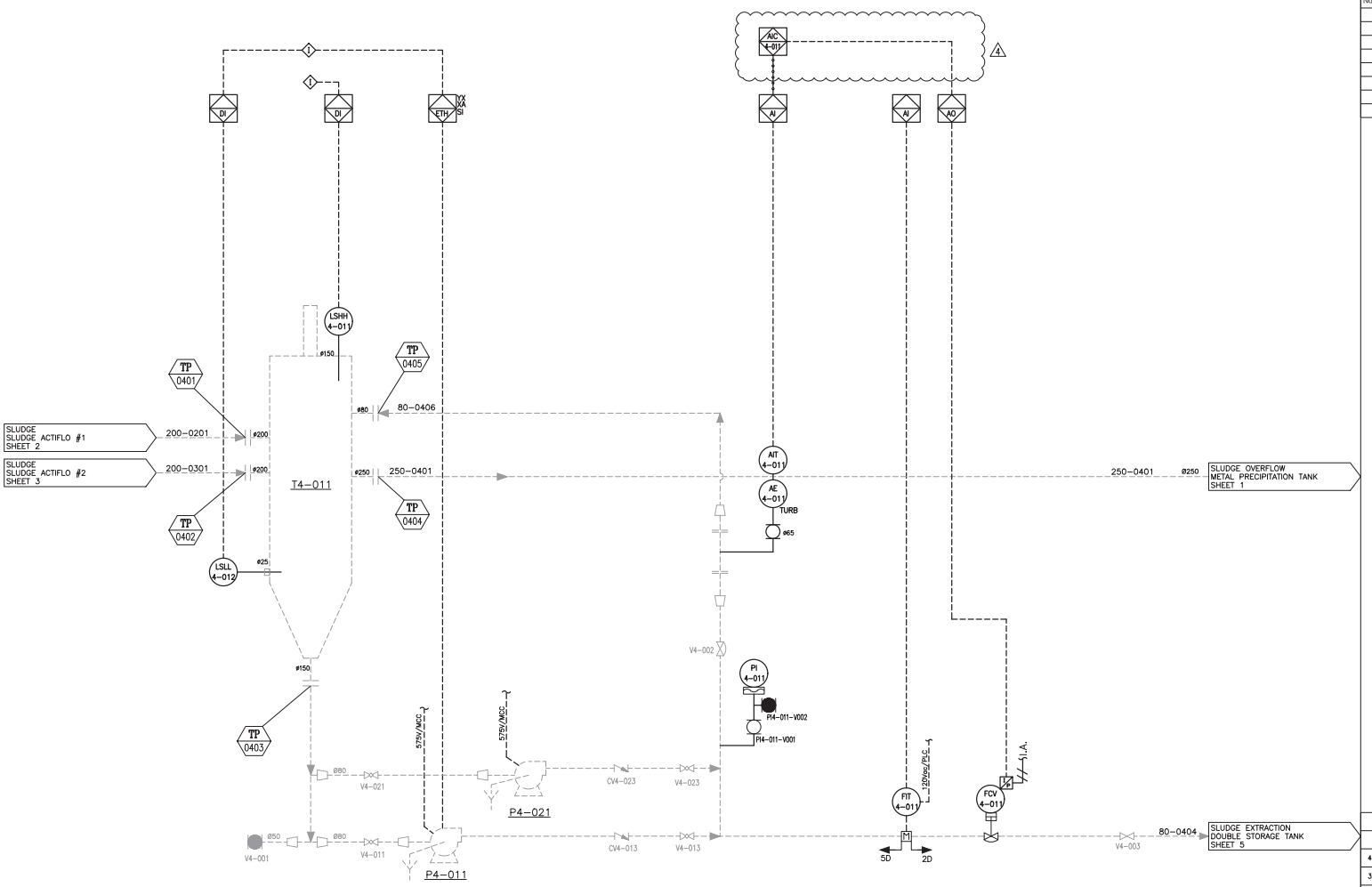

T4-011
(BY OTHERS)
SLUDGE SPLITTER BOX
MATERIAL: SS304
VOLUME: 1.4 m3

P4-011/P4-021 (EXISTING)
SLUDGE EXTRACTION PUMP
CAP.: 42 (28+14) m3/h @ 5mTDH
POWER: 5 HP
575V/3Ph/60Hz

Notes :

Note 0401: Avoid backpressure at the outlet of the hydrocyclones, keep gravity draining.

REV.	DESCRIPTION	DATE	RÉVISÉ REVISED	VÉRIFIÉ CHECKED	APPROUVÉ APPROVED
4	FOR APPROVAL IV	2018-07-04	A.C.	G.P.	G.P.
3	FOR APPROVAL III	2018-05-31	A.C.	G.P.	G.P.
2	FOR APPROVAL II	2018-05-07	A.C.	G.P.	G.P.
1	FOR APPROVAL	2018-04-25	A.C.	G.P.	G.P.

DESSINÉ PAR/DRAWN BY A.C. 2018-04-04
VÉRIFIÉ PAR/CHECKED BY G.P. 2018-04-04
INGÉNIEUR PAR/ENGINEERING BY G.P. 2018-04-04

CLIENT: AGNICO EAGLE MINING
AMARUQ, NU

VEOLIA WATER TECHNOLOGIES

TITRE / TITLE
WATER TREATMENT PLANT
PROCESS AND INSTRUMENTATION DIAGRAM
SLUDGE SPLITTER BOX

ÉCHELLE / SCALE: N.T.S.

PROJET / PROJECT DESSIN No /DRAWING No: 5000218009 – PI0001
INTERNE / INTERNAL: GEN
FEUILLET / SHEET: 4/19
RÉV./REV: 4

Ce document est la propriété de VEOLIA et ne peut être reproduit sans son autorisation écrite. / This document is the property of VEOLIA and cannot be reproduced without its written authorization

REF: N/A

SIZE ANSI D

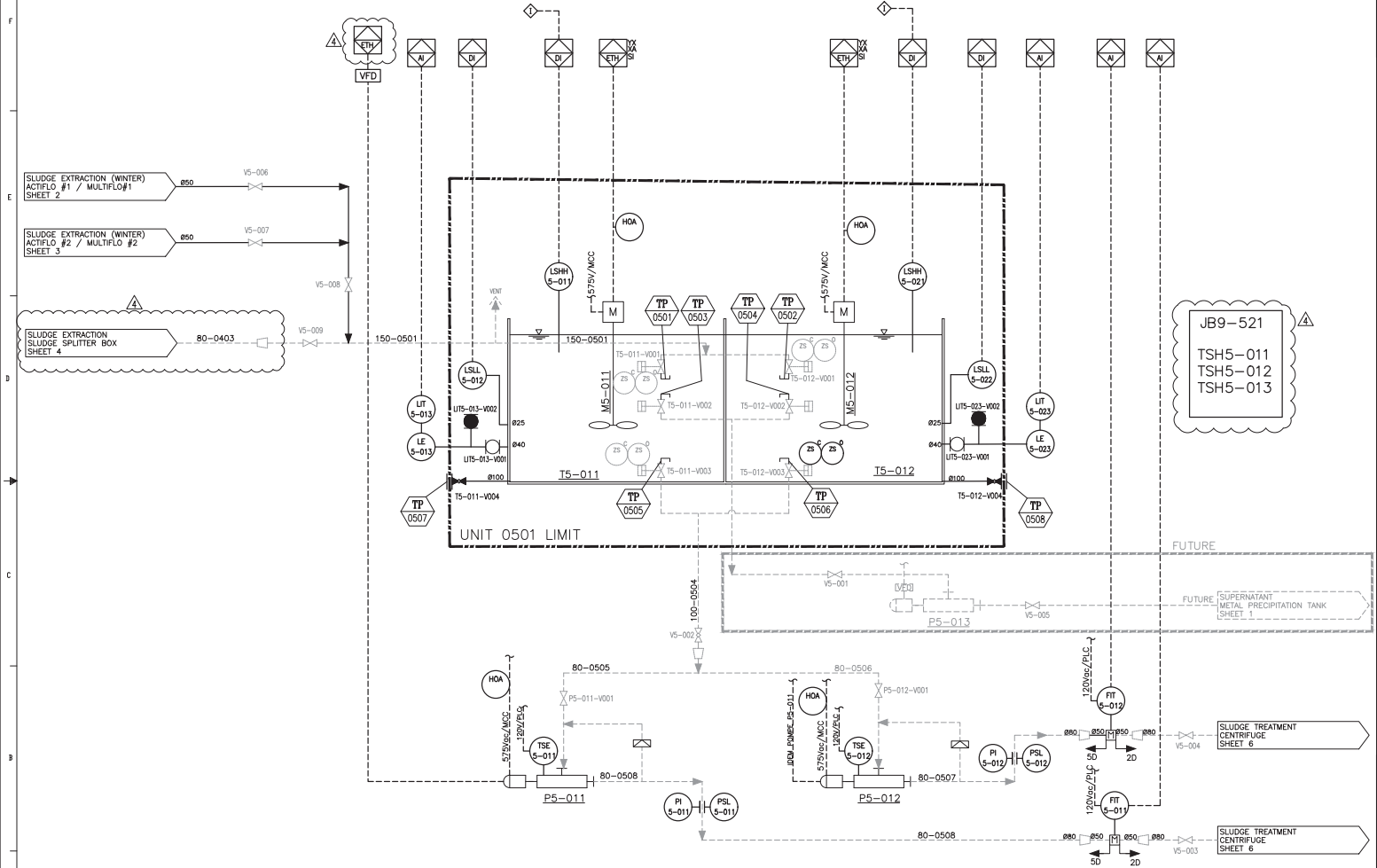

T5-011/012
DOUBLE STORAGE TANK
MODEL: RX75-2
MATERIAL: C.S.
VOLUME: XXX m3

M5-011/012
DOUBLE STORAGE TANK MIXER
MIXER: EVGX6-5
DRIVER: 5 HP
575V/3PH/60Hz
MATERIAL: SS304

P5-011/012
CENTRIFUGE FEEDING PUMP
TYPE: PROGRESSIVE CAVITY
CAP.: 20m3/h @ 50psig
POWER: 5 HP, 575/3/60

P5-013
PUMP (FUTURE)
TYPE: PROGRESSIVE CAVITY
CAP.: XXm3@50psig
POWER: XXHP, 575/3/60

VWT Canada Scope of Supply limits:

RX tanks are pre-mounted as much as possible. However, for freight purposes or general practical reasons, the installation of some items needs to be completed on site by the Subcontractor.

REV. REV.	DESCRIPTION	DATE	REVISE REVISED	VERIFIE CHECKED	APPROUVE APPROVED
4	FOR APPROVAL IV	2018-07-04	A.C.	G.P.	G.P.
3	FOR APPROVAL III	2018-05-31	A.C.	G.P.	G.P.
2	FOR APPROVAL II	2018-05-07	A.C.	G.P.	G.P.
1	FOR APPROVAL	2018-04-25	A.C.	G.P.	G.P.

VEOLIA WATER TECHNOLOGIES

DESSINE PAR/DRAWN BY A.C.	DATE 2018-04-04	CLIENT AGNICO EAGLE MINING AMARUQ, NU
VÉRIFIÉ PAR/CHECKED BY G.P.	DATE 2018-04-04	
INGÉNIERIE PAR/ENGINEERING BY G.P.	DATE 2018-04-04	

TITRE / TITLE
WATER TREATMENT PLANT
PROCESS AND INSTRUMENTATION DIAGRAM
STORAGE DOUBLE TANK

ÉCHELLE / SCALE: N.T.S.

PROJET / PROJECT	DESSIN No /DRAWING No	INTERNE / INTERNAL	FEUILLET / SHEET	REV./REV
5000218009	PI0001	GEN	5/19	4

Ce document est la propriété de VEOLIA et ne peut être reproduit sans son autorisation écrite. / This document is the property of VEOLIA and cannot be reproduced without its written authorisation

REF: N/A

SIZE ANSI D

Jul 20, 2018 11:20:04 - W:\2018\5000218009 Amaruq (TIH128505)\15- Dessins execution_Drawings\B- P\5000218009-PI0001_4.dwg - cristeca

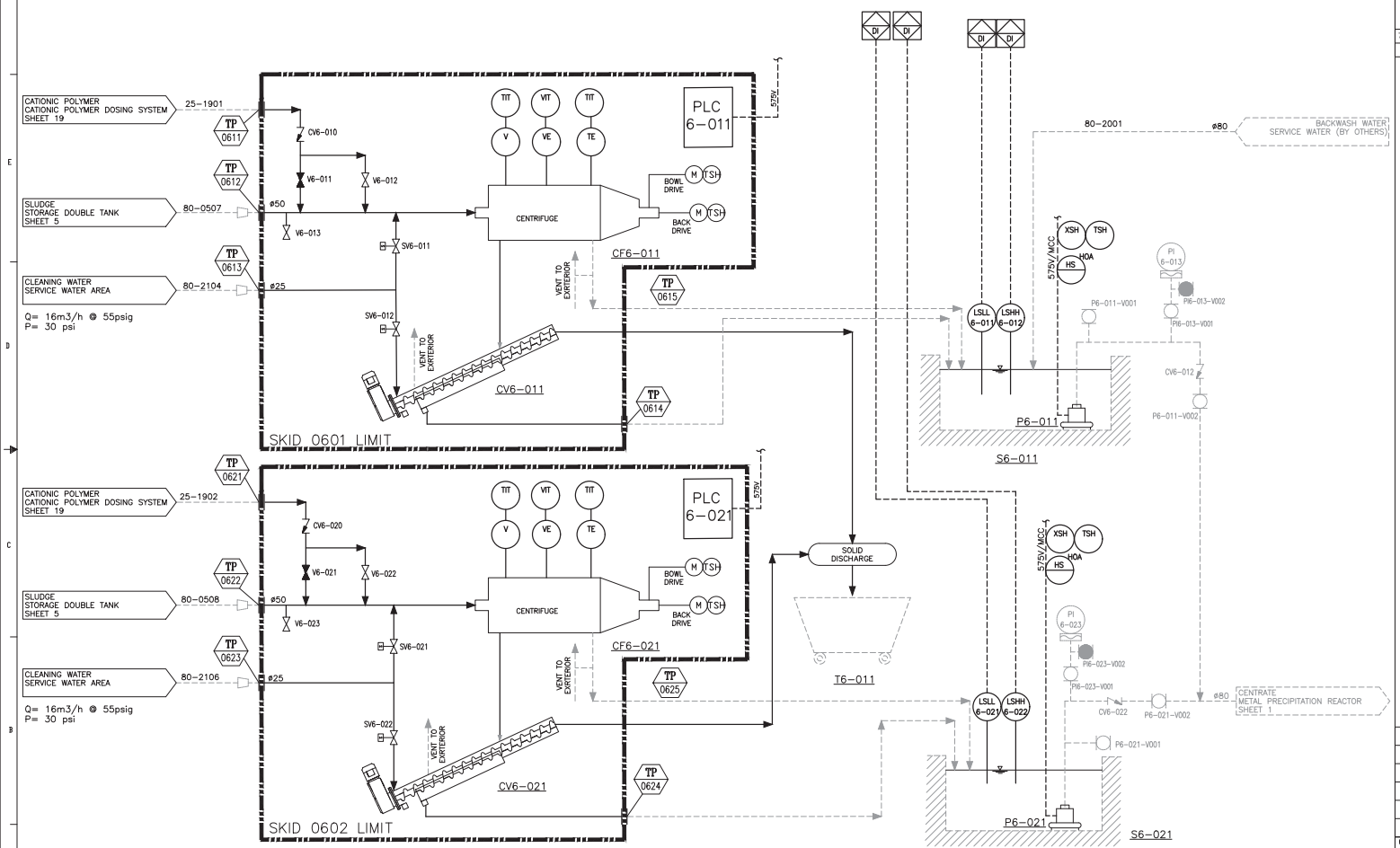

CV6-011 / CV6-021
CONVEYOR
POWER: 575V/3PH/60Hz

CF6-011 / CF6-021
CENTRIFUGE
BOWL DRIVE MOTOR
POWER: 575V/3PH/60Hz

T6-011
ROLL-OFF BIN
(BY OTHERS)

S6-011 / S6-021
SUMP PUMP PIT
VOL.: 5m3

P6-011 / P6-021
CENTRATE SUMP PUMP
TYPE: SUBMERSIBLE PUMP
CAP : 20 m3/h @ 8 mTDH
POWER: 5 HP 575V/3Ph/60Hz

Notes :

1. All piping to and from machine to be completed with flexible connections.
2. See foundation details for design loads and connection details.
3. All dimensions are in mm with inches in [ ].
4. Dry weight of machine 3059kg [6744 lbs].
5. Scroll weight 510 kg [1124 lbs].
6. Process requirements
   Washwater: 35.2-70.4GPM @ 43.5-58PSI
   Shutdown: 15min
   CIP: 10min
   Air flow: 118CFM
   Minimum sludge inlet pressure: 7.5PSI at centrifuge feed flange.
7. All chutes to be supported by others unless noted otherwise.

REV.	DESCRIPTION	DATE	RÉVISÉ REVISED	VÉRIFIÉ CHECKED	APPROUVÉ APPROVED
4	FOR APPROVAL IV	2018-07-04	A.C.	G.P.	G.P.
3	FOR APPROVAL III	2018-05-31	A.C.	G.P.	G.P.
2	FOR APPROVAL II	2018-05-07	A.C.	G.P.	G.P.
1	FOR APPROVAL	2018-04-25	A.C.	G.P.	G.P.

DESSINÉ PAR/DRAWN BY: A.C. DATE: 2018-04-04
VÉRIFIÉ PAR/CHECKED BY: G.P. DATE: 2018-04-04
RÉVISÉ PAR/ENGINEERING BY: G.P. DATE: 2018-04-04

CLIENT: AGNICO EAGLE MINING
AMARUQ, NU

VEOLIA WATER TECHNOLOGIES

TITRE / TITLE:
WATER TREATMENT PLANT
PROCESS AND INSTRUMENTATION DIAGRAM
SLUDGE TREATMENT SYSTEM

ÉCHELLE / SCALE: N.T.S.

PROJET / PROJECT	DESSIN No /DRAWING No	INTERNE / INTERVAL	FEUILLET / SHEET	REV./REV
5000218009 –	PI0001	GEN	6/19	4

Ce document est la propriété de VEOLIA et ne peut être reproduit sans son autorisation écrite / This document is the property of VEOLIA and cannot be reproduced without its written authorization

REF: N/A
SIZE ANSI D

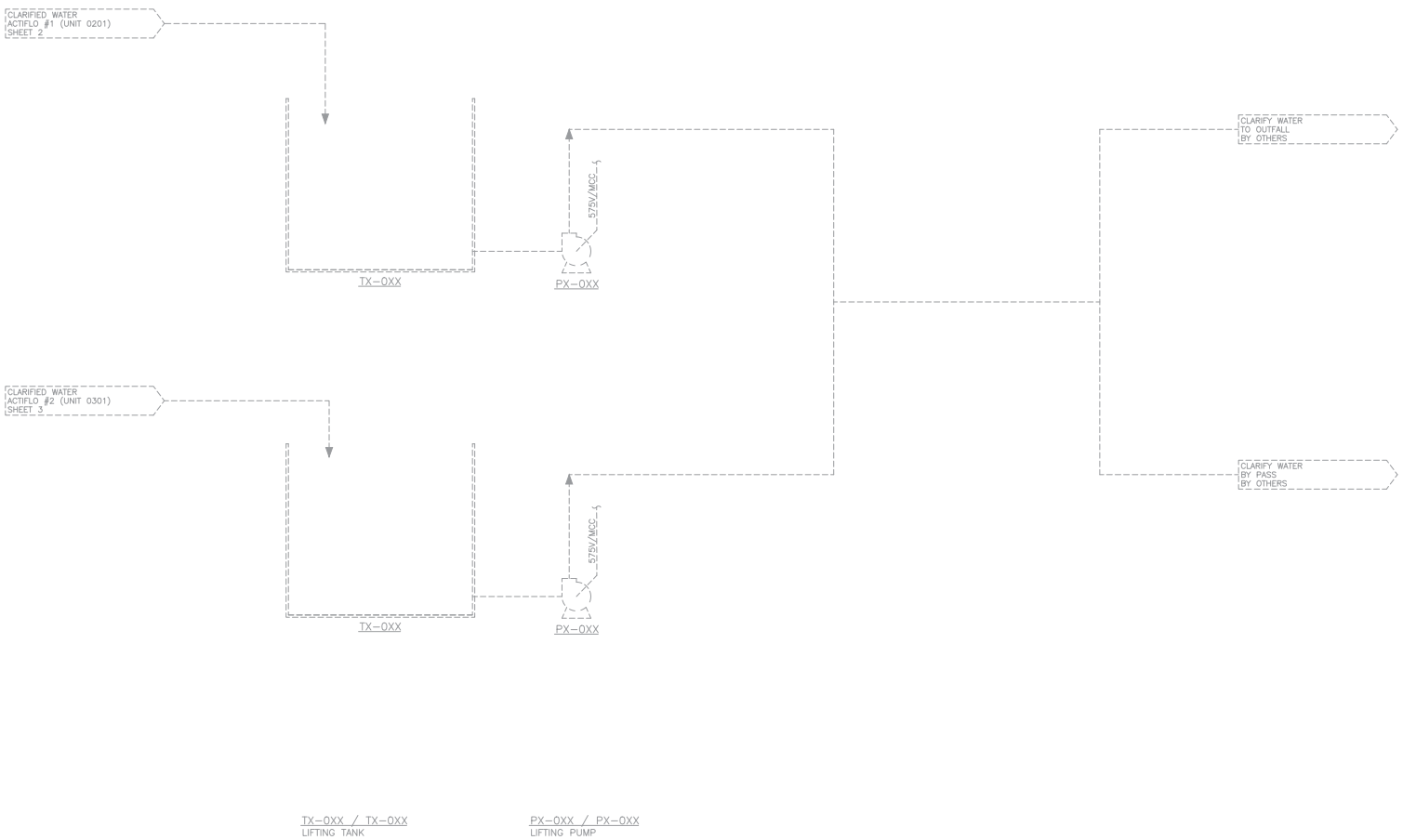

Notes :

REV. REV.	DESCRIPTION	DATE	REVISÉ REVISED	VÉRIFIÉ CHECKED	APPROUVÉ APPROVED
4	FOR APPROVAL IV	2018-07-04	A.C.	G.P.	G.P.
3	FOR APPROVAL III	2018-05-31	A.C.	G.P.	G.P.
2	FOR APPROVAL II	2018-05-07	A.C.	G.P.	G.P.
1	FOR APPROVAL	2018-04-25	A.C.	G.P.	G.P.

VEOLIA WATER TECHNOLOGIES

DESSINÉ PAR/DRAWN BY A.C.	DATE 2018-04-04	CLIENT AGNICO EAGLE MINING AMARUQ, NU
VÉRIFIÉ PAR/CHECKED BY G.P.	DATE 2018-04-04	
INGÉNIÉRÉ PAR/ENGINEERING BY G.P.	DATE 2018-04-04	

TITRE / TITLE
WATER TREATMENT PLANT
PROCESS AND INSTRUMENTATION DIAGRAM
PUMP STATION

ÉCHELLE / SCALE: N.T.S.

PROJET / PROJECT	DESSIN No /DRAWING No	INTERNE / INTERNAL	FEUILLET / SHEET	RÉV./REV
5000218009	PI0001	GEN	7/19	4

Ce document est la propriété de VEOLIA et ne peut être reproduit sans son autorisation écrite. / This document is the property of VEOLIA and cannot be reproduced without its written authorization

REF: N/A

SIZE ANSI D

Jul 20, 2018 11:20:14 - W:\2018\5000218009 Amaruq (TH128505)\15- Dessins execution_Drawings\B- P\5000218009-PI0001_4.dwg - cristeco

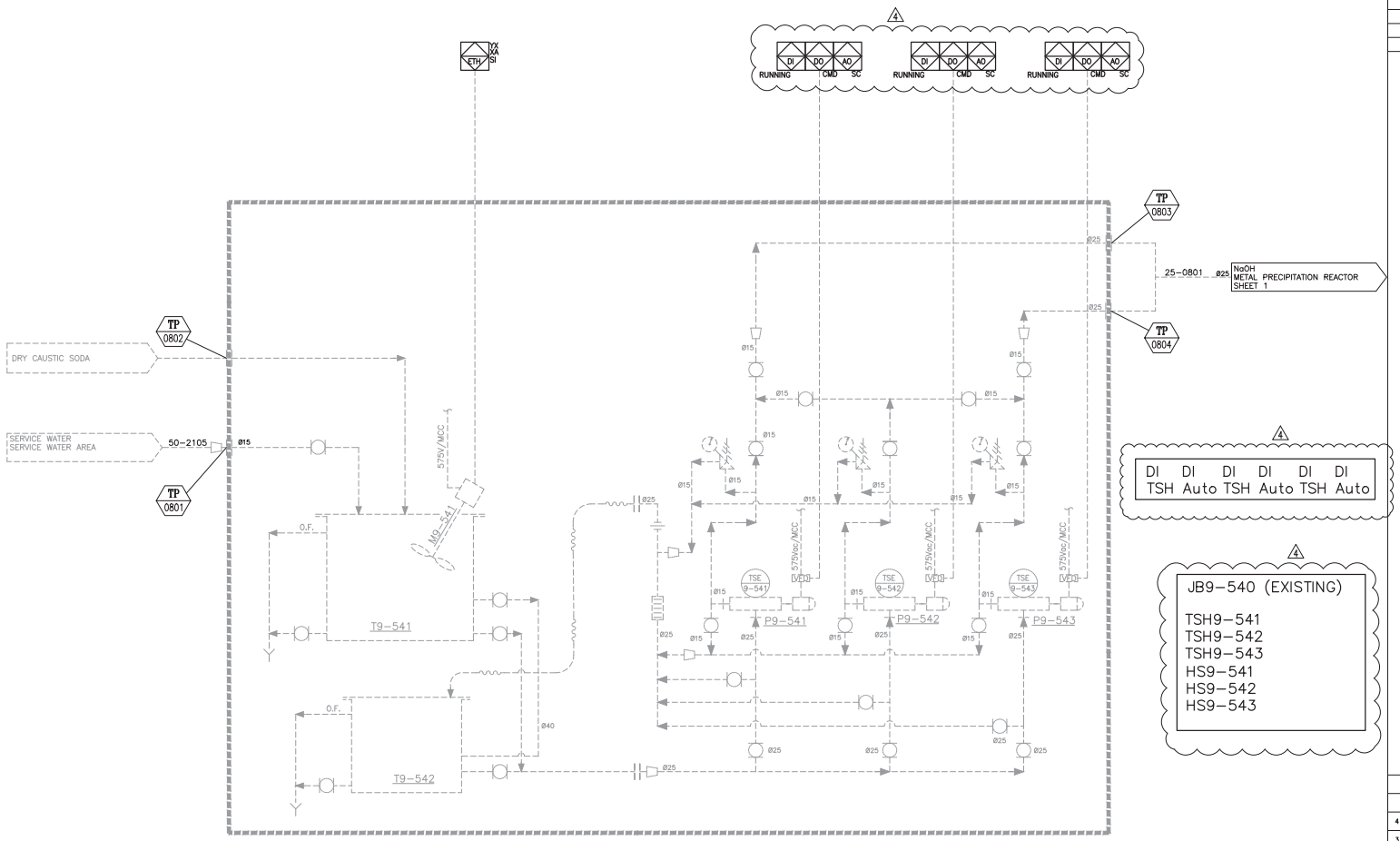

EXISTING SYSTEM FROM MEADOWBANK

T9-541
CAUSTIC SODA PREPARATION TANK
TOTAL CAP: 340 L
MATL: POLYETHYLENE

T9-542
CAUSTIC SODA DOSING TANK
TOTAL CAP: 70 L
MATL: POLYETHYLENE

M9-541
CAUSTIC SODA MIXER
DRIVER: 0.5HP
575V/3Ph/60Hz

P9-541/P9-542/P9-543
CAUSTIC SODA METERING PUMP
DESIGN: 3.3-50 L/h @7 BARS
MOTOR: 0.5HP
POWER SUPPLY: 575V/3PH/60Hz

Notes :

REV.	DESCRIPTION	DATE	RÉVISÉ REVISED	VÉRIFIÉ CHECKED	APPROUVÉ APPROVED
4	FOR APPROVAL IV	2018-07-04	A.C.	G.P.	G.P.
3	FOR APPROVAL III	2018-05-31	A.C.	G.P.	G.P.
2	FOR APPROVAL II	2018-05-07	A.C.	G.P.	G.P.
1	FOR APPROVAL	2018-04-25	A.C.	G.P.	G.P.

DESSINÉ PAR/DRAWN BY A.C. DATE 2018-04-04
VÉRIFIÉ PAR/CHECKED BY G.P. DATE 2018-04-04
INGÉNIEUR PAR/ENGINEERING BY G.P. DATE 2018-04-04

CLIENT
AGNICO EAGLE MINING
AMARUQ, NU

VEOLIA WATER TECHNOLOGIES

TITRE / TITLE
WATER TREATMENT PLANT
PROCESS AND INSTRUMENTATION DIAGRAM
CAUSTIC SODA PREPARATION AND DOSING SYSTEM

ÉCHELLE / SCALE N.T.S.

PROJET / PROJECT	DESSIN No /DRAWING No	INTERNE / INTERVAL	FEUILLET / SHEET	REV./REV
5000218009 – PI0001		GEN	8/19	4

Ce document est la propriété de VEOLIA et ne peut être reproduit sans son autorisation écrite. / This document is the property of VEOLIA and cannot be reproduced without its written authorization

REF: N/A

SIZE ANSI D

Jul 20, 2018 11:20:19 - W:\5\218\5000218009 Amaruq (Thiel2500)\15- Detailed execution\Drawings\5- PI\5000218009-PI0001_4.dwg - cardenas

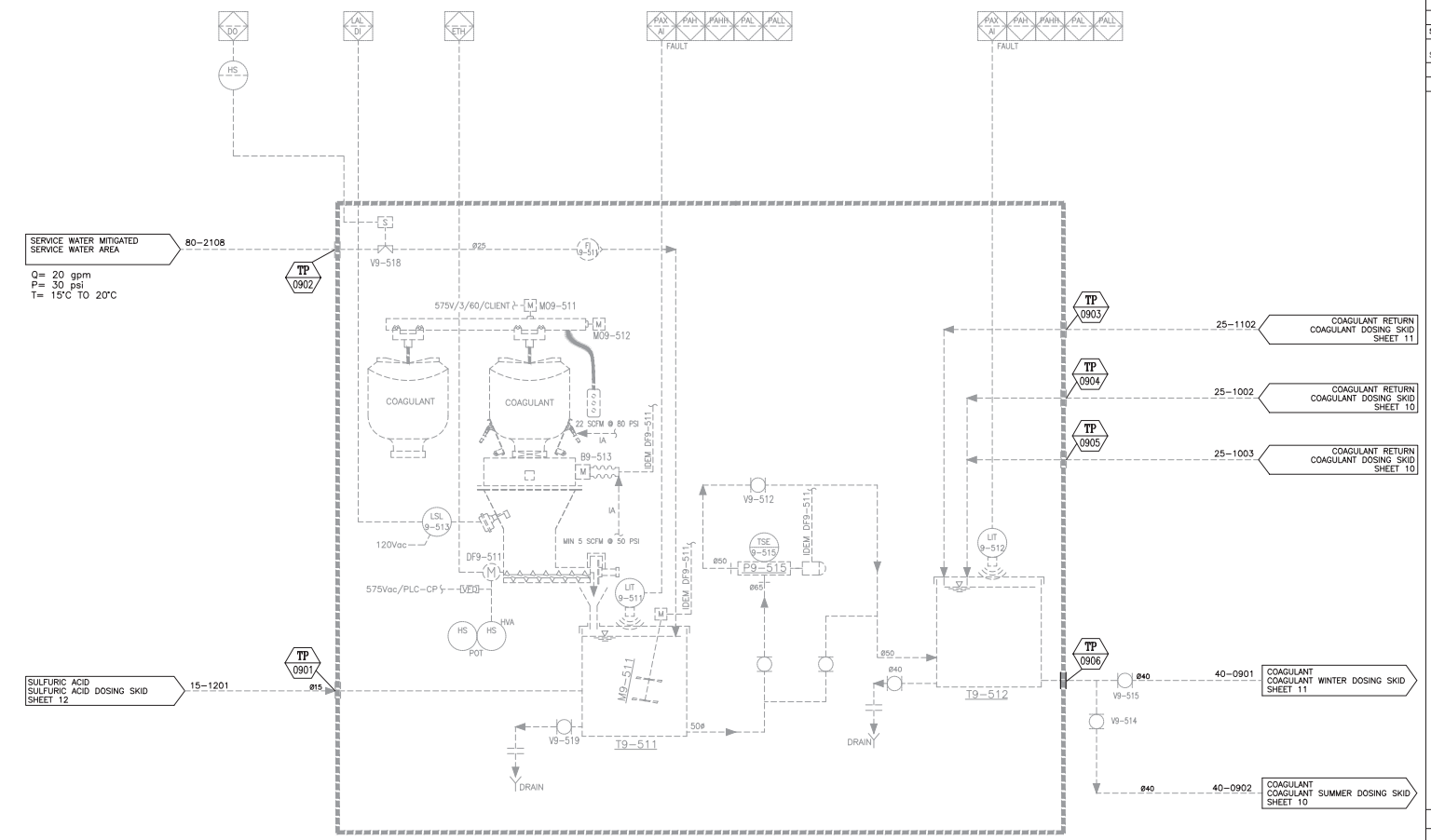

EXISTING SYSTEM FROM MEADOWBANK

P9-515
COAGULANT TRANSFER PUMP
CAPACITY: 5000 L/H @ 30 psi
MOTOR: 5HP, 1150 rpm
POWER SUPPLY: 575V/3Ph/60Hz

DF9-511
DRY FEEDER
CAPACITY: 200 KG/H
DRIVER: 0.75HP
POWER SUPPLY: 575V/3Ph/60Hz

T9-511
COAGULANT MATURATION TANK
CAP.TOTAL: 1000 L

T9-512
COAGULANT DOSING TANK
CAP: 1000L

M9-511
COAGULANT MIXER
DRIVER: 1HP
POWER SUPPLY: 575V/3Ph/60Hz

B9-513
BLOWER
DRIVER: 1.5HP
POWER SUPPLY: 575V/3Ph/60Hz

M09-511
TROLLEY
DRIVER: 0.5 HP
POWER SUPPLY: 575V/3Ph/60Hz

M09-512
HOIST
DRIVER: 2.4 HP
POWER SUPPLY: 575V/3Ph/60Hz

Notes :

Note 0901 : The vent must be higher than the storage tank.

Safety requirements :

Safety Shower must be provided in the immediate work area for emergency use (as per ANSI Z358.1)

REV. REV.	DESCRIPTION	DATE	REVISE REVISED	VERIFIE CHECKED	APPROUVE APPROVED
4	FOR APPROVAL IV	2018-07-04	A.C.	G.P.	G.P.
3	FOR APPROVAL III	2018-05-31	A.C.	G.P.	G.P.
2	FOR APPROVAL II	2018-05-07	A.C.	G.P.	G.P.
1	FOR APPROVAL	2018-04-25	A.C.	G.P.	G.P.

VEOLIA WATER TECHNOLOGIES

DESSINÉ PAR/DRAWN BY A.C.	DATE 2018-04-04	CLIENT AGNICO EAGLE MINING AMARUQ, NU
VÉRIFIÉ PAR/CHECKED BY G.P.	DATE 2018-04-04	
INGÉNIERIE PAR/ENGINEERING BY G.P.	DATE 2018-04-04	

TITRE / TITLE
WATER TREATMENT PLANT
PROCESS AND INSTRUMENTATION DIAGRAM
COAGULANT PREPARATION

ÉCHELLE / SCALE: N.T.S.

PROJET / PROJECT	DESSIN No /DRAWING No	INTERNE / INTERNAL	FEUILLET / SHEET	REV./REV
5000218009	PI0001	GEN	9/19	3

Ce document est la propriété de VEOLIA et ne peut être reproduit sans son autorisation écrite. / This document is the property of VEOLIA and cannot be reproduced without its written authorization

REF: N/A

SIZE ANSI D

Jul 20, 2018 11:20:24 - W:\2018\5000218009 Amaruq (TIH128505)\15- Dessins execution_Drawings\B- P\5000218009-PI0001_4.dwg - cristeca

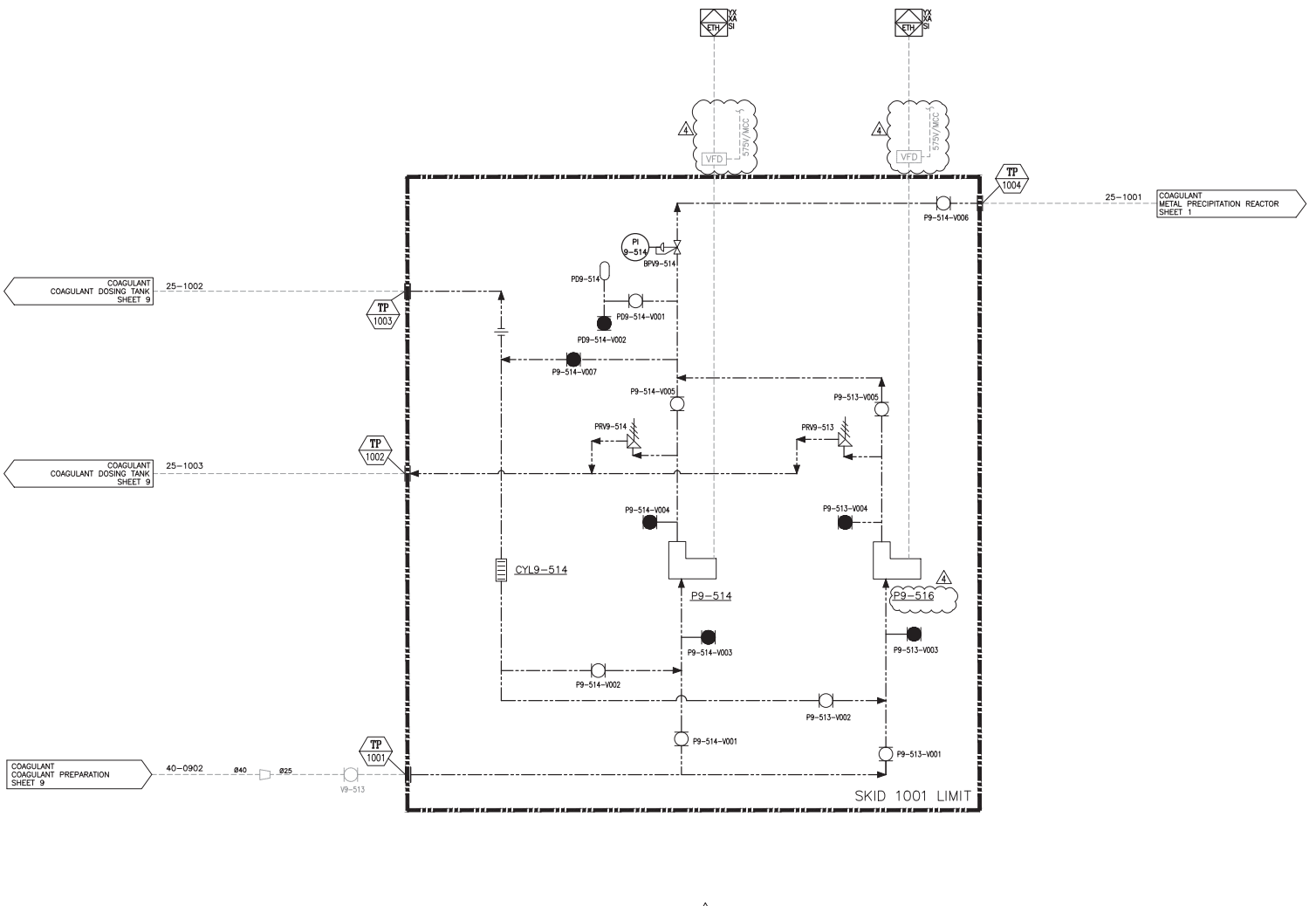

Notes :

Safety requirements :

Safety Shower must be provided in the immediate work area for emergency use (as per ANSI Z358.1)

REV.	DESCRIPTION	DATE	RÉVISÉ / REVISED	VÉRIFIÉ / CHECKED	APPROUVÉ / APPROVED
4	FOR APPROVAL IV	2018-07-04	A.C.	G.P.	G.P.
3	FOR APPROVAL III	2018-05-31	A.C.	G.P.	G.P.
2	FOR APPROVAL II	2018-05-07	A.C.	G.P.	G.P.
1	FOR APPROVAL	2018-04-25	A.C.	G.P.	G.P.

VEOLIA WATER TECHNOLOGIES

DESSINÉ PAR/DRAWN BY	A.C.	DATE 2018-04-04
VÉRIFIÉ PAR/CHECKED BY	G.P.	DATE 2018-04-04
INGÉNIEUR PAR/ENGINEERING BY	G.P.	DATE 2018-04-04

CLIENT: AGNICO EAGLE MINING
AMARUQ, NU

TITRE / TITLE
WATER TREATMENT PLANT
PROCESS AND INSTRUMENTATION DIAGRAM
COAGULANT SUMMER DOSING SYSTEM

ÉCHELLE / SCALE: N.T.S.

PROJET / PROJECT	DESSIN No /DRAWING No	INTERNE / INTERVAL	FEUILLET / SHEET	REV./REV
5000218009 – PI0001		GEN	10/19	4

Ce document est la propriété de VEOLIA et ne peut être reproduit sans son autorisation écrite / This document is the property of VEOLIA and cannot be reproduced without its written authorization

REF: N/A

SIZE ANSI D

Jul 20, 2018 11:02:28 - W:\5000218009\Amarq (TM:285905)\15- Detaille execution_Drawings\En - P\5000218009-PI0001_4.dwg - cardenas

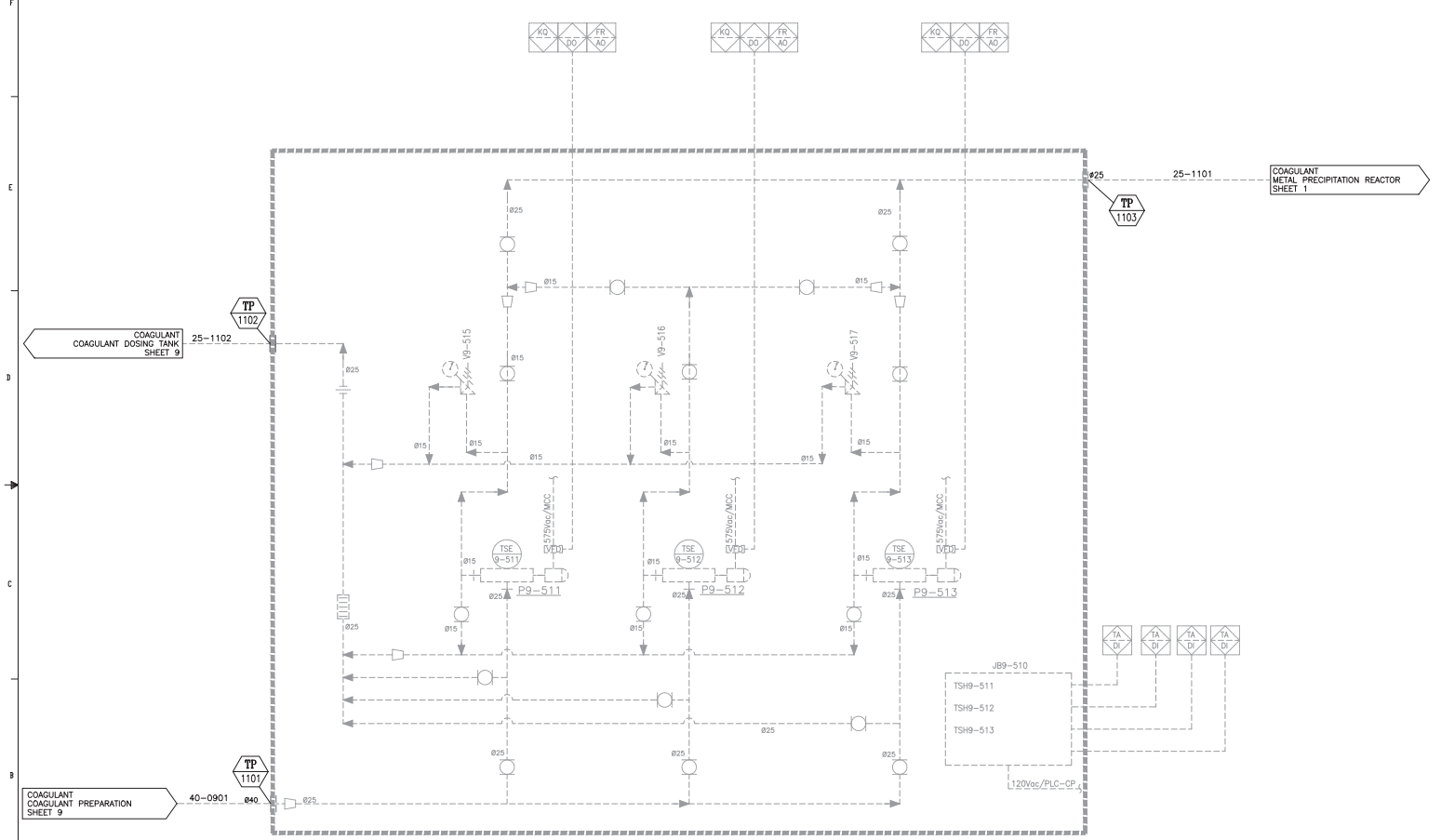

EXISTING SYSTEM FROM MEADOWBANK

P9-511/P9-512/P9-513
COAGULANT METERING PUMP
DESIGN: 87 L/h @2 BARS
MOTOR: 0.5HP
POWER SUPPLY: 575V/3PH/60Hz

Safety requirements :

Safety Shower must be provided in the immediate work area for emergency use (as per ANSI Z358.1)

REV. REV.	DESCRIPTION	DATE	REVISÉ REVISED	VÉRIFIÉ CHECKED	APPROUVÉ APPROVED
4	FOR APPROVAL IV	2018-07-04	A.C.	G.P.	G.P.
3	FOR APPROVAL III	2018-05-31	A.C.	G.P.	G.P.
2	FOR APPROVAL II	2018-05-07	A.C.	G.P.	G.P.
1	FOR APPROVAL	2018-04-25	A.C.	G.P.	G.P.

DESSINÉ PAR/DRAWN BY: A.C. — DATE: 2018-04-04
VÉRIFIÉ PAR/CHECKED BY: G.P. — DATE: 2018-04-04
INGÉNIEUR PAR/ENGINEERING BY: G.P. — DATE: 2018-04-04

VEOLIA WATER TECHNOLOGIES

CLIENT: AGNICO EAGLE MINING
AMARUQ, NU

TITRE / TITLE:
WATER TREATMENT PLANT
PROCESS AND INSTRUMENTATION DIAGRAM
COAGULANT WINTER DOSING SYSTEM

ÉCHELLE / SCALE: N.T.S.

PROJET / PROJECT	DESSIN No /DRAWING No	INTERNE / INTERNAL	FEUILLET / SHEET	REV./REV
5000218009 – PI0001		GEN	11/19	4

Ce document est la propriété de VEOLIA et ne peut être reproduit sans son autorisation écrite. / This document is the property of VEOLIA and cannot be reproduced without its written authorization

REF: N/A — SIZE ANSI D

Jul 20, 2018 - 11:25:33 - W:\5018\5000218009 Amaruq (TH\1385805)\15- Detailed execution_Drawings\P-PI\5000218009-PI0001_4.dwg - cnikiema

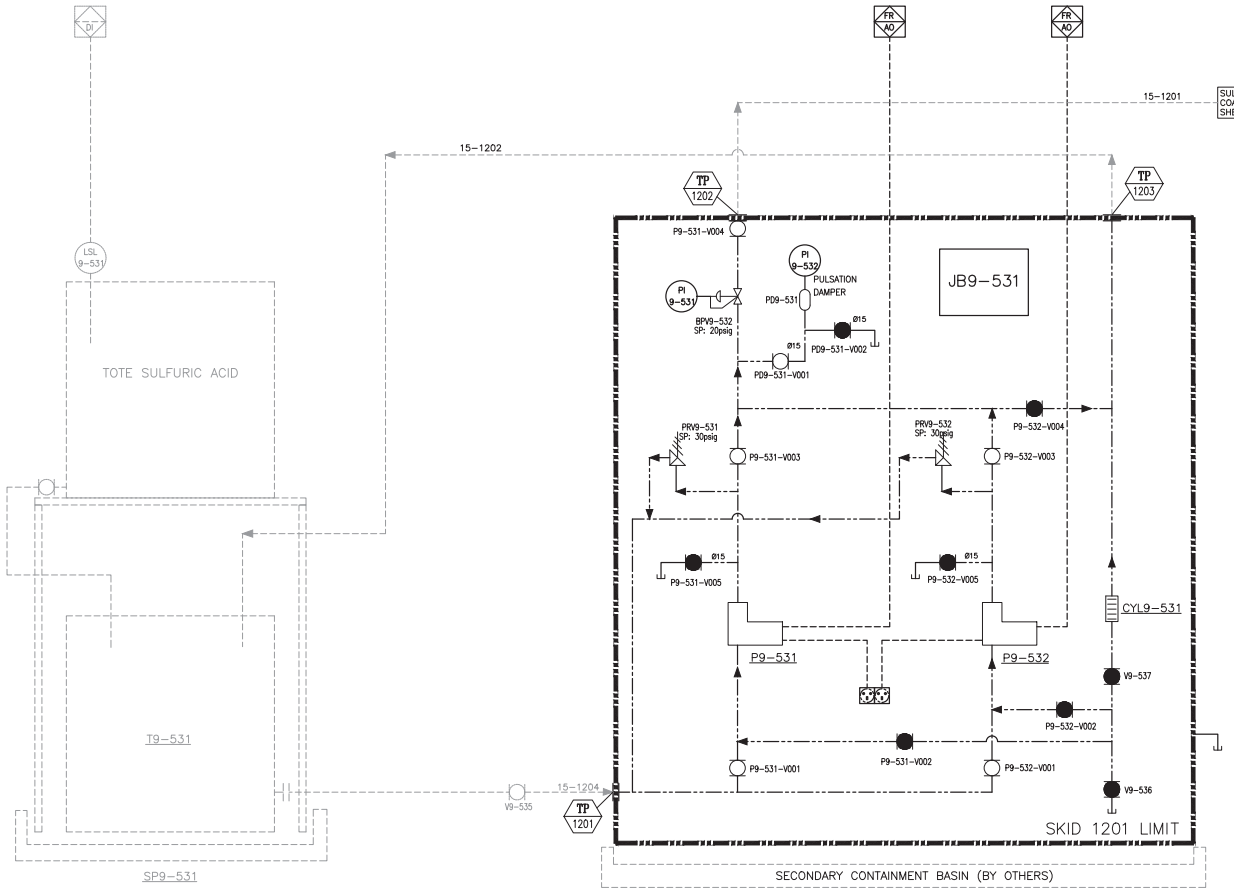

SP9-531 (BY OTHERS)
SECONDARY CONTAINMENT
CAPACITY : 1.8 m^3
MAT'L: HDPE

T9-531 (BY OTHERS)
STORAGE TANK
SULFURIC ACID
MAT'L: HDPE
CAPACITY: 1,5 m^3

P9-531/532
SULFURIC ACID METERING PUMP
TYPE: ELECTROMAGNETIC METERING PUMPS
CAP.: 9LPH@60psig
POWER SUPPLY: 120V/1Ph/60Hz

Safety requirements :

Safety Shower must be provided in the immediate work area for emergency use (as per ANSI Z358.1)

REV.	DESCRIPTION	DATE	RÉVISÉ REVISED	VÉRIFIÉ CHECKED	APPROUVÉ APPROVED
4	FOR APPROVAL IV	2018-07-04	A.C.	G.P.	G.P.
3	FOR APPROVAL III	2018-05-31	A.C.	G.P.	G.P.
2	FOR APPROVAL II	2018-05-07	A.C.	G.P.	G.P.
1	FOR APPROVAL	2018-04-25	A.C.	G.P.	G.P.

VEOLIA WATER TECHNOLOGIES

DESSINÉ PAR/DRAWN BY: A.C. — DATE: 2018-04-04
VÉRIFIÉ PAR/CHECKED BY: G.P. — DATE: 2018-04-04
INGÉNIERIE PAR/ENGINEERING BY: G.P. — DATE: 2018-04-04

CLIENT: AGNICO EAGLE MINING
AMARUQ, NU

TITRE / TITLE:
WATER TREATMENT PLANT
PROCESS AND INSTRUMENTATION DIAGRAM
SULFURIC ACID DOSING SYSTEM

ÉCHELLE / SCALE: N.T.S.

PROJET / PROJECT	DESSIN No /DRAWING No	INTERNE / INTERVAL	FEUILLET / SHEET	REV./REV
5000218009 – PI0001		GEN	12/19	4

Ce document est la propriété de VEOLIA et ne peut être reproduit sans son autorisation écrite / This document is the property of VEOLIA and cannot be reproduced without its written authorization

REF: N/A — SIZE ANSI D

Jul 20, 2018 11:20:38 – W:\2018\5000218009 Amaruq (TNR)\8000\15- Detailed execution_Drawings\A-PI-5000218009-PI0001_4.dwg – cardenas

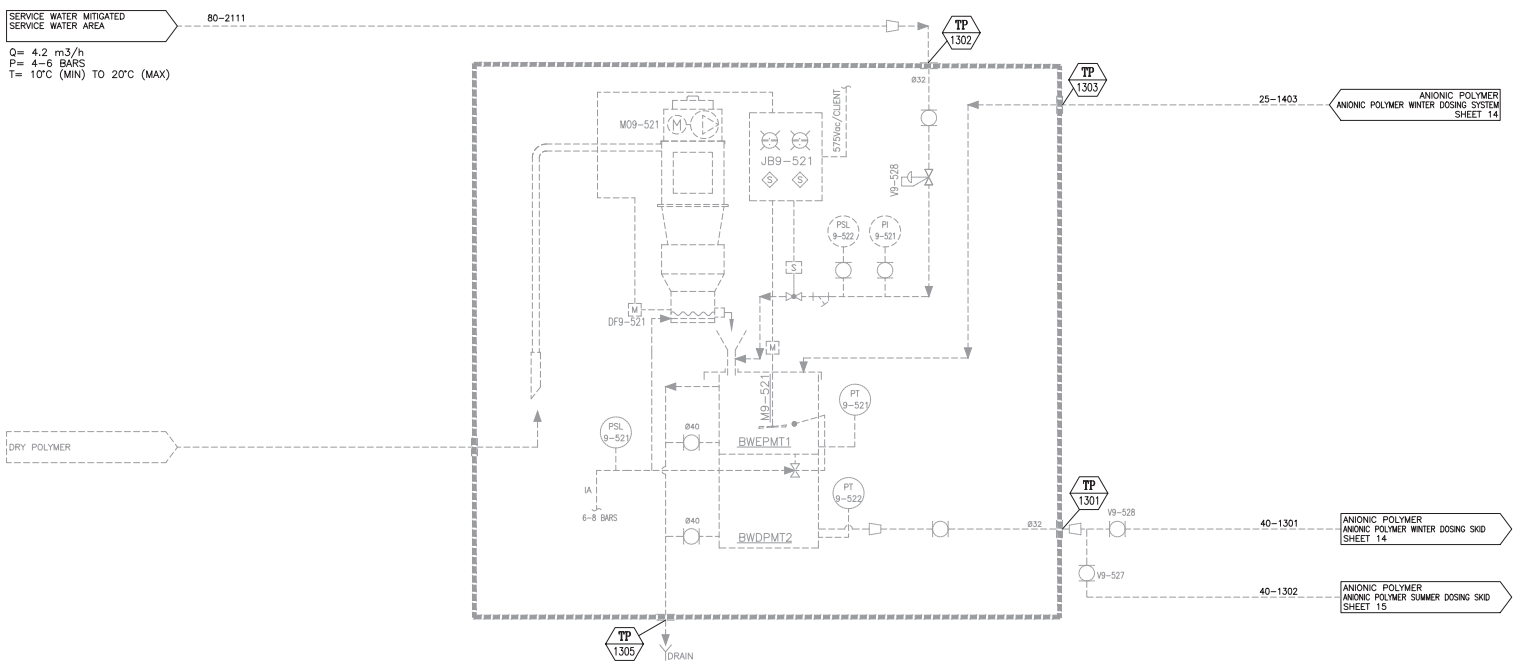

EXISTING SYSTEM FROM MEADOWBANK

BWEPMT1
POLYMER MATURATION TANK
CAP: 1000L

BWDPMT2
POLYMER STORAGE TANK
CAP: 1000L

DF9-521
DRY FEEDER
CAPACITY: 55 Kg/d
DRIVE : 0.25HP
POWER SUPPLY: 575V/3PH/60Hz

M9-521
POLYMER TANK MIXER
DRIVE: 1HP
POWER SUPPLY: 575V/3PH/60Hz

MO9-521
VACUUM CONVEYOR
DRIVE : 1.75HP
POWER SUPPLY: 575V/3PH/60Hz

P9-521/P9-522/P9-523
POLYMER METERING PUMP
DESIGN: 260 L/H @ 2 BARS
MOTOR: 2HP
POWER SUPPLY: 575V/3PH/60Hz

General Notes :

None

VWT Canada Supply limits:

Service water system is pre-mounted as much as possible. However, for freight purposes or general practical reasons, the installation of some items needs to be completed on site by the Subcontractor.

Safety requirements :

Safety Shower must be provided in the immediate work area for emergency use (as per ANSI Z358.1)

REV.	DESCRIPTION	DATE	RÉVISÉ REVISED	VÉRIFIÉ CHECKED	APPROUVÉ APPROVED
4	FOR APPROVAL IV	2018-07-04	A.C.	G.P.	G.P.
3	FOR APPROVAL III	2018-05-31	A.C.	G.P.	G.P.
2	FOR APPROVAL II	2018-05-07	A.C.	G.P.	G.P.
1	FOR APPROVAL	2018-04-25	A.C.	G.P.	G.P.

DESSINÉ PAR/DRAWN BY: A.C. DATE: 2018-04-04
VÉRIFIÉ PAR/CHECKED BY: G.P. DATE: 2018-04-04
INGÉNIEUR PAR/ENGINEERING BY: G.P. DATE: 2018-04-04

CLIENT: AGNICO EAGLE MINING
AMARUQ, NU

VEOLIA WATER TECHNOLOGIES

TITRE / TITLE:
WATER TREATMENT PLANT
PROCESS AND INSTRUMENTATION DIAGRAM
ANIONIC POLYMER PREPARATION

ÉCHELLE / SCALE: N.T.S.

PROJET / PROJECT	DESSIN No /DRAWING No	INTERNE / INTERVAL	FEUILLET / SHEET	REV./REV
5000218009 – PI0001		GEN	13/19	4

Ce document est la propriété de VEOLIA et ne peut être reproduit sans son autorisation écrite / This document is the property of VEOLIA and cannot be reproduced without its written authorization

REF: N/A

SIZE ANSI D

Jul 20, 2018 11:25:43 - W:\5\218\5000218009 Amaruq (Tbl\28500)\15- Detailed execution_Drawings\P- PI\5000218009-PI0001_4.dwg - orleboo

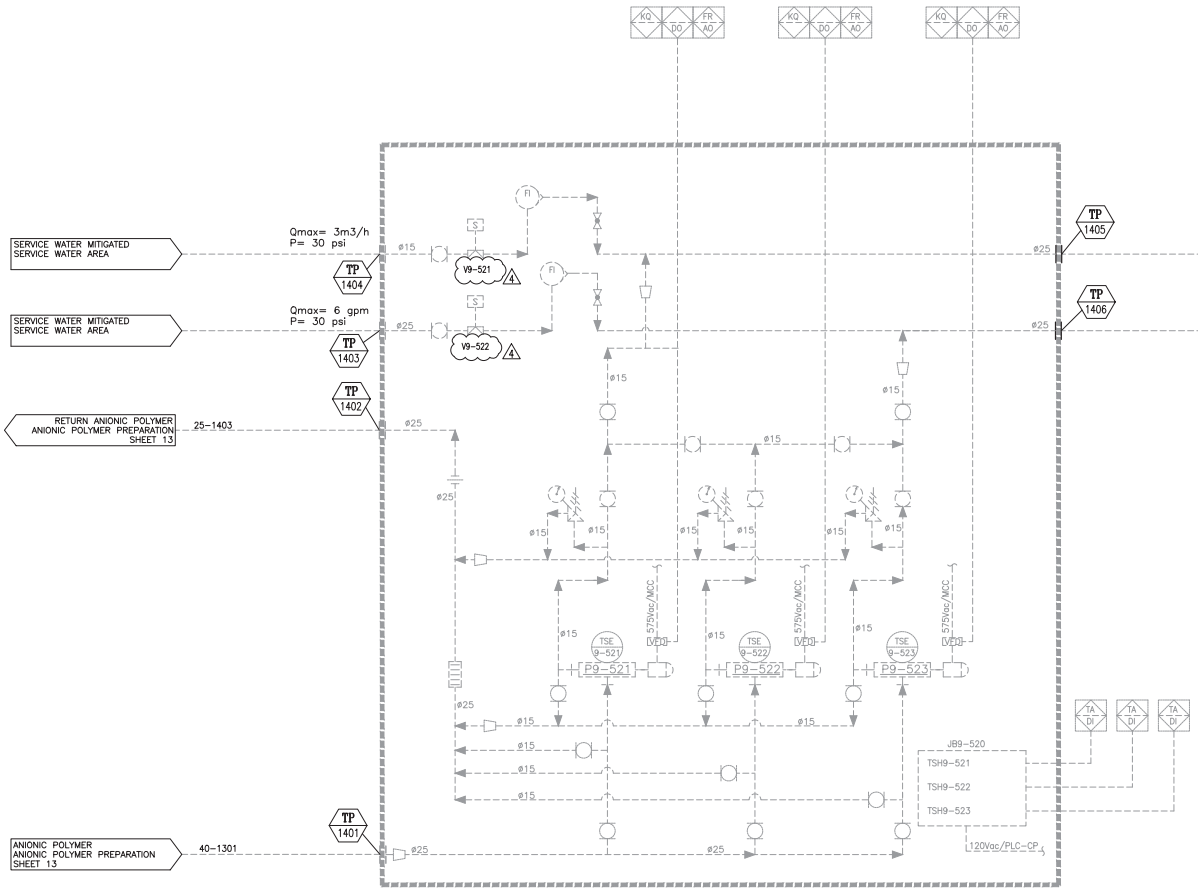

EXISTING SYSTEM FROM MEADOWBANK

P9-521/P9-522/P9-523
POLYMER METERING PUMP
DESIGN: 260 L/H @ 2 BARS
MOTOR: 2HP
POWER SUPPLY: 575V/3PH/60Hz

Notes :

Safety requirements :

Safety Shower must be provided in the immediate work area for emergency use (as per ANSI Z358.1)

REV.	DESCRIPTION	DATE	RÉVISÉ REVISED	VÉRIFIÉ CHECKED	APPROUVÉ APPROVED
4	FOR APPROVAL IV	2018-07-04	A.C.	G.P.	G.P.
3	FOR APPROVAL III	2018-05-31	A.C.	G.P.	G.P.
2	FOR APPROVAL II	2018-05-07	A.C.	G.P.	G.P.
1	FOR APPROVAL	2018-04-25	A.C.	G.P.	G.P.

VEOLIA WATER TECHNOLOGIES

DESSINÉ PAR/DRAWN BY	A.C.
DATE	2018-04-04
VÉRIFIÉ PAR/CHECKED BY	G.P.
DATE	2018-04-04
INGÉNIEUR PAR/ENGINEERING BY	G.P.
DATE	2018-04-04

CLIENT: AGNICO EAGLE MINING
AMARUQ, NU

TITRE / TITLE
WATER TREATMENT PLANT
PROCESS AND INSTRUMENTATION DIAGRAM
ANIONIC POLYMER WINTER DOSING SYSTEM

ÉCHELLE / SCALE: N.T.S.

PROJET / PROJECT	DESSIN No /DRAWING No	INTERNE / INTERVAL	FEUILLET / SHEET	REV./REV
5000218009 – PI0001		GEN	14/19	4

Ce document est la propriété de VEOLIA et ne peut être reproduit sans son autorisation écrite / This document is the property of VEOLIA and cannot be reproduced without its written authorization

REF: N/A
SIZE ANSI D

Jul 20, 2018 11:20:48 – W:\5\218\5000218009 Amaruq (Thiess)\15- Detailed execution\Drawings\P-PI\5000218009-PI0001_4.dwg – cmilano

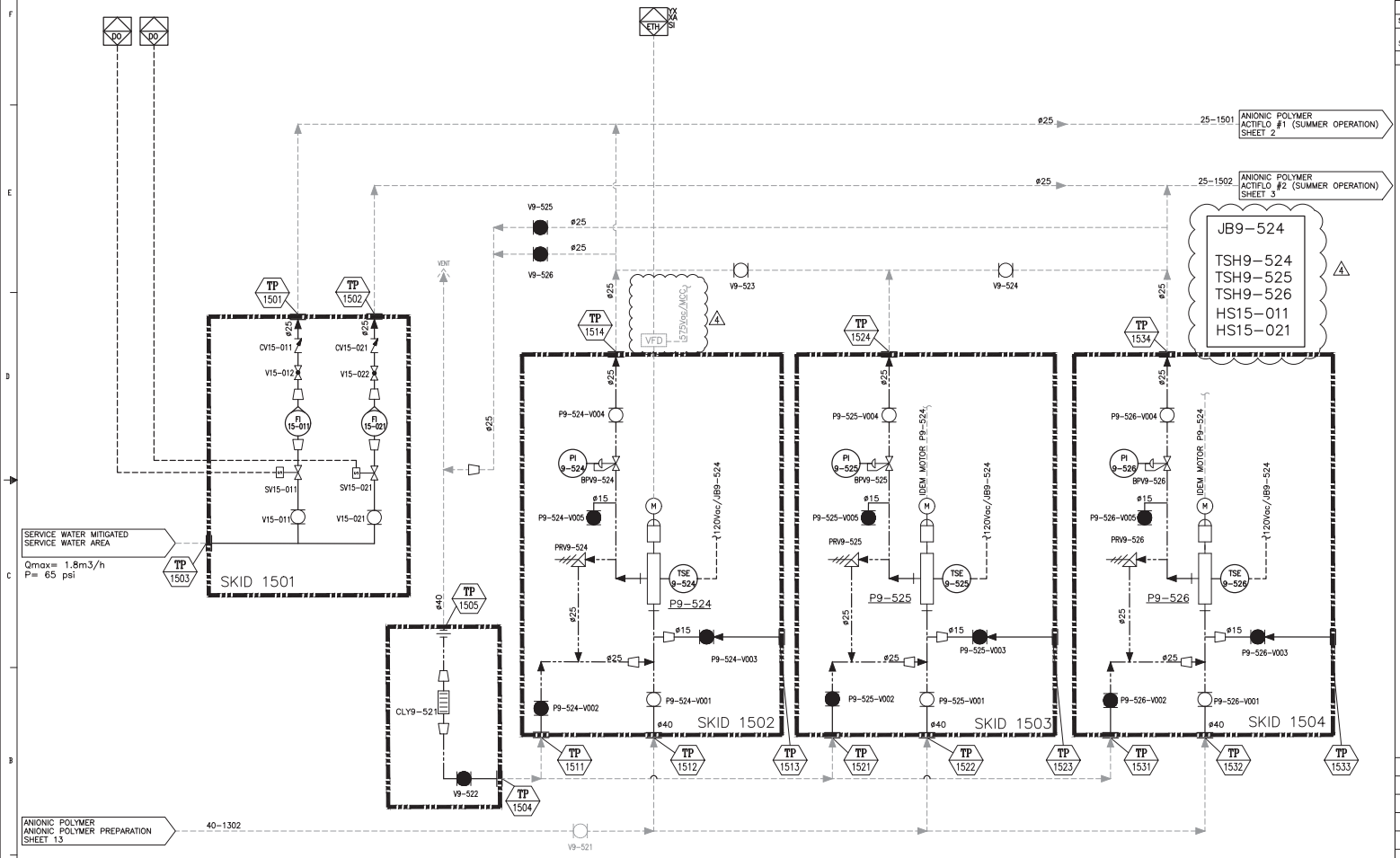

Notes :

Safety requirements :

Safety Shower must be provided in the immediate work area for emergency use (as per ANSI Z358.1)

REV.	DESCRIPTION	DATE	RÉVISÉ REVISED	VÉRIFIÉ CHECKED	APPROUVÉ APPROVED
4	FOR APPROVAL IV	2018-07-04	A.C.	G.P.	G.P.
3	FOR APPROVAL III	2018-05-31	A.C.	G.P.	G.P.
2	FOR APPROVAL II	2018-05-07	A.C.	G.P.	G.P.
1	FOR APPROVAL	2018-04-25	A.C.	G.P.	G.P.

VEOLIA WATER TECHNOLOGIES

DESSINÉ PAR/DRAWN BY	A.C. — DATE 2018-04-04
VÉRIFIÉ PAR/CHECKED BY	G.P. — DATE 2018-04-04
INGÉNIEUR PAR/ENGINEERING BY	G.P. — DATE 2018-04-04
CLIENT	AGNICO EAGLE MINING AMARUQ, NU

TITRE / TITLE

WATER TREATMENT PLANT
PROCESS AND INSTRUMENTATION DIAGRAM
ANIONIC POLYMER SUMMER DOSING SYSTEM

ÉCHELLE / SCALE: N.T.S.

PROJET / PROJECT	DESSIN No /DRAWING No	INTERNE / INTERVAL	FEUILLET / SHEET	REV./REV
5000218009 – PI0001		GEN	15/19	4

Ce document est la propriété de VEOLIA et ne peut être reproduit sans son autorisation écrite. / This document is the property of VEOLIA and cannot be reproduced without its written authorization

REF: N/A — SIZE ANSI D

Jul 20, 2018 11:20:53 – W:\2018\5000218009 Amaruq (Thiess)\15- Detailed execution\Drawings\P&ID\5000218009-PI0001_4.dwg – cmbeau

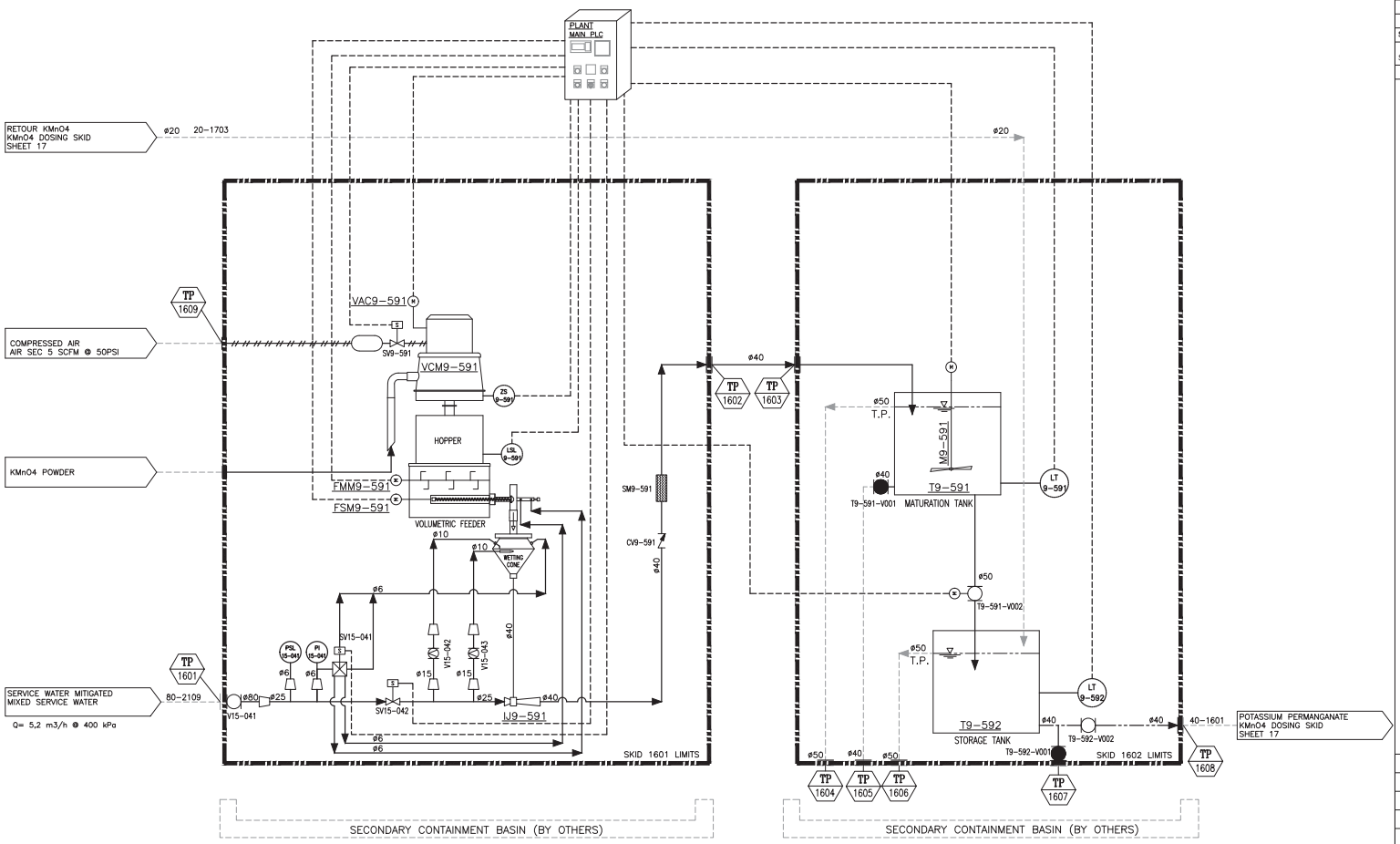

VAC9-591
CONVEYOR MOTOR
POWER Req.: 2.5HP
VOLTAGE: 575V/3Ph/60Hz

VCM9-591
PNEUMATIC CONVEYOR
CAPACITY:21Ft.cu/h (0.6m.cu/h)
MODEL: HAPMAN 16R

FSM9-591
FEEDER SCREW
POWER Req.: 0.5HP
VOLTAGE: 575V/3Ph/60Hz

FMM9-591
FEEDER HOPPER AGITATOR
POWER Req.: 0.75HP
VOLTAGE: 575V/3Ph/60Hz

T9-591
MATURATION TANK
VOLUME: 500L

T9-592
STORAGE TANK
VOLUME: 500L

M9-591
MATURATION TANK MIXER MOTOR
POWER Req.: 0.25Kw/0.33HP
VOLTAGE: 575V/3Ph/60Hz
MODEL: EVGO-0.33

Notes :

Safety requirements :

Safety Shower must be provided in the immediate work area for emergency use (as per ANSI Z358.1)

REV.	DESCRIPTION	DATE	RÉVISÉ REVISED	VÉRIFIÉ CHECKED	APPROUVÉ APPROVED
4	FOR APPROVAL IV	2018-07-04	A.C.	G.P.	G.P.
3	FOR APPROVAL III	2018-05-31	A.C.	G.P.	G.P.
2	FOR APPROVAL II	2018-05-07	A.C.	G.P.	G.P.
1	FOR APPROVAL	2018-04-25	A.C.	G.P.	G.P.

DESSINÉ PAR/DRAWN BY A.C. 2018-04-04
VÉRIFIÉ PAR/CHECKED BY G.P. 2018-04-04
INGÉNIERIE PAR/ENGINEERING BY G.P. 2018-04-04

CLIENT: AGNICO EAGLE MINING
AMARUQ, NU

VEOLIA WATER TECHNOLOGIES

TITRE / TITLE
WATER TREATMENT PLANT
PROCESS AND INSTRUMENTATION DIAGRAM
POTASSIUM PERMANGANATE PREPARATION

ÉCHELLE / SCALE N.T.S.

PROJET / PROJECT	DESSIN No /DRAWING No	INTERNE / INTERVAL	FEUILLET / SHEET	REV./REV
5000218009 – PI0001		GEN	16/19	4

Ce document est la propriété de VEOLIA et ne peut être reproduit sans son autorisation écrite / This document is the property of VEOLIA and cannot be reproduced without its written authorization

REF: N/A SIZE ANSI D

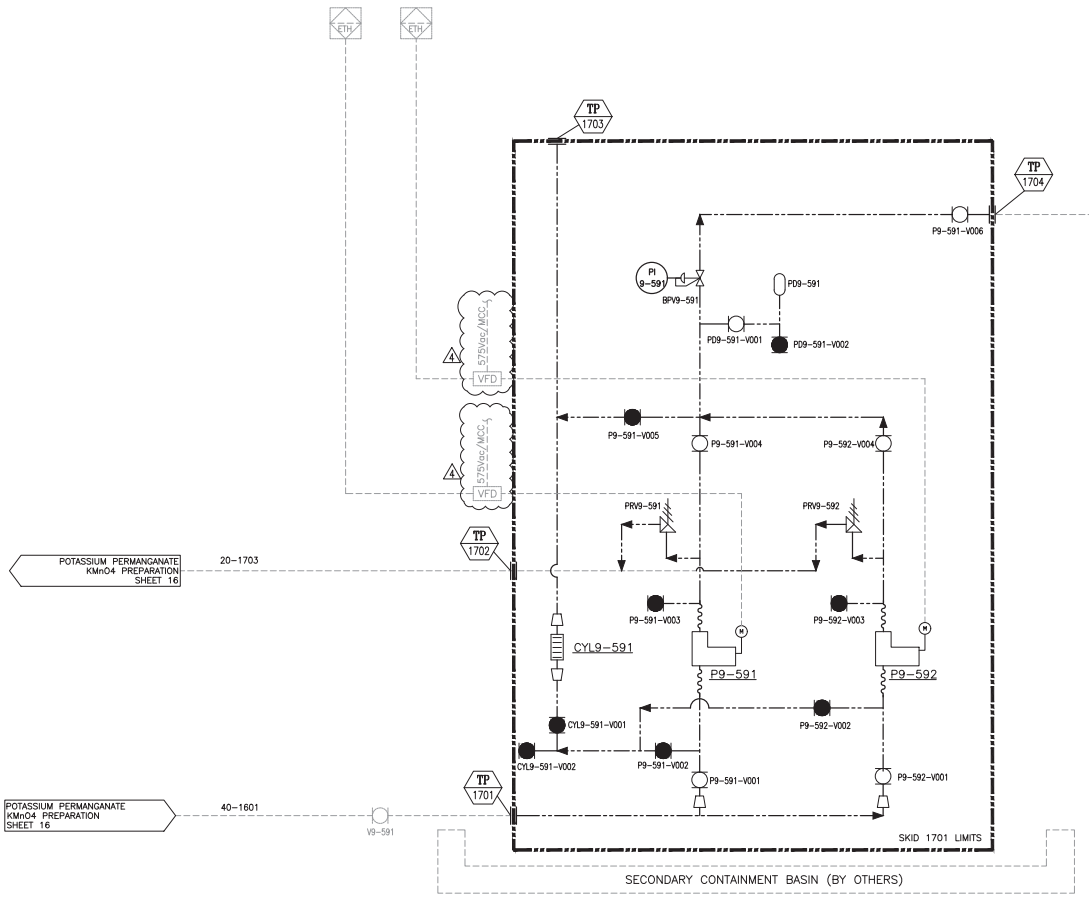

P9-591/P9-592
KMnO4 METERING PUMP
CAP.: 320LPH@80psig
POWER: XX HP, 575/3/60

Notes :

Safety requirements :

Safety Shower must be provided in the immediate work area for emergency use (as per ANSI Z358.1)

REV. REV.	DESCRIPTION	DATE	RÉVISÉ REVISED	VÉRIFIÉ CHECKED	APPROUVÉ APPROVED
4	FOR APPROVAL IV	2018-07-04	A.C.	G.P.	G.P.
3	FOR APPROVAL III	2018-05-31	A.C.	G.P.	G.P.
2	FOR APPROVAL II	2018-05-07	A.C.	G.P.	G.P.
1	FOR APPROVAL	2018-04-25	A.C.	G.P.	G.P.

DESSINÉ PAR/DRAWN BY: A.C. DATE: 2018-04-04
VÉRIFIÉ PAR/CHECKED BY: G.P. DATE: 2018-04-04
INGÉNIEUR PAR/ENGINEERING BY: G.P. DATE: 2018-04-04

CLIENT: AGNICO EAGLE MINING
AMARUQ, NU

VEOLIA WATER TECHNOLOGIES

TITRE / TITLE:
WATER TREATMENT PLANT
PROCESS AND INSTRUMENTATION DIAGRAM
POTASSIUM PERMANGANATE DOSING SYSTEM

ÉCHELLE / SCALE: N.T.S.

PROJET / PROJECT	DESSIN No /DRAWING No	INTERNE / INTERNAL	FEUILLET / SHEET	REV./REV
5000218009 – PI0001		GEN	17/19	4

Ce document est la propriété de VEOLIA et ne peut être reproduit sans son autorisation écrite / This document is the property of VEOLIA and cannot be reproduced without its written authorization

REF: N/A

SIZE ANSI D

Jul 20, 2018 11:21:03 – W:\2018\5000218009 Amaruq (Thiess)\15- Detailed execution\Drawings\P&ID\5000218009-PI0001_4.dwg – cardenas

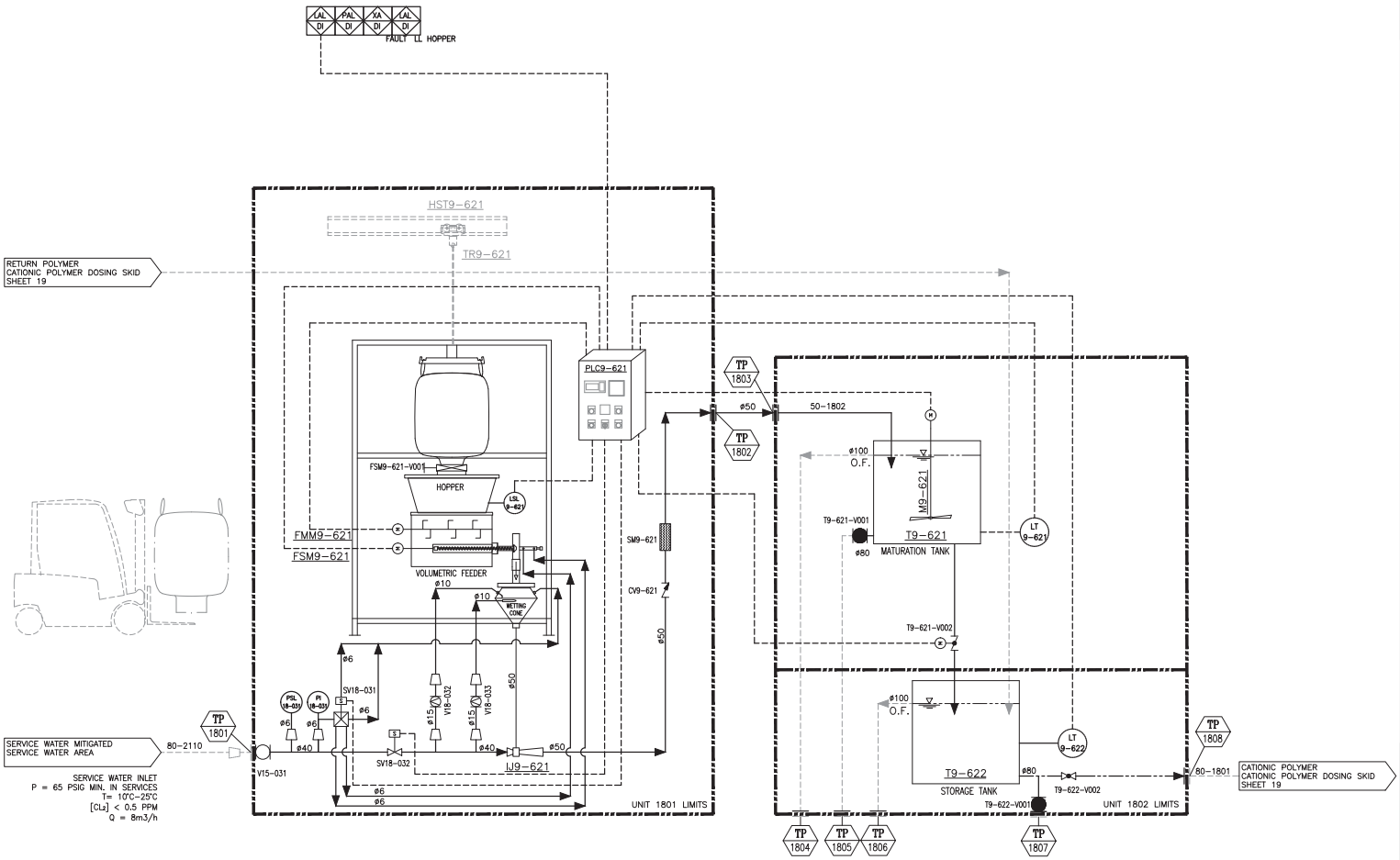

MODEL	INLET WATER FLOW RATE
HP 250	5.2 M3/H
HP 500	5.2 M3/H
HP 750	5.2 M3/H
HP 1000	5.2 M3/H
HP 1250	5.2 M3/H
HP 1500	5.2 M3/H
HP 1750	5.2 M3/H
HP 2000	8.0 M3/H
HP 2500	8.0 M3/H
HP 3000	8.0 M3/H
HP 3500	8.0 M3/H
HP 4000	8.0 M3/H

Notes :

Safety requirements :

Polymer is very slippery. Refer to spill response procedure.

A eye wash fountain must be provided in the immediate work area for emergency use.

HST9-621
HOIST
XX T (XXX Lbs)

TR9-621
TROLLEY

FSM9-621
FEEDER SCREW
POWER Req.: 0.5HP
VOLTAGE: 575V/3Ph/60Hz

FMM9-621
FEEDER HOPPER AGITATOR
POWER Req.: 0.75HP
VOLTAGE: 575V/3Ph/60Hz

T9-621
MATURATION TANK
VOLUME: 3500L

T9-622
STORAGE TANK
VOLUME: 3500L

M9-621
MATURATION TANK MIXER MOTOR
POWER Req.: 0.75HP
VOLTAGE: 575V/3Ph/60Hz
MODEL: EVG1-0.75

REV.	DESCRIPTION	DATE	RÉVISÉ REVISED	VÉRIFIÉ CHECKED	APPROUVÉ APPROVED
4	FOR APPROVAL IV	2018-07-04	A.C.	G.P.	G.P.
3	FOR APPROVAL III	2018-05-31	A.C.	G.P.	G.P.
2	FOR APPROVAL II	2018-05-07	A.C.	G.P.	G.P.
1	FOR APPROVAL	2018-04-25	A.C.	G.P.	G.P.

DESSINÉ PAR/DRAWN BY: A.C. DATE: 2018-04-04
VÉRIFIÉ PAR/CHECKED BY: G.P. DATE: 2018-04-04
INGÉNIEUR PAR/ENGINEERING BY: G.P. DATE: 2018-04-04

CLIENT: AGNICO EAGLE MINING
AMARUQ, NU

VEOLIA WATER TECHNOLOGIES

TITRE / TITLE:
WATER TREATMENT PLANT
PROCESS AND INSTRUMENTATION DIAGRAM
CATIONIC POLYMER PREPARATION

ÉCHELLE / SCALE: N.T.S.

PROJET / PROJECT	DESSIN No /DRAWING No	INTERNE / INTERVAL	FEUILLET / SHEET	REV./REV
5000218009 – PI0001		GEN	18/19	4

Ce document est la propriété de VEOLIA et ne peut être reproduit sans son autorisation écrite / This document is the property of VEOLIA and cannot be reproduced without its written authorization

REF: N/A

SIZE ANSI D

Jul 20, 2018 11:21:08 – W:\5\218\5000218009 Amaruq (Tbl\28500)\15- Detaile execution_Drawings\A-PI\5000218009-PI0001_4.dwg – cedanso

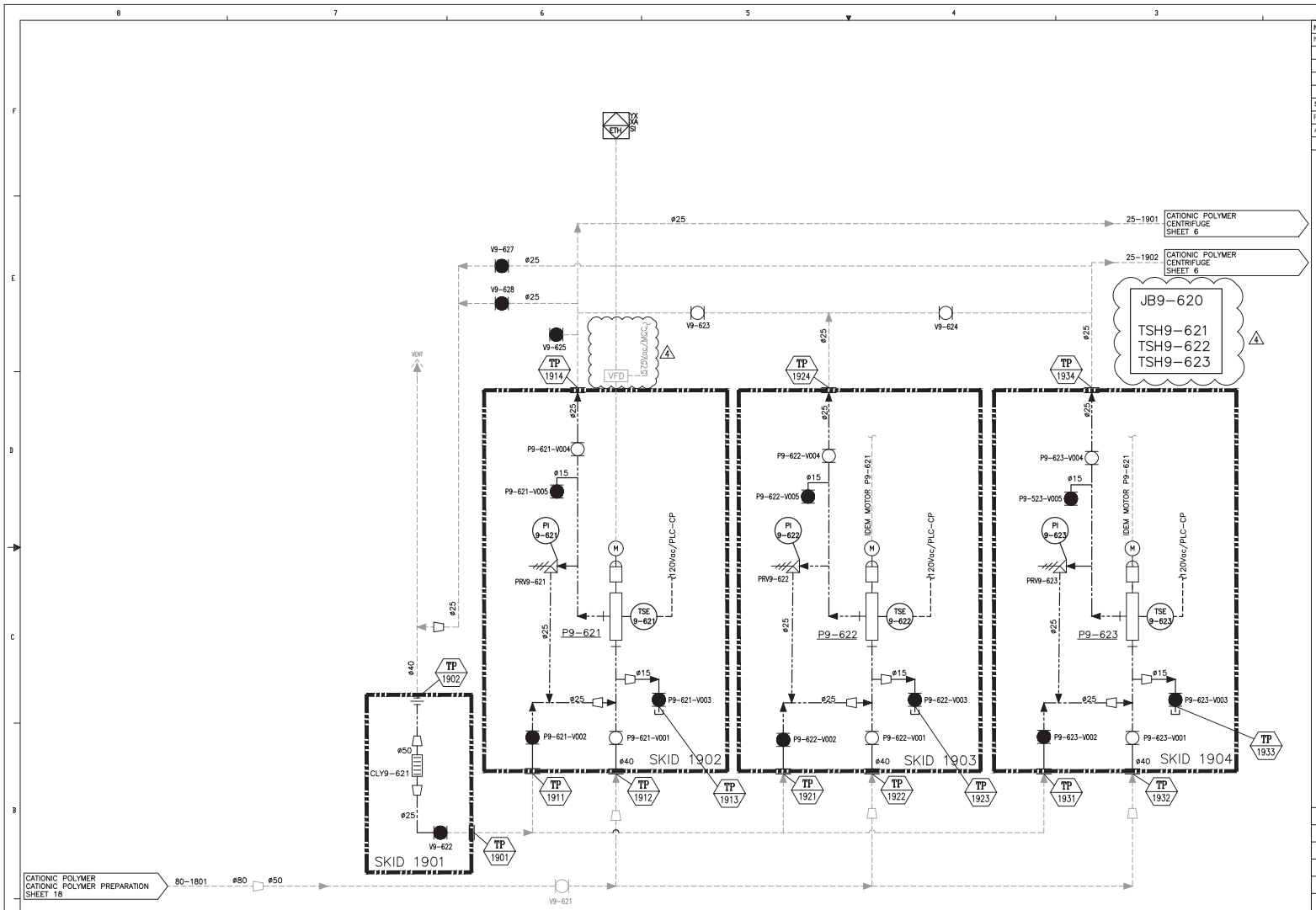

P9-621/P9-622/P9-623
CATIONIC POLYMER METERING PUMP
CAP.: 600LPH@85psig
POWER SUPPLY: 575V/3PH/60Hz

Notes :

Note 1901 : The vent must be higher than the storage tank.

Safety requirements :

Polymer is very slippery. Refer to spill response procedure.

A eye wash fountain must be provided in the immediate work area for emergency use.

REV.	DESCRIPTION	DATE	RÉVISÉ REVISED	VÉRIFIÉ CHECKED	APPROUVÉ APPROVED
2	FOR APPROVAL II	EN COURS			
1	FOR APPROVAL	2018-04-25	A.C.	G.P.	G.P.

DESSINÉ PAR/DRAWN BY	A.C.	DATE 2018-04-04
VÉRIFIÉ PAR/CHECKED BY	G.P.	DATE 2018-04-04
INGÉNIEUR PAR/ENGINEERING BY	G.P.	DATE 2018-04-04

CLIENT: AGNICO EAGLE MINING
AMARUQ, NU

VEOLIA WATER TECHNOLOGIES

TITRE / TITLE
WATER TREATMENT PLANT
PROCESS AND INSTRUMENTATION DIAGRAM
CATIONIC POLYMER DOSING SYSTEM

ÉCHELLE / SCALE: N.T.S.

PROJET / PROJECT	DESSIN No /DRAWING No	INTERNE / INTERVAL	FEUILLET / SHEET	REV./REV
5000218009 – PI0001		GEN	19/19	4

Ce document est la propriété de VEOLIA et ne peut être reproduit sans son autorisation écrite. / This document is the property of VEOLIA and cannot be reproduced without its written authorization

REF: N/A

SIZE ANSI D

Jul 20, 2018 11:21:14 - \\CH1PUBS0002\8009 Amaruq (TH1285001)\15- Detaille execution_Drawings\Pl- P\5000218009-PI0001_4.dwg - cmilano

3 – DRAWINGS

3.3 – HYDRAULIC PROFILE DRAWING

LEFT BLANK

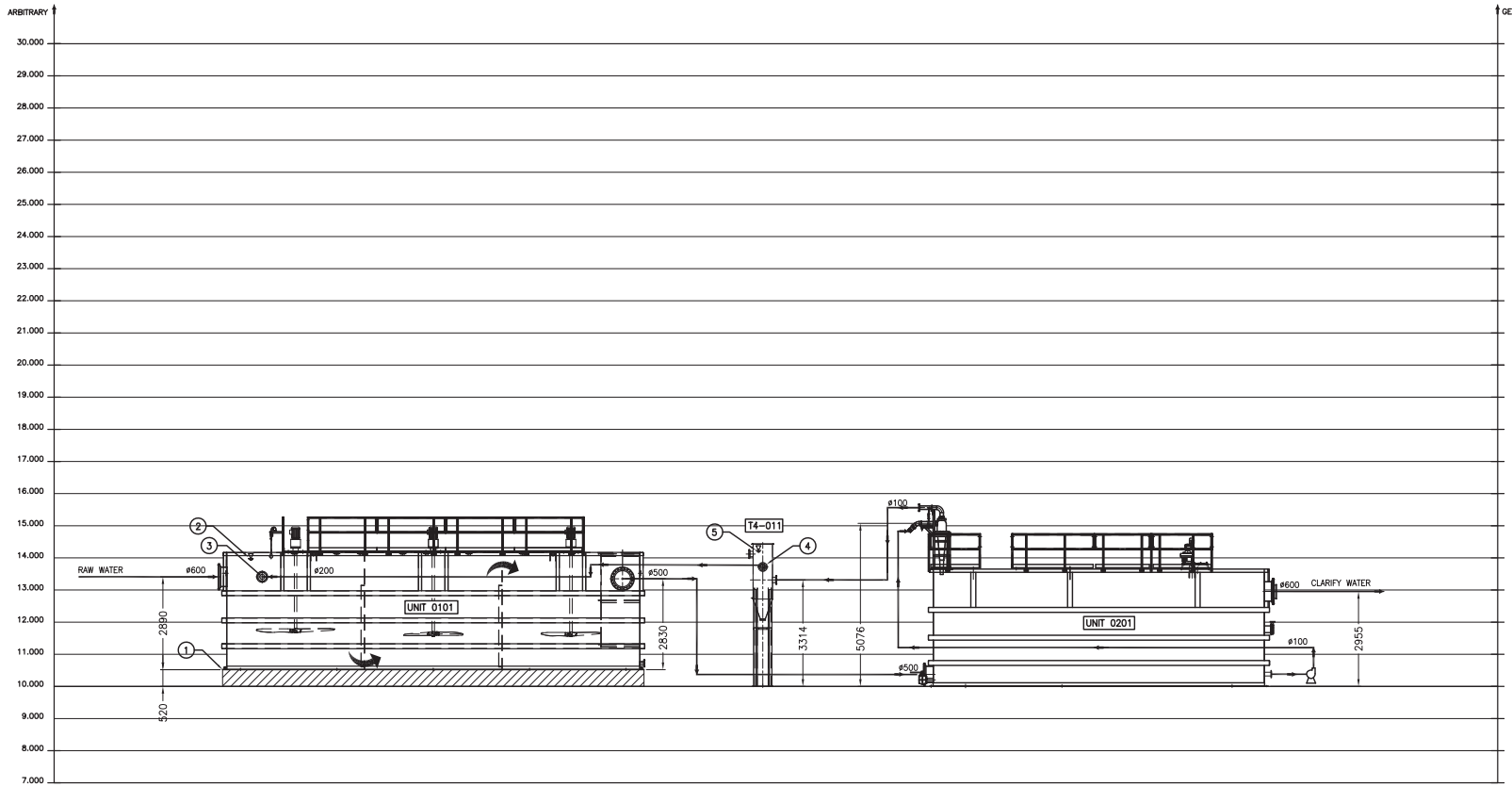

LEVEL	00	01	02	03	04	05
REFERENCE	BOTTOM OF ACTIFLO	BOTTOM OF RX75-3	WATER LEVEL RX75-3	TP0106 C.L	OUTLET FLANGE C.L	WATER LEVER SLUDGE TANKS
ARBITRARY ELEVATION (mm)	10.000	10.520	13.980	13.410	13.717	14.230
GEODESIC ELEVATION (M)						
FREE BOARD (mm)						

REV.	DESCRIPTION	DATE	RÉVISÉ	VÉRIFIÉ	APPROUVÉ	ECN
1	FOR INFORMATION	2018-04-12	A.C.	B.B.	G.P	N/A

AVIS DE CONFIDENTIALITÉ ET DE PROPRIÉTÉ INTELLECTUELLE
L'INFORMATION CONTENUE DANS CE DOCUMENT EST LA PROPRIÉTÉ EXCLUSIVE DE VEOLIA WATER TECHNOLOGIES CANADA INC. À CET EFFET, EN VERTU DE APPLICABLE RELATIVE, NOTAMMENT, LES LOIS EN MATIÈRE DE DROITS D'AUTEUR ET DE TOUTE AUTRE DROITS DE PROPRIÉTÉ INTELLECTUELLE, LES IDÉES-CONCEPTS ET L'INFORMATION CONTENUS DANS CE DOCUMENT SONT LA PROPRIÉTÉ DE VWT, ET SONT SOUMIS DE FAÇON CONFIDENTIELLE. CES IDÉES-CONCEPTS ET CETTE INFORMATION NE SONT PAS TRANSFÉRABLES, ILS DOIVENT ÊTRE UTILISÉS UNIQUEMENT AUX FINS POUR LESQUELLES CE DOCUMENT EST SOUMIS PAR VWT. CE DOCUMENT NE DOIT PAS ÊTRE REPRODUIT, DIVULGUÉ, EXPOSÉ, MODIFIÉ, UTILISÉ OU VENDU SANS LE CONSENTEMENT EXPRÈS ET ÉCRIT DE VWT. L'UTILISATION DE CE DOCUMENT DANS UNE TELLE MANIÈRE SANS LE CONSENTEMENT EXPRÈS ET ÉCRIT DE VWT, OU L'UTILISATION DE CE DOCUMENT AVEC QUI NE SERA PAS CONFIDENTIEL, OU DANS UNE MANIÈRE AUTRE QUE CELLE POUR LAQUELLE IL A ÉTÉ SOUMIS PAR VWT, ENGAGE VOTRE RESPONSABILITÉ SEULE ENVERS VWT ET VOUS DÉGAGE VWT DE TOUTE RESPONSABILITÉ SEULE CAUSÉE PAR UN TEL USAGE. L'UTILISATION DE CE DOCUMENT AVEC QUI NE SERA PAS CONFIDENTIEL, OU DANS UNE MANIÈRE AUTRE QUE CELLE POUR LAQUELLE IL A ÉTÉ SOUMIS PAR VWT, ENGAGE VOTRE RESPONSABILITÉ SEULE ENVERS VWT ET VOUS DÉGAGE VWT DE TOUTE RESPONSABILITÉ SEULE CAUSÉE PAR UN TEL USAGE. L'UTILISATION DE CE DOCUMENT AVEC QUI NE SERA PAS CONFIDENTIEL, OU DANS UNE MANIÈRE AUTRE QUE CELLE POUR LAQUELLE IL A ÉTÉ SOUMIS PAR VWT, ENGAGE VOTRE RESPONSABILITÉ SEULE ENVERS VWT ET VOUS DÉGAGE VWT DE TOUTE RESPONSABILITÉ SEULE CAUSÉE PAR UN TEL USAGE. L'UTILISATION DE CE DOCUMENT AVEC QUI NE SERA PAS CONFIDENTIEL, OU DANS UNE MANIÈRE AUTRE QUE CELLE POUR LAQUELLE IL A ÉTÉ SOUMIS PAR VWT, ENGAGE VOTRE RESPONSABILITÉ SEULE ENVERS VWT ET VOUS DÉGAGE VWT DE TOUTE RESPONSABILITÉ SEULE CAUSÉE PAR UN TEL USAGE. L'UTILISATION DE CE DOCUMENT AVEC QUI NE SERA PAS CONFIDENTIEL, OU DANS UNE MANIÈRE AUTRE QUE CELLE POUR LAQUELLE IL A ÉTÉ SOUMIS PAR VWT, ENGAGE VOTRE RESPONSABILITÉ SEULE ENVERS VWT ET VOUS DÉGAGE VWT DE TOUTE RESPONSABILITÉ SEULE CAUSÉE PAR UN TEL USAGE.

DESSINÉ	A.C.	DATE	2018-04-06
VÉRIFIÉ	B.B.	DATE	2018-04-06
INGÉNIEUR	G.P.	DATE	2018-04-06
ÉCHELLE:	1:75		

TITRE: WATER TREATMENT PLANT
HYDRAULIC PROFILE

CLIENT: AGNICO EAGLE MINING
AMARUQ, NU

VEOLIA
VEOLIA WATER TECHNOLOGIES CANADA INC. 4105 Sartelon, Saint-Laurent, Qc, Canada, Tel: (514) 334-7230

PROJET DESSIN No	INTERNE	FEUILLET	RÉV.
5000218009 – HY0001	GEN	1 DE 1	1

STD: "D" 22x34 | REF: N/A

LEFT BLANK

3 – DRAWINGS

3.4 – GENERAL ARRANGEMENT DRAWING

LEFT BLANK

TIE-POINT #	DESCRIPTION	DIMENSION / TYPE
TP-0101	RAW WATER INLET	ø600mm [ø24"] – RAISED FACE FLANGE 150# RF
TP-0102	PRETREATED WATER OUTLET	ø500mm [ø20"] – RAISED FACE FLANGE 150# RF
TP-0103	PRETREATED WATER OUTLET	ø500mm [ø20"] – RAISED FACE FLANGE 150# RF
TP-0104	DRAIN	ø100mm [ø4"] – FLAT FACE FLANGE 125# FF
TP-0105	SUPERNATANT	ø200mm [ø8"] – RAISED FACE FLANGE 150# RF
TP-0106	SUPERNATANT	ø200mm [ø8"] – RAISED FACE FLANGE 150# RF

REFERENCES DRAWING: 5000218009-PI0001 (SHEET 1)

NOTES:
1. FOR LIST OF SUPPLY OF THIS EQUIPMENT, PLEASE REFER TO THE FIELD INSTALLATION DRAWINGS AND THE TECHNICAL SPECIFICATIONS.
2. TANK SHALL NOT BE USED AS A SUPPORT FOR ANY OTHER EQUIPMENT. EQUIPMENT THAT NEEDS TO BE CONNECTED TO TANK SHALL BE SELF-SUPPORTED.
3. HATCHED AREA SHOW IN THE FOOTPRINT NEEDS TO BE SUPPORTED.
4. FILL THE MIXERS WITH OIL BEFORE STARTING THEM.
5. REMOVE LIFTING LUGS ONCE THE TANK IS IN THE PLACE.
6. FOR UNLOADING, STORAGE AND INSTALLATION, REFER TO HANDLING, STORAGE AND INSTALLATION MANUAL.
7. LUGS FOR TRANSPORTATION USE ONLY. DO NOT USE FOR TANK LIFTING.
8. WEIGHT FOR (1) REACTION TANK:
   TOTAL WEIGHT: 22 330 KG (49 238 LBS) (WITHOUT WATER, for transport)
   TOTAL WEIGHT IN SERVICE: 232 200 KG (510 840 LBS) (WITH WATER).
9. PAINTING REQUIREMENTS AS PER VEOLIA PAINT PROCEDURE (STANDARD PAINT PROCEDURE–ALL APPLICATIONS). COLOR: BLUE SAFETY.
10. MATERIAL:
   – STRUCTURAL PLATES, C AND L PROFILES AS PER CSA G40.21 GRADE 300W
   – HSS AND W PROFILES AS PER CSA G40.21 GRADE 350W

1. BASIN CONTACT REACTOR
2. MIXERS
3. FRP GRATING
4. HANDRAILS
5. LEVEL SWITCH
6. GROUNDING LUGS
7. solitax and pH METER CONTROLLER
8. pH METER CONTROLLER

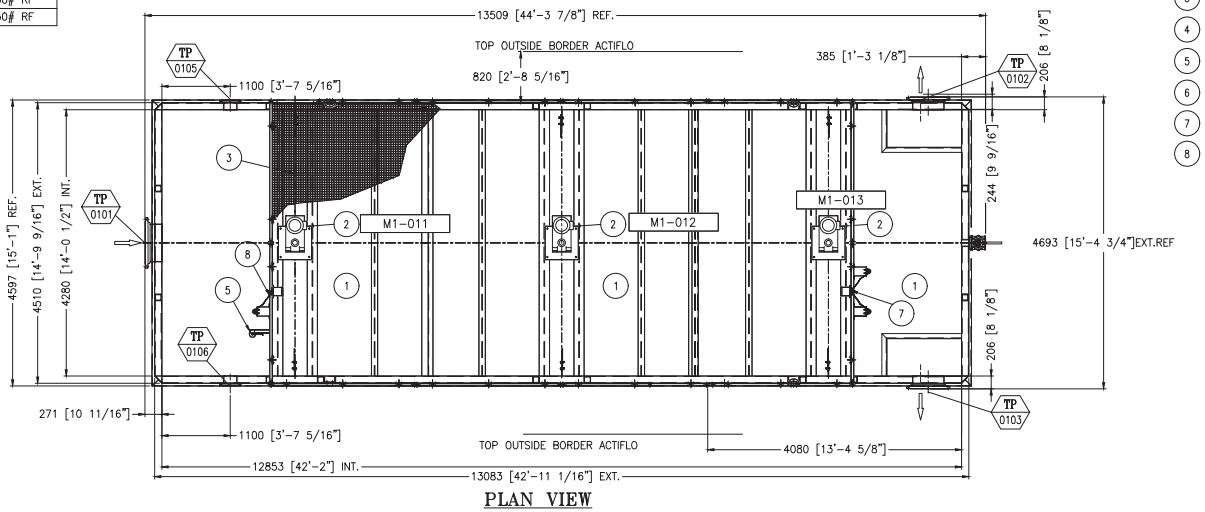

PLAN VIEW

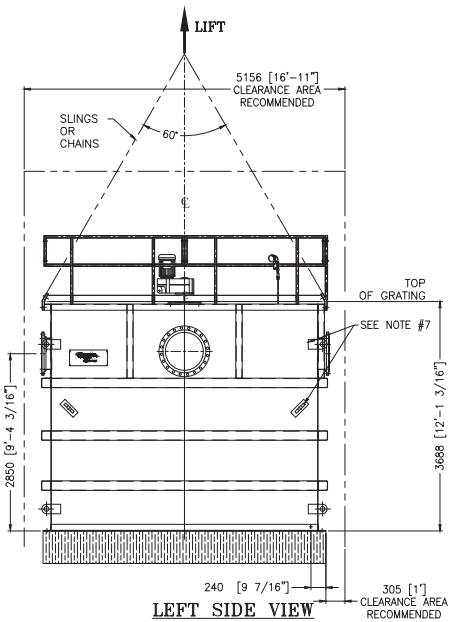

LEFT SIDE VIEW

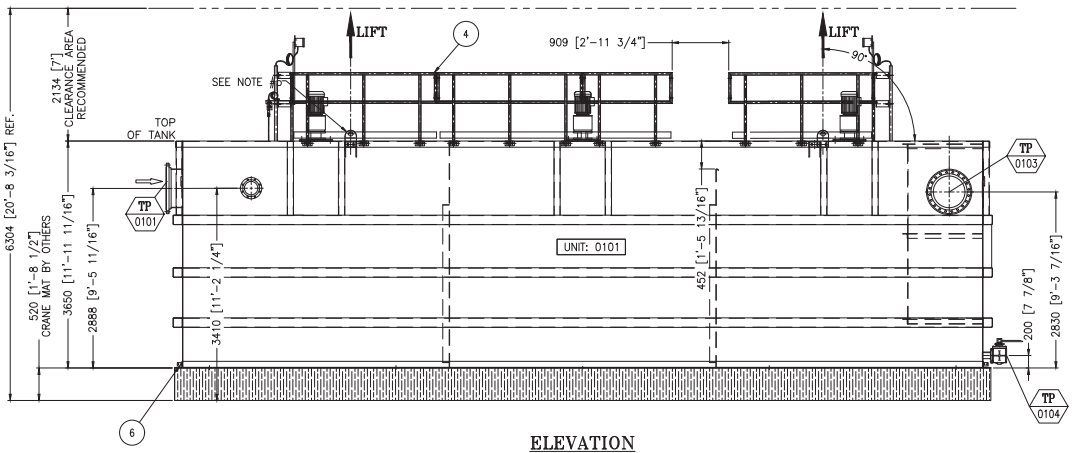

ELEVATION

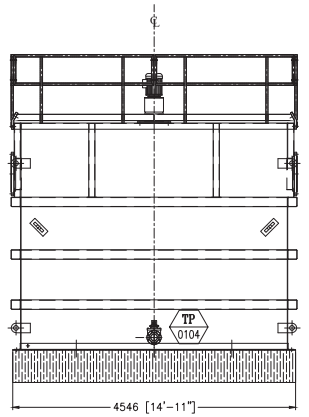

RIGHT SIDE VIEW

REV	DESCRIPTION	DATE	REV'D	CHK'D	APV'D	ECN
2	FOR APPROVAL	2018-04-26			L.J.	
1	PRELIMINARY TOO THE APPROVAL OF LA0001_GEN. DRAWING	2018-03-15	A.C.	G.P.	L.J.	N/A

CONFIDENTIALITY AND INTELLECTUAL PROPERTY NOTICE
ALL INFORMATION CONTAINED IN THIS DOCUMENT IS THE SOLE PROPERTY OF VEOLIA WATER TECHNOLOGIES CANADA INC. AND MAY CONTAIN TRADE SECRETS, COPYRIGHT, TRADEMARK AND OTHER INTELLECTUAL PROPERTY LAWS. THE DESIGN CONCEPTS AND INFORMATION CONTAINED HEREIN ARE PROPRIETARY TO V.W.T. AND ARE SUBMITTED IN CONFIDENCE. THEY ARE NOT TRANSFERABLE. THEY MUST BE USED ONLY FOR THE PURPOSE FOR WHICH THE DOCUMENT IS EXPRESSLY SUBMITTED AND NO IMPLICIT LICENCE IS GRANTED OTHERWISE BY THE SUBMISSION OF THIS DOCUMENT. THEY ARE NOT TO BE DISCLOSED, REPRODUCED, LOANED, MODIFIED OR USED IN ANY OTHER MANNER WITHOUT THE EXPRESS WRITTEN CONSENT OF V.W.T. V.W.T. ASSUMES NO RESPONSIBILITY OR LIABILITY FOR THE USE OF THIS DOCUMENT OR THE DESIGN CONCEPTS AND INFORMATION CONTAINED HEREIN FOR ANOTHER PROJECT, OR IN A MANNER THAT DOES NOT RELATE TO THE FITNESS OR PURPOSE OF THIS DOCUMENT. IN NO EVENT SHALL THE DISCLOSURE OF THIS DOCUMENT BY V.W.T. OR ANY OTHER PERSON OR ENTITY ACTING ON V.W.T.'S BEHALF CONSTITUTE A WAIVER OF ANY OF V.W.T.'S ALL COPYRIGHT, PATENT AND OTHER INTELLECTUAL PROPERTY RIGHTS ARE RESERVED. ACCEPTANCE OF THE DELIVERY OF THIS DOCUMENT CONSTITUTES AGREEMENT TO THESE TERMS AND CONDITIONS.

DESIGNER	DATE
CHECKER	DATE
N/A	
ENGINEER	DATE
SCALE:	1:40

TITLE: METAL PRECIPITATION REACTOR (UNIT 0101)
RX75-3
GENERAL ARRANGEMENT

CLIENT: AGNICO EAGLE MINING
AMARUQ, NU

VEOLIA WATER TECHNOLOGIES CANADA INC. 4105 Sartelon, Saint-Laurent, Qc, Canada Tel: (514) 334-7230

PROJECT DRAWING	INTERNAL	SHEET	REV
5000218009 – GA0001	RX0753	1 OF 2	2

STD: "D" 22x34 | REF:

Apr 27, 2018 16:19:43 – W:\2018\5000218009 Amaruq (TM1285015)\15- Drawings execution_Drawings\5- GA\5000218009-GA0001RX753_2.dwg – jeanlil

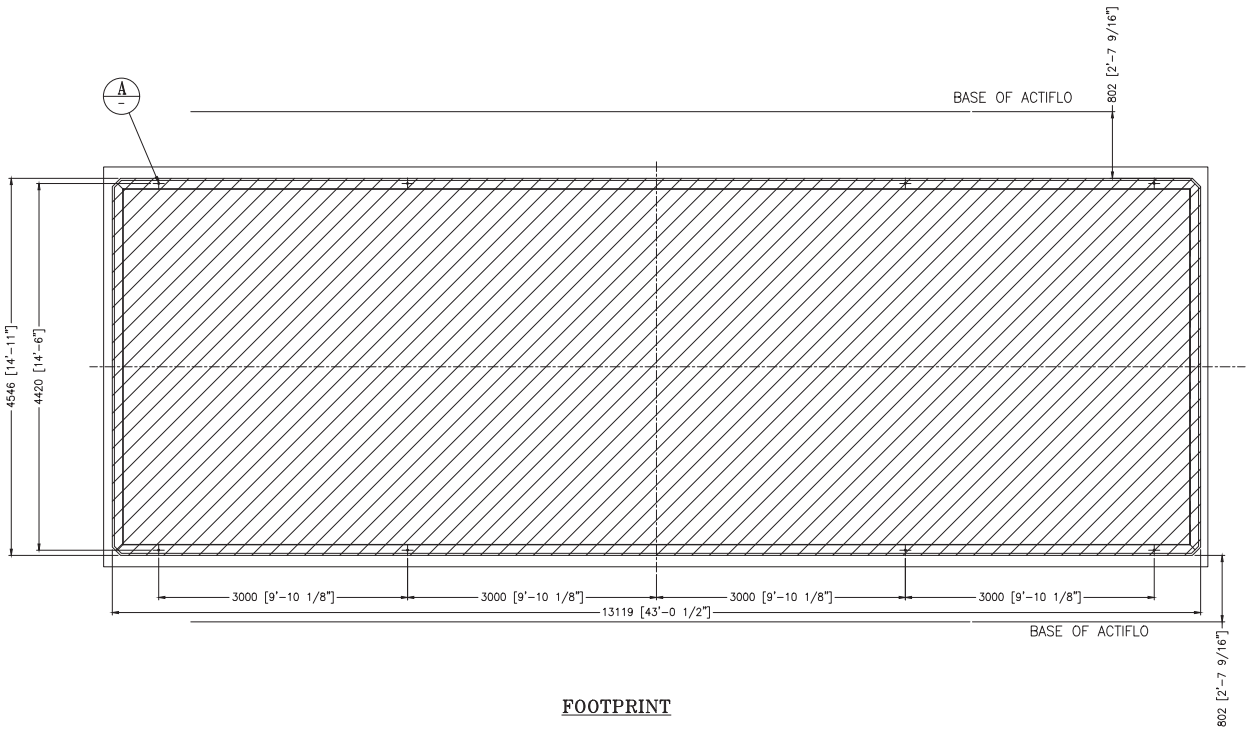

FOOTPRINT

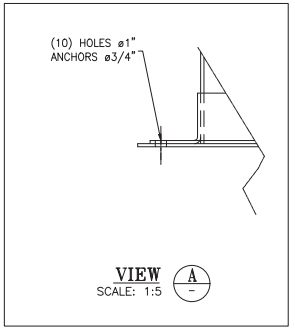

REV	DESCRIPTION	DATE	REV'D	CHK'D	APV'D	ECN
1	PRELIMINARY TOO THE APPROVAL OF LA0001_GEN. DRAWING	2018-03-15	A.C.	G.P.	L.J.	N/A

STD: "D" 22x34 REF: 216018

CONFIDENTIALITY AND INTELLECTUAL PROPERTY NOTICE
ALL INFORMATION CONTAINED IN THIS DOCUMENT IS THE SOLE PROPERTY OF VEOLIA WATER TECHNOLOGIES CANADA INC. AND IS PROTECTED BY ALL APPLICABLE LAWS, INCLUDING BUT NOT LIMITED TO COPYRIGHT AND OTHER INTELLECTUAL PROPERTY LAWS. THE DESIGN CONCEPTS AND INFORMATION CONTAINED HEREIN ARE PROPRIETARY TO V.W.T. AND ARE SUBMITTED IN CONFIDENCE. THEY ARE NOT TRANSFERABLE. THEY MUST BE USED ONLY FOR THE PURPOSE FOR WHICH THE DOCUMENT IS EXPRESSLY SUBMITTED AND NO IMPLICIT LICENCE IS GRANTED OTHERWISE BY THE SUBMISSION OF THIS DOCUMENT. THEY ARE CONFIDENTIAL AND PRIVATE TO THE PERSON OF V.W.T. AND THEY MUST NOT BE DISCLOSED, REPRODUCED, LOANED, REMITTED OR USED IN ANY OTHER MANNER WITHOUT THE EXPRESS WRITTEN CONSENT OF V.W.T. V.W.T. ASSUMES NO RESPONSIBILITY OR LIABILITY FOR THE USE OF THIS DOCUMENT OR THE DESIGN CONCEPTS AND INFORMATION CONTAINED HEREIN FOR ANOTHER PROJECT, OR IN A MANNER THAT DOES NOT RELATE TO THE FITNESS OR PURPOSE OF THIS DOCUMENT. IN NO EVENT SHALL THIS DOCUMENT OR THE DESIGN CONCEPTS AND INFORMATION CONTAINED HEREIN BE USED IN A MANNER SUBMITTAL TO THE INTEREST OF V.W.T. ALL COPYRIGHT, PATENT AND OTHER INTELLECTUAL PROPERTY RIGHTS ARE RESERVED. ACCEPTANCE OF THE DELIVERY OF THIS DOCUMENT CONSTITUTES AGREEMENT TO THESE TERMS AND CONDITIONS.

DESIGNER	O.F.	DATE 2016-03-24
CHECKER	N/A	DATE 2016-03-24
ENGINEER	T.PT.	DATE 2016-03-24
SCALE:	1:40	

TITLE: METAL PRECIPITATION REACTOR (UNIT 0101)
RX75-3
GENERAL ARRANGEMENT

CLIENT: AGNICO EAGLE MINING
AMARUQ, NU

VEOLIA
VEOLIA WATER TECHNOLOGIES CANADA INC. 4105 Sartelon Saint-Laurent, Qc, Canada Tel: (514) 334-7230

PROJECT	DRAWING	INTERNAL	SHEET	REV
5000217035	GA0001	RX0753	2 OF 2	1

Apr 27, 2018 16:20:32 - W:\2018\5000218009 Amaruq (TIH128505)\15- Dessins execution_Drawings\6- GA\5000218009-GA0001RX753_2.dwg - jeanlili

TIE-POINT #	DESCRIPTION	DIMENSION / TYPE
TP-0501	SLUDGE INLET	ø150mm [ø6"] – RAISED FACE FLANGE 150# RF
TP-0502	SLUDGE INLET	ø150mm [ø6"] – RAISED FACE FLANGE 150# RF
TP-0503	DECANTER OUTLET	ø150mm [ø6"] – RAISED FACE FLANGE 150# RF
TP-0504	DECANTER OUTLET	ø150mm [ø6"] – RAISED FACE FLANGE 150# RF
TP-0505	DECANTER OUTLET	ø150mm [ø6"] – RAISED FACE FLANGE 150# RF
TP-0506	DECANTER OUTLET	ø150mm [ø6"] – RAISED FACE FLANGE 150# RF
TP-0507	DRAIN	ø100mm [ø4"] – FLAT FACE FLANGE 125# FF
TP-0508	DRAIN	ø100mm [ø4"] – FLAT FACE FLANGE 125# FF

1. STORAGE TANKS (SLUDGE)
2. MIXERS
3. FRP GRATING
4. HANDRAILS
5. LEVEL SWITCHS
6. N.A.
7. GROUNDING LUGS
8. LADDER

REFERENCES DRAWING: 5000218009-PI0001 (SHEET5)

NOTES:
1. FOR LIST OF SUPPLY OF THIS EQUIPMENT, PLEASE REFER TO THE FIELD INSTALLATION DRAWINGS AND THE TECHNICAL SPECIFICATIONS.
2. TANK SHALL NOT BE USED AS A SUPPORT FOR ANY OTHER EQUIPMENT. EQUIPMENT THAT NEEDS TO BE CONNECTED TO TANK SHALL BE SELF-SUPPORTED.
3. HATCHED AREA SHOW IN THE FOOTPRINT NEEDS TO BE SUPPORTED.
4. FILL THE MIXERS WITH OIL BEFORE STARTING THEM.
5. N.A.
6. FOR UNLOADING, STORAGE AND INSTALLATION, REFER TO HANDLING, STORAGE AND INSTALLATION MANUAL.
7. LUGS FOR TRANSPORTATION USE ONLY. DO NOT USE FOR TANK LIFTING.
8. WEIGHT FOR (1) REACTION TANK:
   TOTAL WEIGHT: 12 088 KG (26 654 LBS) (WITHOUT WATER for transport)
   TOTAL WEIGHT IN SERVICE: 160 250 KG (352 550 LBS) (WITH WATER).
9. PAINTING REQUIREMENTS AS PER VEOLIA PAINT PROCEDURE (STANDARD PAINT PROCEDURE-ALL APPLICATIONS). COLOR: BLUE SAFETY.
10. MATERIAL:
    - STRUCTURAL PLATES, C AND L PROFILES AS PER CSA G40.21 GRADE 300W
    - HSS AND W PROFILES AS PER CSA G40.21 GRADE 350W
11. FOR INSTALLATION REFER TO DRAWING 5000218009-FI0003

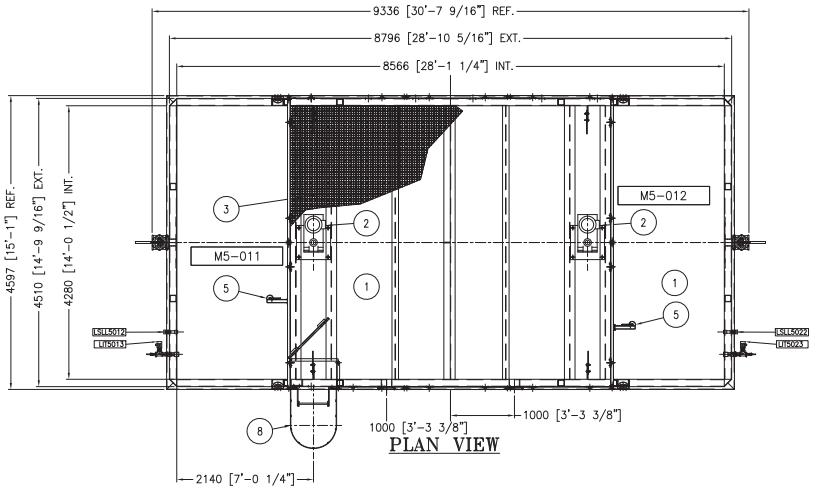

PLAN VIEW

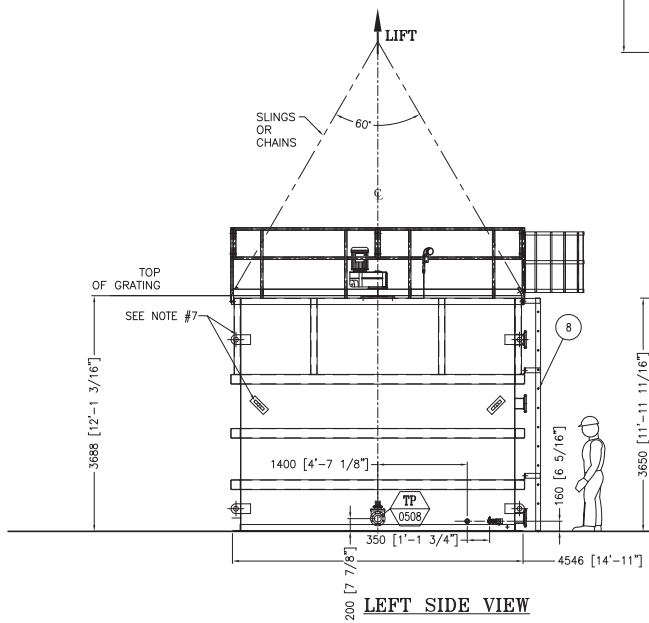

LEFT SIDE VIEW

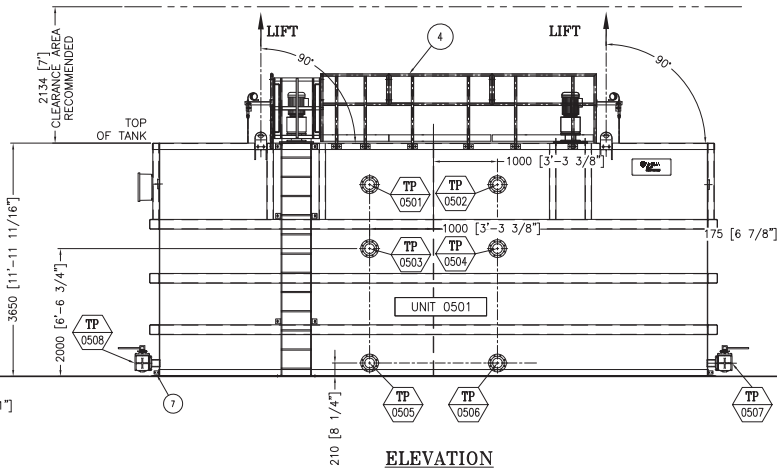

ELEVATION

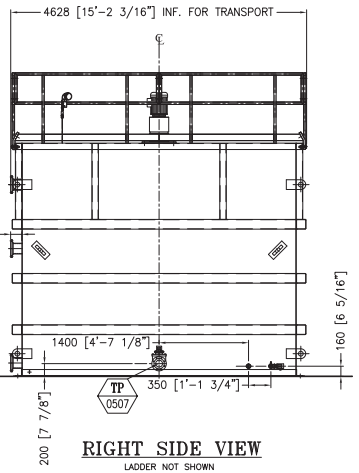

RIGHT SIDE VIEW
LADDER NOT SHOWN

REV	DESCRIPTION	DATE	REV'D	CHK'D	APV'D	ECN
						N/A
						N/A
						N/A
2	FOR APPROVAL	2018-04-26		L.J.	G.P.	N/A
1	PRELIMINARY TOO THE APPROVAL OF LA0001_GEN. DRAWING	2018-03-15	A.C.	L.J.	G.P.	N/A

CONFIDENTIALITY AND INTELLECTUAL PROPERTY NOTICE
ALL INFORMATION CONTAINED IN THIS DOCUMENT IS THE SOLE PROPERTY OF VEOLIA WATER SOLUTIONS & TECHNOLOGIES CANADA INC. AND IS PROTECTED BY COPYRIGHT, PATENT AND OTHER INTELLECTUAL PROPERTY LAWS. THE DESIGN CONCEPTS AND INFORMATION CONTAINED HEREIN ARE PROPRIETARY TO VWS AND ARE SUBMITTED IN CONFIDENCE. THEY ARE NOT TRANSFERABLE. THEY MUST BE USED ONLY FOR THE PURPOSE FOR WHICH THE DOCUMENT IS EXPRESSLY SUBMITTED AND NO IMPLICIT LICENCE IS GRANTED OTHERWISE BY THE SUBMISSION OF THIS DOCUMENT. THEY ARE CONFIDENTIAL AND PRIVILEGED INFORMATION OF VWS AND THEY MUST NOT BE DISCLOSED, REPRODUCED, LOANED, REWITTED OR USED IN WHOLE OR IN PART WITHOUT THE PRIOR WRITTEN CONSENT OF VWS. VWS ASSUMES NO RESPONSIBILITY OR LIABILITY FOR THE USE OF THIS DOCUMENT OR THE DESIGN CONCEPTS AND INFORMATION CONTAINED HEREIN FOR ANOTHER PROJECT, OR IN A MANNER THAT DOES NOT RELATE TO THE FITNESS OR PURPOSE OF THIS DOCUMENT. IN NO EVENT SHALL THIS DOCUMENT OR THE DESIGN CONCEPTS AND INFORMATION CONTAINED HEREIN BE USED IN A MANNER DETRIMENTAL TO THE INTEREST OF VWS. ALL COPYRIGHT, PATENT AND OTHER INTELLECTUAL PROPERTY RIGHTS ARE RESERVED. ACCEPTANCE OF THE DELIVERY OF THIS DOCUMENT CONSTITUTES AGREEMENT TO THESE TERMS AND CONDITIONS.

DESIGNER	DATE
A.C.	2018-03-08
CHECKER	DATE
G.P.	2018-03-08
ENGINEER	DATE
L.J.	2018-03-08
SCALE:	1:40

TITLE: SLUDGE TANK (UNIT 0401)
RX75-2
GENERAL ARRANGEMENT

CLIENT: AGNICO EAGLE MINING
AMARUQ, NU

VEOLIA WATER Solutions & Technologies
VEOLIA Water Solutions & Technologies CANADA Inc.
4105 Sartelon Street,
Saint-Laurent, Qc, Canada H4S 2B3
Tel: (514) 334-7230 / Fax: (514) 334-5070

PROJECT	DRAWING	INTERNAL	SHEET	REV
5000218009	GA0002	RX0752	1 OF 2	2

STD: "D" 22x34 | REF: 5000216018 | BAR = 1" AT PLOT SCALE

Apr 27, 2018 - 14:54:09 - W:\2018\5000218009 Amaruq (TM128505)\15- Dessins execution_Drawings\6- GA\5000218009-GA0002RX752_2.dwg - jeanlil

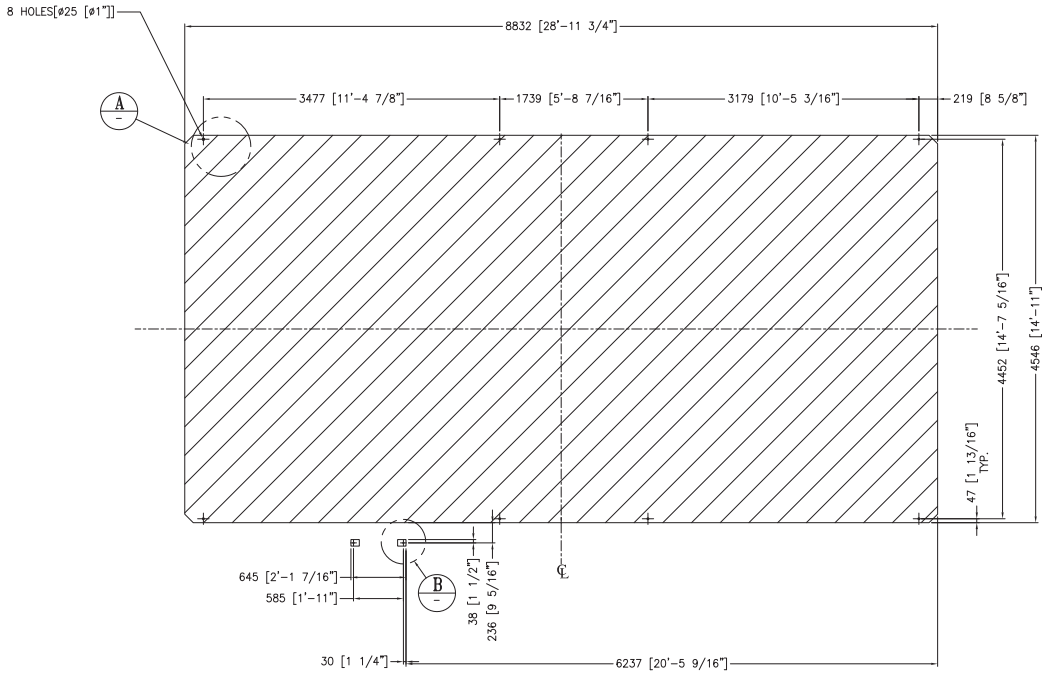

FOOT PRINT

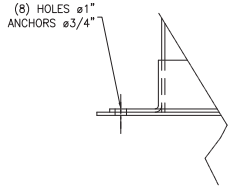

DETAIL A
SCALE: 1:5

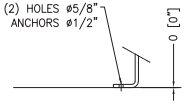

DETAIL B
SCALE: 1:10

REV	DESCRIPTION	DATE	REV'D	CHK'D	APV'D	ECN
2	FOR APPROVAL	2018-04-27		L.J.	G.P.	N/A.
1	PRELIMINARY TOO THE APPROVAL OF LA0001_GEN. DRAWING	2018-03-16	A.C.	L.J.	G.P.	N/A

CONFIDENTIALITY AND INTELLECTUAL PROPERTY NOTICE
ALL INFORMATION CONTAINED IN THIS DOCUMENT IS THE SOLE PROPERTY OF VEOLIA WATER SOLUTIONS & TECHNOLOGIES CANADA INC. AND MAY CONTAIN CONFIDENTIAL, PROPRIETARY AND TRADE SECRET OR OTHER INTELLECTUAL PROPERTY LAWS. THE DESIGN CONCEPTS AND INFORMATION CONTAINED HEREIN ARE PROPRIETARY TO VWS AND ARE SUBMITTED IN CONFIDENCE. THEY ARE NOT TRANSFERABLE. THEY MUST BE USED ONLY FOR THE PURPOSE FOR WHICH THE DOCUMENT IS EXPRESSLY SUBMITTED AND NO IMPLICIT LICENCE IS GRANTED OTHERWISE BY THE SUBMISSION OF THIS DOCUMENT. THEY ARE CONFIDENTIAL AND PRIVILEGED INFORMATION OF VWS AND THEY MUST NOT BE DISCLOSED, REPRODUCED, LOANED, REMITTED OR USED IN WHOLE OR IN PART WITHOUT THE PRIOR WRITTEN CONSENT OF VWS. VWS ASSUMES NO RESPONSIBILITY OR LIABILITY FOR THE USE OF THIS DOCUMENT OR THE DESIGN CONCEPTS AND INFORMATION CONTAINED HEREIN FOR ANOTHER PROJECT, OR IN A MANNER THAT DOES NOT RELATE TO THE FITNESS OR PURPOSE OF THIS DOCUMENT. IN NO EVENT SHALL THIS DOCUMENT OR THE DESIGN CONCEPTS AND INFORMATION CONTAINED HEREIN BE USED IN A MANNER DETRIMENTAL TO THE INTEREST OF VWS. ALL COPYRIGHT, PATENT AND OTHER INTELLECTUAL PROPERTY RIGHTS ARE RESERVED. ACCEPTANCE OF THE DELIVERY OF THIS DOCUMENT CONSTITUTES AGREEMENT TO THESE TERMS AND CONDITIONS.

DESIGNER	A.C.	DATE 2018-03-08
CHECKER	G.P.	DATE 2018-03-08
ENGINEER	L.J.	DATE 2018-03-08
SCALE:	1:40	

TITLE: SLUDGE TANK (UNIT 0401)
RX75-2
GENERAL ARRANGEMENT

CLIENT: AGNICO EAGLE MINING
AMARUQ, NU

VEOLIA WATER Solutions & Technologies
VEOLIA Water Solutions & Technologies CANADA Inc.
4105 Sartelon Street,
Saint-Laurent, Qc, Canada H4S 2B3
Tel: (514) 334-7230 / Fax: (514) 334-5070

PROJECT	DRAWING	INTERNAL	SHEET	REV
5000218009 – GA0002		RX0752	2 OF 2	2

STD: "D" 22x34 | REF: 5000216018 | BAR = 1" AT PLOT SCALE

Apr 27, 2018 14:54:33 – W:\2018\5000218009 Amaruq (TH128505)\15– Dessins execution_Drawings\6– GA\5000218009-GA0002RX752_2.dwg – jeanm

PIPING CONNECTIONS		
PORT	SIZE	DESCRIPTION
A	2"–150 LB ANSI FLANGE	FEED INLET
B	RECTANGULAR 12–1/2" x 19–1/2"	SEDIMENTS DISCHARGE
C	1" NPT	SLUDGE SAMPLE
D	1" NPT	POLYMER CONNECTION
E	1" NPT	WASHWATER CONNECTION
F	8"–150 LB ANSI FLANGE	VENT
G	5"–150 LB ANSI FLANGE	EFFLUENTS OUTLET
H	ø1.327"	FRAME DRAIN

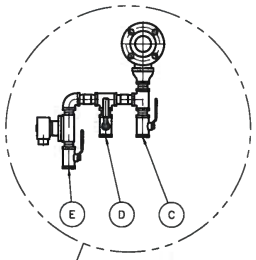

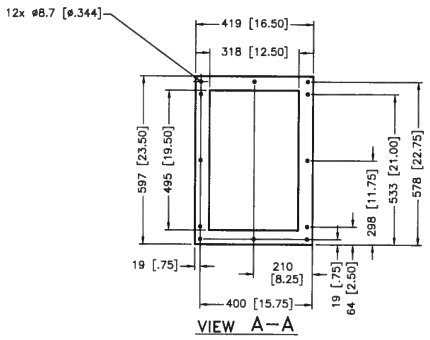

NOTE: KEEP MOTOR CONDUITS AWAY FROM FRONT OF FIBERGLASS GUARDS. RUN MOTOR CONDUITS TOWARD REAR OF MACHINE TO ALLOW FOR COVER AND REMOVAL.

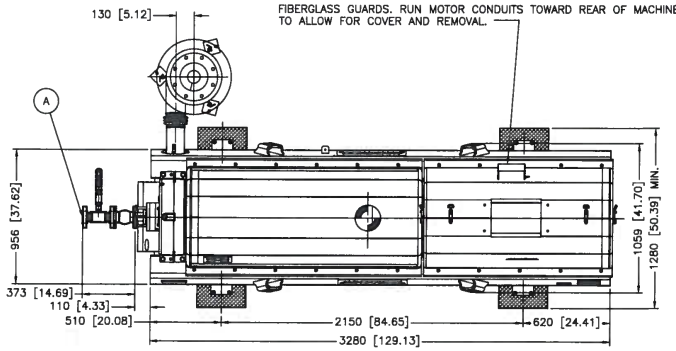

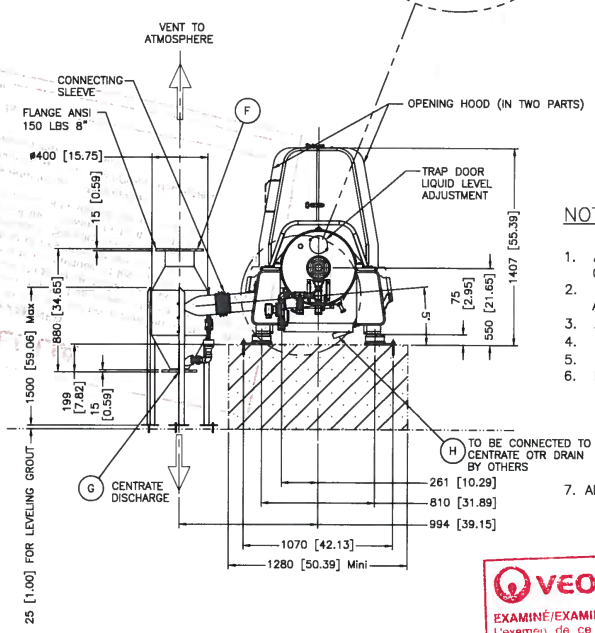

NOTES:

1. ALL PIPING TO AND FROM MACHINE TO BE COMPLETED WITH FLEXIBLE CONNECTIONS.
2. SEE FOUNDATION DETAILS FOR DESIGN LOADS AND CONNECTION DETAILS.
3. ALL DIMENSIONS ARE IN mm WITH inches IN [ ].
4. DRY WEIGHT OF MACHINE 3059 kg [6744 lbs].
5. SCROLL WEIGHT 510 kg [1124 lbs].
6. PROCESS REQUIREMENTS
   WASHWATER: 35.2–70.4GPM @ 43.5–58PSI
   SHUTDOWN: 15min
   CIP: 10min
   AIR FLOW: 118CFM
   MINIMUM SLUDGE INLET PRESSURE: 7.5PSI AT CENTRIFUGE FEED FLANGE.
7. ALL CHUTES TO BE SUPPORTED BY OTHERS UNLESS NOTED OTHERWISE.

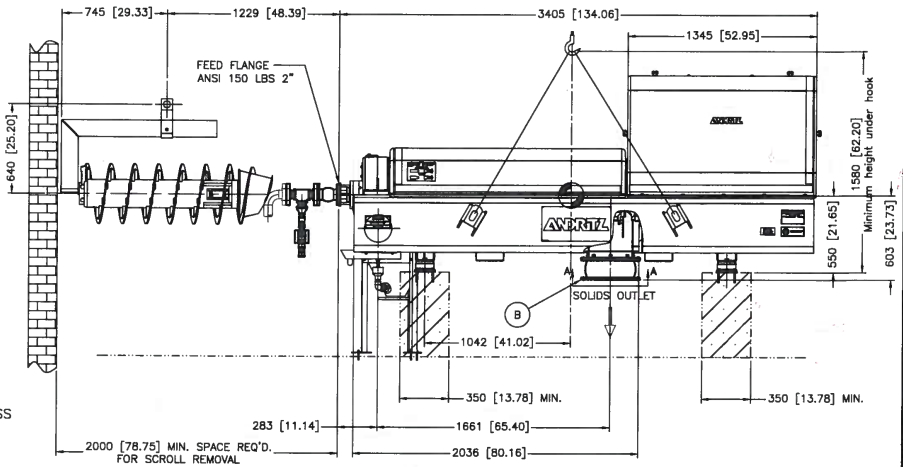

VEOLIA

EXAMINÉ/EXAMINED
L'examen de ce dessin ne relève en aucune façon l'entrepreneur ou le fournisseur de sa responsabilité quant à l'exactitude de ce dessin ou à sa conformité avec les documents contractuels et les conditions de chantier. Examination of this drawing will not release in any way the Contractor or Supplier of his responsibilities as of the precision of this drawing or to its compliance with the contract documents and job site conditions.

☒ Procéder tel quel / Proceed as is
☑ Procéder tel qu'annoté / Proceed as noted
☐ Resoumettre / Re-submit

Par / By: [signature]
Date: 2018-04-25

THIS DRAWING IS COPY RIGHTED
THIS DRAWING IS A TRADE SECRET AND ONLY ENTRUSTED TO THE RECEIVER FOR THE PERSONAL USE WITHOUT THE WRITTEN AUTHORIZATION OF ANDRITZ SEPARATION, INC. IT SHALL NOT BE COPIED, USED, DISCLOSED OR TRANSFERRED, INCLUDING COMPETITORS, NOR MADE ACCESSIBLE TO SUCH PARTIES, ANY ILLEGAL USE BY THE RECEIVER OR THIRD PARTIES FOR WHICH HE IS RESPONSIBLE CAN CONSTITUTE A CAUSE FOR LEGAL ACTION. THIS DRAWING MUST BE RETURNED ON REQUEST OF THE COMPANY.

ANDRITZ SEPARATION, INC.
1010 COMMERCIAL BLVD. SOUTH
ARLINGTON, TEXAS 76017
Phone: (817)465–5811
Telefax: (817)472–8588

CERTIFIED CORRECT FOR INSTALLATION
BY: T.BARTOSH DATE: 4/10/18
PROJECT No. B31476
THESE DWGS. REFLECT CUSTOMER'S CHANGES AND APPROVAL ON PREVIOUS DWG. TRANSMITTALS

ESTIMATED WEIGHT IN LBS:	DRAWN BY: QG	DATE 04/10/18
UNLESS OTHERWISE SPECIFIED: DIMENSIONS ARE IN INCHES	CHECKED BY:	DATE
FABRICATION TOLERANCES .XXX±.040 ANG±1° HOLE±.020	APPROVED BY: JB	DATE 4/10/18
MACHINING TOLERANCES .XXX±.005 ANG±.5° HOLE±.020	THIRD ANGLE PROJECTION	
MILL FINISH ALL OVER		

ANDRITZ SEPARATION, INC.
1010 COMMERCIAL BLVD. SOUTH
ARLINGTON, TEXAS 76001
PHONE: (817) 465–5811

TITLE: VEOLIA AGNICO AMARUQ
D4L CENTRIFUGE
GENERAL ARRANGEMENT

SIZE	DRAWING NUMBER	REV
D	M831476–1	0

SCALE 1/16 | FILE M831476–1 | SHEET 1 OF 1

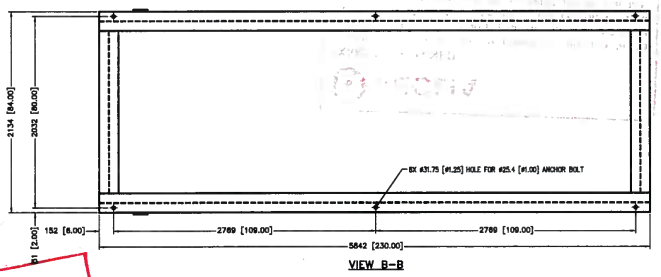

VIEW B-B

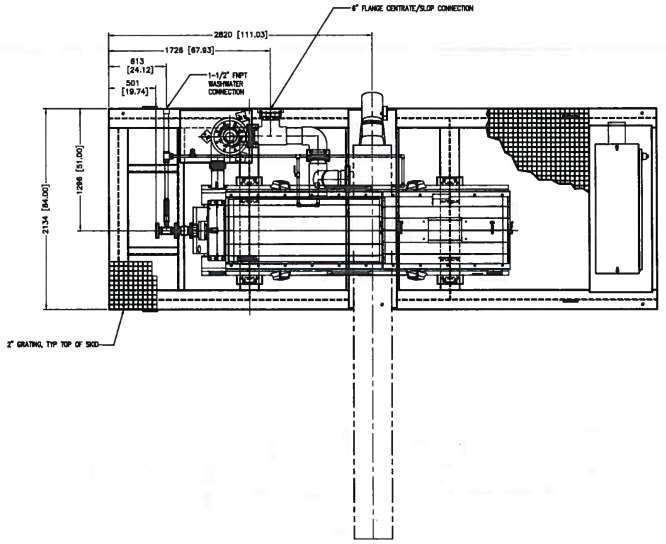

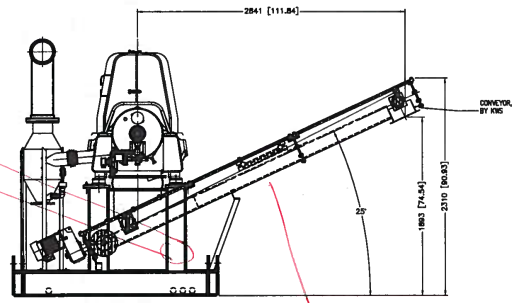

VIEW A-A
WASHWATER PIPING NOT SHOWN IN THIS VIEW

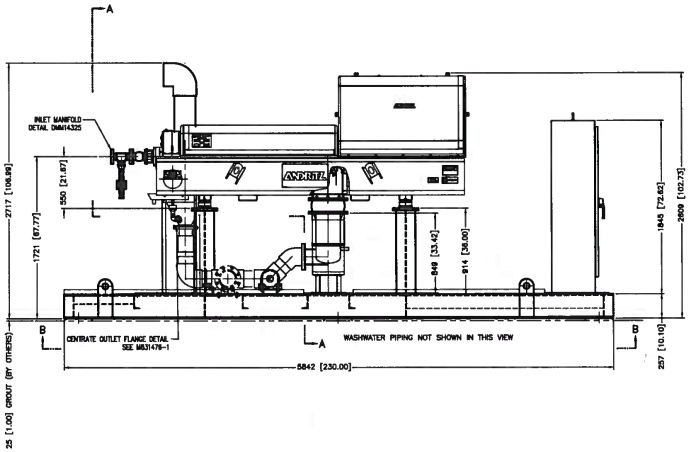

VEOLIA

EXAMINÉ/EXAMINED
L'examen de ce dessin ne relève en aucune façon l'entrepreneur ou le fournisseur de sa responsabilité quant à l'exactitude de ce dessin ou à sa conformité avec les documents contractuels et les conditions de chantier. L'examination of this drawing will not release in any way the Contractor or Supplier of his responsibilities as of the precision of this drawing or to its compliance with the contract documents and job site conditions.

- ☐ Procéder tel quel / Proceed as is
- ☒ Procéder tel qu'annoté / Proceed as noted
- ☐ Resoumettre / Re-submit

Par / by: _____

Date: _____

CONVEYOR ON THIS SIDE FOR UNIT 0601

CONVEYOR ON THIS SIDE FOR UNIT 0602

NOTES:
1. FOUNDATION DESIGN TO BE BY OTHERS.
2. ALL DIMENSIONS ARE IN mm WITH inches IN [ ].
3. PIPING TO/FROM SKID IS BY OTHERS.
4. PROCESS REQUIREMENTS: SEE NOTE 6 ON DRAWING M831476-1.
5. APPROXIMATE DRY WEIGHT OF SKID: 5883 kg [12,970 lbs].
   APPROXIMATE OPERATING WEIGHT OF SKID: 6677 kg [14,720 lbs].
6. SKID TO BE LEVEL IN ALL DIRECTIONS WITHIN 1.6mm [.063 inch].

ASAP DOCUMENT No.-

1010 COMMERCIAL BLVD. SOUTH ARLINGTON, TEXAS 76001 Phone: (817)465-6611 Telefax: (817)472-0502	DRAWN BY: QG	DATE 04/10/18	ANDRITZ ANDRITZ SEPARATION, INC. 1010 COMMERCIAL BLVD. SOUTH ARLINGTON, TEXAS 76001 PHONE: (817) 465-6611
CERTIFIED CORRECT FOR INSTALLATION BY: T.BARTOSH DATE: 4/10/18	CHECKED BY:	DATE	
PROJECT No. 831476	APPROVED BY: JB	DATE 4/11/18	
THESE SHOWS, REFLECT SUBTOMER'S CHANGES AND APPROVAL ON PROJECT DATA TRANSMITTALS	THIRD ANGLE PROJECTION		

TITLE: VEOLIA ARMCO AMARUG
D4L CENTRIFUGE SKID ASSEMBLY GENERAL ARRANGEMENT

SIZE	DRAWING NUMBER	REV
E	M831476-2	0

SCALE 1/16 | FILE M831476-2 | SHEET 1 OF 1

No	PART No	QTY	DESCRIPTION	MATERIAL
01	PINIX1.0CMN	5	CLOSE NIPPLE, 1"	316L
02	PINIX1.0CMN3	2	NIPPLE, 1 x 3 LG	316L
03	PINIX2.0CMN	3	CLOSE NIPPLE, 2"	316L
04	PI90X1.0CFN	1	90° ELBOW, 1"	316L
05	PITEX1.0CFN	2	TEE, 1" FNPT	316L
06	PITEX2.0CFN	1	TEE, 2" FNPT	316L
07	PIREX2X1CFN	1	REDUCER, CONC., 2 X 1 SCH 40 FNPT	316L
08	PIFLX2.0FFN	2	FLANGE, 2 (150 LB) THREADED	316L
09	VBLX1.0FFN	3	BALL VALVE, 1" FNPT	316L
10	131417950	1	ASCO EF8210G4, 1" SOLENOID VALVE	BRASS

6 NOTE:
1. ALL THREADED PIPE JOINTS TO BE SEALED WITH RECTORSEAL 5 PIPE THREAD SEALANT

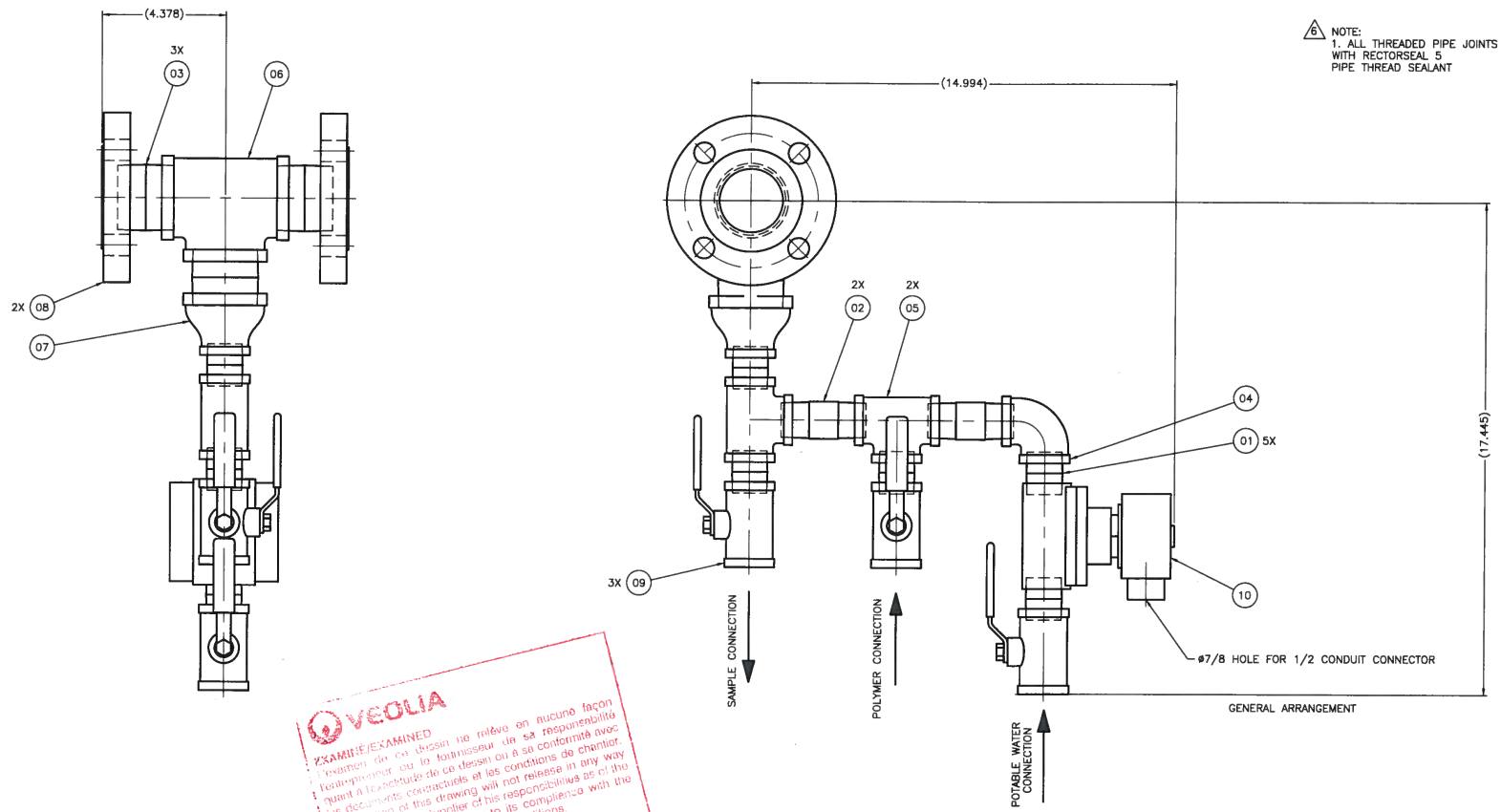

GENERAL ARRANGEMENT

VEOLIA
EXAMINÉ/EXAMINED
L'examen de ce dessin ne relève en aucune façon l'entrepreneur ou le fournisseur de sa responsabilité quant à l'exactitude de ce dessin ou à sa conformité avec les documents contractuels et les conditions de chantier. Examination of this drawing will not release in any way the Contractor or Supplier of his responsibilities as of the precision of this drawing or to its compliance with the contract documents and job site conditions.
☐ Procéder tel quel / Proceed as is
☒ Procéder tel qu'annoté / Proceed as noted
☐ Resoumettre / Re-submit
Par / by:
Date: 2018-04-17

THIS DRAWING IS COPY RIGHTED
THIS DRAWING IS A TRADE SECRET AND ONLY ENTRUSTED TO THE RECEIVER FOR HIS PERSONAL USE. WITHOUT THE SIGNED WRITTEN CONSENT OF ANDRITZ-RUTHNER, INC., IT MUST NOT BE COPIED NOR MADE AVAILABLE TO THIRD PARTIES, INCLUDING COMPETITORS, NOR MADE ACCESSIBLE TO SUCH PARTIES. ANY ILLEGAL USE BY THE RECEIVER OR THIRD PARTIES FOR WHICH HE IS RESPONSIBLE CAN CONSTITUTE A CAUSE FOR LEGAL ACTION. THIS DRAWING MUST BE RETURNED ON REQUEST OF THE COMPANY.

ANDRITZ
1010 COMMERCIAL BLVD. SOUTH
ARLINGTON, TEXAS 76017
Phone: (817)465-5611
Telefax: (817)472-8589

CERTIFIED CORRECT FOR INSTALLATION
BY: T.BARTOSH DATE: 4/10/18
PROJECT No. 831476
THESE DWGS. REFLECT CUSTOMER'S CHANGES AND APPROVAL ON PREVIOUS DWG. TRANSMITTALS

ESTIMATED WEIGHT IN LBS:
UNLESS OTHERWISE SPECIFIED: DIMENSIONS ARE IN INCHES
FABRICATION TOLERANCES .XXX±.040 ANG±1° HOLE±.020
MACHINING TOLERANCES .XXX±.005 ANG±.5° HOLE±.020
MILL FINISH ALL OVER

DRAWN BY: TB	DATE 4/10/18	
CHECKED BY:	DATE	
APPROVED BY: JB	DATE 4/11/18	
THIRD ANGLE PROJECTION		

ANDRITZ
ANDRITZ-RUTHNER, INC.
1010 COMMERCIAL BLVD. SOUTH
ARLINGTON, TEXAS 76001
PHONE: (817) 465-5611

TITLE CENTRIFUGE
MANIFOLD ASSEMBLY

SIZE	DRAWING NUMBER	REV
D	M831476-3	0

SCALE 1/2 FILE M831476-3 SHEET 1 OF 1

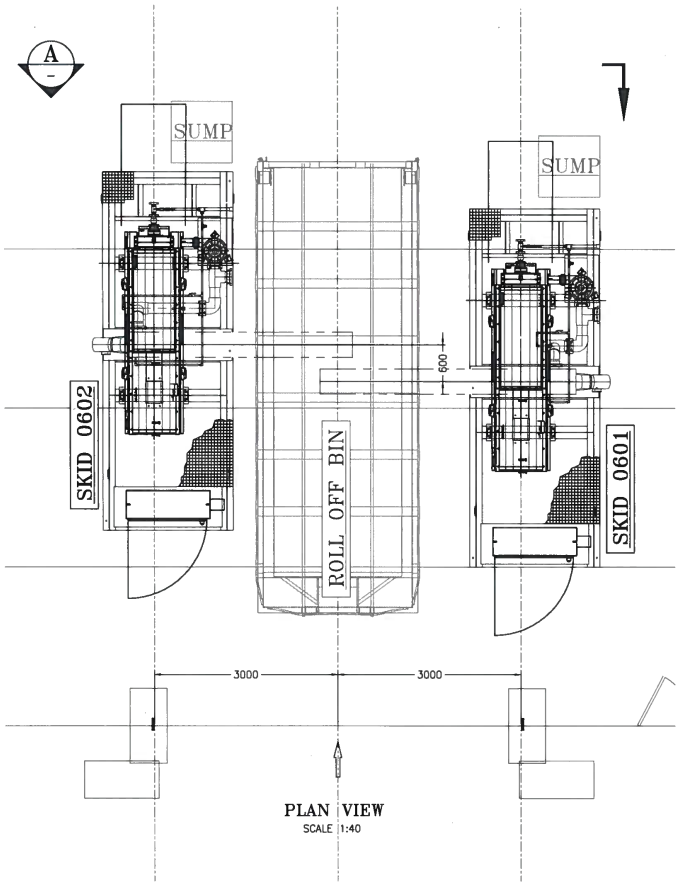

PLAN VIEW
SCALE 1:40

FOR INFORMATION

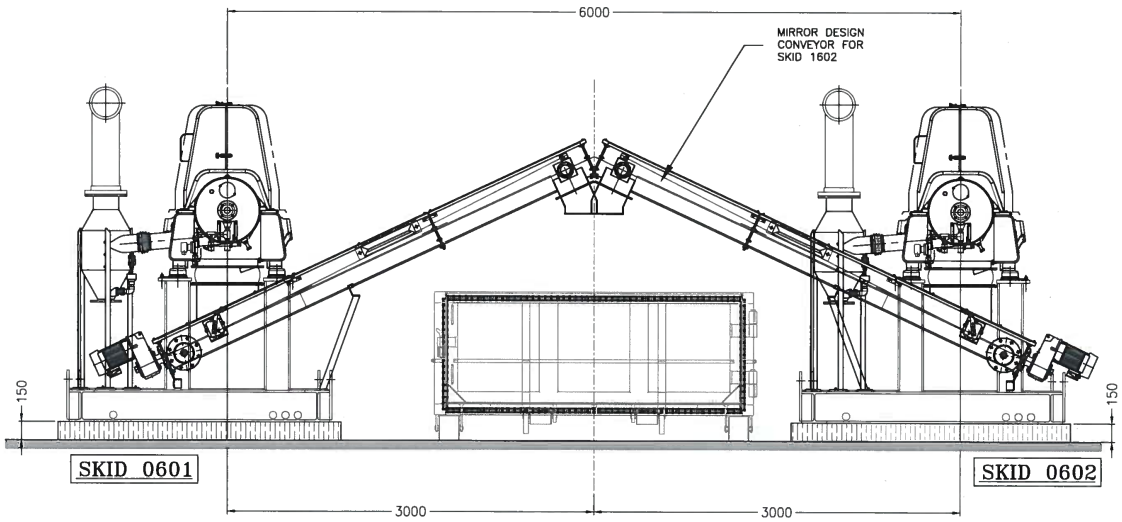

VIEW A
SCALE 1:20

REV	DESCRIPTION	DATE	REV'D	CHK'D	APV'D	ECN
2	CHANGE REQUEST	2018-04-17	A.C.	G.P.		
1	FOR INFORMATION	2018-04-06	A.C.	G.P.		

STD: "D" 22x34 REF:

CONFIDENTIALITY AND INTELLECTUAL PROPERTY NOTICE
ALL INFORMATION CONTAINED IN THIS DOCUMENT IS THE SOLE PROPERTY OF VEOLIA WATER TECHNOLOGIES CANADA INC. AND IS PROTECTED BY ALL APPLICABLE LAWS, INCLUDING BUT NOT LIMITED TO COPYRIGHT AND OTHER INTELLECTUAL PROPERTY LAWS. THE DESIGN CONCEPTS AND INFORMATION CONTAINED HEREIN ARE PROPRIETARY TO V.W.T. AND ARE SUBMITTED IN CONFIDENCE. THEY ARE NOT TRANSFERABLE. THEY MUST BE USED ONLY FOR THE PURPOSE FOR WHICH THE DOCUMENT IS EXPRESSLY SUBMITTED AND NO IMPLICIT LICENCE IS GRANTED OTHERWISE BY THE SUBMISSION OF THIS DOCUMENT. THEY ARE CONFIDENTIAL AND PRIVILEGED INFORMATION OF V.W.T. AND THEY MUST NOT BE DISCLOSED, REPRODUCED, LOANED, REMITTED OR USED IN ANY OTHER MANNER WITHOUT THE EXPRESS WRITTEN CONSENT OF V.W.T. V.W.T. ASSUMES NO RESPONSIBILITY OR LIABILITY FOR THE USE OF THIS DOCUMENT OR THE DESIGN CONCEPTS AND INFORMATION CONTAINED HEREIN FOR ANOTHER PROJECT, OR IN A MANNER THAT DOES NOT RELATE TO THE FITNESS OR PURPOSE OF THIS DOCUMENT. IN NO EVENT SHALL THIS DOCUMENT OR THE DESIGN CONCEPTS AND INFORMATION CONTAINED HEREIN BE USED IN A MANNER OTHER THAN TO THE BENEFIT OF V.W.T. ALL COPYRIGHT, PATENT AND OTHER INTELLECTUAL PROPERTY RIGHTS ARE RESERVED. ACCEPTANCE OF THE DELIVERY OF THIS DOCUMENT CONSTITUTES AGREEMENT TO THESE TERMS AND CONDITIONS.

DESIGNER A.C.	DATE 2018-04-06	TITLE WATER TREATMENT PLANT CENTRIFUGE SKIDS INSTALLATION SKETCH
CHECKER G.P.	DATE 2018-04-06	CLIENT AGNICO EAGLE MINING AMARUQ, NU
ENGINEER	DATE	VEOLIA
SCALE: 1:20		VEOLIA WATER TECHNOLOGIES CANADA INC. 4105 Sartelon, Saint-Laurent, Qc, Canada, Tel: (514) 334-7239

PROJECT	DRAWING	INTERNAL	SHEET	REV
5000218009	SK0002		1 OF 1	2

Apr 17, 2018 14:58:04 - W:\2018\5000218009 Amaruq (TH128505)\15- Dessins execution_Drawings\10- Autres_Others\5000218009-SK0002_2.dwg - cristiaco

TIE-IN POINTS		
TIE-POINT #	DESCRIPTION	DIMENSION / TYPE
TP1201	INLET	Ø1/2" - #150 FLANGE - R.F.
TP1202	OUTLET TO INJECTION POINT	Ø1/2" - #150 FLANGE - R.F.
TP1203	CALIBRATION COLUMN VENT	Ø1/2" - #150 FLANGE - R.F.

ITEM: 5000218007-SKID-1201
TOTAL QUANTITY: 1
WEIGHT: 149 Kg (328 Lbs)

NOTES:

1. ALL PIPING IS IN CHEMFLARE (PFA)
2. SUPPORT IN POLYPROPYLENE PLATE.
3. FOR EQUIPMENT INSTALLATION REFER TO PROJECT INSTALLATION MANUAL
4. RECOMMENDED OVERALL CLEARANCE MUST BE APPROX. 600mm ARROUND SKID.
5. REFERENCE DRAWING: 5000218009-PI0001 SHEET 12

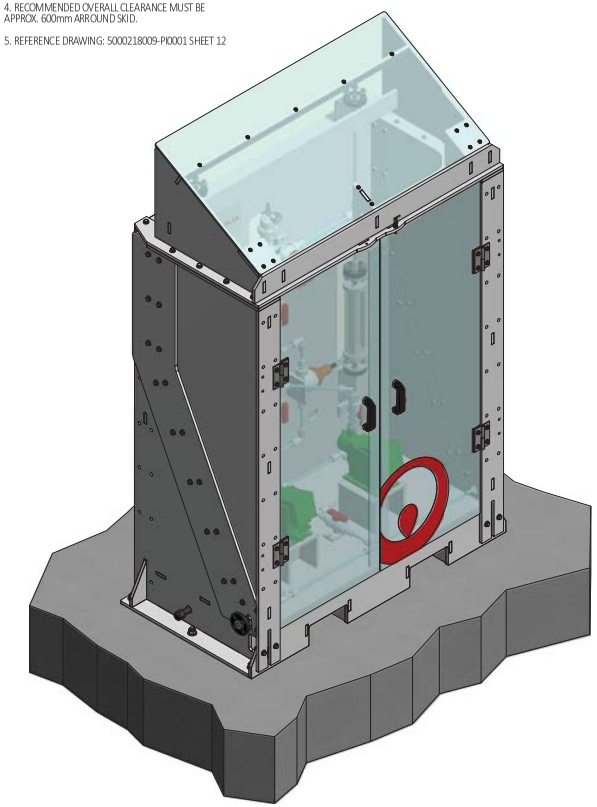

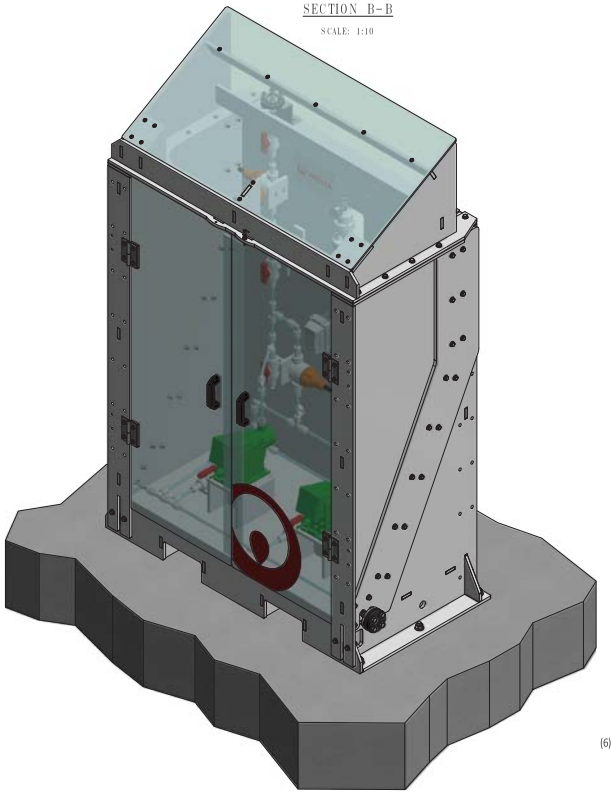

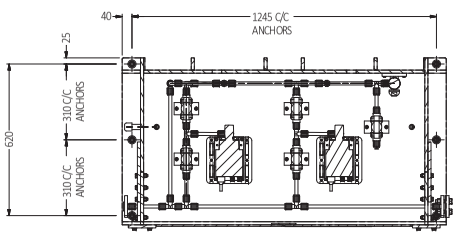

SECTION B-B
SCALE: 1:10

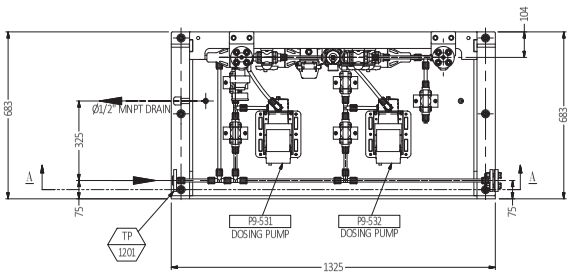

PLAN VIEW

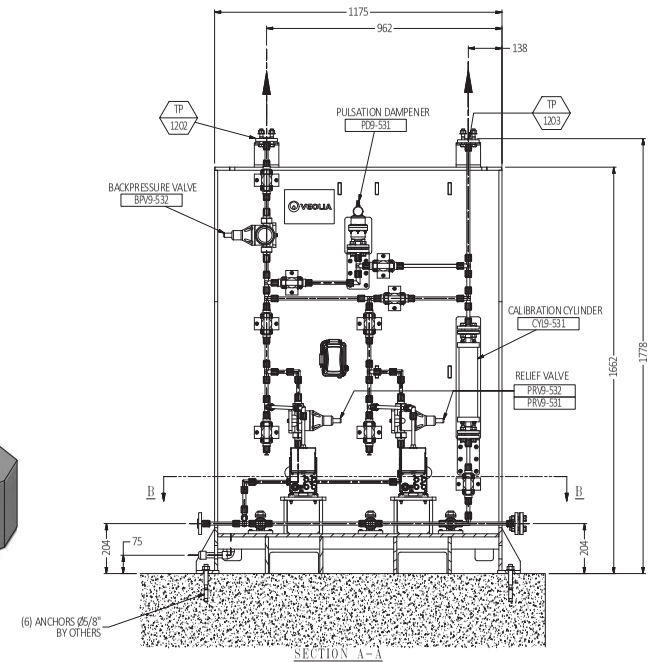

SECTION A-A
SCALE: 1:10

TOUTES LES DIMENSIONS SONT EN / ALL DIMENSIONS ARE IN: po. / in.

GENERAL TOLERANCES:

DIMENSIONS IN INCHES:	DIMENSIONS IN mm:
0 @ 24 : ± 1/32 [± .03]	0 @ 600 : ± 0.5
24 @ 160 : ± 1/16 [± .05]	600 @ 4000 : ± 1.0
> 160 : ± 1/8 [± .1]	> 4000 : ± 3.0

ANGLES: ± 0° 30'
BREAK ALL EDGES
ALL MACHINED SURFACES: 250

THIRD ANGLE PROJECTION

BARRE = 1" ALTO HELLO IMPRESSION
BAR = 1" AT PLOT SCALE

STD "D" 22 X 34 | REF: N/A

REV.	DESCRIPTION	DATE	REVISE REVISED	VERIFIE CHECKED	APPROUVE APPROVED	ECN
1	FOR APPROVAL	2018-04-25	M.M.	G.H.	G.P.	N/A

AVIS CONFIDENTIEL ET PROPRIÉTÉ INTELLECTUELLE
L'INFORMATION CONTENUE DANS CE DOCUMENT EST LA PROPRIÉTÉ EXCLUSIVE DE VEOLIA WATER TECHNOLOGIES CANADA INC. ET EST PRÊTÉE À NOTRE CLIENT SEULEMENT. NI CET EXEMPLAIRE NI AUCUNE PARTIE DE CE DOCUMENT NE DOIVENT ÊTRE COPIÉS, REPRODUITS, DIVULGUÉS OU UTILISÉS DE TOUTE AUTRE MANIÈRE SANS LE CONSENTEMENT EXPRÈS ÉCRIT DE VEOLIA PAR DE VIRT, VINCI, DOUTE TOUTE AUTRE UTILISATION NON AUTORISÉE DE CE DOCUMENT PEUT DONNER LIEU À DES POURSUITES CIVILES ET/OU CRIMINELLES. CE DOCUMENT EST CONFIDENTIEL ET PRÉPARÉ À L'INTENTION EXCLUSIVE DE LA PERSONNE À QUI IL EST REMIS. IL NE DOIT PAS ÊTRE DIVULGUÉ, REPRODUIT, PRÊTÉ OU UTILISÉ À D'AUTRES FINS SANS LE CONSENTEMENT ÉCRIT DE VEOLIA WATER TECHNOLOGIES CANADA INC. ET, LE CAS ÉCHÉANT, SANS LE PAIEMENT DES REDEVANCES APPLICABLES. CE DOCUMENT DOIT ÊTRE RETOURNÉ À VEOLIA WATER TECHNOLOGIES CANADA INC. SUR DEMANDE.
CONFIDENTIALITY AND INTELLECTUAL PROPERTY NOTICE
ALL INFORMATION CONTAINED IN THIS DOCUMENT IS THE SOLE PROPERTY OF VEOLIA WATER TECHNOLOGIES CANADA INC. AND IS PROTECTED BY ALL APPLICABLE LAWS, INCLUDING BUT NOT LIMITED TO COPYRIGHT AND OTHER INTELLECTUAL PROPERTY LAWS. THIS DESIGN CONCEPTS AND INFORMATION CONTAINED HEREIN ARE PROPRIETARY TO VWT AND ARE SUBMITTED IN CONFIDENCE. THEY ARE NOT TRANSFERRED ALL OR IN PART, EXCEPT AS AGREED IN WRITING BY VWT. ACCEPTANCE OF THIS DOCUMENT BY THE RECIPIENT IS CONDITIONAL UPON THE RECIPIENT'S AGREEMENT THAT UNLESS EXPRESSLY AUTHORIZED OTHERWISE BY THE SUBMISSION OF THIS DOCUMENT, THEY ARE CONFIDENTIAL AND PRIVILEGED INFORMATION OF VWT. AND THEY MUST NOT BE DISCLOSED, REPRODUCED, LOANED, REMITTED OR USED IN ANY OTHER MANNER WITHOUT THE EXPRESS WRITTEN CONSENT OF VWT. VWT ASSUMES NO RESPONSIBILITY OR LIABILITY FOR THE USE OF THIS DOCUMENT OR THE DESIGN CONCEPTS AND INFORMATION CONTAINED HEREIN FOR ANOTHER PROJECT, OR IN A MANNER THAT DOES NOT RELATE TO THE FITNESS OF PURPOSE OF THIS DOCUMENT. IN NO EVENT SHALL THIS DOCUMENT OR THE DESIGN CONCEPTS AND INFORMATION CONTAINED HEREIN BE USED IN A MANNER DETRIMENTAL TO THE INTEREST OF VWT. ALL COPYRIGHT, PATENT AND OTHER INTELLECTUAL PROPERTY RIGHTS ARE RESERVED. ACCEPTANCE OF THE DELIVERY OF THIS DOCUMENT CONSTITUTES AGREEMENT TO THESE TERMS AND CONDITIONS.

DESSINÉ PAR / DRAWN BY	M.M.	DATE 2018-05-02
VÉRIFIÉ PAR / CHECKED BY	G.H.	DATE 2018-05-02
INGÉNIÉRÉ PAR / ENGINEERING BY	G.H.	DATE 2018-05-02
ÉCHELLE: / SCALE:	1:10	

TITRE / TITLE: DOSING SKID
2 PUMPS / 1 DOSING POINT - SULFURIC ACID
GENERAL ARRANGEMENT

CLIENT: AGNICO EAGLE MINING
AMARUQ, NU

VEOLIA WATER TECHNOLOGIES CANADA INC. 4105 Sartelon, Saint-Laurent, Qc, Canada Tél: 514 334-7230

PROJET / PROJECT	DESSIN / DRAWING	NUMÉRO INTERNE / INTERNAL NUMBER	FEUILLETS / PAGES	REV.
5000218009	GA0004	PCH	1 / 1	1

LEFT BLANK

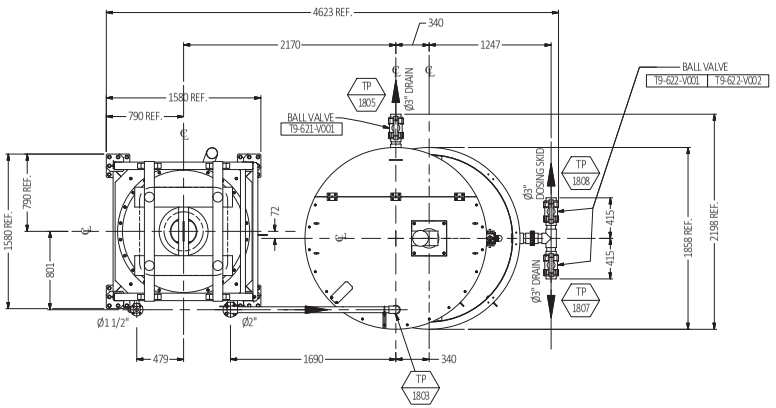

TOP VIEW

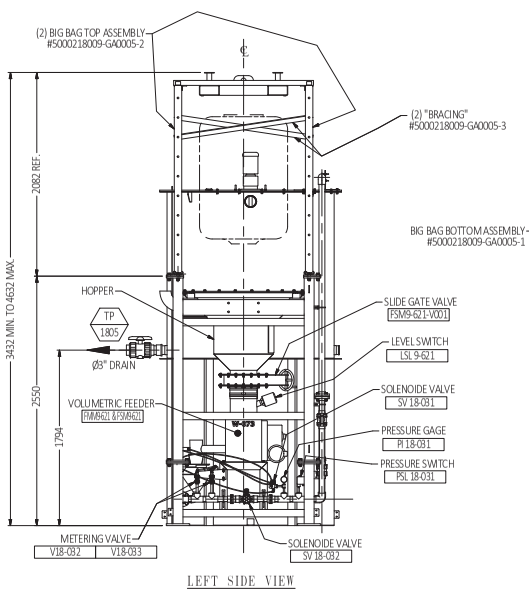

LEFT SIDE VIEW

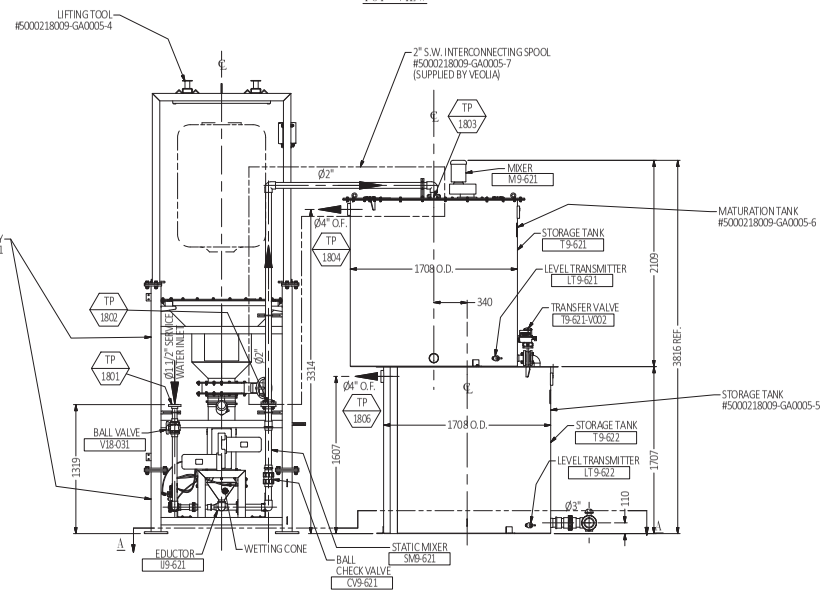

FRONT VIEW

TOUTES LES DIMENSIONS SONT EN / ALL DIMENSIONS ARE IN: mm

TIE-IN POINTS

TIE-POINT #	DESCRIPTION	DIMENSION / TYPE
TP1801	SERVICE WATER INLET	Ø1 1/2" - #150 FLANGE PVC
TP1802	OUTLET TO HYDRAPOL TANKS	Ø2" - #150 FLANGE PVC
TP1803	INLET HYDRAPOL TANKS	Ø2" - #150 FLANGE PVC
TP1804	OVERFLOW MATURATION TANK	Ø4" - FNPT THREADED 304L
TP1805	MATURATION TANK TO DRAIN	Ø3" - SOCKET PVC
TP1806	OVERFLOW STORAGE TANK	Ø4" - FNPT THREADED 304L
TP1807	STORAGE TANK DRAIN	Ø3" - SOCKET PVC
TP1808	OUTLET TO DOSING SKID	Ø3" - SOCKET PVC

ITEM: 5000218009-SKID #1801 & #1802

-TOTAL QUANTITY: 1
-WEIGHT EMPTY : 2833 KG (6246 Lbs)
-APPROXIMATIVE WEIGHT FULL : 10833 KG (23883 Lbs)

NOTES:

1. TANK AND STRUCTURE ARE IN SS304.
2. ALL PIPING IS IN PVC SCH.80.
3. RECOMMENDED OVER ALL CLEARANCE AROUND SKID MUST BE APPROX. 600mm.
4. REFERENCE DRAWING: 5000218009-PI00001 SHEET 18.
5. FOR EMBEDDING, STORAGE AND INSTALLATION OF EQUIPMENT, REFER TO PROJECT INSTALLATION MANUAL.
6. TO BE WIRED TO SCADA OR COSTOMER PLC/MCC (BY OTHERS).
7. DO NOT EXPOSE TO RAIN.

REV.	DESCRIPTION	DATE	REVISE REVISED	VERIFIE CHECKED	APPROUVE APPROVED	ECN
1	FOR APPROVAL	2018-05-07	N.L.	G.H.	G.P.	N/A

AVIS CONFIDENTIEL ET PROPRIÉTÉ INTELLECTUELLE
CONFIDENTIALITY AND INTELLECTUAL PROPERTY NOTICE
All information contained in this document is the sole property of Veolia Water Technologies Canada Inc. and is protected by all applicable laws, including but not limited to copyright and other intellectual property laws. This design concepts and information contained herein are proprietary to VWT and are submitted in confidence. They are not to be transferred, reproduced, used, disclosed or displayed without the express written consent of VWT. Use of this document or the design concepts and information contained herein for another project, or in a manner that does not relate to the purpose for which this document is so submitted, shall be at user's risk and without any liability on the part of VWT. Any unauthorized use of this document or the design concepts and information contained herein is strictly prohibited. All copyright, patent and other intellectual property rights are reserved. Acceptance of the delivery of this document constitutes agreement to these terms and conditions.

DESSINÉ PAR / DRAWN BY	DATE
N.L.	2018-05-07
VÉRIFIÉ PAR / CHECKED BY	DATE
G.H.	2018-05-07
INGÉNIÉRÉ PAR / ENGINEERING BY	DATE
G.P.	2018-05-07
ÉCHELLE / SCALE:	1:15

TITRE / TITLE: CATIONIC POLYMER PREPARATION SYSTM
BIG BAG UNLOADER & TANKS
GENERAL ARRENGEMENT

CLIENT: AGNICO EAGLE MINING
AMARUQ, NU

VEOLIA WATER TECHNOLOGIES CANADA INC. 4105 Sartelon, Saint-Laurent, Qc, Canada Tél: 514-334-7230

PROJET / PROJECT	DESSIN / DRAWING	NUMÉRO INTERNE / INTERNAL NUMBER	FEUILLETS / PAGES	REV.
5000218009	GA0005	PCH	1 / 2	1

STD "D" 22 X 34 | REF: | BARRE = 1" À L'ÉCHELLE D'IMPRESSION / BAR = 1" AT PLOT SCALE

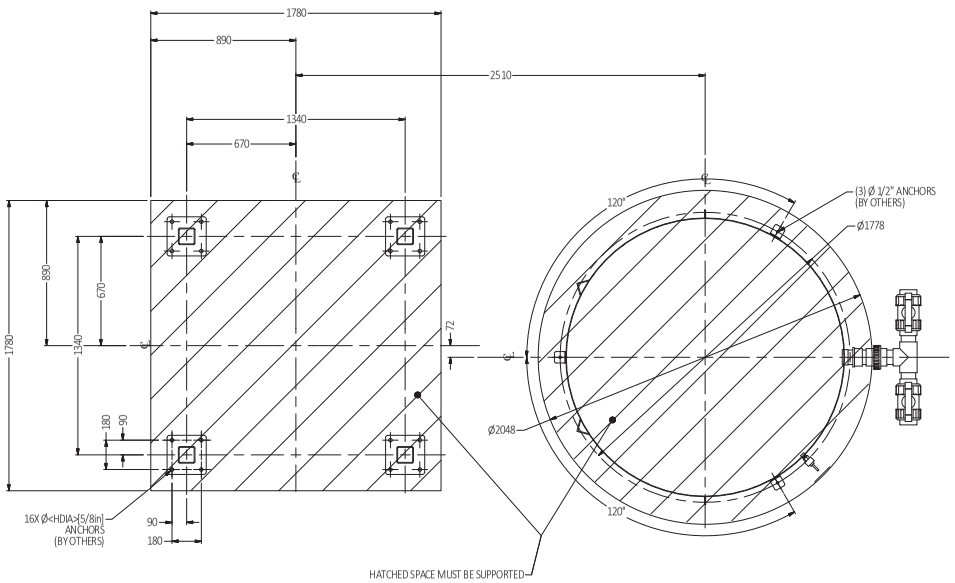

SECTION A-A

SCALE: 1:15

TOUTES LES DIMENSIONS SONT EN / ALL DIMENSIONS ARE IN: mm

REV.	DESCRIPTION	DATE	RÉVISÉ REVISED	VÉRIFIÉ CHECKED	APPROUVÉ APPROVED	ECN
1	FOR APPROVAL	2018-05-07	N.L.	G.H.	G.P.	N/A

AVIS CONFIDENTIEL ET DROIT DE PROPRIÉTÉ INTELLECTUELLE
L'INFORMATION CONTENUE DANS CE DOCUMENT EST LA PROPRIÉTÉ EXCLUSIVE DE VEOLIA WATER TECHNOLOGIES CANADA INC. ET EST PROTÉGÉE PAR TOUTES LES APPLICABLES LOIS, Y COMPRIS MAIS NON LIMITÉ À LA LOI SUR LE DROIT D'AUTEUR, LES MARQUES DE COMMERCE, LES BREVETS OU LES SECRETS INDUSTRIELS. LES DESSINS, LES CONCEPTS ET L'INFORMATION CONTENUS DANS CE DOCUMENT SONT LA PROPRIÉTÉ EXCLUSIVE DE V.W.T. ET DOIVENT DEMEURER CONFIDENTIELS. CE DESSIN, CONCEPTS ET CETTE INFORMATION NE DOIVENT PAS ÊTRE DIVULGUÉS, REPRODUITS, PRÊTÉS, COPIÉS OU UTILISÉS, DE TOUTE AUTRE MANIÈRE SANS LE CONSENTEMENT EXPRÈS ET ÉCRIT DE LA PART DE V.W.T. SAUF DANS LA MESURE OÙ CELA EST NÉCESSAIRE POUR LA MISE À L'ÉTUDE ET À L'APPROBATION DE CE DOCUMENT AINSI QUE DES ÉQUIPEMENTS QUI SE RAPPORTENT À CE DOCUMENT. LE DESSIN, LES CONCEPTS ET L'INFORMATION DANS CE DOCUMENT SONT FOURNIS À TITRE CONFIDENTIEL ET NE DOIVENT PAS ÊTRE UTILISÉS À DES FINS AUTRES QUE CELLES POUR LESQUELLES CE DOCUMENT EST EXPRESSÉMENT SOUMIS ET AUQUEL LICENCE IMPLICITE N'EST OCTROYÉE OU DÉCOULE. AUCUN PARTIE DU DOCUMENT, CE CONSTITUANT DE L'INFORMATION DE NATURE CONFIDENTIELLE ET PAS LIMITÉE À CE QUI EST DÉCRIT AU TEXTE, NE DOIT ÊTRE DIVULGUÉE, REPRODUITE, LOUÉE, REMISE OU UTILISÉE DE QUELQUE MANIÈRE QUE CE SOIT SANS L'AUTORISATION EXPRESSE, ÉCRITE DE V.W.T. TOUT DROITS D'AUTEUR, MARQUES DE COMMERCE, BREVETS OU AUTRES DROITS DE PROPRIÉTÉ INTELLECTUELLE SONT RÉSERVÉS. ACCEPTER OU UTILISER CE DOCUMENT SIGNIFIE QUE VOUS ACCEPTEZ DE VOUS CONFORMER À CES CONDITIONS.
CONFIDENTIALITY AND INTELLECTUAL PROPERTY NOTICE
ALL INFORMATION CONTAINED IN THIS DOCUMENT IS THE SOLE PROPERTY OF VEOLIA WATER TECHNOLOGIES CANADA INC. AND IS PROTECTED BY ALL APPLICABLE LAWS, INCLUDING BUT NOT LIMITED TO COPYRIGHT AND OTHER INTELLECTUAL PROPERTY LAWS. THIS DESIGN CONCEPTS AND INFORMATION CONTAINED HEREIN ARE PROPRIETARY TO V.W.T. AND ARE SUBMITTED IN CONFIDENCE. THEY ARE NOT TRANSFERRED ALL OR IN PART TO ANY OTHER PERSON EXCEPT AS NECESSARY FOR THE REVIEW AND APPROVAL OF THIS DOCUMENT AND EQUIPMENT TO WHICH IT RELATES OR AS EXPRESSLY CREATED OTHERWISE BY THE SUBMISSION OF THIS DOCUMENT. THEY ARE CONFIDENTIAL AND PROPRIETARY INFORMATION OF V.W.T. AND THEY MUST NOT BE DISCLOSED, REPRODUCED, LOANED, REMITTED OR USED IN ANY OTHER MANNER WITHOUT THE EXPRESS WRITTEN CONSENT OF V.W.T. V.W.T. ASSUMES NO RESPONSIBILITY OR LIABILITY FOR THE USE OF THIS DOCUMENT OR THE DESIGN CONCEPTS AND INFORMATION CONTAINED HEREIN FOR ANOTHER PROJECT, OR IN A MANNER THAT DOES NOT RELATE TO THE FITNESS OF PURPOSE OF THIS DOCUMENT. IN NO EVENT SHALL THIS DOCUMENT OR THE DESIGN CONCEPTS AND INFORMATION CONTAINED HEREIN BE USED IN A MANNER DETRIMENTAL TO THE INTEREST OF V.W.T. ALL COPYRIGHT, PATENT AND OTHER INTELLECTUAL PROPERTY RIGHTS ARE RESERVED. ACCEPTANCE OF THE DELIVERY OF THIS DOCUMENT CONSTITUTES AGREEMENT TO THESE TERMS AND CONDITIONS.

DESSINÉ PAR / DRAWN BY	DATE
N.L.	2018-05-07
VÉRIFIÉ PAR / CHECKED BY	DATE
G.H.	2018-05-07
INGÉNIEURE PAR / ENGINEERING BY	DATE
G.P.	2018-05-07
ÉCHELLE: / SCALE:	1:15

TITRE / TITLE: CATIONIC POLYMER PREPARATION SYSTEM
BIG BAG UNLOADER & TANKS
GENERAL ARRENGEMENT

CLIENT: AGNICO EAGLE MINING
AMARUQ, NU

VEOLIA

VEOLIA WATER TECHNOLOGIES CANADA INC. 4105 Sartelon, Saint-Laurent, Qc, Canada Tél: 514-334-7230

PROJET / PROJECT	DESSIN / DRAWING	NUMÉRO INTERNE / INTERNAL NUMBER	FEUILLETS / PAGES	REV.
5000218009	GA0005	PCH	2 / 2	1

STD "D" 22 X 34 | REF: | BARRE = 1" À L'ÉCHELLE D'IMPRESSION / BAR = 1" AT PLOT SCALE

TIE-IN POINTS

TIE-POINT #	DESCRIPTION	DIMENSION / TYPE
TP1601	SERVICE WATER INLET	Ø1" - #150 FLANGE PVC
TP1602	OUTLET TO HYDRAPOL TANKS	Ø1 1/2" - #150 FLANGE PVC
TP1603	OUTLET TO HYDRAPOL TANKS	Ø1 1/2" - #150 FLANGE PVC
TP1604	OVERFLOW MATURATION TANK	Ø2" - FNPT THREADED 304L
TP1605	MATURATION TANK TO DRAIN	Ø1 1/2" - SOCKET PVC
TP1606	OVERFLOW STORAGE TANK	Ø2" - FNPT THREADED 304L
TP1607	STORAGE TANK DRAIN	Ø1 1/2" - SOCKET PVC
TP1608	OUTLET TO DOSING SKID	Ø1 1/2" - SOCKET PVC
TP1609	COMPRESSED AIR INLET	Ø1/4 - FNPT THREADED 304L

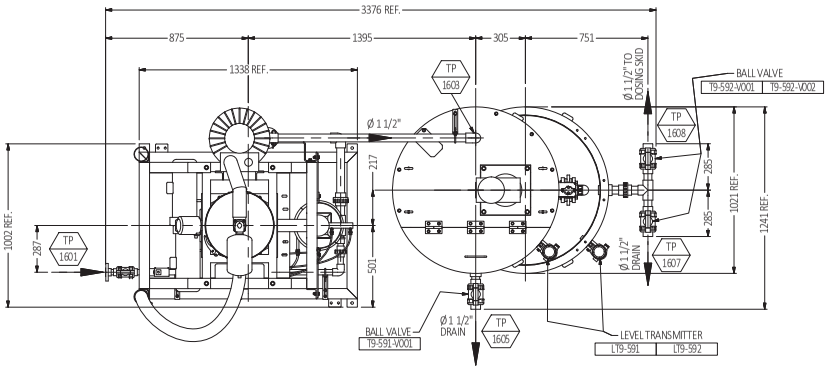

TOP VIEW

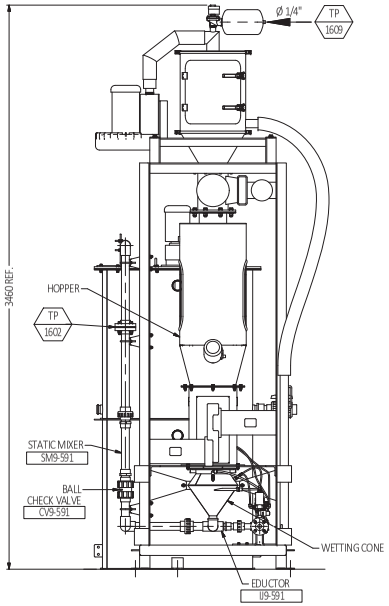

LEFT SIDE VIEW

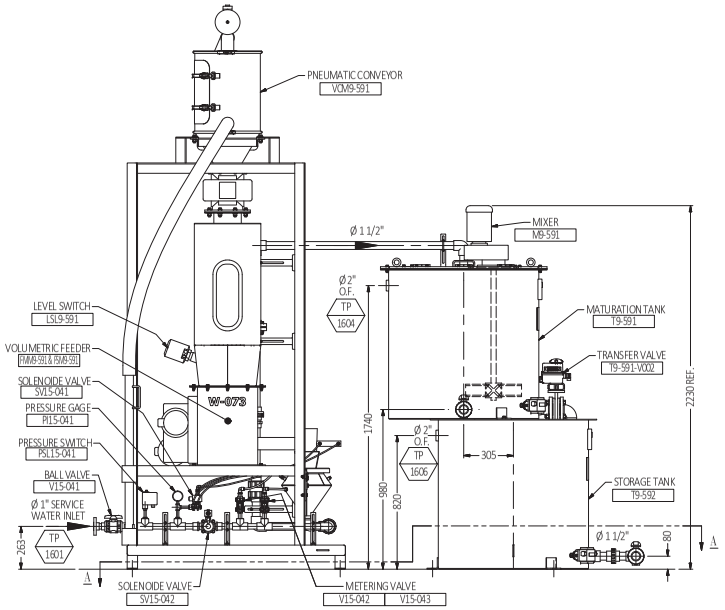

FRONT VIEW

ITEM: SKID #1601 & #1602

-TOTAL QUANTITY: 1
-WEIGHT EMPTY : 647KG (1427 Lbs)
-APPROXIMATIVE WEIGHT FULL : 1852KG (4083 Lbs)

NOTES:

1. TANK AND STRUCTURE ARE IN SS304.
2. ALL PIPING IS IN PVC SCH.80.
3. RECOMMENDED OVER ALL CLEARANCE AROUND SKID MUST BE APPROX. 600mm.
4. REFERENCE DRAWING: 5000218009-PI0001 SHEET 16.
5. FOR EMBEDDING, STORAGE AND INSTALLATION OF EQUIPMENT, REFER TO PROJECT INSTALLATION MANUAL.
6. TO BE WIRED TO SCADA OR COSTOMER PLC/MCC (BY OTHERS).
7. DO NOT EXPOSE TO RAIN.

TOUTES LES DIMENSIONS SONT EN / ALL DIMENSIONS ARE IN: mm

REV.	DESCRIPTION	DATE	REVISE REVISED	VERIFIE CHECKED	APPROUVE APPROVED	ECN
1	FOR APPROVAL	2018-04-26	N.L.	G.H.	G.P.	N/A

AVIS CONFIDENTIALITÉ ET PROPRIÉTÉ INTELLECTUELLE
L'INFORMATION CONTENUE DANS CE DOCUMENT EST LA PROPRIÉTÉ EXCLUSIVE DE VEOLIA WATER TECHNOLOGIES CANADA INC. ET EST PROTÉGÉE PAR TOUTES LES LOIS APPLICABLES INCLUANT, NOTAMMENT, LES LOIS EN MATIÈRE DE DROITS D'AUTEUR DONT EST DOTÉ TOUT AUTRE DROITS DE PROPRIÉTÉ INTELLECTUELLE. LES IDÉES ET CONCEPTS, L'INFORMATION CONTENUE DANS CE DOCUMENT SONT LA PROPRIÉTÉ EXCLUSIVE DE VWT, ET SONT SOUMIS À UNE CONFIDENTIALITÉ. LES IDÉES, CONCEPTS ET CETTE INFORMATION NE DOIVENT PAS ÊTRE DIVULGUÉS À DES TIERS SANS L'AUTORISATION ÉCRITE DE VWT. CE DOCUMENT NE PEUT ÊTRE UTILISÉ À D'AUTRES FINS QUE CELLES POUR LESQUELLES IL A ÉTÉ SOUMIS À VWT. CE DOCUMENT NE PEUT ÊTRE REPRODUIT, DIVULGUÉ, MODIFIÉ OU UTILISÉ SANS L'AUTORISATION ÉCRITE PRÉALABLE DE VWT. LE DESTINATAIRE DE CE DOCUMENT, EN L'ACCEPTANT, S'ENGAGE À RESPECTER LES RESTRICTIONS CI-DESSUS. TOUTE UTILISATION NON AUTORISÉE, DIVULGATION, REPRODUCTION OU MODIFICATION DE CE DOCUMENT SERA PASSIBLE DE POURSUITES JUDICIAIRES.
CONFIDENTIALITY AND INTELLECTUAL PROPERTY NOTICE
ALL INFORMATION CONTAINED IN THIS DOCUMENT IS THE SOLE PROPERTY OF VEOLIA WATER TECHNOLOGIES CANADA INC. AND IS PROTECTED BY ALL APPLICABLE LAWS, INCLUDING BUT NOT LIMITED TO COPYRIGHT AND OTHER INTELLECTUAL PROPERTY LAWS. THE DESIGN CONCEPTS AND INFORMATION CONTAINED HEREIN ARE PROPRIETARY TO VWT AND ARE SUBMITTED IN CONFIDENCE. THEY ARE NOT TRANSFERRED ALL OR IN PART BY THE SUBMISSION OF THIS DOCUMENT. THIS DOCUMENT MAY NOT BE USED FOR ANY PURPOSE NOT EXPRESSLY CREATED OTHERWISE BY THE SUBMISSION OF THIS DOCUMENT. THEY ARE CONFIDENTIAL AND PRIVILEGED INFORMATION OF VWT. AND THEY MUST NOT BE DISCLOSED, REPRODUCED, LOANED, REMITTED OR USED IN ANY OTHER MANNER WITHOUT THE EXPRESS WRITTEN CONSENT OF VWT. VWT ASSUMES NO RESPONSIBILITY OR LIABILITY FOR THE USE OF THIS DOCUMENT OR THE DESIGN CONCEPTS AND INFORMATION CONTAINED HEREIN FOR ANOTHER PROJECT, OR IN A MANNER THAT DOES NOT RELATE TO THE FITNESS OF PURPOSE OF THIS DOCUMENT. IN NO EVENT SHALL THE USE OF THIS DOCUMENT OR THE DESIGN CONCEPTS AND INFORMATION CONTAINED HEREIN BE USED IN A MANNER DETRIMENTAL TO THE INTEREST OF VWT. ALL COPYRIGHT, PATENT AND OTHER INTELLECTUAL PROPERTY RIGHTS ARE RESERVED. ACCEPTANCE OF THE DELIVERY OF THIS DOCUMENT CONSTITUTES AGREEMENT TO THESE TERMS AND CONDITIONS.

DESSINÉ PAR / DRAWN BY	N.L.	DATE 2018-04-26
VÉRIFIÉ PAR / CHECKED BY	G.H.	DATE 2018-04-26
INGÉNIEUR PAR / ENGINEERING BY	G.P.	DATE 2018-04-26
ÉCHELLE: / SCALE:	1:20	

TITRE / TITLE: KMNDM PREPARATION SYSTEM
BENCH & TANKS
GENERAL ARRANGEMENT

CLIENT: AGNICO EAGLE MINING
AMARUQ, NU

VEOLIA WATER TECHNOLOGIES CANADA INC. 4105 Sartelon, Saint-Laurent, Qc, Canada Tél: 514-334-7230

PROJET / PROJECT	DESSIN / DRAWING	NUMÉRO INTERNE / INTERNAL NUMBER	FEUILLETS / PAGES	REV.
5000218009	GA0006	PCH	1 / 2	1

STD "D" 2 2 X 34 | REF: | BARRE = 1" À L'ÉCHELLE D'IMPRESSION / BAR = 1" AT PLOT SCALE | RÉV. / REV.

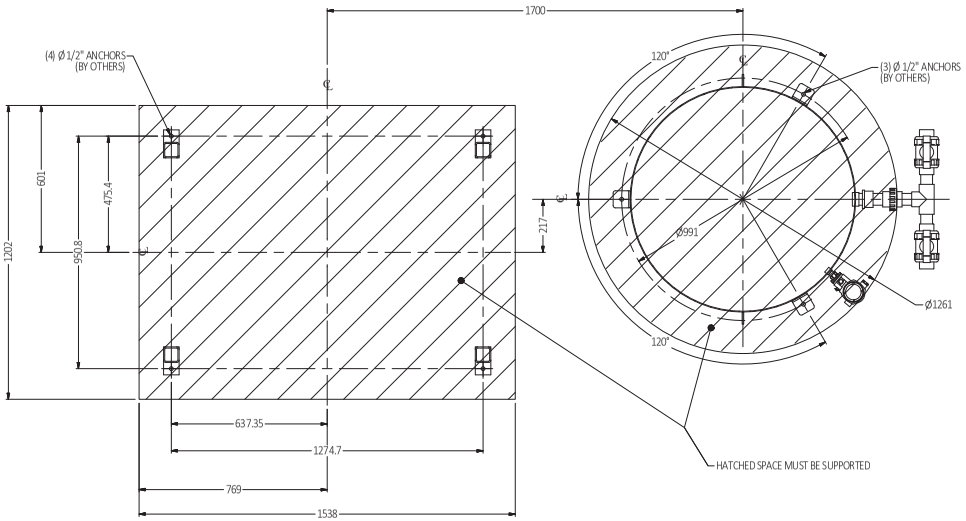

SECTION A-A

SCALE: 1:10

TOUTES LES DIMENSIONS SONT EN / ALL DIMENSIONS ARE IN: mm

			1	FOR APPROVAL	2018-04-26	N.L.	G.H.	G.P.	N/A
STD "D" 22 X 34	REF:	BARRE = 1" AU TCHELLE D'IMPRESSION BAR = 1" AT PLOT SCALE	RÉV. REV.	DESCRIPTION	DATE	RÉVISÉ REVISED	VÉRIFIÉ CHECKED	APPROUVÉ APPROVED	ECN

AVIS CONFIDENTIEL ET PROPRIÉTÉ INTELLECTUELLE
L'INFORMATION CONTENUE DANS CE DOCUMENT EST LA PROPRIÉTÉ EXCLUSIVE DE VEOLIA WATER TECHNOLOGIES CANADA INC. ET EST FOURNIE SOUS LES RÉSERVES SUIVANTES: LES DESSINS, DEVIS ET TOUTES LES AUTRES INFORMATIONS QUI Y SONT CONTENUES SONT CONFIDENTIELS ET DOIVENT DEMEURER LA PROPRIÉTÉ EXCLUSIVE DE VEOLIA WATER TECHNOLOGIES CANADA INC. ET/OU DE SES CLIENTS. ILS NE DOIVENT ÊTRE UTILISÉS QU'AUX FINS POUR LESQUELLES ILS ONT ÉTÉ REMIS ET NE DOIVENT ÊTRE COPIÉS, REPRODUITS, PRÊTÉS, DONNÉS OU VENDUS À AUCUNE AUTRE PERSONNE OU ENTREPRISE SANS L'AUTORISATION ÉCRITE DE VEOLIA WATER TECHNOLOGIES CANADA INC. CE DOCUMENT NE DOIT PAS ÊTRE DIVULGUÉ À DES TIERS SANS L'AUTORISATION ÉCRITE DE VEOLIA WATER TECHNOLOGIES CANADA INC. TOUT DROIT D'AUTEUR, BREVET, SAVOIR-FAIRE OU AUTRE DROIT DE PROPRIÉTÉ INTELLECTUELLE SONT RÉSERVÉS. ACCEPTER OU UTILISER CE DOCUMENT SIGNIFIE QUE VOUS ACCEPTEZ CES CONDITIONS.
CONFIDENTIAL AND INTELLECTUAL PROPERTY NOTICE
ALL INFORMATION CONTAINED IN THIS DOCUMENT IS THE SOLE PROPERTY OF VEOLIA WATER TECHNOLOGIES CANADA INC. AND IS PROTECTED BY ALL APPLICABLE LAWS, INCLUDING BUT NOT LIMITED TO COPYRIGHT AND OTHER INTELLECTUAL PROPERTY LAWS. THE DESIGN CONCEPTS AND INFORMATION CONTAINED HEREIN ARE PROPRIETARY TO VWT AND ARE SUBMITTED IN CONFIDENCE. THEY ARE NOT TRANSFERRED BY THE SUBMISSION OF THIS DOCUMENT. THEY ARE CONFIDENTIAL AND PRIVILEGED INFORMATION. IF V.W.T. HAS NOT EXECUTED OTHERWISE BY THE SUBMISSION OF THIS DOCUMENT,

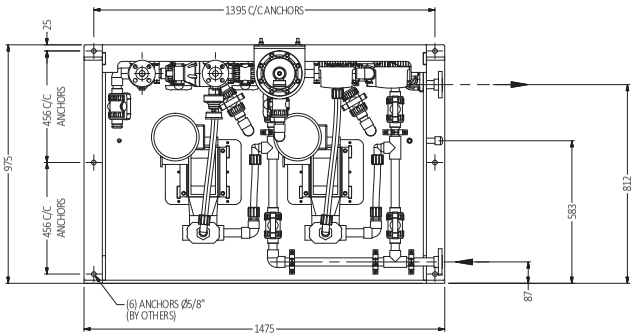

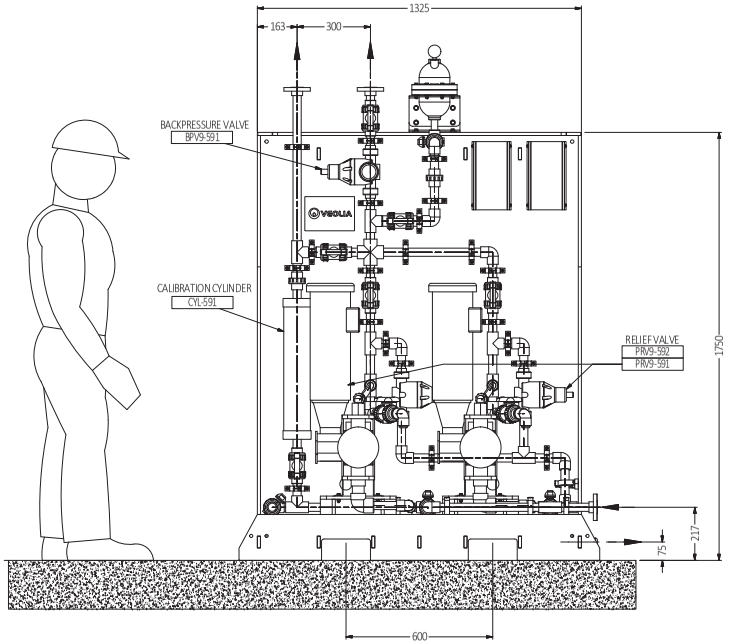

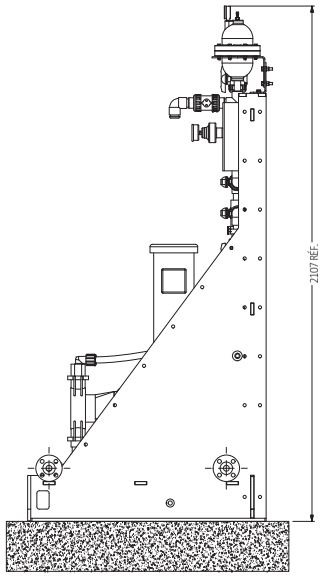

NOTES:

1. ALL PIPING IS IN PVC SCH.80
2. SUPPORT IN POLYPROPYLENE PLATE.
3. FOR EQUIPMENT INSTALLATION REFER TO PROJECT INSTALLATION MANUAL
4. RECOMMENDED OVERALL CLEARANCE MUST BE APPROX. 600mm ARROUND SKID AND 1000mm IN FRONT OF THE JUNCTION BOX.
5. REFERENCE DRAWING: 5000218009-PI0001 SHEET 17

TIE-IN POINTS		
TIE-POINT #	DESCRIPTION	DIMENSION / TYPE
TP1701	INLET	Ø1" - #150 FLANGE
TP1702	RELIEF VALVE TO TANK	Ø1" - #150 FLANGE
TP1703	CALIBRATION COLUMN VENT	Ø1" - #150 FLANGE
TP1704	OUTLET TO DOSING POINT	Ø1" - #150 FLANGE

ITEM: 5000218009-SKID 1701
TOTAL QUANTITY: 1
WEIGHT: 251 Kg (553 Lbs)

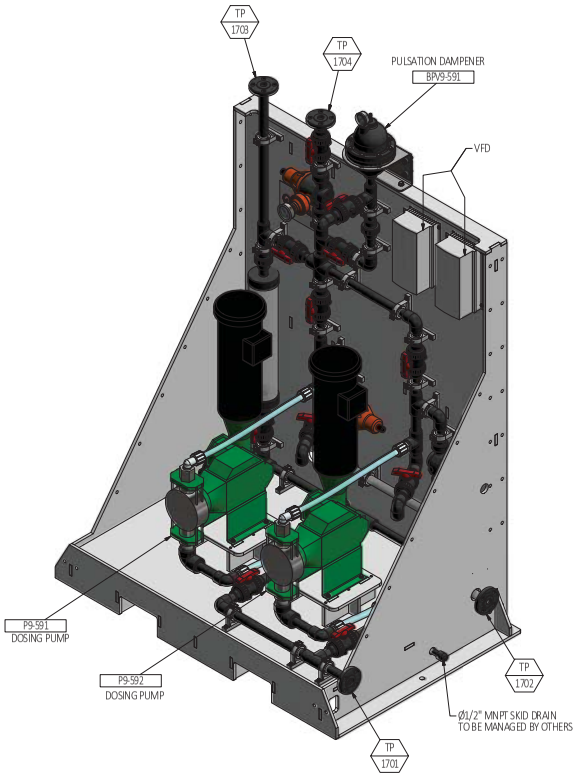

TOUTES LES DIMENSIONS SONT EN / ALL DIMENSIONS ARE IN: mm

TOLÉRANCES GÉNÉRALES:
DIMENSIONS EN POUCES: DIMENSIONS EN mm:
0 @ 24 : ± 1/32 [± .03] | 0 @ 600 : ± 0.5
24 @ 160 : ± 1/16 [± .05] | 600 @ 4000 : ± 1.0
> 160 : ± 1/8 [± .1] | > 4000 : ± 3.0
ANGLES: ± 0° 30'
BRISER TOUTES LES ARÊTES
TOUTES LES SURFACES USINÉES: 250
PROJECTION ORTHOGONALE
BARRE = 1" ALTCHELLE/ IMPRESSION
BAR = 1" ATPLOT SCALE

REV.	DESCRIPTION	DATE	REVISE REVISED	VÉRIFIÉ CHECKED	APPROUVÉ APPROVED	ECN
1	FOR APPROVAL	2018-04-25	M.M.	G.H.	G.P.	N/A

AVIS CONFIDENTIEL ET DROPRIÉTÉ INTELLECTUELLE
L'INFORMATION CONTENUE DANS CE DOCUMENT EST LA PROPRIÉTÉ EXCLUSIVE DE VEOLIA WATER TECHNOLOGIES CANADA INC. SAUF STIPULATION CONTRAIRE ÉCRITE, CE DOCUMENT NE DOIT ÊTRE DIVULGUÉ, REPRODUIT, NI UTILISÉ, EN TOUT OU EN PARTIE, À QUELQUE FIN QUE CE SOIT, SANS L'AUTORISATION ÉCRITE DE VEOLIA WATER TECHNOLOGIES CANADA INC. LES IDÉES ET CONCEPTS QUI Y SONT EXPOSÉS SONT LA PROPRIÉTÉ DE VEOLIA WATER TECHNOLOGIES CANADA INC. ET DEMEURENT LA PROPRIÉTÉ DE VEOLIA WATER TECHNOLOGIES CANADA INC. QUELLE QUE SOIT LA FORME DE LA REPRODUCTION OU DE LA DIVULGATION. CE DOCUMENT EST CONFIDENTIEL. LES IDÉES ET CONCEPTS QUI Y SONT EXPOSÉS, L'INFORMATION QUI Y EST CONTENUE ET LES DESSINS QUI Y SONT INCLUS NE DOIVENT ÊTRE DIVULGUÉS À AUCUNE PERSONNE AUTRE QUE CELLE À LAQUELLE ILS ONT ÉTÉ ORIGINALEMENT REMIS, À MOINS D'AUTRES ARRANGEMENTS PRÉALABLEMENT CONVENUS PAR ÉCRIT AVEC VEOLIA WATER TECHNOLOGIES CANADA INC. CE DOCUMENT NE DOIT PAS ÊTRE COPIÉ, REPRODUIT, PRÊTÉ, REMIS OU UTILISÉ DE TOUTE AUTRE MANIÈRE SANS LE CONSENTEMENT EXPRÈS ÉCRIT DE VEOLIA WATER TECHNOLOGIES CANADA INC. SAUF DISPOSITION CONTRAIRE ÉCRITE, CE DOCUMENT NE CONSTITUE QU'UNE SOUMISSION DE NATURE CONFIDENTIELLE ET NE DOIT ÊTRE UTILISÉ QU'À CETTE FIN. LES IDÉES ET CONCEPTS QUI Y SONT EXPOSÉS, L'INFORMATION QUI Y EST CONTENUE ET LES DESSINS QUI Y SONT INCLUS NE DOIVENT ÊTRE DIVULGUÉS À AUCUNE PERSONNE AUTRE QUE CELLE À LAQUELLE ILS ONT ÉTÉ ORIGINALEMENT REMIS, À MOINS D'AUTRES ARRANGEMENTS PRÉALABLEMENT CONVENUS PAR ÉCRIT AVEC VEOLIA WATER TECHNOLOGIES CANADA INC. CE DOCUMENT NE DOIT PAS ÊTRE COPIÉ, REPRODUIT, PRÊTÉ, REMIS OU UTILISÉ DE TOUTE AUTRE MANIÈRE SANS LE CONSENTEMENT EXPRÈS ÉCRIT DE VEOLIA WATER TECHNOLOGIES CANADA INC. SAUF DISPOSITION CONTRAIRE ÉCRITE, CE DOCUMENT NE CONSTITUE QU'UNE SOUMISSION DE NATURE CONFIDENTIELLE ET NE DOIT ÊTRE UTILISÉ QU'À CETTE FIN.
CONFIDENTIALITY AND INTELLECTUAL PROPERTY NOTICE
ALL INFORMATION CONTAINED IN THIS DOCUMENT IS THE SOLE PROPERTY OF VEOLIA WATER TECHNOLOGIES CANADA INC. AND IS PROTECTED BY ALL APPLICABLE LAWS, INCLUDING BUT NOT LIMITED TO COPYRIGHT AND OTHER INTELLECTUAL PROPERTY LAWS. THE DESIGN CONCEPTS AND INFORMATION CONTAINED HEREIN ARE PROPRIETARY TO VWT AND ARE SUBMITTED IN CONFIDENCE. THEY ARE NOT TRANSFERRED ALL OR IN PART EXCEPT AS AGREED IN WRITING BY VWT. THIS DOCUMENT IS NOT TO BE USED, COPIED, REPRODUCED OR DISCLOSED IN WHOLE OR IN PART EXCEPT AS EXPRESSLY CREATED OTHERWISE BY THE SUBMISSION OF THIS DOCUMENT. THEY ARE CONFIDENTIAL AND PRIVILEGED INFORMATION OF VWT. AND THEY MUST NOT BE DISCLOSED, REPRODUCED, LOANED, REMITTED OR USED IN ANY OTHER MANNER WITHOUT THE EXPRESS WRITTEN CONSENT OF VWT. VWT ASSUMES NO RESPONSIBILITY OR LIABILITY FOR THE USE OF THIS DOCUMENT OR THE DESIGN CONCEPTS AND INFORMATION CONTAINED HEREIN FOR ANOTHER PROJECT, OR IN A MANNER THAT DOES NOT RELATE TO THE FITNESS OF PURPOSE OF THIS DOCUMENT. IN NO EVENT SHALL THIS DOCUMENT OR THE DESIGN CONCEPTS AND INFORMATION CONTAINED HEREIN BE USED IN A MANNER DETRIMENTAL TO THE INTEREST OF VWT. ALL COPYRIGHT, PATENT AND OTHER INTELLECTUAL PROPERTY RIGHTS ARE RESERVED. ACCEPTANCE OF THE DELIVERY OF THIS DOCUMENT CONSTITUTES AGREEMENT TO THESE TERMS AND CONDITIONS.

		DATE
DESSINÉ PAR / DRAWN BY	M.M.	2018-05-02
VÉRIFIÉ PAR / CHECKED BY	G.H.	2018-05-02
INGÉNIÈRE PAR / ENGINEERING BY	G.H.	2018-05-02
ÉCHELLE: / SCALE:	1:10	

TITRE / TITLE: DOSING SKID KMW04 GENERAL ARRANGEMENT
CLIENT: AGNICO EAGLE MINING AMARUQ, NU

VEOLIA WATER TECHNOLOGIES CANADA INC. 4105 Sartelon, Saint-Laurent, Qc, Canada Tél: 514-334-7230

PROJET / PROJECT	DESSIN / DRAWING	NUMÉRO INTERNE / INTERNAL NUMBER	FEUILLETS / PAGES	REV. / REV.
5000218009	GA0007	PCH	1 / 1	1

STD "D" 22 X 34 | REF:-

NOTES:

1. ALL PIPING IS IN PVC SCH.80

2. SUPPORT IN POLYPROPYLENE PLATE.

3. FOR EQUIPMENT INSTALLATION REFER TO PROJECT INSTALLATION MANUAL

4. RECOMMENDED OVERALL CLEARANCE MUST BE APPROX. 600mm ARROUND SKID AND 1000mm IN FRONT OF THE JUNCTION BOX.

5. REFERENCE DRAWING: 5000218009-PI0001 SHEET 10

TIE-IN POINTS		
TIE-POINT #	DESCRIPTION	DIMENSION / TYPE
TP1001	INLET	Ø1" - #150 FLANGE
TP1002	RELIEF VALVE TO TANK	Ø1" - #150 FLANGE
TP1003	CALIBRATION COLUMN VENT	Ø1" - #150 FLANGE
TP1004	OUTLET TO DOSING POINT	Ø1" - #150 FLANGE

ITEM: 5000218009-SKID 1001
TOTAL QUANTITY: 1
WEIGHT: 285 Kg (629 Lbs)

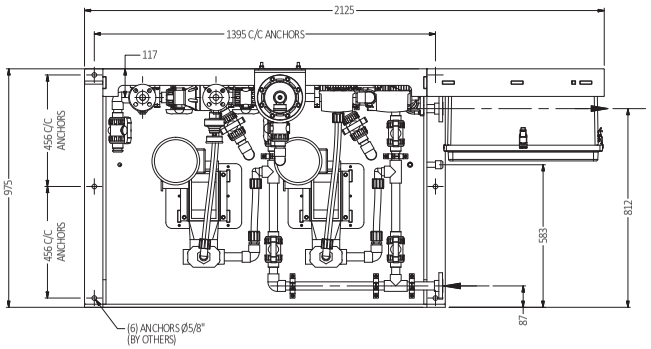

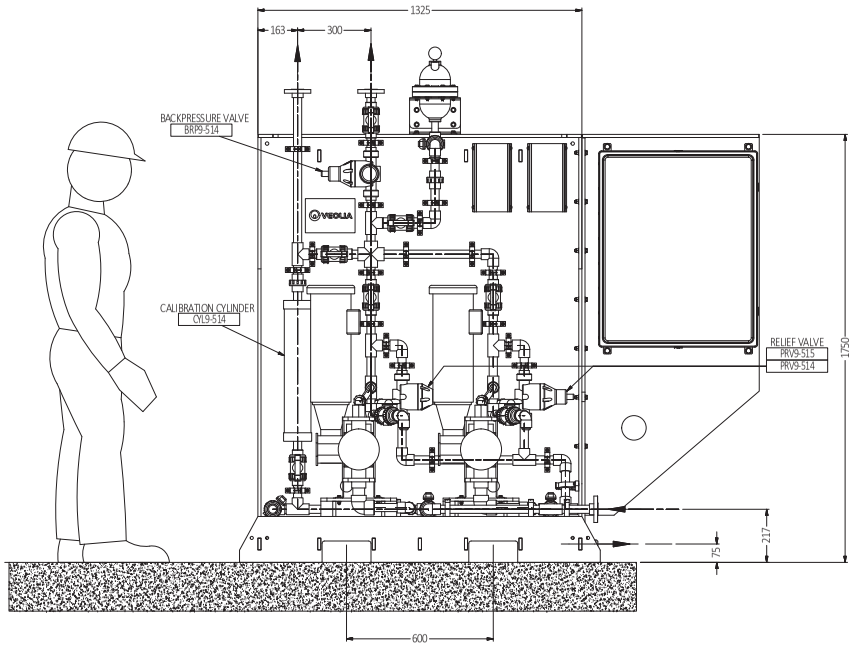

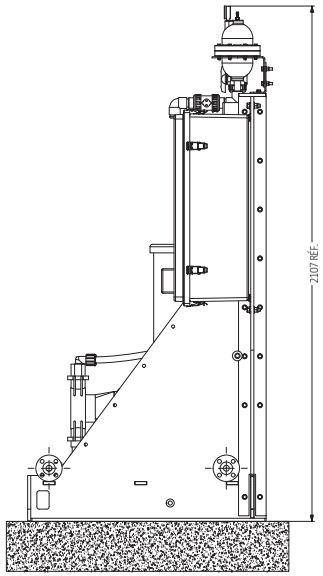

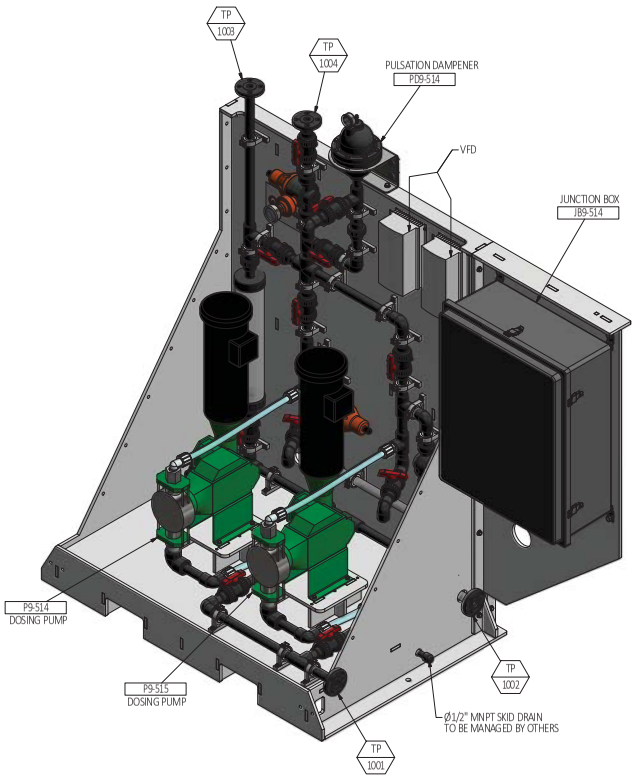

TOUTES LES DIMENSIONS SONT EN / ALL DIMENSIONS ARE IN: mm

TOLÉRANCES GÉNÉRALES:

DIMENSIONS EN POUCES:	DIMENSIONS EN mm:
0 @ 24 : ± 1/32 [± .03]	0 @ 600 : ± 0.5
24 @ 160 : ± 1/16 [± .05]	600 @ 4000 : ± 1.0
> 160 : ± 1/8 [± .1]	> 4000 : ± 3.0

ANGLES: ± 0° 30'
BRISER TOUTES LES ARÊTES
TOUTES LES SURFACES USINÉES: 250

PROJECTION ORTHOGONALE

BARRE = 1" ALTCHELLO IMPRESSION
BAR = 1" ATPLOT SCALE

STD "D" 22 X 34 | REF:-

REV.	DESCRIPTION	DATE	REVISE REVISED	VÉRIFIÉ CHECKED	APPROUVÉ APPROVED	ECN
1	FOR APPROVAL	2018-04-25	M.M.	G.H.	G.P.	N/A

AVIS CONFIDENTIEL ET DE PROPRIÉTÉ INTELLECTUELLE
L'INFORMATION CONTENUE DANS CE DOCUMENT EST LA PROPRIÉTÉ EXCLUSIVE DE VEOLIA WATER TECHNOLOGIES CANADA INC. ET EST PRÊTÉE AVEC LES APPLICABLES INCLUANT MAIS NON LIMITÉ AUX LOIS EN MATIÈRE DE DROITS D'AUTEUR ET DE TOUT AUTRE DROITS DE PROPRIÉTÉ INTELLECTUELLE. LES DESSINS CONCEPTS ET L'INFORMATION CONTENUS DANS CE DOCUMENT SONT LA PROPRIÉTÉ EXCLUSIVE DE VEOLIA WATER TECHNOLOGIES CANADA INC. ET SONT SOUMIS À UNE CONFIDENTIALITÉ. LES DESSINS CONCEPTS ET L'INFORMATION SONT NE DOIVENT ÊTRE UTILISÉS UNIQUEMENT AUX FINS POUR LESQUELLES CE DOCUMENT EST EXPRESSÉMENT SOUMIS ET AUCUNE LICENCE IMPLICITE N'EST OCTROYÉE OU DÉCOULE AUCUN PAR LA SOUMISSION DE CE DOCUMENT. CE DOCUMENT NE DOIT PAS ÊTRE COPIÉ, REPRODUIT OU DIVULGUÉ EN TOUT OU EN PARTIE, SOUS QUELQUE FORME QUE CE SOIT, SANS L'AUTORISATION ÉCRITE DE VEOLIA WATER TECHNOLOGIES CANADA INC. CE DOCUMENT NE DOIT PAS ÊTRE DIVULGUÉ À DES TIERS OU UTILISÉ À DES FINS AUTRES QUE CELLES POUR LESQUELLES IL A ÉTÉ SOUMIS. LES DESSINS CONCEPTS ET L'INFORMATION CONTENUS DANS CE DOCUMENT SONT PROTÉGÉS PAR LES LOIS EN MATIÈRE DE DROITS D'AUTEUR ET DE TOUT AUTRE DROITS DE PROPRIÉTÉ INTELLECTUELLE. LES DESSINS CONCEPTS ET L'INFORMATION CONTENUS DANS CE DOCUMENT SONT LA PROPRIÉTÉ EXCLUSIVE DE VEOLIA WATER TECHNOLOGIES CANADA INC. ET SONT SOUMIS À UNE CONFIDENTIALITÉ. LES DESSINS CONCEPTS ET L'INFORMATION SONT NE DOIVENT ÊTRE UTILISÉS UNIQUEMENT AUX FINS POUR LESQUELLES CE DOCUMENT EST EXPRESSÉMENT SOUMIS ET AUCUNE LICENCE IMPLICITE N'EST OCTROYÉE OU DÉCOULE AUCUN PAR LA SOUMISSION DE CE DOCUMENT. CE DOCUMENT NE DOIT PAS ÊTRE COPIÉ, REPRODUIT OU DIVULGUÉ EN TOUT OU EN PARTIE, SOUS QUELQUE FORME QUE CE SOIT, SANS L'AUTORISATION ÉCRITE DE VEOLIA WATER TECHNOLOGIES CANADA INC. CE DOCUMENT NE DOIT PAS ÊTRE DIVULGUÉ À DES TIERS OU UTILISÉ À DES FINS AUTRES QUE CELLES POUR LESQUELLES IL A ÉTÉ SOUMIS.
CONFIDENTIALITY AND INTELLECTUAL PROPERTY NOTICE
ALL INFORMATION CONTAINED IN THIS DOCUMENT IS THE SOLE PROPERTY OF VEOLIA WATER TECHNOLOGIES CANADA INC. AND IS THE RECEIVED BY AS APPLICABLE LAWS, INCLUDING BUT NOT LIMITED TO COPYRIGHT AND OTHER INTELLECTUAL PROPERTY LAWS. THIS DESIGN CONCEPTS AND INFORMATION CONTAINED HEREIN ARE PROPRIETARY TO I M AND ARE SUBMITTED IN CONFIDENCE. THEY ARE NOT TRANSFERRED ALL OR IN PART EXCEPT AS EXPRESSLY AUTHORIZED BY VEOLIA WATER TECHNOLOGIES CANADA INC. NO LICENSE IMPLIED OR OTHERWISE IS CREATED OTHERWISE BY THE SUBMISSION OF THIS DOCUMENT. THIS DOCUMENT AND PROVIDED INFORMATION OF V. W.T. AND THEY MUST NOT BE DISCLOSED, REPRODUCED, LOANED, REMITTED OR USED IN ANY OTHER MANNER WITHOUT THE EXPRESS WRITTEN CONSENT OF V. W.T. V. W.T. ASSUMES NO RESPONSIBILITY OR LIABILITY FOR THE USE OF THIS DOCUMENT OR THE DESIGN CONCEPTS AND INFORMATION CONTAINED HEREIN FOR ANOTHER PROJECT, OR IN A MANNER THAT DOES NOT RELATE TO THE FITNESS OF PURPOSE OF THIS DOCUMENT. IN NO EVENT SHALL THIS DOCUMENT OR THE DESIGN CONCEPTS AND INFORMATION CONTAINED HEREIN BE USED IN A MANNER DETRIMENTAL TO THE INTEREST OF V. W.T.. ALL COPYRIGHT, PATENT AND OTHER INTELLECTUAL PROPERTY RIGHTS ARE RESERVED. ACCEPTANCE OF THE DELIVERY OF THIS DOCUMENT CONSTITUTES AGREEMENT TO THESE TERMS AND CONDITIONS.

DESSINÉ PAR DRAWN BY	M.M.	DATE 2018-05-02
VÉRIFIÉ PAR CHECKED BY	G.H.	DATE 2018-05-02
INGÉNIEURE PAR ENGINEERING BY	G.H.	DATE 2018-05-02
ÉCHELLE: SCALE:	1:10	

TITRE / TITLE: DOSING SKID COAGULANT GENERAL ARRANGEMENT

CLIENT: AGNICO EAGLE MINING
AMARUQ, NU

VEOLIA WATER TECHNOLOGIES CANADA INC. 4105 Sartelon, Saint-Laurent, Qc, Canada Tél: 514-334-7230

PROJET / PROJECT	DESSIN / DRAWING	NUMÉRO INTERNE / INTERNAL NUMBER	FEUILLETS / PAGES	REV. / REV.
5000218009	GA0008	PCH	1 / 1	1

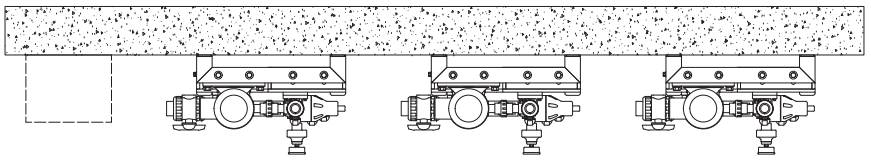

TIE-POINTS SKID #1902		
TIE-POINT #	DESCRIPTION	DIMENSION / TYPE
TP1911	INLET FROM CALIBRATION COLUMN	Ø1" [25mm] SOCKET
TP1912	INLET CATIONIC POLYMER	Ø1 1/2" [40mm] SOCKET
TP1913	INLET WASH WATER	Ø1/2" [15mm] SOCKET
TP1914	OUTLET, TO DOSING POINT	Ø1" [25mm] SOCKET

TIE-POINTS SKID#1903		
TIE-POINT #	DESCRIPTION	DIMENSION / TYPE
TP1921	INLET FROM CALIBRATION COLUMN	Ø1" [25mm] SOCKET
TP1922	INLET CATIONIC POLYMER	Ø1 1/2" [40mm] SOCKET
TP1923	INLET WASH WATER	Ø1/2" [15mm] SOCKET
TP1924	OUTLET TO DOSING POINT	Ø1" [25mm] SOCKET

TIE-POINTS SKID #1904		
TIE-POINT #	DESCRIPTION	DIMENSION / TYPE
TP1931	INLET FROM CALIBRATION COLUMN	Ø1" [25mm] SOCKET
TP1932	INLET CATIONIC POLYMER	Ø1 1/2" [40mm] SOCKET
TP1933	INLET WASH WATER	Ø1/2" [15mm] SOCKET
TP1934	OUTLET TO DOSING POINT	Ø1" [25mm] SOCKET

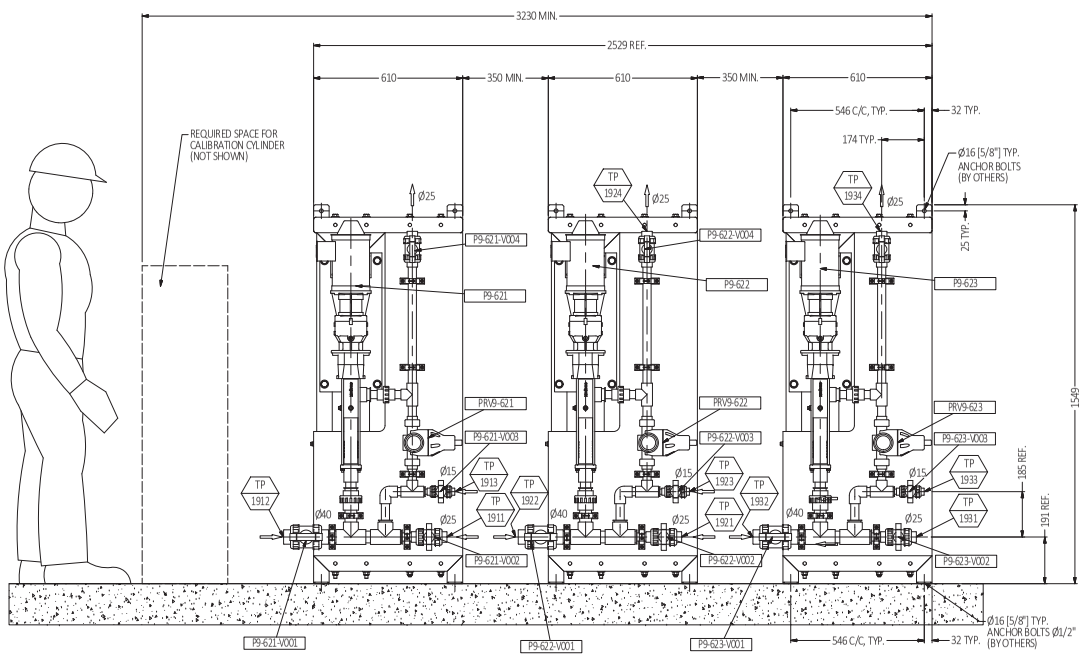

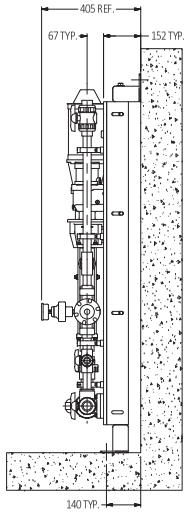

ITEM: SKID #1902, #1903 AND #1904
QUANTITY: 3
WEIGHT: 159Kg (351Lbs) EACH

NOTES:
1. ALL PIPING IN PVC SCH80
2. SUPPORT IN STAINLESS STEEL 304 AND POLYPROPYLENE PLATE.
3. FOR EQUIPMENT INSTALLATION REFER TO PROJECT INSTALLATION MANUAL.
4. RECOMMENDED OVERALL CLEARANCE AROUND SKIDS MUST BE APPROX. 600mm
5. REFERENCE DRAWING: 5000218009-PI0001 SHEET 19.

TOUTES LES DIMENSIONS SONT EN / ALL DIMENSIONS ARE IN: mm

TOLÉRANCES GÉNÉRALES:
DIMENSIONS EN POUCES: 0 @ 24 : ± 1/32 [± .03]; 24 @ 160 : ± 1/16 [± .05]; > 160 : ± 1/8 [± .1]
DIMENSIONS EN mm: 0 @ 600 : ± 0.5; 600 @ 4000 : ± 1.0; > 4000 : ± 3.0
ANGLES: ± 0° 30'
BRISER TOUTES LES ARÊTES
TOUTES LES SURFACES USINÉES: 250
PROJECTION ORTHOGONALE
BARRE = 1" AU TRACÉ ET À L'IMPRESSION
BAR = 1" AT PLOT SCALE

REV.	DESCRIPTION	DATE	REVISÉ REVISED	VÉRIFIÉ CHECKED	APPROUVÉ APPROVED	ECN
1	FOR APPROVAL	2018-04-26	A.C.	G.H.	G.P.	N/A

AVIS CONFIDENTIEL ET DE PROPRIÉTÉ INTELLECTUELLE
L'INFORMATION CONTENUE DANS CE DOCUMENT EST LA PROPRIÉTÉ EXCLUSIVE DE VEOLIA WATER TECHNOLOGIES CANADA INC. ET EST PRÊTÉE À NOTRE CLIENT SEULEMENT À TITRE CONFIDENTIEL. CE DOCUMENT NE DOIT PAS ÊTRE DIVULGUÉ, REPRODUIT, ENTREPOSÉ DANS UN SYSTÈME DE RÉCUPÉRATION, TRANSMIS OU UTILISÉ DE QUELQUE MANIÈRE QUE CE SOIT, ÉLECTRONIQUE, MÉCANIQUE, PHOTOCOPIE, ENREGISTREMENT OU AUTRE, SANS LE CONSENTEMENT PRÉALABLE ÉCRIT DE VEOLIA WATER TECHNOLOGIES CANADA INC. SAUF DANS LA MESURE EXPRESSÉMENT AUTORISÉE PAR LA LOI OU PAR UNE ENTENTE ÉCRITE. LES DESSINS, CONCEPTS ET RENSEIGNEMENTS CONTENUS DANS CE DOCUMENT SONT LA PROPRIÉTÉ EXCLUSIVE DE VEOLIA WATER TECHNOLOGIES CANADA INC. ET NE DOIVENT PAS ÊTRE DIVULGUÉS À DES TIERS OU UTILISÉS À DES FINS AUTRES QUE CELLES POUR LESQUELLES ILS ONT ÉTÉ FOURNIS, SANS LE CONSENTEMENT ÉCRIT PRÉALABLE DE VEOLIA WATER TECHNOLOGIES CANADA INC. SAUF DISPOSITION CONTRAIRE PRÉVUE PAR ÉCRIT,

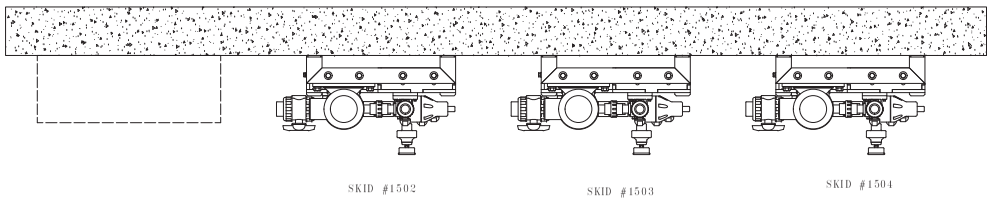

TIE-POINTS SKID #1502		
TIE-POINT #	DESCRIPTION	DIMENSION / TYPE
TP1511	INLET FROM CALIBRATION COLUMN	Ø1" [25mm] SOCKET
TP1512	INLET ANIONIC POLYMER	Ø1 1/2" [40mm] SOCKET
TP1513	INLET WASH WATER	Ø1/2" [15mm] SOCKET
TP1514	OUTLET, TO DOSING POINT	Ø1" [25mm] SOCKET

TIE-POINTS SKID#1503		
TIE-POINT #	DESCRIPTION	DIMENSION / TYPE
TP1521	INLET FROM CALIBRATION COLUMN	Ø1" [25mm] SOCKET
TP1522	INLET ANIONIC POLYMER	Ø1 1/2" [40mm] SOCKET
TP1523	INLET WASH WATER	Ø1/2" [15mm] SOCKET
TP1524	OUTLET TO DOSING POINT	Ø1" [25mm] SOCKET

TIE-POINTS SKID #1504		
TIE-POINT #	DESCRIPTION	DIMENSION / TYPE
TP1531	INLET FROM CALIBRATION COLUMN	Ø1" [25mm] SOCKET
TP1532	INLET ANIONIC POLYMER	Ø1 1/2" [40mm] SOCKET
TP1533	INLET WASH WATER	Ø1/2" [15mm] SOCKET
TP1534	OUTLET TO DOSING POINT POINT	Ø1" [25mm] SOCKET

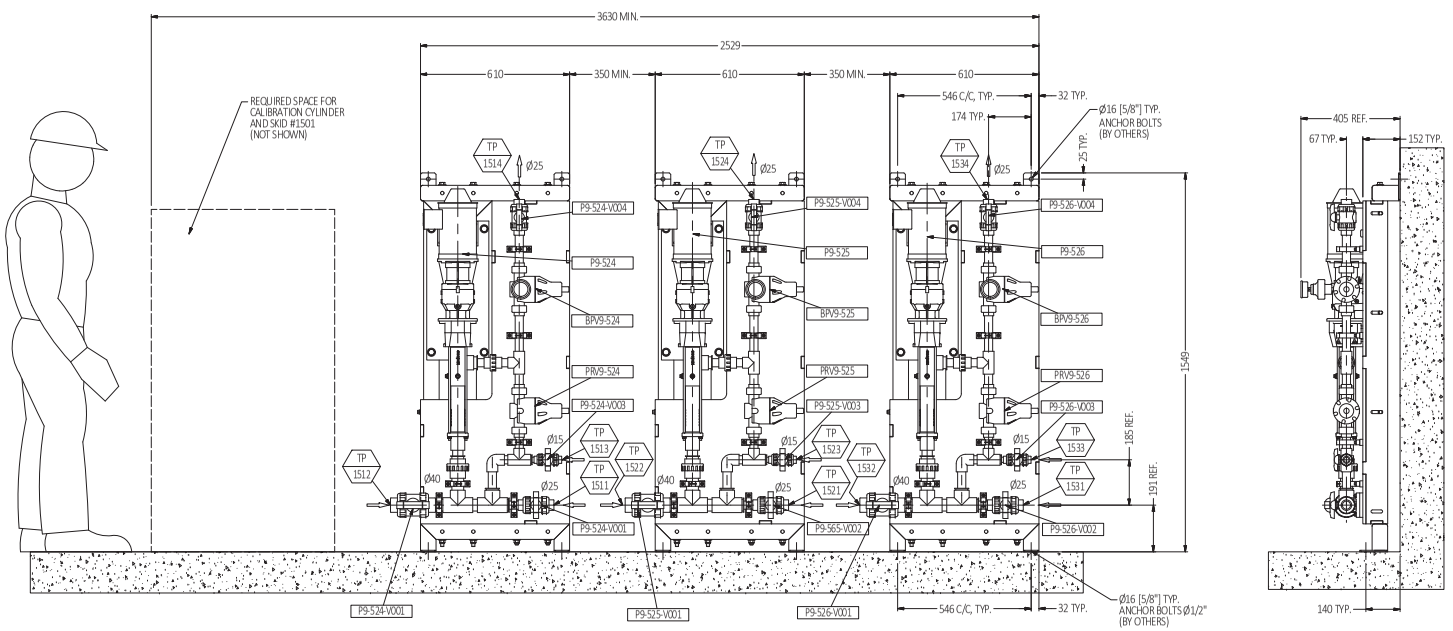

ITEM: SKID #1502, #1503 AND #1504

QUANTITY: 3
WEIGHT: 159Kg (351Lbs) EACH

NOTES:
1. ALL PIPING IN PVC SCH80
2. SUPPORT IN STAINLESS STEEL 304 AND POLYPROPYLENE PLATE.
3. FOR EQUIPMENT INSTALLATION REFER TO PROJECT INSTALLATION MANUAL.
4. RECOMMENDED OVERALL CLEARANCE AROUND SKIDS MUST BE APPROX. 600mm
5. REFERENCE DRAWING: 5000218009-PI0001 SHEET 15.

TOUTES LES DIMENSIONS SONT EN / ALL DIMENSIONS ARE IN: mm

TOLÉRANCES GÉNÉRALES:

DIMENSIONS EN POUCES:	DIMENSIONS EN mm:
0 @ 24 : ± 1/32 [± .03]	0 @ 600 : ± 0.5
24 @ 160 : ± 1/16 [± .05]	600 @ 4000 : ± 1.0
> 160 : ± 1/8 [± .1]	> 4000 : ± 3.0

ANGLES: ± 0° 30'
BRISER TOUTES LES ARÊTES
TOUTES LES SURFACES USINÉES: 250

PROJECTION ORTHOGONALE

BARRE = 1" AU CHELLE / IMPRESSION
BAR = 1" AT PLOT SCALE

STD "D" 22 X 34 | REF:

REV.	DESCRIPTION	DATE	REVISE REVISED	VÉRIFIÉ CHECKED	APPROUVÉ APPROVED	ECN
1	FOR APPROVAL	2018-04-26	A.C.	G.H.	G.P.	N/A

AVIS CONFIDENTIEL ET DE PROPRIÉTÉ INTELLECTUELLE
L'INFORMATION CONTENUE DANS CE DOCUMENT EST LA PROPRIÉTÉ EXCLUSIVE DE VEOLIA WATER TECHNOLOGIES CANADA INC. (VWT). TOUTE UTILISATION NON AUTORISÉE PAR VWT, Y COMPRIS, MAIS SANS S'Y LIMITER, LA REPRODUCTION, LA MODIFICATION, LA DIFFUSION OU LA DIVULGATION DU PRÉSENT DOCUMENT OU DE TOUTE PARTIE DE CELUI-CI, SANS L'AUTORISATION ÉCRITE DE VWT, PEUT ENTRAÎNER DES POURSUITES CIVILES ET/OU PÉNALES. LES RENSEIGNEMENTS CONTENUS DANS CE DOCUMENT SONT LA PROPRIÉTÉ DE VWT ET DOIVENT DEMEURER CONFIDENTIELS. CE DOCUMENT NE DOIT PAS ÊTRE COPIÉ, REPRODUIT OU DIVULGUÉ À DES TIERS SANS L'AUTORISATION ÉCRITE DE VWT. CE DOCUMENT EST FOURNI À TITRE CONFIDENTIEL ET NE DOIT ÊTRE UTILISÉ QUE DANS LE CADRE DU PROJET POUR LEQUEL IL A ÉTÉ SOUMIS. LES CONCEPTS DE CONCEPTION ET LES INFORMATIONS CONTENUES DANS CE DOCUMENT NE DOIVENT PAS ÊTRE UTILISÉS À D'AUTRES FINS, NI DIVULGUÉS À DES TIERS, NI REPRODUITS, NI UTILISÉS POUR UN AUTRE PROJET, SANS L'AUTORISATION ÉCRITE PRÉALABLE DE VWT. SAUF DISPOSITION CONTRAIRE PRÉVUE PAR ÉCRIT, VWT N'ASSUME AUCUNE RESPONSABILITÉ OU GARANTIE QUANT À L'UTILISATION DE CE DOCUMENT OU DES CONCEPTS ET INFORMATIONS QU'IL CONTIENT À DES FINS AUTRES QUE CELLES POUR LESQUELLES IL A ÉTÉ SOUMIS À VWT. L'UTILISATEUR DE CE DOCUMENT ACCEPTE DE DÉFENDRE, D'INDEMNISER ET DE DÉGAGER VWT DE TOUTE RESPONSABILITÉ À L'ÉGARD DE TOUTE RÉCLAMATION, PERTE, DOMMAGE OU FRAIS DE QUELQUE NATURE QUE CE SOIT DÉCOULANT DE L'UTILISATION NON AUTORISÉE DE CE DOCUMENT OU DES CONCEPTS ET INFORMATIONS QU'IL CONTIENT.
CONFIDENTIAL AND INTELLECTUAL PROPERTY NOTICE
ALL INFORMATION CONTAINED IN THIS DOCUMENT IS THE SOLE PROPERTY OF VEOLIA WATER TECHNOLOGIES CANADA INC. AND IS PROTECTED BY ALL APPLICABLE LAWS, INCLUDING BUT NOT LIMITED TO COPYRIGHT AND OTHER INTELLECTUAL PROPERTY LAWS. THE DESIGN CONCEPTS AND INFORMATION CONTAINED HEREIN ARE PROPRIETARY TO VWT AND ARE SUBMITTED IN CONFIDENCE. THEY ARE NOT TRANSFERRED ALL OR IN PART TO ANY THIRD PARTY, NOR USED FOR ANY OTHER PROJECT, NOR IN ANY MANNER THAT DOES NOT RELATE TO THE PURPOSE FOR WHICH THEY WERE SUBMITTED BY VWT, UNLESS OTHERWISE AGREED BY THE SUBMISSION OF THIS DOCUMENT. THEY ARE CONFIDENTIAL AND PROPRIETARY INFORMATION OF VWT AND THEY MUST NOT BE DISCLOSED, REPRODUCED, LOANED, REMITTED OR USED IN ANY OTHER MANNER WITHOUT THE EXPRESS WRITTEN CONSENT OF VWT. VWT ASSUMES NO RESPONSIBILITY OR LIABILITY FOR THE USE OF THIS DOCUMENT OR THE DESIGN CONCEPTS AND INFORMATION CONTAINED HEREIN FOR ANOTHER PROJECT, OR IN A MANNER THAT DOES NOT RELATE TO THE FITNESS OF PURPOSE OF THIS DOCUMENT. TO THE EXTENT SHALL THIS DOCUMENT OR THE DESIGN CONCEPTS AND INFORMATION CONTAINED HEREIN BE USED IN A MANNER DETRIMENTAL TO THE INTEREST OF VWT, ALL COPYRIGHT, PATENT AND OTHER INTELLECTUAL PROPERTY RIGHTS ARE RESERVED. ACCEPTANCE OF THE DELIVERY OF THIS DOCUMENT CONSTITUTES AGREEMENT TO THESE TERMS AND CONDITIONS.

DESSINÉ PAR DRAWN BY	DATE
A.C.	2018-04-24
VÉRIFIÉ PAR CHECKED BY	DATE
S.M.	2018-04-24
INGÉNIEUR PAR ENGINEERING BY	DATE
G.P.	2018-04-24
ÉCHELLE: SCALE:	1:10

TITRE / TITLE: WATER TREATMENT PLANT
ANIONIC POLYMER DOSING SKID #1502, #1503, #1504
GENERAL ARRANGEMENT

CLIENT: AGNICO EAGLE MINING
AMARUQ, NU

VEOLIA WATER TECHNOLOGIES CANADA INC. 4105 Sartelon, Saint-Laurent, Qc, Canada Tél: 514-334-7230

PROJET / PROJECT	DESSIN / DRAWING	NUMÉRO INTERNE / INTERNAL NUMBER	FEUILLETS / PAGES	REV.
5000218009	GA0010	PCH	1 / 1	1

3 – DRAWINGS

3.5 – FIELD INSTALLATION DRAWING

LEFT BLANK

VEOLIA

NOMENCLATURE/ BILL OF MATERIALS

TITRE/ TITLE	Rev.	DESCRIPTION	DATE	Rev	Ver/chk	Appr.	Affaire / Contract	AGNICO EAGLE MINING,AMARUQ, NU
METAL PRECIPITATION REACTOR (SKID 0101) RX75-3, FIELD INSTALLATION	1	FOR INSTALLATION	5/15/2018	F.C.	L.J.	L.J.		
	2							
	3						REF. No.	5000218009 Rev. 1
DESSIN /DWG # FI0001							Date:	5/7/2018

REV.	ITEM		QTE/QTY. Unit.	QTE/QTY. Total	DESCRIPTION	INV. /Plan Ref. Drawing	P&ID I.D./TAG	Commentaires / Comments
	5000218009-FI0001-	1	1	1	METAL PRECIPITATION REACTOR RX75-3, ASSEMBLY	SA100	UNIT-0101	
	5000218009-FI0001-	2	1	1	INJECTION QUILL VALVE KIT	SA200		
	5000218009-FI0001-	3	1	1	N/A			
	5000218009-FI0001-	4	4	4	HANDRAIL	FA104		
	5000218009-FI0001-	5	1	1	HANDRAIL	FA104		
	5000218009-FI0001-	6	2	2	HANDRAIL	FA104		
	5000218009-FI0001-	7	1	1	HANDRAIL	FA104		
	5000218009-FI0001-	8	1	1	HANDRAIL	FA104		
	5000218009-FI0001-	9	1	1	HANDRAIL	FA104		
	5000218009-FI0001-	10	1	1	HANDRAIL	FA104		
	5000218009-FI0001-	11	1	1	HANDRAIL	FA104		
	5000218009-FI0001-	12	1	1	LEVEL SWITCH ENM-10	SA109	LSHH-1011	
	5000218009-FI0001-	13	5	5	U SUPPORT	FA111		
	5000218009-FI0001-	14	2	2	HEX. HEAD SCREW Ø3/8"-16UNC x 1 1/4" (ASTM-F593C-304)	FXSCYS200375		
	5000218009-FI0001-	15	20	20	FLAT WASHER Ø3/8", SAE TYPE N (304)	FXWAYS200666		
	5000218009-FI0001-	16	10	10	HEX.NUT Ø3/8"-16UNC (ASTM-F594C-304)	FXNUYS200206		
	5000218009-FI0001-	17	20	20	HEX. HEAD SCREW Ø3/8"-16UNC x 4" ASTM A307 GR.B (GALV)	FXSCYS311688		
	5000218009-FI0001-	18	40	40	FLAT WASHER Ø3/8" ASTM F436, SAE TYPE N (GALV)	FXWAYS311690		
	5000218009-FI0001-	19	20	20	HEX.NUT Ø3/8"-16UNC ASTM A536 GR.A (GALV)	FXNUYS311689		
	5000218009-FI0001-	20	48	48	HEX. HEAD SCREW Ø1/2"-13UNC x 1 3/4" ASTM A307 GR.B (GALV)	FXSCYV311692		
	5000218009-FI0001-	21	96	96	FLAT WASHER Ø1/2" ASTM F436, SAE TYPE N (GALV)	FXWAYV311696		
	5000218009-FI0001-	22	48	48	HEX.NUT Ø1/2"-13UNC ASTM A536 GR.A (GALV)	FXNUYV311695		
	5000218009-FI0001-	23	1	1	**METAL PRECIPITATION MIXER #**1, MODEL: MIX-TECH EVGX-6-5.0 TYPE: VERTICAL MOUNTED c/w OIL EXPANSION CHAMBER c/w STAINLESS STEEL 304L SHAFT AND IMPELLER c/w NUTS AND BOLTS SHAFT: DIA.: 76,2 mm (3 in), LENGTH: 2430,8 mm (95,70 in.) IMPELLER: Q'TY : 1, DIAMETER "A": 2438,4 mm (96 in.) BOTTOM CLEARANCE "X": 1219,2 mm (48 in.) ROTATION DIRECTION: **CCW - UP** c/w MOTOR 5 HP, 575 Vac/3 ph/60 Hz, 1765 RPM, Isolation Class F WEIGHT: 1415 lb (642 kg)	ST-652-RX75UN1	MI-011	

VEOLIA

NOMENCLATURE/ BILL OF MATERIALS

TITRE/ TITLE	Rev.	DESCRIPTION	DATE	Rev	Ver/chk	Appr.	Affaire / Contract	AGNICO EAGLE MINING,AMARUQ, NU
METAL PRECIPITATION REACTOR (SKID 0101) RX75-3, FIELD INSTALLATION	1	FOR INSTALLATION	5/15/2018	F.C.	L.J.	L.J.		
	2							
	3						REF. No.	5000218009 Rev. 1
DESSIN /DWG # FI0001							Date:	5/7/2018

REV.	ITEM		QTE/QTY. Unit.	QTE/QTY. Total	DESCRIPTION	INV. /Plan Ref. Drawing	P&ID I.D./TAG	Commentaires / Comments
	5000218009-FI0001-	24	1	1	**METAL PRECIPITATION MIXER #2,** MODEL: MIX-TECH EVGX-6-5.0 TYPE: VERTICAL MOUNTED c/w OIL EXPANSION CHAMBER c/w STAINLESS STEEL 304L SHAFT AND IMPELLER c/w NUTS AND BOLTS SHAFT: DIA.: 76,2 mm (3 in), LENGTH: 2430,8 mm (95,70 in.) IMPELLER: Q'TY : 1, DIAMETER "A": 2438,4 mm (96 in.) BOTTOM CLEARANCE "X": 1219,2 mm (48 in.) ROTATION DIRECTION: **CW - DOWN** c/w MOTOR 5 HP, 575 Vac/3 ph/60 Hz, 1765 RPM, Isolation Class F, WEIGHT: 1415 lb (642 kg)	ST-652-RX75DN1	MI-012	
	5000218009-FI0001-	25	1	1	**METAL PRECIPITATION MIXER #3**, MODEL: MIX-TECH EVGX-6-5.0 TYPE: VERTICAL MOUNTED c/w OIL EXPANSION CHAMBER c/w STAINLESS STEEL 304L SHAFT AND IMPELLER c/w NUTS AND BOLTS SHAFT: DIA.: 76,2 mm (3 in), LENGTH: 2430,8 mm (95,70 in.) IMPELLER: Q'TY : 1, DIAMETER "A": 2430,8 mm (95,7 in.) BOTTOM CLEARANCE "X": 1219,2 mm (48 in.) ROTATION DIRECTION: **CCW - UP** c/w MOTOR 5 HP, 575 Vac/3 ph/60 Hz, 1765 RPM, Isolation Class F, WEIGHT: 1415 lb (642 kg)	ST-652-RX75UN1	MI-013	
	5000218009-FI0001-	26	12	12	HEX. HEAD SCREW Ø7/8"-9UNC x 3 1/2" (ASTM-F593D-304)	FXSCYI200319		
	5000218009-FI0001-	27	24	24	FLAT WASHER Ø7/8", SAE TYPE N (304)	FXWAYI200658		
	5000218009-FI0001-	28	12	12	NYLON INSERT LOCK NUT Ø7/8"-9UNC (ASTM-F594D-304)	FXNUYI200194		
	5000218009-FI0001-	29	1	1	PLUG VALVE	ST-312-112	TI-011-V001	
	5000218009-FI0001-	30	1	1	GASKET FLANGE Ø4",FF, 1/8" TH (EPDM))	SEGAFP201223		
	5000218009-FI0001-	31	8	8	HEX. HEAD SCREW Ø5/8"-11UNC x 3" (ASTM-F593C-304)	FXSCYY200497		
	5000218009-FI0001-	32	16	16	FLAT WASHER Ø5/8", SAE TYPE N (304)	FXWAYY200674		
	5000218009-FI0001-	33	8	8	HEX.NUT Ø5/8"-11UNC (ASTM-F594C-304)	FXNUYY200221		
	5000218009-FI0001-	34	8	8	HEX. HEAD SCREW Ø3/8"-16UNC x 1 3/4" (ASTM-F593C-304)	FXSCYS200377		
	5000218009-FI0001-	35	1	1	CLAMP WITH TWO MOUNTING HOLES FOR 3/4" DIA. PIPE, McMASTER #8874T13	FPCLSS319089		
	5000218009-FI0001-	36	2	2	HEX. HEAD SCREW Ø1/4"-20UNC x 1 1/4" (ASTM-F593C-304)	FXSCYP200332		

VEOLIA

NOMENCLATURE/ BILL OF MATERIALS

TITRE/ TITLE	Rev.	DESCRIPTION	DATE	Rev	Ver/chk	Appr.	Affaire / Contract	AGNICO EAGLE MINING,AMARUQ, NU
METAL PRECIPITATION REACTOR (SKID 0101) RX75-3, FIELD INSTALLATION	1	FOR INSTALLATION	5/15/2018	F.C.	L.J.	L.J.		
	2							
	3						REF. No.	5000218009 Rev. 1
DESSIN /DWG # FI0001							Date:	5/7/2018

REV.	ITEM		QTE/QTY. Unit.	QTE/QTY. Total	DESCRIPTION	INV. /Plan Ref. Drawing	P&ID I.D./TAG	Commentaires / Comments
	5000218009-FI0001-	37	4	4	FLAT WASHER Ø1/4", SAE TYPE N (304)	FXWAYP200662		
	5000218009-FI0001-	38	2	2	HEX.NUT Ø1/4"-20UNC (ASTM-F594C-304)	FXNUYP200199		
					ITEMS NOT SHOWN ON DRAWING			
	5000218009-FI0001-	100	1 GAL	1 GAL	PAINT, ENVIROLASTIC 940, JMI BLUE, 1 GAL C/W HARDENER, EPOXY TOUCH UP, EXT	TOTOGU308811		SUPPLIED BY PAINTING WORKSHOP
	5000218009-FI0001-	101	1 GAL	1 GAL	One (1) coat of DURA -PLATE UHS from SHERWIN WILLIAMS, 18 to 28 mils per coat dry, NSF white	TOTOGU309750		SUPPLIED BY PAINTING WORKSHOP
Fin de la liste / End of list								

LEFT BLANK

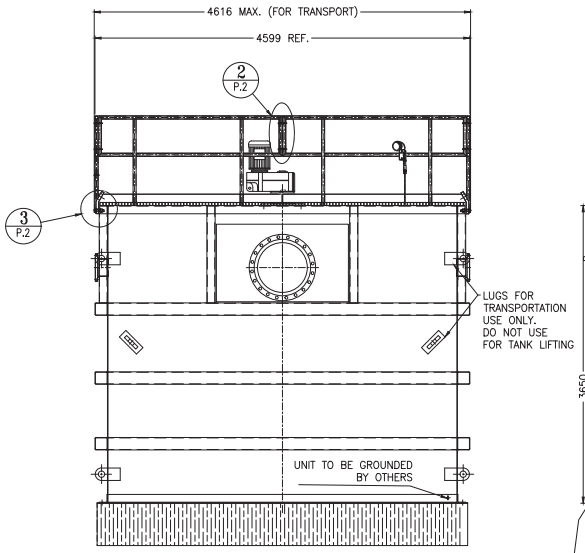

LEFT SIDE VIEW

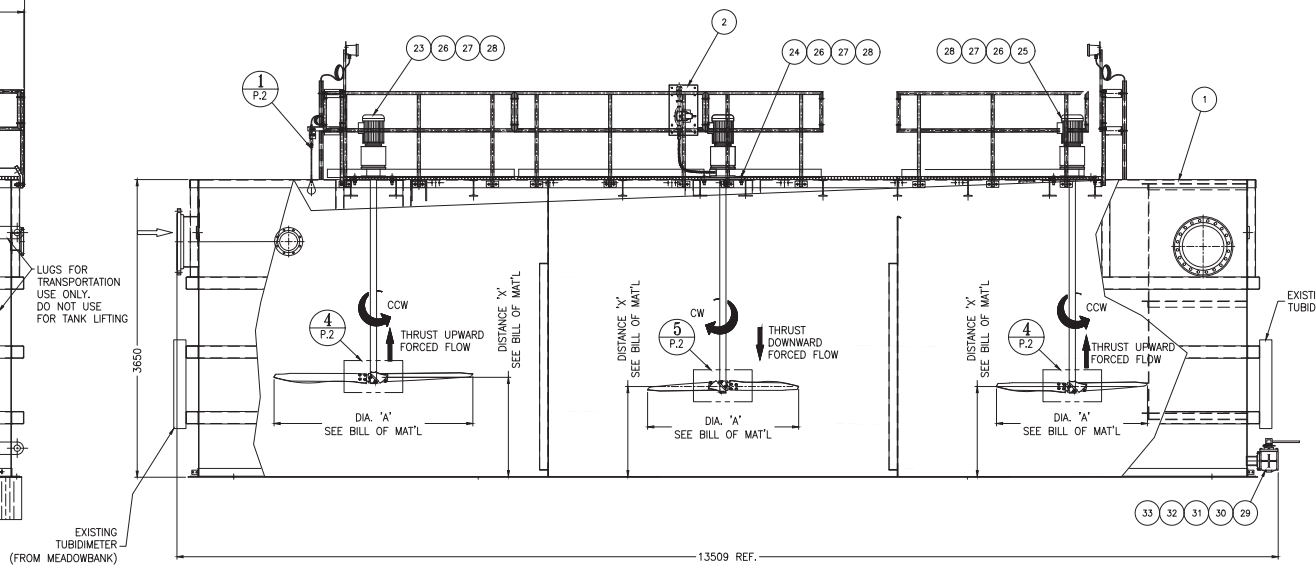

ELEVATION

BOLT SIZE	TORQUE REQUIREMENT
1/4"–20UNC	75 lbs*in/8.5 N*m
3/8"–16UNC	236 lbs*in/26.7 N*m
1/2"–13UNC	43 lbs*ft/58.3 N*m
5/8"–11UNC	92 lbs*ft/124.7 N*m
3/4"–10UNC	127 lbs*ft/172.2 N*m

NOTES:

1. SEE BILL OF MATERIAL : 5000218009–FI0001 AND MANUFACTUR'S INSTRUCTIONS INCLUDED IN O&M MANUAL.
2. ALL ITEMS MENTIONED WILL BE SUPPLIED BY VEOLIA, AS PER B.O.M. AND WILL NEED TO BE INSTALLED ON SITE.
3. PLEASE VERIFY ALL BOLTS AND NUTS ALREADY INSTALLED AND REFER TO THE TORQUE REQUIREMENTS DATA TABLE (SEE INSTALLATION MANUAL).
4. REMOVE ALL FOREIGN MATERIAL (METAL CHIPS, SAND, GRAVEL, ETC.) FROM TANK INTERIOR PRIOR TO TANK WATER FILL.
5. TANKS SHALL NOT BE USED AS A SUPPORT FOR ANY OTHER EQUIPMENT. EQUIPMENTS THAT NEEDS TO BE CONNECTED TO TANK SHALL BE SELF SUPPORTED.
6. TOTAL WEIGHT: 22 330 KG (49 238 LBS) (WITHOUT WATER, for transport)
   TOTAL WEIGHT IN SERVICE: 232 200 KG (510 840 LBS) (WITH WATER).
7. REFER TO GENERAL DRAWING 5000218009_GA_0001_RX_VWT FOR FOOT PRINT.

NOTES FOR MIXERS INSTALLATION:

1. DEPENDING ON THE IMPELLER DIAMETER, HUB AND IMPELLER BLADES MIGHT BE SHIPPED SEPARATELY FROM THE MIXER SHAFT ASSEMBLY.
2. MIXERS & IMPELLER WILL NEED TO BE ASSEMBLED ON SITE (SHIPPED LOOSE).
3. MIXERS AND SCRAPERS WILL NEED FOOD GRADE OIL, REFER TO MANUFACTUR'S INSTRUCTIONS INCLUDED IN O&M MANUAL.

REV.	DESCRIPTION	DATE	REVISÉ REVISED	VÉRIFIÉ CHECKED	APPROUVÉ APPROVED
1	FOR INSTALLATION	2018-05-15	F.C.	L.J.	L.J.

DESSINÉ PAR/DRAWN BY: F.C. DATE: 2018-05-07
VÉRIFIÉ PAR/CHECKED BY: L.J. DATE:
INGÉNIERIE PAR/ENGINEERING BY: L.J. DATE:

CLIENT: AGNICO EAGLE MINING
AMARUQ, NU

VEOLIA WATER TECHNOLOGIES

TITRE / TITLE:
METAL PRECIPITATION REACTOR (SKID 0101)
RX75–3
FIELD INSTALLATION –5000218009_FI_0001_RX_VWT

ÉCHELLE / SCALE: 1:30

PROJET / PROJECT	DESSIN No /DRAWING No	INTERNE / INTERNAL	FEUILLET / SHEET	REV./REV
5000218009 – FI0001		RX0753	1/2	1

Ce document est la propriété de VEOLIA et ne peut être reproduit sans son autorisation écrite. / This document is the property of VEOLIA and cannot be reproduced without its written authorization

SIZE ANSI D

REF:

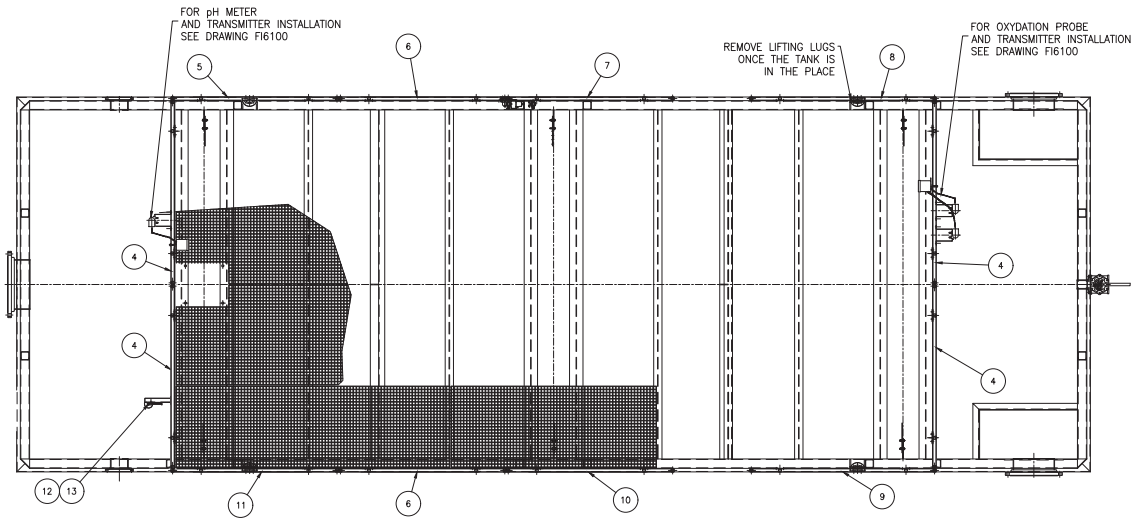

PLAN VIEW

SCALE: 1:30

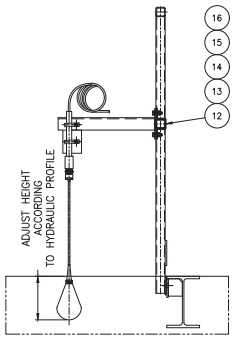

DETAIL 1 P.1
SCALE 1:10

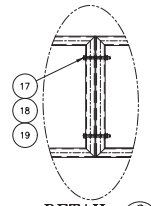

DETAIL 2 P.1
SCALE 1:10

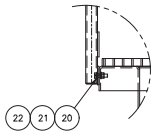

DETAIL 3 P.1
SCALE 1:10

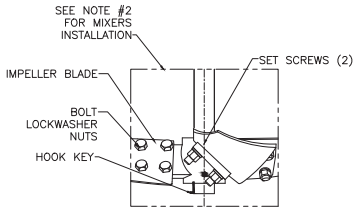

DETAIL 4 P.1
SCALE: N.T.S.

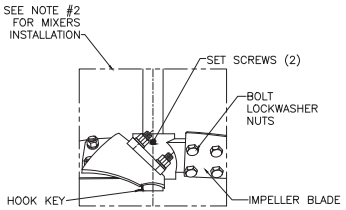

DETAIL 5 P.1
SCALE: N.T.S.

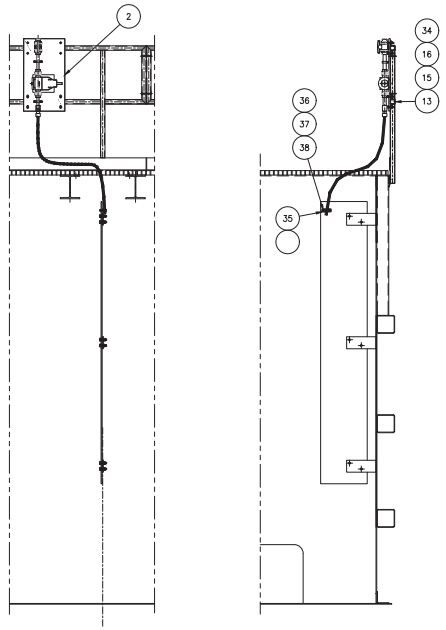

DETAIL 6 –
SCALE: 1:20

REV.	DESCRIPTION	DATE	RÉVISÉ REVISED	VÉRIFIÉ CHECKED	APPROUVÉ APPROVED
1	FOR INSTALLATION	2018-05-15	F.C.	L.J.	L.J.

DESSINÉ PAR/DRAWN BY: F.C. — DATE: 2018-05-07
VÉRIFIÉ PAR/CHECKED BY: L.J. — DATE:
INGÉNIERIE PAR/ENGINEERING BY: L.J. — DATE:

CLIENT: AGNICO EAGLE MINING
AMARUQ, NU

VEOLIA WATER TECHNOLOGIES

TITRE / TITLE:
METAL PRECIPITATION REACTOR (SKID 0101)
RX75-3
FIELD INSTALLATION-5000218009_FI_0001_RX_VWT

ÉCHELLE / SCALE: 1:30

PROJET / PROJECT	DESSIN No /DRAWING No	INTERNE / INTERNAL	FEUILLET / SHEET	REV./REV
5000218009 – FI0001		RX0753	2/2	1

Ce document est la propriété de VEOLIA et ne peut être reproduit sans son autorisation écrite. / This document is the property of VEOLIA and cannot be reproduced without its written authorization

REF:

1 SIZE ANSI D

VEOLIA

NOMENCLATURE/ BILL OF MATERIALS

TITRE/ TITLE	Rev.	DESCRIPTION	DATE	Rev	Ver/chk	Appr.	Affaire / Contract	AGNICO EAGLE MINING, AMARUQ NU
ACTIFLO RECIRCULATION LINES MODIFICATION	1	FOR INSTALLATION	5/14/2018	F.C.	L.J.			
	2	ADD LENGHT FLEXIBLE TUBE	5/29/2018	F.C.	L.J.			
	3	ADDED ITEMS FROM #46 to #63	8/15/2018	A.C.	L.J.		REF. No.	5000218009 Rev. 3
	4							
DESSIN /DWG # FI0002	5						Date:	4/23/2018

REV.	ITEM		QTE/QTY. Unit.	QTE/QTY. Total	DESCRIPTION	INV. /Plan Ref. Drawing	P&ID I.D./TAG	Commentaires / Comments
	5000218009-FI0002-	1	8	16	RECIRCULATION PIPE ø6" (2565mm LG) VICTAULIC END 75kg each	FA120		
	5000218009-FI0002-	2	1	1	RECIRCULATION PIPE ø6" (2058 LG) VICTAULIC END AND ELBOW 71 kg	FA121		
	5000218009-FI0002-	3	1	1	RECIRCULATION PIPE ø6" (2708 LG) VICTAULIC END AND ELBOW 89 kg	FA122		
	5000218009-FI0002-	4	1	1	RECIRCULATION PIPE ø6" (1567 LG) VICTAULIC END AND ELBOW 57kg	FA123		
	5000218009-FI0002-	5	1	1	RECIRCULATION PIPE ø6" (2217 LG) VICTAULIC END AND ELBOW 76kg	FA124		
	5000218009-FI0002-	6	1	2	RECIRCULATION PIPE ø6" (552 LG) VICTAULIC END AND HOSE ADAPTOR 20kg each	FA125		
	5000218009-FI0002-	7	1	2	RECIRCULATION PIPE ø6" (922 LG) VICTAULIC END AND HOSE ADAPTOR 30kg each	FA126		
	5000218009-FI0002-	8	1	2	RECIRCULATION PIPE, ø6" DISCHARGE PUMP (830mm LG) 36kg each	FA127		
	5000218009-FI0002-	9	1	2	RECIRCULATION PIPE, ø6" DISCHARGE PUMP (1170 LG) 45kg each	FA128		
	5000218009-FI0002-	10	1	4	RECIRCULATION PIPE, ø3" SUCCION PUMP 12kg each	FA129		
3	~~5000218009-FI0002-~~	~~11~~	~~1~~	~~2~~	~~ADAPTOR FLANGEø4" X GROOVE GALV (897 LG)13kg each~~	~~FA130~~		NOT USED
	5000218009-FI0002-	12	1	2	RECIRCULATION PIPE ø2" DISCHARGE ø1-1/2"PUMP 665mm LG 6.5 kg each	FA131		
	5000218009-FI0002-	13	1	2	RECIRCULATION PIPE, ø2" DISCHARGE ø1-1/2"PUMP3kg	FA132		
	5000218009-FI0002-	14	1	2	RECIRCULATION PIPE, elbows ø4", 366mm lg. 19 kg each	FA133		
3	~~5000218009-FI0002-~~	~~15~~	~~1~~	~~2~~	~~RECIRCULATION PIPE, ø4" 1697mm lg. 31 kg each~~	~~FA134~~		NOT USED
	5000218009-FI0002-	16	1	2	RECIRCULATION PIPE, ø4"(END VIC-FLANGE)25kg each	FA135		
	5000218009-FI0002-	17	1	2	RECIRCULATION PIPE, ø4"/ø2"(END VIC-FLANGE) 431mm long.11kg each	FA136		
	5000218009-FI0002-	18	1	2	RECIRCULATION PIPE, elbows ø6"1137mm , 71kg each	FA137		
	5000218009-FI0002-	19	1	2	RECIRCULATION PIPE, ø2" 400mm lg , 6.5 kg each	FA138		
	5000218009-FI0002-	20	2	4	NIPPLE ø6" GR x HOSE	FPNISS334548		
	5000218009-FI0002-	21	2	4	ADAPTOR 4 FLANGE X GROOVE GALV STYLE 45	FPADSS334665		
	5000218009-FI0002-	22	1	2	ADAPTOR 2 FLANGE X GROOVE GALV	FPADSS314236		
	5000218009-FI0002-	23	2	4	ADAPTOR 4 GROOVE X GROOVE GALV STYLE43	FPADSS334664		
	5000218009-FI0002-	24	1	2	ADAPTOR 2 GROOVE X GROOVE GALV STYLE43	FPADSS334666		
	5000218009-FI0002-	25	3	6	PLUG VALVE ø4"	ST-312-112		
	5000218009-FI0002-	26	7	14	COUPLING "VICTAULIC" RIGIDE Ø4", SEAL EPDM (GALV.) STYLE-07	FPADSS200463		
	5000218009-FI0002-	27	2	4	COUPLING "VICTAULIC" FLEXIBLE Ø2", SEAL EPDM, STYLE-75 (GALV.)	FPADSS200462		
	5000218009-FI0002-	28	12	24	COUPLING GROOVE END "VICTAULIC" 6,GALV FLEXIBLE,EPDM	FPADSS314692		
	5000218009-FI0002-	29	LOT	LOT	FLEXIBLE TUBE Ø4" ID, Ø118mm OD, BLEU FDA, 240PSI ALFAGOMMA 519O7-4 (8 M LG)	FTTUCS305970		

VEOLIA

NOMENCLATURE/ BILL OF MATERIALS

TITRE/ TITLE	Rev.	DESCRIPTION	DATE	Rev	Ver/chk	Appr.	Affaire / Contract	AGNICO EAGLE MINING, AMARUQ NU
ACTIFLO RECIRCULATION LINES MODIFICATION	1	FOR INSTALLATION	5/14/2018	F.C.	L.J.			
	2	ADD LENGHT FLEXIBLE TUBE	5/29/2018	F.C.	L.J.			
	3	ADDED ITEMS FROM #46 to #63	8/15/2018	A.C.	L.J.		REF. No. 5000218009	Rev. 3
	4							
DESSIN /DWG # FI0002	5						Date:	4/23/2018

REV.	ITEM		QTE/QTY. Unit.	QTE/QTY. Total	DESCRIPTION	INV. /Plan Ref. Drawing	P&ID I.D./TAG	Commentaires / Comments
	5000218009-FI0002-	30	LOT	LOT	FLEXIBLE TUBE Ø6" ID, GREEN FDA, 240PSI ALFAGOMMA 720LG-3 (16 M LG)	FTTUCS305972		
	5000218009-FI0002-	31	LOT	LOT	FLEXIBLE TUBE Ø2" ID, Ø63mm OD, BLUE FDA, 240PSI ALFAGOMMA 519OE-3 (50 M LG)	FTTUCS305968		
	5000218009-FI0002-	32	4	8	HOSE CLAMP W4, Ø63mm x Ø68mm (304)	FXCLZH300020		
	5000218009-FI0002-	33	8	16	HOSE CLAMP W4, Ø112mm x Ø121mm (304)	FXCLZL301866		
	5000218009-FI0002-	34	8	16	HOSE CLAMP W4, Ø162mm x Ø174mm (304)	FXCLZL306213		
	5000218009-FI0002-	35	2	4	BALL VALVE ø 2"	VABLSS204735		
	5000218009-FI0002-	36	2	4	NIPPLE ø2" NPT x 2" LG. (316, ASTM A312)	FPNISS328862		
	5000218009-FI0002-	37	48	96	HEX. HEAD SCREW Ø5/8"-11 x 3" (ASTM A307 GR.B GALV)	FXSCYY311699		
	5000218009-FI0002-	38	96	192	FLAT WASHER Ø5/8" (ASTM F436 SAE TYPE E, GALV)	FXWAYY311702		
	5000218009-FI0002-	39	48	96	HEX.NUT Ø5/8"-11UNC (GALV.)	FXNUYY305327		
	5000218009-FI0002-	40	1	2	HYDROCYCLONE ASSEMBLY	SA050		
	5000218009-FI0002-	41	1	2	SAMPLING TANK	SA1456		
	5000218009-FI0002-	42	1	2	RECIRCULATION PIPE, ø4" 1027mm , 25 kg each	FA139		
	5000218009-FI0002-	43	2	4	SUPPORT TANK	FABKAI332362		
	5000218009-FI0002-	44	4	8	HEX. HEAD SCREW Ø5/16"-18UNC x 5/8" (ASTM-F593C-304)	FXSCYD200271		
	5000218009-FI0002-	45	4	8	FLAT WASHER Ø5/16", SAE TYPE N (304)	FXWAYD200651		
3	5000218009-FI0002-	46	LOT	LOT	FLEXIBLE TUBE Ø4" ID, Ø118mm OD, BLEU FDA, 240PSI ALFAGOMMA 519O7-4 (20 M LG)	FTTUCS305970		
3	5000218009-FI0002-	47	2	4	NIPPLE COMBINATION 4" GROOVE X HOSE (GALV)	FPNISS332922		
3	5000218009-FI0002-	48	8	16	HOSE CLAMP W4, Ø112mm x Ø121mm (304)	FXCLZL301866		
3	5000218009-FI0002-	49	2	4	NIPPLE COMBINATION 4" HOSE X MNPT, SS316	FPNISS314049		
3	5000218009-FI0002-	50	2	4	FLANGE THREADED Ø4" FNPT, #150, A182, FLAT FACE, F304, B16.5	FPFGSS336305		
3	5000218009-FI0002-	51	16	32	HEX. HEAD SCREW Ø5/8"-11 x 3" (ASTM A307 GR.B GALV)	FXSCYY311699		
3	5000218009-FI0002-	52	32	64	FLAT WASHER Ø5/8" (ASTM F436 SAE TYPE E, (GALV)	FXWAYY311702		
3	5000218009-FI0002-	53	16	32	HEX.NUT Ø5/8"-11UNC (GALV.)	FXNUYY305327		
3	5000218009-FI0002-	54	8	16	GASKET FLANGE Ø4",FF, 1/8" TH (RED RUBBER)	SEGAFP200123		
3	5000218009-FI0002-	55	1	2	ADAPTOR 4 FLANGE X GROOVE GALV STYLE 45	FPADSS334665		
3	5000218009-FI0002-	56	8	16	HEX, NUT Ø1/2"-13 (GALV)	FXNUYV308869		
3	5000218009-FI0002-	57	16	32	FLAT WASHER Ø1/2" ASTM F436 SAE TYPE N (GALV.)	FXWAYV311696		
3	5000218009-FI0002-	58	16	32	HEX.NUT Ø5/8"-11UNC (GALV.)	FXNUYY305327		
3	5000218009-FI0002-	59	32	64	FLAT WASHER Ø5/8" ASTM F436 SAE TYPE N (GALV.)	FXWAYY311702		
3	5000218009-FI0002-	60	1	2	GASKET FLANGE Ø6",FF, 1/8" TH (RED RUBBER)	SEGAFP200126		
3	5000218009-FI0002-	61	8	16	HEX. HEAD SCREW Ø3/4"-10UNC x 3 1/2" ASTM-A307 GR B GALV	FXSCZC318768		
3	5000218009-FI0002-	62	16	32	FLAT WASHER Ø3/4", F436 SAE TYPE N, GALV	FXWAZC318490		
3	5000218009-FI0002-	63	8	16	HEX.NUT Ø3/4"-10UNC A563 GR A GALV	FXNUZC318489		

Fin de la liste / End of list

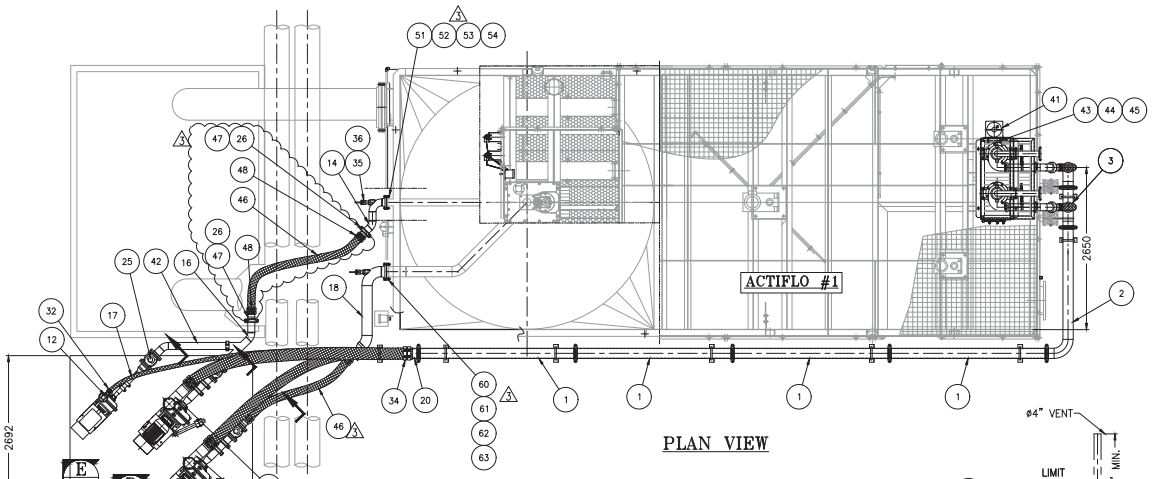

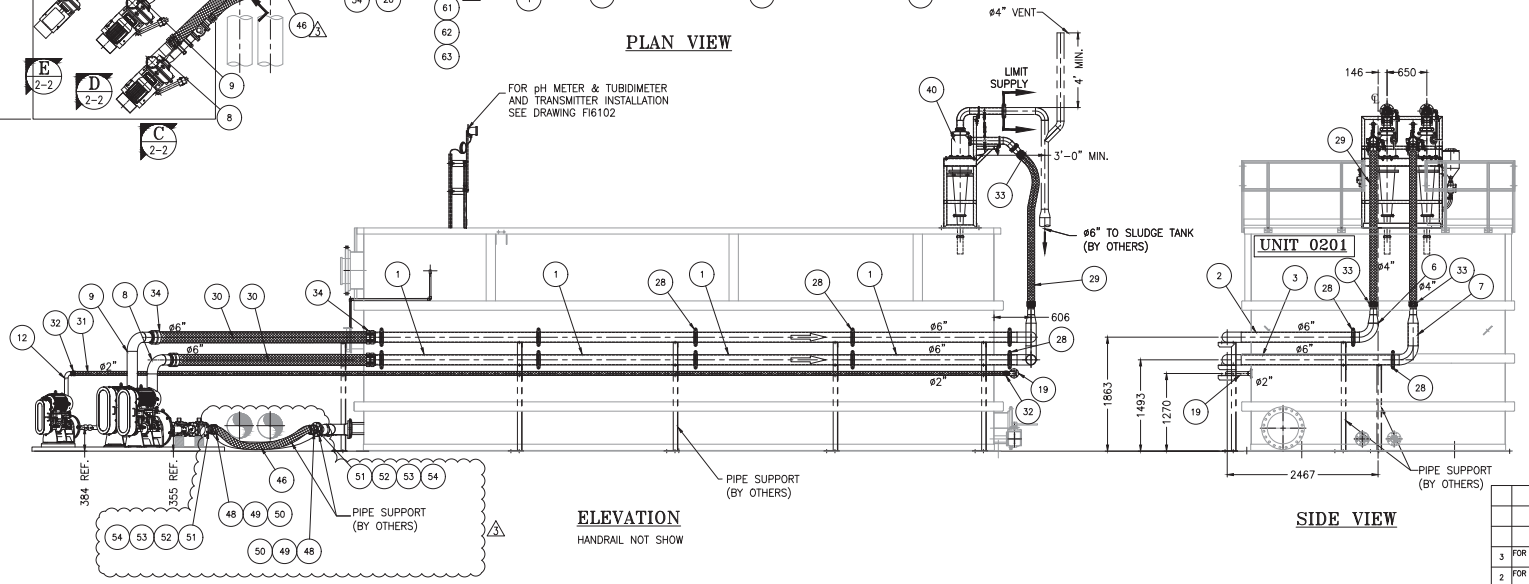

NOTES:

1. SEE BILL OF MATERIAL : 5000218009-FI0002 AND MANUFACTUR'S INSTRUCTIONS INCLUDED IN O&M MANUAL.
2. ALL ITEMS MENTIONED WILL BE SUPPLIED BY VEOLIA, AS PER B.O.M. AND WILL NEED TO BE INSTALLED ON SITE.
3. PLEASE VERIFY ALL BOLTS AND NUTS ALREADY INSTALLED AND REFER TO THE TORQUE REQUIREMENTS DATA TABLE (SEE INSTALLATION MANUAL).
4. INSERT DRIP PAN UNDER EACH PUMP DRY GLAND TO PREVENT LEAKAGE.
5. REMOVE ALL FOREIGN MATERIAL (METAL CHIPS, SAND, GRAVEL, ETC.) FROM TANK INTERIOR PRIOR TO TANK WATER FILL.
6. TANKS SHALL NOT BE USED AS A SUPPORT FOR ANY OTHER EQUIPMENT. EQUIPMENTS THAT NEEDS TO BE CONNECTED TO TANK SHALL BE SELF SUPPORTED.
7. BEFORE INSTALLING ITEM 40, HYDROCYCLONE ASSEMBLY, VERIFY THAT THE EXISTING WELDS UNDER THE SUPPORTS ANGLE ARE UP TO THE STANDARDS AND THAT THEY SHOW NON SIGNS OF DETERIORATION.

REV.	DESCRIPTION	DATE	REVISÉ REVISED	VÉRIFIÉ CHECKED	APPROUVÉ APPROVED
3	FOR INSTALLATION III (ADDED ITEMS FROM 46 TO 63)	2018-08-15	A.C.	L.J.	L.J.
2	FOR INSTALLATION II (REVISION IN FILE FI0002ACP_BOM.xlsm ONLY)	2018-05-29	A.C.	L.J.	L.J.
1	FOR INSTALLATION	2018-05-16	F.C.	LJ	L.J.

DESSINÉ PAR/DRAWN BY: F.C. — DATE: 2018-05-08
VÉRIFIÉ PAR/CHECKED BY: L.J. — DATE:
APPROUVÉ PAR/ENGINEERING BY: L.J. — DATE:

CLIENT: AGNICO EAGLE MINING, AMARUQ NU

VEOLIA WATER TECHNOLOGIES

TITRE / TITLE: ACTIFLO #1& #2 RECIRCULATION LINES MODIFICATION FIELD INSTALLATION-5000218009_FI_0002_ACP_VWT

ÉCHELLE / SCALE: 1:20

PROJET / PROJECT	DESSIN No /DRAWING No	INTERNE / INTERNAL	FEUILLET / SHEET	RÉV./REV
5000218009 – FI0002		ACP	1/2	3

Ce document est la propriété de VEOLIA et ne peut être reproduit sans son autorisation écrite / This document is the property of VEOLIA and cannot be reproduced without its written authorization

SIZE ANSI D

Aug 15, 2018 - 16:23:13 - W:\2018\5000218009 Amaruq (TM=218005)\16- Dossiers execution_Drawings\5- FI\5000218009-FI0002ACP_3 en cours.dwg - cdejean

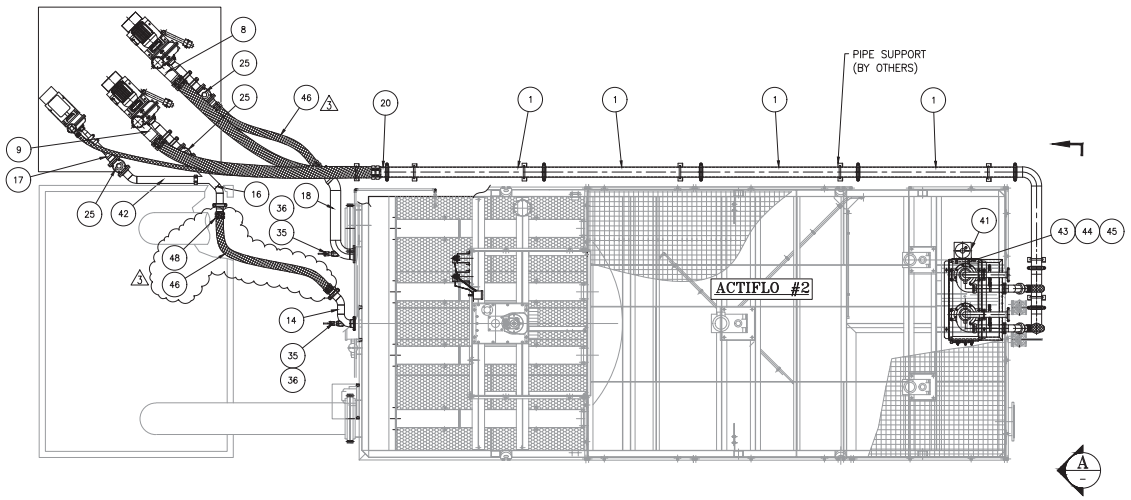

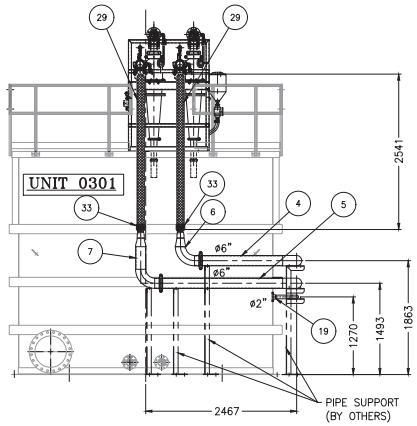

SECTION A

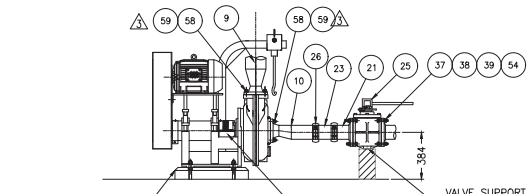

SECTION D
SCALE:1:20

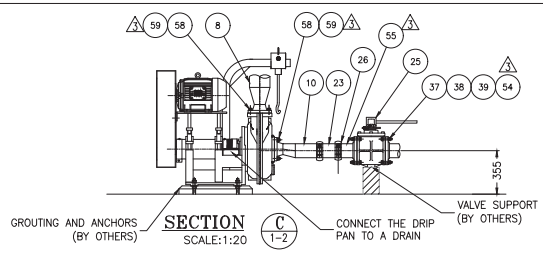

SECTION C
SCALE:1:20

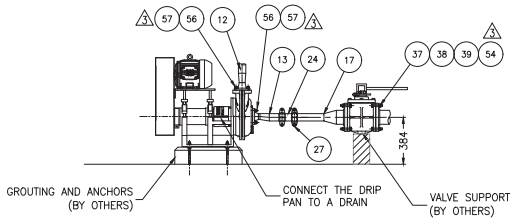

SECTION E
SCALE:1:20

REV.	DESCRIPTION	DATE	RÉVISÉ REVISED	VÉRIFIÉ CHECKED	APPROUVÉ APPROVED
3	FOR INSTALLATION III (ADDED ITEMS FROM 46 TO 63)	2018-08-15	A.C.	L.J.	L.J.
2	FOR INSTALLATION II (REVISION IN FILE FI0002ACP_BOM.xlsm ONLY)	2018-05-29	A.C.	L.J.	L.J.
1	FOR INSTALLATION	2018-05-16	F.C.	L.J	L.J.

DESSINÉ PAR/DRAWN BY: F.C. — DATE: 2018-05-08
VÉRIFIÉ PAR/CHECKED BY: L.J. — DATE:
INGÉNIEUR PAR/ENGINEERING BY: L.J. — DATE:

CLIENT: AGNICO EAGLE MINING, AMARUQ NU

VEOLIA WATER TECHNOLOGIES

TITRE / TITLE: ACTIFLO #1 & #2 RECIRCULATION LINES MODIFICATION FIELD INSTALLATION–5000218009_FI_0002_ACP_VWT

ÉCHELLE / SCALE: 1:20

PROJET / PROJECT	DESSIN No /DRAWING No	INTERNE / INTERNAL	FEUILLET / SHEET	REV./REV
5000218009 – FI0002		ACP	2/2	3

Ce document est la propriété de VEOLIA et ne peut être reproduit sans son autorisation écrite / This document is the property of VEOLIA and cannot be reproduced without its written authorization

SIZE ANSI D

REF:

VEOLIA

NOMENCLATURE/ BILL OF MATERIALS

TITRE/ TITLE	Rev.	DESCRIPTION	DATE	Rev	Ver/chk	Appr.	Affaire / Contract	AGNICO EAGLE MINING AMARUQ,NU
POLISHING REACTOR (SKID 0501) RX75-2, FIELD INSTALLATION	1	FIELD INSTALLATION	5/10/2018	F.C.	L.J.	L.J.		
	2							
	3						REF. No.	5000218009 Rev. 1
	4							
DESSIN /DWG # FI0003							Date:	5/3/2018

REV.	ITEM		QTE/QTY. Unit.	QTE/QTY. Total	DESCRIPTION	INV. /Plan Ref. Drawing	P&ID I.D./TAG	Commentaires / Comments
	5000218009-FI0003-	1	1	1	Storage double tank RX75-2 (SKID 0501), ASSEMBLY	SA150	UNIT-0501	
	5000218009-FI0003-	2	1	1	HANDRAIL	FA153		
	5000218009-FI0003-	3	3	3	HANDRAIL	FA153		
	5000218009-FI0003-	4	1	1	HANDRAIL	FA153		
	5000218009-FI0003-	5	1	1	HANDRAIL	FA153		
	5000218009-FI0003-	6	1	1	HANDRAIL	FA153		
	5000218009-FI0003-	7	1	1	HANDRAIL	FA153		
	5000218009-FI0003-	8	1	1	HANDRAIL	FA153		
	5000218009-FI0003-	9	1	1	HANDRAIL	FA153		
	5000218009-FI0003-	10	1	1	PROTECTIVE CAGE	FA154		
	5000218009-FI0003-	11	1	1	LADDER	FA155		
	5000218009-FI0003-	12	1	1	SAFETY GATE c/w HARDWARE	TACMGU313168		
	5000216018-FI0003-	13	2	2	LEVEL SWITCH ENM-10	SA108	LSHH-5011/5021	
	5000216018-FI0003-	14	2	2	"U" SUPPORT FOR LEVEL SWITCH ENM-10	FA109		
	5000218009-FI0003-	15	4	4	HEX. HEAD SCREW Ø3/8"-16UNC x 1 1/4" (ASTM-F593C-304)	FXSCYS200375		
	5000218009-FI0003-	16	8	8	FLAT WASHER Ø3/8", SAE TYPE N (304)	FXWAYS200666		
	5000218009-FI0003-	17	4	4	HEX.NUT Ø3/8"-16UNC (ASTM-F594C-304)	FXNUYS200206		
	5000218009-FI0003-	18	18	18	HEX. HEAD SCREW Ø3/8"-16UNC x 4" ASTM A307 GR.B (GALV)	FXSCYS311688		
	5000218009-FI0003-	19	36	36	FLAT WASHER Ø3/8" ASTM F436, SAE TYPE N (GALV)	FXWAYS311690		
	5000218009-FI0003-	20	18	18	HEX.NUT Ø3/8"-16UNC ASTM A536 GR.A (GALV)	FXNUYS311689		
	5000218009-FI0003-	21	2	2	**Sludge REACTOR tank MIXER #1 and MIXER #2** "ENVIREQUIP" MODEL: MIX-TECH EVGX-6-5.0 TYPE: VERTICAL MOUNTED c/w OIL EXPANSION CHAMBER c/w STAINLESS STEEL 304L SHAFT AND IMPELLER c/w NUTS AND BOLTS SHAFT: DIA.: 76,2 mm (3") LENGTH: 2430,8mm (96") IMPELLER: QTY: 1 DIAMETER "A": 2438,4 mm (96") BOTTOM CLEARANCE "X": 1219,2 mm (48") ROTATION DIRECTION: **CW - DOWN** c/w MOTOR 5 HP, 575 Vac/3 ph/60 Hz, 1765 RPM WEIGHT: 643 kg (1 415 lb)	ST-652-RX75 D N1	M5-011 & M5-012	
	5000218009-FI0003-	22	8	8	HEX. HEAD SCREW Ø7/8"-9UNC x 3 1/2" (ASTM-F593D-304)	FXSCYI200319		
	5000218009-FI0003-	23	16	16	FLAT WASHER Ø7/8", SAE TYPE N (304)	FXWAYI200658		
	5000218009-FI0003-	24	8	8	NYLON INSERT LOCK NUT Ø7/8"-9UNC (ASTM-F594D-304)	FXNUYI200194		

VEOLIA

NOMENCLATURE/ BILL OF MATERIALS

TITRE/ TITLE	Rev.	DESCRIPTION	DATE	Rev	Ver/chk	Appr.	Affaire / Contract	AGNICO EAGLE MINING AMARUQ,NU
POLISHING REACTOR (SKID 0501) RX75-2, FIELD INSTALLATION	1	FIELD INSTALLATION	5/10/2018	F.C.	L.J.	L.J.		
	2							
	3						REF. No.	5000218009 Rev. 1
	4							
DESSIN /DWG # FI0003							Date:	5/3/2018

REV.	ITEM		QTE/QTY. Unit.	QTE/QTY. Total	DESCRIPTION	INV. /Plan Ref. Drawing	P&ID I.D./TAG	Commentaires / Comments
	5000218009-FI0003-	25	40	40	HEX. HEAD SCREW Ø1/2"-13UNC x 1 3/4" ASTM A307 GR.B (GALV)	FXSCYV311692		
	5000218009-FI0003-	26	80	80	FLAT WASHER Ø1/2" ASTM F436, SAE TYPE N (GALV)	FXWAYV311696		
	5000218009-FI0003-	27	40	40	HEX.NUT Ø1/2"-13UNC ASTM A536 GR.A (GALV)	FXNUYV311695		
	5000218009-FI0003-	28	6	6	HEX. HEAD SCREW Ø1/2"-13UNC x 2" (ASTM-F593C-304)	FXSCYV200429		
	5000218009-FI0003-	29	12	12	FLAT WASHER Ø1/2", SAE TYPE N (304)	FXWAYV200670		
	5000218009-FI0003-	30	6	6	NYLON INSERT LOCK NUT Ø1/2"-13UNC (ASTM-F594C-304)	FXNUYV200214		
	5000218009-FI0003-	31	2	2	PLUG VALVE	ST-312-112	T5011V004 &T5012V004	
	5000218009-FI0003-	32	2	2	GASKET FLANGE Ø4",FF, 1/8" TH (EPDM))	SEGAFP201223		
	5000218009-FI0003-	33	16	16	HEX. HEAD SCREW Ø5/8"-11UNC x 3" (ASTM-F593C-304)	FXSCYY200497		
	5000218009-FI0003-	34	32	32	FLAT WASHER Ø5/8", SAE TYPE N (304)	FXWAYY200674		
	5000218009-FI0003-	35	16	16	HEX.NUT Ø5/8"-11UNC (ASTM-F594C-304)	FXNUYY200221		
	5000218009-FI0003-	36	6	6	HEX. HEAD SCREW Ø3/8"-16UNC x 3"ASTM A307 GR.B (GALV)	FXSCYS312592		
	5000218009-FI0003-	37	12	12	FLAT WASHER Ø3/8" ASTM F436, SAE TYPE N (GALV)	FXWAYS311690		
	5000218009-FI0003-	38	6	6	HEX.NUT Ø3/8"-16UNC ASTM A536 GR.A (GALV)	FXNUYS311689		
					ITEMS NOT SHOWN ON DRAWING			
	5000218009-FI0003-	100	1 GAL	1 GAL	PAINT, ENVIROLASTIC 940, JMI BLUE, 1 GAL C/W HARDENER, EPOXY TOUCH UP, EXT	TOTOGU308811		SUPPLIED BY PAINTING WORKSHOP
	5000218009-FI0003-	101	1 GAL	1 GAL	One (1) coat of DURA -PLATE UHS from SHERWIN WILLIAMS, 18 to 28 mils per coat dry, NSF white	TOTOGU309750		SUPPLIED BY PAINTING WORKSHOP

Fin de la liste / End of list

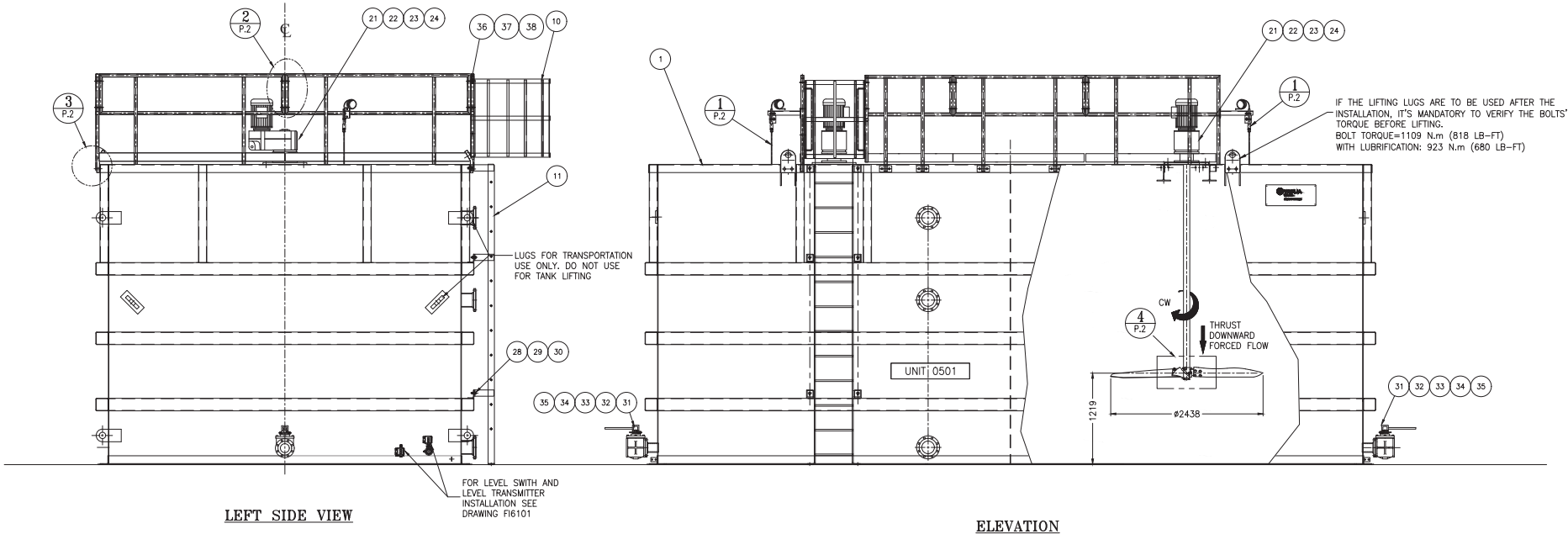

LEFT SIDE VIEW

ELEVATION

BOLT SIZE	TORQUE REQUIREMENT
1/4"-20UNC	75 lbs*in/8.5 N*m
3/8"-16UNC	236 lbs*in/26.7 N*m
1/2"-13UNC	43 lbs*ft/58.3 N*m
5/8"-11UNC	92 lbs*ft/124.7 N*m
3/4"-10UNC	127 lbs*ft/172.2 N*m

NOTES:

1. SEE BILL OF MATERIAL : 5000218009-FI0003 AND MANUFACTUR'S INSTRUCTIONS INCLUDED IN O&M MANUAL.
2. ALL ITEMS MENTIONED WILL BE SUPPLIED BY VEOLIA, AS PER B.O.M. AND WILL NEED TO BE INSTALLED ON SITE.
3. PLEASE VERIFY ALL BOLTS AND NUTS ALREADY INSTALLED AND REFER TO THE TORQUE REQUIREMENTS DATA TABLE (SEE INSTALLATION MANUAL).
4. REMOVE ALL FOREIGN MATERIAL (METAL CHIPS, SAND, GRAVEL, ETC.) FROM TANK INTERIOR PRIOR TO TANK WATER FILL.
5. TANKS SHALL NOT BE USED AS A SUPPORT FOR ANY OTHER EQUIPMENT. EQUIPMENTS THAT NEEDS TO BE CONNECTED TO TANK SHALL BE SELF SUPPORTED.
6. TOTAL WEIGHT: 12 088 KG (26 654 LBS) (WITHOUT WATER for transport)
   TOTAL WEIGHT IN SERVICE: 160 250 KG (352 550 LBS) (WITH WATER)
7. REFER TO GENERAL DRAWING 5000218009_GA_0002_RX_VWT FOR FOOT PRINT.

NOTES FOR MIXERS INSTALLATION:

1. DEPENDING ON THE IMPELLER DIAMETER, HUB AND IMPELLER BLADES MIGHT BE SHIPPED SEPARATELY FROM THE MIXER SHAFT ASSEMBLY.
2. MIXERS & IMPELLERS WILL NEED TO BE ASSEMBLED ON SITE (SHIPPED LOOSE).
3. MIXERS AND SCRAPERS WILL NEED FOOD GRADE OIL, REFER TO MANUFACTUR'S INSTRUCTIONS INCLUDED IN O&M MANUAL.

REV.	DESCRIPTION	DATE	REVISÉ / REVISED	VÉRIFIÉ / CHECKED	APPROUVÉ / APPROVED
1	FIELD INSTALLATION	2018-05-10	F.C.	L.J.	L.J.

DESSINÉ PAR/DRAWN BY: F.C. — DATE: 2018-05-07
VÉRIFIÉ PAR/CHECKED BY: L.J. — DATE:
INGÉNIEUR PAR/ENGINEERING BY: L.J. — DATE:

VEOLIA WATER TECHNOLOGIES

CLIENT: AGNICO EAGLE MINING
AMARUQ,NU

TITRE / TITLE:
STORAGE DOUBLE TANK / (SLUDGE TANK)
RX75-2
FIELD INSTALLATION -5000218009_FI_0003_RX_VWT

ÉCHELLE / SCALE: 1:25

PROJET / PROJECT	DESSIN No /DRAWING No	INTERNE / INTERNAL	FEUILLET / SHEET	RÉV./REV
5000218009 - FI0003		RX752	1/2	1

Ce document est la propriété de VEOLIA et ne peut être reproduit sans son autorisation écrite / This document is the property of VEOLIA and cannot be reproduced without its written authorization

SIZE ANSI D

REF:

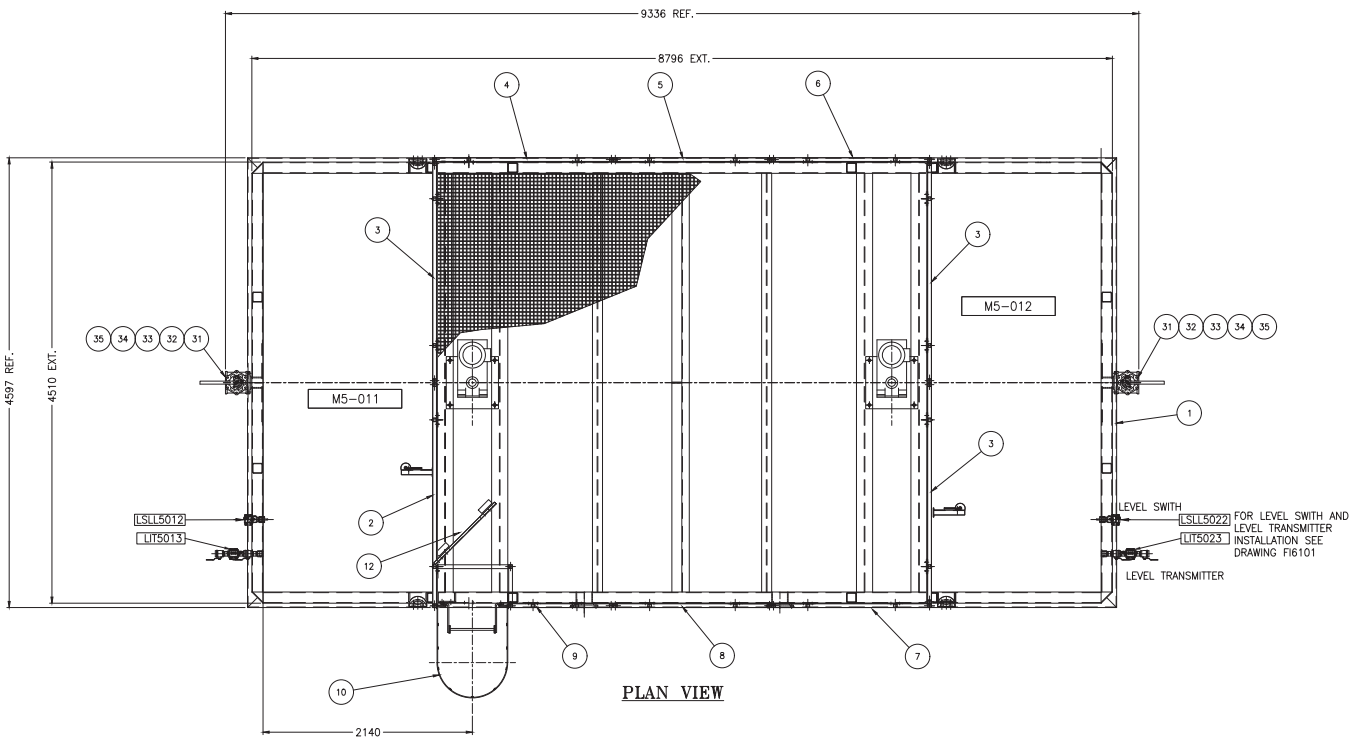

PLAN VIEW

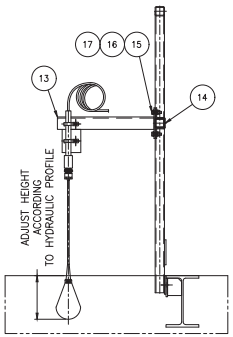

DETAIL 1 P.1
SCALE 1:10

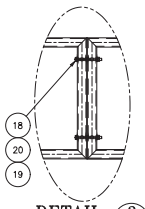

DETAIL 2 P.1
SCALE 1:10

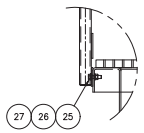

DETAIL 3 P.1
SCALE 1:10

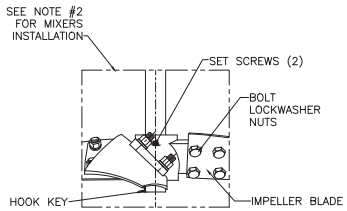

DETAIL 4 P.1
SCALE: N.T.S.

REV.	DESCRIPTION	DATE	RÉVISÉ REVISED	VÉRIFIÉ CHECKED	APPROUVÉ APPROVED
1	FIELD INSTALLATION	2018-05-10	F.C.	L.J.	L.J.

DESSINÉ PAR/DRAWN BY: F.C. DATE: 2018-05-07
VÉRIFIÉ PAR/CHECKED BY: L.J. DATE:
INGÉNIERIE PAR/ENGINEERING BY: L.J. DATE:
CLIENT: AGNICO EAGLE MINING AMARUQ,NU

VEOLIA WATER TECHNOLOGIES

TITRE / TITLE: STORAGE DOUBLE TANK / (SLUDGE TANK) RX75-2 FIELD INSTALLATION –5000218009_FI_0003_RX_VWT

ÉCHELLE / SCALE: 1:25

PROJET / PROJECT	DESSIN No /DRAWING No	INTERNE / INTERNAL	FEUILLET / SHEET	REV./REV
5000218009 – FI0003		RX752	2/2	1

Ce document est la propriété de VEOLIA et ne peut être reproduit sans son autorisation écrite / This document is the property of VEOLIA and cannot be reproduced without its written authorization

SIZE ANSI D

REF:

VEOLIA

NOMENCLATURE/ BILL OF MATERIALS

TITRE/ TITLE	Rev.	DESCRIPTION	DATE	Rev	Ver/chk	Appr.	Affaire / Contract	AGNICO EAGLE MINING AMARUQ, NU
pH PROBE MODEL "DPD1R1" TURBIDIMETER MODEL "SOLITAX" AND TRANSMITTER SC200, FIELD INSTALLATION ON HANDRAILS (RX75-3)	1	FOR INSTALLATION	5/3/2018	F.C.	L.J.			
							REF. No.	5000218009 Rev. 1
DESSIN /DWG # FI6100							Date:	5/2/2018

REV.	ITEM		QTE/QTY. Unit.	QTE/QTY. Total	DESCRIPTION	INV. /Plan Ref. Drawing	P&ID I.D./TAG	Commentaires / Comments
	5000218009-FI6100-	1	2	2	pH PROBE	SITE	AE-1-012/1-014	
	5000218009-FI6100-	2	1	1	OXYDATION REDUCTION POTENTIAL	SITE	AE-1-013	
	5000218009-FI6100-	3	2	2	CONTROLLER SC200	SITE	AIT-1-011/012/014	
	5000218009-FI6100-	4	3	3	HALF COUPLING Ø1" FNPT, #150, 1 9/16" DE (304)	FPADSS312210		
	5000218009-FI6100-	5	3	3	CABLE CONNECTOR Ø1/2" CABLE Ø3/16" @ Ø5/8", IPEX (PVC)	CECKGU200251		
	5000218009-FI6100-	6	3	3	PIPE SUPPORT & GUIDE FOR pH PROBE 2" DIA. PVC x 1850mm LG.	FATUIN328940		
	5000218009-FI6100-	7	6	6	MOUNTING BRACKET 200mm LG.FOR pH PROBE SS304L FOR HANDRAIL INSTALLATION	FABKIN328936		
	5000218009-FI6100-	8	2	2	BRACKET CONTROLLER SC200	FABKIN328935		
	5000218009-FI6100-	9	1	2	TIE,CABLE 7 INCH BLACK NYLON	FXTIYO200120		
	5000218009-FI6100-	10	4	4	HEX. HEAD SCREW Ø3/8"-16UNC x 3 1/2" (ASTM-F593C-304)	FXSCYS200385		
	5000218009-FI6100-	11	32	32	FLAT WASHER Ø3/8", SAE TYPE N (304)	FXWAYS200666		
	5000218009-FI6100-	12	16	16	HEX.NUT Ø3/8"-16UNC (ASTM-F594C-304)	FXNUYS200206		
	5000218009-FI6100-	13	12	12	HEX. HEAD SCREW Ø3/8"-16UNC x 2 1/2" (ASTM-F593C-304)	FXSCYS200380		
	5000218009-FI6100-	14	6	6	U BOLT PIPE Ø2", ROD Ø1/4"-20UNC, EXTENDED (304)	FXUBZG200620		
	5000218009-FI6100-	15	20	20	HEX.NUT Ø1/4"-20UNC (ASTM-F594C-304)	FXNUYP200199		
	5000218009-FI6100-	16	40	40	FLAT WASHER Ø1/4", SAE TYPE N (304)	FXWAYP200662		
	5000218009-FI6100-	17	8	8	HEX. HEAD SCREW Ø1/4"-20UNC x 1 1/2" (ASTM-F593C-304)	FXSCYP200333		

Fin de la liste / End of list

LEFT BLANK

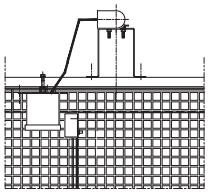

PLAN VIEW

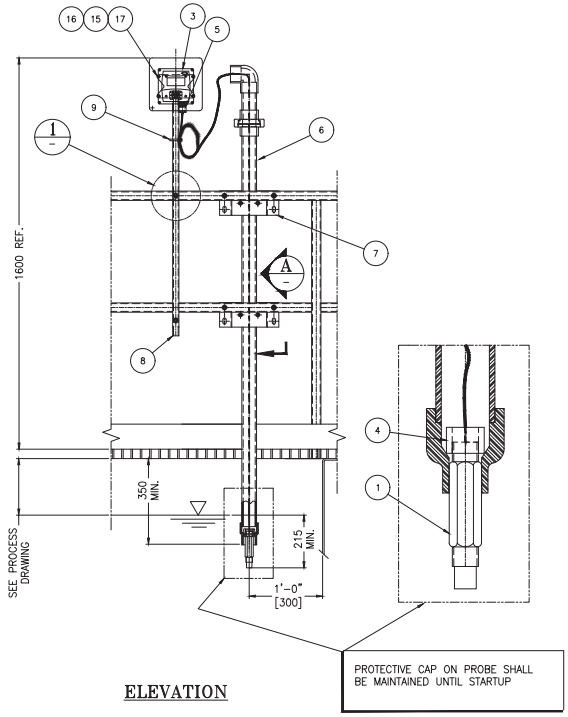

ELEVATION

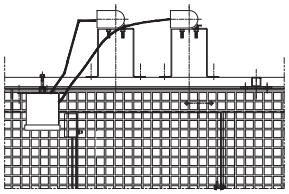

PLAN VIEW

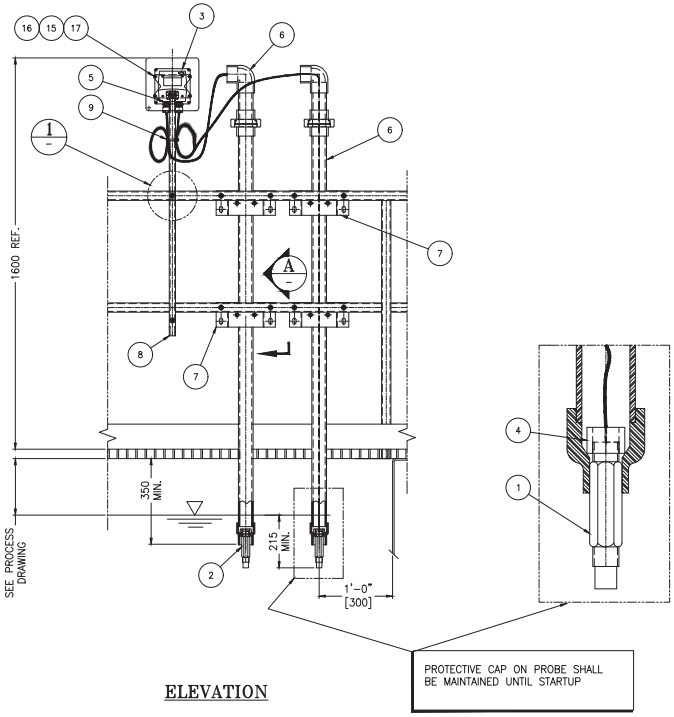

ELEVATION

NOTES:

1– FOR PARTS LIST SEE BILL OF MATERIAL: 5000218009–FI6100.

2– FOR INSTALLATION POSITION SEE: 5000218009–FI0001.

3– FOR INSTALLATION DETAILS SEE ALSO MANUFACTURER'S INSTRUCTIONS INCLUDED IN O&M MANUAL.

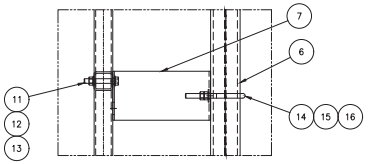

SECTION A
SCALE: 1:5

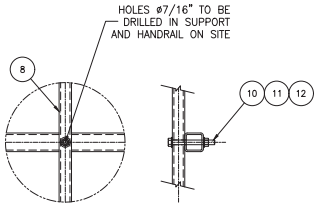

DETAIL 1
SCALE: 1:5

REV.	DESCRIPTION	DATE	RÉVISÉ / REVISED	VÉRIFIÉ / CHECKED	APPROUVÉ / APPROVED
1	FOR INSTALLATION	2018-05-03	F.C.	N/A	L.J.

DESSINÉ PAR/DRAWN BY: F.C. — DATE: 2015-05-03
VÉRIFIÉ PAR/CHECKED BY: L.J. — DATE:
RÉVISÉ PAR/ENGINEERING BY: L.J. — DATE:
CLIENT: AGNICO EAGLE MINING, AMARUQ,NU

VEOLIA WATER TECHNOLOGIES

TITRE / TITLE: pH PROBE MODEL "DPD1R1", OXYDATION PROBE AND TRANSMITTER SC200, FIELD INSTALLATION ON HANDRAILS (RX75-3)

ÉCHELLE / SCALE: 1:10

PROJET / PROJECT	DESSIN No /DRAWING No	INTERNE / INTERNAL	FEUILLET / SHEET	RÉV./REV
5000218009 – FI6100		CTR2100	1/1	1

Ce document est la propriété de VEOLIA et ne peut être reproduit sans son autorisation écrite / This document is the property of VEOLIA and cannot be reproduced without its written authorization

SIZE ANSI D

Jul 19, 2018 9:05:35 – \\Qc1010fs1500021\8009 Amaruq (TH128000)\15– Deuxième exécution\Drawings\5– FI\5000218009–FI6100\CTR2100_1.dwg – cmilano

LEFT BLANK

VEOLIA

NOMENCLATURE/ BILL OF MATERIALS

TITRE/ TITLE	Rev.	DESCRIPTION	DATE	Rev	Ver/chk	Appr.	Affaire / Contract	AGNICO EAGLE MINING, AMARUQ, NU
LEVEL SWITCH AND LEVEL TRANSMITTER, INSTALLATION	1	FOR INSTALLATION at the base of the sludge storage tank RX75-2	5/14/2018	F.C.		L.J.		
	2							
	3						REF. No.	5000218009 Rev. 1
	4							
DESSIN /DWG # FI6101	5						Date:	5/3/2018

REV.	ITEM		QTE/QTY. Unit.	QTE/QTY. Total	DESCRIPTION	INV. /Plan Ref. Drawing	P&ID I.D./TAG	Commentaires / Comments
	5000218009-FI6101-	1	1	2	LEVEL TRANSMITTER 1/2 in dia.	Site	LE-5-013/023 LIT-5-013/023	
	5000218009-FI6101-	2	1	2	LEVEL SWITCH 1 in dia.	Site	LSLL-5-012/022	
	5000218009-FI6101-	3	1	2	BALL VALVE Ø1 1/2" FNPT, "FULL PORT" (316)	VABLSS200270		
	5000218009-FI6101-	4	1	2	TEE Ø 1/2" FNPT, #150 (304)	FPTESS202724		
	5000218009-FI6101-	5	1	2	CLOSE NIPPLE Ø1 1/2" NPT (SCH,40) (304)	FPNISS202301		
	5000218009-FI6101-	6	1	2	BALL VALVE Ø 1/2" FNPT, "FULL PORT" (316)	VABLSS204730	LIT5-013-V002 /LIT5-023-V002	
	5000218009-FI6101-	7	1	2	REDUCING BUSHINGS ø1 1/2" x ø1" 304 McMASTER-CARR (4464K157)	FPRDSS206364		
	5000218009-FI6101-	8	1	2	REDUCING BUSHING 1 1/2 x 1/2 304 McMASTER-CARR 4464K155	FPRDSS312149		
	5000218009-FI6101-	9	2	4	NIPPLE Ø 1/2" NPT (SCH,40) x 3" (304)	FPNISS302608		

Fin de la liste / End of list

LEFT BLANK

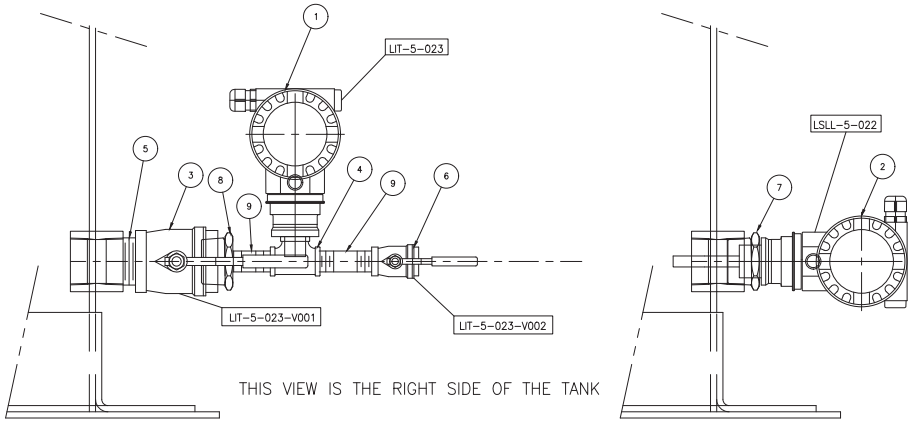

THIS VIEW IS THE RIGHT SIDE OF THE TANK

LEVEL TRANSMITTER

LEVEL SWITCH

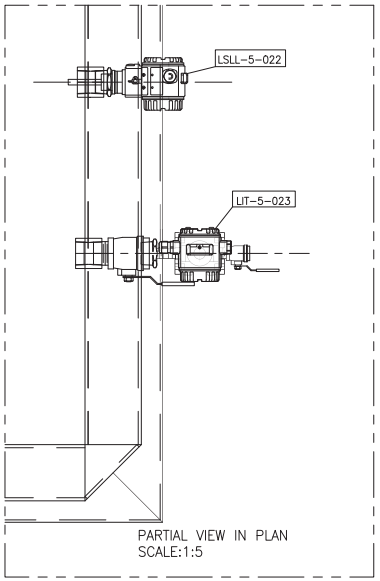

PARTIAL VIEW IN PLAN
SCALE:1:5

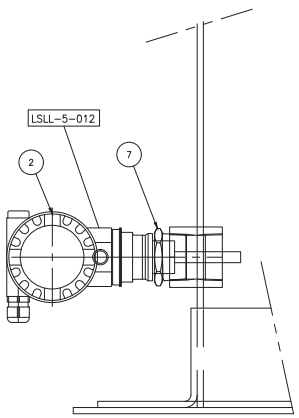

LEVEL SWITCH

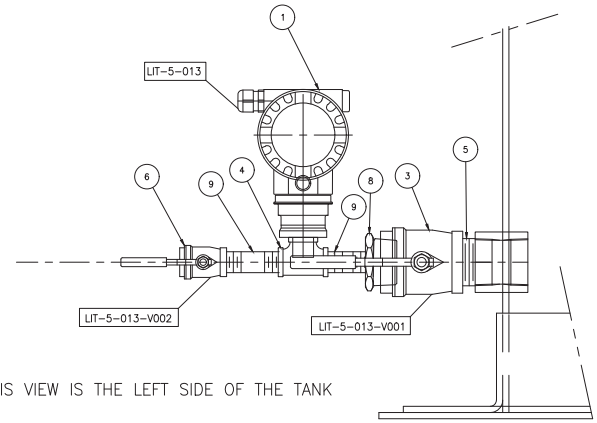

THIS VIEW IS THE LEFT SIDE OF THE TANK

LEVEL TRANSMITTER

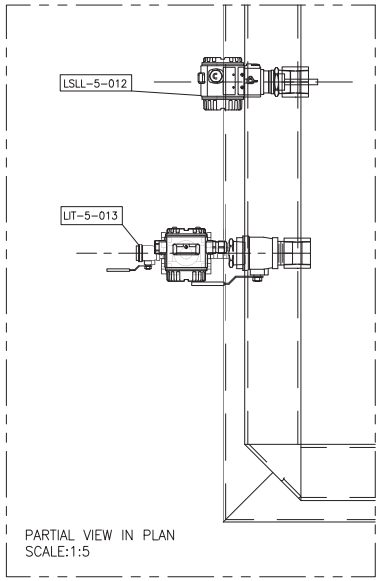

PARTIAL VIEW IN PLAN
SCALE:1:5

REV.	DESCRIPTION	DATE	RÉVISÉ REVISED	VÉRIFIÉ CHECKED	APPROUVÉ APPROVED
1	FOR INSTALLATION	2018-05-14	F.C.	L.J.	L.J.

DESSINÉ PAR/DRAWN BY: F.C. — DATE: 2018-05-03
VÉRIFIÉ PAR/CHECKED BY: L.J. — DATE:
INGÉNIERIE PAR/ENGINEERING BY: L.J. — DATE:

CLIENT: AGNICO EAGLE MINING
AMARUQ, NU

VEOLIA WATER TECHNOLOGIES

TITRE / TITLE: LEVEL SWITCH AND LEVEL TRANSMITTER

ÉCHELLE / SCALE: 1:2.5

PROJET / PROJECT	DESSIN No /DRAWING No	INTERNE / INTERNAL	FEUILLET / SHEET	REV./REV
5000218009 – FI6101		CTR2100	1/1	1

Ce document est la propriété de VEOLIA et ne peut être reproduit sans son autorisation écrite / This document is the property of VEOLIA and cannot be reproduced without its written authorization

REF:

SIZE ANSI D

LEFT BLANK

VEOLIA

NOMENCLATURE/ BILL OF MATERIALS

TITRE/ TITLE	Rev.	DESCRIPTION	DATE	Rev	Ver/chk	Appr.	Affaire / Contract	AGNICO EAGLE MINING AMARUQ. NU
pH PROBE MODEL "DPD1R1" TURBIDIMETER MODEL "SOLITAX" AND TRANSMITTER SC200, FIELD INSTALLATION ON HANDRAILS, ACTIFLO #1& #2	1	FOR INSTALLATION	5/16/2018	F.C.	L.J.	L.J.		
	2							
	3						REF. No.	5000218009 Rev. 1
	4							
DESSIN /DWG # FI6102	5						Date:	4/16/2018

REV.	ITEM		QTE/QTY. Unit.	QTE/QTY. Total	DESCRIPTION	INV. /Plan Ref. Drawing	P&ID I.D./TAG	Commentaires / Comments
	5000218009-FI6102-	1	1	2	pH PROBE	SITE	AE2-011 / AE2-021	
	5000218009-FI6102-	2	1	2	CLARIFIED WATER TURBIDIMETER MODEL: "SOLITAX"	SITE	AE2-012 /022	
	5000218009-FI6102-	3	1	2	HALF COUPLING Ø1" FNPT, #150, 1 9/16" DE (304)	FPADSS312210		
	5000218009-FI6102-	4	2	4	CABLE CONNECTOR Ø1/2" CABLE Ø3/16" @ Ø5/8", IPEX (PVC)	CECKGU200251		
	5000218009-FI6102-	5	1	2	PIPE SUPPORT & GUIDE FOR pH PROBE 2" DIA. PVC x 1850mm LG.	FATUIN328940		
	5000218009-FI6102-	6	2	4	MOUNTING BRACKET 200mm LG.FOR pH PROBE SS304L FOR HANDRAIL INSTALLATION	FABKIN328936		
	5000218009-FI6102-	7	2	4	MOUNTING BRACKET 200mm LG.FOR SOLITAX SS304L FOR HANDRAIL INSTALLATION	FABKIN328937		
	5000218009-FI6102-	8	2	4	MOUNTING PLATE LG.FOR SOLITAX SS304L FOR HANDRAIL INSTALLATION	FAPLIN328938		
	5000218009-FI6102-	9	1	2	TIE,CABLE 7 INCH BLACK NYLON	FXTIYO200120		
	5000218009-FI6102-	10	2	4	HEX. HEAD SCREW Ø3/8"-16UNC x 3 1/2" (ASTM-F593C-304)	FXSCYS200385		
	5000218009-FI6102-	11	28	56	FLAT WASHER Ø3/8", SAE TYPE N (304)	FXWAYS200666		
	5000218009-FI6102-	12	22	44	HEX.NUT Ø3/8"-16UNC (ASTM-F594C-304)	FXNUYS200206		
	5000218009-FI6102-	13	8	16	HEX. HEAD SCREW Ø3/8"-16UNC x 2 1/2" (ASTM-F593C-304)	FXSCYS200380		
	5000218009-FI6102-	14	2	4	U BOLT PIPE Ø1 1/2", ROD Ø3/8"-16UNC, EXTENDED (304)	FXUBZE200617		
	5000218009-FI6102-	15	2	4	U BOLT PIPE Ø2", ROD Ø1/4"-20UNC, EXTENDED (304)	FXUBZG200620		
	5000218009-FI6102-	16	8	12	HEX.NUT Ø1/4"-20UNC (ASTM-F594C-304)	FXNUYP200199		
	5000218009-FI6102-	17	4	8	FLAT WASHER Ø1/4", SAE TYPE N (304)	FXWAYP200662		
	5000218009-FI6102-	18	1	2	TRANSMITTER "HACH" SC200	SITE	AIT2-011 /012 AIT2-021 /022	
	5000218009-FI6102-	19	4	8	SPRING WASHER %%C1/4", "HACH 8H1336 (304)			
	5000218009-FI6102-	20	4	8	MECHANICAL SCREW PHILLIPS HEAD M6x1.0x20mm, "HACH" 5867400 (304)			
	5000218009-FI6102-	21	1	2	TUBE, TURBIDIMETER GUIDE SUPPORT %%C1 1/2" X 1550mm (PVC)	FATUIN328939		
	5000218009-FI6102-	22	1	2	BRACKET, CONTROLLER (304)	FABKIN328935		
	5000218009-FI6102-	23	2	4	SCREW FLAT SOC M6-1.0 x 10mm (304)	FXSCYP305449		
	5000218009-FI6102-	24	8	16	FLAT WASHER Ø1/4", SAE TYPE N (304)	FXWAYP200662		
	5000218009-FI6102-	25	4	8	HEX.NUT Ø1/4"-20UNC (ASTM-F594C-304)	FXNUYP200199		
	5000218009-FI6102-	26	4	8	HEX. HEAD SCREW Ø1/4"-20UNC x 1 1/2" (ASTM-F593C-304)	FXSCYP200333		

Fin de la liste / End of list

LEFT BLANK

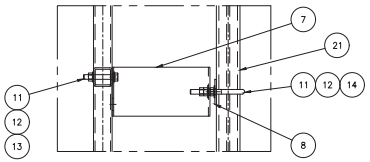

SECTION A
SCALE: 1:5

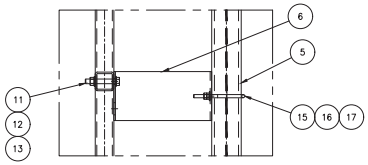

SECTION B
SCALE: 1:5

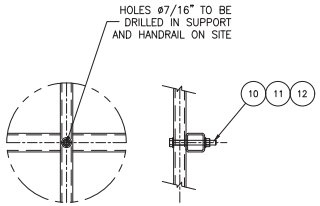

DETAIL 1
SCALE: 1:5

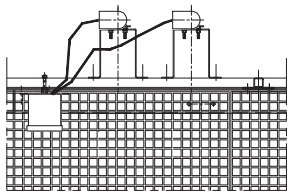

PLAN VIEW

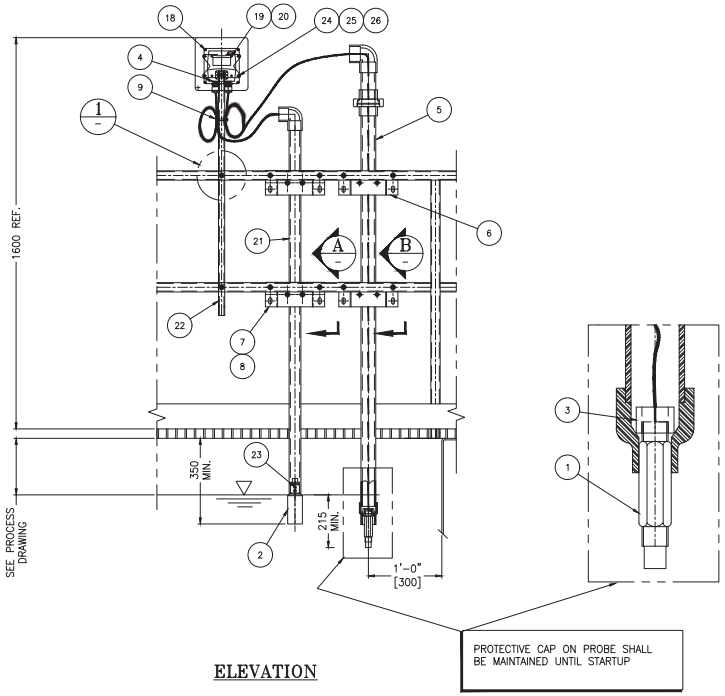

ELEVATION

NOTES:

1- FOR PARTS LIST SEE BILL OF MATERIAL: 5000218009-FI6102.

2- FOR INSTALLATION POSITION SEE: 5000218009-FI0002.

3- FOR INSTALLATION DETAILS SEE ALSO MANUFACTURER'S INSTRUCTIONS INCLUDED IN O&M MANUAL.

REV.	DESCRIPTION	DATE	RÉVISÉ REVISED	VÉRIFIÉ CHECKED	APPROUVÉ APPROVED
1	FOR INSTALLATION	2018-05-16	F.C.	L.J.	L.J.
REV.	DESCRIPTION	DATE	RÉVISÉ REVISED	VÉRIFIÉ CHECKED	APPROUVÉ APPROVED

VEOLIA WATER TECHNOLOGIES

DESSINATEUR/DESIGNER	F.C.	DATE 2018-05-16
VÉRIFICATEUR/CHECKER	L.J.	DATE
INGÉNIEUR/ENGINEER	L.J.	DATE

CLIENT: AGNICO EAGLE MINING
AMARUQ,NU

TITRE / TITLE:
pH PROBE MODEL "DPD1R1", TURBIDIMETER MODEL "SOLITAX" AND TRANSMITTER SC200, FIELD INSTALLATION ON HANDRAILS, ACTIFLO #1& #2

ÉCHELLE / SCALE:	PROJET / PROJECT	DESSIN No /DRAWING No	INTERNE / INTERNAL	FEUILLET / SHEET	REV./REV
1:10	5000218009 – FI6102		CTR2100	1/1	1

Ce document est la propriété de VEOLIA et ne peut être reproduit sans son autorisation écrite.
This document is the property of VEOLIA and cannot be reproduced without its written authorization

REF: ANSI D

LEFT BLANK

3 – DRAWINGS

3.6 – GENERAL ARRANGEMENT LAYOUT

TO BE PROVIDED BY AGNICO EAGLE MINES

LEFT BLANK

4 – DETAILED TECHNICAL DOCUMENTATION

4.1 – EQUIPMENT LISTS

4.1.1 –VALVE LIST

LEFT BLANK

					DOC #	VALS_0001_GEN_VWT								
					VALVE LIST									
CLIENT:	REV	DESCRIPTION			DATE	BY	VER.	APP.						
AGNICO EAGLE	1	FOR APPROVAL			2018-05-01	BB								
PROJET:														
AMARUQ														

EQPMT TAG NO	MANUFACTURER	DESCRIPTION	MODEL NUMBER	EQUIPMENT CODE	VALVE TYPE | RATING	INLET: CONNECTION TYPE | SIZE	OUTLET: CONNECTION TYPE | SIZE	MATERIAL: BODY	MATERIAL: SEAL	DIAMETER	P&ID NO	SUPPLIER	SITE	ACTUATOR TYPE -MODEL
INT-5-3 METAL PRECIPITATION REACTOR														
BPV9-541	CHEMLINE	TYPE: RELIEF VALVE | 150#//MANUFACTURER : CHEMLINE//MODEL : SB12A005EU//CONNECTION TYPE : UNION SOCKET | 13 mm (1/2")//BODY : PVC// SEAL | SEAT :EPDM | EPDM// STEM : N/A	SB12A005EU	VAPSPV329498	RELIEF VALVE | 150#	UNION SOCKET | 13 mm (1/2")	UNION SOCKET | 13 mm (1/2")	PVC	EPDM | EPDM	13 mm (1/2")	PI001 SHEET 01	PRIMARY FLUID	SA	
BPV9-592	CHEMLINE	TYPE: RELIEF VALVE | 150#//MANUFACTURER : CHEMLINE//MODEL : SB12A005EU//CONNECTION TYPE : UNION SOCKET | 13 mm (1/2")//BODY : PVC// SEAL | SEAT :EPDM | EPDM// STEM : N/A	SB12A005EU	VAPSPV329498	RELIEF VALVE | 150#	UNION SOCKET | 13 mm (1/2")	UNION SOCKET | 13 mm (1/2")	PVC	EPDM | EPDM	13 mm (1/2")	PI001 SHEET 01	PRIMARY FLUID	SA	
BPV9-511	CHEMLINE	TYPE: RELIEF VALVE | 150#//MANUFACTURER : CHEMLINE//MODEL : SB12A005EU//CONNECTION TYPE : UNION SOCKET | 13 mm (1/2")//BODY : PVC// SEAL | SEAT :EPDM | EPDM// STEM : N/A	SB12A005EU	VAPSPV329498	RELIEF VALVE | 150#	UNION SOCKET | 13 mm (1/2")	UNION SOCKET | 13 mm (1/2")	PVC	EPDM | EPDM	13 mm (1/2")	PI001 SHEET 01	PRIMARY FLUID	SA	
T1-011-V001	PRATT	TYPE: PLUG | 175 PSI//MANUFACTURER : PRATT//MODEL : 601N1-L/4"//CONNECTION TYPE : FLANGED | DIA. 100 mm (4")//BODY : CAST IRON// ELASTOMER TRIM: BUNA-N | SEAT :| NICKEL// STEM :N/A	601N1-L/4"	ST-312-112	PLUG | 175 PSI	FLANGED | 100 mm (4")	THREADED | 13 mm (1/2")	CAST IRON	BUNA-N | NICKEL	100 mm (4")	PI001 SHEET 01	DM VALVE	SA	
V9-518	CFF	TYPE: TWO PIECE BALL VALVE | 1000 psi W.O.G.//MANUFACTURER : CFF//MODEL : SS-2 (1/2")//CONNECTION TYPE : THREADED | 13 mm (1/2")// BODY : 316 SS// SEAL | SEAT :PTFE | TEFLON// STEM : 316 SS | C/W MANUAL LEVER	SS2-15 (1/2)	VABLSS200267	TWO PIECE BALL VALVE | 1000 psi W.O.G.	THREADED | 13 mm (1/2")	THREADED | 13 mm (1/2")	316 SS	PTFE | TEFLON	13 mm (1/2")	PI001 SHEET 01	CFF	SA	
V9-592	CFF	TYPE: TWO PIECE BALL VALVE | 1000 psi W.O.G.//MANUFACTURER : CFF//MODEL : SS-2 (1/2")//CONNECTION TYPE : THREADED | 13 mm (1/2")// BODY : 316 SS// SEAL | SEAT :PTFE | TEFLON// STEM : 316 SS | C/W MANUAL LEVER	SS2-15 (1/2)	VABLSS200267	TWO PIECE BALL VALVE | 1000 psi W.O.G.	THREADED | 13 mm (1/2")	THREADED | 13 mm (1/2")	316 SS	PTFE | TEFLON	13 mm (1/2")	PI001 SHEET 01	CFF	SA	
V9-593	CFF	TYPE: TWO PIECE BALL VALVE | 1000 psi W.O.G.//MANUFACTURER : CFF//MODEL : SS-2 (1/2")//CONNECTION TYPE : THREADED | 13 mm (1/2")// BODY : 316 SS// SEAL | SEAT :PTFE | TEFLON// STEM : 316 SS | C/W MANUAL LEVER	SS2-15 (1/2)	VABLSS200267	TWO PIECE BALL VALVE | 1000 psi W.O.G.	THREADED | 13 mm (1/2")	THREADED | 13 mm (1/2")	316 SS	PTFE | TEFLON	13 mm (1/2")	PI001 SHEET 01	CFF	SA	
V9-541	CFF	TYPE: TWO PIECE BALL VALVE | 1000 psi W.O.G.//MANUFACTURER : CFF//MODEL : SS-2 (1/2")//CONNECTION TYPE : THREADED | 13 mm (1/2")// BODY : 316 SS// SEAL | SEAT :PTFE | TEFLON// STEM : 316 SS | C/W MANUAL LEVER	SS2-15 (1/2)	VABLSS200267	TWO PIECE BALL VALVE | 1000 psi W.O.G.	THREADED | 13 mm (1/2")	THREADED | 13 mm (1/2")	316 SS	PTFE | TEFLON	13 mm (1/2")	PI001 SHEET 01	CFF	SA	
V9-542	CFF	TYPE: TWO PIECE BALL VALVE | 1000 psi W.O.G.//MANUFACTURER : CFF//MODEL : SS-2 (1/2")//CONNECTION TYPE : THREADED | 13 mm (1/2")// BODY : 316 SS// SEAL | SEAT :PTFE | TEFLON// STEM : 316 SS | C/W MANUAL LEVER	SS2-15 (1/2)	VABLSS200267	TWO PIECE BALL VALVE | 1000 psi W.O.G.	THREADED | 13 mm (1/2")	THREADED | 13 mm (1/2")	316 SS	PTFE | TEFLON	13 mm (1/2")	PI001 SHEET 01	CFF	SA	
ACTIFLO RECIRCULATION LINE MODIFICATION #1														
V2-010	PRATT	TYPE: PLUG | 175 PSI//MANUFACTURER : PRATT//MODEL : 601N1-L/2-1/2"//CONNECTION TYPE : FLANGED | 63 mm (2-1/2")//BODY : CAST IRON// SEAL | SEAT :FONTE DUCTILE REVETUE EN CAOUTCHOU | NICKEL// STEM : N/A	601N1-L/2-1/2"	ST-312-110	PLUG | 175 PSI	FLANGED | 63 mm (2-1/2")	THREADED | 13 mm (1/2")	CAST IRON	BUNA-N | NICKEL	63 mm (2-1/2")	PI001 SHEET 02	PMP	FI	
V2-011	PRATT	TYPE: PLUG | 175 PSI//MANUFACTURER :PRATT//MODEL : 601N1-L/2-1/2"//CONNECTION TYPE : FLANGED | 63 mm (2-1/2")//BODY : CAST IRON// SEAL | SEAT :FONTE DUCTILE REVETUE EN CAOUTCHOU | NICKEL// STEM : N/A	601N1-L/2-1/2"	ST-312-110	PLUG | 175 PSI	FLANGED | 63 mm (2-1/2")	THREADED (FNPT) | 13 mm (1/2")	CAST IRON	BUNA-N | NICKEL	63 mm (2-1/2")	PI001 SHEET 02	PMP	FI	
P2-014-V001	PRATT	TYPE: PLUG | 175 PSI//MANUFACTURER :PRATT//MODEL : 601N1-L/4"//CONNECTION TYPE : FLANGED | DIA. 100 mm (4")//BODY : CAST IRON// ELASTOMER TRIM: BUNA-N | SEAT :| NICKEL// STEM :N/A	601N1-L/4"	ST-312-112	PLUG | 175 PSI	FLANGED | 100 mm (4")	THREADED (FNPT) | 13 mm (1/2")	CAST IRON	BUNA-N | NICKEL	100 mm (4")	PI001 SHEET 02	PRATT	FI	
P2-011-V001	PRATT	TYPE: PLUG | 175 PSI//MANUFACTURER :PRATT//MODEL : 601N1-L/4"//CONNECTION TYPE : FLANGED | DIA. 100 mm (4")//BODY : CAST IRON// ELASTOMER TRIM: BUNA-N | SEAT :| NICKEL// STEM :N/A	601N1-L/4"	ST-312-112	PLUG | 175 PSI	FLANGED | 100 mm (4")	THREADED (FNPT) | 13 mm (1/2")	CAST IRON	BUNA-N | NICKEL	100 mm (4")	PI001 SHEET 02	PRATT	FI	
P2-012-V001	PRATT	TYPE: PLUG | 175 PSI//MANUFACTURER :PRATT//MODEL : 601N1-L/4"//CONNECTION TYPE : FLANGED | DIA. 100 mm (4")//BODY : CAST IRON// ELASTOMER TRIM: BUNA-N | SEAT :| NICKEL// STEM :N/A	601N1-L/4"	ST-312-112	PLUG | 175 PSI	FLANGED | 100 mm (4")	FLANGED | 100 mm (4")	CAST IRON	BUNA-N | NICKEL	100 mm (4")	PI001 SHEET 02	PRATT	FI	
V2-012	CFF	TYPE: TWO PIECE BALL VALVE | 1000 psi W.O.G.//MANUFACTURER : CFF//MODEL : SS-2 (3/4")//CONNECTION TYPE : THREADED | 20 mm (3/4")// BODY : 316 SS// SEAL | SEAT :PTFE | TEFLON// STEM : 316 SS | C/W MANUAL LEVER	SS2-20 (3/4)	VABLSS200268	TWO PIECE BALL VALVE | 1000 psi W.O.G.	THREADED | 20 mm (3/4")	THREADED | 13 mm (1/2")	316 SS	PTFE | TEFLON	20 mm (3/4")	PI001 SHEET 02	CFF	SA	
V2-013	CFF	TYPE: TWO PIECE BALL VALVE | 1000 psi W.O.G.//MANUFACTURER : CFF//MODEL : SS-2 (3/4")//CONNECTION TYPE : THREADED | 20 mm (3/4")// BODY : 316 SS// SEAL | SEAT :PTFE | TEFLON// STEM : 316 SS | C/W MANUAL LEVER	SS2-20 (3/4)	VABLSS200268	TWO PIECE BALL VALVE | 1000 psi W.O.G.	THREADED | 20 mm (3/4")	THREADED | 13 mm (1/2")	316 SS	PTFE | TEFLON	20 mm (3/4")	PI001 SHEET 02	CFF	SA	
PI2-012-V002	CFF	TYPE: TWO PIECE BALL VALVE | 1000 psi W.O.G.//MANUFACTURER : CFF//MODEL : SS-2 (1/2")//CONNECTION TYPE : THREADED | 13 mm (1/2")// BODY : 316 SS// SEAL | SEAT :PTFE | TEFLON// STEM : 316 SS | C/W MANUAL LEVER	SS2-15 (1/2)	VABLSS200267	TWO PIECE BALL VALVE | 1000 psi W.O.G.	THREADED | 13 mm (1/2")	THREADED | 13 mm (1/2")	316 SS	PTFE | TEFLON	13 mm (1/2")	PI001 SHEET 02	CFF	SA	
PI2-011-V002	CFF	TYPE: TWO PIECE BALL VALVE | 1000 psi W.O.G.//MANUFACTURER : CFF//MODEL : SS-2 (1/2")//CONNECTION TYPE : THREADED | 13 mm (1/2")// BODY : 316 SS// SEAL | SEAT :PTFE | TEFLON// STEM : 316 SS | C/W MANUAL LEVER	SS2-15 (1/2)	VABLSS200267	TWO PIECE BALL VALVE | 1000 psi W.O.G.	THREADED | 13 mm (1/2")	THREADED | 13 mm (1/2")	316 SS	PTFE | TEFLON	13 mm (1/2")	PI001 SHEET 02	CFF	SA	
PI2-011-V001	CFF	TYPE: TWO PIECE BALL VALVE | 1000 psi W.O.G.//MANUFACTURER : CFF//MODEL : SS-2 (1/2")//CONNECTION TYPE : THREADED | 13 mm (1/2")// BODY : 316 SS// SEAL | SEAT :PTFE | TEFLON// STEM : 316 SS | C/W MANUAL LEVER	SS2-15 (1/2)	VABLSS200267	TWO PIECE BALL VALVE | 1000 psi W.O.G.	THREADED | 13 mm (1/2")	THREADED | 13 mm (1/2")	316 SS	PTFE | TEFLON	13 mm (1/2")	PI001 SHEET 02	CFF	SA	
PI2-012-V001	CFF	TYPE: TWO PIECE BALL VALVE | 1000 psi W.O.G.//MANUFACTURER : CFF//MODEL : SS-2 (1/2")//CONNECTION TYPE : THREADED | 13 mm (1/2")// BODY : 316 SS// SEAL | SEAT :PTFE | TEFLON// STEM : 316 SS | C/W MANUAL LEVER	SS2-15 (1/2)	VABLSS200267	TWO PIECE BALL VALVE | 1000 psi W.O.G.	THREADED | 13 mm (1/2")	THREADED | 13 mm (1/2")	316 SS	PTFE | TEFLON	13 mm (1/2")	PI001 SHEET 02	CFF	SA	
ACTIFLO RECIRCULATION LINE MODIFICATION #2														
V2-021	PRATT	TYPE: PLUG | 175 PSI//MANUFACTURER : PRATT//MODEL : 601N1-L/2-1/2"//CONNECTION TYPE : FLANGED | 63 mm (2-1/2")//BODY : CAST IRON// SEAL | SEAT :FONTE DUCTILE REVETUE EN CAOUTCHOU | NICKEL// STEM : N/A	601N1-L/2-1/2"	ST-312-110	PLUG | 175 PSI	FLANGED | 63 mm (2-1/2")	THREADED | 13 mm (1/2")	CAST IRON	BUNA-N | NICKEL	63 mm (2-1/2")	PI001 SHEET 03	PMP	FI	
V2-020	PRATT	TYPE: PLUG | 175 PSI//MANUFACTURER : PRATT//MODEL : 601N1-L/2-1/2"//CONNECTION TYPE : FLANGED | 63 mm (2-1/2")//BODY : CAST IRON// SEAL | SEAT :FONTE DUCTILE REVETUE EN CAOUTCHOU | NICKEL// STEM : N/A	601N1-L/2-1/2"	ST-312-110	PLUG | 175 PSI	FLANGED | 63 mm (2-1/2")	THREADED | 13 mm (1/2")	CAST IRON	BUNA-N | NICKEL	63 mm (2-1/2")	PI001 SHEET 03	PMP	FI	
P2-021-V001	PRATT	TYPE: PLUG | 175 PSI//MANUFACTURER :PRATT//MODEL : 601N1-L/4"//CONNECTION TYPE : FLANGED | DIA. 100 mm (4")//BODY : CAST IRON// ELASTOMER TRIM: BUNA-N | SEAT :| NICKEL// STEM :N/A	601N1-L/4"	ST-312-112	PLUG | 175 PSI	FLANGED | 100 mm (4")	THREADED | 25 mm (1")	CAST IRON	BUNA-N | NICKEL	100 mm (4")	PI001 SHEET 03	PRATT	FI	
P2-022-V001	PRATT	TYPE: PLUG | 175 PSI//MANUFACTURER :PRATT//MODEL : 601N1-L/4"//CONNECTION TYPE : FLANGED | DIA. 100 mm (4")//BODY : CAST IRON// ELASTOMER TRIM: BUNA-N | SEAT :| NICKEL// STEM :N/A	601N1-L/4"	ST-312-112	PLUG | 175 PSI	FLANGED | 100 mm (4")	THREADED | 25 mm (1")	CAST IRON	BUNA-N | NICKEL	100 mm (4")	PI001 SHEET 03	PRATT	FI	
P2-023-V001	PRATT	TYPE: PLUG | 175 PSI//MANUFACTURER :PRATT//MODEL : 601N1-L/4"//CONNECTION TYPE : FLANGED | DIA. 100 mm (4")//BODY : CAST IRON// ELASTOMER TRIM: BUNA-N | SEAT :| NICKEL// STEM :N/A	601N1-L/4"	ST-312-112	PLUG | 175 PSI	FLANGED | 100 mm (4")	FLANGED | 63 mm (2-1/2")	CAST IRON	BUNA-N | NICKEL	100 mm (4")	PI001 SHEET 03	PRATT	FI	
V2-023	CFF	TYPE: TWO PIECE BALL VALVE | 1000 psi W.O.G.//MANUFACTURER : CFF//MODEL : SS-2 (3/4")//CONNECTION TYPE : THREADED | 20 mm (3/4")// BODY : 316 SS// SEAL | SEAT :PTFE | TEFLON// STEM : 316 SS | C/W MANUAL LEVER	SS2-20 (3/4)	VABLSS200268	TWO PIECE BALL VALVE | 1000 psi W.O.G.	THREADED | 20 mm (3/4")	FLANGED | 63 mm (2-1/2")	316 SS	PTFE | TEFLON	20 mm (3/4")	PI001 SHEET 03	CFF	SA	
V2-022	CFF	TYPE: TWO PIECE BALL VALVE | 1000 psi W.O.G.//MANUFACTURER : CFF//MODEL : SS-2 (3/4")//CONNECTION TYPE : THREADED | 20 mm (3/4")// BODY : 316 SS// SEAL | SEAT :PTFE | TEFLON// STEM : 316 SS | C/W MANUAL LEVER	SS2-20 (3/4)	VABLSS200268	TWO PIECE BALL VALVE | 1000 psi W.O.G.	THREADED | 20 mm (3/4")	FLANGED | 100 mm (4")	316 SS	PTFE | TEFLON	20 mm (3/4")	PI001 SHEET 03	CFF	SA	
PI2-022-V001	CFF	TYPE: TWO PIECE BALL VALVE | 1000 psi W.O.G.//MANUFACTURER : CFF//MODEL : SS-2 (1/2")//CONNECTION TYPE : THREADED | 13 mm (1/2")// BODY : 316 SS// SEAL | SEAT :PTFE | TEFLON// STEM : 316 SS | C/W MANUAL LEVER	SS2-15 (1/2)	VABLSS200267	TWO PIECE BALL VALVE | 1000 psi W.O.G.	THREADED | 13 mm (1/2")	THREADED | 13 mm (1/2")	316 SS	PTFE | TEFLON	13 mm (1/2")	PI001 SHEET 03	CFF	SA	
PI2-022-V002	CFF	TYPE: TWO PIECE BALL VALVE | 1000 psi W.O.G.//MANUFACTURER : CFF//MODEL : SS-2 (1/2")//CONNECTION TYPE : THREADED | 13 mm (1/2")// BODY : 316 SS// SEAL | SEAT :PTFE | TEFLON// STEM : 316 SS | C/W MANUAL LEVER	SS2-15 (1/2)	VABLSS200267	TWO PIECE BALL VALVE | 1000 psi W.O.G.	THREADED | 13 mm (1/2")	THREADED | 13 mm (1/2")	316 SS	PTFE | TEFLON	13 mm (1/2")	PI001 SHEET 03	CFF	SA	
PI2-021-V001	CFF	TYPE: TWO PIECE BALL VALVE | 1000 psi W.O.G.//MANUFACTURER : CFF//MODEL : SS-2 (1/2")//CONNECTION TYPE : THREADED | 13 mm (1/2")// BODY : 316 SS// SEAL | SEAT :PTFE | TEFLON// STEM : 316 SS | C/W MANUAL LEVER	SS2-15 (1/2)	VABLSS200267	TWO PIECE BALL VALVE | 1000 psi W.O.G.	THREADED | 13 mm (1/2")	THREADED | 13 mm (1/2")	316 SS	PTFE | TEFLON	13 mm (1/2")	PI001 SHEET 03	CFF	SA	

					DOC #	VALS_0001_GEN_VWT								
					VALVE LIST									
CLIENT:	REV	DESCRIPTION			DATE	BY	VER.	APP.						
AGNICO EAGLE	1	FOR APPROVAL			2018-05-01	BB								
PROJET:														
AMARUQ														

EQPMT TAG NO	MANUFACTURER	DESCRIPTION	MODEL NUMBER	EQUIPMENT CODE	VALVE TYPE | RATING	INLET: CONNECTION TYPE | SIZE	OUTLET: CONNECTION TYPE | SIZE	MATERIAL: BODY	MATERIAL: SEAL	DIAMETER	P&ID NO	SUPPLIER	SITE	ACTUATOR TYPE -MODEL
PI2-021-V002	CFF	TYPE: TWO PIECE BALL VALVE | 1000 psi W.O.G.//MANUFACTURER : CFF//MODEL : SS-2 (1/2")//CONNECTION TYPE : THREADED | 13 mm (1/2")//BODY : 316 SS// SEAL | SEAT :PTFE | TEFLON// STEM : 316 SS | C/W MANUAL LEVER	SS2-15 (1/2)	VABLSS200267	TWO PIECE BALL VALVE | 1000 psi W.O.G.	THREADED | 13 mm (1/2")	THREADED | 13 mm (1/2")	316 SS	PTFE | TEFLON	13 mm (1/2")	PI001 SHEET 03	CFF	SA	
SLUDGE TANKS														
FCV4-011	FLOWROX	TYPE: PINCH VALVE | 150 PSI//MANUFACTURER : FLOWROX//MODEL : PVE3AK150-601L-SBRT//CONNECTION TYPE : FLANGED | 75 mm (3")//BODY : CAST IRON// SEAL | SEAT :N/A// SLEEVE : SBRT	PVE3AK150-601L-SBRT	ST-313-501	N/A	FLANGED | 75 mm (3")	FLANGED | 100 mm (4")	CAST IRON	N/A	75 mm (3")	PI001 SHEET 04	DM VALVE	FI	ACTUATOR TYPE : MANUAL// MANUFACTURER : N/A// MODEL # :N/A//
PI4-011-V001	CFF	TYPE: TWO PIECE BALL VALVE | 1000 psi W.O.G.//MANUFACTURER : CFF//MODEL : SS-2 (1/2")//CONNECTION TYPE : THREADED | 13 mm (1/2")//BODY : 316 SS// SEAL | SEAT :PTFE | TEFLON// STEM : 316 SS | C/W MANUAL LEVER	SS2-15 (1/2)	VABLSS200267	TWO PIECE BALL VALVE | 1000 psi W.O.G.	THREADED | 13 mm (1/2")	THREADED | 13 mm (1/2")	316 SS	PTFE | TEFLON	13 mm (1/2")	PI001 SHEET 04	CFF	SA	
PI4-011-V002	CFF	TYPE: TWO PIECE BALL VALVE | 1000 psi W.O.G.//MANUFACTURER : CFF//MODEL : SS-2 (1/2")//CONNECTION TYPE : THREADED | 13 mm (1/2")//BODY : 316 SS// SEAL | SEAT :PTFE | TEFLON// STEM : 316 SS | C/W MANUAL LEVER	SS2-15 (1/2)	VABLSS200267	TWO PIECE BALL VALVE | 1000 psi W.O.G.	THREADED | 13 mm (1/2")	THREADED | 13 mm (1/2")	316 SS	PTFE | TEFLON	13 mm (1/2")	PI001 SHEET 04	CFF	SA	
RX75-2 SLUDGE TANK														
TS-011-V004	PRATT	TYPE: PLUG | 175 PSI//MANUFACTURER : PRATT//MODEL : 601N1-L/4"//CONNECTION TYPE : FLANGED | DIA. 100 mm (4")//BODY : CAST IRON// ELASTOMER TRIM: BUNA-N | SEAT :| NICKEL// STEM :N/A	601N1-L/4"	ST-312-112	PLUG | 175 PSI	FLANGED | 100 mm (4")	THREADED | 13 mm (1/2")	CAST IRON	BUNA-N | NICKEL	100 mm (4")	PI001 SHEET 05	DM VALVE	FI	
TS-012-V004	PRATT	TYPE: PLUG | 175 PSI//MANUFACTURER : PRATT//MODEL : 601N1-L/4"//CONNECTION TYPE : FLANGED | DIA. 100 mm (4")//BODY : CAST IRON// ELASTOMER TRIM: BUNA-N | SEAT :| NICKEL// STEM :N/A	601N1-L/4"	ST-312-112	PLUG | 175 PSI	FLANGED | 100 mm (4")	THREADED | 13 mm (1/2")	CAST IRON	BUNA-N | NICKEL	100 mm (4")	PI001 SHEET 05	DM VALVE	FI	
LIT5-013-V001	CFF	TYPE: TWO PIECE BALL VALVE | 1000 psi W.O.G.//MANUFACTURER : CFF//MODEL : SS-2 (1-1/2")//CONNECTION TYPE : THREADED | 38 mm (1-1/2")//BODY : 316 SS// SEAL | SEAT :PTFE | TEFLON// STEM : 316 SS | C/W MANUAL LEVER	SS2-40 (11/2)	VABLSS200270	TWO PIECE BALL VALVE | 1000 psi W.O.G.	THREADED | 38 mm (1-1/2")	THREADED | 13 mm (1/2")	316 SS	PTFE | TEFLON	38 mm (1-1/2")	PI001 SHEET 05	CFF	FI	
LIT5-013-V002	CFF	TYPE: TWO PIECE BALL VALVE | 1000 psi W.O.G.//MANUFACTURER : CFF//MODEL : SS-2 (1-1/2")//CONNECTION TYPE : THREADED | 38 mm (1-1/2")//BODY : 316 SS// SEAL | SEAT :PTFE | TEFLON// STEM : 316 SS | C/W MANUAL LEVER	SS2-40 (11/2)	VABLSS200270	TWO PIECE BALL VALVE | 1000 psi W.O.G.	THREADED | 38 mm (1-1/2")	THREADED | 13 mm (1/2")	316 SS	PTFE | TEFLON	38 mm (1-1/2")	PI001 SHEET 05	CFF	FI	
LIT5-023-V001	CFF	TYPE: TWO PIECE BALL VALVE | 1000 psi W.O.G.//MANUFACTURER : CFF//MODEL : SS-2 (1-1/2")//CONNECTION TYPE : THREADED | 38 mm (1-1/2")//BODY : 316 SS// SEAL | SEAT :PTFE | TEFLON// STEM : 316 SS | C/W MANUAL LEVER	SS2-40 (11/2)	VABLSS200270	TWO PIECE BALL VALVE | 1000 psi W.O.G.	THREADED | 38 mm (1-1/2")	THREADED | 38 mm (1-1/2")	316 SS	PTFE | TEFLON	38 mm (1-1/2")	PI001 SHEET 05	CFF	FI	
LIT5-023-V002	CFF	TYPE: TWO PIECE BALL VALVE | 1000 psi W.O.G.//MANUFACTURER : CFF//MODEL : SS-2 (1-1/2")//CONNECTION TYPE : THREADED | 38 mm (1-1/2")//BODY : 316 SS// SEAL | SEAT :PTFE | TEFLON// STEM : 316 SS | C/W MANUAL LEVER	SS2-40 (11/2)	VABLSS200270	TWO PIECE BALL VALVE | 1000 psi W.O.G.	THREADED | 38 mm (1-1/2")	THREADED | 38 mm (1-1/2")	316 SS	PTFE | TEFLON	38 mm (1-1/2")	PI001 SHEET 05	CFF	FI	
COAGULANT DOSING SYSTEM														
PD9-514-V002	CHEMLINE	TYPE: BALL VALVE//MANUFACTURER : CHEMLINE//MODEL : Type21-A-005-E-C//CONNECTION TYPE : COMBO | 13 mm (1/2")//BODY : PVC (ASTM D1784)// SEAL | SEAT :PTFE | EPDM// STEM :PVC	21A005EC,TYPE21	VABLPV200249	BALL VALVE	COMBO | 13 mm (1/2")	FLANGED | 63 mm (2-1/2")	PVC (ASTM D1784)	PTFE | EPDM	13 mm (1/2")	PI001 SHEET 10	CHEMLINE	SA	
P9-514-V006	CHEMLINE	TYPE: BALL VALVE//MANUFACTURER : CHEMLINE//MODEL : Type21-A-005-E-C//CONNECTION TYPE : COMBO | 13 mm (1/2")//BODY : PVC (ASTM D1784)// SEAL | SEAT :PTFE | EPDM// STEM :PVC	21A005EC,TYPE21	VABLPV200249	BALL VALVE	COMBO | 13 mm (1/2")	FLANGED | 63 mm (2-1/2")	PVC (ASTM D1784)	PTFE | EPDM	13 mm (1/2")	PI001 SHEET 10	CHEMLINE	SA	
P9-513-V003	CHEMLINE	TYPE: BALL VALVE//MANUFACTURER : CHEMLINE//MODEL : Type21-A-005-E-C//CONNECTION TYPE : COMBO | 13 mm (1/2")//BODY : PVC (ASTM D1784)// SEAL | SEAT :PTFE | EPDM// STEM :PVC	21A005EC,TYPE21	VABLPV200249	BALL VALVE	COMBO | 13 mm (1/2")	FLANGED | 100 mm (4")	PVC (ASTM D1784)	PTFE | EPDM	13 mm (1/2")	PI001 SHEET 10	CHEMLINE	SA	
P9-514-V007	CHEMLINE	TYPE: BALL VALVE//MANUFACTURER : CHEMLINE//MODEL : Type21-A-005-E-C//CONNECTION TYPE : COMBO | 13 mm (1/2")//BODY : PVC (ASTM D1784)// SEAL | SEAT :PTFE | EPDM// STEM :PVC	21A005EC,TYPE21	VABLPV200249	BALL VALVE	COMBO | 13 mm (1/2")	FLANGED | 100 mm (4")	PVC (ASTM D1784)	PTFE | EPDM	13 mm (1/2")	PI001 SHEET 10	CHEMLINE	SA	
P9-514-V003	CHEMLINE	TYPE: BALL VALVE//MANUFACTURER : CHEMLINE//MODEL : Type21-A-005-E-C//CONNECTION TYPE : COMBO | 13 mm (1/2")//BODY : PVC (ASTM D1784)// SEAL | SEAT :PTFE | EPDM// STEM :PVC	21A005EC,TYPE21	VABLPV200249	BALL VALVE	COMBO | 13 mm (1/2")	FLANGED | 100 mm (4")	PVC (ASTM D1784)	PTFE | EPDM	13 mm (1/2")	PI001 SHEET 10	CHEMLINE	SA	
P9-513-V001	CHEMLINE	TYPE: BALL VALVE//MANUFACTURER : CHEMLINE//MODEL : Type21-A-010-E-S//CONNECTION TYPE : SOCKET | 25 mm (1")//BODY : PVC (ASTM D1784)// SEAL | SEAT :PTFE | EPDM// STEM : PVC	21A010EC,TYPE21	VABLPV200251	BALL VALVE	SOCKET | 25 mm (1")	THREADED | 13 mm (1/2")	PVC (ASTM D1784)	PTFE | EPDM	25 mm (1")	PI001 SHEET 10	CHEMLINE	SA	
P9-513-V002	CHEMLINE	TYPE: BALL VALVE//MANUFACTURER : CHEMLINE//MODEL : Type21-A-010-E-S//CONNECTION TYPE : SOCKET | 25 mm (1")//BODY : PVC (ASTM D1784)// SEAL | SEAT :PTFE | EPDM// STEM : PVC	21A010EC,TYPE21	VABLPV200251	BALL VALVE	SOCKET | 25 mm (1")	THREADED | 13 mm (1/2")	PVC (ASTM D1784)	PTFE | EPDM	25 mm (1")	PI001 SHEET 10	CHEMLINE	SA	
P9-513-V004	CHEMLINE	TYPE: BALL VALVE//MANUFACTURER : CHEMLINE//MODEL : Type21-A-010-E-S//CONNECTION TYPE : SOCKET | 25 mm (1")//BODY : PVC (ASTM D1784)// SEAL | SEAT :PTFE | EPDM// STEM : PVC	21A010EC,TYPE21	VABLPV200251	BALL VALVE	SOCKET | 25 mm (1")	THREADED | 13 mm (1/2")	PVC (ASTM D1784)	PTFE | EPDM	25 mm (1")	PI001 SHEET 10	CHEMLINE	SA	
P9-514-V005	CHEMLINE	TYPE: BALL VALVE//MANUFACTURER : CHEMLINE//MODEL : Type21-A-010-E-S//CONNECTION TYPE : SOCKET | 25 mm (1")//BODY : PVC (ASTM D1784)// SEAL | SEAT :PTFE | EPDM// STEM: PVC	21A010EC,TYPE21	VABLPV200251	BALL VALVE	SOCKET | 25 mm (1")	THREADED | 13 mm (1/2")	PVC (ASTM D1784)	PTFE | EPDM	25 mm (1")	PI001 SHEET 10	CHEMLINE	SA	
P9-514-V001	CHEMLINE	TYPE: BALL VALVE//MANUFACTURER : CHEMLINE//MODEL : Type21-A-010-E-S//CONNECTION TYPE : SOCKET | 25 mm (1")//BODY : PVC (ASTM D1784)// SEAL | SEAT :PTFE | EPDM// STEM: PVC	21A010EC,TYPE21	VABLPV200251	BALL VALVE	SOCKET | 25 mm (1")	FLANGED | 75 mm (3")	PVC (ASTM D1784)	PTFE | EPDM	25 mm (1")	PI001 SHEET 10	CHEMLINE	SA	
P9-513-V005	CHEMLINE	TYPE: BALL VALVE//MANUFACTURER : CHEMLINE//MODEL : Type21-A-010-E-S//CONNECTION TYPE : SOCKET | 25 mm (1")//BODY : PVC (ASTM D1784)// SEAL | SEAT :PTFE | EPDM// STEM: PVC	21A010EC,TYPE21	VABLPV200251	BALL VALVE	SOCKET | 25 mm (1")	FLANGED | 75 mm (3")	PVC (ASTM D1784)	PTFE | EPDM	25 mm (1")	PI001 SHEET 10	CHEMLINE	SA	
P9-514-V002	CHEMLINE	TYPE: BALL VALVE//MANUFACTURER : CHEMLINE//MODEL : Type21-A-010-E-S//CONNECTION TYPE : SOCKET | 25 mm (1")//BODY : PVC (ASTM D1784)// SEAL | SEAT :PTFE | EPDM// STEM: PVC	21A010EC,TYPE21	VABLPV200251	BALL VALVE	SOCKET | 25 mm (1")	THREADED | 38 mm (1-1/2")	PVC (ASTM D1784)	PTFE | EPDM	25 mm (1")	PI001 SHEET 10	CHEMLINE	SA	
PD9-514-V001	CHEMLINE	TYPE: BALL VALVE//MANUFACTURER : CHEMLINE//MODEL : Type21-A-010-E-S//CONNECTION TYPE : SOCKET | 25 mm (1")//BODY : PVC (ASTM D1784)// SEAL | SEAT :PTFE | EPDM// STEM: PVC	21A010EC,TYPE21	VABLPV200251	BALL VALVE	SOCKET | 25 mm (1")	THREADED | 38 mm (1-1/2")	PVC (ASTM D1784)	PTFE | EPDM	25 mm (1")	PI001 SHEET 10	CHEMLINE	SA	
P9-514-V004	CHEMLINE	TYPE: BALL VALVE//MANUFACTURER : CHEMLINE//MODEL : Type21-A-010-E-S//CONNECTION TYPE : SOCKET | 25 mm (1")//BODY : PVC (ASTM D1784)// SEAL | SEAT :PTFE | EPDM// STEM: PVC	21A010EC,TYPE21	VABLPV200251	BALL VALVE	SOCKET | 25 mm (1")	THREADED | 38 mm (1-1/2")	PVC (ASTM D1784)	PTFE | EPDM	25 mm (1")	PI001 SHEET 10	CHEMLINE	SA	
PRV9-513	CHEMLINE	TYPE: RELIEF VALVE | 150#//MANUFACTURER : CHEMLINE//MODEL : SB12A010EU//CONNECTION TYPE : UNION SOCKET | 25 mm (1")//BODY : PVC// SEAL | SEAT :EPDM | EPDM// STEM : N/A	SB12A010EU	VARFPV207282	RELIEF VALVE | 150#	UNION SOCKET | 25 mm (1")	THREADED | 38 mm (1-1/2")	PVC	EPDM | EPDM	25 mm (1")	PI001 SHEET 10	CHEMLINE	SA	
PRV9-514	CHEMLINE	TYPE: RELIEF VALVE | 150#//MANUFACTURER : CHEMLINE//MODEL : SB12A010EU//CONNECTION TYPE : UNION SOCKET | 25 mm (1")//BODY : PVC// SEAL | SEAT :EPDM | EPDM// STEM : N/A	SB12A010EU	VARFPV207282	RELIEF VALVE | 150#	UNION SOCKET | 25 mm (1")	FLANGED | 100 mm (4")	PVC	EPDM | EPDM	25 mm (1")	PI001 SHEET 10	CHEMLINE	SA	
BPV9-514	CHEMLINE	TYPE: BACK PRESSURE VALVE | 150#//MANUFACTURER : CHEMLINE//MODEL : SB12A010EU + SGA-005-002-P-G + P025-160-BM//CONNECTION TYPE : UNION SOCKET | 25 mm (1")//BODY : PVC// SEAL | SEAT :EPDM | EPDM// STEM : N/A	SB12A010EU + SGA-005-002-P-G + P025-160-BM (CONFIG. L_U)	VARFPV348512	BACK PRESSURE VALVE | 150#	UNION SOCKET | 25 mm (1")	FLANGED | 100 mm (4")	PVC	EPDM | EPDM	25 mm (1")	PI001 SHEET 10	CHEMLINE	SA	(CONFIG. L_U)
SULFURIC ACID DOSING SYSTEM														
P9-532-V003	CHEMLINE	TYPE: BALL VALVE//MANUFACTURER : CHEMLINE//MODEL : Type21-K-005-V-CF+(2x)21005-4K8N-1//CONNECTION TYPE : CHEMFLARE | 13 mm (1/2")//BODY : PVDF (ASTM D-3222)// SEAL | SEAT :PTFE | VITON// STEM : PVDF	21K005VCF+(2x)21005-4K8N-1	VABLPD207828	BALL VALVE	CHEMFLARE | 13 mm (1/2")	COMBO | 13 mm (1/2")	PVDF (ASTM D-3222)	PTFE | VITON	13 mm (1/2")	PI001 SHEET 12	CHEMLINE	SA	
P9-531-V004	CHEMLINE	TYPE: BALL VALVE//MANUFACTURER : CHEMLINE//MODEL : Type21-K-005-V-CF+(2x)21005-4K8N-1//CONNECTION TYPE : CHEMFLARE | 13 mm (1/2")//BODY : PVDF (ASTM D-3222)// SEAL | SEAT :PTFE | VITON// STEM : PVDF	21K005VCF+(2x)21005-4K8N-1	VABLPD207828	BALL VALVE	CHEMFLARE | 13 mm (1/2")	COMBO | 13 mm (1/2")	PVDF (ASTM D-3222)	PTFE | VITON	13 mm (1/2")	PI001 SHEET 12	CHEMLINE	SA	
P9-531-V005	CHEMLINE	TYPE: BALL VALVE//MANUFACTURER : CHEMLINE//MODEL : Type21-K-005-V-CF+(2x)21005-4K8N-1//CONNECTION TYPE : CHEMFLARE | 13 mm (1/2")//BODY : PVDF (ASTM D-3222)// SEAL | SEAT :PTFE | VITON// STEM : PVDF	21K005VCF+(2x)21005-4K8N-1	VABLPD207828	BALL VALVE	CHEMFLARE | 13 mm (1/2")	COMBO | 13 mm (1/2")	PVDF (ASTM D-3222)	PTFE | VITON	13 mm (1/2")	PI001 SHEET 12	CHEMLINE	SA	

					DOC #	VALS_0001_GEN_VWT								
					VALVE LIST									
CLIENT:	REV	DESCRIPTION			DATE	BY	VER.	APP.						
AGNICO EAGLE	1	FOR APPROVAL			2018-05-01	BB								
PROJET:														
AMARUQ														

EQPMT TAG NO	MANUFACTURER	DESCRIPTION	MODEL NUMBER	EQUIPMENT CODE	VALVE TYPE | RATING	INLET: CONNECTION TYPE | SIZE	OUTLET: CONNECTION TYPE | SIZE	MATERIAL: BODY	MATERIAL: SEAL	DIAMETER	P&ID NO	SUPPLIER	SITE	ACTUATOR TYPE -MODEL
P09-531-V002	CHEMLINE	TYPE: BALL VALVE//MANUFACTURER : CHEMLINE//MODEL : Type21-K-005-V-CF+(2x)21005-4K8N-1//CONNECTION TYPE : CHEMFLARE | 13 mm (1/2")//BODY : PVDF (ASTM D-3222)// SEAL | SEAT :PTFE | VITON// STEM : PVDF	21K005VCF+(2x)21005-4K8N-1	VABUPD207828	BALL VALVE	CHEMFLARE | 13 mm (1/2")	COMBO | 13 mm (1/2")	PVDF (ASTM D-3222)	PTFE | VITON	13 mm (1/2")	PI001 SHEET 12	CHEMLINE	SA	
V9-537	CHEMLINE	TYPE: BALL VALVE//MANUFACTURER : CHEMLINE//MODEL : Type21-K-005-V-CF+(2x)21005-4K8N-1//CONNECTION TYPE : CHEMFLARE | 13 mm (1/2")//BODY : PVDF (ASTM D-3222)// SEAL | SEAT :PTFE | VITON// STEM : PVDF	21K005VCF+(2x)21005-4K8N-1	VABLPD207828	BALL VALVE	CHEMFLARE | 13 mm (1/2")	COMBO | 13 mm (1/2")	PVDF (ASTM D-3222)	PTFE | VITON	13 mm (1/2")	PI001 SHEET 12	CHEMLINE	SA	
P09-531-V001	CHEMLINE	TYPE: BALL VALVE//MANUFACTURER : CHEMLINE//MODEL : Type21-K-005-V-CF+(2x)21005-4K8N-1//CONNECTION TYPE : CHEMFLARE | 13 mm (1/2")//BODY : PVDF (ASTM D-3222)// SEAL | SEAT :PTFE | VITON// STEM : PVDF	21K005VCF+(2x)21005-4K8N-1	VABLPD207828	BALL VALVE	CHEMFLARE | 13 mm (1/2")	SOCKET | 25 mm (1")	PVDF (ASTM D-3222)	PTFE | VITON	13 mm (1/2")	PI001 SHEET 12	PRIMARY FLUID	SA	
V9-536	CHEMLINE	TYPE: BALL VALVE//MANUFACTURER : CHEMLINE//MODEL : Type21-K-005-V-CF+(2x)21005-4K8N-1//CONNECTION TYPE : CHEMFLARE | 13 mm (1/2")//BODY : PVDF (ASTM D-3222)// SEAL | SEAT :PTFE | VITON// STEM : PVDF	21K005VCF+(2x)21005-4K8N-1	VABLPD207828	BALL VALVE	CHEMFLARE | 13 mm (1/2")	SOCKET | 25 mm (1")	PVDF (ASTM D-3222)	PTFE | VITON	13 mm (1/2")	PI001 SHEET 12	CHEMLINE	SA	
P9-531-V003	CHEMLINE	TYPE: BALL VALVE//MANUFACTURER : CHEMLINE//MODEL : Type21-K-005-V-CF+(2x)21005-4K8N-1//CONNECTION TYPE : CHEMFLARE | 13 mm (1/2")//BODY : PVDF (ASTM D-3222)// SEAL | SEAT :PTFE | VITON// STEM : PVDF	21K005VCF+(2x)21005-4K8N-1	VABLPD207828	BALL VALVE	CHEMFLARE | 13 mm (1/2")	SOCKET | 25 mm (1")	PVDF (ASTM D-3222)	PTFE | VITON	13 mm (1/2")	PI001 SHEET 12	CHEMLINE	SA	
P9-532-V002	CHEMLINE	TYPE: BALL VALVE//MANUFACTURER : CHEMLINE//MODEL : Type21-K-005-V-CF+(2x)21005-4K8N-1//CONNECTION TYPE : CHEMFLARE | 13 mm (1/2")//BODY : PVDF (ASTM D-3222)// SEAL | SEAT :PTFE | VITON// STEM : PVDF	21K005VCF+(2x)21005-4K8N-1	VABLPD207828	BALL VALVE	CHEMFLARE | 13 mm (1/2")	SOCKET | 25 mm (1")	PVDF (ASTM D-3222)	PTFE | VITON	13 mm (1/2")	PI001 SHEET 12	CHEMLINE	SA	
P9-531-V002	CHEMLINE	TYPE: BALL VALVE//MANUFACTURER : CHEMLINE//MODEL : Type21-K-005-V-CF+(2x)21005-4K8N-1//CONNECTION TYPE : CHEMFLARE | 13 mm (1/2")//BODY : PVDF (ASTM D-3222)// SEAL | SEAT :PTFE | VITON// STEM : PVDF	21K005VCF+(2x)21005-4K8N-1	VABLPD207828	BALL VALVE	CHEMFLARE | 13 mm (1/2")	SOCKET | 25 mm (1")	PVDF (ASTM D-3222)	PTFE | VITON	13 mm (1/2")	PI001 SHEET 12	CHEMLINE	SA	
P9-532-V001	CHEMLINE	TYPE: BALL VALVE//MANUFACTURER : CHEMLINE//MODEL : Type21-K-005-V-CF+(2x)21005-4K8N-1//CONNECTION TYPE : CHEMFLARE | 13 mm (1/2")//BODY : PVDF (ASTM D-3222)// SEAL | SEAT :PTFE | VITON// STEM : PVDF	21K005VCF+(2x)21005-4K8N-1	VABLPD207828	BALL VALVE	CHEMFLARE | 13 mm (1/2")	SOCKET | 25 mm (1")	PVDF (ASTM D-3222)	PTFE | VITON	13 mm (1/2")	PI001 SHEET 12	CHEMLINE	SA	
P9-531-V001	CHEMLINE	TYPE: BALL VALVE//MANUFACTURER : CHEMLINE//MODEL : Type21-K-005-V-CF+(2x)21005-4K8N-1//CONNECTION TYPE : CHEMFLARE | 13 mm (1/2")//BODY : PVDF (ASTM D-3222)// SEAL | SEAT :PTFE | VITON// STEM : PVDF	21K005VCF+(2x)21005-4K8N-1	VABLPD207828	BALL VALVE	CHEMFLARE | 13 mm (1/2")	SOCKET | 25 mm (1")	PVDF (ASTM D-3222)	PTFE | VITON	13 mm (1/2")	PI001 SHEET 12	CHEMLINE	SA	
P9-532-V004	CHEMLINE	TYPE: BALL VALVE//MANUFACTURER : CHEMLINE//MODEL : Type21-K-005-V-CF+(2x)21005-4K8N-1//CONNECTION TYPE : CHEMFLARE | 13 mm (1/2")//BODY : PVDF (ASTM D-3222)// SEAL | SEAT :PTFE | VITON// STEM : PVDF	21K005VCF+(2x)21005-4K8N-1	VABLPD207828	BALL VALVE	CHEMFLARE | 13 mm (1/2")	SOCKET | 25 mm (1")	PVDF (ASTM D-3222)	PTFE | VITON	13 mm (1/2")	PI001 SHEET 12	CHEMLINE	SA	
P9-532-V005	CHEMLINE	TYPE: BALL VALVE//MANUFACTURER : CHEMLINE//MODEL : Type21-K-005-V-CF+(2x)21005-4K8N-1//CONNECTION TYPE : CHEMFLARE | 13 mm (1/2")//BODY : PVDF (ASTM D-3222)// SEAL | SEAT :PTFE | VITON// STEM : PVDF	21K005VCF+(2x)21005-4K8N-1	VABLPD207828	BALL VALVE	CHEMFLARE | 13 mm (1/2")	SOCKET | 25 mm (1")	PVDF (ASTM D-3222)	PTFE | VITON	13 mm (1/2")	PI001 SHEET 12	CHEMLINE	SA	
BPV9-532	CHEMLINE	TYPE: BACK PRESSURE VALVE | 150#//MANUFACTURER : CHEMLINE//MODEL : SB12K005VCFx + SGK-005-002-P-G + P025-160-BM CONFIG L-U//CONNECTION TYPE : CHEMFLARE | 13 mm (1/2")//BODY : PVDF// SEAL | SEAT :VITON | // STEM : N/A	SB12K005VCFx + SGK-005-002-P-G + P025-160-BM (CONFIG. L_U)	VAPSPD351047	BACK PRESSURE VALVE | 150#	CHEMFLARE | 13 mm (1/2")	UNION SOCKET | 25 mm (1")	PVDF	VITON |	13 mm (1/2")	PI001 SHEET 12	CHEMLINE	SA	
PRV9-532	CHEMLINE	TYPE: RELIEF VALVE | 150#//MANUFACTURER : CHEMLINE//MODEL : SB12K005VCFx+(2x)SB005-17K8N-1// CONNECTION TYPE : CHEMFLARE | 13 mm (1/2")//BODY : PVDF// SEAL | SEAT :VITON | VITON// STEM : N/A	SB12K005VCFx+(2x)SB005-17K8N-1	VARFPD200193	RELIEF VALVE | 150#	CHEMFLARE | 13 mm (1/2")	UNION SOCKET | 25 mm (1")	PVDF	VITON | VITON	13 mm (1/2")	PI001 SHEET 12	CHEMLINE	SA	
PRV9-531	CHEMLINE	TYPE: RELIEF VALVE | 150#//MANUFACTURER : CHEMLINE//MODEL : SB12K005VCFx+(2x)SB005-17K8N-1// CONNECTION TYPE : CHEMFLARE | 13 mm (1/2")//BODY : PVDF// SEAL | SEAT :VITON | VITON// STEM : N/A	SB12K005VCFx+(2x)SB005-17K8N-1	VARFPD200193	RELIEF VALVE | 150#	CHEMFLARE | 13 mm (1/2")	UNION SOCKET | 25 mm (1")	PVDF	VITON | VITON	13 mm (1/2")	PI001 SHEET 12	CHEMLINE	SA	
ANIONIC POLYMER DOSING SYSTEM														
P9-526-V003	CHEMLINE	TYPE: BALL VALVE//MANUFACTURER : CHEMLINE//MODEL : Type21-A-005-E-C//CONNECTION TYPE : COMBO | 13 mm (1/2")//BODY : PVC (ASTM D1784)// SEAL | SEAT :PTFE | EPDM// STEM :PVC	21A005EC,TYPE21	VABLPV200249	BALL VALVE	COMBO | 13 mm (1/2")	CHEMFLARE | 13 mm (1/2")	PVC (ASTM D1784)	PTFE | EPDM	13 mm (1/2")	PI001 SHEET 15	CHEMLINE	SA	
P9-524-V003	CHEMLINE	TYPE: BALL VALVE//MANUFACTURER : CHEMLINE//MODEL : Type21-A-005-E-C//CONNECTION TYPE : COMBO | 13 mm (1/2")//BODY : PVC (ASTM D1784)// SEAL | SEAT :PTFE | EPDM// STEM :PVC	21A005EC,TYPE21	VABLPV200249	BALL VALVE	COMBO | 13 mm (1/2")	CHEMFLARE | 13 mm (1/2")	PVC (ASTM D1784)	PTFE | EPDM	13 mm (1/2")	PI001 SHEET 15	CHEMLINE	SA	
P9-525-V003	CHEMLINE	TYPE: BALL VALVE//MANUFACTURER : CHEMLINE//MODEL : Type21-A-005-E-C//CONNECTION TYPE : COMBO | 13 mm (1/2")//BODY : PVC (ASTM D1784)// SEAL | SEAT :PTFE | EPDM// STEM :PVC	21A005EC,TYPE21	VABLPV200249	BALL VALVE	COMBO | 13 mm (1/2")	CHEMFLARE | 13 mm (1/2")	PVC (ASTM D1784)	PTFE | EPDM	13 mm (1/2")	PI001 SHEET 15	CHEMLINE	SA	
P9-525-V005	CHEMLINE	TYPE: BALL VALVE//MANUFACTURER : CHEMLINE//MODEL : Type21-A-010-E-S//CONNECTION TYPE : SOCKET | 25 mm (1")//BODY : PVC (ASTM D1784)// SEAL | SEAT :PTFE | EPDM// STEM : PVC	21A010EC,TYPE21	VABLPV200251	BALL VALVE	SOCKET | 25 mm (1")	CHEMFLARE | 13 mm (1/2")	PVC (ASTM D1784)	PTFE | EPDM	25 mm (1")	PI001 SHEET 15	CHEMLINE	SA	
V9-523	CHEMLINE	TYPE: BALL VALVE//MANUFACTURER : CHEMLINE//MODEL : Type21-A-010-E-S//CONNECTION TYPE : SOCKET | 25 mm (1")//BODY : PVC (ASTM D1784)// SEAL | SEAT :PTFE | EPDM// STEM : PVC	21A010EC,TYPE21	VABLPV200251	BALL VALVE	SOCKET | 25 mm (1")	CHEMFLARE | 13 mm (1/2")	PVC (ASTM D1784)	PTFE | EPDM	25 mm (1")	PI001 SHEET 15	CHEMLINE	FI	
P9-526-V005	CHEMLINE	TYPE: BALL VALVE//MANUFACTURER : CHEMLINE//MODEL : Type21-A-010-E-S//CONNECTION TYPE : SOCKET | 25 mm (1")//BODY : PVC (ASTM D1784)// SEAL | SEAT :PTFE | EPDM// STEM : PVC	21A010EC,TYPE21	VABLPV200251	BALL VALVE	SOCKET | 25 mm (1")	CHEMFLARE | 13 mm (1/2")	PVC (ASTM D1784)	PTFE | EPDM	25 mm (1")	PI001 SHEET 15	CHEMLINE	SA	
P9-524-V005	CHEMLINE	TYPE: BALL VALVE//MANUFACTURER : CHEMLINE//MODEL : Type21-A-010-E-S//CONNECTION TYPE : SOCKET | 25 mm (1")//BODY : PVC (ASTM D1784)// SEAL | SEAT :PTFE | EPDM// STEM : PVC	21A010EC,TYPE21	VABLPV200251	BALL VALVE	SOCKET | 25 mm (1")	CHEMFLARE | 13 mm (1/2")	PVC (ASTM D1784)	PTFE | EPDM	25 mm (1")	PI001 SHEET 15	CHEMLINE	SA	
V9-526	CHEMLINE	TYPE: BALL VALVE//MANUFACTURER : CHEMLINE//MODEL : Type21-A-010-E-S//CONNECTION TYPE : SOCKET | 25 mm (1")//BODY : PVC (ASTM D1784)// SEAL | SEAT :PTFE | EPDM// STEM : PVC	21A010EC,TYPE21	VABLPV200251	BALL VALVE	SOCKET | 25 mm (1")	CHEMFLARE | 13 mm (1/2")	PVC (ASTM D1784)	PTFE | EPDM	25 mm (1")	PI001 SHEET 15	CHEMLINE	FI	
V9-524	CHEMLINE	TYPE: BALL VALVE//MANUFACTURER : CHEMLINE//MODEL : Type21-A-010-E-S//CONNECTION TYPE : SOCKET | 25 mm (1")//BODY : PVC (ASTM D1784)// SEAL | SEAT :PTFE | EPDM// STEM : PVC	21A010EC,TYPE21	VABLPV200251	BALL VALVE	SOCKET | 25 mm (1")	CHEMFLARE | 13 mm (1/2")	PVC (ASTM D1784)	PTFE | EPDM	25 mm (1")	PI001 SHEET 15	CHEMLINE	FI	
V9-525	CHEMLINE	TYPE: BALL VALVE//MANUFACTURER : CHEMLINE//MODEL : Type21-A-010-E-S//CONNECTION TYPE : SOCKET | 25 mm (1")//BODY : PVC (ASTM D1784)// SEAL | SEAT :PTFE | EPDM// STEM : PVC	21A010EC,TYPE21	VABLPV200251	BALL VALVE	SOCKET | 25 mm (1")	CHEMFLARE | 13 mm (1/2")	PVC (ASTM D1784)	PTFE | EPDM	25 mm (1")	PI001 SHEET 15	CHEMLINE	FI	
V9-522	CHEMLINE	TYPE: BALL VALVE//MANUFACTURER : CHEMLINE//MODEL : Type21-A-015-E-S//CONNECTION TYPE : FLANGED | N/A//BODY : PVC (ASTM D1784)// SEAL | SEAT :PTFE | EPDM// STEM : PVC	21A015EC,TYPE21	VABLPV200253	BALL VALVE	FLANGED | N/A	CHEMFLARE | 13 mm (1/2")	PVC (ASTM D1784)	PTFE | EPDM	N/A	PI001 SHEET 15	CHEMLINE	FI	
P9-524-V002	CHEMLINE	TYPE: BALL VALVE//MANUFACTURER : CHEMLINE//MODEL : Type21-A-015-E-S//CONNECTION TYPE : FLANGED | N/A//BODY : PVC (ASTM D1784)// SEAL | SEAT :PTFE | EPDM// STEM : PVC	21A015EC,TYPE21	VABLPV200253	BALL VALVE	FLANGED | N/A	CHEMFLARE | 13 mm (1/2")	PVC (ASTM D1784)	PTFE | EPDM	N/A	PI001 SHEET 15	CHEMLINE	SA	
P9-526-V001	CHEMLINE	TYPE: BALL VALVE//MANUFACTURER : CHEMLINE//MODEL : Type21-A-015-E-S//CONNECTION TYPE : FLANGED | N/A//BODY : PVC (ASTM D1784)// SEAL | SEAT :PTFE | EPDM// STEM : PVC	21A015EC,TYPE21	VABLPV200253	BALL VALVE	FLANGED | N/A	CHEMFLARE | 13 mm (1/2")	PVC (ASTM D1784)	PTFE | EPDM	N/A	PI001 SHEET 15	CHEMLINE	SA	
P9-526-V002	CHEMLINE	TYPE: BALL VALVE//MANUFACTURER : CHEMLINE//MODEL : Type21-A-015-E-S//CONNECTION TYPE : FLANGED | N/A//BODY : PVC (ASTM D1784)// SEAL | SEAT :PTFE | EPDM// STEM : PVC	21A015EC,TYPE21	VABLPV200253	BALL VALVE	FLANGED | N/A	CHEMFLARE | 13 mm (1/2")	PVC (ASTM D1784)	PTFE | EPDM	N/A	PI001 SHEET 15	CHEMLINE	SA	
P9-524-V001	CHEMLINE	TYPE: BALL VALVE//MANUFACTURER : CHEMLINE//MODEL : Type21-A-015-E-S//CONNECTION TYPE : FLANGED | N/A//BODY : PVC (ASTM D1784)// SEAL | SEAT :PTFE | EPDM// STEM : PVC	21A015EC,TYPE21	VABLPV200253	BALL VALVE	FLANGED | N/A	CHEMFLARE | 13 mm (1/2")	PVC (ASTM D1784)	PTFE | EPDM	N/A	PI001 SHEET 15	CHEMLINE	SA	
P9-525-V002	CHEMLINE	TYPE: BALL VALVE//MANUFACTURER : CHEMLINE//MODEL : Type21-A-015-E-S//CONNECTION TYPE : FLANGED | N/A//BODY : PVC (ASTM D1784)// SEAL | SEAT :PTFE | EPDM// STEM : PVC	21A015EC,TYPE21	VABLPV200253	BALL VALVE	FLANGED | N/A	CHEMFLARE | 13 mm (1/2")	PVC (ASTM D1784)	PTFE | EPDM	N/A	PI001 SHEET 15	CHEMLINE	SA	
P9-525-V001	CHEMLINE	TYPE: BALL VALVE//MANUFACTURER : CHEMLINE//MODEL : Type21-A-015-E-S//CONNECTION TYPE : FLANGED | N/A//BODY : PVC (ASTM D1784)// SEAL | SEAT :PTFE | EPDM// STEM : PVC	21A015EC,TYPE21	VABLPV200253	BALL VALVE	FLANGED | N/A	CHEMFLARE | 13 mm (1/2")	PVC (ASTM D1784)	PTFE | EPDM	N/A	PI001 SHEET 15	CHEMLINE	SA	

					DOC #	VALS_0001_GEN_VWT								
					VALVE LIST									
CLIENT:	REV	DESCRIPTION			DATE	BY	VER.	APP.						
AGNICO EAGLE	1	FOR APPROVAL			2018-05-01	BB								
PROJET:														
AMARUQ														

EQPMT TAG NO	MANUFACTURER	DESCRIPTION	MODEL NUMBER	EQUIPMENT CODE	VALVE TYPE | RATING	INLET: CONNECTION TYPE | SIZE	OUTLET: CONNECTION TYPE | SIZE	MATERIAL: BODY	MATERIAL: SEAL	DIAMETER	P&ID NO	SUPPLIER	SITE	ACTUATOR TYPE -MODEL
V1S-021	CHEMLINE	TYPE: GLOBE VALVE | 150 PSI//MANUFACTURER : CHEMLINE//MODEL : GVA010S//CONNECTION TYPE : SOCKET | 25 mm (1"))/BODY : PVC// SEAL | SEAT :EPDM | N/A// STEM : PVC	GVA010S	VAGLPV207831	GLOBE VALVE | 150 PSI	SOCKET | 25 mm (1")	COMBO | 13 mm (1/2")	PVC	EPDM | N/A	25 mm (1")	PI001 SHEET 15	CHEMLINE	SA	ACTUATOR TYPE : MANUAL HANDWHEEL// MANUFACTURER : N/A// MODEL # :N/A//
V1S-022	CHEMLINE	TYPE: GLOBE VALVE | 150 PSI//MANUFACTURER : CHEMLINE//MODEL : GVA010S//CONNECTION TYPE : SOCKET | 25 mm (1"))/BODY : PVC// SEAL | SEAT :EPDM | N/A// STEM : PVC	GVA010S	VAGLPV207831	GLOBE VALVE | 150 PSI	SOCKET | 25 mm (1")	COMBO | 13 mm (1/2")	PVC	EPDM | N/A	25 mm (1")	PI001 SHEET 15	CHEMLINE	SA	ACTUATOR TYPE : MANUAL HANDWHEEL// MANUFACTURER : N/A// MODEL # :N/A//
V1S-012	CHEMLINE	TYPE: GLOBE VALVE | 150 PSI//MANUFACTURER : CHEMLINE//MODEL : GVA010S//CONNECTION TYPE : SOCKET | 25 mm (1"))/BODY : PVC// SEAL | SEAT :EPDM | N/A// STEM : PVC	GVA010S	VAGLPV207831	GLOBE VALVE | 150 PSI	SOCKET | 25 mm (1")	COMBO | 13 mm (1/2")	PVC	EPDM | N/A	25 mm (1")	PI001 SHEET 15	CHEMLINE	SA	ACTUATOR TYPE : MANUAL HANDWHEEL// MANUFACTURER : N/A// MODEL # :N/A//
V1S-011	CHEMLINE	TYPE: GLOBE VALVE | 150 PSI//MANUFACTURER : CHEMLINE//MODEL : GVA010S//CONNECTION TYPE : SOCKET | 25 mm (1"))/BODY : PVC// SEAL | SEAT :EPDM | N/A// STEM : PVC	GVA010S	VAGLPV207831	GLOBE VALVE | 150 PSI	SOCKET | 25 mm (1")	SOCKET | 25 mm (1")	PVC	EPDM | N/A	25 mm (1")	PI001 SHEET 15	CHEMLINE	SA	ACTUATOR TYPE : MANUAL HANDWHEEL// MANUFACTURER : N/A// MODEL # :N/A//
CV1S-021	CHEMLINE	TYPE: CHECK | 150 PSI//MANUFACTURER : CHEMLINE//MODEL : BTA010EC//CONNECTION TYPE :COMBO | 1"//BODY : PVC// SEAL | SEAT :EPDM | // STEM : N/A	BTA010EC	VANRPV302912	CHECK | 150 PSI	COMBO | 1"	SOCKET | 25 mm (1")	PVC	EPDM |	25 mm (1")	PI001 SHEET 15	CHEMLINE	SA	
CV1S-011	CHEMLINE	TYPE: CHECK | 150 PSI//MANUFACTURER : CHEMLINE//MODEL : BTA010EC//CONNECTION TYPE :COMBO | 1"//BODY : PVC// SEAL | SEAT :EPDM | // STEM : N/A	BTA010EC	VANRPV302912	CHECK | 150 PSI	COMBO | 1"	SOCKET | 25 mm (1")	PVC	EPDM |	25 mm (1")	PI001 SHEET 15	CHEMLINE	SA	
PRV9-526	CHEMLINE	TYPE: RELIEF VALVE | 150#//MANUFACTURER : CHEMLINE//MODEL : SB12A010EU//CONNECTION TYPE : UNION SOCKET | 25 mm (1")//BODY : PVC// SEAL | SEAT :EPDM | EPDM// STEM : N/A	SB12A010EU	VARFPV207282	RELIEF VALVE | 150#	UNION SOCKET | 25 mm (1")	SOCKET | 25 mm (1")	PVC	EPDM | EPDM	25 mm (1")	PI001 SHEET 15	CHEMLINE	SA	
PRV9-525	CHEMLINE	TYPE: RELIEF VALVE | 150#//MANUFACTURER : CHEMLINE//MODEL : SB12A010EU//CONNECTION TYPE : UNION SOCKET | 25 mm (1")/BODY : PVC// SEAL | SEAT :EPDM | EPDM// STEM : N/A	SB12A010EU	VARFPV207282	RELIEF VALVE | 150#	UNION SOCKET | 25 mm (1")	SOCKET | 25 mm (1")	PVC	EPDM | EPDM	25 mm (1")	PI001 SHEET 15	CHEMLINE	SA	
PRV9-524	CHEMLINE	TYPE: RELIEF VALVE | 150#//MANUFACTURER : CHEMLINE//MODEL : SB12A010EU//CONNECTION TYPE : UNION SOCKET | 25 mm (1")/BODY : PVC// SEAL | SEAT :EPDM | EPDM// STEM : N/A	SB12A010EU	VARFPV207282	RELIEF VALVE | 150#	UNION SOCKET | 25 mm (1")	SOCKET | 25 mm (1")	PVC	EPDM | EPDM	25 mm (1")	PI001 SHEET 15	CHEMLINE	SA	
BPV9-524	CHEMLINE	TYPE:BACK PRESSURE VALVE | 150#//MANUFACTURER : CHEMLINE//MODEL : SB12A010EU + SGA-005-002-P-G + P025-160-BM//CONNECTION TYPE : UNION SOCKET | 25 mm (1")//BODY : PVC// SEAL | SEAT :EPDM | EPDM// STEM : N/A	SB12A010EU +SGA-005-002-P-G + P025-160-BM (CONFIG. L_U)	VARFPV348512	BACK PRESSURE VALVE | 150#	UNION SOCKET | 25 mm (1")	SOCKET | 25 mm (1")	PVC	EPDM | EPDM	25 mm (1")	PI001 SHEET 15	CHEMLINE	SA	(CONFIG. L_U)
BPV9-526	CHEMLINE	TYPE:BACK PRESSURE VALVE | 150#//MANUFACTURER : CHEMLINE//MODEL : SB12A010EU + SGA-005-002-P-G + P025-160-BM//CONNECTION TYPE : UNION SOCKET | 25 mm (1")//BODY : PVC// SEAL | SEAT :EPDM | EPDM// STEM : N/A	SB12A010EU +SGA-005-002-P-G + P025-160-BM (CONFIG. L_U)	VARFPV348512	BACK PRESSURE VALVE | 150#	UNION SOCKET | 25 mm (1")	FLANGED | N/A	PVC	EPDM | EPDM	25 mm (1")	PI001 SHEET 15	CHEMLINE	SA	(CONFIG. L_U)
BPV9-525	CHEMLINE	TYPE:BACK PRESSURE VALVE | 150#//MANUFACTURER : CHEMLINE//MODEL : SB12A010EU + SGA-005-002-P-G + P025-160-BM//CONNECTION TYPE : UNION SOCKET | 25 mm (1")//BODY : PVC// SEAL | SEAT :EPDM | EPDM// STEM : N/A	SB12A010EU +SGA-005-002-P-G + P025-160-BM (CONFIG. L_U)	VARFPV348512	BACK PRESSURE VALVE | 150#	UNION SOCKET | 25 mm (1")	FLANGED | N/A	PVC	EPDM | EPDM	25 mm (1")	PI001 SHEET 15	CHEMLINE	SA	(CONFIG. L_U)
SV1S-011	ASCO	TYPE: SOLENOID VALVE//MANUFACTURER : ASCO//MODEL : 8210G089-120VAC//CONNECTION TYPE : THREADED | 25 mm (1") | 25 mm (1")//BODY : 304 SS// SEAL | SEAT : | // STEM : N/A	8210G089-120VAC	VASDSS351509	SOLENOID VALVE	THREADED | 25 mm (1") | 25 mm (1")	FLANGED | N/A	304 SS	|	25 mm (1")	PI001 SHEET 15	TECKNO VALVE	SA	ACTING : PILOT
SV1S-021	ASCO	TYPE: SOLENOID VALVE//MANUFACTURER : ASCO//MODEL : 8210G089-120VAC//CONNECTION TYPE : THREADED | 25 mm (1") | 25 mm (1")//BODY : 304 SS// SEAL | SEAT : | // STEM : N/A	8210G089-120VAC	VASDSS351509	SOLENOID VALVE	THREADED | 25 mm (1") | 25 mm (1")	FLANGED | N/A	304 SS	|	25 mm (1")	PI001 SHEET 15	TECKNO VALVE	SA	ACTING : PILOT
POTASSIUM PERMANGANATE PREPARATION														
SV9-591	ASCO	TYPE: SOLENOID VALVE//MANUFACTURER : ASCO//MODEL : 8210G094/CONNECTION TYPE : THREADED | 13 mm (1/2") | 13 mm (1/2")//BODY : BRASS// SEAL | SEAT : | // STEM : N/A	8210G094 120VAC	ST-304-102	SOLENOID VALVE	THREADED | 13 mm (1/2") | 13 mm (1/2")	FLANGED | N/A	BRASS	|	13 mm (1/2")	PI001 SHEET 16	TECKNO VALVE	SA	ACTING : PILOT
T9-591-V002	CHEMLINE	TYPE: BUTTERFLY | 150 PSI//MANUFACTURER : CHEMLINE//MODEL : 57A020AEL-A / ER20.12//CONNECTION TYPE : WAFER | //BODY : PVC// SEAL | SEAT :EPDM | EPDM// STEM : 403 SS	57A020AEL-A / ER20.12	VABFPV352256	BUTTERFLY | 150 PSI	WAFER |	FLANGED | N/A	PVC	EPDM | EPDM	N/A	PI001 SHEET 16	CHEMLINE	SA	ACTUATOR TYPE : ELECTRIC// MANUFACTURER : CHEMLINE// MODEL # :ER20.12// 115/220 VAC
V1S-041	CHEMLINE	TYPE: BALL VALVE//MANUFACTURER : CHEMLINE// MODEL : Type21-A-010-E-S//CONNECTION TYPE : SOCKET | 25 mm (1")//BODY : PVC (ASTM D1784)// SEAL | SEAT :PTFE | EPDM// STEM: PVC	21A010EC,TYPE21	VABLPV200251	BALL VALVE	SOCKET | 25 mm (1")	FLANGED | N/A	PVC (ASTM D1784)	PTFE | EPDM	25 mm (1")	PI001 SHEET 16	CHEMLINE	SA	
T9-592-V001	CHEMLINE	TYPE: BALL VALVE// MANUFACTURER : CHEMLINE/ /MODEL : Type21-A-015-E-S//CONNECTION TYPE : FLANGED | N/A//BODY : PVC (ASTM D1784)// SEAL | SEAT :PTFE | EPDM// STEM : PVC	21A015EC,TYPE21	VABLPV200253	BALL VALVE	FLANGED | N/A	COMBO | 1"	PVC (ASTM D1784)	PTFE | EPDM	N/A	PI001 SHEET 16	CHEMLINE	SA	
T9-591-V001	CHEMLINE	TYPE: BALL VALVE// MANUFACTURER : CHEMLINE/ /MODEL : Type21-A-015-E-S//CONNECTION TYPE : FLANGED | N/A//BODY : PVC (ASTM D1784)// SEAL | SEAT :PTFE | EPDM// STEM : PVC	21A015EC,TYPE21	VABLPV200253	BALL VALVE	FLANGED | N/A	COMBO | 1"	PVC (ASTM D1784)	PTFE | EPDM	N/A	PI001 SHEET 16	CHEMLINE	SA	
T9-592-V002	CHEMLINE	TYPE: BALL VALVE// MANUFACTURER : CHEMLINE/ /MODEL : Type21-A-015-E-S//CONNECTION TYPE : FLANGED | N/A//BODY : PVC (ASTM D1784)// SEAL | SEAT :PTFE | EPDM// STEM : PVC	21A015EC,TYPE21	VABLPV200253	BALL VALVE	FLANGED | N/A	UNION SOCKET | 25 mm (1")	PVC (ASTM D1784)	PTFE | EPDM	N/A	PI001 SHEET 16	CHEMLINE	SA	
V1S-042	CHEMLINE	TYPE: BALL VALVE/ /MANUFACTURER : CHEMLINE//MODEL : SM2-A-005-E-S/ /CONNECTION TYPE : SOCKET | 13 mm (1/2")//BODY : PVC (ASTM D1784)// SEAL | SEAT : | EPDM// STEM :N/A	SM2A005ES	VABLPV346917	BALL VALVE	SOCKET | 13 mm (1/2")	UNION SOCKET | 25 mm (1")	PVC (ASTM D1784)	| EPDM	13 mm (1/2")	PI001 SHEET 16	CHEMLINE	SA	
V1S-043	CHEMLINE	TYPE: BALL VALVE/ /MANUFACTURER : CHEMLINE//MODEL : SM2-A-005-E-S/ /CONNECTION TYPE : SOCKET | 13 mm (1/2")//BODY : PVC (ASTM D1784)// SEAL | SEAT : | EPDM// STEM :N/A	SM2A005ES	VABLPV346917	BALL VALVE	SOCKET | 13 mm (1/2")	UNION SOCKET | 25 mm (1")	PVC (ASTM D1784)	| EPDM	13 mm (1/2")	PI001 SHEET 16	CHEMLINE	SA	
CV9-591	CHEMLINE	TYPE: CHECK | 150 PSI//MANUFACTURER : CHEMLINE//MODEL : BTA015EC//CONNECTION TYPE : COMBO | 1-1/2"//BODY : PVC// SEAL | SEAT :EPDM | // STEM : N/A	BTA015EC	VANRPV200667	CHECK | 150 PSI	COMBO | 1-1/2"	THREADED | 25 mm (1") | 25 mm (1")	PVC	EPDM |	38 mm (1-1/2")	PI001 SHEET 16	CHEMLINE	SA	
SV1S-041	ASCO	TYPE: SOLENOID VALVE//MANUFACTURER : ASCO//MODEL : EF8345G001-120VAC//CONNECTION TYPE : THREADED | 6 mm (1/4") | 6 mm (1/4")//BODY : BRASS// SEAL | SEAT :NBR | // STEM : N/A	EF8345G001-120VAC	VASDBR352337	SOLENOID VALVE	THREADED | 6 mm (1/4") | 6 mm (1/4")	THREADED | 25 mm (1") | 25 mm (1")	BRASS	NBR |	6 mm (1/4")	PI001 SHEET 16	TECKNO VALVE	SA	ACTING :
SV1S-042	ASCO	TYPE: SOLENOID VALVE//MANUFACTURER : ASCO//MODEL : EF8210G004-120VAC//CONNECTION TYPE : THREADED | 25 mm (1") | 25 mm (1")//BODY : BRASS// SEAL | SEAT :NBR | PA// STEM : N/A	EF8210G004-120VAC	VASDBZ336126	SOLENOID VALVE	THREADED | 25 mm (1") | 25 mm (1")	UNION SOCKET | 25 mm (1")	BRASS	NBR | PA	25 mm (1")	PI001 SHEET 16	TECKNO VALVE	SA	ACTING : PILOT
POTASSIUM PERMANGANATE DOSING SYSTEM														
P9-591-V003	CHEMLINE	TYPE: BALL VALVE//MANUFACTURER : CHEMLINE//MODEL : Type21-A-005-E-C//CONNECTION TYPE : COMBO | 13 mm (1/2")//BODY : PVC (ASTM D1784)// SEAL | SEAT :PTFE | EPDM// STEM : PVC	21A005EC,TYPE21	VABLPV200249	BALL VALVE	COMBO | 13 mm (1/2")	UNION SOCKET | 25 mm (1")	PVC (ASTM D1784)	PTFE | EPDM	13 mm (1/2")	PI001 SHEET 17	CHEMLINE	SA	
PD9-591-V002	CHEMLINE	TYPE: BALL VALVE//MANUFACTURER : CHEMLINE//MODEL : Type21-A-005-E-C//CONNECTION TYPE : COMBO | 13 mm (1/2")//BODY : PVC (ASTM D1784)// SEAL | SEAT :PTFE | EPDM// STEM : PVC	21A005EC,TYPE21	VABLPV200249	BALL VALVE	COMBO | 13 mm (1/2")	UNION SOCKET | 25 mm (1")	PVC (ASTM D1784)	PTFE | EPDM	13 mm (1/2")	PI001 SHEET 17	CHEMLINE	SA	
CYL9-591-V002	CHEMLINE	TYPE: BALL VALVE//MANUFACTURER : CHEMLINE//MODEL : Type21-A-005-E-C//CONNECTION TYPE : COMBO | 13 mm (1/2")//BODY : PVC (ASTM D1784)// SEAL | SEAT :PTFE | EPDM// STEM : PVC	21A005EC,TYPE21	VABLPV200249	BALL VALVE	COMBO | 13 mm (1/2")	SOCKET | 25 mm (1")	PVC (ASTM D1784)	PTFE | EPDM	13 mm (1/2")	PI001 SHEET 17	CHEMLINE	SA	
P9-592-V003	CHEMLINE	TYPE: BALL VALVE//MANUFACTURER : CHEMLINE//MODEL : Type21-A-005-E-C//CONNECTION TYPE : COMBO | 13 mm (1/2")//BODY : PVC (ASTM D1784)// SEAL | SEAT :PTFE | EPDM// STEM : PVC	21A005EC,TYPE21	VABLPV200249	BALL VALVE	COMBO | 13 mm (1/2")	SOCKET | 25 mm (1")	PVC (ASTM D1784)	PTFE | EPDM	13 mm (1/2")	PI001 SHEET 17	CHEMLINE	SA	
P9-591-V005	CHEMLINE	TYPE: BALL VALVE// MANUFACTURER : CHEMLINE/ /MODEL : Type21-A-007-E-S//CONNECTION TYPE : SOCKET | 20 mm (3/4")//BODY : PVC (ASTM D1784)// SEAL | SEAT :PTFE | EPDM// STEM : PVC	21A007EC,TYPE21	VABLPV200250	BALL VALVE	SOCKET | 20 mm (3/4")	SOCKET | 25 mm (1")	PVC (ASTM D1784)	PTFE | EPDM	20 mm (3/4")	PI001 SHEET 17	CHEMLINE	SA	
PD9-591-V001	CHEMLINE	TYPE: BALL VALVE// MANUFACTURER : CHEMLINE/ /MODEL : Type21-A-007-E-S//CONNECTION TYPE : SOCKET | 20 mm (3/4")//BODY : PVC (ASTM D1784)// SEAL | SEAT :PTFE | EPDM// STEM : PVC	21A007EC,TYPE21	VABLPV200250	BALL VALVE	SOCKET | 20 mm (3/4")	SOCKET | 25 mm (1")	PVC (ASTM D1784)	PTFE | EPDM	20 mm (3/4")	PI001 SHEET 17	CHEMLINE	SA	

					DOC #	VALS_0001_GEN_VWT									
					VALVE LIST										
CLIENT:	REV	DESCRIPTION			DATE	BY	VER.	APP.							
AGNICO EAGLE	1	FOR APPROVAL			2018-05-01	BB									
PROJET:															
AMARUQ															
EQPMT TAG NO	MANUFACTURER	DESCRIPTION	MODEL NUMBER	EQUIPMENT CODE	VALVE TYPE | RATING	INLET: CONNECTION TYPE | SIZE	OUTLET: CONNECTION TYPE | SIZE	MATERIAL: BODY	MATERIAL: SEAL	DIAMETER	P&ID NO	SUPPLIER	SITE	ACTUATOR TYPE -MODEL	
V9-591	CHEMLINE	TYPE: BALL VALVE//MANUFACTURER : CHEMLINE//MODEL : Type21-A-010-E-S//CONNECTION TYPE : SOCKET | 25 mm (1")//BODY : PVC (ASTM D1784)// SEAL | SEAT :PTFE | EPDM// STEM : PVC	21A010EC,TYPE21	VABLPV200251	BALL VALVE	SOCKET | 25 mm (1")	WAFER |	PVC (ASTM D1784)	PTFE | EPDM	25 mm (1")	PI001 SHEET 17	CHEMLINE	FI		
P9-591-V002	CHEMLINE	TYPE: BALL VALVE//MANUFACTURER : CHEMLINE//MODEL : Type21-A-010-E-S//CONNECTION TYPE : SOCKET | 25 mm (1")//BODY : PVC (ASTM D1784)// SEAL | SEAT :PTFE | EPDM// STEM : PVC	21A010EC,TYPE21	VABLPV200251	BALL VALVE	SOCKET | 25 mm (1")	SOCKET | 25 mm (1")	PVC (ASTM D1784)	PTFE | EPDM	25 mm (1")	PI001 SHEET 17	CHEMLINE	SA		
P9-591-V006	CHEMLINE	TYPE: BALL VALVE//MANUFACTURER : CHEMLINE//MODEL : Type21-A-010-E-S//CONNECTION TYPE : SOCKET | 25 mm (1")//BODY : PVC (ASTM D1784)// SEAL | SEAT :PTFE | EPDM// STEM : PVC	21A010EC,TYPE21	VABLPV200251	BALL VALVE	SOCKET | 25 mm (1")	FLANGED | N/A	PVC (ASTM D1784)	PTFE | EPDM	25 mm (1")	PI001 SHEET 17	CHEMLINE	SA		
P9-592-V004	CHEMLINE	TYPE: BALL VALVE//MANUFACTURER : CHEMLINE//MODEL : Type21-A-010-E-S//CONNECTION TYPE : SOCKET | 25 mm (1")//BODY : PVC (ASTM D1784)// SEAL | SEAT :PTFE | EPDM// STEM : PVC	21A010EC,TYPE21	VABLPV200251	BALL VALVE	SOCKET | 25 mm (1")	FLANGED | N/A	PVC (ASTM D1784)	PTFE | EPDM	25 mm (1")	PI001 SHEET 17	CHEMLINE	SA		
P9-591-V004	CHEMLINE	TYPE: BALL VALVE//MANUFACTURER : CHEMLINE//MODEL : Type21-A-010-E-S//CONNECTION TYPE : SOCKET | 25 mm (1")//BODY : PVC (ASTM D1784)// SEAL | SEAT :PTFE | EPDM// STEM : PVC	21A010EC,TYPE21	VABLPV200251	BALL VALVE	SOCKET | 25 mm (1")	FLANGED | N/A	PVC (ASTM D1784)	PTFE | EPDM	25 mm (1")	PI001 SHEET 17	CHEMLINE	SA		
P9-592-V001	CHEMLINE	TYPE: BALL VALVE//MANUFACTURER : CHEMLINE//MODEL : Type21-A-010-E-S//CONNECTION TYPE : SOCKET | 25 mm (1")//BODY : PVC (ASTM D1784)// SEAL | SEAT :PTFE | EPDM// STEM : PVC	21A010EC,TYPE21	VABLPV200251	BALL VALVE	SOCKET | 25 mm (1")	SOCKET | 13 mm (1/2")	PVC (ASTM D1784)	PTFE | EPDM	25 mm (1")	PI001 SHEET 17	CHEMLINE	SA		
CYL9-591-V001	CHEMLINE	TYPE: BALL VALVE//MANUFACTURER : CHEMLINE//MODEL : Type21-A-010-E-S//CONNECTION TYPE : SOCKET | 25 mm (1")//BODY : PVC (ASTM D1784)// SEAL | SEAT :PTFE | EPDM// STEM : PVC	21A010EC,TYPE21	VABLPV200251	BALL VALVE	SOCKET | 25 mm (1")	SOCKET | 13 mm (1/2")	PVC (ASTM D1784)	PTFE | EPDM	25 mm (1")	PI001 SHEET 17	CHEMLINE	SA		
P9-591-V001	CHEMLINE	TYPE: BALL VALVE//MANUFACTURER : CHEMLINE//MODEL : Type21-A-010-E-S//CONNECTION TYPE : SOCKET | 25 mm (1")//BODY : PVC (ASTM D1784)// SEAL | SEAT :PTFE | EPDM// STEM : PVC	21A010EC,TYPE21	VABLPV200251	BALL VALVE	SOCKET | 25 mm (1")	COMBO | 1-1/2"	PVC (ASTM D1784)	PTFE | EPDM	25 mm (1")	PI001 SHEET 17	CHEMLINE	SA		
P9-592-V002	CHEMLINE	TYPE: BALL VALVE//MANUFACTURER : CHEMLINE//MODEL : Type21-A-010-E-S//CONNECTION TYPE : SOCKET | 25 mm (1")//BODY : PVC (ASTM D1784)// SEAL | SEAT :PTFE | EPDM// STEM : PVC	21A010EC,TYPE21	VABLPV200251	BALL VALVE	SOCKET | 25 mm (1")	THREADED | 13 mm (1/2") | 13 mm (1/2")	PVC (ASTM D1784)	PTFE | EPDM	25 mm (1")	PI001 SHEET 17	CHEMLINE	SA		
PRV9-592	CHEMLINE	TYPE: RELIEF VALVE | 150#//MANUFACTURER : CHEMLINE//MODEL : SB12A010EU//CONNECTION TYPE : UNION SOCKET | 25 mm (1")//BODY : PVC// SEAL | SEAT :EPDM | EPDM// STEM : N/A	SB12A010EU	VARFPV207282	RELIEF VALVE | 150#	UNION SOCKET | 25 mm (1")	THREADED | 25 mm (1") | 25 mm (1")	PVC	EPDM | EPDM	25 mm (1")	PI001 SHEET 17	CHEMLINE	SA		
PRV9-591	CHEMLINE	TYPE: RELIEF VALVE | 150#//MANUFACTURER : CHEMLINE//MODEL : SB12A010EU//CONNECTION TYPE : UNION SOCKET | 25 mm (1")//BODY : PVC// SEAL | SEAT :EPDM | EPDM// STEM : N/A	SB12A010EU	VARFPV207282	RELIEF VALVE | 150#	UNION SOCKET | 25 mm (1")	THREADED | 6 mm (1/4") | 6 mm (1/4")	PVC	EPDM | EPDM	25 mm (1")	PI001 SHEET 17	CHEMLINE	SA		
BPV9-591	CHEMLINE	TYPE: BACK PRESSURE VALVE | 150#//MANUFACTURER : CHEMLINE//MODEL : SB12A007EU + SGA-005-002-P-G + P025-160-BM//CONNECTION TYPE : UNION SOCKET | 18 mm (3/4")//BODY : PVC// SEAL | SEAT :EPDM | EPDM// STEM : N/A	SB12A007EU +SGA-005-002-P-G + P025-160-BM (CONFIG. I_U)	VARFPV348515	BACK PRESSURE VALVE | 150#	UNION SOCKET | 20 mm (3/4")	COMBO | 13 mm (1/2")	PVC	EPDM | EPDM	20 mm (3/4")	PI001 SHEET 17	CHEMLINE	SA	(CONFIG. I_U)	
CATIONIC POLYMER PREPARATION															
V15-031	CHEMLINE	TYPE: BALL VALVE//MANUFACTURER : CHEMLINE//MODEL : Type21-A-015-E-S//CONNECTION TYPE : FLANGED | N/A//BODY : PVC (ASTM D1784)// SEAL | SEAT :PTFE | EPDM// STEM : PVC	21A015EC,TYPE21	VABLPV200253	BALL VALVE	FLANGED | N/A	COMBO | 13 mm (1/2")	PVC (ASTM D1784)	PTFE | EPDM	N/A	PI001 SHEET 18	CHEMLINE	SA		
CV9-621	CHEMLINE	TYPE: CHECK | 150 PSI//MANUFACTURER : CHEMLINE//MODEL : BTA020EC//CONNECTION TYPE : COMBO | 2"// BODY : PVC// SEAL | SEAT :EPDM | // STEM : N/A	BTA020EC	VABLPV303191	CHECK | 150 PSI	SOCKET | 2"	COMBO | 13 mm (1/2")	PVC	EPDM |	50 mm (2")	PI001 SHEET 18	CHEMLINE	SA		
T9-622-V002	CHEMLINE	TYPE: BALL VALVE//MANUFACTURER : CHEMLINE//MODEL : Type21-A-030-E-S//CONNECTION TYPE : SOCKET | 75 mm (3")//BODY : PVC (ASTM D1784)// SEAL | SEAT :PTFE | EPDM// STEM : PVC	21A030ES,TYPE21	VABLPV303543	BALL VALVE	SOCKET | 75 mm (3")	COMBO | 13 mm (1/2")	PVC (ASTM D1784)	PTFE | EPDM	75 mm (3")	PI001 SHEET 18	CHEMLINE	SA		
T9-622-V001	CHEMLINE	TYPE: BALL VALVE//MANUFACTURER : CHEMLINE//MODEL : Type21-A-030-E-S//CONNECTION TYPE : SOCKET | 75 mm (3")//BODY : PVC (ASTM D1784)// SEAL | SEAT :PTFE | EPDM// STEM : PVC	21A030ES,TYPE21	VABLPV303543	BALL VALVE	SOCKET | 75 mm (3")	SOCKET | 20 mm (3/4")	PVC (ASTM D1784)	PTFE | EPDM	75 mm (3")	PI001 SHEET 18	CHEMLINE	SA		
T9-621-V001	CHEMLINE	TYPE: BALL VALVE//MANUFACTURER : CHEMLINE//MODEL : Type21-A-030-E-S//CONNECTION TYPE : SOCKET | 75 mm (3")//BODY : PVC (ASTM D1784)// SEAL | SEAT :PTFE | EPDM// STEM : PVC	21A030ES,TYPE21	VABLPV303543	BALL VALVE	SOCKET | 75 mm (3")	SOCKET | 20 mm (3/4")	PVC (ASTM D1784)	PTFE | EPDM	75 mm (3")	PI001 SHEET 18	CHEMLINE	SA		
V15-032	CHEMLINE	TYPE: BALL VALVE//MANUFACTURER : CHEMLINE//MODEL : SM2-A-005-E-S//CONNECTION TYPE : SOCKET | 13 mm (1/2")//BODY : PVC (ASTM D1784)// SEAL | SEAT : | EPDM// STEM : N/A	SM2A005ES	VABLPV346917	BALL VALVE	SOCKET | 13 mm (1/2")	SOCKET | 25 mm (1")	PVC (ASTM D1784)	| EPDM	13 mm (1/2")	PI001 SHEET 18	CHEMLINE	SA		
V15-033	CHEMLINE	TYPE: BALL VALVE//MANUFACTURER : CHEMLINE//MODEL : SM2-A-005-E-S//CONNECTION TYPE : SOCKET | 13 mm (1/2")//BODY : PVC (ASTM D1784)// SEAL | SEAT : | EPDM// STEM : N/A	SM2A005ES	VABLPV346917	BALL VALVE	SOCKET | 13 mm (1/2")	SOCKET | 25 mm (1")	PVC (ASTM D1784)	| EPDM	13 mm (1/2")	PI001 SHEET 18	CHEMLINE	SA		
T9-621-V002	ASCO	TYPE: SOLENOID VALVE//MANUFACTURER : ASCO//MODEL : 8345G001-120VAC//CONNECTION TYPE : THREADED | 6 mm (1/4") | 6 mm (1/4")//BODY : BRASS// SEAL | SEAT :NBR | // STEM : N/A	8345G001-120VAC	VASDBR330455	SOLENOID VALVE	THREADED | 6 mm (1/4") | 6 mm (1/4")	SOCKET | 25 mm (1")	BRASS	NBR |	6 mm (1/4")	PI001 SHEET 18	CHEMLINE	SA	ACTING :	
SV15-032	ASCO	TYPE: SOLENOID VALVE//MANUFACTURER : ASCO//MODEL : EF8210G022-120VAC//CONNECTION TYPE : THREADED | 38 mm (1 1/2") | 38 mm (1 1/2")//BODY : BRASS// SEAL | SEAT : | // STEM : N/A	EF8210G022-120VAC	VASDBR352335	SOLENOID VALVE	THREADED | 38 mm (1 1/2") | 38 mm (1 1/2")	SOCKET | 25 mm (1")	BRASS	|	38 mm (1 1/2")	PI001 SHEET 18	TECKNO VALVE	SA	ACTING : PILOT	
SV15-031	ASCO	TYPE: SOLENOID VALVE//MANUFACTURER : ASCO//MODEL : EF8345G001-120VAC//CONNECTION TYPE : THREADED | 6 mm (1/4") | 6 mm (1/4")//BODY : BRASS// SEAL | SEAT :NBR | // STEM : N/A	EF8345G001-120VAC	VASDBR352337	SOLENOID VALVE	THREADED | 6 mm (1/4") | 6 mm (1/4")	SOCKET | 25 mm (1")	BRASS	NBR |	6 mm (1/4")	PI001 SHEET 18	TECKNO VALVE	SA	ACTING :	
CATIONIC POLYMER DOSING SYSTEM															
P9-621-V001	CHEMLINE	TYPE: BALL VALVE//MANUFACTURER : CHEMLINE//MODEL : Type21-A-015-E-S//CONNECTION TYPE : FLANGED | N/A//BODY : PVC (ASTM D1784)// SEAL | SEAT :PTFE | EPDM// STEM : PVC	21A015EC,TYPE21	VABLPV200253	BALL VALVE	FLANGED | N/A	FLANGED | N/A	PVC (ASTM D1784)	PTFE | EPDM	N/A	PI001 SHEET 19	CHEMLINE	SA		
P9-621-V002	CHEMLINE	TYPE: BALL VALVE//MANUFACTURER : CHEMLINE//MODEL : Type21-A-015-E-S//CONNECTION TYPE : FLANGED | N/A//BODY : PVC (ASTM D1784)// SEAL | SEAT :PTFE | EPDM// STEM : PVC	21A015EC,TYPE21	VABLPV200253	BALL VALVE	FLANGED | N/A	FLANGED | N/A	PVC (ASTM D1784)	PTFE | EPDM	N/A	PI001 SHEET 19	CHEMLINE	SA		
P9-621-V003	CHEMLINE	TYPE: BALL VALVE//MANUFACTURER : CHEMLINE//MODEL : Type21-A-005-E-C//CONNECTION TYPE : COMBO | 13 mm (1/2")//BODY : PVC (ASTM D1784)// SEAL | SEAT :PTFE | EPDM// STEM :PVC	21A005EC,TYPE21	VABLPV200249	BALL VALVE	COMBO | 13 mm (1/2")	COMBO | 13 mm (1/2")	PVC (ASTM D1784)	PTFE | EPDM	13 mm (1/2")	PI001 SHEET 19	CHEMLINE	SA		
P9-621-V004	CHEMLINE	TYPE: BALL VALVE//MANUFACTURER : CHEMLINE//MODEL : Type21-A-005-E-C//CONNECTION TYPE : COMBO | 13 mm (1/2")//BODY : PVC (ASTM D1784)// SEAL | SEAT :PTFE | EPDM// STEM :PVC	21A005EC,TYPE21	VABLPV200249	BALL VALVE	COMBO | 13 mm (1/2")	COMBO | 13 mm (1/2")	PVC (ASTM D1784)	PTFE | EPDM	13 mm (1/2")	PI001 SHEET 19	CHEMLINE	SA		
P9-622-V001	CHEMLINE	TYPE: BALL VALVE//MANUFACTURER : CHEMLINE//MODEL : Type21-A-015-E-S//CONNECTION TYPE : FLANGED | N/A//BODY : PVC (ASTM D1784)// SEAL | SEAT :PTFE | EPDM// STEM : PVC	21A015EC,TYPE21	VABLPV200253	BALL VALVE	FLANGED | N/A	FLANGED | N/A	PVC (ASTM D1784)	PTFE | EPDM	N/A	PI001 SHEET 19	CHEMLINE	SA		
P9-622-V002	CHEMLINE	TYPE: BALL VALVE//MANUFACTURER : CHEMLINE//MODEL : Type21-A-015-E-S//CONNECTION TYPE : FLANGED | N/A//BODY : PVC (ASTM D1784)// SEAL | SEAT :PTFE | EPDM// STEM : PVC	21A015EC,TYPE21	VABLPV200253	BALL VALVE	FLANGED | N/A	FLANGED | N/A	PVC (ASTM D1784)	PTFE | EPDM	N/A	PI001 SHEET 19	CHEMLINE	SA		
P9-622-V003	CHEMLINE	TYPE: BALL VALVE//MANUFACTURER : CHEMLINE//MODEL : Type21-A-005-E-C//CONNECTION TYPE : COMBO | 13 mm (1/2")//BODY : PVC (ASTM D1784)// SEAL | SEAT :PTFE | EPDM// STEM :PVC	21A005EC,TYPE21	VABLPV200249	BALL VALVE	COMBO | 13 mm (1/2")	COMBO | 13 mm (1/2")	PVC (ASTM D1784)	PTFE | EPDM	13 mm (1/2")	PI001 SHEET 19	CHEMLINE	SA		
P9-622-V004	CHEMLINE	TYPE: BALL VALVE//MANUFACTURER : CHEMLINE//MODEL : Type21-A-005-E-C//CONNECTION TYPE : COMBO | 13 mm (1/2")//BODY : PVC (ASTM D1784)// SEAL | SEAT :PTFE | EPDM// STEM :PVC	21A005EC,TYPE21	VABLPV200249	BALL VALVE	COMBO | 13 mm (1/2")	COMBO | 13 mm (1/2")	PVC (ASTM D1784)	PTFE | EPDM	13 mm (1/2")	PI001 SHEET 19	CHEMLINE	SA		
P9-623-V001	CHEMLINE	TYPE: BALL VALVE//MANUFACTURER : CHEMLINE//MODEL : Type21-A-015-E-S//CONNECTION TYPE : FLANGED | N/A//BODY : PVC (ASTM D1784)// SEAL | SEAT :PTFE | EPDM// STEM : PVC	21A015EC,TYPE21	VABLPV200253	BALL VALVE	FLANGED | N/A	FLANGED | N/A	PVC (ASTM D1784)	PTFE | EPDM	N/A	PI001 SHEET 19	CHEMLINE	SA		

					DOC #	VALS_0001_GEN_VWT									
					VALVE LIST										
CLIENT:	REV	DESCRIPTION			DATE	BY	VER.	APP.							
AGNICO EAGLE	1	FOR APPROVAL			2018-05-01	BB									
PROJET:															
AMARUQ															

EQPMT TAG NO	MANUFACTURER	DESCRIPTION	MODEL NUMBER	EQUIPMENT CODE	VALVE TYPE | RATING	INLET: CONNECTION TYPE | SIZE	OUTLET: CONNECTION TYPE | SIZE	MATERIAL: BODY	MATERIAL: SEAL	DIAMETER	P&ID NO	SUPPLIER	SITE	ACTUATOR TYPE -MODEL
P9-623-V002	CHEMLINE	TYPE: BALL VALVE//MANUFACTURER : CHEMLINE//MODEL : Type21-A-015-E-S//CONNECTION TYPE : FLANGED | N/A//BODY : PVC (ASTM D1784)// SEAL | SEAT :PTFE | EPDM// STEM : PVC	21A015EC,TYPE21	VABLPV200253	BALL VALVE	FLANGED | N/A	FLANGED | N/A	PVC (ASTM D1784)	PTFE | EPDM	N/A	PID01 SHEET 19	CHEMLINE	SA	
P9-623-V003	CHEMLINE	TYPE: BALL VALVE//MANUFACTURER : CHEMLINE//MODEL : Type21-A-005-E-C//CONNECTION TYPE : COMBO | 13 mm (1/2"))//BODY : PVC (ASTM D1784)// SEAL | SEAT :PTFE | EPDM// STEM :PVC	21A005EC,TYPE21	VABLPV200249	BALL VALVE	COMBO | 13 mm (1/2")	COMBO | 13 mm (1/2")	PVC (ASTM D1784)	PTFE | EPDM	13 mm (1/2")	PID01 SHEET 19	CHEMLINE	SA	
P9-623-V004	CHEMLINE	TYPE: BALL VALVE//MANUFACTURER : CHEMLINE//MODEL : Type21-A-005-E-C//CONNECTION TYPE : COMBO | 13 mm (1/2"))//BODY : PVC (ASTM D1784)// SEAL | SEAT :PTFE | EPDM// STEM :PVC	21A005EC,TYPE21	VABLPV200249	BALL VALVE	COMBO | 13 mm (1/2")	COMBO | 13 mm (1/2")	PVC (ASTM D1784)	PTFE | EPDM	13 mm (1/2")	PID01 SHEET 19	CHEMLINE	SA	
PRV9-621	CHEMLINE	TYPE: BACK PRESSURE VALVE | 150#//MANUFACTURER : CHEMLINE//MODEL : SB12A010EU + SGA-005-002-P-G + P025-160-BM//CONNECTION TYPE : UNION SOCKET | 2.5 mm (1")//BODY : PVC// SEAL | SEAT :EPDM | EPDM// STEM : N/A	SB12A010EU +SGA-005-002-P-G + P025-160-BM (CONFIG. L_U)	VARFPV348512	BACK PRESSURE VALVE | 150#	UNION SOCKET | 2.5 mm (1")	UNION SOCKET | 25 mm (1")	PVC	EPDM | EPDM	25 mm (1")	PID01 SHEET 19	CHEMLINE	SA	(CONFIG. L_U)
PRV9-622	CHEMLINE	TYPE: BACK PRESSURE VALVE | 150#//MANUFACTURER : CHEMLINE//MODEL : SB12A010EU + SGA-005-002-P-G + P025-160-BM//CONNECTION TYPE : UNION SOCKET | 2.5 mm (1")//BODY : PVC// SEAL | SEAT :EPDM | EPDM// STEM : N/A	SB12A010EU +SGA-005-002-P-G + P025-160-BM (CONFIG. L_U)	VARFPV348512	BACK PRESSURE VALVE | 150#	UNION SOCKET | 2.5 mm (1")	UNION SOCKET | 25 mm (1")	PVC	EPDM | EPDM	25 mm (1")	PID01 SHEET 19	CHEMLINE	SA	(CONFIG. L_U)
PRV9-623	CHEMLINE	TYPE: BACK PRESSURE VALVE | 150#//MANUFACTURER : CHEMLINE//MODEL : SB12A010EU + SGA-005-002-P-G + P025-160-BM//CONNECTION TYPE : UNION SOCKET | 2.5 mm (1")//BODY : PVC// SEAL | SEAT :EPDM | EPDM// STEM : N/A	SB12A010EU +SGA-005-002-P-G + P025-160-BM (CONFIG. L_U)	VARFPV348512	BACK PRESSURE VALVE | 150#	UNION SOCKET | 2.5 mm (1")	UNION SOCKET | 25 mm (1")	PVC	EPDM | EPDM	25 mm (1")	PID01 SHEET 19	CHEMLINE	SA	(CONFIG. L_U)
V9-622	CHEMLINE	TYPE: BALL VALVE//MANUFACTURER : CHEMLINE//MODEL : Type21-A-015-E-S//CONNECTION TYPE : FLANGED | N/A//BODY : PVC (ASTM D1784)// SEAL | SEAT :PTFE | EPDM// STEM : PVC	21A015EC,TYPE21	VABLPV200253	BALL VALVE	FLANGED | N/A	FLANGED | N/A	PVC (ASTM D1784)	PTFE | EPDM	N/A	PID01 SHEET 19	CHEMLINE	FI	
V9-623	CHEMLINE	TYPE: BALL VALVE//MANUFACTURER : CHEMLINE//MODEL : Type21-A-010-E-S//CONNECTION TYPE : SOCKET | 25 mm (1")//BODY : PVC (ASTM D1784)//SEAL | SEAT :PTFE | EPDM// STEM : PVC	21A010EC,TYPE21	VABLPV200251	BALL VALVE	SOCKET | 25 mm (1")	SOCKET | 25 mm (1")	PVC (ASTM D1784)	PTFE | EPDM	25 mm (1")	PID01 SHEET 19	CHEMLINE	FI	
V9-624	CHEMLINE	TYPE: BALL VALVE//MANUFACTURER : CHEMLINE//MODEL : Type21-A-010-E-S//CONNECTION TYPE : SOCKET | 25 mm (1")//BODY : PVC (ASTM D1784)//SEAL | SEAT :PTFE | EPDM// STEM : PVC	21A010EC,TYPE21	VABLPV200251	BALL VALVE	SOCKET | 25 mm (1")	SOCKET | 25 mm (1")	PVC (ASTM D1784)	PTFE | EPDM	25 mm (1")	PID01 SHEET 19	CHEMLINE	FI	
V9-625	CHEMLINE	TYPE: BALL VALVE//MANUFACTURER : CHEMLINE//MODEL : Type21-A-010-E-S//CONNECTION TYPE : SOCKET | 25 mm (1")//BODY : PVC (ASTM D1784)//SEAL | SEAT :PTFE | EPDM// STEM : PVC	21A010EC,TYPE21	VABLPV200251	BALL VALVE	SOCKET | 25 mm (1")	SOCKET | 25 mm (1")	PVC (ASTM D1784)	PTFE | EPDM	25 mm (1")	PID01 SHEET 19	CHEMLINE	FI	
V9-627	CHEMLINE	TYPE: BALL VALVE//MANUFACTURER : CHEMLINE//MODEL : Type21-A-010-E-S//CONNECTION TYPE : SOCKET | 25 mm (1")//BODY : PVC (ASTM D1784)// SEAL | SEAT :PTFE | EPDM// STEM : PVC	21A010EC,TYPE21	VABLPV200251	BALL VALVE	SOCKET | 25 mm (1")	SOCKET | 25 mm (1")	PVC (ASTM D1784)	PTFE | EPDM	25 mm (1")	PID01 SHEET 19	CHEMLINE	FI	
V9-628	CHEMLINE	TYPE: BALL VALVE//MANUFACTURER : CHEMLINE//MODEL : Type21-A-010-E-S//CONNECTION TYPE : SOCKET | 25 mm (1")//BODY : PVC (ASTM D1784)// SEAL | SEAT :PTFE | EPDM// STEM : PVC	21A010EC,TYPE21	VABLPV200251	BALL VALVE	SOCKET | 25 mm (1")	SOCKET | 25 mm (1")	PVC (ASTM D1784)	PTFE | EPDM	25 mm (1")	PID01 SHEET 19	CHEMLINE	FI	

4 – DETAILED TECHNICAL DOCUMENTATION

4.1 – EQUIPMENT LISTS

4.1.2 –INSTRUMENTATION LIST

LEFT BLANK

		Doc #	6000218009_P&ID_-_GEN_V.WT
		Client's doc number	
		INSTRUMENTATION LIST	

CLIENT	REV	BY	DATE	DESCRIPTION	Chkd	APPVD
AGNICO EAGLE	1	BB	2018-05-07	FOR APPROVAL		
PROJECT						
AMARUQ						
				DOT PRINT No.		

REV	TAG IDENTIFICATION	I&D SHEET	QTY	PARAMETER	MODEL/NUMBER	MANUFACTURER	CONDENSED INFO 1 (ENGL)	CONDENSED INFO 2 (ENGL)	CONDENSED INFO 3 (ENGL)	EQUIPMENT CODE
ACID 2 SULFIDE REDUCTION REACTOR										
rev1	T1TS-001	P-001 SHEET 01	1	TEMPERATURE ANALYSER	INCLUDED WITH AT1-011					INCLUDED WITH AE1-012
rev1	AT1-012	P-001 SHEET 01	1	pH TRANSMITTER	INCLUDED WITH AT1-011					INCLUDED WITH AT1-011
rev1	AE1-011	P-001 SHEET 01	1	OXYGEN REDUCTION POTENTIAL	ORP/ITS	HACH	ORP SENSOR/MANUFACTURER: HACH/MODEL: ORP19S			IPOPH0100708
rev1	AE1-012	P-001 SHEET 01	1	PH METER PROBE - ACP	pH1852/SENSOR/MANUFACTURER: HACH/MODEL: SPE181	HACH	N/A	N/A	N/A	ST-400-301
rev1	AE1-014	P-001 SHEET 01	1	TURBIDIMETER PROBE	ATU/ITS	HACH	pH1852/SENSOR/MANUFACTURER: HACH/MODEL: SPE181	N/A	N/A	ST-400-301
rev1	AT1-011	P-001 SHEET 01	1	OXYGEN REDUCTION POTENTIAL	SC200/LAV404.99.00552 + HWT PHOTOCOL MOD.UL 9928100 + 3 RD OUTPUT 9334600	HACH	MULTIPURPOSE TRANSMITTER /MANUF: HACH/MODEL: SC200/LAV404.99.00552/1/2/3/4/ 2 DIGITAL CHANNEL HART PROTOCOL/ MODULE 9928100/3 RD OUTPUT 9334600	N/A	N/A	ST-400-301
rev1	AT1-014	P-001 SHEET 01	1	OXYGEN REDUCTION POTENTIAL	SC200/LAV404.99.00552 + HWT PHOTOCOL MOD.UL 9928100 + 3 RD OUTPUT 9334600	HACH	MULTIPURPOSE TRANSMITTER /MANUF: HACH/MODEL: SC200/LAV404.99.00552/1/2/3/4/ 2 DIGITAL CHANNEL HART PROTOCOL/ MODULE 9928100/3 RD OUTPUT 9334600	N/A	N/A	ST-400-301
rev1	FIT1-011	P-001 SHEET 01	1	FLOWMETER	50WGH-ULGA B CBAAW+1	ENDRESS & HAUSER	Electromagnetic flowmeter// Manuf: E&H // Model : 50WGH-ULGA1B2BAAW+0 // DN50 (2") // Liner: Polyurethane Process Connection: CL150, A105, flange ANSI B16.5 Electrodes: 1.4435/316L, bullet nose Calibration: 0.5% Additional Text, certificate: w/o	Housing: Wall Au, IP67 NEMA 4X Cable, Remote version: 10m/ 30ft coil + signal cable Cable Entry: Thread NPT 1/2 Power Supply: Display A85-260V AC, WEA: 2-line + pushbuttons, WEA= language DE+EN+FR+IT+ES+PT+NL	Adjustment; Software Feature: AFactory setup; basic version Output; Input: W 4-20mA 9H HART Marking: 1 Tagging (TAG), see additional spec.	ST-404-586
rev1	LSHH1-011	P-001 SHEET 01	1	HIGH HIGH LEVEL SWITCH	BNM-10 (0m)	FLYGT	LEVEL SWITCH /MANUFACTURER: FLYGT// MODEL: BNM-10 (0m)	N/A	N/A	IISWAE201805
ACTIVE RECIRCULATION UNIT MODIFICATION #1										
rev1	PI-2011	P-001 SHEET 02	1	DIAPHRAGM PRESSURE GAUGE	45-1005SL.04L-60#AV.C/W SEAL SD-1015L-04T-XCG	ASHCROFT	PRESSURE GAUGE C/W ISOLATOR// MANUFACTURER : ASHCROFT // MODEL:45-1005SL.04L-60#AV.C/W SEAL SD-1015L-04T-XCG	N/A	N/A	ST-413-359
rev1	PI-2012	P-001 SHEET 02	1	DIAPHRAGM PRESSURE GAUGE	45-1005SL.04L-60#AV.C/W SEAL SD-1015L-04T-XCG	ASHCROFT	PRESSURE GAUGE C/W ISOLATOR// MANUFACTURER : ASHCROFT // MODEL:45-1005SL.04L-60#AV.C/W SEAL SD-1015L-04T-XCG	N/A	N/A	ST-413-359
rev1	AE2-011	P-001 SHEET 02	1	PH METER PROBE - ACP	pH1852/SENSOR/MANUFACTURER: HACH/MODEL: SPE181	HACH	N/A	N/A	N/A	ST-400-301
rev1	AE2-012	P-001 SHEET 02	1	TURBIDIMETER PROBE - ACP	LWA223.99.10100	HACH	SOLITAX IMMERSION SENSOR FOR TURBIDITY AND NLM, Sc.e. PVC W TR W/ REF.0, 003-4000 NTU, 0.001 mg/L - 50 g/L /MANUFACTURER: HACH/ MODEL: LWA28.99.10100	N/A	N/A	ISPOTS200863
rev1	AT2-012	P-001 SHEET 02	1	TSS TRANSMITTER	SC200/LAV404.99.00552 + HWT PHOTOCOL MOD.UL 9928100	HACH	MULTIPURPOSE TRANSMITTER /MANUF: HACH/MODEL: SC200/LAV404.99.00552/1/2/3/4/ 2 DIGITAL CHANNEL/ HART PROTOCOL/ MODULE 9928100	N/A	N/A	ECNG1045010
rev1	AT2-011	P-001 SHEET 02	1	pH TRANSMITTER						INCLUDED WITH AT2-012
rev1	AT2-013	P-001 SHEET 02	1	pH TRANSMITTER						INCLUDED WITH AT2-012
ACTIVE RECIRCULATION UNIT MODIFICATION #2										
rev1	PI-2021	P-001 SHEET 03	1	DIAPHRAGM PRESSURE GAUGE	45-1005SL.04L-60#AV.C/W SEAL SD-1015L-04T-XCG	ASHCROFT	PRESSURE GAUGE C/W ISOLATOR// MANUFACTURER : ASHCROFT // MODEL:45-1005SL.04L-60#AV.C/W SEAL SD-1015L-04T-XCG	N/A	N/A	ST-413-359
rev1	PI-2022	P-001 SHEET 03	1	DIAPHRAGM PRESSURE GAUGE	45-1005SL.04L-60#AV.C/W SEAL SD-1015L-04T-XCG	ASHCROFT	PRESSURE GAUGE C/W ISOLATOR// MANUFACTURER : ASHCROFT // MODEL:45-1005SL.04L-60#AV.C/W SEAL SD-1015L-04T-XCG	N/A	N/A	ST-413-359
rev1	AE2-021	P-001 SHEET 03	1	PH METER PROBE - ACP	pH1852/SENSOR/MANUFACTURER: HACH/MODEL: SPE181	HACH	N/A	N/A	N/A	ST-400-301
rev1	AE2-022	P-001 SHEET 03	1	TURBIDIMETER PROBE - ACP	LWA223.99.10100	HACH	SOLITAX IMMERSION SENSOR FOR TURBIDITY AND NLM, Sc.e. PVC W TR W/ REF.0, 003-4000 NTU, 0.001 mg/L - 50 g/L /MANUFACTURER: HACH/ MODEL: LWA28.99.10100	N/A	N/A	ISPOTS200863
rev1	AT2-022	P-001 SHEET 03	1	TSS TRANSMITTER	SC200/LAV404.99.00552 + HWT PHOTOCOL MOD.UL 9928100	HACH	MULTIPURPOSE TRANSMITTER /MANUF: HACH/MODEL: SC200/LAV404.99.00552/1/2/3/4/ 2 DIGITAL CHANNEL/ HART PROTOCOL/ MODULE 9928100	N/A	N/A	ECNG1045010
rev1	AT2-021	P-001 SHEET 03	1	pH TRANSMITTER						INCLUDED WITH AT2-012
BUFFER TANK										
rev1	PI-4011	P-001 SHEET 04	1	DIAPHRAGM PRESSURE GAUGE	45-1005SL.04L-60#AV.C/W SEAL SD-1015L-04T-XCG	ASHCROFT	PRESSURE GAUGE C/W ISOLATOR// MANUFACTURER : ASHCROFT // MODEL:45-1005SL.04L-60#AV.C/W SEAL SD-1015L-04T-XCG	N/A	N/A	ST-413-359
rev1	FIT4-011	P-001 SHEET 04	1	FLOWMETER	50WBH-ULGA1B2CBAA W+1	ENDRESS & HAUSER	Electromagnetic flowmeter// Manuf: E&H // Model : 50WBH-ULGA1B2CBAA W+1 // DN50 (2") // Liner: Polyurethane Process Connection: CL150, A105, flange ANSI B16.5 Electrodes: 1.4435/316L, bullet nose Calibration: 0.5% Additional Text, certificate: w/o	Approval: PROFIBUS PA: 4.7 GSATEX 139 X Housing: Wall Au, IP67 NEMA 4X Cable, Remote version: 10m/ 30ft coil + signal cable Cable Entry: Thread NPT 1/2 Power Supply: Display A85-260V AC, WEA: 2-line + pushbuttons,	WEA= language DE+EN+FR+IT+ES+PT+NL Adjustment; Software Feature: AFactory setup; basic version Output; Input: W 4-20mA 9A HART Marking: 1 Tagging (TAG), see additional spec.	ST-404-566
rev1	LSHH-011	P-001 SHEET 04	1	HIGH HIGH LEVEL SWITCH	BNM-10 (0m)	FLYGT	LEVEL SWITCH /MANUFACTURER: FLYGT// MODEL: BNM-10 (0m)	N/A	N/A	IISWAE201805
rev1	LSLL6-012	P-001 SHEET 04	1	LOW LOW LEVEL SWITCH	FTS51-UGN2C0MESA	ENDRESS & HAUSER	LEVEL SWITCH// Manuf : E&H // model: FTS51-UGN2C0MESA Point level/density, vibonic, External tube. Approval: U CSA (2 US General Purpose Process Conn.: GN2 Thread ANSI NPT1, 316L	ProbeLength; Type: G6 Inch; 316L, Ra<3.2um/126uin Electronics; Output: AFF51DA, PROFIBUS PA Housing; Cable Entry: ES F13 NEMA Type 4X/5F End , F17 NEMA Type 4X End. AL≤		ST-451-50F
rev1	AI TR-011	P-001 SHEET 04	1	TSS TRANSMITTER	INCLUDE WITH AE4-011	HACH				INCLUDE WITH AE4-011
rev1	AE4-011	P-001 SHEET 04	1	TURBIDIMETER PROBE	LWA24.99.00100/LZX661/5738400/LWA904. 99. 00052/9328100	HACH	SOLITAX INSERTION SENSOR FOR TURBIDITY AND SS 6 line sc STAINLESS STEEL WITH TIMER P/N 00 01 4000 NTU, 0.001 mg/L - 50 g/L /MANUFACTURER: HACH / MODEL: LWA24.99.00100/LZX661/5738400 C/W CONTROLLER SC200 2 CHANNELS DIGITAL LWA04.99.00552/9328100 HART MODULE	N/A		ST-400-140sc1
PCS-2 SUGGESTAIRE										
rev1	PI5-011	P-001 SHEET 05	1	DIAPHRAGM PRESSURE GAUGE	Size 4" Series PSW	ONYX/WAVE	PRESSURE SWITCH RING C/W PRESSURE SWITCH AND PRESSURE GAUGE / MANUF : ONYX/WAVE / MODEL Size 4" Series PSW	Dual Instrument Fittings // United Electric J120 358-1519 Pressure switch // Range 15-200 psi // Mechanical switch mechanism // Class I, Division 1, Groups, B, C, D	0 Wika 213.53.100 My Pressure Gauge - 4" dial size - Liquid-filled, crimp-sealed goldenbrass stainless steel case - 1% 75 accuracy - Polycarbonate window - Range: 0-160 PSI - n Drawdown Cal-ut instrument Fitting	ST-434-501
rev1	PSLS-011	P-001 SHEET 05	1	DIAPHRAGM PRESSURE GAUGE	INCLUDED WITH PI5-011					INCLUDED WITH PI5-011
rev1	PI5-012	P-001 SHEET 05	1	DIAPHRAGM PRESSURE GAUGE	Size 4" Series PSW	ONYX/WAVE	PRESSURE SWITCH RING C/W PRESSURE SWITCH AND PRESSURE GAUGE / MANUF : ONYX/WAVE / MODEL Size 4" Series PSW	Dual Instrument Fittings // United Electric J120 358-1519 Pressure switch // Range 15-200 psi // Mechanical switch mechanism // Class I, Division 1, Groups, B, C, D	0 Wika 213.53.100 My Pressure Gauge - 4" dial size - Liquid-filled, crimp-sealed goldenbrass stainless steel case - 1% 75 accuracy - Polycarbonate window - Range: 0-160 PSI - n Drawdown Cal-ut instrument Fitting	ST-434-501
rev1	PSLS-012	P-001 SHEET 05	1	DIAPHRAGM PRESSURE GAUGE	INCLUDED WITH PI5-012					INCLUDED WITH PI5-012
rev1	LSLL5-012	P-001 SHEET 05	1	LOW LEVEL SWITCH	FTS51-UGN2C0MESA	ENDRESS & HAUSER	LEVEL SWITCH// Manuf : E&H // model: FTS51-UGN2C0MESA Point level/density, vibonic, External tube. Approval: U CSA (2 US General Purpose Process Conn.: GN2 Thread ANSI NPT1, 316L	ProbeLength; Type: G6 Inch; 316L, Ra<3.2um/126uin Electronics; Output: AFF51DA, PROFIBUS PA Housing; Cable Entry: ES F13 NEMA Type 4X/5F End , F17 NEMA Type 4X End. AL≤		ST-451-50F
rev1	LSLL5-022	P-001 SHEET 05	1	LOW LEVEL SWITCH	FTS51-UGN2C0MESA	ENDRESS & HAUSER	LEVEL SWITCH// Manuf : E&H // model: FTS51-UGN2C0MESA Point level/density, vibonic, External tube. Approval: U CSA (2 US General Purpose Process Conn.: GN2 Thread ANSI NPT1, 316L	ProbeLength; Type: G6 Inch; 316L, Ra<3.2um/126uin Electronics; Output: AFF51DA, PROFIBUS PA Housing; Cable Entry: ES F13 NEMA Type 4X/5F End , F17 NEMA Type 4X End. AL≤		ST-451-50F
rev1	FIT5-011	P-001 SHEET 05	1	FLOWMETER	50W50-ULGA1B2CBAA W+1	ENDRESS & HAUSER	Electromagnetic flowmeter// Manuf: E&H // Model : 50WBH-ULGA 1B2CBAA W+1 // DN50 (2") // Liner: Polyurethane Process Connection: CL150, A 105, flange ANSI B16.5 Electrodes: 1.4435/316L, bullet nose Calibration: 0.5% Power Supply: Display A85-260VAC, WEA: 2-line + pushbuttons, WEA= language DE+EN+FR+IT+ES+PT+NL	Housing: Wall Au, IP67 NEMA 4X Cable, Remote version: 10m/ 30ft coil + signal cable Cable Entry: Thread NPT 1/2 Power Supply: Display A85-260VAC, WEA: 2-line + pushbuttons, WEA= language DE+EN+FR+IT+ES+PT+NL	Adjustment; Software Feature: AFactory setup; basic version Output; Input: W 4-20mA 9H HART Marking: 1 Tagging (TAG), see additional spec.	ST-404-586
rev1	FIT5-012	P-001 SHEET 05	1	FLOWMETER	50W50-ULGA1B2CBAA W+1	ENDRESS & HAUSER	Electromagnetic flowmeter// Manuf: E&H // Model : 50WBH-ULGA 1B2CBAA W+1 // DN50 (2") // Liner: Polyurethane Process Connection: CL150, A 105, flange ANSI B16.5 Electrodes: 1.4435/316L, bullet nose Calibration: 0.5% Power Supply: Display A85-260VAC, WEA: 2-line + pushbuttons, WEA= language DE+EN+FR+IT+ES+PT+NL	Housing: Wall Au, IP67 NEMA 4X Cable, Remote version: 10m/ 30ft coil + signal cable Cable Entry: Thread NPT 1/2 Power Supply: Display A85-260VAC, WEA: 2-line + pushbuttons, WEA= language DE+EN+FR+IT+ES+PT+NL	Adjustment; Software Feature: AFactory setup; basic version Output; Input: W 4-20mA 9A HART Marking: 1 Tagging (TAG), see additional spec.	ST-404-586
rev1	LES-013	P-001 SHEET 05	1	LEVEL SENSOR						INCLUDED WITH LT5-013
rev1	LIT5-013	P-001 SHEET 05	1	LEVEL TRANSMITTER	PMC71-UBCJF32DAG-Z1	Endress & Hauser	PRESSURE TRANSMITTER/MANUFACTURER: ENDRESS AND HAUSER/MODEL: PMC71-UBCJF32DAG-Z1 U: CSA C/US IS CL I,II,III C: zone 0,1,2/ US: zone 0, 1,2,20, 21,22 Output; Operating: 8-22mA HART, find de-r LCD Housing: Cover Sealing; Cable Entry: CT34 As i PA6/6	NPT1/2 thread, TM = side cover Sensor Range; Sens or Overload Limit: 1F 400mbar/40kPa/6psi gauge; Blue/800kPa/116psi Calibration; Unit: 3 Sensor range; mmH2O/mH2O Process Connection: 2D Thread ANSI NPT1-1/2, 316L/flush mount	Seal: AFKM Viton Additional Option 1: A Not selected Additional Option 2: G Separate housing + housing mounting bracket, wall/pipe, 316L + 71040109 Cable L=10m/4000in PE > s ep. housing Marking: Z1 Tagging (TAG), see additional spec.	ST-402-609
rev1	LIT5-023	P-001 SHEET 05	1	LEVEL TRANSMITTER	PMC71-UBCJF32DAG-Z1	Endress & Hauser	PRESSURE TRANSMITTER/MANUFACTURER: ENDRESS AND HAUSER/MODEL: PMC71-UBCJF32DAG-Z1 U: CSA C/US IS CL I,II,III C: zone 0,1,2/ US: zone 0, 1,2,20, 21,22 Output; Operating: 8-22mA HART, find de-r LCD Housing: Cover Sealing; Cable Entry: CT34 As i PA6/6	NPT1/2 thread, TM = side cover Sensor Range; Sens or Overload Limit: 1F 400mbar/40kPa/6psi gauge; Blue/800kPa/116psi Calibration; Unit: 3 Sensor range; mmH2O/mH2O Process Connection: 2D Thread ANSI NPT1-1/2, 316L/flush mount	Seal: AFKM Viton Additional Option 1: A Not selected Additional Option 2: G Separate housing + housing mounting bracket, wall/pipe, 316L + 71040109 Cable L=10m/4000in PE > s ep. housing Marking: Z1 Tagging (TAG), see additional spec.	ST-402-609
rev1	LES-023	P-001 SHEET 05	1	LEVEL SENSOR	INCLUDED WITH LT5-023					INCLUDED WITH LT5-023
rev1	LSHH5-011	P-001 SHEET 05	1	HIGH HIGH LEVEL SWITCH	BNM-10 (0m)	FLYGT	LEVEL SWITCH /MANUFACTURER: FLYGT// MODEL: BNM-10 (0m)	N/A	N/A	IISWAE201805
rev1	LSHH5-021	P-001 SHEET 05	1	HIGH HIGH LEVEL SWITCH	BNM-10 (0m)	FLYGT	LEVEL SWITCH /MANUFACTURER: FLYGT// MODEL: BNM-10 (0m)	N/A	N/A	IISWAE201805
DEWATERING										
rev1	LSLL6-011	P-001 SHEET 06	1	HOPPER LOW LEVEL SWITCH	BNM-10 (0m)	FLYGT	LEVEL SWITCH /MANUFACTURER: FLYGT// MODEL: BNM-10 (0m)	N/A	N/A	IISWAE201805
rev1	LSLL6-021	P-001 SHEET 06	1	HOPPER LOW LEVEL SWITCH	BNM-10 (0m)	FLYGT	LEVEL SWITCH /MANUFACTURER: FLYGT// MODEL: BNM-10 (0m)	N/A	N/A	IISWAE201805
rev1	LSHH6-011	P-001 SHEET 06	1	HIGH HIGH LEVEL SWITCH	BNM-10 (0m)	FLYGT	LEVEL SWITCH /MANUFACTURER: FLYGT// MODEL: BNM-10 (0m)	N/A	N/A	IISWAE201805
rev1	LSHH6-021	P-001 SHEET 06	1	HIGH HIGH LEVEL SWITCH	BNM-10 (0m)	FLYGT	LEVEL SWITCH /MANUFACTURER: FLYGT// MODEL: BNM-10 (0m)	N/A	N/A	IISWAE201805
AMOXTCAL WATER DOSING SKID										
rev1	FI15-011	P-001 SHEET 15	1	VARIABLE AREA FLOWMETER	FSA 025/00	CHEMLINE	VARIABLE AREA FLOWMETER/MANUFACTURER: CHEMLINE/ MODEL: FSA 025/00	N/A	IMPWG1001907	IMFWG1001907
rev1	FI15-021	P-001 SHEET 15	1	VARIABLE AREA FLOWMETER	FSA 025/00	CHEMLINE	VARIABLE AREA FLOWMETER/MANUFACTURER: CHEMLINE/ MODEL: FSA 025/00	N/A	IMPWG1001907	IMFWG1001907
POLYMER PREPARATION STATION										
rev1	PSL15-041	P-001 SHEET 16	1	SERVICE WATER PRESSURE SWITCH	836T-T251J	ALLEN BRADLEY	PRESSURE SWITCH /MANUFACTURER: ALLEN BRADLEY/ MODEL: 836T-T251J	1/4" FNPT female pipe connection	Adjustable range: 13-150 psi	IITSPS108355
rev1	PI15-041	P-001 SHEET 16	1	SERVICE WATER PRESSURE GAUGE	25-3005SWL-02L-160PSI G	ASHCROFT	PRESSURE GAUGE/MANUFACTURER: ASHCROFT/ MODEL: 25-1005SWL-02L-160PSIG/ 1/4"	N/A	N/A	IMPSG6100380
rev1	LT9-691	P-001 SHEET 16	1	TANK LEVEL TRANSMITTER	PMX71-UCC1E3RAMA A	ENDRESS & HAUSER	PRESSURE TRANSMITTER/MANUFACTURER: ENDRESS AND HAUSER/MODEL: PMC71-UCC1E3RAMA A// U Approval: CSA C/US IS CL I, II, III Div 1 Gr A, G, II Div 2 Gr A, G, III, IS, ia, G zone	1F Sensor Range; Sens or Overload Limit: 250mbar/25kPa/3.7psi gauge; Sbar/500kPa/75psi // 3 Calibration; Unit: Sens or range; mmH2O/mH2O // Process Connection: Thread ANSI NPT1/2, FNPT1/4, 316L		IITSPS108482
rev1	LT9-692	P-001 SHEET 16	1	TANK LEVEL TRANSMITTER	PMX71-UCC1E3RAMA A	ENDRESS & HAUSER	PRESSURE TRANSMITTER/MANUFACTURER: ENDRESS AND HAUSER/MODEL: PMC71-UCC1E3RAMA A// U Approval: CSA C/US IS CL I, II, III Div 1 Gr A, G, II Div 2 Gr A, G, III, IS, ia, G zone	1F Sensor Range; Sens or Overload Limit: 250mbar/25kPa/3.7psi gauge; Sbar/500kPa/75psi // 3 Calibration; Unit: Sens or range; mmH2O/mH2O // Process Connection: Thread ANSI NPT1/2, FNPT1/4, 316L		IITSPS108482
rev1	LSLD-591	P-001 SHEET 16	1	HOPPER LOW LEVEL SWITCH	FTD31-C50B11-A	ENDRESS&HAUSER	LEVEL SWITCH // MANUF: E&H // MODEL: FTE31-D10B11 Schwinfort FTE31, thread NPT Level limit switch, Paddel. Solid >= 1.0 g/cm3. 1m delay double pole change over switch.	Housing: Plast ic PBT, IP65 NEMA4 Rod steel 1. 4305 (303): 1x Cable entry NPT 1/2, Appeal: CSA 0/P.O. II, III, Div. 1, Gr. E-G Power: : 24VDC, relay PLC 48VDC, 10mA - 100mA Proc. Conn: Thread NPT 1-1/2, 316L Version: Shaft 300mm	Paddel; Additional Option: 316Ti; basic version Version: Basic version Marking: TI 072711: TAG on device	IESWL1520481S
QUENCHING WATER PUMPING SKID										
rev1	PSL15-031	P-001 SHEET 18	1	SERVICE WATER PRESSURE SWITCH	836T-T251J	ALLEN BRADLEY	PRESSURE SWITCH /MANUFACTURER: ALLEN BRADLEY/ MODEL: 836T-T251J	1/4" FNPT female pipe connection	Adjustable range: 13-150 psi	IITSPS108355
rev1	PI15-031	P-001 SHEET 18	1	SERVICE WATER PRESSURE GAUGE	25-3005SWL-02L-160PSI G	ASHCROFT	PRESSURE GAUGE/MANUFACTURER: ASHCROFT/ MODEL: 25-1005SWL-02L-160PSIG/ 1/4"	N/A	N/A	IMPSG6100380
rev1	LT9-621	P-001 SHEET 18	1	TANK LEVEL TRANSMITTER	PMC131-C22F1D12	ENDRESS & HAUSER	LEVEL TRANSMITTER // E&H // Model : PMC131-C22F1D12 Cerabar T PMC131 capacitive ceramic membrane: ceramic. : Long term stable + overload resistant. Output: 4-20mA passive, 2-wire. Linearity +/-0.5% sensor range.	Electrical Connection: Plug 804400 NPT1/2, NEMA4X + CSA GP Process Connection: Thread ANSI NPT1/2 FNPT1/4, 316 Sensor Seal: FKM Viton	Additional Option: Basic version Meas. Range; Sensor Overload Limit: 0. . 200m/ba/2bPa gauge; 5bar/500kPa Marking: 52008028	IECNPS108999
rev1	LT9-622	P-001 SHEET 18	1	TANK LEVEL TRANSMITTER	PMC131-C22F1D12	ENDRESS & HAUSER	LEVEL TRANSMITTER // E&H // Model : PMC131-C22F1D12 Cerabar T PMC131 capacitive ceramic membrane: ceramic. : Long term stable + overload resistant. Output: 4-20mA passive, 2-wire. Linearity +/-0.5% sensor range.	Electrical Connection: Cl Plug 1804400 NPT1/2, NEMA4X + CSA GP Process Connection: Thread ANSI NPT1/2 FNPT1/4, 316 Sensor Seal: FKM Viton	Additional Option: Basic version Meas. Range; Sensor Overload Limit: 0. . 200m/ba/2bPa gauge; 5bar/500kPa Marking: 52008028	IECNPS108999
rev1	LSLD-621	P-001 SHEET 18	1	HOPPER LOW LEVEL SWITCH	FTD31-C50B11-A	ENDRESS&HAUSER	LEVEL SWITCH // MANUF: E&H // MODEL: FTD31-C50B11 Schwinfort FTD31, thread NPT Level limit switch, Paddel. Solid >= 1.0 g/cm3. 1m delay double pole change over switch.	Housing: Plast ic PBT, IP65 NEMA4 Rod steel 1. 4305 (303): 1x Cable entry NPT 1/2, Appeal: CSA 0/P.O. II, III, Div. 1, Gr. E-G Power: : 24VDC, relay PLC 48VDC, 10mA - 100mA Proc. Conn: Thread NPT 1-1/2, 316L Version: Shaft 300mm	Paddel; Additional Option: 316Ti; basic version Version: Basic version Marking: TI 072711: TAG on device	IESWL1520481S

LEFT BLANK

4 – DETAILED TECHNICAL DOCUMENTATION

4.1 – EQUIPMENT LISTS

4.1.3 – DETAILED LIST

LEFT BLANK

EQUIPMENT LIST

EQPMT TAG	EQUIPMENT TYPE	DESCRIPTION	EQUIPMENT CODE	LOCATION	P&ID	SUPPLIER	MANUFACTURER	MODEL NUMBER
AE1-011	INSTRUMENT	OXYDATION REDUCTION POTENTIAL	IEPOPH200708	RX75-3 PRECIPITATION REACTOR	PI001 SHEET 01	HACH	HACH	DRD1R5
AE1-012	INSTRUMENT	PH METER PROBE - ACP	ST-403-303	RX75-3 PRECIPITATION REACTOR	PI001 SHEET 01	HACH	HACH	DPD1R1
AE1-014	INSTRUMENT	TURBIDIMETER PROBE	ST-403-303	RX75-3 PRECIPITATION REACTOR	PI001 SHEET 01	HACH	HACH	DPD1R1
AE2-011	INSTRUMENT	PH METER PROBE - ACP	ST-403-303	ACTIFLO RECIRCULATION LINE MODIFICATION	PI001 SHEET 02	HACH	HACH	DPD1R1
AE2-012	INSTRUMENT	TURBIDIMETER PROBE - ACP	IEPOTB200853	ACTIFLO RECIRCULATION LINE MODIFICATION	PI001 SHEET 02	HACH	HACH	LXV423.99.10100
AE2-021	INSTRUMENT	PH METER PROBE - ACP	ST-403-303	ACTIFLO RECIRCULATION LINE MODIFICATION	PI001 SHEET 03	HACH	HACH	DPD1R1
AE2-022	INSTRUMENT	TURBIDIMETER PROBE - ACP	IEPOTB200853	ACTIFLO RECIRCULATION LINE MODIFICATION	PI001 SHEET 03	HACH	HACH	LXV423.99.10100
AE4-011	INSTRUMENT	TURBIDIMETER PROBE	ST-400-140zz1	SLUDGE TANK	PI001 SHEET 04	HACH	HACH	LXV424.99.00100/LZX661/5738400/LXV404.99.00552/9328100
AIT1-011	INSTRUMENT	OXYDATION REDUCTION POTENTIAL	ST-403-306	RX75-3 PRECIPITATION REACTOR	PI001 SHEET 01	HACH	HACH	SC200/LXV404.99.00552 + HART PROTOCOL MODULE 9328100 + 3 RD OUTPUT 9334600
AIT1-012	INSTRUMENT	pH TRANSMITTER	INCLUDED WITH AIT1-011	RX75-3 PRECIPITATION REACTOR	PI001 SHEET 01	HACH		
AIT1-014	INSTRUMENT	OXYDATION REDUCTION POTENTIAL	ST-403-306	RX75-3 PRECIPITATION REACTOR	PI001 SHEET 01	HACH	HACH	SC200/LXV404.99.00552 + HART PROTOCOL MODULE 9328100 + 3 RD OUTPUT 9334600
AIT2-011	INSTRUMENT	pH TRANSMITTER	INCLUDED WITH AIT2-012	ACTIFLO RECIRCULATION LINE MODIFICATION	PI001 SHEET 02	HACH		
AIT2-012	INSTRUMENT	TSS TRANSMITTER	IECNGU340502	ACTIFLO RECIRCULATION LINE MODIFICATION	PI001 SHEET 02	HACH	HACH	SC200/LXV404.99.00552 + HART PROTOCOL MODULE 9328100
AIT2-021	INSTRUMENT	pH TRANSMITTER	INCLUDED WITH AIT2-022	ACTIFLO RECIRCULATION LINE MODIFICATION	PI001 SHEET 03	HACH		
AIT2-022	INSTRUMENT	TSS TRANSMITTER	IECNGU340502	ACTIFLO RECIRCULATION LINE MODIFICATION	PI001 SHEET 03	HACH	HACH	SC200/LXV404.99.00552 + HART PROTOCOL MODULE 9328100
AIT4-011	INSTRUMENT	TSS TRANSMITTER	INCLUDE WITH AE4-011	SLUDGE TANK	PI001 SHEET 04	HACH		
BPV9-511	VALVE	BACKPRESSURE VALVE	VAPSPV329498	RX75-3 PRECIPITATION REACTOR	PI001 SHEET 01	CHEMLINE	CHEMLINE	SB12A005EU
BPV9-514	VALVE	BACKPRESSURE VALVE	VARFPV348512	COAGULANT DOSING SKID	PI001 SHEET 10	CHEMLINE	CHEMLINE	SB12A010EU + SGA-005-002-P-G + P025-160-BM (CONFIG. L_U)
BPV9-524	VALVE	BACKPRESSURE VALVE	VARFPV348513	ANIONIC POLYMER DOSING SKID	PI001 SHEET 15	CHEMLINE	CHEMLINE	SB12A010EU + SGA-005-002-P-G + P025-160-BM (CONFIG. R_U)
BPV9-525	VALVE	BACKPRESSURE VALVE	VARFPV348513	ANIONIC POLYMER DOSING SKID	PI001 SHEET 15	CHEMLINE	CHEMLINE	SB12A010EU + SGA-005-002-P-G + P025-160-BM (CONFIG. R_U)
BPV9-526	VALVE	BACKPRESSURE VALVE	VARFPV348513	ANIONIC POLYMER DOSING SKID	PI001 SHEET 15	CHEMLINE	CHEMLINE	SB12A010EU + SGA-005-002-P-G + P025-160-BM (CONFIG. R_U)
BPV9-532	VALVE	BACKPRESSURE VALVE	VAPSPD351047	SULFURIC ACID DOSING SKID	PI001 SHEET 12	CHEMLINE	CHEMLINE	SB12K005VCFx + SGK-005-002-P-G + P025-160-BM (CONFIG. L_U)
BPV9-541	VALVE	BACKPRESSURE VALVE	VAPSPV329498	RX75-3 PRECIPITATION REACTOR	PI001 SHEET 01	CHEMLINE	CHEMLINE	SB12A005EU
BPV9-591	VALVE	BACKPRESSURE VALVE	VARFPV348512	KMnO4 DOSING SKID	PI001 SHEET 17	CHEMLINE	CHEMLINE	SB12A010EU + SGA-005-002-P-G + P025-160-BM (CONFIG. L_U)
BPV9-592	VALVE	BACKPRESSURE VALVE	VAPSPV329498	RX75-3 PRECIPITATION REACTOR	PI001 SHEET 01	CHEMLINE	CHEMLINE	SB12A005EU
C1	CONTAINER	CONTAINER	N/A	CONTAINER	PI001 SHEET 17	VWTC		
C1 (1)	CONTAINER	CONTAINER	N/A	CONTAINER	PI001 SHEET 16	VWTC		
C2-011	HYDROCYCLONE	HYDROCYCLONE	ST-904-001	ACTIFLO RECIRCULATION LINE MODIFICATION	PI001 SHEET 02	FLSMIDTH	KREBS ENGINEERS	U10-GMAX-9.5SQIN
C2-012	HYDROCYCLONE	HYDROCYCLONE	ST-904-001	ACTIFLO RECIRCULATION LINE MODIFICATION	PI001 SHEET 02	FLSMIDTH	KREBS ENGINEERS	U10-GMAX-9.5SQIN
C2-021	HYDROCYCLONE	HYDROCYCLONE	ST-904-001	ACTIFLO RECIRCULATION LINE MODIFICATION	PI001 SHEET 03	FLSMIDTH	KREBS ENGINEERS	U10-GMAX-9.5SQIN
C2-022	HYDROCYCLONE	HYDROCYCLONE	ST-904-001	ACTIFLO RECIRCULATION LINE MODIFICATION	PI001 SHEET 03	FLSMIDTH	KREBS ENGINEERS	U10-GMAX-9.5SQIN
CLY9-521	MISC	Calibration Cylinder	PUSPPV200284	ANIONIC POLYMER DOSING SKID	PI001 SHEET 15	PRIMARY FLUID	PRIMARY FLUID	PV#2 10000
CLY9-531	MISC	CALIBRATION CYLINDER	TOLBGU316608	SULFURIC ACID DOSING SKID	PI001 SHEET 12	PRIMARY FLUID	PRIMARY FLUID	ACS#2-250-GKV-F
CV15-011	VALVE	CHECK VALVE - CARRIER WATER	VANRPV302912	ANIONIC POLYMER DOSING SKID	PI001 SHEET 15	CHEMLINE	CHEMLINE	BTA010EC
CV15-021	VALVE	CHECK VALVE - CARRIER WATER	VANRPV302912	ANIONIC POLYMER DOSING SKID	PI001 SHEET 15	CHEMLINE	CHEMLINE	BTA010EC
CV9-591	VALVE	CHECK VALVE - LIQUID POLYMER	VANRPV200667	KMnO4 PREP SYSTEM	PI001 SHEET 16	CHEMLINE	CHEMLINE	BTA015EC
CV9-621	VALVE	CHECK VALVE - LIQUID POLYMER	VABLPV303191	HYDRAPOL 3500	PI001 SHEET 18	CHEMLINE	CHEMLINE	BTA020EC
CYL9-514	MISC	CALIBRATION CYLINDER	PUSPPV200288	COAGULANT DOSING SKID	PI001 SHEET 10	PRIMARY FLUID	PRIMARY FLUID	PV#2 4000
CYL9-591	MISC	CALIBRATION CYLINDER	PUSPPV200288	KMnO4 DOSING SKID	PI001 SHEET 17	PRIMARY FLUID	PRIMARY FLUID	PV#2 4000
CYL9-591-V001	VALVE	ISOLATION VALVE (SUCTION)	VABLPV200251	KMnO4 DOSING SKID	PI001 SHEET 17	CHEMLINE	CHEMLINE	21A010EC,TYPE21
CYL9-591-V002	VALVE	CLEANING VALVE	VABLPV200249	KMnO4 DOSING SKID	PI001 SHEET 17	CHEMLINE	CHEMLINE	21A005EC,TYPE21
CYL9-621	MISC	CALIBRATION CYLINDER	PUSPPV200284	CATIONIC POLYMER DOSING SKID	PI001 SHEET 19	PRIMARY FLUID	PRIMARY FLUID	PV#2 10000
FCV4-011	VALVE	PINCH VALVE	ST-313-501	SLUDGE TANK	PI001 SHEET 04	DM VALVE	FLOWROX	PVE3AK150-601L-SBRT
FI15-011	INSTRUMENT	VARIABLE AREA FLOWMETER	IMFWGG301907	ANIONIC POLYMER DOSING SKID	PI001 SHEET 15	CHEMLINE	CHEMLINE	FSA02500
FI15-021	INSTRUMENT	VARIABLE AREA FLOWMETER	IMFWGG301907	ANIONIC POLYMER DOSING SKID	PI001 SHEET 15	CHEMLINE	CHEMLINE	FSA02500
FIT1-011	INSTRUMENT	FLOWMETER	ST-404-566	RAW WATER	PI001 SHEET 01	E&H	ENDRESS & HAUSER	50W6H-ULGA1RC2BAAW+1
FIT4-011	INSTRUMENT	FLOWMETER	ST-404-564	SLUDGE TANK	PI001 SHEET 04	E&H	ENDRESS & HAUSER	50W80-ULGA1RC2BAAW+1
FIT5-011	INSTRUMENT	FLOWMETER	ST-404-565	RX75-2 SLUDGE TANK	PI001 SHEET 05	E&H	ENDRESS & HAUSER	50W50-ULGA1RC2BAAW+1
FIT5-012	INSTRUMENT	FLOWMETER	ST-404-565	RX75-2 SLUDGE TANK	PI001 SHEET 05	E&H	ENDRESS & HAUSER	50W50-ULGA1RC2BAAW+1
FMM9-591	FEEDER	DRY POLYMER AGITATOR	INCLUDED WITH FSM9-591	KMnO4 PREP SYSTEM	PI001 SHEET 16	WAM		

EQUIPMENT LIST

EQPMT TAG	EQUIPMENT TYPE	DESCRIPTION	EQUIPMENT CODE	LOCATION	P&ID	SUPPLIER	MANUFACTURER	MODEL NUMBER
FMM9-621	FEEDER	DRY POLYMER AGITATOR	INCLUDED WITH FSM9-621	HYDRAPOL 3500	PI001 SHEET 18	WAM		
FSM9-591	FEEDER	FEEDER SREW	ST-999-001	KMnO4 PREP SYSTEM	PI001 SHEET 16	WAM	WAM	
FSM9-621	FEEDER	DREY FEEDER	CMSPGU320682	HYDRAPOL 3500	PI001 SHEET 18	WAM	WAM	MBF 073 I:20 4-5-D-E // 575V // NEMA BALDOR MOTORS
FSM9-621-C001	MISC	CONE BIG BAG	CMSPGU320684	HYDRAPOL 3500	PI001 SHEET 18	WAM	WAM	SBB/Cone MS
FSM9-621-V001	VALVE	SLIDE GATE VALVE	CMSPGU320683	HYDRAPOL 3500	PI001 SHEET 18	WAM	WAM	VLC0250P3/CMG0250
IJ9-591	EDUCTOR	EDUCTOR	EJGUEJ200371	KMnO4 PREP SYSTEM	PI001 SHEET 16	SHUTTE&KOERTING	SHUTTE&KOERTING	1,5"- Fig264 PVC Eductor
IJ9-621	EDUCTOR	EDUCTOR	EJGUEJ200372	HYDRAPOL 3500	PI001 SHEET 18	SHUTTE&KOERTING	SHUTTE&KOERTING	2"- Fig264 PVC Eductor
INJ9-541	MISC	INJECTION QUILL	XXX	RX75-3 PRECIPITATION REACTOR	PI001 SHEET 01	PRIMARY FLUID		
INJ9-591	MISC	INJECTION QUILL	XXX	RX75-3 PRECIPITATION REACTOR	PI001 SHEET 01	PRIMARY FLUID		
JB9-514	MISC	JUNCTION BOX	N/A	COAGULANT DOSING SKID	PI001 SHEET 10	VWTC AUTOMATION		
JB9-524	MISC	JUNCTION BOX	N/A	ANIONIC POLYMER DOSING SKID	PI001 SHEET 15	VWTC AUTOMATION		
JB9-621	MISC	CONTROL PANEL	N/A	CATIONIC POLYMER DOSING SKID	PI001 SHEET 19	VWTC AUTOMATION		
LE5-013	INSTRUMENT	LEVEL SENSOR	INCLUDED WITH LIT5-013	RX75-2 SLUDGE TANK	PI001 SHEET 05	E&H		
LE5-023	INSTRUMENT	LEVEL SENSOR	INCLUDED WITH LIT5-023	RX75-2 SLUDGE TANK	PI001 SHEET 05	E&H		
LIT5-013	INSTRUMENT	LEVEL TRANSMITTER	ST-402-609	RX75-2 SLUDGE TANK	PI001 SHEET 05	E&H	ENDRESS & HAUSER	PMC71-UBC1F32DAAG-Z1
LIT5-013-V001	VALVE	ISOLATION VALVE	VABLSS200270	RX75-2 SLUDGE TANK	PI001 SHEET 05	CFF	CFF	SS2-40 (11/2)
LIT5-013-V002	VALVE	DRAIN VALVE	VABLSS204730	RX75-2 SLUDGE TANK	PI001 SHEET 05	PINACLE	PINACLE	316VTB205
LIT5-023	INSTRUMENT	LEVEL TRANSMITTER	ST-402-609	RX75-2 SLUDGE TANK	PI001 SHEET 05	E&H	ENDRESS & HAUSER	PMC71-UBC1F32DAAG-Z1
LIT5-023-V001	VALVE	ISOLATION VALVE	VABLSS200270	RX75-2 SLUDGE TANK	PI001 SHEET 05	CFF	CFF	SS2-40 (11/2)
LIT5-023-V002	VALVE	DRAIN VALVE	VABLSS204730	RX75-2 SLUDGE TANK	PI001 SHEET 05	PINACLE	PINACLE	316VTB205
LSHH1-011	INSTRUMENT	HIGH HIGH LEVEL SWITCH	IESWLE201155	RX75-3 PRECIPITATION REACTOR	PI001 SHEET 01	FLYGT	FLYGT	ENM-10 (6m)
LSHH4-011	INSTRUMENT	HIGH HIGH LEVEL SWITCH	IESWLE201155	SLUDGE TANK	PI001 SHEET 04	FLYGT	FLYGT	ENM-10 (6m)
LSHH5-011	INSTRUMENT	HIGH HIGH LEVEL SWITCH	IESWLE201155	RX75-2 SLUDGE TANK	PI001 SHEET 05	FLYGT	FLYGT	ENM-10 (6m)
LSHH5-021	INSTRUMENT	HIGH HIGH LEVEL SWITCH	IESWLE201155	RX75-2 SLUDGE TANK	PI001 SHEET 05	FLYGT	FLYGT	ENM-10 (6m)
LSHH6-011	INSTRUMENT	HIGH HIGH LEVEL SWITCH	IESWLE201155	CENTRIFUGE	PI001 SHEET 06	FLYGT	FLYGT	ENM-10 (6m)
LSHH6-021	INSTRUMENT	HIGH HIGH LEVEL SWITCH	IESWLE201155	CENTRIFUGE	PI001 SHEET 06	FLYGT	FLYGT	ENM-10 (6m)
LSL9-591	INSTRUMENT	HOPPER LOW LEVEL SWITCH	IESWLE5204819	KMnO4 PREP SYSTEM	PI001 SHEET 16	E&H	ENDRESS & HAUSER	FTE31-C6DB11-A
LSL9-621	INSTRUMENT	HOPPER LOW LEVEL SWITCH	IESWLE5204819	HYDRAPOL 3500	PI001 SHEET 18	E&H	ENDRESS & HAUSER	FTE31-C6DB11-A
LSLL4-012	INSTRUMENT	LOW LOW LEVEL SWITCH	ST-451-507	SLUDGE TANK	PI001 SHEET 04	E&H	ENDRESS & HAUSER	FTL51-UGN2CB4E5A
LSLL5-012	INSTRUMENT	LOW LEVEL SWITCH	ST-451-507	RX75-2 SLUDGE TANK	PI001 SHEET 05	E&H	ENDRESS & HAUSER	FTL51-UGN2CB4E5A
LSLL5-022	INSTRUMENT	LOW LEVEL SWITCH	ST-451-507	RX75-2 SLUDGE TANK	PI001 SHEET 05	E&H	ENDRESS & HAUSER	FTL51-UGN2CB4E5A
LSLL6-011	INSTRUMENT	HOPPER LOW LEVEL SWITCH	IESWLE201155	CENTRIFUGE	PI001 SHEET 06	FLYGT	FLYGT	ENM-10 (6m)
LSLL6-021	INSTRUMENT	HOPPER LOW LEVEL SWITCH	IESWLE201155	CENTRIFUGE	PI001 SHEET 06	FLYGT	FLYGT	ENM-10 (6m)
LT9-591	INSTRUMENT	TANK LEVEL TRANSMITTER	IEPOPS340482	KMnO4 PREP SYSTEM	PI001 SHEET 16	E&H	ENDRESS & HAUSER	PMC71-UCC1E3RABAA
LT9-592	INSTRUMENT	TANK LEVEL TRANSMITTER	IEPOPS340482	KMnO4 PREP SYSTEM	PI001 SHEET 16	E&H	ENDRESS & HAUSER	PMC71-UCC1E3RABAA
M1-011	MIXER	MIXER EVGX6-5,575V,SS304,NORD,CCW	ST-652-RX75UN1	RX75-3 PRECIPITATION REACTOR	PI001 SHEET 01	ENVIREQUIP		
M1-012	MIXER	MIXER EVGX6-5,575V,SS304,NORD,CW	ST-652-RX75DN1	RX75-3 PRECIPITATION REACTOR	PI001 SHEET 01	ENVIREQUIP		
M1-013	MIXER	MIXER EVGX6-5,575V,SS304,NORD,CCW	ST-652-RX75UN1	RX75-3 PRECIPITATION REACTOR	PI001 SHEET 01	ENVIREQUIP		
M5-011	MIXER	MIXER EVGX6-5,575V,SS304,NORD,CW	ST-652-RX75DN1	RX75-2 SLUDGE TANK	PI001 SHEET 05	ENVIREQUIP		
M5-012	MIXER	MIXER EVGX6-5,575V,SS304,NORD,CW	ST-652-RX75DN1	RX75-2 SLUDGE TANK	PI001 SHEET 05	ENVIREQUIP		
M9-591	MIXER	MATURATION MIXER	CMSPMI319898	KMnO4 PREP SYSTEM	PI001 SHEET 16	ENVIREQUIP	ENVIREQUIP	HP500 (2016) // EVG01-0.5 // 304//575
M9-621	MIXER	MATURATION MIXER	CMSPMI319908	HYDRAPOL 3500	PI001 SHEET 18	ENVIREQUIP	ENVIREQUIP	HP3500 (2016) // EVG1-0.75 // 304//575
P2-011	PUMP	RECIRCULATION PUMP	ST-607-08008011xx1	ACTIFLO RECIRCULATION LINE MODIFICATION	PI001 SHEET 02	MCLANAHAN	McLANAHAN	SÉRIE IIIr 80x80
P2-011-V001	VALVE	ISOLATION VALVE	ST-312-112	ACTIFLO RECIRCULATION LINE MODIFICATION	PI001 SHEET 02	PRATT	PRATT	601N1-L/4"
P2-012	PUMP	RECIRCULATION PUMP	ST-607-08008011xx1	ACTIFLO RECIRCULATION LINE MODIFICATION	PI001 SHEET 02	MCLANAHAN	McLANAHAN	SÉRIE IIIr 80x80
P2-012-V001	VALVE	ISOLATION VALVE	ST-312-112	ACTIFLO RECIRCULATION LINE MODIFICATION	PI001 SHEET 02	PRATT	PRATT	601N1-L/4"
P2-014	PUMP	RECIRCULATION PUMP MULTIFLO	ST-607-107	ACTIFLO RECIRCULATION LINE MODIFICATION	PI001 SHEET 02	MCLANAHAN	McLANAHAN	
P2-014-V001	VALVE	ISOLATION VALVE	ST-312-112	ACTIFLO RECIRCULATION LINE MODIFICATION	PI001 SHEET 02	PRATT	PRATT	601N1-L/4"
P2-021	PUMP	RECIRCULATION PUMP	ST-607-08008011xx1	ACTIFLO RECIRCULATION LINE MODIFICATION	PI001 SHEET 03	MCLANAHAN	McLANAHAN	SÉRIE IIIr 80x80
P2-021-V001	VALVE	ISOLATION VALVE	ST-312-112	ACTIFLO RECIRCULATION LINE MODIFICATION	PI001 SHEET 03	PRATT	PRATT	601N1-L/4"

EQUIPMENT LIST

EQPMT TAG	EQUIPMENT TYPE	DESCRIPTION	EQUIPMENT CODE	LOCATION	P&ID	SUPPLIER	MANUFACTURER	MODEL NUMBER
P2-022	PUMP	RECIRCULATION PUMP	ST-607-08008011xx1	ACTIFLO RECIRCULATION LINE MODIFICATION	PI001 SHEET 03	MCLANAHAN	McLANAHAN	SÉRIE IIIr 80x80
P2-022-V001	VALVE	ISOLATION VALVE	ST-312-112	ACTIFLO RECIRCULATION LINE MODIFICATION	PI001 SHEET 03	PRATT	PRATT	601N1-L/4"
P2-023	PUMP	RECIRCULATION PUMP MULTIFLO	ST-607-107	ACTIFLO RECIRCULATION LINE MODIFICATION	PI001 SHEET 03	MCLANAHAN	McLANAHAN	
P2-023-V001	VALVE	ISOLATION VALVE	ST-312-112	ACTIFLO RECIRCULATION LINE MODIFICATION	PI001 SHEET 03	PRATT	PRATT	601N1-L/4"
P5-011	PUMP	CENTRIFUGE FEEDING PUMP	ST-999-008	RX75-2 SLUDGE TANK	PI001 SHEET 05	SEEPEX		
P5-012	PUMP	CENTRIFUGE FEEDING PUMP	ST-999-008	RX75-2 SLUDGE TANK	PI001 SHEET 05	SEEPEX		
P6-011	PUMP	CENTRATE SUMP PUMP	ST-999-011	CENTRIFUGE	PI001 SHEET 06	Sulzer		
P6-021	PUMP	CENTRATE SUMP PUMP	ST-999-011	CENTRIFUGE	PI001 SHEET 06	Sulzer		
P9-513	PUMP	COAGULANT METERING PUMP	ST-999-004	COAGULANT DOSING SKID	PI001 SHEET 10	PULSAFEEDER		
P9-513-V001	VALVE	ISOLATION VALVE (SUCTION)	VABLPV200251	COAGULANT DOSING SKID	PI001 SHEET 10	CHEMLINE	CHEMLINE	21A010EC,TYPE21
P9-513-V002	VALVE	ISOLATION VALVE (SUCTION)	VABLPV200251	COAGULANT DOSING SKID	PI001 SHEET 10	CHEMLINE	CHEMLINE	21A010EC,TYPE21
P9-513-V003	VALVE	CLEANING VALVE	VABLPV200249	COAGULANT DOSING SKID	PI001 SHEET 10	CHEMLINE	CHEMLINE	21A005EC,TYPE21
P9-513-V004	VALVE	ISOLATION VALVE (DISCHARGE)	VABLPV200251	COAGULANT DOSING SKID	PI001 SHEET 10	CHEMLINE	CHEMLINE	21A010EC,TYPE21
P9-513-V005	VALVE	ISOLATION VALVE (DISCHARGE)	VABLPV200251	COAGULANT DOSING SKID	PI001 SHEET 10	CHEMLINE	CHEMLINE	21A010EC,TYPE21
P9-514	PUMP	COAGULANT METERING PUMP	ST-999-004	COAGULANT DOSING SKID	PI001 SHEET 10	PULSAFEEDER		
P9-514-V001	VALVE	ISOLATION VALVE (SUCTION)	VABLPV200251	COAGULANT DOSING SKID	PI001 SHEET 10	CHEMLINE	CHEMLINE	21A010EC,TYPE21
P9-514-V002	VALVE	ISOLATION VALVE (SUCTION)	VABLPV200251	COAGULANT DOSING SKID	PI001 SHEET 10	CHEMLINE	CHEMLINE	21A010EC,TYPE21
P9-514-V003	VALVE	CLEANING VALVE	VABLPV200249	COAGULANT DOSING SKID	PI001 SHEET 10	CHEMLINE	CHEMLINE	21A005EC,TYPE21
P9-514-V004	VALVE	ISOLATION VALVE (DISCHARGE)	VABLPV200251	COAGULANT DOSING SKID	PI001 SHEET 10	CHEMLINE	CHEMLINE	21A010EC,TYPE21
P9-514-V005	VALVE	ISOLATION VALVE (DISCHARGE)	VABLPV200251	COAGULANT DOSING SKID	PI001 SHEET 10	CHEMLINE	CHEMLINE	21A010EC,TYPE21
P9-514-V006	VALVE	ISOLATION VALVE (DISCHARGE)	VABLPV200249	COAGULANT DOSING SKID	PI001 SHEET 10	CHEMLINE	CHEMLINE	21A005EC,TYPE21
P9-514-V007	VALVE	CLEANING VALVES	VABLPV200249	COAGULANT DOSING SKID	PI001 SHEET 10	CHEMLINE	CHEMLINE	21A005EC,TYPE21
P9-524	PUMP	ANIONIC POLYMER METERING PUMP	ST-999-007	ANIONIC POLYMER DOSING SKID	PI001 SHEET 15	SEEPEX		
P9-524-V001	VALVE	ISOLATION VALVE (SUCTION)	VABLPV200253	ANIONIC POLYMER DOSING SKID	PI001 SHEET 15	CHEMLINE	CHEMLINE	21A015EC,TYPE21
P9-524-V002	VALVE	ISOLATION VALVE (SUCTION)	VABLPV200251	ANIONIC POLYMER DOSING SKID	PI001 SHEET 15	CHEMLINE	CHEMLINE	21A010EC,TYPE21
P9-524-V003	VALVE	CLEANING VALVE	VABLPV200249	ANIONIC POLYMER DOSING SKID	PI001 SHEET 15	CHEMLINE	CHEMLINE	21A005EC,TYPE21
P9-524-V004	VALVE	ISOLATION VALVE (DISCHARGE)	VABLPV200251	ANIONIC POLYMER DOSING SKID	PI001 SHEET 15	CHEMLINE	CHEMLINE	21A010EC,TYPE21
P9-524-V005	VALVE	ISOLATION VALVE (DISCHARGE)	VABLPV200249	ANIONIC POLYMER DOSING SKID	PI001 SHEET 15	CHEMLINE	CHEMLINE	21A005EC,TYPE21
P9-525	PUMP	ANIONIC POLYMER METERING PUMP	ST-999-007	ANIONIC POLYMER DOSING SKID	PI001 SHEET 15	SEEPEX		
P9-525-V001	VALVE	ISOLATION VALVE (SUCTION)	VABLPV200253	ANIONIC POLYMER DOSING SKID	PI001 SHEET 15	CHEMLINE	CHEMLINE	21A015EC,TYPE21
P9-525-V002	VALVE	ISOLATION VALVE (SUCTION)	VABLPV200251	ANIONIC POLYMER DOSING SKID	PI001 SHEET 15	CHEMLINE	CHEMLINE	21A010EC,TYPE21
P9-525-V003	VALVE	CLEANING VALVE	VABLPV200249	ANIONIC POLYMER DOSING SKID	PI001 SHEET 15	CHEMLINE	CHEMLINE	21A005EC,TYPE21
P9-525-V004	VALVE	ISOLATION VALVE (DISCHARGE)	VABLPV200251	ANIONIC POLYMER DOSING SKID	PI001 SHEET 15	CHEMLINE	CHEMLINE	21A010EC,TYPE21
P9-525-V005	VALVE	ISOLATION VALVE (DISCHARGE)	VABLPV200249	ANIONIC POLYMER DOSING SKID	PI001 SHEET 15	CHEMLINE	CHEMLINE	21A005EC,TYPE21
P9-526	PUMP	ANIONIC POLYMER METERING PUMP	ST-999-007	ANIONIC POLYMER DOSING SKID	PI001 SHEET 15	SEEPEX		
P9-526-V001	VALVE	ISOLATION VALVE (SUCTION)	VABLPV200253	ANIONIC POLYMER DOSING SKID	PI001 SHEET 15	CHEMLINE	CHEMLINE	21A015EC,TYPE21
P9-526-V002	VALVE	ISOLATION VALVE (SUCTION)	VABLPV200251	ANIONIC POLYMER DOSING SKID	PI001 SHEET 15	CHEMLINE	CHEMLINE	21A010EC,TYPE21
P9-526-V003	VALVE	CLEANING VALVE	VABLPV200249	ANIONIC POLYMER DOSING SKID	PI001 SHEET 15	CHEMLINE	CHEMLINE	21A005EC,TYPE21
P9-526-V004	VALVE	ISOLATION VALVE (DISCHARGE)	VABLPV200251	ANIONIC POLYMER DOSING SKID	PI001 SHEET 15	CHEMLINE	CHEMLINE	21A010EC,TYPE21
P9-526-V005	VALVE	ISOLATION VALVE (DISCHARGE)	VABLPV200249	ANIONIC POLYMER DOSING SKID	PI001 SHEET 15	CHEMLINE	CHEMLINE	21A005EC,TYPE21
P9-531	PUMP	SULFURIC ACID METERING PUMP	ST-999-002	SULFURIC ACID DOSING SKID	PI001 SHEET 12	GRUNDFOS		
P9-531-V001	VALVE	ISOLATION VALVE (SUCTION)	VABLPD207828	SULFURIC ACID DOSING SKID	PI001 SHEET 12	CHEMLINE	CHEMLINE	21K005VCF+(2x)21005-4K8N-1
P9-531-V002	VALVE	ISOLATION VALVE (SUCTION)	VABLPD207828	SULFURIC ACID DOSING SKID	PI001 SHEET 12	CHEMLINE	CHEMLINE	21K005VCF+(2x)21005-4K8N-1
P9-531-V003	VALVE	ISOLATION VANNE (DISCHARGE)	VABLPD207828	SULFURIC ACID DOSING SKID	PI001 SHEET 12	CHEMLINE	CHEMLINE	21K005VCF+(2x)21005-4K8N-1
P9-531-V004	VALVE	ISOLATION VANNE (DISCHARGE)	VABLPD207828	SULFURIC ACID DOSING SKID	PI001 SHEET 12	CHEMLINE	CHEMLINE	21K005VCF+(2x)21005-4K8N-1
P9-531-V005	VALVE	CLEANING VALVE	VABLPD207828	SULFURIC ACID DOSING SKID	PI001 SHEET 12	CHEMLINE	CHEMLINE	21K005VCF+(2x)21005-4K8N-1
P9-532	PUMP	SULFURIC ACID METERING PUMP	ST-999-002	SULFURIC ACID DOSING SKID	PI001 SHEET 12	GRUNDFOS		
P9-532-V001	VALVE	ISOLATION VALVE (SUCTION)	VABLPD207828	SULFURIC ACID DOSING SKID	PI001 SHEET 12	CHEMLINE	CHEMLINE	21K005VCF+(2x)21005-4K8N-1
P9-532-V002	VALVE	ISOLATION VALVE (SUCTION)	VABLPD207828	SULFURIC ACID DOSING SKID	PI001 SHEET 12	CHEMLINE	CHEMLINE	21K005VCF+(2x)21005-4K8N-1
P9-532-V003	VALVE	ISOLATION VANNE (DISCHARGE)	VABLPD207828	SULFURIC ACID DOSING SKID	PI001 SHEET 12	CHEMLINE	CHEMLINE	21K005VCF+(2x)21005-4K8N-1

EQUIPMENT LIST

EQPMT TAG	EQUIPMENT TYPE	DESCRIPTION	EQUIPMENT CODE	LOCATION	P&ID	SUPPLIER	MANUFACTURER	MODEL NUMBER
P9-532-V004	VALVE	ISOLATION VANNE (DISCHARGE)	VABLPD207828	SULFURIC ACID DOSING SKID	PI001 SHEET 12	CHEMLINE	CHEMLINE	21K005VCF+(2x)21005-4K8N-1
P9-532-V005	VALVE	CLEANING VALVE	VABLPD207828	SULFURIC ACID DOSING SKID	PI001 SHEET 12	CHEMLINE	CHEMLINE	21K005VCF+(2x)21005-4K8N-1
P9-591	PUMP	KMnO4 METERING PUMP	ST-999-003	KMnO4 DOSING SKID	PI001 SHEET 17	PULSAFEEDER		
P9-591-V001	VALVE	ISOLATION VALVE (SUCTION)	VABLPV200251	KMnO4 DOSING SKID	PI001 SHEET 17	CHEMLINE	CHEMLINE	21A010EC,TYPE21
P9-591-V002	VALVE	ISOLATION VALVE (SUCTION)	VABLPV200251	KMnO4 DOSING SKID	PI001 SHEET 17	CHEMLINE	CHEMLINE	21A010EC,TYPE21
P9-591-V003	VALVE	CLEANING VALVE	VABLPV200249	KMnO4 DOSING SKID	PI001 SHEET 17	CHEMLINE	CHEMLINE	21A005EC,TYPE21
P9-591-V004	VALVE	ISOLATION VALVE (DISCHARGE)	VABLPV200251	KMnO4 DOSING SKID	PI001 SHEET 17	CHEMLINE	CHEMLINE	21A010EC,TYPE21
P9-591-V005	VALVE	ISOLATION VALVE (DISCHARGE)	VABLPV200250	KMnO4 DOSING SKID	PI001 SHEET 17	CHEMLINE	CHEMLINE	21A007EC,TYPE21
P9-591-V006	VALVE	ISOLATION VALVE (DISCHARGE)	VABLPV200251	KMnO4 DOSING SKID	PI001 SHEET 17	CHEMLINE	CHEMLINE	21A010EC,TYPE21
P9-592	PUMP	KMnO4 METERING PUMP	ST-999-003	KMnO4 DOSING SKID	PI001 SHEET 17	PULSAFEEDER		
P9-592-V001	VALVE	ISOLATION VALVE (SUCTION)	VABLPV200251	KMnO4 DOSING SKID	PI001 SHEET 17	CHEMLINE	CHEMLINE	21A010EC,TYPE21
P9-592-V002	VALVE	ISOLATION VALVE (SUCTION)	VABLPV200251	KMnO4 DOSING SKID	PI001 SHEET 17	CHEMLINE	CHEMLINE	21A010EC,TYPE21
P9-592-V003	VALVE	CLEANING VALVE	VABLPV200249	KMnO4 DOSING SKID	PI001 SHEET 17	CHEMLINE	CHEMLINE	21A005EC,TYPE21
P9-592-V004	VALVE	ISOLATION VALVE (DISCHARGE)	VABLPV200251	KMnO4 DOSING SKID	PI001 SHEET 17	CHEMLINE	CHEMLINE	21A010EC,TYPE21
P9-621	PUMP	CAVITY PROGRESSIVE PUMP	ST-999-006	CATIONIC POLYMER DOSING SKID	PI001 SHEET 19	SEEPEX	SEEPEX	
P9-621-V001	VALVE	ISOLATION VALVE (SUCTION)	VABLPV200253	CATIONIC POLYMER DOSING SKID	PI001 SHEET 19	CHEMLINE	CHEMLINE	21A015EC,TYPE21
P9-621-V002	VALVE	ISOLATION VALVE (SUCTION)	VABLPV200251	CATIONIC POLYMER DOSING SKID	PI001 SHEET 19	CHEMLINE	CHEMLINE	21A010EC,TYPE21
P9-621-V003	VALVE	CLEANING VALVE	VABLPV200249	CATIONIC POLYMER DOSING SKID	PI001 SHEET 19	CHEMLINE	CHEMLINE	21A005EC,TYPE21
P9-621-V004	VALVE	CLEANING VALVE	VABLPV200251	CATIONIC POLYMER DOSING SKID	PI001 SHEET 19	CHEMLINE	CHEMLINE	21A010EC,TYPE21
P9-621-V005	VALVE	CLEANING VALVE	VABLPV200249	CATIONIC POLYMER DOSING SKID	PI001 SHEET 19	CHEMLINE	CHEMLINE	21A005EC,TYPE21
P9-622	PUMP	CAVITY PROGRESSIVE PUMP	ST-999-006	CATIONIC POLYMER DOSING SKID	PI001 SHEET 19	SEEPEX	SEEPEX	
P9-622-V001	VALVE	ISOLATION VALVE (SUCTION)	VABLPV200253	CATIONIC POLYMER DOSING SKID	PI001 SHEET 19	CHEMLINE	CHEMLINE	21A015EC,TYPE21
P9-622-V002	VALVE	ISOLATION VALVE (SUCTION)	VABLPV200251	CATIONIC POLYMER DOSING SKID	PI001 SHEET 19	CHEMLINE	CHEMLINE	21A010EC,TYPE21
P9-622-V003	VALVE	CLEANING VALVE	VABLPV200249	CATIONIC POLYMER DOSING SKID	PI001 SHEET 19	CHEMLINE	CHEMLINE	21A005EC,TYPE21
P9-622-V004	VALVE	CLEANING VALVE	VABLPV200251	CATIONIC POLYMER DOSING SKID	PI001 SHEET 19	CHEMLINE	CHEMLINE	21A010EC,TYPE21
P9-622-V005	VALVE	CLEANING VALVE	VABLPV200249	CATIONIC POLYMER DOSING SKID	PI001 SHEET 19	CHEMLINE	CHEMLINE	21A005EC,TYPE21
P9-623	PUMP	CAVITY PROGRESSIVE PUMP	ST-999-006	CATIONIC POLYMER DOSING SKID	PI001 SHEET 19	SEEPEX	SEEPEX	
P9-623-V001	VALVE	ISOLATION VALVE (SUCTION)	VABLPV200253	CATIONIC POLYMER DOSING SKID	PI001 SHEET 19	CHEMLINE	CHEMLINE	21A015EC,TYPE21
P9-623-V002	VALVE	ISOLATION VALVE (SUCTION)	VABLPV200251	CATIONIC POLYMER DOSING SKID	PI001 SHEET 19	CHEMLINE	CHEMLINE	21A010EC,TYPE21
P9-623-V003	VALVE	CLEANING VALVE	VABLPV200249	CATIONIC POLYMER DOSING SKID	PI001 SHEET 19	CHEMLINE	CHEMLINE	21A005EC,TYPE21
P9-623-V004	VALVE	CLEANING VALVE	VABLPV200251	CATIONIC POLYMER DOSING SKID	PI001 SHEET 19	CHEMLINE	CHEMLINE	21A010EC,TYPE21
P9-623-V005	VALVE	CLEANING VALVE	VABLPV200249	CATIONIC POLYMER DOSING SKID	PI001 SHEET 19	CHEMLINE	CHEMLINE	21A005EC,TYPE21
PD9-514	MISC	PULSATION DAMPENER	PUSPPV200278	COAGULANT DOSING SKID	PI001 SHEET 10	PRIMARY FLUID	ACCU-PULSE	API-PVC-N-2
PD9-514-V001	VALVE	ISOLATION VALVE (DISCHARGE)	VABLPV200251	COAGULANT DOSING SKID	PI001 SHEET 10	CHEMLINE	CHEMLINE	21A010EC,TYPE21
PD9-514-V002	VALVE	CLEANING VALVES	VABLPV200249	COAGULANT DOSING SKID	PI001 SHEET 10	CHEMLINE	CHEMLINE	21A005EC,TYPE21
PD9-531	MISC	PULSATION DAMPENER	PUSPPD203070	SULFURIC ACID DOSING SKID	PI001 SHEET 12	PRIMARY FLUID	ACCU-PULSE	API-PVDF-V-1-F
PD9-531-V001	VALVE	ISOLATION VALVE	VABLPD207828	SULFURIC ACID DOSING SKID	PI001 SHEET 12	CHEMLINE	CHEMLINE	21K005VCF+(2x)21005-4K8N-1
PD9-531-V002	VALVE	CLEANING VALVE	VABLPD207828	SULFURIC ACID DOSING SKID	PI001 SHEET 12	CHEMLINE	CHEMLINE	21K005VCF+(2x)21005-4K8N-1
PD9-591	MISC	PULSTAION DAMPENER	PUSPPV304128	KMnO4 DOSING SKID	PI001 SHEET 17	PRIMARY FLUID	ACCU-PULSE	API-PVC-E-2
PD9-591-V001	VALVE	ISOLATION VALVE (DISCHARGE)	VABLPV200250	KMnO4 DOSING SKID	PI001 SHEET 17	CHEMLINE	CHEMLINE	21A007EC,TYPE21
PD9-591-V002	VALVE	CLEANING VALVE	VABLPV200249	KMnO4 DOSING SKID	PI001 SHEET 17	CHEMLINE	CHEMLINE	21A005EC,TYPE21
PI15-041	INSTRUMENT	SERVICE WATER PRESSURE GAUGE	IMPSGG300380	KMnO4 PREP SYSTEM	PI001 SHEET 16	TECKNO VALVE	ASHCROFT	25-1009SWL-02L-160PSIG
PI18-031	INSTRUMENT	SERVICE WATER PRESSURE GAUGE	IMPSGG300380	HYDRAPOL 3500	PI001 SHEET 18	TECKNO VALVE	ASHCROFT	25-1009SWL-02L-160PSIG
PI2-011	INSTRUMENT	DIAPHRAGM PRESSURE GAUGE	ST-413-359	ACTIFLO RECIRCULATION LINE MODIFICATION	PI001 SHEET 02	TECKNO VALVE	ASHCROFT	45-1009SL-04L-60#-XAJ C/W SEAL 50-101SS-04T-XCG
PI2-011-V001	VALVE	ISOLATION VALVE	VABLSS200267	ACTIFLO RECIRCULATION LINE MODIFICATION	PI001 SHEET 02	CFF	CFF	SS2-15 (1/2)
PI2-011-V002	VALVE	ISOLATION VALVE	VABLSS200267	ACTIFLO RECIRCULATION LINE MODIFICATION	PI001 SHEET 02	CFF	CFF	SS2-15 (1/2)
PI2-012	INSTRUMENT	DIAPHRAGM PRESSURE GAUGE	ST-413-359	ACTIFLO RECIRCULATION LINE MODIFICATION	PI001 SHEET 02	TECKNO VALVE	ASHCROFT	45-1009SL-04L-60#-XAJ C/W SEAL 50-101SS-04T-XCG
PI2-012-V001	VALVE	ISOLATION VALVE	VABLSS200267	ACTIFLO RECIRCULATION LINE MODIFICATION	PI001 SHEET 02	CFF	CFF	SS2-15 (1/2)
PI2-012-V002	VALVE	ISOLATION VALVE	VABLSS200267	ACTIFLO RECIRCULATION LINE MODIFICATION	PI001 SHEET 02	CFF	CFF	SS2-15 (1/2)
PI2-021	INSTRUMENT	DIAPHRAGM PRESSURE GAUGE	ST-413-359	ACTIFLO RECIRCULATION LINE MODIFICATION	PI001 SHEET 03	TECKNO VALVE	ASHCROFT	45-1009SL-04L-60#-XAJ C/W SEAL 50-101SS-04T-XCG

EQUIPMENT LIST

EQPMT TAG	EQUIPMENT TYPE	DESCRIPTION	EQUIPMENT CODE	LOCATION	P&ID	SUPPLIER	MANUFACTURER	MODEL NUMBER
PI2-021-V001	VALVE	ISOLATION VALVE	VABLSS200267	ACTIFLO RECIRCULATION LINE MODIFICATION	PI001 SHEET 03	CFF	CFF	SS2-15 (1/2)
PI2-021-V002	VALVE	ISOLATION VALVE	VABLSS200267	ACTIFLO RECIRCULATION LINE MODIFICATION	PI001 SHEET 03	CFF	CFF	SS2-15 (1/2)
PI2-022	INSTRUMENT	DIAPHRAGM PRESSURE GAUGE	ST-413-359	ACTIFLO RECIRCULATION LINE MODIFICATION	PI001 SHEET 03	TECKNO VALVE	ASHCROFT	45-1009SL-04L-60#-XAJ C/W SEAL 50-101SS-04T-XCG
PI2-022-V001	VALVE	ISOLATION VALVE	VABLSS200267	ACTIFLO RECIRCULATION LINE MODIFICATION	PI001 SHEET 03	CFF	CFF	SS2-15 (1/2)
PI2-022-V002	VALVE	ISOLATION VALVE	VABLSS200267	ACTIFLO RECIRCULATION LINE MODIFICATION	PI001 SHEET 03	CFF	CFF	SS2-15 (1/2)
PI4-011	INSTRUMENT	DIAPHRAGM PRESSURE GAUGE	ST-413-359	SLUDGE TANK	PI001 SHEET 04	TECKNO VALVE	ASHCROFT	45-1009SL-04L-60#-XAJ C/W SEAL 50-101SS-04T-XCG
PI4-011-V001	VALVE	ISOLATION VALVE	VABLSS200267	SLUDGE TANK	PI001 SHEET 04	CFF	CFF	SS2-15 (1/2)
PI4-011-V002	VALVE	ISOLATION VALVE	VABLSS200267	SLUDGE TANK	PI001 SHEET 04	CFF	CFF	SS2-15 (1/2)
PI5-011	INSTRUMENT	DIAPHRAGM PRESSURE GAUGE	ST-434-501	RX75-2 SLUDGE TANK	PI001 SHEET 05	ONYX	ONXYVALVE	Size 4" Series PSW
PI5-012	INSTRUMENT	DIAPHRAGM PRESSURE GAUGE	ST-434-501	RX75-2 SLUDGE TANK	PI001 SHEET 05	ONYX	ONXYVALVE	Size 4" Series PSW
PI9-514	INSTRUMENT	BACKPRESSURE VALVE GAUGE	INCLUDED WITH BPV9-514	COAGULANT DOSING SKID	PI001 SHEET 10	CHEMLINE		
PI9-524	INSTRUMENT	BACKPRESSURE VALVE GAUGE	INCLUDED WITH BPV9-524	ANIONIC POLYMER DOSING SKID	PI001 SHEET 15	CHEMLINE		
PI9-525	INSTRUMENT	BACKPRESSURE VALVE GAUGE	INCLUDED WITH BPV9-525	ANIONIC POLYMER DOSING SKID	PI001 SHEET 15	CHEMLINE		
PI9-526	INSTRUMENT	BACKPRESSURE VALVE GAUGE	INCLUDED WITH BPV9-526	ANIONIC POLYMER DOSING SKID	PI001 SHEET 15	CHEMLINE		
PI9-531	INSTRUMENT	BACKPRESSURE VALVE GAUGE	INCLUDED WITH BPV9-532	SULFURIC ACID DOSING SKID	PI001 SHEET 12	CHEMLINE		
PI9-532	INSTRUMENT	BACKPRESSURE VALVE GAUGE	INCLUDED WITH PD9-531	SULFURIC ACID DOSING SKID	PI001 SHEET 12	PRIMARY FLUID		
PI9-591	INSTRUMENT	BACKPRESSURE VALVE GAUGE	INCLUDED WITH BPV9-591	KMnO4 DOSING SKID	PI001 SHEET 17	CHEMLINE		
PI9-621	INSTRUMENT	PRESSURE GAUGE	INCLUDED WITH PRV9-621	CATIONIC POLYMER DOSING SKID	PI001 SHEET 19	CHEMLINE		
PI9-622	INSTRUMENT	PRESSURE GAUGE	INCLUDED WITH PRV9-622	CATIONIC POLYMER DOSING SKID	PI001 SHEET 19	CHEMLINE		
PI9-623	INSTRUMENT	PRESSURE GAUGE	INCLUDED WITH PRV9-623	CATIONIC POLYMER DOSING SKID	PI001 SHEET 19	CHEMLINE		
PRV9-513	VALVE	RELIEF VALVE	VARFPV207282	COAGULANT DOSING SKID	PI001 SHEET 10	CHEMLINE	CHEMLINE	SB12A010EU
PRV9-514	VALVE	RELIEF VALVE	VARFPV207282	COAGULANT DOSING SKID	PI001 SHEET 10	CHEMLINE	CHEMLINE	SB12A010EU
PRV9-524	VALVE	RELIEF VALVE	VARFPV207282	ANIONIC POLYMER DOSING SKID	PI001 SHEET 15	CHEMLINE	CHEMLINE	SB12A010EU
PRV9-525	VALVE	RELIEF VALVE	VARFPV207282	ANIONIC POLYMER DOSING SKID	PI001 SHEET 15	CHEMLINE	CHEMLINE	SB12A010EU
PRV9-526	VALVE	RELIEF VALVE	VARFPV207282	ANIONIC POLYMER DOSING SKID	PI001 SHEET 15	CHEMLINE	CHEMLINE	SB12A010EU
PRV9-531	VALVE	RELIEF VALVE	VARFPD200193	SULFURIC ACID DOSING SKID	PI001 SHEET 12	CHEMLINE	CHEMLINE	SB12K005VCFx+(2x)SB005-17K8N-1
PRV9-532	VALVE	RELIEF VALVE	VARFPD200193	SULFURIC ACID DOSING SKID	PI001 SHEET 12	CHEMLINE	CHEMLINE	SB12K005VCFx+(2x)SB005-17K8N-1
PRV9-591	VALVE	RELIEF VALVE	VARFPV207282	KMnO4 DOSING SKID	PI001 SHEET 17	CHEMLINE	CHEMLINE	SB12A010EU
PRV9-592	VALVE	RELIEF VALVE	VARFPV207282	KMnO4 DOSING SKID	PI001 SHEET 17	CHEMLINE	CHEMLINE	SB12A010EU
PRV9-621	VALVE	RELIEF VALVE	VARFPV348512	CATIONIC POLYMER DOSING SKID	PI001 SHEET 19	CHEMLINE	CHEMLINE	SB12A010EU + SGA-005-002-P-G + P025-160-BM (CONFIG. L_U)
PRV9-622	VALVE	RELIEF VALVE	VARFPV348512	CATIONIC POLYMER DOSING SKID	PI001 SHEET 19	CHEMLINE	CHEMLINE	SB12A010EU + SGA-005-002-P-G + P025-160-BM (CONFIG. L_U)
PRV9-623	VALVE	RELIEF VALVE	VARFPV348512	CATIONIC POLYMER DOSING SKID	PI001 SHEET 19	CHEMLINE	CHEMLINE	SB12A010EU + SGA-005-002-P-G + P025-160-BM (CONFIG. L_U)
PSL15-041	INSTRUMENT	SERVICE WATER PRESSURE SWITCH	IEPOPS201955	KMnO4 PREP SYSTEM	PI001 SHEET 16	LUMEN	ALLEN BRADLEY	836T-T253J
PSL18-031	INSTRUMENT	SERVICE WATER PRESSURE SWITCH	IEPOPS201955	HYDRAPOL 3500	PI001 SHEET 18	LUMEN	ALLEN BRADLEY	836T-T253J
PSL5-011	INSTRUMENT	DIAPHRAGM PRESSURE GAUGE	INCLUDED WITH PI5-011	RX75-2 SLUDGE TANK	PI001 SHEET 05	TECKNO VALVE		
PSL5-012	INSTRUMENT	DIAPHRAGM PRESSURE GAUGE	INCLUDED WITH PI5-012	RX75-2 SLUDGE TANK	PI001 SHEET 05	TECKNO VALVE		
SM9-591	MIXER	STATIC MIXER	FPMIPV202516	KMnO4 PREP SYSTEM	PI001 SHEET 16	KOFLO	KOFLO	1.5-40C-4-6-2
SM9-621	MIXER	STATIC MIXER	IEGUSP300707	HYDRAPOL 3500	PI001 SHEET 18	KOFLO	KOFLO	2-40C-4-6-2
SP9-531	MISC	SECONDARY CONTAINMENT	XXX	SULFURIC ACID DOSING SKID	PI001 SHEET 12	ACO		
SV15-011	VALVE	ON/OFF VALVE - CARRIER WATER	VASDSS351509	ANIONIC POLYMER DOSING SKID	PI001 SHEET 15	TECKNO VALVE	ASCO	8210G089-120VAC
SV15-021	VALVE	ON/OFF VALVE - CARRIER WATER	VASDSS351509	ANIONIC POLYMER DOSING SKID	PI001 SHEET 15	TECKNO VALVE	ASCO	8210G089-120VAC
SV15-041	VALVE	SOLENOID VALVE - FEEDER	VASDBR352337	KMnO4 PREP SYSTEM	PI001 SHEET 16	TECKNO VALVE	ASCO	EF8345G001-120VAC
SV15-042	VALVE	SOLENOID VALVE - DRIVING WATER	VASDBZ336126	KMnO4 PREP SYSTEM	PI001 SHEET 16	TECKNO VALVE	ASCO	EF8210G004-120VAC
SV18-031	VALVE	SOLENOID VALVE - FEEDER	VASDBR352337	HYDRAPOL 3500	PI001 SHEET 18	TECKNO VALVE	ASCO	EF8345G001-120VAC
SV18-032	VALVE	SOLENOID VALVE - DRIVING WATER	VASDBR352335	HYDRAPOL 3500	PI001 SHEET 18	TECKNO VALVE	ASCO	EF8210G022-120VAC
SV9-591	VALVE	SOLENOID VALVE	ST-304-102	KMnO4 PREP SYSTEM	PI001 SHEET 16	TECKNO VALVE	ASCO	8210G094 120VAC
T1-011-V001	VALVE	DRAIN VALVE	ST-312-112	RX75-3 PRECIPITATION REACTOR	PI001 SHEET 01	DM VALVE	PRATT	601N1-L/4"
T5-011-V004	VALVE	DRAIN VALVE	ST-312-112	RX75-2 SLUDGE TANK	PI001 SHEET 05	DM VALVE	PRATT	601N1-L/4"
T5-012-V004	VALVE	DRAIN VALVE	ST-312-112	RX75-2 SLUDGE TANK	PI001 SHEET 05	DM VALVE	PRATT	601N1-L/4"
T9-531	TANK	STORAGE TANK	XXX	SULFURIC ACID DOSING SKID	PI001 SHEET 12	ACO		

EQUIPMENT LIST

EQPMT TAG	EQUIPMENT TYPE	DESCRIPTION	EQUIPMENT CODE	LOCATION	P&ID	SUPPLIER	MANUFACTURER	MODEL NUMBER
T9-591	TANK	MATURATION TANK	FATAHP205320	KMnO4 PREP SYSTEM	PI001 SHEET 16	Davidson		
T9-591-V001	VALVE	DRAIN VALVE	VABLPV200253	KMnO4 PREP SYSTEM	PI001 SHEET 16	CHEMLINE	CHEMLINE	21A015EC,TYPE21
T9-591-V002	VALVE	Actuated Transfer Valve	VABFPV352256	KMnO4 PREP SYSTEM	PI001 SHEET 16	CHEMLINE	CHEMLINE	57A020AEL-A / ER20.12
T9-592	TANK	STORAGE TANK	FATAHP205331	KMnO4 PREP SYSTEM	PI001 SHEET 16	Davidson		
T9-592-V001	VALVE	DRAIN VALVE	VABLPV200253	KMnO4 PREP SYSTEM	PI001 SHEET 16	CHEMLINE	CHEMLINE	21A015EC,TYPE21
T9-592-V002	VALVE	ISOLATION VALVE - TANK OUTLET	VABLPV200253	KMnO4 PREP SYSTEM	PI001 SHEET 16	CHEMLINE	CHEMLINE	21A015EC,TYPE21
T9-621	TANK	MATURATION TANK	FATAHP205328	HYDRAPOL 3500	PI001 SHEET 18	Davidson		
T9-621-V001	VALVE	ISOLATION VALVE - TANK DRAIN	VABLPV303543	HYDRAPOL 3500	PI001 SHEET 18	CHEMLINE	CHEMLINE	21A030ES,TYPE21
T9-621-V002	VALVE	Actuated Transfer Valve	VASDBR330455	HYDRAPOL 3500	PI001 SHEET 18	CHEMLINE	ASCO	8345G001-120VAC
T9-622	TANK	STORAGE TANK	FATAHP205339	HYDRAPOL 3500	PI001 SHEET 18	Davidson		
T9-622-V001	VALVE	ISOLATION VALVE - TANK DRAIN	VABLPV303543	HYDRAPOL 3500	PI001 SHEET 18	CHEMLINE	CHEMLINE	21A030ES,TYPE21
T9-622-V002	VALVE	ISOLATION VALVE - TANK OUTLET	VABLPV303543	HYDRAPOL 3500	PI001 SHEET 18	CHEMLINE	CHEMLINE	21A030ES,TYPE21
TSE5-011	INSTRUMENT	HIGH TEMPERATURE	INCLUDED WITH P5-011	RX75-2 SLUDGE TANK	PI001 SHEET 05	SEEPEX		
TSE5-012	INSTRUMENT	HIGH TEMPERATURE	INCLUDED WITH P5-012	RX75-2 SLUDGE TANK	PI001 SHEET 05	SEEPEX		
TSE9-524	INSTRUMENT	HIGH TEMPERATURE	INCLUDED WITH P9-524	ANIONIC POLYMER DOSING SKID	PI001 SHEET 15	SEEPEX		
TSE9-525	INSTRUMENT	HIGH TEMPERATURE	INCLUDED WITH P9-525	ANIONIC POLYMER DOSING SKID	PI001 SHEET 15	SEEPEX		
TSE9-526	INSTRUMENT	HIGH TEMPERATURE	INCLUDED WITH P9-526	ANIONIC POLYMER DOSING SKID	PI001 SHEET 15	SEEPEX		
TSE9-621	INSTRUMENT	HIGH TEMPERATURE	INCLUDED WITH P9-621	CATIONIC POLYMER DOSING SKID	PI001 SHEET 19	SEEPEX		
TSE9-622	INSTRUMENT	HIGH TEMPERATURE	INCLUDED WITH P9-622	CATIONIC POLYMER DOSING SKID	PI001 SHEET 19	SEEPEX		
TSE9-623	INSTRUMENT	HIGH TEMPERATURE	INCLUDED WITH P9-623	CATIONIC POLYMER DOSING SKID	PI001 SHEET 19	SEEPEX		
TT15-001	INSTRUMENT	TEMPERATURE ANALYZER	INCLUDED WITH AE1-012	RX75-3 PRECIPITATION REACTOR	PI001 SHEET 01	HACH		
UNIT 0101	TANK	TANK	N/A	RX75-3 PRECIPITATION REACTOR	PI001 SHEET 01	VWTC		
UNIT 0501	TANK	STORAGE TANK	T5-011	RX75-2 SLUDGE TANK	PI001 SHEET 05	ACIER ROGER		
V15-011	VALVE	GLOVE VALVE - CARRIER WATER	VAGLPV207831	ANIONIC POLYMER DOSING SKID	PI001 SHEET 15	CHEMLINE	CHEMLINE	GVA010S
V15-012	VALVE	GLOVE VALVE - CARRIER WATER	VAGLPV207831	ANIONIC POLYMER DOSING SKID	PI001 SHEET 15	CHEMLINE	CHEMLINE	GVA010S
V15-021	VALVE	GLOVE VALVE - CARRIER WATER	VAGLPV207831	ANIONIC POLYMER DOSING SKID	PI001 SHEET 15	CHEMLINE	CHEMLINE	GVA010S
V15-022	VALVE	GLOVE VALVE - CARRIER WATER	VAGLPV207831	ANIONIC POLYMER DOSING SKID	PI001 SHEET 15	CHEMLINE	CHEMLINE	GVA010S
V15-041	VALVE	ISOLATION VALVE - DRIVING WATER	VABLPV200251	KMnO4 PREP SYSTEM	PI001 SHEET 16	CHEMLINE	CHEMLINE	21A010EC,TYPE21
V15-042	VALVE	METERING VALVE - WETTING CONE	VABLPV346917	KMnO4 PREP SYSTEM	PI001 SHEET 16	CHEMLINE	CHEMLINE	SM2A005ES
V15-043	VALVE	METERING VALVE - WETTING CONE	VABLPV346917	KMnO4 PREP SYSTEM	PI001 SHEET 16	CHEMLINE	CHEMLINE	SM2A005ES
V18-031	VALVE	ISOLATION VALVE - DRIVING WATER	VABLPV200253	HYDRAPOL 3500	PI001 SHEET 18	CHEMLINE	CHEMLINE	21A015EC,TYPE21
V18-032	VALVE	METERING VALVE - WETTING CONE	VABLPV346917	HYDRAPOL 3500	PI001 SHEET 18	CHEMLINE	CHEMLINE	SM2A005ES
V18-033	VALVE	METERING VALVE - WETTING CONE	VABLPV346917	HYDRAPOL 3500	PI001 SHEET 18	CHEMLINE	CHEMLINE	SM2A005ES
V2-010	VALVE	DRAIN VALVE	VABLSS204735	ACTIFLO RECIRCULATION LINE MODIFICATION	PI001 SHEET 02	PINACLE	PINACLE	316VTB22
V2-011	VALVE	DRAIN VALVE	VABLSS204735	ACTIFLO RECIRCULATION LINE MODIFICATION	PI001 SHEET 02	PINACLE	PINACLE	316VTB22
V2-012	VALVE	DRAIN VALVE	VABLSS200268	ACTIFLO RECIRCULATION LINE MODIFICATION	PI001 SHEET 02	CFF	CFF	SS2-20 (3/4)
V2-013	VALVE	DRAIN VALVE	VABLSS200268	ACTIFLO RECIRCULATION LINE MODIFICATION	PI001 SHEET 02	CFF	CFF	SS2-20 (3/4)
V2-020	VALVE	DRAIN VALVE	VABLSS204735	ACTIFLO RECIRCULATION LINE MODIFICATION	PI001 SHEET 03	PINACLE	PINACLE	316VTB22
V2-021	VALVE	DRAIN VALVE	VABLSS204735	ACTIFLO RECIRCULATION LINE MODIFICATION	PI001 SHEET 03	PINACLE	PINACLE	316VTB22
V2-022	VALVE	DRAIN VALVE	VABLSS200268	ACTIFLO RECIRCULATION LINE MODIFICATION	PI001 SHEET 03	CFF	CFF	SS2-20 (3/4)
V2-023	VALVE	DRAIN VALVE	VABLSS200268	ACTIFLO RECIRCULATION LINE MODIFICATION	PI001 SHEET 03	CFF	CFF	SS2-20 (3/4)
V9-518	VALVE	ISOLATION VALVE	VABLSS200267	RX75-3 PRECIPITATION REACTOR	PI001 SHEET 01	CFF	CFF	SS2-15 (1/2)
V9-522	VALVE	ISOLATION VALVE (SUCTION)	VABLPV200253	ANIONIC POLYMER DOSING SKID	PI001 SHEET 15	CHEMLINE	CHEMLINE	21A015EC,TYPE21
V9-523	VALVE	ISOLATION VALVE (DISCHARGE)	VABLPV200251	ANIONIC POLYMER DOSING SKID	PI001 SHEET 15	CHEMLINE	CHEMLINE	21A010EC,TYPE21
V9-524	VALVE	ISOLATION VALVE (DISCHARGE)	VABLPV200251	ANIONIC POLYMER DOSING SKID	PI001 SHEET 15	CHEMLINE	CHEMLINE	21A010EC,TYPE21
V9-525	VALVE	ISOLATION VALVE (DISCHARGE)	VABLPV200251	ANIONIC POLYMER DOSING SKID	PI001 SHEET 15	CHEMLINE	CHEMLINE	21A010EC,TYPE21
V9-526	VALVE	ISOLATION VALVE (DISCHARGE)	VABLPV200251	ANIONIC POLYMER DOSING SKID	PI001 SHEET 15	CHEMLINE	CHEMLINE	21A010EC,TYPE21
V9-536	VALVE	DRAIN VALVE	VABLPD207828	SULFURIC ACID DOSING SKID	PI001 SHEET 12	CHEMLINE	CHEMLINE	21K005VCF+(2x)21005-4K8N-1
V9-537	VALVE	ISOLATION VALVE	VABLPD207828	SULFURIC ACID DOSING SKID	PI001 SHEET 12	CHEMLINE	CHEMLINE	21K005VCF+(2x)21005-4K8N-1
V9-541	VALVE	ISOLATION VALVE	VABLSS200267	RX75-3 PRECIPITATION REACTOR	PI001 SHEET 01	CFF	CFF	SS2-15 (1/2)

EQUIPMENT LIST

EQPMT TAG	EQUIPMENT TYPE	DESCRIPTION	EQUIPMENT CODE	LOCATION	P&ID	SUPPLIER	MANUFACTURER	MODEL NUMBER
V9-542	VALVE	ISOLATION VALVE	VABLSS200267	RX75-3 PRECIPITATION REACTOR	PI001 SHEET 01	CFF	CFF	SS2-15 (1/2)
V9-591	VALVE	ISOLATION VALVE (COMMON SUCTION)	VABLPV200251	KMnO4 DOSING SKID	PI001 SHEET 17	CHEMLINE	CHEMLINE	21A010EC,TYPE21
V9-592	VALVE	ISOLATION VALVE	VABLSS200267	RX75-3 PRECIPITATION REACTOR	PI001 SHEET 01	CFF	CFF	SS2-15 (1/2)
V9-593	VALVE	ISOLATION VALVE	VABLSS200267	RX75-3 PRECIPITATION REACTOR	PI001 SHEET 01	CFF	CFF	SS2-15 (1/2)
V9-622	VALVE	ISOLATION VALVE (SUCTION)	VABLPV200253	CATIONIC POLYMER DOSING SKID	PI001 SHEET 19	CHEMLINE	CHEMLINE	21A015EC,TYPE21
V9-623	VALVE	ISOLATION VALVE (DISCHARGE)	VABLPV200251	CATIONIC POLYMER DOSING SKID	PI001 SHEET 19	CHEMLINE	CHEMLINE	21A010EC,TYPE21
V9-624	VALVE	ISOLATION VALVE (DISCHARGE)	VABLPV200251	CATIONIC POLYMER DOSING SKID	PI001 SHEET 19	CHEMLINE	CHEMLINE	21A010EC,TYPE21
V9-625	VALVE	ISOLATION VALVE (DISCHARGE)	VABLPV200251	CATIONIC POLYMER DOSING SKID	PI001 SHEET 19	CHEMLINE	CHEMLINE	21A010EC,TYPE21
V9-627	VALVE	ISOLATION VALVE (DISCHARGE)	VABLPV200251	CATIONIC POLYMER DOSING SKID	PI001 SHEET 19	CHEMLINE	CHEMLINE	21A010EC,TYPE21
V9-628	VALVE	ISOLATION VALVE (DISCHARGE)	VABLPV200251	CATIONIC POLYMER DOSING SKID	PI001 SHEET 19	CHEMLINE	CHEMLINE	21A010EC,TYPE21
VAC9-591	MISC	PNEUMATIC CONVEYER	INCLUDED WITH VCM9-591	KMnO4 PREP SYSTEM	PI001 SHEET 16	HAPMAN		
VCM9-591	MISC	CONVEYER MOTOR	ST-999-010	KMnO4 PREP SYSTEM	PI001 SHEET 16	HAPMAN		
ZS9-591	INSTRUMENT		INCLUDED WITH VCM9-591	KMnO4 PREP SYSTEM	PI001 SHEET 16	HAPMAN		

LEFT BLANK

4 – DETAILED TECHNICAL DOCUMENTATION

4.2 – PRODUCT DATA SHEETS

LEFT BLANK

	VEOLIA					VWT DOC#		PDS_0001_RX_VWT	
						PROJECT No		5000218009	
						Date		3/2/2018	
						REACTOR STAGE 1			
CLIENT		REV	DESCRIPTION			DATE	By:	CHKD	APP.
AEM		1	For Information			3/2/2018	L.J.	G.P.	C.B.
		2	As noted by client			3/21/2018	L.J.		
PROJECT		3							
AMARUK, NU		4							
		5							
		6							
		7							REV
GENERAL INFORMATION	Technology					-	Metal PRECIPITATION Reactor		
	Number of trains					-	1		
	Type					-	Prefab. Reaction tank		
	TAG								
	Model						RX75-3		
	Number of units					-	1		
ENVIRONMENT CONDITIONS	Equipment Location					-	Indoor		
	Altitude (if blower)					m	N/A		
	Min. Temperature- WATER					°C	1		
	Max. Temperature- WATER					°C	25		
	Min. Temperature- AIR					°C	7		
	Max. Temperature- AIR					°C	35		
	Max. Humidity					%	100		
	Corrosive atmosphere					-	Non Hazardous Area,Non corrosive		
	Freeze conditions					-	Maintain above freezing temperature		
	Comments					-	_		
COMPONENTS APPROVAL AND CERTIFICATIONS	NSF-61			yes/no		-	NO		
	CSA / UL			yes/no			YES		
	Others					-	N/A		
SAFETY	Electrical Classification (according to NFPA 820)					-	N/A		
	Province						NUNAVUT		
REQUIRED PERFORMANCE	Application					-	INDUSTRIAL		
	Design Capacity			Day of 12hr , 2 ACP of 1000m3/hr each.		m^3/d	24000		
	Retention time at design capacity winter			Winter capacity = 84 m^3/hr		min	127.5	or 2hr7.5min.	
	Retention time at design capacity (incl. recirculation)			AT 1600m^3/hr+4x56m^3/hr = 1824 6m^3/hr		min	5.8		
	Volume			one tank = 29.53m^3 x 3tanks =		m^3	TOTAL VOLUME 179m^3 at 3.25m Height		
	Effluent Quality					Specs reference (specify)	N/A		
TECHNICAL DESCRIPTION	Tank #1		Basin Dimensions	Length		in (mm)	168.5 in (4 280mm)		
				Width		in (mm)	168.5 in (4 280mm)		
				Water Depth		in (mm)	128 in. (3250 mm)		
				CONTACT TIME nominal		min.	2.3 to 9.4		
			Mixers	Manufacturer		-	ENVIREQUIP W.T.E.M. INC		
				Model		-	Envirequip MIX-TECH EVGX-6-5,0		
				Power		HP	5 HP		
				Weigth		Kg	1415 lb (642 kg)		
				Rotation/direction of thrust		-	ccw up		
				Material and Grade			304 stainless steel		
	Tank #2		Basin Dimensions	Length		in (mm)	168.5 in (4 280mm)		
				Width		in (mm)	168.5 in (4 280mm)		
				Water Depth		in (mm)	128 in. (3250 mm)		
				CONTACT TIME		min.	2.3 to 9.4		
			Mixers	Manufacturer		-	ENVIREQUIP W.T.E.M. INC		
				Model		-	Envirequip MIX-TECH EVGX-6-5,0		
				Power		HP	5 HP		
				Weigth		Kg	1415 lb (642 kg)		
				Rotation/direction of thrust		-	cw down		
				Material and Grade		-	304 stainless steel		
	Tank #3		Basin Dimensions	Length		in (mm)	168.5 in (4 280mm)		
				Width		in (mm)	168.5 in (4 280mm)		
				Water Depth		in (mm)	128 in. (3250 mm)		
				CONTACT TIME		min.	2.3 to 9.4		
			Mixers	Manufacturer		-	ENVIREQUIP W.T.E.M. INC		
				Model		-	Envirequip MIX-TECH EVGX-6-5,0		
				Power		HP	5 HP		
				Weigth		Kg	1415 lb (642 kg)		
				Rotation/direction of thrust		-	ccw up		
				Material and Grade			304 stainless steel		
	Chemical Dosage			Chemical Product		-	TBD		
				Dosage min/average/max		mg/L			
				Chemical Product		-			
				Dosage min/average/max		mg/L			

	A	B	C	D	E	F	G	H	J
87		Recirculation flow			Origin	-	NA		
88					Dosage min/average/max	m3/h			
89	OTHERS CONSTRUCTION MATERIALS	Inside Walls (if applicable)					Painted Steel		
90		Anti-rotation Baffle (if applicable)				-	304 stainless steel (std)		
91		Others				-	NA		
92		Hardware (immerged)				-	304 stainless steel (std)		
93		Hardware (non-immerged)				-	Galvanized Steel		
94	CONNECTIONS	Inlet diameter				in (mm)	24 in (600 mm)		
95		Drain Diameter				in (mm)	4 in (100 mm)		
96		Outlet diameter				in (mm)	2 X 20 in (500 mm)		
97	VALVES			Inlet modulating Valve	Manufacturer	-	N/A		
98					Valve Type	-	N/A		
99					Model | Diam.	-	N/A		
100					Quantity	-	N/A		
101			X	Isolation valve - Drain	Manufacturer	-	PRATT (former MILLIKEN)		
102					Valve Type	-	ECCENTRIC PLUG | Cl.125		
103					Model | Diam.	-	601N1-L	100 mm	
104					Quantity	-	1		
105	INSTRUMENTATION		N/A	Raw water Flowmeter	Manufacturer	-	TBD		
106					Model | Diam.		TBD		
107				Zone : *Non Hazardous*	Quantity	-	TBD		
108			X	Level Switch (High High)	Manufacturer	-	TBD		
109					Model | Diam.				
110				Zone : *Non Hazardous*	Quantity	-	TBD		
111			X	pH Clarified Water	Manufacturer	-	TBD		
112					Model | Diam.		TBD		
113				Zone : *Non Hazardous*	Quantity	-	TBD		
114				pH Clarified Water Controller	Manufacturer	-	TBD		
115					Model | Diam.		TBD		
116				Zone : *Non Hazardous*	Quantity	-	TBD		
117			N/A	Turbidimeter Clarified Water	Manufacturer	-	NA		
118					Model | Diam.		NA	NA	
119				Zone : *Non Hazardous*	Quantity	-	NA		
120				Turbidity Controller (specify of common controller)	Manufacturer	-	NA		
121					Model | Diam.		NA	NA	
122				Zone : *Non Hazardous*	Quantity	-	NA		
123			N/A	Pressure transmitter (recirculation)	Manufacturer	-	NA		
124					Model | Diam.		NA	NA	
125				Zone : *Non Hazardous*	Quantity	-	NA		
126			N/A	Pressure gauge (recirculation)	Manufacturer	-	NA		
127					Model | Diam.		NA	NA	
128				Zone : *Non Hazardous*	Quantity	-	NA		2
129			x	Others (specify)	Manufacturer	-	NA		2
130					Model | Diam.		NA		2
131					Quantity	-	NA		2
132				Comments		-	NA	NA	
133	METAL WORKS	Grating			Dimensions/Type	-	FIBERGRATE Square Mesh 1¼ x 1¼ x 1½		
134					Material	-	FRP		
135		Handrails			Dimensions/Type	-	Square Tubing 1½"		
136					Material	Saftey Yellow	Painted Steel		
137		Access (ladder/stairs)			Dimensions/Type	-	by the Actiflo tank		
138					Material	-	Other		
139		Others				-	N/A		
140		-				-	-		
141	POWER FEED	Motors				V/ph/Hz	575/3/60		
142		Panels				V/ph/Hz	575/3/60		
143		Others				V/ph/Hz	NA		
144	OTHER	Tank height				in (mm)	143.7 in (3650 mm)		
145		Recommended Headroom				in (mm)	Refer to GA dwg		
146		Recommended overall width				in (mm)	Refer to GA dwg		
147		Recommended overall length				in (mm)	Refer to GA dwg		
148		Weight (dry)				Lbs (Kg)	47 300 lbs (21 500 Kg)		
149		Weight (full of water)				Lbs (Kg)	510 840 lbs (232 200 Kg)		
150	COMMENTS	TANK INSTALL ON A TBD mm HEIGHT for hydraulic							
151									

	VEOLIA					VWT DOC#		PDS_0002_RX_VWT	
						PROJECT No		5000218009	
						Date		3/19/2018	
						Sludge Recirculation			
CLIENT		REV	DESCRIPTION			DATE	By:	CHKD	APP.
AEM		1	For Information			3/19/2018	L.J.	G.P.	C.B.
		2							
PROJECT		3							
AMARUK, NU		4							
		5							
		6							
		7							REV
GENERAL INFORMATION	Technology					-	Sludge Recirculation Reactor		
	Number of trains					-	1		
	Type					-	Prefab. Reaction tank		
	TAG								
	Model						RX75-2		
	Number of units					-	1		
ENVIRONMENT CONDITIONS	Equipment Location					-	Indoor		
	Altitude (if blower)					m	N/A		
	Min. Temperature- WATER					°C	1		
	Max. Temperature- WATER					°C	25		
	Min. Temperature- AIR					°C	7		
	Max. Temperature- AIR					°C	35		
	Max. Humidity					%	100		
	Corrosive atmosphere					-	Non Hazardous Area,Non corrosive		
	Freeze conditions					-	Maintain above freezing temperature		
	Comments					-	_		
COMPONENTS APPROVAL AND CERTIFICATIONS	NSF-61			yes/no		-	NO		
	CSA / UL			yes/no			YES		
	Others					-	N/A		
SAFETY	Electrical Classification (according to NFPA 820)					-	N/A		
	Province						NUNAVUT		
REQUIRED PERFORMANCE	Application					-	INDUSTRIAL		
	Design Capacity					m^3/d	4320		
	Nominal capacity per unit					m^3/d			
	Retention time at design capacity (incl. recirculation)			180 m^3/hr		min	19.8	by tank	
	Volume					m^3	VOLUME 59m^3X 2tank at 3.25m Height		
	Effluent Quality					Specs reference (specify)	N/A		
TECHNICAL DESCRIPTION	Tank # 1	Basin Dimensions	Length			in (mm)	168.5 in (4 280mm)		
			Width			in (mm)	168.5 in (4 280mm)		
			Water Depth			in (mm)	128 in. (3250 mm)		
			CONTACT TIME for 180 m3/hr			min.	19.80		
		Mixers	Manufacturer			-	ENVIREQUIP W.T.E.M. INC		
			Model			-	Envirequip MIX-TECH EVGX-6-5,0		
			Power			HP	5 HP		
			Weigth			Kg	1415 lb (642 kg)		
			Rotation/direction of thrust			-	cw down		
			Material and Grade				304 stainless steel		
	Tank # 2	Basin Dimensions	Length			in (mm)	168.5 in (4 280mm)		
			Width			in (mm)	168.5 in (4 280mm)		
			Water Depth			in (mm)	128 in. (3250 mm)		
			CONTACT TIME			min.	19.80		
		Mixers	Manufacturer			-	ENVIREQUIP W.T.E.M. INC		
			Model			-	Envirequip MIX-TECH EVGX-6-5,0		
			Power			HP	5 HP		
			Weigth			Kg	1415 lb (642 kg)		
			Rotation/direction of thrust			-	cw down		
			Material and Grade			-	304 stainless steel		
	Chemical Dosage			Chemical Product		-	TBD		
				Dosage min/average/max		mg/L			
				Chemical Product		-			
				Dosage min/average/max		mg/L			

	A	B	C	D	E	F	G	H	J
87		Recirculation flow			Origin	-	NA		
88					Dosage min/average/max	m3/h			
89	OTHERS CONSTRUCTION MATERIALS	Inside Walls (if applicable)					Painted Steel		
90		Anti-rotation Baffle (if applicable)				-	304 stainless steel (std)		
91		Others				-	NA		
92		Hardware (immerged)				-	304 stainless steel (std)		
93		Hardware (non-immerged)				-	Galvanized Steel		
94	CONNECTIONS	Inlet diameter				in (mm)	10 in (2500 mm) to 6''		
95		Drain Diameter				in (mm)	4 in (100 mm)		
96		Outlet diameter				in (mm)	6 in (150 mm) or 10''		
97	VALVES			Inlet modulating Valve	Manufacturer	-	N/A		
98					Valve Type	-	N/A		
99					Model | Diam.	-	N/A		
100					Quantity	-	N/A		
101			X	Isolation valve - Drain	Manufacturer	-	PRATT (former MILLIKEN)		
102					Valve Type	-	ECCENTRIC PLUG | Cl.125		
103					Model | Diam.	-	601N1-L	100 mm	
104					Quantity	-	1		
105	INSTRUMENTATION		N/A	Raw water Flowmeter	Manufacturer	-	TBD		
106					Model | Diam.		TBD		
107				Zone : *Non Hazardous*	Quantity	-	TBD		
108			X	Level Switch (High High)	Manufacturer	-	TBD		
109					Model | Diam.				
110				Zone : *Non Hazardous*	Quantity	-	TBD		
111			X	pH Clarified Water	Manufacturer	-	TBD		
112					Model | Diam.		TBD		
113				Zone : *Non Hazardous*	Quantity	-	TBD		
114				pH Clarified Water Controller	Manufacturer	-	TBD		
115					Model | Diam.		TBD		
116				Zone : *Non Hazardous*	Quantity	-	TBD		
117			N/A	Turbidimeter Clarified Water	Manufacturer	-	NA		
118					Model | Diam.		NA	NA	
119				Zone : *Non Hazardous*	Quantity	-	NA		
120				Turbidity Controller (specify of common controller)	Manufacturer	-	NA		
121					Model | Diam.		NA	NA	
122				Zone : *Non Hazardous*	Quantity	-	NA		
123			N/A	Pressure transmitter (recirculation)	Manufacturer	-	NA		
124					Model | Diam.		NA	NA	
125				Zone : *Non Hazardous*	Quantity	-	NA		
126			N/A	Pressure gauge (recirculation)	Manufacturer	-	NA		
127					Model | Diam.		NA	NA	
128				Zone : *Non Hazardous*	Quantity	-	NA		2
129			x	Others (specify)	Manufacturer	-	NA		2
130					Model | Diam.		NA		2
131					Quantity	-	NA		2
132				Comments		-	NA	NA	
133	METAL WORKS	Grating			Dimensions/Type	-	FIBERGRATE Square Mesh 1¼ x 1¼ x 1½		
134					Material	-	FRP		
135		Handrails			Dimensions/Type	-	Square Tubing 1½"		
136					Material	Saftey Yellow	Painted Steel		
137		Access (ladder/stairs)			Dimensions/Type	-	by the Actiflo tank		
138					Material	-	Other		
139		Others				-	N/A		
140		-				-	-		
141	POWER FEED	Motors				V/ph/Hz	575/3/60		
142		Panels				V/ph/Hz	575/3/60		
143		Others				V/ph/Hz	NA		
144	OTHER	Tank height				in (mm)	143.7 in (3650 mm)		
145		Recommended Headroom				in (mm)	Refer to GA dwg		
146		Recommended overall width				in (mm)	Refer to GA dwg		
147		Recommended overall length				in (mm)	Refer to GA dwg		
148		Weight (dry)				Lbs (Kg)	46 560 lbs (21 160 Kg)		
149		Weight (full of water)				Lbs (Kg)	352 550 lbs (160 250 Kg)		
150	COMMENTS	TANK INSTALL ON A TBD mm HEIGHT for hydraulic							
151									

	VEOLIA					VWT CANADA #		PSDS_0004_PCH			
						Project #		5000218009			
						Date		2018-03-27			
						SULFURIC ACID WINTER / SUMMER DOSING SKID					
	CLIENT	**REV**	**DESCRIPTION**			**DATE**	**By**	**Chkd**		**App.**	
		0									
	AGNICO EAGLE MINES	**1**	For approval			2018-03-28	G.H.	G.P.		C.B.	
		2	Name revised, flow rate revised & flange connection			2018-04-12	G.H.	G.P.		C.B.	
	PROJECT	**3**									
	AEM AMARUQ	**4**									
		5									
		6									
		TAG:									REV
	GENERAL	**Dosed Chemical**					Sulfuric Acid - (H2SO4)				
		Number of skids					1				
		Pumps type					Solenoid Driven Diaphragm Pump				
		Model Serie					Grundfos				
		Total number of pumps					2				
		Number of pumps in duty					1				
		Number of pumps in standby					1				
		Number of dosing points					1				
	PROCESS REQUIREMENT	**Min Flowrate**				lph	0.17				2
		Avg Flowrate				lph	9				
		Max Flowrate				lph	17				2
	ENVIRONMENT	**Equipment Location**					Indoor				
		Min. Temperature				°C	5				
		Max . Temperature				°C	30				
		Max. Humidity				%	95				
		Corrosive Atmosphere					Non Corrossive				
		Freeze					N/A				
		Comments									
	SAFETY	**Electrical Classification**					Non Hazardous				
		Province/State					Nunavut				
	PUMP(S) CAPACITY	**Max Flowrate**				lph	17				2
		Min Flowrate				lph	0.17				2
	TECHNICAL DESCRIPTION	**Skid Frame**			**Material**		Polypropylene				
					Type		Stand Alone				
					Option #1		Safeguarding Shield				
					Option #2						
		Pump		X	**Dosing Pumps**		DDA 17-7 AR-PV/T/C-F-31U7U7BG				
					Variable Frequency Drive	**N/A**					
		Components			**Foot valve c/w flexible hose**						
			Valves	x	**Isolation Valves (common suction)**	**Chemline**	21K005VCf		1		
				x	**Isolation Valves (suction)**	**Chemline**	21K005VCf		2		
				x	**Isolation Valves (discharge)**	**Chemline**	21K005VCf		4		
				x	**Backpressure Valves**	**Chemline**	SB12K005VCfx (BPVG)		1		
				x	C/w Isolator & Press. Gauge	**Chemline**	SGK-005-002-P-G + P025-160-BM	Config. L-U	0		
				x	**Relief Valves**	**Chemline**	SB12K005VCfx (RV)		2		
					W/o Press. Gauge	**N/A**	N/A	N/A			
					Globe Valve - Carrier water	**Chemline**	N/A		0		
					Check Valves - Carrier water	**Chemline**	N/A		0		
					ON/OFF Valves - Carrier water	**ASCO**	N/A	N/A	0		
				x	**Cleaning valves**	**Chemline**	21K005VCf		4		
			Misc.	x	**Calibration Cylinder**	**PFS**	ACS#2-250-GKV-F	250 ml	1		2
					Variable Area Flowmeter	**Chemline**	N/A		0		
					Flow switch	**N/A**			0		
					Flowmeter	**N/A**			0		
				x	**Pulsation Dampener**	**PFS**	API-PVDF-V-1-F	10 in3	1		2
		Piping			**VWS Piping spec code**		*A073C*				
					Pipe Material		*PFA Tubing*				
					Common Suction Nominal Pipe Size	**in**	*1/2"*				
					Suction Pipe Nominal Pipe Size	**in**	*1/2"*				
					Discharge Pipe Nominal Pipe Size	**in**	*1/2"*				
	UTILITIES	**Service Water for Chemical Transport**			**Flowrate (per injection line)**	**lph**	*N/A*				
					Pressure	**psig**	*N/A*				
					Transport Water Nominal Pipe Size	**in**	*N/A*				

1	VEOLIA					VWT CANADA #	PSDS_0004_PCH		
2						Project #	5000218009		
3						Date	2018-03-27		
4						SULFURIC ACID WINTER / SUMMER DOSING SKID			
5	CLIENT	REV	DESCRIPTION			DATE	By	Chkd	App.
6		0							
7	AGNICO EAGLE MINES	1	For approval			2018-03-28	G.H.	G.P.	C.B.
8		2	Name revised, flow rate revised & flange connection			2018-04-12	G.H.	G.P.	C.B.
9	PROJECT	3							
10	AEM AMARUQ	4							
11		5							
12		6							
13		TAG:							REV
65	DESIGN CRITERIA	Design Pressure				psig	100		
66		Design Temperature				°C	35		
67		Operating Pressure				psig	50		
68		Test Pressure				psig	150		
69		Test duration				min	60		
70		Test Fluid				-	Air		
71	CONNECTIONS	Inlet		Diameter (NPS)		in	1/2"		
72				Type			Socket union		
73		Outlet		Diameter (NPS)		in	1/2"		
74				Type			Socket union		
75		Transport Water		Diameter (NPS)		in	N/A		
76				Type			N/A		
77	ELECTRICITY	Main Power					120V/1Ph/60 Hz		
78		Controls		(by others)			4-20 mA (direct)		
79		Frame Grounding							
80		Wiring		Pre wired (Y or N | details)			Prewired / NEMA 4X JB		
81				Cable Type					
82		Anchors		Qty			4		
83				Supply			No		
84	CODE, APPROVAL & CERTIFICATIONS	Design Code					ASME B31.3 Non Certified		
		Glueing					Glueing B31.3 non certified / Non Certified Shop		
85		Mandatory Registration					*No*		
87									
88	OVERALL DIMENSIONS AND WEIGTH	Weight (dry)		Final		kg	Refer to GA drawing		
89		Overall Length		Final		mm	Refer to GA drawing		
90		Overall Width				mm	Refer to GA drawing		
91		Overall Heigth				mm	Refer to GA drawing		

	VEOLIA				VWT CANADA #		PDS_0005_HYDP		
					Project #		5000218009		
					Date		2018-03-08		
					HYDRA-POL CATIONIC POLYMER				
CLIENT	REV	DESCRIPTION			DATE	By	Chkd	App.	
	1	For Approval			2018-03-08	G.H.	G.P.	C.B.	
AGNICO EAGLE MINES	2	Revised Process Requirement section			2018-03-12	G.H.	G.P.	C.B.	
	3	Revised Process Requirement section			2018-03-28	G.H.	G.P.	C.B.	
PROJECT	4	24 Volt Instruments & Valves, Name revised			2018-04-12	G.H.	G.P.	C.B.	
AEM AMARUQ	5								
	6								
	7								
	TAG:	APPLICATION : Polymer System Preparation							REV
GENERAL	Manufacturer					VEOLIA WATER TECHNOLOGIES CANADA			
	Model Serie					HP3500			
	VEOLIA Model Number					HP3500-CT-MBF-BF025F-AB575T-S2B-AAS-SSCEP-Z6Z			
PROCESS REQUIREMENT	Polymer Type				-	Cationic			2
	Liquid Polymer Concentration				%	0.50%			3
	Polymer Density				kg/L	0.8			
	Recommended Maturation Time				min	60			
	Min Flowrate				lph	60			3
	Avg Flowrate				lph	300			3
	Max Flowrate				lph	1600			3
ENVIRONMENT	Equipment Location					Indoor			
	Min. Temperature				°c	2			
	Max . Temperature				°c	38			
	Max. Humidity				%	95			
	Corrosive Atmosphere					Non Corrosif			
	Freeze					N/A			
	Comments								
SAFETY	Electrical Classification					Non Hazardous Area			
	Province					Nunavut			
OPERATING CONDITIONS	Batch size				L	*3200*			
	Kg / batch				Kg	*16.00*			
	Feeder cap/rev				Kg/rev	*0.099*			
	Feeder rpm				rpm	*86.8*			
	Mass Flowrate				kg/min	*8.56*			
	Pre-rinsing time				min	*11.6*			
	Dosing time				sec	*82.8*			
	Maturing time (incl transf)				min	60			
	Emptying time				min	3.26			
	Total time				min	69.7			
TECHNICAL DESCRIPTION	Mechanical Components	Skid Frame		Manufacturer | Model	- | -	VWTC	LATIS#		
				Material	-	Painted Carbon Steel			
				Color	-	Blue Grey RAL 7031			
				Dry Polymer Storage Type	-	Bulk Bag Frame with a Yoke for Fork Lift			
		-		-	- | -				
		-		-	- | -				
		Dry Feeder		Manufacturer | Model	- | -	*WAM*	MBF 073 I:20 4-5-D-		
				Motor's Manufacturer |Type	-	*Baldor*	*NEMA*		
				Horsepower	HP	0.75	0.5		
		Eductor		Manufacturer | Model	- | -	SHUTTE&KOERTING	2"- Fig264 PVC Eductor		
				Material		PVC			
		Maturation Mixer		Manufacturer | Model	- | -	ENVIREQUIP / NORD	EVG1-0.75		
				Motor's Manufacturer |Type	-	NORD			
				Horsepower	HP	0.75			
		Maturation Tank		Manufacturer | Model	- | -	VWTC			
				Material |Nominal Capacity	- | L	304L S.S.	3 502		
				Transfer Type		Stacked Maturation Tank			
		Storage Tank		Manufacturer | Model	- | -	VWTC			
				Material |Nominal Capacity	- | L	304L S.S.	3 502		
		Tanks Location / Feeder				Right (Standard)			
		Isolation Valve - Driving Water		Manufacturer | Model	-	CHEMLINE	21A015EC		
				Diameter | Quantity	-	*1 1/2"*	*1*		
		Solenoid Valve - Driving Valve		Manufacturer | Model	120 VAC	ASCO	8210G022-120VAC		4
				Diameter | Quantity	-	*1 1/2"*	*1*		
		Metering Valve- Wetting Cone		Manufacturer | Model	-	CHEMLINE	SM2A005ES		
				Diameter | Quantity	-	*1/2"*	*2*		
		Solenoid Valve - Feeder		Manufacturer | Model	120 VAC	ASCO	8345G001-120VAC		4
				Diameter | Quantity	-	*1/4"*	*1*		
		Actuated Transfer Valve		Manufacturer | Model	120VAC	CHEMLINE	57A020AEL-A / ER20.12		4
				Diameter | Quantity	-	*2"*	*1*		
		Check Valve- Liquid Polymer		Manufacturer | Model	-	CHEMLINE	BTA020EC		
				Diameter | Quantity	-	*2"*	*1*		
		Isoaltion Valve- Tank Outlet		Manufacturer | Model	-	CHEMLINE	21A030ES		
				Diameter | Quantity	-	*3"*	*1*		
		Isolation Valves- Tanks Drains		Manufacturer | Model	-	CHEMLINE	21A030ES		
				Diameter | Quantity	-	*3"*	*2*		
		Static Mixer		Manufacturer | Model	-	KOFLO	2-40C-4-6-2		
				Diameter | Quantity	-	*2"*	*1*		
		Tuyauterie		VWTC Piping Class Code	-	*A050C*			
				Pipe Material	-	*PVC sh80*			
				Design Pressure	psig	60			
				Design Temperature	°C	38			
				Operating Pressure	psig	65			
				Test Pressure	psig	90			
				Test duration	min	60			
				Test Fluid	-	Water			

1	VEOLIA						VWT CANADA #		PDS_0005_HYDP		
2							Project #		5000218009		
3							Date		2018-03-08		
4							HYDRA-POL CATIONIC POLYMER				
5	CLIENT	REV	DESCRIPTION				DATE	By	Chkd	App.	
6		1	For Approval				2018-03-08	G.H.	G.P.	C.B.	
7	AGNICO EAGLE MINES	2	Revised Process Requirement section				2018-03-12	G.H.	G.P.	C.B.	
8		3	Revised Process Requirement section				2018-03-28	G.H.	G.P.	C.B.	
9	PROJECT	4	24 Volt Instruments & Valves, Name revised				2018-04-12	G.H.	G.P.	C.B.	
10	AEM AMARUQ	5									
11		6									
12		7									
13		TAG:	APPLICATION :		Polymer System Preparation						REV
89	TECHNICAL DESCRIPTION	ELECTRICITY, INSTRUMENTATION & CONTROLS	INSTRUMENTS	Hopper Low Level Switch	Manufacturer | Model		24 VDC	*Endress&Hauser*	*FTE31-C6DB11-A*		
90					Diameter | Quantity			*MNPT 1-1/2*	*1*		
91				Service Water Pressure Switch	Manufacturer | Model		24 VDC	*Allen-Bradley*	*836T-T253J*		
92					Diameter | Quantity			*3/8''*	*1*		
93				Service Water Pressure Gauge	Manufacturer | Model			*Ashcroft 2.5"*	*25-1009SWL-02L-0/160PSIG + Glycerine*		
94					Diameter | Quantity			*1/2''*	*1*		
95				Tanks Level Transmitter	Manufacturer | Model		24 VDC	*Endress&Hauser (Pressure)*	*PMC131-C22F1D12*		
96					Diameter | Quantity			*1/2''*	*2*		
97											
98			CONTROL PANEL	PLC	Manufacturer | Model			*Scheinder*	*M340*		
99				HMI	Manufacturer | Model			*Scheinder*	*HMI-STU655*		
100					HMI Screen Size			*6"*			
101				Panel Enclosure	Material | Enclosure Rating			*Fiberglass*	*NEMA-4X*		
102			ELECTRICITY	Power Supply	Voltage | Amps			*575V/3Ph/60Hz*	15 Amps		
103				Frame Grounding				*By others*			
104				Wiring	Pre wired (Yes/No)			*Yes*			
105					Cable Type			*TECK 90-Armoured Cable*			
106	UTILITIES	Service Water for Chemical Transport		Required Driving Water Flowrate			m^3/h	*8*			
107				Min. Pressure (in operation at Qmax)			psig	70			
108				Residual Chlorine Concentration			mg Cl_2/L	<0.5 mg Cl2/L			
109				Driving Water Temperature Range			Deg C	10 deg C <T<25 deg C			
110	CONNECTIONS	Driving Water Inlet			Diameter (NPS)		in	1-1/2"			
111					Type			Socket Union			
112		Storage Tank Outlet			Diameter (NPS)		in	2"			
113					Type			Socket Union			
114		Drain			Diameter (NPS)		in	3''			
115					Type			Socket Union			
116		Overflow			Diameter (NPS)		in	4''			
117					Type			By others			
118		Anchors			Qty			See General Arrangement DWG			
119					Supply			By others			
120	CODE, APPROVAL & TESTS	Piping Design Code						ASME B31.3 Non Certified			
121		Control Panel Approval						CSA/cUL			
122											
123	OVERALL DIMENSIONS AND WEIGTH	Weight (dry)					kg	*See General Arrangement DWG*			
124		Overall Length					mm				
125		Overall Width					mm				
126		Overall Heigth					mm				

	VEOLIA					VWT CANADA #	PDS_0006_HYDP			
						Project #	5000218009			
						Date	2018-03-26			
						HYDRA-POL KMnO4				
CLIENT		REV	DESCRIPTION			DATE	By	Chkd	App.	
		1	For Approval			2018-03-26	G.H.	G.P.	C.B.	
AGNICO EAGLE MINES		2	Revised model #			2018-04-12	G.H.	G.P.	C.B.	
		3								
PROJECT		4								
AEM AMARUQ		5								
		6								
		7								
		TAG:	APPLICATION : KMnO4 System Preparation							REV
GENERAL	Manufacturer						VEOLIA WATER TECHNOLOGIES CANADA			
	Model Serie						HP500			
	VEOLIA Model Number						HP500-CT-MBF-VC100F-AB575T-B2B-AAS-SSCEP-SC6Z			
PROCESS REQUIREMENT	Powder Type					-	KMnO4			
	Liquid Concentration					%	1.00%			
	Powder Density					kg/L	1.52			
	Recommended Maturation Time					min	30			
	Min Flowrate					lph	30			
	Avg Flowrate					lph	300			
	Max Flowrate					lph	320			
ENVIRONMENT	Equipment Location						Indoor			
	Min. Temperature					°C	10			
	Max . Temperature					°C	35			
	Max. Humidity					%	95			
	Corrosive Atmosphere						Non Corrosif			
	Freeze						N/A			
	Comments									
SAFETY	Electrical Classification						Non Hazardous Area			
	Province						Nunavut			
OPERATING CONDITIONS	Batch size					L	*470*			
	Kg / batch					Kg	*4.70*			
	Feeder cap/rev					Kg/rev	*0.187*			
	Feeder rpm					rpm	*24.8*			
	Mass Flowrate					kg/min	*3.48*			
	Pre-rinsing time					min	*2.6*			
	Dosing time					sec	*108.4*			
	Maturing time (incl transf)					min	40			
	Emptying time					min	0.69			
	Total time					min	43.7			
TECHNICAL DESCRIPTION	Mechanical Components	Skid Frame		Manufacturer | Model		- | -	VWTC	LATIS#		
				Material		-	SS304			
				Color		-	Grey Blue			
				Dry Polymer Storage Type		-	Vacuum Conveyor & Hopper			
		Vacuum Conveyor		Manufacturer | Model		- | -	Hapman	16" pneumatic receiver		2
		-		Manufacturer | Model		- | -				
		Dry Feeder		Manufacturer | Model		- | -	WAM	MBF 073 I:70 4-5-D-		
				Motor's Manufacturer |Type		-	Baldor	NEMA		
				Horsepower		HP	0.75	0.5		
		Eductor		Manufacturer | Model		- | -	SHUTTE&KOERTING	1,5"- Fig264 PVC Eductor		
				Material			PVC sh80			
		Maturation Mixer		Manufacturer | Model		- | -	ENVIREQUIP / NORD	EVG01-0.5		
				Motor's Manufacturer |Type		-	BALDOR			
				Horsepower		HP	0.5			
		Maturation Tank		Manufacturer | Model		- | -	VWTC			
				Material |Nominal Capacity		- | L	304L S.S.	508		
				Transfer Type			Stacked Maturation Tank			
		Storage Tank		Manufacturer | Model		- | -	VWTC			
				Material |Nominal Capacity		- | L	304L S.S.	508		
		Tanks Location / Feeder					Right (Standard)			
		Isolation Valve - Driving Water		Manufacturer | Model		-	CHEMLINE	21A010EC		
				Diameter | Quantity		-	*1"*	*1*		
		Solenoid Valve - Driving Valve		Manufacturer | Model		**120 VAC**	ASCO	EF8210G004-120VAC		2
				Diameter | Quantity		-	*1"*	*1*		
		Metering Valve- Wetting Cone		Manufacturer | Model		-	CHEMLINE	SM2A005ES		
				Diameter | Quantity		-	*1/2"*	*2*		
		Solenoid Valve - Feeder		Manufacturer | Model		**120 VAC**	ASCO	EF8345G001-120VAC		2
				Diameter | Quantity		-	*1/4"*	*1*		
		Actuated Transfer Valve		Manufacturer | Model		**120 VAC**	CHEMLINE	57A020AEL / ER20.12		2
				Diameter | Quantity		-	*2"*	*1*		
		Check Valve- Liquid Polymer		Manufacturer | Model		-	CHEMLINE	BTA015EC		
				Diameter | Quantity		-	*11/2"*	*1*		
		Isoaltion Valve- Tank Outlet		Manufacturer | Model		-	CHEMLINE	21A015EC		
				Diameter | Quantity		-	*11/2"*	*1*		
		Isolation Valves- Tanks Drains		Manufacturer | Model		-	CHEMLINE	21A015EC		
				Diameter | Quantity		-	*1 1/2"*	*2*		
		Static Mixer		Manufacturer | Model		-	KOFLO	1,5-40C-4-6-2		
				Diameter | Quantity		-	*1.5"*	*1*		
		Tuyauterie		VWTC Piping Class Code		-	*A050C*			
				Pipe Material		-	*PVC sh80*			
				Design Pressure		psig	60			
				Design Temperature		°C	35			
				Operating Pressure		psig	65			
				Test Pressure		psig	90			
				Test duration		min	60			
				Test Fluid		-	Eau			

1	VEOLIA					VWT CANADA #		PDS_0006_HYDP			
2						Project #		5000218009			
3						Date		2018-03-26			
4						HYDRA-POL KMnO4					
5	CLIENT	REV	DESCRIPTION			DATE	By	Chkd	App.		
6		1	For Approval			2018-03-26	G.H.	G.P.	C.B.		
7	AGNICO EAGLE MINES	2	Revised model #			2018-04-12	G.H.	G.P.	C.B.		
8		3									
9	PROJECT	4									
10	AEM AMARUQ	5									
11		6									
12		7									
13		TAG:	APPLICATION :		KMnO4 System Preparation						REV
89	TECHNICAL DESCRIPTION	ELECTRICITY, INSTRUMENTATION & CONTROLS	INSTRUMENTS	Hopper Low Level Switch	Manufacturer | Model	24 VDC	*Endress&Hauser*	*FTE31-C6DB11-A*			2
90					Diameter | Quantity		*MNPT 1-1/2*	*1*			
91				Service Water Pressure Switch	Manufacturer | Model	24 VDC	*Allen-Bradley*	*836T-T253J*			
92					Diameter | Quantity		*3/8''*	*1*			
93				Service Water Pressure Gauge	Manufacturer | Model		*Ashcroft 2.5''*	*25-1009SWL-02L-0/160PSIG + Glycerine*			
94					Diameter | Quantity		*1/2''*	*1*			
95				Tanks Level Transmitter	Manufacturer | Model	24 VDC	*Endress&Hauser (Pressure)*	*PMC71-UCC1E3RABAA*			2
96					Diameter | Quantity		*1/2''*	*2*			
97											
98			CONTROL PANEL	PLC	Manufacturer | Model		*Schneider*	*M241 (TM241CE24T)*			
99				HMI	Manufacturer | Model		*Schneider*	*HMI-STU655*			
100					HMI Screen Size		*6''*				
101				Panel Enclosure	Material | Enclosure Rating		*Custom*	*NEMA-4X*			
102			ELECTRICITY	Power Supply	Voltage | Amps		*575V/3Ph/60Hz*	15 Amps			
103				Frame Grounding			*By others*				
104				Wiring	Pre wired (Yes/No)		*Yes*				
105					Cable Type		*TECK 90-Armoured Cable*				
106	UTILITIES	Service Water for Chemical Transport		Required Driving Water Flowrate		m^3/h	*5.2*				
107				Min. Pressure (in operation at Qmax)		psig	70				
108				Residual Chlorine Concentration		mg Cl_2/L	<0.5 mg Cl2/L				
109				Driving Water Temperature Range		Deg C	10 deg C <T<25 deg C				
110	CONNECTIONS	Driving Water Inlet			Diameter (NPS)	in	1"				
111					Type		Socket Union				
112		Storage Tank Outlet			Diameter (NPS)	in	1-1/2"				
113					Type		Socket Union				
114		Drain			Diameter (NPS)	in	1-1/2"				
115					Type		Socket Union				
116		Overflow			Diameter (NPS)	in	2"				
117					Type		By others				
118		Anchors			Qty		See General Arrangement DWG				
119					Supply		By others				
120	CODE, APPROVAL & TESTS	Piping Design Code					ASME B31.3 Non Certified				
121		Control Panel Approval					CSA/cUL				
122											
123	OVERALL DIMENSIONS AND WEIGTH	Weight (dry)				kg	*See General Arrangement DWG*				
124		Overall Length				mm					
125		Overall Width				mm					
126		Overall Heigth				mm					

1	VEOLIA					VWT CANADA #		PSDS_0007_PCH			
2						Project #		5000218009			
3						Date		2018-03-26			
4						KMnO4 SUMMER / WINTER DOSING SKID					
5	CLIENT	REV	DESCRIPTION			DATE	By	Chkd		App.	
6		0									
7	AGNICO EAGLE MINES	1	For approval			2018-03-26	G.H.	G.P.		C.B.	
8		2	Name revised, min flow rate			2018-04-12	G.H.	G.P.		C.B.	
9	PROJECT	3									
10	AEM AMARUQ	4									
11		5									
12		6									
13		TAG:									REV
14	GENERAL	Dosed Chemical					Potassium permanganate (KMnO4)				
15		Number of skids					1				
16		Pumps type					Mechanical Diaphragm Pump				
17		Model Serie					Shadow				
18		Total number of pumps					2				
19		Number of pumps in duty					1				
20		Number of pumps in standby					1				
21		Number of dosing points					1				
22	PROCESS REQUIREMENT	Min Flowrate				lph	30				
23		Avg Flowrate				lph	250				
24		Max Flowrate				lph	320				
25	ENVIRONMENT	Equipment Location					Indoor				
26		Min. Temperature				°C	5				
27		Max . Temperature				°C	25				
28		Max. Humidity				%	95				
29		Corrosive Atmosphere					Non Corrossive				
30		Freeze					N/A				
31		Comments									
32	SAFETY	Electrical Classification					Non Hazardous				
33		Province/State					Nunavut				
34	PUMP(S) CAPACITY	Max Flowrate				lph	400				
35		Min Flowrate				lph	15				2
36	TECHNICAL DESCRIPTION	Skid Frame			Material		Polypropylene				
37					Type		Stand Alone				
38					Option #1		N/A				
39					Option #2		N/A				
40		Pump		X	Dosing Pumps		Shadow 55BF-EZ000234U1				
41				X	Motors	N/A	Baldor Class 2 Div 1 Gr. F & G				
41				X	Variable Frequency Drive	N/A	See electrical package				
42		Components	Valves		Foot valve c/w flexible hose						
43				X	Isolation Valves (common suction)	Chemline	21A010EC		1		
44				X	Isolation Valves (suction)	Chemline	21A010EC		4		
45				X	Isolation Valves (discharge)	Chemline	21A010EC		4		
46				X	Backpressure Valves	Chemline	SB12A010EU (BPVG)		1		
				X	C/w Isolator & Press. Gauge	Chemline	SGA-005-002-P-G + P025-160-BM	Config. L-U	0		
47				X	Relief Valves	Chemline	SB12A010EU (RV)		2		
					W/o Press. Gauge	N/A	N/A	N/A			
48					Globe Valve - Carrier water	Chemline	N/A		0		
49					Check Valves - Carrier water	N/A	N/A		0		
50					ON/OFF Valves - Carrier water	ASCO	N/A	N/A	0		
51				X	Cleaning valves	Chemline	21A005EC		4		
52			Misc.	X	Calibration Cylinder	PFS	PV#2-4000	4000 ml	1		
53					Variable Area Flowmeter	Chemline	N/A		0		
54					Flow switch	N/A			0		
55					Flowmeter	N/A			0		
56				X	Pulsation Dampener	PFS	APII-PVC-E-2	85 in3	1		
57		Piping			VWS Piping spec code		*A050C*				
58					Pipe Material		*PVC Sh 80 ASTM D1784*				
59					Common Suction Nominal Pipe Size	in	1"				
60					Suction Pipe Nominal Pipe Size	in	1"				
61					Discharge Pipe Nominal Pipe Size	in	1"				
62	UTILITIES	Service Water for Chemical Transport			Flowrate (per injection line)	lph	N/A				
63					Pressure	psig	0				
64					Transport Water Nominal Pipe Size	in	N/A				

1	VEOLIA					VWT CANADA #		PSDS_0007_PCH		
2						Project #		5000218009		
3						Date		2018-03-26		
4						KMnO4 SUMMER / WINTER DOSING SKID				
5	CLIENT	REV	DESCRIPTION			DATE	By	Chkd	App.	
6		0								
7	AGNICO EAGLE MINES	1	For approval			2018-03-26	G.H.	G.P.	C.B.	
8		2	Name revised, min flow rate			2018-04-12	G.H.	G.P.	C.B.	
9	PROJECT	3								
10	AEM AMARUQ	4								
11		5								
12		6								
13		TAG:								REV
65	DESIGN CRITERIA	Design Pressure				psig	80			
66		Design Temperature				°C	35			
67		Operating Pressure				psig	50			
68		Test Pressure				psig	120			
69		Test duration				min	60			
70		Test Fluid				-	Water			
71	CONNECTIONS	Inlet		Diameter (NPS)		in	1"			
72				Type			Flange			
73		Outlet		Diameter (NPS)		in	1"			
74				Type			Flange			
75		Transport Water		Diameter (NPS)		in	N/A			
76				Type			N/A			
77	ELECTRICITY	Main Power					575V/3Ph/60 Hz			
78		Controls					VFD c/w 4-20 mA			
79		Frame Grounding					By-others			
80		Wiring		Pre wired (Y or N | details)			Prewired / NEMA 4X JB			
81				Cable Type			Teck 90			
82		Anchors		Qty			4			
83				Supply			No			
84	CODE, APPROVAL & CERTIFICATIONS	Design Code					ASME B31.3 Non Certified			
		Glueing					Glueing B31.3 non certified / Non Certified Shop			
85		Mandatory Registration					No			
87										
88	OVERALL DIMENSIONS AND WEIGTH	Weight (dry)		Final		kg	Refer to GA Drawing			
89		Overall Length				mm	Refer to GA Drawing			
90		Overall Width		Final		mm	Refer to GA Drawing			
91		Overall Heigth				mm	Refer to GA Drawing			

1	VEOLIA					VWT CANADA #		PSDS_0008_PCH		
2						Project #		5000218009		
3						Date		2018-03-27		
4						**COAGULANT WINTER / SUMMER DOSING SKID**				
5	**CLIENT**	**REV**	**DESCRIPTION**			**DATE**	**By**	**Chkd**	**App.**	
6		**0**								
7	AGNICO EAGLE MINES	**1**	For approval			2018-03-28	G.H.	G.P.	C.B.	
8		**2**	Revised name			2018-04-12	G.H.	G.P.	C.B.	
9	**PROJECT**	**3**								
10	AEM AMARUQ	**4**								
11		**5**								
12		**6**								
13		**TAG:**								REV
14	**GENERAL**	**Dosed Chemical**					Ferric Sulfate - (Fe2(SO4)3)			
15		**Number of skids**					1			
16		**Pumps type**					Mechanical Diaphragm Pump			
17		**Model Serie**					Shadow			
18		**Total number of pumps**					2			
19		**Number of pumps in duty**					1			
20		**Number of pumps in standby**					1			
21		**Number of dosing points**					1			
22	**PROCESS REQUIREMENT**	**Min Flowrate**				**lph**	36			
23		**Avg Flowrate**				**lph**	225			
24		**Max Flowrate**				**lph**	450			
25	**ENVIRONMENT**	**Equipment Location**					Indoor			
26		**Min. Temperature**				**°C**	10			
27		**Max . Temperature**				**°C**	30			
28		**Max. Humidity**				**%**	95			
29		**Corrosive Atmosphere**					Non Corrossive			
30		**Freeze**					N/A			
31		**Comments**								
32	**SAFETY**	**Electrical Classification**					Non Hazardous			
33		**Province/State**					Nunavut			
34	**PUMP(S) CAPACITY**	**Max Flowrate**				**lph**	500			
35		**Min Flowrate**				**lph**	36			
36	**TECHNICAL DESCRIPTION**	**Skid Frame**			**Material**		Polypropylene			
37					**Type**		Stand Alone			
38					**Option #1**		N/A			
39					**Option #2**		N/A			
40		**Pump**		X	**Dosing Pumps**		Shadow 55BF-EZ000234U6			
41				x	**Variable Frequency Drive**	**N/A**	See Electrical Package			
42		**Components**	**Valves**		**Foot valve c/w flexible hose**					
43				x	**Isolation Valves (common suction)**	**Chemline**	21A010EC		1	
44				x	**Isolation Valves (suction)**	**Chemline**	21A010EC		4	
45				x	**Isolation Valves (discharge)**	**Chemline**	21A010EC		5	
46				x	**Backpressure Valves**	**Chemline**	SB12A010EU (BPVG)		1	
				x	C/w Isolator & Press. Gauge	**Chemline**	SGA-005-002-P-G + P025-160-BM	Config. L-U	0	
47				x	**Relief Valves**	**Chemline**	SB12A010EU (RV)		2	
					W/o Press. Gauge	**N/A**	N/A	N/A		
48					**Globe Valve - Carrier water**	**Chemline**	N/A		0	
49					**Check Valves - Carrier water**	**Chemline**	N/A		0	
50					**ON/OFF Valves - Carrier water**	**ASCO**	N/A	Brass	0	
51				x	**Cleaning valves**	**Chemline**	21A005EC		4	
52			**Misc.**	x	**Calibration Cylinder**	**PFS**	PV#2-4000	4000 ml	1	
53					**Variable Area Flowmeter**	**Chemline**	N/A		0	
54					**Flow switch**	**N/A**			0	
55					**Flowmeter**	**N/A**			0	
56				x	**Pulsation Dampener**	**PFS**	APII-PVC-N-2	85 in3	1	
57		**Piping**			**VWS Piping spec code**		*A050C*			
58					**Pipe Material**		*PVC Sh 80 ASTM D1784*			
59					**Common Suction Nominal Pipe Size**	**in**	*1"*			
60					**Suction Pipe Nominal Pipe Size**	**in**	*1"*			
61					**Discharge Pipe Nominal Pipe Size**	**in**	*1"*			
62	**UTILITIES**	**Service Water for Chemical Transport**			**Flowrate (per injection line)**	**lph**	*N/A*			
63					**Pressure**	**psig**	*N/A*			
64					**Transport Water Nominal Pipe Size**	**in**	*N/A*			

1	VEOLIA					VWT CANADA #	PSDS_0008_PCH		
2						Project #	5000218009		
3						Date	2018-03-27		
4						COAGULANT WINTER / SUMMER DOSING SKID			
5	CLIENT	REV	DESCRIPTION			DATE	By	Chkd	App.
6		0							
7	AGNICO EAGLE MINES	1	For approval			2018-03-28	G.H.	G.P.	C.B.
8		2	Revised name			2018-04-12	G.H.	G.P.	C.B.
9	PROJECT	3							
10	AEM AMARUQ	4							
11		5							
12		6							
13		TAG:							REV
65	DESIGN CRITERIA	Design Pressure				psig	80		
66		Design Temperature				°C	35		
67		Operating Pressure				psig	50		
68		Test Pressure				psig	120		
69		Test duration				min	60		
70		Test Fluid				-	Water		
71	CONNECTIONS	Inlet		Diameter (NPS)		in	1"		
72				Type			Socket union		
73		Outlet		Diameter (NPS)		in	1"		
74				Type			Socket union		
75		Transport Water		Diameter (NPS)		in	N/A		
76				Type			N/A		
77	ELECTRICITY	Main Power					575V/3Ph/60 Hz		
78		Controls		(by others)			VFD c/w 4-20 mA		
79		Frame Grounding							
80		Wiring		Pre wired (Y or N | details)			Prewired / NEMA 4X JB		
81				Cable Type			Teck 90		
82		Anchors		Qty			4		
83				Supply			No		
84	CODE, APPROVAL & CERTIFICATIONS	Design Code					ASME B31.3 Non Certified		
		Glueing					Glueing B31.3 non certified / Non Certified Shop		
85		Mandatory Registration					*No*		
87									
88	OVERALL DIMENSIONS AND WEIGTH	Weight (dry)		Final		kg	Refer to GA drawing		
89		Overall Length		Final		mm	Refer to GA drawing		
90		Overall Width				mm	Refer to GA drawing		
91		Overall Heigth				mm	Refer to GA drawing		

1	VEOLIA							VWT CANADA #		PSDS_0010_PCH			
2								Project #		5000218009			
3								Date		2018-03-29			
4								ANIONIC POLYMER WINTER / SUMMER CENTRIFUGE					
5	CLIENT	REV	DESCRIPTION					DATE	By	Chkd		App.	
6		0											
7	AGNICO EAGLE MINES	1	For approval					2018-03-29	G.H.	GP		C.B.	
8		2	Revised name & min flow rate					2018-04-12	G.H.	GP		C.B.	
9	PROJECT	3											
10	AEM AMARUQ	4											
11		5											
12		6											
13		TAG:											REV
14	GENERAL	Dosed Chemical							Polymer				
15		Number of skids							3				
16		Pumps type							Cavity Progressive Pump				
17		Model Serie							Seepex BN				
18		Total number of pumps							1				
19		Number of pumps in duty							1				
20		Number of pumps in standby							1				
21		Number of dosing points							1				
22	PROCESS REQUIREMENT	Min Flowrate						lph	60				
23		Avg Flowrate						lph	300				
24		Max Flowrate						lph	600				
25	ENVIRONMENT	Equipment Location							Indoor				
26		Min. Temperature						°C	10				
27		Max . Temperature						°C	30				
28		Max. Humidity						%	95				
29		Corrosive Atmosphere							Non Corrossive				
30		Freeze							N/A				
31		Comments											
32	SAFETY	Electrical Classification							Non Hazardous				
33		Province/State							Nunavut				
34	PUMP(S) CAPACITY	Max Flowrate						lph	670				
35		Min Flowrate						lph	30				2
36	TECHNICAL DESCRIPTION	Skid Frame			Material				Stainless Steel				
37					Type				Stand Alone				
38					Option #1				N/A				
39					Option #2								
40		Pump		X	Dosing Pumps				SEEPEX BN				
41				x	Variable Frequency Drive			N/A	See Electrical Submital Package				
42		Components			Foot valve c/w flexible hose								
43			Valves	x	Isolation Valves (common suction)			Chemline	21A015ES		1		
44				x	Isolation Valves (suction)			Chemline	21A015ES		3		
45				x	Isolation Valves (discharge)			Chemline	21A010EC		5		
46					Backpressure Valves			Chemline	N/A		0		
					W/o Press. Gauge			N/A	N/A	N/A	0		
47				x	Relief Valves			Chemline	SB12A010EU (RVG)		3		
				x	C/w Isolator & Press. Gauge			Chemline	SGA-005-002-P-G + P025-160-BM	Config. L-U			
48				x	Globe Valve - Carrier water			Chemline	GVA010S		2		
49				x	Check Valves - Carrier water			Chemline	BTA010EC		2		
50				x	ON/OFF Valves - Carrier water			ASCO	8210G089	304 SS	2		
51				x	Cleaning valves			Chemline	21A005EC		6		
52			Misc.	x	Calibration Cylinder			PFS	PV#2-10000	10000 ml	1		
53				x	Variable Area Flowmeter			Chemline	FSA02500		2		
54					Flow switch			N/A			0		
55					Flowmeter			N/A			0		
56					Pulsation Dampener			PFS	N/A		0		
57		Piping			VWS Piping spec code				*A050C*				
58					Pipe Material				*PVC Sh 80 ASTM D1784*				
59					Common Suction Nominal Pipe Size			in	*1 1/2"*				
60					Suction Pipe Nominal Pipe Size			in	*1 1/2"*				
61					Discharge Pipe Nominal Pipe Size			in	*1"*				
62	UTILITIES	Service Water for Chemical Transport			Flowrate (per injection line)			lph	*1800*				
63					Pressure			psig	65				
64					Transport Water Nominal Pipe Size			in	*1"*				

1	VEOLIA					VWT CANADA #		PSDS_0010_PCH	
2						Project #		5000218009	
3						Date		2018-03-29	
4						ANIONIC POLYMER WINTER / SUMMER CENTRIFUGE			
5	CLIENT	REV	DESCRIPTION			DATE	By	Chkd	App.
6		0							
7	AGNICO EAGLE MINES	1	For approval			2018-03-29	G.H.	GP	C.B.
8		2	Revised name & min flow rate			2018-04-12	G.H.	GP	C.B.
9	PROJECT	3							
10	AEM AMARUQ	4							
11		5							
12		6							
13		TAG:							REV
65	DESIGN CRITERIA	Design Pressure				psig	80		
66		Design Temperature				°C	35		
67		Operating Pressure				psig	50		
68		Test Pressure				psig	120		
69		Test duration				min	60		
70		Test Fluid				-	Water		
71	CONNECTIONS	Inlet		Diameter (NPS)		in	1 1/2"		
72				Type			Socket union		
73		Outlet		Diameter (NPS)		in	1"		
74				Type			Socket union		
75		Transport Water		Diameter (NPS)		in	N/A		
76				Type			N/A		
77	ELECTRICITY	Main Power					575V/3Ph/60 Hz		
78		Controls		(by others)			VFD c/w 4-20 mA		
79		Frame Grounding							
80		Wiring		Pre wired (Y or N | details)			Prewired / NEMA 4X JB		
81				Cable Type			Teck 90		
82		Anchors		Qty			6		
83				Supply			No		
84	CODE, APPROVAL & CERTIFICATIONS	Design Code					ASME B31.3 Non Certified		
		Glueing					Glueing B31.3 non certified / Non Certified Shop		
85		Mandatory Registration					*No*		
87									
88	OVERALL DIMENSIONS AND WEIGTH	Weight (dry)		Final		kg	Refer to GA drawings		
89		Overall Length		Final		mm	Refer to GA drawings		
90		Overall Width				mm	Refer to GA drawings		
91		Overall Heigth				mm	Refer to GA drawings		

1	VEOLIA						VWT CANADA #		PSDS_0010_PCH		
2							Project #		5000218009		
3							Date		2018-03-29		
4							ANIONIC POLYMER SUMMER DOSING SKID				
5	CLIENT	REV	DESCRIPTION				DATE	By	Chkd	App.	
6		0									
7	AGNICO EAGLE MINES	1	For approval				2018-03-29	G.H.	G.P.	C.B.	
8		2	Revised name & min flow rate					G.H.	G.P.	C.B.	
9	PROJECT	3									
10	AEM AMARUQ	4									
11		5									
12		6									
13		TAG:									REV
14	GENERAL	Dosed Chemical						Polymer			
15		Number of skids						3			
16		Pumps type						Cavity Progressive Pump			
17		Model Serie						Seepex BN			
18		Total number of pumps						1			
19		Number of pumps in duty						1			
20		Number of pumps in standby						1			
21		Number of dosing points						1			
22	PROCESS REQUIREMENT	Min Flowrate					lph	60			
23		Avg Flowrate					lph	300			
24		Max Flowrate					lph	600			
25	ENVIRONMENT	Equipment Location						Indoor			
26		Min. Temperature					°C	10			
27		Max . Temperature					°C	30			
28		Max. Humidity					%	95			
29		Corrosive Atmosphere						Non Corrossive			
30		Freeze						N/A			
31		Comments									
32	SAFETY	Electrical Classification						Non Hazardous			
33		Province/State						Nunavut			
34	PUMP(S) CAPACITY	Max Flowrate					lph	670			
35		Min Flowrate					lph	30			2
36	TECHNICAL DESCRIPTION	Skid Frame			Material			Stainless Steel			
37					Type			Stand Alone			
38					Option #1			N/A			
39					Option #2						
40		Pump		X	Dosing Pumps			SEEPEX BN			
41				x	Variable Frequency Drive		N/A	See Electrical Submital Package			
42		Components	Valves		Foot valve c/w flexible hose						
43				x	Isolation Valves (common suction)		Chemline	21A015ES		1	
44				x	Isolation Valves (suction)		Chemline	21A015ES		3	
45				x	Isolation Valves (discharge)		Chemline	21A010EC		5	
46				x	Backpressure Valves		Chemline	SB12A010EU (BPVG)		3	
				x	C/w Isolator & Press. Gauge		Chemline	SGA-005-002-P-G + P025-160-BM	Config. L-U	0	
47				x	Relief Valves		Chemline	SB12A010EU (RV)		3	
					W/o Press. Gauge		N/A	N/A	N/A		
48				x	Globe Valve - Carrier water		Chemline	GVA010S		2	
49				x	Check Valves - Carrier water		Chemline	BTA010EC		2	
50				x	ON/OFF Valves - Carrier water		ASCO	8210G089	304 SS	2	
51				x	Cleaning valves		Chemline	21A005EC		6	
52			Misc.	x	Calibration Cylinder		PFS	PV#2-10000	10000 ml	1	
53				x	Variable Area Flowmeter		Chemline	FSA02500		2	
54					Flow switch		N/A			0	
55					Flowmeter		N/A			0	
56					Pulsation Dampener		PFS	N/A		0	
57		Piping			VWS Piping spec code			*A050C*			
58					Pipe Material			*PVC Sh 80 ASTM D1784*			
59					Common Suction Nominal Pipe Size		in	*1 1/2"*			
60					Suction Pipe Nominal Pipe Size		in	*1 1/2"*			
61					Discharge Pipe Nominal Pipe Size		in	*1"*			
62	UTILITIES	Service Water for Chemical Transport			Flowrate (per injection line)		lph	*1800*			
63					Pressure		psig	65			
64					Transport Water Nominal Pipe Size		in	*1"*			

1	VEOLIA					VWT CANADA #		PSDS_0010_PCH		
2						Project #		5000218009		
3						Date		2018-03-29		
4						ANIONIC POLYMER SUMMER DOSING SKID				
5	CLIENT	REV	DESCRIPTION			DATE	By	Chkd	App.	
6		0								
7	AGNICO EAGLE MINES	1	For approval			2018-03-29	G.H.	G.P.	C.B.	
8		2	Revised name & min flow rate				G.H.	G.P.	C.B.	
9	PROJECT	3								
10	AEM AMARUQ	4								
11		5								
12		6								
13		TAG:								REV
65	DESIGN CRITERIA	Design Pressure				psig	80			
66		Design Temperature				°C	35			
67		Operating Pressure				psig	50			
68		Test Pressure				psig	120			
69		Test duration				min	60			
70		Test Fluid				-	Water			
71	CONNECTIONS	Inlet			Diameter (NPS)	in	1 1/2"			
72					Type		Socket union			
73		Outlet			Diameter (NPS)	in	1"			
74					Type		Socket union			
75		Transport Water			Diameter (NPS)	in	N/A			
76					Type		N/A			
77	ELECTRICITY	Main Power					575V/3Ph/60 Hz			
78		Controls			(by others)		VFD c/w 4-20 mA			
79		Frame Grounding								
80		Wiring			Pre wired (Y or N | details)		Prewired / NEMA 4X JB			
81					Cable Type		Teck 90			
82		Anchors			Qty		6			
83					Supply		No			
84	CODE, APPROVAL & CERTIFICATIONS	Design Code					ASME B31.3 Non Certified			
		Glueing					Glueing B31.3 non certified / Non Certified Shop			
85		Mandatory Registration					*No*			
87										
88	OVERALL DIMENSIONS AND WEIGTH	Weight (dry)			Final	kg	Refer to GA drawings			
89		Overall Length			Final	mm	Refer to GA drawings			
90		Overall Width				mm	Refer to GA drawings			
91		Overall Heigth				mm	Refer to GA drawings			

VWT CANADA #	5000218009_PSDS_0018_AU_VWT
Project #	5000218009
Date	2018-04-26

Automation System

CLIENT	REV	DESCRIPTION	DATE	By	Chkd	App.
	1	Initial release	2018-04-26	PLG	XM	CB
AEM Amaruq	2					
PROJECT	3					
	4					
	5					
	6					

						REV
General	Voltage		Volts	120		
	Panel Enclosure	Material		Nema 4	Carbon steel	
	Control Panel Approval			CSA		
	Wires color			Client specification		
	Junction boxes	Pre-wiring		Yes	Yes	
	Pre-Wire cable type			Teck 90		
	UPS			Yes		
	Motor control			Client MCC		
	Remote Access			N/A		
Environnement	Panel Location			Indoor		
	Min. Temperature		°C	5		
	Max . Temperature		°C	25		
	Max. Humidity		%	80	non-condensing	
	Corrosive Atmosphere			Non Corrosive		
	Freeze			No		
	Comments					
Safety	Electrical Classification			Non Hazardous		
	Province/State			Nunavut		
Process Controller	Brand			Schneider		
	Model			M580	BMEP582040	
	Memory					
	Estimated memory consumption			50%		
	Spare I/O			20%		
	Digital inputs cards			BMXDDI6402K	BMXDDI3202K	
	Digital outputs cards			BMXDDO6402K	BMXDDO3202K	
	Analog inputs cards			BMEAHI0812		
	Analog outputs cards			BMEAHO0412		
	Communication cards			BMENOC0301		
	Power supply			BMXCPS3500		
	Remote I/O	Model				
HMI	Brand			Schneider		
	Model			HMIDT732	HMIG3U	
	Size		in	15		
	Resolution		Pixels	1024x768		
SCADA Hardware	Brand			N/A		
	Model			N/A		
	Screen size	Screen Quantity	in	N/A		
	Resolution		Pixels	N/A		
	Printer			N/A		
	MS Office			N/A		
	Reporting			N/A		
Software	PLC Software	Version		Unity	12.00	
	HMI Software	Version		Vijeo Designer	6.20	
	SCADA Software	Version		N/A		

LEFT BLANK

4 – DETAILED TECHNICAL DOCUMENTATION

4.3 – SHOP DRAWINGS

4.3.1 – PRECIPITATION REACTOR – RX75-3

LEFT BLANK

Project name:	AMARUQ
Project#:	5000218009
Document #:	SPK_0001_RX
by:	LJ
chkd:	GP
appvd:	CB

SUBMITTAL PACKAGE

METAL PRECIPITATION REACTOR

This page is intentionally left blank

Project name: AMARUQ

Project#: 5000218009

Document #: SPK_0001_RX

by: LJ

chkd: GP

appvd: CB

METAL PRECIPITATION REACTOR

PROCESS DATASHEET

OIM manual section: 4.3.1.1

REFER TO 5000218009_PSDS_0001_RX_VWT

This page is intentionally left blank

Project name: AMARUQ

Project#: 5000218009

Document #: SPK_0001_RX

by: LJ

chkd: GP

appvd: CB

METAL PRECIPITATION REACTOR

GENERAL ARRANGEMENT DRAWING

OIM manual section: 4.3.1.2

REFER TO 5000218009_GA_0001_RX75-3_VWT

This page is intentionally left blank

Project name: AMARUQ

Project#: 5000218009

Document #: SPK_0001_RX

by: LJ

chkd: GP

appvd: CB

METAL PRECIPITATION REACTOR

MIXER

OIM manual section: 4.3.1.3

This page is intentionally left blank

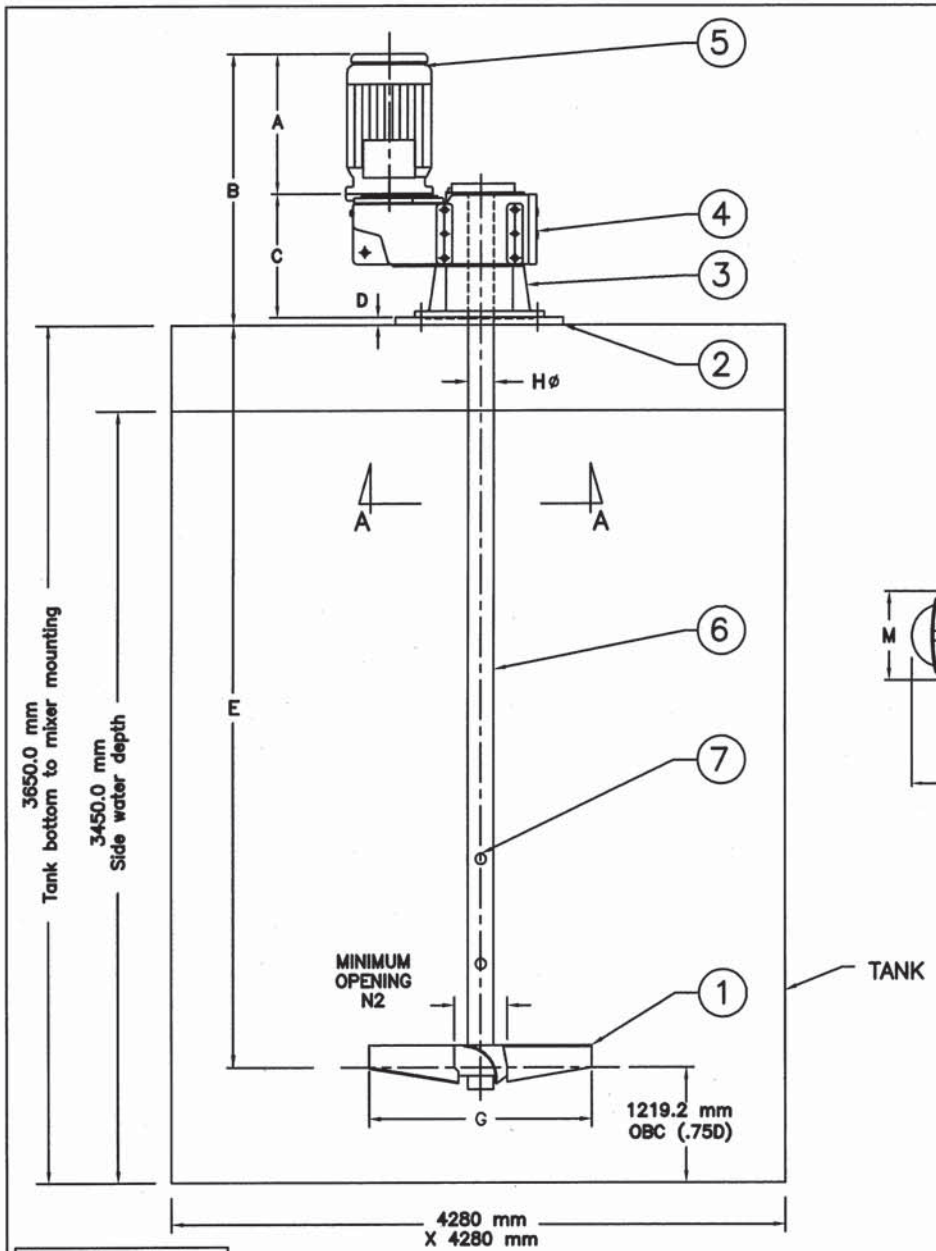

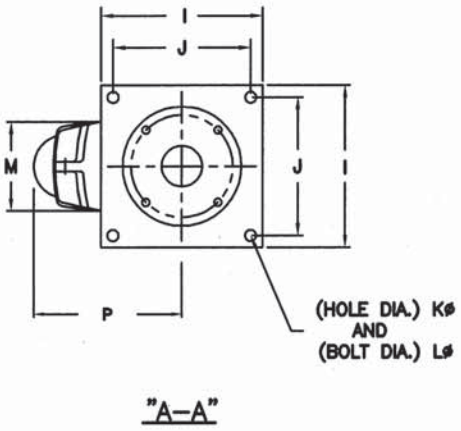

"A–A"

ITEM	DESCRIPTION	MATERIAL
1	Envirofoil Impeller (F–4) 2438.4 mm (96.0")ø ⊙ 22.0 °	304L
2	Base 533.4 mm x 533.4 mm (21.0" x 21.0")	Steel
3	Pedestal c/w dry well (dry well)	
4	NORD reducer 21.72 RPM	
5	NORD 5.0 Hp motor, premium efficiency, 575/3/60, TEFC	
6	Shaft: (1) section 2430.8 mm (95.7") ⊙ 3.0"ø	304L
7	Three pos'n adjustment: 1/2D, 3/4D and 1.0D	

APPL'N: REACTOR (QTY 3)
MELANGEURS MIX–TECH
MODEL: EVGX6–5.0
3.73 kW ⊙ 21.72 RPM
S/N 04865–1, 2, 3
Reactor # 1
Rotation: Counter clocwise
Thrust: Up
Tag #: M1–011
Reactor # 2
Rotation: clocwise down
Thrust: U
Tag #: M1–012
Reactor # 3
Rotation: Counter clocwise
Thrust: Up
Tag #: M1–013

Dimensions: Inches

MOD.:	A	B	C	D	E	E2	F	Gø	Hø SHAFT	I	J	Kø	Lø	M	N2	P
EVGX6	12.85	29.8	16.05	.875	95.7	–	–	96.0	3.0	21.0	18.0	1.0	.875	13.8	16.0	16.02

Dimensions: mm

MOD.:	A	B	C	D	E	E2	F	Gø	Hø SHAFT	I	J	Kø	Lø	M	N2	P
EVGX6	326.4	756.9	407.7	22.2	2430.8	–	–	2438.4	76.2	533.4	457.2	25.4	22.2	350.5	406.4	407.0

Ce dessin et l'information qu'il contient est la propriété de ENVIREQUIP WTEM Inc. Il est interdit de le copier, le photographier, l'imprimer, le prêter ou de l'utiliser sans la permission de ENVIREQUIP WTEM Inc.

This drawing and the information contained thereon is the property of ENVIREQUIP WTEM Inc. It is not to be printed, photographed, copied, loaned or used without the permission of ENVIREQUIP WTEM Inc.

NO	DATE	REVISION	P/B

PROJET/PROJECT
AGNICO EAGLE – AMARUK

ENVIREQUIP WTEM INC.
490 Bord du Lac – Suite 2
Dorval, QC H9S 2A8
Montreal Tel: (514) 338-1043
RR1 (21404 Little Russels Rd.)
Glen Robertson, Ont K0B 1H0
Ontario Tel: (613) 874-2016
Fax: (613) 874-2629
E-mail: enviroqp@glen-net.ca

TITRE/TITLE
"MIX–TECH" Mixers
Veolia Water Technologies
EVGX SERIES

DESSINÉ PAR: DRAWN BY: PJ	DATE March 8, 2018
DESS. NO: DWG NO: EVGX	ÉCH./SCALE N.T.S
VÉRIFIÉ PAR: CHECKED BY: PJ	PROJ.NO: 04865
APPROUVÉ PAR: APPROVED BY: RJ	REV. 00

This page is intentionally left blank

ENVIREQUIP

W.T.E.M. INC.

MIX-TECH

DYNAMIC MIXERS

EVG & EVG-FP SERIES

1/4 TO 200 HP

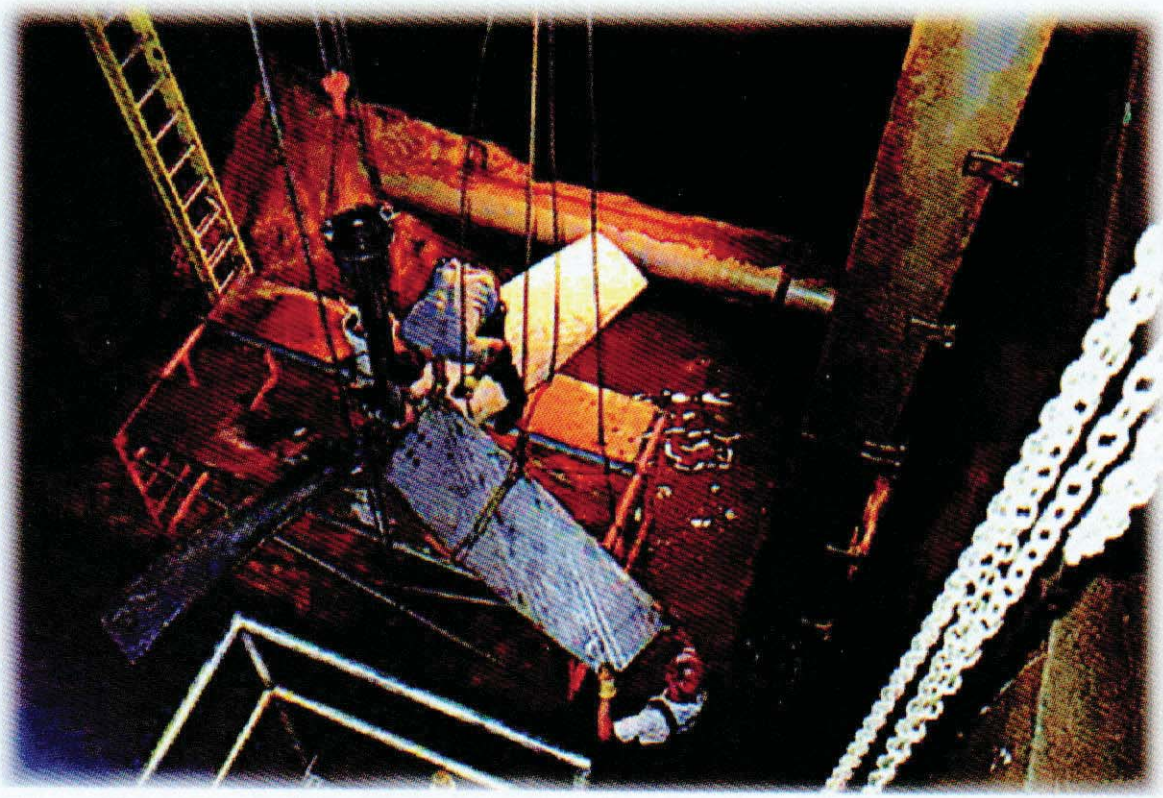

MIX-TECH FEATURES:

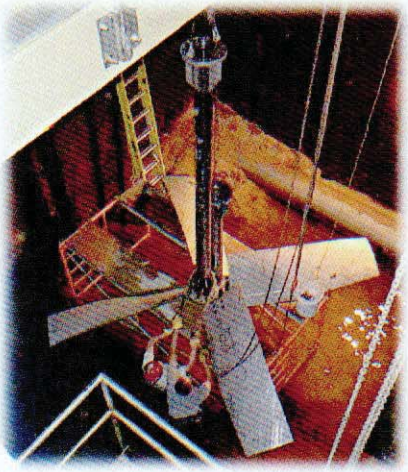

- Large service factors on gear drives - minimum 2.5.
- Shaft stress to 9000 psi maximum.
- Impeller / Hub / Coupling 6000 psi maximum.
- All drives are capable of reverse rotation.
- Optional pedestal with shaft catcher design, that allows removal of the gear drive without disturbing the wet end.
- "FP" Option: The reducer is totally isolated from the random hydraulic loads imposed by the shaft & impeller assembly.
- Large shaft capability operating at 65% of the shaft's 1st Harmonic frequency or Critical Speed.
- Mounting options: Steel base, pedestals and custom.
- Seal options: HPLRSB, LPSB, Lip seals, Single, Double, Dry-Running or Cartridge seals.
- Motor options: Nord integral Standard; Nema motors, hydraulic & pneumatic motors also available.
- Full range of impellers including **ENVIROFOIL**.

MIX-TECH... GOOD PEOPLE TO MIX WITH

ENVIREQUIP

W.T.E.M. INC.

EVG & EVG-FP SERIES
1/4 TO 200HP

MIX-TECH
DYNAMIC MIXERS

Isolating the gear drive 100% from the random hydraulic loads generated by the mixer's shaft and impeller assembly.

FEATURES:

- Elegant parallel design shaft-helical gears.
- AGMA 13 on high speed gears and AGMA 11 minimum for other gears.
- Large service factors - minimum 2,5.
- Oversized roller bearings B10 life, 100,000 hours minimum.
- Double output shaft seals and leakproof dry-well design option.
- Available with hollow quill output shaft for easy maintenance.

MIX-TECH... GOOD PEOPLE TO MIX WITH

ENVIREQUIP

MIX-TECH MIXERS - WARRANTY - SERVICE

WARRANTY

ENVIREQUIP offers a 2 Year warranty against defects on materials and workmanship and a process warranty providing that the process information provided at the time on which the mixer selection was based is correct.

SERVICE

MIX-TECH have shipped mixers to many parts of the world. MIX-TECH provide sales and service in North America through our own staff and through our network of distributors and representatives. For the MIX-TECH Series EVG mixers, the drives are Nord Gear. Because MIX-TECH do not remove the nameplates from the original Nord drive, our clients have the original serial numbers of the drive(s). For any problems or for new applications, please contact us directly toll free at 1-866-819-6123 or fax us at 1-613-874-2629.

Additionally, Nord provide sales and service in hundreds of locations in most countries worldwide. You are never far from service anywhere in the world.

CONTACT US

From all of us at **ENVIREQUIP**, we thank our clients very much for your interest in our equipment and for your patronage. We promise to continue to manufacture top quality, rugged equipment, that is energy-efficient, feature-packed, at a reasonable price. Contact us toll free at 1-866-819-6123, fax us at 1-613-874-2629, send e-mail to : envireqp@glen-net.ca or visit our web site at www.envirequip.com

Or contact Vivendi one of our licensees for water and waste water applications at 1-514-334-7230.

For a mixer selection and quotation, please call, fax, e-mail, check our web site, or write to us, and we will be pleased to provide you with a prompt energy-efficient mixer quotation.

REPRESENTED BY :

ENVIREQUIP

W.T.E.M. INC.

MIX-TECH... GOOD PEOPLE TO MIX WITH

ENVIREQUIP

WTEM INC.

MIX-TECH PORTABLE MIXERS 1/4 to 2 HP

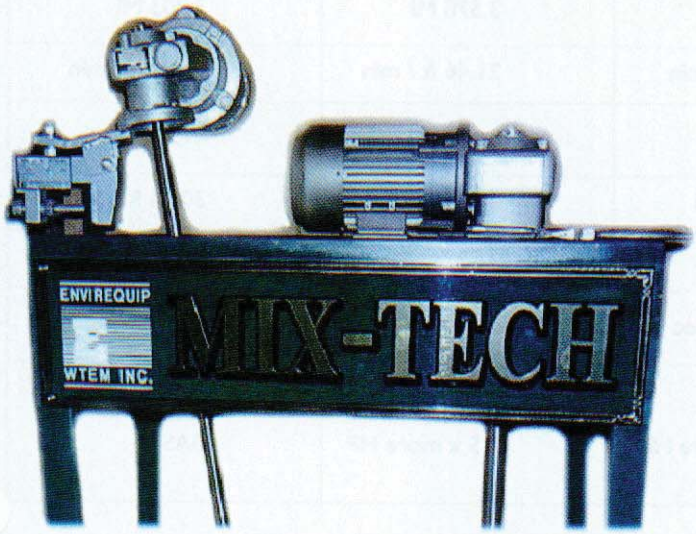

Nord Gear reducers with hollow quill, Crown & Worm gearing and fixed mount is Standard, Parallel Shaft Helical optional.

Commercially available Nord reducers No proprietary parts nor their high prices - Availability worldwide.

Motors: 575/3/60 or 460/3/60 TEFC, inverter service Standard 120/1/60 TEFC 56C inverter service optional air or hydraulic motor and XP optionally available.

Mounting: Flanged Fixed mount Standard optional: Angle Riser base (2) axis Clamp; Custom designs.

Shafts: 0.75", 1.0", 1.25", 1.4375" diameter.

Seals: LRSB, Lip seals, Mechanical Seals including Dry-Running.

Impellers: ENVIROFOILs Standard "best-fit" supplied.

Materials: Steel, 304, 316 SS, PVC and/or elastomer coatings et al.

Sanitary Design: Welded design, Polished to any finish, SS pedestals, Washdown motors.

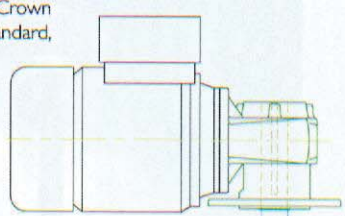

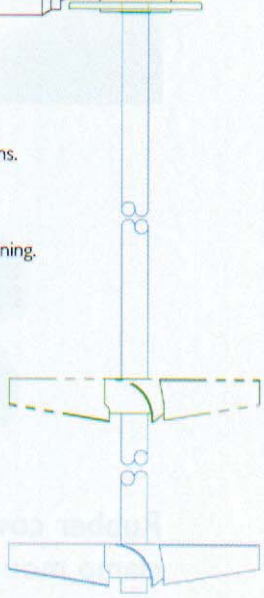

15 Reasons why you should consider buying MIX-TECH Portable Mixers:

MIX-TECH MIXERS operate below the 1st shaft harmonic frequency or Critical Speed and have no problems using VFD's over the entire speed range.

MIX-TECH MIXERS consume up to (10) times less HP than others operating at 350 RPM.

MIX-TECH MIXERS are selected taking THE MECHANICAL ADVANTAGE, thus optimizing energy usage.

MIX-TECH MIXERS are equipped with large impellers (Compared to others), providing excellent batch control.

MIX-TECH MIXERS operate at low peripheral speeds which provide less wear, shear and foaming problems

MIX-TECH standard mixers equipped with Crown & Worm gearing operating at low RPM's are more energy efficient than any other mixer operating at 350 RPM. Parallel shaft helical drives also available.

Crown & Worm drives can withstand momentary overloads up to 300%.

MIX-TECH MIXERS all have a minimum service factor of 2.5, others are usually 1.25 to 1.5 maximum.

MIX-TECH MIXERS are equipped with oversized bearings and are sized to provide a B10 Life of 100,000 hours minimum.

MIX-TECH MIXERS drive's high speed gears are ground to AGMA 13; the low speed gears to AGMA 11 minimum.

MIX-TECH MIXERS come equipped with fixed flange mounts as standard (OPTIONS: Clamp, Angle-Riser, Custom), and can be field converted to any other mounting (or visa versa).

MIX-TECH MIXERS have an easy shaft removal system (thrust plate & bolt).

MIX-TECH MIXERS are equipped with ENVIROFOIL high pumping - Low Power-Draw Impellers.

MIX-TECH MIXER'S warranty is (2) years against defects in materials or workmanship and includes a Process Warranty.

At ENVIREQUIP, our goal is to manufacture MIX-TECH MIXERS which are rugged, feature packed, easy to maintain and energy efficient at a reasonable price.

MIX-TECH...GOOD PEOPLE TO MIX WITH

VL2 & VL3 AGITATOR
MIXER & SHREDDER REDUCERS

NORD DRIVESYSTEMS

VL2 - SPREAD BEARING DESIGN

Increased bearing spreads with an oversized double row spherical bearing on the lower side. It is commonly used in shredders, mixers or applications requiring increased bearing load carrying capacities.

VL3 - SPREAD BEARING DESIGN

In addition to the VLII design an oil leakage control system is added. Our Dry Cavity System provides a very high degree of oil safety. The anti-leak QUADRILIP™ Oil Sealing System is enhanced with an oil collection cavity (just-in-case) and various ways to sense and remove the leakage from the cavity. Standard is a viewable oil sight indicator with an optional capacitive proximity switch and control available for electronic indication of a leak.

OPTIONS TO BOTH DESIGNS

You may include a grease zerk to lubricate the lower bearing, and a removable plug to allow excess grease to purge from the bearing cavity.

Unit Size	B5 Flange Diameter		Solid Shaft Diameter		Hollow Shaft Diameter		Shrink Disc Diameter		Output Bearings		Bearing Spread	
	[in]	[mm]	[in]	[mm]	[in]	[mm]	[in]	[mm]	upper	lower	[in]	[mm]
Offset Parallel (Clincher)												
SK 1282	7.87	200	1.250	30	1.188	30	1.250	30	6009Z	22210E	4.91	125
SK 2282 or SK 2382	9.84	250	1.375	35	1.438	35	1.500	35	NUP210E	22212E	5.55	141
SK 3282 or SK 3382	11.81	300	1.875	45	1.625	40	1.625	40	NUP211E	22213E	6.58	167
SK 4282 or SK 4382	11.81	300	2.250	55	2.062	50	2.000	50	NUP214E	22216E	8.45	215
SK 5282 or SK 5382	13.78	350	2.500	65	2.438	60	2.500	60	NUP217E	22219E	9.92	252
SK 6282 or SK 6382	15.75	400	3.000	75	2.750	70	3.000	70	NUP220E	23222E	12.67	322
SK 7282 or SK 7382	17.72	450	3.500	90	3.188	80	3.188	80	NUP222E	23224E	14.08	358
SK 8282 or SK 8382	21.65	550	4.250	110	4.062	100	4.000	100	NUP226E	23228E	16.76	426
SK 9282 or SK 9382	25.98	660	5.250	140	4.750	120	4.750	125	NUP232E	23236E	19.04	484
SK 10282 or SK 10382	25.98	660	6.250	160	----	----	6.250	160	23044MB	22244MB	23.70	602
SK 11282 or SK 11382	25.98	660	7.000	180	----	----	7.000	180	23048MB	22244MB	24.29	617
SK 12382	25.98	660	7.000	180	----	----	7.000	180	23048MB	22244MB	24.29	617
Helical-Bevel Speed Reducer												
SK 9012.1 or SK 9013.1	7.87	200	1.250	30	1.375	35	1.375	35	6010Z	22210E	6.17	157
SK 9016.1 or SK 9017.1	7.87	200	1.375	35	1.500	40	1.500	40	6010Z	22210E	6.17	157
SK 9022.1 or SK 9023.1	9.84	250	1.375	35	1.500	40	1.500	40	6010Z	22210E	7.13	181
SK 9032.1 or SK 9033.1	11.81	300	1.750	45	2.000	50	2.000	50	6014 2RS	22214ES	8.17	207
SK 9042.1 or SK 9043.1	13.78	350	2.375	65	2.375	60	2.375	60	NUP216E	22219ES	10.47	266
SK 9052.1 or SK 9053.1	15.75	400	2.875	75	2.750	70	3.250	70	NUP220E	23222ES	13.28	337
SK 9072.1	17.72	450	3.625	90	3.250	80	3.250	80	NUP222E	23224ES	15.74	400
SK 9072.1/32	17.72	450	3.625	90	3.250	80	3.250	80	NUP222E	23224ES	15.74	400
SK 9072.1/42	17.72	450	3.625	90	3.250	80	3.250	80	NUP222E	23224ES	15.74	400
SK 9082.1	21.65	550	4.375	110	4.000	110	4.000	110	NUP228E	23228ES	18.61	473
SK 9082.1/42	21.65	550	4.375	110	4.000	110	4.000	110	NUP228E	23228ES	18.61	473
SK 9082.1/52	21.65	550	4.375	110	4.000	110	4.000	110	NUP228E	23228ES	18.61	473
SK 9086.1	25.98	660	4.750	120	4.750	120	4.750	125	22232E	23236ES	21.50	546
SK 9086.1/52	25.98	660	4.750	120	4.750	120	4.750	125	22232E	23236ES	21.50	546
SK 9092.1	25.98	660	5.500	140	----	----	5.500	150	23040E	23236ES	25.57	650
SK 9092.1/52	25.98	660	5.500	140	----	----	5.500	150	23040E	23236ES	25.57	650
SK 9096.1	25.98	660	7.500	190	----	----	----	----	23040E	23236ES	25.57	650
SK 9096.1/62	25.98	660	7.500	190	----	----	----	----	23040E	23236ES	25.57	650
SK 9096.1/63	25.98	660	7.500	190	----	----	----	----	23040E	23236ES	25.57	650

VL2 & VL3 AGITATOR

RATIO & SPEED

OFFSET PARALLEL CLINCHER

- Ratio range : 4.03:1 to 6616.79:1
- Speed range from 1750 rpm motor : 0.26 to 434 rpm
- 95.5% minimum standard efficiency

90 SERIES RIGHT ANGLE BEVEL

- Ratio range : 8.04:1 to 4916.63:1
- Speed range from 1750 rpm motor : 0.36 to 218 rpm
- 95.5% minimum standard efficiency

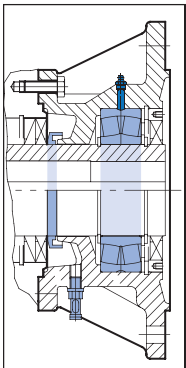

STANDARD CONFIGURATION

- B5 flange housing style
- Output shaft types : Keyed solid shaft, Keyed hollow shaft, Keyless shrink disc connector
- VLII-spread bearing design has an Increased bearing spread, and a Large double row spherical bearing on lower side
- VLIII-dry cavity design : Includes the VLII features with added oil leakage control, Oil flinger, Oil accumulation cavity, sight glass to show if oil is present in the control cavity

STANDARD CONFIGURATION OPTIONS

Regreasable zerk lubricating nipple for lower bearing, Capacitive oil sensing switch, Capacitive oil switch

SHAFT DATA

- AISI 4140 output shaft material
- Inch shaft key dimensions according to AISI B17
- Metric shaft key dimensions according to DIN 6885
- Standard output shaft drill and tap
- Shrink disc size range [in] :1.250 to 7.000
- Shrink disc size range [mm] : 30 to 180

INTERNAL PARTS ASSEMBLY

- Heavy press fit assembly method
- Standard reversing duty
- Typical backlash range [arc minutes] : 6 to 13

GEARING

- Up to AGMA Class 13 quality rating on gears
- 58 Rockwell C minimum hardness of steel gears
- Ground or skive hobbed hard finishing of gear teeth
- Standard drop forged gear blanks
- 275% momentary overload capacity
- Standard hunting tooth ratios

HOUSING

- Class 35 gray iron typical housing material
- Single setup machining method
- UNICASE™ one piece main housing design
- Seals directly contact main housing
- Exceptional housing torsional stiffness
- Thick housing wall section
- Castings are dip sealed

BEARINGS

- ABEC-1 quality bearings
- Bearing spread is larger than standard unit by at least 50%
- Double row spherical lower output bearing
- Optional housing with grease zerk available for lower bearing regreasing
- NIGI 2EP lithium based lower bearing lubricant
- 50,000 + hours of L10 output bearing life

LUBRICANT & SEALING COMPONENTS

- Factory filled ISO 220 mineral oil
- Standard AUTOVENT™ breather style
- QUADRILIP™ output seal system
- 3 double lip & 2 single lip output shaft oil seals
- Double lipped lower flange seal
- Nitrile rubber oil seals

LUBRICANT & SEALING OPTIONS

Custom synthetic lubricating oil, High or low temperature lubricating oil, Fluid grease lubricant, Food grade lubricating oil, Long term storage preparation, Magnetic drain plug, Bullseye sight glass, Custom drain plug, Fluorinated rubber oil seal material

ENVIRONMENTAL PROTECTION

- Exterior primer coverage : all metal exterior surfaces
- Paint type : Water Based Resin
- Paint additive : 316 stainless steel flakes
- USDA incidental contact exposure : H1

ENVIRONMENTAL OPTIONS

Severe duty and washdown duty paint options, Custom paint, Top side shaft covers

DRIVESYSTEMS

www.nord.com

NORD Gear Corporation
National Customer Service Toll-Free: 888.314.6673
info.us@nord.com

NORD Gear Limited
Toll-Free in Canada: 800.668.4378
info.ca@nord.com

WEST
Corona, CA (Los Angeles)
Phone: 608.849.0190

MIDWEST
Waunakee, WI (Madison)
Phone: 608.849.7300

EAST
Charlotte, NC
Phone: 608.849.0140

CANADA
Brampton, ON (Toronto)
Phone: 905.796.3606

100200023/1011

Project name: AMARUQ

Project#: 5000218009

Document #: SPK_0001_RX

by: LJ

chkd: GP

appvd: CB

METAL PRECIPITATION REACTOR

VALVES

OIM manual section: 4.3.1.4

This page is intentionally left blank

PRATT

Henry Pratt Company

Ballcentric® Plug Valve

Engineering Creative Solutions
for Fluid Systems Since 1901

A Tradition of Excellence

With the development of the first rubber seated butterfly valve more than 70 years ago, the Henry Pratt Company became a trusted name in the flow control industry, setting the standard for product quality and customer service. Today Pratt provides the following range of superior products to the water, wastewater and power generation industries.

Butterfly Valves: from 3" to 162"

Rectangular Valves: 1' x 1' to 14' x 16'

Ball Valves –
Rubber Seated: from 4" to 60"
Metal Seated: from 6" to 48"

Plug Valves: from 1/2" to 72", 100% port available up to 48", 3 ways

Air Valves for Water and Wastewater: from 1/2" to 20"

Hydraulic Control Systems

Valve Controls

Energy Dissipating Valves and Fixed Energy Dissipaters

Cone Valves

Check Valves

Plunger Valves

A Commitment to Meeting The Customers' Needs

Henry Pratt valves represent a long-term commitment to both the customer and to a tradition of product excellence. This commitment is evident in the number of innovations we have brought to the industries we serve. In fact, the Henry Pratt Company was the first to introduce many of the flow control products in use today, including the first rubber seated butterfly valve, one of the first nuclear N-Stamp valves, and the bonded seat butterfly valve.

Innovative Products For Unique Applications

Though many of the standard valves we produce are used in water filtration and distribution applications, Pratt has built a reputation on the ability to develop specialized products that help customers to meet their individual operational challenges.

Creative Engineering for Fluid Systems

Pratt's ability to provide practical solutions to complex issues is demonstrated by the following case histories.

Earthquake Proof Valves

Pratt designed and manufactured hydraulically actuated valves for a water storage application so that the valves would automatically operate in the event of earthquakes. This led to the development of a valve that will withstand acceleration forces of up to 6gs.

Custom Actuation/Isolation Valves

Pratt has designed and manufactured nuclear quality quarter-turn valves and parts since the first nuclear-powered generating plants were built. Our custom valves are able to close in a millisecond, using specially designed Pratt electro-pneumatic actuators.

Valves Designed for Harsh Environments

Pratt designed and manufactured a 144" diameter butterfly valve for the emergency cooling system at a jet engine test facility. The valve was designed to supply water to help dissipate the tremendous heat generated by the engines during testing.

PRATT
Henry Pratt Company

Through experience, commitment and creative engineering, Pratt is uniquely suited to provide superior products for our customers' special needs.
For more information, contact our corporate headquarters in Aurora, Illinois.

PRATT
Henry Pratt Company

401 South Highland Avenue
Aurora, Illinois 60506-5563
www.henrypratt.com
phone: 630.844.4000
fax: 630.844.4160

Table of Contents

Ballcentric® Plug Valve

Scope of Line 2
Features and Benefits 3
Dimensional Data 4
Standard Materials of Construction, Fig. 601/600, 12" & Smaller 5
Standard Materials of Construction, Fig. 601/600, 14" & Larger 6
Flanged End, Fig. 601 Cast Iron/611 Ductile Iron 2 $^{1}/_{2}$" - 12" 7
Mechanical Joint, Fig. 600 Cast Iron/610 Ductile Iron 3" - 12" 8
Flanged End Fig. 601 Cast Iron/611 Ductile Iron and Mechanical Joint
End, Fig. 600 Cast Iron/610 Ductile Iron 14" & Larger 9
Flanged End Fig. 602 Class 250 2 $^{1}/_{2}$" and Larger 10
Flanged End Fig. 601RL Rubberlined 3" & Larger 11
Grooved End, Fig. 606 2 $^{1}/_{2}$" - 20" 12
Adaption 13
Technical Specification Series 601/600 Cast Iron Valves 14
Technical Specification Series 602 Class 250 Valves 15
Technical Specification Series 601RL Rubberlined Valves 16
Technical Specification Series 601S Stainless Steel Valves 17
Technical Specification Series 611/610 Ductile Iron Valves 18
Technical Specification Series 601GL Glass Lined Valves 19

Scope of Line

The Henry Pratt criteria of quality, reliability, safety and value are embodied in the Ballcentric® plug valve, setting higher standards for dependable performance with excellent features achieved by the utilization of the very latest design and manufacturing techniques.

- Computer Aided Design
- High Integrity Casting
- CNC manufacturing delivers consistent sizes on all components

All complemented by rigorous Quality Control System

Body

Conforming to AWWA C504 wall thickness, the Ballcentric® plug valve body casting is in ASTM A126 CL B cast iron using high pressure molding techniques. Alternative flanged, grooved or mechanical joint ends are available.

Flange diameter, thickness and drilling conform to ANSI B16.1 Class 125 or 250.

Grooved ends meet AWWA C-606 for ductile or steel pipe. Mechanical joints to AWWA C111 (ANSI A21.11).

Seat

The Ballcentric® plug valve incorporates as standard, on 3" and larger, a 1/8" thick welded 99% nickel seat for corrosion and erosion resistance specifically profiled for low torque and extended seat life.

Stem Seal

High integrity sealing by combining the advantages of a resilient and abrasion resistant U-Cup seal. From vacuum to high pressure, the self-adjusting sealing system (per AWWA C504) gives positive, trouble-free service and is retained independently of the plug stem or external torque device, thereby eliminating periodic maintenance.

Bearings

The plug rotates in permanently lubricated 316 grade stainless steel bearings, located in the body and bonnet, along with upper and lower PTFE thrust washers, which ensure consistently low operating torque.

Plug

Supported on integral trunnions, the plug is totally encapsulated with an elastomer that is molded on 2 1/2" – 48" and vulcanized on 54" and larger to the casting providing tight shut off even under vacuum conditions. High integrity corrosion-free sealing is achieved by a variety of abrasion resistant elastomers which protect the plug right up to the trunnions. When assembled, the light compression of the elastomers onto PTFE thrust washers, prevents entry of abrasive materials into the bearings.

Bonnet Seal

Superior "O" ring sealing with metal/metal contact means lower bolting stresses compared with compression gaskets.

Flow

The port design (round on 2 1/2" – 12" and rectangular on 14" and larger) with streamlined internal contours gives the highest industry capacity straight through flow in the full open position, reducing turbulence and pressure drop and the effect of erosive media. Handling of sludges and slurries is therefore enhanced.

Interchangeable

Because of the common face to face dimension with wedge gate valves (3" – 12"), fitting the tight shut-off rotary Ballcentric® plug valve into existing systems is accomplished without pipeline modifications.

Travel Stops

Adjustable open and closed travel stops are fitted as standard on both wrench and gear operated Ballcentric® plug valves.

Features and Benefits

- Valve in closed position for bubble tight shut-off
- Normal flow direction gives pressure assisted sealing
- Torques are low even in reverse flow

- Plug rotates away from the seat for instant opening
- Seat wear and operating torque reduced
- No further seat contact until valve is closed again

- Design of Ballcentric® plug valve allows modulating control over the full 90˚ travel
- Ideally suited for balancing service
- Standard rotary valve provides control and tight shut off in one valve

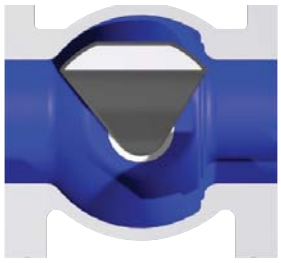

- Plug is out of flow path when fully open
- Straight through, uninterrupted smooth flow
- Round port reduces turbulence and erosion, lowers pumping costs and can be "pigged" to clean the pipeline

Installation

The Ballcentric® plug valve is suitable for flow and shut-off in either direction. Seat end downstream is the preferred orientation and any reverse flow requirement should be stated at the time of order. For use on fluids with suspended solids, it is recommended that the valve should be installed with the seat upstream and the valve stem horizontal with plug rotation to the top of the valve ensuring smooth operation.

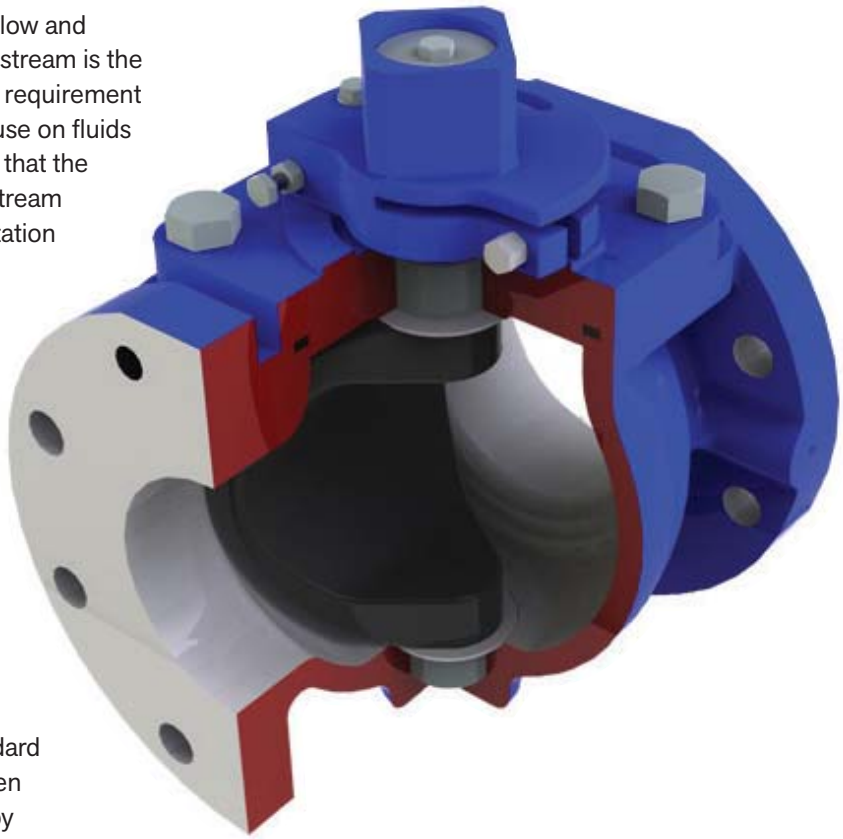

In-Line Maintenance

In the unlikely event of stem leakage, the stem seals can be easily replaced without removing the bonnet. Access to the body for cleaning or inspection does not require removal from the line.

Modular Construction

Design of the bonnet and stem allows for on-site adaption of gear operators, power actuators, or extension devices on to standard valves. Conversion can be easily undertaken without removing the valve bonnet, thereby minimizing downtime.

Power Operation

Pneumatic, electric or hydraulic operation is available, complete with accessories such as limit switches, solenoid valves and positioners when required.

Dimensional Data

ORDERING INFORMATION

Valve Types	Designation
Mechanical Joint Cast Iron	600
Mechanical Joint Ductile Iron	610
ANSI 125 Flanged Cast Iron	601
ANSI 125 Flanged Ductile Iron	611
ANSI 150 Flanged Ductile Iron	621
ANSI 250 Flanged Ductile Iron	602
ANSI 125 Grooved for Steel Pipe	606S
ANSI 125 Grooved for Ductile Pipe	606D
ANSI 150 Flanged 316SS	601S
SEAT	
Nickel (3" & Larger)	N
Epoxy (2½" ONLY)	E
316SS (on stainless steel valve only)	S
Rubberlined	RL
Glasslined	GL
ELASTOMER TRIM	
EPDM	0
Buna-Nitrile	1
Viton	2
Neoprene	3
Natural	4
MANUAL OPERATORS	
Above Ground Gear and Handwheel	AGHW
Above Ground Gear with 2" Nut	AGNUT
Buried Gear with 2" Nut	BG
Memory Stop Gear with Handwheel	MGHW
Lever / Wrench (8" & smaller)	L
Direct Nut (8" & smaller)	TC

Example: 4" 601N3AGHW = 4" ANSI 125 Flanged, Nickel Seat, Neoprene plug with Above Ground Gear and Handwheel

Valves are only tested for bi-directional shut-off if specified at time of order. Contact Henry Pratt for bi-directional ratings.

NOTE: We recommend mechanical joint or buried flanged valves to have gear operators

NOTE: We recommend valves for bi-directional service to have gear operators

PRESSURE RATING

12" and smaller	ANSI 125	175 psi
14" and larger	ANSI 125	150 psi
20" and smaller	ANSI 150	285 psi
12" and smaller	ANSI 250	400 psi
14" and larger	ANSI 250	300 psi

Body Hydrotest = 150% of rated pressure / Seat Test = 100% of rated pressure Testing per AWWA C517

ELASTOMERS AVAILABLE FOR BALLCENTRIC® PLUG VALVE

Natural rubber is also available.

Nitrile

A general purpose material sometimes referred to as BUNA-N or HYCAR with a –20°F to 212°F temperature range. Used on sewage, water, hydrocarbon and mineral oils.

EPDM

An excellent polymer for use on chilled water through to LP steam applications having a temperature range of –35°F to 250°F. Resistance to many acids, alkalies, detergents, phosphate esters, alcohols and glycols is an added benefit.

Neoprene

This versatile material shows outstanding resistance to abrasion and ozone. Chemical resistance to a wide range of petroleum base products and dilute acids and alkalies. Temperature range –20°F to 225°F.

Viton

Retention of mechanical properties at high temperature is an important feature of this elastomer: temperature range is –10°F to 300°F. It also has excellent resistance to oils, fuels, lubricants and most mineral acids and aromatic hydrocarbons.
Note: Not for water or steam applications.

Elastomer Selection Chart

Service	Elastomer	Average Useful Temp. Range	Service	Elastomer	Average Useful Temp. Range	Service	Elastomer	Average Useful Temp. Range
Acetone	EPDM	–35°F to 250°F	Caustic Soda	EPDM	–35°F to 250°F	Oil, Animal	Nitrile	–20°F to 212°F
Air	EPDM	–35°F to 250°F	Cement Slurry	EPDM	–35°F to 250°F	Oil, Mobil Therm Light	Viton	10°F to 250°F
Air w/Oil	Nitrile	0°F to 212°F	Copper Sulphate	EPDM	–35°F to 250°F	Oil, Mobil Therm 600	Viton	10°F to 250°F
Alcohol AMYL	EPDM	0°F to 212°F	Creosote (Coal)	Nitrile	–20°F to 212°F	Oil, Mobil Therm 603	Nitrile	–20°F to 212°F
Alcohol Aromatic	Viton	10°F to 250°F	Coal Slurry	Nitrile	–20°F to 212°F	Oil, Lubricating	Nitrile	–20°F to 212°F
Alcohol Butyl	Neoprene	–20°F to 225°F	Diesel Fuel No. 3	Nitrile	–20°F to 212°F	Oil, Vegetable	Nitrile	–20°F to 212°F
Alcohol Denatured	Nitrile	–20°F to 212°F	Diethylene Glycol	EPDM	–35°F to 250°F	Paint, Latex	Nitrile	–20°F to 212°F
Alcohol Ethyl	EPDM	–20°F to 250°F	Ethylene Glycol	EPDM	–35°F to 250°F	Phosphate Ester	EPDM	–35°F to 250°F
Alcohol Grain	Nitrile	–20°F to 212°F	Fatty Acid	Nitrile	–20°F to 212°F	Propane	Nitrile	–20°F to 212°F
Alcohol Isopropyl	Neoprene	–20°F to 225°F	Fuel Oil No. 2	Nitrile	–20°F to 212°F	Rape Seed Oil	EPDM	–35°F to 250°F
Alcohol Methyl	EPDM	–20°F to 250°F	Fertilizer Liquid H4N2O2	EPDM	–35°F to 250°F	Sewage with Oils	Nitrile	–20°F to 212°F
Ammonia Anhydrous	Neoprene	–20°F to 225°F	Gasoline Keg	Nitrile	–20°F to 212°F	Sodium Hydroxide 20%	EPDM	–35°F to 250°F
Ammonium Nitrate	EPDM	–20°F to 250°F	Gas Natural	Nitrile	–20°F to 212°F	Starch	EPDM	–35°F to 250°F
Ammonia, water	EPDM	–20°F to 250°F	Glue, Animal	Nitrile	–20°F to 212°F	Steam to 250°F	EPDM	–35°F to 250°F
Animal Fats	Nitrile	–20°F to 212°F	Green Liquor	EPDM	–20°F to 212°F	Stoddard, Solvent	Nitrile	–20°F to 80°F
Black Liquor	EPDM	–20°F to 250°F	Hydraulic Oil (Petro)	Nitrile	–20°F to 212°F	Sulphuric Acid 10% 50%	Neoprene	–20°F to 158°F
Blast Furnace Gas	Neoprene	–20°F to 225°F	Hydrogen	Nitrile	–20°F to 212°F	Sulphuric Acid 100%	Viton	10°F to 300°F
Butane	Nitrile	–20°F to 212°F	JF4, JP5	Viton	–20°F to 212°F	Trichloroethylene Dry	Viton	10°F to 300°F
Bunker Oil "C"	Nitrile	–20°F to 212°F	Kerosene	Nitrile	0°F to 212°F	Triethanol Amine	EPDM	–35°F to 250°F
Calcium Chloride	EPDM	–20°F to 250°F	Ketone	EPDM	–35°F to 250°F	Varnish	Viton	10°F to 300°F
Carbon Dioxide	EPDM	–20°F to 250°F	Lime Slurry	EPDM	–35°F to 250°F	Water, Fresh	EPDM	–35°F to 250°F
Carbon Monoxide (Cold)	Neoprene	–20°F to 150°F	Methane	Nitrile	–20°F to 212°F	Water, Salt	EPDM	–35°F to 250°F
Carbon Monoxide (Hot)	Viton	10°F to 300°F	Methyl Ethyl Ketone	EPDM	–35°F to 250°F	Xylene	Viton	10°F to 300°F
Carbon Tetrachloride	Viton	10°F to 300°F	Naptha (Berzin)	Nitrile	–20°F to 212°F			

NOTE: Above elastomer/temperature chart are guidelines only. See Henry Pratt Compatibility Chart for specific applications.

Standard Materials of Construction, Fig. 601/600, 12" & Smaller

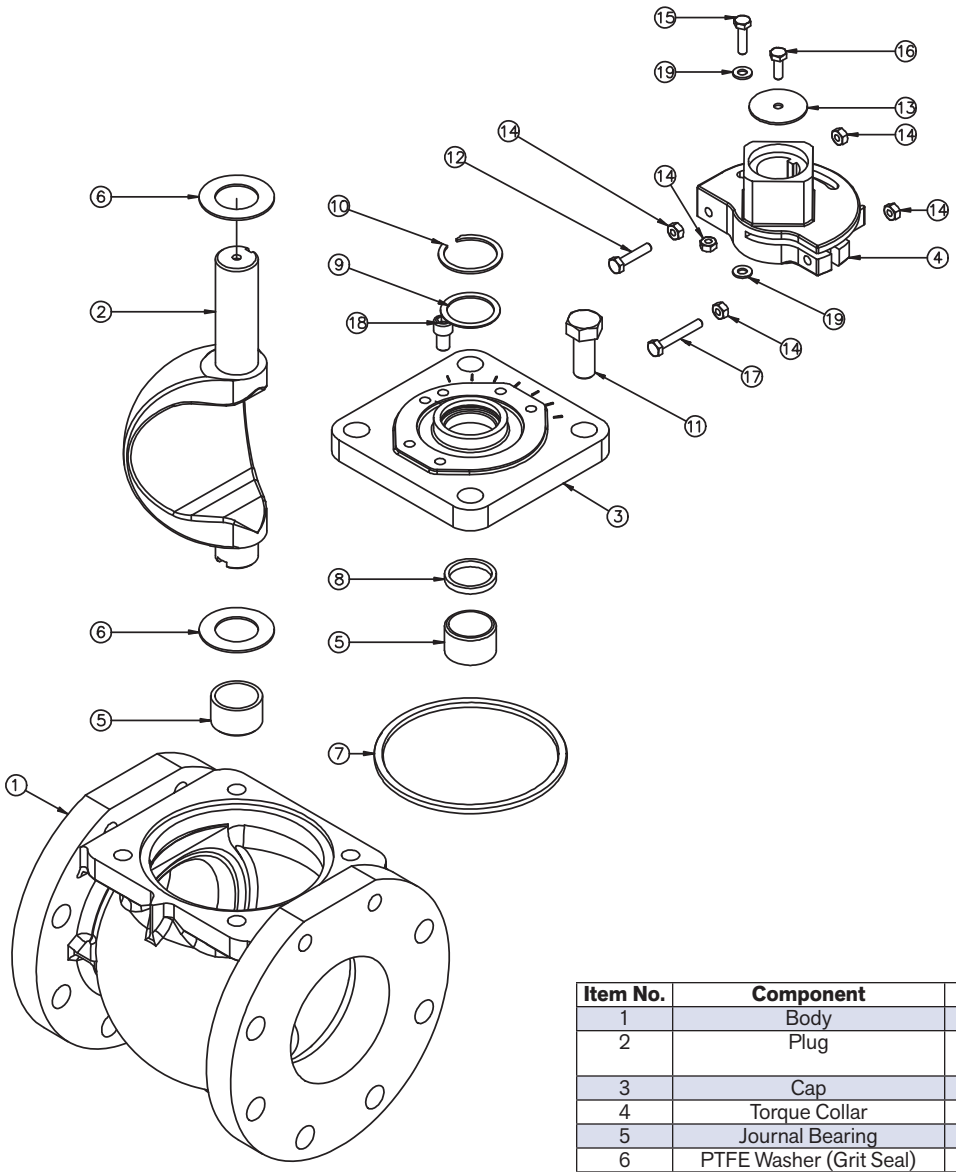

Item No.	Component	Material
1	Body	Cast Iron A126 Class B
2	Plug	Rubber Coated Ductile Iron ASTM A536
3	Cap	Cast Iron A126 Class B
4	Torque Collar	Ductile Iron ASTM A536
5	Journal Bearing	St.Steel – ANSI 316
6	PTFE Washer (Grit Seal)	PTFE
7	O Ring	Elas. as Spec.
8	U Cup Seal	Elas. as Spec.
9	Washer	Brass – ASTM B-138-675
10	Internal Snap Ring	Spring Steel
11	Setscrew	Steel (Zinc Plated)
12*	Closed Stop	Steel (Zinc Plated)
13*	Locking Washer	Steel
14*	Nut	Steel (Zinc Plated)
15*	Open Stop	Steel (Zinc Plated)
16*	Setscrew	Steel (Zinc Plated)
17*	Torque Bolt	Steel (Zinc Plated)
18*	Travel Stop	Steel
19*	Washer	Steel

***NOTE:** Torque Collar Assembly on 8" and Smaller

Standard Materials of Construction, Fig. 601/600, 14" & Larger

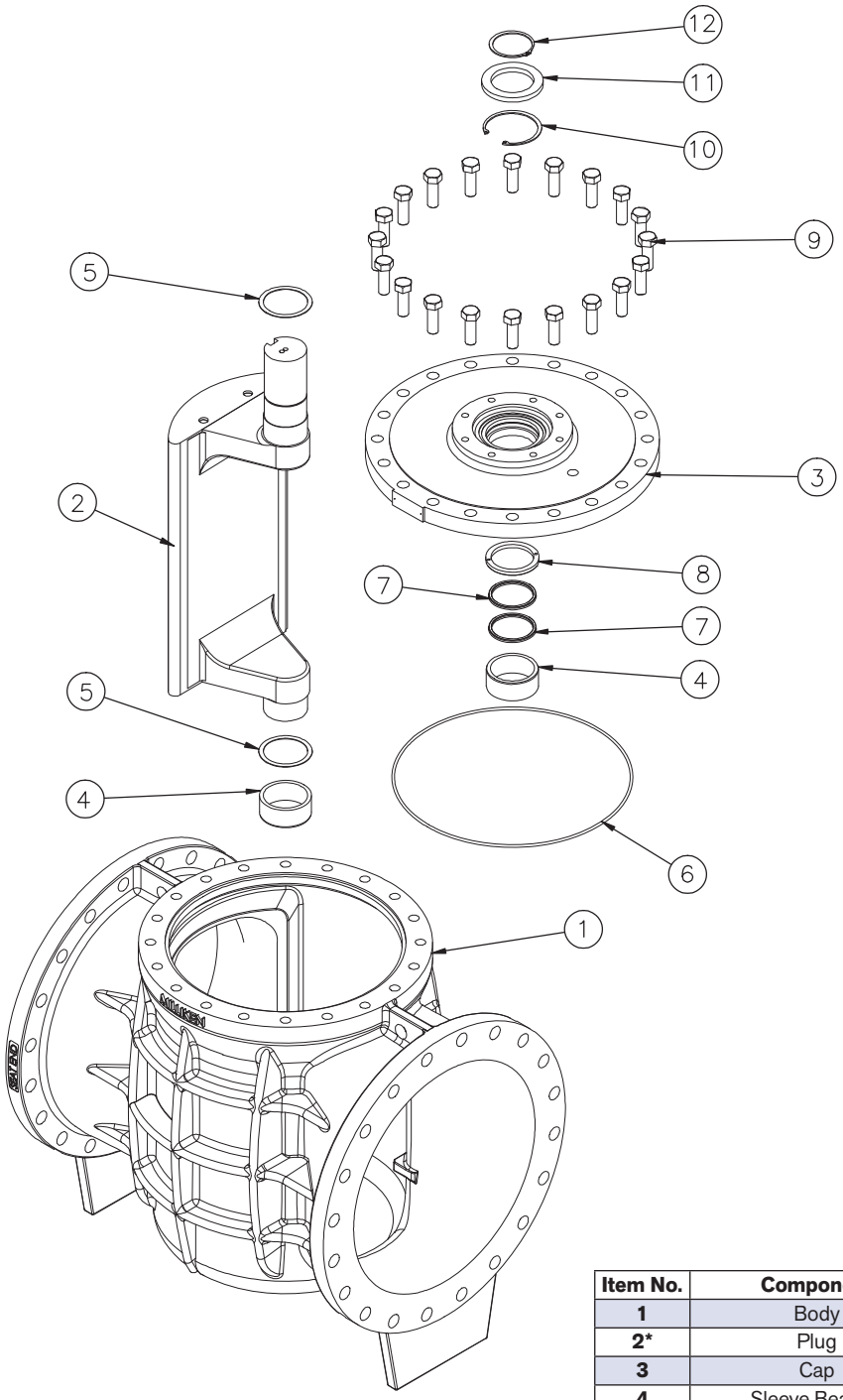

Item No.	Component	Material	Qty.
1	Body	Cast Iron A126 Class B	1
2*	Plug	Rubber Coated See Note 1	1
3	Cap	Cast Iron A126 Class B	1
4	Sleeve Bearing	Stainless Steel/Bronze	2
5	PTFE Washer (Grit Seal)	PTFE	2
6	Cap "O" Ring	Elas. as Spec.	1
7	U Cup Seal	Elas. as Spec.	2
8*	Seal Retaining Ring	See Note 2	1
9	Cap Screw	Steel (Zinc Plated)	A/R
10	Internal Snap Ring	Spring Steel	1
11	Support Collar	Steel	1
12	External Snap Ring	Spring Seal	1

***NOTE 1:** Plugs: Ductile Iron – ASTM A536 on 14" – 20"
Cast Iron – A126 Class B on 24" and larger

***NOTE 2:** Seal Retaining Ring: Brass – ASTM B-138-675 on 14" – 20" Steel on 24" and larger

Fig. 601 Cast Iron / 611 Ductile Iron – Flanged End 2 1/2" – 12", 175 PSI

2½" – 8" VALVES ONLY

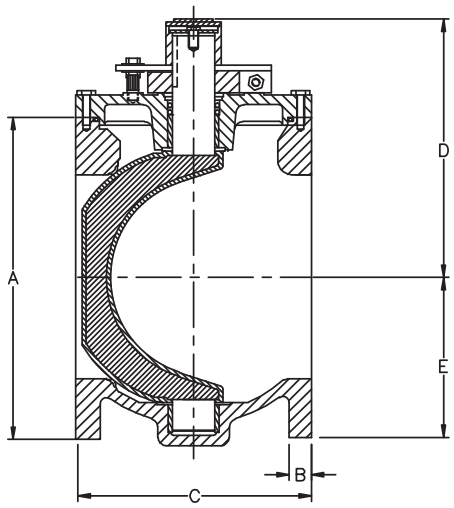

2½" – 12" VALVES

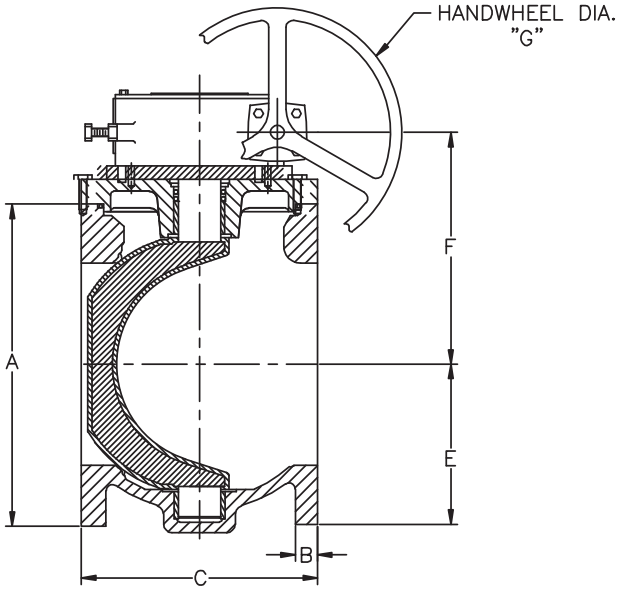

FLANGED END – ANSI 125								
SIZE	**2.50**	**3**	**4**	**5**	**6**	**8**	**10***	**12***
A	7.00	7.50	9.00	10.00	11.00	13.50	16.00	19.00
B	.69	.75	.94	.94	1.00	1.13	1.19	1.25
C	7.50	8.00	9.00	10.00	10.50	11.50	13.00	14.00
D	6.19	6.19	7.25	8.38	8.38	10.69	–	–
E	3.50	3.75	4.50	5.75	5.75	7.63	8.88	10.00
F	5.16	5.16	6.31	7.56	7.56	9.63	11.13	12.81
G	6.00	6.00	6.00	6.00	6.00	12.00	12.00	12.00
WEIGHT (approx.)	30	40	70	105	115	190	345**	440**

*10" & above have gear operators as standard

**Weight includes gear operator

NOTE: Drawings are for information purposes only; please request certified drawings before preparing piping diagrams

Fig. 600 Cast Iron / 610 Ductile Iron – Mechanical Joint 3" – 12", 175 PSI

3" – 8" VALVES ONLY

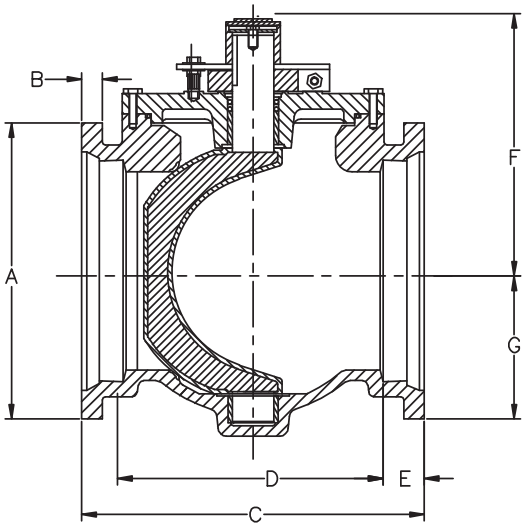

3" – 12" VALVES

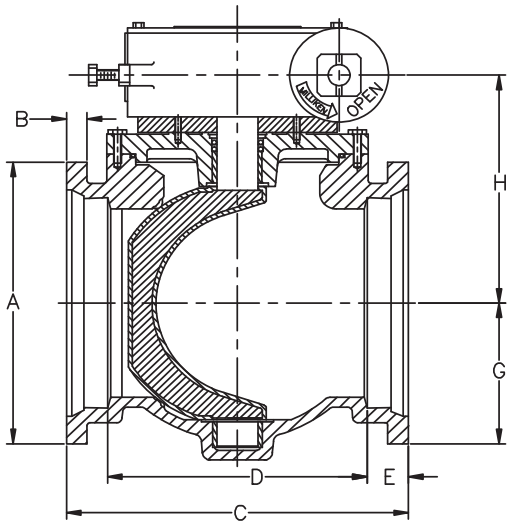

MECHANICAL JOINT END						
SIZE	**3**	**4**	**6**	**8**	**10***	**12***
A	7.69	9.00	11.13	13.38	15.63	17.94
B	.94	1.00	1.06	1.13	1.19	1.25
C	11.50	14.25	15.75	17.38	15.63	20.75
D	6.00	9.25	10.75	12.39	14.39	15.75
E	2.75	2.50	2.50	2.50	2.50	2.50
F	6.19	7.25	8.38	10.69	–	–
G	3.84	4.50	5.56	6.69	7.81	8.97
H	5.16	6.31	7.56	9.63	11.13	12.81
WEIGHT (approx.)	50	80	125	200	360**	480**

*10" & above have gear operators as standard

**Weight includes gear operator

We recommend gears on all Mechanical Joint Valves

NOTE: Drawings are for information purposes only; please request certified drawings before preparing piping diagrams

Fig. 601 Cast Iron / 611 Ductile Iron Flanged End
Fig. 600/610 Ductile Iron Mechanical Joint End
14" & Larger, 150 PSI

14" –20" VALVES

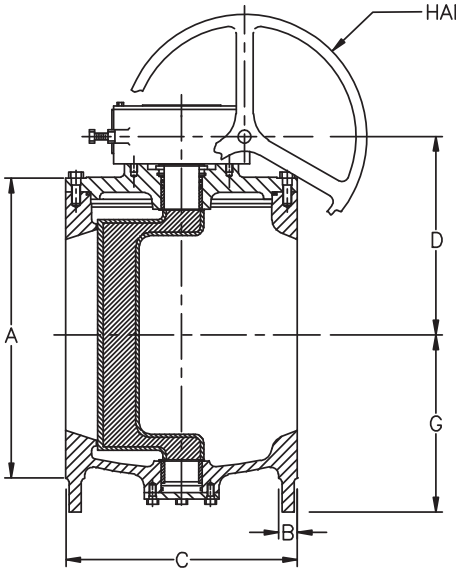

14" –20" VALVES

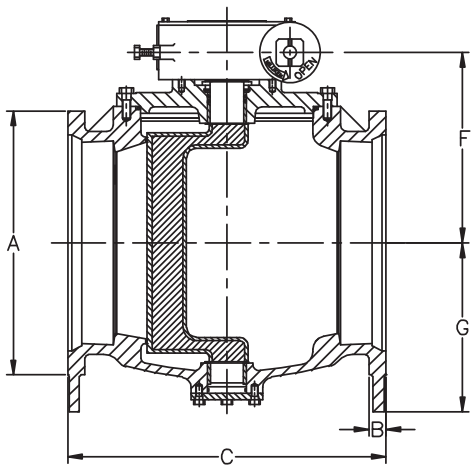

24" VALVES AND LARGER

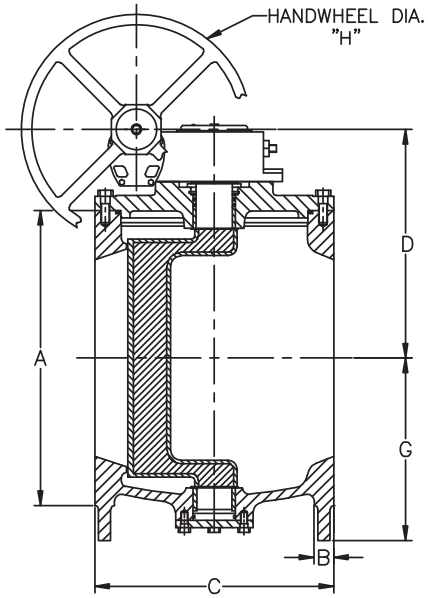

24" VALVES AND LARGER

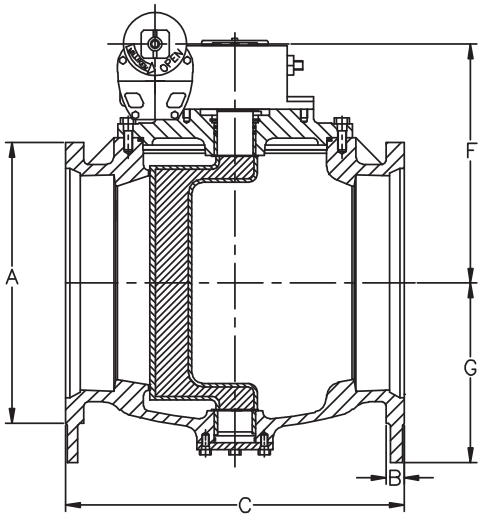

FLANGED END – ANSI 125										
SIZE	**14**	**16**	**18**	**20**	**24**	**30**	**36**	**42**	**48**	**54**
A	21.00	23.50	25.00	27.50	32.00	38.75	46.00	53.00	59.00	66.25
B	1.38	1.44	1.56	1.69	1.88	2.13	2.38	2.63	2.75	3.00
C	17.00	17.75	21.50	23.50	42.00	51.00	60.00	72.00	84.00	96.00
D	14.56	15.81	16.36	17.63	25.13	29.00	33.51	33.88	39.57	50.86
G	13.00	14.00	15.00	16.00	21.62	24.43	29.00	29.00	36.00	36.00
H	18.00	18.00	18.00	18.00	24.00	24.00	24.00	30.33	30.00	30.00
WEIGHT (approx.)	905	1030	1355	1880	3800	5200	6950	10160	13350	15100

Flanged Valves Meet ANSI B16.1

MECHANICAL JOINT END									
SIZE	**14**	**16**	**18**	**20**	**24**	**30**	**36**	**42**	**48**
A	20.13	22.56	24.84	27.06	31.50	39.13	46.00	53.13	60.00
B	1.31	1.38	1.43	1.50	1.62	1.68	2.00	2.00	2.00
C	24.50	27.25	29.25	31.00	42.00	51.00	60.00	72.00	84.00
F	14.56	15.81	16.36	17.63	25.13	29.00	33.51	33.88	39.57
G	13.00	14.00	15.00	16.00	21.62	24.75	29.00	29.00	36.00
WEIGHT (approx.)	905	1030	1355	1880	3800	5200	6950	10160	13350

Mechanical Joint Valves Meet ANSI 21.11 & AWWA C-111

Weight includes gear operator

NOTE: Drawings are for information purposes only; please request certified drawings before preparing piping diagrams.

NOTE: Dimensions on 60" and larger available upon request.

Fig. 602 Class 250 Flanged End
2 1/2" – 12", 400 PSI, 14" – 36", 300 PSI

2½" – 12" VALVES

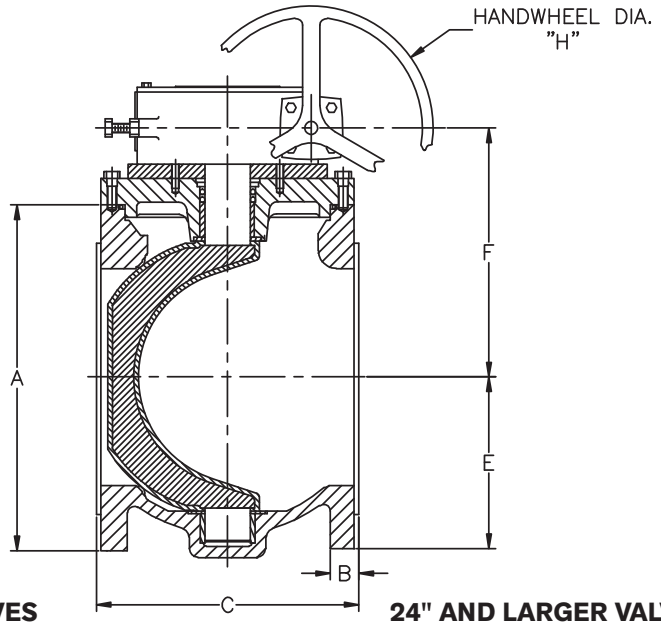

14" – 20" VALVES

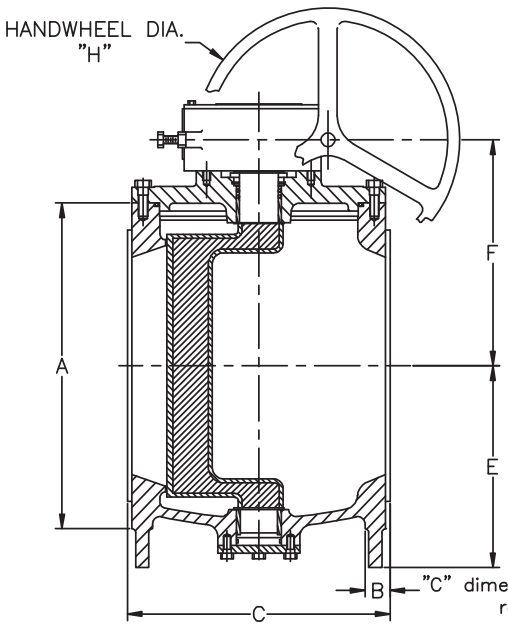

24" AND LARGER VALVES

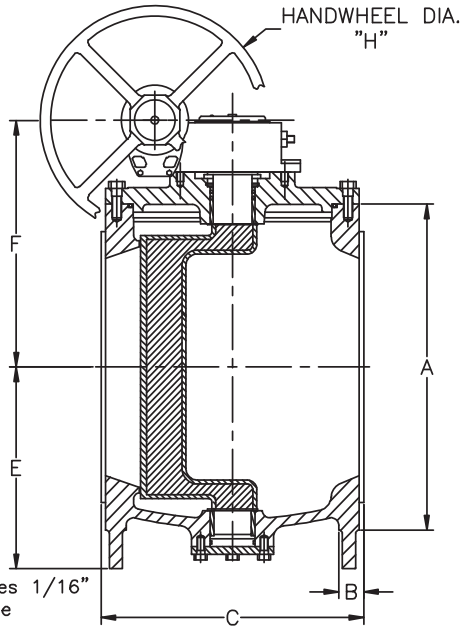

"C" dimen. includes 1/16" raised face

FLANGED END – ANSI 250															
SIZE	**2.50**	**3**	**4**	**5**	**6**	**8**	**10**	**12**	**14**	**16**	**18**	**20**	**24**	**30**	**36**
A	7.50	8.25	10.00	11.00	12.50	15.00	17.50	20.50	23.00	25.50	28.00	30.50	36.00	43.00	50.00
B	1.06	1.13	1.25	1.38	1.44	1.63	1.88	2.00	2.12	2.25	2.38	2.50	2.75	3.00	3.38
C	9.50	11.13	12.00	15.00	15.88	16.50	18.00	19.75	18.50	19.38	23.13	25.00	42.88	51.88	61.00
E	3.50	3.75	4.50	5.75	5.75	17.63	8.88	10.00	13.00	14.00	15.00	16.00	21.62	24.75	29.00
F	5.16	5.16	6.31	7.56	7.56	9.63	11.13	12.81	14.56	15.81	16.36	17.63	22.81	27.59	33.00
H	6.00	6.00	6.00	6.00	6.00	12.00	12.00	12.00	18.00	18.00	18.00	18.00	24.00	24.00	24.00
WEIGHT (approx.)	70	80	120	162	170	275	398	590	980	1125	1830	2060	4160	5700	7670

All above have gear operators as standard
Weight includes gear operator
NOTE: Drawings are for information purposes only; please request certified drawings before preparing piping diagrams
NOTE: Dimensions on 42" and larger available upon request

Fig. 601RL Rubberlined – Flanged End
3" – 12", 175 PSI, 14" & Larger, 150 PSI

3" – 12" VALVES

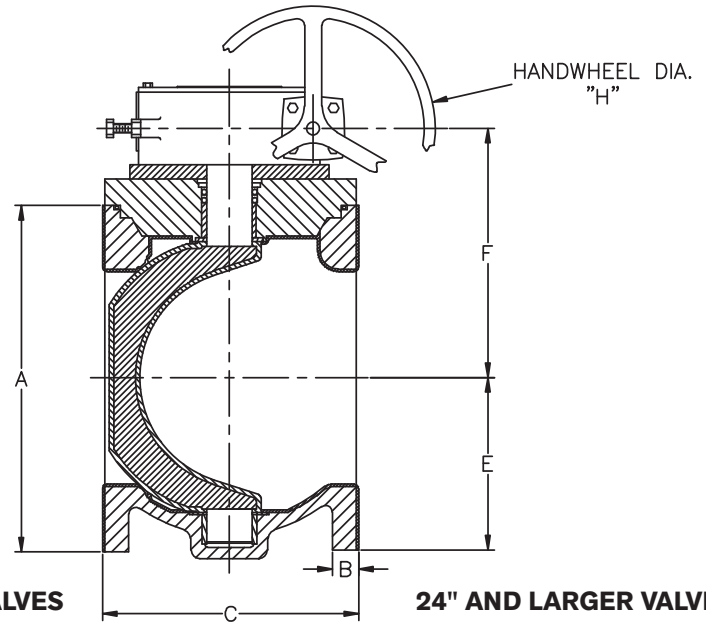

14" – 20" VALVES

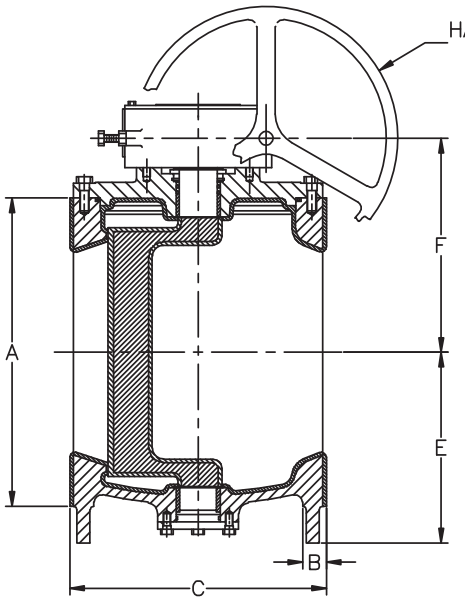

24" AND LARGER VALVES

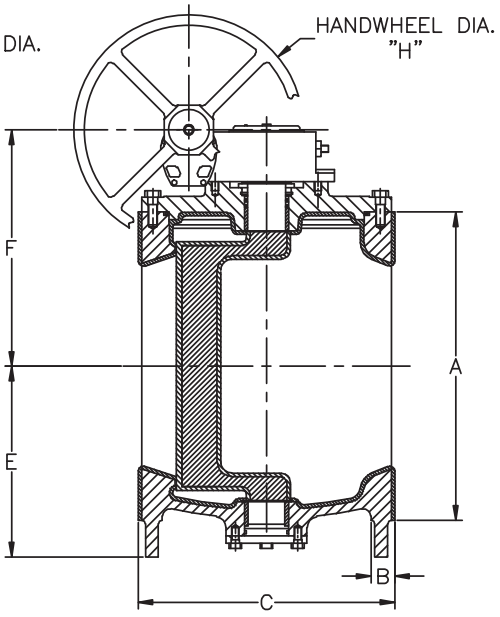

FLANGED END – ANSI 125 RUBBER LINED															
SIZE	**3**	**4**	**5**	**6**	**8**	**10**	**12**	**14**	**16**	**18**	**20**	**24**	**30**	**36**	**42**
A	7.50	9.00	10.00	11.00	13.50	16.00	19.00	21.00	23.25	25.00	27.50	32	38.75	46.00	53.00
B	.88	1.07	1.07	1.13	1.26	1.32	1.38	1.26	2.25	2.38	2.50	2.75	3.00	3.38	3.38
C	8.25	9.25	10.25	10.75	11.75	13.25	14.25	17.25	18.00	21.75	23.75	42.25	51.25	60.25	72.25
E	3.75	4.50	7.75	7.75	7.63	8.88	10.00	13.00	14.00	15.00	16.00	21.63	24.75	29.00	29.00
F	5.16	6.31	7.56	7.56	9.63	11.13	12.81	14.56	15.81	16.36	17.63	25.13	29.00	33.51	33.88
H	6.00	6.00	6.00	6.00	12.00	12.00	12.00	18.00	18.00	18.00	18.00	24.00	24.00	24.00	24.00
WEIGHT (approx.)	70	100	135	145	240	345	440	905	1030	1355	1880	3800	5200	6940	10160

All above have gear operators as standard
Weight includes gear operator
NOTE: Drawings are for information purposes only; please request certified drawings before preparing piping diagrams
NOTE: Dimensions on 48" and larger available upon request

Fig. 606 Grooved End
2 1/2" – 12", 175 PSI, 14" – 20", 150 PSI

2½" – 8" VALVES

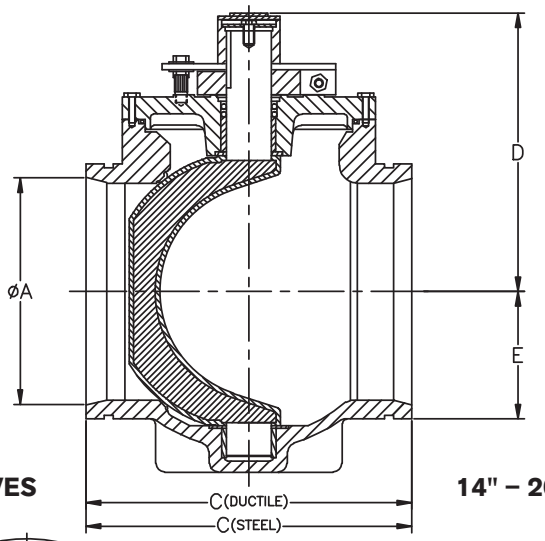

2½" – 12" VALVES

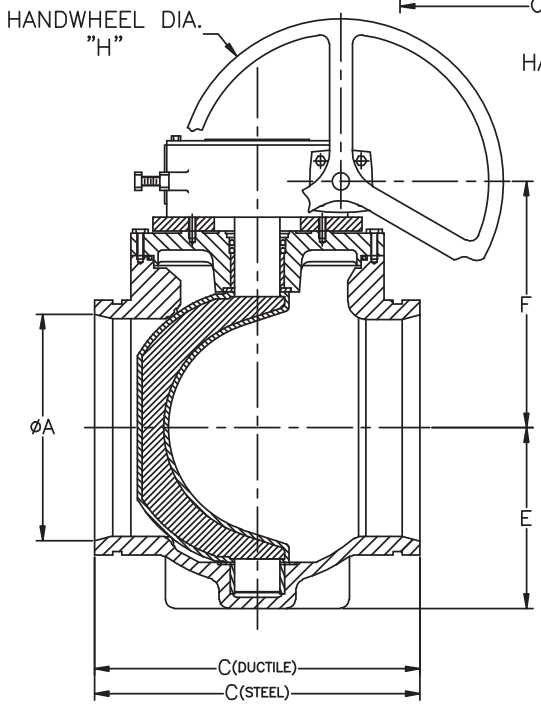

14" – 20" VALVES

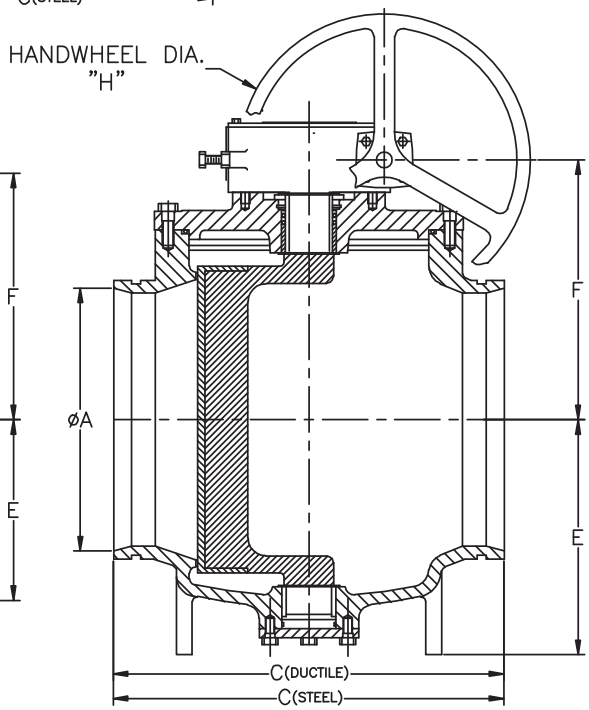

GROOVED END – AWWA 606												
SIZE	2.50	3	4	5	6	8	10*	12*	14*	16*	18*	20*
A	2.50	3.00	4.00	5.00	6.00	8.00	10.00	12.00	14.00	15.25	16.19	18.06
C (Duct.)	N/A	9.06	10.25	N/A	12.50	14.00	16.56	18.00	21.63	N/A	27.50	30.00
C (Steel)	7.13	8.50	10.13	12.38	12.38	13.88	16.44	17.88	21.63	22.50	27.50	30.00
D	6.19	6.19	7.25	8.38	8.38	10.69	–	–	–	–	–	–
E	3.50	3.75	4.50	5.75	5.75	7.63	8.88	10.00	10.00	14.00	15.00	16.00
F	5.16	5.16	6.31	7.56	7.56	9.63	11.13	12.86	13.56	15.81	16.35	17.63
H	6.00	6.00	6.00	6.00	6.00	12.00	12.00	12.00	12.00	18.00	18.00	18.00
WEIGHT (approx.)	20	30	50	70	80	145	325**	420**	RTF	RTF	RTF	RTF

*10" & above have gear operators as standard

**Weight includes gear operator

NOTE: Drawings are for information purposes only; please request certified drawings before preparing piping diagrams

NOTE: Larger sizes are available. Contact Henry Pratt Valve for data.

Adaption

**A range of extended stems & floor mounted stands for remote operation, particularly in buried service, are available.
Chainwheels & locking devices are readily incorporated onto the Ballcentric® Plug Valve.**

Valve with extended stem & 2" nut (Only for 8" and smaller valves)

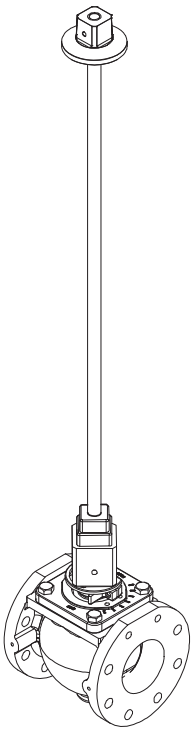

Valve with extended stem, buried gear and 2" nut

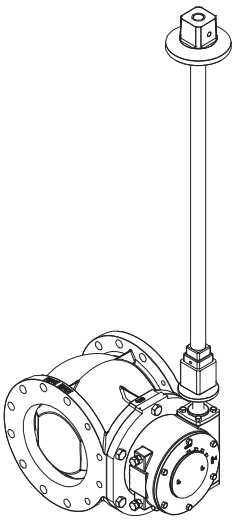

Valve with indicating floorstand

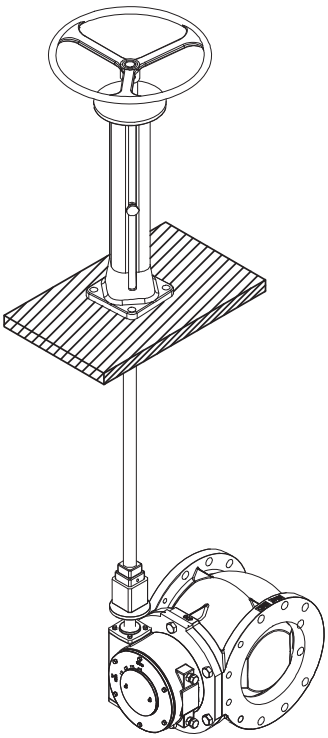

Valve with non-indicating floorstand & motor operator

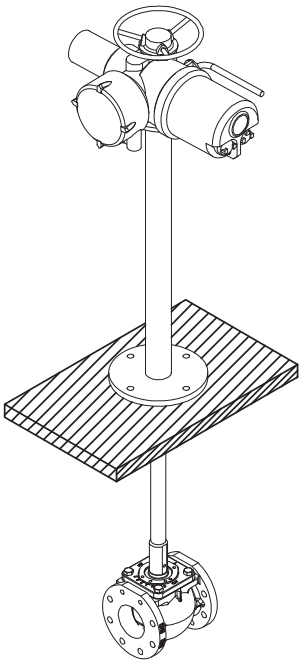

Valve with extended bonnet & motor operator

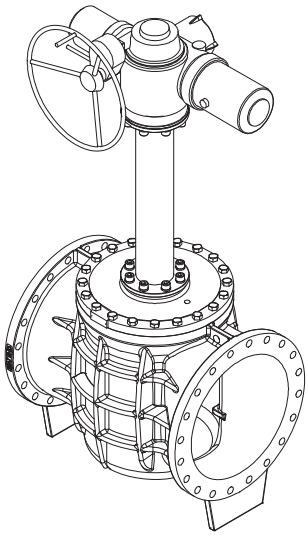

Valve with extended bonnet with gear

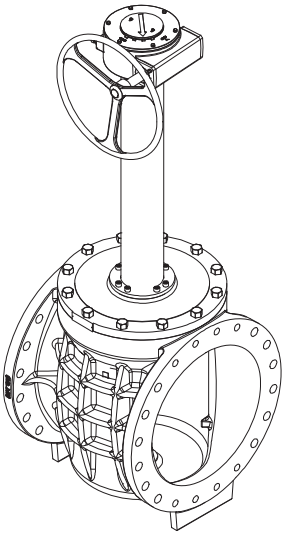

Technical Specification Ballcentric® Series 601/600 Plug Valves

AWWA C517-09 Standards

Valves shall be of the non-lubricated eccentric type with an elastomer covering all seating surfaces. The elastomer shall be suitable for the service intended. Flanged valves shall be manufactured in accordance with **ANSI B16.1 Class 125/150** including facing, drilling and flange thickness. Mechanical joint ends shall be in compliance with **AWWA/ANSI C-111-92**. Grooved ends shall be manufactured to the dimensions of **ANSI/AWWA C606** for ductile or steel pipe as required. Ports shall be round on sizes 2½"-12" and rectangular port design on valves 14" and larger. All valves shall be capable of being "pigged" with a soft pig when required.

Valve bodies shall be of **ASTM A-126 Class B** cast iron in accordance with **AWWA C-517-09 Section 4.3.3.1**. Valves 3" and larger shall be furnished with a welded-in overlay seat of 1/8" thick of not less than 99% nickel in accordance with **AWWA C-517-09, Section 4.3.3.4**. Sprayed, plated or screwed-in seats are not acceptable.

Plugs shall be of **ASTM A-536-Grade 65-45-12** for sizes 20" and smaller, and **ASTM A126 Class B Cast Iron** for sizes 24" and larger in compliance with **AWWA C-517-09 Sections 4.3.3.1 and 4.3.3.2**. The plugs shall be of one piece solid construction with PTFE thrust bearings on the upper and lower bearing journals to reduce torque and prevent dirt and grit from entering the bearing and seal area.

Valves shall be furnished with replaceable sleeve type bearings conforming to **AWWA C-517-09, Section 4.3.3.6**. Bearings shall be of sintered, oil impregnated type 316 stainless steel **ASTM A-743 Grade CF-8M**. Valve shaft seals shall be of the "U" cup type in accordance with **AWWA C-517-09 Section 4.4.7**. Seals shall be self adjusting and repackable without removing the bonnet from the valve.

Wrench operated valves 2½"-8" shall be capable of being converted to worm gear or automated operation without removing the bonnet or plug from the valve. All wrench operated valves shall be equipped with a 2" square nut for use with removeable levers or extended "T" handles.

Worm gear operators, where required, shall be of the heavy duty construction with the ductile iron quadrant supported on the top and bottom by oil impregnated bronze bearings. The worm gear and shaft shall be manufactured of hardened steel and run on high efficiency roller bearings.

Valves shall be designed and manufactured to shut off bubble tight at 175 psi for valves 2½"-12" and 150 psi for valves 14" and larger. Each valve shall be given a hydrostatic and seat test with the test results being certified when required by the customer. Certified copies of Proof-of-Design test reports shall be furnished as outlined in **AWWA C-517-09 Section 5.2.2** when requested.

Plug valves shall be Ballcentric® Plug Valve Series 601/600 as manufactured by Henry Pratt Company of Aurora, Illinois.

Technical Specification Ballcentric® Series 602 ANSI Class 250 Plug Valves

AWWA C517-09 Standards
Valves shall be of the non-lubricated eccentric type with an elastomer covering all seating surfaces. The elastomer shall be suitable for the service intended. Flanged valves shall be manufactured in accordance with **ANSI B16.1 Class 250** including facing, drilling and flange thickness. Ports shall be round on sizes 2½" through 12" to facilitate "pigging" when required. Valves 14" and larger shall be of a rectangular port design.
Valve bodies shall be of **ASTM A-536 Grade 65-45-12** ductile iron in accordance with **AWWA C-517-09 Section 4.3.3.2**. Valves 3" and larger shall be furnished with a welded-in overlay seat of 1/8" thick of not less than 99% nickel in accordance with **AWWA C-517-09 Section 4.3.3.4**. Sprayed, plated or screwed-in seats are not acceptable.

Plugs shall be of **ASTM A-536-Grade 65-45-12** in compliance with **AWWA C-517-09 Section 4.3.3.2**. The plugs shall be of one piece solid construction with PTFE thrust bearings on the upper and lower bearing journals to reduce torque and prevent dirt and grit form entering the bearing and seal area.

Valves shall be furnished with replaceable sleeve type bearings conforming to **AWWA C-517- 09 Section 4.3.3.6**. Bearings shall be of sintered, oil impregnated type 316 stainless steel **ASTM A-743 Grade CF-8M**. Valve shaft seals shall be of the "U" cup type in accordance with **AWWA C-517-09 Section 4.4.7**. Seals shall be self adjusting and repackable without removing the bonnet from the valve.

Worm gear operators shall be of the heavy duty construction with the ductile iron quadrant supported on the top and bottom by oil impregnated bronze bearings. The worm gear and shaft shall be manufactured of hardened steel and run on high efficiency roller bearings. All worm gear operators shall be sized for bi-directional shutoff at the valves design pressure rating.

Valves shall be designed and manufactured to shut off bubble tight at 400 psi for valves 2½"-12" and 300 psi for valves 14"-48" with pressure behind the plug.

Each valve shall be given a hydrostatic and seat test with the test results being certified when required by the customer. Certified copies of Proof-of-Design test reports shall be furnished as outlined in **AWWA C-517-09 Section 5.2.2** when requested.

Plug valves shall be Ballcentric® Plug Valve **Series 602** as manufactured by Henry Pratt Company of Aurora, Illinois.

Technical Specification Ballcentric® Series 601RL Rubberlined Plug Valves

AWWA C517-09 Standards
Valves shall be of the non-lubricated eccentric type with an elastomer covering all seating surfaces. The elastomer shall be suitable for the service intended. Flanged valves shall be manufactured in accordance with **ANSI B16.1 Class 125/150** including facing, drilling and flange thickness. Mechanical joint ends shall be in compliance with **AWWA/ ANSI C-111- 92**. Grooved ends shall be manufactured to the dimensions of **ANSI/AWWA C606** for ductile or steel pipe as required. Ports shall be round on sizes 2½"-12" and rectangular port design on valves 14" and larger. All valves shall be capable of being "pigged" with a soft pig when required.
Valve bodies shall be of **ASTM A-126 Class B** cast iron in accordance with **AWWA C- 517-09 Section 4.3.3.1**. The interior of the valve bodies shall be covered with a suitable elastomer with a minimum thickness of 1/8". The elastomer shall extend through the valve flow way and onto the flanges to ensure a positive seal.

Plugs shall be of **ASTM A-536-Grade 65-45-12** for sizes 20" and smaller, and **ASTM A126 Class B Cast Iron** for sizes 24" and larger in compliance with **AWWA C-517-09 Sections 4.3.3.1 and 4.3.3.2**. The plugs shall be of one piece solid construction with PTFE thrust bearings on the upper and lower bearing journals to reduce torque and prevent dirt and grit from entering the bearing and seal area.

Valves shall be furnished with replaceable sleeve type bearings conforming to **AWWA C-517-09, Section 4.3.3.6.** Bearings shall be of sintered, oil impregnated type 316 stainless steel **ASTM A-743 Grade CF-8M**. Valve shaft seals shall be of the "U" cup type in accordance with **AWWA C-517-09 Section 4.4.7**. Seals shall be self adjusting and repackable without removing the bonnet from the valve.

Worm gear operators shall be of the heavy duty construction with the ductile iron quadrant supported on the top and bottom by oil impregnated bronze bearings. The worm gear and shaft shall be manufactured of hardened steel and run on high efficiency roller bearings. All worm gear operators shall be sized for bi-directional shutoff at the valves design pressure rating.

Valves shall be designed and manufactured to shut off bubble tight at 175 psi for valves 2½"-12" and 150 psi for valves 14" and larger. Each valve shall be given a hydrostatic and seat test with the test results being certified when required by the customer. Certified copies of Proof-of-Design test reports shall be furnished as outlined in **AWWA C-517-09 Section 5.2.2** when requested.

Plug valves shall be Ballcentric® Plug Valve **Series 601RL** as manufactured by **Henry Pratt Company of Aurora, Illinois.**

Technical Specification Ballcentric® Series 601S – Stainless Steel Plug Valves

AWWA C517-09 Standards
Valves shall be of the non-lubricated eccentric type with an elastomer covering all seating surfaces. The elastomer shall be suitable for the service intended. Flanged valves shall be manufactured in accordance with **ANSI B16.1 Class 125** including facing, drilling and flange thickness. Ports shall be round on sizes 2½"-12" and rectangular port design on valves 14" and larger. All valves shall be capable of being "pigged" with a soft pig when required.
Valve bodies shall be of **CF8M (316 stainless steel)**. Valves shall be furnished with 316 stainless steel seat in accordance with **AWWA C-517-09 Section 4.3.3.4**.

Plugs shall be of **CF8M (316 stainless steel)**. The plugs shall be of one piece solid construction with PTFE thrust bearings on the upper and lower bearing journals to reduce torque and prevent dirt and grit from entering the bearing and seal area.

Valves shall be furnished with replaceable sleeve type bearings conforming to **AWWA C-517-09 Section 4.3.3.6**. Bearings shall be of sintered, oil impregnated type 316 stainless steel **ASTM A-743 Grade CF-8M**. Valve shaft seals shall be of the "U" cup type in accordance with **AWWA C-517-09 Section 4.4.7**. Seals shall be self adjusting and repackable without removing the bonnet from the valve.

Wrench operated valves 2½"-8" shall be capable of being converted to worm gear or automated operation without removing the bonnet or plug from the valve. All wrench operated valves shall be equipped with a 2" square nut for use with removable levers or extended "T" handles.

Worm gear operators, where required, shall be of the heavy duty construction with the ductile iron quadrant supported on the top and bottom by oil impregnated bronze bearings. The worm gear and shaft shall be manufactured of hardened steel and run on high efficiency roller bearings. All worm gear operators shall be sized for bi-directional shutoff at the valves design pressure rating.

Valves shall be designed and manufactured to shut off bubble tight at 175 psi for valves 2½"-12" and 150 psi for valves 14" and larger. Each valve shall be given a hydrostatic and seat test with the test results being certified when required by the customer. Certified copies of Proof-of-Design test reports shall be furnished as outlined in **AWWA C-517-09 Section 5.2.2** when requested.

Plug valves shall be Ballcentric® Plug Valve **Series 601S** as manufactured by Henry Pratt Company of Aurora, Illinois.

Technical Specification Ballcentric® Series 611/610 Ductile Iron Plug Valves

AWWA C517-09 Standards
Valves shall be of the non-lubricated eccentric type with an elastomer covering all seating surfaces. The elastomer shall be suitable for the service intended. Flanged valves shall be manufactured in accordance with **ANSI B16.1 Class 125/150** including facing, drilling and flange thickness. Mechanical joint ends shall be in compliance with **AWWA/ANSI C-111-92**. Grooved ends shall be manufactured to the dimensions of **ANSI/AWWA C606** for ductile or steel pipe as required. Ports shall be round on sizes 2½"-12" and rectangular port design on valves 14" and larger. All valves shall be capable of being "pigged" with a soft pig when required.
Valve bodies shall be of **ASTM A-536 Grade 65-45-12** in accordance with **AWWA C-517-09 Section 4.3.3.2.** Valves 3" and larger shall be furnished with a welded-in overlay seat of 1/8" thick of not less than 99% nickel in accordance with **AWWA C-517-09, Section 4.3.3.4**. Sprayed, plated or screwed-in seats are not acceptable.

Plugs shall be of **ASTM A-536-Grade 65-45-12** for all sizes in accordance with **AWWA C-517-09 Section 4.3.3.2**. The plugs shall be of one piece solid construction with PTFE thrust bearings on the upper and lower bearing journals to reduce torque and prevent dirt and grit from entering the bearing and seal area.

Valves shall be furnished with replaceable sleeve type bearings conforming to **AWWA C-517-09, Section 4.3.3.6**. Bearings shall be of sintered, oil impregnated type 316 stainless steel **ASTM A-743 Grade CF-8M**. Valve shaft seals shall be of the "U" cup type in accordance with **AWWA C-517-09 Section 4.4.7**. Seals shall be self adjusting and repackable without removing the bonnet from the valve.

Wrench operated valves 2½"-8" shall be capable of being converted to worm gear or automated operation without removing the bonnet or plug from the valve. All wrench operated valves shall be equipped with a 2" square nut for use with removeable levers or extended "T" handles.

Worm gear operators, where required, shall be of the heavy duty construction with the ductile iron quadrant supported on the top and bottom by oil impregnated bronze bearings. The worm gear and shaft shall be manufactured of hardened steel and run on high efficiency roller bearings. All worm gear operators shall be sized for bi-directional shutoff at the valves design pressure rating.

Valves shall be designed and manufactured to shut off bubble tight at 175 psi for valves 2½"-12" and 150 psi for valves 14" and larger. Each valve shall be given a hydrostatic and seat test with the test results being certified when required by the customer. Certified copies of Proof-of-Design test reports shall be furnished as outlined in **AWWA C-517-09 Section 5.2.2** when requested.

Plug valves shall be Ballcentric® Plug Valve **Series 611/610** as manufactured by Henry Pratt Company of Aurora, Illinois.

Technical Specification Ballcentric® Series 601GL Glass Lined Plug Valves

AWWA C517-09 Standards
Valves shall be of the non-lubricated eccentric type with an elastomer covering all seating surfaces. The elastomer shall be suitable for the service intended. Flanged valves shall be manufactured in accordance with **ANSI B16.1 Class 125/150** including facing, drilling and flange thickness. Mechanical joint ends shall be in compliance with **AWWA/ ANSI C-111-92**. Grooved ends shall be manufactured to the dimensions of **ANSI/AWWA C606** for ductile or steel pipe as required. Ports shall be round on sizes 3"-12" and rectangular port design on valves 14" and larger. All valves shall be capable of being "pigged" with a soft pig when required.
Valve bodies shall be of **ASTM A-126 Class B** cast iron in accordance with A**WWA C-517-09 Section 4.3.3.1**. Interior of valves shall be glass lined at .008-.012 mils thickness, covering the entire interior of valve bodies and stopping at the flange faces.

Plugs shall be of **ASTM A-536-Grade 65-45-12** for sizes 20" and smaller, and **ASTM A126 Class B Cast Iron** for sizes 24" and larger in compliance with **AWWA C-517-09 Sections 4.3.3.1 and 4.3.3.2**. The plugs shall be of one piece solid construction with PTFE thrust bearings on the upper and lower bearing journals to reduce torque and prevent dirt and grit from entering the bearing and seal area.

Valves shall be furnished with replaceable sleeve type bearings conforming to **AWWA C-517-09, Section 4.3.3.6**. Bearings shall be of sintered, oil impregnated type 316 stainless steel **ASTM A-743 Grade CF-8M**. Valve shaft seals shall be of the "U" cup type in accordance with **AWWA C-517-09 Section 4.4.7**. Seals shall be self adjusting and repackable without removing the bonnet from the valve.

Wrench operated valves 2½"-8" shall be capable of being converted to worm gear or automated operation without removing the bonnet or plug from the valve. All wrench operated valves shall be equipped with a 2" square nut for use with removeable levers or extended "T" handles.

Worm gear operators, where required, shall be of the heavy duty construction with the ductile iron quadrant supported on the top and bottom by oil impregnated bronze bearings. The worm gear and shaft shall be manufactured of hardened steel and run on high efficiency roller bearings. All worm gear operators shall be sized for bi-directional shutoff at the valves design pressure rating.

Valves shall be designed and manufactured to shut off bubble tight at 175 psi for valves 2½"-12" and 150 psi for valves 14" and larger. Each valve shall be given a hydrostatic and seat test with the test results being certified when required by the customer. Certified copies of Proof-of-Design test reports shall be furnished as outlined in **AWWA C-517-09 Section 5.2.2** when requested.

Plug valves shall be Ballcentric® Plug Valve Series **601GL/600GL** as manufactured by Henry Pratt Company of Aurora, Illinois.

PRATT PRODUCT GUIDE

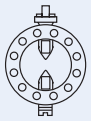

Model
2FII

Monoflange
MKII

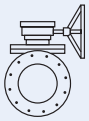

Plug
Valve

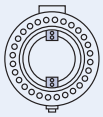

Triton®
XR70

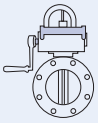

Indicating Butterfly Valve
UL & FM approved

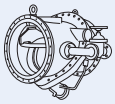

Tilting Disc
Check Valve

Triton®
XL

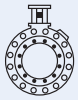

N-Stamp Nuclear
Butterfly Valve

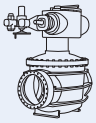

Cone
Valve

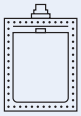

Rectangular

PIVA Post Indicating Valve Assembly
UL & FM approved

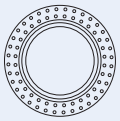

Sleeve
Valve

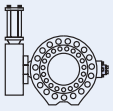

Rubber Seated
Ball Valve

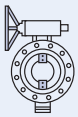

Triton®
HP250

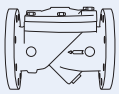

Check
Valve

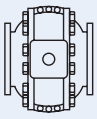

Metal Seated
Ball Valve

Control
Systems

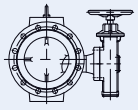

Plunger Valve

PRATT

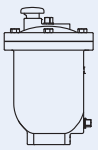

Air Valve

Henry Pratt Company
401 South Highland Avenue
Aurora, Illinois 60506-5563 - US
P: 630-844-4000 F: 630-844-4160
www.henrypratt.com
ISO 9001: 2000 Certified

©2014 Henry Pratt Company | Printed in the U.S.A. | HPPLUG-0414

VALVE SIZE	GEAR SIZE & RATIO	A	B	C	D	E	F	G	H	J	K	L	M	N	P	Q	S	T
2.5	M2 (20:1)	7.5	3.41	3.50	2.5	5.50	7.00	0.75	4	--	–	0.69	2.5	6	4.75	4.75	1.75	2.00
3	M2 (20:1)	8	3.41	3.75	3	6.00	7.50	0.75	4	--	–	0.75	2.5	6	4.75	4.75	1.75	2.00
4	M3 (30:1)	9	4.38	4.50	4	7.50	9	0.75	6	0.63	2	0.94	3	6	9.50	8	2.00	2.56
5	M3 (30:1)	10	5.63	5.75	5	8.50	10	0.88	6	0.75	2	0.94	3	6	9.50	8	2.00	2.56
6	M3 (30:1)	10.50	5.63	5.75	6	9.50	11	0.88	6	0.75	2	1	3	6	9.50	8	2.00	2.56
8	M5 (50:1)	11.50	7.56	7.63	8	11.75	13.50	0.88	6	0.75	2	1.13	6	12	11.25	8	2.25	3.16
10	M8 (80:1)	13	9.25	8.88	10	14.25	16	1	8	0.88	4	1.19	6	12	11.63	10	2.00	4.63
12	M8 (80:1)	14	10.88	10	12	17.00	19	1	8	0.88	4	1.25	6	12	11.63	10	2.00	4.63

△5 △6 REFERENCE ONLY △6

ABOVE GROUND GEAR W/ HANDWHEEL OPTION

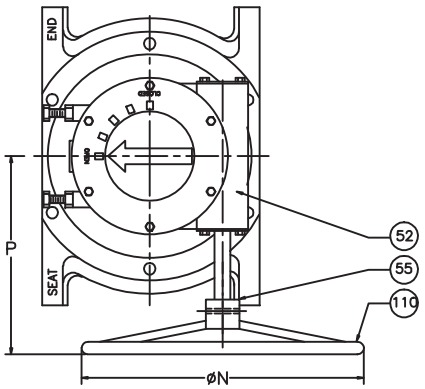

BURIED GEAR W/ 2" NUT OPTION

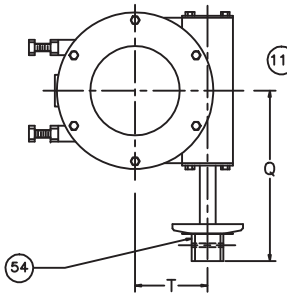

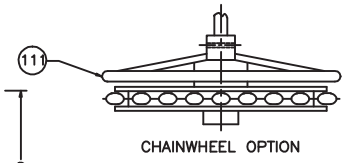

CHAINWHEEL OPTION

SIZE	GEAR	# OF TURNS
2.5"	20:1	5
3"	20:1	5
4"	30:1	7 1/2
5"	30:1	7 1/2
6"	30:1	7 1/2
8"	50:1	12 1/2
10"	80:1	20
12"	80:1	20

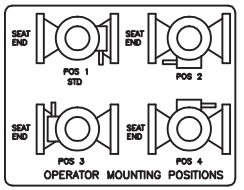

THIS DRAWING IS THE PROPERTY OF
HENRY PRATT COMPANY
AND MUST NOT BE USED IN ANY WAY
PREJUDICIAL TO THEIR INTERESTS

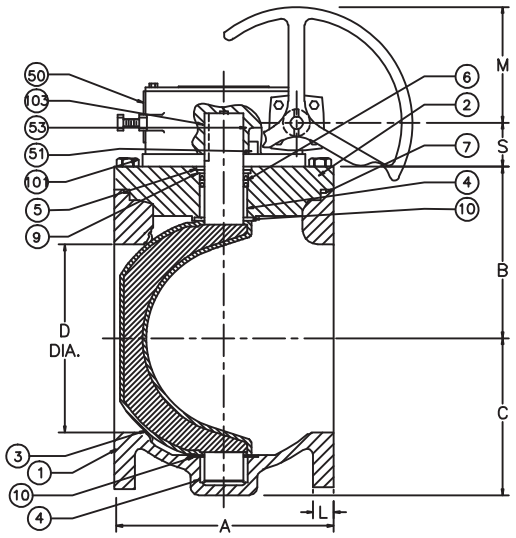

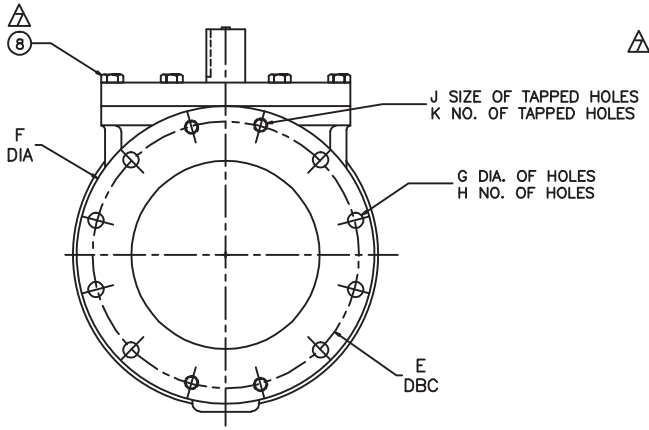

*RISER RING IS ONLY ON 2-1/2" TO 8" VALVE

ITEM	QTY	DESCRIPTION	MATERIAL
111	1	CHAINWHEEL	DUCTILE IRON
110	1	SPRING PIN	STEEL
103	1	KEY	STEEL
*101	1	RISER RING	STEEL
55	1	HANDWHEEL	DUCTILE IRON
54	1	2" NUT	DUCTILE IRON
53	2	SLEEVE BEARING	BRONZE
52	1	WORM GEAR	STEEL
51	1	QUAD GEAR	DUCTILE IRON
△4 50	1	HOUSING	
10	2	GRIT SEAL	PTFE
9	1	SEAL RETAINING RING	BRASS
△7 8	AR	H.H. CAP SCREW	☐STEEL ☐STN. STEEL
7	1	O-RING	ELAS AS SPEC.
6	2	U-CUP SEAL	ELAS AS SPEC.
5	1	SNAP RING	SPRING STEEL
4	2	SLEEVE BEARING	STN. STEEL
3	1	PLUG ELASTOMER AS SPEC.	DUCTILE IRON
2	1	CAP	CAST IRON
1	1	BODY	CAST IRON

PRATT®
HENRY PRATT COMPANY
AURORA, ILL.

BY	DATE	SCALE
CR	10/95	NONE
CHK'D: AJ		DIM.: INCHES

ISSUE NUM.	DATE	REVISIONS	BY
1	12/97	REVISED GEAR DIM. FOR 2.5" & 3" WAS M2 NOW ALECTO 232-07	CR
2	11/98	ITEM 8 WAS BRONZE	CR
3	09/07	ADDED MTRL. TYPE	JC
4	02/10	ITEM 50 MATERIAL CHANGED FROM CAST TO DUCTILE IRON [ECR# 252]	JC
5	09/10	REMOVED DATA FOR 14" [ECR # 384]	TF
6	05/12	CORRECTION IN "B" & "S" DIM. [ECN# 584]	AA
7	01/13	ADDED ITEM 10 AND BOM UPDATE	JC
8	01/13	B.O.M. STANDARDIZATION ITEM 10 NOW 8	AA

TITLE:
2-1/2" TO 12"
PLUG VALVE, FLANGED,
GEAR OPERATED,
w/HANDWHEEL, 2" NUT,
OR CHAINWHEEL OPTION

DWG. NO. HP49110

This page is intentionally left blank

Project name: AMARUQ

Project#: 5000218009

Document #: SPK_0001_RX

by: LJ

chkd: GP

appvd: CB

METAL PRECIPITATION REACTOR

INSTRUMENTS

OIM manual section: 4.3.1.5

This page is intentionally left blank

Technical
specification

ENM-10 Level regulator

FLYGT
a xylem brand

Table of Contents

PRODUCT DESCRIPTION....2
Product description....2

CHEMICAL RESISTANCE LIST....6
Chemical resistance list....6

PRODUCT RANGE....8
Product range....8

PRODUCT DESCRIPTION

Product description

The simplest possible method for level control! A mechanical switch in a plastic casing, freely suspended at the desired height from its own cable. When the liquid level reaches the regulator, the casing will tilt and the mechanical switch will close or break the circuit, thereby starting or stopping a pump or actuating an alarm device. No wear, no maintenance! In sewage pumping stations, for ground water and drainage pumping – in fact, for most level control applications – the ENM-10 is the ideal solution.

The regulator casing is made of polypropylene and the cable is sheathed with a special PVC or Nitrile/PVC rubber compound. The plastic components are welded and screwed together. Adhesive is never used. Impurities and deposits will not adhere to the smooth casing.

This level regulator is available in different versions, depending upon the medium in which it is to be used. As standard, the regulator can be obtained with 6, 13, 20, 30 or 50 metres (20, 42, 65, 100 or 167 feet) of cable for liquids with specific density between 0.95 and 1.10 g/cm3; for other specific densities and for the Ex-version, the regulator is only available with 20 metres (65 ft) of cable. The regulator can withstand up to 60°C (140°F).

Technical data

Liquid temperature:	min. 0°C (32°F) max. 60°C (140°F)
Liquid density:	min. 0.65 g/cm^3 max. 1.5 g/cm^3
Degree of protection:	IP68, 20 m (65 ft)
Interrupting capacity of micro switch:	AC, resistive load, 250V 10A AC, inductive load, 250V 3A cos ϕ = 0.5 DC, 30V 5A
With gold plated micro switch:	same as above, except: DC, 24V 10mA

Note that local regulations may limit the voltage.

Materials

Body:	Body:
Bending relief:	EPDM rubber
Cable:	special compound PVC or NBR/PVC nitrile/PVC rubber

Dimensions

Table 1

For density g/cm^3	Regulator length mm (in.)	Diameter mm (in.)
0.65–0.80	194 (7 10/16)	100 (4)
0.80–0.95	177 (7)	100 (4)
0.95–1.10	162 (6 3/8)	100 (4)
1.05–1.20	142 (5 9/16)	100 (4)
1.20–1.30	133 (5 1/4)	100 (4)

For density g/cm^3	Regulator length mm (in.)	Diameter mm (in.)
1.30–1.40	130 (5 2/16)	100 (4)
1.40–1.50	126 (5)	100 (4)

Weight: approx. 2 kg (4.5 lb) for a standard density regulator with 20 m cable.

Approvals: CE, CSA, SEMKO, NEMKO, DEMKO

LVD approval according to EN61058

CSA approval: Cert no. 1330172

Cl.I Zone 0, Gr. IIC;

CL.I Div.1 Gr A, B, C&D;

Cl.II Gr. E, F&G;

Cl.III when installed to the certified Intrinsically Safe relay, Ex ia, rated for the locations per submitter controll drawing and installation manual.

Intrincically safe circuits are required for the automatic control system. - Use a EX-safety barrier (e.g. Prod. no. 84 01 07).

0080

Figure 1

Wiring alternative

To conform to local regulations, the level regulators are normally connected through a transformer to a low-tension control circuit.

Two regulators are used; one for starting and one for stopping. A third regulator can be connected if an alarm is required at a given level.

Identical regulators can be used for all functions.

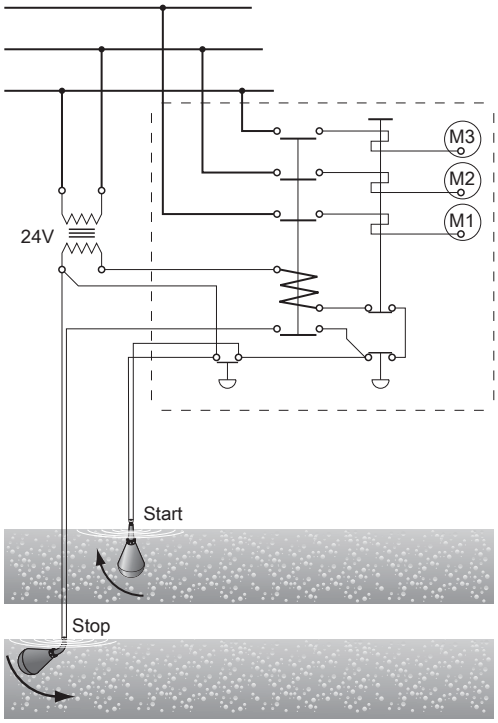

Connect the gray and black leads.

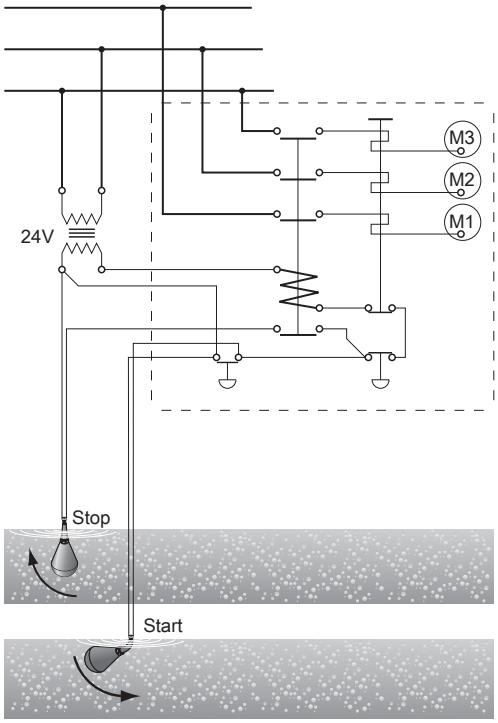

Connect the gray and brown leads.

Insulate the brown lead.
Figure 2: Connected for emptying

Insulate the black lead.
Figure 3: Connected for emptying

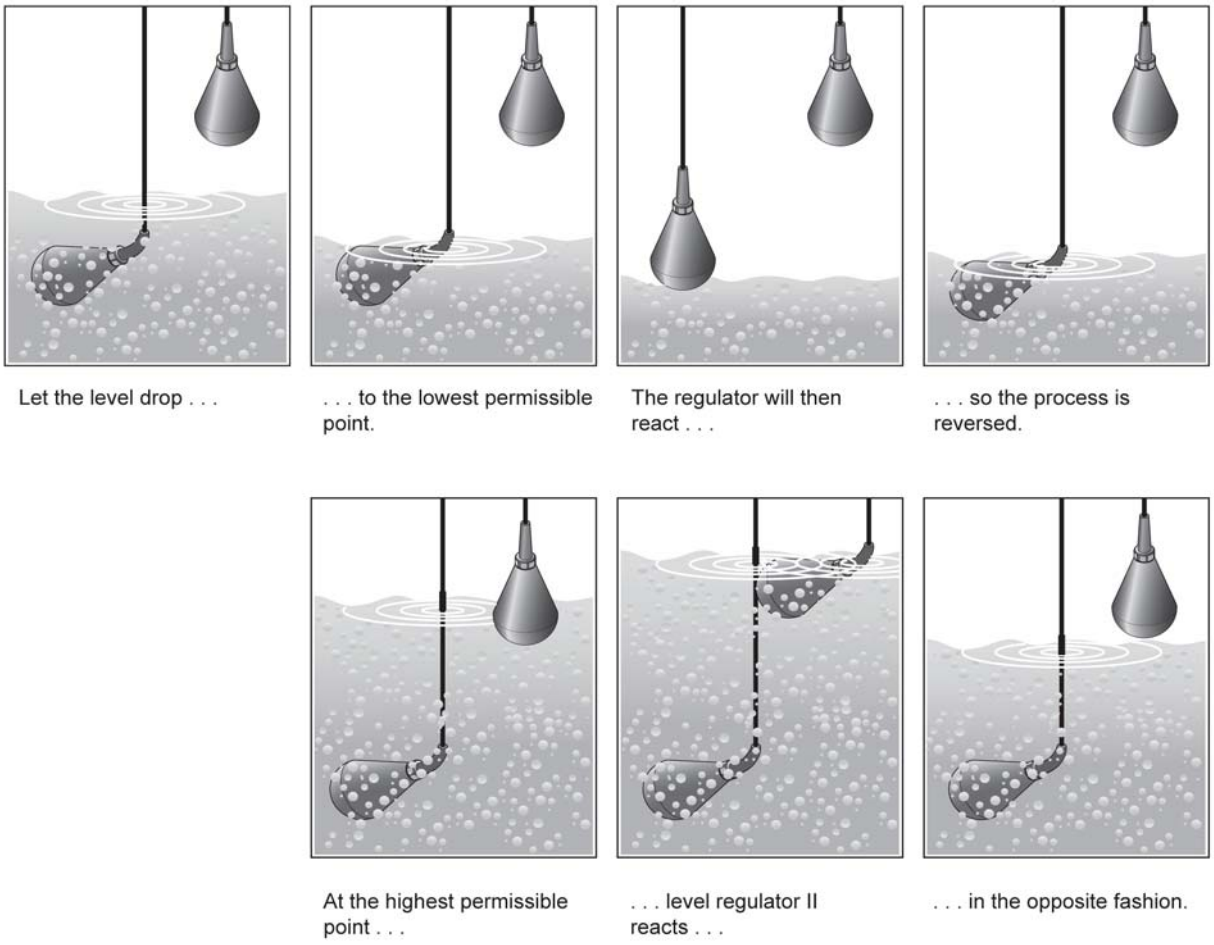

Figure 4

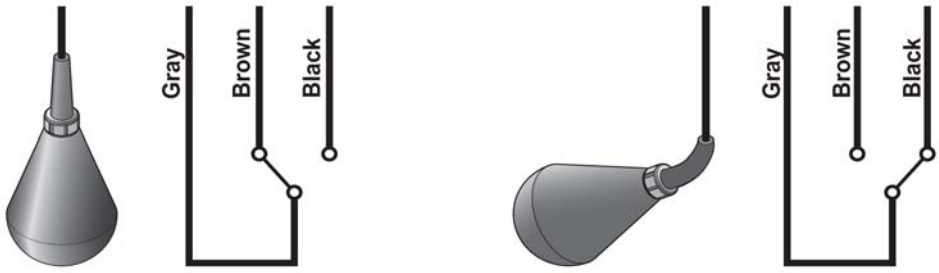

Figure 5: Colour code

Maintenance and repair

ENM-10 is very durable and practically maintenance free. You only have to check on it occasionally, to ensure its continual operation.

- It is recommended to occasionally clean ENM-10, and especially when fat/grease covers the plastic surface.
- At the same time, make an occular inspection of the regulator to make sure neither cable, protective sleeve or plastic casing show any signs of damage.

- A damaged ENM-10 cannot be repaired in any way, due to the hermetic encapsulation. If the unit is found to be damaged, replace it with a new one.
- For Ex-installations, also make absolutely sure that the Ex-barrier (e.g. Prod. no. 84 01 07) is operating correctly - The LED changes when the switch is toggled.

The manufacturers reserve the right to alter performance specification or design without notice.

CHEMICAL RESISTANCE LIST

Chemical resistance list

The liquid in which level regulation is practiced most frequently is, of course, water. Of the millions of regulators in use all over the world today, it is estimated that nine out of ten work in water.

However, with a float body of polypropylene, a cable of PVC or NBR/PVC nitrile/PVC rubber and a bending relief of EPDM rubber, the ENM-10 is virtually insensitive to many aggressive liquids.

The table shows how resistant the ENM-10 equipped with either PVC or NBR/PVC nitrile/PVC rubber cable, is to different chemicals at two different temperatures.

The classification is broken down into the following categories:

0 = No effect, 1 = Minor to moderate and 2 = Severe effect. The sign – means that information is not available.

Keep in mind also that the density of the liquid determines the bouyancy of the regulator. The ENM-10 is made for seven different densities. See *Product description* (page 2).

Always observe local regulations:

Take particular note of:

- risk of fire/explosion
- hygiene requirements

Acids	PVC cable		NBR/PVC nitrile/PVC rubber cable	
	20°C (68°F)	60°C (140°F)	20°C (68°F)	60°C (140°F)
Acetic Acid 50%	1	2	0	0
Acetic Acid 75%	2	2	0	0
Benzoic Acid	2	2	0	0
Boric Acid 5%	0	—	0	0
Butyric Acid	2	2	2	2
Chromic Acid 10%	0	2	2	2
Citric Acid	0	1	0	0
Hydrobromic Acid 5%	1	2	0	0
Hydrochloric Acid 10%	0	1	0	1
Hydrochloric Acid 37%	1	2	0	2
Hydrocyanic Acid 10%	0	0	1	2
Hydrofluoric Acid 5%	0	2	0	1
Hypochloric Acid	1	2	2	2
Maleic Acid	2	2	2	2
Nitric Acid 5%	1	1	1	1
Nitric Acid 65%	2	2	2	2
Oleic Acid	1	2	2	2
Oxalic Acid 50%	1	1	1	2
Phosphoric Acid 25%	0	0	1	2
Phosphoric Acid 85%	0	0	1	2
Sulphuric Acid 10%	1	2	1	2
Sulphuric Acid 78%	2	2	2	2
Tannic Acid	0	0	0	0
Tartaric Acid	1	1	1	1
Bases				
Ammonium Hydroxide	0	—	0	0
Calcium Hydroxide	0	0	0	0
Potassium Hydroxide	1	2	0	0
Sodium Hydroxide	1	2	0	0

Salts	PVC cable		NBR/PVC nitrile/PVC rubber cable	
	20°C (68°F)	60°C (140°F)	20°C (68°F)	60°C (140°F)
Aluminium Chloride	0	0	0	0
Calcium Sulphate	0	0	0	0
Calcium Chloride	0	0	0	0
Calcium Nitrate	0	0	0	0
Copper Chloride	0	0	0	0
Copper Sulphate	0	0	0	0
Ferric Chloride	0	0	0	0
Ferrous Sulphate	0	0	0	0
Magnesium Chloride	0	0	0	0
Potassium Sulphate	0	0	0	0
Potassium Nitrate	0	0	0	0
Potassium Carbonate	1	1	1	1
Potassium Bicarbonate	0	0	0	0
Sodium Sulphate	0	0	0	0
Sodium Chloride	0	0	0	0
Sodium Nitrate	0	0	0	0
Sodium Bicarbonate	0	0	0	0
Sodium Carbonate	0	0	0	0
Tin Chloride	1	1	1	1
Zinc Sulphate	0	0	0	0
Zinc Chloride	0	0	0	0
Oils				
Castor Oil	1	1	1	1
Cocoanut Oil	0	—	0	2
Corn Oil	2	2	2	2
Diesel Oil	2	2	2	2
Linseed Oil	2	2	2	2
Mineral Oils	2	2	2	2
Olive Oil	1	1	1	1
Silicone Oils	0	0	0	0

Solvents and miscellaneous	PVC cable		NBR/PVC nitrile/PVC rubber cable	
	20°C (68°F)	60°C (140°F)	20°C (68°F)	60°C (140°F)
Aceton	2	2	2	2
Aniline	2	2	1	2
Benzene	2	2	2	2
Butyl Alcohol	2	2	0	1
Carbon Tetrachloride	2	2	2	2
Chlorobenzene	2	2	2	2
Chloroform	2	2	2	2
Ethyl Alcohol	2	2	0	1
Ethyl Ether	2	2	2	2
Ethyl Acetate	2	2	2	2
Ethylene Dichloride	2	2	2	2
Ethylene Chloride	2	2	2	2
Formaldehyde 37%	1	2	0	0
Gasoline	2	2	2	2
Kerosene	2	2	2	2
Methyl Alcohol	2	2	0	0
Methyl Ethyl Ketone	2	2	2	2
Methylene Chloride	2	2	2	2
Nitrobenzene	2	2	2	2
Phenol	2	2	2	2
Toluene	2	2	2	2
Trichlorethylene	2	2	2	2
Turpentine	2	2	2	2
Xylene	2	2	2	2
Gases				
Carbon Dioxide	0	0	0	0
Carbon Monoxide	0	0	0	0
Chlorine (wet)	2	2	2	2
Hydrogen Sulphide	0	0	1	1
Sulphur Dioxide (wet)	1	1	2	2

0 = No effect, 1 = Minor to moderate, 2 = Severe effect. – = No information available.

Figure 6

PRODUCT RANGE

Product range

Part no.	For density [g/cm³]	Color of level switch	Type of cable	Cable length [m]	Approvals	For market	Notes
5828800	0,65-0,80	Blue	1	20	CE		
5828801	0,80-0,95	Blue	1	20	CE		
5828802	0,95-1,10	Blue	1	6	CE		
5828803	0,95-1,10	Blue	1	13	CE		
5828804	0,95-1,10	Blue	1	20	CE		
5828805	1,05-1,20	Blue	1	20	CE		
5828806	1,2-1,3	Blue	1	20	CE		
5828807	1,3-1,4	Blue	1	20	CE		
5828808	1,4-1,5	Blue	1	20	CE		
5828809	0,65-0,80	Grey	5	20	CSA/CE	Canada	
5828810	0,80-0,95	Grey	5	20	CSA/CE	Canada	
5828811	0,95-1,10	Grey	5	6	CSA/CE	Canada	
5828812	0,95-1,10	Grey	5	13	CSA/CE	Canada	
5828813	0,95-1,10	Grey	5	20	CSA/CE	Canada	
5828814	1,05-1,20	Grey	5	20	CSA/CE	Canada	
5828815	1,2-1,3	Grey	5	20	CSA/CE	Canada	
5828816	1,3-1,4	Grey	5	20	CSA/CE	Canada	
5828817	1,4-1,5	Grey	5	20	CSA/CE	Canada	
5828818	0,65-0,80	Grey	1	20	CSA/CE	Canada	
5828819	0,80-0,95	Grey	1	20	CSA/CE	Canada	
5828820	0,95-1,10	Grey	1	6	CSA/CE	Canada	
5828821	0,95-1,10	Grey	1	13	CSA/CE	Canada	
5828822	0,95-1,10	Grey	1	20	CSA/CE	Canada	
5828823	1,05-1,20	Grey	1	20	CSA/CE	Canada	
5828824	1,2-1,3	Grey	1	20	CSA/CE	Canada	
5828825	1,3-1,4	Grey	1	20	CSA/CE	Canada	
5828826	1,4-1,5	Grey	1	20	CSA/CE	Canada	
5828827	0,65-0,80	Blue	2	20	CE	USA	
5828828	0,80-0,95	Blue	2	20	CE	USA	
5828829	0,95-1,10	Blue	2	6	CE	USA	
5828830	0,95-1,10	Blue	2	13	CE	USA	
5828831	0,95-1,10	Blue	2	20	CE	USA	
5828832	1,05-1,20	Blue	2	20	CE	USA	
5828833	1,2-1,3	Blue	2	20	CE	USA	
5828834	1,3-1,4	Blue	2	20	CE	USA	
5828835	1,4-1,5	Blue	2	20	CE	USA	
5828836	0,95-1,10	Grey	5	30	CSA/CE	Canada	
5828837	0,95-1,10	Grey	5	50	CSA/CE	Canada	
5828838	0,95-1,10	Grey	5	100	CSA/CE	Canada	
5828839	0,95-1,10	Grey	5	150	CSA/CE	Canada	
5828851	0,95-1,10	Red	3	65	CE		
5828852	0,95-1,10	Red	3	6	CE		
5828853	0,95-1,10	Red	3	13	CE		
5828854	0,95-1,10	Red	3	20	CE		
5828855	0,95-1,10	Red	3	6	CSA/CE	Canada	
5828856	0,95-1,10	Red	3	13	CSA/CE	Canada	
5828857	0,95-1,10	Red	3	20	CSA/CE	Canada	

Cont. →

Figure 7

5828858	0,95-1,10	Red	4	6	CE	USA	
5828859	0,95-1,10	Red	4	13	CE	USA	
5828860	0,95-1,10	Red	4	20	CE	USA	
5828870	0,65-0,80	Blue	5	20	CE		
5828871	0,80-0,95	Blue	5	20	CE		
5828872	0,95-1,10	Blue	5	6	CE		
5828873	0,95-1,10	Blue	5	13	CE		
5828874	0,95-1,10	Blue	5	20	CE		
5828875	1,05-1,20	Blue	5	20	CE		
5828876	1,2-1,3	Blue	5	20	CE		
5828877	1,3-1,4	Blue	5	20	CE		
5828878	1,4-1,5	Blue	5	20	CE		
5828879	0,95-1,10	Blue	1	65	CE		
5828880	0,95-1,10	Blue	1	30	CE		
5828881	0,95-1,10	Blue	1	50	CE		
5828882	0,95-1,10	Grey	1	30	CSA/CE	Canada	
5828883	0,95-1,10	Grey	1	50	CSA/CE	Canada	
5828884	0,95-1,10	Blue	2	30	CE	USA	
5828885	0,95-1,10	Blue	2	50	CE	USA	
5828886	0,95-1,10	Red	3	30	CE		
5828887	0,95-1,10	Red	3	50	CE		
5828890	0,95-1,10	Blue	5	30	CE		
5828891	0,95-1,10	Blue	5	50	CE		
5828892	0,95-1,10	Red	3	6	CE	Japan	
5828893	0,95-1,10	Red	3	13	CE	Japan	
5828894	0,95-1,10	Red	3	20	CE	Japan	
5828895	0,95-1,10	Blue	1	6	CE	Japan	
5828896	0,95-1,10	Blue	1	13	CE	Japan	
5828897	0,95-1,10	Blue	1	20	CE	Japan	
5828898	0,95-1,10	Blue	1	50	CE	Japan	
5947919	0,95-1,10	Blue	5	20	CE		Designed for low current and slow movements
5947920	0,95-1,10	Grey	5	20	CSA/CE		Designed for low current and slow movements

Type of cable:

1. Blue PVC jacket with color coding of wires: Grey/Brown/Black
2. Blue PVC jacket with color coding of wires: Red/White/Black
3. Red PVC jacket with color coding of wires: Grey/Brown/Black
4. Red PVC jacket with color coding of wires: Red/White/Black
5. BLACK NBR/PVC jacket with color coding of wires: Grey/Brown/Black (NBR=Nitrile rubber)

Xylem |ˈzīləm|

1) The tissue in plants that brings water upward from the roots
2) A leading global water technology company

We're 12,000 people unified in a common purpose: creating innovative solutions to meet our world's water needs. Developing new technologies that will improve the way water is used, conserved, and re-used in the future is central to our work. We move, treat, analyze, and return water to the environment, and we help people use water efficiently, in their homes, buildings, factories and farms. In more than 150 countries, we have strong, long-standing relationships with customers who know us for our powerful combination of leading product brands and applications expertise, backed by a legacy of innovation.

For more information on how Xylem can help you, go to xyleminc.com

xylem
Let's Solve Water

Xylem Water Solutions AB
Gesällvägen 33
174 87 Sundbyberg
Sweden
Tel. +46-8-475 60 00
Fax +46-8-475 69 00
http://tpi.xyleminc.com

Visit our Web site for the latest version of this document and more information

The original instruction is in English. All non-English instructions are translations of the original instruction.

© 2011 Xylem Inc

891480_11.1_en.GB_2012-01_TS_ENM-10

This page is intentionally left blank

Project name: AMARUQ

Project#: 5000218009

Document #: SPK_0001_RX

by: LJ

chkd: GP

appvd: CB

METAL PRECIPITATION REACTOR

PAINT SPECS

OIM manual section: 4.3.1.6

This page is intentionally left blank

6.0 TREATMENT

6.1 Internal treatment

- Sandblast as per SSPC-SP-10;
- Brush application on welds and difficult to reach places (inside of holes and openings) of one layer of DURA_PLATE UHS by SHERWIN WILLIAMS, color « light green » and;
- Application of one coat of DURA-PLATE-UHS by SHERWIN WILLIAMS, 20 to 28 mils dft (restricted level 5 as per SSPC-PA 2), color « white NSF»;
- Important note: **Never dilute** the DURA-PLATE-UHS paint.

Only if needed, application of one coat of DURA-PLATE UHS PRIMER by SHERWIN WILLIAMS, 4 to 8 mils dft per coat, color “Gold”, if required depending on atmospheric conditions and delays between sandblast and paint.

6.2 External treatment

- Sandblast as per SSPC-SP-6;
- Spacing between intermittent welds should be filled with an hybrid sealant LOXON H-1 by SHERWIN WILLIAMS before the application of the external coating;
- Brush application on welds and difficult to reach places (inside of holes and openings) of one layer of ENVIROLASTIC 940 by SHERWIN WILLIAMS, color « White »;
- Application of one layer of ENVIROLASTIC 940 by SHERWIN WILLIAMS, 7.0 to 9.0 mils dft, (restricted level 5 as per SSPC-PA 2), color « John Meunier Blue ».

6.3 Piping treatment

Identical to the external coating of the works as stated for tank previously. There is no internal coating to provide for the nozzles of 3" diameter or less (should be made from Stainless Steel). Ensure pipe ends and flanges are covered with paint with the exception of the raised face.

6.4 Extra paint to be supplied

For every equipment, a touch-up paint kit of 1 gallon for both internal and exterior paint must be provided at shipping. Please attach the product label.

This page is intentionally left blank

Protective & Marine Coatings

NSF Certified to NSF/ANSI 61

DURA-PLATE® UHS

WITH OPTI-CHECK OAP TECHNOLOGY

PART A	B62-210	SERIES
PART A	B62W211	WHITE OAP (NSF)
PART B	B62V210	STANDARD HARDENER (NSF)
PART B	B62V211	LOW TEMP HARDENER (NSF)

Revised: December 3, 2014

PRODUCT INFORMATION

TRM.35

PRODUCT DESCRIPTION

DURA-PLATE UHS is an ultra high solids epoxy amine engineered specifically for immersion service in ballast tanks, oil tanks, and refined fuel storage tanks. The high build, edge-retentive properties of Dura-Plate UHS provide superior protection compared to conventional epoxies.

- Airless Spray
- One coat protection
- Low VOC
- Low odor
- High flash point, >200°F (93°C)
- Can be used with 1½ oz. fiberglass mat
- Low Temperature Hardener for applications down to 40°F (4.5°C).
- NSF approved to Standard 61 for potable water (tanks of 1000 gallons or greater and pipes of 30" diameter or greater.)

RECOMMENDED USES

For use over prepared steel or concrete surfaces in industrial and marine exposures such as:

- Meets MIL-PRF-23236, Type VII, Class 5, 7, 9 and 11, Grade C (standard hardener only)
- Ballast tank interiors, Oil storage tank interiors, Refined fuel storage tank and potable water tanks interiors and pipe.
- NSF approved for one coat application up to 50.0 mils (1250 microns) dft if required
- Water and waste treatment plants
- Buried Pipe Applications
- Primary and secondary containment areas
- Where edge protection film build properties are required
- Suitable for use with cathodic protection systems
- White B62W211 Contains OAP fluorescent pigment (NSF Approved)
- Suitable for use in the Mining & Minerals Industry

PRODUCT CHARACTERISTICS

Finish	Gloss
Color:	White OAP (NSF), White (NSF), Light Gray (NSF), Light Green (NSF), Black, Haze Gray
Volume Solids:	98% ± 2%, mixed
Weight Solids:	98% ± 2%, mixed
VOC (EPA Method 24):	
(with B62-V210 Hardeners)	<100 g/L; 0.83 lb/gal, mixed
(with B62V211 Hardener)	<100 g/L; 0.84 lb/gal, mixed
Mix Ratio:	4:1 by volume

Recommended Spreading Rate per coat*:

	1 coat system Min.		1 coat system Max.		2 coat system Min.		2 coat system Max.	
Wet mils (microns)	**18.0**	450	**22.0**	550	**10.0**	250	**12.0**	300
Dry mils (microns)	**18.0**	450	**22.0**	550	**10.0**	250	**12.0**	300
Total mils (microns)	**18.0**	450	**22.0**	550	**20.0**	500	**24.0**	600
~Coverage sq ft/gal (m^2/L)	**72**	1.76	**90**	2.2	**130**	3.18	**160**	3.9
Theoretical coverage **sq ft/gal** (m^2/L) @ 1 mil/25 micron dft	**1568** (38.4)							

* See NSF Systems on next page.

NOTE: Brush or roll application recommended for stripe coating and repair only. Standard hardener preferred for brush & roll due to pot life.

Drying Schedule @ 10.0-22.0 mils wet (250-550 microns):

With B62-V210	@ 55°F/13°C *50% RH*	@ 77°F/25°C	@ 100°F/38°C
To touch:	12 hours	5 hours	3 hours
To handle:	48 hours	14 hours	8 hours
To recoat:			
minimum:	48 hours	14 hours	8 hours
maximum:	21 days	14 days	14 days
Cure to service:	10 days	4 days	24 hours
Heat Cure:	8 hours @ ambient, then 16 hrs @ 140°F (60°C)*		

*Not NSF Approved. See Tips Section.

Pot Life*:	30-45 minutes	30-45 minutes	20-30 minutes
*Dependent upon temperature and mass			
Sweat-in-time:	15 minutes	None	None

PRODUCT CHARACTERISTICS (CONT'D)

With B62V211	@ 40°F/4.5°C	@ 55°F/13°C *50% RH*	@ 77°F/25°C
To touch:	24 hours	5 hours	3 hours
To handle:	48 hours	24 hours	8 hours
To recoat:			
minimum:	48 hours	24 hours	8 hours
maximum:	30 days	21 days	14 days
Cure to service:	7 days	5 days	3 days
Heat Cure:	8 hours @ ambient, then 16 hrs @ 140°F (60°C)*		

Material should be at least 50°F (10°C) for optimal performance.

If maximum recoat time is exceeded, abrade surface before recoating.

Drying time is temperature, humidity, and film thickness dependent.

Sterilize and rinse per AWWA C652.

*Not NSF Approved. See Tips Section.

Pot Life*:	20 minutes	20 minutes	10 minutes
*Dependent upon temperature and mass			
Sweat-in-Time:	5 minutes	None	None

Shelf Life:	36 months Store indoors at 40°F (4.5°C) to 100°F (38°C).
Flash Point:	>200°F (93°C), PMCC, mixed
Reduction:	Not recommended
Clean Up:	MEK, R6K10 or R7K104 Reducer

PERFORMANCE CHARACTERISTICS

Substrate*: Steel

Surface Preparation*: SSPC-SP10/NACE 2

System Tested*:

1 ct. Dura-Plate UHS @ 18.0 mils (450 microns) dft with B62GV210 Hardener

*unless otherwise noted below

Test Name	Test Method	Results
Abrasion Resistance	ASTM D4060, CS17 wheel, 1000 cycles, 1 kg load	20.8 mg loss
Adhesion	ASTM D4541; ASTM D3359	800 psi, minimum (ASTM D4541); 5A (ASTM D3359)
Corrosion Weathering	ASTM D5894, 6 cycles, 2016 hours	Rating 10 per ASTM D610 for rusting and Rating 10 per ASTM D714 for blistering
Direct Impact Resistance	ASTM D2794; ASTM G14	30 in. lb. (ASTM D2794); 168 in. lb. (ASTM G14)
Dry Heat Resistance	ASTM D2485	250°F (121°C)
Flexibility	ASTM D522, 180° bend, 1/2" mandrel	Passes, 9.7% elongation
Immersion (Galvapac/1 ct Dura Plate UHS)	5 year potable water	Rating 10 per ASTM D610 for rusting and Rating 10 per ASTM D714 for blistering
Pencil Hardness	ASTM D3363	3H

IMMERSION (Ambient temperature):

- Ballast Tank mix ..... Recommended
- Crude oil ..... Recommended
- Diesel fuel ..... Recommended
- Ethanol or Gasohol ..... Recommended
- Fresh water/Potable Water ..... Recommended
- Fuel oil ..... Recommended
- Methanol or methanol blends ..... Not Recommended
- MTBE, TAME, ETBE ..... Recommended
- Refined petroleum products ..... Recommended
- Sea water ..... Recommended
- Hi-Aromatic Gasolines ..... Recommended

continued on back

Protective & Marine Coatings

NSF Certified to NSF/ANSI 61

DURA-PLATE® UHS

WITH OPTI-CHECK OAP TECHNOLOGY

PART A	B62-210	SERIES
PART A	B62W211	WHITE OAP (NSF)
PART B	B62V210	STANDARD HARDENER (NSF)
PART B	B62V211	LOW TEMP HARDENER (NSF)

Revised: December 3, 2014

PRODUCT INFORMATION

TRM.35

RECOMMENDED SYSTEMS

		Dry Film Thickness / ct. Mils	(Microns)
Steel, NSF Systems:			
1 ct.	Dura-Plate UHS Primer	4.0-8.0*	(100-200)
1 ct.	Dura-Plate UHS	10.0-12.0*	(250-300)
or			
1 ct.	Dura-Plate UHS	16.0-50.0	(400-1250)
or			
2 cts.	Dura-Plate UHS	8.0-25.0	(200-625)
or			
3 cts.	Dura-Plate UHS	8.0-16.0	(200-400)
Steel, OAP Fluorescent Pigment System			
1 ct.	Dura-Plate UHS (B62W211)	12.0-14.0	(300-350)
Steel:			
1 ct.	Dura-Plate UHS Primer	4.0-8.0**	(100-200)
1 ct.	Dura-Plate UHS	10.0-12.0	(250-300)
or			
2 cts.	Dura-Plate UHS	6.0-7.0	(150-175)
or			
1 ct.	Dura-Plate UHS	18.0-22.0	(450-550)
or			
2 cts.	Dura-Plate UHS	10.0-12.0	(250-300)
Steel, with hold primer:			
1 ct.	Macropoxy 5500 Primer (as required for blast hold primer)	1.0-1.5**	(25-40)
2 cts.	Dura-Plate UHS	10.0-12.0	(250-300)
Steel, Laminate System:			
1 ct.	Copoxy Shop Primer (as required for blast hold primer)	1.0-1.5	(25-40)
or			
1 ct.	Dura-Plate UHS Primer	4.0-8.0**	(100-200)
1 ct.	Steel-Seam FT910 as required for filling pits, and transitioning sharp edges, weld seams, etc.		
1 ct.	Dura-Plate UHS Clear Laminate Resin with 1½ oz. glass mat	40.0-45.0	(1000-1125)
1 ct.	Dura-Plate UHS as required to seal fiberglass mat	10.0-12.0	(250-300)
Concrete/Masonry:			
1 ct.	Corobond 100 Epoxy Primer/Sealer	4.0-6.0	(100-150)
	(or 1 ct Dura- Plate UHS Primer (as required for NSF)	4.0-8.0**	(100-200)
1 ct.	Dura-Plate UHS (as required for NSF)	10.0-12.0	(250-300)

* If primer is used, 10 mils (250 microns) dft maximum for primer and 14 mils (350 microns) dft maximum for topcoat.

** When using the B62L210 Primer containing the OAP fluorescent pigment, make sure a non-containing OAP fluorescent pigment Topcoat is used.

Refer to Application Bulletin for treatment of pitted tank bottoms.

The systems listed above are representative of the product's use, other systems may be appropriate.

DISCLAIMER

The information and recommendations set forth in this Product Data Sheet are based upon tests conducted by or on behalf of The Sherwin-Williams Company. Such information and recommendations set forth herein are subject to change and pertain to the product offered at the time of publication. Consult your Sherwin-Williams representative to obtain the most recent Product Data Information and Application Bulletin.

SURFACE PREPARATION

Surface must be clean, dry, and in sound condition. Remove all oil, dust, grease, dirt, loose rust, and other foreign material to ensure adequate adhesion.

Refer to product Application Bulletin for detailed surface preparation information.

Minimum recommended surface preparation:

Iron & Steel:
- Atmospheric: SSPC-SP6/NACE 3, 2 mil (50 micron) profile or SSPC-SP12/NACE No. 5, WJ-3/NV-2
- Immersion: SSPC-SP10/NACE2, 2-3 mil (50-75 micron)profile or SSPC- SP12/NACE No. 5, WJ-2/NV-2

Concrete & Masonry:
- Atmospheric: SSPC-SP13/NACE 6, or ICRI No. 310.2R CSP 2-3
- Immersion: SSPC-SP13/NACE 6-4.3.1 or 4.3.2, or ICRI No. 310.2R CSP 2-3

Surface Preparation Standards

Condition of Surface		ISO 8501-1 BS7079:A1	Swedish Std. SIS055900	SSPC	NACE
White Metal		Sa 3	Sa 3	SP 5	1
Near White Metal		Sa 2.5	Sa 2.5	SP 10	2
Commercial Blast		Sa 2	Sa 2	SP 6	3
Brush-Off Blast		Sa 1	Sa 1	SP 7	4
Hand Tool Cleaning	Rusted	C St 2	C St 2	SP 2	-
	Pitted & Rusted	D St 2	D St 2	SP 2	-
Power Tool Cleaning	Rusted	C St 3	C St 3	SP 3	-
	Pitted & Rusted	D St 3	D St 3	SP 3	-

TINTING

Do not tint Part A.

Clear Hardeners B62V210 and B62V211 may be tinted with up to 1½ oz. per gallon with Maxitoner Colorant, Phthalo Green or Black (both NSF approved) **ONLY**.

APPLICATION CONDITIONS

Temperature (air, surface):
- B62-V210 Hardeners: 50°F (10°C) minimum, 110°F (43°C) maximum
- B62V211 Hardener: 40°F (4.5°C) minimum, 77°F (25°C) maximum

At least 5°F (2.8°C) above dew point

Material should be 70°F (21°C) to 85°F (29°C) or optimal performance.

Relative humidity: 85% maximum

Refer to product Application Bulletin for detailed application information.

ORDERING INFORMATION

Packaging:
- Part A: 4 gallon (15.1L) container
- Part B: 1 gallon (3.78L) container

Weight: 10.52 ± 0.2 lb/gal ; 1.26 Kg/L, mixed

SAFETY PRECAUTIONS

Refer to the MSDS sheet before use.

Published technical data and instructions are subject to change without notice. Contact your Sherwin-Williams representative for additional technical data and instructions.

WARRANTY

The Sherwin-Williams Company warrants our products to be free of manufacturing defects in accord with applicable Sherwin-Williams quality control procedures. Liability for products proven defective, if any, is limited to replacement of the defective product or the refund of the purchase price paid for the defective product as determined by Sherwin-Williams. NO OTHER WARRANTY OR GUARANTEE OF ANY KIND IS MADE BY SHERWIN-WILLIAMS, EXPRESSED OR IMPLIED, STATUTORY, BY OPERATION OF LAW OR OTHERWISE, INCLUDING MERCHANTABILITY AND FITNESS FOR A PARTICULAR PURPOSE.

Protective & Marine Coatings

NSF Certified to NSF/ANSI 61

DURA-PLATE® UHS

WITH OPTI-CHECK OAP TECHNOLOGY

PART A	B62-210	SERIES
PART A	B62W211	WHITE OAP (NSF)
PART B	B62V210	STANDARD HARDENER (NSF)
PART B	B62V211	LOW TEMP HARDENER (NSF)

Revised: December 3, 2014

APPLICATION BULLETIN

TRM.35

SURFACE PREPARATIONS

Surface must be clean, dry, and in sound condition. Remove all oil, dust, grease, dirt, loose rust, and other foreign material to ensure adequate adhesion.

Iron & Steel (atmospheric service)
Minimum surface preparation is Commercial Blast Cleaning per SSPC-SP6/NACE 3 or SSPC-SP12/NACE No. 5. For surfaces prepared by SSPC SP6/NACE 3, first remove all oil and grease from surface by Solvent Cleaning per SSPC-SP1. For better performance, use Near White Metal Blast Cleaning per SSPC-SP10/NACE 2. Blast clean all surfaces using a sharp, angular abrasive for optimum surface profile (2-3 mils / 50-75 microns). For surfaces prepared by SSPC-SP12/NACE No. 5, all surfaces shall be cleaned in accordance with WJ-3/NV2. Pre-existing profile should be approximately 2 mils (50 microns). Prime any bare steel the same day as it is cleaned or before flash rusting occurs.

Iron & Steel (immersion service)
Remove all oil and grease from surface by Solvent Cleaning per SSPC-SP1. Minimum surface preparation is Near White Metal Blast Cleaning per SSPC-SP10/NACE 2, or SSPC-SP12/NACE No. 5. For SSPC-SP10/NACE 2 blast clean all surfaces using a sharp, angular abrasive for optimum surface profile (2-3 mils / 50-75 microns). For SSPC-SP12/NACE No.5, all surfaces to be coated shall be cleaned in accordance with WJ-2/NV2 standards. Pre-existing profile should be approximately 2 mils (50 microns). Remove all weld spatter. Prime any bare steel the same day as it is cleaned or before flash rusting occurs.

Concrete and Masonry
For surface preparation, refer to SSPC-SP13/NACE 6, or ICRI No. 310.2R, CSP 2-3. Surfaces should be thoroughly clean and dry. Concrete and mortar must be cured at least 28 days @ 75°F (24°C). Remove all loose mortar and foreign material. Surface must be free of laitance, concrete dust, dirt, form release agents, moisture curing membranes, loose cement and hardeners. Fill bug holes, air pockets and other voids with Steel-Seam FT910. Primer required.

Follow the standard methods listed below when applicable:
ASTM D4258 Standard Practice for Cleaning Concrete.
ASTM D4259 Standard Practice for Abrading Concrete.
ASTM D4260 Standard Practice for Etching Concrete.
ASTM F1869 Standard Test Method for Measuring Moisture Vapor Emission Rate of Concrete.
SSPC-SP 13/Nace 6 Surface Preparation of Concrete.
ICRI No. 310.2R Concrete Surface Preparation.

Concrete, Immersion Service:
For surface preparation, refer to SSPC-SP13/NACE 6, Section 4.3.1 or 1.3.2 or ICRI No. 310.2R, CSP 2-3.

Surface Preparation Standards

Condition of Surface		ISO 8501-1 BS7079:A1	Swedish Std. SIS055900	SSPC	NACE
White Metal		Sa 3	Sa 3	SP 5	1
Near White Metal		Sa 2.5	Sa 2.5	SP 10	2
Commercial Blast		Sa 2	Sa 2	SP 6	3
Brush-Off Blast		Sa 1	Sa 1	SP 7	4
Hand Tool Cleaning	Rusted	C St 2	C St 2	SP 2	-
	Pitted & Rusted	D St 2	D St 2	SP 2	-
Power Tool Cleaning	Rusted	C St 3	C St 3	SP 3	-
	Pitted & Rusted	D St 3	D St 3	SP 3	-

APPLICATION CONDITIONS

Temperature (air, surface):

B62-V210 Hardeners	50°F (10°C) minimum, 110°F (43°C) maximum
B62V211 Hardener	40°F (4.5°C) minimum, 77°F (25°C) maximum
	At least 5°F (2.8°C) above dew point

Material should be 70°F (21°C) to 85°F (29°C) or optimal performance.

Relative humidity: 85% maximum

APPLICATION EQUIPMENT

The following is a guide. Changes in pressures and tip sizes may be needed for proper spray characteristics. Always purge spray equipment before use with listed reducer. Any reduction must be compliant with existing VOC regulations and compatible with the existing environmental and application conditions.

Reduction .....Not recommended

Clean Up .....MEK, R6K10 or R7K104 Reducer

Airless Spray
Unit.....74:1 Pump, minimum
Pressure.....6000 psi minimum
Hose.....3/8" ID
Tip .....019" - .021"
Filter.....30 mesh

In order to avoid blockage of spray equipment and hose, flush equipment with MEK, R6K10 or R7K104 Reducer at least once every 30 minutes when using the B62V210 Hardener and after each kit when using the Low Temperature Hardener, and before periods of extended downtime.

Plural Component Equipment .....Acceptable

Brush .....For stripe coating and repair only
Brush.....Nylon/Polyester or Natural Bristle

Roller .....For stripe coating and repair only
Cover .....3/8" woven with solvent resistant core

If specific application equipment is not listed above, equivalent equipment may be substituted.

continued on back

Protective & Marine Coatings

NSF Certified to NSF/ANSI 61

DURA-PLATE® UHS

WITH OPTI-CHECK OAP TECHNOLOGY

PART A	B62-210	SERIES
PART A	B62W211	WHITE OAP (NSF)
PART B	B62V210	STANDARD HARDENER (NSF)
PART B	B62V211	LOW TEMP HARDENER (NSF)

Revised: December 3, 2014

APPLICATION BULLETIN

TRM.35

APPLICATION PROCEDURES

Surface preparation must be completed as indicated.

Mixing Instructions: Mix contents of each component thoroughly using low speed power agitation. Make certain no pigment remains on the bottom or the sides of the can. Then combine four parts by volume of Part A with one part by volume of Part B. Thoroughly agitate the mixture with power agitation.

To ensure that no unmixed material remains on the sides or bottom of the cans after mixing, visually observe the container by pouring the material into a separate container.

Apply paint at the recommended film thickness and spreading rate as indicated below:

Recommended Spreading Rate per coat*:

	1 coat system Min.		1 coat system Max.		2 coat system Min.		2 coat system Max.	
Wet mils (microns)	**18.0**	450	**22.0**	550	**10.0**	250	**12.0**	300
Dry mils (microns)	**18.0**	450	**22.0**	550	**10.0**	250	**12.0**	300
Total mils (microns)	**18.0**	450	**22.0**	550	**20.0**	500	**24.0**	600
~Coverage sq ft/gal (m^2/L)	**72**	1.76	**90**	2.2	**130**	3.18	**160**	3.9
Theoretical coverage **sq ft/gal** (m^2/L) @ 1 mil/25 micron dft	**1568** (38.4)							

* See NSF Systems on next page.

NOTE: Brush or roll application recommended for stripe coating and repair only. Standard hardener preferred for brush & roll due to pot life.

Drying Schedule @ 10.0-22.0 mils wet (250-550 microns):

With B62-V210	**@ 55°F/13°C *50% RH***	**@ 77°F/25°C**	**@ 100°F/38°C**
To touch:	12 hours	5 hours	3 hours
To handle:	48 hours	14 hours	8 hours
To recoat:			
minimum:	48 hours	14 hours	8 hours
maximum:	21 days	14 days	14 days
Cure to service:	10 days	4 days	24 hours
Heat Cure:	8 hours @ ambient, then 16 hrs @ 140°F (60°C)*		

*Not NSF Approved. See Tips Section.

Pot Life*:	30-45 minutes	30-45 minutes	20-30 minutes
*Dependent upon temperature and mass			
Sweat-in-time:	15 minutes	None	None

With B62V211	**@ 40°F/4.5°C**	**@ 55°F/13°C *50% RH***	**@ 77°F/25°C**
To touch:	24 hours	5 hours	3 hours
To handle:	48 hours	24 hours	8 hours
To recoat:			
minimum:	48 hours	24 hours	8 hours
maximum:	30 days	21 days	14 days
Cure to service:	7 days	5 days	3 days
Heat Cure:	8 hours @ ambient, then 16 hrs @ 140°F (60°C)*		

Material should be at least 50°F (10°C) for optimal performance.

If maximum recoat time is exceeded, abrade surface before recoating.

Drying time is temperature, humidity, and film thickness dependent.

Sterilize and rinse per AWWA C652.

*Not NSF Approved. See Tips Section.

Pot Life*:	20 minutes	20 minutes	10 minutes
*Dependent upon temperature and mass			
Sweat-in-Time:	5 minutes	None	None

Note: Recommended application procedure direct to steel: Apply a 5.0-6.0 mil (125-150 micron) coat to the substrate. Allow material to "wet" the surface. Then apply additional material, to bring total film thickness to the recommended range.

Application of coating above maximum or below minimum recommended spreading rate may adversely affect coating performance.

CLEAN UP INSTRUCTIONS

Clean spills and spatters immediately with MEK, R6K10. Clean tools immediately after use with MEK, R6K10. Follow manufacturer's safety recommendations when using any solvent.

PERFORMANCE TIPS

Repair of Pitted Tank Bottoms
Extensive, deep pitting:
Options:
Option 1 ....Apply a full wet coat, by spray application, of Dura-Plate UHS Primer. Follow with rubber squeegee to work material into and fill the pitted areas. After recommended drying time, apply a full coat of Dura-Plate UHS at recommended film thickness.
Option 2 ....Apply Dura-Plate Laminant Resin with 1½ oz fiberglass mat over the pitted areas. After recommended drying time, apply a full coat of Dura-Plate UHS at recommended film thickness.
Option 3 ....Weld new steel plates, or use puddle welds, as required to repair pitted areas. Coat areas as recommended.
Shallow pitting, isolated areas:
Options:
Option 1 ....Same as number 1 above.
Option 2 ....Apply Steel-Seam FT910 as required to fill the pitted areas. Coat areas as recommended.

When using spray application, use a 50% overlap with each pass of the gun to avoid holidays, bare areas, and pinholes. If necessary, cross-coat spray at a right angle.

Spreading rates are calculated on volume solids and do not include an application loss factor due to surface profile, roughness or porosity of the surface, skill and technique of the applicator, method of application, various surface irregularities, material lost during mixing, spillage, overthinning, climatic conditions, and excessive film build.
No reduction of material is recommended as this can affect film build, appearance, and adhesion.

Do not mix previously catalyzed material with new.

Do not apply the material beyond recommended pot life.

In order to avoid blockage of spray equipment and hose, flush equipment with MEK, R6K10 or R7K104 Reducer at least once every 30 minutes when using the B62V210 Hardener and after each kit when using the Low Temperature Hardener, and before periods of extended downtime.

For Immersion Service: (if required) Holiday test in accordance with ASTM D5162 for steel, or ASTM D4787 for concrete.

May be applied up to 50.0-60.0 mils (1250-1500 microns) dft in one coat if required.

When using the B62L210 Primer containing the OAP fluorescent pigment, make sure a non-containing OAP fluorescent pigment Topcoat is used.

Stripe coat all crevices, welds, and sharp angles to prevent early failure in these areas.

Heat curing is not acceptable for NSF approval.

Guidance on techniques and required equipment to inspect a coating system incorporating Opti-Check OAP Technology can be found in SSPC-TU 11.

Refer to Product Information sheet for additional performance characteristics and properties.

SAFETY PRECAUTIONS

Refer to the MSDS sheet before use.

Published technical data and instructions are subject to change without notice. Contact your Sherwin-Williams representative for additional technical data and instructions.

WARRANTY

The Sherwin-Williams Company warrants our products to be free of manufacturing defects in accord with applicable Sherwin-Williams quality control procedures. Liability for products proven defective, if any, is limited to replacement of the defective product or the refund of the purchase price paid for the defective product as determined by Sherwin-Williams. NO OTHER WARRANTY OR GUARANTEE OF ANY KIND IS MADE BY SHERWIN-WILLIAMS, EXPRESSED OR IMPLIED, STATUTORY, BY OPERATION OF LAW OR OTHERWISE, INCLUDING MERCHANTABILITY AND FITNESS FOR A PARTICULAR PURPOSE.

DISCLAIMER

The information and recommendations set forth in this Product Data Sheet are based upon tests conducted by or on behalf of The Sherwin-Williams Company. Such information and recommendations set forth herein are subject to change and pertain to the product offered at the time of publication. Consult your Sherwin-Williams representative to obtain the most recent Product Data Information and Application Bulletin.

Protective & Marine Coatings

ENVIROLASTIC® 940 DTM
POLYASPARTIC URETHANE

PART A	B65-940	SERIES
PART B	B65V940	HARDENER

Revised: February 6, 2014

PRODUCT INFORMATION

5.52

PRODUCT DESCRIPTION

ENVIROLASTIC 940 DTM is a single coat, direct-to-metal urethane finish. It is a fast dry, polyaspartic urethane formulated to provide high build, high performance protection and gloss and color retention through airless spray.

- Single coat application
- Direct to metal
- Corrosion resistant
- High film build in one coat
- Cures quickly to improve productivity
- No gassing
- Outstanding application properties

PRODUCT CHARACTERISTICS

Finish: Gloss

Color: Wide range of colors possible

Volume Solids: 68% ± 2%, mixed, may vary by color

Weight Solids: 80% ± 2%, mixed, may vary by color

VOC (EPA Method 24): 265 g/L; 2.21 lb/gal, mixed, may vary by color

Mix Ratio: 2:1 by volume

Recommended Spreading Rate per coat:

	Minimum	Maximum
Wet mils (microns)	**9.0** (225)	**13.0** (325)
Dry mils (microns)	**6.0** (150)	**9.0** (225)
~Coverage sq ft/gal (m^2/L)	**121** (3.0)	**182** (4.5)
Theoretical coverage **sq ft/gal** (m^2/L) @ 1 mil / 25 microns dft	**1089** (26.7)	

NOTE: Brush or roll application may require multiple coats to achieve maximum film thickness and uniformity of appearance.

Drying Schedule @ 9.0 mils wet (225 microns):

	@ 35°F/1.6°C	@ 50°F/10°C	@ 77°F/25°C 50% RH	@ 120°F/49°C
To touch:	5 hours	3 hours	1 hour	30 minutes
To handle:	16 hours	7 hours	2 hours	1 hour
To recoat:				
minimum:	16 hours	7 hours	2 hours	1 hour
maximum:	3 months	3 months	3 months	45 days
To cure:	7 days	7 days	4 days	2 days
Pot Life:	4 hours	3 hours	2 hours	30 minutes
Sweat-in-Time:	None required			

If maximum recoat time is exceeded, abrade surface before recoating. Drying time is temperature, humidity, and film thickness dependent.

Shelf Life:	Part A - 24 months, unopened Part B - 24 months, unopened Store indoors at 40°F (4.5°C) to 100°F (38°C).
Flash Point:	57°F (14°C), mixed (Seta Flash)
Reducer/Clean Up:	
Below 80°F (27°C):	MEK, R6K10
Above 80°F (27°C):	Reducer R7K216
Brush / Roll:	Reducer R7K216

RECOMMENDED USES

- Direct to properly prepared steel and galvanizing in industrial environments
- Replaces conventional epoxy/urethane systems
- Ideal for maintenance or new construction applications
- Suitable for use in USDA inspected facilities
- Acceptable for use in high performance architectural applications
- Suitable for use in the Mining & Minerals Industry
- Not recommended for electrostatic spray or air-assisted airless spray

PERFORMANCE CHARACTERISTICS

Substrate*: Steel

Surface Preparation*: SSPC-SP10/NACE 2

System Tested*:

1 ct. Envirolastic 940 DTM @ 6.0-9.0 mils (150-225 microns) dft

*unless otherwise noted below

Test Name	Test Method	Results
Abrasion Resistance	ASTM D4060, CS17 wheel, 1000 cycles, 1 kg load	120 mg loss
Adhesion	ASTM D4541	1400 psi
Direct Impact Resistance	ASTM G14	60 in lb
Dry Heat Resistance	ASTM D2485	200°F (93°C)
Flexibility	ASTM D522, 180° bend, 3/4" mandrel	Passes
Pencil Hardness	ASTM D3363	H

continued on back

Protective & Marine Coatings

ENVIROLASTIC® 940 DTM
POLYASPARTIC URETHANE

PART A	B65-940	SERIES
PART B	B65V940	HARDENER

Revised: February 6, 2014

PRODUCT INFORMATION

5.52

RECOMMENDED SYSTEMS

	Dry Film Thickness / ct. Mils	(Microns)
Steel:		
1 ct. Envirolastic 940 DTM	6.0-9.0	(150-225)
Galvanizing:		
1 ct. DTM Wash Primer	0.7-1.3	(18-32)
1 ct. Envirolastic 940 DTM	6.0-9.0	(150-225)
Galvanizing:		
1 ct. Envirolastic 940 DTM	6.0-9.0	(150-225)
Steel, if primer is required:		
1 ct. Corothane I GalvaPac Zinc Primer	3.0-4.0*	(75-100)
1 ct. Envirolastic 940 DTM	6.0-9.0	(150-225)
Previously Painted Surfaces:		
1 ct. Envirolastic 940	4.0-7.0	(100-200)
Check Compatibility		

* other acceptable primers
- Fast Clad Zinc HS
- Macropoxy 646 Epoxy
- Steel Spec Epoxy Primer
- Zinc Clad III HS
- Zinc Clad IV

SURFACE PREPARATION

Surface must be clean, dry, and in sound condition. Remove all oil, dust, grease, dirt, loose rust, and other foreign material to ensure adequate adhesion.

Refer to product Application Bulletin for detailed surface preparation information.

The systems listed above are representative of the product's use, other systems may be appropriate.

DISCLAIMER

The information and recommendations set forth in this Product Data Sheet are based upon tests conducted by or on behalf of The Sherwin-Williams Company. Such information and recommendations set forth herein are subject to change and pertain to the product offered at the time of publication. Consult your Sherwin-Williams representative to obtain the most recent Product Data Information and Application Bulletin.

Minimum recommended surface preparation:

Iron & Steel: SSPC-SP6/NACE 3, 2 mil (50 micron) profile

Galvanizing: SSPC-SP16, 2 mil (50 micron) profile

Surface Preparation Standards

Condition of Surface	ISO 8501-1 BS7079:A1	Swedish Std. SIS055900	SSPC	NACE
White Metal	Sa 3	Sa 3	SP 5	1
Near White Metal	Sa 2.5	Sa 2.5	SP 10	2
Commercial Blast	Sa 2	Sa 2	SP 6	3
Brush-Off Blast	Sa 1	Sa 1	SP 7	4
Hand Tool Cleaning Rusted	C St 2	C St 2	SP 2	-
Hand Tool Cleaning Pitted & Rusted	D St 2	D St 2	SP 2	-
Power Tool Cleaning Rusted	C St 3	C St 3	SP 3	-
Power Tool Cleaning Pitted & Rusted	D St 3	D St 3	SP 3	-

TINTING

Tint with Maxitoner colorants only into Part A Ultra Deep at 100% tint strength and 150% tint strength for Extra White. Five minutes minimum mixing on a mechanical shaker is required for complete mixing of color.

APPLICATION CONDITIONS

Temperature: 35°F (1.6°C) minimum, 120°F (49°C) maximum
(air, surface, and material)
At least 5°F (2.8°C) above dew point

Relative humidity: 85% maximum

Refer to product Application Bulletin for detailed application information.

ORDERING INFORMATION

Packaging:

Part A: 2 qts. (1.9L) gallon can
Part B: 1 qt. (0.95L) quart can

Part A: 3 gallon (12.04L) pail
Part B: short filled 2 gallon (6.28L) pail

Weight: 11.4 ± 0.2 lb/gal ; 1.4 Kg/L
mixed, may vary with color

SAFETY PRECAUTIONS

Refer to the MSDS sheet before use.
Published technical data and instructions are subject to change without notice. Contact your Sherwin-Williams representative for additional technical data and instructions.

WARRANTY

The Sherwin-Williams Company warrants our products to be free of manufacturing defects in accord with applicable Sherwin-Williams quality control procedures. Liability for products proven defective, if any, is limited to replacement of the defective product or the refund of the purchase price paid for the defective product as determined by Sherwin-Williams. NO OTHER WARRANTY OR GUARANTEE OF ANY KIND IS MADE BY SHERWIN-WILLIAMS, EXPRESSED OR IMPLIED, STATUTORY, BY OPERATION OF LAW OR OTHERWISE, INCLUDING MERCHANTABILITY AND FITNESS FOR A PARTICULAR PURPOSE.

Protective & Marine Coatings

ENVIROLASTIC® 940 DTM
POLYASPARTIC URETHANE

PART A	B65-940	SERIES
PART B	B65V940	HARDENER

Revised: February 6, 2014

APPLICATION BULLETIN

5.52

SURFACE PREPARATIONS

Surface must be clean, dry, and in sound condition. Remove all oil, dust, grease, dirt, loose rust, and other foreign material to ensure adequate adhesion.

Iron & Steel
Remove all oil and grease from surface by Solvent Cleaning per SSPC-SP1. Minimum surface preparation is Commercial Blast Cleaning per SSPC-SP6/NACE 3. For better performance, use Near White Metal Blast Cleaning per SSPC-SP10/NACE 2. Blast clean all surfaces using a sharp, angular abrasive for optimum surface profile (2 mils / 50 microns). Prime any bare steel the same day as it is cleaned or before flash rusting occurs.

Aluminum
Remove all oil, grease, dirt, oxide and other foreign material by Solvent Cleaning per SSPC-SP1. Primer required.

Galvanized Steel
Surface Preparation Specification SSPC-SP 16 must be followed obtaining a surface profile of minimum 2.0 mils (50 microns).

Previously Painted Surfaces
If in sound condition, clean the surface of all foreign material. Smooth, hard or glossy coatings and surfaces should be dulled by abrading the surface. Apply a test area, allowing paint to dry one week before testing adhesion. If adhesion is poor, or if this product attacks the previous finish, removal of the previous coating may be necessary. If paint is peeling or badly weathered, clean surface to sound substrate and treat as a new surface as above.

Surface Preparation Standards

	Condition of Surface	ISO 8501-1 BS7079:A1	Swedish Std. SIS055900	SSPC	NACE
White Metal		Sa 3	Sa 3	SP 5	1
Near White Metal		Sa 2.5	Sa 2.5	SP 10	2
Commercial Blast		Sa 2	Sa 2	SP 6	3
Brush-Off Blast		Sa 1	Sa 1	SP 7	4
Hand Tool Cleaning	Rusted	C St 2	C St 2	SP 2	-
	Pitted & Rusted	D St 2	D St 2	SP 2	-
Power Tool Cleaning	Rusted	C St 3	C St 3	SP 3	-
	Pitted & Rusted	D St 3	D St 3	SP 3	-

APPLICATION CONDITIONS

Temperature:	35°F (1.6°C) minimum, 120°F (49°C) maximum (air, surface, and material) At least 5°F (2.8°C) above dew point
Relative humidity:	85% maximum

APPLICATION EQUIPMENT

The following is a guide. Changes in pressures and tip sizes may be needed for proper spray characteristics. Always purge spray equipment before use with listed reducer. Any reduction must be compliant with existing VOC regulations and compatible with the existing environmental and application conditions.

Reducer/Clean Up
- Above 80°F.....Reducer R7K216
- Below 80°F .....MEK, R6K10
- Brush and roll.....Reducer R7K216

Airless Spray
- Pump.....30:1
- Pressure.....2800 - 3000 psi
- Hose.....3/8" ID
- Tip .....017" - .021"
- Filter.....60 mesh
- Reduction.....As needed up to 5% by volume

Conventional Spray
- Gun .....Binks 95
- Cap 63P
- Fluid Tip 67
- Atomization Pressure.....50-70 psi
- Fluid Pressure.....20-25 psi
- Reduction.....As needed, up to 10% by volume

Brush (small areas only)
- Brush.....Natural bristle
- Reduction.....As needed up to 5% by volume

Roller (small areas only)
- Cover .....1/4" woven with solvent resistant core
- Reduction.....As needed up to 5% by volume

If specific application equipment is not listed above, equivalent equipment may be substituted.

continued on back

Protective & Marine Coatings

ENVIROLASTIC® 940 DTM
POLYASPARTIC URETHANE

PART A	B65-940	SERIES
PART B	B65V940	HARDENER

Revised: February 6, 2014

APPLICATION BULLETIN

5.52

APPLICATION PROCEDURES

Surface preparation must be completed as indicated.

Mix contents of each component thoroughly with low speed power agitation. Make certain no pigment remains on the bottom of the can. Then combine 2 parts by volume of Part A with 1 part by volume of Part B. Thoroughly agitate the mixture with power agitation.

If reducer solvent is used, add only after both components have been thoroughly mixed.

Apply paint at the recommended film thickness and spreading rate as indicated below:

Recommended Spreading Rate per coat:

	Minimum	Maximum
Wet mils (microns)	**9.0** (225)	**13.0** (325)
Dry mils (microns)	**6.0** (150)	**9.0** (225)
~Coverage sq ft/gal (m^2/L)	**121** (3.0)	**182** (4.5)
Theoretical coverage **sq ft/gal** (m^2/L) @ 1 mil / 25 microns dft	**1089** (26.7)	

NOTE: Brush or roll application may require multiple coats to achieve maximum film thickness and uniformity of appearance.

Drying Schedule @ 9.0 mils wet (225 microns):

	@ 35°F/1.6°C	@ 50°F/10°C	@ 77°F/25°C *50% RH*	@ 120°F/49°C
To touch:	5 hours	3 hours	1 hour	30 minutes
To handle:	16 hours	7 hours	2 hours	1 hour
To recoat:				
minimum:	16 hours	7 hours	2 hours	1 hour
maximum:	3 months	3 months	3 months	45 days
To cure:	7 days	7 days	4 days	2 days
Pot Life:	4 hours	3 hours	2 hours	30 minutes
Sweat-in-Time:	None required			

If maximum recoat time is exceeded, abrade surface before recoating. Drying time is temperature, humidity, and film thickness dependent.

Application of coating above maximum or below minimum recommended spreading rate may adversely affect coating performance.

CLEAN UP INSTRUCTIONS

Clean spills and spatters immediately with MEK, R6K10. Clean tools immediately after use with MEK, R6K10. Follow manufacturer's safety recommendations when using any solvent.

DISCLAIMER

The information and recommendations set forth in this Product Data Sheet are based upon tests conducted by or on behalf of The Sherwin-Williams Company. Such information and recommendations set forth herein are subject to change and pertain to the product offered at the time of publication. Consult your Sherwin-Williams representative to obtain the most recent Product Data Information and Application Bulletin.

PERFORMANCE TIPS

Stripe coat all crevices, welds, and sharp angles to prevent early failure in these areas.

When using spray application, use a 50% overlap with each pass of the gun to avoid holidays, bare areas, and pinholes. If necessary, cross spray at a right angle.

Spreading rates are calculated on volume solids and do not include an application loss factor due to surface profile, roughness or porosity of the surface, skill and technique of the applicator, method of application, various surface irregularities, material lost during mixing, spillage, overthinning, climatic conditions, and excessive film build.

Excessive reduction of material can affect film build, appearance, and adhesion.

Do not use Quik-Thane Urethane Accelerator.

Do not apply the material beyond recommended pot life.

Do not mix previously catalyzed material with new.

In order to avoid blockage of spray equipment, clean equipment before use or before periods of extended downtime with MEK, R6K10.

Mixed coating is sensitive to water. Use water traps in all air lines. Moisture contact can reduce pot life and affect gloss and color.

Refer to Product Information sheet for additional performance characteristics and properties.

SAFETY PRECAUTIONS

Refer to the MSDS sheet before use.

Published technical data and instructions are subject to change without notice. Contact your Sherwin-Williams representative for additional technical data and instructions.

WARRANTY

The Sherwin-Williams Company warrants our products to be free of manufacturing defects in accord with applicable Sherwin-Williams quality control procedures. Liability for products proven defective, if any, is limited to replacement of the defective product or the refund of the purchase price paid for the defective product as determined by Sherwin-Williams. NO OTHER WARRANTY OR GUARANTEE OF ANY KIND IS MADE BY SHERWIN-WILLIAMS, EXPRESSED OR IMPLIED, STATUTORY, BY OPERATION OF LAW OR OTHERWISE, INCLUDING MERCHANTABILITY AND FITNESS FOR A PARTICULAR PURPOSE.

4 – DETAILED TECHNICAL DOCUMENTATION

4.3 – SHOP DRAWINGS

4.3.2 – SLUDGE TANK – RX75-2

LEFT BLANK

Project name:	AMARUQ
Project#:	5000218009
Document #:	SPK_0004_RX
by:	LJ
chkd:	GP
appvd:	CB

SUBMITTAL PACKAGE

SLUDGE TANKS RX75-2

This page is intentionally left blank

Project name:	AMARUQ
Project#:	5000218009
Document #:	SPK_0004_RX
by:	LJ
chkd:	GP
appvd:	CB

SLUDGE TANKS RX75-2

PROCESS DATASHEET

OIM manual section: 4.3.2.1

REFER TO 5000218009_PSDS_0002_RX_VWT

This page is intentionally left blank

Project name: AMARUQ

Project#: 5000218009

Document #: SPK_0004_RX

by: LJ

chkd: GP

appvd: CB

SLUDGE TANKS RX75-2

GENERAL ARRANGEMENT DRAWING

OIM manual section: 4.3.2.2

REFER TO 5000218009_GA_0002_RX75-2_VWT

This page is intentionally left blank

Project name:	AMARUQ
Project#:	5000218009
Document #:	SPK_0004_RX
by:	LJ
chkd:	GP
appvd:	CB

SLUDGE TANKS RX75-2

MIXER

OIM manual section: 4.3.2.3

This page is intentionally left blank

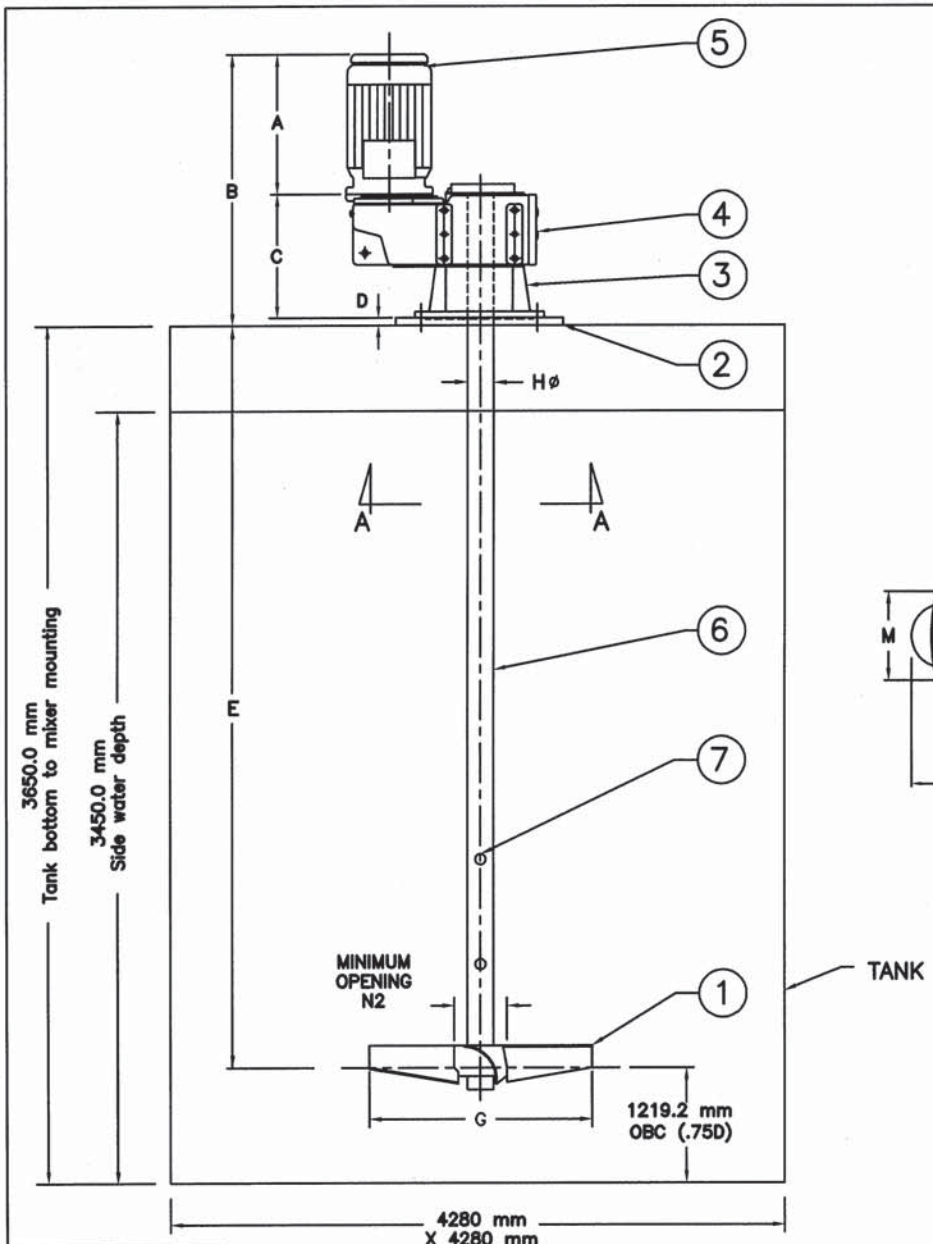

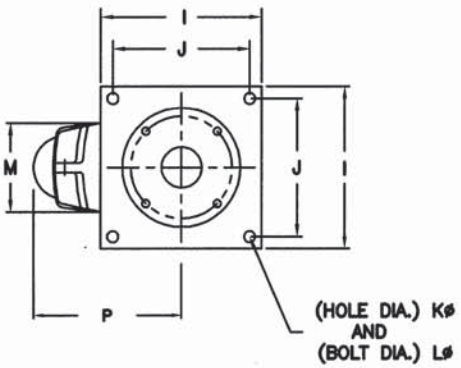

"A–A"

ITEM	DESCRIPTION	MATERIAL
1	Envirofoil Impeller (F–4) 2438.4 mm (96.0")ø ● 22.0 °	304L
2	Base 533.4 mm x 533.4 mm (21.0" x 21.0")	Steel
3	Pedestal c/w dry well (dry well)	
4	NORD reducer 21.72 RPM	
5	NORD 5.0 Hp motor, premium efficiency, 575/3/60, TEFC	
6	Shaft: (1) section 2430.8 mm (95.7") ● 3.0"ø	304L
7	Three pos'n adjustment: 1/2D, 3/4D and 1.0D	

APPL'N: SLUDGE (QTY 2)
MELANGEURS MIX–TECH
MODEL: EVGX6–5.0
3.73 kW ● 21.72 RPM
S/N 04865–4, 5
Sludge tank # 1
Rotation: Clockwise
Thrust: Down
Tag #: M4–011
Reactor # 2
Rotation: Clockwise
Thrust: Down
Tag #: M4–012

Dimensions: Inches

MOD.:	A	B	C	D	E	E2	F	Gø	Hø SHAFT	I	J	Kø	Lø	M	N2	P
EVGX6	12.85	29.8	16.05	.875	95.7	–	–	96.0	3.0	21.0	18.0	1.0	.875	13.8	16.0	16.02

Dimensions: mm

MOD.:	A	B	C	D	E	E2	F	Gø	Hø SHAFT	I	J	Kø	Lø	M	N2	P
EVGX6	326.4	756.9	407.7	22.2	2430.8	–	–	2438.4	76.2	533.4	457.2	25.4	22.2	350.5	406.4	407.0

Ce dessin et l'information qu'il contient est la propriété de ENVIREQUIP WTEM Inc. Il est interdit de le copier, le photographier, l'imprimer, le prêter ou de l'utiliser sans la permission de ENVIREQUIP WTEM Inc.

This drawing and the information contained thereon is the property of ENVIREQUIP WTEM Inc. It is not to be printed, photographed, copied, loaned or used without the permission of ENVIREQUIP WTEM Inc.

NO	DATE	REVISION	P/B

PROJET/PROJECT
AGNICO EAGLE – AMARUK

ENVIREQUIP WTEM INC.
490 Bord du Lac – Suite 2
Dorval, QC H9S 2A8
Montreal Tel: (514) 338-1043
RR1 (21494 Little Russels Rd.)
Glen Robertson, Ont K0B 1H0
Ontario Tel: (613) 874-2616
Fax: (613) 874-2629
E-mail: enviregp@glen-net.ca

TITRE/TITLE
"MIX–TECH" Mixers
Veolia Water Technologies
EVGX SERIES

DESSINÉ PAR: DRAWN BY: PJ	DATE March 8, 2018
DESS. NO: DWG NO: EVGX	ÉCH./SCALE N.T.S
VÉRIFIÉ PAR: CHECKED BY: PJ	PROJ.NO: 04865
APPROUVÉ PAR: APPROVED BY: RJ	REV. 00

This page is intentionally left blank

ENVIREQUIP

W.T.E.M. INC.

MIX-TECH

DYNAMIC MIXERS

EVG & EVG-FP SERIES

1/4 TO 200 HP

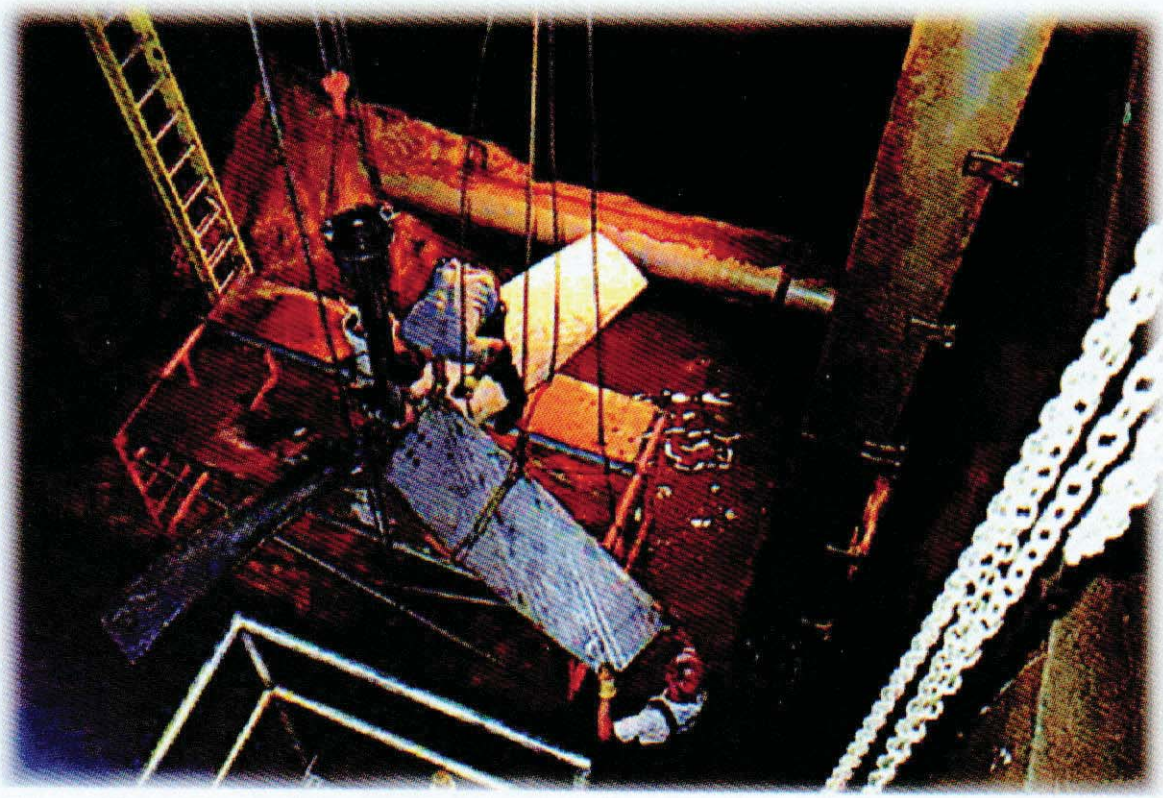

MIX-TECH FEATURES:

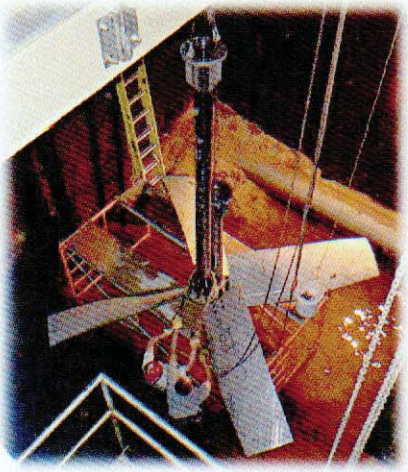

- Large service factors on gear drives - minimum 2.5.
- Shaft stress to 9000 psi maximum.
- Impeller / Hub / Coupling 6000 psi maximum.
- All drives are capable of reverse rotation.
- Optional pedestal with shaft catcher design, that allows removal of the gear drive without disturbing the wet end.
- "FP" Option: The reducer is totally isolated from the random hydraulic loads imposed by the shaft & impeller assembly.
- Large shaft capability operating at 65% of the shaft's 1st Harmonic frequency or Critical Speed.
- Mounting options: Steel base, pedestals and custom.
- Seal options: HPLRSB, LPSB, Lip seals, Single, Double, Dry-Running or Cartridge seals.
- Motor options: Nord integral Standard; Nema motors, hydraulic & pneumatic motors also available.
- Full range of impellers including **ENVIROFOIL**.

MIX-TECH... GOOD PEOPLE TO MIX WITH

ENVIREQUIP

W.T.E.M. INC.

EVG & EVG-FP SERIES
1/4 TO 200HP

MIX-TECH
DYNAMIC MIXERS

Isolating the gear drive 100% from the random hydraulic loads generated by the mixer's shaft and impeller assembly.

FEATURES:

- Elegant parallel design shaft-helical gears.
- AGMA 13 on high speed gears and AGMA 11 minimum for other gears.
- Large service factors - minimum 2,5.
- Oversized roller bearings B10 life, 100,000 hours minimum.
- Double output shaft seals and leakproof dry-well design option.
- Available with hollow quill output shaft for easy maintenance.

MIX-TECH... GOOD PEOPLE TO MIX WITH

ENVIREQUIP

MIX-TECH MIXERS - WARRANTY - SERVICE

WARRANTY

ENVIREQUIP offers a 2 Year warranty against defects on materials and workmanship and a process warranty providing that the process information provided at the time on which the mixer selection was based is correct.

SERVICE

MIX-TECH have shipped mixers to many parts of the world. MIX-TECH provide sales and service in North America through our own staff and through our network of distributors and representatives. For the MIX-TECH Series EVG mixers, the drives are Nord Gear. Because MIX-TECH do not remove the nameplates from the original Nord drive, our clients have the original serial numbers of the drive(s). For any problems or for new applications, please contact us directly toll free at 1-866-819-6123 or fax us at 1-613-874-2629.

Additionally, Nord provide sales and service in hundreds of locations in most countries worldwide. You are never far from service anywhere in the world.

CONTACT US

From all of us at **ENVIREQUIP**, we thank our clients very much for your interest in our equipment and for your patronage. We promise to continue to manufacture top quality, rugged equipment, that is energy-efficient, feature-packed, at a reasonable price. Contact us toll free at 1-866-819-6123, fax us at 1-613-874-2629, send e-mail to : envireqp@glen-net.ca or visit our web site at www.envirequip.com

Or contact Vivendi one of our licensees for water and waste water applications at 1-514-334-7230.

For a mixer selection and quotation, please call, fax, e-mail, check our web site, or write to us, and we will be pleased to provide you with a prompt energy-efficient mixer quotation.

REPRESENTED BY :

ENVIREQUIP

W.T.E.M. INC.

MIX-TECH... GOOD PEOPLE TO MIX WITH

ENVIREQUIP

WTEM INC.

MIX-TECH PORTABLE MIXERS 1/4 to 2 HP

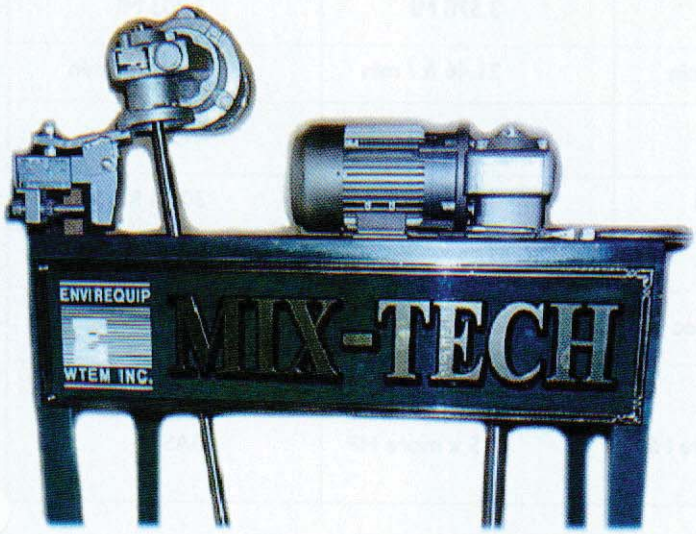

Nord Gear reducers with hollow quill, Crown & Worm gearing and fixed mount is Standard, Parallel Shaft Helical optional.

Commercially available Nord reducers No proprietary parts nor their high prices - Availability worldwide.

Motors: 575/3/60 or 460/3/60 TEFC, inverter service Standard 120/1/60 TEFC 56C inverter service optional air or hydraulic motor and XP optionally available.

Mounting: Flanged Fixed mount Standard optional: Angle Riser base (2) axis Clamp; Custom designs.

Shafts: 0.75", 1.0", 1.25", 1.4375" diameter.

Seals: LRSB, Lip seals, Mechanical Seals including Dry-Running.

Impellers: ENVIROFOILs Standard "best-fit" supplied.

Materials: Steel, 304, 316 SS, PVC and/or elastomer coatings et al.

Sanitary Design: Welded design, Polished to any finish, SS pedestals, Washdown motors.

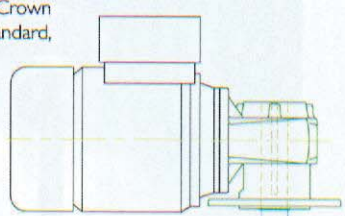

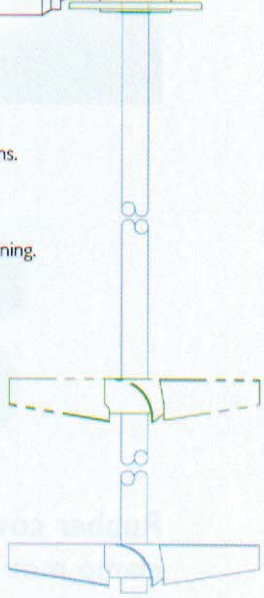

15 Reasons why you should consider buying MIX-TECH Portable Mixers:

MIX-TECH MIXERS operate below the 1st shaft harmonic frequency or Critical Speed and have no problems using VFD's over the entire speed range.

MIX-TECH MIXERS consume up to (10) times less HP than others operating at 350 RPM.

MIX-TECH MIXERS are selected taking THE MECHANICAL ADVANTAGE, thus optimizing energy usage.

MIX-TECH MIXERS are equipped with large impellers (Compared to others), providing excellent batch control.

MIX-TECH MIXERS operate at low peripheral speeds which provide less wear, shear and foaming problems

MIX-TECH standard mixers equipped with Crown & Worm gearing operating at low RPM's are more energy efficient than any other mixer operating at 350 RPM. Parallel shaft helical drives also available.

Crown & Worm drives can withstand momentary overloads up to 300%.

MIX-TECH MIXERS all have a minimum service factor of 2.5, others are usually 1.25 to 1.5 maximum.

MIX-TECH MIXERS are equipped with oversized bearings and are sized to provide a B10 Life of 100,000 hours minimum.

MIX-TECH MIXERS drive's high speed gears are ground to AGMA 13; the low speed gears to AGMA 11 minimum.

MIX-TECH MIXERS come equipped with fixed flange mounts as standard (OPTIONS: Clamp, Angle-Riser, Custom), and can be field converted to any other mounting (or visa versa).

MIX-TECH MIXERS have an easy shaft removal system (thrust plate & bolt).

MIX-TECH MIXERS are equipped with ENVIROFOIL high pumping - Low Power-Draw Impellers.

MIX-TECH MIXER'S warranty is (2) years against defects in materials or workmanship and includes a Process Warranty.

At ENVIREQUIP, our goal is to manufacture MIX-TECH MIXERS which are rugged, feature packed, easy to maintain and energy efficient at a reasonable price.

MIX-TECH...GOOD PEOPLE TO MIX WITH

VL2 & VL3 AGITATOR
MIXER & SHREDDER REDUCERS

NORD DRIVESYSTEMS

VL2 - SPREAD BEARING DESIGN

Increased bearing spreads with an oversized double row spherical bearing on the lower side. It is commonly used in shredders, mixers or applications requiring increased bearing load carrying capacities.

VL3 - SPREAD BEARING DESIGN

In addition to the VLII design an oil leakage control system is added. Our Dry Cavity System provides a very high degree of oil safety. The anti-leak QUADRILIP™ Oil Sealing System is enhanced with an oil collection cavity (just-in-case) and various ways to sense and remove the leakage from the cavity. Standard is a viewable oil sight indicator with an optional capacitive proximity switch and control available for electronic indication of a leak.

OPTIONS TO BOTH DESIGNS

You may include a grease zerk to lubricate the lower bearing, and a removable plug to allow excess grease to purge from the bearing cavity.

Unit Size	B5 Flange Diameter		Solid Shaft Diameter		Hollow Shaft Diameter		Shrink Disc Diameter		Output Bearings		Bearing Spread	
	[in]	[mm]	[in]	[mm]	[in]	[mm]	[in]	[mm]	upper	lower	[in]	[mm]
Offset Parallel (Clincher)												
SK 1282	7.87	200	1.250	30	1.188	30	1.250	30	6009Z	22210E	4.91	125
SK 2282 or SK 2382	9.84	250	1.375	35	1.438	35	1.500	35	NUP210E	22212E	5.55	141
SK 3282 or SK 3382	11.81	300	1.875	45	1.625	40	1.625	40	NUP211E	22213E	6.58	167
SK 4282 or SK 4382	11.81	300	2.250	55	2.062	50	2.000	50	NUP214E	22216E	8.45	215
SK 5282 or SK 5382	13.78	350	2.500	65	2.438	60	2.500	60	NUP217E	22219E	9.92	252
SK 6282 or SK 6382	15.75	400	3.000	75	2.750	70	3.000	70	NUP220E	23222E	12.67	322
SK 7282 or SK 7382	17.72	450	3.500	90	3.188	80	3.188	80	NUP222E	23224E	14.08	358
SK 8282 or SK 8382	21.65	550	4.250	110	4.062	100	4.000	100	NUP226E	23228E	16.76	426
SK 9282 or SK 9382	25.98	660	5.250	140	4.750	120	4.750	125	NUP232E	23236E	19.04	484
SK 10282 or SK 10382	25.98	660	6.250	160	----	----	6.250	160	23044MB	22244MB	23.70	602
SK 11282 or SK 11382	25.98	660	7.000	180	----	----	7.000	180	23048MB	22244MB	24.29	617
SK 12382	25.98	660	7.000	180	----	----	7.000	180	23048MB	22244MB	24.29	617
Helical-Bevel Speed Reducer												
SK 9012.1 or SK 9013.1	7.87	200	1.250	30	1.375	35	1.375	35	6010Z	22210E	6.17	157
SK 9016.1 or SK 9017.1	7.87	200	1.375	35	1.500	40	1.500	40	6010Z	22210E	6.17	157
SK 9022.1 or SK 9023.1	9.84	250	1.375	35	1.500	40	1.500	40	6010Z	22210E	7.13	181
SK 9032.1 or SK 9033.1	11.81	300	1.750	45	2.000	50	2.000	50	6014 2RS	22214ES	8.17	207
SK 9042.1 or SK 9043.1	13.78	350	2.375	65	2.375	60	2.375	60	NUP216E	22219ES	10.47	266
SK 9052.1 or SK 9053.1	15.75	400	2.875	75	2.750	70	3.250	70	NUP220E	23222ES	13.28	337
SK 9072.1	17.72	450	3.625	90	3.250	80	3.250	80	NUP222E	23224ES	15.74	400
SK 9072.1/32	17.72	450	3.625	90	3.250	80	3.250	80	NUP222E	23224ES	15.74	400
SK 9072.1/42	17.72	450	3.625	90	3.250	80	3.250	80	NUP222E	23224ES	15.74	400
SK 9082.1	21.65	550	4.375	110	4.000	110	4.000	110	NUP228E	23228ES	18.61	473
SK 9082.1/42	21.65	550	4.375	110	4.000	110	4.000	110	NUP228E	23228ES	18.61	473
SK 9082.1/52	21.65	550	4.375	110	4.000	110	4.000	110	NUP228E	23228ES	18.61	473
SK 9086.1	25.98	660	4.750	120	4.750	120	4.750	125	22232E	23236ES	21.50	546
SK 9086.1/52	25.98	660	4.750	120	4.750	120	4.750	125	22232E	23236ES	21.50	546
SK 9092.1	25.98	660	5.500	140	----	----	5.500	150	23040E	23236ES	25.57	650
SK 9092.1/52	25.98	660	5.500	140	----	----	5.500	150	23040E	23236ES	25.57	650
SK 9096.1	25.98	660	7.500	190	----	----	----	----	23040E	23236ES	25.57	650
SK 9096.1/62	25.98	660	7.500	190	----	----	----	----	23040E	23236ES	25.57	650
SK 9096.1/63	25.98	660	7.500	190	----	----	----	----	23040E	23236ES	25.57	650

VL2 & VL3 AGITATOR

RATIO & SPEED

OFFSET PARALLEL CLINCHER

- Ratio range : 4.03:1 to 6616.79:1
- Speed range from 1750 rpm motor : 0.26 to 434 rpm
- 95.5% minimum standard efficiency

90 SERIES RIGHT ANGLE BEVEL

- Ratio range : 8.04:1 to 4916.63:1
- Speed range from 1750 rpm motor : 0.36 to 218 rpm
- 95.5% minimum standard efficiency

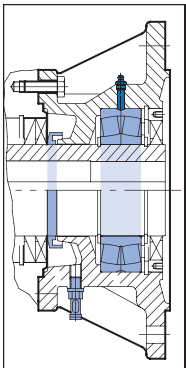

STANDARD CONFIGURATION

- B5 flange housing style
- Output shaft types : Keyed solid shaft, Keyed hollow shaft, Keyless shrink disc connector
- VLII-spread bearing design has an Increased bearing spread, and a Large double row spherical bearing on lower side
- VLIII-dry cavity design : Includes the VLII features with added oil leakage control, Oil flinger, Oil accumulation cavity, sight glass to show if oil is present in the control cavity

STANDARD CONFIGURATION OPTIONS

Regreasable zerk lubricating nipple for lower bearing, Capacitive oil sensing switch, Capacitive oil switch

SHAFT DATA

- AISI 4140 output shaft material
- Inch shaft key dimensions according to AISI B17
- Metric shaft key dimensions according to DIN 6885
- Standard output shaft drill and tap
- Shrink disc size range [in] :1.250 to 7.000
- Shrink disc size range [mm] : 30 to 180

INTERNAL PARTS ASSEMBLY

- Heavy press fit assembly method
- Standard reversing duty
- Typical backlash range [arc minutes] : 6 to 13

GEARING

- Up to AGMA Class 13 quality rating on gears
- 58 Rockwell C minimum hardness of steel gears
- Ground or skive hobbed hard finishing of gear teeth
- Standard drop forged gear blanks
- 275% momentary overload capacity
- Standard hunting tooth ratios

HOUSING

- Class 35 gray iron typical housing material
- Single setup machining method
- UNICASE™ one piece main housing design
- Seals directly contact main housing
- Exceptional housing torsional stiffness
- Thick housing wall section
- Castings are dip sealed

BEARINGS

- ABEC-1 quality bearings
- Bearing spread is larger than standard unit by at least 50%
- Double row spherical lower output bearing
- Optional housing with grease zerk available for lower bearing regreasing
- NIGI 2EP lithium based lower bearing lubricant
- 50,000 + hours of L10 output bearing life

LUBRICANT & SEALING COMPONENTS

- Factory filled ISO 220 mineral oil
- Standard AUTOVENT™ breather style
- QUADRILIP™ output seal system
- 3 double lip & 2 single lip output shaft oil seals
- Double lipped lower flange seal
- Nitrile rubber oil seals

LUBRICANT & SEALING OPTIONS

Custom synthetic lubricating oil, High or low temperature lubricating oil, Fluid grease lubricant, Food grade lubricating oil, Long term storage preparation, Magnetic drain plug, Bullseye sight glass, Custom drain plug, Fluorinated rubber oil seal material

ENVIRONMENTAL PROTECTION

- Exterior primer coverage : all metal exterior surfaces
- Paint type : Water Based Resin
- Paint additive : 316 stainless steel flakes
- USDA incidental contact exposure : H1

ENVIRONMENTAL OPTIONS

Severe duty and washdown duty paint options, Custom paint, Top side shaft covers

DRIVESYSTEMS

www.nord.com

NORD Gear Corporation
National Customer Service Toll-Free: 888.314.6673
info.us@nord.com

NORD Gear Limited
Toll-Free in Canada: 800.668.4378
info.ca@nord.com

WEST
Corona, CA (Los Angeles)
Phone: 608.849.0190

MIDWEST
Waunakee, WI (Madison)
Phone: 608.849.7300

EAST
Charlotte, NC
Phone: 608.849.0140

CANADA
Brampton, ON (Toronto)
Phone: 905.796.3606

100200023/1011

Project name:	AMARUQ
Project#:	5000218009
Document #:	SPK_0004_RX
by:	LJ
chkd:	GP
appvd:	CB

SLUDGE TANKS RX75-2

VALVES

OIM manual section: 4.3.2.4

This page is intentionally left blank

PRATT

Henry Pratt Company

Ballcentric® Plug Valve

Engineering Creative Solutions
for Fluid Systems Since 1901

A Tradition of Excellence

With the development of the first rubber seated butterfly valve more than 70 years ago, the Henry Pratt Company became a trusted name in the flow control industry, setting the standard for product quality and customer service. Today Pratt provides the following range of superior products to the water, wastewater and power generation industries.

Butterfly Valves: from 3" to 162"

Rectangular Valves: 1' x 1' to 14' x 16'

Ball Valves –
Rubber Seated: from 4" to 60"
Metal Seated: from 6" to 48"

Plug Valves: from 1/2" to 72", 100% port available up to 48", 3 ways

Air Valves for Water and Wastewater: from 1/2" to 20"

Hydraulic Control Systems

Valve Controls

Energy Dissipating Valves and Fixed Energy Dissipaters

Cone Valves

Check Valves

Plunger Valves

A Commitment to Meeting The Customers' Needs

Henry Pratt valves represent a long-term commitment to both the customer and to a tradition of product excellence. This commitment is evident in the number of innovations we have brought to the industries we serve. In fact, the Henry Pratt Company was the first to introduce many of the flow control products in use today, including the first rubber seated butterfly valve, one of the first nuclear N-Stamp valves, and the bonded seat butterfly valve.

Innovative Products For Unique Applications

Though many of the standard valves we produce are used in water filtration and distribution applications, Pratt has built a reputation on the ability to develop specialized products that help customers to meet their individual operational challenges.

Creative Engineering for Fluid Systems

Pratt's ability to provide practical solutions to complex issues is demonstrated by the following case histories.

Earthquake Proof Valves

Pratt designed and manufactured hydraulically actuated valves for a water storage application so that the valves would automatically operate in the event of earthquakes. This led to the development of a valve that will withstand acceleration forces of up to 6gs.

Custom Actuation/Isolation Valves

Pratt has designed and manufactured nuclear quality quarter-turn valves and parts since the first nuclear-powered generating plants were built. Our custom valves are able to close in a millisecond, using specially designed Pratt electro-pneumatic actuators.

Valves Designed for Harsh Environments

Pratt designed and manufactured a 144" diameter butterfly valve for the emergency cooling system at a jet engine test facility. The valve was designed to supply water to help dissipate the tremendous heat generated by the engines during testing.

PRATT
Henry Pratt Company

Through experience, commitment and creative engineering, Pratt is uniquely suited to provide superior products for our customers' special needs.
For more information, contact our corporate headquarters in Aurora, Illinois.

PRATT
Henry Pratt Company

401 South Highland Avenue
Aurora, Illinois 60506-5563
www.henrypratt.com
phone: 630.844.4000
fax: 630.844.4160

Table of Contents

Ballcentric® Plug Valve

Scope of Line 2
Features and Benefits 3
Dimensional Data 4
Standard Materials of Construction, Fig. 601/600, 12" & Smaller 5
Standard Materials of Construction, Fig. 601/600, 14" & Larger 6
Flanged End, Fig. 601 Cast Iron/611 Ductile Iron 2 $^{1}/_{2}$" - 12" 7
Mechanical Joint, Fig. 600 Cast Iron/610 Ductile Iron 3" - 12" 8
Flanged End Fig. 601 Cast Iron/611 Ductile Iron and Mechanical Joint
End, Fig. 600 Cast Iron/610 Ductile Iron 14" & Larger 9
Flanged End Fig. 602 Class 250 2 $^{1}/_{2}$" and Larger 10
Flanged End Fig. 601RL Rubberlined 3" & Larger 11
Grooved End, Fig. 606 2 $^{1}/_{2}$" - 20" 12
Adaption 13
Technical Specification Series 601/600 Cast Iron Valves 14
Technical Specification Series 602 Class 250 Valves 15
Technical Specification Series 601RL Rubberlined Valves 16
Technical Specification Series 601S Stainless Steel Valves 17
Technical Specification Series 611/610 Ductile Iron Valves 18
Technical Specification Series 601GL Glass Lined Valves 19

Scope of Line

The Henry Pratt criteria of quality, reliability, safety and value are embodied in the Ballcentric® plug valve, setting higher standards for dependable performance with excellent features achieved by the utilization of the very latest design and manufacturing techniques.

- Computer Aided Design
- High Integrity Casting
- CNC manufacturing delivers consistent sizes on all components

All complemented by rigorous Quality Control System

Body

Conforming to AWWA C504 wall thickness, the Ballcentric® plug valve body casting is in ASTM A126 CL B cast iron using high pressure molding techniques. Alternative flanged, grooved or mechanical joint ends are available.

Flange diameter, thickness and drilling conform to ANSI B16.1 Class 125 or 250.

Grooved ends meet AWWA C-606 for ductile or steel pipe. Mechanical joints to AWWA C111 (ANSI A21.11).

Seat

The Ballcentric® plug valve incorporates as standard, on 3" and larger, a 1/8" thick welded 99% nickel seat for corrosion and erosion resistance specifically profiled for low torque and extended seat life.

Stem Seal

High integrity sealing by combining the advantages of a resilient and abrasion resistant U-Cup seal. From vacuum to high pressure, the self-adjusting sealing system (per AWWA C504) gives positive, trouble-free service and is retained independently of the plug stem or external torque device, thereby eliminating periodic maintenance.

Bearings

The plug rotates in permanently lubricated 316 grade stainless steel bearings, located in the body and bonnet, along with upper and lower PTFE thrust washers, which ensure consistently low operating torque.

Plug

Supported on integral trunnions, the plug is totally encapsulated with an elastomer that is molded on 2 1/2" – 48" and vulcanized on 54" and larger to the casting providing tight shut off even under vacuum conditions. High integrity corrosion-free sealing is achieved by a variety of abrasion resistant elastomers which protect the plug right up to the trunnions. When assembled, the light compression of the elastomers onto PTFE thrust washers, prevents entry of abrasive materials into the bearings.

Bonnet Seal

Superior "O" ring sealing with metal/metal contact means lower bolting stresses compared with compression gaskets.

Flow

The port design (round on 2 1/2" – 12" and rectangular on 14" and larger) with streamlined internal contours gives the highest industry capacity straight through flow in the full open position, reducing turbulence and pressure drop and the effect of erosive media. Handling of sludges and slurries is therefore enhanced.

Interchangeable

Because of the common face to face dimension with wedge gate valves (3" – 12"), fitting the tight shut-off rotary Ballcentric® plug valve into existing systems is accomplished without pipeline modifications.

Travel Stops

Adjustable open and closed travel stops are fitted as standard on both wrench and gear operated Ballcentric® plug valves.

Features and Benefits

- Valve in closed position for bubble tight shut-off
- Normal flow direction gives pressure assisted sealing
- Torques are low even in reverse flow

- Plug rotates away from the seat for instant opening
- Seat wear and operating torque reduced
- No further seat contact until valve is closed again

- Design of Ballcentric® plug valve allows modulating control over the full 90˚ travel
- Ideally suited for balancing service
- Standard rotary valve provides control and tight shut off in one valve

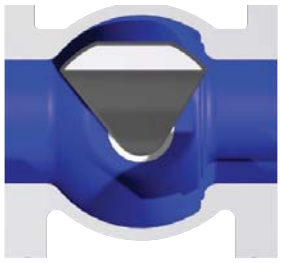

- Plug is out of flow path when fully open
- Straight through, uninterrupted smooth flow
- Round port reduces turbulence and erosion, lowers pumping costs and can be "pigged" to clean the pipeline

Installation

The Ballcentric® plug valve is suitable for flow and shut-off in either direction. Seat end downstream is the preferred orientation and any reverse flow requirement should be stated at the time of order. For use on fluids with suspended solids, it is recommended that the valve should be installed with the seat upstream and the valve stem horizontal with plug rotation to the top of the valve ensuring smooth operation.

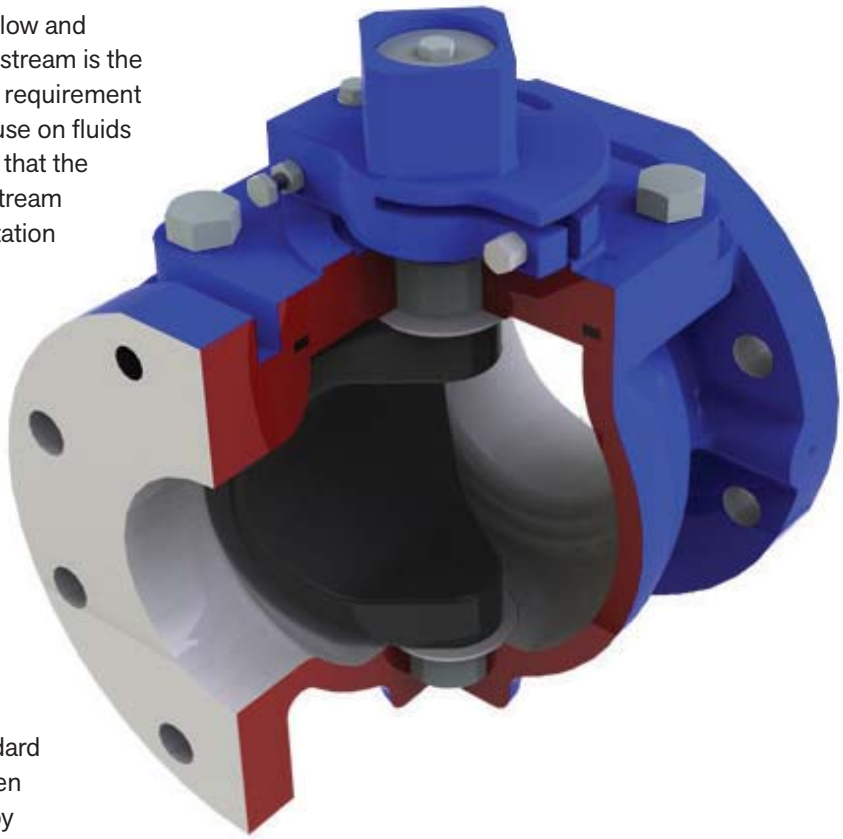

In-Line Maintenance

In the unlikely event of stem leakage, the stem seals can be easily replaced without removing the bonnet. Access to the body for cleaning or inspection does not require removal from the line.

Modular Construction

Design of the bonnet and stem allows for on-site adaption of gear operators, power actuators, or extension devices on to standard valves. Conversion can be easily undertaken without removing the valve bonnet, thereby minimizing downtime.

Power Operation

Pneumatic, electric or hydraulic operation is available, complete with accessories such as limit switches, solenoid valves and positioners when required.

Dimensional Data

ORDERING INFORMATION

Valve Types	Designation
Mechanical Joint Cast Iron	600
Mechanical Joint Ductile Iron	610
ANSI 125 Flanged Cast Iron	601
ANSI 125 Flanged Ductile Iron	611
ANSI 150 Flanged Ductile Iron	621
ANSI 250 Flanged Ductile Iron	602
ANSI 125 Grooved for Steel Pipe	606S
ANSI 125 Grooved for Ductile Pipe	606D
ANSI 150 Flanged 316SS	601S
SEAT	
Nickel (3" & Larger)	N
Epoxy (2½" ONLY)	E
316SS (on stainless steel valve only)	S
Rubberlined	RL
Glasslined	GL
ELASTOMER TRIM	
EPDM	0
Buna-Nitrile	1
Viton	2
Neoprene	3
Natural	4
MANUAL OPERATORS	
Above Ground Gear and Handwheel	AGHW
Above Ground Gear with 2" Nut	AGNUT
Buried Gear with 2" Nut	BG
Memory Stop Gear with Handwheel	MGHW
Lever / Wrench (8" & smaller)	L
Direct Nut (8" & smaller)	TC

Example: 4" 601N3AGHW = 4" ANSI 125 Flanged, Nickel Seat, Neoprene plug with Above Ground Gear and Handwheel

Valves are only tested for bi-directional shut-off if specified at time of order. Contact Henry Pratt for bi-directional ratings.

NOTE: We recommend mechanical joint or buried flanged valves to have gear operators

NOTE: We recommend valves for bi-directional service to have gear operators

PRESSURE RATING

12" and smaller	ANSI 125	175 psi
14" and larger	ANSI 125	150 psi
20" and smaller	ANSI 150	285 psi
12" and smaller	ANSI 250	400 psi
14" and larger	ANSI 250	300 psi

Body Hydrotest = 150% of rated pressure / Seat Test = 100% of rated pressure Testing per AWWA C517

ELASTOMERS AVAILABLE FOR BALLCENTRIC® PLUG VALVE

Natural rubber is also available.

Nitrile

A general purpose material sometimes referred to as BUNA-N or HYCAR with a –20°F to 212°F temperature range. Used on sewage, water, hydrocarbon and mineral oils.

EPDM

An excellent polymer for use on chilled water through to LP steam applications having a temperature range of –35°F to 250°F. Resistance to many acids, alkalies, detergents, phosphate esters, alcohols and glycols is an added benefit.

Neoprene

This versatile material shows outstanding resistance to abrasion and ozone. Chemical resistance to a wide range of petroleum base products and dilute acids and alkalies. Temperature range –20°F to 225°F.

Viton

Retention of mechanical properties at high temperature is an important feature of this elastomer: temperature range is –10°F to 300°F. It also has excellent resistance to oils, fuels, lubricants and most mineral acids and aromatic hydrocarbons.
Note: Not for water or steam applications.

Elastomer Selection Chart

Service	Elastomer	Average Useful Temp. Range	Service	Elastomer	Average Useful Temp. Range	Service	Elastomer	Average Useful Temp. Range
Acetone	EPDM	–35°F to 250°F	Caustic Soda	EPDM	–35°F to 250°F	Oil, Animal	Nitrile	–20°F to 212°F
Air	EPDM	–35°F to 250°F	Cement Slurry	EPDM	–35°F to 250°F	Oil, Mobil Therm Light	Viton	10°F to 250°F
Air w/Oil	Nitrile	0°F to 212°F	Copper Sulphate	EPDM	–35°F to 250°F	Oil, Mobil Therm 600	Viton	10°F to 250°F
Alcohol AMYL	EPDM	0°F to 212°F	Creosote (Coal)	Nitrile	–20°F to 212°F	Oil, Mobil Therm 603	Nitrile	–20°F to 212°F
Alcohol Aromatic	Viton	10°F to 250°F	Coal Slurry	Nitrile	–20°F to 212°F	Oil, Lubricating	Nitrile	–20°F to 212°F
Alcohol Butyl	Neoprene	–20°F to 225°F	Diesel Fuel No. 3	Nitrile	–20°F to 212°F	Oil, Vegetable	Nitrile	–20°F to 212°F
Alcohol Denatured	Nitrile	–20°F to 212°F	Diethylene Glycol	EPDM	–35°F to 250°F	Paint, Latex	Nitrile	–20°F to 212°F
Alcohol Ethyl	EPDM	–20°F to 250°F	Ethylene Glycol	EPDM	–35°F to 250°F	Phosphate Ester	EPDM	–35°F to 250°F
Alcohol Grain	Nitrile	–20°F to 212°F	Fatty Acid	Nitrile	–20°F to 212°F	Propane	Nitrile	–20°F to 212°F
Alcohol Isopropyl	Neoprene	–20°F to 225°F	Fuel Oil No. 2	Nitrile	–20°F to 212°F	Rape Seed Oil	EPDM	–35°F to 250°F
Alcohol Methyl	EPDM	–20°F to 250°F	Fertilizer Liquid H4N2O2	EPDM	–35°F to 250°F	Sewage with Oils	Nitrile	–20°F to 212°F
Ammonia Anhydrous	Neoprene	–20°F to 225°F	Gasoline Keg	Nitrile	–20°F to 212°F	Sodium Hydroxide 20%	EPDM	–35°F to 250°F
Ammonium Nitrate	EPDM	–20°F to 250°F	Gas Natural	Nitrile	–20°F to 212°F	Starch	EPDM	–35°F to 250°F
Ammonia, water	EPDM	–20°F to 250°F	Glue, Animal	Nitrile	–20°F to 212°F	Steam to 250°F	EPDM	–35°F to 250°F
Animal Fats	Nitrile	–20°F to 212°F	Green Liquor	EPDM	–20°F to 212°F	Stoddard, Solvent	Nitrile	–20°F to 80°F
Black Liquor	EPDM	–20°F to 250°F	Hydraulic Oil (Petro)	Nitrile	–20°F to 212°F	Sulphuric Acid 10% 50%	Neoprene	–20°F to 158°F
Blast Furnace Gas	Neoprene	–20°F to 225°F	Hydrogen	Nitrile	–20°F to 212°F	Sulphuric Acid 100%	Viton	10°F to 300°F
Butane	Nitrile	–20°F to 212°F	JF4, JP5	Viton	–20°F to 212°F	Trichloroethylene Dry	Viton	10°F to 300°F
Bunker Oil "C"	Nitrile	–20°F to 212°F	Kerosene	Nitrile	0°F to 212°F	Triethanol Amine	EPDM	–35°F to 250°F
Calcium Chloride	EPDM	–20°F to 250°F	Ketone	EPDM	–35°F to 250°F	Varnish	Viton	10°F to 300°F
Carbon Dioxide	EPDM	–20°F to 250°F	Lime Slurry	EPDM	–35°F to 250°F	Water, Fresh	EPDM	–35°F to 250°F
Carbon Monoxide (Cold)	Neoprene	–20°F to 150°F	Methane	Nitrile	–20°F to 212°F	Water, Salt	EPDM	–35°F to 250°F
Carbon Monoxide (Hot)	Viton	10°F to 300°F	Methyl Ethyl Ketone	EPDM	–35°F to 250°F	Xylene	Viton	10°F to 300°F
Carbon Tetrachloride	Viton	10°F to 300°F	Naptha (Berzin)	Nitrile	–20°F to 212°F			

NOTE: Above elastomer/temperature chart are guidelines only. See Henry Pratt Compatibility Chart for specific applications.

Standard Materials of Construction, Fig. 601/600, 12" & Smaller

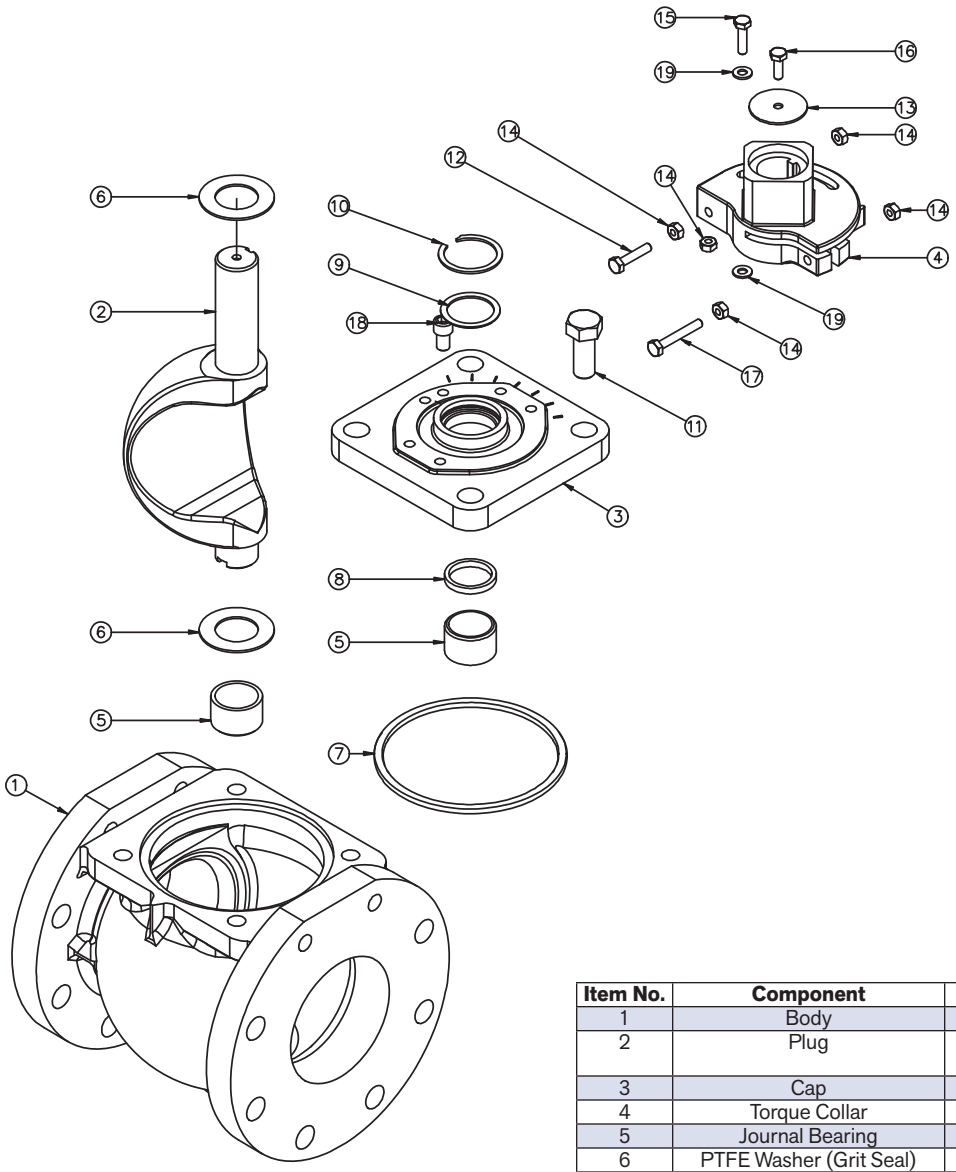

Item No.	Component	Material
1	Body	Cast Iron A126 Class B
2	Plug	Rubber Coated Ductile Iron ASTM A536
3	Cap	Cast Iron A126 Class B
4	Torque Collar	Ductile Iron ASTM A536
5	Journal Bearing	St.Steel – ANSI 316
6	PTFE Washer (Grit Seal)	PTFE
7	O Ring	Elas. as Spec.
8	U Cup Seal	Elas. as Spec.
9	Washer	Brass – ASTM B-138-675
10	Internal Snap Ring	Spring Steel
11	Setscrew	Steel (Zinc Plated)
12*	Closed Stop	Steel (Zinc Plated)
13*	Locking Washer	Steel
14*	Nut	Steel (Zinc Plated)
15*	Open Stop	Steel (Zinc Plated)
16*	Setscrew	Steel (Zinc Plated)
17*	Torque Bolt	Steel (Zinc Plated)
18*	Travel Stop	Steel
19*	Washer	Steel

***NOTE:** Torque Collar Assembly on 8" and Smaller

Standard Materials of Construction, Fig. 601/600, 14" & Larger

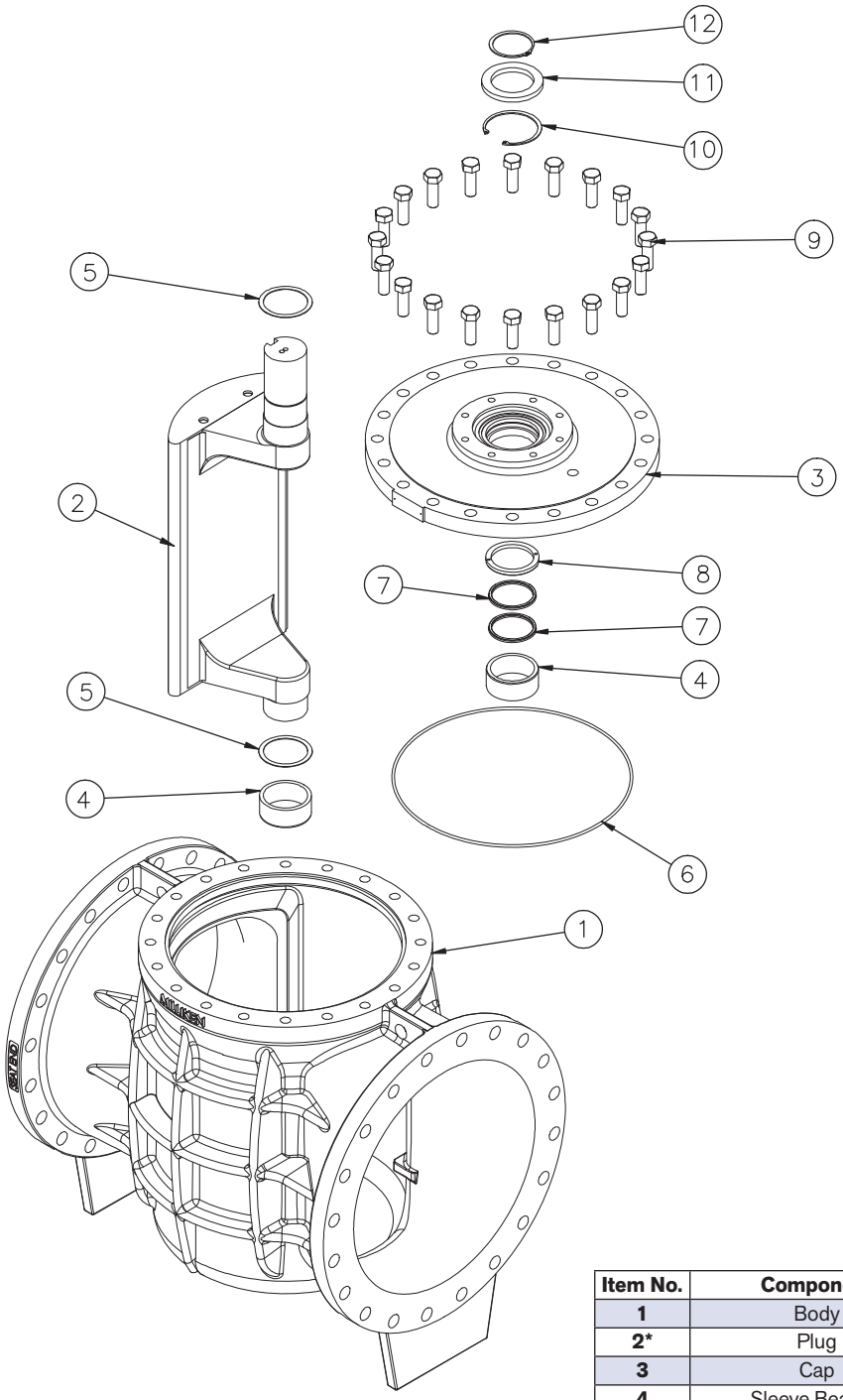

Item No.	Component	Material	Qty.
1	Body	Cast Iron A126 Class B	1
2*	Plug	Rubber Coated See Note 1	1
3	Cap	Cast Iron A126 Class B	1
4	Sleeve Bearing	Stainless Steel/Bronze	2
5	PTFE Washer (Grit Seal)	PTFE	2
6	Cap "O" Ring	Elas. as Spec.	1
7	U Cup Seal	Elas. as Spec.	2
8*	Seal Retaining Ring	See Note 2	1
9	Cap Screw	Steel (Zinc Plated)	A/R
10	Internal Snap Ring	Spring Steel	1
11	Support Collar	Steel	1
12	External Snap Ring	Spring Seal	1

***NOTE 1:** Plugs: Ductile Iron – ASTM A536 on 14" – 20"
Cast Iron – A126 Class B on 24" and larger

***NOTE 2:** Seal Retaining Ring: Brass – ASTM B-138-675 on 14" – 20" Steel on 24" and larger

Fig. 601 Cast Iron / 611 Ductile Iron – Flanged End 2 1/2" – 12", 175 PSI

2½" – 8" VALVES ONLY

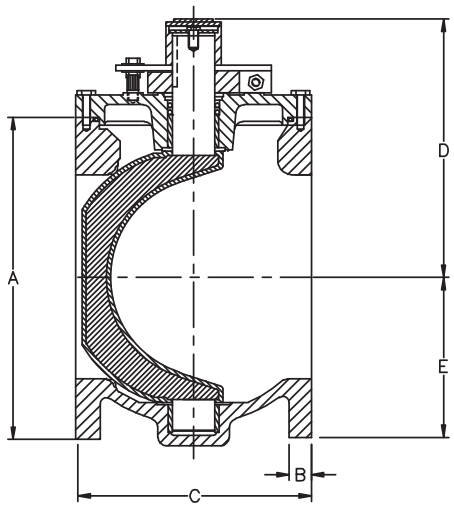

2½" – 12" VALVES

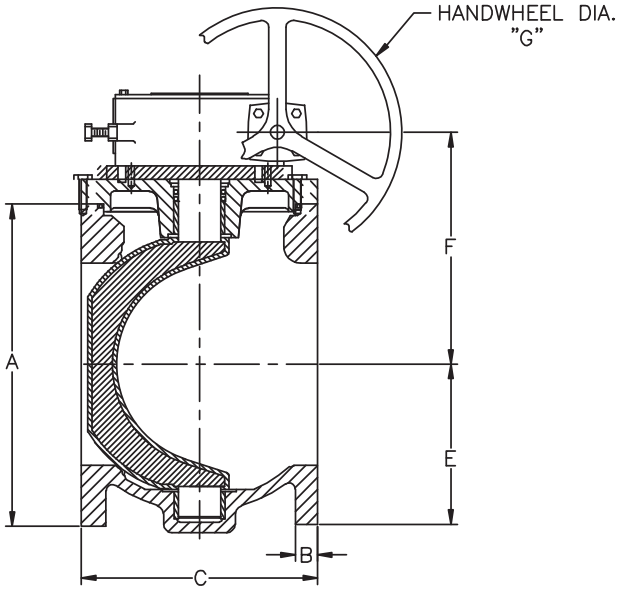

FLANGED END – ANSI 125								
SIZE	**2.50**	**3**	**4**	**5**	**6**	**8**	**10***	**12***
A	7.00	7.50	9.00	10.00	11.00	13.50	16.00	19.00
B	.69	.75	.94	.94	1.00	1.13	1.19	1.25
C	7.50	8.00	9.00	10.00	10.50	11.50	13.00	14.00
D	6.19	6.19	7.25	8.38	8.38	10.69	–	–
E	3.50	3.75	4.50	5.75	5.75	7.63	8.88	10.00
F	5.16	5.16	6.31	7.56	7.56	9.63	11.13	12.81
G	6.00	6.00	6.00	6.00	6.00	12.00	12.00	12.00
WEIGHT (approx.)	30	40	70	105	115	190	345**	440**

*10" & above have gear operators as standard

**Weight includes gear operator

NOTE: Drawings are for information purposes only; please request certified drawings before preparing piping diagrams

Fig. 600 Cast Iron / 610 Ductile Iron – Mechanical Joint 3" – 12", 175 PSI

3" – 8" VALVES ONLY

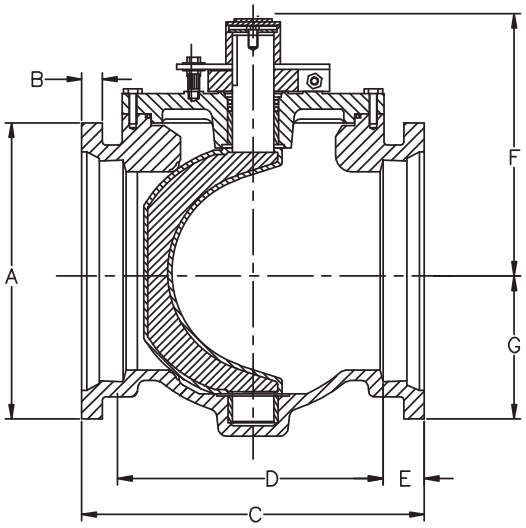

3" – 12" VALVES

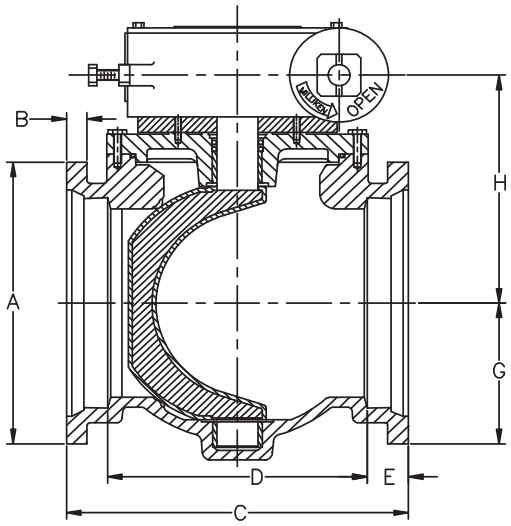

MECHANICAL JOINT END						
SIZE	**3**	**4**	**6**	**8**	**10***	**12***
A	7.69	9.00	11.13	13.38	15.63	17.94
B	.94	1.00	1.06	1.13	1.19	1.25
C	11.50	14.25	15.75	17.38	15.63	20.75
D	6.00	9.25	10.75	12.39	14.39	15.75
E	2.75	2.50	2.50	2.50	2.50	2.50
F	6.19	7.25	8.38	10.69	–	–
G	3.84	4.50	5.56	6.69	7.81	8.97
H	5.16	6.31	7.56	9.63	11.13	12.81
WEIGHT (approx.)	50	80	125	200	360**	480**

*10" & above have gear operators as standard

**Weight includes gear operator

We recommend gears on all Mechanical Joint Valves

NOTE: Drawings are for information purposes only; please request certified drawings before preparing piping diagrams

Fig. 601 Cast Iron / 611 Ductile Iron Flanged End
Fig. 600/610 Ductile Iron Mechanical Joint End
14" & Larger, 150 PSI

14" –20" VALVES

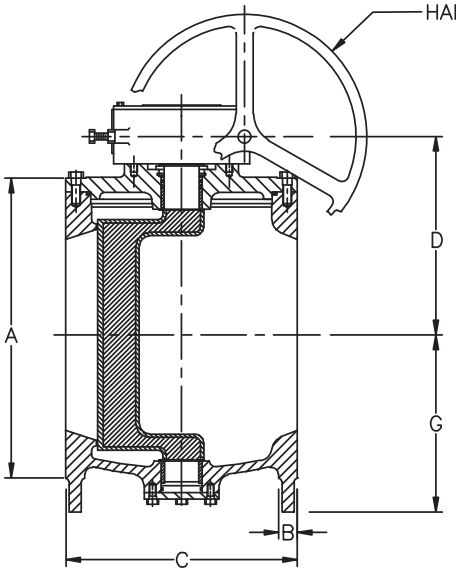

14" –20" VALVES

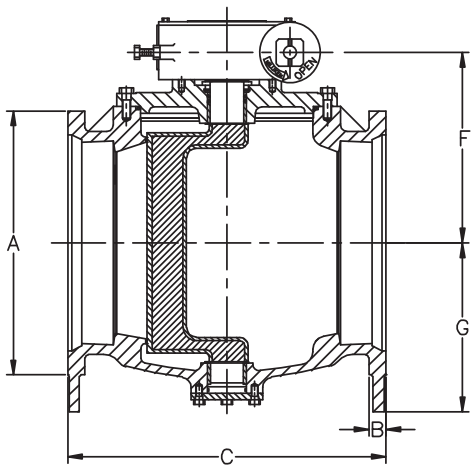

24" VALVES AND LARGER

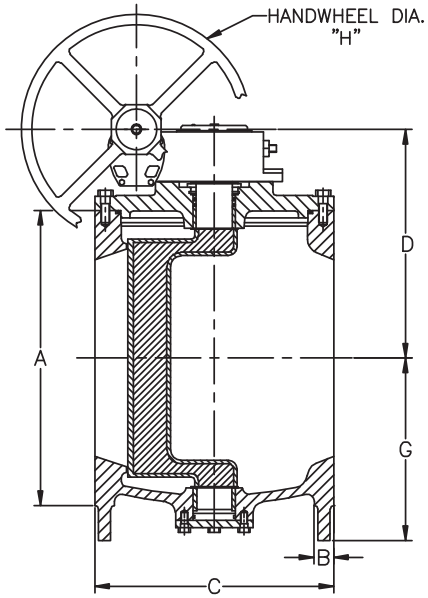

24" VALVES AND LARGER

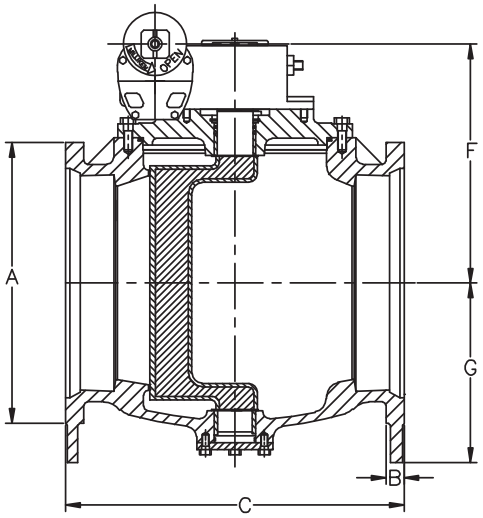

FLANGED END – ANSI 125										
SIZE	**14**	**16**	**18**	**20**	**24**	**30**	**36**	**42**	**48**	**54**
A	21.00	23.50	25.00	27.50	32.00	38.75	46.00	53.00	59.00	66.25
B	1.38	1.44	1.56	1.69	1.88	2.13	2.38	2.63	2.75	3.00
C	17.00	17.75	21.50	23.50	42.00	51.00	60.00	72.00	84.00	96.00
D	14.56	15.81	16.36	17.63	25.13	29.00	33.51	33.88	39.57	50.86
G	13.00	14.00	15.00	16.00	21.62	24.43	29.00	29.00	36.00	36.00
H	18.00	18.00	18.00	18.00	24.00	24.00	24.00	30.33	30.00	30.00
WEIGHT (approx.)	905	1030	1355	1880	3800	5200	6950	10160	13350	15100

Flanged Valves Meet ANSI B16.1

MECHANICAL JOINT END									
SIZE	**14**	**16**	**18**	**20**	**24**	**30**	**36**	**42**	**48**
A	20.13	22.56	24.84	27.06	31.50	39.13	46.00	53.13	60.00
B	1.31	1.38	1.43	1.50	1.62	1.68	2.00	2.00	2.00
C	24.50	27.25	29.25	31.00	42.00	51.00	60.00	72.00	84.00
F	14.56	15.81	16.36	17.63	25.13	29.00	33.51	33.88	39.57
G	13.00	14.00	15.00	16.00	21.62	24.75	29.00	29.00	36.00
WEIGHT (approx.)	905	1030	1355	1880	3800	5200	6950	10160	13350

Mechanical Joint Valves Meet ANSI 21.11 & AWWA C-111

Weight includes gear operator

NOTE: Drawings are for information purposes only; please request certified drawings before preparing piping diagrams.

NOTE: Dimensions on 60" and larger available upon request.

Fig. 602 Class 250 Flanged End
2 1/2" – 12", 400 PSI, 14" – 36", 300 PSI

2½" – 12" VALVES

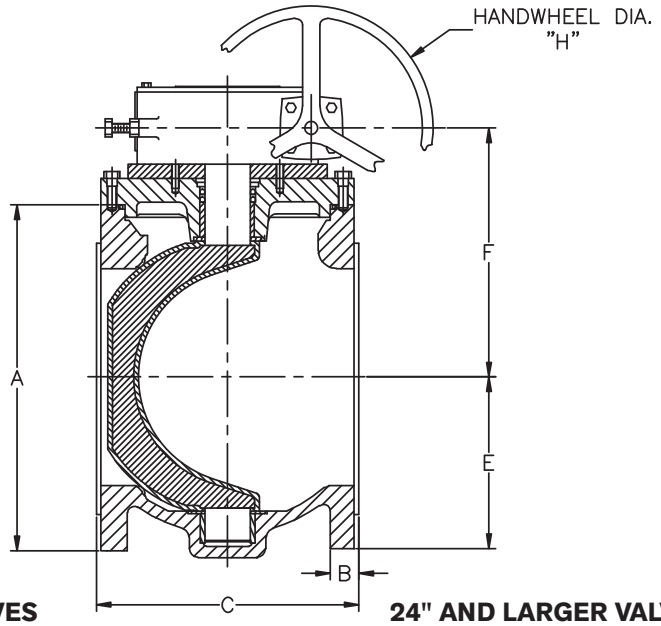

14" – 20" VALVES

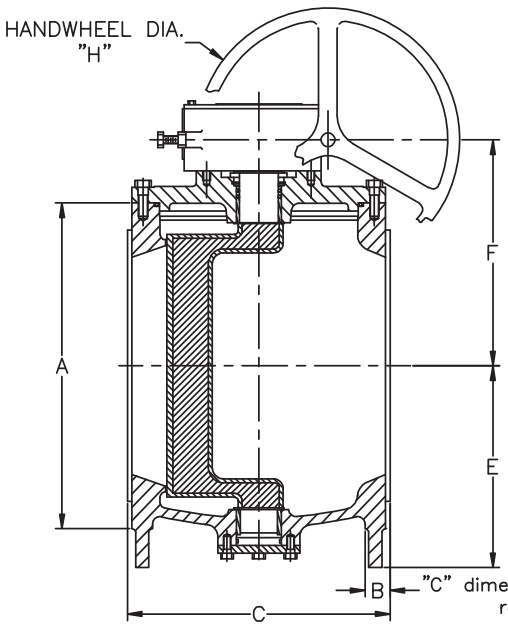

24" AND LARGER VALVES

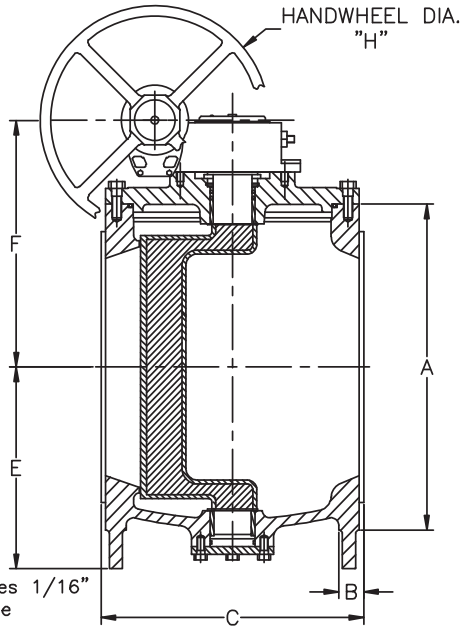

"C" dimen. includes 1/16" raised face

FLANGED END – ANSI 250															
SIZE	**2.50**	**3**	**4**	**5**	**6**	**8**	**10**	**12**	**14**	**16**	**18**	**20**	**24**	**30**	**36**
A	7.50	8.25	10.00	11.00	12.50	15.00	17.50	20.50	23.00	25.50	28.00	30.50	36.00	43.00	50.00
B	1.06	1.13	1.25	1.38	1.44	1.63	1.88	2.00	2.12	2.25	2.38	2.50	2.75	3.00	3.38
C	9.50	11.13	12.00	15.00	15.88	16.50	18.00	19.75	18.50	19.38	23.13	25.00	42.88	51.88	61.00
E	3.50	3.75	4.50	5.75	5.75	17.63	8.88	10.00	13.00	14.00	15.00	16.00	21.62	24.75	29.00
F	5.16	5.16	6.31	7.56	7.56	9.63	11.13	12.81	14.56	15.81	16.36	17.63	22.81	27.59	33.00
H	6.00	6.00	6.00	6.00	6.00	12.00	12.00	12.00	18.00	18.00	18.00	18.00	24.00	24.00	24.00
WEIGHT (approx.)	70	80	120	162	170	275	398	590	980	1125	1830	2060	4160	5700	7670

All above have gear operators as standard
Weight includes gear operator
NOTE: Drawings are for information purposes only; please request certified drawings before preparing piping diagrams
NOTE: Dimensions on 42" and larger available upon request

Fig. 601RL Rubberlined – Flanged End
3" – 12", 175 PSI, 14" & Larger, 150 PSI

3" – 12" VALVES

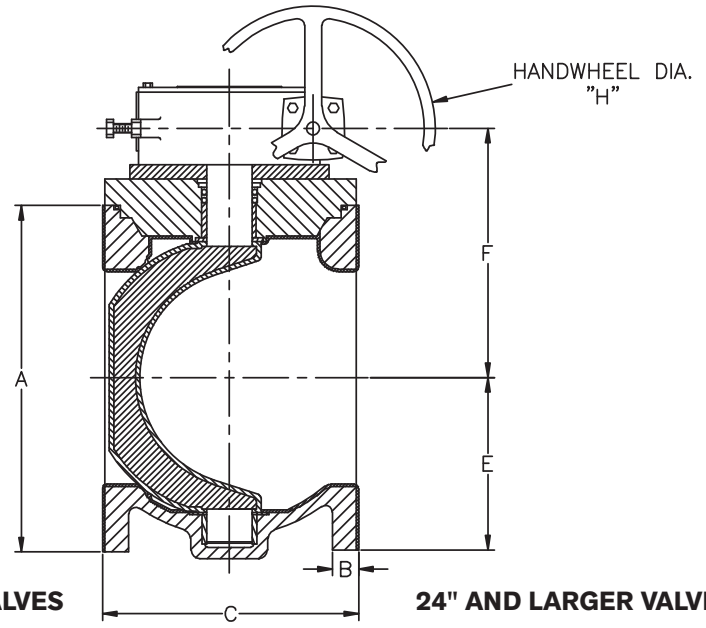

14" – 20" VALVES

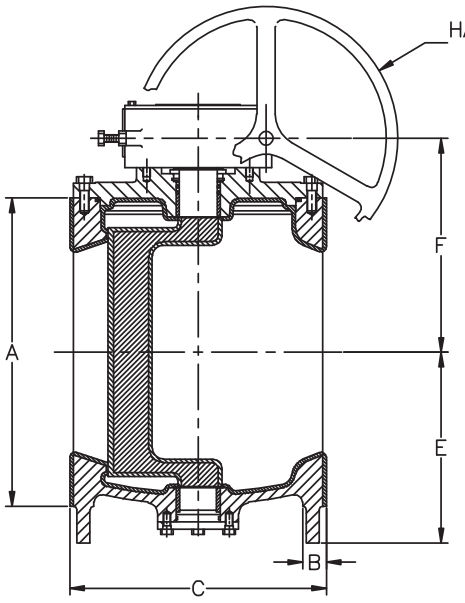

24" AND LARGER VALVES

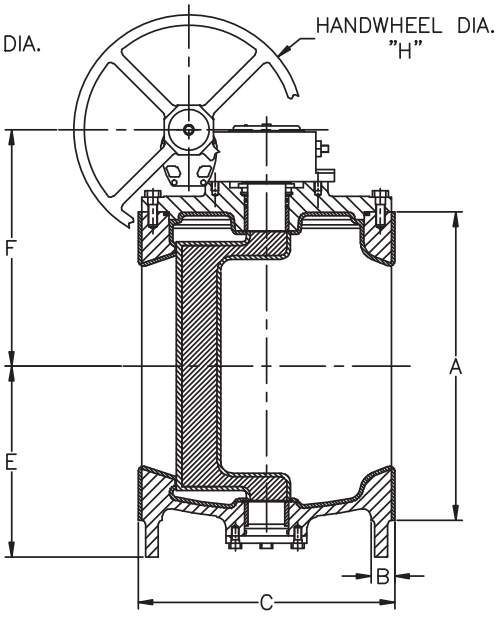

FLANGED END – ANSI 125 RUBBER LINED															
SIZE	**3**	**4**	**5**	**6**	**8**	**10**	**12**	**14**	**16**	**18**	**20**	**24**	**30**	**36**	**42**
A	7.50	9.00	10.00	11.00	13.50	16.00	19.00	21.00	23.25	25.00	27.50	32	38.75	46.00	53.00
B	.88	1.07	1.07	1.13	1.26	1.32	1.38	1.26	2.25	2.38	2.50	2.75	3.00	3.38	3.38
C	8.25	9.25	10.25	10.75	11.75	13.25	14.25	17.25	18.00	21.75	23.75	42.25	51.25	60.25	72.25
E	3.75	4.50	7.75	7.75	7.63	8.88	10.00	13.00	14.00	15.00	16.00	21.63	24.75	29.00	29.00
F	5.16	6.31	7.56	7.56	9.63	11.13	12.81	14.56	15.81	16.36	17.63	25.13	29.00	33.51	33.88
H	6.00	6.00	6.00	6.00	12.00	12.00	12.00	18.00	18.00	18.00	18.00	24.00	24.00	24.00	24.00
WEIGHT (approx.)	70	100	135	145	240	345	440	905	1030	1355	1880	3800	5200	6940	10160

All above have gear operators as standard
Weight includes gear operator
NOTE: Drawings are for information purposes only; please request certified drawings before preparing piping diagrams
NOTE: Dimensions on 48" and larger available upon request

Fig. 606 Grooved End
2 1/2" – 12", 175 PSI, 14" – 20", 150 PSI

2½" – 8" VALVES

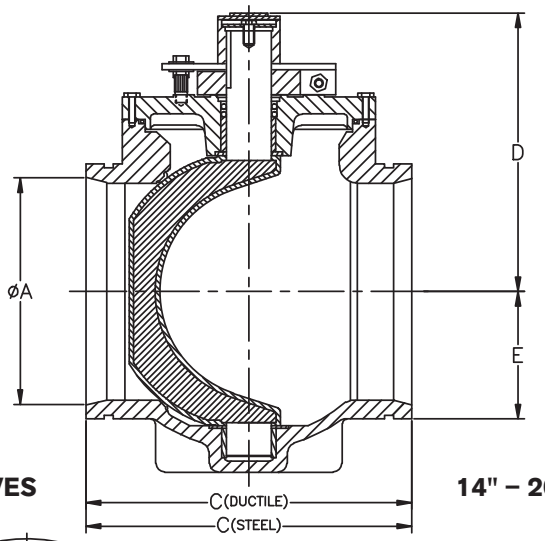

2½" – 12" VALVES

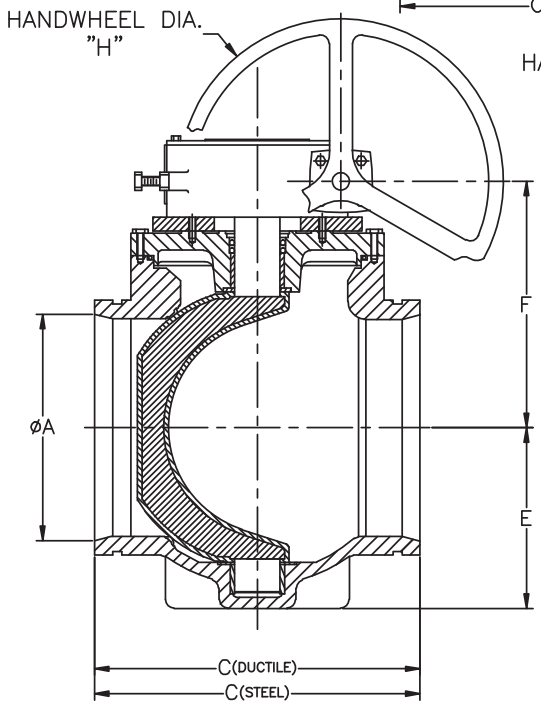

14" – 20" VALVES

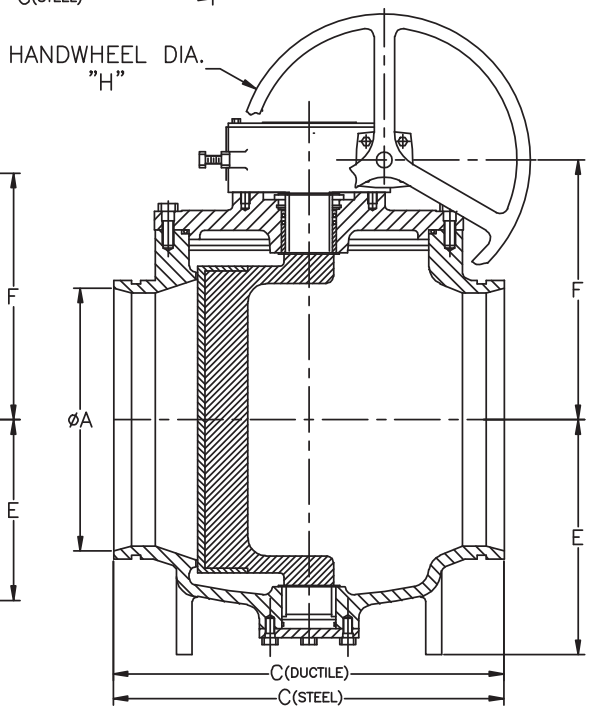

GROOVED END – AWWA 606												
SIZE	2.50	3	4	5	6	8	10*	12*	14*	16*	18*	20*
A	2.50	3.00	4.00	5.00	6.00	8.00	10.00	12.00	14.00	15.25	16.19	18.06
C (Duct.)	N/A	9.06	10.25	N/A	12.50	14.00	16.56	18.00	21.63	N/A	27.50	30.00
C (Steel)	7.13	8.50	10.13	12.38	12.38	13.88	16.44	17.88	21.63	22.50	27.50	30.00
D	6.19	6.19	7.25	8.38	8.38	10.69	–	–	–	–	–	–
E	3.50	3.75	4.50	5.75	5.75	7.63	8.88	10.00	10.00	14.00	15.00	16.00
F	5.16	5.16	6.31	7.56	7.56	9.63	11.13	12.86	13.56	15.81	16.35	17.63
H	6.00	6.00	6.00	6.00	6.00	12.00	12.00	12.00	12.00	18.00	18.00	18.00
WEIGHT (approx.)	20	30	50	70	80	145	325**	420**	RTF	RTF	RTF	RTF

*10" & above have gear operators as standard

**Weight includes gear operator

NOTE: Drawings are for information purposes only; please request certified drawings before preparing piping diagrams

NOTE: Larger sizes are available. Contact Henry Pratt Valve for data.

Adaption

**A range of extended stems & floor mounted stands for remote operation, particularly in buried service, are available.
Chainwheels & locking devices are readily incorporated onto the Ballcentric® Plug Valve.**

Valve with extended stem & 2" nut (Only for 8" and smaller valves)

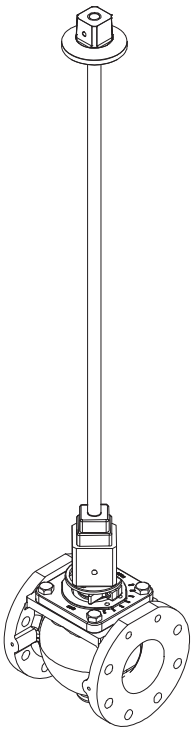

Valve with extended stem, buried gear and 2" nut

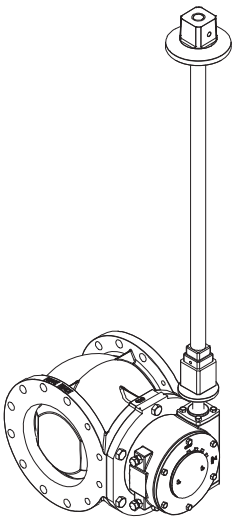

Valve with indicating floorstand

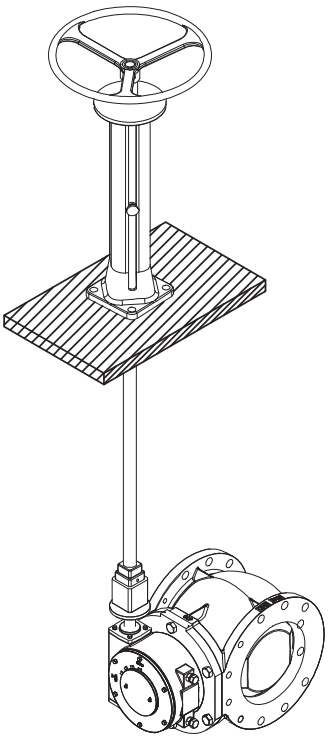

Valve with non-indicating floorstand & motor operator

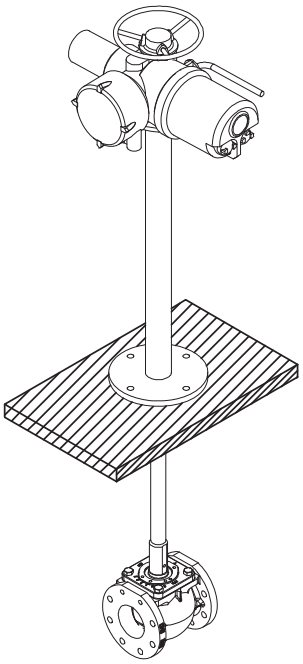

Valve with extended bonnet & motor operator

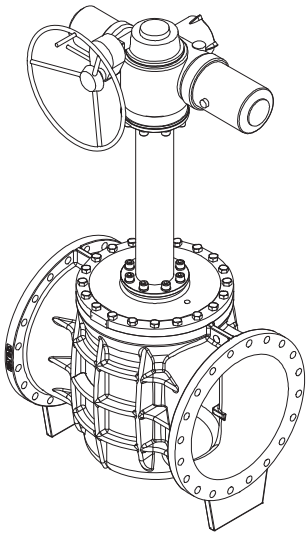

Valve with extended bonnet with gear

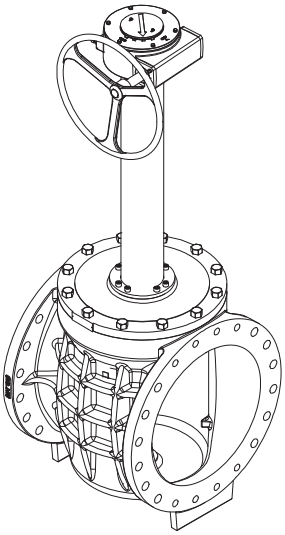

Technical Specification Ballcentric® Series 601/600 Plug Valves

AWWA C517-09 Standards

Valves shall be of the non-lubricated eccentric type with an elastomer covering all seating surfaces. The elastomer shall be suitable for the service intended. Flanged valves shall be manufactured in accordance with **ANSI B16.1 Class 125/150** including facing, drilling and flange thickness. Mechanical joint ends shall be in compliance with **AWWA/ANSI C-111-92**. Grooved ends shall be manufactured to the dimensions of **ANSI/AWWA C606** for ductile or steel pipe as required. Ports shall be round on sizes 2½"-12" and rectangular port design on valves 14" and larger. All valves shall be capable of being "pigged" with a soft pig when required.

Valve bodies shall be of **ASTM A-126 Class B** cast iron in accordance with **AWWA C-517-09 Section 4.3.3.1**. Valves 3" and larger shall be furnished with a welded-in overlay seat of 1/8" thick of not less than 99% nickel in accordance with **AWWA C-517-09, Section 4.3.3.4**. Sprayed, plated or screwed-in seats are not acceptable.

Plugs shall be of **ASTM A-536-Grade 65-45-12** for sizes 20" and smaller, and **ASTM A126 Class B Cast Iron** for sizes 24" and larger in compliance with **AWWA C-517-09 Sections 4.3.3.1 and 4.3.3.2**. The plugs shall be of one piece solid construction with PTFE thrust bearings on the upper and lower bearing journals to reduce torque and prevent dirt and grit from entering the bearing and seal area.

Valves shall be furnished with replaceable sleeve type bearings conforming to **AWWA C-517-09, Section 4.3.3.6**. Bearings shall be of sintered, oil impregnated type 316 stainless steel **ASTM A-743 Grade CF-8M**. Valve shaft seals shall be of the "U" cup type in accordance with **AWWA C-517-09 Section 4.4.7**. Seals shall be self adjusting and repackable without removing the bonnet from the valve.

Wrench operated valves 2½"-8" shall be capable of being converted to worm gear or automated operation without removing the bonnet or plug from the valve. All wrench operated valves shall be equipped with a 2" square nut for use with removeable levers or extended "T" handles.

Worm gear operators, where required, shall be of the heavy duty construction with the ductile iron quadrant supported on the top and bottom by oil impregnated bronze bearings. The worm gear and shaft shall be manufactured of hardened steel and run on high efficiency roller bearings.

Valves shall be designed and manufactured to shut off bubble tight at 175 psi for valves 2½"-12" and 150 psi for valves 14" and larger. Each valve shall be given a hydrostatic and seat test with the test results being certified when required by the customer. Certified copies of Proof-of-Design test reports shall be furnished as outlined in **AWWA C-517-09 Section 5.2.2** when requested.

Plug valves shall be Ballcentric® Plug Valve Series 601/600 as manufactured by Henry Pratt Company of Aurora, Illinois.

Technical Specification Ballcentric® Series 602 ANSI Class 250 Plug Valves

AWWA C517-09 Standards
Valves shall be of the non-lubricated eccentric type with an elastomer covering all seating surfaces. The elastomer shall be suitable for the service intended. Flanged valves shall be manufactured in accordance with **ANSI B16.1 Class 250** including facing, drilling and flange thickness. Ports shall be round on sizes 2½" through 12" to facilitate "pigging" when required. Valves 14" and larger shall be of a rectangular port design.
Valve bodies shall be of **ASTM A-536 Grade 65-45-12** ductile iron in accordance with **AWWA C-517-09 Section 4.3.3.2**. Valves 3" and larger shall be furnished with a welded-in overlay seat of 1/8" thick of not less than 99% nickel in accordance with **AWWA C-517-09 Section 4.3.3.4**. Sprayed, plated or screwed-in seats are not acceptable.

Plugs shall be of **ASTM A-536-Grade 65-45-12** in compliance with **AWWA C-517-09 Section 4.3.3.2**. The plugs shall be of one piece solid construction with PTFE thrust bearings on the upper and lower bearing journals to reduce torque and prevent dirt and grit form entering the bearing and seal area.

Valves shall be furnished with replaceable sleeve type bearings conforming to **AWWA C-517- 09 Section 4.3.3.6**. Bearings shall be of sintered, oil impregnated type 316 stainless steel **ASTM A-743 Grade CF-8M**. Valve shaft seals shall be of the "U" cup type in accordance with **AWWA C-517-09 Section 4.4.7**. Seals shall be self adjusting and repackable without removing the bonnet from the valve.

Worm gear operators shall be of the heavy duty construction with the ductile iron quadrant supported on the top and bottom by oil impregnated bronze bearings. The worm gear and shaft shall be manufactured of hardened steel and run on high efficiency roller bearings. All worm gear operators shall be sized for bi-directional shutoff at the valves design pressure rating.

Valves shall be designed and manufactured to shut off bubble tight at 400 psi for valves 2½"-12" and 300 psi for valves 14"-48" with pressure behind the plug.

Each valve shall be given a hydrostatic and seat test with the test results being certified when required by the customer. Certified copies of Proof-of-Design test reports shall be furnished as outlined in **AWWA C-517-09 Section 5.2.2** when requested.

Plug valves shall be Ballcentric® Plug Valve **Series 602** as manufactured by Henry Pratt Company of Aurora, Illinois.

Technical Specification Ballcentric® Series 601RL Rubberlined Plug Valves

AWWA C517-09 Standards
Valves shall be of the non-lubricated eccentric type with an elastomer covering all seating surfaces. The elastomer shall be suitable for the service intended. Flanged valves shall be manufactured in accordance with **ANSI B16.1 Class 125/150** including facing, drilling and flange thickness. Mechanical joint ends shall be in compliance with **AWWA/ ANSI C-111- 92**. Grooved ends shall be manufactured to the dimensions of **ANSI/AWWA C606** for ductile or steel pipe as required. Ports shall be round on sizes 2½"-12" and rectangular port design on valves 14" and larger. All valves shall be capable of being "pigged" with a soft pig when required.
Valve bodies shall be of **ASTM A-126 Class B** cast iron in accordance with **AWWA C- 517-09 Section 4.3.3.1**. The interior of the valve bodies shall be covered with a suitable elastomer with a minimum thickness of 1/8". The elastomer shall extend through the valve flow way and onto the flanges to ensure a positive seal.

Plugs shall be of **ASTM A-536-Grade 65-45-12** for sizes 20" and smaller, and **ASTM A126 Class B Cast Iron** for sizes 24" and larger in compliance with **AWWA C-517-09 Sections 4.3.3.1 and 4.3.3.2**. The plugs shall be of one piece solid construction with PTFE thrust bearings on the upper and lower bearing journals to reduce torque and prevent dirt and grit from entering the bearing and seal area.

Valves shall be furnished with replaceable sleeve type bearings conforming to **AWWA C-517-09, Section 4.3.3.6.** Bearings shall be of sintered, oil impregnated type 316 stainless steel **ASTM A-743 Grade CF-8M**. Valve shaft seals shall be of the "U" cup type in accordance with **AWWA C-517-09 Section 4.4.7**. Seals shall be self adjusting and repackable without removing the bonnet from the valve.

Worm gear operators shall be of the heavy duty construction with the ductile iron quadrant supported on the top and bottom by oil impregnated bronze bearings. The worm gear and shaft shall be manufactured of hardened steel and run on high efficiency roller bearings. All worm gear operators shall be sized for bi-directional shutoff at the valves design pressure rating.

Valves shall be designed and manufactured to shut off bubble tight at 175 psi for valves 2½"-12" and 150 psi for valves 14" and larger. Each valve shall be given a hydrostatic and seat test with the test results being certified when required by the customer. Certified copies of Proof-of-Design test reports shall be furnished as outlined in **AWWA C-517-09 Section 5.2.2** when requested.

Plug valves shall be Ballcentric® Plug Valve **Series 601RL** as manufactured by **Henry Pratt Company of Aurora, Illinois.**

Technical Specification Ballcentric® Series 601S – Stainless Steel Plug Valves

AWWA C517-09 Standards
Valves shall be of the non-lubricated eccentric type with an elastomer covering all seating surfaces. The elastomer shall be suitable for the service intended. Flanged valves shall be manufactured in accordance with **ANSI B16.1 Class 125** including facing, drilling and flange thickness. Ports shall be round on sizes 2½"-12" and rectangular port design on valves 14" and larger. All valves shall be capable of being "pigged" with a soft pig when required.
Valve bodies shall be of **CF8M (316 stainless steel)**. Valves shall be furnished with 316 stainless steel seat in accordance with **AWWA C-517-09 Section 4.3.3.4**.

Plugs shall be of **CF8M (316 stainless steel)**. The plugs shall be of one piece solid construction with PTFE thrust bearings on the upper and lower bearing journals to reduce torque and prevent dirt and grit from entering the bearing and seal area.

Valves shall be furnished with replaceable sleeve type bearings conforming to **AWWA C-517-09 Section 4.3.3.6**. Bearings shall be of sintered, oil impregnated type 316 stainless steel **ASTM A-743 Grade CF-8M**. Valve shaft seals shall be of the "U" cup type in accordance with **AWWA C-517-09 Section 4.4.7**. Seals shall be self adjusting and repackable without removing the bonnet from the valve.

Wrench operated valves 2½"-8" shall be capable of being converted to worm gear or automated operation without removing the bonnet or plug from the valve. All wrench operated valves shall be equipped with a 2" square nut for use with removable levers or extended "T" handles.

Worm gear operators, where required, shall be of the heavy duty construction with the ductile iron quadrant supported on the top and bottom by oil impregnated bronze bearings. The worm gear and shaft shall be manufactured of hardened steel and run on high efficiency roller bearings. All worm gear operators shall be sized for bi-directional shutoff at the valves design pressure rating.

Valves shall be designed and manufactured to shut off bubble tight at 175 psi for valves 2½"-12" and 150 psi for valves 14" and larger. Each valve shall be given a hydrostatic and seat test with the test results being certified when required by the customer. Certified copies of Proof-of-Design test reports shall be furnished as outlined in **AWWA C-517-09 Section 5.2.2** when requested.

Plug valves shall be Ballcentric® Plug Valve **Series 601S** as manufactured by Henry Pratt Company of Aurora, Illinois.

Technical Specification Ballcentric® Series 611/610 Ductile Iron Plug Valves

AWWA C517-09 Standards
Valves shall be of the non-lubricated eccentric type with an elastomer covering all seating surfaces. The elastomer shall be suitable for the service intended. Flanged valves shall be manufactured in accordance with **ANSI B16.1 Class 125/150** including facing, drilling and flange thickness. Mechanical joint ends shall be in compliance with **AWWA/ANSI C-111-92**. Grooved ends shall be manufactured to the dimensions of **ANSI/AWWA C606** for ductile or steel pipe as required. Ports shall be round on sizes 2½"-12" and rectangular port design on valves 14" and larger. All valves shall be capable of being "pigged" with a soft pig when required.
Valve bodies shall be of **ASTM A-536 Grade 65-45-12** in accordance with **AWWA C-517-09 Section 4.3.3.2.** Valves 3" and larger shall be furnished with a welded-in overlay seat of 1/8" thick of not less than 99% nickel in accordance with **AWWA C-517-09, Section 4.3.3.4**. Sprayed, plated or screwed-in seats are not acceptable.

Plugs shall be of **ASTM A-536-Grade 65-45-12** for all sizes in accordance with **AWWA C-517-09 Section 4.3.3.2**. The plugs shall be of one piece solid construction with PTFE thrust bearings on the upper and lower bearing journals to reduce torque and prevent dirt and grit from entering the bearing and seal area.

Valves shall be furnished with replaceable sleeve type bearings conforming to **AWWA C-517-09, Section 4.3.3.6**. Bearings shall be of sintered, oil impregnated type 316 stainless steel **ASTM A-743 Grade CF-8M**. Valve shaft seals shall be of the "U" cup type in accordance with **AWWA C-517-09 Section 4.4.7**. Seals shall be self adjusting and repackable without removing the bonnet from the valve.

Wrench operated valves 2½"-8" shall be capable of being converted to worm gear or automated operation without removing the bonnet or plug from the valve. All wrench operated valves shall be equipped with a 2" square nut for use with removeable levers or extended "T" handles.

Worm gear operators, where required, shall be of the heavy duty construction with the ductile iron quadrant supported on the top and bottom by oil impregnated bronze bearings. The worm gear and shaft shall be manufactured of hardened steel and run on high efficiency roller bearings. All worm gear operators shall be sized for bi-directional shutoff at the valves design pressure rating.

Valves shall be designed and manufactured to shut off bubble tight at 175 psi for valves 2½"-12" and 150 psi for valves 14" and larger. Each valve shall be given a hydrostatic and seat test with the test results being certified when required by the customer. Certified copies of Proof-of-Design test reports shall be furnished as outlined in **AWWA C-517-09 Section 5.2.2** when requested.

Plug valves shall be Ballcentric® Plug Valve **Series 611/610** as manufactured by Henry Pratt Company of Aurora, Illinois.

Technical Specification Ballcentric® Series 601GL Glass Lined Plug Valves

AWWA C517-09 Standards
Valves shall be of the non-lubricated eccentric type with an elastomer covering all seating surfaces. The elastomer shall be suitable for the service intended. Flanged valves shall be manufactured in accordance with **ANSI B16.1 Class 125/150** including facing, drilling and flange thickness. Mechanical joint ends shall be in compliance with **AWWA/ ANSI C-111-92**. Grooved ends shall be manufactured to the dimensions of **ANSI/AWWA C606** for ductile or steel pipe as required. Ports shall be round on sizes 3"-12" and rectangular port design on valves 14" and larger. All valves shall be capable of being "pigged" with a soft pig when required.
Valve bodies shall be of **ASTM A-126 Class B** cast iron in accordance with A**WWA C-517-09 Section 4.3.3.1**. Interior of valves shall be glass lined at .008-.012 mils thickness, covering the entire interior of valve bodies and stopping at the flange faces.

Plugs shall be of **ASTM A-536-Grade 65-45-12** for sizes 20" and smaller, and **ASTM A126 Class B Cast Iron** for sizes 24" and larger in compliance with **AWWA C-517-09 Sections 4.3.3.1 and 4.3.3.2**. The plugs shall be of one piece solid construction with PTFE thrust bearings on the upper and lower bearing journals to reduce torque and prevent dirt and grit from entering the bearing and seal area.

Valves shall be furnished with replaceable sleeve type bearings conforming to **AWWA C-517-09, Section 4.3.3.6**. Bearings shall be of sintered, oil impregnated type 316 stainless steel **ASTM A-743 Grade CF-8M**. Valve shaft seals shall be of the "U" cup type in accordance with **AWWA C-517-09 Section 4.4.7**. Seals shall be self adjusting and repackable without removing the bonnet from the valve.

Wrench operated valves 2½"-8" shall be capable of being converted to worm gear or automated operation without removing the bonnet or plug from the valve. All wrench operated valves shall be equipped with a 2" square nut for use with removeable levers or extended "T" handles.

Worm gear operators, where required, shall be of the heavy duty construction with the ductile iron quadrant supported on the top and bottom by oil impregnated bronze bearings. The worm gear and shaft shall be manufactured of hardened steel and run on high efficiency roller bearings. All worm gear operators shall be sized for bi-directional shutoff at the valves design pressure rating.

Valves shall be designed and manufactured to shut off bubble tight at 175 psi for valves 2½"-12" and 150 psi for valves 14" and larger. Each valve shall be given a hydrostatic and seat test with the test results being certified when required by the customer. Certified copies of Proof-of-Design test reports shall be furnished as outlined in **AWWA C-517-09 Section 5.2.2** when requested.

Plug valves shall be Ballcentric® Plug Valve Series **601GL/600GL** as manufactured by Henry Pratt Company of Aurora, Illinois.

PRATT PRODUCT GUIDE

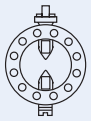

Model
2FII

Monoflange
MKII

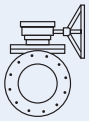

Plug
Valve

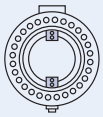

Triton®
XR70

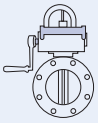

Indicating Butterfly Valve
UL & FM approved

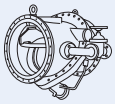

Tilting Disc
Check Valve

Triton®
XL

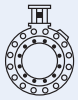

N-Stamp Nuclear
Butterfly Valve

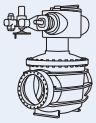

Cone
Valve

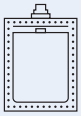

Rectangular

PIVA Post Indicating Valve Assembly
UL & FM approved

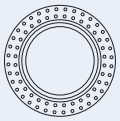

Sleeve
Valve

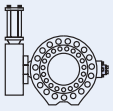

Rubber Seated
Ball Valve

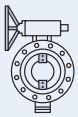

Triton®
HP250

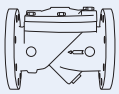

Check
Valve

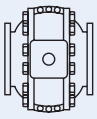

Metal Seated
Ball Valve

Control
Systems

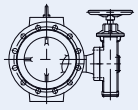

Plunger Valve

PRATT

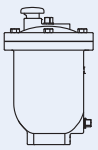

Air Valve

Henry Pratt Company
401 South Highland Avenue
Aurora, Illinois 60506-5563 - US
P: 630-844-4000 F: 630-844-4160
www.henrypratt.com
ISO 9001: 2000 Certified

©2014 Henry Pratt Company | Printed in the U.S.A. | HPPLUG-0414

VALVE SIZE	GEAR SIZE & RATIO	A	B	C	D	E	F	G	H	J	K	L	M	N	P	Q	S	T
2.5	M2 (20:1)	7.5	3.41	3.50	2.5	5.50	7.00	0.75	4	--	–	0.69	2.5	6	4.75	4.75	1.75	2.00
3	M2 (20:1)	8	3.41	3.75	3	6.00	7.50	0.75	4	--	–	0.75	2.5	6	4.75	4.75	1.75	2.00
4	M3 (30:1)	9	4.38	4.50	4	7.50	9	0.75	6	0.63	2	0.94	3	6	9.50	8	2.00	2.56
5	M3 (30:1)	10	5.63	5.75	5	8.50	10	0.88	6	0.75	2	0.94	3	6	9.50	8	2.00	2.56
6	M3 (30:1)	10.50	5.63	5.75	6	9.50	11	0.88	6	0.75	2	1	3	6	9.50	8	2.00	2.56
8	M5 (50:1)	11.50	7.56	7.63	8	11.75	13.50	0.88	6	0.75	2	1.13	6	12	11.25	8	2.25	3.16
10	M8 (80:1)	13	9.25	8.88	10	14.25	16	1	8	0.88	4	1.19	6	12	11.63	10	2.00	4.63
12	M8 (80:1)	14	10.88	10	12	17.00	19	1	8	0.88	4	1.25	6	12	11.63	10	2.00	4.63

△5 △6 REFERENCE ONLY △6

ABOVE GROUND GEAR W/ HANDWHEEL OPTION

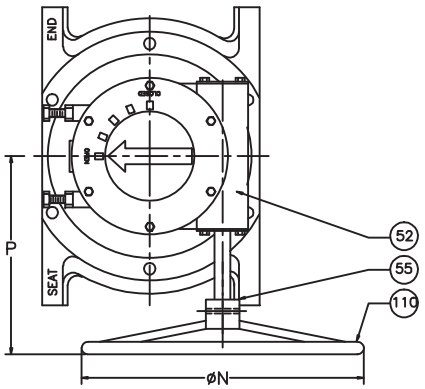

BURIED GEAR W/ 2" NUT OPTION

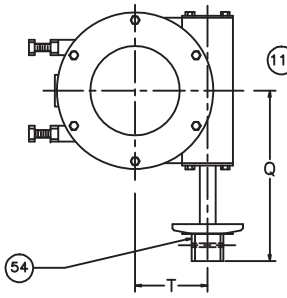

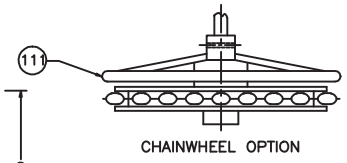

CHAINWHEEL OPTION

SIZE	GEAR	# OF TURNS
2.5"	20:1	5
3"	20:1	5
4"	30:1	7 1/2
5"	30:1	7 1/2
6"	30:1	7 1/2
8"	50:1	12 1/2
10"	80:1	20
12"	80:1	20

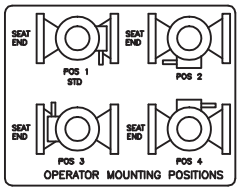

THIS DRAWING IS THE PROPERTY OF
HENRY PRATT COMPANY
AND MUST NOT BE USED IN ANY WAY
PREJUDICIAL TO THEIR INTERESTS

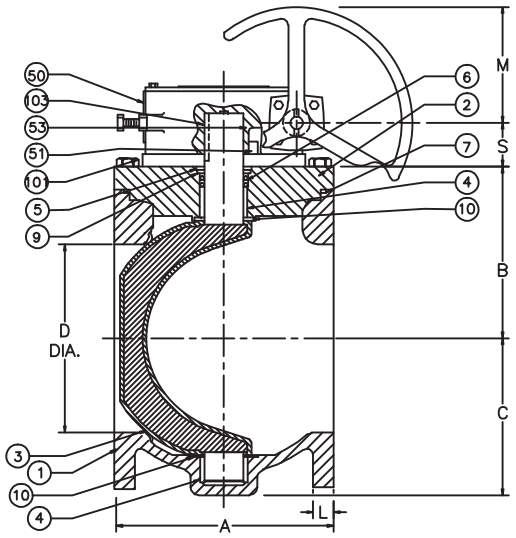

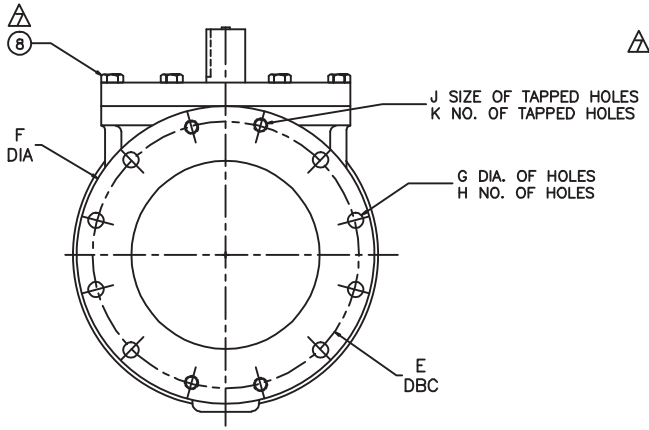

*RISER RING IS ONLY ON 2-1/2" TO 8" VALVE

ITEM	QTY	DESCRIPTION	MATERIAL
111	1	CHAINWHEEL	DUCTILE IRON
110	1	SPRING PIN	STEEL
103	1	KEY	STEEL
*101	1	RISER RING	STEEL
55	1	HANDWHEEL	DUCTILE IRON
54	1	2" NUT	DUCTILE IRON
53	2	SLEEVE BEARING	BRONZE
52	1	WORM GEAR	STEEL
51	1	QUAD GEAR	DUCTILE IRON
△4 50	1	HOUSING	
10	2	GRIT SEAL	PTFE
9	1	SEAL RETAINING RING	BRASS
△7 8	AR	H.H. CAP SCREW	☐STEEL ☐STN. STEEL
7	1	O-RING	ELAS AS SPEC.
6	2	U-CUP SEAL	ELAS AS SPEC.
5	1	SNAP RING	SPRING STEEL
4	2	SLEEVE BEARING	STN. STEEL
3	1	PLUG ELASTOMER AS SPEC.	DUCTILE IRON
2	1	CAP	CAST IRON
1	1	BODY	CAST IRON

PRATT®
HENRY PRATT COMPANY
AURORA, ILL.

BY	DATE	SCALE
CR	10/95	NONE
CHK'D: AJ		DIM.: INCHES

ISSUE NUM.	DATE	REVISIONS	BY
1	12/97	REVISED GEAR DIM. FOR 2.5" & 3" WAS M2 NOW ALECTO 232-07	CR
2	11/98	ITEM 8 WAS BRONZE	CR
3	09/07	ADDED MTRL. TYPE	JC
4	02/10	ITEM 50 MATERIAL CHANGED FROM CAST TO DUCTILE IRON [ECR# 252]	JC
5	09/10	REMOVED DATA FOR 14" [ECR # 384]	TF
6	05/12	CORRECTION IN "B" & "S" DIM. [ECN# 584]	AA
7	01/13	ADDED ITEM 10 AND BOM UPDATE	JC
8	01/13	B.O.M. STANDARDIZATION ITEM 10 NOW 8	AA

TITLE:
2-1/2" TO 12"
PLUG VALVE, FLANGED,
GEAR OPERATED,
w/HANDWHEEL, 2" NUT,
OR CHAINWHEEL OPTION

DWG. NO. HP49110

This page is intentionally left blank

Project name:	AMARUQ
Project#:	5000218009
Document #:	SPK_0004_RX
by:	LJ
chkd:	GP
appvd:	CB

SLUDGE TANKS RX75-2

INSTRUMENTS

OIM manual section: 4.3.2.5

This page is intentionally left blank

Technical
specification

ENM-10 Level regulator

FLYGT
a xylem brand

Table of Contents

PRODUCT DESCRIPTION....2
Product description....2

CHEMICAL RESISTANCE LIST....6
Chemical resistance list....6

PRODUCT RANGE....8
Product range....8

PRODUCT DESCRIPTION

Product description

The simplest possible method for level control! A mechanical switch in a plastic casing, freely suspended at the desired height from its own cable. When the liquid level reaches the regulator, the casing will tilt and the mechanical switch will close or break the circuit, thereby starting or stopping a pump or actuating an alarm device. No wear, no maintenance! In sewage pumping stations, for ground water and drainage pumping – in fact, for most level control applications – the ENM-10 is the ideal solution.

The regulator casing is made of polypropylene and the cable is sheathed with a special PVC or Nitrile/PVC rubber compound. The plastic components are welded and screwed together. Adhesive is never used. Impurities and deposits will not adhere to the smooth casing.

This level regulator is available in different versions, depending upon the medium in which it is to be used. As standard, the regulator can be obtained with 6, 13, 20, 30 or 50 metres (20, 42, 65, 100 or 167 feet) of cable for liquids with specific density between 0.95 and 1.10 g/cm3; for other specific densities and for the Ex-version, the regulator is only available with 20 metres (65 ft) of cable. The regulator can withstand up to 60°C (140°F).

Technical data

Liquid temperature:	min. 0°C (32°F) max. 60°C (140°F)
Liquid density:	min. 0.65 g/cm^3 max. 1.5 g/cm^3
Degree of protection:	IP68, 20 m (65 ft)
Interrupting capacity of micro switch:	AC, resistive load, 250V 10A AC, inductive load, 250V 3A cos ϕ = 0.5 DC, 30V 5A
With gold plated micro switch:	same as above, except: DC, 24V 10mA

Note that local regulations may limit the voltage.

Materials

Body:	Body:
Bending relief:	EPDM rubber
Cable:	special compound PVC or NBR/PVC nitrile/PVC rubber

Dimensions

Table 1

For density g/cm^3	Regulator length mm (in.)	Diameter mm (in.)
0.65–0.80	194 (7 10/16)	100 (4)
0.80–0.95	177 (7)	100 (4)
0.95–1.10	162 (6 3/8)	100 (4)
1.05–1.20	142 (5 9/16)	100 (4)
1.20–1.30	133 (5 1/4)	100 (4)

For density g/cm^3	Regulator length mm (in.)	Diameter mm (in.)
1.30–1.40	130 (5 2/16)	100 (4)
1.40–1.50	126 (5)	100 (4)

Weight: approx. 2 kg (4.5 lb) for a standard density regulator with 20 m cable.

Approvals: CE, CSA, SEMKO, NEMKO, DEMKO

LVD approval according to EN61058

CSA approval: Cert no. 1330172

Cl.I Zone 0, Gr. IIC;

CL.I Div.1 Gr A, B, C&D;

Cl.II Gr. E, F&G;

Cl.III when installed to the certified Intrinsically Safe relay, Ex ia, rated for the locations per submitter controll drawing and installation manual.

Intrincically safe circuits are required for the automatic control system. - Use a EX-safety barrier (e.g. Prod. no. 84 01 07).

0080

Figure 1

Wiring alternative

To conform to local regulations, the level regulators are normally connected through a transformer to a low-tension control circuit.

Two regulators are used; one for starting and one for stopping. A third regulator can be connected if an alarm is required at a given level.

Identical regulators can be used for all functions.

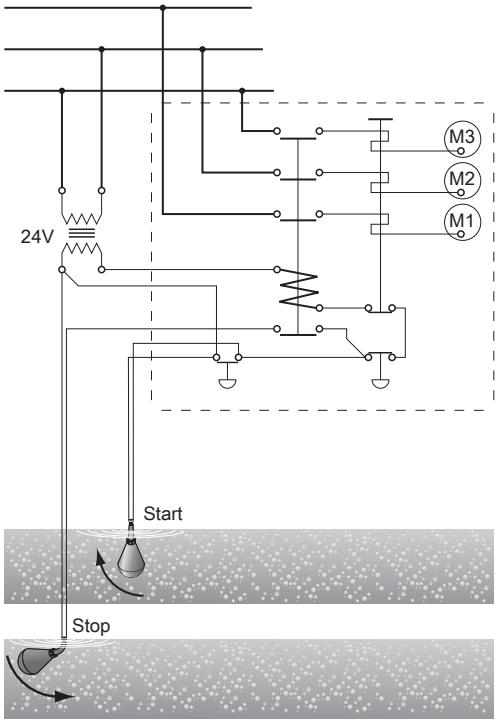

Connect the gray and black leads.

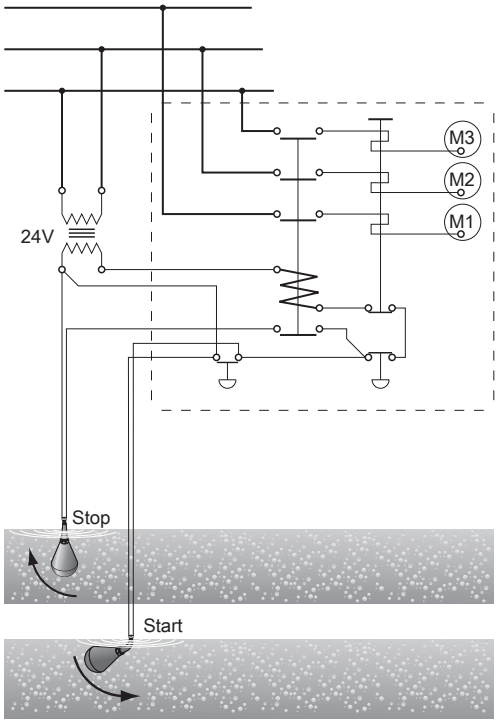

Connect the gray and brown leads.

Insulate the brown lead.
Figure 2: Connected for emptying

Insulate the black lead.
Figure 3: Connected for emptying

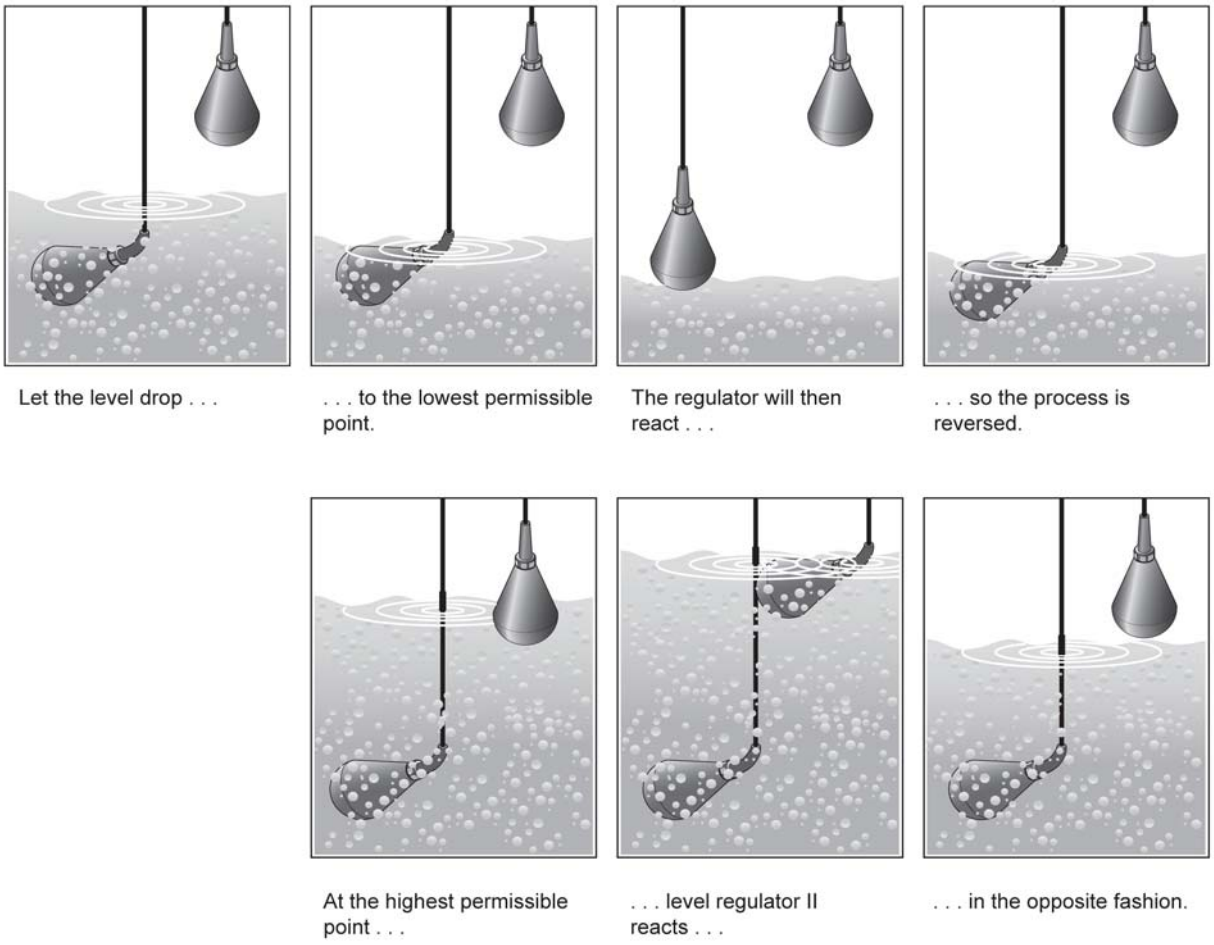

Figure 4

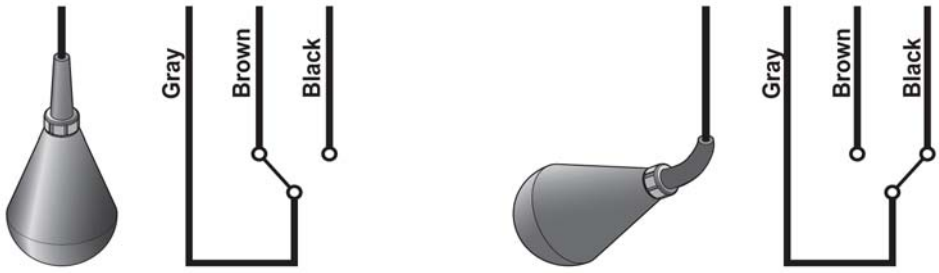

Figure 5: Colour code

Maintenance and repair

ENM-10 is very durable and practically maintenance free. You only have to check on it occasionally, to ensure its continual operation.

- It is recommended to occasionally clean ENM-10, and especially when fat/grease covers the plastic surface.
- At the same time, make an occular inspection of the regulator to make sure neither cable, protective sleeve or plastic casing show any signs of damage.

- A damaged ENM-10 cannot be repaired in any way, due to the hermetic encapsulation. If the unit is found to be damaged, replace it with a new one.
- For Ex-installations, also make absolutely sure that the Ex-barrier (e.g. Prod. no. 84 01 07) is operating correctly - The LED changes when the switch is toggled.

The manufacturers reserve the right to alter performance specification or design without notice.

CHEMICAL RESISTANCE LIST

Chemical resistance list

The liquid in which level regulation is practiced most frequently is, of course, water. Of the millions of regulators in use all over the world today, it is estimated that nine out of ten work in water.

However, with a float body of polypropylene, a cable of PVC or NBR/PVC nitrile/PVC rubber and a bending relief of EPDM rubber, the ENM-10 is virtually insensitive to many aggressive liquids.

The table shows how resistant the ENM-10 equipped with either PVC or NBR/PVC nitrile/PVC rubber cable, is to different chemicals at two different temperatures.

The classification is broken down into the following categories:

0 = No effect, 1 = Minor to moderate and 2 = Severe effect. The sign – means that information is not available.

Keep in mind also that the density of the liquid determines the bouyancy of the regulator. The ENM-10 is made for seven different densities. See *Product description* (page 2).

Always observe local regulations:

Take particular note of:

- risk of fire/explosion
- hygiene requirements

Acids	PVC cable		NBR/PVC nitrile/PVC rubber cable	
	20°C (68°F)	60°C (140°F)	20°C (68°F)	60°C (140°F)
Acetic Acid 50%	1	2	0	0
Acetic Acid 75%	2	2	0	0
Benzoic Acid	2	2	0	0
Boric Acid 5%	0	—	0	0
Butyric Acid	2	2	2	2
Chromic Acid 10%	0	2	2	2
Citric Acid	0	1	0	0
Hydrobromic Acid 5%	1	2	0	0
Hydrochloric Acid 10%	0	1	0	1
Hydrochloric Acid 37%	1	2	0	2
Hydrocyanic Acid 10%	0	0	1	2
Hydrofluoric Acid 5%	0	2	0	1
Hypochloric Acid	1	2	2	2
Maleic Acid	2	2	2	2
Nitric Acid 5%	1	1	1	1
Nitric Acid 65%	2	2	2	2
Oleic Acid	1	2	2	2
Oxalic Acid 50%	1	1	1	2
Phosphoric Acid 25%	0	0	1	2
Phosphoric Acid 85%	0	0	1	2
Sulphuric Acid 10%	1	2	1	2
Sulphuric Acid 78%	2	2	2	2
Tannic Acid	0	0	0	0
Tartaric Acid	1	1	1	1
Bases				
Ammonium Hydroxide	0	—	0	0
Calcium Hydroxide	0	0	0	0
Potassium Hydroxide	1	2	0	0
Sodium Hydroxide	1	2	0	0

Salts	PVC cable		NBR/PVC nitrile/PVC rubber cable	
	20°C (68°F)	60°C (140°F)	20°C (68°F)	60°C (140°F)
Aluminium Chloride	0	0	0	0
Calcium Sulphate	0	0	0	0
Calcium Chloride	0	0	0	0
Calcium Nitrate	0	0	0	0
Copper Chloride	0	0	0	0
Copper Sulphate	0	0	0	0
Ferric Chloride	0	0	0	0
Ferrous Sulphate	0	0	0	0
Magnesium Chloride	0	0	0	0
Potassium Sulphate	0	0	0	0
Potassium Nitrate	0	0	0	0
Potassium Carbonate	1	1	1	1
Potassium Bicarbonate	0	0	0	0
Sodium Sulphate	0	0	0	0
Sodium Chloride	0	0	0	0
Sodium Nitrate	0	0	0	0
Sodium Bicarbonate	0	0	0	0
Sodium Carbonate	0	0	0	0
Tin Chloride	1	1	1	1
Zinc Sulphate	0	0	0	0
Zinc Chloride	0	0	0	0
Oils				
Castor Oil	1	1	1	1
Cocoanut Oil	0	—	0	2
Corn Oil	2	2	2	2
Diesel Oil	2	2	2	2
Linseed Oil	2	2	2	2
Mineral Oils	2	2	2	2
Olive Oil	1	1	1	1
Silicone Oils	0	0	0	0

Solvents and miscellaneous	PVC cable		NBR/PVC nitrile/PVC rubber cable	
	20°C (68°F)	60°C (140°F)	20°C (68°F)	60°C (140°F)
Aceton	2	2	2	2
Aniline	2	2	1	2
Benzene	2	2	2	2
Butyl Alcohol	2	2	0	1
Carbon Tetrachloride	2	2	2	2
Chlorobenzene	2	2	2	2
Chloroform	2	2	2	2
Ethyl Alcohol	2	2	0	1
Ethyl Ether	2	2	2	2
Ethyl Acetate	2	2	2	2
Ethylene Dichloride	2	2	2	2
Ethylene Chloride	2	2	2	2
Formaldehyde 37%	1	2	0	0
Gasoline	2	2	2	2
Kerosene	2	2	2	2
Methyl Alcohol	2	2	0	0
Methyl Ethyl Ketone	2	2	2	2
Methylene Chloride	2	2	2	2
Nitrobenzene	2	2	2	2
Phenol	2	2	2	2
Toluene	2	2	2	2
Trichlorethylene	2	2	2	2
Turpentine	2	2	2	2
Xylene	2	2	2	2
Gases				
Carbon Dioxide	0	0	0	0
Carbon Monoxide	0	0	0	0
Chlorine (wet)	2	2	2	2
Hydrogen Sulphide	0	0	1	1
Sulphur Dioxide (wet)	1	1	2	2

0 = No effect, 1 = Minor to moderate, 2 = Severe effect. – = No information available.

Figure 6

PRODUCT RANGE

Product range

Part no.	For density [g/cm³]	Color of level switch	Type of cable	Cable length [m]	Approvals	For market	Notes
5828800	0,65-0,80	Blue	1	20	CE		
5828801	0,80-0,95	Blue	1	20	CE		
5828802	0,95-1,10	Blue	1	6	CE		
5828803	0,95-1,10	Blue	1	13	CE		
5828804	0,95-1,10	Blue	1	20	CE		
5828805	1,05-1,20	Blue	1	20	CE		
5828806	1,2-1,3	Blue	1	20	CE		
5828807	1,3-1,4	Blue	1	20	CE		
5828808	1,4-1,5	Blue	1	20	CE		
5828809	0,65-0,80	Grey	5	20	CSA/CE	Canada	
5828810	0,80-0,95	Grey	5	20	CSA/CE	Canada	
5828811	0,95-1,10	Grey	5	6	CSA/CE	Canada	
5828812	0,95-1,10	Grey	5	13	CSA/CE	Canada	
5828813	0,95-1,10	Grey	5	20	CSA/CE	Canada	
5828814	1,05-1,20	Grey	5	20	CSA/CE	Canada	
5828815	1,2-1,3	Grey	5	20	CSA/CE	Canada	
5828816	1,3-1,4	Grey	5	20	CSA/CE	Canada	
5828817	1,4-1,5	Grey	5	20	CSA/CE	Canada	
5828818	0,65-0,80	Grey	1	20	CSA/CE	Canada	
5828819	0,80-0,95	Grey	1	20	CSA/CE	Canada	
5828820	0,95-1,10	Grey	1	6	CSA/CE	Canada	
5828821	0,95-1,10	Grey	1	13	CSA/CE	Canada	
5828822	0,95-1,10	Grey	1	20	CSA/CE	Canada	
5828823	1,05-1,20	Grey	1	20	CSA/CE	Canada	
5828824	1,2-1,3	Grey	1	20	CSA/CE	Canada	
5828825	1,3-1,4	Grey	1	20	CSA/CE	Canada	
5828826	1,4-1,5	Grey	1	20	CSA/CE	Canada	
5828827	0,65-0,80	Blue	2	20	CE	USA	
5828828	0,80-0,95	Blue	2	20	CE	USA	
5828829	0,95-1,10	Blue	2	6	CE	USA	
5828830	0,95-1,10	Blue	2	13	CE	USA	
5828831	0,95-1,10	Blue	2	20	CE	USA	
5828832	1,05-1,20	Blue	2	20	CE	USA	
5828833	1,2-1,3	Blue	2	20	CE	USA	
5828834	1,3-1,4	Blue	2	20	CE	USA	
5828835	1,4-1,5	Blue	2	20	CE	USA	
5828836	0,95-1,10	Grey	5	30	CSA/CE	Canada	
5828837	0,95-1,10	Grey	5	50	CSA/CE	Canada	
5828838	0,95-1,10	Grey	5	100	CSA/CE	Canada	
5828839	0,95-1,10	Grey	5	150	CSA/CE	Canada	
5828851	0,95-1,10	Red	3	65	CE		
5828852	0,95-1,10	Red	3	6	CE		
5828853	0,95-1,10	Red	3	13	CE		
5828854	0,95-1,10	Red	3	20	CE		
5828855	0,95-1,10	Red	3	6	CSA/CE	Canada	
5828856	0,95-1,10	Red	3	13	CSA/CE	Canada	
5828857	0,95-1,10	Red	3	20	CSA/CE	Canada	

Cont. →

Figure 7

5828858	0,95-1,10	Red	4	6	CE	USA	
5828859	0,95-1,10	Red	4	13	CE	USA	
5828860	0,95-1,10	Red	4	20	CE	USA	
5828870	0,65-0,80	Blue	5	20	CE		
5828871	0,80-0,95	Blue	5	20	CE		
5828872	0,95-1,10	Blue	5	6	CE		
5828873	0,95-1,10	Blue	5	13	CE		
5828874	0,95-1,10	Blue	5	20	CE		
5828875	1,05-1,20	Blue	5	20	CE		
5828876	1,2-1,3	Blue	5	20	CE		
5828877	1,3-1,4	Blue	5	20	CE		
5828878	1,4-1,5	Blue	5	20	CE		
5828879	0,95-1,10	Blue	1	65	CE		
5828880	0,95-1,10	Blue	1	30	CE		
5828881	0,95-1,10	Blue	1	50	CE		
5828882	0,95-1,10	Grey	1	30	CSA/CE	Canada	
5828883	0,95-1,10	Grey	1	50	CSA/CE	Canada	
5828884	0,95-1,10	Blue	2	30	CE	USA	
5828885	0,95-1,10	Blue	2	50	CE	USA	
5828886	0,95-1,10	Red	3	30	CE		
5828887	0,95-1,10	Red	3	50	CE		
5828890	0,95-1,10	Blue	5	30	CE		
5828891	0,95-1,10	Blue	5	50	CE		
5828892	0,95-1,10	Red	3	6	CE	Japan	
5828893	0,95-1,10	Red	3	13	CE	Japan	
5828894	0,95-1,10	Red	3	20	CE	Japan	
5828895	0,95-1,10	Blue	1	6	CE	Japan	
5828896	0,95-1,10	Blue	1	13	CE	Japan	
5828897	0,95-1,10	Blue	1	20	CE	Japan	
5828898	0,95-1,10	Blue	1	50	CE	Japan	
5947919	0,95-1,10	Blue	5	20	CE		Designed for low current and slow movements
5947920	0,95-1,10	Grey	5	20	CSA/CE		Designed for low current and slow movements

Type of cable:

1. Blue PVC jacket with color coding of wires: Grey/Brown/Black
2. Blue PVC jacket with color coding of wires: Red/White/Black
3. Red PVC jacket with color coding of wires: Grey/Brown/Black
4. Red PVC jacket with color coding of wires: Red/White/Black
5. BLACK NBR/PVC jacket with color coding of wires: Grey/Brown/Black (NBR=Nitrile rubber)

Xylem |ˈzīləm|

1) The tissue in plants that brings water upward from the roots
2) A leading global water technology company

We're 12,000 people unified in a common purpose: creating innovative solutions to meet our world's water needs. Developing new technologies that will improve the way water is used, conserved, and re-used in the future is central to our work. We move, treat, analyze, and return water to the environment, and we help people use water efficiently, in their homes, buildings, factories and farms. In more than 150 countries, we have strong, long-standing relationships with customers who know us for our powerful combination of leading product brands and applications expertise, backed by a legacy of innovation.

For more information on how Xylem can help you, go to xyleminc.com

xylem
Let's Solve Water

Xylem Water Solutions AB
Gesällvägen 33
174 87 Sundbyberg
Sweden
Tel. +46-8-475 60 00
Fax +46-8-475 69 00
http://tpi.xyleminc.com

Visit our Web site for the latest version of this document and more information

The original instruction is in English. All non-English instructions are translations of the original instruction.

© 2011 Xylem Inc

891480_11.1_en.GB_2012-01_TS_ENM-10

This page is intentionally left blank

Project name:	AMARUQ
Project#:	5000218009
Document #:	SPK_0004_RX
by:	LJ
chkd:	GP
appvd:	CB

SLUDGE TANKS RX75-2

PAINT SPECS

OIM manual section: 4.3.2.6

This page is intentionally left blank

6.0 TREATMENT

6.1 Internal treatment

- Sandblast as per SSPC-SP-10;
- Brush application on welds and difficult to reach places (inside of holes and openings) of one layer of DURA_PLATE UHS by SHERWIN WILLIAMS, color « light green » and;
- Application of one coat of DURA-PLATE-UHS by SHERWIN WILLIAMS, 20 to 28 mils dft (restricted level 5 as per SSPC-PA 2), color « white NSF»;
- Important note: **Never dilute** the DURA-PLATE-UHS paint.

Only if needed, application of one coat of DURA-PLATE UHS PRIMER by SHERWIN WILLIAMS, 4 to 8 mils dft per coat, color “Gold”, if required depending on atmospheric conditions and delays between sandblast and paint.

6.2 External treatment

- Sandblast as per SSPC-SP-6;
- Spacing between intermittent welds should be filled with an hybrid sealant LOXON H-1 by SHERWIN WILLIAMS before the application of the external coating;
- Brush application on welds and difficult to reach places (inside of holes and openings) of one layer of ENVIROLASTIC 940 by SHERWIN WILLIAMS, color « White »;
- Application of one layer of ENVIROLASTIC 940 by SHERWIN WILLIAMS, 7.0 to 9.0 mils dft, (restricted level 5 as per SSPC-PA 2), color « John Meunier Blue ».

6.3 Piping treatment

Identical to the external coating of the works as stated for tank previously. There is no internal coating to provide for the nozzles of 3" diameter or less (should be made from Stainless Steel). Ensure pipe ends and flanges are covered with paint with the exception of the raised face.

6.4 Extra paint to be supplied

For every equipment, a touch-up paint kit of 1 gallon for both internal and exterior paint must be provided at shipping. Please attach the product label.

This page is intentionally left blank

Protective & Marine Coatings

NSF Certified to NSF/ANSI 61

DURA-PLATE® UHS

WITH OPTI-CHECK OAP TECHNOLOGY

PART A	B62-210	SERIES
PART A	B62W211	WHITE OAP (NSF)
PART B	B62V210	STANDARD HARDENER (NSF)
PART B	B62V211	LOW TEMP HARDENER (NSF)

Revised: December 3, 2014

PRODUCT INFORMATION

TRM.35

PRODUCT DESCRIPTION

DURA-PLATE UHS is an ultra high solids epoxy amine engineered specifically for immersion service in ballast tanks, oil tanks, and refined fuel storage tanks. The high build, edge-retentive properties of Dura-Plate UHS provide superior protection compared to conventional epoxies.

- Airless Spray
- One coat protection
- Low VOC
- Low odor
- High flash point, >200°F (93°C)
- Can be used with 1½ oz. fiberglass mat
- Low Temperature Hardener for applications down to 40°F (4.5°C).
- NSF approved to Standard 61 for potable water (tanks of 1000 gallons or greater and pipes of 30" diameter or greater.)

RECOMMENDED USES

For use over prepared steel or concrete surfaces in industrial and marine exposures such as:

- Meets MIL-PRF-23236, Type VII, Class 5, 7, 9 and 11, Grade C (standard hardener only)
- Ballast tank interiors, Oil storage tank interiors, Refined fuel storage tank and potable water tanks interiors and pipe.
- NSF approved for one coat application up to 50.0 mils (1250 microns) dft if required
- Water and waste treatment plants
- Buried Pipe Applications
- Primary and secondary containment areas
- Where edge protection film build properties are required
- Suitable for use with cathodic protection systems
- White B62W211 Contains OAP fluorescent pigment (NSF Approved)
- Suitable for use in the Mining & Minerals Industry

PRODUCT CHARACTERISTICS

Finish	Gloss
Color:	White OAP (NSF), White (NSF), Light Gray (NSF), Light Green (NSF), Black, Haze Gray
Volume Solids:	98% ± 2%, mixed
Weight Solids:	98% ± 2%, mixed
VOC (EPA Method 24):	
(with B62-V210 Hardeners)	<100 g/L; 0.83 lb/gal, mixed
(with B62V211 Hardener)	<100 g/L; 0.84 lb/gal, mixed
Mix Ratio:	4:1 by volume

Recommended Spreading Rate per coat*:

	1 coat system Min.		1 coat system Max.		2 coat system Min.		2 coat system Max.	
Wet mils (microns)	**18.0**	450	**22.0**	550	**10.0**	250	**12.0**	300
Dry mils (microns)	**18.0**	450	**22.0**	550	**10.0**	250	**12.0**	300
Total mils (microns)	**18.0**	450	**22.0**	550	**20.0**	500	**24.0**	600
~Coverage sq ft/gal (m^2/L)	**72**	1.76	**90**	2.2	**130**	3.18	**160**	3.9
Theoretical coverage **sq ft/gal** (m^2/L) @ 1 mil/25 micron dft	**1568** (38.4)							

* See NSF Systems on next page.

NOTE: Brush or roll application recommended for stripe coating and repair only. Standard hardener preferred for brush & roll due to pot life.

Drying Schedule @ 10.0-22.0 mils wet (250-550 microns):

With B62-V210	@ 55°F/13°C *50% RH*	@ 77°F/25°C	@ 100°F/38°C
To touch:	12 hours	5 hours	3 hours
To handle:	48 hours	14 hours	8 hours
To recoat:			
minimum:	48 hours	14 hours	8 hours
maximum:	21 days	14 days	14 days
Cure to service:	10 days	4 days	24 hours
Heat Cure:	8 hours @ ambient, then 16 hrs @ 140°F (60°C)*		

*Not NSF Approved. See Tips Section.

Pot Life*:	30-45 minutes	30-45 minutes	20-30 minutes
*Dependent upon temperature and mass			
Sweat-in-time:	15 minutes	None	None

PRODUCT CHARACTERISTICS (CONT'D)

With B62V211	@ 40°F/4.5°C	@ 55°F/13°C *50% RH*	@ 77°F/25°C
To touch:	24 hours	5 hours	3 hours
To handle:	48 hours	24 hours	8 hours
To recoat:			
minimum:	48 hours	24 hours	8 hours
maximum:	30 days	21 days	14 days
Cure to service:	7 days	5 days	3 days
Heat Cure:	8 hours @ ambient, then 16 hrs @ 140°F (60°C)*		

Material should be at least 50°F (10°C) for optimal performance.

If maximum recoat time is exceeded, abrade surface before recoating.

Drying time is temperature, humidity, and film thickness dependent.

Sterilize and rinse per AWWA C652.

*Not NSF Approved. See Tips Section.

Pot Life*:	20 minutes	20 minutes	10 minutes
*Dependent upon temperature and mass			
Sweat-in-Time:	5 minutes	None	None

Shelf Life:	36 months Store indoors at 40°F (4.5°C) to 100°F (38°C).
Flash Point:	>200°F (93°C), PMCC, mixed
Reduction:	Not recommended
Clean Up:	MEK, R6K10 or R7K104 Reducer

PERFORMANCE CHARACTERISTICS

Substrate*: Steel

Surface Preparation*: SSPC-SP10/NACE 2

System Tested*:

1 ct. Dura-Plate UHS @ 18.0 mils (450 microns) dft with B62GV210 Hardener

*unless otherwise noted below

Test Name	Test Method	Results
Abrasion Resistance	ASTM D4060, CS17 wheel, 1000 cycles, 1 kg load	20.8 mg loss
Adhesion	ASTM D4541; ASTM D3359	800 psi, minimum (ASTM D4541); 5A (ASTM D3359)
Corrosion Weathering	ASTM D5894, 6 cycles, 2016 hours	Rating 10 per ASTM D610 for rusting and Rating 10 per ASTM D714 for blistering
Direct Impact Resistance	ASTM D2794; ASTM G14	30 in. lb. (ASTM D2794); 168 in. lb. (ASTM G14)
Dry Heat Resistance	ASTM D2485	250°F (121°C)
Flexibility	ASTM D522, 180° bend, 1/2" mandrel	Passes, 9.7% elongation
Immersion (Galvapac/1 ct Dura Plate UHS)	5 year potable water	Rating 10 per ASTM D610 for rusting and Rating 10 per ASTM D714 for blistering
Pencil Hardness	ASTM D3363	3H

IMMERSION (Ambient temperature):

- Ballast Tank mix ..... Recommended
- Crude oil ..... Recommended
- Diesel fuel ..... Recommended
- Ethanol or Gasohol ..... Recommended
- Fresh water/Potable Water ..... Recommended
- Fuel oil ..... Recommended
- Methanol or methanol blends ..... Not Recommended
- MTBE, TAME, ETBE ..... Recommended
- Refined petroleum products ..... Recommended
- Sea water ..... Recommended
- Hi-Aromatic Gasolines ..... Recommended

continued on back

Protective & Marine Coatings

NSF Certified to NSF/ANSI 61

DURA-PLATE® UHS

WITH OPTI-CHECK OAP TECHNOLOGY

PART A	B62-210	SERIES
PART A	B62W211	WHITE OAP (NSF)
PART B	B62V210	STANDARD HARDENER (NSF)
PART B	B62V211	LOW TEMP HARDENER (NSF)

Revised: December 3, 2014

PRODUCT INFORMATION

TRM.35

RECOMMENDED SYSTEMS

		Dry Film Thickness / ct. Mils	(Microns)
Steel, NSF Systems:			
1 ct.	Dura-Plate UHS Primer	4.0-8.0*	(100-200)
1 ct.	Dura-Plate UHS	10.0-12.0*	(250-300)
or			
1 ct.	Dura-Plate UHS	16.0-50.0	(400-1250)
or			
2 cts.	Dura-Plate UHS	8.0-25.0	(200-625)
or			
3 cts.	Dura-Plate UHS	8.0-16.0	(200-400)
Steel, OAP Fluorescent Pigment System			
1 ct.	Dura-Plate UHS (B62W211)	12.0-14.0	(300-350)
Steel:			
1 ct.	Dura-Plate UHS Primer	4.0-8.0**	(100-200)
1 ct.	Dura-Plate UHS	10.0-12.0	(250-300)
or			
2 cts.	Dura-Plate UHS	6.0-7.0	(150-175)
or			
1 ct.	Dura-Plate UHS	18.0-22.0	(450-550)
or			
2 cts.	Dura-Plate UHS	10.0-12.0	(250-300)
Steel, with hold primer:			
1 ct.	Macropoxy 5500 Primer (as required for blast hold primer)	1.0-1.5**	(25-40)
2 cts.	Dura-Plate UHS	10.0-12.0	(250-300)
Steel, Laminate System:			
1 ct.	Copoxy Shop Primer (as required for blast hold primer)	1.0-1.5	(25-40)
or			
1 ct.	Dura-Plate UHS Primer	4.0-8.0**	(100-200)
1 ct.	Steel-Seam FT910 as required for filling pits, and transitioning sharp edges, weld seams, etc.		
1 ct.	Dura-Plate UHS Clear Laminate Resin with 1½ oz. glass mat	40.0-45.0	(1000-1125)
1 ct.	Dura-Plate UHS as required to seal fiberglass mat	10.0-12.0	(250-300)
Concrete/Masonry:			
1 ct.	Corobond 100 Epoxy Primer/Sealer	4.0-6.0	(100-150)
	(or 1 ct Dura- Plate UHS Primer (as required for NSF)	4.0-8.0**	(100-200)
1 ct.	Dura-Plate UHS (as required for NSF)	10.0-12.0	(250-300)

* If primer is used, 10 mils (250 microns) dft maximum for primer and 14 mils (350 microns) dft maximum for topcoat.

** When using the B62L210 Primer containing the OAP fluorescent pigment, make sure a non-containing OAP fluorescent pigment Topcoat is used.

Refer to Application Bulletin for treatment of pitted tank bottoms.

The systems listed above are representative of the product's use, other systems may be appropriate.

DISCLAIMER

The information and recommendations set forth in this Product Data Sheet are based upon tests conducted by or on behalf of The Sherwin-Williams Company. Such information and recommendations set forth herein are subject to change and pertain to the product offered at the time of publication. Consult your Sherwin-Williams representative to obtain the most recent Product Data Information and Application Bulletin.

SURFACE PREPARATION

Surface must be clean, dry, and in sound condition. Remove all oil, dust, grease, dirt, loose rust, and other foreign material to ensure adequate adhesion.

Refer to product Application Bulletin for detailed surface preparation information.

Minimum recommended surface preparation:

Iron & Steel:
- Atmospheric: SSPC-SP6/NACE 3, 2 mil (50 micron) profile or SSPC-SP12/NACE No. 5, WJ-3/NV-2
- Immersion: SSPC-SP10/NACE2, 2-3 mil (50-75 micron)profile or SSPC- SP12/NACE No. 5, WJ-2/NV-2

Concrete & Masonry:
- Atmospheric: SSPC-SP13/NACE 6, or ICRI No. 310.2R CSP 2-3
- Immersion: SSPC-SP13/NACE 6-4.3.1 or 4.3.2, or ICRI No. 310.2R CSP 2-3

Surface Preparation Standards

Condition of Surface		ISO 8501-1 BS7079:A1	Swedish Std. SIS055900	SSPC	NACE
White Metal		Sa 3	Sa 3	SP 5	1
Near White Metal		Sa 2.5	Sa 2.5	SP 10	2
Commercial Blast		Sa 2	Sa 2	SP 6	3
Brush-Off Blast		Sa 1	Sa 1	SP 7	4
Hand Tool Cleaning	Rusted	C St 2	C St 2	SP 2	-
	Pitted & Rusted	D St 2	D St 2	SP 2	-
Power Tool Cleaning	Rusted	C St 3	C St 3	SP 3	-
	Pitted & Rusted	D St 3	D St 3	SP 3	-

TINTING

Do not tint Part A.

Clear Hardeners B62V210 and B62V211 may be tinted with up to 1½ oz. per gallon with Maxitoner Colorant, Phthalo Green or Black (both NSF approved) **ONLY**.

APPLICATION CONDITIONS

Temperature (air, surface):
- B62-V210 Hardeners: 50°F (10°C) minimum, 110°F (43°C) maximum
- B62V211 Hardener: 40°F (4.5°C) minimum, 77°F (25°C) maximum

At least 5°F (2.8°C) above dew point

Material should be 70°F (21°C) to 85°F (29°C) or optimal performance.

Relative humidity: 85% maximum

Refer to product Application Bulletin for detailed application information.

ORDERING INFORMATION

Packaging:
- Part A: 4 gallon (15.1L) container
- Part B: 1 gallon (3.78L) container

Weight: 10.52 ± 0.2 lb/gal ; 1.26 Kg/L, mixed

SAFETY PRECAUTIONS

Refer to the MSDS sheet before use.

Published technical data and instructions are subject to change without notice. Contact your Sherwin-Williams representative for additional technical data and instructions.

WARRANTY

The Sherwin-Williams Company warrants our products to be free of manufacturing defects in accord with applicable Sherwin-Williams quality control procedures. Liability for products proven defective, if any, is limited to replacement of the defective product or the refund of the purchase price paid for the defective product as determined by Sherwin-Williams. NO OTHER WARRANTY OR GUARANTEE OF ANY KIND IS MADE BY SHERWIN-WILLIAMS, EXPRESSED OR IMPLIED, STATUTORY, BY OPERATION OF LAW OR OTHERWISE, INCLUDING MERCHANTABILITY AND FITNESS FOR A PARTICULAR PURPOSE.

Protective & Marine Coatings

NSF Certified to NSF/ANSI 61

DURA-PLATE® UHS

WITH OPTI-CHECK OAP TECHNOLOGY

PART A	B62-210	SERIES
PART A	B62W211	WHITE OAP (NSF)
PART B	B62V210	STANDARD HARDENER (NSF)
PART B	B62V211	LOW TEMP HARDENER (NSF)

Revised: December 3, 2014

APPLICATION BULLETIN

TRM.35

SURFACE PREPARATIONS

Surface must be clean, dry, and in sound condition. Remove all oil, dust, grease, dirt, loose rust, and other foreign material to ensure adequate adhesion.

Iron & Steel (atmospheric service)
Minimum surface preparation is Commercial Blast Cleaning per SSPC-SP6/NACE 3 or SSPC-SP12/NACE No. 5. For surfaces prepared by SSPC SP6/NACE 3, first remove all oil and grease from surface by Solvent Cleaning per SSPC-SP1. For better performance, use Near White Metal Blast Cleaning per SSPC-SP10/NACE 2. Blast clean all surfaces using a sharp, angular abrasive for optimum surface profile (2-3 mils / 50-75 microns). For surfaces prepared by SSPC-SP12/NACE No. 5, all surfaces shall be cleaned in accordance with WJ-3/NV2. Pre-existing profile should be approximately 2 mils (50 microns). Prime any bare steel the same day as it is cleaned or before flash rusting occurs.

Iron & Steel (immersion service)
Remove all oil and grease from surface by Solvent Cleaning per SSPC-SP1. Minimum surface preparation is Near White Metal Blast Cleaning per SSPC-SP10/NACE 2, or SSPC-SP12/NACE No. 5. For SSPC-SP10/NACE 2 blast clean all surfaces using a sharp, angular abrasive for optimum surface profile (2-3 mils / 50-75 microns). For SSPC-SP12/NACE No.5, all surfaces to be coated shall be cleaned in accordance with WJ-2/NV2 standards. Pre-existing profile should be approximately 2 mils (50 microns). Remove all weld spatter. Prime any bare steel the same day as it is cleaned or before flash rusting occurs.

Concrete and Masonry
For surface preparation, refer to SSPC-SP13/NACE 6, or ICRI No. 310.2R, CSP 2-3. Surfaces should be thoroughly clean and dry. Concrete and mortar must be cured at least 28 days @ 75°F (24°C). Remove all loose mortar and foreign material. Surface must be free of laitance, concrete dust, dirt, form release agents, moisture curing membranes, loose cement and hardeners. Fill bug holes, air pockets and other voids with Steel-Seam FT910. Primer required.

Follow the standard methods listed below when applicable:
ASTM D4258 Standard Practice for Cleaning Concrete.
ASTM D4259 Standard Practice for Abrading Concrete.
ASTM D4260 Standard Practice for Etching Concrete.
ASTM F1869 Standard Test Method for Measuring Moisture Vapor Emission Rate of Concrete.
SSPC-SP 13/Nace 6 Surface Preparation of Concrete.
ICRI No. 310.2R Concrete Surface Preparation.

Concrete, Immersion Service:
For surface preparation, refer to SSPC-SP13/NACE 6, Section 4.3.1 or 1.3.2 or ICRI No. 310.2R, CSP 2-3.

Surface Preparation Standards

Condition of Surface		ISO 8501-1 BS7079:A1	Swedish Std. SIS055900	SSPC	NACE
White Metal		Sa 3	Sa 3	SP 5	1
Near White Metal		Sa 2.5	Sa 2.5	SP 10	2
Commercial Blast		Sa 2	Sa 2	SP 6	3
Brush-Off Blast		Sa 1	Sa 1	SP 7	4
Hand Tool Cleaning	Rusted	C St 2	C St 2	SP 2	-
	Pitted & Rusted	D St 2	D St 2	SP 2	-
Power Tool Cleaning	Rusted	C St 3	C St 3	SP 3	-
	Pitted & Rusted	D St 3	D St 3	SP 3	-

APPLICATION CONDITIONS

Temperature (air, surface):

B62-V210 Hardeners	50°F (10°C) minimum, 110°F (43°C) maximum
B62V211 Hardener	40°F (4.5°C) minimum, 77°F (25°C) maximum
	At least 5°F (2.8°C) above dew point

Material should be 70°F (21°C) to 85°F (29°C) or optimal performance.

Relative humidity: 85% maximum

APPLICATION EQUIPMENT

The following is a guide. Changes in pressures and tip sizes may be needed for proper spray characteristics. Always purge spray equipment before use with listed reducer. Any reduction must be compliant with existing VOC regulations and compatible with the existing environmental and application conditions.

Reduction .....Not recommended

Clean Up .....MEK, R6K10 or R7K104 Reducer

Airless Spray
Unit.....74:1 Pump, minimum
Pressure.....6000 psi minimum
Hose.....3/8" ID
Tip .....019" - .021"
Filter.....30 mesh

In order to avoid blockage of spray equipment and hose, flush equipment with MEK, R6K10 or R7K104 Reducer at least once every 30 minutes when using the B62V210 Hardener and after each kit when using the Low Temperature Hardener, and before periods of extended downtime.

Plural Component Equipment .....Acceptable

Brush .....For stripe coating and repair only
Brush.....Nylon/Polyester or Natural Bristle

Roller .....For stripe coating and repair only
Cover .....3/8" woven with solvent resistant core

If specific application equipment is not listed above, equivalent equipment may be substituted.

continued on back

Protective & Marine Coatings

NSF Certified to NSF/ANSI 61

DURA-PLATE® UHS

WITH OPTI-CHECK OAP TECHNOLOGY

PART A	B62-210	SERIES
PART A	B62W211	WHITE OAP (NSF)
PART B	B62V210	STANDARD HARDENER (NSF)
PART B	B62V211	LOW TEMP HARDENER (NSF)

Revised: December 3, 2014

APPLICATION BULLETIN

TRM.35

APPLICATION PROCEDURES

Surface preparation must be completed as indicated.

Mixing Instructions: Mix contents of each component thoroughly using low speed power agitation. Make certain no pigment remains on the bottom or the sides of the can. Then combine four parts by volume of Part A with one part by volume of Part B. Thoroughly agitate the mixture with power agitation.

To ensure that no unmixed material remains on the sides or bottom of the cans after mixing, visually observe the container by pouring the material into a separate container.

Apply paint at the recommended film thickness and spreading rate as indicated below:

Recommended Spreading Rate per coat*:

	1 coat system Min.		1 coat system Max.		2 coat system Min.		2 coat system Max.	
Wet mils (microns)	**18.0**	450	**22.0**	550	**10.0**	250	**12.0**	300
Dry mils (microns)	**18.0**	450	**22.0**	550	**10.0**	250	**12.0**	300
Total mils (microns)	**18.0**	450	**22.0**	550	**20.0**	500	**24.0**	600
~Coverage sq ft/gal (m^2/L)	**72**	1.76	**90**	2.2	**130**	3.18	**160**	3.9
Theoretical coverage **sq ft/gal** (m^2/L) @ 1 mil/25 micron dft	**1568** (38.4)							

* See NSF Systems on next page.

NOTE: Brush or roll application recommended for stripe coating and repair only. Standard hardener preferred for brush & roll due to pot life.

Drying Schedule @ 10.0-22.0 mils wet (250-550 microns):

With B62-V210	**@ 55°F/13°C *50% RH***	**@ 77°F/25°C**	**@ 100°F/38°C**
To touch:	12 hours	5 hours	3 hours
To handle:	48 hours	14 hours	8 hours
To recoat:			
minimum:	48 hours	14 hours	8 hours
maximum:	21 days	14 days	14 days
Cure to service:	10 days	4 days	24 hours
Heat Cure:	8 hours @ ambient, then 16 hrs @ 140°F (60°C)*		

*Not NSF Approved. See Tips Section.

Pot Life*:	30-45 minutes	30-45 minutes	20-30 minutes
*Dependent upon temperature and mass			
Sweat-in-time:	15 minutes	None	None

With B62V211	**@ 40°F/4.5°C**	**@ 55°F/13°C *50% RH***	**@ 77°F/25°C**
To touch:	24 hours	5 hours	3 hours
To handle:	48 hours	24 hours	8 hours
To recoat:			
minimum:	48 hours	24 hours	8 hours
maximum:	30 days	21 days	14 days
Cure to service:	7 days	5 days	3 days
Heat Cure:	8 hours @ ambient, then 16 hrs @ 140°F (60°C)*		

Material should be at least 50°F (10°C) for optimal performance.

If maximum recoat time is exceeded, abrade surface before recoating.

Drying time is temperature, humidity, and film thickness dependent.

Sterilize and rinse per AWWA C652.

*Not NSF Approved. See Tips Section.

Pot Life*:	20 minutes	20 minutes	10 minutes
*Dependent upon temperature and mass			
Sweat-in-Time:	5 minutes	None	None

Note: Recommended application procedure direct to steel: Apply a 5.0-6.0 mil (125-150 micron) coat to the substrate. Allow material to "wet" the surface. Then apply additional material, to bring total film thickness to the recommended range.

Application of coating above maximum or below minimum recommended spreading rate may adversely affect coating performance.

CLEAN UP INSTRUCTIONS

Clean spills and spatters immediately with MEK, R6K10. Clean tools immediately after use with MEK, R6K10. Follow manufacturer's safety recommendations when using any solvent.

PERFORMANCE TIPS

Repair of Pitted Tank Bottoms
Extensive, deep pitting:
Options:
Option 1 ....Apply a full wet coat, by spray application, of Dura-Plate UHS Primer. Follow with rubber squeegee to work material into and fill the pitted areas. After recommended drying time, apply a full coat of Dura-Plate UHS at recommended film thickness.
Option 2 ....Apply Dura-Plate Laminant Resin with 1½ oz fiberglass mat over the pitted areas. After recommended drying time, apply a full coat of Dura-Plate UHS at recommended film thickness.
Option 3 ....Weld new steel plates, or use puddle welds, as required to repair pitted areas. Coat areas as recommended.
Shallow pitting, isolated areas:
Options:
Option 1 ....Same as number 1 above.
Option 2 ....Apply Steel-Seam FT910 as required to fill the pitted areas. Coat areas as recommended.

When using spray application, use a 50% overlap with each pass of the gun to avoid holidays, bare areas, and pinholes. If necessary, cross-coat spray at a right angle.

Spreading rates are calculated on volume solids and do not include an application loss factor due to surface profile, roughness or porosity of the surface, skill and technique of the applicator, method of application, various surface irregularities, material lost during mixing, spillage, overthinning, climatic conditions, and excessive film build.
No reduction of material is recommended as this can affect film build, appearance, and adhesion.

Do not mix previously catalyzed material with new.

Do not apply the material beyond recommended pot life.

In order to avoid blockage of spray equipment and hose, flush equipment with MEK, R6K10 or R7K104 Reducer at least once every 30 minutes when using the B62V210 Hardener and after each kit when using the Low Temperature Hardener, and before periods of extended downtime.

For Immersion Service: (if required) Holiday test in accordance with ASTM D5162 for steel, or ASTM D4787 for concrete.

May be applied up to 50.0-60.0 mils (1250-1500 microns) dft in one coat if required.

When using the B62L210 Primer containing the OAP fluorescent pigment, make sure a non-containing OAP fluorescent pigment Topcoat is used.

Stripe coat all crevices, welds, and sharp angles to prevent early failure in these areas.

Heat curing is not acceptable for NSF approval.

Guidance on techniques and required equipment to inspect a coating system incorporating Opti-Check OAP Technology can be found in SSPC-TU 11.

Refer to Product Information sheet for additional performance characteristics and properties.

SAFETY PRECAUTIONS

Refer to the MSDS sheet before use.

Published technical data and instructions are subject to change without notice. Contact your Sherwin-Williams representative for additional technical data and instructions.

WARRANTY

The Sherwin-Williams Company warrants our products to be free of manufacturing defects in accord with applicable Sherwin-Williams quality control procedures. Liability for products proven defective, if any, is limited to replacement of the defective product or the refund of the purchase price paid for the defective product as determined by Sherwin-Williams. NO OTHER WARRANTY OR GUARANTEE OF ANY KIND IS MADE BY SHERWIN-WILLIAMS, EXPRESSED OR IMPLIED, STATUTORY, BY OPERATION OF LAW OR OTHERWISE, INCLUDING MERCHANTABILITY AND FITNESS FOR A PARTICULAR PURPOSE.

DISCLAIMER

The information and recommendations set forth in this Product Data Sheet are based upon tests conducted by or on behalf of The Sherwin-Williams Company. Such information and recommendations set forth herein are subject to change and pertain to the product offered at the time of publication. Consult your Sherwin-Williams representative to obtain the most recent Product Data Information and Application Bulletin.

Protective & Marine Coatings

ENVIROLASTIC® 940 DTM
POLYASPARTIC URETHANE

PART A	B65-940	SERIES
PART B	B65V940	HARDENER

Revised: February 6, 2014

PRODUCT INFORMATION

5.52

PRODUCT DESCRIPTION

ENVIROLASTIC 940 DTM is a single coat, direct-to-metal urethane finish. It is a fast dry, polyaspartic urethane formulated to provide high build, high performance protection and gloss and color retention through airless spray.

- Single coat application
- Direct to metal
- Corrosion resistant
- High film build in one coat
- Cures quickly to improve productivity
- No gassing
- Outstanding application properties

PRODUCT CHARACTERISTICS

Finish: Gloss

Color: Wide range of colors possible

Volume Solids: 68% ± 2%, mixed, may vary by color

Weight Solids: 80% ± 2%, mixed, may vary by color

VOC (EPA Method 24): 265 g/L; 2.21 lb/gal, mixed, may vary by color

Mix Ratio: 2:1 by volume

Recommended Spreading Rate per coat:

	Minimum	Maximum
Wet mils (microns)	**9.0** (225)	**13.0** (325)
Dry mils (microns)	**6.0** (150)	**9.0** (225)
~Coverage sq ft/gal (m^2/L)	**121** (3.0)	**182** (4.5)
Theoretical coverage **sq ft/gal** (m^2/L) @ 1 mil / 25 microns dft	**1089** (26.7)	

NOTE: Brush or roll application may require multiple coats to achieve maximum film thickness and uniformity of appearance.

Drying Schedule @ 9.0 mils wet (225 microns):

	@ 35°F/1.6°C	@ 50°F/10°C	@ 77°F/25°C 50% RH	@ 120°F/49°C
To touch:	5 hours	3 hours	1 hour	30 minutes
To handle:	16 hours	7 hours	2 hours	1 hour
To recoat:				
minimum:	16 hours	7 hours	2 hours	1 hour
maximum:	3 months	3 months	3 months	45 days
To cure:	7 days	7 days	4 days	2 days
Pot Life:	4 hours	3 hours	2 hours	30 minutes
Sweat-in-Time:	None required			

If maximum recoat time is exceeded, abrade surface before recoating. Drying time is temperature, humidity, and film thickness dependent.

Shelf Life:	Part A - 24 months, unopened Part B - 24 months, unopened Store indoors at 40°F (4.5°C) to 100°F (38°C).
Flash Point:	57°F (14°C), mixed (Seta Flash)
Reducer/Clean Up:	
Below 80°F (27°C):	MEK, R6K10
Above 80°F (27°C):	Reducer R7K216
Brush / Roll:	Reducer R7K216

RECOMMENDED USES

- Direct to properly prepared steel and galvanizing in industrial environments
- Replaces conventional epoxy/urethane systems
- Ideal for maintenance or new construction applications
- Suitable for use in USDA inspected facilities
- Acceptable for use in high performance architectural applications
- Suitable for use in the Mining & Minerals Industry
- Not recommended for electrostatic spray or air-assisted airless spray

PERFORMANCE CHARACTERISTICS

Substrate*: Steel

Surface Preparation*: SSPC-SP10/NACE 2

System Tested*:

1 ct. Envirolastic 940 DTM @ 6.0-9.0 mils (150-225 microns) dft

*unless otherwise noted below

Test Name	Test Method	Results
Abrasion Resistance	ASTM D4060, CS17 wheel, 1000 cycles, 1 kg load	120 mg loss
Adhesion	ASTM D4541	1400 psi
Direct Impact Resistance	ASTM G14	60 in lb
Dry Heat Resistance	ASTM D2485	200°F (93°C)
Flexibility	ASTM D522, 180° bend, 3/4" mandrel	Passes
Pencil Hardness	ASTM D3363	H

continued on back

Protective & Marine Coatings

ENVIROLASTIC® 940 DTM
POLYASPARTIC URETHANE

PART A	B65-940	SERIES
PART B	B65V940	HARDENER

Revised: February 6, 2014

PRODUCT INFORMATION

5.52

RECOMMENDED SYSTEMS

	Dry Film Thickness / ct. Mils	(Microns)
Steel:		
1 ct. Envirolastic 940 DTM	6.0-9.0	(150-225)
Galvanizing:		
1 ct. DTM Wash Primer	0.7-1.3	(18-32)
1 ct. Envirolastic 940 DTM	6.0-9.0	(150-225)
Galvanizing:		
1 ct. Envirolastic 940 DTM	6.0-9.0	(150-225)
Steel, if primer is required:		
1 ct. Corothane I GalvaPac Zinc Primer	3.0-4.0*	(75-100)
1 ct. Envirolastic 940 DTM	6.0-9.0	(150-225)
Previously Painted Surfaces:		
1 ct. Envirolastic 940	4.0-7.0	(100-200)
Check Compatibility		

* other acceptable primers
- Fast Clad Zinc HS
- Macropoxy 646 Epoxy
- Steel Spec Epoxy Primer
- Zinc Clad III HS
- Zinc Clad IV

SURFACE PREPARATION

Surface must be clean, dry, and in sound condition. Remove all oil, dust, grease, dirt, loose rust, and other foreign material to ensure adequate adhesion.

Refer to product Application Bulletin for detailed surface preparation information.

The systems listed above are representative of the product's use, other systems may be appropriate.

DISCLAIMER

The information and recommendations set forth in this Product Data Sheet are based upon tests conducted by or on behalf of The Sherwin-Williams Company. Such information and recommendations set forth herein are subject to change and pertain to the product offered at the time of publication. Consult your Sherwin-Williams representative to obtain the most recent Product Data Information and Application Bulletin.

Minimum recommended surface preparation:

Iron & Steel: SSPC-SP6/NACE 3, 2 mil (50 micron) profile

Galvanizing: SSPC-SP16, 2 mil (50 micron) profile

Surface Preparation Standards

Condition of Surface	ISO 8501-1 BS7079:A1	Swedish Std. SIS055900	SSPC	NACE
White Metal	Sa 3	Sa 3	SP 5	1
Near White Metal	Sa 2.5	Sa 2.5	SP 10	2
Commercial Blast	Sa 2	Sa 2	SP 6	3
Brush-Off Blast	Sa 1	Sa 1	SP 7	4
Hand Tool Cleaning Rusted	C St 2	C St 2	SP 2	-
Hand Tool Cleaning Pitted & Rusted	D St 2	D St 2	SP 2	-
Power Tool Cleaning Rusted	C St 3	C St 3	SP 3	-
Power Tool Cleaning Pitted & Rusted	D St 3	D St 3	SP 3	-

TINTING

Tint with Maxitoner colorants only into Part A Ultra Deep at 100% tint strength and 150% tint strength for Extra White. Five minutes minimum mixing on a mechanical shaker is required for complete mixing of color.

APPLICATION CONDITIONS

Temperature: 35°F (1.6°C) minimum, 120°F (49°C) maximum
(air, surface, and material)
At least 5°F (2.8°C) above dew point

Relative humidity: 85% maximum

Refer to product Application Bulletin for detailed application information.

ORDERING INFORMATION

Packaging:

Part A: 2 qts. (1.9L) gallon can
Part B: 1 qt. (0.95L) quart can

Part A: 3 gallon (12.04L) pail
Part B: short filled 2 gallon (6.28L) pail

Weight: 11.4 ± 0.2 lb/gal ; 1.4 Kg/L
mixed, may vary with color

SAFETY PRECAUTIONS

Refer to the MSDS sheet before use.
Published technical data and instructions are subject to change without notice. Contact your Sherwin-Williams representative for additional technical data and instructions.

WARRANTY

The Sherwin-Williams Company warrants our products to be free of manufacturing defects in accord with applicable Sherwin-Williams quality control procedures. Liability for products proven defective, if any, is limited to replacement of the defective product or the refund of the purchase price paid for the defective product as determined by Sherwin-Williams. NO OTHER WARRANTY OR GUARANTEE OF ANY KIND IS MADE BY SHERWIN-WILLIAMS, EXPRESSED OR IMPLIED, STATUTORY, BY OPERATION OF LAW OR OTHERWISE, INCLUDING MERCHANTABILITY AND FITNESS FOR A PARTICULAR PURPOSE.

Protective & Marine Coatings

ENVIROLASTIC® 940 DTM
POLYASPARTIC URETHANE

PART A	B65-940	SERIES
PART B	B65V940	HARDENER

Revised: February 6, 2014

APPLICATION BULLETIN

5.52

SURFACE PREPARATIONS

Surface must be clean, dry, and in sound condition. Remove all oil, dust, grease, dirt, loose rust, and other foreign material to ensure adequate adhesion.

Iron & Steel
Remove all oil and grease from surface by Solvent Cleaning per SSPC-SP1. Minimum surface preparation is Commercial Blast Cleaning per SSPC-SP6/NACE 3. For better performance, use Near White Metal Blast Cleaning per SSPC-SP10/NACE 2. Blast clean all surfaces using a sharp, angular abrasive for optimum surface profile (2 mils / 50 microns). Prime any bare steel the same day as it is cleaned or before flash rusting occurs.

Aluminum
Remove all oil, grease, dirt, oxide and other foreign material by Solvent Cleaning per SSPC-SP1. Primer required.

Galvanized Steel
Surface Preparation Specification SSPC-SP 16 must be followed obtaining a surface profile of minimum 2.0 mils (50 microns).

Previously Painted Surfaces
If in sound condition, clean the surface of all foreign material. Smooth, hard or glossy coatings and surfaces should be dulled by abrading the surface. Apply a test area, allowing paint to dry one week before testing adhesion. If adhesion is poor, or if this product attacks the previous finish, removal of the previous coating may be necessary. If paint is peeling or badly weathered, clean surface to sound substrate and treat as a new surface as above.

Surface Preparation Standards

	Condition of Surface	ISO 8501-1 BS7079:A1	Swedish Std. SIS055900	SSPC	NACE
White Metal		Sa 3	Sa 3	SP 5	1
Near White Metal		Sa 2.5	Sa 2.5	SP 10	2
Commercial Blast		Sa 2	Sa 2	SP 6	3
Brush-Off Blast		Sa 1	Sa 1	SP 7	4
Hand Tool Cleaning	Rusted	C St 2	C St 2	SP 2	-
	Pitted & Rusted	D St 2	D St 2	SP 2	-
Power Tool Cleaning	Rusted	C St 3	C St 3	SP 3	-
	Pitted & Rusted	D St 3	D St 3	SP 3	-

APPLICATION CONDITIONS

Temperature:	35°F (1.6°C) minimum, 120°F (49°C) maximum (air, surface, and material) At least 5°F (2.8°C) above dew point
Relative humidity:	85% maximum

APPLICATION EQUIPMENT

The following is a guide. Changes in pressures and tip sizes may be needed for proper spray characteristics. Always purge spray equipment before use with listed reducer. Any reduction must be compliant with existing VOC regulations and compatible with the existing environmental and application conditions.

Reducer/Clean Up
- Above 80°F.....Reducer R7K216
- Below 80°F .....MEK, R6K10
- Brush and roll.....Reducer R7K216

Airless Spray
- Pump.....30:1
- Pressure.....2800 - 3000 psi
- Hose.....3/8" ID
- Tip .....017" - .021"
- Filter.....60 mesh
- Reduction.....As needed up to 5% by volume

Conventional Spray
- Gun .....Binks 95
- Cap 63P
- Fluid Tip 67
- Atomization Pressure.....50-70 psi
- Fluid Pressure.....20-25 psi
- Reduction.....As needed, up to 10% by volume

Brush (small areas only)
- Brush.....Natural bristle
- Reduction.....As needed up to 5% by volume

Roller (small areas only)
- Cover .....1/4" woven with solvent resistant core
- Reduction.....As needed up to 5% by volume

If specific application equipment is not listed above, equivalent equipment may be substituted.

continued on back

Protective & Marine Coatings

ENVIROLASTIC® 940 DTM
POLYASPARTIC URETHANE

PART A	B65-940	SERIES
PART B	B65V940	HARDENER

Revised: February 6, 2014

APPLICATION BULLETIN

5.52

APPLICATION PROCEDURES

Surface preparation must be completed as indicated.

Mix contents of each component thoroughly with low speed power agitation. Make certain no pigment remains on the bottom of the can. Then combine 2 parts by volume of Part A with 1 part by volume of Part B. Thoroughly agitate the mixture with power agitation.

If reducer solvent is used, add only after both components have been thoroughly mixed.

Apply paint at the recommended film thickness and spreading rate as indicated below:

Recommended Spreading Rate per coat:

	Minimum	Maximum
Wet mils (microns)	**9.0** (225)	**13.0** (325)
Dry mils (microns)	**6.0** (150)	**9.0** (225)
~Coverage sq ft/gal (m^2/L)	**121** (3.0)	**182** (4.5)
Theoretical coverage **sq ft/gal** (m^2/L) @ 1 mil / 25 microns dft	**1089** (26.7)	

NOTE: Brush or roll application may require multiple coats to achieve maximum film thickness and uniformity of appearance.

Drying Schedule @ 9.0 mils wet (225 microns):

	@ 35°F/1.6°C	@ 50°F/10°C	@ 77°F/25°C *50% RH*	@ 120°F/49°C
To touch:	5 hours	3 hours	1 hour	30 minutes
To handle:	16 hours	7 hours	2 hours	1 hour
To recoat:				
minimum:	16 hours	7 hours	2 hours	1 hour
maximum:	3 months	3 months	3 months	45 days
To cure:	7 days	7 days	4 days	2 days
Pot Life:	4 hours	3 hours	2 hours	30 minutes
Sweat-in-Time:	None required			

If maximum recoat time is exceeded, abrade surface before recoating. Drying time is temperature, humidity, and film thickness dependent.

Application of coating above maximum or below minimum recommended spreading rate may adversely affect coating performance.

CLEAN UP INSTRUCTIONS

Clean spills and spatters immediately with MEK, R6K10. Clean tools immediately after use with MEK, R6K10. Follow manufacturer's safety recommendations when using any solvent.

DISCLAIMER

The information and recommendations set forth in this Product Data Sheet are based upon tests conducted by or on behalf of The Sherwin-Williams Company. Such information and recommendations set forth herein are subject to change and pertain to the product offered at the time of publication. Consult your Sherwin-Williams representative to obtain the most recent Product Data Information and Application Bulletin.

PERFORMANCE TIPS

Stripe coat all crevices, welds, and sharp angles to prevent early failure in these areas.

When using spray application, use a 50% overlap with each pass of the gun to avoid holidays, bare areas, and pinholes. If necessary, cross spray at a right angle.

Spreading rates are calculated on volume solids and do not include an application loss factor due to surface profile, roughness or porosity of the surface, skill and technique of the applicator, method of application, various surface irregularities, material lost during mixing, spillage, overthinning, climatic conditions, and excessive film build.

Excessive reduction of material can affect film build, appearance, and adhesion.

Do not use Quik-Thane Urethane Accelerator.

Do not apply the material beyond recommended pot life.

Do not mix previously catalyzed material with new.

In order to avoid blockage of spray equipment, clean equipment before use or before periods of extended downtime with MEK, R6K10.

Mixed coating is sensitive to water. Use water traps in all air lines. Moisture contact can reduce pot life and affect gloss and color.

Refer to Product Information sheet for additional performance characteristics and properties.

SAFETY PRECAUTIONS

Refer to the MSDS sheet before use.

Published technical data and instructions are subject to change without notice. Contact your Sherwin-Williams representative for additional technical data and instructions.

WARRANTY

The Sherwin-Williams Company warrants our products to be free of manufacturing defects in accord with applicable Sherwin-Williams quality control procedures. Liability for products proven defective, if any, is limited to replacement of the defective product or the refund of the purchase price paid for the defective product as determined by Sherwin-Williams. NO OTHER WARRANTY OR GUARANTEE OF ANY KIND IS MADE BY SHERWIN-WILLIAMS, EXPRESSED OR IMPLIED, STATUTORY, BY OPERATION OF LAW OR OTHERWISE, INCLUDING MERCHANTABILITY AND FITNESS FOR A PARTICULAR PURPOSE.

4 – DETAILED TECHNICAL DOCUMENTATION

4.3 – SHOP DRAWINGS

4.3.3 – CENTRIFUGE

LEFT BLANK

Project name:	AMARUQ
Project#:	5000218009
Document #:	SPK_0003_CTF
by:	GH
chkd:	GP
appvd:	CB

SUBMITTAL PACKAGE

CENTRIFUGE

This page is intentionally left blank

Project name:	AMARUQ
Project#:	5000218009
Document #:	SPK_0003_CTF
by:	GH
chkd:	GP
appvd:	CB

CENTRIFUGE

PROCESS DATASHEET

OIM manual section: 4.3.3.1

REFER TO 5000218009_PSDS_0003_CTF_VWT

This page is intentionally left blank

Project name: AMARUQ

Project#: 5000218009

Document #: SPK_0003_CTF

by: GH

chkd: GP

appvd: CB

CENTRIFUGE

GENERAL ARRANGEMENT DRAWING

OIM manual section: 4.3.3.2

REFER TO 5000218009_GA_0003_CTF_VWT

This page is intentionally left blank

Project name: AMARUQ

Project#: 5000218009

Document #: SPK_0003_CTF

by: GH

chkd: GP

appvd: CB

CENTRIFUGE

INSTRUMENTS

OIM manual section: 4.3.3.3

This page is intentionally left blank

CS-451-100 : Identification sheet

VWTC PROJECT NUMBER:	5000218009	REV:	1
PROJECT NAME:	AEM AMARUQ	SUBMITTED TO (COMPANY):	AGNICO EAGLE MINES
ENGINEER:	Gabriel Hébert	SUBMITTED TO (RESPONSIBLE)	
PROJECT MANAGER:	Clément B	PROJECT NUM REFERENCE.:	
PHONE NUMBER:		LOT NUMBER:	

SUPPLIER	EQPT CODE	EQPT TAG NO	DIA	DESCRIPTION	INFO 1	INFO 2	INFO 3	APPLIC.	NOTE	REV
FLYGT	IESWLE201155	LSHH6-011	N/A	HIGH HIGH LEVEL SWITCH	LEVEL SWITCH/MANUFACTURER:FLYGT// MODEL: ENM-10 (6m)	N/A	N/A	CENTRIFUGE		rev1
FLYGT	IESWLE201155	LSHH6-021	N/A	HIGH HIGH LEVEL SWITCH	LEVEL SWITCH/MANUFACTURER:FLYGT// MODEL: ENM-10 (6m)	N/A	N/A	CENTRIFUGE		rev1
FLYGT	IESWLE201155	LSLL6-011	N/A	HOPPER LOW LEVEL SWITCH	LEVEL SWITCH/MANUFACTURER:FLYGT// MODEL: ENM-10 (6m)	N/A	N/A	CENTRIFUGE		rev1
FLYGT	IESWLE201155	LSLL6-021	N/A	HOPPER LOW LEVEL SWITCH	LEVEL SWITCH/MANUFACTURER:FLYGT// MODEL: ENM-10 (6m)	N/A	N/A	CENTRIFUGE		rev1

This page is intentionally left blank

Technical
specification

ENM-10 Level regulator

FLYGT
a xylem brand

Table of Contents

PRODUCT DESCRIPTION....2
Product description....2

CHEMICAL RESISTANCE LIST....6
Chemical resistance list....6

PRODUCT RANGE....8
Product range....8

PRODUCT DESCRIPTION

Product description

The simplest possible method for level control! A mechanical switch in a plastic casing, freely suspended at the desired height from its own cable. When the liquid level reaches the regulator, the casing will tilt and the mechanical switch will close or break the circuit, thereby starting or stopping a pump or actuating an alarm device. No wear, no maintenance! In sewage pumping stations, for ground water and drainage pumping – in fact, for most level control applications – the ENM-10 is the ideal solution.

The regulator casing is made of polypropylene and the cable is sheathed with a special PVC or Nitrile/PVC rubber compound. The plastic components are welded and screwed together. Adhesive is never used. Impurities and deposits will not adhere to the smooth casing.

This level regulator is available in different versions, depending upon the medium in which it is to be used. As standard, the regulator can be obtained with 6, 13, 20, 30 or 50 metres (20, 42, 65, 100 or 167 feet) of cable for liquids with specific density between 0.95 and 1.10 g/cm3; for other specific densities and for the Ex-version, the regulator is only available with 20 metres (65 ft) of cable. The regulator can withstand up to 60°C (140°F).

Technical data

Liquid temperature:	min. 0°C (32°F) max. 60°C (140°F)
Liquid density:	min. 0.65 g/cm^3 max. 1.5 g/cm^3
Degree of protection:	IP68, 20 m (65 ft)
Interrupting capacity of micro switch:	AC, resistive load, 250V 10A AC, inductive load, 250V 3A cos ϕ = 0.5 DC, 30V 5A
With gold plated micro switch:	same as above, except: DC, 24V 10mA

Note that local regulations may limit the voltage.

Materials

Body:	Body:
Bending relief:	EPDM rubber
Cable:	special compound PVC or NBR/PVC nitrile/PVC rubber

Dimensions

Table 1

For density g/cm^3	Regulator length mm (in.)	Diameter mm (in.)
0.65–0.80	194 (7 10/16)	100 (4)
0.80–0.95	177 (7)	100 (4)
0.95–1.10	162 (6 3/8)	100 (4)
1.05–1.20	142 (5 9/16)	100 (4)
1.20–1.30	133 (5 1/4)	100 (4)

For density g/cm^3	Regulator length mm (in.)	Diameter mm (in.)
1.30–1.40	130 (5 2/16)	100 (4)
1.40–1.50	126 (5)	100 (4)

Weight: approx. 2 kg (4.5 lb) for a standard density regulator with 20 m cable.

Approvals: CE, CSA, SEMKO, NEMKO, DEMKO

LVD approval according to EN61058

CSA approval: Cert no. 1330172

Cl.I Zone 0, Gr. IIC;

CL.I Div.1 Gr A, B, C&D;

Cl.II Gr. E, F&G;

Cl.III when installed to the certified Intrinsically Safe relay, Ex ia, rated for the locations per submitter controll drawing and installation manual.

Intrincically safe circuits are required for the automatic control system. - Use a EX-safety barrier (e.g. Prod. no. 84 01 07).

0080

Figure 1

Wiring alternative

To conform to local regulations, the level regulators are normally connected through a transformer to a low-tension control circuit.

Two regulators are used; one for starting and one for stopping. A third regulator can be connected if an alarm is required at a given level.

Identical regulators can be used for all functions.

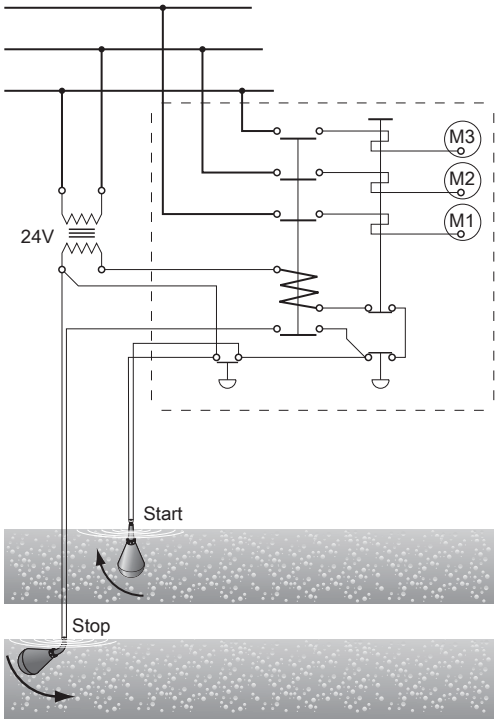

Connect the gray and black leads.

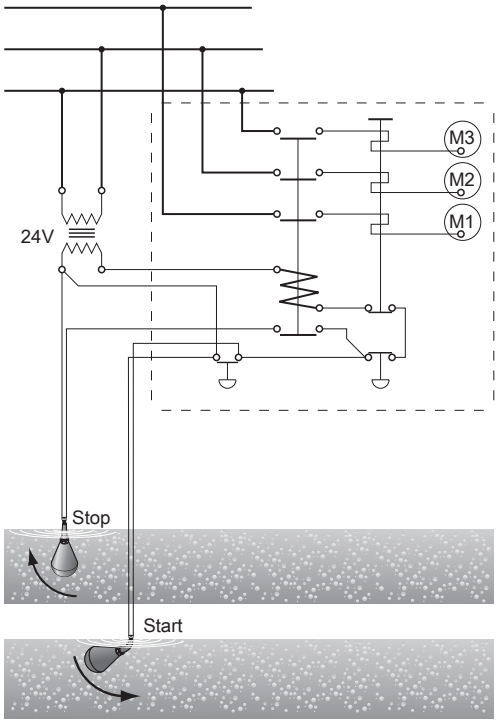

Connect the gray and brown leads.

Insulate the brown lead.
Figure 2: Connected for emptying

Insulate the black lead.
Figure 3: Connected for emptying

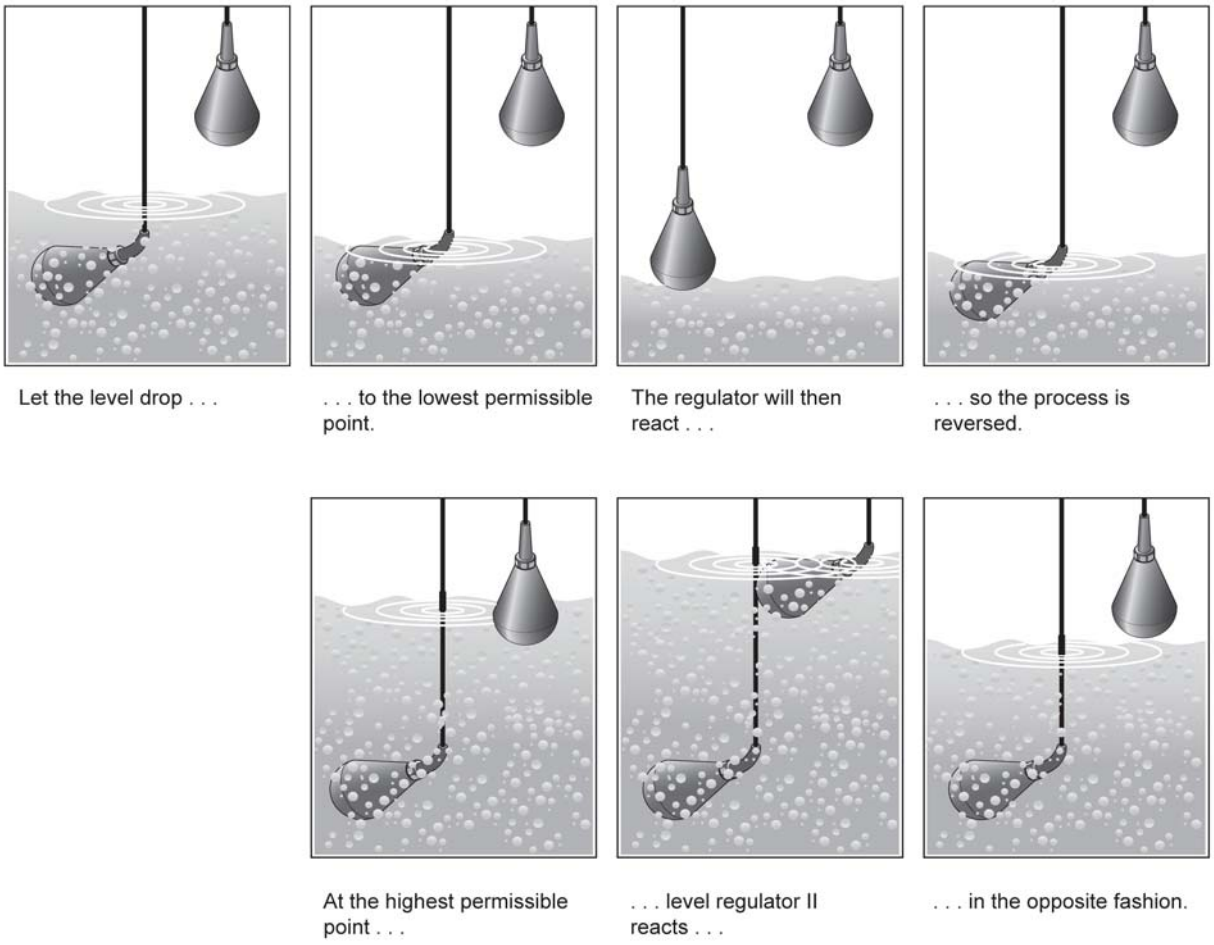

Figure 4

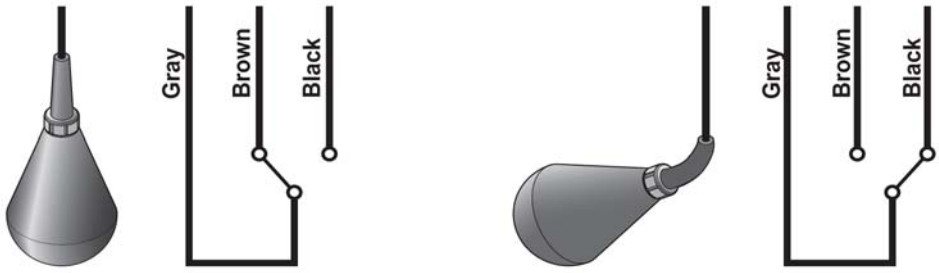

Figure 5: Colour code

Maintenance and repair

ENM-10 is very durable and practically maintenance free. You only have to check on it occasionally, to ensure its continual operation.

- It is recommended to occasionally clean ENM-10, and especially when fat/grease covers the plastic surface.
- At the same time, make an occular inspection of the regulator to make sure neither cable, protective sleeve or plastic casing show any signs of damage.

- A damaged ENM-10 cannot be repaired in any way, due to the hermetic encapsulation. If the unit is found to be damaged, replace it with a new one.
- For Ex-installations, also make absolutely sure that the Ex-barrier (e.g. Prod. no. 84 01 07) is operating correctly - The LED changes when the switch is toggled.

The manufacturers reserve the right to alter performance specification or design without notice.

CHEMICAL RESISTANCE LIST

Chemical resistance list

The liquid in which level regulation is practiced most frequently is, of course, water. Of the millions of regulators in use all over the world today, it is estimated that nine out of ten work in water.

However, with a float body of polypropylene, a cable of PVC or NBR/PVC nitrile/PVC rubber and a bending relief of EPDM rubber, the ENM-10 is virtually insensitive to many aggressive liquids.

The table shows how resistant the ENM-10 equipped with either PVC or NBR/PVC nitrile/PVC rubber cable, is to different chemicals at two different temperatures.

The classification is broken down into the following categories:

0 = No effect, 1 = Minor to moderate and 2 = Severe effect. The sign – means that information is not available.

Keep in mind also that the density of the liquid determines the bouyancy of the regulator. The ENM-10 is made for seven different densities. See *Product description* (page 2).

Always observe local regulations:

Take particular note of:

- risk of fire/explosion
- hygiene requirements

Acids	PVC cable		NBR/PVC nitrile/PVC rubber cable	
	20°C (68°F)	60°C (140°F)	20°C (68°F)	60°C (140°F)
Acetic Acid 50%	1	2	0	0
Acetic Acid 75%	2	2	0	0
Benzoic Acid	2	2	0	0
Boric Acid 5%	0	—	0	0
Butyric Acid	2	2	2	2
Chromic Acid 10%	0	2	2	2
Citric Acid	0	1	0	0
Hydrobromic Acid 5%	1	2	0	0
Hydrochloric Acid 10%	0	1	0	1
Hydrochloric Acid 37%	1	2	0	2
Hydrocyanic Acid 10%	0	0	1	2
Hydrofluoric Acid 5%	0	2	0	1
Hypochloric Acid	1	2	2	2
Maleic Acid	2	2	2	2
Nitric Acid 5%	1	1	1	1
Nitric Acid 65%	2	2	2	2
Oleic Acid	1	2	2	2
Oxalic Acid 50%	1	1	1	2
Phosphoric Acid 25%	0	0	1	2
Phosphoric Acid 85%	0	0	1	2
Sulphuric Acid 10%	1	2	1	2
Sulphuric Acid 78%	2	2	2	2
Tannic Acid	0	0	0	0
Tartaric Acid	1	1	1	1
Bases				
Ammonium Hydroxide	0	—	0	0
Calcium Hydroxide	0	0	0	0
Potassium Hydroxide	1	2	0	0
Sodium Hydroxide	1	2	0	0

Salts	PVC cable		NBR/PVC nitrile/PVC rubber cable	
	20°C (68°F)	60°C (140°F)	20°C (68°F)	60°C (140°F)
Aluminium Chloride	0	0	0	0
Calcium Sulphate	0	0	0	0
Calcium Chloride	0	0	0	0
Calcium Nitrate	0	0	0	0
Copper Chloride	0	0	0	0
Copper Sulphate	0	0	0	0
Ferric Chloride	0	0	0	0
Ferrous Sulphate	0	0	0	0
Magnesium Chloride	0	0	0	0
Potassium Sulphate	0	0	0	0
Potassium Nitrate	0	0	0	0
Potassium Carbonate	1	1	1	1
Potassium Bicarbonate	0	0	0	0
Sodium Sulphate	0	0	0	0
Sodium Chloride	0	0	0	0
Sodium Nitrate	0	0	0	0
Sodium Bicarbonate	0	0	0	0
Sodium Carbonate	0	0	0	0
Tin Chloride	1	1	1	1
Zinc Sulphate	0	0	0	0
Zinc Chloride	0	0	0	0
Oils				
Castor Oil	1	1	1	1
Cocoanut Oil	0	—	0	2
Corn Oil	2	2	2	2
Diesel Oil	2	2	2	2
Linseed Oil	2	2	2	2
Mineral Oils	2	2	2	2
Olive Oil	1	1	1	1
Silicone Oils	0	0	0	0

Solvents and miscellaneous	PVC cable		NBR/PVC nitrile/PVC rubber cable	
	20°C (68°F)	60°C (140°F)	20°C (68°F)	60°C (140°F)
Aceton	2	2	2	2
Aniline	2	2	1	2
Benzene	2	2	2	2
Butyl Alcohol	2	2	0	1
Carbon Tetrachloride	2	2	2	2
Chlorobenzene	2	2	2	2
Chloroform	2	2	2	2
Ethyl Alcohol	2	2	0	1
Ethyl Ether	2	2	2	2
Ethyl Acetate	2	2	2	2
Ethylene Dichloride	2	2	2	2
Ethylene Chloride	2	2	2	2
Formaldehyde 37%	1	2	0	0
Gasoline	2	2	2	2
Kerosene	2	2	2	2
Methyl Alcohol	2	2	0	0
Methyl Ethyl Ketone	2	2	2	2
Methylene Chloride	2	2	2	2
Nitrobenzene	2	2	2	2
Phenol	2	2	2	2
Toluene	2	2	2	2
Trichlorethylene	2	2	2	2
Turpentine	2	2	2	2
Xylene	2	2	2	2
Gases				
Carbon Dioxide	0	0	0	0
Carbon Monoxide	0	0	0	0
Chlorine (wet)	2	2	2	2
Hydrogen Sulphide	0	0	1	1
Sulphur Dioxide (wet)	1	1	2	2

0 = No effect, 1 = Minor to moderate, 2 = Severe effect. – = No information available.

Figure 6

PRODUCT RANGE

Product range

Part no.	For density [g/cm³]	Color of level switch	Type of cable	Cable length [m]	Approvals	For market	Notes
5828800	0,65-0,80	Blue	1	20	CE		
5828801	0,80-0,95	Blue	1	20	CE		
5828802	0,95-1,10	Blue	1	6	CE		
5828803	0,95-1,10	Blue	1	13	CE		
5828804	0,95-1,10	Blue	1	20	CE		
5828805	1,05-1,20	Blue	1	20	CE		
5828806	1,2-1,3	Blue	1	20	CE		
5828807	1,3-1,4	Blue	1	20	CE		
5828808	1,4-1,5	Blue	1	20	CE		
5828809	0,65-0,80	Grey	5	20	CSA/CE	Canada	
5828810	0,80-0,95	Grey	5	20	CSA/CE	Canada	
5828811	0,95-1,10	Grey	5	6	CSA/CE	Canada	
5828812	0,95-1,10	Grey	5	13	CSA/CE	Canada	
5828813	0,95-1,10	Grey	5	20	CSA/CE	Canada	
5828814	1,05-1,20	Grey	5	20	CSA/CE	Canada	
5828815	1,2-1,3	Grey	5	20	CSA/CE	Canada	
5828816	1,3-1,4	Grey	5	20	CSA/CE	Canada	
5828817	1,4-1,5	Grey	5	20	CSA/CE	Canada	
5828818	0,65-0,80	Grey	1	20	CSA/CE	Canada	
5828819	0,80-0,95	Grey	1	20	CSA/CE	Canada	
5828820	0,95-1,10	Grey	1	6	CSA/CE	Canada	
5828821	0,95-1,10	Grey	1	13	CSA/CE	Canada	
5828822	0,95-1,10	Grey	1	20	CSA/CE	Canada	
5828823	1,05-1,20	Grey	1	20	CSA/CE	Canada	
5828824	1,2-1,3	Grey	1	20	CSA/CE	Canada	
5828825	1,3-1,4	Grey	1	20	CSA/CE	Canada	
5828826	1,4-1,5	Grey	1	20	CSA/CE	Canada	
5828827	0,65-0,80	Blue	2	20	CE	USA	
5828828	0,80-0,95	Blue	2	20	CE	USA	
5828829	0,95-1,10	Blue	2	6	CE	USA	
5828830	0,95-1,10	Blue	2	13	CE	USA	
5828831	0,95-1,10	Blue	2	20	CE	USA	
5828832	1,05-1,20	Blue	2	20	CE	USA	
5828833	1,2-1,3	Blue	2	20	CE	USA	
5828834	1,3-1,4	Blue	2	20	CE	USA	
5828835	1,4-1,5	Blue	2	20	CE	USA	
5828836	0,95-1,10	Grey	5	30	CSA/CE	Canada	
5828837	0,95-1,10	Grey	5	50	CSA/CE	Canada	
5828838	0,95-1,10	Grey	5	100	CSA/CE	Canada	
5828839	0,95-1,10	Grey	5	150	CSA/CE	Canada	
5828851	0,95-1,10	Red	3	65	CE		
5828852	0,95-1,10	Red	3	6	CE		
5828853	0,95-1,10	Red	3	13	CE		
5828854	0,95-1,10	Red	3	20	CE		
5828855	0,95-1,10	Red	3	6	CSA/CE	Canada	
5828856	0,95-1,10	Red	3	13	CSA/CE	Canada	
5828857	0,95-1,10	Red	3	20	CSA/CE	Canada	

Cont. →

Figure 7

5828858	0,95-1,10	Red	4	6	CE	USA	
5828859	0,95-1,10	Red	4	13	CE	USA	
5828860	0,95-1,10	Red	4	20	CE	USA	
5828870	0,65-0,80	Blue	5	20	CE		
5828871	0,80-0,95	Blue	5	20	CE		
5828872	0,95-1,10	Blue	5	6	CE		
5828873	0,95-1,10	Blue	5	13	CE		
5828874	0,95-1,10	Blue	5	20	CE		
5828875	1,05-1,20	Blue	5	20	CE		
5828876	1,2-1,3	Blue	5	20	CE		
5828877	1,3-1,4	Blue	5	20	CE		
5828878	1,4-1,5	Blue	5	20	CE		
5828879	0,95-1,10	Blue	1	65	CE		
5828880	0,95-1,10	Blue	1	30	CE		
5828881	0,95-1,10	Blue	1	50	CE		
5828882	0,95-1,10	Grey	1	30	CSA/CE	Canada	
5828883	0,95-1,10	Grey	1	50	CSA/CE	Canada	
5828884	0,95-1,10	Blue	2	30	CE	USA	
5828885	0,95-1,10	Blue	2	50	CE	USA	
5828886	0,95-1,10	Red	3	30	CE		
5828887	0,95-1,10	Red	3	50	CE		
5828890	0,95-1,10	Blue	5	30	CE		
5828891	0,95-1,10	Blue	5	50	CE		
5828892	0,95-1,10	Red	3	6	CE	Japan	
5828893	0,95-1,10	Red	3	13	CE	Japan	
5828894	0,95-1,10	Red	3	20	CE	Japan	
5828895	0,95-1,10	Blue	1	6	CE	Japan	
5828896	0,95-1,10	Blue	1	13	CE	Japan	
5828897	0,95-1,10	Blue	1	20	CE	Japan	
5828898	0,95-1,10	Blue	1	50	CE	Japan	
5947919	0,95-1,10	Blue	5	20	CE		Designed for low current and slow movements
5947920	0,95-1,10	Grey	5	20	CSA/CE		Designed for low current and slow movements

Type of cable:

1. Blue PVC jacket with color coding of wires: Grey/Brown/Black
2. Blue PVC jacket with color coding of wires: Red/White/Black
3. Red PVC jacket with color coding of wires: Grey/Brown/Black
4. Red PVC jacket with color coding of wires: Red/White/Black
5. BLACK NBR/PVC jacket with color coding of wires: Grey/Brown/Black (NBR=Nitrile rubber)

Xylem |ˈzīləm|

1) The tissue in plants that brings water upward from the roots
2) A leading global water technology company

We're 12,000 people unified in a common purpose: creating innovative solutions to meet our world's water needs. Developing new technologies that will improve the way water is used, conserved, and re-used in the future is central to our work. We move, treat, analyze, and return water to the environment, and we help people use water efficiently, in their homes, buildings, factories and farms. In more than 150 countries, we have strong, long-standing relationships with customers who know us for our powerful combination of leading product brands and applications expertise, backed by a legacy of innovation.

For more information on how Xylem can help you, go to xyleminc.com

xylem
Let's Solve Water

Xylem Water Solutions AB
Gesällvägen 33
174 87 Sundbyberg
Sweden
Tel. +46-8-475 60 00
Fax +46-8-475 69 00
http://tpi.xyleminc.com

Visit our Web site for the latest version of this document and more information

The original instruction is in English. All non-English instructions are translations of the original instruction.

© 2011 Xylem Inc

891480_11.1_en.GB_2012-01_TS_ENM-10

This page is intentionally left blank

Project name: AMARUQ

Project#: 5000218009

Document #: SPK_0003_CTF

by: GH

chkd: GP

appvd: CB

CENTRIFUGE

PUMPS

OIM manual section: 4.3.3.4

This page is intentionally left blank

CS-999-011 : Identification sheet

VWTC PROJECT NUMBER:	5000218009	REV:	1
PROJECT NAME:	AEM AMARUQ	SUBMITTED TO (COMPANY):	AGNICO EAGLE MINES
ENGINEER:	Gabriel Hébert	SUBMITTED TO (RESPONSIBLE)	
PROJECT MANAGER:	Clément B	PROJECT NUM REFERENCE.:	
PHONE NUMBER:		LOT NUMBER:	

SUPPLIER	EQPT CODE	EQPT TAG NO	DIA	DESCRIPTION	INFO 1	INFO 2	INFO 3	APPLIC.	NOTE	REV
Sulzer	ST-999-011	P6-011		CENTRATE SUMP PUMP	Sulzer pump Duty Point 20m3/h @ 8m H20, Tag: P6-011 & P6-021 // Submersible Ejector Model #EJ15D-2,1.5HP-1710RPM,575/60/3,complete with contrablock impeller system,double mechanical seals, 2" Discharge,20ft Cable (External Overload Protection by Others)	Lifting Chain, 10ft Galvanized		CENTRIFUGE		
Sulzer	ST-999-011	P6-021		CENTRATE SUMP PUMP	Sulzer pump Duty Point 20m3/h @ 8m H20, Tag: P6-011 & P6-021 // Submersible Ejector Model #EJ15D-2,1.5HP-1710RPM,575/60/3,complete with contrablock impeller system,double mechanical seals, 2" Discharge,20ft Cable (External Overload Protection by Others)	Lifting Chain, 10ft Galvanized		CENTRIFUGE		

This page is intentionally left blank

MOTOR SPECIFICATIONS

Motor Design	NEMA design B, squirrel cage induction, oil filled, non toxic oil
Motor Type	Enclosed submersible
Insulation Class	Class B, rated at 120° C
Motor Protection	Single Phase: Internal thermal protection with automatic reset. Installer must provide circuit breaker for short circuit protection per N.E.C standards. Three Phase: Installer must provide external motor overload protection device such as a contactor w/ thermal relay, and circuit breaker for short circuit protection per N.E.C. standards.
Service Factor	1.15
Voltage Tolerance	± 10% from name plate rating

MOTOR DATA, 60Hz

Model	Phase	Output Power bhp	Volts	Full Load Amps	Locked Rotor Amps	NEMA Code Letter	Pole/ Speed (rpm)
EJ 15W-2	1*	1.5	230	15.0	59	L	4/1750
EJ 15D-2	3**	1.5	208-230	7.7-7.0	45-40	M	4/1750
	3**	1.5	460	3.5	20	M	4/1750
	3	1.5	575	2.8	16	M	4/1750

* Start switch and capacitor integrated into top of pump.

** These three phase motors are tri-voltage, 208/230/460.

MATERIALS of CONSTRUCTION

Upper Motor Lid	Cast Iron ASTM A48 Class 30
Motor Housing	Cast Iron ASTM A48 Class 30
Oil Chamber	Cast Iron ASTM A48 Class 30
Volute	Cast Iron ASTM A48 Class 30
Bottom Plate	Cast Iron ASTM A48 Class 30
Impeller	Cast Iron ASTM A48 Class 30
Lifting Bail	AISI 304 Stainless Steel
Oil (motor & oil chamber)	Non-toxic white mineral oil (Marcol 52)
External Hardware	AISI 304 Stainless Steel
O-Rings	Buna-N
Motor Shaft	AISI 420 Stainless Steel
Upper Bearing	Single row ball bearing
Lower Bearing(s)	Single row ball bearing
Upper Shaft Seal (secondary)	Rotating carbon face w/ stationary ceramic face.
Lower Shaft Seal (primary)	Rotating carbon face w/ stationary ceramic face. Includes V-ring lip seal for lower seal protection. Option: Silicon Carbide mechanical seal

DIMENSIONS, WEIGHT, AND MISC.

Pump weight, lb. (kg)	90 (41) [EJ 15W-2], 84 (38) [EJ 15D-2]
Maximum submergence, ft. (m)	65 (20)
Discharge size, standard	2 inch horizontal
Discharge type	Flange with standard ANSI class 125 bolt pattern.
Maximum temp. of pumped fluid	40°C continuous, 50°C intermittent
Agency Approvals	Approved by CSA to UL 778 and CSA C22.2-108 standards

CABLE SPECIFICATIONS

POWER CABLE	VOLTAGE	DIAMETER	LENGTH	OUTER JACKET
14/3 SJEOOW (EJ 15W-2)	230	0.36in (9.2mm)	20 ft (6m)	Thermoplastic elastomer
16/4 SEOOW (EJ 15D-2)	208-230/460/575	0.43in (10.9mm)		

LEFT BLANK

4 – DETAILED TECHNICAL DOCUMENTATION

4.3 – SHOP DRAWINGS

4.3.4 – SULFURIC ACID DOSING SKID

LEFT BLANK

Project name:	AMARUQ
Project#:	5000218009
Document #:	SPK_0004_PCH
by:	GH
chkd:	GP
appvd:	CB

SUBMITTAL PACKAGE

SULFURIC ACID DOSING SKID

This page is intentionally left blank

Project name:	AMARUQ
Project#:	5000218009
Document #:	SPK_0004_PCH
by:	GH
chkd:	GP
appvd:	CB

SULFURIC ACID DOSING SKID

PROCESS DATASHEET

OIM manual section: 4.3.4.1

REFER TO 5000218009_PSDS_0004_PCH_VWT

This page is intentionally left blank

Project name: AMARUQ

Project#: 5000218009

Document #: SPK_0004_PCH

by: GH

chkd: GP

appvd: CB

SULFURIC ACID DOSING SKID

GENERAL ARRANGEMENT DRAWING

OIM manual section: 4.3.4.2

REFER TO 5000218009_GA_0004_PCH_VWT

This page is intentionally left blank

Project name: AMARUQ

Project#: 5000218009

Document #: SPK_0004_PCH

by: GH

chkd: GP

appvd: CB

SULFURIC ACID DOSING SKID

PUMP(S)

OIM manual section: 4.3.4.3

This page is intentionally left blank

CS-999-002 : Identification sheet

VWTC PROJECT NUMBER:	5000218009	REV:	1
PROJECT NAME:	AEM AMARUQ	SUBMITTED TO (COMPANY):	AGNICO EAGLE MINES
ENGINEER:	Gabriel Hébert	SUBMITTED TO (RESPONSIBLE)	
PROJECT MANAGER:	Clément B	PROJECT NUM REFERENCE.:	
PHONE NUMBER:		LOT NUMBER:	

SUPPLIER	EQPT CODE	EQPT TAG NO	DIA	DESCRIPTION	INFO 1	INFO 2	INFO 3	APPLIC.	NOTE	REV
GRUNDFOS	ST-999-002	P9-531		SULFURIC ACID METERING PUMP	Grundfos // Fluid: Sulfuric acid dosing skid // PN 97722590 - DDA 17-7 AR-PV/T/C-F-31U7U7BG // PN 96609016, Input signal control cable, 4-20mA, pulse, start/stop // PN 96609019, Relay Output, Relay 1+2; tank Lvl error, stroke signal //			SULFURIC ACID DOSING SKID		
GRUNDFOS	ST-999-002	P9-532		SULFURIC ACID METERING PUMP	Grundfos // Fluid: Sulfuric acid dosing skid // PN 97722590 - DDA 17-7 AR-PV/T/C-F-31U7U7BG // PN 96609016, Input signal control cable, 4-20mA, pulse, start/stop // PN 96609019, Relay Output, Relay 1+2; tank Lvl error, stroke signal //			SULFURIC ACID DOSING SKID		

This page is intentionally left blank

GRUNDFOS

Company name:
Created by:
Phone:

Date: 4/6/2018

Position	Count	Description
	1	**DDA 17-7**

Product photo could vary from the actual product

Product No.: 97722590
DDA 17-7 AR-PV/T/C-F-31U7U7BG

The SMART Digital DDA is a compact positive displacement, diaphragm dosing pump with variable-speed drive (stepper motor) and intelligent control electronics with minimum energy consumption. The SMART Digital Dosing series operates at full stroke length to ensure optimum accuracy, priming and suction, even for high-viscosity or degassing liquids. The duration of each discharge stroke varies according to the capacity set, resulting in optimum smooth and continuous discharge flow.
The click-stop mounting plate allows installation in three different positions without using any additional accessories. The control cube can be turned easily into front, left or right position. The click wheel and the multi-coloured backlit graphical, plain-text LC display make commissioning and operation intuitive. The control elements are protected by a transparent cover.

The dosing head is composed of:
- Long lifetime and universal, chemically resistant full-PTFE diaphragm.
- Double ball valves for highest dosing accuracy.
- Deaeration valve for easy start-up.

Operation modes:
- Manual dosing in ml/h, l/h or gph.
- Pulse control in ml/pulse (incl. memory function).
- Analog control 0/4-20 mA (scalable).
- Pulse-based batch function in ml, l or gal.
- Timer-based batch function (Dosing timer, cycle or week).
- Fieldbus control (Genibus prepared for ProfibusDP E-box).

Other features:
- Auto deaeration during pump standby to avoid breakdowns due to air-locking.
- Two SlowMode steps (anti-cavitation), 50 % (maximum flow: 8.5 l/h) and 25 % (maximum flow: 4.25 l/h), e.g. for high-viscosity or degassing liquids.
- Service information display to show when service and which wear-part order number is required.
- Two-step key lock function to protect the pump against unauthorised access.
- Additional display function to provide further information, e.g. the actual mA input signal.
- Counter for total dosed volume (resettable), operating hours, etc.
- Save and load customised settings as well as reload of factory settings.

Signal inputs/outputs:
- Input for pulse, analog 0/4-20mA, external stop.
- Input for low-level and empty-tank signal.
- Two potential-free output relays for max. 30 V AC/DC (configurable, e.g. alarm, stroke signal, pump dosing, timer etc.)
- Output analog 0/4-20mA.
- Fieldbus communication interface (GeniBus, also for additional Profibus DP E-box to retrofit).

Technical:

GRUNDFOS

Company name:
Created by:
Phone:

Date: 4/6/2018

Position	Count	Description	
		Type key:	DDA 17-7 AR-PV/T/C-F-31U7U7BG
		Max. Flow:	17 l/h
		Max. flow in slow mode 50%:	8.5 l/h
		Max. flow in slow mode 25%:	4.25 l/h
		Min flow:	17,0 ml/h
		Turn-down ratio:	1:1000
		Approvals on nameplate:	CE,CSA-US,NSF61,RCM
		Valve type:	Standard
		Maximum viscosity at 100 %:	300 mPas
		Maximum viscosity in slow mode 50 %:	1300 mPas
		Maximum viscosity in slow mode 25 %:	2500 mPas
		Accuracy of repeatability:	1 %
		Materials:	
		Dosing head:	PVDF (Polyvinylidene fluoride)
		Valve ball:	Ceramic
		Gasket:	PTFE
		Installation:	
		Range of ambient temperature:	32 .. 113 °F
		Maximum operating pressure:	101.53 psi
		Installation set:	NO
		Installation type:	No installation set
		Pump inlet:	0.17x 1/4, 1/4x3/8, 3/8x1/2"
		Pump outlet:	0.17x 1/4, 1/4x3/8, 3/8x1/2"
		Max. Suction lift during operation:	19.7 ft
		Max. Suction lift during priming:	9.84 ft
		Liquid:	
		Pumped liquid:	Water
		Liquid temperature range:	14 .. 113 °F
		Liquid temperature during operation:	68 °F
		Density:	62.4 lb/ft³
		Electrical data:	
		Maximum power input - P1:	24 W
		Main frequency:	60 Hz
		Rated voltage:	1 x 100-240 V
		Enclosure class (IEC 34-5):	IP65 / NEMA 4X
		Length of cable:	4.92 ft
		Type of cable plug:	USA, Canada
		Inrush current:	25A at 230V for 2ms
		Controls:	
		Control variant:	AR
		Level control:	YES
		Analog input:	0/4-20 mA
		Pulse control:	YES
		Ext. Stop input:	YES
		Analog output:	0/4-20 mA
		Output relays:	2
		Bus communication:	YES
		Others:	
		Net weight:	6.62 lb
		Gross weight:	8.82 lb
		COLOR:	RED
		Custom tariff no.:	8413.50.0050

Company name:
Created by:
Phone:

Date: 4/6/2018

97722590 DDA 17-7 60 Hz

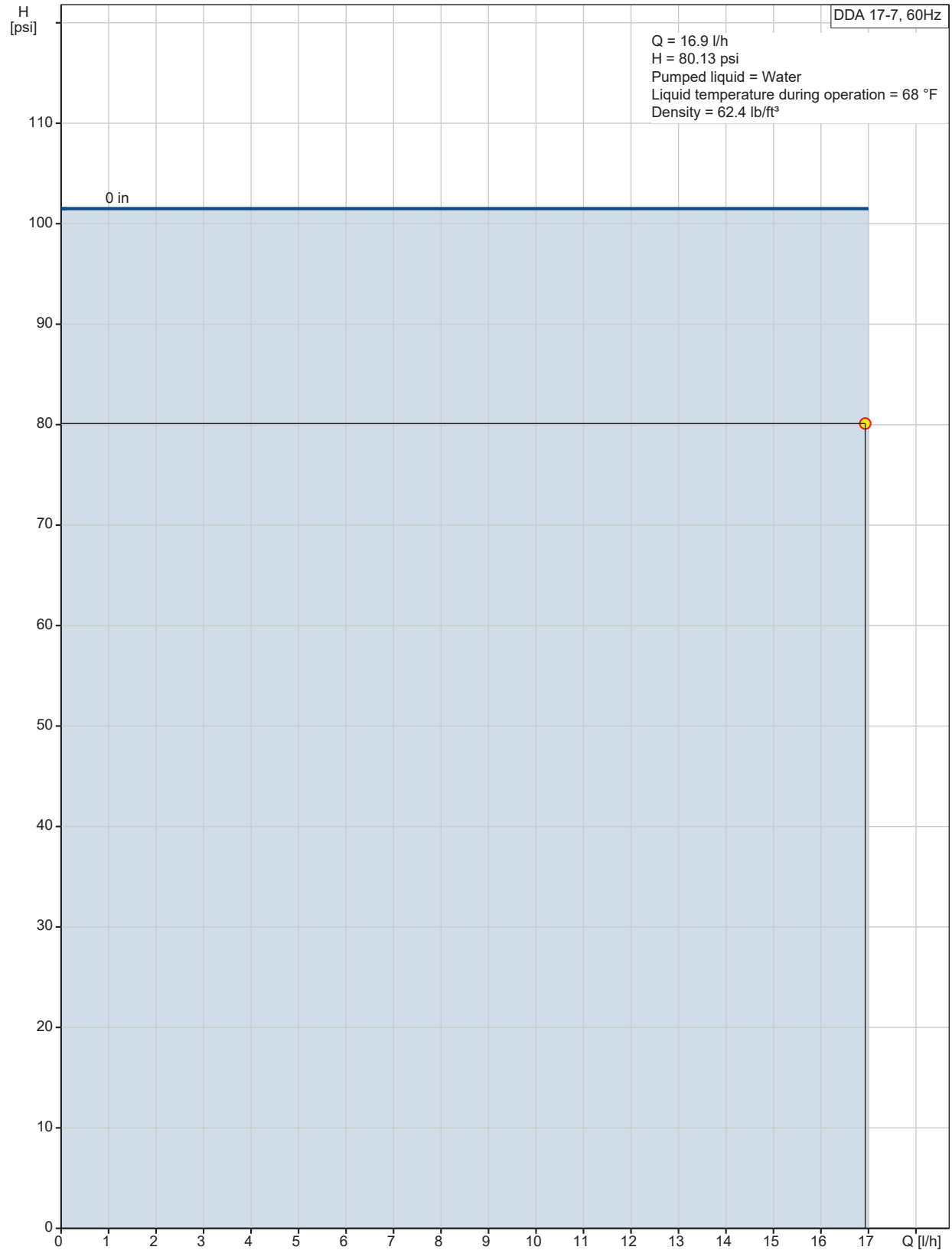

Company name:
Created by:
Phone:

Date: 4/6/2018

97722590 DDA 17-7 60 Hz

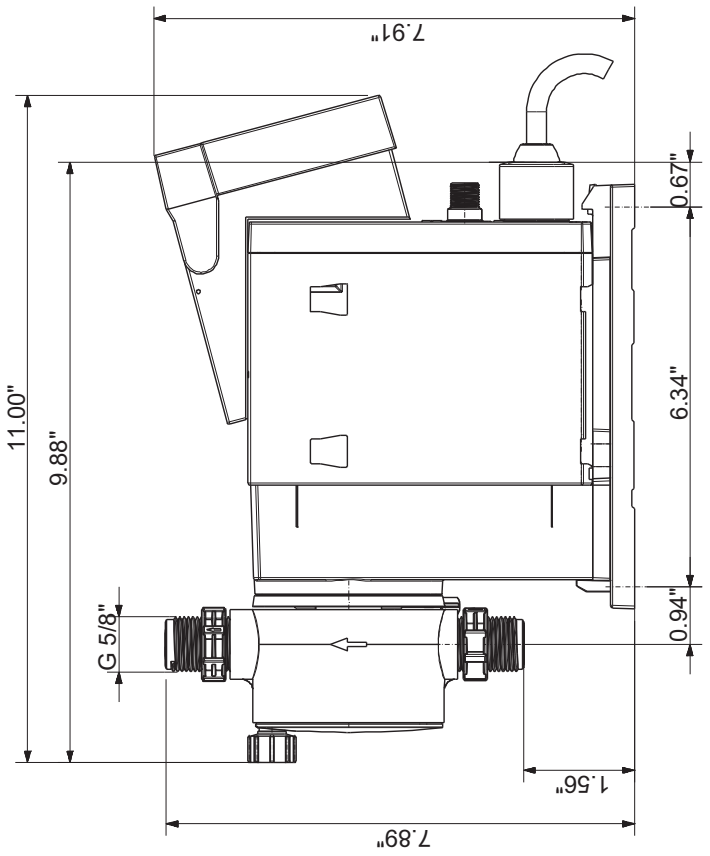

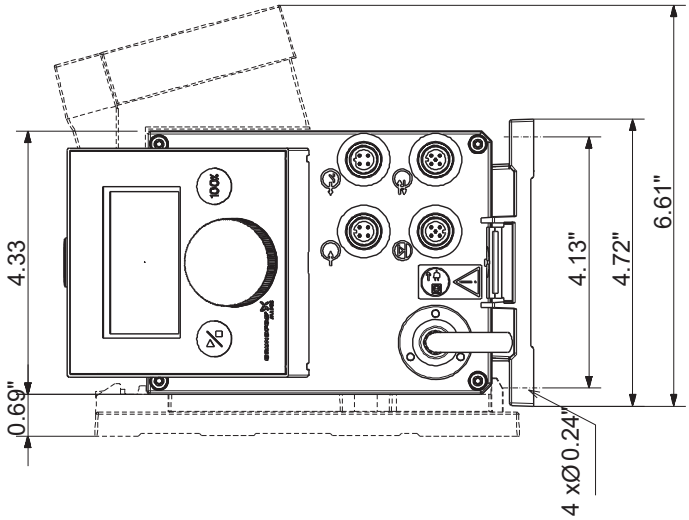

Note! All units are in [mm] unless otherwise stated.
Disclaimer: This simplified dimensional drawing does not show all details.

Project name: AMARUQ

Project#: 5000218009

Document #: SPK_0004_PCH

by: GH

chkd: GP

appvd: CB

SULFURIC ACID DOSING SKID

VALVES

OIM manual section: 4.3.4.4

This page is intentionally left blank

CS-301-100 : Identification sheet

VWTC PROJECT NUMBER:	5000218009	REV:	1
PROJECT NAME:	AEM AMARUQ	SUBMITTED TO (COMPANY):	AGNICO EAGLE MINES
ENGINEER:	Gabriel Hébert	SUBMITTED TO (RESPONSIBLE)	
PROJECT MANAGER:	Clément B	PROJECT NUM REFERENCE.:	
PHONE NUMBER:		LOT NUMBER:	

SUPPLIER	EQPT CODE	EQPT TAG NO	DIA	DESCRIPTION	INFO 1	INFO 2	INFO 3	APPLIC.	NOTE	REV
CHEMLINE	VABLPD207828	P9-531-V001	DIA: 13 mm (1/2")	ISOLATION VALVE (SUCTION)	TYPE: BALL VALVE//MANUFACTURER : CHEMLINE//MODEL : Type21-K-005-V-CF+(2x)21005-4K8N-1//CONNECTION TYPE : CHEMFLARE | 13 mm (1/2")//BODY : PVDF (ASTM D-3222)// SEAL | SEAT :PTFE | VITON// STEM : PVDF			SULFURIC ACID DOSING SKID		
CHEMLINE	VABLPD207828	P9-531-V002	DIA: 13 mm (1/2")	ISOLATION VALVE (SUCTION)	TYPE: BALL VALVE//MANUFACTURER : CHEMLINE//MODEL : Type21-K-005-V-CF+(2x)21005-4K8N-1//CONNECTION TYPE : CHEMFLARE | 13 mm (1/2")//BODY : PVDF (ASTM D-3222)// SEAL | SEAT :PTFE | VITON// STEM : PVDF			SULFURIC ACID DOSING SKID		
CHEMLINE	VABLPD207828	P9-531-V003	DIA: 13 mm (1/2")	ISOLATION VANNE (DISCHARGE)	TYPE: BALL VALVE//MANUFACTURER : CHEMLINE//MODEL : Type21-K-005-V-CF+(2x)21005-4K8N-1//CONNECTION TYPE : CHEMFLARE | 13 mm (1/2")//BODY : PVDF (ASTM D-3222)// SEAL | SEAT :PTFE | VITON// STEM : PVDF			SULFURIC ACID DOSING SKID		

SUPPLIER	EQPT CODE	EQPT TAG NO	DIA	DESCRIPTION	INFO 1	INFO 2	INFO 3	APPLIC.	NOTE	REV
CHEMLINE	VABLPD207828	P9-531-V004	DIA: 13 mm (1/2")	ISOLATION VANNE (DISCHARGE)	TYPE: BALL VALVE//MANUFACTURER : CHEMLINE//MODEL : Type21-K-005-V-CF+(2x)21005-4K8N-1//CONNECTION TYPE : CHEMFLARE | 13 mm (1/2")//BODY : PVDF (ASTM D-3222)// SEAL | SEAT :PTFE | VITON// STEM : PVDF			SULFURIC ACID DOSING SKID		
CHEMLINE	VABLPD207828	P9-531-V005	DIA: 13 mm (1/2")	CLEANING VALVE	TYPE: BALL VALVE//MANUFACTURER : CHEMLINE//MODEL : Type21-K-005-V-CF+(2x)21005-4K8N-1//CONNECTION TYPE : CHEMFLARE | 13 mm (1/2")//BODY : PVDF (ASTM D-3222)// SEAL | SEAT :PTFE | VITON// STEM : PVDF			SULFURIC ACID DOSING SKID		
CHEMLINE	VABLPD207828	P9-532-V001	DIA: 13 mm (1/2")	ISOLATION VALVE (SUCTION)	TYPE: BALL VALVE//MANUFACTURER : CHEMLINE//MODEL : Type21-K-005-V-CF+(2x)21005-4K8N-1//CONNECTION TYPE : CHEMFLARE | 13 mm (1/2")//BODY : PVDF (ASTM D-3222)// SEAL | SEAT :PTFE | VITON// STEM : PVDF			SULFURIC ACID DOSING SKID		
CHEMLINE	VABLPD207828	P9-532-V002	DIA: 13 mm (1/2")	ISOLATION VALVE (SUCTION)	TYPE: BALL VALVE//MANUFACTURER : CHEMLINE//MODEL : Type21-K-005-V-CF+(2x)21005-4K8N-1//CONNECTION TYPE : CHEMFLARE | 13 mm (1/2")//BODY : PVDF (ASTM D-3222)// SEAL | SEAT :PTFE | VITON// STEM : PVDF			SULFURIC ACID DOSING SKID		

SUPPLIER	EQPT CODE	EQPT TAG NO	DIA	DESCRIPTION	INFO 1	INFO 2	INFO 3	APPLIC.	NOTE	REV
CHEMLINE	VABLPD207828	P9-532-V003	DIA: 13 mm (1/2")	ISOLATION VANNE (DISCHARGE)	TYPE: BALL VALVE//MANUFACTURER : CHEMLINE//MODEL : Type21-K-005-V-CF+(2x)21005-4K8N-1//CONNECTION TYPE : CHEMFLARE | 13 mm (1/2")//BODY : PVDF (ASTM D-3222)// SEAL | SEAT :PTFE | VITON// STEM : PVDF			SULFURIC ACID DOSING SKID		
CHEMLINE	VABLPD207828	P9-532-V004	DIA: 13 mm (1/2")	ISOLATION VANNE (DISCHARGE)	TYPE: BALL VALVE//MANUFACTURER : CHEMLINE//MODEL : Type21-K-005-V-CF+(2x)21005-4K8N-1//CONNECTION TYPE : CHEMFLARE | 13 mm (1/2")//BODY : PVDF (ASTM D-3222)// SEAL | SEAT :PTFE | VITON// STEM : PVDF			SULFURIC ACID DOSING SKID		
CHEMLINE	VABLPD207828	P9-532-V005	DIA: 13 mm (1/2")	CLEANING VALVE	TYPE: BALL VALVE//MANUFACTURER : CHEMLINE//MODEL : Type21-K-005-V-CF+(2x)21005-4K8N-1//CONNECTION TYPE : CHEMFLARE | 13 mm (1/2")//BODY : PVDF (ASTM D-3222)// SEAL | SEAT :PTFE | VITON// STEM : PVDF			SULFURIC ACID DOSING SKID		
CHEMLINE	VABLPD207828	PD9-531-V002	DIA: 13 mm (1/2")	CLEANING VALVE	TYPE: BALL VALVE//MANUFACTURER : CHEMLINE//MODEL : Type21-K-005-V-CF+(2x)21005-4K8N-1//CONNECTION TYPE : CHEMFLARE | 13 mm (1/2")//BODY : PVDF (ASTM D-3222)// SEAL | SEAT :PTFE | VITON// STEM : PVDF			SULFURIC ACID DOSING SKID		

SUPPLIER	EQPT CODE	EQPT TAG NO	DIA	DESCRIPTION	INFO 1	INFO 2	INFO 3	APPLIC.	NOTE	REV
CHEMLINE	VABLPD207828	V9-536	DIA: 13 mm (1/2")	DRAIN VALVE	TYPE: BALL VALVE//MANUFACTURER : CHEMLINE//MODEL : Type21-K-005-V-CF+(2x)21005-4K8N-1//CONNECTION TYPE : CHEMFLARE | 13 mm (1/2")//BODY : PVDF (ASTM D-3222)// SEAL | SEAT :PTFE | VITON// STEM : PVDF			SULFURIC ACID DOSING SKID		
CHEMLINE	VABLPD207828	V9-537	DIA: 13 mm (1/2")	ISOLATION VALVE	TYPE: BALL VALVE//MANUFACTURER : CHEMLINE//MODEL : Type21-K-005-V-CF+(2x)21005-4K8N-1//CONNECTION TYPE : CHEMFLARE | 13 mm (1/2")//BODY : PVDF (ASTM D-3222)// SEAL | SEAT :PTFE | VITON// STEM : PVDF			SULFURIC ACID DOSING SKID		
PRIMARY FLUID	VABLPD207828	PD9-531-V001	DIA: 13 mm (1/2")	ISOLATION VALVE	TYPE: BALL VALVE//MANUFACTURER : CHEMLINE//MODEL : Type21-K-005-V-CF+(2x)21005-4K8N-1//CONNECTION TYPE : CHEMFLARE | 13 mm (1/2")//BODY : PVDF (ASTM D-3222)// SEAL | SEAT :PTFE | VITON// STEM : PVDF			SULFURIC ACID DOSING SKID		

PDF Published March 1, 2013

Type 21 Ball Valves

CHEMLINE PLASTICS
SUPERIOR FLOW SOLUTIONS

The Chemline Type 21 True Union Ball valve incorporates state of the art features for long term performance. This is a full port, full blocking True Union valve pressure rated at 16 bar (230 psi)[4]. Double stem o-rings and Safety Shear stem design provide for a high degree of safety on hazardous fluid applications. All sizes have an ISO standard actuator mounting platform integral to the valve body. This provides for sturdy and secure mounting of pneumatic or electric actuators.

PVC | CPVC | PP | PVDF

CRN Registered Consult Chemline

NSF[5] Certified to NSF/ANSI 61

SERIES: Type 21

SIZES: 3/8" – 4"

ENDS: Socket, Threaded, Flanged, Butt[1] or ChemFlare™

SEATS: PTFE

SEALS[2]: EPDM, FKM (Viton®), CPE[3]

features

Pressure rated to 230 psi[4]
- Provides a high factor of safety

Integral Actuator Mounting Platform
- Actuation is easy. Electric or pneumatic actuators may be mounted in the field.

Full Port
- High capacity and low pressure drops

Fully Blocking
- Downstream union nut may be safely disassembled for piping maintenance while valve is closed off under full system pressure

Built-In Spanner Wrench
- Top of the handle is designed to be used as a tool for accessing internal parts

Safety Shear Stem Design
- Stem has double o-rings
- Designed to hold full pressure even if stem breaks due to excessive torque

High Chemical Resistant Material
- PVC and CPVC compounds have an "A" chemical resistance rating as per ASTM D-1784. They have outperformed other PVC and CPVC compounds on aggressive chemicals.

[1] Butt ends for fusion to Chemline metric PP, PVDF or ECTFE (Halar®) piping.
[2] Other materials are available.
[3] CPE=Chlorinated Polyethylene.
[4] PVC, CPVC and PVDF 1/2" to 2" are rated at 230 psi; 2-1/2" to 4" and all size PP valves are rated at 150 psi at 20°C.
[5] PVC valves with EPDM or FKM (Viton®) seals are certified under NSF/ANSI Standard 61 for contact with drinking water.

03/13 ©Chemline Plastics Limited 2013
Chemline is a registered trade mark of Chemline Plastics Limited

Type 21 Ball Valves

features

Double Stem O-Rings – Safety Shear Design

- Upper o-ring groove is deeper than lower. In case of excessive stem torque, stem will shear at the upper groove, leaving the inner o-ring intact to seal against full line pressure.

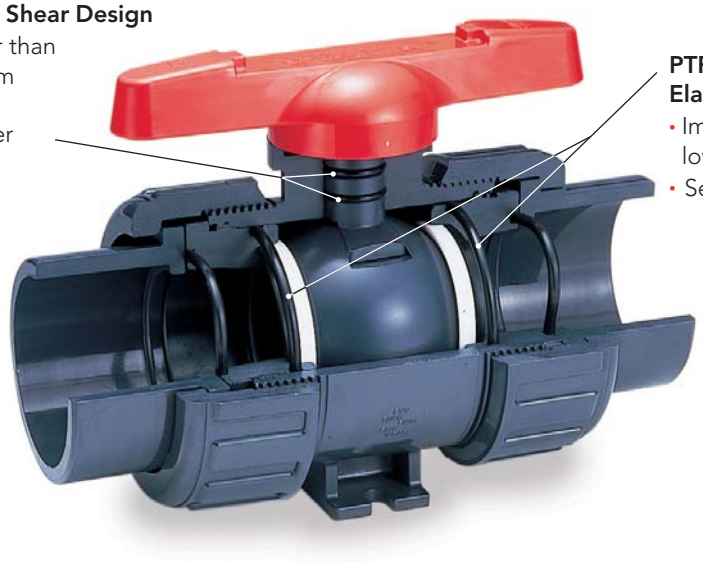

PTFE Seats have Elastomer Cushions

- Improved sealing while lowering stem torques
- Self adjusts for seat wear

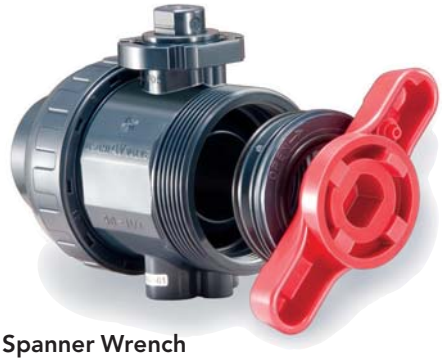

Built in Spanner Wrench

- For removing or tightening the seat carrier
- All parts are replaceable

Integral Actuator Mounting Platform

- Actuation is easy. Electric or pneumatic actuators may be mounted in the field. Simply pull off the handle to reveal a standard ISO 5211 mounting platform which accepts bolt-on hardware.

Fully Blocking

- Downstream pipe may be removed while upstream side is still pressurized. This may be done with valve installed in either direction.

Base Mounting Pad

- Optional threaded inserts allow valves to be securely anchored
- Supplied standard with actuated valves

Type 21 Ball Valves

options + accessories

ChemFlare™ Ends

- For connection to PFA tube. Leak-free connections for difficult services such as sodium hypochlorite

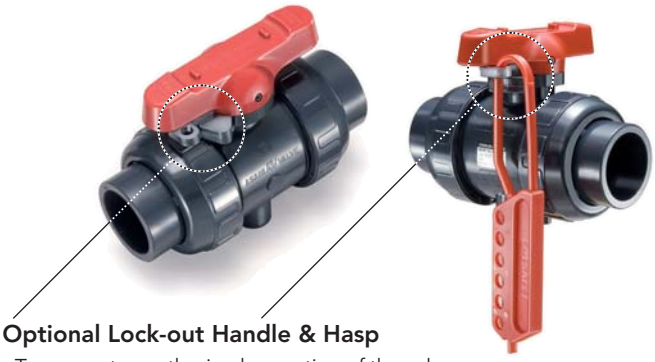

Optional Lock-out Handle & Hasp

- To prevent unauthorized operation of the valve
- Used during maintenance shut-downs

One-piece moulded PVC and CPVC 6" socket ends

- Allows installation of 4" valve in 6" line
- Factory moulded, not fabricated with couplings and reducers cemented together
- Fixed to valve mechanically just like the one-piece moulded factory flanges

Different Colour Handles

- Choose a handle colour other than standard red for colour coding different services

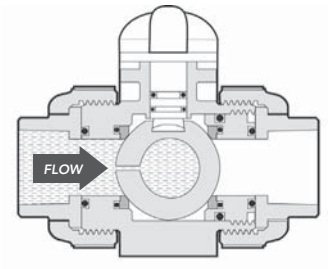

Vented Ball

- For sodium hypochlorite services at any concentration
- Valve shown in closed position

electric + pneumatic actuation

Pneumatic and Electric Actuators

- A complete range of actuators and control accessories are available, mounted to valves using PPG plastic brackets and stainless steel couplings. Refer to separate data sheets.

Electromni® Electric

Q Series Electric

A Series Electric

V Series Electric
with Local Control Station

PA Series Pneumatic

Type 21 Ball Valves

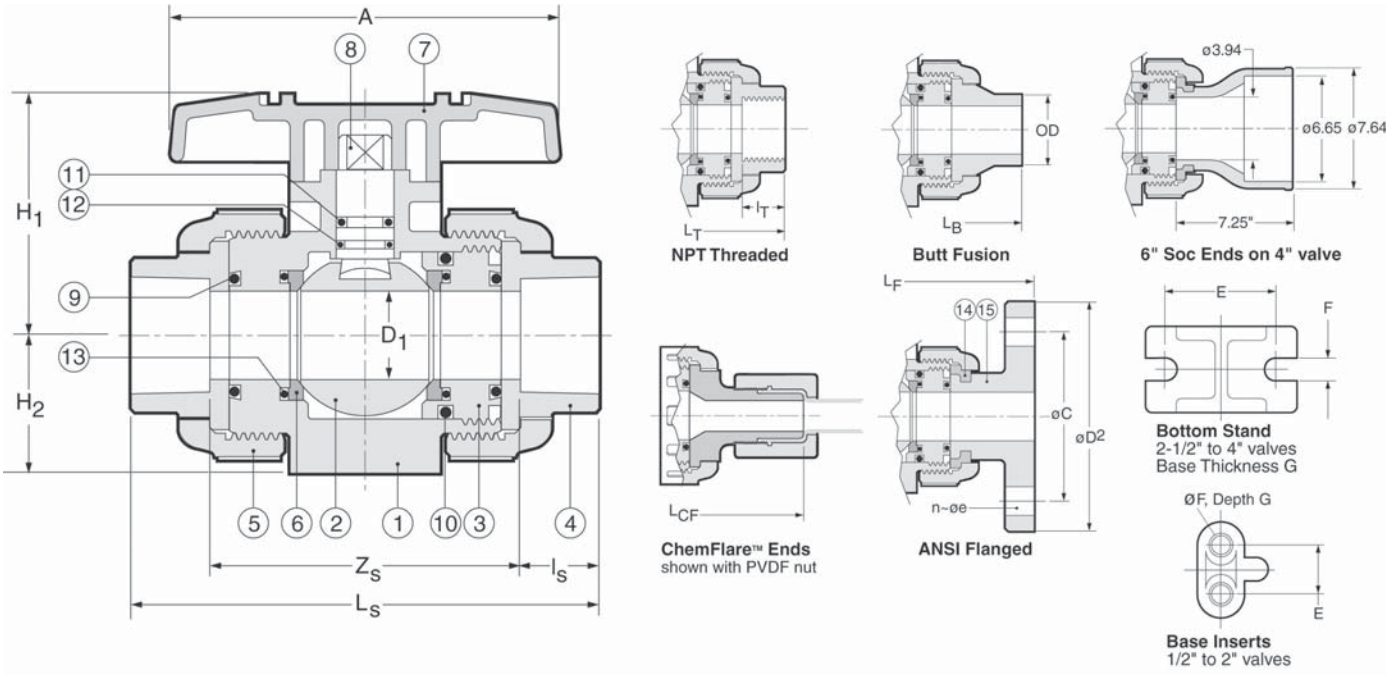

PARTS

▲ Recommended Spare Parts

No.	Part	Pcs.	Materials
1	Body	1	PVC, CPVC, PP, PVDF
2	Ball	1	PVC, CPVC, PP, PVDF
3	Carrier[1]	1/2	PVC, CPVC, PP, PVDF
4	End Connector	2	PVC, CPVC, PP, PVDF
5	Union Nut	2	PVC, CPVC, PP, PVDF
6▲	Ball Seat	2	PTFE
7	Handle	1	ABS

[1] 1 carrier for sizes 1/2" to 2", 2 carriers for sizes 2-1/2" to 4"
[2] EPDM seals standard with PVC, CPVC, PP; FKM (Viton®) with PVDF valves
[3] 2 pcs 1/2" to 2", 6 pcs 2-1/2" to 4"

PARTS

▲ Recommended Spare Parts

No.	Part	Pcs.	Materials
8	Stem	1	PVC, CPVC, PP, PVDF
9▲	Face O-Ring[2]	2	EPDM, FKM (Viton®)
10▲	Carrier O-Ring[2]	2	EPDM, FKM (Viton®)
11▲	Upper Thicker Stem O-Ring[2]	1	EPDM, FKM (Viton®)
12▲	Lower Thinner Stem O-Ring[2]	1	EPDM, FKM (Viton®)
13	Seat Cushion[2]	2	EPDM, FKM (Viton®)
14	Flange Retainer[3]	2/6	PVDF
15	Flange	2	PVC, CPVC, PP, PVDF

DIMENSIONS INCHES

					End Connections														Valve Base		
					Socket			Threaded		Factory Flanged					Butt		ChemFlare™				
Size	D Bore	A	H_1	H_2	L_S	Z_S	l_S	l_T	L_T	L_F	D_2	C	n	e	L_B	OD	L_{CF}	Tube[4]	E	F[5]	G
1/2"	.59	3.6	2.03	1.14	4.45	2.70	.875	.64	4.02	5.63	3.50	2.38	4	.62	4.88	.79	6.12	1/2"	.75	.29	.43
3/4"	.79	3.9	2.34	1.38	5.08	3.08	1.00	.65	4.72	6.77	3.88	2.75	4	.62	5.67	.98	6.52	3/4"	.75	.29	.43
1"	.98	4.3	2.68	1.54	5.75	3.50	1.13	.81	5.16	7.36	4.25	3.12	4	.62	6.06	1.26	7.26	1"	.75	.29	.43
1-1/4"	1.22	4.8	3.17	1.85	6.46	5.21	1.25	.85	5.91	7.48	4.62	3.50	4	.62	6.85	1.57	9.58	1-1/4"	1.18	.35	.59
1-1/2"	1.57	5.2	3.50	2.17	7.24	4.49	1.38	.85	6.42	8.35	5.00	3.88	4	.62	7.64	1.97	–	–	1.18	.35	.59
2"	2.01	6.3	4.02	2.60	8.23	5.23	1.50	1.90	7.76	9.21	6.00	4.75	4	.75	8.82	2.48	–	–	1.18	.35	.59
2-1/2"	2.28	7.87	4.96	2.83	9.45	5.95	1.75	1.21	8.46	10.20	7.00	5.49	4	.75	9.72	2.95	–	–	1.89	.35	.23
3"	2.70	9.45	5.51	3.35	11.10	7.35	1.88	1.30	10.39	11.97	7.50	6.00	4	.75	11.61	3.54	–	–	2.17	.43	.28
4"	3.54	11.81	7.01	4.33	13.88	9.87	2.00	1.38	14.17	14.65	9.00	7.50	8	.75	14.76	4.33	–	–	2.56	.43	.32

[4] ChemFlare™ ends are available for reduced tube sizes down to 1/4".
[5] Optional threaded inserts: 1/2" to 1" valves – UNC 1/4"-20; 1-1/4" to 2" valves – UNC 5/16"-18. 'Recoil' brand inserts require drilling before insertion.

Type 21 Ball Valves

WORKING PRESSURES PSI, Water, Non-Shock

VACUUM RATING • 29.9 inches mercury

Size	PVC			CPVC						PP			PVDF				
	20°C 68°F	40°C 104°F	50°C 122°F	20°C 68°F	40°C 104°F	50°C 122°F	60°C 140°F	80°C 176°F	90°C 194°F	20°C 68°F	60°C 140°F	80°C 176°F	20°C 68°F	40°C 104°F	60°C 140°F	80°C 176°F	100°C 212°F
1/2"– 2"	230	165	150	230	165	150	120	75	55	150	85	55	230	185	150	110	85
2-1/2"– 4"	150	150	150	150	150	150	120	75	55	150	70	40	150	150	150	110	85

Temperature Ranges: PVC 0 to 60°C (32 to 140°F), **CPVC** 0 to 95°C (32 to 203°F), **PP** –20 to 80°C (–4 to 176°F), **PVDF** –40 to 100°C (–40 to 212°F)

WEIGHTS LB. THREADED or SOCKET

WEIGHTS LB. FLANGED

Size	PVC	CPVC	PP	PVDF	PVC	CPVC	PP	PVDF
1/2"	0.4	0.4	0.4	0.4	0.9	0.9	0.7	1.1
3/4"	0.7	0.7	0.7	0.9	1.3	1.5	1.1	1.5
1"	0.9	1.1	0.9	1.1	1.8	2.0	1.5	2.2
1-1/4"	1.5	1.5	1.3	1.8	2.6	2.9	2.0	3.3
1-1/2"	2.4	2.6	1.5	2.9	3.7	4.0	2.6	4.4
2"	4.0	4.4	2.6	4.9	5.5	6.0	4.0	8.2
2-1/2"	5.1	5.5	3.7	6.2	7.3	7.7	5.3	8.8
3"	8.2	8.8	5.5	9.9	10.1	11.0	7.5	12.6
4"	19.4	21.8	13.2	24.9	21.6	23.4	15.4	26.7

Cv VALUES VS. BALL ANGLE

Size	0%	25%	50%	75%	100%
1/2"	0	0.35	1.3	5.5	14.
3/4"	0	0.73	2.8	11.5	29.
1"	0	1.2	4.5	18.6	47.
1-1/4"	0	1.8	6.8	28.4	72.
1-1/2"	0	3.9	14.7	61.2	155.
2"	0	4.8	18.0	75.0	190.
2-1/2"	0	9.1	34.7	144.0	365.
3"	0	10.2	39.0	162.0	410.
4"	0	17.0	64.6	269.0	680.

SAMPLE SPECIFICATION

1. All True Union Ball Valves in PVC, CPVC, PP or PVDF shall be Chemline Type 21 or equal sizes 1/2" to 2" in PVC, CPVC, and PVDF rated at 230 psi and in PP 150 psi maximum working pressure. Sizes 2-1/2", 3" and 4" rated at 150 psi maximum working pressure with EPDM, FKM (Viton®) or CPE seals. Ball seats shall be PTFE with elastomer cushions for closure with minimum stem torques.
2. All valves will have Safety Shear stem design, blowout-proof with double o-rings for safety. The top o-ring groove shall be deeper so that if the stem breaks off under excessive torque the lower o-ring will remain intact and the valve will hold pressure.
3. All valves shall be full port and two-way blocking design.
4. All valves will be CRN (Canadian Registration Number) registered with TSSA.
5. PVC valves with EPDM or FKM (Viton®) seals shall be certified under NSF/ANSI Standard 61 for contact with drinking water.
6. All valves shall have chemical resistant labels permanently marked with manufacturing number to provide production level traceability.
7. PVC compound shall have an ASTM cell classification 12454-A with a minimum suffix "A" designation for chemical resistance as per ASTM D-1784 (CSA report LO 4000-172).
8. CPVC compound shall have an ASTM cell classification 23567-A with a minimum suffix "A" designation for chemical resistance as per ASTM D-1784.
9. PP material will conform to ASTM D-4101 PP 021 B 67272 material requirements.
10. PVDF material shall be unpigmented conforming to ASTM D-3222 material requirements and to be USDA Title 21 Chapter 1 Part 177. 2510 requirements for contact with food.
11. Socket ends in PVC and CPVC shall be Schedule 80 and conform to ASTM D-2467.
12. Threaded ends shall be Schedule 80 and conform to ASTM D-2464.
13. Butt fusion ends in PP or PVDF will be compatible with Chemline PP or PVDF metric piping systems.
14. Flanged ends shall be ANSI Class 150 one-piece factory moulded (not fabricated) to ensure maximum strength and close tolerance end to end dimensions.

ORDERING EXAMPLE

Chemline True Union Ball Valves	21	A	020	E	S
Body Material	**A** – PVC **B** – PP	**C** – CPVC **K** – PVDF			
Size[1]	**002** – 1/4" **010** – 1" **025** – 2-1/2"	**003** – 3/8" **012** – 1-1/4" **030** – 3"	**005** – 1/2" **015** – 1-1/2" **040** – 4"	**007** – 3/4" **020** – 2" **060** – 6"	
Seals	**E** – EPDM	**V** – FKM (Viton®)	**C** – CPE	**B** – Nitrile	**A** – Aflas®
Ends	**S** – Socket	**T** – Threaded	**F** – Flanged	**B** – Butt[2]	**CF** – ChemFlare™

Example: Chemline Type 21 True Union Ball Valve, PVC, 2", with EPDM seals, socket ends.

[1] 1/4" is normally the 3/8" valve reduced. 6" is 4" valve with 6" end connections.

[2] PP, PVDF and ECTFE (Halar®) metric butt fusion ends (1/2" to 4") connect to Chemline PP, PVDF and ECTFE (Halar®) piping systems.

OTHER OPTIONS & ACCESSORIES

- **Alternate O-Ring Seals**
- **Stem Extensions** made to any length
- **Limit Switches** – For open and/or closed position indication
- **Municipal Operating Nut**
- **Lubrication-free Valves** – Factory clean room assembled
- **Vented Ball** – For sodium hypochlorite applications

CHEMLINE PLASTICS
SUPERIOR FLOW SOLUTIONS

55 Guardsman Road, Thornhill, ON, L3T 6L2, Canada | ISO 9001:2008 Certified
tel.905.889.7890 | fax.905.889.8553 | request@chemline.com | chemline.com

This page is intentionally left blank

CS-303-100 : Identification sheet

VWTC PROJECT NUMBER:	5000218009	REV:	1
PROJECT NAME:	AEM AMARUQ	SUBMITTED TO (COMPANY):	AGNICO EAGLE MINES
ENGINEER:	Gabriel Hébert	SUBMITTED TO (RESPONSIBLE)	
PROJECT MANAGER:	Clément B	PROJECT NUM REFERENCE.:	
PHONE NUMBER:		LOT NUMBER:	

SUPPLIER	EQPT CODE	EQPT TAG NO	DIA	DESCRIPTION	INFO 1	INFO 2	INFO 3	APPLIC.	NOTE	REV
CHEMLINE	VARFPD200193	PRV9-531	DIA: 13 mm (1/2")	RELIEF VALVE	TYPE: RELIEF VALVE | 150#//MANUFACTURER : CHEMLINE//MODEL : SB12K005VCFx+(2x)SB005-17K8N-1//CONNECTION TYPE : CHEMFLARE | 13 mm (1/2")//BODY : PVDF// SEAL | SEAT :VITON | VITON// STEM : N/A			SULFURIC ACID DOSING SKID		
CHEMLINE	VARFPD200193	PRV9-532	DIA: 13 mm (1/2")	RELIEF VALVE	TYPE: RELIEF VALVE | 150#//MANUFACTURER : CHEMLINE//MODEL : SB12K005VCFx+(2x)SB005-17K8N-1//CONNECTION TYPE : CHEMFLARE | 13 mm (1/2")//BODY : PVDF// SEAL | SEAT :VITON | VITON// STEM : N/A			SULFURIC ACID DOSING SKID		

This page is intentionally left blank

PDF Published September 17, 2014

SB12 Series Back Pressure/Relief Valves

CHEMLINE PLASTICS
SUPERIOR FLOW SOLUTIONS

PVC PP PVDF

CRN Registered as Category C Fittings Consult Chemline

NSF[3] Certified to NSF/ANSI 61

SERIES: SB12

SIZES: 3/8" – 4"

ENDS: True Union Socket, Threaded or ChemFlare™[1] Spigot[2] Bodies with Plain, Socket, Threaded or Flanged ends

DIAPHRAGM: PTFE Bonded EPDM

SEALS: EPDM, FKM (Viton®)

The Chemline SB Series Back Pressure/ Relief Valve has two functions. As a ***back pressure valve***, installed in-line downstream of a pump, the back pressure below the metering pump is maintained. When installed in the branch of a tee it is a ***pressure relief valve***. The valve stays closed until inlet pressure reaches the set pressure which is adjusted by turning the spring tensioning bolt. Inlet pressure acts upward against the piston allowing excess pressure to flow upwards through the orifice.

The SB12 Series has a built-in check valve function, desirable for dosing applications. It is not so sensitive as to open with every pulsation from a metering pump.

features

True Union Ends

- Easy installation and maintenance
- Eliminate chemical leakage problems common with old fashioned threaded connections

Long Cycling Life

- Dynamic seal is PTFE bonded EPDM for high chemical resistance
- This moulded diaphragm is designed for superior sealing and flex life

Superior Performance in Dosing Systems

- Valves are hydraulically designed for very low hysteresis ("backlash") and to eliminate chatter
- Built-in check (non-return) function
- Valve opening depends on inlet pressure only and is uneffected by changes in downstream (back) pressure

CRN Registration numbers by province

- Ontario: OC10134.5
- Newfoundland: OC10134.50
- Alberta: OC10134.52
- Saskatchewan/Manitoba/Quebec: OC10134.56
- New Brunswick: OC10134.57
- Nova Scotia: OC10134.58
- P.E.I.: OC10134.59
- British Columbia: not required

technical

Set Pressure Ranges

- 1/2" to 2" – 5 to 150 psi
- 2-1/2" and 3" – 7.5 to 150 psi
- 2-1/2" to 4" – 4 to 60 psi (optional)
- 4" – 7.5 to 90 psi

Maximum Viscosity

- 120cP is maximum recommended service viscosity

[1] For ChemFlare™ end connectors, consult Chemline.
[2] PP and PVDF spigot ends have DIN dimensions and will butt fuse directly to Chemline PP and PVDF piping systems.
[3] PVC valves with EPDM or FKM (Viton®) seals are certified under NSF/ANSI Standard 61 for contact with drinking water.

09/14 ©Chemline Plastics Limited 2014
Chemline is a registered trade mark of Chemline Plastics Limited

SB12 Series Back Pressure/Relief Valves 1/2" to 2"

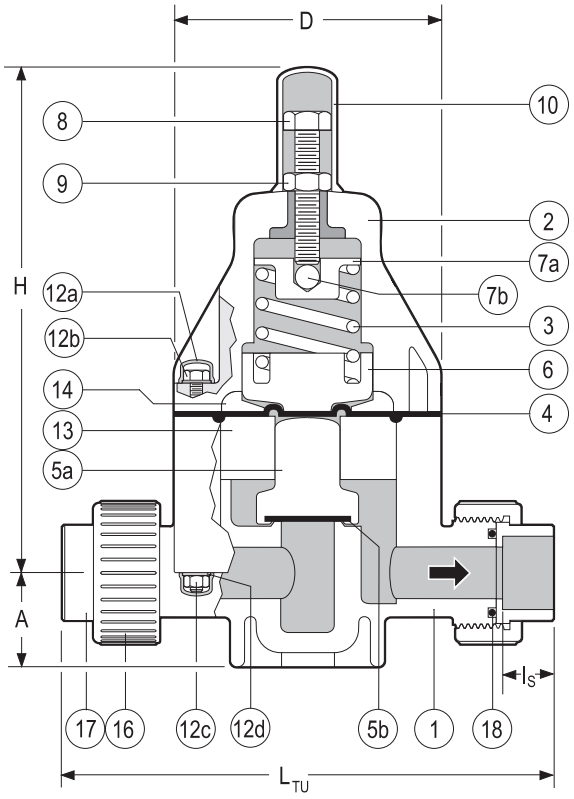

True Union Body

PARTS

▲ Recommended Spare Parts

No.	Part	Pcs.	Materials
1	Body	1	PVC, PP, PVDF
2	Bonnet	1	PPG
3	Spring	1	Galvanized Steel
4▲	Control Diaphragm	1	PTFE bonded EPDM
5a▲	Piston	1	PVC, PP, PVDF
5b▲	Seat	1	EPDM, FPM(Viton®)
6	Lower Spring Retainer	1	PPG
7a	Upper Spring Retainer	1	Cad. Plated Steel
7b	Ball	1	304 SS
8	Spring Tensioning Bolt	1	304 SS
9	Lock Nut	1	304 SS
10	Spring Bolt Cap	1	PE
12a	Bolt/Nut Cap	8/12[1]	PE
12b	Hex Bolt	4/6[1]	304 SS
12c	Hex Nut	4/6[1]	304 SS
12d	Washer	8/12[1]	304 SS
13	Spacer Disc	1	PVC, PP, PVDF
14	Pressure Plate	1	PP
16	Union Nut	2	PVC, PP, PVDF
17	End Connector	2	PVC, PP, PVDF
18▲	Face O-Ring	2	EPDM, FPM(Viton®)

[1] 1/2" size / 3/4" to 2" sizes

OTHER ENDS

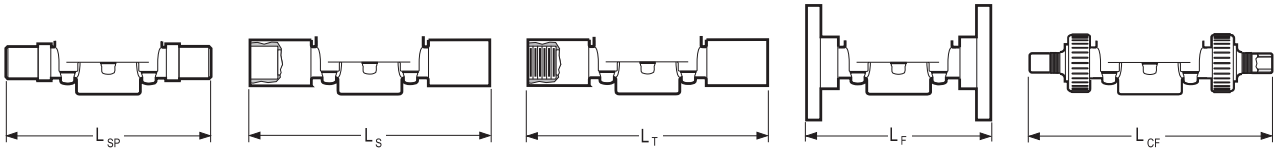

Spigot Body | Socket | Threaded | Flanged | ChemFlare™

DIMENSIONS INCHES

WEIGHTS LB.

Cv VALUES

Size	D	H	PVC A	PVC I_S	PVC L_{TU}[2]	PVC L_{SP}[3]	PVC L_S	PVC L_T	PVC L_F	PVC L_{CF}	PP and PVDF A	PP and PVDF L_{SP}[3]	PP and PVDF L_{TU}[2]	PVC	PP	PVDF	USGPM Flow at 1 psi △P
3/8"	3.2	6.9	1.0	0.6	6.5	5.7	7.4	7.2	4.5	8.2	0.9	5.7	**	1.8	1.5	2.2	2.1
1/2"	3.2	6.9	1.0	0.6	6.8	5.7	8.0	7.8	6.3	8.3[4]	0.9	5.7	7.1	1.9	1.6	2.4	3.0
3/4"	4.2	8.0	1.5	0.7	8.3	6.9	9.3	8.9	7.4	9.7	1.4	6.9	8.4	4.1	3.5	4.6	6.6
1"	4.2	8.0	1.5	0.9	8.5	6.9	9.6	9.3	7.4	10.2	1.4	6.9	8.7	4.2	3.5	4.7	8.7
1-1/4"	5.8	10.3	2.2	1.0	10.9	8.8	11.6	11.2	9.2	13.5	2.1	8.8	10.9	11.0	9.0	12.0	18.0
1-1/2"	5.8	10.3	2.2	1.2	11.1	8.8	12.2	11.5	9.5	–	2.1	8.8	11.2	11.2	9.2	12.2	20.0
2"	5.8	10.3	2.2	1.5	11.3	9.6	12.9	12.0	10.0	–	2.1	8.8	13.2	11.4	9.4	12.4	21.4

[2] True Union bodies come standard with socket ends. Threaded union ends are available. ** Consult Chemline.

[3] Spigot bodies are used for non union socket, threaded or flanged ends. All spigot ends have metric dimensions and the PP and PVDF spigots butt fuse directly to Chemline PP and PVDF piping. [4] Tube size can be reduced to 1/4" tube, LCF = 7.74" for 1/4", 8.26" for 3/8".

MAXIMUM PRESSURES PSI

Size	PVC 20°C 68°F	PVC 30°C 86°F	PVC 40°C 104°F	PVC 50°C 122°F	PP 30°C 86°F	PP 40°C 104°F	PP 50°C 122°F	PP 60°C 140°F	PP 70°C 158°F	PVDF 30°C 86°F	PVDF 50°C 122°F	PVDF 70°C 158°F	PVDF 80°C 176°F	PVDF 90°C 194°F	PVDF 100°C 212°F
1/2"– 2"	150	105	60	15	150	90	60	37.5	15	150	100	60	45	30	15

Temperature Ranges: PVC 0 to 50°C (32 to 122°F), **PP** 10 to 70°C (50 to 158°F), **PVDF** –30 to 100°C (–22 to 212°F).

SB12 Series Back Pressure/Relief Valves 1/2" to 2"

pressure loss nomogram for SB12 valves 3/8" to 2"

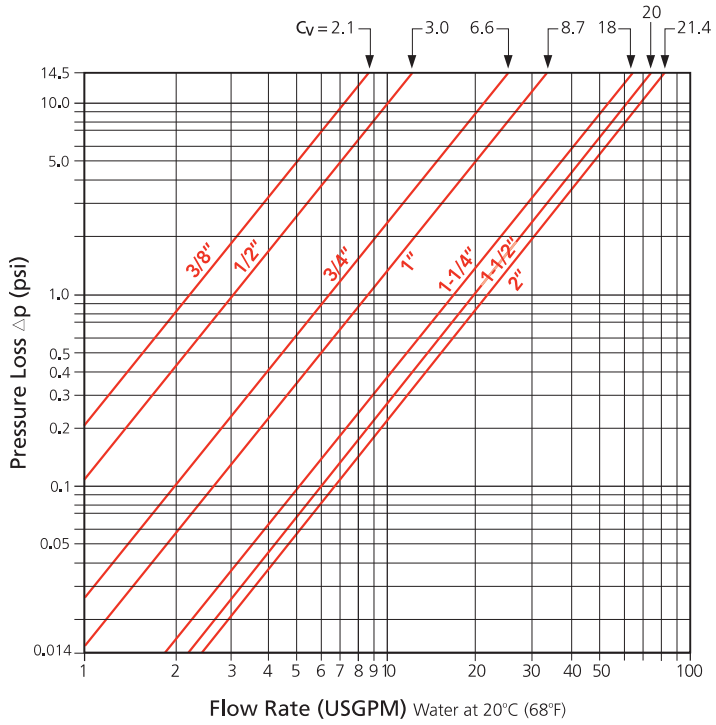

typical dosing system schematic

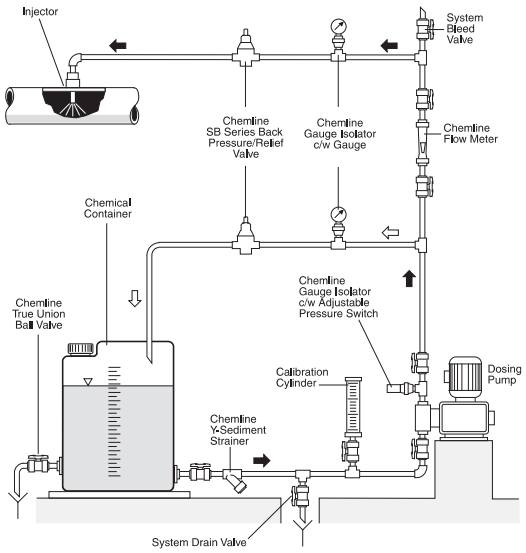

application of pressure relief valves

Constant System Pressure

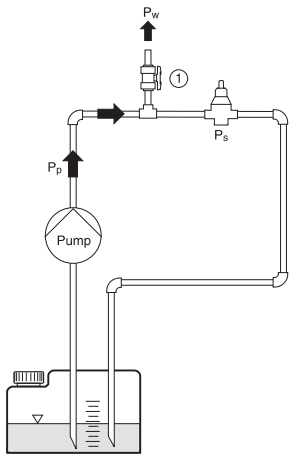

$P_p \geq P_w$
$P_p \geq P_s$ → valve opens
$P_p \leq P_s$ → valve closed

P_w = Working Pressure
P_p = Pump Pressure
P_s = Set Pressure

Consumer 1 and/or 2 Open, Valve Closes

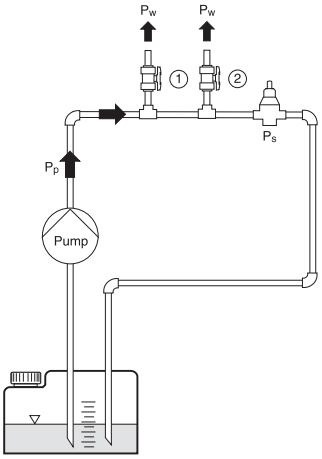

$P_p \geq P_s$ → valve opens
$P_p \leq P_s$ → valve closed

Non-Return Valve

Container 1 is located above the pump

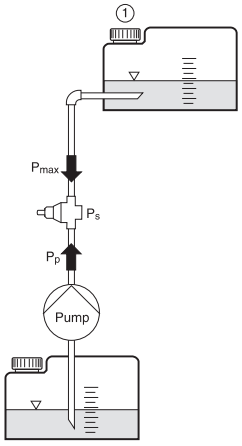

$P_s \geq P_{max}$
$P_p \geq P_s$ → valve opens
$P_p \leq P_s$ → valve closed

Overflow Valve

Pressure of container or application system should not exceed the maximum pressure value

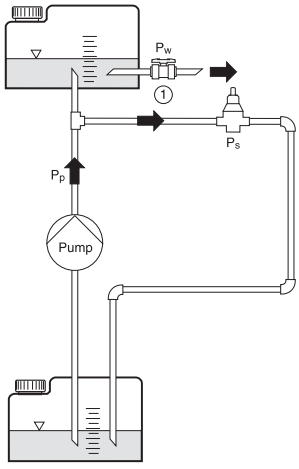

$P_s \leq P_w$
$P_p \geq P_s$ → valve opens
$P_p \leq P_s$ → valve closed

SB12 Series Back Pressure/Relief Valves 1/2" to 2"

working pressure vs. flow rate

The curves show the relationship between the working pressure and the approximate flow rate through the valve for water at 20°C (68°F) . These values will vary depending on:

- The configuration of the piping and the pressure losses associated with it
- The fluid if not water at 20°C (68°F)
- Whether the pressure is rising or falling, hysteresis is approximately 4 psi for 1/2" to 2" valves. For valves 2-1/2" to 4", hysteresis is approximately 14.5 psi.

operation examples

1. The valve is set closed at 100 psi. At a pressure increase of 10 psi, a flow of approximately 1.0 USGPM will be reached.
   - set pressure = 100 psi
   - working pressure = 110 psi
   - opening pressure = approximately 104 psi
2. The valve is set closed at 50 psi. At a pressure increase of 10 psi, a flow of approximately 1.0 USGPM will be reached.
   - set pressure = 50 psi
   - working pressure = 60 psi
   - opening pressure = approximately 54 psi

3/8" Valves

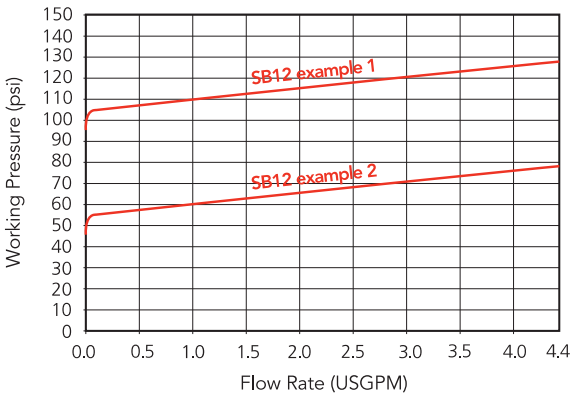

1/2" Valves

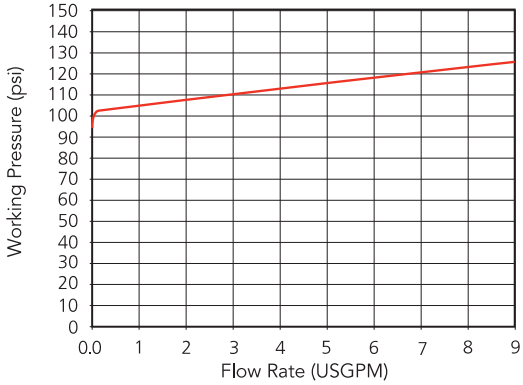

3/4" Valves

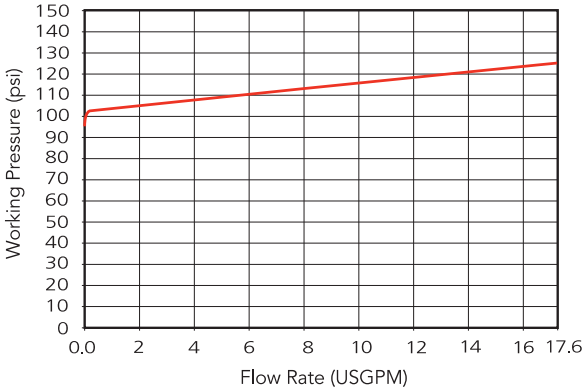

1" Valves

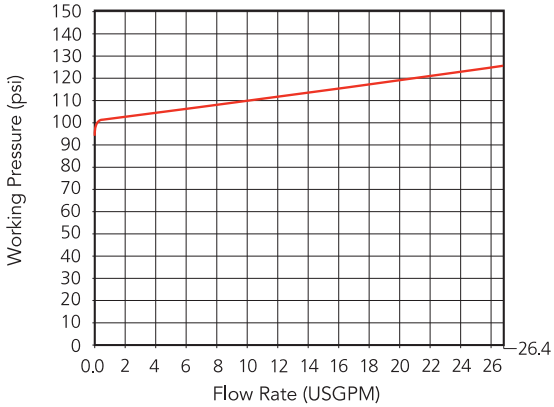

1-1/4" Valves

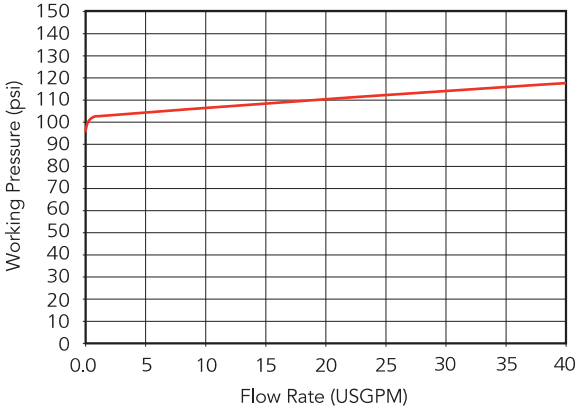

1-1/2" Valves

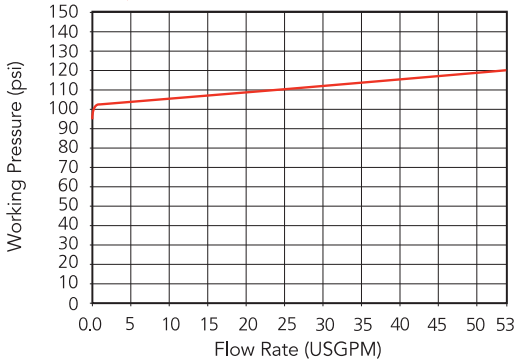

2" Valves

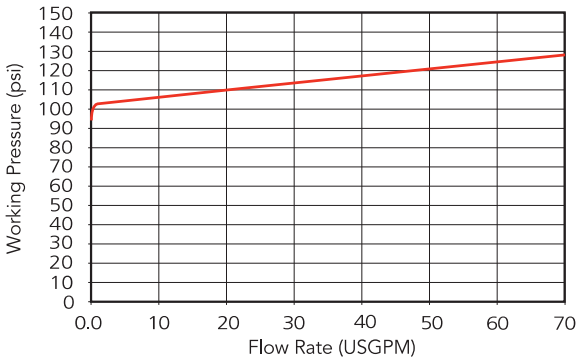

SB12 Series Back Pressure/Relief Valves 2-1/2" to 4"

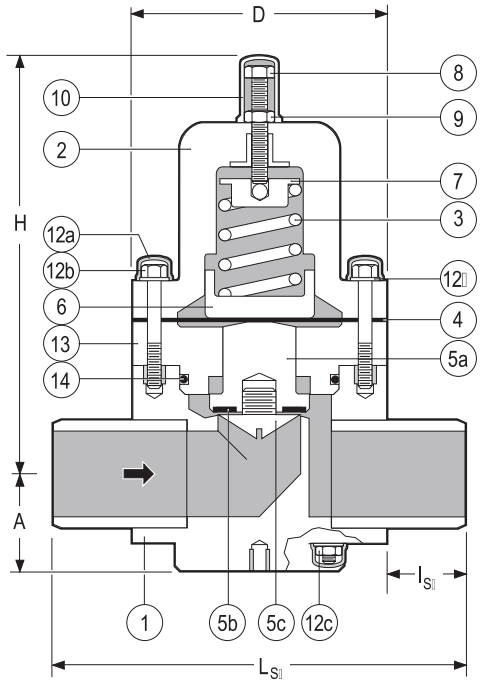

Spigot Body

PARTS

▲ Recommended Spare Parts

No.	Part	Pcs.	Materials
1	Body	1	PVC, PP, PVDF
2	Bonnet	1	PPG
3	Spring	1	Galvanized Steel
4▲	Control Diaphragm	1	PTFE bonded EPDM
5a▲	Piston	2	PVC, PP, PVDF
5b▲	Seat	1	EPDM, FPM(Viton®)
5c▲	Seat Retainer	1	PVC, PP, PVDF
6	Lower Spring Retainer	1	PPG
7	Upper Spring Retauner	1	304 SS
8	Spring Tensioning Bolt	1	304 SS
9	Lock Nut	1	304 SS
10	Spring Bolt Cap	1	PE
12a	Hex Bolt/Nut Cap	20	PE
12b	Hex Bolt/Stud	12[1]	304 SS
12c	Hex Nut	20	304 SS
12d	Washer	20	304 SS
13	Spacer Disc	1	PVC, PP, PVDF
14	Spacer O ring	1	EPDM, FPM(Viton®)

[1] 2 large upper bolts, 2 shorter lower bolts, 8 studs

OTHER ENDS

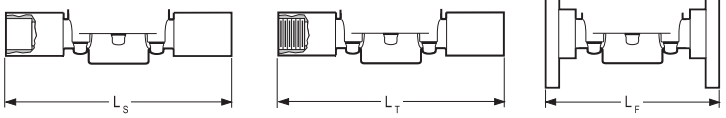

Socket Threaded Flanged

ChemFlare™ Ends
- For connection to PFA tube. Leak-free connections for difficult services such as sodium hypochlorite

DIMENSIONS INCHES

WEIGHTS LB.

Cv VALUES

Size	PVC, PP & PVDF A	D	H	L_{SP}[2]	I_{SP}	PVC L_F	PVC	PP	PVDF	USGPM Flow at 1 psi △P
2-1/2"	2.7	6.9	11.1	11.2	2.1	12.2	20.9	15.4	24.6	41
3"	3.0	7.9	12.2	14.2	3.1	15.0	26.4	23.8	30.8	63
4"	3.7	9.8	14.2	16.5	3.3	16.9	33.0	26.4	37.4	98

[2] Plain spigot ends in PP & PVDF may be butt fused directly to Chemline PP & PVDF piping systems. Weights based on spigot bodies.

MAXIMUM PRESSURES PSI

Size	PVC 20°C 68°F	30°C 86°F	40°C 104°F	50°C 122°F	PP 20°C 68°F	30°C 86°F	40°C 104°F	50°C 122°F	60°C 140°F	70°C 158°F	PVDF 30°C 86°F	50°C 122°F	70°C 158°F	80°C 176°F	90°C 194°F	100°C 212°F
2-1/2"–4"	150	90	44	15	150	116	90	60	37.5	15	150	90	55	40	30	15

Temperature Ranges: PVC 0 to 50°C (32 to 122°F), **PP** 10 to 70°C (50 to 158°F), **PVDF** –30 to 100°C (–22 to 212°F).

ORDERING EXAMPLE

Chemline Back Pressure/ Relief Valves	SB12	A	005	V	U
Body Material	**A** – PVC	**B** – PP	**K** – PVDF		
Size	**003** – 3/8" **010** – 1" **020** – 2"	**005** – 1/2" **012** – 1-1/4" **025** – 2-1/2"	**007** – 3/4" **015** – 1-1/2" **030** – 3"	**040** – 4"		
Elastomers	**E** – EPDM	**V** – FPM (Viton®)				
Ends	**S** – Socket **CFx** – ChemFlare™	**T** – Threaded	**F** – Flanged **Blank** – Spigot (Butt)	**U** – Union Socket		

Example: Chemline SB 12 Series, PVC, 1/2" diameter, FPM (Viton®) seals, Union socket ends.
x = 4 for 1/4", **6** for 3/8", **8** for 1/2", **12** for 1" ID tube connections.

OPTIONS

- 4 to 60 psi Pressure Range springs for 2-1/2" to 4" valves
- **Integral Pressure Gauge** – for inlet and/or outlet
- Bodies in 316 Stainless Steel and PTFE

Optional Pressure Gauge
- For inlet and/or outlet

SB12 Series Back Pressure/Relief Valves 2-1/2" to 4"

working pressure vs. flow rate

• Whether the pressure is rising or falling, hysteresis is approximately 14.5 psi for 2-1/2" to 4" valves

2-1/2" Valves / 4 to 60 psi set pressure range

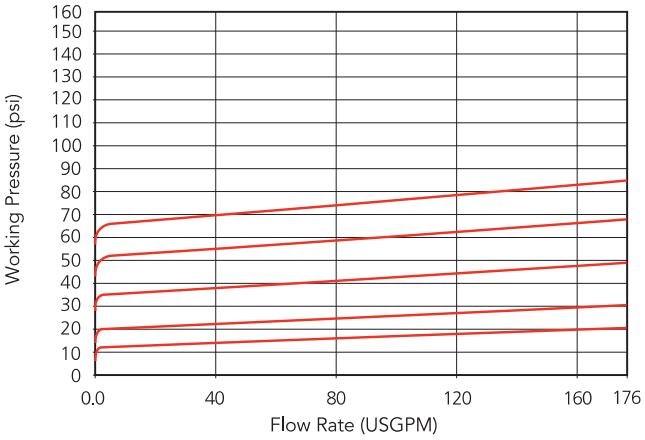

2-1/2" Valves / 7.5 to 150 psi set pressure range

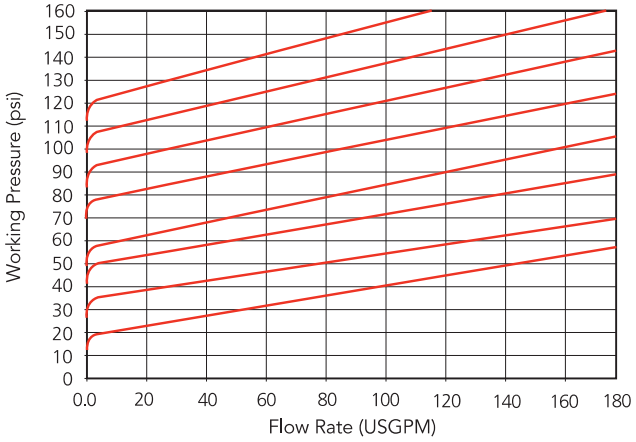

3" Valves / 4 to 60 psi set pressure range

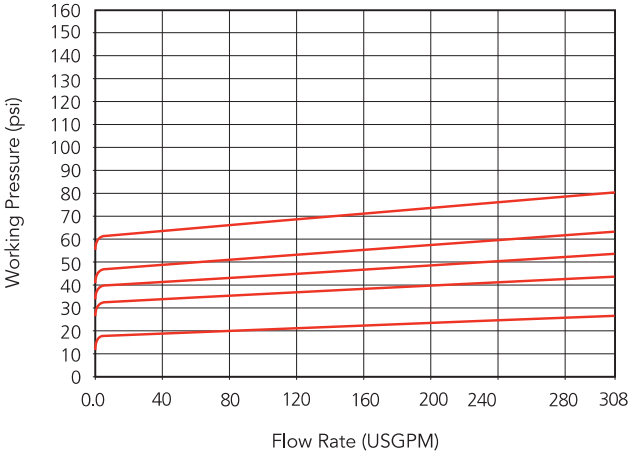

3" Valves / 7.5 to 150 psi set pressure range

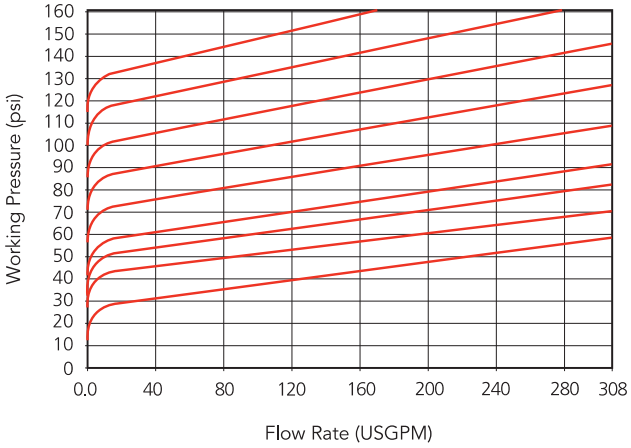

4" Valves / 4 to 60 psi set pressure range

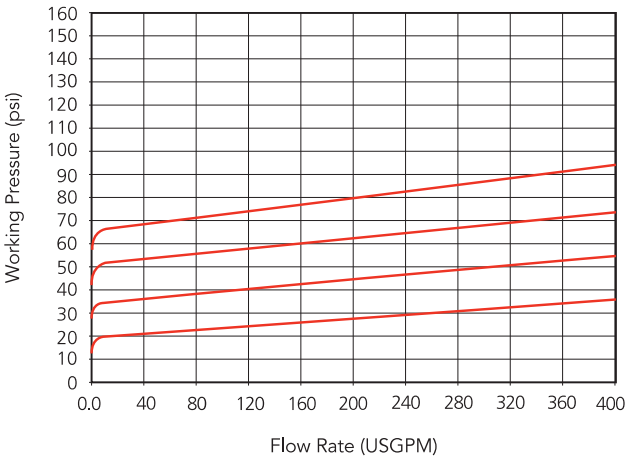

4" Valves / 7.5 to 90 psi set pressure range

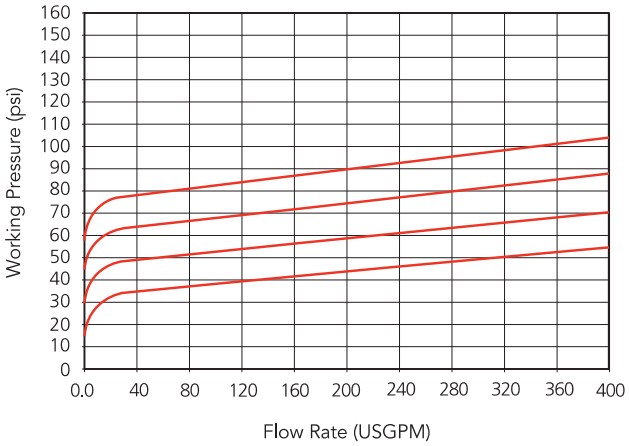

CHEMLINE PLASTICS
SUPERIOR FLOW SOLUTIONS

55 Guardsman Road, Thornhill, ON, L3T 6L2, Canada | ISO 9001:2008 Certified
tel.905.889.7890 | fax.905.889.8553 | request@chemline.com | chemline.com

CS-305-170 : Identification sheet

VWTC PROJECT NUMBER:	5000218009	REV:	1
PROJECT NAME:	AEM AMARUQ	SUBMITTED TO (COMPANY):	AGNICO EAGLE MINES
ENGINEER:	Gabriel Hébert	SUBMITTED TO (RESPONSIBLE)	
PROJECT MANAGER:	Clément B	PROJECT NUM REFERENCE.:	
PHONE NUMBER:		LOT NUMBER:	

SUPPLIER	EQPT CODE	EQPT TAG NO	DIA	DESCRIPTION	INFO 1	INFO 2	INFO 3	APPLIC.	NOTE	REV
CHEMLINE	VAPSPD351047	BPV9-532	DIA: 13 mm (1/2")	BACKPRESSURE VALVE	TYPE: BACK PRESSURE VALVE | 150#//MANUFACTURER : CHEMLINE//MODEL : SB12K005VCFx + SGK-005-002-P-G + P025-160-BM CONFIG L-U//CONNECTION TYPE : CHEMFLARE | 13 mm (1/2")//BODY : PVDF// SEAL | SEAT :VITON | // STEM : N/A			SULFURIC ACID DOSING SKID		

This page is intentionally left blank

PDF Published September 17, 2014

SB12 Series Back Pressure/Relief Valves

CHEMLINE PLASTICS
SUPERIOR FLOW SOLUTIONS

PVC PP PVDF

CRN Registered as Category C Fittings Consult Chemline

NSF[3] Certified to NSF/ANSI 61

SERIES: SB12

SIZES: 3/8" – 4"

ENDS: True Union Socket, Threaded or ChemFlare™[1] Spigot[2] Bodies with Plain, Socket, Threaded or Flanged ends

DIAPHRAGM: PTFE Bonded EPDM

SEALS: EPDM, FKM (Viton®)

The Chemline SB Series Back Pressure/ Relief Valve has two functions. As a ***back pressure valve***, installed in-line downstream of a pump, the back pressure below the metering pump is maintained. When installed in the branch of a tee it is a ***pressure relief valve***. The valve stays closed until inlet pressure reaches the set pressure which is adjusted by turning the spring tensioning bolt. Inlet pressure acts upward against the piston allowing excess pressure to flow upwards through the orifice.

The SB12 Series has a built-in check valve function, desirable for dosing applications. It is not so sensitive as to open with every pulsation from a metering pump.

features

True Union Ends

- Easy installation and maintenance
- Eliminate chemical leakage problems common with old fashioned threaded connections

Long Cycling Life

- Dynamic seal is PTFE bonded EPDM for high chemical resistance
- This moulded diaphragm is designed for superior sealing and flex life

Superior Performance in Dosing Systems

- Valves are hydraulically designed for very low hysteresis ("backlash") and to eliminate chatter
- Built-in check (non-return) function
- Valve opening depends on inlet pressure only and is uneffected by changes in downstream (back) pressure

CRN Registration numbers by province

- Ontario: OC10134.5
- Newfoundland: OC10134.50
- Alberta: OC10134.52
- Saskatchewan/Manitoba/Quebec: OC10134.56
- New Brunswick: OC10134.57
- Nova Scotia: OC10134.58
- P.E.I.: OC10134.59
- British Columbia: not required

technical

Set Pressure Ranges

- 1/2" to 2" – 5 to 150 psi
- 2-1/2" and 3" – 7.5 to 150 psi
- 2-1/2" to 4" – 4 to 60 psi (optional)
- 4" – 7.5 to 90 psi

Maximum Viscosity

- 120cP is maximum recommended service viscosity

[1] For ChemFlare™ end connectors, consult Chemline.
[2] PP and PVDF spigot ends have DIN dimensions and will butt fuse directly to Chemline PP and PVDF piping systems.
[3] PVC valves with EPDM or FKM (Viton®) seals are certified under NSF/ANSI Standard 61 for contact with drinking water.

09/14 ©Chemline Plastics Limited 2014
Chemline is a registered trade mark of Chemline Plastics Limited

SB12 Series Back Pressure/Relief Valves 1/2" to 2"

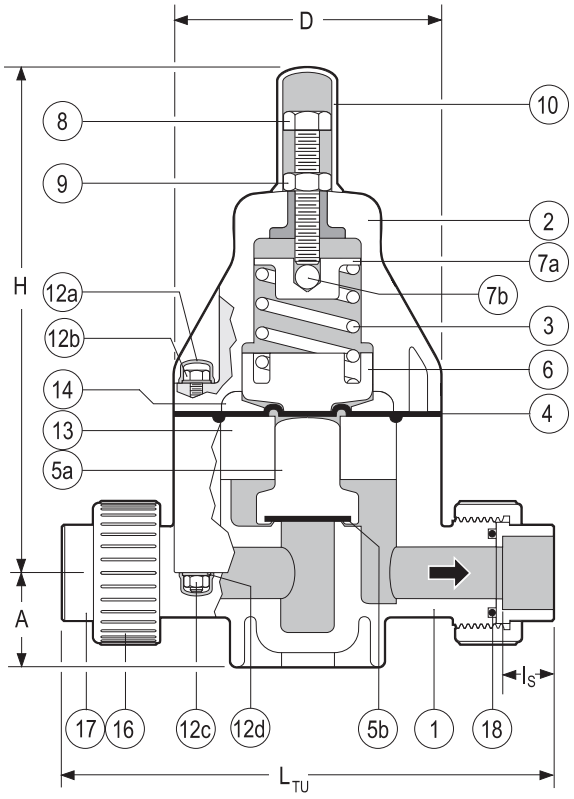

True Union Body

PARTS

▲ Recommended Spare Parts

No.	Part	Pcs.	Materials
1	Body	1	PVC, PP, PVDF
2	Bonnet	1	PPG
3	Spring	1	Galvanized Steel
4▲	Control Diaphragm	1	PTFE bonded EPDM
5a▲	Piston	1	PVC, PP, PVDF
5b▲	Seat	1	EPDM, FPM(Viton®)
6	Lower Spring Retainer	1	PPG
7a	Upper Spring Retainer	1	Cad. Plated Steel
7b	Ball	1	304 SS
8	Spring Tensioning Bolt	1	304 SS
9	Lock Nut	1	304 SS
10	Spring Bolt Cap	1	PE
12a	Bolt/Nut Cap	8/12[1]	PE
12b	Hex Bolt	4/6[1]	304 SS
12c	Hex Nut	4/6[1]	304 SS
12d	Washer	8/12[1]	304 SS
13	Spacer Disc	1	PVC, PP, PVDF
14	Pressure Plate	1	PP
16	Union Nut	2	PVC, PP, PVDF
17	End Connector	2	PVC, PP, PVDF
18▲	Face O-Ring	2	EPDM, FPM(Viton®)

[1] 1/2" size / 3/4" to 2" sizes

OTHER ENDS

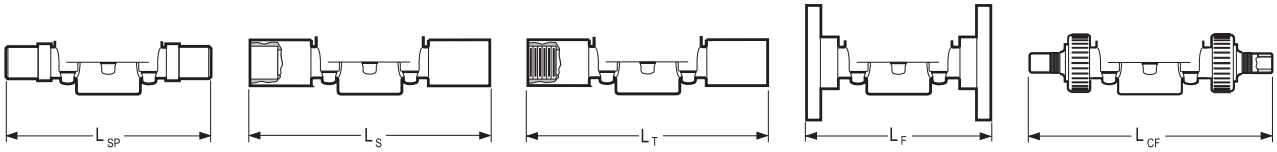

Spigot Body | Socket | Threaded | Flanged | ChemFlare™

DIMENSIONS INCHES

WEIGHTS LB.

Cv VALUES

Size	D	H	PVC A	PVC I_S	PVC L_{TU}[2]	PVC L_{SP}[3]	PVC L_S	PVC L_T	PVC L_F	PVC L_{CF}	PP and PVDF A	PP and PVDF L_{SP}[3]	PP and PVDF L_{TU}[2]	PVC	PP	PVDF	USGPM Flow at 1 psi △P
3/8"	3.2	6.9	1.0	0.6	6.5	5.7	7.4	7.2	4.5	8.2	0.9	5.7	**	1.8	1.5	2.2	2.1
1/2"	3.2	6.9	1.0	0.6	6.8	5.7	8.0	7.8	6.3	8.3[4]	0.9	5.7	7.1	1.9	1.6	2.4	3.0
3/4"	4.2	8.0	1.5	0.7	8.3	6.9	9.3	8.9	7.4	9.7	1.4	6.9	8.4	4.1	3.5	4.6	6.6
1"	4.2	8.0	1.5	0.9	8.5	6.9	9.6	9.3	7.4	10.2	1.4	6.9	8.7	4.2	3.5	4.7	8.7
1-1/4"	5.8	10.3	2.2	1.0	10.9	8.8	11.6	11.2	9.2	13.5	2.1	8.8	10.9	11.0	9.0	12.0	18.0
1-1/2"	5.8	10.3	2.2	1.2	11.1	8.8	12.2	11.5	9.5	–	2.1	8.8	11.2	11.2	9.2	12.2	20.0
2"	5.8	10.3	2.2	1.5	11.3	9.6	12.9	12.0	10.0	–	2.1	8.8	13.2	11.4	9.4	12.4	21.4

[2] True Union bodies come standard with socket ends. Threaded union ends are available. ** Consult Chemline.

[3] Spigot bodies are used for non union socket, threaded or flanged ends. All spigot ends have metric dimensions and the PP and PVDF spigots butt fuse directly to Chemline PP and PVDF piping. [4] Tube size can be reduced to 1/4" tube, LCF = 7.74" for 1/4", 8.26" for 3/8".

MAXIMUM PRESSURES PSI

Size	PVC 20°C 68°F	PVC 30°C 86°F	PVC 40°C 104°F	PVC 50°C 122°F	PP 30°C 86°F	PP 40°C 104°F	PP 50°C 122°F	PP 60°C 140°F	PP 70°C 158°F	PVDF 30°C 86°F	PVDF 50°C 122°F	PVDF 70°C 158°F	PVDF 80°C 176°F	PVDF 90°C 194°F	PVDF 100°C 212°F
1/2"– 2"	150	105	60	15	150	90	60	37.5	15	150	100	60	45	30	15

Temperature Ranges: PVC 0 to 50°C (32 to 122°F), **PP** 10 to 70°C (50 to 158°F), **PVDF** –30 to 100°C (–22 to 212°F).

SB12 Series Back Pressure/Relief Valves 1/2" to 2"

pressure loss nomogram for SB12 valves 3/8" to 2"

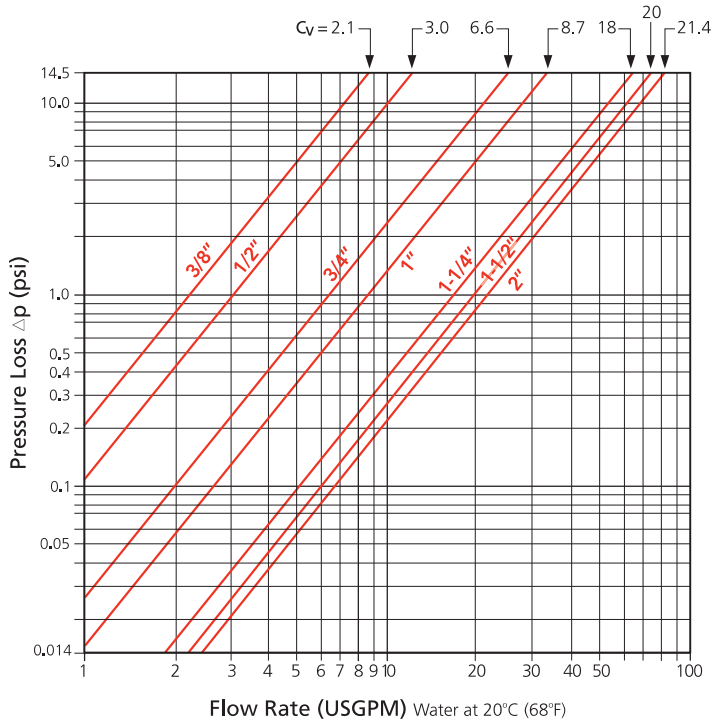

typical dosing system schematic

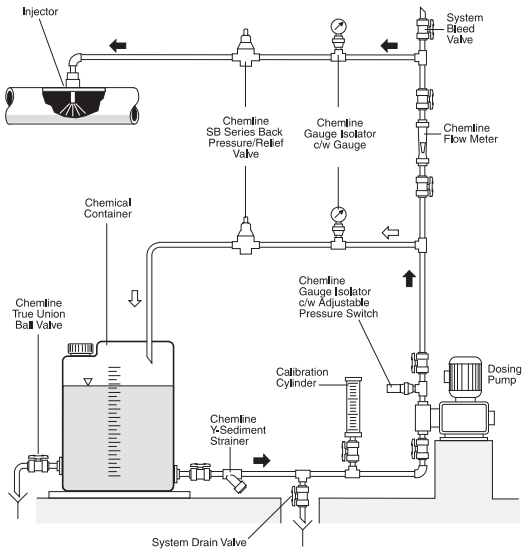

application of pressure relief valves

Constant System Pressure

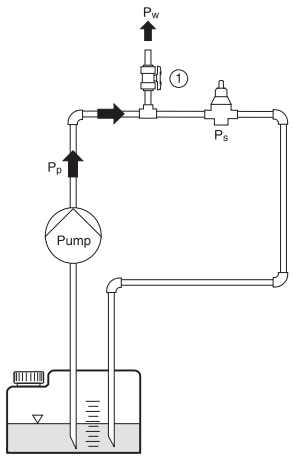

$P_p \geq P_w$
$P_p \geq P_s$ → valve opens
$P_p \leq P_s$ → valve closed

P_w = Working Pressure
P_p = Pump Pressure
P_s = Set Pressure

Consumer 1 and/or 2 Open, Valve Closes

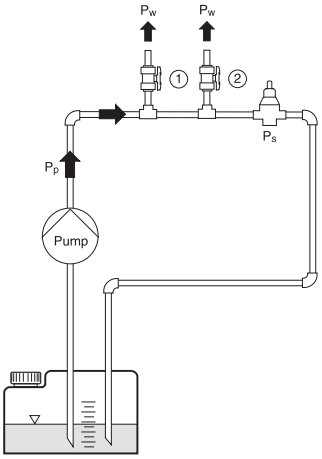

$P_p \geq P_s$ → valve opens
$P_p \leq P_s$ → valve closed

Non-Return Valve

Container 1 is located above the pump

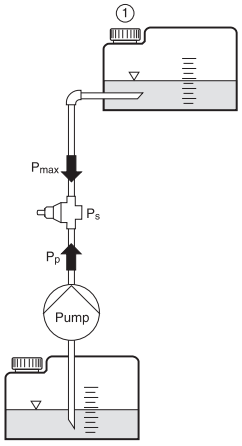

$P_s \geq P_{max}$
$P_p \geq P_s$ → valve opens
$P_p \leq P_s$ → valve closed

Overflow Valve

Pressure of container or application system should not exceed the maximum pressure value

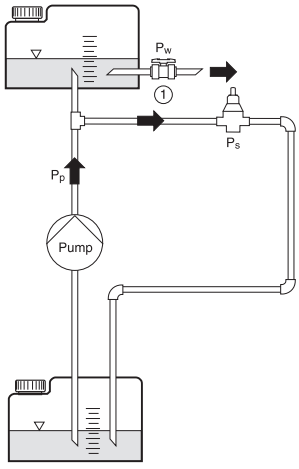

$P_s \leq P_w$
$P_p \geq P_s$ → valve opens
$P_p \leq P_s$ → valve closed

SB12 Series Back Pressure/Relief Valves 1/2" to 2"

working pressure vs. flow rate

The curves show the relationship between the working pressure and the approximate flow rate through the valve for water at 20°C (68°F) . These values will vary depending on:

- The configuration of the piping and the pressure losses associated with it
- The fluid if not water at 20°C (68°F)
- Whether the pressure is rising or falling, hysteresis is approximately 4 psi for 1/2" to 2" valves. For valves 2-1/2" to 4", hysteresis is approximately 14.5 psi.

operation examples

1. The valve is set closed at 100 psi. At a pressure increase of 10 psi, a flow of approximately 1.0 USGPM will be reached.
   - set pressure = 100 psi
   - working pressure = 110 psi
   - opening pressure = approximately 104 psi
2. The valve is set closed at 50 psi. At a pressure increase of 10 psi, a flow of approximately 1.0 USGPM will be reached.
   - set pressure = 50 psi
   - working pressure = 60 psi
   - opening pressure = approximately 54 psi

3/8" Valves

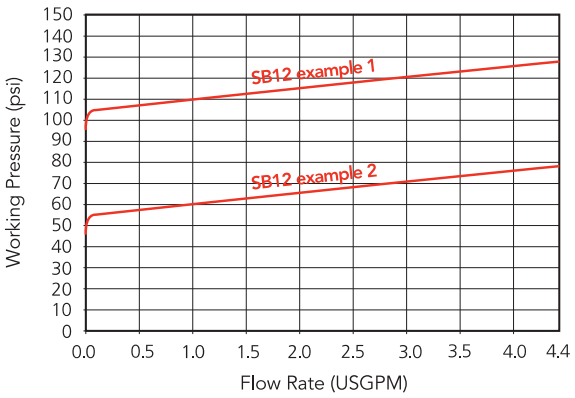

1/2" Valves

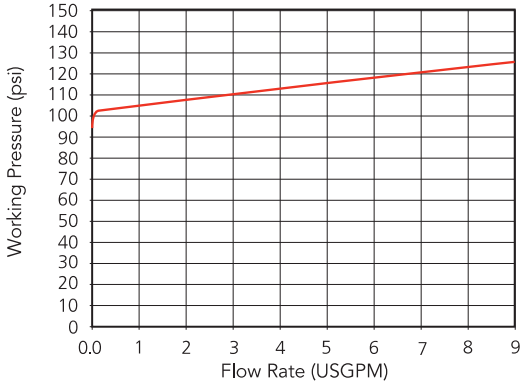

3/4" Valves

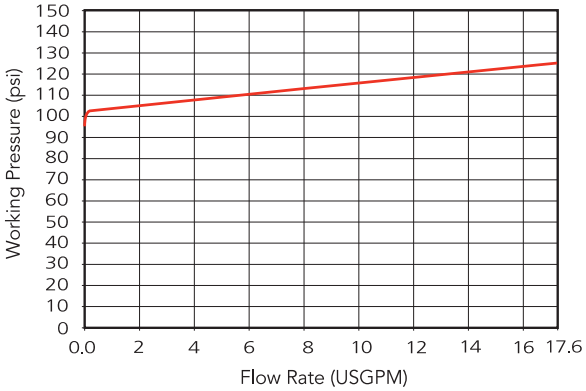

1" Valves

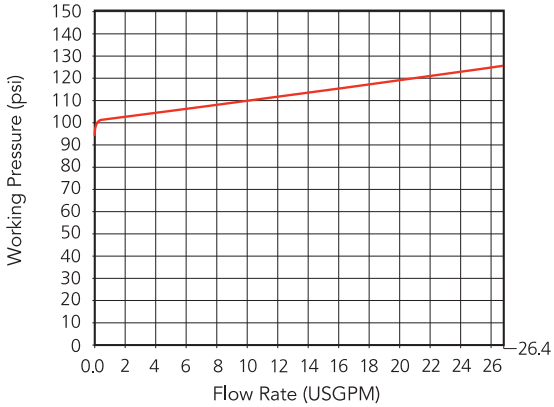

1-1/4" Valves

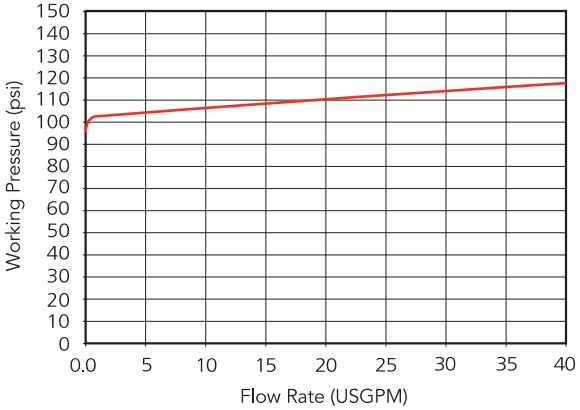

1-1/2" Valves

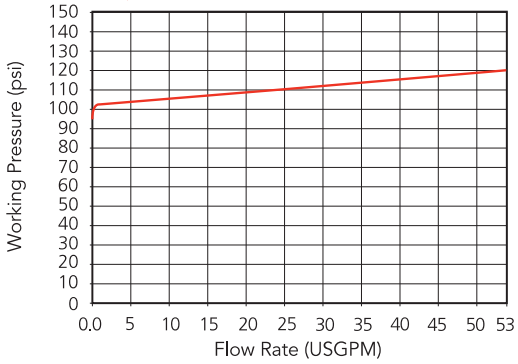

2" Valves

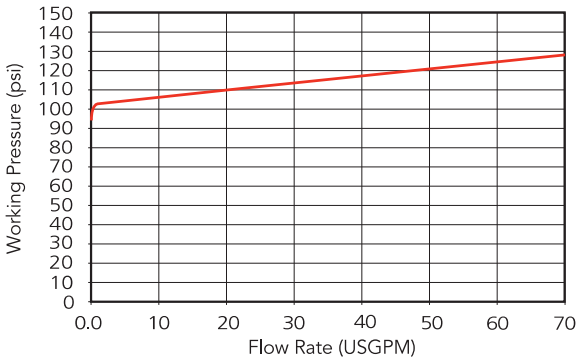

SB12 Series Back Pressure/Relief Valves 2-1/2" to 4"

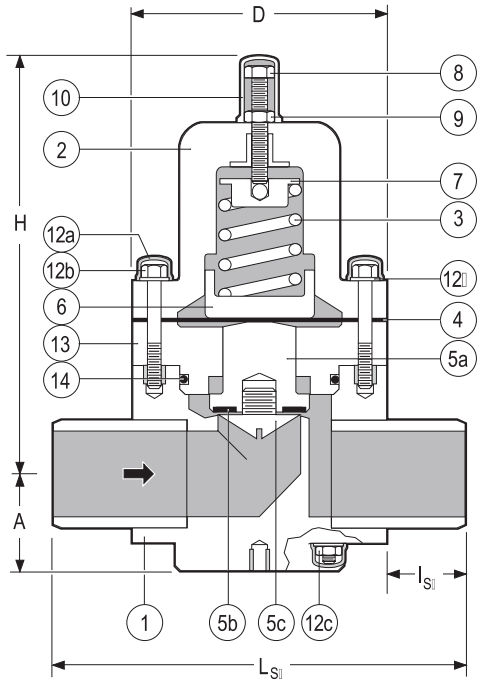

Spigot Body

PARTS

▲ Recommended Spare Parts

No.	Part	Pcs.	Materials
1	Body	1	PVC, PP, PVDF
2	Bonnet	1	PPG
3	Spring	1	Galvanized Steel
4▲	Control Diaphragm	1	PTFE bonded EPDM
5a▲	Piston	2	PVC, PP, PVDF
5b▲	Seat	1	EPDM, FPM(Viton®)
5c▲	Seat Retainer	1	PVC, PP, PVDF
6	Lower Spring Retainer	1	PPG
7	Upper Spring Retauner	1	304 SS
8	Spring Tensioning Bolt	1	304 SS
9	Lock Nut	1	304 SS
10	Spring Bolt Cap	1	PE
12a	Hex Bolt/Nut Cap	20	PE
12b	Hex Bolt/Stud	12[1]	304 SS
12c	Hex Nut	20	304 SS
12d	Washer	20	304 SS
13	Spacer Disc	1	PVC, PP, PVDF
14	Spacer O ring	1	EPDM, FPM(Viton®)

[1] 2 large upper bolts, 2 shorter lower bolts, 8 studs

OTHER ENDS

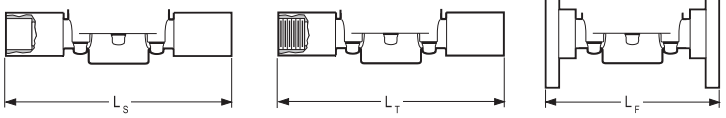

Socket Threaded Flanged

ChemFlare™ Ends
- For connection to PFA tube. Leak-free connections for difficult services such as sodium hypochlorite

DIMENSIONS INCHES

WEIGHTS LB.

Cv VALUES

Size	PVC, PP & PVDF A	D	H	L_{SP}[2]	I_{SP}	PVC L_F	PVC	PP	PVDF	USGPM Flow at 1 psi △P
2-1/2"	2.7	6.9	11.1	11.2	2.1	12.2	20.9	15.4	24.6	41
3"	3.0	7.9	12.2	14.2	3.1	15.0	26.4	23.8	30.8	63
4"	3.7	9.8	14.2	16.5	3.3	16.9	33.0	26.4	37.4	98

[2] Plain spigot ends in PP & PVDF may be butt fused directly to Chemline PP & PVDF piping systems. Weights based on spigot bodies.

MAXIMUM PRESSURES PSI

Size	PVC 20°C 68°F	30°C 86°F	40°C 104°F	50°C 122°F	PP 20°C 68°F	30°C 86°F	40°C 104°F	50°C 122°F	60°C 140°F	70°C 158°F	PVDF 30°C 86°F	50°C 122°F	70°C 158°F	80°C 176°F	90°C 194°F	100°C 212°F
2-1/2"–4"	150	90	44	15	150	116	90	60	37.5	15	150	90	55	40	30	15

Temperature Ranges: PVC 0 to 50°C (32 to 122°F), **PP** 10 to 70°C (50 to 158°F), **PVDF** –30 to 100°C (–22 to 212°F).

ORDERING EXAMPLE

Chemline Back Pressure/ Relief Valves	SB12	A	005	V	U
Body Material	**A** – PVC	**B** – PP	**K** – PVDF		
Size	**003** – 3/8" **010** – 1" **020** – 2"	**005** – 1/2" **012** – 1-1/4" **025** – 2-1/2"	**007** – 3/4" **015** – 1-1/2" **030** – 3"	**040** – 4"		
Elastomers	**E** – EPDM	**V** – FPM (Viton®)				
Ends	**S** – Socket **CFx** – ChemFlare™	**T** – Threaded	**F** – Flanged **Blank** – Spigot (Butt)	**U** – Union Socket		

Example: Chemline SB 12 Series, PVC, 1/2" diameter, FPM (Viton®) seals, Union socket ends.
x = 4 for 1/4", **6** for 3/8", **8** for 1/2", **12** for 1" ID tube connections.

OPTIONS

- 4 to 60 psi Pressure Range springs for 2-1/2" to 4" valves
- **Integral Pressure Gauge** – for inlet and/or outlet
- Bodies in 316 Stainless Steel and PTFE

Optional Pressure Gauge
- For inlet and/or outlet

SB12 Series Back Pressure/Relief Valves 2-1/2" to 4"

working pressure vs. flow rate

• Whether the pressure is rising or falling, hysteresis is approximately 14.5 psi for 2-1/2" to 4" valves

2-1/2" Valves / 4 to 60 psi set pressure range

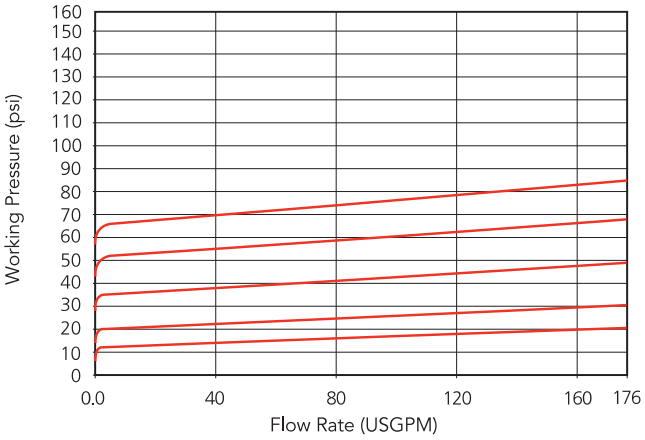

2-1/2" Valves / 7.5 to 150 psi set pressure range

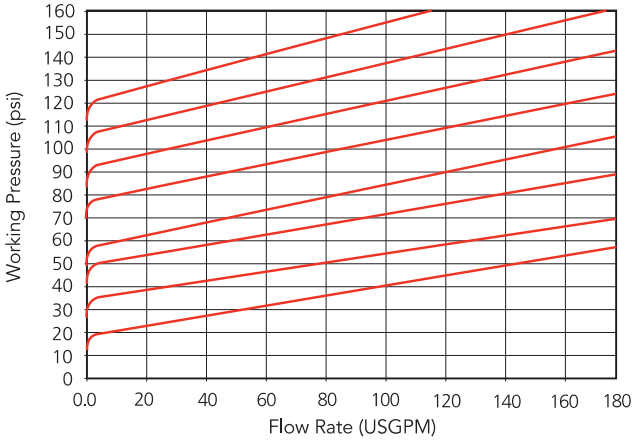

3" Valves / 4 to 60 psi set pressure range

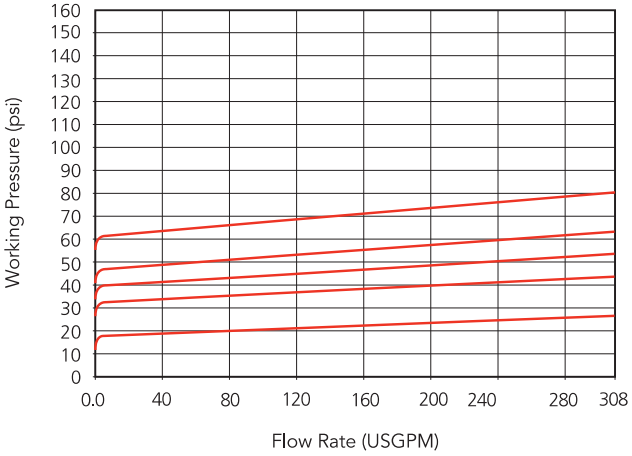

3" Valves / 7.5 to 150 psi set pressure range

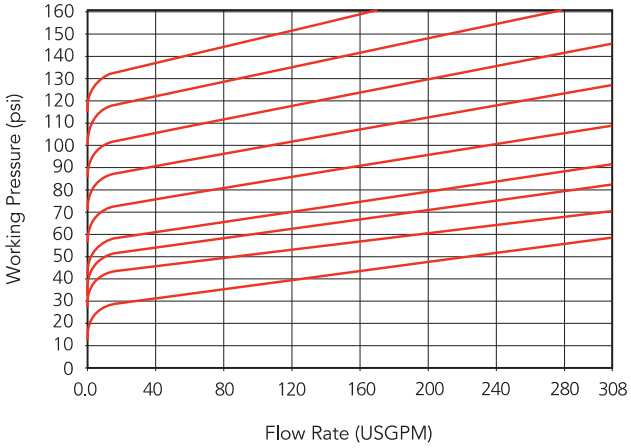

4" Valves / 4 to 60 psi set pressure range

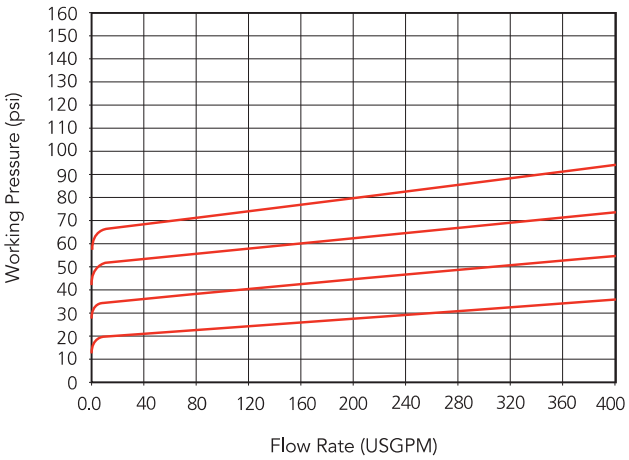

4" Valves / 7.5 to 90 psi set pressure range

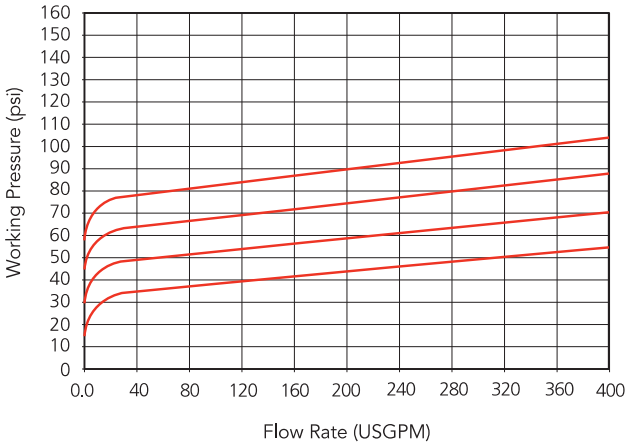

CHEMLINE PLASTICS
SUPERIOR FLOW SOLUTIONS

55 Guardsman Road, Thornhill, ON, L3T 6L2, Canada | ISO 9001:2008 Certified
tel.905.889.7890 | fax.905.889.8553 | request@chemline.com | chemline.com

PDF Published June 23, 2014

Gauge Isolators

CHEMLINE PLASTICS
SUPERIOR FLOW SOLUTIONS

PVC PP PVDF

CRN Registered Consult Chemline

NSF[4] Certified to NSF/ANSI 61

SERIES: SG

INLET CONNECTION: 1/4" or 1/2" Threaded[1]

INSTRUMENT CONNECTION: 1/4" or 1/2" Threaded

DIAPHRAGM: PTFE

[1] Other available inlet connections are 1/2" socket or 1/2" to 1" flanged.
[2] Other fluids are available for special applications such as chlorine service.
[3] Glass reinforced polypropylene.
[4] PVC isolators are certified under NSF/ANSI Standard 61 for contact with drinking water.

Chemline SG Series Gauge Isolators allow inexpensive pressure gauges, or any other pressure instrument to be used in corrosive services. The upper chamber (gauge side) is filled with a stable fluid such as glycol or glycerine[2]. A diaphragm separates it from the lower chamber which receives the media under pressure.

The 1/2" gauge connection allows use of the popular 4" and 4-1/2" diameter gauges. Pressure switches or transmitters may also be installed. Customers can easily fill isolators and install their own gauges.

features

Easy to Mount Gauges

- It is easy to fill an isolator and field mount a gauge. No special equipment is required.
- Will accept popular 4" and 4-1/2" diameter gauges

Provision for Fill Port

- Housing may be drilled and tapped by Chemline or customer for a threaded fill port. This is used for filling isolator using a vacuum filling station

High Chemical Resistance

- Choice of body materials for a wide range of applications
- PTFE bonded EPDM dished diaphragm for high chemical resistance and sensitivity

Heavy Duty Design for Safety

- PPG[3] top chamber
- Heavy wall connection ports

CRN Registration number by province

- Ontario: OH16085.5

Optional Gauges

- Isolators are available alone or with gauge mounted and prefilled with glycol[2]

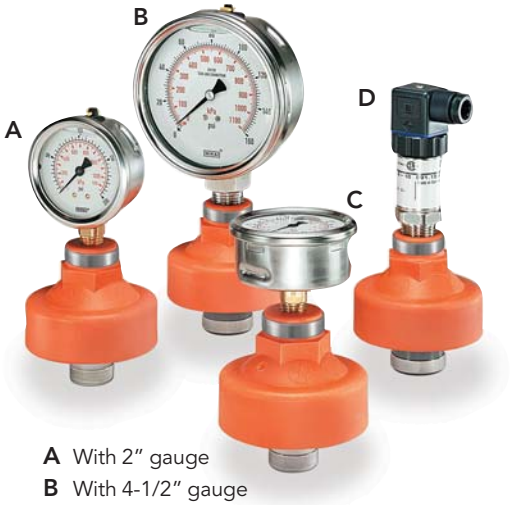

A With 2" gauge
B With 4-1/2" gauge
C With 2" back mount gauge
D With pressure transmitter

06/14 ©Chemline Plastics Limited 2014
Chemline is a registered trade mark of Chemline Plastics Limited

Gauge Isolators

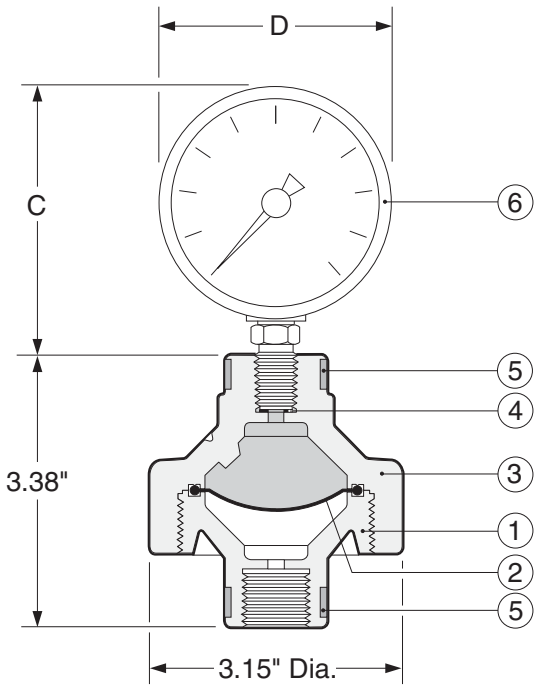

PARTS

No.	Part	Pcs.	Materials
1	Body	1	PVC, PP, PVDF
2	Diaphragm	1	PTFE
3	Bonnet	1	PPG[1]
4	Gasket	1	EPDM
5	Stainless Steel Bands	2	304 SS
6	Optional Gauge	1	See below

[1]PPG = Glass reinforced polypropylene

OPTIONAL GAUGES

- Chemline offers the gauges listed below mounted to isolator and prefilled with glycol, glycerine or special fluid for chlorine applications. These gauges have dials and cases filled with either glycol (standard), glycerine or silicon for corrosion resistance and dampening.
- Chemline SG gauge isolators are not recommended for vacuum applications. They will not affect the gauge accuracy as low as approximately 3 psi. The accuracy depends on the process conditions and the gauge installed on it.

OTHER OPTIONS

- **Flanged** inlet connections
- **Threaded Fill Port** – drilled, tapped and plugged
- Chemline will mount any pressure instrument supplied free issue by customer

DIMENSIONS (Gauge Isolator with optional gauge installed) INCHES

Optional Gauge Ordering No.	Gauge Diameter	Gauge Connection	Housing	Bourdon Tube	Window	Accuracy	Dimensions C	Dimensions D(max.)
P025-xx	2-1/2"	1/4"	316 SS	Brass	Polycarbonate	±1.5% of span	3.1	2.5
P025-xx-SS	2-1/2"	1/4"	316 SS	316 SS	Polycarbonate	±1.5% of span	3.1	2.5
P025-xx-SS/BM	2-1/2" Back Mount	1/4"	316 SS	316 SS	Polycarbonate	±1.5% of span	1.6	2.5
P025-xx-BM	2-1/2" Back Mount	1/4"	316 SS	Brass	Polycarbonate	±1.5% of span	1.6	2.5
P040-xx-SS	4"	1/2"	316 SS	316 SS	Safety Glass	±1% of span	4.5	4.0
P045-xx-SS	4-1/2"	1/2"	PBTP Plastic[2]	316 SS	Acrylic	±0.5% of span	6.3	5.8

xx denotes the maximum gauge pressure i.e., 30, 60, 100, 160 or 200 psi. See data page for recommended working pressures.
[2] PBTP = glass filled polyester.

WORKING PRESSURES PSI

WEIGHTS

Material	10 – 20°C 50 – 68°F	30°C 86°F	40°C 104°F	50°C 122°F	60°C 140°F	70°C 158°F	80°C 176°F	90°C 194°F	100°C 212°F	120°C 248°F	Net Weights Pounds[3]
PVC	150	100	80	45	15	–	–	–	–	–	1.0
PP	150	125	100	80	65	45	–	–	–	–	0.7
PVDF	150	150	150	125	105	85	70	60	45	30	1.3

Temperature Ranges: PVC 0 to 60°C (32 to 140°F), **PP** 10 to 80°C (50 to 176°F), **PVDF** –30 to 120°C (–22 to 248°F).
NR = Not Recommended. [3] Weights are for unfilled 1/2" x 1/2" isolators without gauges. 1/2" x 1/4" isolators are 20% lighter.

ORDERING EXAMPLE

Chemline Gauge Isolators SG		A	005-	002	P	G
Body Material	**A** – PVC	**B** – PP	**K** – PVDF			
Inlet Size	**002** – 1/4"	**005** – 1/2"(Standard)				
Instrument Connection	**002** – 1/4"	**005** – 1/2"				
Diaphragm	**P** – PTFE bonded EPDM					
Filling & Mounting	**G** –Add only if isolator is supplied filled with glycol and gauge or pressure instrument is mounted by Chemline. Separate gauge item numbers are listed above.					

Example: Chemline SG Series Gauge Isolator, PVC, 1/2" x 1/4" FNPT inlet x instrument connections, PTFE diaphragm.

CHEMLINE PLASTICS
SUPERIOR FLOW SOLUTIONS
55 Guardsman Road, Thornhill, ON, L3T 6L2, Canada | ISO 9001:2008 Certified
tel.905.889.7890 | fax.905.889.8553 | request@chemline.com | chemline.com

Project name: AMARUQ

Project#: 5000218009

Document #: SPK_0004_PCH

by: GH

chkd: GP

appvd: CB

SULFURIC ACID DOSING SKID

CALIBRATION CYLINDER

OIM manual section: 4.3.4.5

This page is intentionally left blank

CS-500-100 : Identification sheet

VWTC PROJECT NUMBER:	5000218009	REV:	1
PROJECT NAME:	AEM AMARUQ	SUBMITTED TO (COMPANY):	AGNICO EAGLE MINES
ENGINEER:	Gabriel Hébert	SUBMITTED TO (RESPONSIBLE)	
PROJECT MANAGER:	Clément B	PROJECT NUM REFERENCE.:	
PHONE NUMBER:		LOT NUMBER:	

SUPPLIER	EQPT CODE	EQPT TAG NO	DIA	DESCRIPTION	INFO 1	INFO 2	INFO 3	APPLIC.	NOTE	REV
PRIMARY FLUID	TOLBGU316608	CLY9-531	N/A	CALIBRATION CYLINDER	CALIBRATION CYLINDER/MANUFACTURER: PRIMARY FLUID/MODEL: ACS-2-250-GKV-F	N/A	N/A	SULFURIC ACID DOSING SKID		

This page is intentionally left blank

ACCUDRAW® Calibration Cylinders

Polypropylene

PVC

Glass

- PVC with removable "O" ring sealed top for easy cleaning

- yellow polypropylene level indicator float for high visibility

ACCUDRAW® ***has been developed for the accurate calibration of metering pumps. Standard features include:***

- translucent
- chemical resistant
- break resistant
- threaded, socket or flanged
- colored graduations and lettering
- PVC has dual scale USGPH & ml
- PVC sizes 100 - 20000 ml
- POLY sizes 100 - 4000 ml
- POLY meets ISO standards
- Glass sizes 100 - 20000 ml
- custom designs available

For detailed product information visit our website: primaryfluid.com

PRIMARY FLUID SYSTEMS INC.
Call Toll Free 1-800-776-6580
Tel (905) 333-8743 Fax (905) 333-8746
E-Mail: primary@primaryfluid.com
www.primaryfluid.com

ACCUDRAW® Calibration Cylinders

"For Accuracy That Counts"

For complete product information visit our website: primaryfluid.com

Flanged: Glass, PVC

Flanged: PVC

PV#4

Sizing and Ordering Information:

ACCUDRAW Standard Materials of Construction

AC = All polypropylene construction (see below for options)
PV = All polyvinylchloride construction (see below for options)
ACS = Glass*

Note: Cylinders are NOT pressure vessels

Example: AC#1-1000B

AC = PP (polypropylene)
#1 = Bottom threaded connection only
1000 = 1000 ml
B = BSP Thread

e.g. Part # AC #1 - 1000 B

Type:
AC = Polypropylene
PV = PVC
ACS = Glass

Style:
1 = Bottom threaded conn. only
2 = Top and Bottom threaded conn.
3 = Bottom threaded conn. c/w removable vented dust cap
4 = Top/Bottom threaded conn. c/w removable "O" ring sealed top and float ring level indicator
**** Glass calibration cylinders available in Style 2 only***

Graduation Scale:
PP - ml only
PVC - ml and GPH
Glass - ml only

Std. connection is NPT thread
Optional: add suffix as follows
S = Socket weld connection (PVC only)
GTV = Glass/TFE construction
GKV = Glass/PVDF construction
GCV = Glass/CPVC construction
GSV = Glass/SS construction
B = BSP Thread
F = Flanged

Substitute **E** for **V**
for **EPDM** wetted "O" ring seal

Sizes:		**Material**
100 =	100 ml (1.6 GPH)	PP, PVC, Glass
250 =	250 ml (4 GPH)	PP, PVC, Glass
500 =	500 ml (8 GPH)	PP, PVC, Glass
1000 =	1000 ml (16 GPH)	PP, PVC, Glass
2000 =	2000 ml (32 GPH)	PP, PVC, Glass
4000 =	4000 ml (64 GPH)	PP, PVC, Glass
6000 =	6000 ml	Glass only
8000 =	8000 ml	Glass only
10000 =	10000 ml (160 GPH)	PVC, Glass
20000 =	20000 ml (320 GPH)	PVC, Glass

Custom sizes and materials available.

ACCUDRAW® Calibration Cylinders

ACCUDRAW® Glass Calibration Cylinders ***are ideal for the calibration of metering pumps, batch systems and for handling hazardous chemicals.***

- **volumes calibrated in ml**
- **construction materials available include TFE, PVDF, CPVC and 316 stainless steel**
- **sealing "O" rings are Viton and Buna N**
- **outer shield of acrylic construction**
- **port connections in NPT, metric or flanged**
- **standard sizes 100 - 20,000 ml**
- **custom designs available to your specifications**

Sizing and Ordering Information: Glass Construction

Size	Conn.	Model # For TFE End Flgs	Model # For 316 S/S End Flgs	Model # For PVDF End Flgs	Model # For CPVC End Flgs
100 ml	1/2" NPT	ACS#2-100-GTV	ACS#2-100-GSV	ACS#2-100-GKV	ACS#2-100-GCV
250 ml	1/2" NPT	ACS#2-250-GTV	ACS#2-250-GSV	ACS#2-250-GKV	ACS#2-250-GCV
500 ml	1/2" NPT	ACS#2-500-GTV	ACS#2-500-GSV	ACS#2-500-GKV	ACS#2-500-GCV
1000 ml	1/2" NPT	ACS#2-1000-GTV	ACS#2-1000-GSV	ACS#2-1000-GKV	ACS#2-1000-GCV
2000 ml	1 " NPT	ACS#2-2000-GTV	ACS#2-2000-GSV	ACS#2-2000-GKV	ACS#2-2000-GCV
4000 ml	1" NPT	ACS#2-4000-GTV	ACS#2-4000-GSV	ACS#2-4000-GKV	ACS#2-4000-GCV
6000 ml	1" NPT	ACS#2-6000-GTV	ACS#2-6000-GSV	ACS#2-6000-GKV	ACS#2-6000-GCV
8000 ml	2" NPT	ACS#2-8000-GTV	ACS#2-8000-GSV	ACS#2-8000-GKV	ACS#2-8000-GCV
10000 ml	2" NPT	ACS#2-10000-GTV	ACS#2-10000-GSV	ACS#2-10000-GKV	ACS#2-10000-GCV
20000 ml	2" NPT	ACS#2-20000-GTV	ACS#2-20000-GSV	ACS#2-20000-GKV	ACS#2-20000-GCV

Cylinders are bolted together using stainless steel rods with Viton "O" rings for the glass seal and Buna N "O" rings for the acrylic seal. For EPDM "O" rings, subsititute "E" for "V".

Options available: (may affect price and delivery)

- **different type or size of thread connection, different "O" ring material, different flange material**

Descriptions:

TFE, PVDF and CPVC End Flanges:
Glass cylinder with acrylic outer shield and 3/4" thick (TFE, PVDF or CPVC) end flanges

316 S/S End Flanges:
Glass cylinder with acrylic outer shield and 1/2" thick 316 Stainless Steel end flanges

Glass Dimensional Information

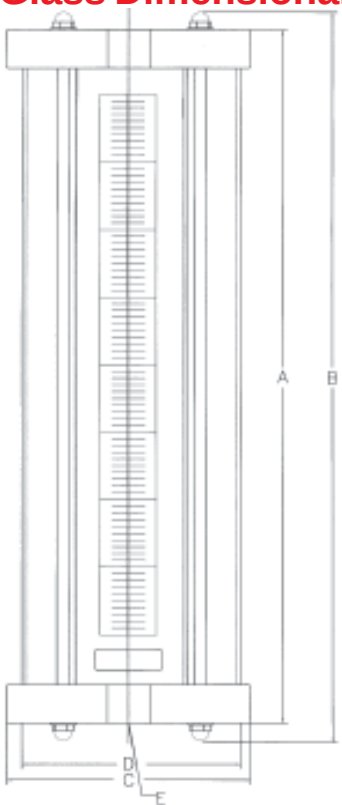

Note: Cylinders are <u>not</u> pressure vessels.

Dimensions subject to change without notice.

Glass cylinders with TFE, PVDF or CPVC End Flanges

Size ml	DIV ml	A inches	B inches	C inches	D inches	E thread
100	1.00	10.00	11.00	3.00	2.50	1/2" FNPT
250	2.00	12.75	13.50	3.50	3.00	1/2" FNPT
500	5.00	14.50	15.50	4.00	3.50	1/2" FNPT
1000	10.00	16.75	17.75	4.75	4.25	1/2" FNPT
2000	20.00	18.75	19.75	5.50	5.00	1" FNPT
4000	25.00	22.50	23.50	6.50	6.00	1" FNPT
6000	50.00	20.13	21.16	8.00	7.50	1" FNPT
8000	50.00	24.63	25.66	8.00	7.50	2" FNPT
10000	50.00	30.13	31.16	8.00	7.50	2" FNPT
20000	200.00	43.25	44.25	9.00	8.50	2" FNPT

Glass cylinders with 316 Stainless Steel End Flanges

Size ml	DIV ml	A inches	B inches	C inches	D inches	E thread
100	1.00	9.50	10.50	3.00	2.50	1/2" FNPT
250	2.00	12.25	13.00	3.50	3.00	1/2" FNPT
500	5.00	14.00	15.00	4.00	3.50	1/2" FNPT
1000	10.00	16.25	17.25	4.75	4.25	1/2" FNPT
2000	20.00	18.25	19.25	5.50	5.00	1" FNPT
4000	25.00	22.00	23.00	6.50	6.00	1" FNPT
6000	50.00	19.63	20.66	8.00	7.50	1" FNPT
8000	50.00	24.13	25.16	8.00	7.50	2" FNPT
10000	50.00	29.63	30.66	8.00	7.50	2" FNPT
20000	200.00	42.75	43.75	9.00	8.50	2" FNPT

ACCUDRAW® Calibration Cylinders

Installations

Conversion Factors
1 ml = 1 cc
1000 ml = 1 liter
ml/sec X 60 = ml/min
1 US gal/min X 0.063 = liters/sec
1 US gal = 3.786 liters

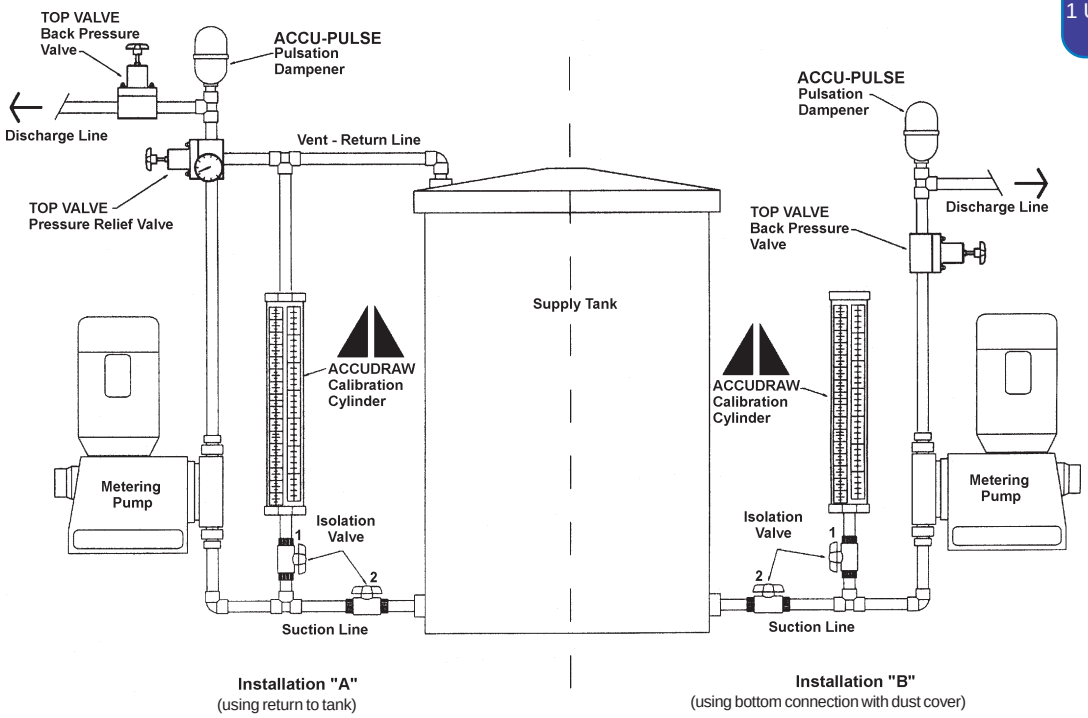

Installation "A"
(using return to tank)

Installation "B"
(using bottom connection with dust cover)

Other available products at www.primaryfluid.com

TOP VALVE Back Pressure/Pressure Relief

- *long life diaphragm*
- *range of 15 - 350 PSIG*
- *air release, optional gauge port*
- *PVC, CPVC, PVDF, Teflon, polypropylene, stainless, Alloy 20 and Hastelloy C*
- *7 sizes 1/4" - 2" NPT*
- *color coded handles indicate size*
- *higher pressure & temperature available*

PFS Corporation Stops

Designed to inject chemical into the center stream of process.

- *isolation valve allows for ease of maintenance*
- *available in 6 materials of construction*
- *wetted components have comparable or greater chemical resistance than quill construction material*
- *standard and custom lengths available*
- *connection in NPT, metric or flanged*

Custom built in other sizes & materials.

ACCUPULSE Pulsation Dampeners

Designed to remove pulsatingflows from positive displacement pumps.

- *increase system efficiency and pump life; decrease maintenance and costs*
- *protect pipes, meters, valves and instrumentation from pulsation and vibration*
- *ensure meter accuracy, longevity and repeatability*
- *prevent foaming and splashing*
- *extensive range of materials and sizes with lightweight, compact design*

Distributed By:

PRIMARY FLUID SYSTEMS INC.

Call Toll Free 1-800-776-6580
Tel: (905) 333-8743
Fax: (905) 333-8746

Distribution Territories Available

E:Mail: primary@primaryfluid.com
www.primaryfluid.com

® Registered Trade Mark of Primary Fluid Systems

Project name: AMARUQ

Project#: 5000218009

Document #: SPK_0004_PCH

by: GH

chkd: GP

appvd: CB

SULFURIC ACID DOSING SKID

PULSATION DAMPENER

OIM manual section: 4.3.4.6

This page is intentionally left blank

CS-501-100 : Identification sheet

VWTC PROJECT NUMBER:	5000218009	REV:	1
PROJECT NAME:	AEM AMARUQ	SUBMITTED TO (COMPANY):	AGNICO EAGLE MINES
ENGINEER:	Gabriel Hébert	SUBMITTED TO (RESPONSIBLE)	
PROJECT MANAGER:	Clément B	PROJECT NUM REFERENCE.:	
PHONE NUMBER:		LOT NUMBER:	

SUPPLIER	EQPT CODE	EQPT TAG NO	DIA	DESCRIPTION	INFO 1	INFO 2	INFO 3	APPLIC.	NOTE	REV
PRIMARY FLUID	PUSPPD203070	PD9-531	N/A	PULSATION DAMPENER	PULSATION DAMPENER/MANUF.: ACCU-PULSE// MODEL: API-PVDF-V-1-F	Vol.: 10 in3/Body Mtl: PVDF/Bellows Mtl: Viton/Size: 1/2" FLANGED	N/A	SULFURIC ACID DOSING SKID		

This page is intentionally left blank

ACCU-PULSE
Pulsation Dampeners

ACCU-PULSE Pulsation Dampeners have been developed to remove pulsating flows from positive displacement pumps providing:

- **increased system efficiency and pump life**
- **protection of pipes, meters, valves and instrumentation from pulsation and vibration**
- **meter accuracy, longevity and repeatability**
- **prevention of foaming and splashing**
- **decreased maintenance and costs**

Standard Features Include:

- **lightweight, compact design**
- **extensive range of materials and sizes**
- **easy in-line maintenance**
- **2 year warranty**

For detailed product information visit our website: primaryfluid.com

PRIMARY FLUID SYSTEMS INC.

Call Toll Free 1-800-776-6580
Tel (905) 333-8743 Fax (905) 333-8746

E-Mail: primary@primary fluid.com
www.primaryfluid.com

ACCU-PULSE Pulsation Dampeners

Dampener Sizing Guide

Note: Separate sizing guide available for air operated double diaphragm pumps.

Standard Simplex Metering Pumps:

The following are general ranges for sizing ACCU-Pulse Pulsation dampeners for metering pump applications. Models stated are based on 10% pressure fluctuations and a Simplex single acting metering pump. For 5% pressure fluctuation, divide the Capacity per Stroke Range numbers in the chart below by 2.

To calculate cubic inches per stroke: $\frac{\text{gallons per minute}}{\text{strokes per minute}}$ = gallons per stroke

Gallons per stroke X 231 cu inches per gallon = cubic inch per stroke

Example: $\frac{.15}{100}$ = .0015 GPS **Therefore:** .0015 X 231 = 0.3465 Cubic inches per stroke = API Dome Top Dampener

Capacity per Stroke Range	ACCU-Pulse Dampener
0 to 0.22 Cubic Inches	API F Flat Top
0.23 to 0.75 Cubic Inches	API Dome Top
0.76 to 2.71 Cubic Inches	API IIF Flat Top
2.72 to 6.40 Cubic Inches	API II Dome Top
6.41 to 12.96 Cubic Inches	API IIIF Flat Top
12.97 to 27.89 Cubic Inches	API III Dome Top

Note:
For other pump factors, or residual pulsation, contact factory.

Ordering Information

Example: Part # AP - I - PVC - E - 1 - F

ACCU-PULSE
- AP = Standard 150/300 PSIG
- APH = High Pressure 1000/600 PSIG
- APX = High Pressure 4000 PSIG

Series
- I = 10 cu in capacity
- IF = 4 cu in capacity
- II = 85 cu in capacity
- IIF = 36 cu in capacity
- III = 370 cu in capacity
- IIIF = 175 cu in capacity
- IV = 1155 cu in capacity (AP only)
- 8 = 8 cu in capacity (APX only)
- 12 = 12 cu in capacity (APX only)
- 16 = 16 cu in capacity (APX only)
- 24 = 24 cu in capacity (APX only)

Body Material
- PP = Polypropylene
- PVC = Polyvinylchoride (not available in Series IV)
- PVDF = Polyvinylidene Fluoride
- S/S = 316L Stainless Steel
- ALL20 = Alloy 20 (not available in Series IV)
- HAST = Hastelloy C
- CS = Carbon Steel
- CPVC = Chlorinated Polyvinyl Chloride*

* (available in Series I only)

Optional Flanges
Add suffix -F for flanges

Size
- 0 = 3/8" npt(f) series I Std Metal
- 1 = 1/2" npt(f) series I Std Plastic
- 2 = 3/4" npt(f) series II Std All
- 3 = 1" npt(f) series II (Optional)
- 4 = 2" npt(f) series III
- 5 = 3" flanged series IV
- 6 = 4" flanged series IV

Bellows material
- N = Neoprene
- B = Buna-N
- H = Hypalon
- E = EPDM (Nordel)
- V = Viton
- T = Teflon
- S = Santoprene
- P = Polyvinylchloride

APX Series available ONLY with:
Body: 316L Stainless Steel
Size: 1/2" npt(f)
Bellows: Buna-N, EPDM & Viton

Note:
CRN certification available.
Food grade material available.
Other sizes and materials available.
Please contact factory.

For detailed product information visit our website: primaryfluid.com

Distributed By:

PRIMARY FLUID SYSTEMS INC.

Call Toll Free 1-800-776-6580
Tel: (905) 333-8743
Fax: (905) 333-8746
E:Mail: primary@primaryfluid.com
www.primaryfluid.com

Distribution Territories Available

*PAT 5,857,486/5,944,050
® Registered Trade Mark of Primary Fluid Systems

4 – DETAILED TECHNICAL DOCUMENTATION

4.3 – SHOP DRAWINGS

4.3.5 – POLYMER PREPARATION SYSTEM – HYDRA-POL 3500

LEFT BLANK

Project name:	AMARUQ
Project#:	5000218009
Document #:	SPK_0005_HYDP
by:	GH
chkd:	GP
appvd:	CB

SUBMITTAL PACKAGE

HYDRAPOL 3500

This page is intentionally left blank

Project name:	AMARUQ
Project#:	5000218009
Document #:	SPK_0005_HYDP
by:	GH
chkd:	GP
appvd:	CB

HYDRAPOL 3500

PROCESS DATASHEET

OIM manual section: 4.3.5.1

REFER TO 5000218009_PSDS_0005_HYDP_VWT

This page is intentionally left blank

Project name:	AMARUQ
Project#:	5000218009
Document #:	SPK_0005_HYDP
by:	GH
chkd:	GP
appvd:	CB

HYDRAPOL 3500

GENERAL ARRANGEMENT DRAWING

OIM manual section: 4.3.5.2

REFER TO 5000218009_GA_0005_HYDP_VWT

This page is intentionally left blank

Project name:	AMARUQ
Project#:	5000218009
Document #:	SPK_0005_HYDP
by:	GH
chkd:	GP
appvd:	CB

HYDRAPOL 3500

SUPPLIER TECHNICAL DATASHEETS

OIM manual section: 4.3.5.3

This page is intentionally left blank

CS-301-100 : Identification sheet

VWTC PROJECT NUMBER:	5000218009	REV:	1
PROJECT NAME:	AEM AMARUQ	SUBMITTED TO (COMPANY):	AGNICO EAGLE MINES
ENGINEER:	Gabriel Hébert	SUBMITTED TO (RESPONSIBLE)	
PROJECT MANAGER:	Clément B	PROJECT NUM REFERENCE.:	
PHONE NUMBER:		LOT NUMBER:	

SUPPLIER	EQPT CODE	EQPT TAG NO	DIA	DESCRIPTION	INFO 1	INFO 2	INFO 3	APPLIC.	NOTE	REV
CHEMLINE	VABLPV200253	V18-031	DIA: 38 mm (1-1/2")	ISOLATION VALVE - DRIVING WATER	TYPE: BALL VALVE//MANUFACTURER : CHEMLINE//MODEL : Type21-A-015-E-S//CONNECTION TYPE : FLANGED | N/A//BODY : PVC (ASTM D1784)// SEAL | SEAT :PTFE | EPDM// STEM : PVC			HYDRAPOL 3500		

This page is intentionally left blank

PDF Published March 1, 2013

Type 21 Ball Valves

CHEMLINE PLASTICS
SUPERIOR FLOW SOLUTIONS

The Chemline Type 21 True Union Ball valve incorporates state of the art features for long term performance. This is a full port, full blocking True Union valve pressure rated at 16 bar (230 psi)[4]. Double stem o-rings and Safety Shear stem design provide for a high degree of safety on hazardous fluid applications. All sizes have an ISO standard actuator mounting platform integral to the valve body. This provides for sturdy and secure mounting of pneumatic or electric actuators.

PVC | CPVC | PP | PVDF

CRN Registered Consult Chemline

NSF[5] Certified to NSF/ANSI 61

SERIES: Type 21

SIZES: 3/8" – 4"

ENDS: Socket, Threaded, Flanged, Butt[1] or ChemFlare™

SEATS: PTFE

SEALS[2]: EPDM, FKM (Viton®), CPE[3]

features

Pressure rated to 230 psi[4]
- Provides a high factor of safety

Integral Actuator Mounting Platform
- Actuation is easy. Electric or pneumatic actuators may be mounted in the field.

Full Port
- High capacity and low pressure drops

Fully Blocking
- Downstream union nut may be safely disassembled for piping maintenance while valve is closed off under full system pressure

Built-In Spanner Wrench
- Top of the handle is designed to be used as a tool for accessing internal parts

Safety Shear Stem Design
- Stem has double o-rings
- Designed to hold full pressure even if stem breaks due to excessive torque

High Chemical Resistant Material
- PVC and CPVC compounds have an "A" chemical resistance rating as per ASTM D-1784. They have outperformed other PVC and CPVC compounds on aggressive chemicals.

[1] Butt ends for fusion to Chemline metric PP, PVDF or ECTFE (Halar®) piping.
[2] Other materials are available.
[3] CPE=Chlorinated Polyethylene.
[4] PVC, CPVC and PVDF 1/2" to 2" are rated at 230 psi; 2-1/2" to 4" and all size PP valves are rated at 150 psi at 20°C.
[5] PVC valves with EPDM or FKM (Viton®) seals are certified under NSF/ANSI Standard 61 for contact with drinking water.

03/13 ©Chemline Plastics Limited 2013
Chemline is a registered trade mark of Chemline Plastics Limited

Type 21 Ball Valves

features

Double Stem O-Rings – Safety Shear Design

- Upper o-ring groove is deeper than lower. In case of excessive stem torque, stem will shear at the upper groove, leaving the inner o-ring intact to seal against full line pressure.

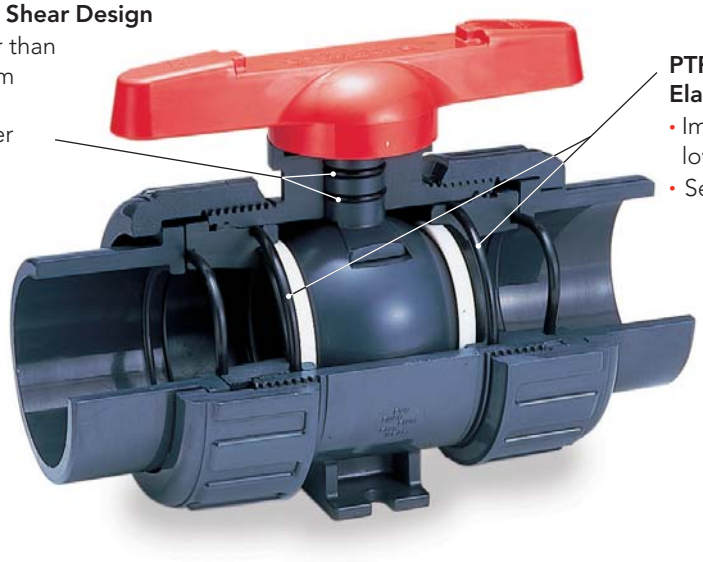

PTFE Seats have Elastomer Cushions

- Improved sealing while lowering stem torques
- Self adjusts for seat wear

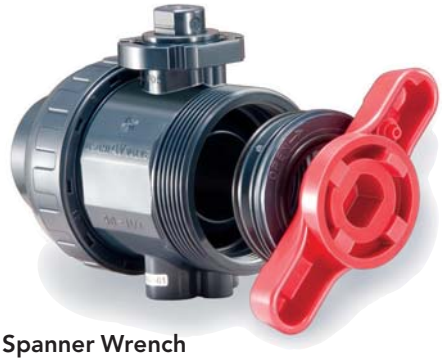

Built in Spanner Wrench

- For removing or tightening the seat carrier
- All parts are replaceable

Integral Actuator Mounting Platform

- Actuation is easy. Electric or pneumatic actuators may be mounted in the field. Simply pull off the handle to reveal a standard ISO 5211 mounting platform which accepts bolt-on hardware.

Fully Blocking

- Downstream pipe may be removed while upstream side is still pressurized. This may be done with valve installed in either direction.

Base Mounting Pad

- Optional threaded inserts allow valves to be securely anchored
- Supplied standard with actuated valves

Type 21 Ball Valves

options + accessories

ChemFlare™ Ends

- For connection to PFA tube. Leak-free connections for difficult services such as sodium hypochlorite

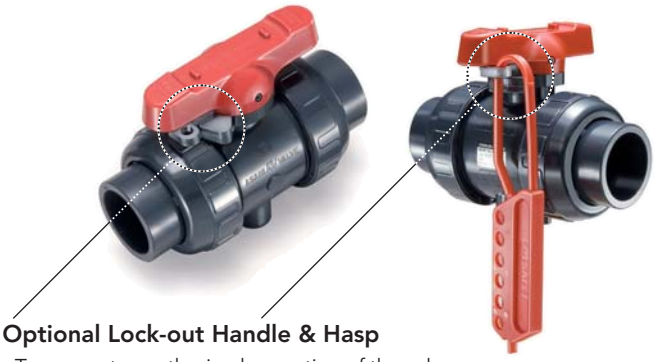

Optional Lock-out Handle & Hasp

- To prevent unauthorized operation of the valve
- Used during maintenance shut-downs

One-piece moulded PVC and CPVC 6" socket ends

- Allows installation of 4" valve in 6" line
- Factory moulded, not fabricated with couplings and reducers cemented together
- Fixed to valve mechanically just like the one-piece moulded factory flanges

Different Colour Handles

- Choose a handle colour other than standard red for colour coding different services

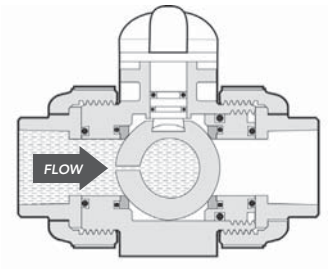

Vented Ball

- For sodium hypochlorite services at any concentration
- Valve shown in closed position

electric + pneumatic actuation

Pneumatic and Electric Actuators

- A complete range of actuators and control accessories are available, mounted to valves using PPG plastic brackets and stainless steel couplings. Refer to separate data sheets.

Electromni® Electric

Q Series Electric

A Series Electric

V Series Electric
with Local Control Station

PA Series Pneumatic

Type 21 Ball Valves

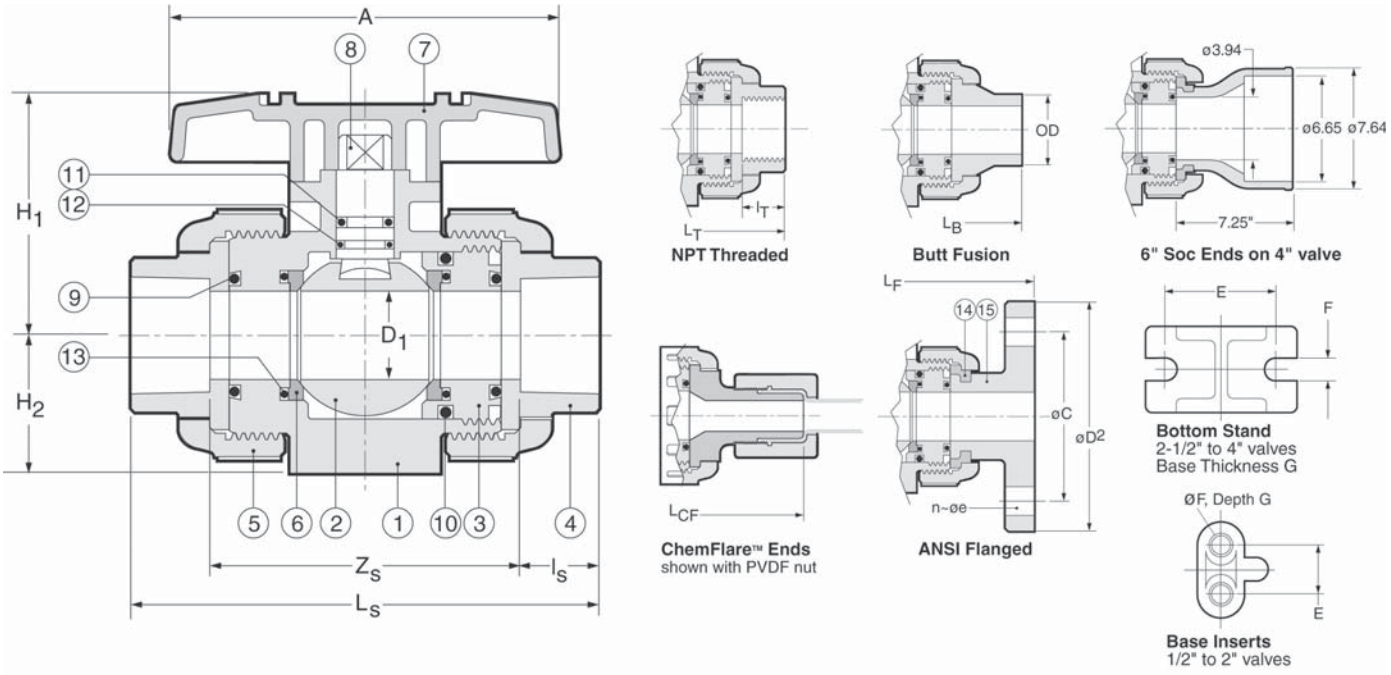

PARTS

▲ Recommended Spare Parts

No.	Part	Pcs.	Materials
1	Body	1	PVC, CPVC, PP, PVDF
2	Ball	1	PVC, CPVC, PP, PVDF
3	Carrier[1]	1/2	PVC, CPVC, PP, PVDF
4	End Connector	2	PVC, CPVC, PP, PVDF
5	Union Nut	2	PVC, CPVC, PP, PVDF
6▲	Ball Seat	2	PTFE
7	Handle	1	ABS

[1] 1 carrier for sizes 1/2" to 2", 2 carriers for sizes 2-1/2" to 4"
[2] EPDM seals standard with PVC, CPVC, PP; FKM (Viton®) with PVDF valves
[3] 2 pcs 1/2" to 2", 6 pcs 2-1/2" to 4"

PARTS

▲ Recommended Spare Parts

No.	Part	Pcs.	Materials
8	Stem	1	PVC, CPVC, PP, PVDF
9▲	Face O-Ring[2]	2	EPDM, FKM (Viton®)
10▲	Carrier O-Ring[2]	2	EPDM, FKM (Viton®)
11▲	Upper Thicker Stem O-Ring[2]	1	EPDM, FKM (Viton®)
12▲	Lower Thinner Stem O-Ring[2]	1	EPDM, FKM (Viton®)
13	Seat Cushion[2]	2	EPDM, FKM (Viton®)
14	Flange Retainer[3]	2/6	PVDF
15	Flange	2	PVC, CPVC, PP, PVDF

DIMENSIONS INCHES

					End Connections														Valve Base		
					Socket			Threaded		Factory Flanged					Butt		ChemFlare™				
Size	D Bore	A	H_1	H_2	L_S	Z_S	l_S	l_T	L_T	L_F	D_2	C	n	e	L_B	OD	L_{CF}	Tube[4]	E	F[5]	G
1/2"	.59	3.6	2.03	1.14	4.45	2.70	.875	.64	4.02	5.63	3.50	2.38	4	.62	4.88	.79	6.12	1/2"	.75	.29	.43
3/4"	.79	3.9	2.34	1.38	5.08	3.08	1.00	.65	4.72	6.77	3.88	2.75	4	.62	5.67	.98	6.52	3/4"	.75	.29	.43
1"	.98	4.3	2.68	1.54	5.75	3.50	1.13	.81	5.16	7.36	4.25	3.12	4	.62	6.06	1.26	7.26	1"	.75	.29	.43
1-1/4"	1.22	4.8	3.17	1.85	6.46	5.21	1.25	.85	5.91	7.48	4.62	3.50	4	.62	6.85	1.57	9.58	1-1/4"	1.18	.35	.59
1-1/2"	1.57	5.2	3.50	2.17	7.24	4.49	1.38	.85	6.42	8.35	5.00	3.88	4	.62	7.64	1.97	–	–	1.18	.35	.59
2"	2.01	6.3	4.02	2.60	8.23	5.23	1.50	1.90	7.76	9.21	6.00	4.75	4	.75	8.82	2.48	–	–	1.18	.35	.59
2-1/2"	2.28	7.87	4.96	2.83	9.45	5.95	1.75	1.21	8.46	10.20	7.00	5.49	4	.75	9.72	2.95	–	–	1.89	.35	.23
3"	2.70	9.45	5.51	3.35	11.10	7.35	1.88	1.30	10.39	11.97	7.50	6.00	4	.75	11.61	3.54	–	–	2.17	.43	.28
4"	3.54	11.81	7.01	4.33	13.88	9.87	2.00	1.38	14.17	14.65	9.00	7.50	8	.75	14.76	4.33	–	–	2.56	.43	.32

[4] ChemFlare™ ends are available for reduced tube sizes down to 1/4".
[5] Optional threaded inserts: 1/2" to 1" valves – UNC 1/4"-20; 1-1/4" to 2" valves – UNC 5/16"-18. 'Recoil' brand inserts require drilling before insertion.

Type 21 Ball Valves

WORKING PRESSURES PSI, Water, Non-Shock

VACUUM RATING • 29.9 inches mercury

Size	PVC			CPVC						PP			PVDF				
	20°C 68°F	40°C 104°F	50°C 122°F	20°C 68°F	40°C 104°F	50°C 122°F	60°C 140°F	80°C 176°F	90°C 194°F	20°C 68°F	60°C 140°F	80°C 176°F	20°C 68°F	40°C 104°F	60°C 140°F	80°C 176°F	100°C 212°F
1/2"– 2"	230	165	150	230	165	150	120	75	55	150	85	55	230	185	150	110	85
2-1/2"– 4"	150	150	150	150	150	150	120	75	55	150	70	40	150	150	150	110	85

Temperature Ranges: PVC 0 to 60°C (32 to 140°F), **CPVC** 0 to 95°C (32 to 203°F), **PP** –20 to 80°C (–4 to 176°F), **PVDF** –40 to 100°C (–40 to 212°F)

WEIGHTS LB. THREADED or SOCKET

WEIGHTS LB. FLANGED

Size	PVC	CPVC	PP	PVDF	PVC	CPVC	PP	PVDF
1/2"	0.4	0.4	0.4	0.4	0.9	0.9	0.7	1.1
3/4"	0.7	0.7	0.7	0.9	1.3	1.5	1.1	1.5
1"	0.9	1.1	0.9	1.1	1.8	2.0	1.5	2.2
1-1/4"	1.5	1.5	1.3	1.8	2.6	2.9	2.0	3.3
1-1/2"	2.4	2.6	1.5	2.9	3.7	4.0	2.6	4.4
2"	4.0	4.4	2.6	4.9	5.5	6.0	4.0	8.2
2-1/2"	5.1	5.5	3.7	6.2	7.3	7.7	5.3	8.8
3"	8.2	8.8	5.5	9.9	10.1	11.0	7.5	12.6
4"	19.4	21.8	13.2	24.9	21.6	23.4	15.4	26.7

Cv VALUES VS. BALL ANGLE

Size	0%	25%	50%	75%	100%
1/2"	0	0.35	1.3	5.5	14.
3/4"	0	0.73	2.8	11.5	29.
1"	0	1.2	4.5	18.6	47.
1-1/4"	0	1.8	6.8	28.4	72.
1-1/2"	0	3.9	14.7	61.2	155.
2"	0	4.8	18.0	75.0	190.
2-1/2"	0	9.1	34.7	144.0	365.
3"	0	10.2	39.0	162.0	410.
4"	0	17.0	64.6	269.0	680.

SAMPLE SPECIFICATION

1. All True Union Ball Valves in PVC, CPVC, PP or PVDF shall be Chemline Type 21 or equal sizes 1/2" to 2" in PVC, CPVC, and PVDF rated at 230 psi and in PP 150 psi maximum working pressure. Sizes 2-1/2", 3" and 4" rated at 150 psi maximum working pressure with EPDM, FKM (Viton®) or CPE seals. Ball seats shall be PTFE with elastomer cushions for closure with minimum stem torques.
2. All valves will have Safety Shear stem design, blowout-proof with double o-rings for safety. The top o-ring groove shall be deeper so that if the stem breaks off under excessive torque the lower o-ring will remain intact and the valve will hold pressure.
3. All valves shall be full port and two-way blocking design.
4. All valves will be CRN (Canadian Registration Number) registered with TSSA.
5. PVC valves with EPDM or FKM (Viton®) seals shall be certified under NSF/ANSI Standard 61 for contact with drinking water.
6. All valves shall have chemical resistant labels permanently marked with manufacturing number to provide production level traceability.
7. PVC compound shall have an ASTM cell classification 12454-A with a minimum suffix "A" designation for chemical resistance as per ASTM D-1784 (CSA report LO 4000-172).
8. CPVC compound shall have an ASTM cell classification 23567-A with a minimum suffix "A" designation for chemical resistance as per ASTM D-1784.
9. PP material will conform to ASTM D-4101 PP 021 B 67272 material requirements.
10. PVDF material shall be unpigmented conforming to ASTM D-3222 material requirements and to be USDA Title 21 Chapter 1 Part 177. 2510 requirements for contact with food.
11. Socket ends in PVC and CPVC shall be Schedule 80 and conform to ASTM D-2467.
12. Threaded ends shall be Schedule 80 and conform to ASTM D-2464.
13. Butt fusion ends in PP or PVDF will be compatible with Chemline PP or PVDF metric piping systems.
14. Flanged ends shall be ANSI Class 150 one-piece factory moulded (not fabricated) to ensure maximum strength and close tolerance end to end dimensions.

ORDERING EXAMPLE

Chemline True Union Ball Valves	21	A	020	E	S
Body Material	**A** – PVC **B** – PP	**C** – CPVC **K** – PVDF			
Size[1]	**002** – 1/4" **010** – 1" **025** – 2-1/2"	**003** – 3/8" **012** – 1-1/4" **030** – 3"	**005** – 1/2" **015** – 1-1/2" **040** – 4"	**007** – 3/4" **020** – 2" **060** – 6"	
Seals	**E** – EPDM	**V** – FKM (Viton®)	**C** – CPE	**B** – Nitrile	**A** – Aflas®
Ends	**S** – Socket	**T** – Threaded	**F** – Flanged	**B** – Butt[2]	**CF** – ChemFlare™

Example: Chemline Type 21 True Union Ball Valve, PVC, 2", with EPDM seals, socket ends.

[1] 1/4" is normally the 3/8" valve reduced. 6" is 4" valve with 6" end connections.

[2] PP, PVDF and ECTFE (Halar®) metric butt fusion ends (1/2" to 4") connect to Chemline PP, PVDF and ECTFE (Halar®) piping systems.

OTHER OPTIONS & ACCESSORIES

- **Alternate O-Ring Seals**
- **Stem Extensions** made to any length
- **Limit Switches** – For open and/or closed position indication
- **Municipal Operating Nut**
- **Lubrication-free Valves** – Factory clean room assembled
- **Vented Ball** – For sodium hypochlorite applications

CHEMLINE PLASTICS
SUPERIOR FLOW SOLUTIONS

55 Guardsman Road, Thornhill, ON, L3T 6L2, Canada | ISO 9001:2008 Certified
tel.905.889.7890 | fax.905.889.8553 | request@chemline.com | chemline.com

This page is intentionally left blank

CS-301-150 : Identification sheet

VWTC PROJECT NUMBER:	5000218009	REV:	1
PROJECT NAME:	AEM AMARUQ	SUBMITTED TO (COMPANY):	AGNICO EAGLE MINES
ENGINEER:	Gabriel Hébert	SUBMITTED TO (RESPONSIBLE)	
PROJECT MANAGER:	Clément B	PROJECT NUM REFERENCE.:	
PHONE NUMBER:		LOT NUMBER:	

SUPPLIER	EQPT CODE	EQPT TAG NO	DIA	DESCRIPTION	INFO 1	INFO 2	INFO 3	APPLIC.	NOTE	REV
CHEMLINE	VABLPV303543	T9-621-V001	DIA: 75 mm (3")	ISOLATION VALVE - TANK DRAIN	TYPE: BALL VALVE//MANUFACTURER : CHEMLINE//MODEL : Type21-A-030-E-S//CONNECTION TYPE : SOCKET | 75 mm (3")//BODY : PVC (ASTM D1784)// SEAL | SEAT :PTFE | EPDM// STEM : PVC			HYDRAPOL 3500		
CHEMLINE	VABLPV303543	T9-622-V001	DIA: 75 mm (3")	ISOLATION VALVE - TANK DRAIN	TYPE: BALL VALVE//MANUFACTURER : CHEMLINE//MODEL : Type21-A-030-E-S//CONNECTION TYPE : SOCKET | 75 mm (3")//BODY : PVC (ASTM D1784)// SEAL | SEAT :PTFE | EPDM// STEM : PVC			HYDRAPOL 3500		
CHEMLINE	VABLPV303543	T9-622-V002	DIA: 75 mm (3")	ISOLATION VALVE - TANK OUTLET	TYPE: BALL VALVE//MANUFACTURER : CHEMLINE//MODEL : Type21-A-030-E-S//CONNECTION TYPE : SOCKET | 75 mm (3")//BODY : PVC (ASTM D1784)// SEAL | SEAT :PTFE | EPDM// STEM : PVC			HYDRAPOL 3500		

This page is intentionally left blank

PDF Published March 1, 2013

Type 21 Ball Valves

CHEMLINE PLASTICS
SUPERIOR FLOW SOLUTIONS

The Chemline Type 21 True Union Ball valve incorporates state of the art features for long term performance. This is a full port, full blocking True Union valve pressure rated at 16 bar (230 psi)[4]. Double stem o-rings and Safety Shear stem design provide for a high degree of safety on hazardous fluid applications. All sizes have an ISO standard actuator mounting platform integral to the valve body. This provides for sturdy and secure mounting of pneumatic or electric actuators.

PVC | CPVC | PP | PVDF

CRN Registered Consult Chemline

NSF[5] Certified to NSF/ANSI 61

SERIES: Type 21

SIZES: 3/8" – 4"

ENDS: Socket, Threaded, Flanged, Butt[1] or ChemFlare™

SEATS: PTFE

SEALS[2]: EPDM, FKM (Viton®), CPE[3]

features

Pressure rated to 230 psi[4]
- Provides a high factor of safety

Integral Actuator Mounting Platform
- Actuation is easy. Electric or pneumatic actuators may be mounted in the field.

Full Port
- High capacity and low pressure drops

Fully Blocking
- Downstream union nut may be safely disassembled for piping maintenance while valve is closed off under full system pressure

Built-In Spanner Wrench
- Top of the handle is designed to be used as a tool for accessing internal parts

Safety Shear Stem Design
- Stem has double o-rings
- Designed to hold full pressure even if stem breaks due to excessive torque

High Chemical Resistant Material
- PVC and CPVC compounds have an "A" chemical resistance rating as per ASTM D-1784. They have outperformed other PVC and CPVC compounds on aggressive chemicals.

[1] Butt ends for fusion to Chemline metric PP, PVDF or ECTFE (Halar®) piping.
[2] Other materials are available.
[3] CPE=Chlorinated Polyethylene.
[4] PVC, CPVC and PVDF 1/2" to 2" are rated at 230 psi; 2-1/2" to 4" and all size PP valves are rated at 150 psi at 20°C.
[5] PVC valves with EPDM or FKM (Viton®) seals are certified under NSF/ANSI Standard 61 for contact with drinking water.

03/13 ©Chemline Plastics Limited 2013
Chemline is a registered trade mark of Chemline Plastics Limited

Type 21 Ball Valves

features

Double Stem O-Rings – Safety Shear Design

- Upper o-ring groove is deeper than lower. In case of excessive stem torque, stem will shear at the upper groove, leaving the inner o-ring intact to seal against full line pressure.

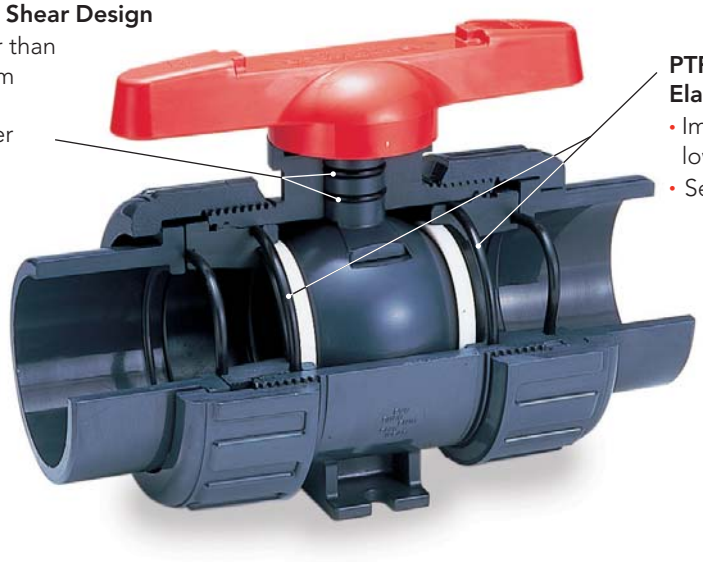

PTFE Seats have Elastomer Cushions

- Improved sealing while lowering stem torques
- Self adjusts for seat wear

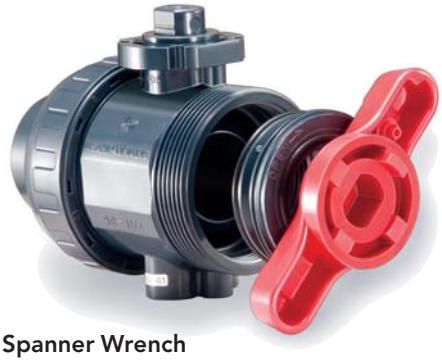

Built in Spanner Wrench

- For removing or tightening the seat carrier
- All parts are replaceable

Integral Actuator Mounting Platform

- Actuation is easy. Electric or pneumatic actuators may be mounted in the field. Simply pull off the handle to reveal a standard ISO 5211 mounting platform which accepts bolt-on hardware.

Fully Blocking

- Downstream pipe may be removed while upstream side is still pressurized. This may be done with valve installed in either direction.

Base Mounting Pad

- Optional threaded inserts allow valves to be securely anchored
- Supplied standard with actuated valves

Type 21 Ball Valves

options + accessories

ChemFlare™ Ends

- For connection to PFA tube. Leak-free connections for difficult services such as sodium hypochlorite

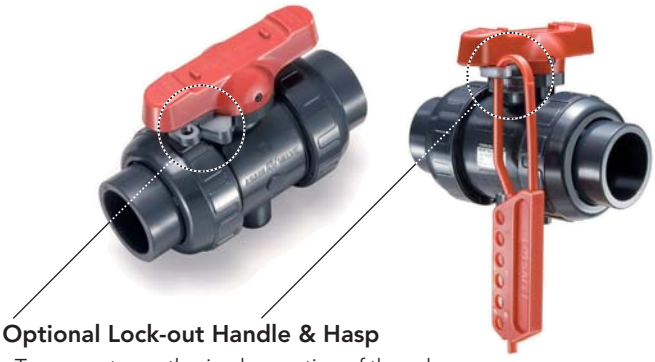

Optional Lock-out Handle & Hasp

- To prevent unauthorized operation of the valve
- Used during maintenance shut-downs

One-piece moulded PVC and CPVC 6" socket ends

- Allows installation of 4" valve in 6" line
- Factory moulded, not fabricated with couplings and reducers cemented together
- Fixed to valve mechanically just like the one-piece moulded factory flanges

Different Colour Handles

- Choose a handle colour other than standard red for colour coding different services

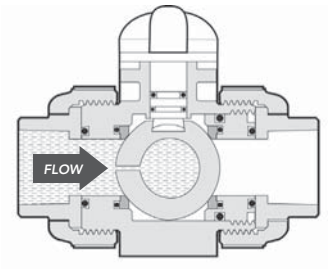

Vented Ball

- For sodium hypochlorite services at any concentration
- Valve shown in closed position

electric + pneumatic actuation

Pneumatic and Electric Actuators

- A complete range of actuators and control accessories are available, mounted to valves using PPG plastic brackets and stainless steel couplings. Refer to separate data sheets.

Electromni® Electric

Q Series Electric

A Series Electric

V Series Electric
with Local Control Station

PA Series Pneumatic

Type 21 Ball Valves

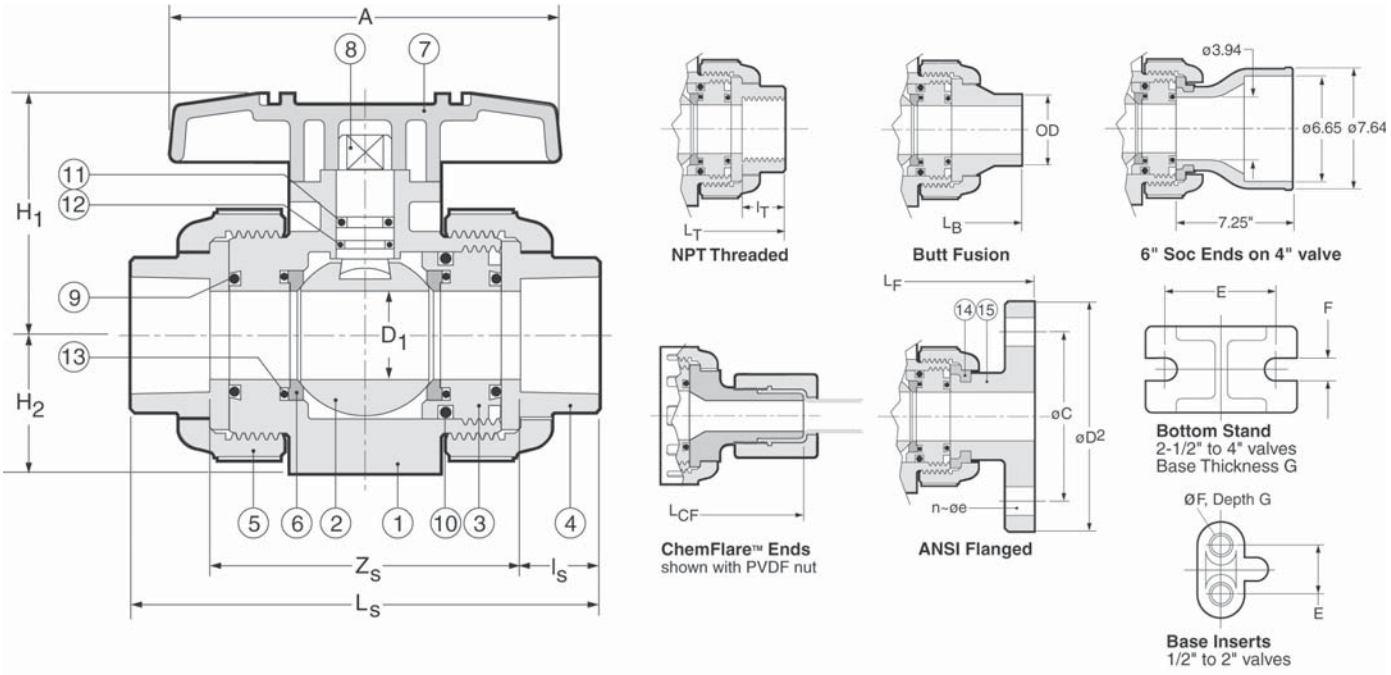

PARTS

▲ Recommended Spare Parts

No.	Part	Pcs.	Materials
1	Body	1	PVC, CPVC, PP, PVDF
2	Ball	1	PVC, CPVC, PP, PVDF
3	Carrier[1]	1/2	PVC, CPVC, PP, PVDF
4	End Connector	2	PVC, CPVC, PP, PVDF
5	Union Nut	2	PVC, CPVC, PP, PVDF
6▲	Ball Seat	2	PTFE
7	Handle	1	ABS

[1] 1 carrier for sizes 1/2" to 2", 2 carriers for sizes 2-1/2" to 4"
[2] EPDM seals standard with PVC, CPVC, PP; FKM (Viton®) with PVDF valves
[3] 2 pcs 1/2" to 2", 6 pcs 2-1/2" to 4"

PARTS

▲ Recommended Spare Parts

No.	Part	Pcs.	Materials
8	Stem	1	PVC, CPVC, PP, PVDF
9▲	Face O-Ring[2]	2	EPDM, FKM (Viton®)
10▲	Carrier O-Ring[2]	2	EPDM, FKM (Viton®)
11▲	Upper Thicker Stem O-Ring[2]	1	EPDM, FKM (Viton®)
12▲	Lower Thinner Stem O-Ring[2]	1	EPDM, FKM (Viton®)
13	Seat Cushion[2]	2	EPDM, FKM (Viton®)
14	Flange Retainer[3]	2/6	PVDF
15	Flange	2	PVC, CPVC, PP, PVDF

DIMENSIONS INCHES

					End Connections														Valve Base		
					Socket			Threaded		Factory Flanged					Butt		ChemFlare™				
Size	D Bore	A	H_1	H_2	L_S	Z_S	l_S	l_T	L_T	L_F	D_2	C	n	e	L_B	OD	L_{CF}	Tube[4]	E	F[5]	G
1/2"	.59	3.6	2.03	1.14	4.45	2.70	.875	.64	4.02	5.63	3.50	2.38	4	.62	4.88	.79	6.12	1/2"	.75	.29	.43
3/4"	.79	3.9	2.34	1.38	5.08	3.08	1.00	.65	4.72	6.77	3.88	2.75	4	.62	5.67	.98	6.52	3/4"	.75	.29	.43
1"	.98	4.3	2.68	1.54	5.75	3.50	1.13	.81	5.16	7.36	4.25	3.12	4	.62	6.06	1.26	7.26	1"	.75	.29	.43
1-1/4"	1.22	4.8	3.17	1.85	6.46	5.21	1.25	.85	5.91	7.48	4.62	3.50	4	.62	6.85	1.57	9.58	1-1/4"	1.18	.35	.59
1-1/2"	1.57	5.2	3.50	2.17	7.24	4.49	1.38	.85	6.42	8.35	5.00	3.88	4	.62	7.64	1.97	–	–	1.18	.35	.59
2"	2.01	6.3	4.02	2.60	8.23	5.23	1.50	1.90	7.76	9.21	6.00	4.75	4	.75	8.82	2.48	–	–	1.18	.35	.59
2-1/2"	2.28	7.87	4.96	2.83	9.45	5.95	1.75	1.21	8.46	10.20	7.00	5.49	4	.75	9.72	2.95	–	–	1.89	.35	.23
3"	2.70	9.45	5.51	3.35	11.10	7.35	1.88	1.30	10.39	11.97	7.50	6.00	4	.75	11.61	3.54	–	–	2.17	.43	.28
4"	3.54	11.81	7.01	4.33	13.88	9.87	2.00	1.38	14.17	14.65	9.00	7.50	8	.75	14.76	4.33	–	–	2.56	.43	.32

[4] ChemFlare™ ends are available for reduced tube sizes down to 1/4".
[5] Optional threaded inserts: 1/2" to 1" valves – UNC 1/4"-20; 1-1/4" to 2" valves – UNC 5/16"-18. 'Recoil' brand inserts require drilling before insertion.

Type 21 Ball Valves

WORKING PRESSURES PSI, Water, Non-Shock

VACUUM RATING • 29.9 inches mercury

Size	PVC			CPVC						PP			PVDF				
	20°C 68°F	40°C 104°F	50°C 122°F	20°C 68°F	40°C 104°F	50°C 122°F	60°C 140°F	80°C 176°F	90°C 194°F	20°C 68°F	60°C 140°F	80°C 176°F	20°C 68°F	40°C 104°F	60°C 140°F	80°C 176°F	100°C 212°F
1/2"– 2"	230	165	150	230	165	150	120	75	55	150	85	55	230	185	150	110	85
2-1/2"– 4"	150	150	150	150	150	150	120	75	55	150	70	40	150	150	150	110	85

Temperature Ranges: PVC 0 to 60°C (32 to 140°F), **CPVC** 0 to 95°C (32 to 203°F), **PP** –20 to 80°C (–4 to 176°F), **PVDF** –40 to 100°C (–40 to 212°F)

WEIGHTS LB. THREADED or SOCKET

WEIGHTS LB. FLANGED

Size	PVC	CPVC	PP	PVDF	PVC	CPVC	PP	PVDF
1/2"	0.4	0.4	0.4	0.4	0.9	0.9	0.7	1.1
3/4"	0.7	0.7	0.7	0.9	1.3	1.5	1.1	1.5
1"	0.9	1.1	0.9	1.1	1.8	2.0	1.5	2.2
1-1/4"	1.5	1.5	1.3	1.8	2.6	2.9	2.0	3.3
1-1/2"	2.4	2.6	1.5	2.9	3.7	4.0	2.6	4.4
2"	4.0	4.4	2.6	4.9	5.5	6.0	4.0	8.2
2-1/2"	5.1	5.5	3.7	6.2	7.3	7.7	5.3	8.8
3"	8.2	8.8	5.5	9.9	10.1	11.0	7.5	12.6
4"	19.4	21.8	13.2	24.9	21.6	23.4	15.4	26.7

Cv VALUES VS. BALL ANGLE

Size	0%	25%	50%	75%	100%
1/2"	0	0.35	1.3	5.5	14.
3/4"	0	0.73	2.8	11.5	29.
1"	0	1.2	4.5	18.6	47.
1-1/4"	0	1.8	6.8	28.4	72.
1-1/2"	0	3.9	14.7	61.2	155.
2"	0	4.8	18.0	75.0	190.
2-1/2"	0	9.1	34.7	144.0	365.
3"	0	10.2	39.0	162.0	410.
4"	0	17.0	64.6	269.0	680.

SAMPLE SPECIFICATION

1. All True Union Ball Valves in PVC, CPVC, PP or PVDF shall be Chemline Type 21 or equal sizes 1/2" to 2" in PVC, CPVC, and PVDF rated at 230 psi and in PP 150 psi maximum working pressure. Sizes 2-1/2", 3" and 4" rated at 150 psi maximum working pressure with EPDM, FKM (Viton®) or CPE seals. Ball seats shall be PTFE with elastomer cushions for closure with minimum stem torques.
2. All valves will have Safety Shear stem design, blowout-proof with double o-rings for safety. The top o-ring groove shall be deeper so that if the stem breaks off under excessive torque the lower o-ring will remain intact and the valve will hold pressure.
3. All valves shall be full port and two-way blocking design.
4. All valves will be CRN (Canadian Registration Number) registered with TSSA.
5. PVC valves with EPDM or FKM (Viton®) seals shall be certified under NSF/ANSI Standard 61 for contact with drinking water.
6. All valves shall have chemical resistant labels permanently marked with manufacturing number to provide production level traceability.
7. PVC compound shall have an ASTM cell classification 12454-A with a minimum suffix "A" designation for chemical resistance as per ASTM D-1784 (CSA report LO 4000-172).
8. CPVC compound shall have an ASTM cell classification 23567-A with a minimum suffix "A" designation for chemical resistance as per ASTM D-1784.
9. PP material will conform to ASTM D-4101 PP 021 B 67272 material requirements.
10. PVDF material shall be unpigmented conforming to ASTM D-3222 material requirements and to be USDA Title 21 Chapter 1 Part 177. 2510 requirements for contact with food.
11. Socket ends in PVC and CPVC shall be Schedule 80 and conform to ASTM D-2467.
12. Threaded ends shall be Schedule 80 and conform to ASTM D-2464.
13. Butt fusion ends in PP or PVDF will be compatible with Chemline PP or PVDF metric piping systems.
14. Flanged ends shall be ANSI Class 150 one-piece factory moulded (not fabricated) to ensure maximum strength and close tolerance end to end dimensions.

ORDERING EXAMPLE

Chemline True Union Ball Valves	21	A	020	E	S
Body Material	**A** – PVC **B** – PP	**C** – CPVC **K** – PVDF			
Size[1]	**002** – 1/4" **010** – 1" **025** – 2-1/2"	**003** – 3/8" **012** – 1-1/4" **030** – 3"	**005** – 1/2" **015** – 1-1/2" **040** – 4"	**007** – 3/4" **020** – 2" **060** – 6"	
Seals	**E** – EPDM	**V** – FKM (Viton®)	**C** – CPE	**B** – Nitrile	**A** – Aflas®
Ends	**S** – Socket	**T** – Threaded	**F** – Flanged	**B** – Butt[2]	**CF** – ChemFlare™

Example: Chemline Type 21 True Union Ball Valve, PVC, 2", with EPDM seals, socket ends.

[1] 1/4" is normally the 3/8" valve reduced. 6" is 4" valve with 6" end connections.

[2] PP, PVDF and ECTFE (Halar®) metric butt fusion ends (1/2" to 4") connect to Chemline PP, PVDF and ECTFE (Halar®) piping systems.

OTHER OPTIONS & ACCESSORIES

- **Alternate O-Ring Seals**
- **Stem Extensions** made to any length
- **Limit Switches** – For open and/or closed position indication
- **Municipal Operating Nut**
- **Lubrication-free Valves** – Factory clean room assembled
- **Vented Ball** – For sodium hypochlorite applications

CHEMLINE PLASTICS
SUPERIOR FLOW SOLUTIONS

55 Guardsman Road, Thornhill, ON, L3T 6L2, Canada | ISO 9001:2008 Certified
tel.905.889.7890 | fax.905.889.8553 | request@chemline.com | chemline.com

This page is intentionally left blank

PDF Published August 14, 2013

PA Series Pneumatic Actuators

CHEMLINE PLASTICS
SUPERIOR FLOW SOLUTIONS

for Chemline ball valves up to 6"
for Chemline butterfly valves up to 24"

MATERIAL: Epoxy and Rilsan® coated aluminum

SERIES: PAS – Spring Return
PAD – Double Acting

CONTROL PRESSURE: 40 to 120 psi

OUTPUT TORQUES: (AT 80 PSI AIR)
Spring Return[1]: up to 15,660 in.-lb.
Double Acting: up to 40,660 in.-lb.

PA Series on Type 21 True Union Ball Valve

[1] Based on Spring End torque, used for sizing on normally closed butterfly valves.
[2] See page 2 for details of coating process.

Chemline PA Series is part of the P Series family of quarter-turn pneumatic rack and pinion actuators designed for long cycling life in demanding industrial applications.

PA Series features aluminum bodies and end caps coated inside and out with a two part coating of cataphoresis epoxy then Rilsan polyamide. The result is a superior actuator with longer cycling life and durable abrasion and corrosion resistant surfaces.

Output torques are up to 15,660 in.-lbs. spring return[1] (SR) and 40,660 in-lbs. double acting (DA) with 80 psi control air. They will power all Chemline ball valves and butterfly valves up to 24" DA and 20" SR.

Chemline offers complete actuated ball and butterfly valves assembled and bench tested. Actuation services are also available for all quarter-turn metal valves.

features

Application Diversity
- Industrial Process
- Submersion
- Bleach or water washdown

Quality Built for Long Cycling Life
- Rated for over 1 million cycles
- Self-lubricating Rilsan® coating on inner cylinder surfaces for better wear than epoxy or anodizing
- Molybdenum grease-impregnated O-rings
- PTFE impregnated piston wear pads and wear rings
- Double O-ring shaft seals
- Minimum backlash with no play between parts
- Massive tooth engagement between racks and pinion

Corrosion Resistant
- Silicone-free aluminum alloy body and end caps
- 4-step pre-treatment process
- Cataphoresis layer for extra protection
- Self-lubricating Rilsan® coating[2] offers outstanding chemical and abrasion resistance

Standard Mounting Dimensions
- ISO 5211 bottom bolt circles and drives allow direct mounting to most valves
- NAMUR solenoid pad and VDI/VDE 3845 top shaft allow for mounting of all standardized accessories
- Standardized actuator mounting kits are available for many valve makes

Compact, Simple Design
- Dual-opposed rack and pinion design supplies high torque for its size and weight
- Air porting is integral, keeps design clean and simple

Integrated Travel Stops
- Permit adjustment of last 5 degrees of either open or closed position travel

Safety Spring Set
- Prevent dangerous release of spring tension during disassembly

08/13 ©Chemline Plastics Limited 2013
Chemline is a registered trade mark of Chemline Plastics Limited

PA Series Pneumatic Actuators

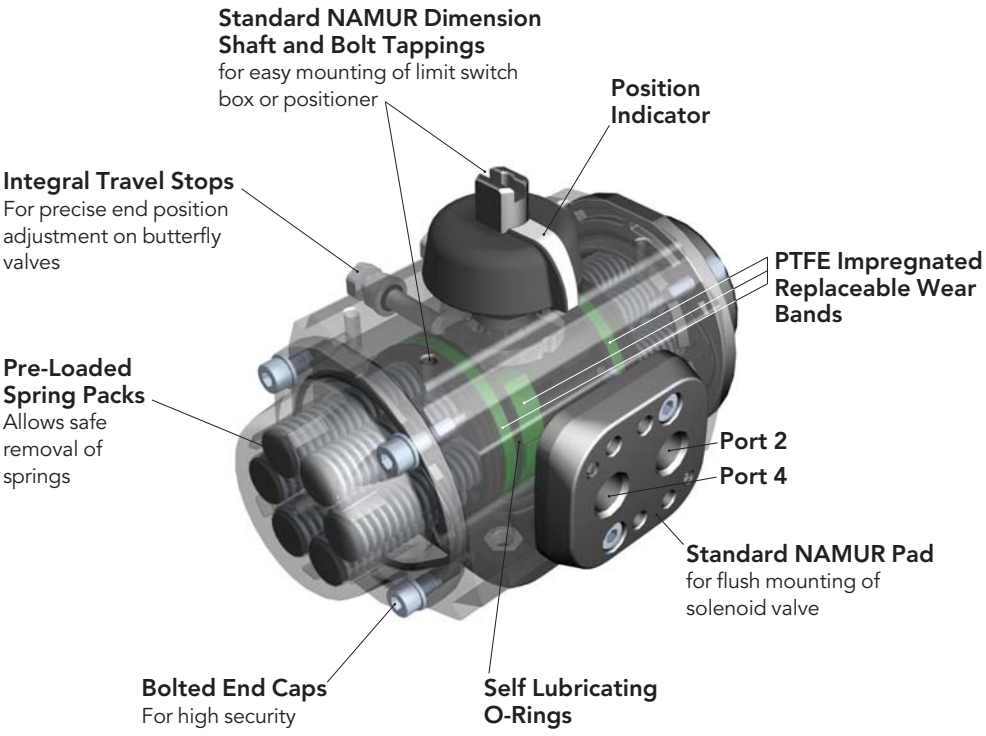

Standard ISO 5211 Bolt Pattern
for mounting to valve

Double ISO 5211 Bolt Circles
on most models

ISO 5211 Star Drive Socket
for mouning flexibility on butterfly valves

OPERATION–SPRING RETURN MODELS

Spring Cycle: Provided left port (4) is exhausted, the springs move pistons inward, turning the shaft 90° clockwise, as viewed from top of actuator.

Air Cycle: Air pressure to right port (2) moves pistons outward, compressing springs and turning the shaft 90° counter-clockwise, as viewed from top of actuator.

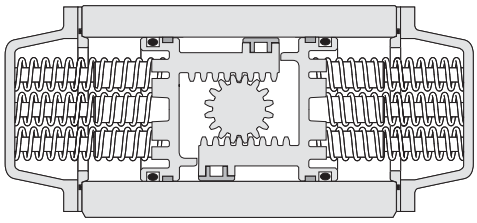

Spring End or Air Start Cycles

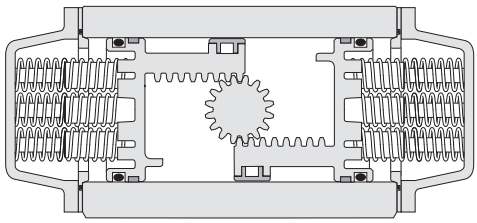

Spring Start or Air End Cycles

SPECIAL PROCESS FOR A SUPERIOR COATING

The aluminum body and end caps of the PA Series actuators are coated inside and out. First the aluminum actuator bodies and end caps undergo a four-step cleaning and passivation treatment.

The next step is epoxy coating by cationic electro deposition (cataphoresis). A 20 micron thick layer is applied to create a smooth chemical resistant coat which bonds into the aluminum crystalline structure.

The final step is application of a Rilsan 11 Polyamide coat up to 250 microns thick . Rilsan is a fully polymerized thermoplastic which provides outstanding chemical resistance to effluents, sea water, sea mist, hydrocarbons, solvents, and many chemicals. The final result is an actuator with a very smooth internal finish which offers long cycle life as well as durable, abrasion resistant external resistance to hostile chemical environments.

technical

WORKING TEMPERATURES: –32 to 90°C (–25 to 175°F)

CONTROL PRESSURE: Control pressure range is minimum 40 to maxiumum 120 psi

CONTROL MEDIA: Actuator may be powered using air, water, natural gas or non-aggressive fluids

ENVIRONMENT: May be operated while submerged in water

PA Series Pneumatic Actuators

Front View

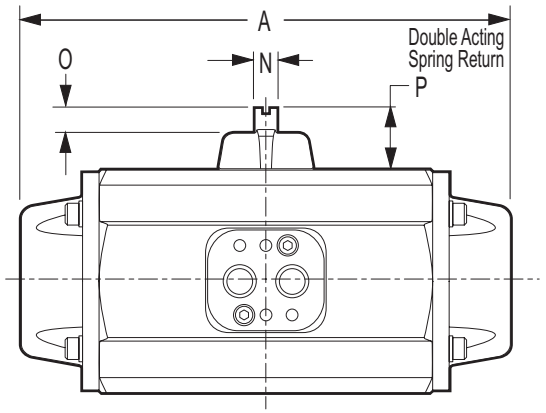

Side View

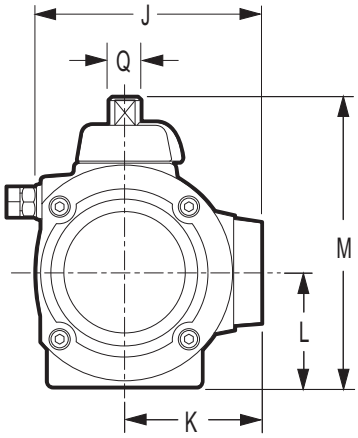

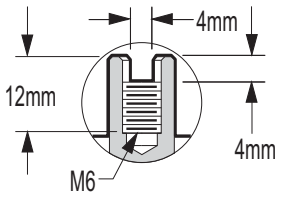

VDI/VDE 3845 Top Shaft

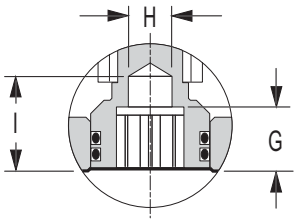

ISO 5211 Bottom Shaft

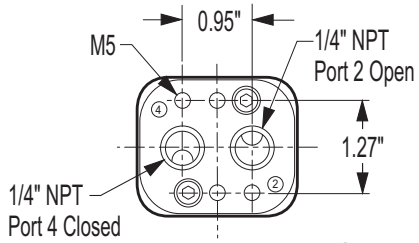

NAMUR Mounting Pad

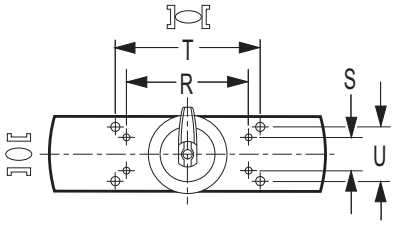

VDI/VDE 3845 Top Detail

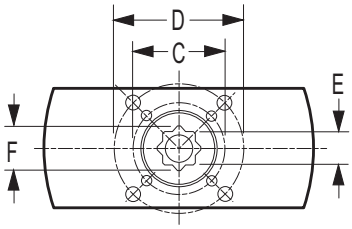

ISO 5211 Bottom Mount

DIMENSIONS INCHES

Size	Item No. DA	Item No. SR	A DA	A SR	ISO 5211 Bottom Mount C Dia.	C Thread	C Depth	D Dia.	D Thread	D Depth	ISO 5211 Bottom Shaft E	F	G	H	I
W	PADW	PASW	5.52	5.52	1.42 (F03)	M5	0.57	1.65 (F04)	M5	0.57	0.43	0.56	0.69	0.39	0.80
00	PAD00	PAS00	6.00	6.00	1.65 (F04)	M6	0.57	1.97 (F07)	M6	0.57	0.55	0.75	0.70	0.57	1.21
05	PAD05	PAS05	7.61	7.61	1.97 (F05)	M6	0.57	2.76 (F07)	M8	0.79	0.67	0.91	0.81	0.59	1.20
10	PAD10	PAS10	8.83	8.83	1.97 (F05)	M6	0.57	2.76 (F07)	M8	0.79	0.67	0.91	0.82	0.59	1.21
15	PAD15	PAS15	10.40	10.40	1.97 (F05)	M6	0.71	2.76 (F07)	M8	0.91	0.67	0.91	0.82	0.72	1.21
20	PAD20	PAS20	12.19	12.19	1.97 (F05)	M6	0.71	2.76 (F07)	M8	0.91	0.87	1.14	0.81	0.72	1.29
25	PAD25	PAS25	14.02	14.02	2.76 (F07)	M8	0.91	4.02 (F10)	M10	1.06	1.06	1.44	1.22	1.87	1.42
30	PAD30	PAS30	13.74	18.86	2.76 (F07)	M8	0.91	4.02 (F10)	M10	1.06	1.06	1.44	1.18	1.18	1.65
40	PADA40	PASR40	17.48	23.54	4.02 (F10)	M10	1.06	4.92 (F12)	M12	1.02	1.42	1.93	1.50	1.38	1.97
50	PADA50	PASR50	20.63	27.32	–	–	–	5.51 (F14)	M16	1.18	1.42	1.93	1.50	1.38	1.97
60	PAD60	PAS60	26.40	26.40	–	–	–	6.50 (F16)	M20	1.18	1.81	2.40	2.05	1.93	2.36
70	PAD70	PAS70	29.23	29.23	–	–	–	6.50 (F16)	M20	1.18	1.81	2.40	2.05	1.93	2.05

DIMENSIONS INCHES

Size	Item No. DA	Item No. SR	J	K	L	M	VDI/VDE 3845 Top Shaft N	O	P	Q	VDI/VDE 3845 Top Detail R	S	T	U
W	PADW	PASW	3.00	1.90	1.46	3.52	0.31	0.32	0.79 (ISO-1)	0.35	3.15	1.18	–	–
00	PAD00	PAS00	3.31	2.06	1.70	4.38	0.39	0.49	1.18 (ISO-2)	0.54	3.15	1.18	–	–
05	PAD05	PAS05	4.00	2.43	1.94	5.05	0.39	0.49	1.18 (ISO-2)	0.54	3.15	1.18	–	–
10	PAD10	PAS10	4.08	2.47	2.06	2.21	0.39	0.49	1.18 (ISO-2)	0.54	3.15	1.18	–	–
15	PAD15	PAS15	4.70	2.78	2.35	5.82	0.39	0.49	1.18 (ISO-2)	0.54	3.15	1.18	–	–
20	PAD20	PAS20	5.02	2.96	2.51	6.15	0.63	0.49	1.18 (ISO-2)	0.86	3.15	1.18	–	–
25	PAD25	PAS25	6.04	3.51	3.04	7.26	0.63	0.49	1.18 (ISO-2)	0.86	3.15	1.18	–	–
30	PAD30	PAS30	6.97	3.70	3.78	8.31	0.63	0.43	1.18 (ISO-2)	0.86	3.15	1.18	–	–
40	PADA40	PASR40	8.90	4.72	4.57	10.71	1.26	0.79	1.97 (ISO-4)	1.65	5.12	1.18	4.65	1.61
50	PADA50	PASR50	10.14	5.31	5.24	12.32	1.26	0.79	1.97 (ISO-4)	1.65	5.12	1.18	4.65	1.61
60	PAD60	PAS60	13.01	6.77	6.36	14.49	1.26	0.31	1.97 (ISO-4)	1.65	5.12	1.18	–	–
70	PAD70	PAS70	15.85	8.50	7.52	16.85	1.42	0.31	1.97 (ISO-4)	1.71	5.12	1.18	–	–

PA Series Pneumatic Actuators

SIZES

W, 00, 05, 10, 15, 20, 25, 30, 60, 70

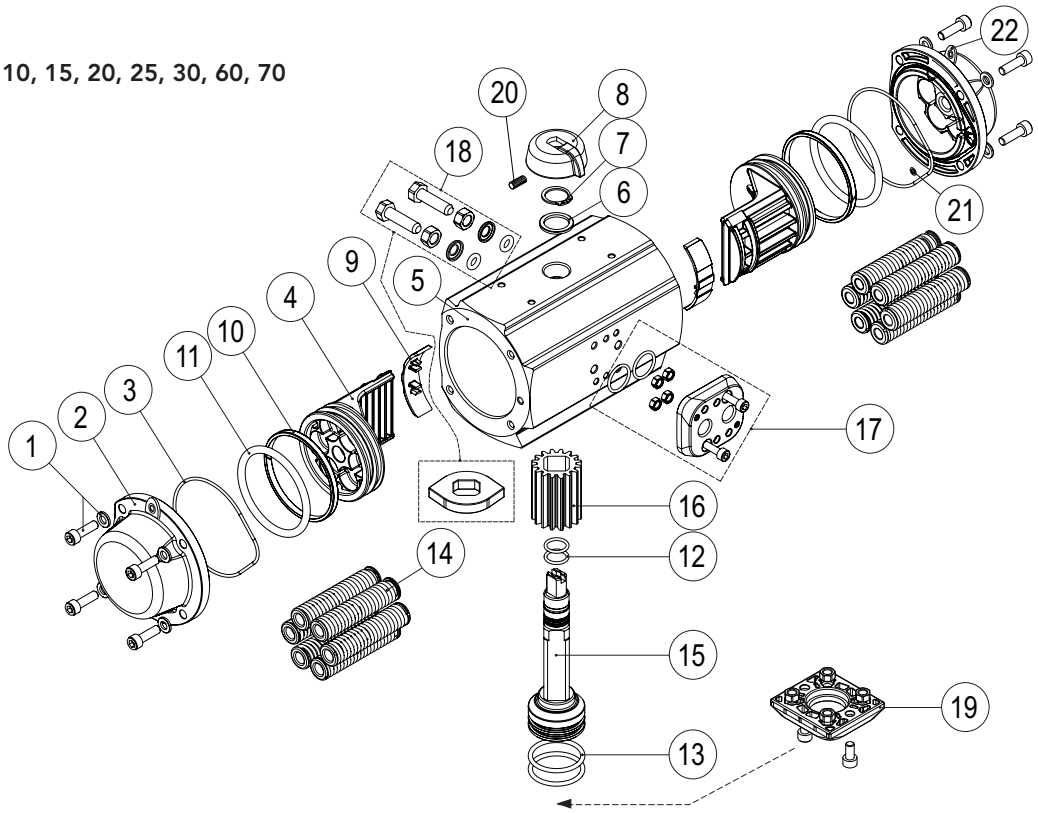

PARTS

▲ Recommended Spare Parts

No.	Part	Size	Pcs.	Materials
1▲	Allen Screw & Washer	W to 25	8	304 SS
		30	12	
		40 to 60	16	
		70	20	
2	Cap (DA&SR)	W to 70	2	Aluminum Alloy coated w. cataphoresis and polyamide
3▲	Cap O-Ring	W to 70	2	Nitrile Buna-N
4	Piston	W	2	Polyarilamide
		00 to 25	2	Aluminum Alloy coated w. cataphoresis
		30 to 70	2	Aluminum Alloy
5	Cylinder	W to 70	1	Aluminum Alloy coated w. cataphoresis and polyamide
6	Washer	W to 70	1	Polyamide 6
7	Spring Clip	W	1	420 SS
		00 to 30	1	Steel coated with Nickel-PTFE
		40 to 70	1	Steel coated with cataphoresis
8	Position Indicator	W	1	Polyacetal
		00 to 30, 60	1	Polyamide
		40, 50, 70	1	Polypropylene
9	Piston Guide	00 to 25	2	Polyacetal
		30 to 40	4	PTFE-Bronze
		60	4	PTFE-Carbon
		50, 70	4	Nylon
10	Guide Ring	W	2	Polyacetal & Mb
		00 to 25	2	Polyacetal
		30 to 70	2	PTFE-Bronze
11▲	Piston O-Ring	W to 25	2	Nitrile Buna-N
		30 to 70	4	

PARTS

▲ Recommended Spare Parts

No.	Part	Size	Pcs.	Materials
12▲	Upper Shaft O-Ring	W to 70	2	Nitrile Buna-N
13▲	Lower Shaft O-Ring	W to 70	2	Nitrile Buna-N
14	Spring Set	W to 25	1	DIN 17223-C passivated[1] Spring Steel and epoxy coated
		30 to 50	1	DIN 17223-C Spring Steel epoxy coated
		60 to 70	1	DIN 17223-C Spring Steel epoxy coated (preloaded)
15	Shaft	W	1	Polyamide with 303 SS insert and drive adapter
		00 to 70	1	Steel coated with cataphoresis
16	Gear	10 to 25, 70	1	Ball burnished Aluminum Alloy
		30 to 50	1	Alluminum Alloy coated with cataphoresis
17	Pneumatic Connection Plate Assembly	W to 30, 60, 70	1	50% glass filled Polyamide base plate, 304 SS bolts & nuts, Nitrile O-rings
18	Travel Stop Assembly	00 to 70	2	304 SS nuts & bolts, 303 SS bushings, Nitrile O-rings
19	Base Plate Assembly	W to 00	1	50% glass filled Polyamide base plate, 304 SS nuts & bolts
20	Threaded Pin	30 to 70	1	304 SS
21	Port Seal O-Ring	30 to 70	2	Nitrile Buna-N
22	Hoop	70	2	304 SS

[1] Trivalent Chromium Passivation.

SIZES
40 & 50

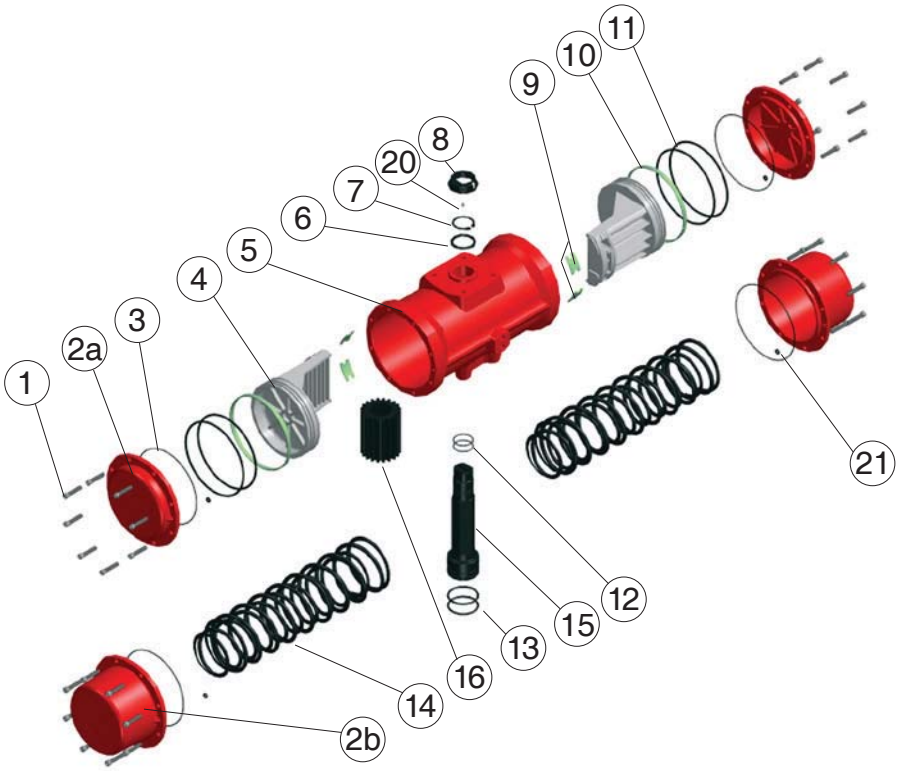

PARTS

▲ Recommended Spare Parts

No.	Part	Size	Pcs.	Materials
1▲	Allen Screw	40 and 50	16	304 SS
2a	Double Acting Cap	40 and 50	2	Aluminum Alloy coated with Rilsan epoxy and polyamide
2b	Spring Return Cap	40 and 50	2	Aluminum Alloy coated with Rilsan epoxy and polyamide
3▲	Cap O-Ring	40 and 50	2	Nitrile
4	Piston	40 and 50	2	Aluminum Alloy
5	Cylinder	40 and 50	1	Aluminum Alloy coated with Rilsan epoxy and polyamide
6	Washer	40 and 50	1	Polyamide
7	Spring Clip	40 and 50	1	Epoxy coated Steel
8	Position	40 and 50	1	Polypropylene

PARTS

▲ Recommended Spare Parts

No.	Part	Size	Pcs.	Materials
9	Piston Guide	40	4	PTFE-Bronze
		50	4	Polyamide
10	Guide Ring	40 and 50	2	PTFE-Bronze
11▲	Piston O-Ring	40 and 50	4	Nitrile
12▲	Upper Shaft O-Ring	40 and 50	2	Nitrile
13▲	Lower Shaft O-Ring	40 and 50	2	Nitrile
14	Spring Set	40 and 50	1	DIN 17223-C Spring Steel epoxy coated
15	Shaft	40 and 50	1	Epoxy coated Steel
16	Gear	40 and 50	1	Epoxy coated Aluminum Alloy
20	Threaded Pin	40 and 50	1	304 SS
21	Port Seal O-Ring	40 and 50	2	Nitrile

PA Series Pneumatic Actuators

OUTPUT TORQUES – DOUBLE ACTING INCH POUNDS

Item No.	Supply Pressure (psi)				
	40	60	80	100	120
PADW	62	103	137	172	209
PAD00	93	147	201	256	309
PAD05	188	295	401	506	612
PAD10	263	417	571	725	880
PAD15	442	690	939	1,187	1,437
PAD20	622	978	1,334	1,689	2,045
PAD25	1,128	1,734	2,342	2,948	3,601
PAD30	1,823	2,804	3,789	4,770	5,757
PADA40	4,708	7,124	9,549	11,963	14,392
PADA50	8,033	12,357	16,697	21,019	25,367
PAD60	13,135	20,499	27,883	35,242	42,648
PAD70	19,157	29,889	40,662	51,388	62,181

OUTPUT TORQUES – SPRING RETURN INCH POUNDS

Item No.	Number of Springs[1]	Spring Cycle		Air Cycle							
				Supply Pressure (psi)							
				60		80		100		120	
		Start	End	Start	End	Start	End	Start	End	Start	End
PASW	6	89	59	43	13	78	49	114	85	150	120
PAS00	6	146	98	48	1	103	55	157	109	211	163
PAS05	6	278	185	110	17	216	123	322	229	427	335
PAS10	6	404	273	145	14	299	168	453	322	608	477
PAS15	6	633	434	257	58	506	306	754	555	1,003	804
PAS20	6	927	582	397	52	752	408	1,107	763	1,462	1,118
PAS25	6	1,609	1,057	668	116	1,292	740	1,915	1,363	2,539	1,986
PAS30	4	2,422	1,592	1,212	382	2,196	1,366	3,181	2,350	4,165	3,334
PASR40	4	6,787	4,351	2,780	344	5,200	2,764	7,620	5,183	10,040	7,603
PASR50	4	10,673	6,404	5,966	1,697	10,297	6,028	14,628	10,359	18,690	14,690
PAS60	6	18,365	12,241	8,272	2,148	15,648	9,524	23,025	16,901	30,401	24,277
PAS70	6	31,320	15,660	14,262	1,398	25,012	9,352	35,763	20,103	46,513	30,853

[1] Standard Spring set. Higher torques for air operation can be obtained by removing springs. Consult Chemline.

WEIGHTS, AIR CONSUMPTION, CYCLE TIMES

Size	Double Acting						Spring Return				
	Item No.	Weight lbs.	Air Consumption (li)[2]		Cycle Time (sec.)		Item No.	Weight lbs.	Air Consumption (Standard litres)[2]	Cycle Time (sec.)	
			Open Port 2	Close Port 4	Open Port 2	Close Port 4				Open Port 2	Close Port 4
W	PADW	2.02	0.08	0.11	0.10	0.10	PASW	2.20	0.08	0.15	0.15
00	PAD00	3.09	0.15	0.18	0.15	0.15	PAS00	3.58	0.15	0.20	0.20
05	PAD05	5.67	0.28	0.37	0.20	0.20	PAS05	6.49	0.28	0.25	0.25
10	PAD10	6.79	0.35	0.45	0.25	0.25	PAS10	7.68	0.35	0.30	0.30
15	PAD15	9.25	0.65	0.82	0.30	0.30	PAS15	11.10	0.65	0.40	0.40
20	PAD20	12.36	0.80	1.05	0.40	0.40	PAS20	14.60	0.80	0.50	0.50
25	PAD25	20.50	1.5	2.0	0.50	0.50	PAS25	24.92	1.5	0.80	0.80
30	PAD30	20.02	2.1	1.9	0.60	0.60	PAS30	34.98	2.1	1.20	1.20
40	PADA40	38.72	5.3	5.3	1.20	1.02	PASR40	80.10	5.3	2.00	2.00
50	PADA50	67.50	10.5	7.0	2.00	2.00	PASR50	128.50	10.5	6.00	6.00
60	PAD60	106.48	19.5	20.7	4.00	4.00	PAS60	142.86	19.5	11.00	8.00
70	PAD70	171.74	31.0	30.0	6.00	6.00	PAS70	260.59	31.0	15.00	10.00

[2] 1 Liter = 61.02 cubic inches

PA Series Options

END CAP TRAVEL STOPS

End cap travel stops are available on PA Series actuators, sizes 00 to 70. Two bolts in the actuator end caps act as adjustable travel stops for one end of travel, either the open position of a normally closed valve, or closed position of a normally open valve. They must be adjusted equally to apply balanced stopping pressure on both pistons. The **full length of piston travel is adjustable.**

INTEGRAL TRAVEL STOPS

Integral travel stops are **standard on PA Series actuators, sizes 00, 30, 60 and 70. They are optional on sizes 40 and 50.** Two bolts in the actuator body act as adjustable travel stops for both the open and closed valve end of travel. The bolt ends contact stops on the output shaft. They are **adjustable for the last 5 degrees of travel.**

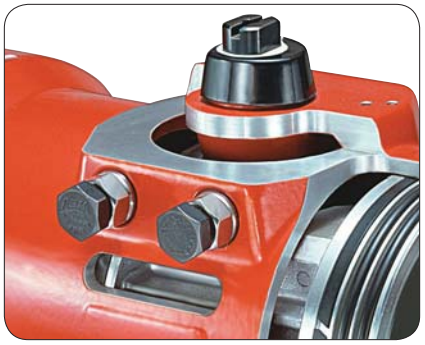

RETAINED SPRING SET

Retained concentric spring packs prevent sudden release of spring tension during actuator end cap removal, preventing possible actuator damage or personal injury. They are available as an **option on sizes 40 and 50. All other sizes (W to 30, 60 and 70) have pre-loaded spring packs as standard.**

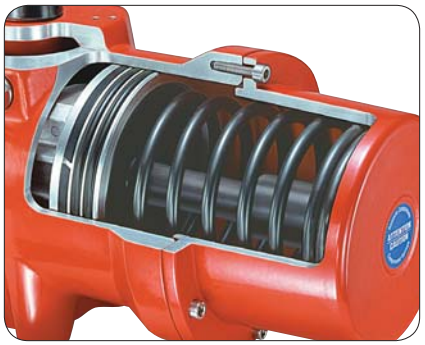

OPTION ITEM NUMBERS

Size	End Cap Travel Stops		Integral Travel Stops	Retained Spring Set
	Spring Return	Double Acting		
W	N/A	N/A	N/A	Standard
00	LP-00S	LP-00	Standard	Standard
05	LP-05S	LP-05	Standard	Standard
10	LP-10S	LP-10	Standard	Standard
15	LP-15S	LP-15	Standard	Standard
20	LP-20S	LP-20	Standard	Standard
25	LP-25S	LP-25	Standard	Standard
30	LP-30S	LP-30	Standard	Standard
40	LP-40S	LP-40	TR40 (Optional)	SM40 (Optional)
50	LP-50S	LP-50	TR50 (Optional)	SM50 (Optional)
60	LP-70S	LP-70	Standard	Standard
70	LP-70S	LP-70	Standard	Standard

PA Series Accessories

for all P series actuators

Accessories are supplied mounted to actuators and bench tested, or separately.

SOLENOID VALVES

Pilot solenoid valves control air supply air in and out of pneumatic actuators to open and close the valve and are electrically actuated. They are usually but not always mounted directly to the actuator. V Series Solenoid Valves are CSA/UL approved and designed for multi-million cycle life. These mount flush to P Series or any other NAMUR compliant pneumatic actuator. They are robust, reliable and corrosion resistant, offering high air flows and fast response. The same valve functions as both 5/2 way (for double acting actuators) and 3/2 way (for spring return actuators). Simply flip over the base plate which changes porting configurations. A screw type manual override is standard. Construction is glass reinforced polyamide body, nitrile seals, nickel plated ports and screws, and epoxy encapsulated coil. The electrical connection is a 3-pin DIN plug with 1/2" NPT for conduit connection. Grommet (cable gripper) and LED grommet (glows to indicate power) version plugs are also available. Versions are available in different voltages, also in intrinsically safe and explosion proof designs.

Solenoid Valves

LIMIT SWITCHES

Limit switches are for On and/or Off valve position feedback. YT Series Limit Switch Boxes are CSA/UL approved 2-position units which are easily mounted to P Series or any other NAMUR compliant rotary actuator. They are compact and robust, featuring quick-setting switch cams, high visibility position indicator beacon and a quick-access cover. Dual 1/2" NPT conduit entries and an 8-position terminal strip allow for wiring of a solenoid valve through the box. The standard model has an epoxy coated aluminum housing and single-pole double-throw switches rated for multi million cycles. An intrinsically safe version is available with inductive proximity switches. Also available are hazardous area enclosures. Another series is available with various BUS modules.

Limit Switches

DECLUTCHABLE GEAR OVERRIDE

The MO Series Manual Declutchable Gear Override allows manual valve/actuator operation of actuated valves in case supply pressure fails. The unit is mounted between the actuator and the valve mounting bracket. For normal powered operation the worm gear is disengaged by moving the lever bar upwards. Construction is epoxy coated cast iron housing with aluminum or welded steel hand wheel. These rugged units are suitable for indoor and outdoor use. The self-locking worm gear design offers safe and easy operation, positive manual positioning and long life.

Declutchable Gear Override

POSITIONERS

Valve positioners control actuator-valve position, responding to a signal from a process controller, usually electronic (most often 4–20mA) or sometimes pneumatic (3–15 psi). YT Series positioners are easy to mount directly to P Series actuators and other NAMUR compliant rotary actuators. They have epoxy coated aluminum enclosures and are also available in 316 stainless steel. All available models are attractively priced:

- **YT1200R 3–15 psi Pneumatic** – a conventional all-mechanical positioner
- **YT1300R 4–20 mA Electro-Pneumatic** – an electronic positioner designed for vibration resistance, better control and easy calibration
- **YT2300 4–20 mA Smart** – a fully digital positioner with intelligent functions like auto calibration, PID control, also theoretical and user defined characterized output. Options include alarms (switch or relay output), 4–20 mA transmitter for position feedback and HART digital communication protocol.

Positioners

AIR FILTER/REGULATOR

A filter/regulator is required to protect pneumatic equipment with small orifices from clogging due to debris and to protect from corrosion or fouling due to excess oil or condensed water in the air supply. Chemline **includes an air filter/regulator with all positioners** mounted to actuators. Chemline recommends they **also be supplied with all pilot solenoid valves.** The F/R-A is a one-piece air filter/regulator and pressure gauge with a GRP plastic body, polycarbonate filter bowl and polyethylene filter element. The filter bowl has a manual drain valve.

Air Filter/Regulator

CHEMLINE PLASTICS
SUPERIOR FLOW SOLUTIONS

55 Guardsman Road, Thornhill, ON, L3T 6L2, Canada | ISO 9001:2008 Certified
tel.905.889.7890 | fax.905.889.8553 | request@chemline.com | chemline.com

CS-301-501 : Identification sheet

VWTC PROJECT NUMBER:	5000218009	REV:	1
PROJECT NAME:	AEM AMARUQ	SUBMITTED TO (COMPANY):	AGNICO EAGLE MINES
ENGINEER:	Gabriel Hébert	SUBMITTED TO (RESPONSIBLE)	
PROJECT MANAGER:	Clément B	PROJECT NUM REFERENCE.:	
PHONE NUMBER:		LOT NUMBER:	

SUPPLIER	EQPT CODE	EQPT TAG NO	DIA	DESCRIPTION	INFO 1	INFO 2	INFO 3	APPLIC.	NOTE	REV
CHEMLINE	VABLPV346917	V18-032	DIA: 13 mm (1/2")	METERING VALVE - WETTING CONE	TYPE: BALL VALVE//MANUFACTURER : CHEMLINE//MODEL : SM2-A-005-E-S//CONNECTION TYPE : SOCKET | 13 mm (1/2")//BODY : PVC (ASTM D1784)// SEAL | SEAT : | EPDM// STEM : N/A			HYDRAPOL 3500		
CHEMLINE	VABLPV346917	V18-033	DIA: 13 mm (1/2")	METERING VALVE - WETTING CONE	TYPE: BALL VALVE//MANUFACTURER : CHEMLINE//MODEL : SM2-A-005-E-S//CONNECTION TYPE : SOCKET | 13 mm (1/2")//BODY : PVC (ASTM D1784)// SEAL | SEAT : | EPDM// STEM : N/A			HYDRAPOL 3500		

This page is intentionally left blank

PDF Published October 18, 2017

Metering Ball Valves

CHEMLINE PLASTICS
SUPERIOR FLOW SOLUTIONS

Chemline SM Series Metering Ball Valve is designed for fine linear flow control of chemicals or clean fluids. The ball is solid with graduated V-groove cut on the outside surface. Precise linear flow control is accomplished through 180° rotation of the handle. With a positioning electric actuator, this becomes an inexpensive control valve. If higher C_V values are required, refer to SP Series Proportional ball valves.

PVC PP

SERIES: SM2
SIZES: 1/2" – 1"
ENDS: Threaded, Socket, Butt[1] or ChemFlare™ [2]
SEATS: PTFE
O-RINGS: EPDM, FPM (Viton®)

Integral 180° Scale with 5° Increments
- Linear flow control and settable flow rates

features

Precise Linear Flow Control
- Provided by a special V-groove ball and wide handle travel (0° to 180°)

Full Size Range
- 6 valves sizes 1/2" to 2" offers a large selection of C_V values

High End Ball Valve Features
- Full Blocking design
- Double Stem O-Rings for safety
- PTFE seats with elastomer cushion
  - Automatically compensates for seat wear or expansion
- 230 psi pressure rated (PVC)

Low Stem Torques
- Due to floating ball design and cushioned PTFE seats

Bidirectional
- Works with flow in either direction

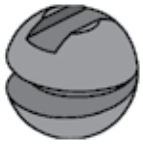

Ball Detail

[1]Butt ends for fusion to Chemline metric PP piping.
[2]For ChemFlare™ end connectors, consult Chemline.

10/17 ©Chemline Plastics Limited 2017
Chemline is a registered trade mark of Chemline Plastics Limited

Metering Ball Valves

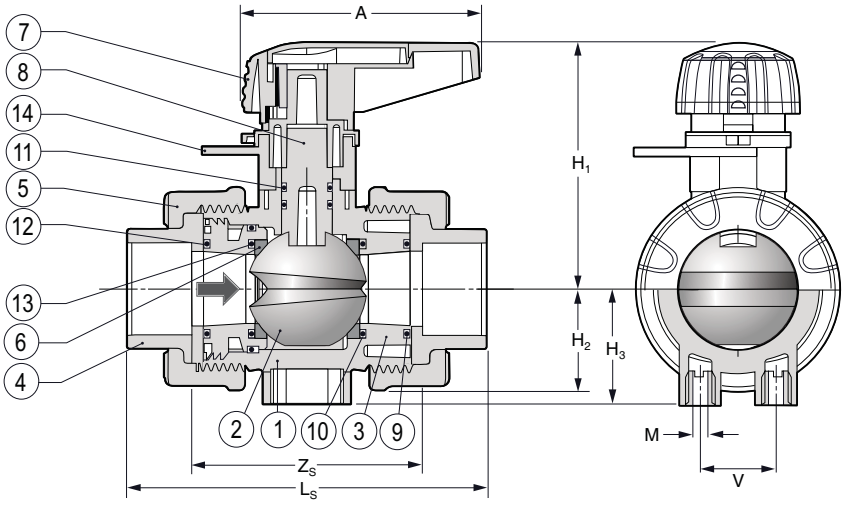

PARTS

No.	Part	Pcs.	Materials
1	Body	1	PVC, PP, PVDF
2	Ball	1	PVC, PP, PVDF
3	Carrier	1	PVC, PP, PVDF
4	End Connector	2	PVC, PP, PVDF
5	Union Nut	5	PVC, PP, PVDF
6	Ball Seat	2	PTFE
7	Handle	1	PVC
8	Stem	1	PVC, PP, PVDF
9	Carrier Face O-Ring	1	EPDM, FPM(Viton®)
10	Carrier O-Ring	1	EPDM, FPM(Viton®)
11	Stem O-Ring[1]	2	EPDM, FPM(Viton®)
12	Face O-Ring	1	EPDM, FPM(Viton®)
13	Seat Cushion[1]	2	EPDM, FPM(Viton®)
14	Position Indicator Scale	1	PVC

DIMENSIONS INCHES

							PVC			PP		
Size	A	H_1	H_3	H	M	V	Z_s	L_s	H_2	Z_s	L_s	H_2
1/2″	2.62	2.48	1.10	2.50	M5	0.98	2.48	3.74	0.99	2.64	3.74	1.06
3/4″	3.21	3.03	1.20	2.70	M5	0.98	2.83	4.33	1.16	3.03	4.29	1.18
1″	3.21	3.39	1.60	3.00	M6	1.02	3.11	4.84	1.39	3.27	4.69	1.57

ELECTRICALLY OR PNEUMATICALLY ACTUATED

The metering ball valve becomes a proportional control valve with the addition of a Q or E Series electric or P Series pneumatic actuator with 4-20 mA positioner

- Thermoplastic housing and mounting bracket
- Manual override
- Position indication
- Mechanical travel stops
- Different voltages are available

Q Series Electric

E Series Electric

P Series Pneumatic

E Series Electric Actuator on a SM2 Valve

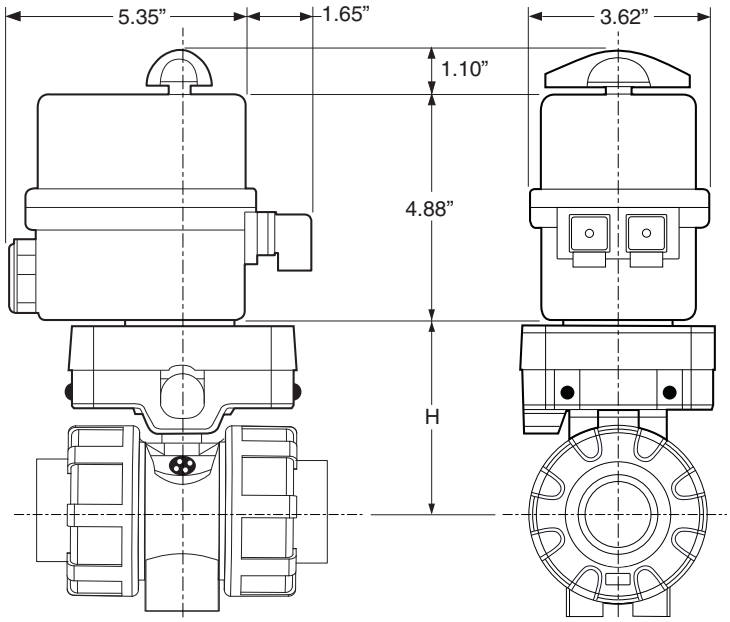

Side View

Port View

Metering Ball Valves

WORKING PRESSURES PSI

NET WEIGHTS LB. Cv VALUES

Size	PVC 20°C 68°F	PVC 40°C 104°F	PVC 60°C 140°F	PP 20°C 68°F	PP 40°C 104°F	PP 60°C 140°F	PP 80°C 176°F	PVC	PP	USGPM Flow at 1 psi △P
1/2″	230	130	30	150	100	65	20	0.35	0.29	1.4
3/4″	230	130	30	150	100	65	20	0.60	0.44	1.9
1″	230	130	30	150	100	65	20	0.84	0.64	2.3

Temperature Ranges: PVC 0 to 60°C (32 to 140°F), PP 0 to 95°C (32 to 203°F)

Cv VALUE vs. VALVE OPENING

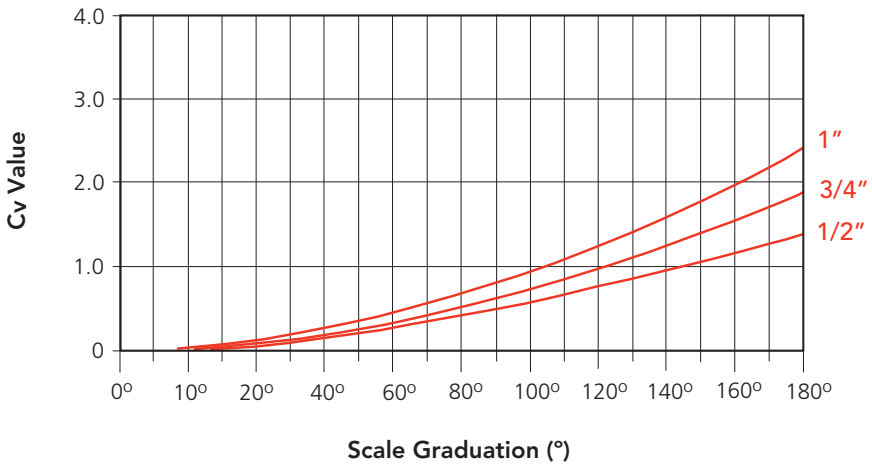

SAMPLE SPECIFICATION

1. All low flow control valves, 1/2″ to 1″, will be Chemline SM Series metering ball valves.
2. Body material will be PVC or PP, and o-rings will be EPDM or FPM (Viton®).
3. Body will be full blocking design with double stem o-rings for safety, rated at 230 psi maximum working pressure for PVC and 150 psi for PP material.
4. Ball will be floating design, molded solid with a V-groove for linear flow control over a 180° range of handle rotation.
5. Seats will be PTFE with elastomer cushions for positive closure with minimum stem torques and automatic compensation for seat wear and expansion.
6. Position indicating scale will be 0° to 180° with 5° increments for fine flow control and settable flow rates.
7. End connections will be 1/2″ to 1″ ANSI socket or FNPT threaded or 150 lb flanged or butt fusion for Chemline metric PP pipe or ChemFlare™ for PFA tubing.

ORDERING EXAMPLE

Chemline Metering Ball Valves	SM2	A	010	E	S
Valve Material	**A** – PVC	**B** – PP			
Size	**005** – 1/2″	**007** – 3/4″	**010** – 1″		
Seals	**E** – EPDM	**V** – FPM (Viton®)			
Ends	**S** – Socket	**T** – Threaded	**B** – Butt[1]	**CF** – ChemFlare™	

Example: SM2 Series Ball Valve, PVC, 1″, EPDM seals, socket ends.

[1] PP metric butt fusion ends (1/2″ to 2″) connect to Chemline PP piping systems.

VACUUM RATING

- 29.9 inches mercury

OPTIONS & ACCESSORIES

- **Reduced Ends**
- **Electric or Pneumatic Actuator with Positioner**
  – Operates as a linear control valve

55 Guardsman Road, Thornhill, ON, L3T 6L2, Canada | ISO 9001:2008 Certified
1.800.930.2436 (CHEM) | fax.905.889.8553 | request@chemline.com | chemline.com

This page is intentionally left blank

CS-302-100 : Identification sheet

VWTC PROJECT NUMBER:	5000218009	REV:	1
PROJECT NAME:	AEM AMARUQ	SUBMITTED TO (COMPANY):	AGNICO EAGLE MINES
ENGINEER:	Gabriel Hébert	SUBMITTED TO (RESPONSIBLE)	
PROJECT MANAGER:	Clément B	PROJECT NUM REFERENCE.:	
PHONE NUMBER:		LOT NUMBER:	

SUPPLIER	EQPT CODE	EQPT TAG NO	DIA	DESCRIPTION	INFO 1	INFO 2	INFO 3	APPLIC.	NOTE	REV
CHEMLINE	VABLPV303191	CV9-621	DIA: 50 mm (2")	CHECK VALVE - LIQUID POLYMER	TYPE: CHECK | 150 PSI//MANUFACTURER : CHEMLINE//MODEL : BTA020EC//CONNECTION TYPE : COMBO | 2"//BODY : PVC// SEAL | SEAT :EPDM | // STEM : N/A			HYDRAPOL 3500		

This page is intentionally left blank

PDF Published March 1, 2013

Ball Check & Foot Valves

CHEMLINE PLASTICS
SUPERIOR FLOW SOLUTIONS

The economical and versatile Chemline Ball Check Valve is the most popular type of non-return valves for pipe sizes under 6". A wide selection of body and seat materials, and end connections are available for many different applications. It has good flow capacity and will handle many slurry and suspended solid services. This valve works in both horizontal and vertical lines. The Foot Valve is for end of line services such as sumps.

PVC | CPVC | PP | PVDF

CRN Registered Consult Chemline

NSF[3] Certified to NSF/ANSI 61

SERIES: BT: True Union Check
BC: Single Union Check
FT: True Union Check
FV: Single Union Check

SIZES: 1/2" – 4"

ENDS: Threaded, Socket, Flanged, Butt[1] or ChemFlare™[2]

SEAT/SEALS: EPDM, FKM (Viton®), PTFE coated FKM (Viton®)

features

- **True Union to 2"**
- **Full Port to 4"**
- **NSF Certified[3]**
- **Built-in Union Design** – For easy installation and maintenance
- **Free Floating Ball** – The only moving part
- **Uniseat/Seal** – Easily removable
- **May be used either horizontally or vertically**
- **Excellent flow characteristics**
- **Low seating and opening pressures**

True Union Check
1/2" to 2" in all materials

Single Union Check
1/2" to 4" in PVC
2-1/2" to 4" in CPVC, PP and PVDF

Foot Valve is light weight and has a low profile basket

[1] PP and PVDF Butt fusion ends (available 1/2" to 2") connect to Chemline PP and PVDF piping systems.
[2] For ChemFlare™ end connectors, consult Chemline.
[3] PVC valves with EPDM or FKM (Viton®) seals are certified under NSF/ANSI Standard 61 for contact with drinking water.

03/13 ©Chemline Plastics Limited 2013
Chemline is a registered trade mark of Chemline Plastics Limited

Ball Check Valves

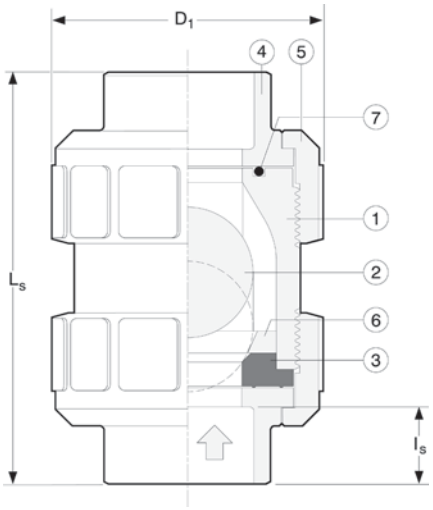

True Union Valve

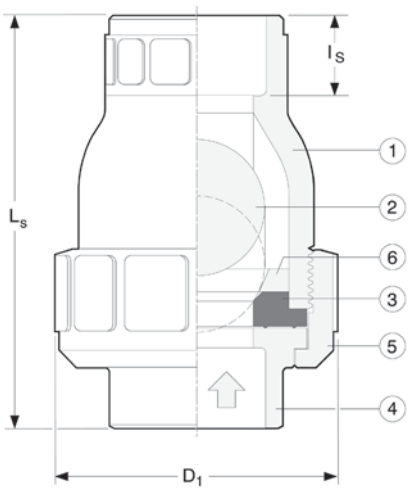

Single Union Valve

PARTS

▲ Recommended Spare Parts

No.	Part	Pcs. T/U	Pcs. S/U	Materials
1	Body	1	1	PVC, CPVC, PP, PVDF
2	Ball	1	1	PVC, CPVC, PP, PVDF
3▲	Uniseat/Seal[1]	1	1	EPDM, FKM(Viton®), PTFE coated FKM (Viton®)
4	End Connector	2	1	PVC, CPVC, PP, PVDF
5	Union Nut	2	1	PVC, CPVC, PP, PVDF
6	Stop Ring	1	1	PVC, CPVC, PP, PVDF
7	Face O-Ring	1	1	EPDM, FKM(Viton®)
9	Flange Retainer[2]	2	1	PVDF
10	Factory Flange[3]	2	1	PVC, CPVC, PP, PVDF

[1] Standard seals are EPDM in PVC, CPVC and PP valves, PTFE coated FKM (Viton®) in PVDF valves. Coating is .002" thick.

[2] True Union: 2 pcs 1/2" to 2", 6 pcs 1-1/2" to 4" Single Union: 1 pcs 1/2" to 2", 3 pcs 2-1/2" to 4".

[3] True Union flanged valves have two factory flanges. Single Union valves have one factory flange and one fabricated flange. Consult Chemline for details on fabricated type.

UNION END CONNECTIONS

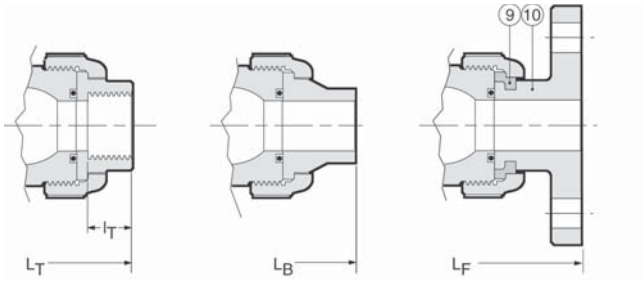

NPT Threaded

Butt Fusion PP and PVDF

Factory Flanged

DIMENSIONS INCHES

WEIGHTS LB.

Size	D_1	I_s	I_T	True Union PVC & CPVC L_T	L_S	L_F	True Union PP & PVDF L_T	L_B	L_F	Single Union PVC L_T	L_S	L_F	True Union Socket or Butt PVC	CPVC	PP	PVDF	Single Union PVC
1/2"	1.9	0.69	0.59	3.4	3.4	5.1	3.4	4.0	5.1	3.2	3.4	5.6	0.3	0.3	0.2	0.3	0.2
3/4"	2.4	0.72	0.67	4.1	3.9	6.1	4.1	4.4	6.1	3.8	3.7	6.6	0.5	0.5	0.3	0.6	0.4
1"	2.8	0.88	0.79	4.5	4.4	6.5	4.5	4.8	6.5	4.2	4.3	7.3	0.7	0.8	0.4	0.9	0.6
1-1/4"	3.1	0.94	0.87	5.0	4.9	6.6	5.0	5.9	6.6	6.2	6.3	12.3	1.1	1.2	0.7	1.5	1.5
1-1/2"	3.7	1.09	0.98	5.9	5.9	7.6	5.9	5.8	7.6	5.6	5.7	9.1	1.6	1.7	1.0	2.0	1.3
2"	4.2	1.16	1.10	7.0	6.8	8.4	7.0	6.5	8.4	6.5	6.5	10.5	2.2	2.4	1.4	2.7	1.8

DIMENSIONS INCHES

WEIGHTS LB.

Size	D_1	I_s[4]	I_T	Single Union PVC & CPVC L_T	L_S	L_F	Single Union PP & PVDF L_T	L_B	L_F	Single Union PVC	CPVC	PP	PVDF
2-1/2"	6.0	2.10	2.17	10.0	10.4	14.3	8.7	*	*	5.7	6.2	*	*
3"	6.0	1.88	1.38	8.7	9.6	12.2	8.7	*	*	5.1	5.5	3.3	6.3
4"	8.3	2.00	1.77	12.1	12.2	15.0	12.1	*	*	12.7	13.9	8.1	15.7

[4] Consult Chemline.

Foot Valves

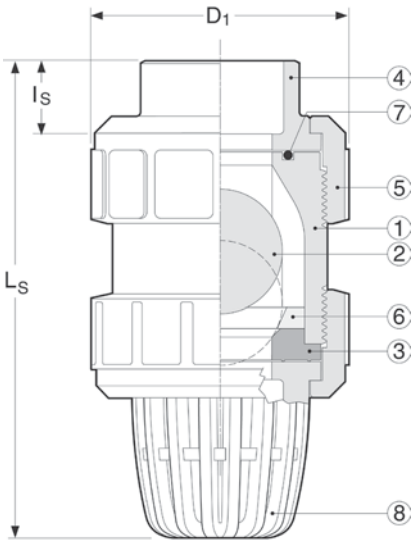

True Union Valve

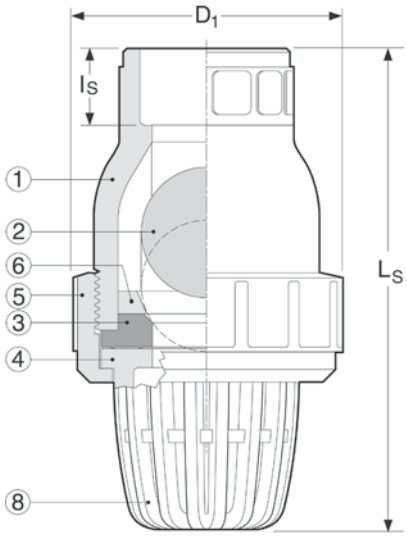

Single Union Valve

PARTS

▲ Recommended Spare Parts

No.	Part	Pcs. T/U	Pcs. S/U	Materials
1	Body	1	1	PVC, CPVC, PP, PVDF
2	Ball	1	1	PVC, CPVC, PP, PVDF
3▲	Uniseat/Seal[1]	1	1	EPDM, FKM(Viton®), PTFE coated FKM (Viton®)
4	End Connector	2	1	PVC, CPVC, PP, PVDF
5	Union Nut	2	1	PVC, CPVC, PP, PVDF
6	Stop Ring	1	1	PVC, CPVC, PP, PVDF
7	Face O-Ring	1	1	EPDM, FKM(Viton®)
8	Foot Valve Basket	1	1	PVC, CPVC, PP, PVDF
9	Flange Retainer[2]	3	0	PVDF
10	Factory Flange[3]	1	0	PVC, CPVC, PP, PVDF

[1] Standard seals are EPDM in PVC, CPVC and PP valves, PTFE coated FKM (Viton®) in PVDF valves. Coating is .002" thick.

[2] True Union: 1 pc 1/2" to 2", 3 pcs 2-1/2" to 4".

[3] True Union valves have factory flanges. Single Union have fabricated flanges. Consult Chemline for details on fabricated type.

END CONNECTIONS FOR TRUE UNION VALVE

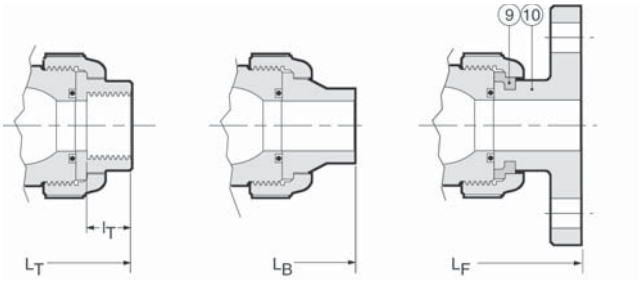

NPT Threaded

Butt Fusion PP and PVDF

Factory Flanged

DIMENSIONS INCHES

WEIGHTS LB.

Size	D_1	I_s Soc	I_T Thd	True Union PVC & CPVC L_T	True Union PVC & CPVC L_S	True Union PVC & CPVC L_F	Single Union PVC L_T	Single Union PVC L_S	Single Union PVC L_F	Single Union PVC Socket
1/2"	1.9	0.69	0.59	2.8	2.9	3.7	3.5	3.7	4.7	0.3
3/4"	2.4	0.72	0.67	3.3	3.3	4.4	4.1	4.2	5.4	0.4
1"	2.8	0.88	0.79	3.7	3.7	4.8	4.5	4.8	6.1	0.8
1-1/4"	3.7	0.94	0.87	*	*	*	*	*	*	1.8
1-1/2"	3.7	1.09	0.98	5.4	5.4	6.3	6.8	7.0	8.5	1.7
2"	4.2	1.16	1.10	6.4	6.4	7.2	7.4	7.6	9.3	2.1
2-1/2"	6.0	2.10	2.17	–	–	–	*	*	*	7.4
3"	6.0	1.88	1.38	–	–	–	11.6	12.1	14.2	7.1
4"	8.3	2.00	1.77	–	–	–	14.7	15.0	17.4	15.7

* Consult Chemline for dimensions.

For CPVC (2-1/2" to 4"), PP and PVDF Foot Valve lengths, consult Chemline.

Ball Check & Foot Valves

WORKING PRESSURES PSI

Size	PVC	CPVC				Polypropylene			PVDF			
	0-50°C 32-122°F	0-50°C 32-122°F	60°C 140°F	80°C 176°F	90°C 194°F	–20-30°C –4-90°F	60°C 140°F	80°C 176°F	–20-60°C –4-140°F	80°C 176°F	90°C 194°F	100°C 212°F
1/2″	150	150	115	85	60	150	90	60	150	120	110	85
3/4″	150	150	115	85	60	150	90	60	150	120	110	85
1″	150	150	115	85	60	150	90	60	150	120	110	85
1-1/4″	150	150	115	85	60	150	90	60	150	120	110	85
1-1/2″	150	150	115	85	60	150	90	60	150	120	110	85
2″	150	150	115	85	60	150	90	60	150	120	110	85
2-1/2″	100	100	90	60	45	100	60	45	100	90	60	45
3″	100	100	90	60	45	100	60	45	100	90	60	45
4″	100	100	90	60	45	100	60	45	100	90	60	45

Maximum Temperatures: PVC 0 to 60°C (32 to 140°F), **CPVC** 0 to 95°C (32 to 203°F), **PP** –20 to 90°C (–4 to194°F), **PVDF** –40 to 100°C (–40 to 212°F)

MINIMUM SEATING AND OPENING PRESSURE PSI

Cv VALVES

Size	Vertical Piping		Horizontal Piping		Check Valves
	Open	Seating	Open	Seating	
1/2″	0.7	2.8	0.1	2.8	6.5
3/4″	0.7	4.3	0.1	4.3	17.
1″	0.7	4.3	0.1	4.3	25.
1-1/4″	1.4	4.3	0.3	4.3	86.
1-1/2″	1.4	4.3	0.3	4.3	86.
2″	1.4	4.3	0.3	4.3	130.
2-1/2″	1.4	2.8	0.3	2.8	280.
3″	1.4	2.8	0.3	2.8	280.
4″	1.4	2.8	0.3	2.8	500.

VACUUM RATING

- 29.9 inches mercury
- Maximum recommended velocity 5 m/s

SAMPLE SPECIFICATION

All Ball Check valves in PVC, CPVC, PP or PVDF shall be Chemline BT or BC Series or equal with EPDM [FKM (Viton®) or PTFE coated FKM (Viton®)] seats and union ends. Sizes 1/2″ to 2″ shall be slip-out True Union style, sizes 2-1/2″ to 4″ shall be single union. The elastomer uniseat/seal shall function as both the ball seat and the union seal. Ball Check valves shall be rated 150 psi up to 2″ and 100 psi for sizes 2-1/2″ to 4″.

ORDERING EXAMPLE

Chemline Ball Check/Foot Valves	BT	A	020	E	S
Valve Type	**BT** – True Union Ball Check **BC** – Single Union Ball Check **FV** – Single Union Foot Valve **FT** – True Union Foot Valve				
Body Material	**A** – PVC **C** – CPVC **B** – PP **K** – PVDF				
Size	**005** – 1/2″ **007** – 3/4″ **010** – 1″ **012** – 1-1/4″ **015** – 1-1/2″ **020** – 2″ **025** – 2-1/2″ **030** – 3″ **040** – 4″				
Seals	**E** – EPDM **V** – FKM (Viton®) **T** – PTFE coated FKM (Viton®)				
Ends	**S** – Socket **T** – Threaded **F** – Flanged **B** – Butt[1] **CF** – ChemFlare™				

Example: Ball Check Valve, PVC, 2″, with EPDM seat, socket ends.

[1] PP and PVDF metric butt fusion ends (1/2″ to 2″) connect to Chemline PP and PVDF piping systems.

OPTIONS & ACCESSORIES

- **PTFE coated Uniseat/Seal**
- **Spring Loaded Ball** – Assists ball to seat faster

55 Guardsman Road, Thornhill, ON, L3T 6L2, Canada | ISO 9001:2008 Certified
tel.905.889.7890 | fax.905.889.8553 | request@chemline.com | chemline.com

CS-304-100 : Identification sheet

VWTC PROJECT NUMBER:	5000218009	REV:	1
PROJECT NAME:	AEM AMARUQ	SUBMITTED TO (COMPANY):	AGNICO EAGLE MINES
ENGINEER:	Gabriel Hébert	SUBMITTED TO (RESPONSIBLE)	
PROJECT MANAGER:	Clément B	PROJECT NUM REFERENCE.:	
PHONE NUMBER:		LOT NUMBER:	

SUPPLIER	EQPT CODE	EQPT TAG NO	DIA	DESCRIPTION	INFO 1	INFO 2	INFO 3	APPLIC.	NOTE	REV
TECKNO VALVE	VASDBR352335	SV18-032	N/A	SOLENOID VALVE - DRIVING WATER	TYPE: SOLENOID VALVE//MANUFACTURER : ASCO//MODEL : EF8210G022-120VAC//CONNECTION TYPE : THREADED | 38 mm (1 1/2") | 38 mm (1 1/2")//BODY : BRASS// SEAL | SEAT : | // STEM : N/A	ACTING : PILOT	NORMALLY : FERMÉ/CLOSED	HYDRAPOL 3500		

This page is intentionally left blank

Features

- Wide range of pressure ratings, sizes, and resilient materials provide long service life and low internal leakage
- High flow valves for liquid, corrosive, and air/inert gas service
- Industrial applications include:
  - Car wash
  - Laundry equipment
  - Air compressors
  - Industrial water control
  - Pumps

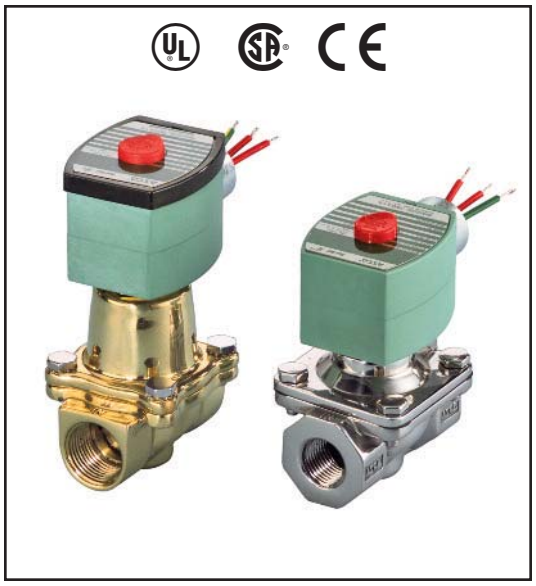

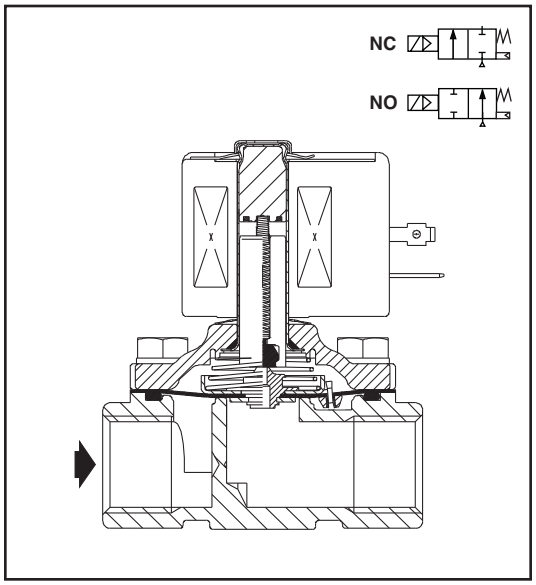

Construction

Valve Parts in Contact with Fluids		
Body	Brass	304 Stainless Steel*
Seals and Discs	NBR or PTFE	
Disc-Holder	PA	
Core Tube	305 Stainless Steel	
Core and Plugnut	430F Stainless Steel	
Springs	302 Stainless Steel	
Shading Coil	Copper	Silver

*Catalog Numbers 8210G127, 8210G129, 8210G132, 8210G133 have 316L Stainless Steel bodies.

Electrical

Standard Coil and Class of Insulation	Watt Rating and Power Consumption				Spare Coil Part Number			
		AC			General Purpose		Explosionproof	
	DC Watts	Watts	VA Holding	VA Inrush	AC	DC	AC	DC
F	-	6.1	16	40	238210	-	238214	-
F	11.6	10.1	25	70	238610	238710	238614	238714
F	16.8	16.1	35	180	272610	97617	272614	97617
F	-	17.1	40	93	238610	-	238614	-
F	-	20	43	240	99257	-	99257	-
F	-	20.1	48	240	272610	-	272614	-
F	30.8	-	-	-	-	501695	-	501696
H	40.6	-	-	-	-	238910	-	238914

Standard Voltages: 24, 120, 240, 480 volts AC, 60 Hz (or 110, 220 volts AC, 50 Hz). 6, 12, 24, 120, 240 volts DC. Must be specified when ordering.
Other voltages available when required.

Solenoid Enclosures

Standard: RedHat II - Watertight, Types 1, 2, 3, 3S, 4, and 4X; RedHat - Type I.

Optional: RedHat II - Explosionproof and Watertight, Types 3, 3S, 4, 4X, 6, 6P, 7, and 9; Red-Hat - Explosionproof and Watertight, Types 3, 4, 4X, 7, and 9.

(To order, add prefix "EF" to catalog number, except Catalog Numbers 8210B057, 8210B058, and 8210B059, which are not available with Explosionproof enclosures.)
See Optional Features Section for other available options.

Nominal Ambient Temp. Ranges

RedHat II/RedHat AC: 32˚F to 125˚F (0˚C to 52˚C)
RedHat II DC: 32˚F to 104˚F (0˚C to 40˚C)
RedHat DC: 32˚F to 77˚F (0˚C to 25˚C)
(104˚F/40˚C occasionally)
8210G227 AC: 32˚F to 130˚F (0˚C to 54˚C)
DC: 32˚F to 90˚F (0˚C to 32˚C)
Refer to Engineering Section for details.

Approvals

UL listed as indicated. CSA certified.
RedHat II meets applicable CE directives.
Refer to Engineering Section for details.

ATEX/IECEx certified with prefix "EV" as listed. *Refer to Optional Features Electrical Section for details.*

2/2 SERIES 8210

ASCO®

Specifications (English units)

Pipe Size (in)	Orifice Size (in)	Cv Flow Factor	Operating Pressure Differential (psi)							Max. Fluid Temp. ˚F		Brass Body			Stainless Steel Body			Watt Rating/ Class of Coil Insulation ⑦	
				Max. AC			Max. DC												
			Min.	Air-Inert Gas	Water	Light Oil @ 300 SSU	Air-Inert Gas	Water	Light Oil @ 300 SSU	AC	DC	Catalog Number	Const. Ref. ④	UL ⑤ Listing	Catalog Number	Const. Ref. ④	UL ⑤ Listing	AC	DC
NORMALLY CLOSED (Closed when de-energized), NBR or PTFE ② Seating																			
3/8	3/8	1.5	①	150	125	-	40	40	-	180	150	8210G073 ③	1P	●	8210G036 ③	1P	●	6.1/F	11.6/F
3/8	5/8	3	0	150	150	-	40	40	-	180	150	8210G093	5D	❍	-	-	-	10.1/F	11.6/F
3/8	5/8	3	5	200	150	135	125	100	100	180	150	8210G001 ▼	6D	❍	-	-	-	6.1/F	11.6/F
3/8	5/8	3	5	300	300	300	-	-	-	175	-	8210G006 ✓	5D	❍	-	-	-	17.1/F	-
1/2	7/16	2.2	①	150	125	-	40	40	-	180	150	8210G015 ③	2P	●	8210G037 ③	2P	●	6.1/F	11.6/F
1/2	5/8	4	0	150	150	-	40	40	-	180	150	8210G094 ✓	5D	❍	-	-	-	10.1/F	11.6/F
1/2	5/8	4	0	150	150	125	40	40	-	175	150	-	-	-	8210G087 ✓	7D	●	17.1/F	11.6/F
1/2	5/8	4	5	200	150	135	125	100	100	180	150	8210G002 ▼	6D	❍	-	-	-	6.1/F	11.6/F
1/2	5/8	4	5	300	300	300	-	-	-	175	-	8210G007	5D	❍	-	-	-	17.1/F	-
1/2	3/4	4	5	-	300	-	-	300	-	130	90	8210G227	5D	❍ †	-	-	-	17.1/F	40.6/H
3/4	5/8	4.5	0	150	150	125	40	40	-	175	150	-	-	-	8210G088 ✓	7D	●	17.1/F	11.6/F
3/4	3/4	5	5	125	125	125	100	90	75	180	150	8210G009 ▼	9D	❍	-	-	-	6.1/F	11.6/F
3/4	3/4	5	0	150	150	-	40	40	-	180	150	8210G095 ✓	8D	❍	-	-	-	10.1/F	11.6/F
3/4	3/4	6.5	5	250	150	100	125	125	125	180	150	8210G003 ▼	11D	❍	-	-	-	6.1/F	11.6/F
3/4	3/4	6	0	350	300	200	200	200	200	200	180	8210G026 ② ‡ ◆	40P/10D	●	-	-	-	16.1F	30.8/F
1	1	13	0	150	125	125	135	120	120	180	180	8210G054 ‡ ◆	41D/31D	●	8210G089 ‡ ◆	45D/15D	●	16.1/F	30.8/F
1	1	13	5	150	150	100	125	125	125	180	150	8210G004 ▼	12D	❍	-	-	-	6.1/F	11.6/F
1	1	13.5	0	300	225	115	-	-	-	200	-	8210G027 ‡	42P	●	-	-	-	20.1/F	-
1	1	13.5	10	300	300	300	-	-	-	175	-	8210G078 ②	13P	-	-	-	-	17.1/F	-
1 1/4	1 1/8	15	0	150	125	125	135	120	120	180	180	8210G055 ‡ ◆	43D/32D	●	-	-	-	16.1/F	30.8/F
1 1/4	1 1/8	15	5	150	150	100	125	125	125	180	150	8210G008 ▼	16D	❍	-	-	-	6.1/F	11.6/F
1 1/2	1 1/4	22.5	0	150	125	125	135	120	120	180	180	8210G056 ‡ ◆	44D/33D	●	-	-	-	16.1/F	30.8/F
1 1/2	1 1/4	22.5	5	150	150	100	125	125	125	180	150	8210G022 ▼	18D	●	8210G127	-	-	6.1/F	11.6/F
2	1 3/4	43	5	150	125	90	50	50	50	180	150	8210G100	20P	●	8210G129	-	-	6.1/F	11.6/F
2 1/2	1 3/4	45	5	150	125	90	50	50	50	180	150	8210G101	21P	●	-	-	-	6.1/F	11.6/F
NORMALLY OPEN (Open when de-energized), NBR Seating (PA Disc-Holder, except as noted)																			
3/8	5/8	3	0	150	150	125	125	125	80	180	150	8210G033	23D	●	-	-	-	10.1/F	11.6/F
3/8	5/8	3	5	250	200	200	250	200	200	180	180	8210G011 ⑧ ⑨	39D	●	-	-	-	10.1/F	11.6/F
1/2	5/8	4	0	150	150	125	125	125	80	180	150	8210G034 ✓	23D	●	-	-	-	10.1/F	11.6/F
1/2	5/8	3	0	150	150	100	125	125	80	180	150	-	-	-	8210G030 ✓	37D	●	10.1/F	11.6/F
1/2	5/8	4	5	250	200	200	250	200	200	180	180	8210G012 ⑧ ⑨	39D	●	-	-	-	10.1/F	11.6/F
3/4	3/4	5.5	0	150	150	125	125	125	80	180	150	8210G035 ✓	25D	●	-	-	-	10.1/F	11.6/F
3/4	5/8	3	0	150	150	100	125	125	80	180	150	-	-	-	8210G038 ✓	38D	●	10.1/F	11.6/F
3/4	3/4	6.5	5	-	-	-	250	200	200	-	180	8210C013	24D	●	-	-	-	-	16.8/F
3/4	3/4	6.5	5	250	200	200	-	-	-	180	-	8210G013	46D	●	-	-	-	16.1/F	-
1	1	13	0	125	125	125	-	-	-	180	-	8210B057 ⑥ ⑩	34D	●	-	-	-	20/F	-
1	1	13	5	-	-	-	125	125	125	-	180	8210D014	26D	●	-	-	-	-	16.8/F
1	1	13	5	150	150	125	-	-	-	180	-	8210G014	47D	●	-	-	-	16.1/F	-
1 1/4	1 1/8	15	0	125	125	125	-	-	-	180	-	8210B058 ⑥ ⑩	35D	●	-	-	-	20/F	-
1 1/4	1 1/8	15	5	-	-	-	125	125	125	-	180	8210D018	28D	●	-	-	-	-	16.8/F
1 1/4	1 1/8	15	5	150	150	125	-	-	-	180	-	8210G018	48D	●	-	-	-	16.1/F	-
1 1/2	1 1/4	22.5	0	125	125	125	-	-	-	180	-	8210B059 ⑥ ⑩	36D	●	-	-	-	20/F	-
1 1/2	1 1/4	22.5	5	-	-	-	125	125	125	-	180	8210D032	29D	●	-	-	-	-	16.8/F
1 1/2	1 1/4	22.5	5	150	150	125	-	-	-	180	-	8210G032	49D	●	8210G132	-	-	16.1/F	-
2	1 3/4	43	5	-	-	-	125	125	125	-	150	8210 103	30P	●	-	-	-	-	16.8/F
2	1 3/4	43	5	125	125	125	-	-	-	180	-	8210G103	50P	●	8210G133	-	-	16.1/F	-
2 1/2	1 3/4	45	5	-	-	-	125	125	125	-	150	8210 104	27P	●	-	-	-	-	16.8/F
2 1/2	1 3/4	45	5	125	125	125	-	-	-	180	-	8210G104	51P	●	-			16.1/F	-

① 5 psi on Air; 1 psi on Water.
② Valve provided with PTFE main disc.
③ Valve includes Ultem (G.E. trademark) piston.
④ Letter "D" denotes diaphragm construction; "P" denotes piston construction.
⑤ ❍ Safety Shutoff Valve; ● General Purpose Valve.
Refer to Engineering Section (Approvals) for details.

⑥ Valves not available with Explosionproof enclosures.
⑦ On 50 hertz service, the watt rating for the 6.1/F solenoid is 8.1 watts.
⑧ AC construction also has PA seating.
⑨ No disc-holder.
⑩ Stainless steel disc-holder.
† UL listed for fire protection systems per UL429A.

‡ DC constructions must have solenoid mounted vertical and upright.
✓ ATEX/IECEx certified with prefix "EV".
▼ ATEX/IECEx certified for DC only with prefix "EV".
◆ Not available in 6 Volt DC. EF and HB prefix only.

Specifications (Metric units)

Pipe Size (in)	Orifice Size (mm)	Kv Flow Factor (m^3/hr)	Operating Pressure Differential (bar)							Max. Fluid Temp. ˚C		Brass Body			Stainless Steel Body			Watt Rating/ Class of Coil Insulation ⑦	
				Max. AC			Max. DC												
			Min.	Air-Inert Gas	Water	Light Oil @ 300 SSU	Air-Inert Gas	Water	Light Oil @ 300 SSU	AC	DC	Catalog Number	Const. Ref. ④	UL ⑤ Listing	Catalog Number	Const. Ref. ④	UL ⑤ Listing	AC	DC
NORMALLY CLOSED (Closed when de-energized), NBR or PTFE ② Seating																			
3/8	10	1.3	①	10	9	-	3	3	-	82	65	8210G073 ③	1P	●	8210G036 ③	1P	●	6.1/F	11.6/F
3/8	16	2.6	0	10	10	-	3	3	-	82	65	8210G093	5D	❍	-	-	-	10.1/F	11.6/F
3/8	16	2.6	0.3	14	10	9	9	7	7	82	65	8210G001 ▼	6D	❍	-	-	-	6.1/F	11.6/F
3/8	16	2.6	0.3	21	21	21	-	-	-	79	-	8210G006 ✓	5D	❍	-	-	-	17.1/F	-
1/2	11	1.9	①	10	9	-	3	3	-	82	65	8210G015 ③	2P	●	8210G037 ③	2P	●	6.1/F	11.6/F
1/2	16	3.4	0	10	10	-	3	3	-	82	65	8210G094 ✓	5D	❍	-	-	-	10.1/F	11.6/F
1/2	16	3.4	0	10	10	9	3	3	-	79	65	-	-	-	8210G087 ✓	7D	●	17.1/F	11.6/F
1/2	16	3.4	0.3	14	10	9	9	7	7	82	65	8210G002 ▼	6D	❍	-	-	-	6.1/F	11.6/F
1/2	16	3.4	0.3	21	21	21	-	-	-	79	-	8210G007	5D	❍	-	-	-	17.1/F	-
1/2	19	3.4	0.3	-	21	-	-	21	-	54	32	8210G227	5D	❍ †	-	-	-	17.1/F	40.6H
3/4	16	3.9	0	10	10	9	3	3	-	79	65	-	-	-	8210G088 ✓	7D	●	17.1/F	11.6/F
3/4	19	4.3	0.3	9	9	9	7	6	5	82	65	8210G009 ▼	9D	❍	-	-	-	6.1/F	11.6/F
3/4	19	4.3	0	10	10	-	3	3	-	82	65	8210G095 ✓	8D	❍	-	-	-	10.1/F	11.6/F
3/4	19	5.6	0.3	17	10	7	9	9	9	82	65	8210G003 ▼	11D	❍	-	-	-	6.1/F	11.6/F
3/4	19	5.1	0	24	21	14	14	14	14	93	82	8210G026 ② ‡ ◆	40P/10D	●	-	-	-	16.1F	30.8/F
1	25	11	0	10	9	9	9	8	8	82	82	8210G054 ‡ ◆	41D/31D	●	8210G089 ‡ ◆	45D/15D	●	16.1/F	30.8/F
1	25	11	0.3	10	10	7	9	9	9	82	65	8210G004 ▼	12D	❍	-	-	-	6.1/F	11.6/F
1	25	11.5	0	21	16	8	-	-	-	93	-	8210G027 ‡	42P	●	-	-	-	20.1/F	-
1	25	11.5	0.7	21	21	21	-	-	-	79	-	8210G078 ②	13P	-	-	-	-	17.1/F	-
1 1/4	29	13	0	10	9	9	9	8	8	82	82	8210G055 ‡ ◆	43D/32D	●	-	-	-	16.1/F	30.8/F
1 1/4	29	13	0.3	10	10	7	9	9	9	82	65	8210G008 ▼	16D	❍	-	-	-	6.1/F	11.6/F
1 1/2	32	19.5	0	10	9	9	9	8	8	82	82	8210G056 ‡ ◆	44D/33D	●	-	-	-	16.1/F	30.8/F
1 1/2	32	19.5	0.3	10	10	7	9	9	9	82	65	8210G022 ▼	18D	●	8210G127	-	-	6.1/F	11.6/F
2	44	37	0.3	10	9	6	3	3	3	82	65	8210G100	20P	●	8210G129	-	-	6.1/F	11.6/F
2 1/2	44	39	0.3	10	9	6	3	3	3	82	65	8210G101	21P	●	-	-	-	6.1/F	11.6/F
NORMALLY OPEN (Open when de-energized), NBR Seating (PA Disc-Holder, except as noted)																			
3/8	16	2.6	0.0	10	10	9	9	9	6	82	65	8210G033	23D	●	-	-	-	10.1/F	11.6/F
3/8	16	2.6	0.3	17	14	14	17	14	14	82	82	8210G011 ⑧ ⑨	39D	●	-	-	-	10.1/F	11.6/F
1/2	16	3.4	0	10	10	9	9	9	6	82	65	8210G087 ✓	7D	●	-	-	-	10.1/F	11.6/F
1/2	16	2.6	0	10	10	7	9	9	6	82	65	-	-	-	8210G087 ✓	7D	●	10.1/F	11.6/F
1/2	16	3.4	0.3	17	14	14	17	14	14	82	82	8210G012 ⑧ ⑨	39D	●	-	-	-	10.1/F	11.6/F
3/4	19	4.7	0	10	10	9	9	9	6	82	65	8210G087 ✓	7D	●	-	-	-	10.1/F	11.6/F
3/4	16	2.6	0	10	10	7	9	9	6	82	65	-	-	-	8210G087 ✓	7D	●	10.1/F	11.6/F
3/4	19	5.6	0.3	-	-	-	17	14	14	-	82	8210C013	24D	●	-	-	-	-	16.8/F
3/4	19	5.6	0.3	17	14	14	-	-	-	82	-	8210G013	46D	●	-	-	-	16.1/F	-
1	25	11	0	9	9	9	-	-	-	82	-	8210B057 ⑥ ⑩	34D	●	-	-	-	20/F	-
1	25	11	0.3	-	-	-	9	9	9	-	82	8210D014	26D	●	-	-	-	-	16.8/F
1	25	11	0.3	10	10	9	-	-	-	82	-	8210G014	47D	●	-	-	-	16.1/F	-
1 1/4	29	13	0	9	9	9	-	-	-	82	-	8210B058 ⑥ ⑩	35D	●	-	-	-	20/F	-
1 1/4	29	13	0.3	-	-	-	9	9	9	-	82	8210D018	28D	●	-	-	-	-	16.8/F
1 1/4	29	13	0.3	10	10	9	-	-	-	82	-	8210G018	48D	●	-	-	-	16.1/F	-
1 1/2	32	19.5	0	9	9	9	-	-	-	82	-	8210B059 ⑥ ⑩	36D	●	-	-	-	20/F	-
1 1/2	32	19.5	0.3	-	-	-	9	9	9	-	82	8210D032	29D	●	-	-	-	-	16.8/F
1 1/2	32	19.5	0.3	10	10	9	-	-	-	82	-	8210G032	49D	●	8210G132	-	-	16.1/F	-
2	44	37	0.3	-	-	-	9	9	9	-	65	8210 103	30P	●	-	-	-	-	16.8/F
2	44	37	0.3	9	9	9	-	-	-	82	-	8210G103	50P	●	8210G133	-	-	16.1/F	-
2 1/2	44	39	0.3	-	-	-	9	9	9	-	65	8210 104	27P	●	-	-	-	-	16.8/F
2 1/2	44	39	0.3	9	9	9	-	-	-	82	-	8210G104	51P	●	-	-	-	16.1/F	-

① 0.3 bar on Air; 0.0 bar on Water.
② Valve provided with PTFE main disc.
③ Valve includes UItem (G.E. trademark) piston.
④ Letter "D" denotes diaphragm construction; "P" denotes piston construction.
⑤ ❍ Safety Shutoff Valve; ● General Purpose Valve.
Refer to Engineering Section (Approvals) for details.

⑥ Valves not available with Explosionproof enclosures.
⑦ On 50 hertz service, the watt rating for the 6.1/F solenoid is 8.1 watts.
⑧ AC construction also has PA seating.
⑨ No disc-holder.
⑩ Stainless steel disc-holder.
† UL listed for fire protection systems per UL429A.

‡ DC constructions must have solenoid mounted vertical and upright.
✓ ATEX/IECEx certified with prefix "EV".
▼ ATEX/IECEx certified for DC only with prefix "EV".
◆ Not available in 6 Volt DC. EF and HB prefix only.

Dimensions: inches (mm)

Const. Ref.		H	K	L	P	W
1*	in	3.85	3.00	1.91	3.41	1.69
	mm	98	76	49	87	43
2*	in	4.17	3.25	2.28	3.63	1.69
	mm	106	83	58	92	43
5	in	3.84	2.31	2.75	3.28	2.28
	mm	98	59	70	83	58
6*	in	3.38	1.94	2.75	2.80	2.28
	mm	86	49	70	71	58
7	in	4.19	2.50	2.81	3.47	2.39
	mm	106	64	71	88	61
8	in	4.13	2.47	2.81	3.44	2.29
	mm	105	63	71	87	58
9*	in	3.66	2.10	2.81	2.96	2.28
	mm	93	53	71	75	58
10*	in	5.20	3.40	2.80	4.50	2.50
	mm	131	86	71	114	62
11*	in	4.16	2.66	3.84	3.52	2.75
	mm	106	68	98	89	70
12	in	5.64	3.15	3.75	4.01	3.36
	mm	143	80	95	102	85
13	in	4.44	3.22	3.75	4.19	5.81
	mm	113	82	95	106	147
15*	in	5.20	3.30	3.80	4.40	3.80
	mm	133	83	98	111	98
16	in	5.64	3.15	3.66	4.01	3.56
	mm	143	80	93	102	90
18*	in	6.11	3.30	4.38	4.16	3.92
	mm	155	84	111	106	100
20*	in	7.33	3.71	5.06	4.57	4.87
	mm	186	94	129	116	124
21*	in	7.33	3.71	5.50	4.57	4.87
	mm	186	94	140	116	124
23	in	4.35	2.65	2.75	3.79	2.28
	mm	110	67	70	96	58
24	in	5.06	X	3.78	4.44	2.75
	mm	129	X	96	113	70
25	in	4.64	2.81	2.81	3.94	2.28
	mm	118	71	71	100	58
26	in	6.53	X	3.75	4.91	3.19
	mm	166	X	95	125	81
27	in	8.22	X	5.50	5.47	4.87
	mm	209	X	140	139	124
28	in	6.53	X	3.66	4.91	3.19
	mm	166	X	93	125	81
29	in	7.03	X	4.38	5.06	4.40
	mm	179	X	111	129	112

* DC dimensions slightly larger.
IMPORTANT: Valves may be mounted in any position, except as noted in specifications table.

Const. Ref. 1, 2

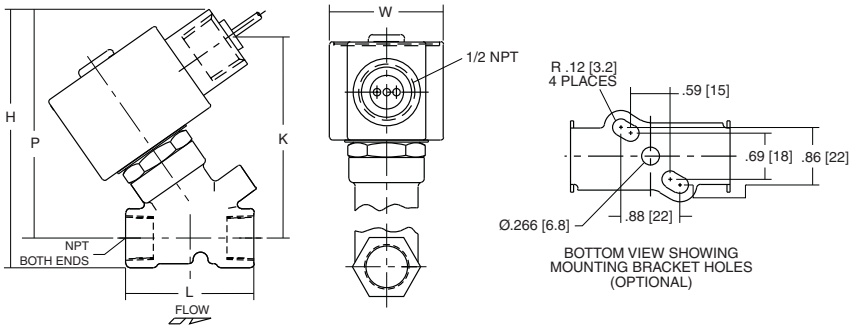

Const. Ref. 13

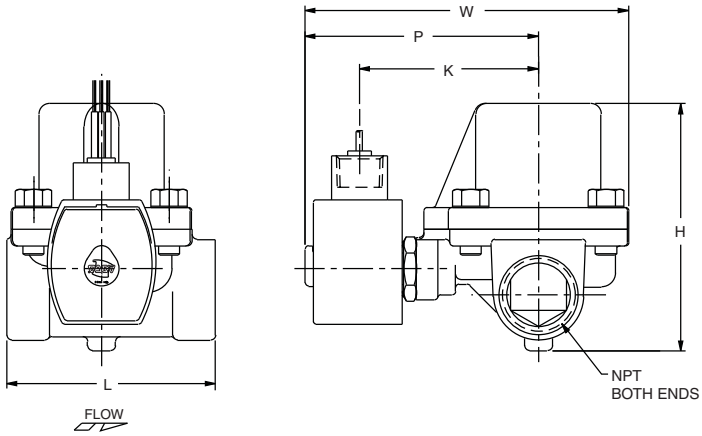

Const. Ref. 5-9, 11, 23 , 25, 37,38, 40-46

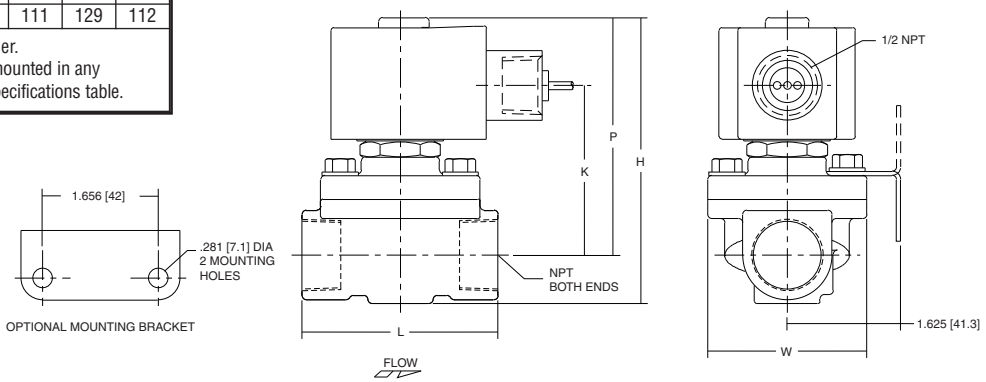

Dimensions: inches (mm)

Const. Ref.		H	K	L	P	W
30	in	8.22	X	5.06	5.47	4.87
	mm	209	X	129	139	124
31	in	5.13	3.19	3.76	4.32	3.27
	mm	130	81	95	110	83
32	in	5.60	3.44	3.66	4.57	3.27
	mm	142	87	93	116	83
33	in	5.92	3.66	4.51	4.80	3.89
	mm	150	93	115	122	99
34	in	6.91	X	3.75	6.09	3.25
	mm	176	X	95	155	83
35	in	7.34	X	3.66	6.34	3.25
	mm	186	X	93	161	83
36	in	7.66	X	4.38	6.56	3.91
	mm	1.95	X	111	167	99
37	in	4.61	2.75	2.81	3.89	2.39
	mm	117	70	71	99	61
38	in	4.61	2.75	2.81	3.89	2.39
	mm	117	70	71	99	61
39	in	5.42	2.31	2.75	4.86	3.80
	mm	138	59	70	123	97
40	in	5.20	3.29	2.81	4.50	2.28
	mm	132	83	71	114	58
41	in	5.13	3.10	3.75	4.32	3.25
	mm	130	79	95	110	83
42	in	6.43	4.40	3.93	5.62	3.25
	mm	163	112	100	143	83
43	in	5.57	3.35	3.66	4.57	3.25
	mm	142	85	93	116	83
44	in	5.90	3.57	4.38	4.79	3.91
	mm	150	91	111	122	99
45	in	5.26	3.17	3.75	4.38	3.84
	mm	134	81	95	111	98
46	in	4.95	3.10	3.84	4.31	2.75
	mm	126	79	98	110	70
47	in	6.43	3.59	3.75	4.81	3.52
	mm	163	91	95	122	90
48	in	6.43	3.59	3.66	4.81	3.73
	mm	163	91	93	122	95
49	in	6.91	3.75	4.38	4.96	4.40
	mm	176	95	111	126	112
50	in	8.13	4.15	5.06	5.37	4.87
	mm	207	105	129	136	124
51	in	8.13	4.15	5.50	5.37	5.18
	mm	207	105	140	136	132

IMPORTANT: Valves may be mounted in any position, except as noted in specifications table.

Const. Ref. 10, 15, 31, 32, 33

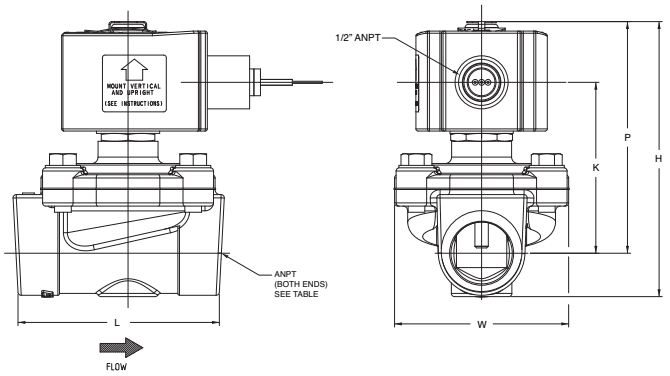

Const. Ref. 24, 34, 35, 36

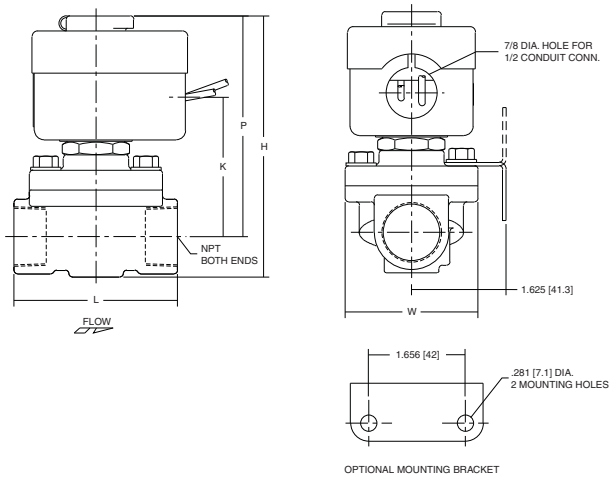

Const. Ref. 12, 16, 26, 28, 47, 48

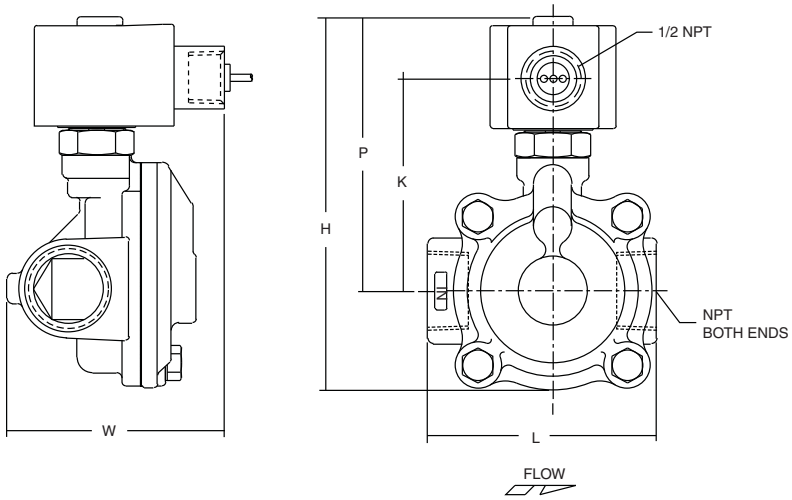

Dimensions: inches (mm)

Const. Ref. 39

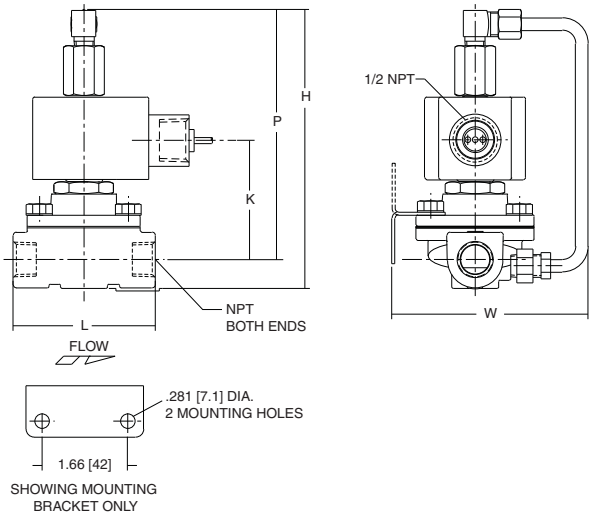

Const. Ref. 18, 29, 49

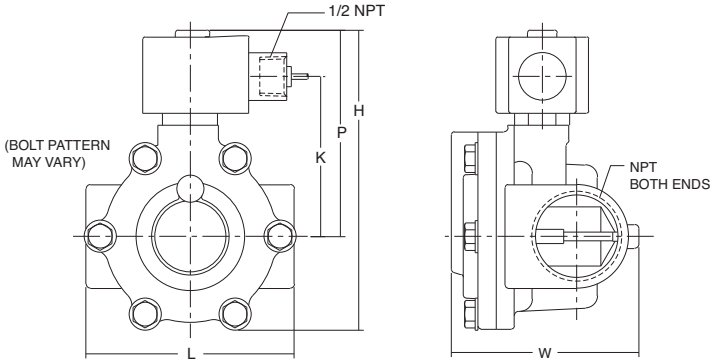

Const. Ref. 20, 21, 27, 30, 50, 51

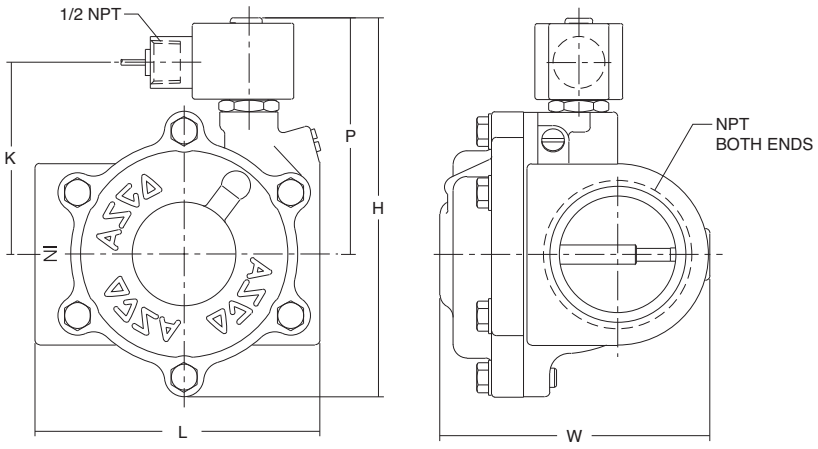

CS-304-500 : Identification sheet

VWTC PROJECT NUMBER:	5000218009	REV:	1
PROJECT NAME:	AEM AMARUQ	SUBMITTED TO (COMPANY):	AGNICO EAGLE MINES
ENGINEER:	Gabriel Hébert	SUBMITTED TO (RESPONSIBLE)	
PROJECT MANAGER:	Clément B	PROJECT NUM REFERENCE.:	
PHONE NUMBER:		LOT NUMBER:	

SUPPLIER	EQPT CODE	EQPT TAG NO	DIA	DESCRIPTION	INFO 1	INFO 2	INFO 3	APPLIC.	NOTE	REV
CHEMLINE	VASDBR330455	T9-621-V002	N/A	Actuated Transfer Valve	TYPE: SOLENOID VALVE//MANUFACTURER : ASCO//MODEL : 8345G001-120VAC//CONNECTION TYPE : THREADED | 6 mm (1/4") | 6 mm (1/4")//BODY : BRASS// SEAL | SEAT :NBR | // STEM : N/A	ACTING :	NORMALLY :	HYDRAPOL 3500		

This page is intentionally left blank

Features

- Compact valves for general service applications
- Low-cost, 4-way valve when low flow is sufficient
- Mountable in any position

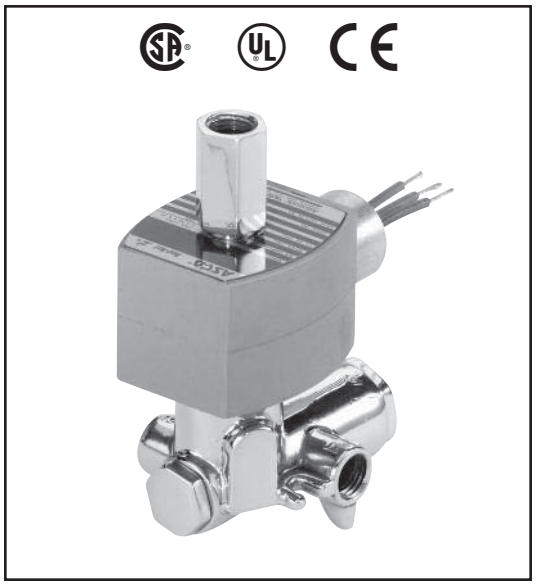

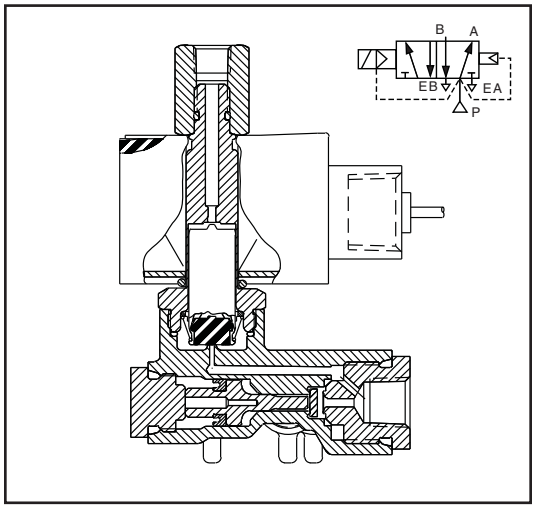

Construction

Valve Parts in Contact with Fluids		
Body	Brass	316 Stainless Steel
Seals and Disc	NBR and PA	
Core Tube	305 Stainless Steel	
Core and Plugnut	430F Stainless Steel	
Springs	302 Stainless Steel	
Shading Coil	Copper	Silver
Piston	PA	

Electrical

Standard Coil and Class of Insulation	Watt Rating and Power Consumption				Spare Coil Part Number					
		AC			General Purpose		Explosionproof (EF)		Explosionproof (EV)	
	DC Watts	Watts	VA Holding	VA Inrush	AC	DC	AC	DC	AC	DC
F	11.6	10.1	25	50	238610	238710	238614	238714	274614	274714

Standard Voltages: 24, 120, 240, 480 volts AC, 60 Hz (or 110, 220 volts AC, 50 Hz).
6, 12, 24, 120, 240 volts DC. Must be specified when ordering.
Other voltages are available when required.

Solenoid Enclosures

Standard: Watertight, Types 1, 2, 3, 3S, 4, and 4X.

Optional: Explosionproof and Watertight, Types 3, 3S, 4, 4X, 6, 6P, 7, and 9. (To order, add prefix "EF" or, for Explosionproof Stainless Steel trim and hub on Brass-Bodied valves, add "EV" to catalog number.)

See Optional Features Section for other available options.

Nominal Ambient Temp. Ranges

AC: 32˚F to 125˚F (0˚C to 52˚C)
DC: 32˚F to 104˚F (0˚C to 40˚C)

Refer to Engineering Section for details.

Approvals

CSA certified. UL listed as General Purpose Valve.
EV8345G081 solenoid only UL approved.
Meets applicable CE directives.
Refer to Engineering Section for details.

ATEX/IECEx certified with prefix "EV" as listed.
Refer to Optional Features Electrical Section for details.

Important

A Minimum Operating Pressure Differential must be maintained between the pressure and exhaust ports. Supply and exhaust piping must be full area, unrestricted. ASCO flow controls and other similar components must be installed in the cylinder lines only.

Refer to Engineering Section for details.

ASCO®

Specifications (English units)

Pipe Size (in)	Orifice Size (in)		Cv Flow Factor		Operating Pressure Differential (psi)							Max. Fluid Temp. ˚F		Brass Body	Stainless Steel Body		Watt Rating/ Class of Coil Insulation	
					Max. AC				Max. DC									
	Press.	Exh.	Inlet	Exh.	Min.	Air-Inert Gas	Water	Lt. Oil @ 50 SSU	Air-Inert Gas	Water	Lt. Oil @ 50 SSU	AC	DC	Catalog Number	Catalog Number	Const. Ref.	AC	DC
SINGLE SOLENOID																		
1/4	1/16	3/32	.09	.09	10	150	150	150	100	100	100	180	104	8345G001 ①	EV8345G081 ①	1	10.1/F	11.6/F
SINGLE SOLENOID AIR-ONLY CONSTRUCTION - Exhaust to Atmosphere																		
1/4	1/16	3/32	.09	.09	10	150	-	-	100	-	-	180	104	8345H003	-	1	10.1/F	11.6/F

① ATEX/IECEx certified with prefix "EV".

Specifications (Metric units)

Pipe Size (in)	Orifice Size (mm)		Kv Flow Factor (m^3/h)		Operating Pressure Differential (bar)							Max. Fluid Temp. ˚C		Brass Body	Stainless Steel Body		Watt Rating/ Class of Coil Insulation	
					Max. AC				Max. DC									
	Press.	Exh.	Inlet	Exh.	Min.	Air-Inert Gas	Water	Lt. Oil @ 50 SSU	Air-Inert Gas	Water	Lt. Oil @ 50 SSU	AC	DC	Catalog Number	Catalog Number	Const. Ref.	AC	DC
SINGLE SOLENOID																		
1/4	2	2	.08	.08	0.7	10	10	10	7	7	7	82	40	8345G001 ①	EV8345G081 ①	1	10.1/F	11.6/F
SINGLE SOLENOID AIR-ONLY CONSTRUCTION - Exhaust to Atmosphere																		
1/4	2	2	.08	.08	0.7	10	-	-	7	-	-	82	40	8345H003	-	1	10.1/F	11.6/F

① ATEX/IECEx certified with prefix "EV".

Dimensions inches (mm)

Const. Ref. 1

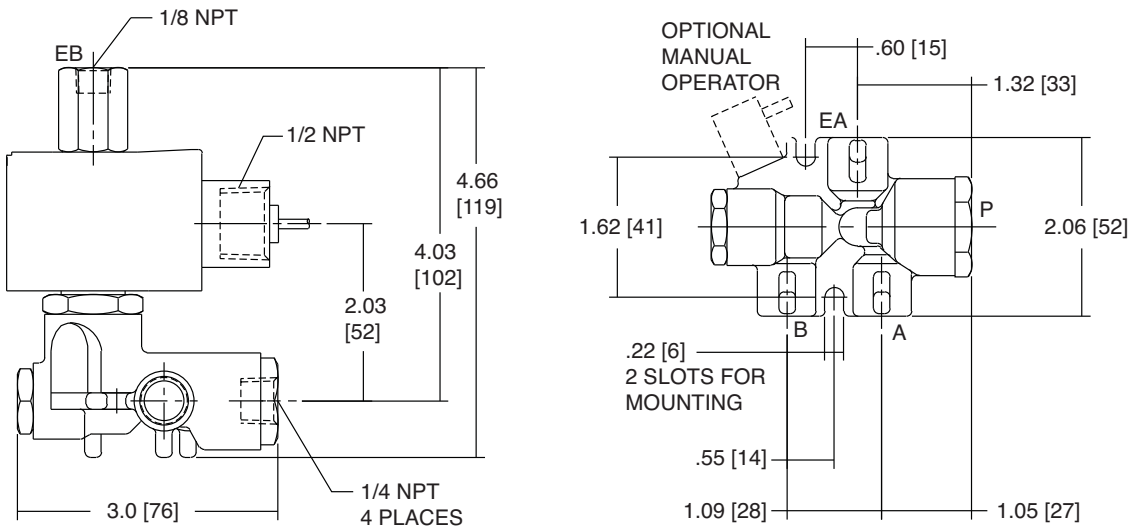

CS-304-507 : Identification sheet

VWTC PROJECT NUMBER:	5000218009	REV:	1
PROJECT NAME:	AEM AMARUQ	SUBMITTED TO (COMPANY):	AGNICO EAGLE MINES
ENGINEER:	Gabriel Hébert	SUBMITTED TO (RESPONSIBLE)	
PROJECT MANAGER:	Clément B	PROJECT NUM REFERENCE.:	
PHONE NUMBER:		LOT NUMBER:	

SUPPLIER	EQPT CODE	EQPT TAG NO	DIA	DESCRIPTION	INFO 1	INFO 2	INFO 3	APPLIC.	NOTE	REV
TECKNO VALVE	VASDBR352337	SV18-031	N/A	SOLENOID VALVE - FEEDER	TYPE: SOLENOID VALVE//MANUFACTURER : ASCO//MODEL : EF8345G001-120VAC//CONNECTION TYPE : THREADED | 6 mm (1/4") | 6 mm (1/4")//BODY : BRASS// SEAL | SEAT :NBR | // STEM : N/A	ACTING :	NORMALLY :	HYDRAPOL 3500		

This page is intentionally left blank

Features

- Compact valves for general service applications
- Low-cost, 4-way valve when low flow is sufficient
- Mountable in any position

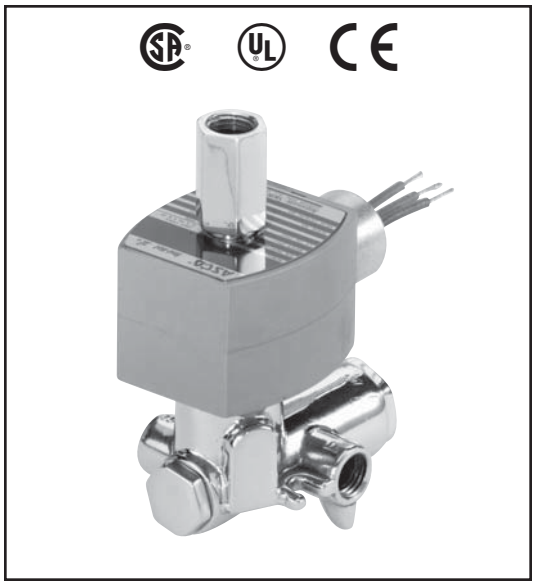

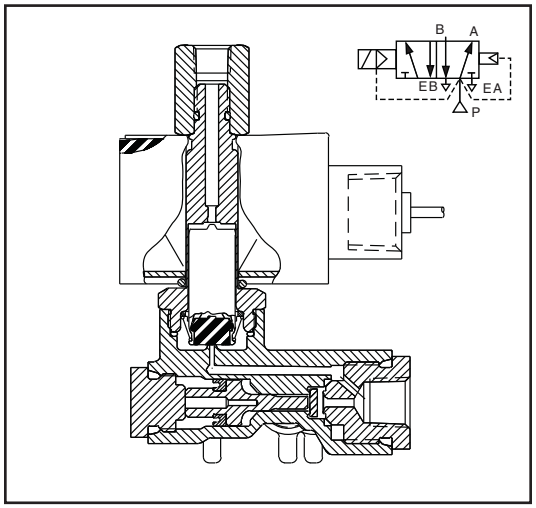

Construction

Valve Parts in Contact with Fluids		
Body	Brass	316 Stainless Steel
Seals and Disc	NBR and PA	FKM, PA and UR
Core Tube	305 Stainless Steel	
Core and Plugnut	430F Stainless Steel	
Springs	302 Stainless Steel	
Shading Coil	Copper	Silver
Piston	PA	

Electrical

Standard Coil and Class of Insulation	Watt Rating and Power Consumption				Spare Coil Part Number					
		AC			General Purpose		Explosionproof (EF)		Explosionproof (EV)	
	DC Watts	Watts	VA Holding	VA Inrush	AC	DC	AC	DC	AC	DC
F	11.6	10.1	25	50	238610	238710	238614	238714	274614	274714

Standard Voltages: 24, 120, 240, 480 volts AC, 60 Hz (or 110, 220 volts AC, 50 Hz).
6, 12, 24, 120, 240 volts DC. Must be specified when ordering.
Other voltages are available when required.

Solenoid Enclosures

Standard: Watertight, Types 1, 2, 3, 3S, 4, and 4X.

Optional: Explosionproof and Watertight, Types 3, 3S, 4, 4X, 6, 6P, 7, and 9. (To order, add prefix "EF" or, for Explosionproof Stainless Steel trim and hub on Brass-Bodied valves, add "EV" to catalog number.)

See Optional Features Section for other available options.

Nominal Ambient Temp. Ranges

AC: 32˚F to 125˚F (0˚C to 52˚C)
DC: 32˚F to 104˚F (0˚C to 40˚C)

Refer to Engineering Section for details.

Approvals

CSA certified. UL listed as General Purpose Valve.
EV8345G081 solenoid only UL approved.
Meets applicable CE directives.

Refer to Engineering Section for details.

Important

A Minimum Operating Pressure Differential must be maintained between the pressure and exhaust ports. Supply and exhaust piping must be full area, unrestricted. ASCO flow controls and other similar components must be installed in the cylinder lines only.

Refer to Engineering Section for details.

ASCO®

Specifications (English units)

Pipe Size (ins.)	Orifice Size (ins.)		Cv Flow Factor		Operating Pressure Differential (psi)							Max. Fluid Temp. ˚F		Brass Body	Stainless Steel Body		Watt Rating/ Class of Coil Insulation	
					Max. AC				Max. DC									
	Press.	Exh.	Inlet	Exh.	Min.	Air-Inert Gas	Water	Lt. Oil @ 50 SSU	Air-Inert Gas	Water	Lt. Oil @ 50 SSU	AC	DC	Catalog Number	Catalog Number	Const. Ref.	AC	DC
SINGLE SOLENOID																		
1/4	1/16	3/32	.09	.09	10	150	150	150	100	100	100	180	104	8345G001	EV8345G081	1	10.1/F	11.6/F
SINGLE SOLENOID AIR-ONLY CONSTRUCTION - Exhaust to Atmosphere																		
1/4	1/16	3/32	.09	.09	10	150	-	-	100	-	-	180	104	8345H003	-	1	10.1/F	11.6/F

Specifications (Metric units)

Pipe Size (ins.)	Orifice Size (mm)		Kv Flow Factor (m3/h)		Operating Pressure Differential (bar)							Max. Fluid Temp. ˚C		Brass Body	Stainless Steel Body		Watt Rating/ Class of Coil Insulation	
					Max. AC				Max. DC									
	Press.	Exh.	Inlet	Exh.	Min.	Air-Inert Gas	Water	Lt. Oil @ 50 SSU	Air-Inert Gas	Water	Lt. Oil @ 50 SSU	AC	DC	Catalog Number	Catalog Number	Const. Ref.	AC	DC
SINGLE SOLENOID																		
1/4	2	2	.08	.08	0.7	10	10	10	7	7	7	82	40	8345G001	EV8345G081	1	10.1/F	11.6/F
SINGLE SOLENOID AIR-ONLY CONSTRUCTION - Exhaust to Atmosphere																		
1/4	2	2	.08	.08	0.7	10	-	-	7	-	-	82	40	8345H003	-	1	10.1/F	11.6/F

Dimensions inches (mm)

Const. Ref. 1

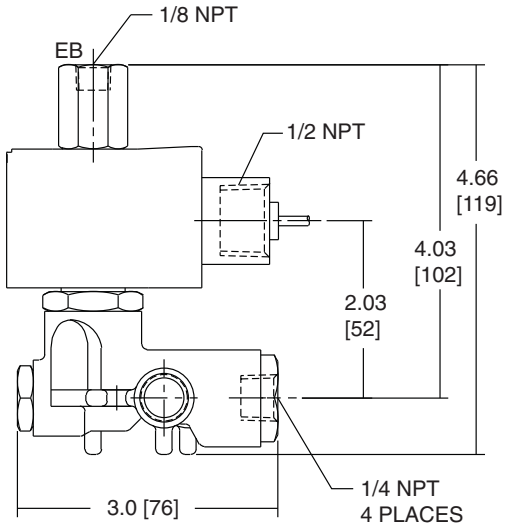

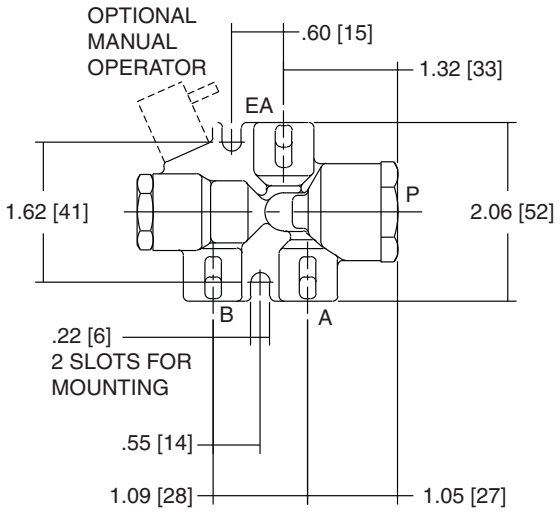

CS-405-100 : Identification sheet

VWTC PROJECT NUMBER:	5000218009	REV:	1
PROJECT NAME:	AEM AMARUQ	SUBMITTED TO (COMPANY):	AGNICO EAGLE MINES
ENGINEER:	Gabriel Hébert	SUBMITTED TO (RESPONSIBLE)	
PROJECT MANAGER:	Clément B	PROJECT NUM REFERENCE.:	
PHONE NUMBER:		LOT NUMBER:	

SUPPLIER	EQPT CODE	EQPT TAG NO	DIA	DESCRIPTION	INFO 1	INFO 2	INFO 3	APPLIC.	NOTE	REV
E&H	IECNPS201999	LT9-621	N/A	TANKS LEVEL TRANSMITTER	LEVEL TRANSMITTER // E&H // Model : PMC131-C22F1D12 Cerabar T PMC131 capacitive.membrane: ceramic. :: Longterm stable + overload resistant. Output: 4-20mA passive, 2-wire. Linearity +/- 0.5% sensor range.	Electrical Connection:C2 Plug ISO4400 NPT1/2, NEMA4X + CSA GP Process Connection:2 Thread ANSI MNPT1/2 FNPT1/4, 304 Sensor Seal:F FKM Viton	Additional Option:1 Basic version Meas. Range; Sensor Overload Limit:D12 0...200mbar/20kPa gauge; 5bar/500kPa	HYDRAPOL 3500		rev1
E&H	IECNPS201999	LT9-622	N/A	TANKS LEVEL TRANSMITTER	LEVEL TRANSMITTER // E&H // Model : PMC131-C22F1D12 Cerabar T PMC131 capacitive.membrane: ceramic. :: Longterm stable + overload resistant. Output: 4-20mA passive, 2-wire. Linearity +/- 0.5% sensor range.	Electrical Connection:C2 Plug ISO4400 NPT1/2, NEMA4X + CSA GP Process Connection:2 Thread ANSI MNPT1/2 FNPT1/4, 304 Sensor Seal:F FKM Viton	Additional Option:1 Basic version Meas. Range; Sensor Overload Limit:D12 0...200mbar/20kPa gauge; 5bar/500kPa	HYDRAPOL 3500		rev1

This page is intentionally left blank

Level | Pressure | Flow | Temperature | Liquid Analysis | Registration | Systems Components | Services | Solutions

Technical Information

Cerabar T PMC131, PMP131, PMP135

Process pressure measurement
Pressure transducer with ceramic and metallic sensors
For absolute pressure and gauge pressure measurement up to 400 bar (6000 psi); Extremely stable, overload-resistant and reliable

Application

The Cerabar T is a pressure transducer for measuring absolute pressure and gauge pressure in gases, vapors, liquids and dusts.
Hygienic and threaded connections are available as process connections.

Your benefits

This compact pressure transducer impresses with its well-engineered construction:

- High reproducibility and long-term stability.
- Finely graduated measuring ranges from vacuum up to 400 bar (6000 psi)
- Ceraphire® ceramic sensor: corrosion-proof, abrasion-proof and extremely overload-resistant
- Deployed for pressure monitoring up to SIL 2 as per IEC 61508/IEC 61511-1
- Sensors
  - Dry capacitance ceramic sensor (Ceraphire®) for measuring ranges up to 40 bar (600 psi): overload-resistant, vacuum-proof, stable against alternating load
  - Piezoresistive sensor with metallic process isolating diaphragm for measuring ranges up to 400 bar (6000 psi)

TI00415P/00/EN/19.15
No. 71289985

Endress+Hauser
People for Process Automation

Table of contents

Function and system design 3
Device selection 3
Measuring principle 3
Measuring system 4

Input 4
Measured variable 4
Measuring range 4

Output 4
Output signal 4
Load 4
Output signal 4
Output current 4
Power 5
Switch frequency 5
Input PLC 5
Inductive loads 5

Power supply 5
PMC131 5
PMP131 and PMP135 6
Supply voltage 7
Residual ripple 7
Cable entry 7

Performance characteristics 8
Reference operating conditions 8
Long-term stability 8
Reference accuracy
Analog output 8
Switch point 8
Rise time (T90) 8
Thermal change in the zero output and the output span 9
Temperature coefficient (TK) for lower range value and span 9

Operating conditions (installation) 9
Orientation 9
Installation instructions 9
Location dependence 9

Operating conditions (environment) 10
Ambient temperature range 10
Storage temperature range 10
Climate class 10
Degree of protection 10
Vibration resistance 10
Electromagnetic compatibility 10

Operating conditions (process) 11
Process temperature range 11
Overload resistance 11
Vacuum resistance 11
Pressure specifications 11

Mechanical construction 12
PMC131 Housing 12
PMC131 Process connections 12
PMP131 and PMP135 Housings 13
PMP131 Process connections 13
PMP135 Process connections 14
Weights 14
Material (not wetted) 15
Material (wetted) 16

Operating elements 17
Operating elements 17

Certificates and approvals 19
CE mark 19
Ex approvals 19
Pressure Equipment Directive (PED) 19
Functional safety SIL 2 19
Suitability for hygenic processes 19
TSE Certificate of Suitability 19
Standards and guidelines 19
Registered trademarks 20

Ordering information 21
PMC131 21
PMC131 (continued) 22
PMP131 23
PMP131 (continued) 24
PMP135 25

Accessories 26
Welding neck with
sealing taper 26
Welding neck with
sealing surface 26
Plug-in jack 26
Connecting cable 26
Plug-on display
PHX20/PHX21 26

Documentation 27
Field of Activities 27
Technical Information 27
Operating Instructions 27
Functional Safety Manual (SIL) 27
Safety Instructions 27

Function and system design

Device selection

Cerabar T – Product family	PMC131	PMP131	PMP135
	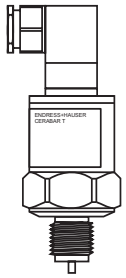 P01-PMC131xx-14-xx-xx-xx-000	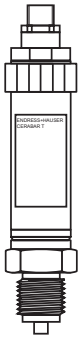 P01-PMP131xx-14-xx-xx-xx-000	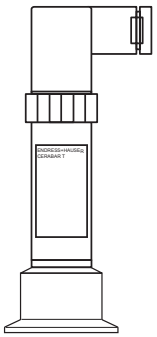 P01-PMP135xx-14-xx-xx-xx-000
	With capacitive measuring cell and ceramic process isolating diaphragm (Ceraphire®)	With piezoresistive measuring cell and metallic process isolating diaphragm	With piezoresistive measuring cell and metallic process isolating diaphragm for hygienic applications
Field of application	Absolute pressure and gauge pressure	Absolute pressure and gauge pressure	Absolute pressure and gauge pressure in hygienic processes
Output	– Current output 4 to 20 mA	– Current output 4 to 20 mA – Voltage output 0 to 10 V – Switch output PNP	– Current output 4 to 20 mA – Switch output PNP
Process connections	Thread: – G ½ – ½ MNPT and ¼ FNPT – G ½, bore 11 mm (0.43 in)	Thread: – G ½ – ½ MNPT and ¼ FNPT – ½ MNPT, bore 11.4 mm (0.45 in) – G ¼ – ¼ MNPT, bore 3.5 mm (0.14 in) – M 20 x 1.5	Hygiene: – Clamp DN 22 (¾") – Tri-Clamp DN 25 to 38 (1" to 1½") – Tri-Clamp DN 40 to 51 (2") – G 1 – SMS 1½"
Measuring ranges	from –1 to 0 bar (–15 to 0 psi) / –100 to 0 kPa up to 0 to 40 bar (0 to 600 psi) / 0 to 4 MPa	0 to 1 bar (0 to 15 psi) / 0 to 100 kPa up to 0 to 400 bar (0 to 6000 psi) / 0 to 40 MPa	0 to 1 bar (0 to 15 psi)/0 to 100 kPa up to 0 to 40 bar (0 to 600 psi) / 0...4 MPa
Process temperature range	–20 to +100 °C (-4 to +212 °F)	–25 °C to +70 °C (-13 to +158 °F)	–25 to +100 °C (-13 to +212 °F), +135 °C (275 °F) for max. 1 hour

Measuring principle

PMC131

The process pressure causes a slight deflection of the ceramic process isolating diaphragm of the sensor. The pressure-proportional change in capacitance is measured at the electrodes of the ceramic sensor. The ceramic sensor is a dry sensor, i.e. no fill fluid is required for the pressure transfer. This makes the sensor completely suitable for vacuums. Extremely high stability, comparable with the material Alloy, is achieved by using ultrapure Ceraphire® as the ceramic.

PMP131 and PMP135 with analog output

The process pressure acting upon the metallic process isolating diaphragm of the sensor is transmitted to a resistance bridge via a fluid. The pressure-proportional change of the bridge output voltage is measured and processed further.

PMP131 and PMP135 with switch output

The process pressure acting upon the metallic process isolating diaphragm of the sensor is transmitted to a resistance bridge via a fluid. A differential amplifier creates a standard signal from the pressure-proportional change in output voltage of the bridge. A comparator with an adjustable hysteresis compares this signal with the pre-set switch point and then activates the transistor output.

Measuring system

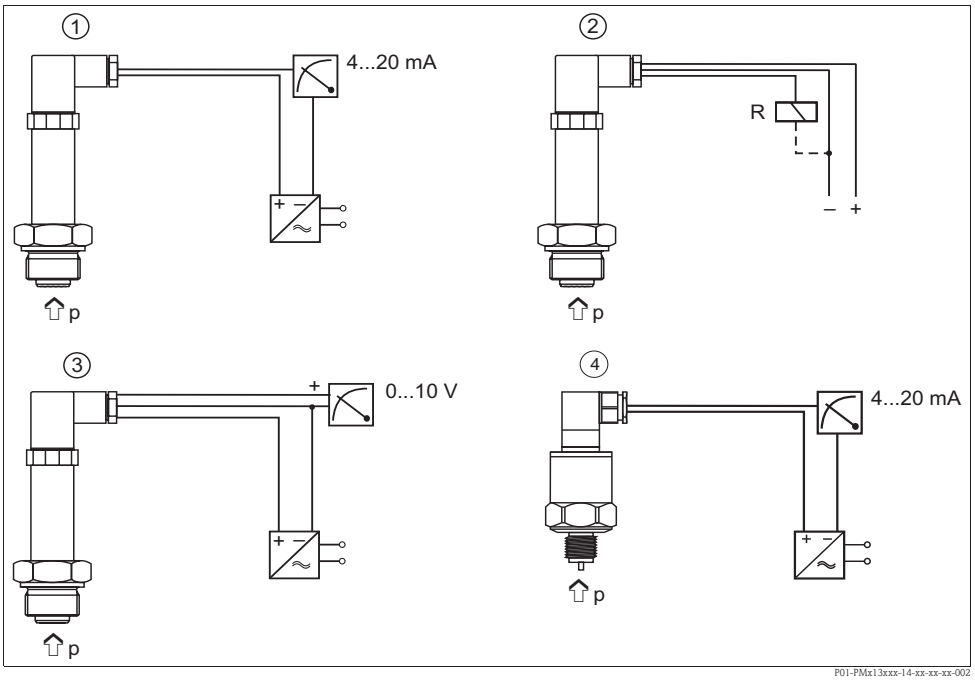

1 PMP131, PMP135: current output with transmitter power supply unit, e.g. RN 221N from Endress+Hauser
2 PMP131, PMP135: switch output with load, e.g. PLC, DCS, relay
3 PMC131: voltage output with transmitter power supply unit, e.g. RIA452 from Endress+Hauser
4 PMC131: current output with transmitter power supply unit, e.g. RN 221N from Endress+Hauser

Input

Measured variable

Absolute pressure or gauge pressure

Measuring range

up to 400 bar (6000 psi), → 🖹 21, "Ordering information" section

Output

Analog output (PMC131, PMP131, PMP135)

Output signal

Current output 4...20 mA, 2-wire version (PMC131, PMP131, PMP135)
Voltage output 0...10 V, 3-wire version (PMP131)

Load

PMC131
R_{Lmax} [Ω] ≤ (U_S – 11 V) / 0.02 A

PMP131 and PMP135 (current output)
R_{Lmax} [Ω] ≤ (U_S – 12 V) / 0.02 A (R_{Lmax}: Maximum load resistance, U_S: Supply voltage)

PMP131 (voltage output)
Load resistance RLmax ≥5 kΩ, current consumption ≤6 mA

Switch output (PMP131, PMP135)

Output signal

PNP switch output (positive voltage signal), rate depends on power supply voltage

Output current

- Switch status ON: I_a ≤ 500 mA

	■ Switch status OFF: $I_a \leq 1$ mA
Power	max. 6 W
Switch frequency	max. 10 Hz
Input PLC	■ Input resistance $R_i \leq 2$ kΩ ■ Input current $I_i \geq 10$ mA
Inductive loads	To prevent electrical interference, only operate an inductive load (relays, contactors, solenoid valves) when directly connected to a protective circuit (free-wheeling diode or capacitor).

Power supply

PMC131

Plug/cable connection

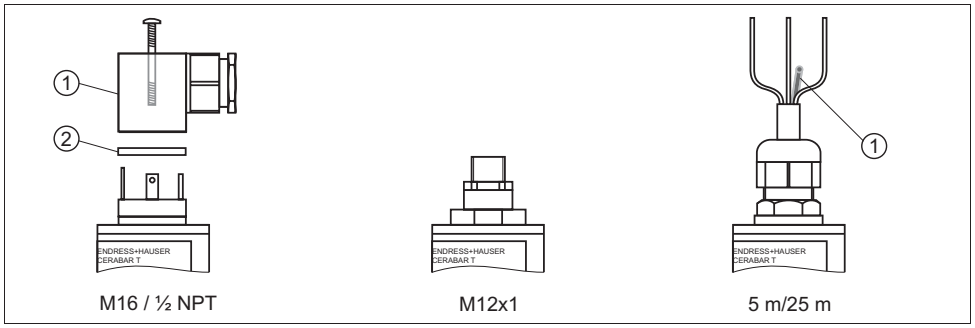

Plug M 16 x 1.5 (DIN 43650/A), ½ NPT	Plug M 12x1	5 m (16 ft) / 25 m (82 ft) cable
① Plug-in housing		① Reference pressure line
② Gasket		

Electrical connection: Analog/current output

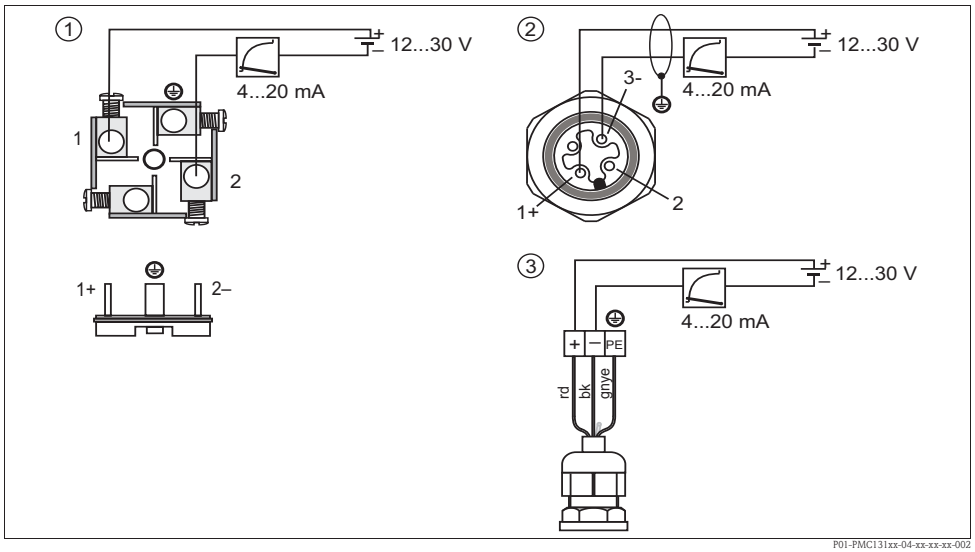

1 Plug M 16 x 1.5 (DIN 43650/A), ½ NPT
2 Plug M 12 x 1
3 Cable (rd = red, bk = black, gnye = green-yellow)

PMP131 and PMP135

Plug/cable connection

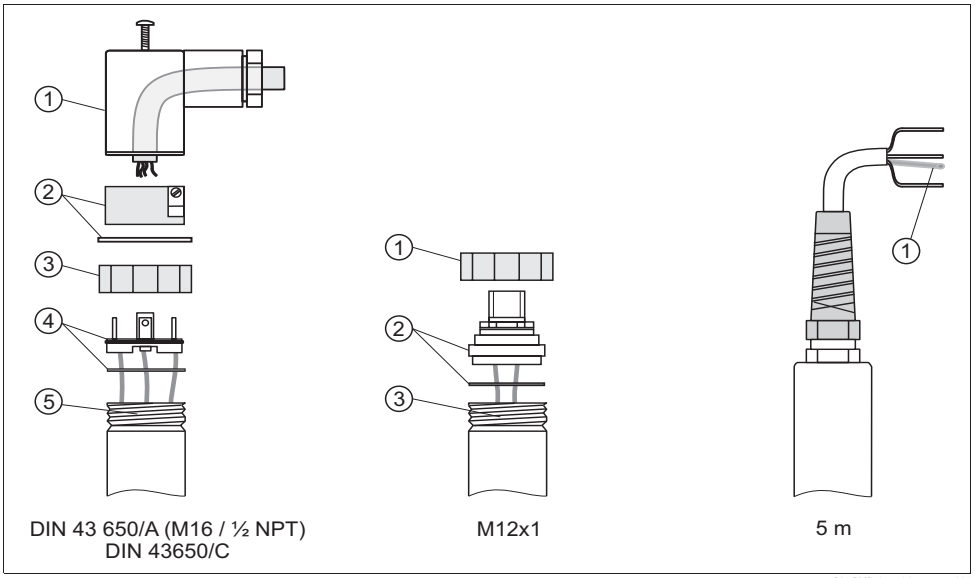

Plug M 16 x 1.5 (DIN 43650/A), ½ NPT Plug DIN 43650/C	Plug M 12x1	5 m (16 ft) cable, only analog output
① Plug-in housing	① Coupling nut	① Reference pressure line
② Plug-in jack with gasket	② Connector with gasket	
③ Coupling nut	③ Operating potentiometer (inner)	
④ Plug with O-ring		
⑤ Operating potentiometer (inner)		

Electrical connection: Analog/current output

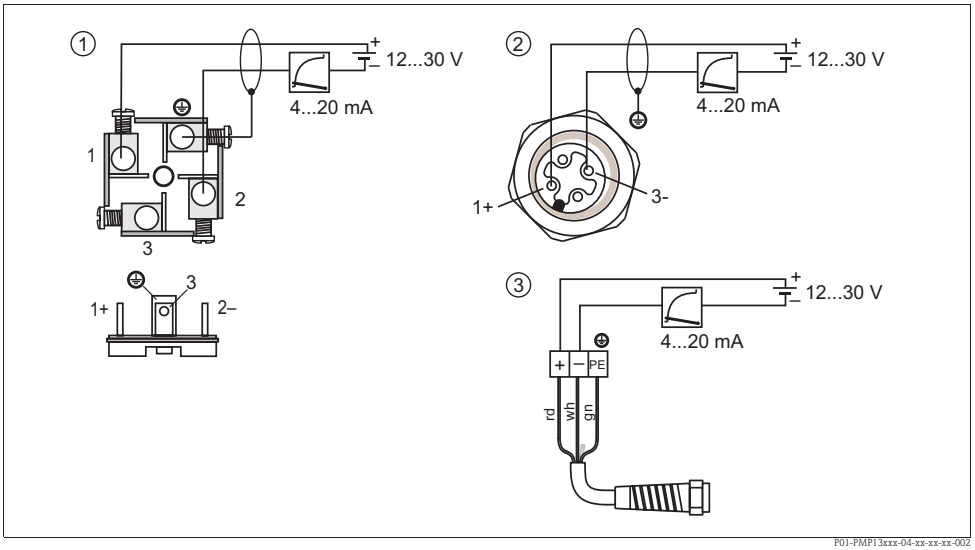

1 Plug M 16 x 1.5 (DIN 43650/A), ½ NPT and plug DIN 43650/C
2 Plug M 12 x 1
3 Cable (rd = red, wh = white, gn = green)

For electrical connection provided by customer use only shielded cable

Electrical connection (switch output)

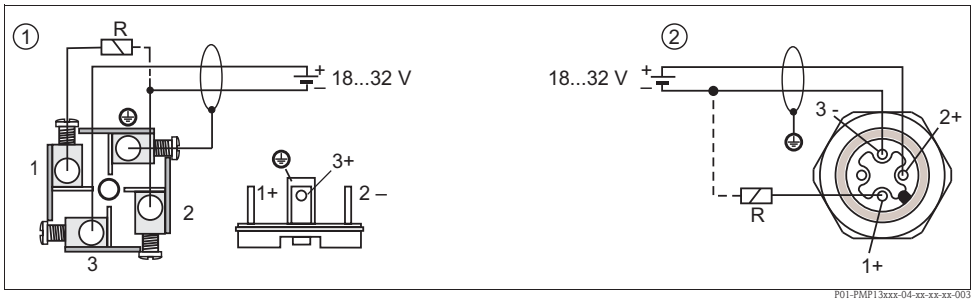

1 Plug M 16 x 1.5 (DIN 43650/A), ½ NPT
2 Plug M 12 x 1
R External load, e.g. relay, programmable logic controller, distributed control system

For electrical connection provided by customer use only shielded cable

PMP131 Electrical connection: Analog-/voltage output

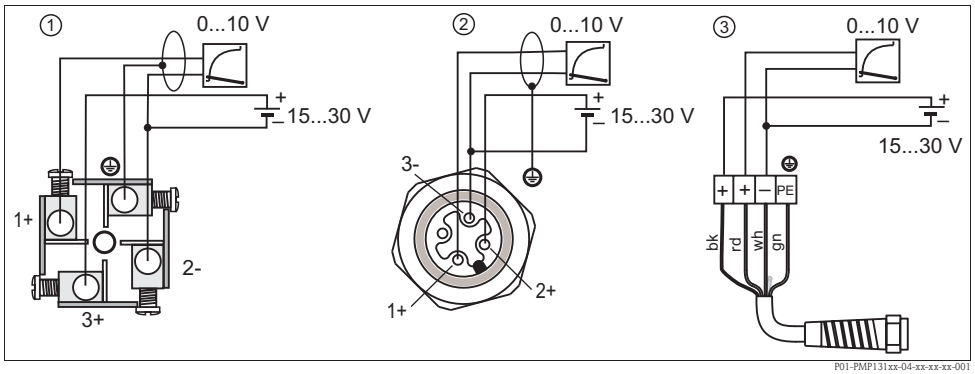

1 Plug M 16 x 1,5 (DIN 43650/A), ½ NPT and plug DIN 43 650/C
2 Plug M 12 x 1
3 Cable (rd = red, wh = white, gn = green)

For electrical connection provided by customer use only shielded cable

Supply voltage

PMC131
11 to 30 V DC

PMP131 and PMP135 (current output, 2-wire version)

- For non-hazardous areas: 12 to 30 V DC
- Ex i: no-load voltage ≤ 26 V DC, short-circuit current ≤ 100 mA, power consumption ≤ 0.8 W

PMP131 (voltage output, 3-wire version)

- 15...30 V DC

PMP131 and PMP135 (switch output)

- 18 to 32 V DC, current consumption without load < 20 mA, with reverse polarity protection

Residual ripple

- Analog output: max. 5 % of supply voltage
- Switch output: max. 10 % of supply voltage

Cable entry

→ 📄 21, "Ordering information" section.

Performance characteristics

Reference operating conditions

as per DIN IEC 60770, T_U = 25 °C (77 °F)

Long-term stability

≤ 0.15 % of URL per year

Reference accuracy
Analog output

The reference accuracy comprises the non-linearity according to limit point setting, hysteresisand non-reproducibility as per IEC 60770.

PMC131

- ≤ 0.5 % of nominal value x TD
  (extended specifications apply to customer-specific measuring ranges)

Example: PMC131 version "A1R"
- Nominal value = 10 bar (150 psi)
- Upper range value (URV) = 6 bar (90 psi)
- Lower range value (LRV) = 0 bar

Turn down (is set at factory):
- Nominal value / (URV – LRV) | =
  10 bar (150 psi)/6 bar (90 psi) = 10:6

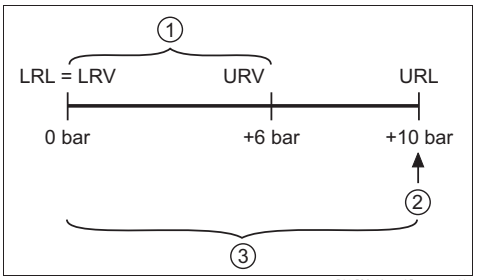

P01-PMx13xxx-05-xx-xx-xx-001

Example: PMC131 version "A1R"
set span: 0 to 6 bar (0 to 90 psi);
nominal value = 10 bar (150 psi)

1 Span set and calibrated at the factory (measuring range)
2 Nominal value ≙ Upper Range Limit (URL)
3 Sensor measuring range
LRL Lower Range Limit
URL Upper Range Limit
LRV Lower Range Value
URV Upper Range Value

PMP131 and PMP135

- ≤ 0.5 % of URL

Switch point

PMP131 and PMP135

- Deviation: ≤ 1 % of URL
- Non-reproducibility: ≤ 0.5 % of URL

Rise time (T90)

PMC131
20 ms

PMP131 and PMP135
2 to 5 ms

Thermal change in the zero output and the output span

PMC131

For customer-specific measuring-ranges: values are doubled

Zero output, –20 to +85 °C (-4 to +185 °F):
- typically 1.5 % of nominal value

Output span, –20 to +85 °C (-4 to +185 °F):
- Nominal value 0.4 to 40 bar (6 to 600 psi): typically 0.8 % of nominal value
- Nominal value 0.1 to 0.2 bar (1.5 to 3 psi): typically 1.0 % of nominal value

Temperature coefficient (T_K) for lower range value and span

PMP131 and PMP135 (analog output)

Zero output:
- typically: 0.2 % of URL/10 K
- max.: 0.5 % of URL/10 K
- Nominal value ≤ 6 bar (90 psi): by 0.1 % of URL/10 K higher

Output signal:
- typically: 0.2 % of URL/10 K
- max.: 0.5 % of URL/10 K

PMP131 and PMP135 (switch output)

Switch point:
- typically: 0.2 % of URL/10 K
- max.: 0.5 % of URL/10 K

Operating conditions (installation)

Orientation

anywhere

Installation instructions

PMP131
Process connection G ½ flush-mounted, max. torque 40 Nm (29.5 lbf ft)

Location dependence

PMC131
without influence

PMP131 and PMP135
Position-dependent zero point shift can be corrected by potentiometer setting, → 17.

Operating conditions (environment)

Ambient temperature range

PMC131
–20 to +85 °C (-4 to +185 °F)

PMP131 and PMP135

- For non-hazardous areas: –25 to +70 °C (-13 to +158 °F)
- Ex i: –25 to +65 °C (-13 to +149 °F)

Storage temperature range

PMC131
–50 to +100 °C (-58 to +212 °F)

PMP131 and PMP135
–40 to +85 °C (-40 to +185 °F)

Climate class

PMC131
4K4H as per DIN EN 60721-3

PMP131 and PMP135
4Z
with Z = 70 °C (158 °F) as per VDI/VDE 3540

Degree of protection

PMC131
- Plug M 16 x 1,5 (DIN 43650/A), ½ NPT: IP 65/NEMA 4X
- Plug M12x1: IP 65/ NEMA 4
- Cable: IP 68/NEMA 6P (1 mWS/24 h)

PMP131 and PMP135
- Plug M 16 x 1,5 (DIN 43650/A), ½ NPT: IP 65/NEMA 4X
- Plug M 12x1 and gauge pressure sensors: IP 65/NEMA 4X
- Plug M 12x1 and absolute pressure sensors: IP 68/NEMA 6P (1 mWS/24 h)
- Cable: IP 68/NEMA 6P (1 mWS/24 h)

Vibration resistance

4M5 as per DIN EN 60721-3

Electromagnetic compatibility

EMC in accordance with all the relevant requirements of the EN 61326 series. Details are provided in the Declaration of Conformity.

Operating conditions (process)

Process temperature range

PMC131

- –20 to +100 °C (-4 to 212 °F)
- Devices for oxygen application: –10 to +60 °C (14 to 140 °F)
  (Version "S" for feature 30 "Sensor gasket")

PMP131
–25 to +70 °C (-13 to +158 °F)

PMP135
–25 to +100 °C (-13 to 212 °F), +135 °C (275 °F) for max. 1 hour

Extreme jumps in temperature can result in temporary measuring errors. Temperature compensation takes effect after several minutes. Internal temperature compensation is faster the smaller the temperature jump and the longer the time interval.

Overload resistance

→ 21, "Ordering information" section.

Vacuum resistance

PMC131

URV	Vacuum resistance	Version
0...100 mbar (0...1.5 psi)	700 $mbar_{abs}$ (10.5 psi_{abs})	D10
20 mbar (0.3 psi)		D3W
100 mbar (1.5 psi)		D31
1.5 psi (100 mbar)		V6F
0...1.5 psi (0...100 mbar)		Q4D
15 inH_2O		W6N
30 inH_2O		W6R
0...200 mbar (0...3 psi)	500 $mbar_{abs}$ (7.5 psi_{abs})	D12
200 mbar (3 psi)		D38
50 inH_2O		S4N
80 inH_2O		W6O
all other versions	0 $mbar_{abs}$	

PMP131 and PMP135
10 $mbar_{abs}$ (0.15 psi_{abs})
The vacuum resistance applies for the measuring cell under reference operating conditions.

Pressure specifications

- The MWP (maximum working pressure) of the device is specified on the nameplate. It depends on the weakest element, with regard to pressure, of the selected components. See the following sections:
  – → 21 ff, "Ordering information" section, feature 50 "Measuring range; MWP; Nominal value; OPL" or "Sensor range; MWP; OPL".
  – → 12 ff, "Mechanical construction" section.
  The MWP specification on the nameplate is based on a reference temperature of +20 °C (68 °F) and can be present over an unlimited period of time.
- The test pressure corresponds to the overload limit of the measuring device (Over Pressure Limit OPL) and must only be present for a limited period of time.

Mechanical construction

PMC131 Housing

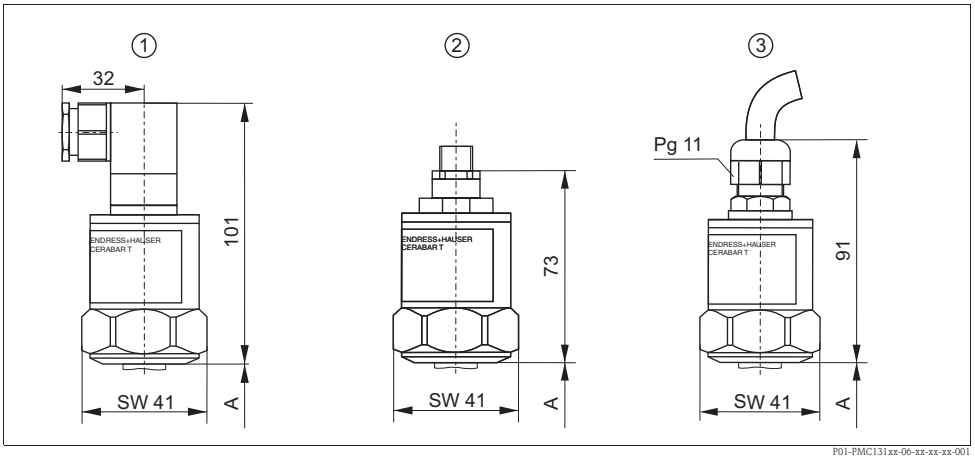

Housing PMC131; Material AISI 304 (1.4301)

1 Versions A1, A2, B1, C1, C2: Plug M 16 or ½ NPT (ISO 4400), IP 65
2 Versions A5, B5, C5: Plug M 12, IP 65
3 Versions A3, A4, B3, C3: 5 m (16 ft) or 25 m (82 ft) cable, IP 68

→ *See the following diagram for the height of process connection A*

PMC131 Process connections

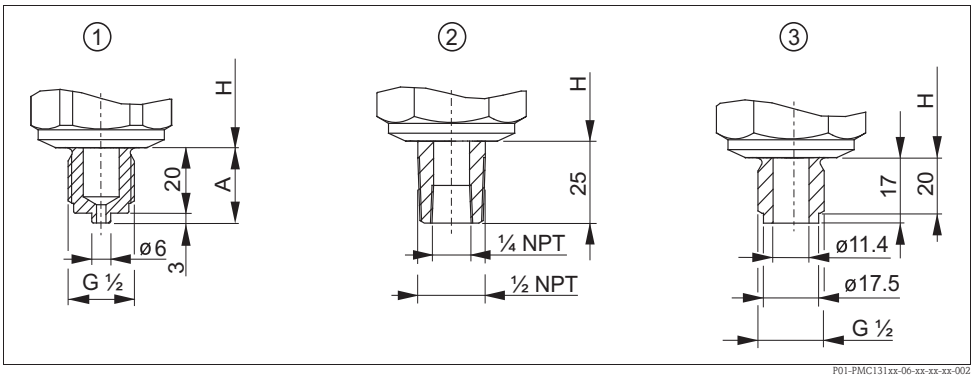

Process connections PMC131; Material AISI 304 (1.4301)

1 Version 1: Thread ISO 228 G ½
2 Version 2: Thread ANSI ½ MNPT ¼ FNPT
3 Version 5: Thread ISO 228 G ½, bore 11.4 mm (0.45 in)

→ *See respective housing for installation height H (previous figure)*

PMP131 and PMP135
Housings

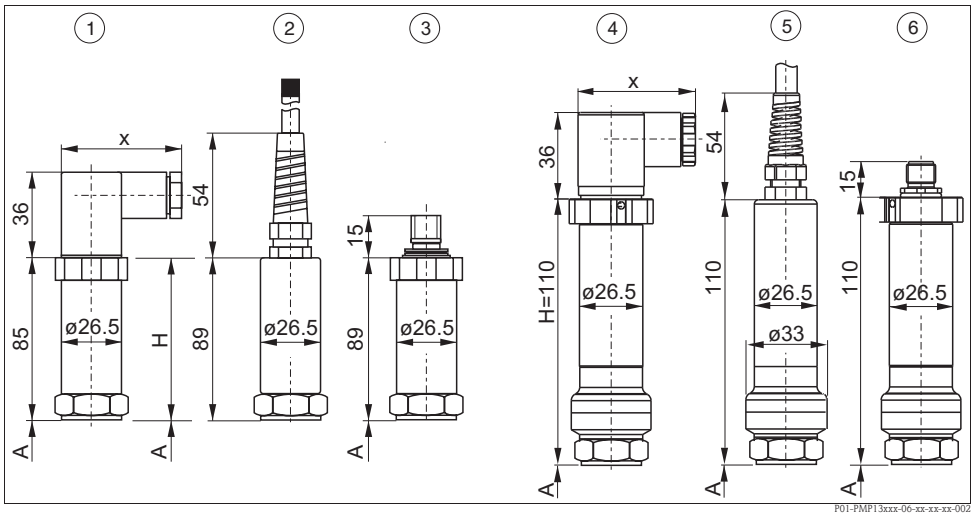

Housings PMP131 and PMP135; Material AISI 304 (1.4301)

1...3 PMP131 and PMP135 with sensor range up to 60 bar (900 psi)
4...6 PMP131 with sensor range up to 400 bar (6000 psi)
1 + 4 Versions A1, A2: Plug M 16 (DIN 43650/A) or ½ NPT (ISO 4400), IP 65; dimension x = 52 mm (2.05 in)
Version A5: Plug DIN 43650/C, IP 65; dimension x = 42 mm (1.65 in)
2 + 5 Version A3: 5 m (16 ft) cable, IP 68
3 + 6 Version A4: Plug M 12, IP 65

→ *See the following figure for the dimensions of process connection A*

PMP131 Process connections

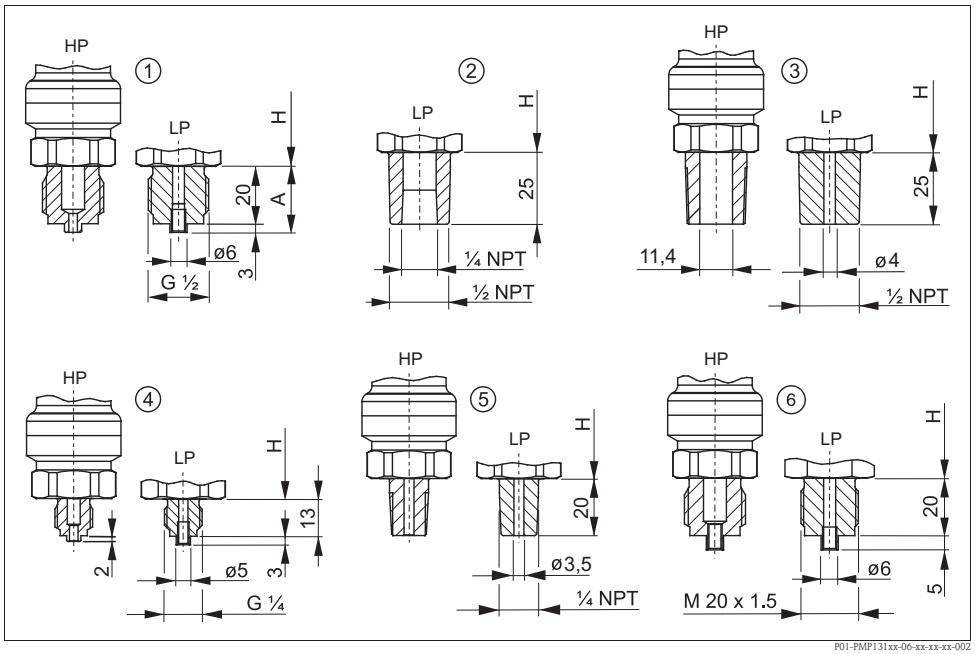

Process connections PMP131; Material AISI 304 (1.4301)
HP: process connections from 100 to 400 bar (1500 psi to 6000 psi). LP: lower measuring ranges.

1 Version 1: Thread ISO 228 G ½
2 Version 2: Thread ANSI ½ MNPT ¼ FNPT
3 Version 3: Thread ANSI ½ MNPT, bore 11.4 mm (0.45 in) female
4 Version 4: Thread ISO 228 G ¼
5 Version 5: Thread ANSI ¼ MNPT, bore 3.5 mm (0.14 in) female
6 Version 6: Thread M 20 x 1.5
→ *See respective housing for installation height H (figure above)*
→ *Process connections with AF 27 mm*

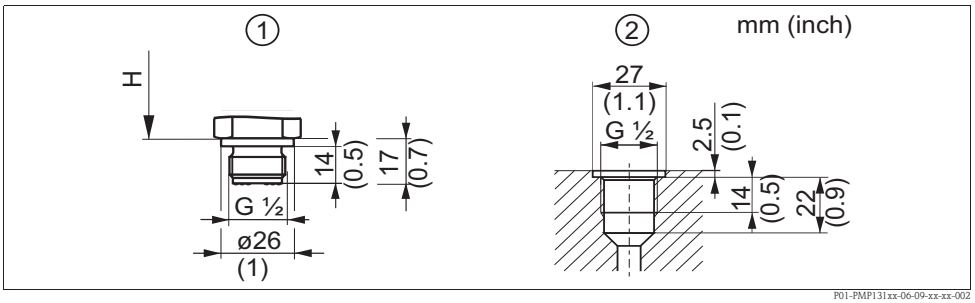

Process connection PMP131; Material AISI 304 (1.4301)

1 Version B: Thread ISO 228 G ½, Seal seat as per DIN 3852-A, AISI 304, flush-mounted
2 Dimensions for tapped hole G ½ as per DIN 3852-11 form X

→ See respective housing for installation height H

PMP135 Process connections

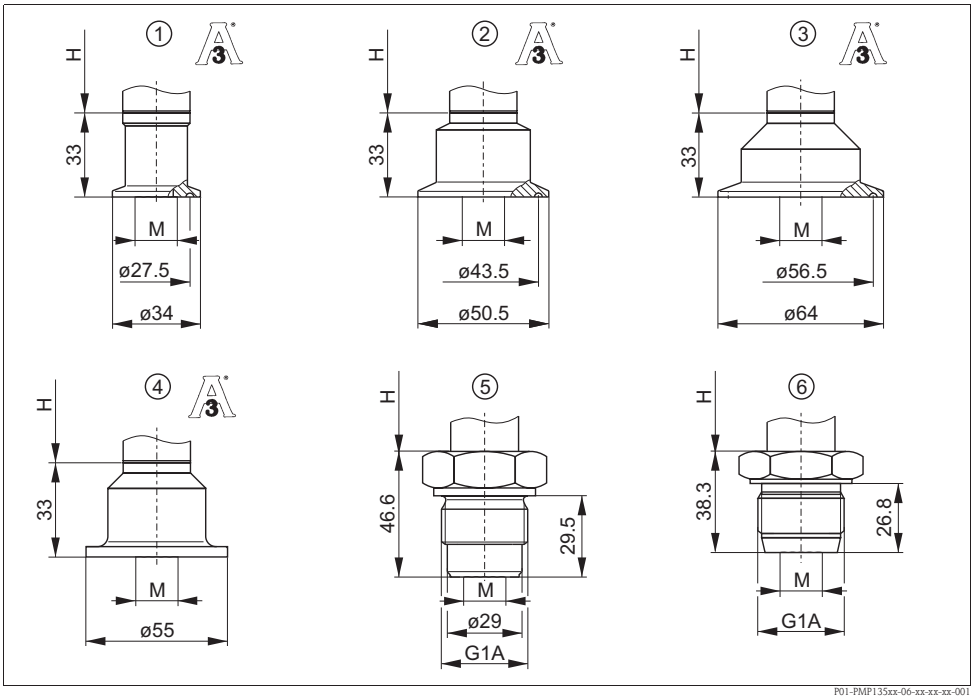

Process connections PMP135; Material AISI 316L (1.4435); Surface roughness of the surfaces in contact with the media $R_a \leq 0.8\,\mu m$
M = Diaphragm diameter 17.2 mm (0.68 in)

1 Version F: Clamp DN18-22 ¾" (DIN 32676), 3A, EHEDG
2 Version G: Tri-Clamp 1" to 1½" (ISO 2852) or DN 25 to DN 40 (DIN 32676), 3A, EHEDG
3 Version H: Tri-Clamp 2" (ISO 2852) or DN 50 (DIN 32676), 3A, EHEDG
4 Version S: SMS 1½" PN 25, 3A, EHEDG
5 Version N : G1A (ISO 228), with sealing surface for flush-mounted installation
3A and EHEDG approval in combination with o-ring seal and welding neck 52001051 (see → 26)
6 Version M: G1A (ISO 228), with metallic sealing taper, flush-mounted

→ See respective housing for installation height H

Weights

- PMC131: approx. 0.32 kg (0.71 lbs)
- PMP131:
  approx. 0.24 kg (0.53 lbs) up to 60 bar (870 psi),
  approx. 0.32 kg (0.71 lbs) up to 400 bar (5800 psi)
- PMP135: approx. 0.34 kg (0.75 lbs)

Material (not wetted) **Housing**

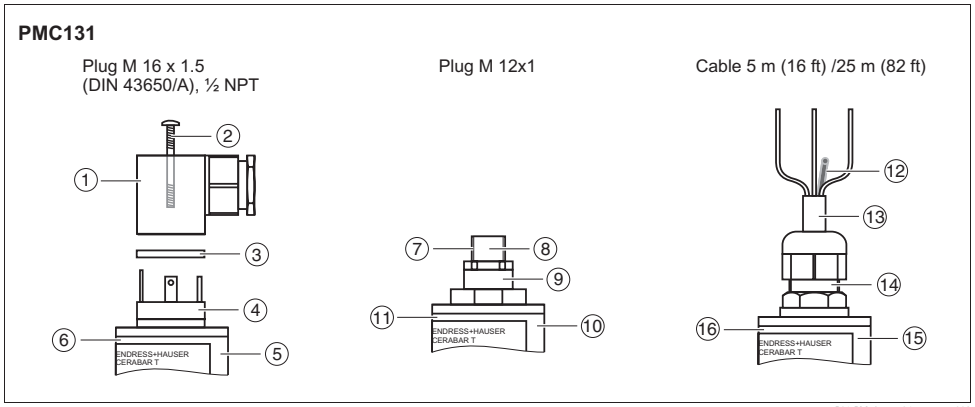

P01-PMx3xxxx-06-xx-xx-en-002

Item number	Component part	Material
1	Plug housing	PA6 GF
2	Flat sealing	NBR
3	Screw M3 x 35	A2
4	Connection cover	PBT-FR
5	O-ring	NBR
6	Housing	1.4301
7	O-ring for connector	FKM
8	Inner connector	PA
9	M12 connector	GD-Zn, nickel-plated
10	O-ring	NBR
11	Housing	1.4301
12	Hose	PA
13	Cable	PE
14	Gland	PBT
15	O-ring	NBR
16	Housing	1.4301

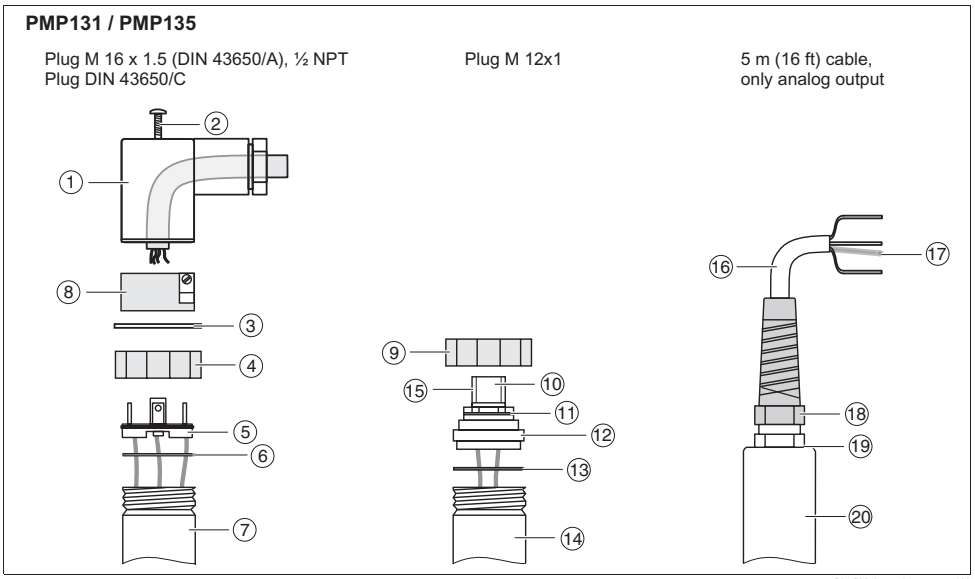

Item number	Component part	Material
1	Plug housing	PA6 GF
2	Screw M3 x 35	A2
3	Flat sealing	NBR
4	Coupling nut	PA
5	Cover plug	PA66 GF
6	O-ring	NBR
7	Housing	1.4301
8	Plug	PA66 GF
9	Coupling nut	PA
10	Inner connector	PA
11	O-ring	NBR
12	M12 connector	GD-Zn, nickel-plated
13	O-ring	NBR
14	Housing	1.4301
15	O-ring for connector	FKM
16	Cable	PUR
17	Hose	PA
18	Anti-jackknife	PA
19	O-ring	NBR
20	Housing	1.4301

Fill oil:

- PMP131: Tegiloxan 3
- PMP135: Mineral oil, FDA number 21-CFR 178.3570

Material (wetted)

Note!
The wetted device components are listed in the "Mechanical construction" (→ 12 ff) and "Ordering information" (→ 21 ff) sections.

Process connection

- PMC131/PMP131: AISI 304 (1.4301)
- PMP135: AISI 316L (1.4435)

Process isolating diaphragm

- PMC131: Ceraphire® (99,9 % Al_2O_3). The US Food & Drug Administration (FDA) has no objections to the use of ceramics made from aluminum oxide as a surface material in contact with foodstuffs. This declaration is based on the FDA certificates of our ceramic suppliers.
- PMP131, PMP135: AISI 316L (1.4435)

Operating elements

Operating elements

Position of operating elements

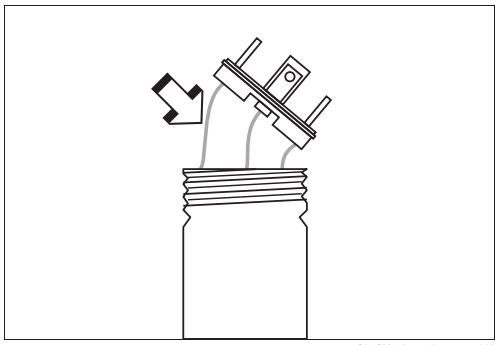

P01-PMx13xxx-19-xx-xx-xx-003

The potentiometer for operating the Cerabar T PMP131 and PMP135 with analog or switch output is located below the base of the plug.

Analog output: Zero point adjustment

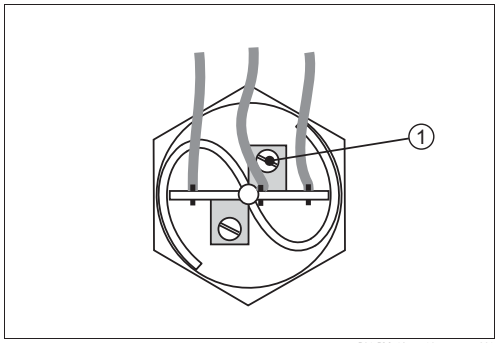

P01-PMx13xxx-19-xx-xx-xx-001

The zero point can be corrected for the Cerabar T PMP131 and PMP135 with analog output and plug version.

1 Potentiometer for zero point correction by ±5 % of URL

Switch output: Switch point and hysteresis adjustment

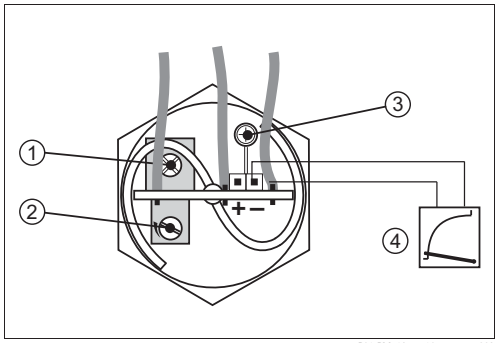

P01-PMx13xxx-19-xx-xx-xx-002

For the Cerabar T PMP131 and PMP135 with switch output, both the switch point and hysteresis can be adjusted.
This can also be carried out at atmospheric pressure using the enclosed test cable and a voltmeter.

1 Hysteresis adjustment 1.5 to 20 % of URL; Factory setting 10 % of URL
2 Switch point adjustment 0 to 100 % of URL; Factory setting 50 % of URL
3 LED color code for checking the switch status: green = off; red = on
4 Connect voltmeter to test pins: 0 to 1 V corresponds to 0 to 100 % of URL

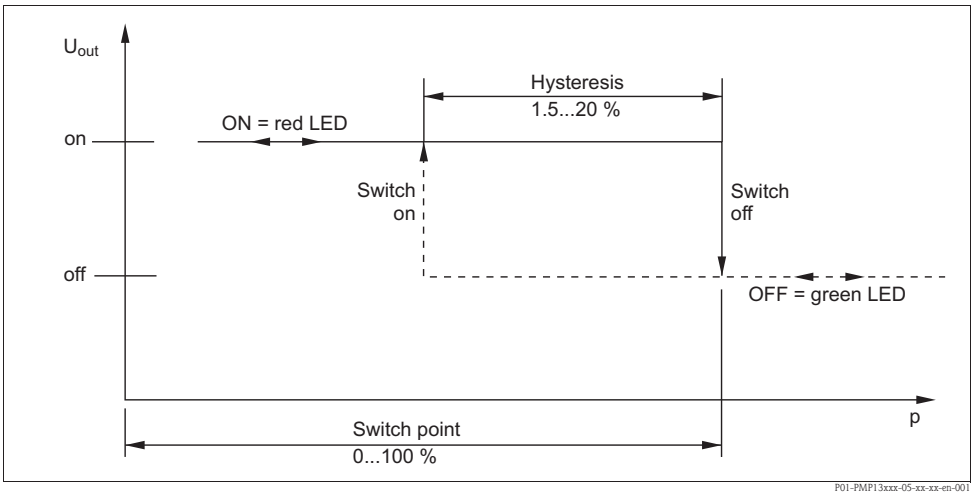

Instructions for switch point and hysteresis (the percentage values refer to the URL)

U_a Output voltage
p Acting pressure

Certificates and approvals

CE mark

The device meets the legal requirements of the EC directives. Endress+Hauser confirms that the device has been successfully tested by applying the CE mark.

Ex approvals

All explosion protection data are given in separate documentation which is available upon request. The Ex documentation is supplied as standard with all devices approved for use in explosion hazardous areas.
See also → 27, "Safety Instructions" section.

Pressure Equipment Directive (PED)

This measuring device corresponds to Article 3 (3) of the EC directive 97/23/EC (Pressure Equipment Directive) and has been designed and manufactured according to good engineering practice.

Functional safety SIL 2

The Cerabar T PMP131 and PMP135 pressure transducers with 4 to 20 mA electronics have been assessed by an independent body according to the standards IEC 61508/IEC 61511-1. These devices can be used for monitoring process pressure up to SIL 2.
→ For a detailed description of safety functions with Cerabar T, settings and characteristic quantities for functional safety, see the "Functional Safety Manual – Cerabar T SD00160P".

Suitability for hygenic processes

All materials in contact with foodstuffs comply with framework Regulation (EC) 1935/2004. The device is available with hygienic process connections (overview: see order code).

Caution!
Risk of contamination if incorrect seals and parts are used!

- To avoid the risk of contamination, when installing the device comply with the design principles of EHEDG, Guideline 37 "Hygienic Design and Application of Sensors" and Guideline 16 "Hygienic Pipe Couplings".
- Suitable assemblies and seals must be used to ensure hygienic design in accordance with 3-A SSI and EHEDG specifications.
- The leak-proof connections can be cleaned with the cleaning methods typical of this industry (CIP and SIP). Attention must be paid to the pressure and temperature specifications of the sensor and process connections for CIP and SIP processes (clean in place/sterilize in place).

TSE Certificate of Suitability

Cerabar T PMP135
The following applies to wetted device components: They do not contain any materials derived from animals. No auxiliaries or operating materials derived from animals are used in production or processing. Process wetted device components are listed in the “Mechanical construction” and “Ordering information” sections.

Standards and guidelines

DIN EN 60770 (IEC 60770):
Transmitters for controlling in systems used in industrial process technology
Part 1: Methods for evaluating the operating behavior.

DIN EN 61003-1, Edition:1993-12
Systems used in industrial process technology;
Devices with analog inputs and two-point or multi-point behavior;
Part 1: Methods for evaluating the operating behavior.

DIN 16086:
Electrical pressure measuring devices, pressure sensors, transmitters, pressure measuring devices
Terms, specifications in data sheets.

IEC 60529
Degrees of protection provided by enclosures (IP-Code).

EN 61326:
Electrical equipment for control technology and laboratory application – EMC requirements.

IEC 61010
Safety requirements for electrical equipment for measurement, control and laboratory use.

NAMUR
Association for Standards for Control and Regulation in the Chemical Industry.

Registered trademarks

Ceraphire®
Registered trademark of Endress+Hauser GmbH+Co. KG, Maulburg, Germany
(→ see also www.endress.com/ceraphire)

Ordering information

PMC131

This overview does not mark options which are mutually exclusive.

10	Electrical connection:
	A1 Plug ISO 4400, M 16, IP 65/NEMA 4X
	A2 Plug ISO 4400, ½ NPT, IP 65/NEMA 4X
	A3 5 m cable, IP 68/NEMA 6P
	A4 25 m cable, IP 68/NEMA 6P
	A5 Plug M 12, IP 65/NEMA 4
	B1 Plug ISO 4400, M 16, IP 65, ATEX II 3 G EEx nA II T4
	B3 5 m cable, IP 68, ATEX II 3 G EEx nA II T4
	B5 Plug M 12, IP 65, ATEX II 3 G EEx nA II T4
	C1 Plug ISO 4400, M 16, NEMA 4X, CSA GP
	C2 Plug ISO 4400, ½ NPT, NEMA 4X, CSA GP
	C3 5m cable, IP 68/NEMA 6P, CSA GP
	C5 Plug M12, IP 65/NEMA 4, CSA GP

20		Process connection:
	1	Thread ISO 228 G ½, AISI 304
	2	Thread ANSI ½ MNPT ¼ FNPT, AISI 304
	5	Thread ISO 228 G ½ bore 11 mm, AISI 304

30		Sensor seal:
	E	EPDM
	F	FKM Viton
	S	FKM Viton, oxygen application

40		Additional options:
	1	Without additional equipment
	S	GL (German Lloyd) marine certificate
	2	Final inspection report

50	Measuring range; MWP; Nominal value; OPL:			
	Measuring range	**MWP (Maximum Working Pressure)**	**Nominal value**	**OPL (Over Pressure Limit)**
	Sensors for gauge pressure			
A1G	0 to 1 bar / 0 to 100 kPa	6.7 bar	1 bar	10 bar / 1 MPa
A1H [1)]	0 to 1.6 bar / 0 to 160 kPa	12 bar	2 bar	18 bar / 1.8 MPa
A1K	0 to 2 bar / 0 to 200 kPa	12 bar	2 bar	18 bar / 1.8 MPa
A1Q	0 to 4 bar / 0 to 400 kPa	16.7 bar	4 bar	25 bar / 2.5 MPa
A1R 1)	0 to 6 bar / 0 to 600 kPa	26.7 bar	10 bar	40 bar / 4 MPa
A1S	0 to 10 bar / 0 to 1 MPa	26.7 bar	10 bar	40 bar / 4 MPa
A1T 1)	0 to 16 bar / 0 to 1.6 MPa	26.7 bar	20 bar	40 bar / 4 MPa
A1V	0 to 20 bar / 0 to 2 MPa	26.7 bar	20 bar	40 bar / 4 MPa
A1W 1)	0 to 25 bar / 0 to 2.5 MPa	40 bar	40 bar	60 bar / 6 MPa
A1X	0 to 40 bar / 0 to 4 MPa	40 bar	40 bar	60 bar / 6 MPa
A3C 1)	–1 to 0 bar / –100 to 0 kPa	6.7 bar	2 bar	10 bar / 1 MPa
A3E 1)	–1 to 1 bar / –100 to 100 kPa	6.7 bar	2 bar	10 bar / 1 MPa
A3G 1)	–1 to 3 bar / –100 to 300 kPa	16.7 bar	4 bar	25 bar / 2.5 MPa
A3K 1)	–1 to 9 bar / –100 to 900 kPa	26.7 bar	10 bar	40 bar / 4 MPa
A3N 1)	–1 to 15 bar / –0.1 to 1.5 MPa	26.7 bar	20 bar	40 bar / 4 MPa
D10	0 to 100 mbar / 0 to 10 kPa	2.7 bar	0.1 bar	4 bar / 400 kPa
D12 1)	0 to 200 mbar / 0 to 20 kPa	3.3 bar	0.2 bar	5 bar / 500 kPa
D14	0 to 400 mbar / 0 to 40 kPa	5.3 bar	0.4 bar	8 bar / 800 kPa
D3W	–20 to 20 mbar / –2 to 2 kPa	2.7 bar	0.2 bar	4 bar / 400 kPa
D31 1)	–100 to 100 mbar / –10 to 10 kPa	3.3 bar	0.2 bar	5 bar / 500 kPa
D38 1)	–200 to 200 mbar / –20 to 20 kPa	3.3 bar	0.4 bar	5 bar / 500 kPa
D39 1)	–300 to 300 mbar / –30 to 30 kPa	5.3 bar	1 bar	8 bar / 800 kPa

PMC131	Order code

→ For continuation of ordering information of PMC131, see the following page.

1) Span set and calibrated at the factory

PMC131 (continued)

50					Measuring range; MWP; Nominal value; OPL:			
					Measuring range	**MWP (Maximum Working Pressure)**	**Nominal value**	**OPL (Over Pressure Limit)**
					Sensors for gauge pressure			
				Q4D	0 to 1.5 psi	40 psi	1.5 psi	60 psi
				Q4F 1)	0 to 5 psi	80 psi	6 psi	120 psi
				Q4H	0 to 15 psi	100 psi	15 psi	150 psi
				Q4K	0 to 30 psi	180 psi	30 psi	270 psi
				Q4N 1)	0 to 50 psi	250 psi	60 psi	375 psi
				Q4R	0 to 150 psi	400 psi	150 psi	600 psi
				Q4S	0 to 300 psi	400 psi	300 psi	600 psi
				Q4T 1)	0 to 500 psi	600 psi	600 psi	900 psi
				V6F 1)	–1.5 to 1.5 psi	50 psi	3 psi	75 psi
				V6N 1)	–15 to 15 psi	100 psi	30 psi	150 psi
				V6R 1)	–15 to 30 psi	250 psi	60 psi	375 psi
				V6S	–15 to 60 psi	250 psi	60 psi	375 psi
				V6V	–15 to 150 psi	400 psi	150 psi	600 psi
				S4N 1)	0 to 50 inH_2O	50 psi	3 psi	75 psi
				S4Q 1)	0 to 100 inH_2O	80 psi	6 psi	120 psi
				W6N 1)	–15 to 15 inH_2O	40 psi	3 psi	60 psi
				W6O 1)	–80 to 80 inH_2O	50 psi	6 psi	75 psi
				W6R 1)	–15 to 30 inH_2O	50 psi	3 psi	75 psi
					Sensors for absolute pressure			
				A2G	0 to 1 bar / 0 to 100 kPa	6.7 bar	1 bar	10 bar / 1 MPa
				A2H 1)	0 to 1.6 bar / 0 to 160 kPa	12 bar	2 bar	18 bar / 1.8 MPa
				A2K	0 to 2 bar / 0 to 200 kPa	12 bar	2 bar	18 bar / 1.8 MPa
				A2Q	0 to 4 bar / 0 to 400 kPa	16.7 bar	4 bar	25 bar / 2.5 MPa
				A2R 1)	0 to 6 bar / 0 to 600 kPa	26.7 bar	10 bar	40 bar / 4 MPa
				A2S	0 to 10 bar / 0 to 1 MPa	26.7 bar	10 bar	40 bar / 4 MPa
				A2T 1)	0 to 16 bar / 0 to 1.6 MPa	26.7 bar	20 bar	40 bar / 4 MPa
				A2V	0 to 20 bar / 0 to 2 MPa	26.7 bar	20 bar	40 bar / 4 MPa
				A2W 1)	0 to 25 bar / 0 to 2.5 MPa	40 bar	40 bar	60 bar / 6 MPa
				A2X	0 to 40 bar / 0 to 4 MPa	40 bar	40 bar	60 bar / 6 MPa
				D20 1)	0 to 100 mbar / 0 to 10 kPa	3.3 bar	0.2 bar	5 bar / 500 kPa
				D22	0 to 200 mbar / 0 to 20 kPa	3.3 bar	0.2 bar	5 bar / 500 kPa
				D24	0 to 400 mbar / 0 to 40 kPa	5.3 bar	0.4 bar	8 bar / 800 kPa
				R4D 1)	0 to 1.5 psi	50 psi	3 psi	75 psi
				R4F 1)	0 to 5 psi	80 psi	6 psi	120 psi
				R4H	0 to 15 psi	100 psi	15 psi	150 psi
				R4K	0 to 30 psi	180 psi	30 psi	270 psi
				R4N 1)	0 to 50 psi	250 psi	60 psi	375 psi
				R4R	0 to 150 psi	400 psi	150 psi	600 psi
				R4S	0 to 300 psi	400 psi	300 psi	600 psi
				R4T 1)	0 to 500 psi	600 psi	600 psi	900 psi

995						Marking	
						1	Tagging (TAG), see additional spec.

PMC131							Complete order code

1) Span set and calibrated at the factory

PMP131

This overview does not mark options which are mutually exclusive.

10	Electrical connection:
A1	Plug ISO 4400, M 16, IP 65/NEMA 4X (DIN 43650/A)
A2	Plug ISO 4400, ½ NPT, IP 65/NEMA 4X
A3	5 m cable, IP 68/NEMA 6P
A4	Plug M 12, IP 65/NEMA 4X
A5	Plug DIN 43650/C, IP65, NEMA 4X

20	Process connection:
B	Thread ISO 228 G ½, Seal seat as per DIN 3852, AISI 304, flush-mounted
1	Thread ISO 228 G ½, AISI 304
2	Thread ANSI ½ MNPT ¼ FNPT, AISI 304
3	Thread ANSI ½ MNPT bore 11.4 mm, AISI 304
4	Thread ISO 228 G ¼, AISI 304
5	Thread ANSI ¼ MNPT bore 3.5 mm, AISI 304
6	Thread M 20 x 1.5

30	Output:
0	Analog current output 4 to 20 mA, SIL
D	Analog current output 4 to 20 mA, SIL, ATEX II 1/2 G Ex ib IIC T6
1	Analog current output 4 to 20 mA, SIL, ATEX II 2 G Ex ib IIC T6
5	Analog current output 4 to 20 mA, SIL, ATEX II 3 G EEx nA II T6
2	Switch output PNP, 3-wire
3	Switch output PNP, 3-wire, ATEX II 3 G EEx nA II T6
6	Analog voltage output 0...10 V

40	Additional options:
1	Without additional equipment
S	GL/RINA marine approval
2	Final inspection report

50	Sensor range; MWP; OPL:		
	Sensor range	**MWP (maximum working pressure)**	**OPL (over pressure limit)**
	Sensors for gauge pressure		
A1G	0 to 1 bar / 0 to 100 kPa	2.7 bar	4 bar / 400 kPa
A1H	0 to 1.6 bar / 0 to 160 kPa	4 bar	6.4 bar / 640 kPa
A1N	0 to 2.5 bar / 0 to 250 kPa	6.7 bar	10 bar / 1 MPa
A1Q	0 to 4 bar / 0 to 400 kPa	10.7 bar	16 bar / 1.6 MPa
A1R	0 to 6 bar / 0 to 600 kPa	16 bar	24 bar / 2.4 MPa
A1S	0 to 10 bar / 0 to 1 MPa	25 bar	40 bar / 4 MPa
A1T	0 to 16 bar / 0 to 1.6 MPa	25 bar	64 bar / 6.4 MPa
A1W	0 to 25 bar / 0 to 2.5 MPa	25 bar	100 bar / 10 MPa
A1X	0 to 40 bar / 0 to 4 MPa	60 bar	160 bar / 16 MPa
A1Z	0 to 60 bar / 0 to 6 MPa	60 bar	240 bar / 24 MPa
A70	0 to 100 bar / 0 to 10 MPa	100 bar	400 bar / 40 MPa
A71	0 to 160 bar / 0 to 16 MPa	160 bar	600 bar / 60 MPa
A73	0 to 250 bar / 0 to 25 MPa	250 bar	600 bar / 60 MPa
A74	0 to 400 bar / 0 to 40 MPa	400 bar	600 bar / 60 MPa
Q4H	0 to 15 psi	40 psi	60 psi
Q4K	0 to 30 psi	100 psi	150 psi
Q4N	0 to 50 psi	160 psi	240 psi
Q4R	0 to 150 psi	400 psi	600 psi
Q4S	0 to 300 psi	400 psi	1500 psi
Q4T	0 to 500 psi	1000 psi	2400 psi
Q4V	0 to 1000 psi	1000 psi	3600 psi
Q70	0 to 1500 psi	1500 psi	6000 psi
Q73	0 to 3000 psi	3000 psi	9000 psi
Q74	0 to 6000 psi	6000 psi	9000 psi

PMP131	Order code

→ For continuation of ordering information of PMP131, see the following page.

PMP131 (continued)

50					Sensor range; MWP; OPL:			
						Sensor range Sensors for absolute pressure	MWP (maximum working pressure)	OPL (over pressure limit)
					A2G	0 to 1 bar / 0 to 100 kPa	2.7 bar	4 bar / 400 kPa
					A2H	0 to 1.6 bar / 0 to 160 kPa	4 bar	6.4 bar / 640 kPa
					A2N	0 to 2.5 bar / 0 to 250 kPa	6.7 bar	10 bar / 1 MPa
					A2Q	0 to 4 bar / 0 to 400 kPa	10.7 bar	16 bar / 1.6 MPa
					A2R	0 to 6 bar / 0 to 600 kPa	16 bar	24 bar / 2.4 MPa
					A2S	0 to 10 bar / 0 to 1 MPa	25 bar	40 bar / 4 MPa
					A2T	0 to 16 bar / 0 to 1.6 MPa	25 bar	64 bar / 6.4 MPa
					A2W	0 to 25 bar / 0 to 2.5 MPa	25 bar	100 bar / 10 MPa
					A2X	0 to 40 bar / 0 to 4 MPa	60 bar	160 bar / 16 MPa
					A2Z	0 to 60 bar / 0 to 6 MPa	60 bar	240 bar / 24 MPa
					B70	0 to 100 bar / 0 to 10 MPa	100 bar	400 bar / 40 MPa
					B71	0 to 160 bar / 0 to 16 MPa	160 bar	600 bar / 60 MPa
					B73	0 to 250 bar / 0 to 25 MPa	250 bar	600 bar / 60 MPa
					B74	0 to 400 bar / 0 to 40 MPa	400 bar	600 bar / 60 MPa
					R4H	0 to 15 psi	40 psi	60 psi
					R4K	0 to 30 psi	100 psi	150 psi
					R4N	0 to 50 psi	160 psi	240 psi
					R4R	0 to 150 psi	400 psi	600 psi
					R4S	0 to 300 psi	400 psi	1500 psi
					R4T	0 to 500 psi	1000 psi	2400 psi
					R4V	0 to 1000 psi	1000 psi	3600 psi
					R70	0 to 1500 psi	1500 psi	6000 psi
					R73	0 to 3000 psi	3000 psi	9000 psi
					R74	0 to 6000 psi	6000 psi	9000 psi

995						Marking	
						1	Tagging (TAG), see additional spec.

PMP131							Complete order code

PMP135

This overview does not mark options which are mutually exclusive.

10	**Electrical connection:**	
	A1	Plug ISO 4400, M 16, IP 65/NEMA 4X
	A2	Plug ISO 4400, ½ NPT, IP 65/NEMA 4X
	A3	5 m cable, IP 68/NEMA 6P
	A4	Plug M 12, IP 65/NEMA 4X

20	**Process connection:**	
	F	Clamp ISO 2852, DN 22 (¾"), AISI 316L, 3A, DIN 32676 DN 20, EHEDG, 3A
	G	Tri-Clamp ISO 2852, DN 25 to 38 (1" to 1½"), AISI 316L, 3A, DIN 32676 DN 25 to 40, EHEDG, 3A
	H	Tri-Clamp ISO 2852, DN 40 to 51 (2"), AISI 316L, 3A, DIN 32676 DN 50, EHEDG, 3A
	M	Thread ISO 228, G 1, with metallic sealing taper, AISI 316L, flush-mounted, adapter 52005087
	N	Thread ISO 228, G 1, with sealing surface for flush-mounted installation, AISI 316L, adapter 52001051 EHEDG, 3A (3A and EHEDG approval in combination with o-ring seal and welding neck)
	S	SMS 1½", PN 25, AISI 316L, EHEDG, 3A

30	**Output:**	
	0	Analog 4 to 20 mA, SIL
	D	Analog 4 to 20 mA, SIL, ATEX II 1/2 G Ex ib IIC T6
	1	Analog 4 to 20 mA, SIL, ATEX II 2 G Ex ib IIC T6
	5	Analog 4 to 20 mA, SIL, ATEX II 3 G EEx nA II T6
	2	Switch output PNP, 3-wire
	3	Switch output PNP, ATEX II 3 G EEx nA II T6

40	**Additional options:**	
	1	Basic version
	C	EN10204-3.1 material (wetted parts) inspection certificate
	D	Final inspection report + EN10204-3.1 material (wetted parts) inspection certificate
	2	Final inspection report

50	**Sensor range; MWP; OPL:**			
		Sensor range	**MWP (maximum working pressure)**	**OPL (over pressure limit)**
		Sensors for gauge pressure		
	A1G	0 to 1 bar / 0 to 100 kPa	2.7 bar	4 bar / 400 kPa
	A1H	0 to 1.6 bar / 0 to 160 kPa	4 bar	6.4 bar / 640 kPa
	A1N	0 to 2.5 bar / 0 to 250 kPa	6.7 bar	10 bar / 1 MPa
	A1Q	0 to 4 bar / 0 to 400 kPa	10.7 bar	16 bar / 1.6 MPa
	A1R	0 to 6 bar / 0 to 600 kPa	16 bar	24 bar / 2.4 MPa
	A1S	0 to 10 bar / 0 to 1 MPa	25 bar	40 bar / 4 MPa
	A1T	0 to 16 bar / 0 to 1.6 MPa	25 bar	64 bar / 6.4 MPa
	A1W	0 to 25 bar / 0 to 2.5 MPa	25 bar	100 bar / 10 MPa
	A1X	0 to 40 bar / 0 to 4 MPa	60 bar	160 bar / 16 MPa
	Q4H	0 to 15 psi	40 psi	60 psi
	Q4K	0 to 30 psi	100 psi	150 psi
	Q4N	0 to 50 psi	160 psi	240 psi
	Q4R	0 to 150 psi	400 psi	600 psi
	Q4S	0 to 300 psi	400 psi	1500 psi
	Q4T	0 to 500 psi	1000 psi	2400 psi
		Sensors for absolute pressure		
	A2G	0 to 1 bar / 0 to 100 kPa	2.7 bar	4 bar / 400 kPa
	A2H	0 to 1.6 bar / 0 to 160 kPa	4 bar	6.4 bar / 640 kPa
	A2N	0 to 2.5 bar / 0 to 250 kPa	6.7 bar	10 bar / 1 MPa
	A2Q	0 to 4 bar / 0 to 400 kPa	10.7 bar	16 bar / 1.6 MPa
	A2R	0 to 6 bar / 0 to 600 kPa	16 bar	24 bar / 2.4 MPa
	A2S	0 to 10 bar / 0 to 1 MPa	25 bar	40 bar / 4 MPa
	A2T	0 to 16 bar / 0 to 1.6 MPa	25 bar	64 bar / 6.4 MPa
	A2W	0 to 25 bar / 0 to 2.5 MPa	25 bar	100 bar / 10 MPa
	A2X	0 to 40 bar / 0 to 4 MPa	60 bar	160 bar / 16 MPa
	R4H	0 to 15 psi	40 psi	60 psi
	R4K	0 to 30 psi	100 psi	150 psi
	R4N	0 to 50 psi	160 psi	240 psi
	R4R	0 to 150 psi	400 psi	600 psi
	R4S	0 to 300 psi	400 psi	1500 psi
	R4T	0 to 500 psi	1000 psi	2400 psi

995	**Marking**	
	1	Tagging (TAG), see additional spec.

PMP135		Complete order code

Accessories

Welding neck with sealing taper

- Welding neck for flush-mounted installation of the process connection G1 A with metallic sealing taper (PMP135, version M)
  Material: AISI 316L (1.4435)
  Order number: 52005087
- with inspection certificate 3.1
  Order number: 52010171

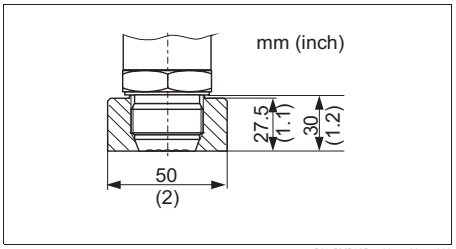

P01-PMP135xx-00-xx-00-xx-002

- Pressure sensor dummy for welding the welding neck without any problems with order number 52005087 or 52010171
  Material: CuZn
  Order number: 52005272

Welding neck with sealing surface

- Welding neck for flush-mounted installation of the process connection G1 A with sealing surface (PMP135, version N)
  Material: AISI 316L (1.4435)
  Gasket (enclosed): silicone O-ring
  Order number: 52001051
- Optional with inspection certificate 3.1
  Order number: 52011896

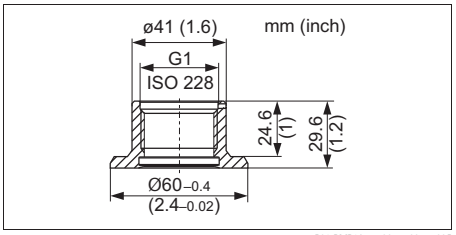

P01-PMP13xxx-00-xx-00-xx-005

Plug-in jack

- Plug-in jack M 12x1, straight
  Self-made connection to M 12x1 housing plug
  Material: Handle body PA; Coupling nut CuZn, nickel-plated, degree of protection (inserted): IP 67
  Order number: 52006263

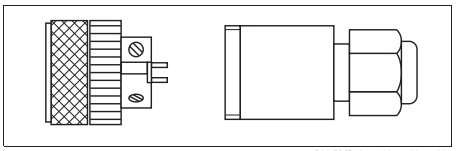
P01-PMP13xxx-00-xx-00-xx-003

Connecting cable

- Cable, 4 x 0.34 mm² (AWG 21) with M12 socket, elbowed, screw plug, length 5 m (16 ft), sprayed cable
  Materials: Body PUR
  Coupling nut: Cu Zn/Ni, brass, nickeled
  Cable: PVC
  Protection: IP 67 (fully locked)
  order number: 52010285

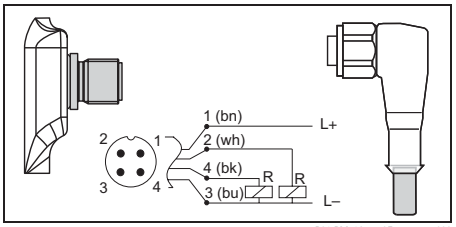

P01-PMx13xxx-07-xx-xx-xx-000

Plug-on display PHX20/PHX21

- Plug-on display for electrical connections
  – PMC131 version A1, A2, B1, C1, C2
  – PMP131/135 version A1, A2.
  4-digit red LED display for looping into 4 to 20 mA circuit via elbow plug ISO4400, rotatable in 90° steps, programmable via 2 keys
  Display range: –1999 to +9999
  Degree of protection: IP 65
  Material: Housing Pa6 GF30, front screen PMMA
  Voltage drop: ≤5 V (corresponds to max. 250 Ω load)
  Approval for PHX21: ATEX II 2G
  Order number PHX20: 52022914
  Order number PHX21: 52022915

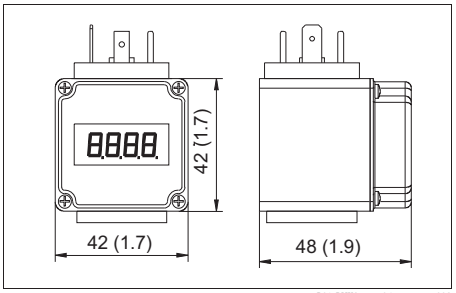

P01-PHX2xxxx-06-xx-xx-xx-002

Documentation

Field of Activities

- Pressure measurement, powerful measuring devices for process pressure, differential pressure, level and flow: FA00004P/00/EN

Technical Information

- EMC test procedures: TI00241F/00/EN

Operating Instructions

- Cerabar T PMC131: KA00085P/00/A3
- Cerabar T PMP131: KA00103P/00/A3
- Cerabar T PMP135: KA00198P/00/A3

Functional Safety Manual (SIL)

- Cerabar T PMP131, PMP135: SD00160P/00/EN

Safety Instructions

Certificate/Type of protection	Device	Documentation	Version in the order code
ATEX II 3 G EEx nA II T4 [1]	PMC131	– XA00191P	B1, B3, B5
ATEX II 1/2 G Ex ib IIC T6 ATEX II 2 G Ex ib IIC T6 ATEX II 3 G EEx nA II T6 [1]	PMP131, PMP135	– XA00142P – XA00191P	D 1 3, 5

1) In the event of applications in a Zone 2 explosive atmosphere (EEx nA explosion protection) protect the housing from impact.

Instruments International

Endress+Hauser
Instruments International AG
Kaegenstrasse 2
4153 Reinach
Switzerland

Tel.+41 61 715 81 00
Fax+41 61 715 25 00
www.endress.com
info@ii.endress.com

Endress+Hauser

People for Process Automation

TI00415P/00/EN/19.15
71289985
CCS/FM+SGML 9.0

71289985

CS-413-300 : Identification sheet

VWTC PROJECT NUMBER:	5000218009	REV:	1
PROJECT NAME:	AEM AMARUQ	SUBMITTED TO (COMPANY):	AGNICO EAGLE MINES
ENGINEER:	Gabriel Hébert	SUBMITTED TO (RESPONSIBLE)	
PROJECT MANAGER:	Clément B	PROJECT NUM REFERENCE.:	
PHONE NUMBER:		LOT NUMBER:	

SUPPLIER	EQPT CODE	EQPT TAG NO	DIA	DESCRIPTION	INFO 1	INFO 2	INFO 3	APPLIC.	NOTE	REV
TECKNO VALVE	IMPSGG300380	PI18-031	DIA. CADRAN: 2.5"	SERVICE WATER PRESSURE GAUGE	PRESSURE GAUGE/MANUFACTURER: ASHCROFT// MODEL: 25-1009SWL-02L-160PSIG// 1/4''	N/A	N/A	HYDRAPOL 3500		rev1

This page is intentionally left blank

ASHCROFT®

Duralife® Pressure Gauge
Type 1009, ASME B 40.1
Grade 1A (±1% of span)

DESIGNED FOR SAFETY AND LONGER LIFE

- ***5-year limited warranty***
- ***Patented PowerFlex™ movement isolates movement from shock and vibration for longer life***
- ***All stainless, all-welded construction for long life***
- ***ASME Grade 1A, 1% accuracy full scale***
- ***True Zero™ pointer indication – no stop pin to mask false zero reading – ensures safety and process control***

The following Table is *not* for conversion purposes.

STANDARD RANGES [3][4][5]

Pressure psi	kg/cm² - bar	kPa
0/15	0/1	0/100
0/30	0/1.6	0/160
0/60	0/2.5	0/250
0/100	0/4	0/400
0/160	0/6	0/600
0/200	0/10	0/1000
0/300	0/16	0/1600
0/400	0/25	0/2500
0/600	0/40	0/4000
0/800	0/60	0/6000
0/1000	0/100	0/10,000
0/1500	0/160	0/16,000
0/2000	0/250	0/25,000
0/3000	0/400	0/40,000
0/4000	0/600	0/60,000
0/5000	0/1000	0/100,000
0/6000		
0/7500		
0/10,000		
0/15,000		
Vacuum		
30 in./0 in.Hg	–1/0	–100/0
Compound		
30 in.Hg/15 psi	–1/0/1.5	–100/0/150
30 in.Hg /30 psi	–1/0/3	–100/0/300
30 in.Hg /60 psi	–1/0/5	–100/0/500
30 in.Hg /100 psi	–1/0/9	–100/0/900
30 in.Hg /150 psi	–1/0/15	–100/0/1500
30 in.Hg /300 psi	–1/0/24	–100/0/2400

- ***New PLUS!™ Performance Option:***
  - ***Liquid-filled performance in a dry gauge***
  - ***Fights vibration and pulsations without liquid-fill headaches***
  - ***See pages 6-7 for details***
  - ***Order as option XLL***

OTHER FEATURES:

Available in 2½˝ and 3½˝ dial sizes, Duralife® pressure gauges are liquid fillable and field convertible for panel mounting. Both zero and span adjustments are standard.

The gauge is available dry, liquid-filled weatherproof or hermetically sealed and *now* with *PLUS!™* performance option. A five year limited warranty is standard with the Duralife® 1009.

BOURDON SYSTEM SELECTION[1]

Ordering Code	Bourdon Tube & Tip Material[1]	Socket Material	Tube Type	Range Selection Limits (psi)	NPT Conn.[6]
AW	316 stainless steel	Bronze	C-Tube	Vac/600	¼
AW	316 stainless steel	Bronze	Helical	1000	¼
SW	316 stainless steel	316 stainless steel	C-Tube	Vac/600	¼ & ½[2]
SW	316 stainless steel	316 stainless steel	Helical	800/15,000	¼ & ½[2]

(1) For selection of the correct Bourdon system material, see the media application table on page 243.
(2) ½ NPT available 3½˝ lower SW system only.
(3) Type 1009 gauges may be ordered with metric single-scale dial: kPa,bar or kg/cm².
(4) Dual-scale dials will be supplied with standard metric inner scale and equivalent psi outer scale or with standard psi inner scale and equivalent metric outer scale–please specify.
(5) Special logos and scales available upon request.
(6) ¼˝ JIS, BSP or DIN threads available on SW systems.

TO ORDER THIS 1009 DURALIFE PRESSURE GAUGE:

Select:	35	1009	SW	(L)	02L	XXX	1000#

1. Dial size–2½˝, 3½˝
2. Case type–1009
3. Tube and socket material
4. Liquid filled (glycerin), leave blank if dry
5. Connection size–⅛ (01), ¼ (02) ½ (04)
6. Connection location–Lower (L), Back (B)
7. Optional Features–see page 176
8. Standard pressure range–1000 psi

Accessories: see pages 233-238

Consult factory for guidance in product selection
Phone (203) 385-0217, Fax (203) 385-0602 or
visit our web site at www.ashcroft.com

DRESSER Instruments

This page is intentionally left blank

ASHCROFT®
Trust the shield.™

Type 310, 315 All-Welded "Mini" Diaphragm Seal

PRODUCT FEATURES

- Compact size to fit space-restricted areas
- Designed to protect transducers, mini-switches and 3½″ or smaller pressure gauges from corrosion, plugging or freeze-up
- All-welded metal construction prevents leakage of process media
- Rated for 2500 psi at 100°F
- Fill/bleed connection is standard
- Available with male process connection (Type 310)

The compact size of the Ashcroft® 310 mini-seal allows it to fit into space-restricted areas and is designed to protect transducers, mini-switches, and 3½" or smaller dial size pressure gauges from corrosion, plugging or freeze- up. All welded metal construction prevents leakage of process media. It is rated for 2500 psi at 100°F and has a 316L stainless steel top housing standard. Lower housing materials include 316L stainless steel or Hastelloy C. Diaphragm materials include 316L stainless, Hastelloy C or Tantalum. ¼ NPT or ½ NPT process connection sizes are available.

PRODUCT SPECIFICATIONS

Model Number:	Type 310, 315
Process Connection Size:	¼″, ½″ (⅛″, ¾″, 1″- 310 only) (see table A)
Instrument Connection Size:	⅛, ¼ NPT
Diaphragm Material:	316L SS, Hastelloy C276, Tantalum, Monel
Bottom Housing Materials:	316L SS, Hastelloy C276, Monel, Hastelloy B
Filling Fluid:	Glycerin, Silicone, Halocarbon, Syltherm

All specifications are subject to change without notice.
All sales subject to standard terms and conditions.
© Ashcroft Inc. 2015 09/15

Ashcroft Inc., 250 East Main Street, Stratford, CT 06614 USA
Tel: 203-378-8281 • Fax: 203-385-0408
email: info@ashcroft.com • www.ashcroft.com

Type 310, 315 All-Welded "Mini" Diaphragm Seal

Table A – Process Connection

Process Connection	Size	Code
Threaded – male NPT*	⅛	01
Threaded – male NPT*	¼	02
Threaded – male NPT*	½	04
Threaded – male NPT*	¾	06
Threaded – male NPT*	1	08
Threaded – female NPT†	¼	25
Threaded – female NPT†	½	50

*Available in Type 310 only.
†Available in Types 310 & 315.

Pressure Ratings – All 2500 psi except flanged seals are per ASME B 16.5, temperature limit determined by diaphragm, bottom housing and/or filling fluid.

Table B – Type

Description	Code
All-welded mini-seal	310
All-welded midi-seal w/flushing connection	315

Table C – Diaphragm Materials

Materials	Code
316L stainless steel	S
Hastelloy C-276	H
Tantalum	U
Monel	P

Table D – Housing Materials

Bottom(1)	Code	Top(2)
316L SS	S	316L SS
Hastelloy C-276	H	316L SS
Monel	M	Monel

(1) Other bottom housing materials on application.
(2) Top housing material is 316L SS (standard). Monel mini-seal standard with monel top housing.

Table E – Instrument Connection

Instrument Connection	Size	Code
Threaded – female NPT	¼	02T
Threaded – female NPT	⅛	01T

NOTES:
(1) For use with most 3½″ and smaller gauges. Movementless gauge 4½″ (exception).
(2) Other bottom housing materials on application.
(3) Top housing material is 316L SS (standard). Monel mini-seal standard with monel top housing.
(4) Not available with monel bottom housing.

Table F – Filling Fluid

Fill	Service	Connection to Instrument	Temperature Range °F	Code
Glycerin	Pressure	Direct Only	0/400	CG
Silicone	Pressure/Vacuum	Direct or Flexible Line	–40/600	CK
Halocarbon	Pressure/Vacuum in presence of strong oxidizing agent	Direct or Flexible Line	–70/300	CF
Syltherm	Pressure	Direct or Flexible Line	–40/750	HA

Monel is a registered trademark of Huntington Alloys, Inc.
Hastelloy is a registered trademark of Cabot Corp.
Halocarbon is a registered trademark of Halocarbon Products
GYLON 3510 is a registered trademark of Garlock Inc.

HOW TO ORDER:

1. **From Table A...** select PROCESS CONNECTION (e.g., 1/4″ process code 25)
2. **From Table B...** select TYPE (310)
3. **From Table B...** select DIAPHRAGM MATERIAL. (e.g., 316L stainless steel–code S)
4. **From Table C...** select BOTTOM HOUSING MATERIAL. (e.g., 316 stainless steel–code S)
5. **From Table D...** select INSTRUMENT CONNECTION size. (e.g., 1/4 NPT–code 02T)
6. **From Table E...** select FILLING FLUID, if diaphragm seal will be attached to instrument. (e.g., Glycerin–code CG)

Coded order: **25-310SS-02T-CG**

Dimension

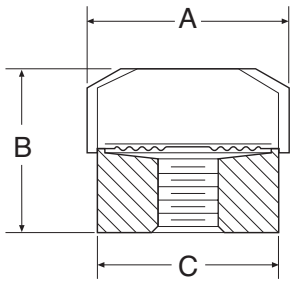

Types 310 mini-seal – Threaded ¼, ½, ¾, NPT

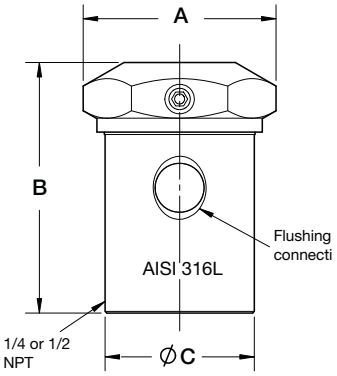

Types 315 mini-seal – Threaded ¼, ½, ¾, NPT

	A		B		C	
	in	mm	in	mm	in	mm
Type 310	1.75	(38)	.81	(30)	1.34	(34)
Type 315	1.73	(44)	2.25	(57.2)	1.34	(34)

All specifications are subject to change without notice.
All sales subject to standard terms and conditions.
© Ashcroft Inc. 2015 09/15

Ashcroft Inc., 250 East Main Street, Stratford, CT 06614 USA
Tel: 203-378-8281 • Fax: 203-385-0408
email: info@ashcroft.com • www.ashcroft.com

CS-434-100 : Identification sheet

VWTC PROJECT NUMBER:	5000218009	REV:	1
PROJECT NAME:	AEM AMARUQ	SUBMITTED TO (COMPANY):	AGNICO EAGLE MINES
ENGINEER:	Gabriel Hébert	SUBMITTED TO (RESPONSIBLE)	
PROJECT MANAGER:	Clément B	PROJECT NUM REFERENCE.:	
PHONE NUMBER:		LOT NUMBER:	

SUPPLIER	EQPT CODE	EQPT TAG NO	DIA	DESCRIPTION	INFO 1	INFO 2	INFO 3	APPLIC.	NOTE	REV
LUMEN	IEPOPS201955	PSL18-031	N/A	SERVICE WATER PRESSURE SWITCH	PRESSURE SWITCH/MANUFACTURER: ALLEN BRADLEY// MODEL: 836T-T253J	1/4" FNPT female pipe connection	Adjustable Range : 12-150 psi	HYDRAPOL 3500		rev1

This page is intentionally left blank

Bulletin 836T Pressure Controls

- Operating ranges from 30 in. Hg vacuum…5000 psi
- Independently adjustable range and differential
- Copper alloy and stainless steel bellows
- 2- and 4-Circuit contact block
- Pressure difference controls available
- 1/4 in. and 3/8 in. N.P.T. and O-ring straight thread connections
- Type 4 & 13 and Type 7 & 9 and 4 & 13 combination enclosures

Table of Contents

Product Overview ..... this page
Technical Data 13-26
Product Selection 13-34
Modifications 13-41
Accessories 13-42
Conversion Kits 13-43
Factory Options 13-44
Wiring Diagrams 13-45
Approximate Dimensions 13-48

Standards Compliance and Certification

(For file and guide numbers, see page 13-44)

Product Overview

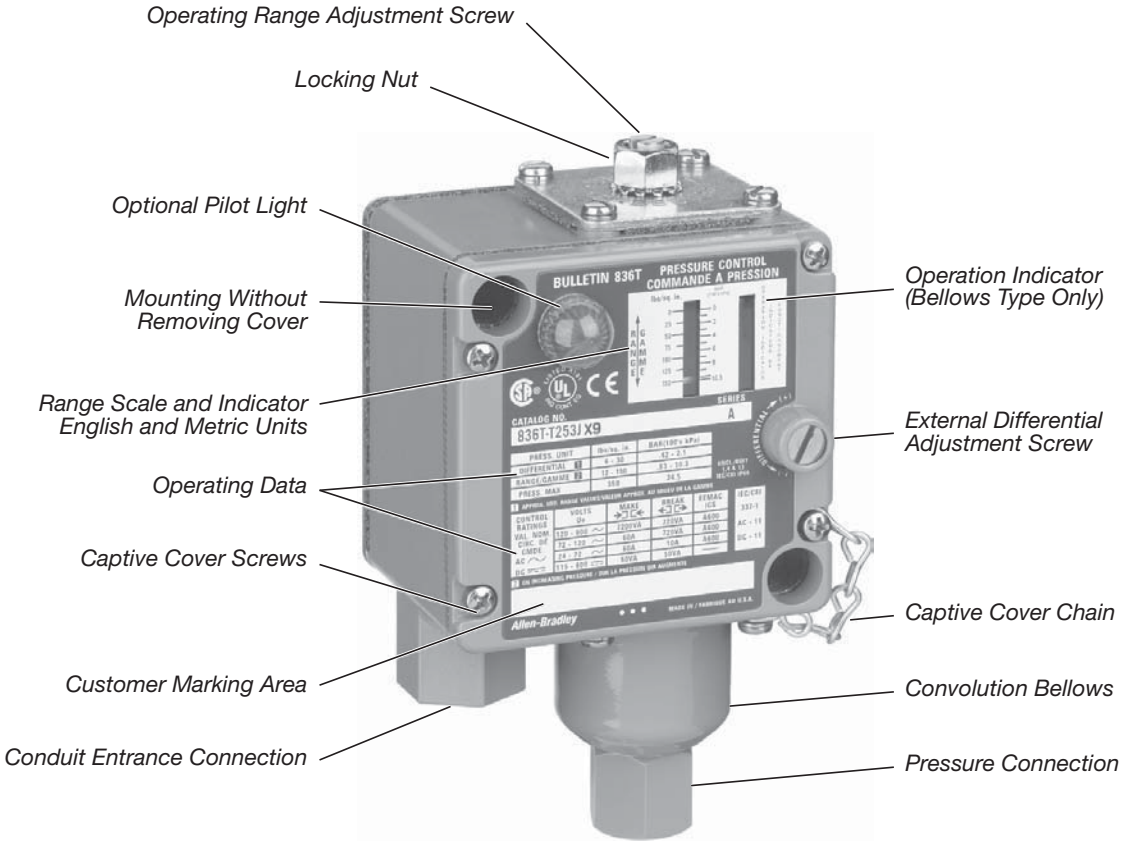

Bulletin 836T Style T Bellows Type Enclosure Type 1, 4 & 13, IEC IP66

Description

Bulletin 836T Pressure Controls are control circuit devices designed to meet the traditional requirements of the transportation, machine tool, and other heavy-duty industries. Allen-Bradley Bulletin 836T Pressure Controls can be used in pneumatic and hydraulic applications. The copper alloy bellows actuators can be used with air, water, oil, vapor, and other non-corrosive gases and liquids. Type 316 stainless steel bellows are available for more corrosive gases, vapors, and fluids.

A rugged stainless steel cylinder and stainless steel piston assembly is used for the higher-pressure coolant and hydraulic oil applications. May also be used with water and water-based fluids. The controls feature snap-action precision switches equipped with silver contacts. A relatively friction-free mechanism provides consistent operation regardless of mounting position. Devices are designed to allow easy adjustment of pressure settings.

Allen-Bradley Bulletin 836T Pressure Controls are used in many types of applications with adjustable ranges from 30 in. Hg vacuum…5000 psi. They can be used to control pneumatic systems and maintain a pressure tank within a preset and constant pressure range. They can be used to detect over-pressures of gases and liquids to prevent damage to valuable equipment. Pressure controls can also detect low pressure to protect equipment from loss of coolants and lubrication.

Bulletin 836T Pressure Controls are offered in a variety of styles to fit a wide range of applications. The devices are available with either a Type 1, 4 & 13, or 7 & 9 and 4 & 13 combined enclosure. They are available with two-circuit or four-circuit contact blocks. Accessories and modifications are available to tailor the devices to meet most application requirements.

Applications

- Machine tools
- Machine hydraulic pressures
- Material clamping fixtures
- Lubricant and coolant pressures
- Compactor ram pressures
- Air compressors

Style T — Pressure Control

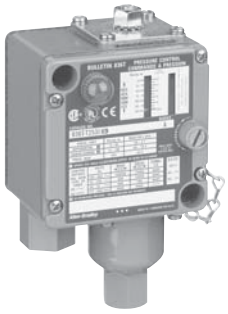

Style T

- Independently adjustable operating range and differential
- Single bellows or piston operation

Copper Alloy Bellows

- 1/4 in. N.P.T. female pipe connection
- Adjustable operating range — 30 in. Hg vacuum…650 psi
- Maximum line pressure — up to 1300 psi
- Occasional surge pressure — up to 1600 psi

Type 316 Stainless Steel Bellows

- 1/4 in. N.P.T. female pipe connection
- Adjustable operating range — 30 in. Hg vacuum…375 psi
- Maximum line pressure — up to 600 psi
- Occasional surge pressure — up to 600 psi

Piston

- 3/8 in. N.P.T. female pipe connection
- SAE 7/16-20 UNF-2B thread O-ring boss seal
- SAE 9/16-18 UNF-2B thread O-ring boss seal
- Adjustable operating range — 40…5000 psi
- Occasional surge pressure — up to 15,000 psi

Style D — Pressure Difference Control

Style D

- Independently adjustable system difference range and differential
- Two-bellows operation, one bellows connected to each system

Copper Alloy Bellows

- 1/4 in. N.P.T. female pipe connection
- Adjustable system difference range — 1…70 psi
- Maximum line pressure — up to 600 psi
- Occasional surge pressure — up to 650 psi

Type 316 Stainless Steel Bellows

- 1/4 in. N.P.T. female pipe connection
- Adjustable system difference range — 1…70 psi
- Maximum line pressure — up to 500 psi
- Occasional surge pressure — up to 500 psi

Technical Terms

Adjustable operating range — Total span within which the contacts can be adjusted to trip and reset.

Trip setting — Higher pressure setting at which value the contacts transfer from their normal state to a change state.

Reset setting — Lower pressure setting at which value the contacts return to their normal state.

Adjustable differential — Difference between the trip and reset values

Minimum differential — When the differential is set to the lowest possible difference between trip and reset.

Maximum differential — When the differential is set to the highest possible difference between trip and reset.

Max. occasional surge pressure — Maximum surge pressure that can be applied to the actuator. Surges or ransients can occur during start-up and shut-down of a machine or system. Expressed in milliseconds, complex electronic instrumentation is required to measure the varying amplitude, frequency, and duration of this wave form. Extreme surges that occur approximately 8 times in a 24-hour period are negligible.

Maximum line pressure — Maximum sustained pressure that can be applied to the actuator without permanent damage. The control should not be cycled at this pressure. **Note:** Does not apply to piston type controls.

psi — Pounds per square inch gauge (positive pressure). Devices listed are in gauge pressure units which use atmospheric pressure as a reference. Atmospheric pressure at sea level is approximately 14.7 psi or 30 in. Hg.

Vacuum — Inches of mercury (in. Hg) vacuum (negative pressure).

Operating range adjustment screw — This screw is used to adjust the trip setting by varying the force of the main spring.

Differential adjustment screw — This screw is used to adjust reset setting by varying the force of the differential blade spring.

Pressure media — There are many types of pressure media that can be controlled. Examples include air, water, hydraulic fluids, and other types of gases and liquids. The type of media and the maximum system pressure will determine the type of actuator used for the pressure control application. See page 13-33.

Pressure connection — Common standard types of pressure connections used in control systems are 1/4 in. and 3/8 in. N.P.T. female pipe threads. SAE 7/16 and SAE 9/16 O-ring boss seals are also available (piston versions only).

Contact configuration — Bulletin 836T controls are available with either a 2-circuit or 4-circuit contact block. See page 13-31.

Style D

Style D — pressure difference controls adjustable system difference range — The adjustable operating range for a pressure difference control.

System difference pressure bushing — This bushing is used to adjust the trip setting by varying the force on the main spring.

Trip setting — Desired difference in pressure between the two bellows at which value the contacts transfer from their normal state to a changed state. This occurs in one of the following conditions:

- The pressure in the bottom bellows is higher than the pressure in the top bellows by a value equal to the trip setting.
- The pressure in the bottom bellows remains constant and the pressure in the top bellows decreases by a value equal to the trip setting.

Reset setting — Predetermined normal difference in pressure between the two bellows, at which value the contacts return to their normal state. This occurs in one of the following conditions:

- The pressure in the bottom bellows is lower than the top bellows.
- The pressure in the bottom bellows remains constant and the pressure in the top bellows increases.

Figure 1
Graphics to illustrate technical terms

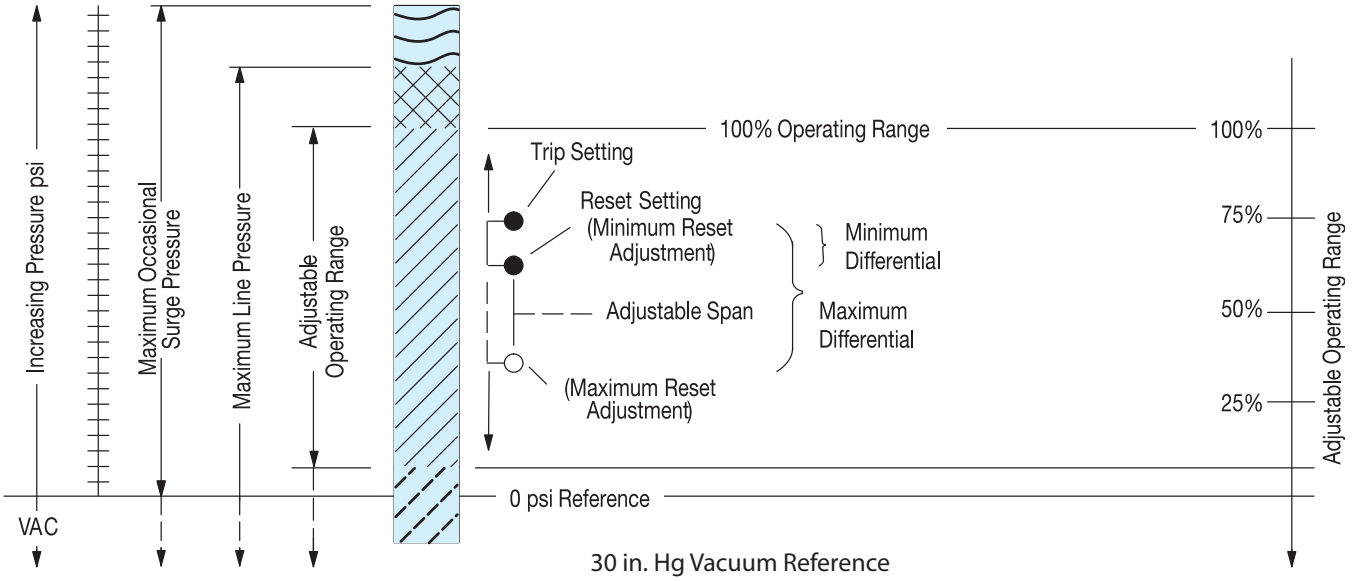

Visit our website: www.ab.com/catalogs
Preferred availability cat. nos. are printed in **bold**

Allen-Bradley

Theory of Operation

Bulletin 836T Pressure Controls are designed to open or close electrical circuits in response to changes in pneumatic (air or gas) or hydraulic (oil or non-corrosive liquids) pressure. Piston controls are not intended for use with air or water. Figure 2 shows the basic operating mechanism.

Pressure is applied to the actuator which can be either a bellows or piston type. As pressure rises, the actuator exerts force on the main spring. When the threshold force of the main spring is overcome, levers transfer the motion to the contact block, displacing the contacts — this is referred to as the trip setting. The unique lever design amplifies the actuator motion, providing shorter stroke, which results in maximizing bellows life.

The lever assembly also includes a virtually friction-free over-center toggle arrangement, providing positive snap action to the contact block for long contact life. As pressure falls, force on the differential spring increases and contacts return to their normal state — this is referred to as reset setting. Varying the force of the main spring (by turning the operating range adjustment screw) determines when the contacts will trip. Varying the force of the differential spring (by turning the differential adjustment screw) determines when the contacts will reset. Setting trip and reset values determines the operating parameters of the application.

Figure 2
Basic mechanical structure

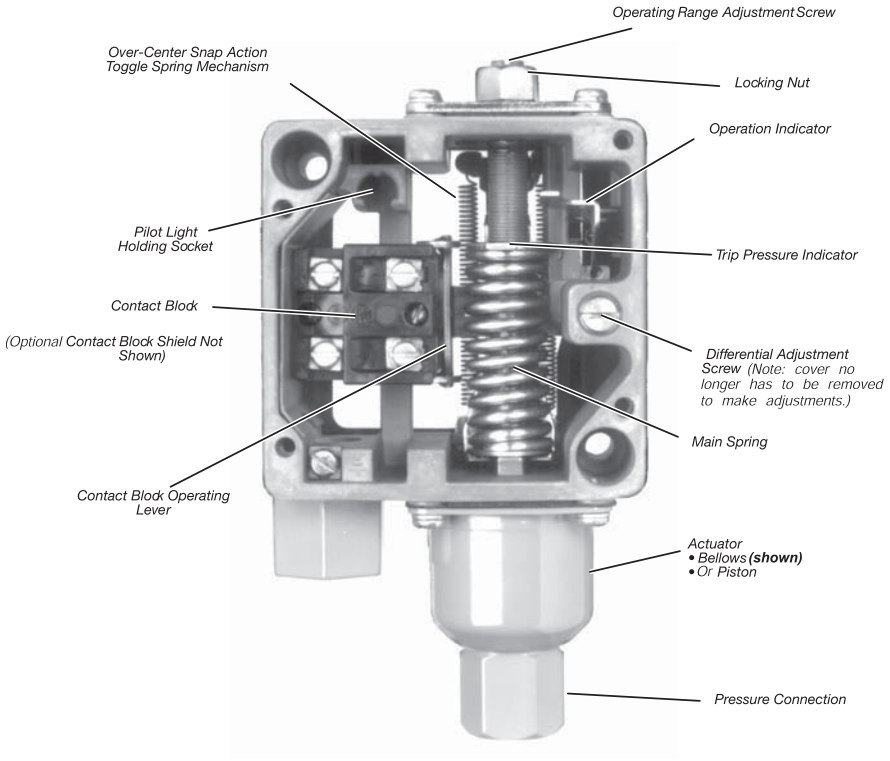

Applications for Control

Pressure controls can be used to either control or monitor a machine or process. Figure 3 shows a typical control application. Here, pressure is controlled within predetermined high and low values. Figure 4 shows a typical monitoring application. Here, pressure is monitored between a high and low value, signaling when a preset limit has been exceeded.

Figure 3
Typical control application

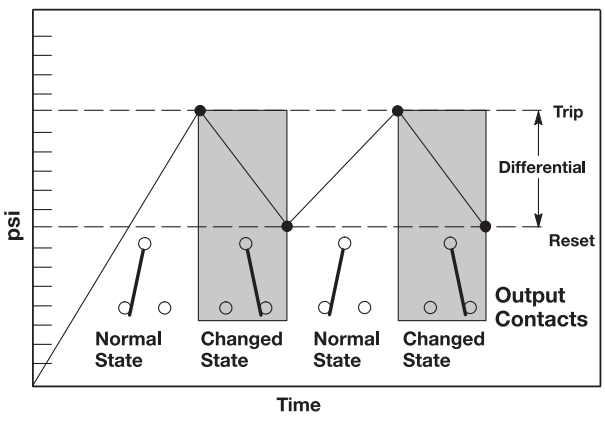

Figure 4
Typical monitoring application

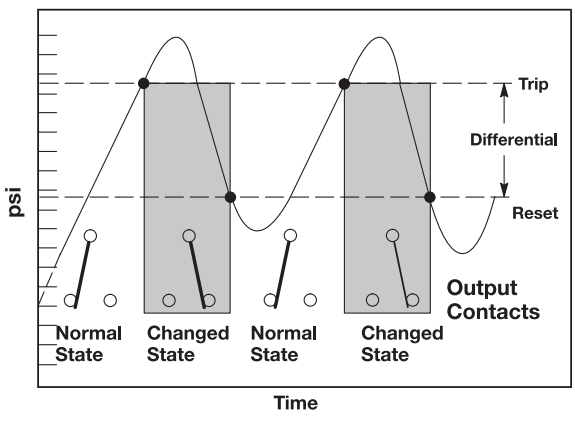

Control Setting — Style T Pressure Controls

Allen-Bradley controls are designed for ease of setting to help minimize installation time. Standard pressure controls shipped from the factory are set at the maximum operating range and minimum differential. By using a pressure gauge and following these simple directions, the control can be set to the specific requirements for each application. See Figure 5.

Step 1 — Adjust trip setting
The trip setting is controlled by the operating range adjustment screw and is adjusted externally. After loosening the lock nut, the trip setting is set by turning the operating range adjustment screw counterclockwise to lower the trip setting or clockwise to raise the trip setting. The approximate trip setting is shown on the indicating scale. When the proper setting is reached, simply tighten the lock nut.
Note: Turning the operating range adjustment screw will cause both the trip and reset settings to change in virtually equal increments.

Step 2 — Adjust reset setting
The reset setting is controlled by an external differential adjustment screw. The reset setting is set by turning the differential adjustment screw clockwise to increase the differential or counterclockwise to decrease the differential.
Note: Adjusting the differential has little or no affect on the trip setting.

Figure 5
Trip and reset adjustment for pressure controls

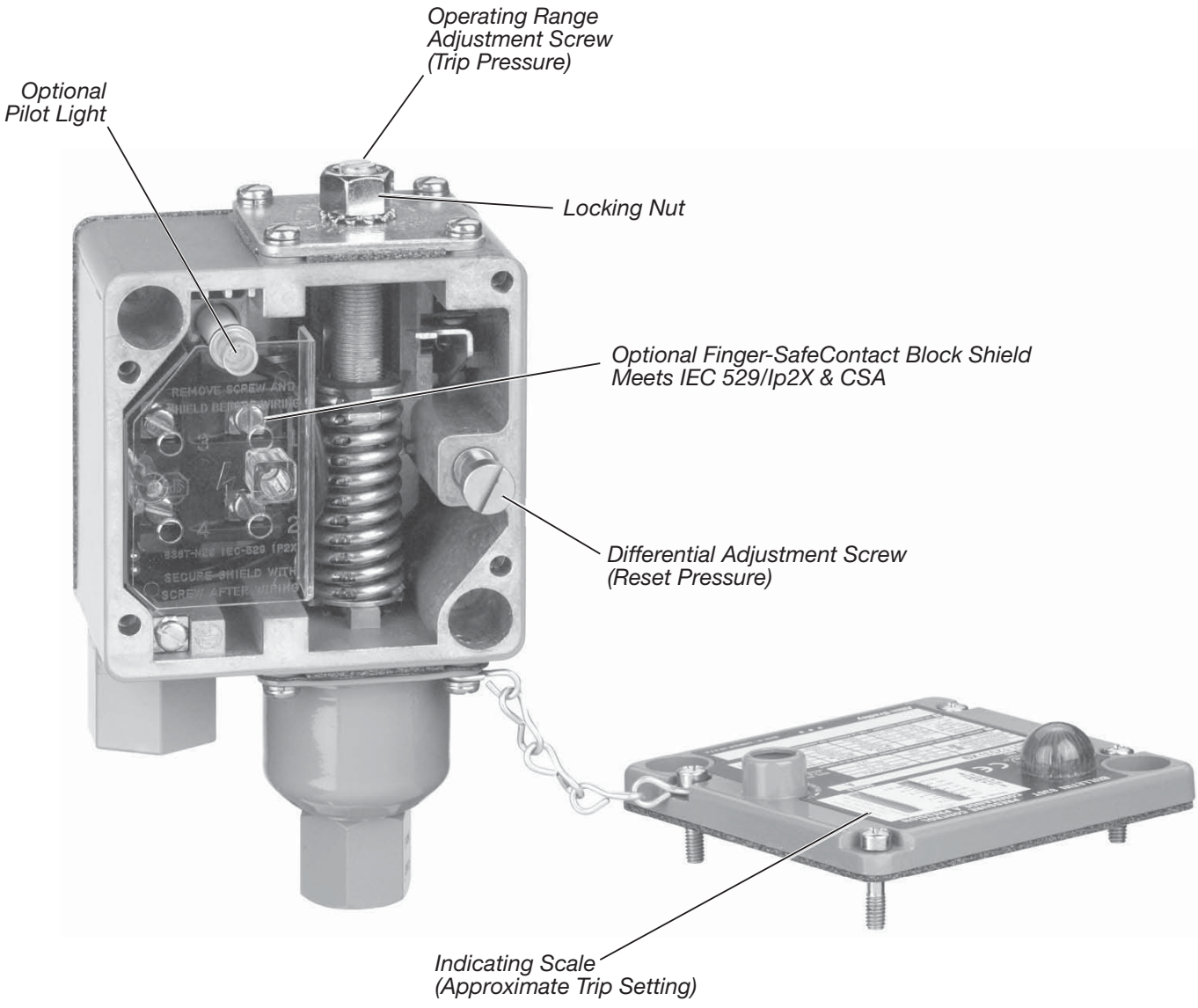

Control Setting — Style D Pressure Difference Controls

Standard pressure difference controls shipped from the factory are set at the maximum adjustable difference range and minimum differential. Remove the front cover and use a pressure gauge to make the following adjustments. See Figure 6.

Step 1 — Adjust trip setting (difference pressure)

The trip setting is controlled by the system difference pressure bushing and is adjusted internally. With no pressure (open to atmosphere) applied to top bellows, apply a constant pressure to bottom bellows equal to the desired difference in pressure at which the contacts are to trip. Insert a 1/8 in. diameter rod into a hole in the bushing and turn bushing to the left. Continue to turn bushing until the mechanism trips; circuit 1-2 will open. At this value, the trip setting is set at the pressure which is being applied to the bottom bellows.
Note: Turning the system difference pressure bushing will cause both the trip and reset settings to change in virtually equal increments.

Step 2 — Adjust reset setting (differential pressure)

The reset setting is controlled by differential adjustment screw (this adjustment can be made with the cover on). The reset setting is adjusted by turning the differential adjustment screw clockwise to increase the differential or counterclockwise to decrease the differential.
Note: Adjusting the differential has little or no affect upon the trip setting (difference pressure).

Figure 6
Trip and reset adjustment for pressure difference controls — 4-circuit contact block

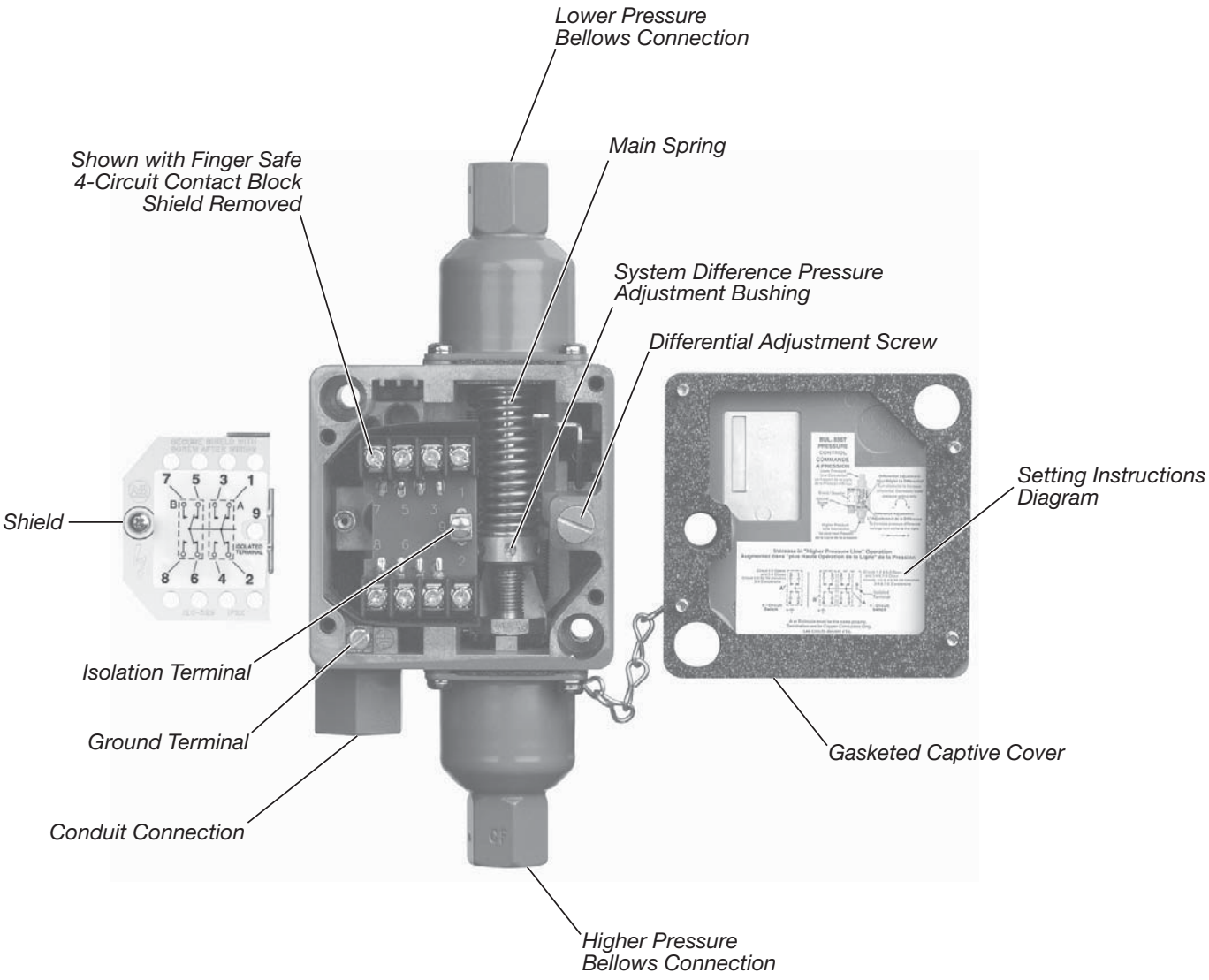

Repeat Accuracy and Mechanical Life

The design and construction of Bulletin 836T Pressure Controls provide a typical repeat accuracy equal to or better than the values shown in the repeat accuracy table below. Repeat accuracy is based on percent of maximum range, evaluated from test data and calculated using the formula per ICS 2-225 standards. Repeat accuracy and mechanical life of bellows type controls is graphically illustrated in Figure 7. The life curve does not apply to piston type controls.

For general applications, controls selected where the contacts operate between 30% and 80% of the operating range and where the maximum line and surge pressures do not exceed the specified values will provide excellent life and repeat accuracy. For more specific applications, it is important to note that the controls are designed to operate below or above these values. However, there may be a small trade-off between the factors of repeat accuracy and mechanical life.

Figure 7
Repeat accuracy versus mechanical life graph

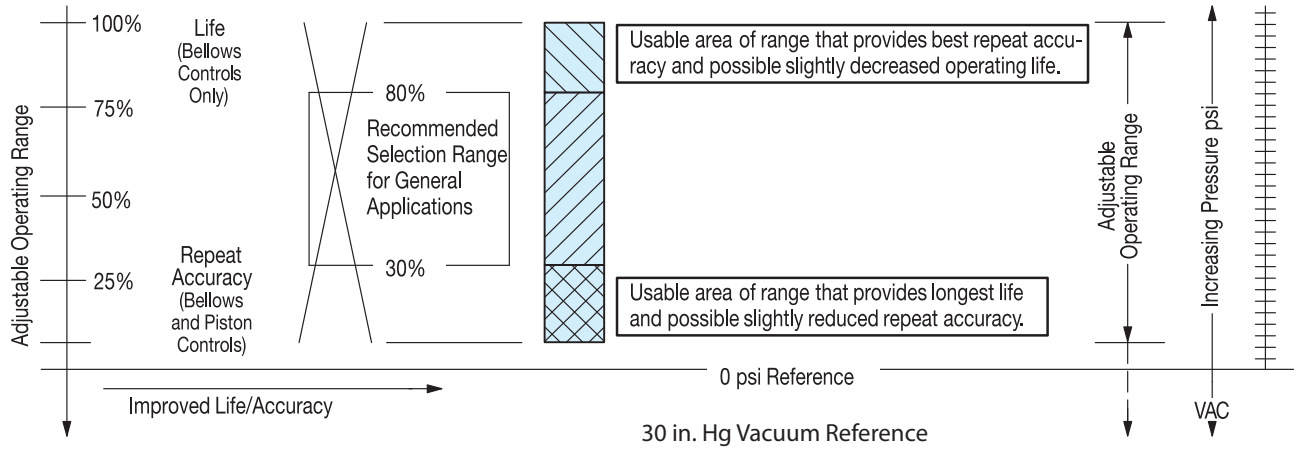

Repeat Accuracy

Type	Typical Characteristics (% of Maximum Range) ✶
Bellows	± 1%
Piston with seal	± 5% ❄
Piston without seal	± 3%

✶ Evaluation made from test data and calculated using formula per ICS 2-225 standards.

❄ Seal adds additional friction and value shown takes into consideration initial breakaway frictional force incurred during start-up or infrequent cycle operation. On continual cycle operation the repeat accuracy approaches ±3%.

Conversion Factors (Rounded)

psi x 703.1 = mm/H_2O
psi x 27.68 = in. H_2O
psi x 51.71 = mm/Hg
psi x 2.036 = in. Hg
psi x 0.0703 = kg/cm^2
psi x 0.0689 = bar
psi x 68.95 = mbar
psi x 6895 = Pa
psi x 6.895 = kPa

Note: psi - pounds per square inch (gauge).
H_2O at 39.2 °F
Hg at 32 °F

Mounting without Removing Cover

Bulletin 836T controls can be mounted without removing the front cover. This helps prevent foreign materials from entering the opened enclosure during the interval between mounting and wiring of the control.

Factory Set Pressure Controls

Rockwell Automation will factory set pressure controls to customer specified values. Unspecified pressure controls shipped from the factory are set at the maximum operating range and minimum differential. See Factory-Set Pressure Controls, page 13-44.

Temperature Range

The temperature range at +32 °F (0 °C) or below is based on the absence of freezing moisture, water, or other fluids that may solidify and impede the operation of the control. Temperature ratings:

Operating: –22… +150 °F (–30…+66 °C)
Storage: –22…+200 °F (–30…+93 °C)

Contacts

Bulletin 836T controls feature 2- and 4-circuit contact blocks for added control circuit flexibility. Two-circuit contact blocks have one normally open contact and one normally closed contact and may be arranged for single-pole double-throw operation or separate circuit operation having the same polarity. Four-circuit contact blocks may be arranged for double-pole double-throw operation or separate circuit operation having the same polarity.

2-Circuit Contact Ratings — NEMA A600 (ICS 2-125)

AC						DC	
Maximum AC Voltage	A		Continuous Carrying Current	VA		Maximum Voltage	[A]
	Make	Break		Make	Break		
120	60	6.00	10	7200	720	115…125	0.4
240	30	3.00	10	7200	720	230…250	0.2
480	15	1.50	10	7200	720	550…600	0.1
600	12	1.20	10	7200	720	—	—

IEC 337-1					
Maximum Operational Voltage U_e	Utilization Category	Maximum Continuous Current I_{th}	Volts U_e	Rated Operational Current Make	Rated Operational Current Break
AC600	AC-11	10	120…600 AC	7200 VA	720 VA
		10	72…120 AC	60 A	720 VA
DC600	DC-11	10	24…72 AC	60 A	10 A
		—	115…600 DC	50 VA	50 VA

4-Circuit Contact Ratings — NEMA B150 (ICS 2-125)

AC						DC	
Maximum AC Voltage	A		Continuous Carrying Current	VA		Maximum Voltage	[A]
	Make	Break		Make	Break		
120	30	3.00	5	3600	360	115…120	0.33
240	27.5	2.80	5	6600	660	230…240	0.17

IEC 337-1					
Maximum Operational Voltage U_e	Utilization Category	Maximum Continuous Current I_{th}	Volts U_e	Rated Operational Current Make	Rated Operational Current Break
AC150	AC-11	5	72…120 AC	30 A	360 VA
		5	24…72 AC	30 A	3 A
DC150	DC-11	—	115…240 DC	40 VA	40 VA

Note: NEMA does not rate contacts to switch low voltage and current. Bulletin 836T Styles T and D Pressure Controls are supplied with silver contacts. The devices are designed to deliver high force snap action to the contacts. This provides exceptional contact fidelity at 24V DC I/O card current level entry when the integrity of the enclosure is maintained.

Contact Wiring Configurations

2-Circuit Contact Blocks

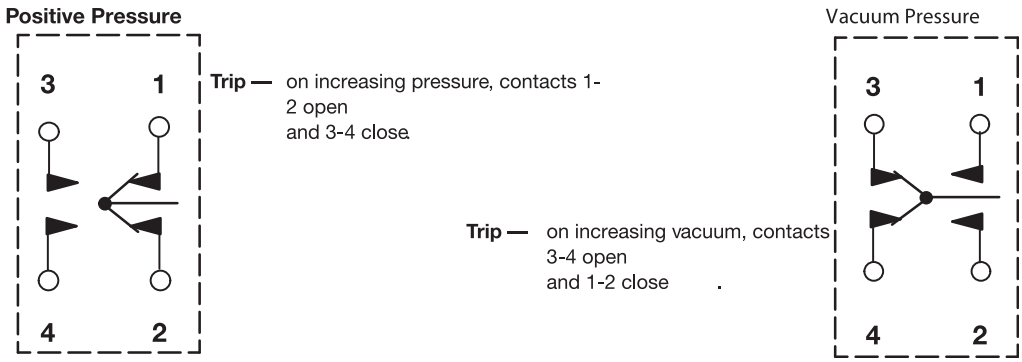

4-Circuit Contact Blocks

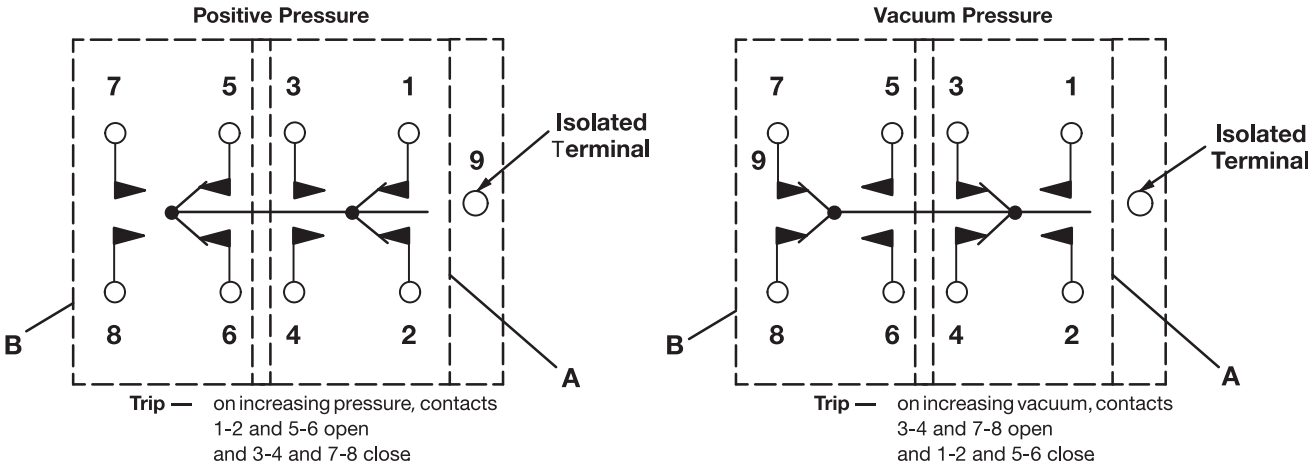

Note: Circuits A and B are electrically isolated from one another.
A or B circuits must be the same polarity.

Nameplate with Removable Paint Mask

The masks are convenient for the many users who repaint controls to match the machine or color code equipment. Saves costly time-consuming hand masking necessary so as not to conceal product functional specifications and approval listings. This feature is standard on most controls at no additional cost. The paint mask feature cannot be supplied on controls with pilot lights. They are also not available on those devices where it is necessary to remove the mask and add suffix modifications to the catalog number or specific customer identification in the space provided.

Figure 8
Removable paint mask

Cover with Transparent Mask and Instruction Label in Place

Cover with Mask Partially Removed

Pressure Control Selection

The selection table below is an overview of the five types of Bulletin 836T Pressure Controls Rockwell Automation offers. Each type of control is suitable for use on many types of applications. Pressure ranges, pressure connections, enclosure types, and the compatibility of the actulator with different types of pressure media are given to assist in the selection of which type of control to use.

836T				
Actuator Type	Copper Alloy Bellows	Type 316 Stainless Steel Bellows	Piston Type Without Seal	Piston Type With Seal
Adjustable operating ranges	30 in. Hg vacuum…650 psi	30 in. Hg vacuum…375 psi	40…5000 psi	80…5000 psi
Adjustable differentials	2…125 psi	2…90 psi	20…650 psi	40…650 psi
Maximum line pressures	up to 1300 psi	up to 600 psi	—	—
Occasional surge pressures	up to 1600 psi	up to 600 psi	up to 15,000 psi	up to 15,000 psi
Pressure Media				
Air	•	•		
Water	•	•	•	•
Hydraulic fluids	•	•	•	•
Corrosive liquids ∗		•		
Non-corrosive liquids	•	•	•	•
Corrosive gases ∗		•		
Non-corrosive gases	•	•		
Enclosures				
Type 1, 4 & 13	•	•	•	•
Type 7 & 9 and 4 & 13, IP66	•	•	•	•
Pipe Connections				
Standard pressure connection	1/4 in. N.P.T. female pipe thread	1/4 in. N.P.T. female pipe thread	3/8 in. N.P.T. female pipe thread SAE 7/16-20 UNF-2B thread O-ring boss seal SAE 9/16-18 UNF-2B thread O-ring boss seal	3/8 in. N.P.T. female pipe thread SAE 7/16-20 UNF-2B thread O-ring boss seal SAE 9/16-18 UNF-2B thread O-ring boss seal

∗ Corrosive liquids and gases must be compatible with Type 316 Stainless Steel Bellows.

Note: Pressure difference controls are supplied with either copper alloy or stainless steel bellows. See Product Selection on page 13-39 and page 13-40 for details.

Ordering Bulletin 836T Pressure Controls

When ordering Bulletin 836T Pressure Controls, consider the following:

- Device style
- Adjustable operating range
- Adjustable differential
- Maximum line pressure
- Occasional surge pressure
- Pressure media
- Enclosure type
- Pressure connection

How to Order

Step 1: Basic Device
Select a catalog number for the basic device.....**See pages 13-35…13-40.**

Step 2: Modifications
If required, add the appropriate modification suffix code(s) to the catalog number of the basic device.....**See page 13-41.**

Step 3: Accessories
If required, order accessories.....**See page 13-42.**

Step 4: Factory Options
Factory-set pressure controls.....**See page 13-44 .**

Catalog Number Explanation

Note: Catalog number must not include blank spaces.

836T –	T	25	1	J	X40	X15
	a	*b*	*c*	*d*	*e*	*f*

a

Style of Device	
Code	Description
T	Pressure control
D	Pressure difference control

b

Operator Type		
Code	Style	Description
25	T	Copper alloy bellows
26	T	Type 316 stainless steel bellows
30	T	Piston without seal
35	T	Piston with seal
40	T	Piston with seal (independent trip and reset adjustment)
45	D	Copper alloy bellows
46	D	Type 316 stainless steel bellows

c

Pressure Specifications
See “Pressure Specifications” on pages 13-35…13-40

d

Enclosure Type	
Code	Description
J	1, 4 & 13 Industrial use
E	7 & 9 and 4 & 13 Combined hazardous locations

e

Contact Block Type	
Code	Description
None	2-circuit contact block - standard
X40	4-circuit contact block

f

Modification 1
Add suffix codes in descending order whenever possible. (Optional. See page 13-41.)

Product Selection

Style T — Type 1, 4 & 13 with Pilot Light Option

Style T — Type 1, 4 & 13 with Pilot Light, Range Locking Cap, and 5-Pin Mini-Receptacle

Style T Pressure Controls with Copper Alloy Bellows∗ — S.P.D.T. 2-Circuit Contact Block

Standard Pressure Controls shipped from the factory are set at the maximum operating range and minimum differential.

Pressure Specifications				Enclosure Type	
	Adjustable Differential [psi] (Approximate Mid-Range Values)	Maximum psi		Type 1, 4 & 13	Type 7 & 9 and 4 & 13 ‡
Adjustable Operating Range [psi]		Line Pressure	Occasional Surge Pressure❄	Cat. No.	Cat. No.
30 in. Hg vacuum…35	2…7	80	90	**836T-T251J**	836T-T251E
6…75	3…15	200	220	**836T-T252J**	836T-T252E
12…150	6…30	350	450	**836T-T253J**	836T-T253E
20…300	10…55	600	750	**836T-T254J**	836T-T254E
40…450	20…90	900	1200	**836T-T255J**	836T-T255E
60…650	30…125	1300	1600	**836T-T256J**	836T-T256E

Style T Pressure Controls with Copper Alloy Bellows∗ — D.P.D.T. 4-Circuit Contact Block

Standard Pressure Controls shipped from the factory are set at the maximum operating range and minimum differential.

Pressure Specifications				Enclosure Type	
	Adjustable Differential [psi] (Approximate Mid-Range Values)	Maximum psi		Type 1, 4 & 13	Type 7 & 9 and 4 & 13 ‡
Adjustable Operating Range [psi]		Line Pressure	Occasional Surge Pressure❄	Cat. No.	Cat. No.
30 in. Hg vacuum…35	2.2…7	80	90	836T-T251JX40	836T-T251EX40
6…75	4.5…15	200	220	**836T-T252JX40**	836T-T252EX40
12…150	9…30	350	450	**836T-T253JX40**	836T-T253EX40
20…300	15…55	600	750	836T-T254JX40	836T-T254EX40
40…450	30…90	900	1200	836T-T255JX40	836T-T255EX40
60…650	45…125	1300	1600	836T-T256JX40	836T-T256EX40

∗ Copper alloy bellows may be used on water or air, and other liquids or gases not corrosive to this alloy.

❄ Transients (pulses) can occur in a system prior to reaching a steady-state condition. Surge pressures within published values generated during startup or shutdown of a machine or system, not exceeding eight times in a 24-hour period, are negligible.

‡ The combined Type 7 & 9 and 4 & 13 hazardous gas and dust service enclosure is supplied with special gasket and O-ring seal to diminish/exclude moisture, fluids, and dust from entering the enclosure. Enclosure is rated for the following environments:
CLASS I Groups C,D
CLASS II Groups E,F,G
CLASS III

Ordering Modifications

Modifications are ordered by adding the appropriate modification suffix code to the catalog number of the basic device. Add suffix codes to the catalog number in descending order.

Item	Description	Suffix Code
Oxygen/nitrous oxide service	Bellows and fittings specially prepared for oxygen and nitrous oxide service. Devices tested with pure oxygen, bellows plugged for protection from contamination and a tag warning against contamination is applied.	X2
External adjustment sealed	The 836T external adjustment is sealed, requiring cover removal to adjust differential (includes contact block shield)	X3
Tamper resistant setting	Range and differential adjustments are factory sealed. Price includes factory setting charge.✶	X4
SAE 7/16-20 UNF thread O-ring boss seal (piston type pressure control)	Female SAE straight thread O-ring seal designed to prevent leaks and minimize loss of hydraulic fluids.	X6
SAE 9/16-18 UNF thread O-ring boss seal (piston type pressure control)		X7
Neon pilot light 120V AC	A high-intensity neon pilot light for 120V AC, 60 Hz applications is available and can be wired for ON or OFF operation. The current rating is 1.0 mA.❄	X9
Red LED pilot light 24V DC	A high-intensity LED 24V DC pilot light is available to meet the requirements of the automotive, machine tool builders, and other industries. The current rating is 22 mA and can be wired for ON or OFF operation.❄	X15
Green LED pilot light 24V DC		X18
Special diaphragm assembly (piston type pressure control)	Diaphragm is made of Viton® and Nomex® fabric. Required when phosphate ester base and other adverse hydraulic fluids are present. Use on Catalog Numbers **836T-T300J** through **836T-T303J** series controls.	X25
Special diaphragm and O-ring assembly (piston type pressure control)	Diaphragm is made of Viton® and Nomex® fabric, O-ring is made of Viton® . Required when phosphate esterbase and other adverse hydraulic fluids are present. Use on Catalog Numbers **836T-T350J, -T351J, -T352J, -T353J** and **-T400J** series controls.	X26
Viton® enclosure gaskets	Special enclosure gaskets made of Viton® are available for applications where the standard gasket materials are not fluid compatible. Viton® is generally specified by the user for use with existing and newly developed coolants and hydraulic fluids to maintain enclosure integrity. These include cover, backplate, cover, and bellows or piston gaskets. **Note**: Viton® enclosure gaskets are often used with special diaphragm assemblies **(X25 or X26)**. See description above.	X29
5-Pin mini-type receptacle without pilot light❄	Select the desired pin wiring configuration from the diagrams on pages 13-45…13-47. Rated at 8 A, 600V.	See pages 13-45…13-47.
5-Pin mini-type receptacle with prewired pilot light❄	Select the desired pin wiring, pilot light wiring, and voltage from the diagrams on pages 13-45…13-47. Includes receptacle and pilot light. Rated at 8 A, 600V.	See pages 13-45…13-47.
5-Pin micro-connect receptacle without pilot light❄	Select the desired pin wiring configuration from the diagrams on pages 13-45…13-47. Add number "1" to the suffix number immediately following the letter "X." **Example: "X19" becomes "X119."** Rated at 3 A, 300V. Pin/Wiring Code: 1 – Red with white tracer, 2 – Red, 3 – Green (Gnd), 4 – Red with yellow tracer, 5 – Red with Black Tracer	See pages 13-45…13-47.
5-Pin micro-connect receptacle with prewired pilot light❄	Select the desired pin wiring configuration and pilot light (X9 or X15, see above for specifications) from the diagrams on pages 13-45…13-47. Add number "1" to the Suffix Number immediately following the letter "X." **Example: "X12X9" becomes "X121X9."** Rated at 3 A, 300V. Pin/Wiring Code: 1 – Red with white tracer, 2 – Red, 3 – Green (Gnd), 4 – Red with yellow tracer, 5 – Red with black tracer	See pages 13-45…13-47.
Additional optional receptacles and wiring❄	For assistance, please consult your local Rockwell Automation sales office or Allen-Bradley distributor.	

✶ See paragraph entitled "Factory-Set Pressure Controls" on page 13-44.
❄ Not available on the Type 7 & 9 and 4 & 13 combined enclosed devices.

Ordering Accessories

Accessories are ordered as separate catalog numbers. Select the required accessories from the accessories table below.

Item	Description	Type	Cat. No.
External fixed pulsation snubbers	Controls are supplied as standard with an internal pulsation snubber. However, a control properly selected and used within the adjustable range values, yet having a short bellows life, is a good indication of the presence of extreme surge pressures. External fixed pulsation snubbers are available to provide **additional** dampening when extreme pulsations or surges are present. Recommended if more than eight line surges occur in a 24-hour time period.	Snubber for bellows control 1/4-18 N.P.T. thread	**836-N7**
		Snubber for piston control 3/8-18 N.P.T. thread	**836T-N8**
Selectable element pulsation snubbers	Controls are supplied as standard with an internal pulsation snubber. However, a control properly selected and used within the adjustable range values, yet having a short bellows life, is a good indication of the presence of extreme surge pressures. Selectable element pulsation snubbers are supplied with five different elements to provide a selectable balance between maximizing pressure control life and minimizing control response time. Pulsation snubbers are supplied with the mid-range element already mounted and four other color-coded porosity elements included in the package. See "Selectable Pulsation Snubber Porosity Elements" table on this page for porosity specifications.	Snubber for bellows control 1/4-18 N.P.T. thread	**836-N40**
		Snubber for piston control 3/8-18 N.P.T. thread	**836T-N41**
	Female SAE straight thread O-ring seal designed to prevent leaks and minimize loss of hydraulic fluids. Use on applications with a pressure range of 550…5000 psi.	SAE 7/16-20 UNF-2B thread O-ring boss seal for piston controls	836T-N49
		SAE 9/16-18 UNF-2B thread O-ring boss seal for piston controls	**836T-N50**
Selectable pulsation snubber porosity elements	Package consists of five porosity elements and complete instructions. Elements are color-coded for easy identification. Elements are available in five different porosities for a wide range of applications. See selectable pulsation snubber porosity elements table.		See Table on this page
Locking cap	Deters unauthorized tampering of range setting. Once installed, the locking cap can be removed with a screwdriver to re-adjust the control.	—	**836T-N13**
Isolation trap with two 1/4 in. male pipe fittings	An isolation trap is available for high-temperature media applications from 150…600 °F or corrosive applications compatible with Type 316 stainless steel tubing and fittings. The isolation coil is inserted between the bellows of the pressure control and the elevated temperature line of the system. The isolation trap will fill with condensed water or can be filled with water or suitable fluid when installed. A silicone buffer fluid is available in a convenient dispenser. Copper alloy lower and higher pressure range bellows can be applied to many applications using the isolation trap. The silicone buffer fluid is used to isolate many corrosive substances from coming in contact with the bellows. The isolation trap is rated at 3000 psi working pressure. Not available for piston-type controls. See photo on this page.		836-N25
Isolation trap with one 1/4 in. male and one 1/4 in. female pipe fittings			836-N26
2 oz. of buffer fluid to fill bellows and tubing			836-N27
Metric electrical entry conduit adapters	BS 20 mm thread adapter		**836T-N36**
	Pg 13.5 thread adapter		836T-N37

Selectable Pulsation Snubber Porosity Elements

Recommended Type of Service	Color Code	Porosity	Cat. No.
Viscous fluids (over 500 SSU)*	None	Coarser	836-N43
Medium type oils (225…500 SSU)*	Black		**836-N44**
Water and light oils (30… 225 SSU)*	Brown		**836-N45**
Low viscosity fluids (under 30 SSU)*	Green		**836-N46**
Air and other gases	Red	Finer	**836-N47**
One of each of the above	—	Assorted	836-N48

* Saybolt Seconds Universal (SSU) — units of viscosity measurement.

Note: Color code is located on end of element.

Isolation Trap and Silicone Buffer Fluid

Fixed Pulsation Snubbers

Male/Female Pipe Threads

Selectable Element Pulsation Snubbers

Male/Female Pipe Threads

Pulsation Snubbers

Conversion Kits

Ordering Conversion Kits

Conversion Kits are ordered by adding the appropriate suffix code to the catalog number of the basic device. Select the required conversion kits from the table below.

Conversion Kits

Item	Description	Suffix Code
Neon pilot light conversion kit	Converts standard control to control with 120V AC neon pilot light. Not available on Type 7 & 9 devices. Kit includes pilot light and cover assembly.	N9
Red LED pilot light conversion kit	Converts standard control to control with 24V DC LED pilot light; has a 22 mA current rating. Not available on Type 7 & 9 devices. Kit includes pilot light and cover assembly.	N15
Green LED pilot light conversion kit	Converts standard control to control with 24V DC LED pilot light; has a 22 mA current rating. Not available on Type 7 & 9 devices. Kit includes pilot light and cover assembly.	N18

Example:
To convert a **Cat. No. 836T-T301J** to a **Cat. No. 836T-T301JX15**, order **Cat. No. 836T-T301JN15**.

Renewal Parts

Ordering Renewal Parts

Renewal Parts are ordered as separate catalog numbers. Select the required renewal parts from the table below.

Renewal Parts

Item	Description	Cat. No.
2-Circuit contact block renewal kit	Allows renewal of worn contacts for Bulletin 836T controls.	**836T-N1**
4-Circuit contact block renewal kit	Allows renewal of worn contacts for Bulletin 836T controls.	836T-N2
Renewal seals for piston-type controls	For use on Cat. No. 836T-T350J.	836T-N20
	For use on Cat. No. 836T-T351J.	836T-N21
	For use on Cat. No. 836T-T352J and 836T-T400J.	836T-N22
	For use on Cat. No. 836T-T353J.	836T-N23

Factory-Set Pressure Controls

Ordering factory-set pressure controls

- When a specific factory setting is requested, the specific terminal connections must be specified — e.g., N.O. or N.C. It must also be specified whether the contact operation is occurring on either increasing or decreasing pressure. For example:

Normally Closed (N.C.) contacts to open at∗ psi increasing pressure and close at∗ psi decreasing pressure.

—OR—

Normally Open (N.O.) contacts to close at∗ psi increasing pressure and open at∗ psi decreasing pressure.

- If minimum differential is not critical and the inherent minimum differential satisfies the application, specify the factory setting as follows:

Normally Closed (N.C.) contacts to open at∗ psi increasing pressure minimum differential.

—OR—

Normally Open (N.O.) contacts to close at∗ psi increasing pressure minimum differential.

Quality analog test gauges§ are used when applying requested factory settings to these rugged industrial grade pressure controls. (Gauges are calibrated and accuracy is traceable to the The National Institute of Standards and Technology.)

The actual requested setting is applied to the control by reading the set point directly from the test gauge being used. However, traceable gauge tolerance variance between source and user, and possible severe shock during shipping and installation, may contribute to the factory settings deviating slightly from the specified values. Slight recalibration can easily be accomplished upon final installation to meet specific requirements for the more demanding applications.

When installed, the controls will perform with a repeat accuracy as established in the paragraph entitled “Repeat Accuracy" (see page 13-54). Special service is available to factory-set controls on digital laboratory instruments, up to 600 psi, when required for more critical applications. An additional charge may be added for this service contingent upon setting tolerance and quantity. Please contact your local Rockwell Automation sales office or Allen-Bradley distributor.

∗ Specify psi (pounds per square inch) or, in. Hg vac (inches of mercury vacuum).

❄ Per ANSI B40.1 Grade 2A (0.5% accuracy full scale), Grade 3A (0.25% accuracy full scale).

If not specified, setting tolerances will be as shown in the table below.

Pressure Range	Tolerance
30 in. Hg Vac....0	+/- 1 in. Hg vac.
> 0...100 psi	+/- 1 psi
> 100...300 psi	+/- 2 psi
> 300...500 psi	+/- 5 psi
> 500...1000 psi	+/- 10 psi
> 1000...5000 psi	+/- 50 psi

Standards Compliance

- UL508
- CSA 22,2 No. 14
- UL698, 1604 (Haz. Loc.)
- NEMA ICS-2

Certifications

File and Guide Numbers

	UL		CSA	
	File Number	Guide Number	File Number	Class
Bulletin 836T	E14842	NKPZ	LR1234	3211-03
	E53048 (Haz. Loc.)	NOWT	LR11924 (Haz. Loc.)	3218-05
	Hazardous Location enclosure devices are not CE compliant. All other enclosed devices are CE compliant.			

Approximate Dimensions and Shipping Weights

Dimensions in inches (millimeters). Dimensions are not intended to be used for manufacturing purposes.

Type 4 & 13 (Bellows)

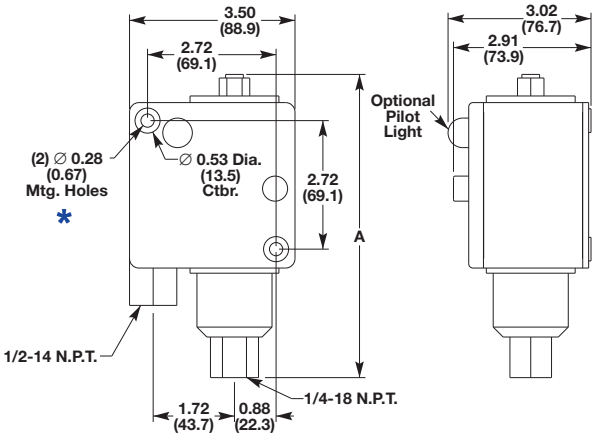

Approximate Shipping Weight 3-1/2 lbs. (1.6 kg)

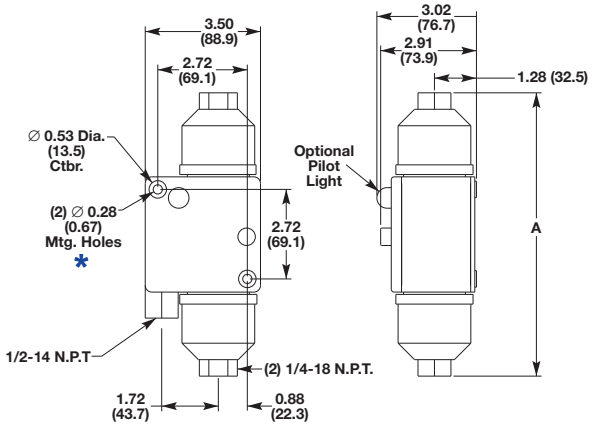

Approximate Shipping Weight 4 lbs. (1.8 kg)

Cat. No.	A Dimensions	Cat. No.	A Dimensions	Cat. No.	A Dimensions	Cat. No.	A Dimensions
836T-T251J	6.65 (169)	**836T-T254J**	6.95 (176)	**836T-D450J**	8.60 (218)	836T-D460J	8.60 (218)
836T-T260J		**836T-T255J**					
—	—	**836T-T256J**	7.09 (180)	**836T-D451J**	8.14 (207)		
836T-T252J	6.41(163)	**836T-T262J**	7.33 (186)	**836T-D452J**		**836T-T252J**	8.5 (216)
836T-T253J		**836T-T263J**	7.25 (184)			836T-D463J	10.06 (256)
836T-T261J				**836T-D453J**	9.5 (241)		

Type 4 & 13 (Piston)

(Does not include Dual Bellows Devices)

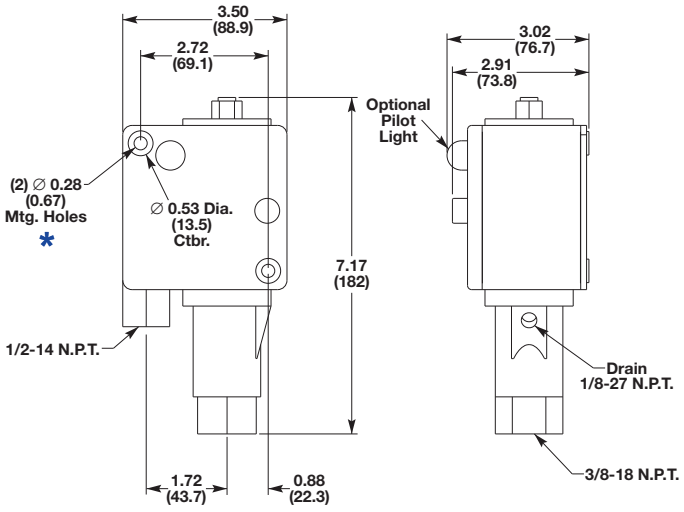

Approximate Shipping Weight 4.5 lbs. (2.0 kg)

Type 4 & 13 and 7 & 9 Bellows and Piston Type

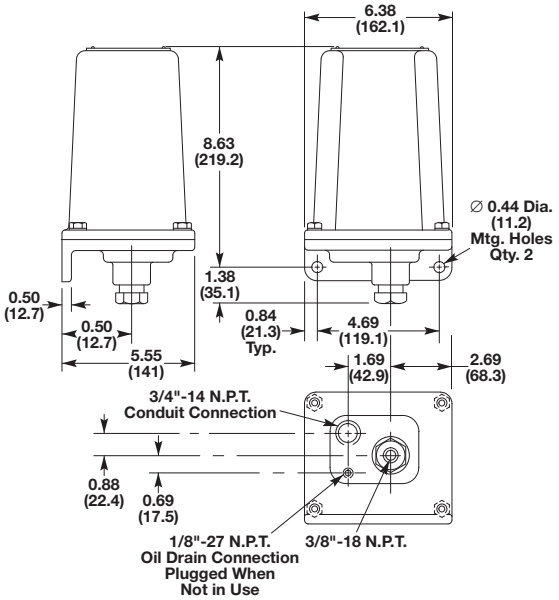

Approximate Shipping Weight 10 lbs. (4.5 kg)

∗ (2) mounting screws are required: 3/16 x 20 x 2 in. Counterbore depth is 1-1/8 in. Overall depth of mtg hole (front to back) is 2-1/4 in.

Cat. No.	
836T-T300J	836T-T350J
	836T-T351J
836T-T301J	836T-T352J
836T-T302J	836T-T353J
836T-T303J	836T-T400J

This page is intentionally left blank

CS-451-200 : Identification sheet

VWTC PROJECT NUMBER:	5000218009	REV:	1
PROJECT NAME:	AEM AMARUQ	SUBMITTED TO (COMPANY):	AGNICO EAGLE MINES
ENGINEER:	Gabriel Hébert	SUBMITTED TO (RESPONSIBLE)	
PROJECT MANAGER:	Clément B	PROJECT NUM REFERENCE.:	
PHONE NUMBER:		LOT NUMBER:	

SUPPLIER	EQPT CODE	EQPT TAG NO	DIA	DESCRIPTION	INFO 1	INFO 2	INFO 3	APPLIC.	NOTE	REV
E&H	IESWLE5204819	LSL9-621	ENCLOSURE: 110 x 218 mm, SHAFT:	HOPPER LOW LEVEL SWITCH	LEVEL SWITCH // MANUF: E&H// MODEL :FTE31-C6DB11 Soliswitch FTE31, thread NPT Level limit switch, Paddel. Solid >= 100 g/dm3. 1x relay double pole change over switch.	Housing: Plastics PBT, IP65 NEMA4 Rod: steel 1.4305 (303). 1x Cable entry NPT 1/2. Appval:C CSA DIP Cl. II,III, Div.1, Gr.EFG Power : 24VDC relay	Paddel; Additional Option:1 316Ti; basic version Version:1 Basic version B Marking: 71072711: TAG on device	HYDRAPOL 3500		rev1

This page is intentionally left blank

Level | Pressure | Flow | Temperature | Liquid Analysis | Registration | Systems Components | Services | Solutions

Technical Information

Soliswitch FTE31

Level Limit Switch
Economical paddle limit switch
For application in dust hazardous explosive areas

Application areas

The universal paddle level limit switch FTE 31 is used as a full, empty and demand alarm on silos containing solids. Its construction and materials make the unit suitable for use in the food industry.
The unit is suitable as a level limit switch in dust explosion hazardous areas.
Typical applications are level detection in:

- Cereals
- Sugar
- Cacao
- Animal feeds
- Washing powders
- Chalk
- Dry plaster
- Cement
- Granulates
- Wood chips

Features and benefits

- Simple operation
- Proven principle
- Slip clutch
- Ingress protection to IP 65 / NEMA 4x / Type 4x

TI068R/09/en
51002384

Endress+Hauser
People for Process Automation

Function and system construction

Measurement principle

The shaft and paddle are driven using a reduction gear and synchronous motor. If the paddle is stopped by material covering it, the hinged motor in the housing moves from the rest to the switch position. This movement operates two switch contacts, the first is for external level indication and the second switches the power off to the motor.
The paddle starts to rotate once the medium level falls below the paddle, the hinged motor returns to its rest position and the two contacts switch to normal operation. Intermittent loads that operate against or even in the same direction of rotation are evened out by using a slip clutch.

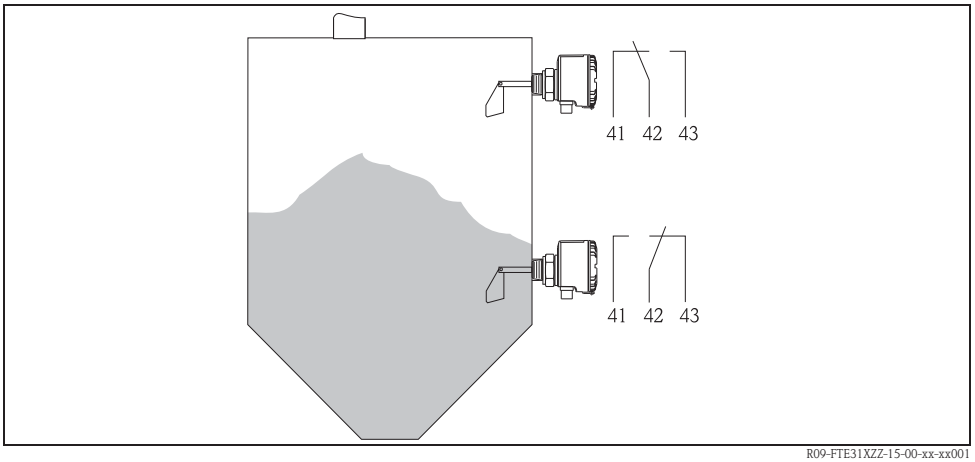

Level measurement changeover contact

System

Complete level measurement limit switch, paddle, shaft with synchronous motor and slip clutch, single pole double throw switch.

Input values

Measurement value

Level of solids

Range

Variable types dependent on:
- Installation point
- Length of shaft or rope

Output values

Output signal

Binary, once the set level is reached the micro switch contact changes.

Output circuit

Connectable load:
≤ 250 VAC, 10 A nominal current, 3 A on motor

Switch output

Potential free changeover contact (SPDT)

Switch delay

Approx. 2 seconds

Mechanical life time

min. 500 000 switch cycles

Power supply

Electrical connection

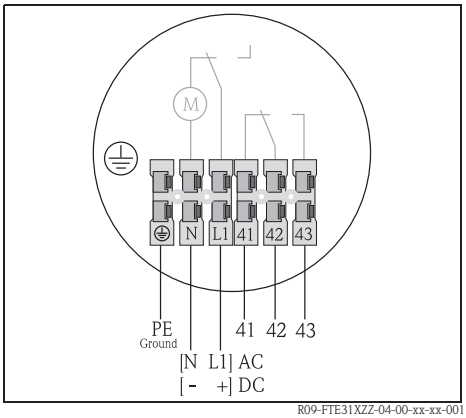

Terminal layout FTE31

AC	DC	
PE		Earth (ground) connection
N	-	Power connection
L	+	Power connection
41		Normally closed contact
42		Common contact
43		Normally open contact

Cable entry

Power supply and signal cable (in-/output):
- Thread for cable gland [½" NPT]

Power supply

Standard:
- 230 V AC, 50/60 Hz (±10%)

Option:
- 115 V AC, 50/60 Hz (±10%)
- 20...28 V DC

Power consumption

AC: P < 4,5 VA; DC: P < 3,5 W

Current requirement

DC: $I_{max} \leq 66$ mA

Installation conditions

Installation hints

Installation position:
- horizontal up to shaft length > 300 mm (11.8") or vertical (see diagram)
- side load on the shaft max. 60 N
- Load on the rope max. 1500 N

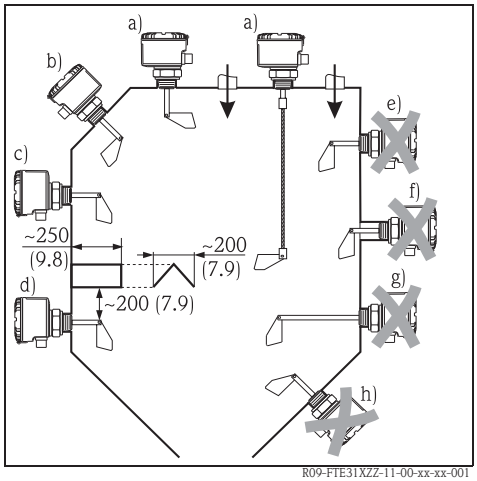

Installation of the FTE31 paddle level limit switch, dimensions in mm (inch).

Correct installation	Incorrect installation
a) Vertical from top of silo	e) In dierction of solids flow
b) Angled from the top	f) Installation coupling too long
c) From the side	g) Horizontal with shaft length > 300 mm
d) With protective cover against falling solids	h) Angled from below

The FTE31 paddle limit switch can be installed in solids silos as shown under points a, b, c and d.

Environment conditions

Ambient temperature	- 20 °C ... + 60 °C (-4 °F ... + 140 °F)
Storage temperature	- 20 °C ... + 60 °C (-4 °F ... + 140 °F)
Ingress protection	■ IP 65 / NEMA 4x / Type 4x with closed cover ■ IP 20 / NEMA 1 with open cover
Vibration protection	IEC 654-3, dimension V.S.1 (v<3 mm/s, 1<f<150 Hz)
EMC	To EN 61 326, Class B
Protection class	I
Over voltage protection category	II
Altitude	Up to 2000 m (6560 ft) above sea level.

Process conditions

Material temperature range	- 20 °C ... + 80 °C (-4 °F ... 176 °F)
Operating pressure range	0.5 bar ... 1.8 bar (7.25 PSI ... 26.1 PSI)
Material conditions	Solids - grain size ≤ 50 mm (1.97")
Product density (solids weight)	100 g/l

Mechanical construction

Model/dimensions

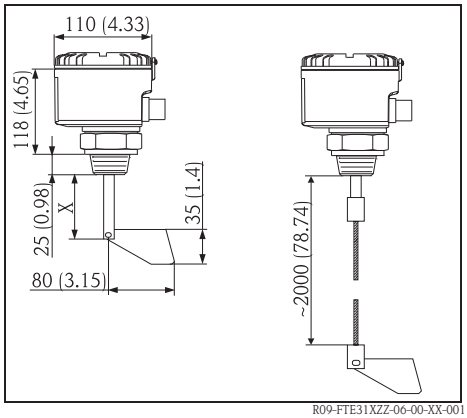

Construction of the compact unit - dimensions in mm (inch).

Shaft variations:

Standard shaft X = 75 mm (2.95")
Special length X:
100 mm (3.94"), 200 mm (7.87"), 300 mm (11.8"), 400 mm (15.75"), 500 mm (19.7"), 600 mm (23.6")

Rope version:

Rope length approx. 2000 mm (78.7"), can be shortened.

Caution!
If the shaft length is > 300 mm (11.8") the FTE31 can only be installed vertically downwards.

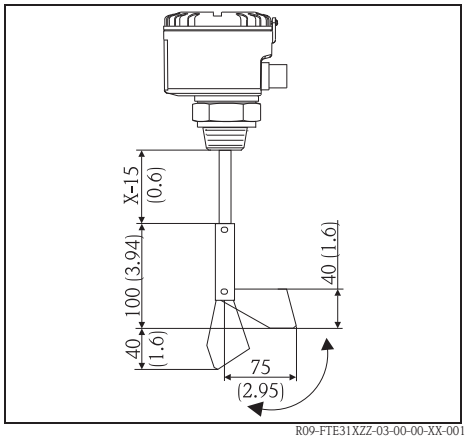

Hinged paddle - dimensions in mm (inch)

Option hinged paddle:

The paddle is hinged so that it can be easily mounted through a threaded mounting boss. Because it is spring loaded the paddle retuns to its normal operation once inside the vessel. Removal of the unit is always possible.

The hinged paddle can be mounted to both the solid shaft as well as the rope extension versions.

Weight	approx. 1 kg (2.2 lb)
Materials	Housing, cover and process connection: – VALOX 553 plastic with 30% fibre glass. Shaft: – Corrosion resistant steel 1.4435 Paddle: – Corrosion reseitant steel 1.4435 Option: – Process connection - corrosion resistant steel 1.4435 – Rope extension- corrosion resistant1.4571 with corrosion resistant steel 1.4305 weight – Hinged paddle - corrosion resistant steel 1.4435 O-ring seal: – NBR Shaft sealing ring: – NBR Perbunan Cable entries NPT ½": – Nickel plated brass
Shaft bearing	High performance friction bearing - maintenance free
Shaft revolution	approx. 1 revolution per minute
Process connection	Threaded boss - thread NPT 1¼" or NPT 1½"
Electrical connection	Plug-in terminals 2.5 mm^2 (14 AWG) solid core, 1.5 mm^2 (16 AWG) stranded with ferrule

Certification

CE approval	The measurement system fulfils the requirements demanded by the EU regulations. Endress+Hauser acknowledges successful unit testing by adding the CE mark.
FM	DIP Class II, Div. 1+2, Groups E, F, G and Class III
CSA	DIP Class II, Div. 1+2, Groups E, F, G and Class III

Ordering information

Soliswitch FTE31, Thread NPT

Approval:							
A	Non-hazardous area						
B	FM DIP Cl. II, III, Div. 1, Gr. EFG						
C	CSA DIP Cl. II, III, Div. 1, Gr. EFG						
		Power supply:					
		1	230 V AC, relay 250 V AC, 100 mA-10 A				
		2	115 V AC, relay 250 V AC, 100 mA-10 A				
		3	20...28 V DC, relay 250 V AC, 100 mA-10 A				
		4	230 V AC, relay PLC 48 V DC, 10 mA-100 mA				
		5	115 V AC, relay PLC 48 V DC, 10 mA-100 mA				
		6	20...28 V DC, relay PLC 48 V DC, 10 mA-100 mA				
				Process connection:			
				A	Thread NPT 1¼", Valox553 (PBT)		
				B	Thread NPT 1¼", 316L		
				C	Thread NPT 1½", Valox553 (PBT)		
				D	Thread NPT 1½", 316L		
						Version:	
						A	Shaft 100 mm
						B	Shaft 200 mm
						C	Shaft 300 mm
						D	Shaft 400 mm, vertical installation
						E	Shaft 500 mm, vertical installation
						F	Shaft 600 mm, vertical installation
						Y	Other
						1	Shaft 75 mm, compact
						2	Rope 2 m, 316, shortable
							Paddle; Additionla option:
						1	316Ti; basic version
						2	316L; fold-away, w/o signal lamp
FTE31-							⇐ **Ordercode**

This ordering information can give an overview about the available order options. The Endress+Hauser sales organization can provide detailed ordering information and information on the order code.

Accessories

Hinged paddle for retro-fitting
Order no. 50089768

Further documentation

Short form operating manual KA094R/09/a3

Instruments International

Endress+Hauser
Instruments International AG
Kaegenstrasse 2
4153 Reinach
Switzerland

Tel. +41 61 715 81 00
Fax +41 61 715 25 00
www.endress.com
info@ii.endress.com

Endress+Hauser
People for Process Automation

CS-504-100 : Identification sheet

VWTC PROJECT NUMBER:	5000218009	REV:	1
PROJECT NAME:	AEM AMARUQ	SUBMITTED TO (COMPANY):	AGNICO EAGLE MINES
ENGINEER:	Gabriel Hébert	SUBMITTED TO (RESPONSIBLE)	
PROJECT MANAGER:	Clément B	PROJECT NUM REFERENCE.:	
PHONE NUMBER:		LOT NUMBER:	

SUPPLIER	EQPT CODE	EQPT TAG NO	DIA	DESCRIPTION	INFO 1	INFO 2	INFO 3	APPLIC.	NOTE	REV
SHUTTE&KOERTING	EJGUEJ200372	IJ9-621	N/A	EDUCTOR	MANUFACTURER: SHUTTE&KOERTING / MODEL: 2"- Fig264 PVC Eductor	N/A	N/A	HYDRAPOL 3500		

This page is intentionally left blank

Schutte & Koerting

Water Jet Eductors

Introduction

The Water Jet Eductor is a type of ejector which utilizes the kinetic energy of a pressurized liquid to entrain another liquid, mix the two, and discharge the mixture against a counter pressure. Ejectors of this type are used throughout industry for pumping and mixing operations.

Application

Water jet eductors have numerous uses in the plant such as lifting, pumping, mixing and agitation of liquids, granular solids and slurries. Some specific applications are: draining flooded areas, emptying tanks and sumps, pumping and mixing operations in oil treating systems, dewatering sand and coal barges, introducing anti-knock agents and coloring additives into gasoline, continuous blending, acidifying, causticizing of oils, producing emulsions, pumping food products, pumping sand and filter clay, tank mixing, and various proportioning operations. As an example of eductor performance in a typical use, a jet eductor measuring 8½" in length will empty a 500 gallon water tank in less than half an hour, using water at 60 psig, as the sole source of motive power.

Features

Self Priming Eductors require no priming and can be used for either continuous or intermittent operation.
Simple and Reliable Since the basic eductor has no moving parts to wear or break, only periodic inspection is required.
Corrosion and Erosion Resistant Because they can be made from most materials, or coated with corrosion resistant materials, eductors can be made resistant to the corrosive effects of the liquids handled and the environment.
Automatic Control Units can be adapted for automatic operation by means of a regulating spindle or a snap valve and float arrangement.
Non-Electrical Eductors can be used in hazardous locations where electrically operated alternatives would require expensive explosion-proofing.
Easy to Install Either threaded or flanged connections are available. Units are compact, relatively light and can be adapted to a variety of piping configurations.
Low Cost Water eductors are inexpensive in relation to the work they do.

Construction

Water Jet Eductors consist of only three basic components: a converging nozzle, a diffuser (or venturi) and a body to hold these parts in their proper relative positions and provide a suction chamber.

Converging Nozzle | Diffuser (or Venturi) | Body - holds diffuser and nozzle in position

Jet ejectors can be made from most workable materials, such as: cast iron, bronze, stainless steel, aluminum, polyvinyl chloride, polyester fiberglass, Phenolic Fiberglass Reinforced Plastic (FRP), Teflon[2] and Hastelloy[3].

A variety of types and sizes are available as noted on the following pages. Certain variables such as pressure, temperature, viscosity, density, operating conditions of suction and discharge fluids, and desired results must be considered in determining the type of eductor best suited to your needs. S&K engineers will work with you to select the proper eductor for your application.

Request Performance Data Supplement 2M for operating characteristics of water jet eductors.

Index

Description	Page
Fig. 264 Water Jet Eductor	2
Fig. 266 Water Jet Eductor	2
Fig. 264 PVC and Kynar Water Jet Eductor	3
Fig. 2645 Automatic Eductor	4
Fig. 265 Liquid Jet Eductor	5
Fig. 242 Condensate and Mixing Eductor	6
Fig. 258 Tank Mixing Eductor	7
Fig. 268 Tank Mixing Eductor	7
Fig. 254 Hopper-Equipped Eductor	9
Fig. 267 Hopper-Equipped Eductor	9
Fig. 227 Hopper-Equipped Eductor	9
Fig. 224 Water Jet Sand and Mud Eductor	10
Fig. 235 Annular Multi-Nozzle Water Jet Eductor	11
Fig. 222 Portable Eductor	12
Fig. 212 Corrosion Resistant Eductor	12
Typical Applications of S&K Water Jet Eductors	12

Fig. 264 and Fig. 266 Water Jet Eductors

S&K Fig. 264 and Fig. 266 Water Jet Eductors are designed for liquid pumping and mixing operations and for the handling of some solids where requirements do not necessitate capacities greater than those obtained with sizes up to and including 6". They are considered the standard eductors within this size range. Typical applications begin on page 12.

In operation, pressure liquid enters the eductor through the pressure nozzle and produces a high velocity jet. This jet action creates a vacuum in the line which causes the suction liquid to flow up into the body of the eductor where it is entrained by the pressure liquid. Both liquids are thoroughly mixed in the throat of the eductor and are discharged against back pressure. The streamlined body with no pockets permits the pressure liquid to move straight through the eductor and reduces the possibility of solids in the suction material collecting and clogging. In addition, pressure drop in the suction chamber is held to a minimum.

Accompanying Bulletin 2M Supplement Performance Data provides performance information.

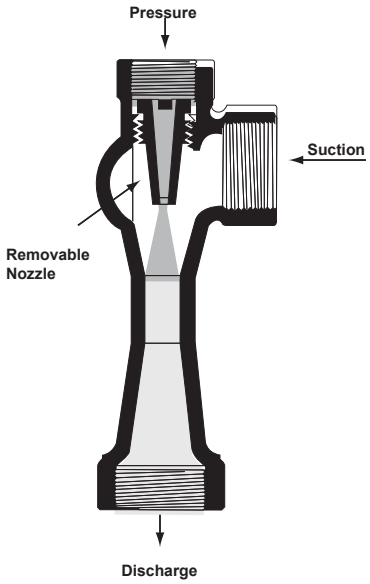

Fig 1. FIG. 264 EDUCTOR
Eductors of this type have streamlined bodies with threaded pipe connections. They are made in sizes ranging from 1/2" to 3" and are stocked in these sizes in ductile iron and bronze and Fig. 316 stainless steel. They are stocked in sizes from 1/2", 2", and 3" in PVC. Other materials are available on order.

Fig. 2. FIG. 264 EDUCTOR

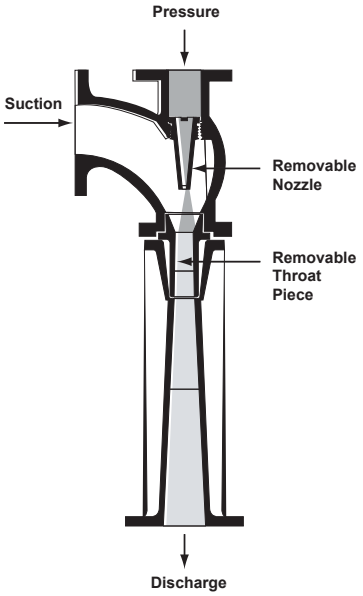

Fig. 3. FIG. 266 EDUCTOR.
These eductors are similar to Fig. 264 Eductors except that they have flanged connections and removable throat bushings along with removable nozzles. They are supplied in cast iron, bronze-mounted in 4" and 6" sizes. Other materials can be supplied on special order.

Table 1. Sizes and Dimensions, Fig. 264 and Fig. 266 Water Jet Eductors

Size In Inches	Connections In Inches		Wgt. In Lbs.	Working Pressures						Dimensions in Inches			Max. Round Particle Size In Inches
	Suction Disch.	Pressure		Cast Iron		Bronze		Stainless Steel		A	B	C	
				Motive psi	Body psi	Motive psi	Body psi	Motive psi	Body psi				
Fig. 264 Eductor													
1/2	1/2	3/8	3/4	150	125	125	100	600	500	1 1/16	2 9/16	1 1/8	1/16
3/4	3/4	1/2	1 1/4	125	125	100	100	500	500	1 3/8	3 3/8	1 1/4	1/8
1	1	3/4	2	150	150	150	125	600	600	1 1/2	4 3/16	1 5/8	5/32
1 1/2	1 1/2	1	4	150	100	125	90	600	400	2	6 1/2	2	5/16
2	2	1 1/4	6	150	100	125	85	600	400	2 1/4	7 5/8	2 1/4	3/8
2 1/2	2 1/2	1 1/2	11	200	150	200	125	600	300	2 11/16	9 1/4	3 1/8	3/8
3	3	2	20	250	150	225	125	600	400	3 1/8	11 1/4	3 1/2	13/16
Fig. 266 Eductor													
4	4	2 1/2	100	125	125	-	-	-	-	4 3/8	19 1/4	7 13/16	1
6	6	4	180	125	125	-	-	-	-	6 1/16	28 3/8	9 1/8	1 1/8

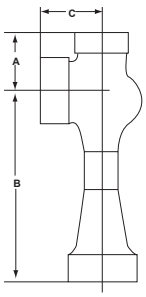

Fig. 264

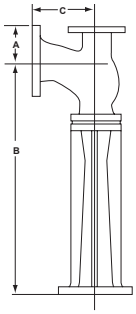

Fig. 266

Schutte & Koerting • 2510 Metropolitan Drive • Trevose, PA 19053 • USA • tel: (215) 639-0900 • fax: (215) 639-1597 • www.s-k.com • sales@s-k.com

Fig. 264 PVC and Kynar Water Jet Eductors

Fig. 264 PVC and Kynar Eductors offer resistance to many corrosive media. PVC Eductors are not recommended, however, for acetone, ketones, ether, esters, aromatic hydrocarbons or chlorinated hydrocarbons. A table of recommended uses is available on request. Maximum temperature rating is 150°F. Kynar Eductors will handle PVC applications including those mentioned above. Kynar's temperature limitation is 250°F. Pressure ratings are given in Table 2.

Fig. 264 PVC and Kynar Eductors operate on the same principle as do all other S&K Eductors. Performance characteristics with water are shown in Bulletin 2M Supplement Technical Data. For performance with other liquids, contact S&K.

Nozzles and diffusers are not removable on these eductors. Sizes 1" and smaller are of molded construction.

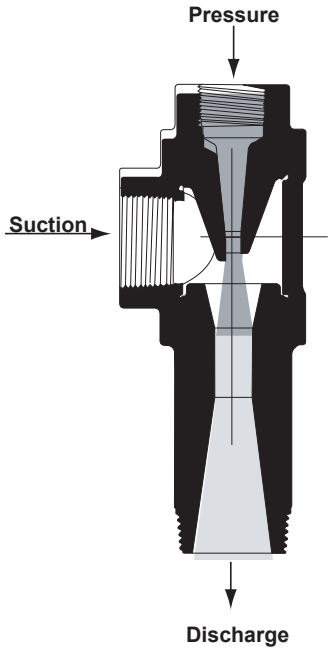

Fig. 4. FIG. 264 PVC EDUCTOR. Sizes from 1 1/2" up are designed as shown here and in Fig. 5. On these sizes, the pressure and suction connections are female and the discharge connection is male. All connections are threaded.

Fig. 5. FIG. 264 PVC EDUCTOR.

Table 2. Sizes, Dimensions, and Particle Size Data, Fig. 264 Water Jet Eductor

Size in Inches	Connections in Inches		Wgt. In Lbs.	Dimensions in Inches			Working Pressure (psig) at 75°F	Max. Round Particle Sizes (in inches) Eductors will Handle
	Suction Disch.	Pressure		A	B	C		
1/2s	1/2s	3/8s	1/2	1 7/16	3 1/4	1 7/16	325	1/16
1/2	1/2	3/8	1/2	1 7/16	3 1/4	1 7/16	325	1/16
3/4	3/4	1/2	1/2	1 11/16	3 1/2	1 11/16	275	1/8
1	1	3/4	1/2	1 7/8	3 11/16	1 7/8	250	5/32
1 1/2	1 1/2	1	1 1/2	2 9/16	5 11/32	2 1/16	200	5/16
2	2	1 1/4	2 1/2	3 1/32	6 21/32	2 5/32	185	3/8
3	3	2	6 3/4	4 1/8	9 1/2	3 7/8	165	13/16

s = denotes smaller internals.

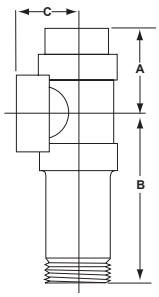

Fig. 6. FIG. 264 KYNAR EDUCTOR. 1/2" to 1" Design. Sizes 1/2", 3/4", and 1" look like this. All connections are female and are threaded.

Fig. 2645 Automatic Eductor

Fig. 2645 Automatic Water Jet Eductors are used to pump out sumps (pits, tanks, etc.) where liquid accumulates slowly but must be evacuated when it reaches a predetermined level.

As the liquid in the sump (basin, tank, cellar, bilge, etc.) accumulates, it raises the ball float until the upward action of the float opens the snap-acting valve, admitting motive fluid into the pressure connection of the eductor.

The jet action of the motive fluid creates a vacuum in the eductor and entrains the suction fluid, discharging both fluids under pressure. As the suction fluid is thus pumped out, the sump level drops to a point where the snap-acting valve shuts off. No further pumping action takes place until the sump again fills to the operating level.

Operation of the Fig. 2645 Eductor is completely automatic. It is self-operated, requires no electrical connections or any external power other than the motive fluid. The snap-acting valve and ball float are the only moving parts. The full assembly is so compact it can be installed in tanks as small as 13 1/2" diameter.

For performance information, see accompanying Bulletin 2M Supplement Performance Data.

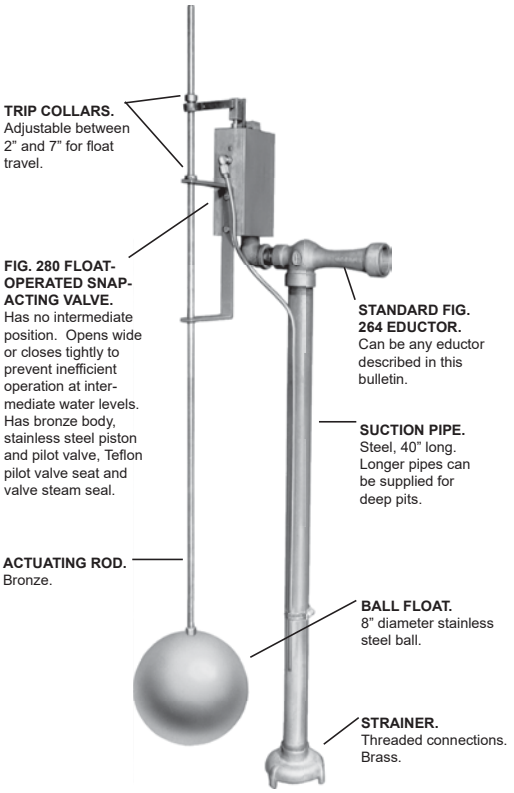

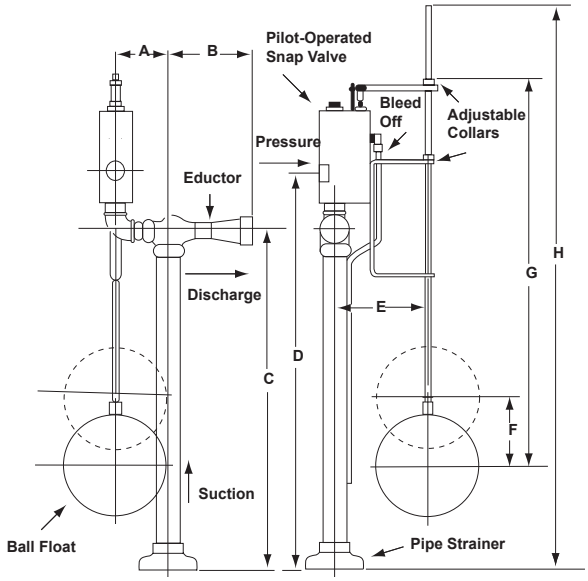

Table 3. Sizes and Dimensions, Fig. 2645 Automatic Eductor

Eductor Size In Inches	Connections In Inches N.P.T.		Wgt. In Lbs.	Working Pressure (Bronze)		Dimensions in Inches							
	Suc.-Disch.	Pressure (Snap-Valve)		Motive* (psig)	Body (psig)	A	B	C	D	E	F	G	H
3/4	3/4	1	24	100	100	3 11/16	3 3/8	41	44 7/8	7 5/6	5 3/8	47 1/8	60
1	1	1	26	150	125	4 5/16	4 3/16	41	44 7/8	7 5/6	5 3/8	47 1/8	60
1 1/2	1 1/2	1	32	125	90	4 1/8	6 1/2	41	44 7/8	7 5/6	5 3/8	47 1/8	60
2	2	2	43	125	85	6 1/4	7 5/8	38 3/8	43 15/16	7 7/16	5 3/8	47 1/8	60
2 1/2	2 1/2	2	65	200	125	6 11/16	9 1/4	38 3/8	43 15/16	7 7/16	5 3/8	47 1/8	60
3	3	2	81	200	125	6 3/8	11 1/4	38 3/8	43 15/16	7 7/16	5 3/8	47 1/8	60

*Minimum motive pressure for all Fig. 2645 Eductors: 40 psig

Fig. 265 Liquid Jet Eductor

Fig. 265 Liquid Jet Eductor is similar in design to the Fig. 264 Water Jet Eductor and is made for liquid pumping and mixing operations and for handling some solids where requirements do not necessitate capacities greater than those obtained with sizes up to and including 3". Typical applications begin on page 12.

The Fig. 265 Liquid Jet Eductor provides higher discharge pressures and higher suction flow capacities than other standard eductors.

In operation, pressure liquid enters the eductor through the pressure nozzle and produces a high velocity jet. This jet action creates a vacuum in the line which causes the suction liquid to flow up into the body of the eductor where it is entrained by the pressure liquid. Both liquids are thoroughly mixed in the throat of the eductor and are discharged against back pressure. The streamlined body with no pockets permits the pressure liquid to move straight through the eductor and reduces the possibility of solids in the suction material collecting and clogging. In addition, pressure drop in the suction chamber is held to a minimum.

Accompanying Bulletin 2M Supplement Performance Data provides performance information.

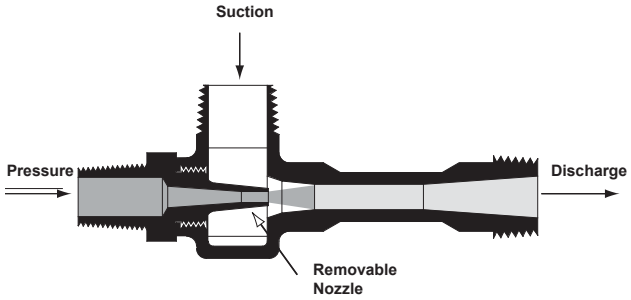

Fig 8. FIG. 265 LIQUID JET EDUCTOR
Eductors of this type have streamlined investment cast bodies with threaded NPT male pipe connections. They are made in sizes ranging from 3/4" to 3" and are stocked in these sizes in Fig. 316 stainless steel. Other materials are available on order.

Fig. 9. FIG. 265 EDUCTOR.

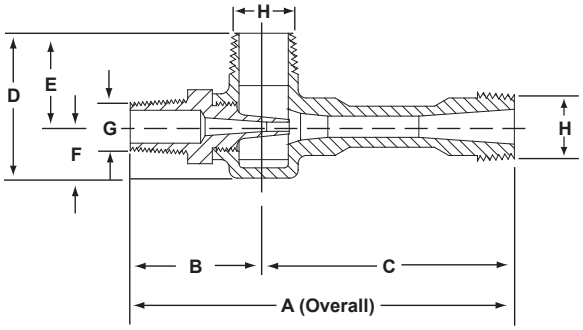

Table 265. Sizes and Dimensions, Fig. 265 Liquid Jet Eductor

Size (In Inches)	Wgt.	Dimensions						Connections	
		A	B	C	D	E	F	G	H
3/4	1	5 7/8	2	3 7/8	2 1/4	1 1/2	3/4	3/8	3/4
1	2	7 1/8	2 1/4	4 7/8	2 3/4	1 3/4	1	1/2	1
1 1/2	4	11	2 3/4	8 1/4	3 21/32	2 1/2	1 5/16	1	1 1/2
2	8	14 3/8	3 1/8	11 1/4	5	2 7/8	2 1/8	1 1/4	2
3	30	23 7/8	4	19 7/8	8	5	3	2	3

Fig. 242 Condensate and Mixing Eductor

Fig. 242 Water Jet Eductors are designed to mix two liquids intimately in various proportions in operations where the pressure liquid is the greater proportion of the mixture. Typical applications include: removal of condensate; mixing gasoline with acid; blending and proportioning chemical solutions; and diluting acids and alkali.

In operation, the pressure liquid issues from the nozzle at high velocity and entrains the suction liquid. The extreme turbulence in the throat of the eductor mixes the two liquids, blending and emulsifying thoroughly and completely. Colloidal suspensions can also be produced.

Entrainment ratio is dependent upon the eductor design. Close regulation within the design limits is usually obtained by a valve in the suction liquid line.

The pressure drop between the pressure liquid and the discharge should be at least 10 psi to give adequate mixing, and the difference between the discharge pressure and the suction pressure should not exceed 75% of the difference between the operating pressure and the suction pressure.

When used for removal of condensate, the eductor should be installed three feet below the condensate level at the drain of the condenser. For performance information, see Technical Data Supplement to Bulletin 2M.

Fig. 10. FIG. 242 EDUCTOR.

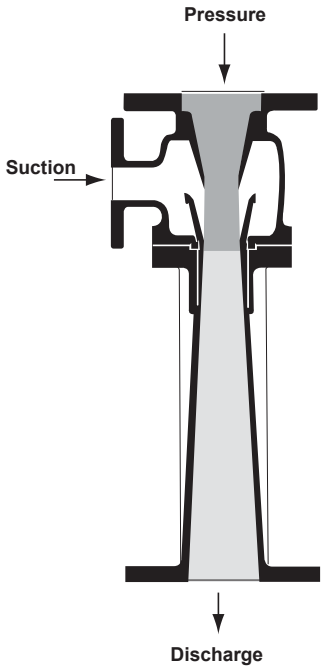

Fig. 11. FIG. 242 EDUCTOR.
The 242 is the flanged type Condensate and Mixing Eductor. This style, too, is made in bronze or cast iron, bronze mounted, but can be supplied in other materials. Nozzles and throat bushings are removable.

Table 4. Sizes and Dimensions, Fig. 242 Condensate and Mixing Eductor

Size No.	Connection in Inches			Dimensions in Inches			Weight in Lbs.
	Pressure	Suction*	Discharge	A	B	C	
2	2	1 - 2	2	4 3/4	11 3/4	3 3/4	50
2 1/2	2 1/2	1 1/4 - 2 1/2	2 1/2	3 1/2	15 1/4	4	60
3	3	2 - 3	3	4	17 15/16	4 5/8	70
4	4	2 - 4	4	5 9/16	20 3/8	5 1/2	80
6	6	3 - 6	6	6 1/4	29	6	270
8	8	4 - 8	8	14 1/16	35 1/2	7 13/16	450

*Note: Suction connection may vary to suit conditions.

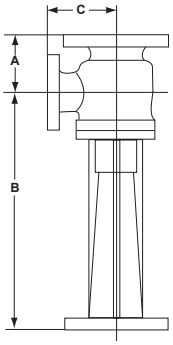

Fig. 258 and Fig. 268 Tank Mixing Eductors

Fig. 258 and Fig. 268 Tank Mixing Eductors are used to agitate liquid, dissolve powdered solids in liquid, and to mix two or more liquids intimately within a tank or other vessel without the use of baffles or moving parts inside the tank. These units take the place of mechanical agitators.

The 268 is used in preference to the 258 in operations where it is desirable to start mixing from a shallow level or where uniform local agitation is required over large, shallow tank area. Typical applications of each are shown in the application section beginning on page 12.

Fig. 258 and 268 Eductors are operated by a flow of pressure liquid through the nozzle. As shown in the sectional drawings, the motive liquid entrains suction liquid, the two are mixed intimately in the venturi, and the mixture is discharged into the tank. Pressure liquid can be taken from the tank by means of a pump or it can be a new liquid. Standard, stock units are designed to entrain 3 gallons of suction fluid for each gallon of motive fluid. (Special designs of the 258 Eductor can be made to give 1 to 1 ratio.)

Normally, the tank is filled by means of the eductors. Mixing occurs as soon as the level of liquid in the tank covers the suction of the eductor. In addition to the mixing obtained between suction and motive fluids in the eductor, the jet action of the discharge from the eductor serves to agitate the tank and prevents stratification.

If a drawing or sketch of the mixing tank is furnished, S&K will recommend and quote on the proper type of distribution system.

Performance information is given in accompanying Performance Data, Bulletin 2M Supplement. Similar units using steam as motive fluid for heating, circulating and mixing are described in Bulletin 3A as “Fig. 314” units.

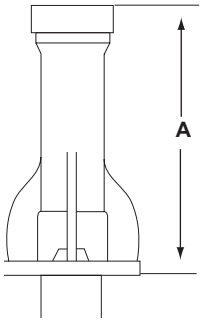

Table 5. Sizes and Dimensions, Fig. 258 Tank Mixing Eductor

Size in Inches	Connections in Inches		Wgt. in Lbs.	Dimensions in Inches
	Disch.	Pressure		A
1/2	1	1/2	2	5 1/2
3/4	1 1/2	3/4	6	8 1/2
1	2	1	22 1/2	12 5/16
1 1/4	2 1/2	1 1/4	29	11 1/8
1 1/2	3	1 1/2	36 1/2	15 7/8
2	4*	2	78	19 5/8
3	6*	3	ON APPL.	28 13/16
4	†	4*		†
5	†	5*		†
6	†	6*		†

*Flanged Connection
† Varies with performance and application
Note: A discharge flange is not supplied on large fabricated units unless required by the application.
(See Fig. 16 for dimensions of Fig. 268 Eductor).

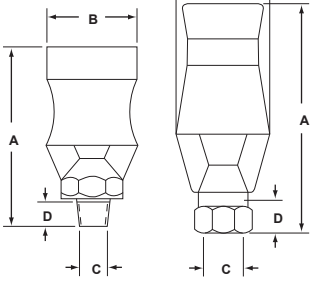

Sizes 3/8, 3/4 Sizes 1 1/2, 2, 3

Table 5-A. Sizes and Dimensions, Fig. 268 Tank Mixing Eductor

Size in Inches	A	B	C	D	Wgt. in Lbs.
3/8	3 3/4	1 3/4	3/8	7/16	3/4
3/4	5 1/4	2 3/8	3/4	9/16	2 1/2
1 1/2	8 13/16	4 1/16	1 1/2	13/16	6 1/4
2	12 1/4	5 13/16	2	45/64	22
3	17	8 1/8	3	15/16	48

Fig. 258 and Fig. 268 Tank Mixing Eductors

Fig. 12. FIG. 258 TANK MIXING EDUCTOR.

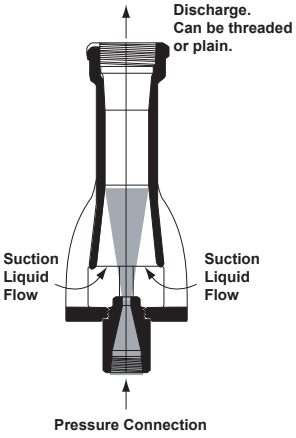

Fig. 13. FIG. 258 TANK MIXING EDUCTOR.
Standard units are made in cast iron and bronze but can be made in many other materials on special order. Large sizes can be fabricated instead of cast.

Fig. 14. FIG. 268 TANK MIXING EDUCTOR. 3/8" and 3/4" sizes.

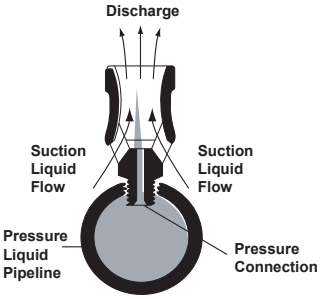

Fig. 15. FIG. 268 TANK MIXING EDUCTOR.
This design is used for 3/8" (3 3/4" overall length and 1 3/4" overall width), and 3/4" (5 1/4" overall length and 2 3/8" overall width) pressure connection sizes. It is threaded directly into threads tapped into the 1 1/2" diameter or larger pressure liquid pipeline. It is cast in one piece and is stocked in cast iron, bronze and 316 stainless steel. Other materials can be supplied on special order.

Fig. 17. FIG. 268 TANK MIXING EDUCTOR. 1 1/2" size and over.

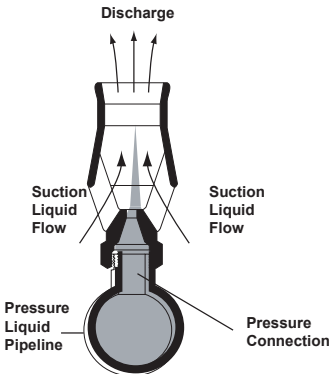

Fig. 16. FIG. 268 TANK MIXING EDUCTOR.
This design is used for 1 1/2" (8 7/8" overall length x 4 1/8" overall width), 2" (12 1/4" overall length x 5 7/8" overall width) and 3" (17" overall length x 8 1/8" overall width) pressure connection sizes. All are cast in one piece and have female thread connections for installation on nipples welded into the pressure liquid piping. The 1 1/2" and 2" sizes are stocked in cast iron, bronze, and 316 stainless steel. The 3" size is stocked in cast iron and stainless steel only. Other materials can be supplied on special order.

Fig. 254 and Fig. 267 and Fig. 227 Hopper-Equipped Eductors

Fig. 254 and Fig. 267 Hopper-Type Eductors are made for handling slurries or dry solids in granular form and are used extensively for ejecting sludges from tank bottoms, for pumping sand from filter beds and for washing and conveying granular materials. Typical materials handled include: borax, charcoal, diatomaceous earth, lime, mash, fly ash, rosin, rock and granulated salt, sand, dry sawdust, light soda ash, dry sodium nitrate, powdered sulphur, wheat and many others.

A typical application of Fig. 254 Eductor is shown in the application section of this bulletin, beginning on page 12. the material from adhering to the sides of the hopper and keep it moving down into the eductor. Pressure water, passing through the eductor nozzle, entrains the sand, sludge or other materials and discharges into the piping system.

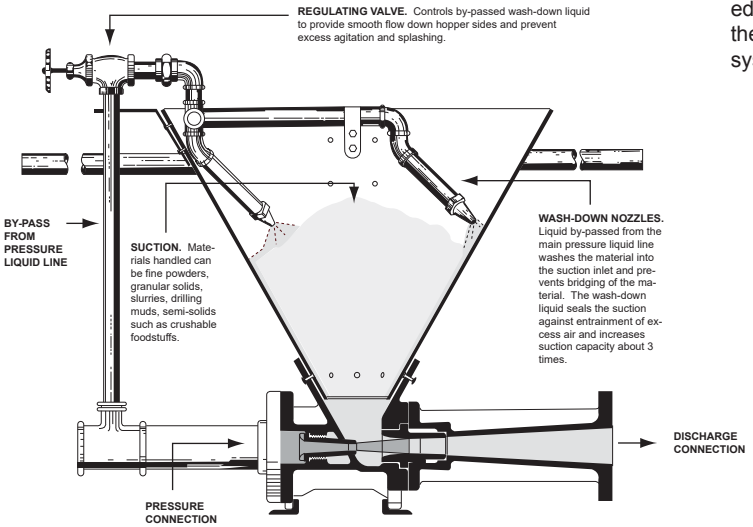

Fig. 18. FIG. 254 HOPPER-EQUIPPED EDUCTOR.
Standard units are made in cast iron and have hardened steel nozzles and throat bushings. Special materials are also available on special order. Both nozzles and throat pieces are removable and pressure and discharge connections can be fitted for hose where maximum portability is desired. Handles and supporting feet are optional.

Fig. 19. FIG. 267 HOPPER-EQUIPPED EDUCTOR.
This economical unit is available from stock with body and nozzle in cast iron, bronze, 316 stainless steel, Kynar and PVC. Hoppers are stocked in Type 304 stainless steel (1, 1 1/2 & 2" sizes) and are also available in galvanized steel, brass, aluminum and PVC.

Table 6. Sizes and Dimensions, Fig. 254(1) and Fig. 267(2) Hopper-Equipped Eductors

Size in Inches	Connection (Inches)		Dimension (Inches)			
	Disch.	Press.	A	B	C	D
FIG. 254(1)						
1 1/2	1 1/2	1 1/2	13 1/4	11 1/2	18	15 1/4
2	2	2	14 1/2	13 3/4	21	17 3/4
3	3	2 1/2	17 3/4	17 1/2	23 3/8	19 3/4
4	4	4	19 5/8	24 3/16	27	22 1/2
6	6	6	28 1/16	36 7/16	38	28 5/16
FIG. 267(2)						
1	1	3/4	1 1/2	4 3/16	24	42
1 1/2	1 1/2	1	2	6 1/2	24	41 1/2
2	2	1 1/4	2 1/4	7 5/8	24	41
2 1/2	2 1/2	1 1/2	2 11/16	9 1/4	24	41 1/4
3	3	2	3 1/8	11 1/4	24	40 3/4

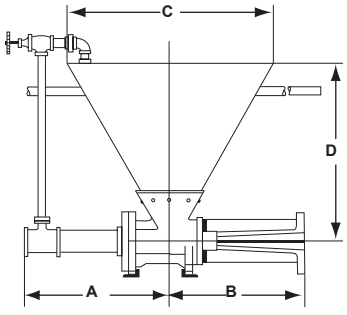

Fig. 254(1)

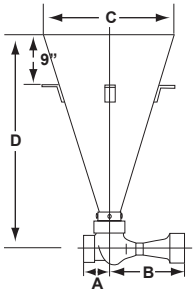

Fig. 267(2)

Fig. 227 Hopper-Equipped Eductor

Furnished with a stainless steel funnel, the eductor can be made of any machinable material. Bronze units up to and including 3" and cast iron units up to and including 4" sizes are available from stock. Prices, delivery or a sectional outline drawing 67-XS-081-J will be furnished on request. Stainless steel funnels are stocked in 1-1/4", 1-1/2" and 2" sizes.

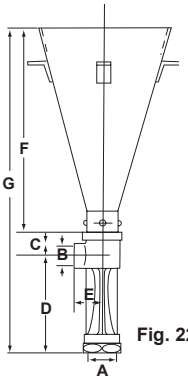

Fig. 227

Table 227. Sizes and Dimensions of Fig. 227 Hopper-Equipped Eductor

Dimensions in Inches							Wgt. (Lbs)
A	B	C	D	E	F	G	
1 1/4	3/4	1 9/16	6 7/16	1 13/16	39 5/8	47 5/8	31
1 1/2	3/4	2	8 13/16	2	39 1/4	50	36
2	1	2 1/2	9 1/8	2 1/4	38 1/2	49 7/8	45
2 1/2	1 1/4	2 3/4	11 1/4	2 3/8	37 7/8	51 7/8	51
3	1 1/2	3 1/16	13 5/16	2 3/4	37	53 3/8	58
4	2	3 5/8	17 1/16	3 3/16	35 1/2	56 3/16	70

Fig. 224 Water Jet Sand and Mud Eductor

Fig. 224 Water Jet Sand and Mud Eductors are used in pumping out wells, pits, tanks, or sumps where there is an accumulation of sand, mud, or other material not easily handled by the standard eductor. They are ideal for handling the heavy sludge residue from refining operations. A typical application of a Fig. 224 Eductor is shown in the application section beginning on page 12.

These eductors have an open suction and are designed to be submerged in the material being handled. The pressure liquid, passing through the nozzle, produces a high velocity jet which entrains the sludge or mud. This mixture is then discharged through a vertical pipe or hose. For performance information, see Bulletin 2M Supplement.

Similar units which use steam as the motive power are described in Bulletin 2A under “Fig. 225 Syphons”.

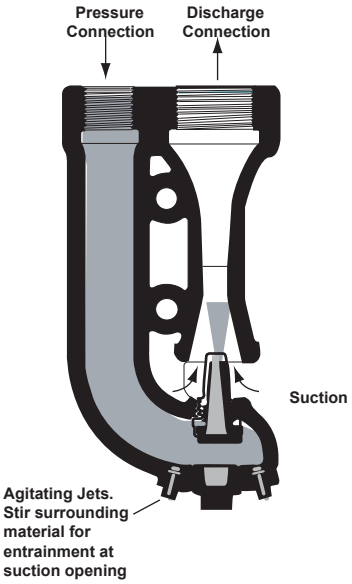

Fig. 20. FIG. 224 WATER JET SAND AND MUD EDUCTOR.
Standard units are made of cast iron with bronze pressure nozzles. Other corrosion-resistant materials are available on special order.

Fig. 21. FIG. 224 EDUCTOR.

Table 7. Sizes and Dimensions, Fig. 224 Sand and Mud Eductor

Size in Inches	Connections in Inches		Wgt in Lbs.	Dimensions in Inches	
	Disch.	Pressure		A	B
1 1/2	1 1/2	1	8	9 3/8	4 5/8
2 1/2	2 1/2	2	42	16 3/4	7 7/8
3	3	2 1/2	87	21 7/8	10 1/4
4	4	3	130	25 1/2	11
5*	5	4	-	30 1/4	17 3/8
6*	6	4	-	35 5/16	18

*Flanged Connections.

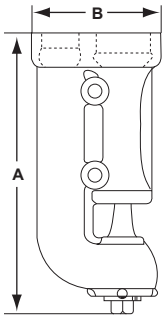

Fig. 235 Annular Multi-Nozzle Water Jet Eductor

Fig. 235 Annular Multi-Nozzle Water Jet Eductors are designed to handle solids and semi-solids. They operate at highest efficiency in large sizes and at low discharge heads. Because these eductors have high air handling capacities, they are particularly well suited for priming large pumps such as dredging pumps which frequently encounter air pockets.

Nozzles on the periphery of the throat introduce the pressure water. The pressure water creates a vacuum which draws in and entrains the material being handled and all flow discharges through the discharge connection. All suction flow is in a straight line through the eductor. For performance information, see Bulletin 2M Supplement.

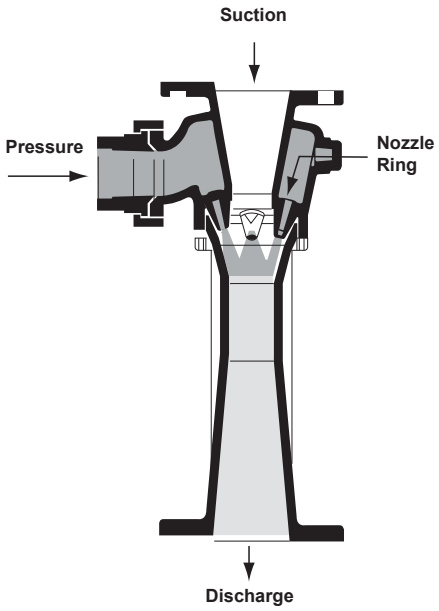

Fig. 22. FIG. 235 ANNULAR MULTI-NOZZLE WATER JET EDUCTOR.
These eductors are made to order from any workable material. Sizes from 1 1/2" to 6" are cast with flanged suction, discharge and pressure connections, except 2" size which has sil-brazed pressure connection. Sizes above 6" (to 28" and up) are generally fabricated.

Table 8. Sizes and Dimensions, Fig. 235 Annular Multi-Nozzle Water Jet Eductor

Size in Inches	Connections in Inches		Wgt. In Lbs.	Dimensions in Inches		
	Suction Disch.	Pressure		A	B	C
1 1/2	1 1/2	1	16	2 7/8	8 7/16	3 3/8
2	2	1 1/4	22	3 1/8	11 7/8	3 3/4
2 1/2	2 1/2	1 1/2	27	3 1/4	12 5/16	4
4	4	2 1/2	65	4 1/8	18 11/16	5 1/8
5	5	3	100	4 5/8	24 7/16	6
6	6	4	150	5 1/4	30	7 1/4

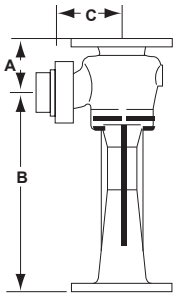

Fig. 23. FIG. 235 EDUCTOR.
(2" size with sil-brazed connection).

Special Purpose Eductors

The special-purpose eductors illustrated here are similar in operation to the basic Fig. 264 Eductor described on page 3.

Fig. 24. FIG. 222 PORTABLE EDUCTOR.
Is designed for use as an auxiliary with a pump where the suction lift is too great for the pump alone. Made of anodized aluminum, bronze or other materials as required.

Fig. 25. FIG. 212 CORROSION RESISTANT EDUCTOR.
Is made of Phenolic Fiberglass Reinforced Plastic (FRP). Body is of one-piece construction.

TYPICAL APPLICATIONS OF S&K WATER JET EDUCTORS

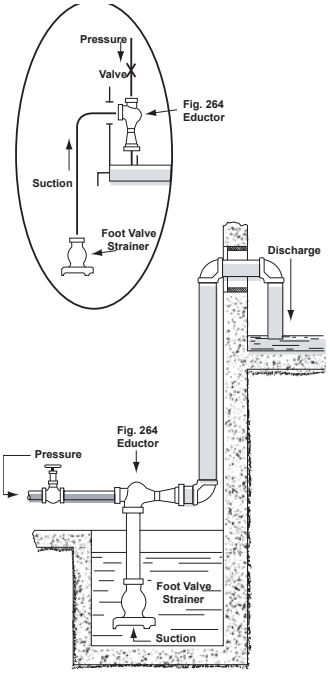

Fig. 26. FIG. 264 EDUCTOR USED TO EMPTY TANKS.
Water jet eductors are often used to empty tanks or to pump out sumps, penstocks, cellars, and the like. The pressure line should be fitted with a regulating stop valve and a pressure gauge while the suction line should be provided with an S&K Strainer. Discharge lines should be sealed for a positive pick-up of the liquid by turning the discharge line up or by submerging the end of the discharge line. It is recommended that the eductor be installed a short distance above the liquid to be handled and that short suction lines be used. Eductors will operate with long suction lines, as shown in the line drawing, however, with suction lifts greater than 15', capacities are reduced considerably. When handling hot liquid the eductor must be arranged with a short suction line or must be submerged.

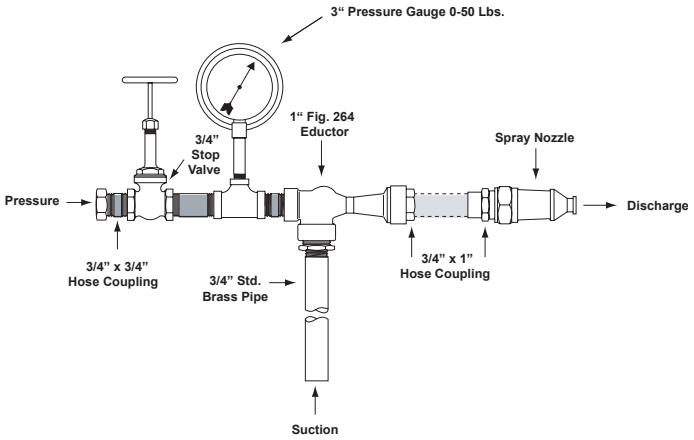

Fig. 27. FIG. 264 EDUCTOR USED IN MIXING LIQUIDS.
This illustration shows a typical arrangement used in mixing liquids such as chemicals or fertilizers in proportion for spraying. The solution to be applied is mixed in a container in approximately twice the strength at which it is to be used. The water jet proportioning apparatus is operated by a jet of high pressure water and is controlled by a 3/4" stop valve. A 3" pressure gauge indicates pressure. The jet action of the pressure water draws the solution from the container and the water and solution are mixed in the throat of the eductor and are discharged through a standard 3/4" hose to a spray nozzle. Solids can be handled and sprayed through a non-clogging type spray nozzle.

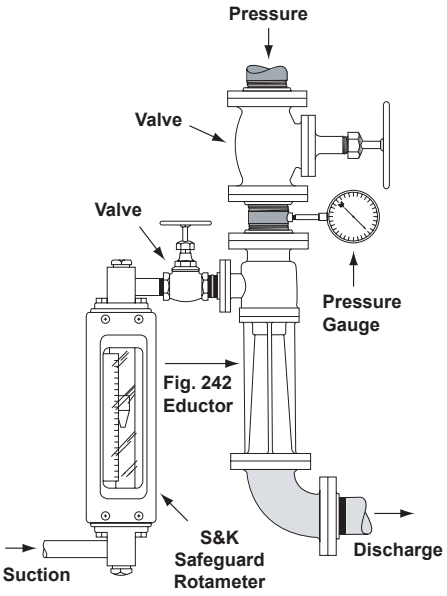

Fig. 28. FIG. 242 EDUCTOR USED IN TYPICAL PROPORTIONING SYSTEM.
This shows a typical proportioning system using a Fig. 242 Eductor. Rate of flow is measured by a Rotameter and is controlled by a valve in the line. A valve in the pressure line and orifice of the eductor nozzle control the flow of the pressure liquid. Fluids are thoroughly mixed in the desired proportions and are then discharged.

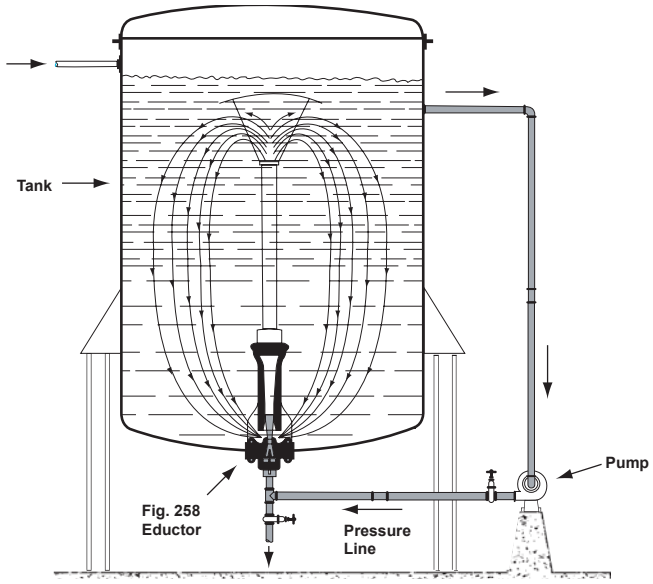

Fig. 30. FIG. 258 EDUCTOR IN BATCH MIXING APPLICATION.
This illustrates the batch mixing of two or more liquids with an S&K Fig. 258 Eductor. The pressure liquid, taken from the top of the tank is passed through a pump to the eductor. The jet action of this fluid entrains the liquid at the bottom of the tank and proper mixing results.

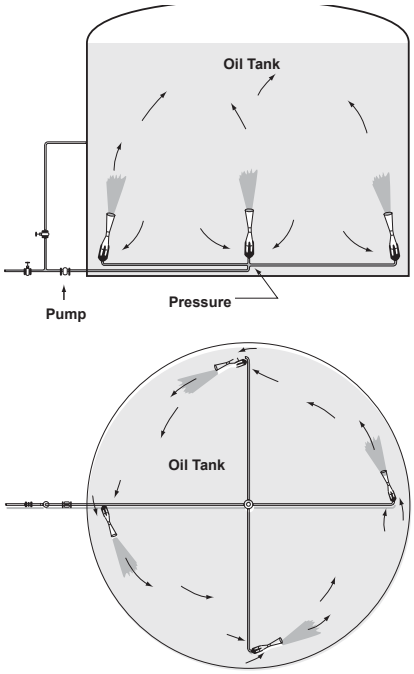

Fig. 29. FIG. 258 EDUCTORS FOR TANK BLENDING OF OILS.
For the tank blending of oils, the arrangement shown has proved highly satisfactory. In this particular installation five 8" Fig. 258 Eductors are used in a 100' tank. Initially, the eductors are used to fill the tank during which time they provide continuous agitation. After the tank is filled, the oil is drawn off and recirculated by means of the same pumps. Oil from the top of the tank issues through the eductor nozzle and entrains oil from the bottom of the tank. The two are mixed in the throat of the eductor and are discharged with sufficient force to maintain constant agitation and further blending in the tank.

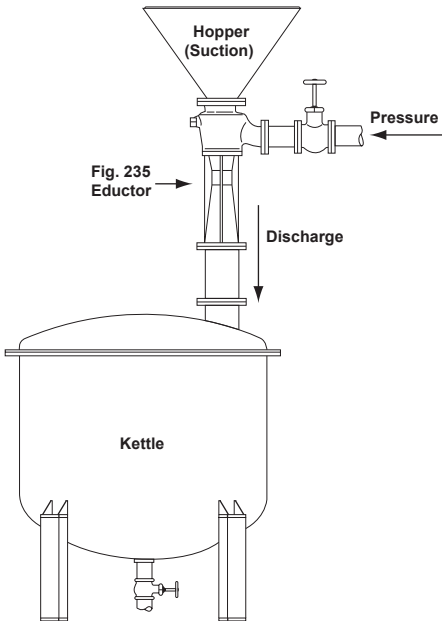

Fig. 31. FIG. 235 EDUCTOR USED IN MIXING DRY POWDER.
Mixing dry powder and a liquid prior to discharge into a tank is accomplished through the use of a Fig. 235 Eductor as shown here.
Pressure liquid enters the eductor, entrains the powder, mixes the two in the venturi of the eductor and discharges the mixture into a receptacle. The streamline eductor design provides maximum efficiency in this operation.

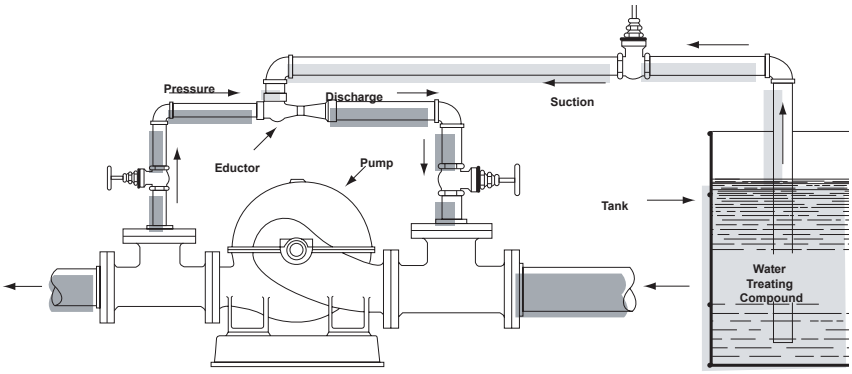

Fig. 32. FIG. 264 OR FIG. 265 WATER JET EDUCTORS USED TO ENTRAIN ANOTHER LIQUID.
This illustration shows a Fig. 264 or Fig. 265 Eductor being used to introduce a water treating compound into boiler feed water. A portion of the water issuing from the pump is bypassed into the eductor where it acts as the pressure medium to draw in and entrain the water treating compound.

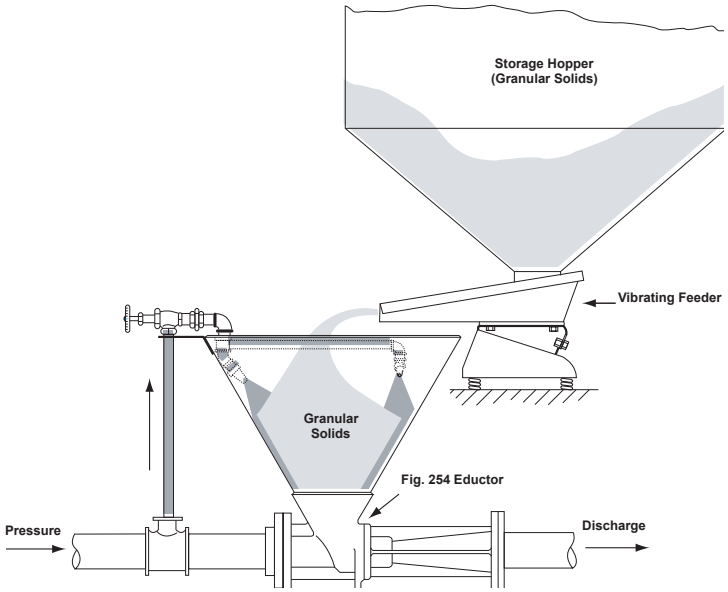

Fig. 33. APPLICATION OF FIG. 254 SOLIDS/LIQUID HOPPER EDUCTOR.
One arrangement for handling granular solids with the Fig. 254 Eductor is illustrated here. In this installation, granular solids drop from a storage hopper into a vibrating feeder which feeds the solids into the eductor hopper at a controlled rate. Water, bypassed from the pressure line, flows through nozzles located in the hopper and washes the solids into the eductor. There they are entrained by the jet action of the pressure water and are discharged. Although the material can be placed in the hopper manually, this system reduces handling and controls the flow of solids.

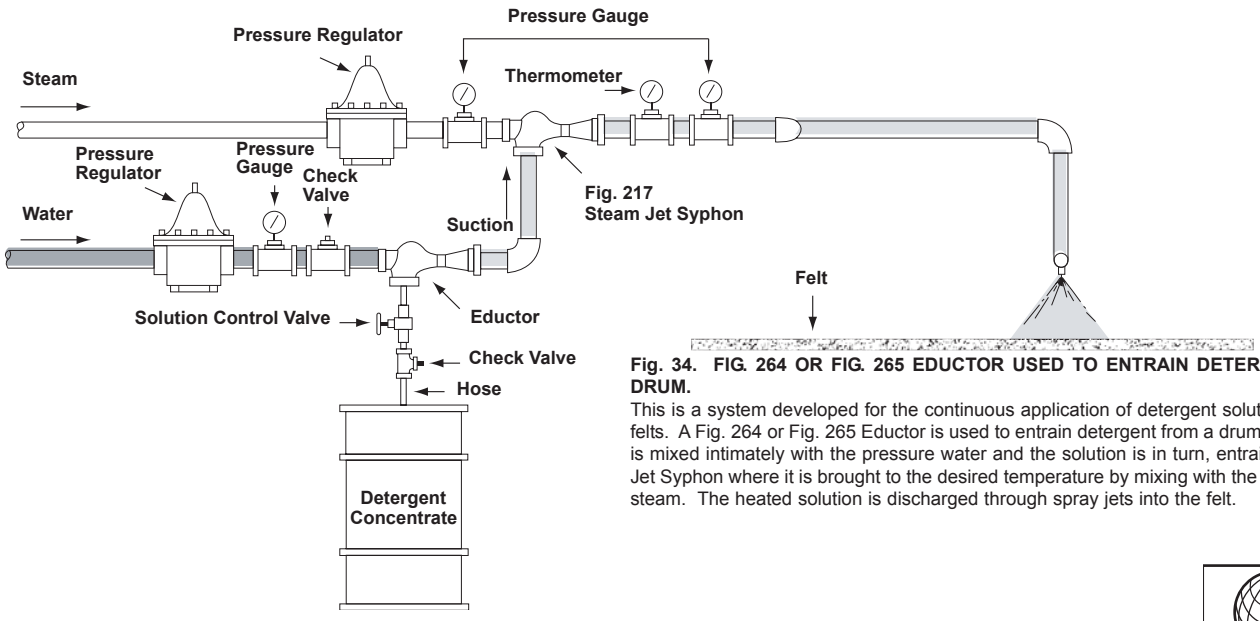

Fig. 34. FIG. 264 OR FIG. 265 EDUCTOR USED TO ENTRAIN DETERGENT FROM A DRUM.
This is a system developed for the continuous application of detergent solution to paper mill felts. A Fig. 264 or Fig. 265 Eductor is used to entrain detergent from a drum. This detergent is mixed intimately with the pressure water and the solution is in turn, entrained by a Steam Jet Syphon where it is brought to the desired temperature by mixing with the syphon's motive steam. The heated solution is discharged through spray jets into the felt.

ISO 9001 Certified

CS-910-400 : Identification sheet

VWTC PROJECT NUMBER:	5000218009	REV:	1
PROJECT NAME:	AEM AMARUQ	SUBMITTED TO (COMPANY):	AGNICO EAGLE MINES
ENGINEER:	Gabriel Hébert	SUBMITTED TO (RESPONSIBLE)	
PROJECT MANAGER:	Clément B	PROJECT NUM REFERENCE.:	
PHONE NUMBER:		LOT NUMBER:	

SUPPLIER	EQPT CODE	EQPT TAG NO	DIA	DESCRIPTION	INFO 1	INFO 2	INFO 3	APPLIC.	NOTE	REV
WAM	CMSPGU320682	FSM9-621	N/A	DREY FEEDER	SCREW FEEDER // Manuf : WAM // Model : MBF/073.A/TT/UD4.SST.UO2/C.0.Q.+.++++.++++ Feeding rate: 8,3 Liter/min at 88 rpm For material: dry polymer powder, approx.. 0.8 Kg/Ltr Blending tool: nbr. 1, plowshare shape	Feeding screw: nbr. 4, full flighting on pipe, SS304 Drive Blending tool: varvel gear box ratio 1:40 Drive feeding screw:varvel gear box ratio 1:20 Shaft sealing: SS with	Baldor 0.75 HP blending tool motor 1750rpm NEMA056 Baldor 0.5 HP feeding screw motor 1750rpm NEMA056 575V-	HYDRAPOL 3500		

This page is intentionally left blank

WAM®

WAMGROUP

1

TECHNICAL CATALOGUE

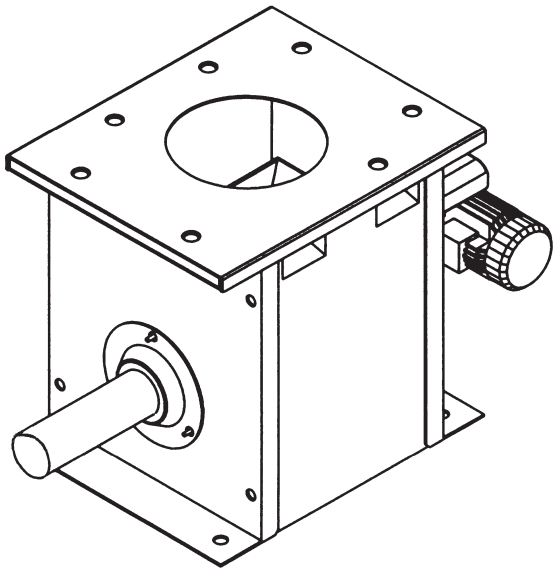

MBF

- **MICRO - BATCH FEEDERS**
  TECHNICAL CATALOGUE
- ***MIKRODOSIERER***
  TECHNISCHER KATALOG
- **MICRODOSEURS**
  CATALOGUE TECHNIQUE
- ***MICRODOSATORI***
  CATALOGO TECNICO

All rights reserved © WAMGROUP S.p.A.

CATALOGUE No.		VAL.062.-.T.4L	CREATION DATE
ISSUE **A17**	CIRCULATION **100**	DATE OF LATEST UPDATE **02.11**	**03.00**

WAM®

All the products described in this catalogue are manufactured according to **WAMGROUP S.p.A. Quality System procedures**. The Company's Quality System, certified in July 1994 according to International Standards **UNI EN ISO 9002** and extended to the latest release of **UNI EN ISO 9001**, ensures that the entire production process, starting from the processing of the order to the technical service after delivery, is carried out in a controlled manner that guarantees the quality standard of the product.

*Alle in diesem Katalog beschriebenen Produkte werden gemäß dem **Qualitätssystem der WAMGROUP S.p.A.** hergestellt. Das im Juli 1994 gemäß der internationalen Norm **UNI EN ISO 9002** und auf die neueste Version der **UNI EN ISO 9001** erweiterte, zertifizierte Qualitätssystem der Firma gewährleistet, dass der gesamte Produktionsprozess von der Auftragsbearbeitung bis zum technischen Kundendienst nach Lieferung in kontrollierter Art und Weise erfolgt, so dass der Qualitätsstandard des Produkts gewährleistet ist.*

Tous les produits décrits dans ce catalogue sont fabriqués selon les procédures du **Système de Qualité de WAMGROUP S.p.A.**, certifié en Juillet 1994 selon les normes internationales **UNI EN ISO 9002** et étendu à la dernière version de la norme **UNI EN ISO 9001**. Cela garantit que le processus de production, à partir de la gestion de la commande au service technique après-vente, est effectué de manière contrôlée garantissant la norme de qualité du produit.

*Tutti i prodotti descritti nel catalogo sono stati realizzati secondo le **procedure del Sistema Qualità di WAMGROUP S.p.A.** Il Sistema Qualità aziendale, certificato dal luglio 1994 in conformità alle normative internazionali **UNI EN ISO 9002** e successivamente esteso all' ultima versione delle normative **UNI EN ISO 9001**, garantisce che l'intero processo produttivo, dalla formulazione dell'ordine fino all'assistenza tecnica dopo la consegna, si svolga secondo modalità controllate che garantiscono lo standard qualitativo del prodotto.*

This publication cancels and replaces any previous edition and revision.
We reserve the right to implement modifications without notice.
This catalogue cannot be reproduced, even partially, without prior written consent by the Manufacturer.

Diese Veröffentlichung storniert und ersetzt alle früheren Ausgaben und überarbeiteten Fassungen.
Wir behalten uns das Recht vor, Änderungen ohne vorherige Information durchzuführen.
Dieser Katalog darf selbst auszugsweise nicht ohne das schriftliche Einverständnis der Herstellers vervielfältigt werden.

Cette publication annule et remplace toute édition et révision antérieure.
Nous nous réservons le droit de mettre en place des modifications sans préavis.
Aucune reproduction, partielle ou intégrale du catalogue, ne pourra être faite sans l'accord préalable et écrit du Fabricant.

Questa pubblicazione annulla e sostituisce le edizioni e revisioni precedenti.
Ci riserviamo la facoltà di apportare modifiche senza preavviso.
Il presente catalogo non può essere riprodotto, nemmeno parzialmente, senza previo consenso scritto del Costruttore.

1 TECHNICAL CATALOGUE — TECHNISCHER KATALOG

DESCRIPTION AND TECHNICAL CHARACTERISTICS	BESCHREIBUNG UND TECHNISCE MERKMALE	T. 6 → .23
ORDER CODES	BESTELLCODES	24 → .27
ACCESSORIES	ZUBEHÖR	28 → .42
OPERATION AND MAINTENANCE	BETRIEBS- UND WARTUNGSANLEITUNG	43
INQUIRY AND ORDER FORM	ANFRAGE- UND BESTELLBLATT	44

1 CATALOGUE TECNIQUE — CATALOGO TECNICO

DESCRIPTION ET CARACTERISTIQUES TECHNIQUES	DESCRIZIONE E CARATTERISTICHE TECNICHE	T. 6 → .23
CODES DE COMMANDE	CODICI DI ORDINAZIONE	24 → .27
ACCESSOIRES	ACCESSORI	28 → .42
UTILISATION ET ENTRETIEN	USO E MANUTENZIONE	43
QUESTIONNAIRE	MODULO DI RICHIESTA	44

2 MAINTENANCE CATALOGUE — WARTUNGSKATALOG

OPERATION AND MAINTENANCE	BETRIEBS- UND WARTUNGSANLEITUNG	M. 4 → .24

2 CATALOGUE D'ENTRETIEN — CATALOGO DI MANUTENZIONE

UTILISATION ET ENTRETIEN	USO E MANUTENZIONE	M. 4 → .24

3 SPARE PARTS CATALOGUE — ERSAITZTEILKATALOG

SPARE PARTS	ERSATZTEIL	R. 4 → .12

3 CATALOGUE PIECES DE RECHANGE — CATALOGO RICAMBI

PIECES DE RECHANGE	PEZZI DI RICAMBIO	R. 4 → .12

CODES - *CODEBEZEICHNUNGEN* - SIGLES - *SIGLE*

MBF	Micro batch feeder	Mikrodosierer	Microdoseur modulaire	Microdosatore per polveri
MDXCR	Round cover	Runde Abdeckung	Couvercle rond	Coperchio tondo
MDXGS	Cutter grille for square hopper	Quadratischer Aufreißgrill	Grille carré	Griglia quadrata
MDXSV	Vertical spout	Ablaufrohr	Sortie verticale	Scarico verticale
MDXTR	Round hopper	Runder Aufgabetrichter	Trémie ronde	Tramoggia verticale
MDXTS	Square hopper	Quadratischer Aufgabetricher	Trémie carrée	Tramoggia quadrata
UTD	Metering screw	Dosierwerkzeug	Outil dosage	Utensile dosaggio
UTO	Blending tool	Homogenisierwerkzeug	Homogénéisateur	Utensile omogenizzazione
MBT	Seal	Wellenabdichtung	Etanchéité	Tenuta
MBTP	Extendend pipe	Verlängert Innenrohr	Tube rallongé	Tubo prolungato
MBPR	Linerfeeder pipe	Dosierrohr mit innernaiskleidung	Tube de dosage avec revetement interieeur	Scarico rivestito internamente
MBPI	STD inspection hatch	STD inspektionstür	Trappe de visite	Portello di ispezione
MBPIP	Inspection hatch with extended tube	Inspektionstür mit länglichrohr	Trappe de visite avec tube prolonge	Portello di ispezione con tubo prolungato

MBF micro-batch feeders are used in gravimetric and volumetric dosing plants for powders and granular materials of various kinds. The body is made of WAM®'s engineering polymers SINT®ER ,SINT®AL or AISI 304L/316L, while all other feeder parts including nuts and bolts are made of staimless steel 304.

On request micro-batch feeders are supplied in a food-grade version.

Unless otherwise specified, all the dimensions are given in millimetres.

MBF Mikrodosierer werden in gravimetrischen und volumetrischen Dosieranlagen von Pulvern und Granulaten aller Art eingesetzt. Das Gehäuse besteht aus den Polymeren SINT®ER, SINT®AL oder edelstahl 1.4301/1.4401. Alle anderen Komponenten einschließlich Schraubenmaterial sind aus Edelstahl 1.4301.

Auf Wunsch ist eine nahrungsmitteltaugliche Version lieferbar.

Wenn nicht anders angegeben, alle Maßangaben in Millimetern.

Les microdoseurs MBF sont utilisés dans toutes les installations de dosage à poids ou volumétriques pour les plus divers matériaux en poudre ou granulés. Le corps est construit en SINT®ER, SINT®AL ou AISI 304L/316L. Les autres composants sont en acier inox 304L, boulonnerie comprise.

Sur demande le microdoseur est fourni en version indiquée pour des produits alimentaires.

Sauf indication contraire, toutes les dimensions sont exprimées en millimètres.

I microdosatori MBF sono utilizzati in tutti gli impianti di dosaggio a peso o volumetrici per polveri e materiali granulari di vario tipo. Il corpo è costruito in SINT®ER, SINT®AL o AISI 304L/316L, mentre le altre parti sono in AISI 304L, bulloneria compresa.

Su richiesta, queste macchine possono essere fornite idonee per prodotti alimentari.

Se non specificato altrimenti, tutte le dimensioni sono in millimetri.

FINISHING - *FINISH* - FINITION - *FINITURE*

End plate	Endschild	Bride d'extremité	Frontale	**AISI 304L EDELSTAHL 1.4301**
Drive support	Antriebshaltung	Plaque de fixation	Piastra d'attacco	**ALUMINIUM ALLUMINIO**
Reducer	Getriebe	Reducteur	Riduttore	**ALUMINIUM ALLUMINIO**
Speed variator	Regelgetriebe	Variateur	Variatore	**RAL 5010**
Motor	Elektromotor	Moteur	Motore	**RAL7001**

SELECTION CRITERIA - *AUSWAHLKRITEREN* - CRITERES DE CHOIX - *CRITERI DI SCELTA*

CF = [dm³/ J] = theoretical capacity per hour at 1 RPM.
CE = [dm³/ h] = real capacity of MBF
CR = [dm³/ h] requested capacity.
CT = [dm³/ h] theoretical capacity
N = [RPM] = metering screw speed.
mvs = material efficiency

Given:
- the characteristics of the material to be handled, the application and the feeding system into the microbatch feeder;
- CR (=capacity requested by customer), in order to choose correct MBF type proceed as follows:
- Check from material table mvs and all other important characteristics (e.g. metering screw type, accessories, others)
- Calculate real capacity CE of standard MBF (with fixed or variable speed as required by customer)

CE = CT x mvs

where for CT refer to page T.10. If difference between CE and CT is too big (that is, if customer does not accept standard MBF) it is necessary to find correct MBF speed in order to obtain the requested capacity, using the following formula:

$$N = \frac{CR}{CF \times mvs}$$

Subsequently, select ratio nearest to specific requirements (see page T.11). In carrying out these calculations it has to be born in mind that mvs given in materials table is empirical. The real value depends on a number of factors which may be difficult to control, such as the condition of the material, atmospheric conditions, height of material column inside the hopper, speed of rotation etc. For material efficiency mvs see pag. T10.

CF = [dm³/J] = theoretische Stundenleistung bei 1 U/min
CE = [dm³/ h] =effektive Dosierleistung MBF
CR = [dm³/ h] = kundenseits geforderte Dosierleistung
CT = [dm³/ h] = theoretische Dosierleistung
N = [Upm] = Drehzahl des Dosierwerkzeugs
mvs = Material-Wirkungsgrad

Gegeben:
- Bezeichnung und Beschreibung des Dosierguts, zu erwartende Betriebs- und Beschickungsart
- CR (= kundenseits geforderte Dosierleistung). Um den MBF-Dosierer korrekt auszulegen, muß nun wie folgt vorgegangen werden:
- Eigenschaften des Dosierguts der Materialtabelle entnehmen z.B. mvs, Dosierwerkzeug, Zubehör etc.)
- Effektive Dosierleistung CE des Standard-Dosierers errechnen (mit fester oder variabler Drehzahl, je nach Kundenwunsch)

CE = CT x mvs

wobei CT wie auf Seite T.10 angegeben. Wenn Differenz zwischen GE und CT zu groß, bzw. Kunde MBF Standard-Dosierer nicht akzeptiert, muß jene Drehzahl gefunden werden, bei welcher der Dosierer die kundenseits geforderte Stundenleistung erbringt. Hierzu ist folgende Formel zu verwenden :

$$N = \frac{CR}{CF \times mvs}$$

Demzufolge wählt man eine Getriebeuntersetzung (siehe Seite T.11), die den Wünschen des Kunden am nächsten kommt. Bei der Ermittlung der vorgenannten Werte ist zu berücksichtigen, daß der in der Materialtabelle aufgeführte Parameter mvs ein rein empirischer Durchschnittswert aus der Summe der bisher gemachten Erfahrungen mit dem jeweiligen Medium ist, welcher im Einzelfall teilweise stark schwankt. In der Tat hängt mvs von mehreren, zum Teil schwer kontrollierbaren Variablen ab (z.B. Zustand des Dosierguts, Witterungseinflüsse, Materialsäule im Aufgabetrichter, Dosierer-Drehzahl etc.). Für Material-Wirkungsgrad siehe Seite T.10.

CF = [dm³/J] = débit horaire théorique pour 1 RPM
CE = [dm³/h] = débit effectif MBF
CR = [dm³/h] débit souhaité par le client
CT = [dm³/h] débit théorique MBF
N = [TPM] = vitesse de rotation de la spire doseuse.
mvs = coefficient du matériau

Donné:
- la description du matériau à doser, le fonctionnement prévu et le système d'alimentation du microdoseur,
- CR (= débit souhaité par le client), là succession correcte des opérations pour la choix d'un microdoseur est la suivante:
- Contrôler dans le tableau des matériaux mvs et toutes les autres caractéristiques impor-tantes (ex.; type de spire doseuse, accessoires, autres)
- Calculer le débit effectif CE du MBF standard (vitesse fixe ou variable suivant la demande du client)

CE = CT x mvs

où CT est à la page T.10. Si la différence entre CE et CT est trop grande (c'est à dire, le client n'accepte pas le MBF standard), il est nécessaire de trouver à quelle vitesse de rotation devra tourner le MBF pour obtenir le débit souhaité par le client. On utilisera la formule:

$$N = \frac{CR}{CF \times mvs}$$

Ensuite il faut choisir (voir page T.11) le rapport qui se rapproche le plus de celui souhaité par le client. A ce point du calcul quoi qu'il en soit, il est nécessaire de tenir compte que mvs figurant dans le tableau matériaux est en realité une donnée empirique obtenue comme une moyenne des résultas de l'expérience passée. Cette donnée peut dépendre en fait de multiple facteurs difficiles à contrôler (ex. état du matériau, conditions atmosphériques, hauteur de la colonne du matériau dans la trémie, vitesse de rotation etc.).
Le coefficient du matériau mvs est indiqué a page T.10.

CF = [dm³/J] = portata teorica oraria per 1 RPM
CE = [dm³/h] = portata effettiva MBF
CR = [dm³/h] = portata richiesta dal cliente
CT = [dm³/h] = portata teorica MBF
N = [RPM] = velocità di rotazione dell'utensile di dosaggio
mvs= efficienza del materiale

Dati:
- la descrizione dei materiale da dosare, il funzionamento previsto e il sistema di alimentazione dei microdosatore,
- CR (= portata richiesta dal cliente), la successione corretta delle operazioni per la scelta dei MBF è la seguente:
- controllare mvs e tutte le altre caratteristiche importanti nella tabella materiali (es.: tipo di utensile di dosaggio, accessori, vari, etc.)
- calcolare la portata effettiva CE del MBF standard (a velocità fissa o variabile in base alla richiesta dei cliente)

CE = CT x mvs

dove CT è a pag. T.10. Se la differenza tra CE e CT è troppo grande (cioè il cliente non accetta il ns. MBF standard) è necessario trovare a quale velocità di rotazione deve ruotare l' MBF per ottenere la portata richiesta dal cliente. Si usa la formula:

$$N = \frac{CR}{CF \times mvs}$$

Poi si sceglie (vedi pag. T.11) il rapporto che più si avvicina ai desideri del cliente. In questi calcoli è comunque necessario tenere presente che mvs riportato nella tabella materiali, è in realtà un dato empirico ottenuto come media dei risultati delle esperienze fatte, risultati talvolta anche distanti tra di loro. Esso può dipendere infatti da molteplici variabili, alcuni delle quali di difficile controllo (es. stato del materiale, condizioni atmosferiche, altezza colonna materiale nella tramoggia, velocità di rotazione, etc.).
Il coefficiente mvs è indicato a pagina T.10.

DIMENSIONS - *EINBAUMASSE* - ENCOMBREMENT - *INGOMBRO*

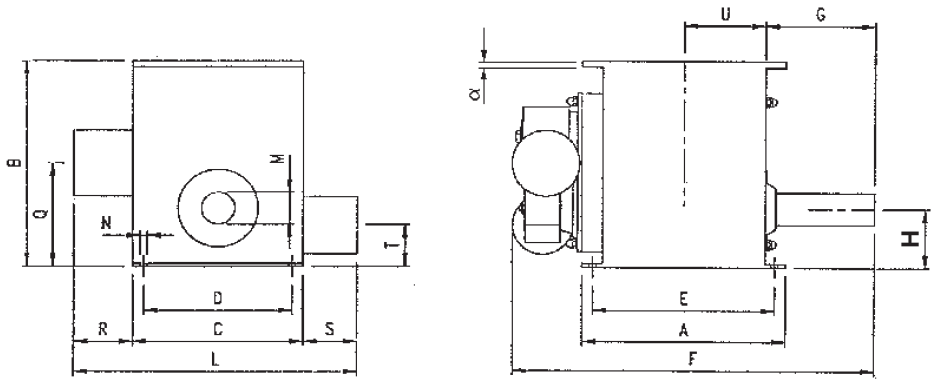

MBF	A	B	C	D	E	F	G	H	L*	M	N	Q	R*	S**	T	U	α	dm³	kg
042	310	295	250	200	253	595	200	100	535	42	12.5	235	160	125	100	105	12	5	20
073	464	486	390	305	410	855	250	135	600	76	12.5	240	135	75	95	185	15	28	60
114	464	486	390	305	410	855	250	135	600	114	12.5	259	135	75	95	185	15	35	65

* Without variable speed reducer
** Ohne Regelgetriebe*
* Sans variateur
** Senza variatore*

** According to IEC - Standards
*** Gemäß IEC - Norm*
** Selon normes IEC
*** Secondo norme IEC*

MBF 042

TOP FLANGE
FLANSCH OBEN
BRIDE SUPERIEURE
FLANGIATURA SUPERIORE

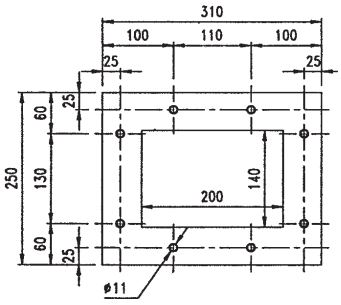

BOTTOM FLANGE
FLANSCH UNTEN
BRIDE INFERIEURE
FLANGIATURA INFERIORE

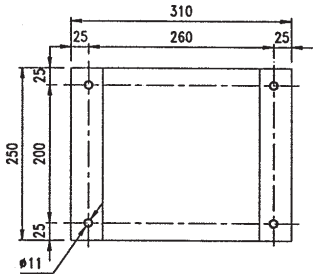

MBF 073

MBF 114

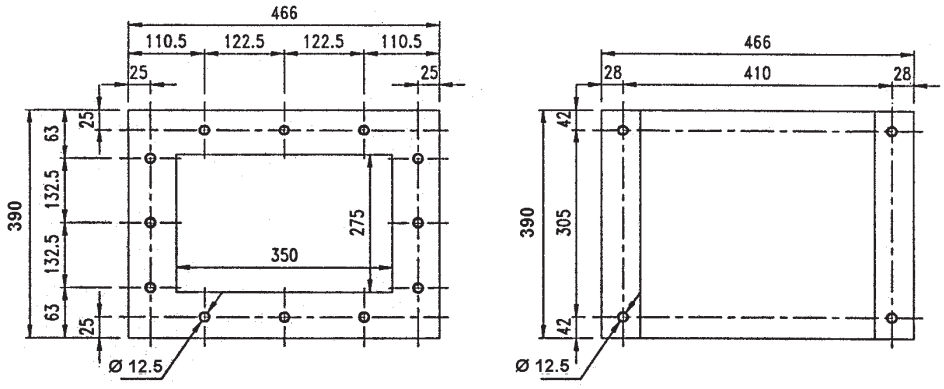

STANDARD SUPPLY - *STANDARD-LIEFERUMFANG* - FORNITURE STANDARD - *FORNITURE STANDARD*

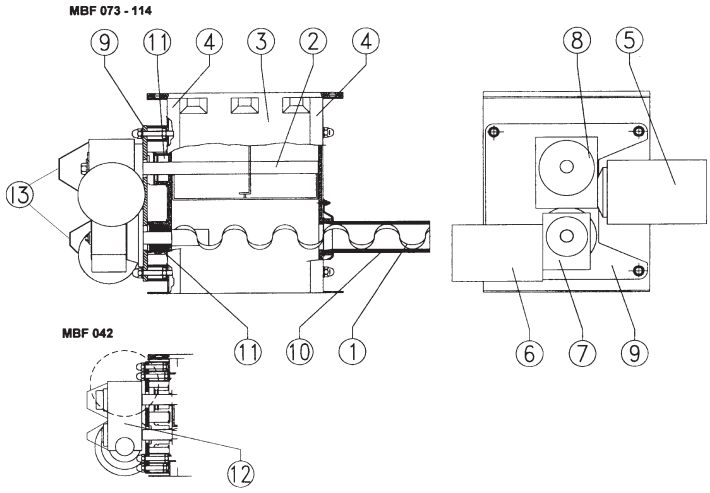

1	Metering screw	Dosierwerkzeug	Vis de dosage	Utensile dosaggio
2	Blending tool	Homogenisierwerkzeug	Homogénéisateur	Utensile omogeneiz.
3	Elastomer trough	Dosiertrog	Corps	Corpo
4	End plate	Endschild	Bride d'extremité	Frontale
5	Agitator motor	E- Motor Homogenisierer	Moteur electr. outil de homogé	Motore elect. omogen.
6	Metering screw motor	E- Motor Dosierer	Moteur elect. outil de dosage	Motore elect. dosaggio
7	Metering screw reducer	Getriebe Dosierer	Réducteur outil de dosage	Riduttore dosaggio
8	Blending tool reducer	Getriebe Homogenisierer	Réducteur outil de homogén.	Riduttore omogeneiz.
9	Drive support	Antriebshalterung	Plaque de fixation	Piastra d'attacco
10	Feeder pipe	Dosierrohr	Sortie	Uscita
11	Seals	Wellenabdichtungen	Etancheitées	Tenute
12	Reducer	Getriebe	Réducteur	Riduttore
13	Cover	Abdeckung	Couvercle	Coperchio

N.B. Item 4 in the stainless steel version, front panel can be opened for inspection.
N.B. Pos.4 in der Edelstahlversion mit abnehmbarer Frontplatte zu Inspektionszwecken.
N.B. Pos.4 dans la version en acier inox, plaque frontale peut être ouverte pour inspection.
N.B. Pos.4 nella versione in AISI, frontale apribile per ispezione.

The batch feeder must not be starded before the screw conveyor itself, as well as the plant it is going to be installed in, have been declared in conformity with the European Directive 14/06/1982 (89/392/EEC).

It is the plant designer's / plant fitter's responsability to design and install all necessary protection in order to avoid that breaking and / or yielding of the equipment or of parts of it might damage people and / or parts of the plant (e.g. adequate protection against falling down of the motor etc.).
For dangerous materials, i.e. those that must not get in contact with the human body or be inhaled, for flammable, explosive and bacteriologically dangerous materials the plant manufacturer or fitter must provide for the required safety devices and measures.

Der Dosier darf nicht in Betrieb genommen werden, bevor sowohl sie selbst, als auch die Anlage, in die sie eingebaut wird, mit den Vorschriften der Direktive 14/06/1982 (89/392/ ECC) für konform erklärt wurde.
Es liegt in der Verantwortung des Anlagenplaners bzw. -aufstellers, alle notwendigen Schutzvorrichtungen vorzusehen, welche es verhindern, daß durch einen Geräte- oder Teiledefekt Personen- und/oder Sachschäden verursacht werden (z.B. geeigneter Schutz gegen das Herunterfallen des Motors etc.).
Für Gefahrenprodukte, bzw. solche, die nicht mit dem menschlichen Körper in Kontakt geraten oder eingeatmet werden dürfen, für leicht entzündbare, explosive sowie bakteriologisch gefährliche Medien muß der Anlagenbauer bzw. –errichter die für die Sicherheit erforderlichen Vorrichtungen vorsehen und Maßnahmen treffen.

Il est interdit de mettre le doseur en fonction avant que la machine / l'installation dans laquelle elles doivent être montées a été déclarée conforme aux dispositions de la Directive 14/06/1982 (89/392/ECC).

Dans ce cadre il est la responsabilité du constructeur de l'installation ou de l'installateur de projeter et d'installer tout équipement de protection nécessaire afin d'eviter que des ruptures et / ou des parties d'elle puissent causer de dégâts à des personnes et / ou des choses (par ex.: des protections appropriées contre la chaute du moteur etc.).
Pour des produits dangereux, nuisibles au contact et/ou à l'inhalation, inflammables, explosifs et dangereux du point de vue bactériologique et/ou viral, le constructeur de l'installation ou l'installateur devront prévoir des dispositifs appropriés au besoin.

E' vietato mettere il dosatore in funzione prima che la macchina/ impianto, nel quale devono essere installate, sia dichiarato conforme alle disposizioni della direttiva 14/06/1982 (89/392/EEC).

In quest'ambito è cura dell'impiantista / installatore predisporre ed installare tutti gli accorgimenti / protezioni al fine di evitare danni a cose o persone in caso di rotture e conseguente caduta di pezzi della macchina (ad es.: rottura del motore).
Per prodotti pericolosi, nocivi al contatto e/o all'inalzione, infiammabili, esplosivi e pericolosi dal punto di vista batteriologico e/o virale, l'impiantista e/o l'installatore, dovranno prevedere idonei dispositivi all'uopo.

THEORETICAL STANDARD FEED RATES - *THEORETISCHE STANDARD - DOSIERLEISTUNGEN*
DEBITS THEORIQUES STANDARD - *PORTATE TEORICHE STANDARD*

TAB. 1

MBF		THEORETICAL STANDARD FEED RATES *THEORETISCHE STANDARD-DOSIERLEISTUNGEN* DEBITS THEORIQUES STANDARD *PORTATE TEORICHE STANDARD*			CT
	Metering screws *Dosierwerkzeuge* Outils dosage *Utensili dosatori*	Hourly feed rate at *Dosierleistung pro Stunde bei* Débit horaïre à *Portata oraria a* **1 rpm**	Fixed speed feed rate *Leistung bei Konstanter Drehzahl* Débit à vitesse fixe *Portata a velocità fissa* **93 rpm**	Feed rate with variable speed *Leistung bei variabler Drehzahl* Débit à vitesse variable *Portata a velocità variabile* **13 - 67 rpm**	Capacity whit diff. variator *Leist. bei var. Drehz. + Diff.* Débit à vites. var. avec différ. *Port.a vel. variab. con differ.* **4 - 60 rpm**
	Type	**dm³ / h**	**dm³ / h**	**dm³ / h**	**dm³ / h**
042	1 - 4 - D - 2 - B 3 5 7	0.7 0.6 0.64 0.95	65 56 60 88	9 - 48 8 - 40 8 - 45 12 - 64	
073	1 - 2 - B 3 4 - 5 - D - E	5.7 4.4 7.4	530 410 688	74 - 382 57 - 295 96 - 496	23 - 342 18 - 264 31 - 421
114	1 - 2 - B 3 4 - 5 - D- E	26 13.6 29.7	2418 1265 2762	338 - 1742 177 - 911 386 - 1990	104 - 1560 55 - 816 130 - 1930

N.B. The theoretical feed rate has to be multiplied by the efficient factor which depends on the type of feeder screw and on the material fed.
N.B. Die theoretische Dosierleistung ist dem Wirkungsfactor zu multiplizieren, der wierderum abhängig ist vom Dosierwendeltyp und vom dosierten Medium.
N.B. La débit théorique doit être multiplié pae le facteurs d'efficience qui est en fonction de la spire et du produit dosé.
N.B. La portata teorica deve essere moltiplicata per il fattore di efficenza che è in funzione dell'elica e del prodotto trasportato.

General efficiency coefficient mvs depeneding on feeder screw used
Allgemeiner Wirkungsgrad mvs in Abhängigkeit von der eingesetzten Dosierwendel
Coefficient d'efficacité général en fonction du type de spire utilisée
Coefficienti di efficienza generico mvs, in funzione del tipo di elica utilizzata

TAB. 3

UTD. 12 UTD. 32	UTD. 22 UTD. B2	UTD. 42 UTD. D2	UTD. 5 UTD. G UTD. E
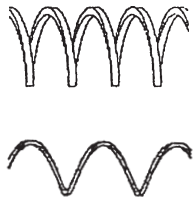	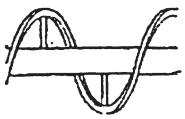	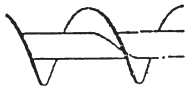	
Efficiency: 1.1	**Wirkungsgrad: 0.6**	**Coefficient: 0.75**	**Efficienza: 0.7**

The theoretical feeds rate (pag.T.11)has to be multiplied by the efficient factor which depends on the type of feeder screw fed.

Note:
The efficiency factor can vary due to grain size, bulk density, degree of humidity and all the other material properties that have an influence on handling the material.

Die theoretischen Dosierleistungen gem. Seite T.11 müssen mit diesem Faktor je nach eingestzter Dosierwendeltype multipliziert werden.

Anm.:
Der Wirkungsgrad kann sich aufgrund der Körnung, des Schüttgewichts, des Feuchtegrads sowie aller übrigen, sich auf das Handling auswirkenden Produkte.

Les débits théoriques comme à page T.11 doivent être multipliés par ce facteur en fonction des spires choisies.

Note:
Le facteur d'efficacité peut subir des variations à cause de la granulométrie, du poids spécifique, de l'humidité et de tous les composants imputables au matériau transporté.

Le portate teoriche come a pag. T.11 debbono essere moltiplicate per questo fattore in funzione delle eliche scelte.

Nota:
Il fattore di efficienza può subire delle variazioni dovute a granulometria, al peso specifico, umidità e a tutte quelle componenti imputabili al prodotto trasportato.

THEORETICAL CAPACITIES SPC - *THEORETISCHE DOSIERLEIST.SPEZ.*
DEBITS THEORIQUES SPC. - *PORTATE TEORICHE SPECIALI*

TAB. 2

MBF				THEORETICAL FEED RATES *THEORETISCHE DOSIERLEISTUNGEN* DEBITS THEORIQUES *PORTATE TEORICHE*			CT
	Metering screws *Dosierwerkzeuge* Outils dosage *Utensili dosatori*	Hourly feed rate at *Dosierleistung pro Stunde bei* Débit horaïre à *Portata oraria a* 1 rpm	Gear ratios *Getriebeuntersetzungen* Rapports réducteurs *Rapporti riduttori*	Fixed speed feed rate *Leistung bei Konstanter Drehzahl* Débit à vitesse fixe *Portata a velocità fissa*	Feed rate with variable speed *Leistung bei variabler Drehzahl* Débit à vitesse variable *Portata a velocità variabile*		Capacity with diff. variator *Leist. bei var. Drehz. + Diff.* Débit à vites. var. avec différ. *Port.a vel. variab. con differ.*
	Type	dm^3 / h	1 / ..	dm^3 / h	dm^3 / h MIN	dm^3 / h MAX	dm^3 / h
42	1-2-4-B-D	0.70	10 15 28 40(std)	98 65 35 24	14 9 5 3	70 47 25 17	
	3	0.6	10 15 28 40 (std)	82 55 29 20	11 8 4 3	59 39 21 15	
	5-E	0.64	10 15 28 40(std)	90 60 32 22	12 8 4 3	64 43 23 16	
	7-G	0.95	10 15 28 40 (std)	133 89 48 33	19 12 7 5	95 63 34 24	
73	1-2-B	5.7	10 15 20 28 40 (std) 70	798 532 399 285 199 114	111 74 56 40 28 16	570 380 285 203 142 81	33-513 22-342 17-256 12-183 8-128 5-73
	3	4.4	10 15 20 28 40 (std) 70	616 411 308 220 154 88	86 57 43 31 21 12	440 293 220 157 110 63	26-396 17-264 13-198 9-141 6-99 4-57
	4-5-D-E	7.4	10 15 20 28 40(std) 70	1,036 691 518 370 259 148	144 96 72 52 36 21	740 493 370 264 185 106	43-66 29-444 21-333 15-238 11-167 6-95
114	1-2-B	26	10 15 20 28 40 (std) 70	3,640 2,427 1,820 1,300 910 520	507 338 254 181 127 72	2,600 1,733 1,300 929 650 371	151-2,340 101-1,560 75-1,170 54-836 38-585 22-334
	3	13.6	10 15 20 28 40 (std) 70	1,904 1,269 952 680 476 272	265 177 133 95 66 38	1,360 907 680 486 340 194	79-1,224 53-816 39-612 28-437 20-306 11-175
	4-5-D-E	29.7	10 15 20 28 40 (std) 70	4,158 2,772 2,079 1,485 1,040 594	579 386 290 207 145 83	2,970 1,980 1,485 1,061 743 424	172-2,673 115-1,782 86-1,337 62-955 43-668 25-382

N.B. The theoretical feed rate has to be multiplied by the efficient factor which depends on the type of feeder screw and on the material fed.
(See tab. 3 pag. T.10)
N.B. Die theoretische Dosierleistung ist dem Wirkungsfactor zu multiplizieren, der wierderum abhängig ist vom Dosierwendeltyp und vom dosierten Medium.(Siehe Tabelle 3 Seite T.10)
N.B. La débit théorique doit être multiplié pae le facteurs d'efficience qui est en fonction de la spire et du produit dosé.(Voir tab. 3 pag. T.10)
N.B. La portata teorica deve essere miltiplicata per il fattore di efficenza che è in funzione dell'elica e del prodotto trasportato.(vedi tab.3 pag. T.10)

FIXED SPEED DRIVES - *ANTRIEBE MIT KONSTANTER DREHZAHL*
MOTORISATIONS A VITESSE FIXE - *MOTORIZZAZIONI A VELOCITA' FISSA*

MBF 042	**METERING SCREW - *DOSIERWERKZEUG* - OUTIL DOSAGE - *UTENSILE DOSAGGIO***				
	RPM	**STANDARD**	**SPECIAL**		
		93	140	50	35
	Ratio - *Untersetzung* Rapport - *Rapporto*	1:15	1:10	1:28	1:40
	Gear red. - *Getriebe* Réduct. - *Riduttore*	RW BB ØØ	RW AA ØØ	RW DA ØØ	RW EA ØØ
	Motors - *E-Motoren* Moteurs - *Motori*	**0.12 kW 4P 50 Hz 63A B5 (std)** (0.18 kW/0.25 kW 4P 50 Hz 63b/63c B5)			
	BLENDING TOOL - *HOMOGENISIERWERKZEUG* - OUTIL DE HOMOGENEISATION - *OMOGENEIZZATORE*				
	RPM	35			
	Ratio - *Untersetzung* Rapport - *Rapporto*	1:40			
	Motors - *E-Motoren* Moteurs - *Motori*	**0.25 kW 4P 50 Hz 71A B5 (std)** (0.37 kW 4P 50 Hz 71B B5)			

MBF 073 114	**METERING SCREW - *DOSIERWERKZEUG* - OUTIL DOSAGE - *UTENSILE DOSAGGIO***						
	RPM	**STANDARD**	**SPECIAL**				
		93	140	70	50	35	20
	Ratio - *Untersetzung* Rapport - *Rapporto*	1:15	1:10	1:20	1:28	1:40	1:70
	Gear red. - *Getriebe* Réduct. - *Riduttore*	B5 PAM 71 Ø Flange = 160 mm Ø M* = 14 mm Ø U* = 24 mm					
	Motors - *E-Motoren* Moteurs - *Motori*	**0.25 kW 4P 50 Hz 71A B5 (std)** (0.37 kW 4P 50 Hz 71B B5)					
	BLENDING TOOL - *HOMOGENISIERWERKZEUG* - OUTIL DE HOMOGENEISATION - *OMOGENEIZZATORE*						
	RPM	**STANDARD**	**SPECIAL**				
		35	14				
	Ratio - *Untersetzung* Rapport - *Rapporto*	1:40	1:100				
	Gearbox - *Getriebe* Réduct. - *Riduttore*	B5bi PAM 80 Ø Flange = 200 mm Ø M* = 19 mm Ø U* = 25 mm					
	Motors - *E-Motoren* Moteurs - *Motori*	**0.55 kW 4P 50 Hz 80A B5 (std)** (0.75 kW 4P 50 Hz 80B B5)					

*** ØM** = Ø Electric motor shaft - *Welle elektromotore* - Arbre moteur electrique - *Albero motore elettrico*

*** ØU** = Ø Screw shaft - *Werkzeugwelle* - Arbre outil - *Albero utensile*

VARIABLE SPEED DRIVES - *ANTRIEBE MIT VARIABLER DREHZAHL*
MOTORISATIONS A VITESSE VARIABLE - *MOTORIZZAZIONI A VELOCITA' VARIABILE*

MBF 042	**METERING SCREW - *DOSIERWERKZEUG* - OUTIL DOSAGE - *UTENSILE DOSAGGIO***				
	RPM	**STANDARD**	**SPECIAL**		
		93	140	50	35
	Ratio - *Untersetzung* Rapport - *Rapporto*	1:15	1:10	1:28	1:40
	Gear red. - *Getriebe* Réduct. - *Riduttore*	RW NB ØØ	RW MA ØØ	RW QA ØØ	RW RA ØØ
	Variator - *Regelgetr.* Variateur - *Variatore*	B5/B5 PAM 63/63 n° 190-910 rpm Ø Flange 140/140 mm Ø M* = 11 mm Ø U* = 11 mm			
	Motors - *E-Motoren* Moteurs - *Motori*	**0.12 kW 4P 50 Hz 63C B5 (std)** **(0.18 kW/0.25 kW 4P 50 Hz 63b/63c B5)**			
	BLENDING TOOL - *HOMOGENISIERWERKZEUG* - OUTIL DE HOMOGENEISATION - *OMOGENEIZZATORE*				
	RPM	35			
	Ratio - *Untersetzung* Rapport - *Rapporto*	1:40			
	Motors - *E-Motoren* Moteurs - *Motori*	**0.25 kW 4P 50 Hz 71A B5 (std)** (0.37 kW 4P 50 Hz 71B B5)			

N.B.: the motors provided on the speed variator are special and can therefore be 0.22-0.25 kW, depending on the supplier
Anm.: Die auf dem Drehzahlregler vorhandenen Motoren sind Spezialausführungen und können je nach Hersteller 0,22 -0,25 kW haben
N.B.: Etant donnée que les moteurs prévus sur variateur sont spéciaux, ils peuvent être de 0.22-0.25 kW, en fonction du fournisseur
N.B.: i motori previsti su variatore, essendo speciali, potranno essere, 0.22-0.25 kW in funzione del fornitore

MBF 073 114	**METERING SCREW - *DOSIERWERKZEUG* - OUTIL DOSAGE - *UTENSILE DOSAGGIO***						
	RPM	**STANDARD**	**SPECIAL**				
		93	140	70	50	35	20
	Ratio - *Untersetzung* Rapport - *Rapporto*	1:15	1:10	1:20	1:28	1:40	1:70
	Gear red. - *Getriebe* Réduct. - *Riduttore*	B5/B5 PAM 71 Ø Flange = 160 mm Ø M* = 14 mm Ø U* = 24 mm					
	Variator - *Regelgetr.* Variateur - *Variatore*	B5/B5 PAM 71/71 n° 190-1000 rpm Ø Flange 160/160 mm Ø M* =14 mm Ø U* =14 mm					
	Differrent. - *Different.* Différént. - *Differenz.*	B5/B5 PAM 71/71 n° 0-1000 rpm Ø Flange 160/160 mm Ø M* =14 mm Ø U* =14 mm					
	Motors - *E-Motoren* Moteurs - *Motori*	**0.25 kW 4P 50 Hz 71A B5 (std)** (0.37 kW 4P 50 Hz 71B B5)					
	BLENDING TOOL - *HOMOGENISIERWERKZEUG* - OUTIL DE HOMOGENEISATION - *OMOGENEIZZATORE*						
	RPM	**STANDARD**	**SPECIAL**				
		35	14				
	Ratio - *Untersetzung* Rapport - *Rapporto*	1:40	1:100				
	Gear red. - *Getriebe* Réduct. - *Riduttore*	B5bi PAM 80 Ø Flange = 200 mm Ø M* = 19 mm Ø U* = 25 mm					
	Motors - *E-Motoren* Moteurs - *Motori*	**0.55 kW 4P 50 Hz 80A B5 (std)** (0.75 kW 4P 50 Hz 80B B5)					

*** ØM** = Ø Electric motor shaft - *Welle elektromotor* - Arbre moteur electrique - *Albero motore elettrico*
*** ØU** = Ø Screw shaft - *Werkzeugwelle* - Arbre outil - *Albero utensile*

FINISHING - *FINISH* - FINITION - *FINITURE*

End plate	Endschild	Bride d'extremité	Frontale	**St. St. 304 / EDELSTAHL 1.4301 / AISI 304**
Drive support	Antriebshalter.	Plaque de fixation	Piastra d'attacco	**ALUMINIUM / ALLUMINIO**
Reducer	Getriebe	Reducteur	Riduttore	**ALUMINIUM / ALLUMINIO**
Speed variator	Regelgetriebe	Variateur	Variatore	**RAL 5010**
Motor	Elektromotor	Moteur	Motore	**RAL 7001**

STANDARD METERING SCREWS - *STANDARD-DOSIERWERKZEUGE*
OUTILS DE DOSAGE STANDARD - *UTENSILI DOSAGGI STD*

UTD. 12 — **TYPE 1**

RECTANGULAR SECTION SPIRAL WITHOUT CENTRE PIPE	WENDEL MIT RECHTECKIGEM QUERSCHNITT OHNE INNENROHR	HELICE A SECTION RECTANGULAIRE SANS TUBE INTERIEUR	ELICHE A SEZIONE RETTANGOLARE PRIVE DI TUBO INTERNO
Light sticky materials: flour, sugar, cocoa, pellets, granular products, light and slightly sticky oxides.	Geeignet für Medien mit geringem Schüttgewicht und mit Tendenz zum Anbacken: Mehl, Zucker, Kakao, Pellets, Granulate, Oxyde mit geringem Schüttgewicht und gewisser Tendenz zum Anbacken.	Matériaux légers avec une tendance au tassement: farines, sucre, cacao, pellets, poduits granulaires, oxides légers.	Materiali leggeri con tendenza all'impaccamento: farine, zucchero, cacao, pellets, prodotti granulari, ossidi leggeri moderatamente impaccati.

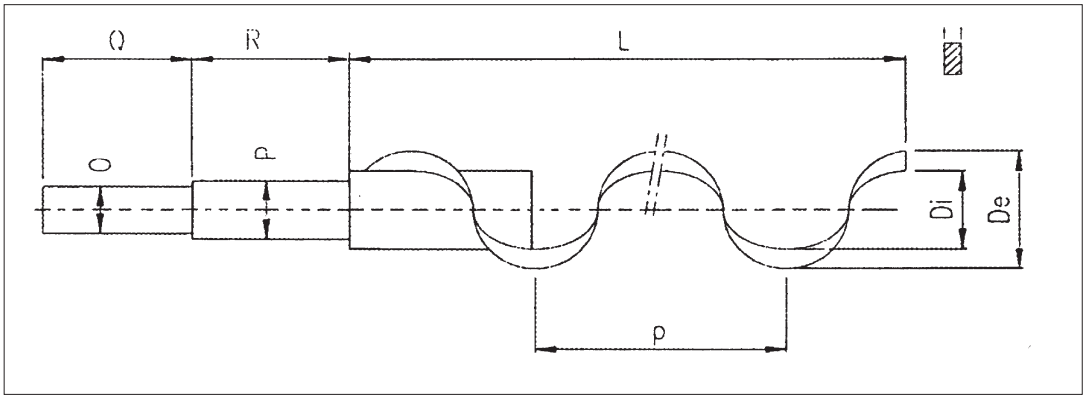

TYPE1 Rectangular section spiral withhout centre pipe
TYPE1 *Wendel mit rechteckigem Querschnitt ohne Innenrohr*
TYPE1 Hélice à section rectangulaire sans tube intérieur
TIPO 1 *Eliche a sezione rettangolare senza tubo interno*

MBF	Code	De	Di	p	S	L	Ø O	Ø P	Q	R	kg
042	**UTD 212**	26	16	30	5	403	14	25	58	81	0.5
073	**UTD 312**	60	40	60	5	607	24	29	96	119	3
114	**UTD 412**	100	67	100	5	607	24	29	96	119	5

STD BLENDING TOOLS - STD - *HOMOGENISIERWERKZEUGE*
HOMOGENEISATEURS STD - *UTENSILI OMOGENEIZZAZIONE STD*

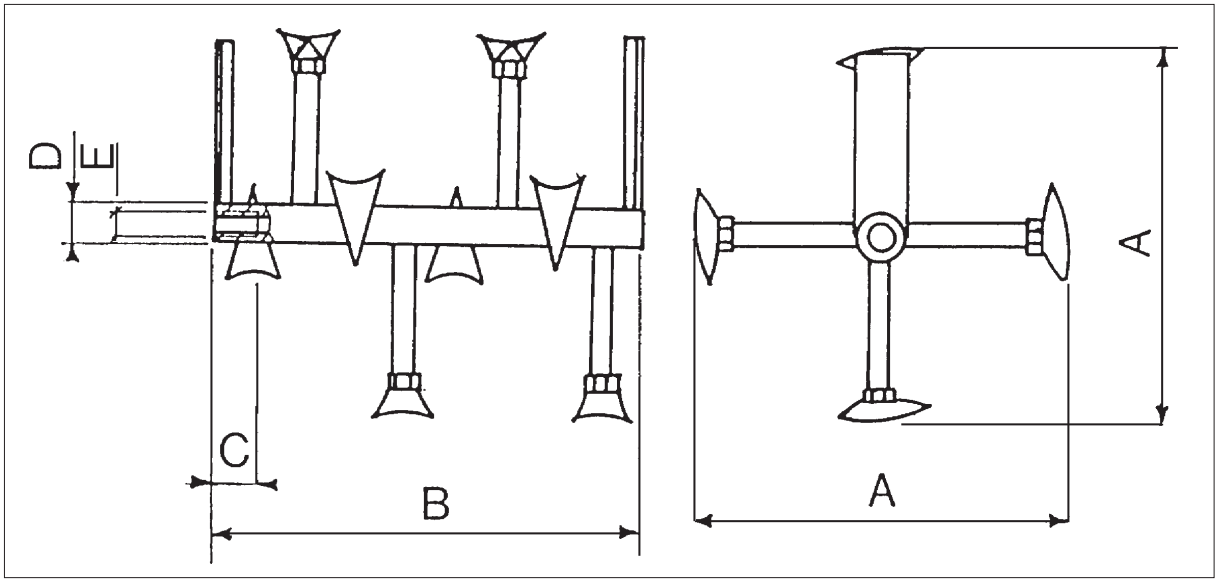

TYPE 2

MBF	Code	A	B	C	D	E	kg
042	**UTO 22**	130	199	25	25	M 12	1
073	**UTO 23**	269	349	35	35	M 16	3.5
114	**UTO 24**	269	349	35	35	M 16	3.5

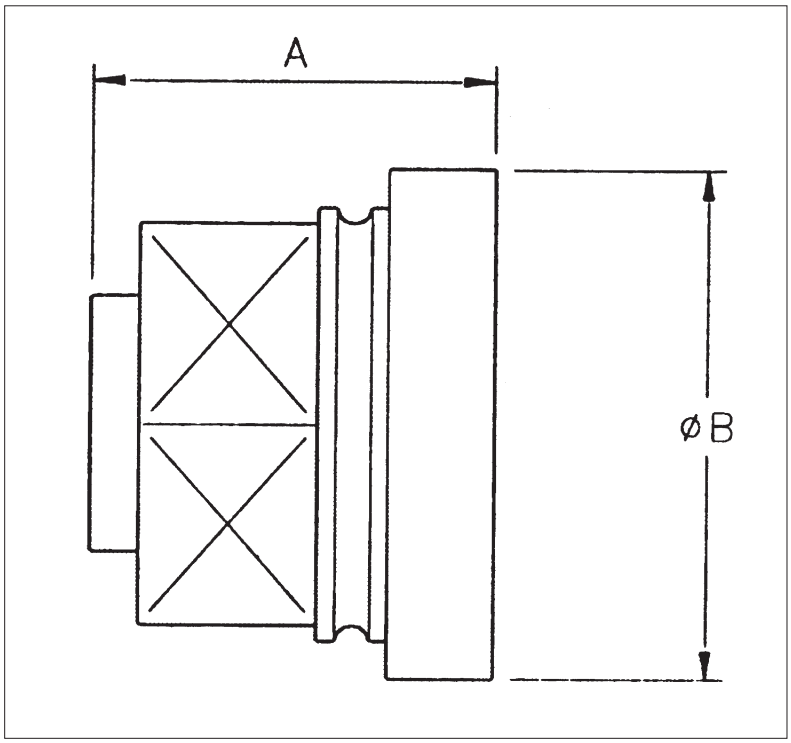

SINT®ER

MBF	Code	A	B
042	**MBT N2**	54	60
073	**MBT N3**	57	80
114	**MBT N4**	57	80

SINT®AL

MBF	Code	A	B
042	**MBT F2**	54	60
073	**MBT F3**	57	80
114	**MBT F4**	57	80

SPECIAL METERING SCREWS - *SPEZIALDOSIERWERKZEUGE* - OUTILS DOSAGE SPECIAUX - *UTENSILI DOSAGGIO SPECIALI*

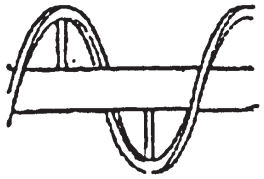

UTD. 22 — TYPE 2

RIBBON SPIRAL ON PIPE	BRANDWENDEL MIT INNENROHR	HELICE A RUBAN AVEC TUBE INTERIEUR	ELICHE A NASTRO CON TUBO INTERNO
Heavy sticky materials, heavy oxides, clay	Geeignet für Medien mit höherem Schüttgewicht und mit Tendenz zum Anbacken: Oxyde mit höherem Schüttgewicht, Ton	Matériaux lourds avec tendance au tassement, oxides lourdes, argiles	Materiali pesanti con tendenza all'impaccamento ossidi pesanti, argille

UTD. 32 — TYPE 3

ROUND SECTION SPIRAL WITHOUT CENTRE PIPE	WENDEL MIT RUNDEM QUERSCHNITT OHNE INNENROHR	HELICE A SECTION RONDE SANS TUBE INTERIEUR	ELICHE A SEZIONE TONDA PRIVE DI TUBO INTERNO
Light materials, granular products, pellets, PVC, polymers in pellets.	Geeignet für Medien mit geringem Schüttgewicht, ohne Tendenz zum Anbacken: Granulate, Pellets; PVC, Polymere in Pellets.	Matériaux légers, produits granulaires, pellets, PVC, polymers en pellets.	Materiali leggeri non impaccati, prodotti granulari, pellets, PVC, polimeri in pellets.

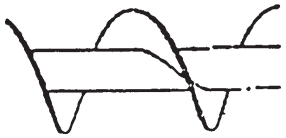

UTD.42 — TYPE 4

STANDARD SCREW	VOLLBLATTWENDEL MIT INNENROHR	HELICE AVEC TUBE INTERIEUR	ELICHE CONTINUE CON TUBO INTERNO
Heavy fluid materials metallic granules.	Geeignet für gut fließende Medien mit höherem Schüttgewicht: Schiefer gemahlen, Metallgranulate.	Matériaux lourds et fluides, grains de métal.	Materiali pesanti e scorrevoli, graniglia di metalli.

UTD. 5. — TYPE 5

HELICOID SCREW ON TAPERED PIPE MADE FROM SINT®ER OR SINT®AL	WENDEL MIT KONISCHER WELLE AUS SINT®ER ODER SINT®AL	HELICE AVEC TUBE CONIQUE EN SINT®ER OU SINT®AL	ELICA CON TUBO CONICO IN SINT®ER O SINT®AL
Whenever even metering on the entire surface along with mixing of materials with different particle size, bulk density and/or fluency is required.	Findet überall Verwendung, wo eine homogene Dosierung auf der gesamten Fläche in Verbindung mit einer Durchmischung von Medien mit unterschiedlicher Körnung, Fließfähigkeit und/ oder Schüttdichte erforderlich ist.	Où qu'une extraction homogéne sur toute la surface avec des mélanges de produits à granulométries différentes, à poids spécifiques différents et/ ou degrés différents de fluidité.	Dovunque sia necessaria una estrazione omogenea su tutta la superficie con miscele di prodotti a diversa granulometria, diverso peso specifico, diverso grado di scorrevolezza.

SPECIAL METERING SCREWS - *SPEZIAL-DOSIERWERKZEUGE* - OUTILS DOSAGE SPECIAUX - *UTENSILI DOSAGGIO SPECIAL*

	UTD. 7.	TYPE 7		
	SAME AS TYPE 5 BUT WITH DIFFERENT PITCH	WIE TYP 5, JEDOCH MIT UNTERSCHIEDLICHER STEIGUNG	SIMILAIRE AU TYPE 5, MAIS AVEC PAS DIFFERENT	SIMILE AL TIPO 5, MA CON PASSO DIVERSO
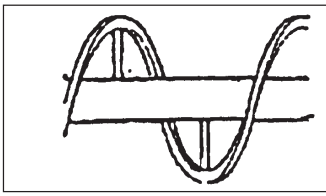	**UTD. B2**	TYPE B		
	SAME AS TYPE 2 BUT EXTENDED	WIE TYP 2, JEDOCH VERLÄNGERT	SIMILAIRE AU TYPE 2, MAIS PROLONGÉ	SIMILE AL TIPO 2, MA PROLUNGATO
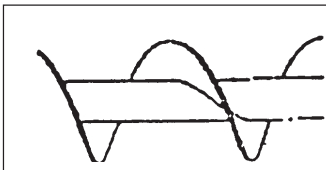	**UTD. D2**	TYPE D		
	SAME AS TYPE 4 BUT EXTENDED	WIE TYP 4, JEDOCH VERLÄNGERT	SIMILAIRE AU TYPE 4, MAIS PROLONGÉ	SIMILE AL TIPO 4, MA PROLUNGATO
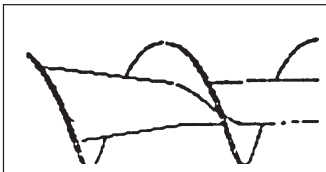	**UTD. E.**	TYPE E		
	SAME AS TYPE 5 BUT EXTENDED	WIE TYP 5, JEDOCH VERLÄNGERT	SIMILAIRE AU TYPE 5, MAIS PROLONGÉ	SIMILE AL TIPO 5, MA PROLUNGATO
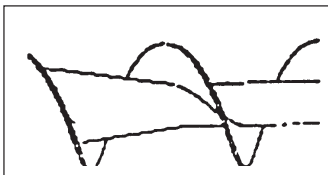	**UTD. G.**	TYPE G		
	SAME AS TYPE 7 BUT EXTENDED	WIE TYP 7, JEDOCH VERLÄNGERT	SIMILAIRE AU TYPE 7, MAIS PROLONGÉ	SIMILE AL TIPO 7, MA PROLUNGATO

SPECIAL METERING SCREWS - *SPEZIAL-DOSIERWERKZEUGE* - OUTILS DOSAGE SPECIAUX - *UTENSILI DOSAGGIO SPECIAL*

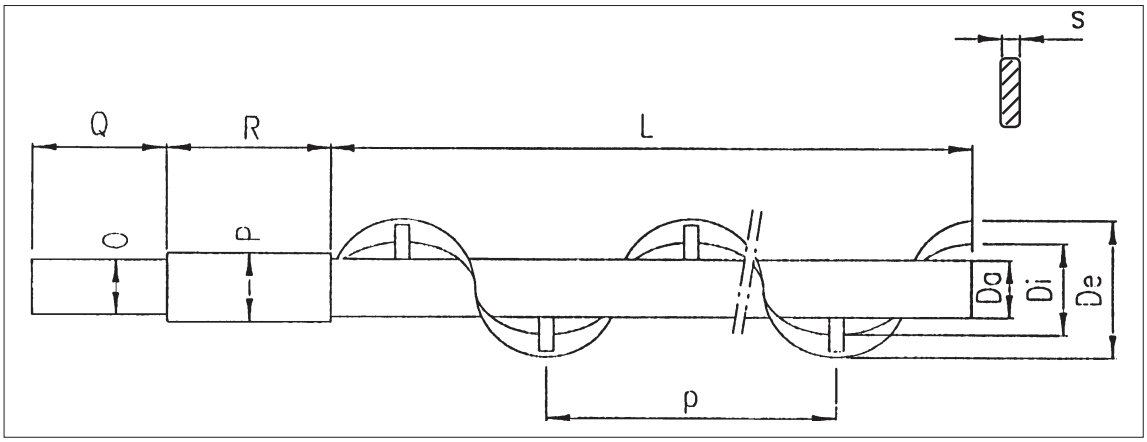

TYPE 2 and TYPE B Ribbon flight on pipe
TYPE 2 und TYPE B *Bandwendel mit Innenrohr*
TYPE 2 et TYPE B à ruban avec tube interieur
TIPO 2 e TIPO B *a nastro con tubo interno*

Type	MBF	Code	De	Di	Da	p	S	L	Ø O	Ø P	Q	R	kg
2	**042**	**UTD222**	30	20	10	30	5	403	14	25	58	81	2
	073	**UTD322**	60	40	25	60	5	607	24	29	96	119	3
	114	**UTD422**	100	67	25	100	5	607	24	29	96	119	4
B	**042**	**UTD2B2**	30	20	10	30	5	573	14	25	58	81	3
	073	**UTD3B2**	60	40	25	60	5	857	24	29	96	119	4
	114	**UTD4B2**	100	67	25	100	5	857	24	29	96	119	4,5

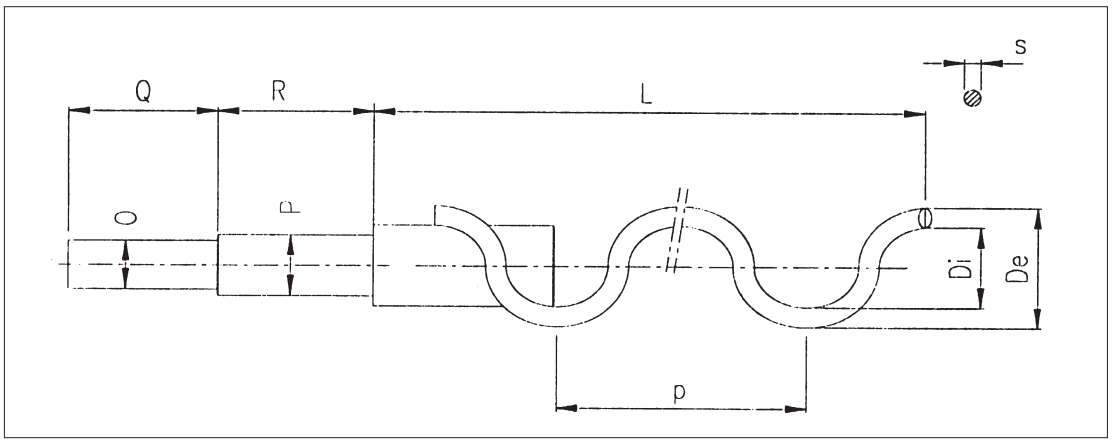

TYPE 3 Round section spiral without centre pipe
TYPE 3 *Wendel mit rundem Querschnitt ohne Innenrohr*
TYPE 3 Hélice à section rectangulaire sans tube intérieur
TIPO 3 *Eliche sezione tonda senza tubo interno*

Type	MBF	Code	De	Di	p	S	L	Ø O	Ø P	Q	R	kg
3	**042**	**UTD 232**	26	16	30	5	403	14	25	58	81	0.5
	073	**UTD 332**	57	40	60	8	607	24	29	96	119	3
	114	**UTD 432**	90	70	75	10	607	24	29	96	119	5

SPECIAL METERING SCREWS - *SPEZIAL-DOSIERWERKZEUGE* - OUTILS DOSAGE SPECIAUX - *UTENSILI DOSAGGIO SPECIAL*

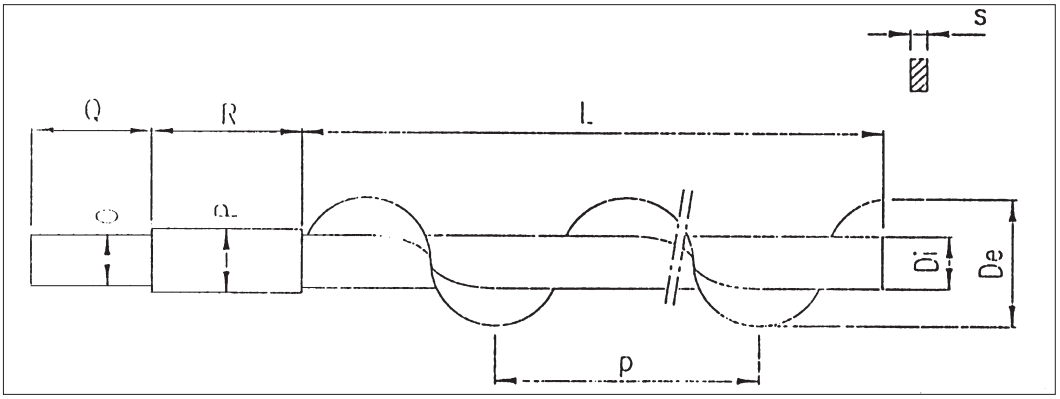

TYPE 4 **and** **TYPE D** standard screws
TYPE 4 ***und*** ***TYPE D*** *Vollblattwendeln mit Innenrohr*
TYPE 4 **et** **TYPE D** hélices continues avec tube interieur
TIPO 4 ***e*** ***TIPO D*** *eliche continue con tubo interno*

EXTENDED
VERLÄNGERT
RALLONGE
ALLUNGATO

Type	MBF	Code	De	Di	p	S	L	Ø O	Ø P	Q	R	kg
4	042	UTD 242	30	20	30	5	403	14	25	58	81	1.5
	073	UTD 342	57	25	60	5	607	24	29	96	119	3.5
	114	UTD 442	90	32	100	5	607	24	29	96	119	6
D	042	UTD 2D2	30	20	30	5	573	14	25	58	81	2
	073	UTD 3D2	57	25	60	5	857	24	29	96	118	5
	114	UTD 4D2	90	32	100	5	857	24	29	96	119	7.5

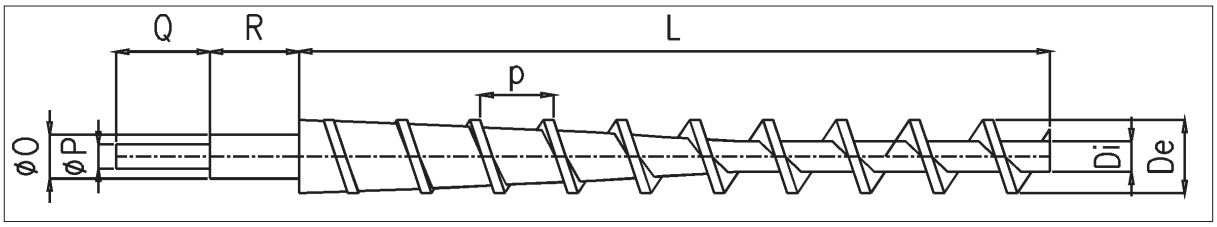

TYPE 5 **and** **TYPE E** screws made of SINT®ER or SINT®AL with tapered pipe
TYPE 5 ***und*** ***TYPE E*** *Wendeln aus SINT®ER oder SINT®AL mit konischem Innenrohr*
TYPE 5 **et** **TYPE E** Hélices en SINT®ER ou SINT®AL avec tube conique
TIPO 5 ***e*** ***TIPO E*** *Eliche in SINT®ER o SINT®AL con tubo conico*

EXTENDED
VERLÄNGERT
RALLONGE
ALLUNGATO

Type	MBF	Code	De	Di	p	L	Ø O	Ø P	Q	R	kg
5	042	UTD 25.	30	15	20	403	25	14	58	81	0.6
	073	UTD 35.	60	25	60	607	30	24	96	119	2
	114	UTD 45.	100	35	100	607	30	24	96	119	3
E	042	UTD 2E.	30	15	20	573	25	14	58	81	0.85
	073	UTD 3E.	60	25	60	857	30	24	96	119	2
	114	UTD 4E.	100	35	100	857	30	24	96	119	3.5

4	SINT®ER
5	SINT®AL

SPECIAL METERING SCREWS - *SPEZIAL-DOSIERWERKZEUGE* - OUTILS DOSAGE SPECIAUX - *UTENSILI DOSAGGIO SPECIAL*

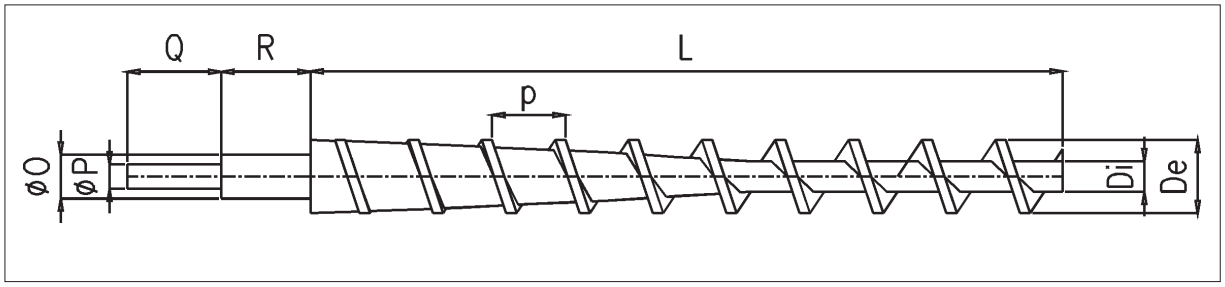

TYPE 7- G Screw with tapered centre pipe made of SINT®ER or SINT®AL
TYPE 7- G *Vollblattwendel mit konischem Innenrohr aus SINT®ER oder SINT®AL*
TYPE 7- G Hélice continue avec tube intérieur conique en SINT®ER ou SINT®AL
TIPO 7- G *Elica continua con yubo interno conico in SINT®ER o SINT®AL*

Type	MBF	Code	De	Di	p	L	Ø O	Ø P	Q	R	kg
7	042	UTD 27 .	30	20	30	403	25	14	58	81	0.6
G	042	UTD 2G .	30	20	30	573	25	14	58	81	0.7

4	SINT®ER
5	SINT®AL

SPECIAL SHAFT SEAL - *SONDER-WELLENABDICHTUNG* - ETANCHEITE SPECIALE - *TENUTA SPECIALE*

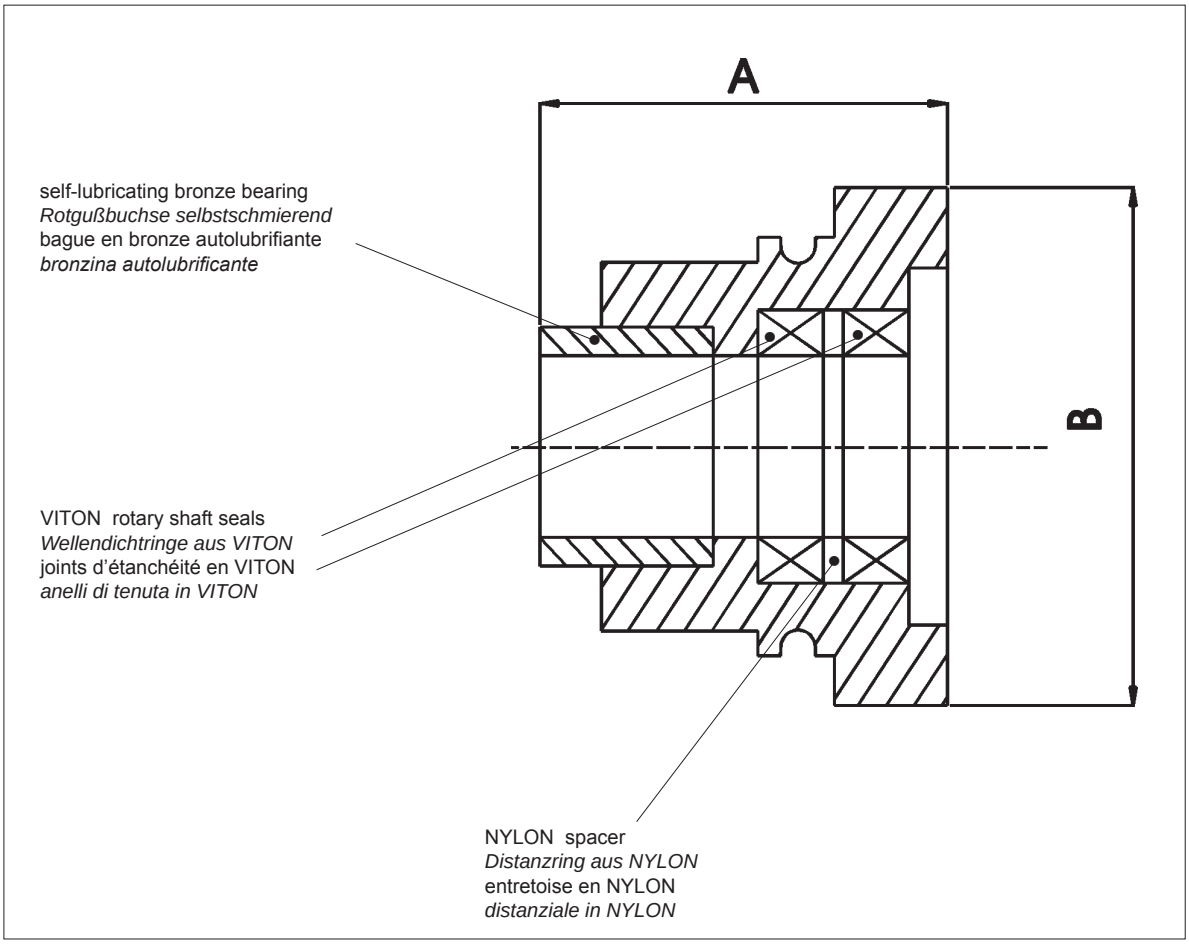

MBF	Code	A	B	kg
042	**MBTX2**	54	60	0.35
073	**MBTX3**	57	80	0.5
114	**MBTX4**	57	80	0.5

SPECIAL SHAFT SEAL WITH GREASING - *SONDER-WELLENABDICHTUNG MIT FETT*
ETANCHEITE SPECIALE AVEC GRAISSE - *TENUTA SPECIALE CON INGRASSAGGIO*

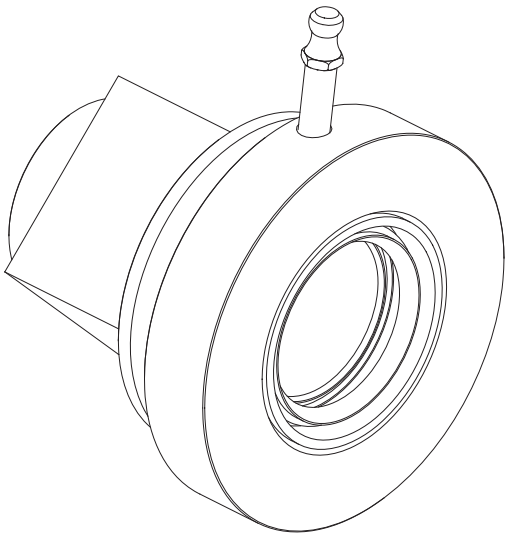

MBTT 2

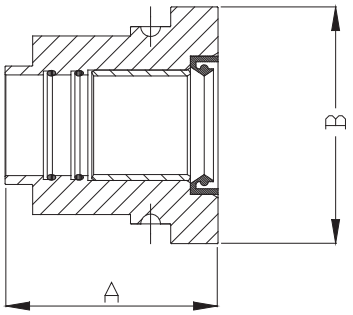

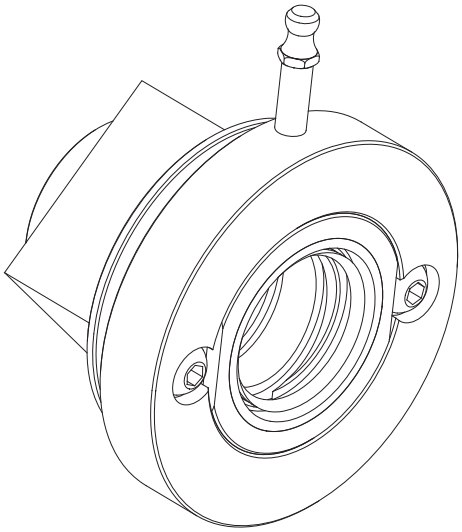

MBTT 3 - 4

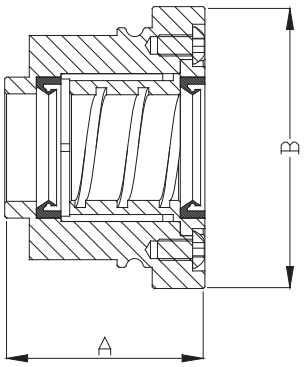

MBF	Code	A	B	kg
042	MBTT2	54	60	0.35
073	MBTT3	57	80	0.5
114	MBTT4	57	80	0.5

N.B. : The MBTT seal is standard with stainless steel version only
N.B. : MBTT-Wellenabdichtung ist nur für Edelstahlversion Standard
N.B. : L'étanchéité MBTT est standard seulement pour la version en acier inox
N.B. : La tenuta MBTT è STD solo sulla versione in AISI

①	②	③	④	⑤	⑥	⑦	⑧	⑨	⑩	⑪	⑫
MBF	073	N	TN	UD 1	SST	UO 2	B	0	Q	1	0025	0055

MICROBATCH FEEDER
TYPE “MBF”

DIAMETER
042 - 073 - 114

BODY MATERIAL
N =Standard SINT® polymer
F= Food SINT® polymer
A= St.Steel 304L
B= St.steel 316L

SEAL
TN= SINT®ER
TF= SINT®AL
TT= 304 ST.STEEL WITH GREASING
TA= 304 ST.STEEL WITH TEFLON
TX= 304 ST.STEEL WITH BRONZE

FEEDER SCREW
+++ - UD1 (©)- UD2- UD3- UD4- UD5- UD7(#)- UDB- UDD- UDE- UDG(#)

FEEDER PIPE
SST= STANDARD FEEDER PIPE
SPL= EXTENDED FEEDER PIPE
SSR= LINER FEEDER PIPE
SPR= EXTENDED LINER FEEDER PIPE

BLENDING TOOL
+++ = WITHOUT
UO1= SHAPED PADDLES
UO2= STANDARD PLOUGHSHARE

FEEDER DRIVE
+ = WITHOUT 0 rpm (§)
A = FIXED SPEED 1/10 -140 rpm
B = FIXED SPEED 1/15 -93 rpm (©)
C = FIXED SPEED 1/20 -70 rpm (§)
D = FIXED SPEED 1/28 -50 rpm
E = FIXED SPEED 1/40 -35 rpm
F = FIXED SPEED 1/70 -20 rpm (§)

VARIABLE SPEED
0 = WITHOUT (©)
1= VARIABLE SPEED 1000 rpm-190 rpm
2= VARIABLE SPEED WITH DIFFERENTIAL 900 rpm-10 rpm (§)

BLENDING DRIVE
+ = WITHOUT GEAR (§)
Q = STANDARD SPEED 35 rpm
S = SPECIAL SPEED 14 rpm (§)

VOLTAGE
+ = WITHOUT MOTOR
1 = 220-240 / 380-420 V 50 Hz; 440-480 V 60 Hz (©)
6 = 210-230 / 360-400 V 60 Hz

DRIVE POWER FEEDER SCREW
++++ = WITHOUT MOTOR
0012= 0,12 kW for D=042 (©)
0018 = 0,18 kW for D=042
0025= 0,25 kW for D= 042-073-114 (©)
0037= 0,37 kW for D= 042-073-114

DRIVE POWER FEEDER SCREW
++++ = WITHOUT MOTOR
0025= 0,25 kW for D=042 (©)
0037= 0,37 kW for D= 042
0055= 0,25 kW for D= 073-114 (©)
0075= 0,75 kW for D= 073-114

LEGENDA:
© STANDARD
§ NO MBF042
# ONLY MBF042

①	②	③	④	⑤	⑥	⑦	⑧	⑨	⑩	⑪	⑫
MBF	073	N	TN	UD 1	SST	UO 2	B	0	Q	1	0025	0055

MIKRODOSIERER
TYP “MBF”

DURCHMESSER
042 - 073 - 114

WERKSTOFF GEHÄUSE
N =Standard SINT®ER Technisches Polymer
F= SINT®AL Technisches Polymer
A= Edelstahl 1.4301
B= Edelstahl 1.4401

WELLENABDICHTUNG
TN= SINT®ER
TF= SINT®AL
TT= Edelstahl 1.4301 MIT FETT
TA= Edelstahl 1.4301 MIT TEFLON-BUCHSE
TX= Edelstahl 1.4301

DOSIERWERKZEUGE
+++ - UD1 (©)- UD2- UD3- UD4- UD5- UD7(#)- UDB-
UDD- UDE- UDG(#)

DOSIERROHR MIT INNENAUSKLEIDUNG
SST= STANDARD DOSIERROHR
SPL= VERLÄNGERTES DOSIERROHR
SSR= DOSIEROHR MIT INNENAUSKLEIDUG
SPR= VERLÄNGERTES DOSIERROHR MIT INNENAUSKLEIDUG

HOMOGENISIERWEKZEUG
+++ = OHNE HOMOGENISIERWEKZEUG
UO1= HOMOGENISIERWEKZEUG MIT PADDEL
UO2= STANDARD PFLUGSCHAR-HOMOGENISIERWEKZEUG

DREHZAHL DES DOSIERANTRIEBS
+ = OHNE GETRIEBE 0 rpm (§)
A = KOSTANTE DREHZAHL 1/10 -140 rpm
B = KOSTANTE DREHZAHL 1/15 -93 rpm (©)
C = KOSTANTE DREHZAHL 1/20 -70 rpm (§)
D = KOSTANTE DREHZAHL 1/28 -50 rpm
E = KOSTANTE DREHZAHL 1/40 -35 rpm
F = KOSTANTE DREHZAHL 1/70 -20 rpm (§)

REGELBARE DREHZAHL
0 = KOSTANTE DREHZAHL (©)
1 = REGELBARE DREHZAHL 1000 rpm-190 rpm
2 = REGELBARE DREHZAHL MIT DIFFERENTIAL 900 rpm-10 rpm (§)

ANTRIEB HOMOGENISIERWERKZEUG
+ = OHNE GETRIEBE (§)
Q = STANDARD-DREHZAHL 35 rpm
S = SONDER-DREHZAHL14 rpm (§)

SPANNUNG- FREQUENZ
+ = OHNE VERSORGUNG
1 = 220-240 / 380-420 V 50 Hz; 440-480 V 60 Hz (©)
6 = 210-230 / 360-400 V 60 Hz

ANTRIEBSLEISTUNG DOSIERWERKZEUG
++++ = OHNE ANTRIEB
0012= 0,12 kW mit D=042 (©)
0018 = 0,18 kW mit D=042
0025= 0,25 kW mit D= 042-073-114 (©)
0037= 0,37 kW mit D= 042-073-114

ANTRIEBSLEISTUNG HOMOGENISIERWERKZEUG
++++ = OHNE ANTRIEB
0025= 0,25 kW mit D=042 (©)
0037= 0,37 kW mit D= 042
0055= 0,25 kW mit D= 073-114 (©)
0075= 0,75 kW mit D= 073-114

LEGENDA:
© STANDARD
§ NO MBF042
# NUR MBF042

①	②	③	④	⑤	⑥	⑦	⑧	⑨	⑩	⑪	⑫
MBF	073	N	TN	UD 1	SST	UO 2	B	0	Q	1	0025	0055

MICRODOSEUR
TYPE “MBF”

DIAMETRE
042 - 073 - 114

MATERIAU CORPS
N =Standard SINT® Tecnopolmero
F= SINT® Tecnopolimero Alimentare
A= AISI 304L
B= AISI 316L

ETANCHEITES
TN= SINT®ER
TF= SINT®AL
TT= AISI 304 AVEC GRAISEE
TA= AISI 304 AVEC TEFLON
TX= AISI 304 SPECIALE

OUTIL DE DOSAGE
+++ - UD1 (©)- UD2- UD3- UD4- UD5- UD7(#)- UDB- UDD- UDE- UDG(#)

TUBE DE DOSAGE
SST= TUBE DE DOSAGE STANDAR
SPL= TUBE DE DOSAGE RALLONGEE
SSR= TUBE DE DOSAGE AVEC REVETEMENT INTERIEU
SPR= TUBE DE DOSAGE RALLONGE AVEC REVETEMENT INTERIEUR

OUTILS HOMOGENEISATEUR
+++ = AVEC HOMOGENEISATEUR
UO1= SPECIAL
UO2= STANDARD

MOTORISATION DE DOSAGE
+ = AVEC MOTORISATION 0 rpm (§)
A = VITESSE COSTANTE 1/10 -140 rpm
B = VITESSE COSTANTE 1/15 -93 rpm (©)
C = VITESSE COSTANTE 1/20 -70 rpm (§)
D = VITESSE COSTANTE 1/28 -50 rpm
E = VITESSE COSTANTE 1/40 -35 rpm
F = VITESSE COSTANTE 1/70 -20 rpm (§)

VITESSE VARIABLE
0 = VITESSE COSTANTE (©)
1= VITESSE VARIABLE 1000 rpm-190 rpm
2= VITESSE VARIABLE AVEC DIFFÉRENZIALE 900 rpm-10 rpm (§)

MOTORISATION DE HOMOGENEISATION
+ = AVEC MOTORISATION (§)
Q = STANDARD 35 rpm
S = SPECIAL 14 rpm (§)

VOLTAGE ET FREQUENCE D’ALIMENTATION
+ = SANS MOTEUR
1 = 220-240 / 380-420 V 50 Hz; 440-480 V 60 Hz (©)
6 = 210-230 / 360-400 V 60 Hz

PUISSANCE MOT. OUTIL DE DOSAGE
++++ = SANS MOTEUR
0012= 0,12 kW per D=042 (©)
0018 = 0,18 kW per D=042
0025= 0,25 kW per D= 042-073-114 (©)
0037= 0,37 kW per D= 042-073-114

PUISSANCE MOT. OUTIL DE HOMOGENEISATION
++++ = SANS MOTEUR
0025= 0,25 kW per D=042 (©)
0037= 0,37 kW per D= 042
0055= 0,25 kW per D= 073-114 (©)
0075= 0,75 kW per D= 073-114

LEGENDA:
© STANDARD
§ NO MBF042
# SEULEMENT POUR MBF042

①	②	③	④	⑤	⑥	⑦	⑧	⑨	⑩	⑪	⑫
MBF	073	N	TN	UD 1	SST	UO 2	B	0	Q	1	0025	0055

MICRODOSATORE
TIPO “MBF”

DIAMETRO
042 - 073 - 114

MATERIALE CORPO
N =Standard SINT® Tecnopolimero
F= SINT® Tecnopolimero Alimentare
A= AISI 304L
B= AISI 316L

TENUTE
TN= SINT®ER
TF= SINT®AL
TT= AISI 304 INGRASSATE
TA= AISI 304 CON TEFLON
TX= AISI 304 CON BRONZO

UTENSILE DI DOSAGGIO
+++ - UD1 (©)- UD2- UD3- UD4- UD5 - UD7(#) - UDB- UDD- UDE- UDG(#)

TUBO DI SCARICO
SST= SCARICO STANDARD
SPL= SCARICO PROLUNGATO
SSR= SCARICO INTERNAMENTE RIVESTITO
SPR= SCARICO PROLUNGATO INTERNAMENTE RIVESTITO

UTENSILE DI OMOGENIZZAZIONE
+++ = SENZA
UO1= SPECIALE
UO2= STANDARD A VOMERI

MOTORIZZAZIONE DOSAGGIO
+ = ASSENTE 0 rpm (§)
A = VELOCITA’ FISSA 1/10 -140 rpm
B = VELOCITA’ FISSA 1/15 -93 rpm (©)
C = VELOCITA’ FISSA 1/20 -70 rpm (§)
D = VELOCITA’ FISSA 1/28 -50 rpm
E = VELOCITA’ FISSA 1/40 -35 rpm
F = VELOCITA’ FISSA 1/70 -20 rpm (§)

VELOCITA’ VARIABILE
0 = VELOCITA’ COSTANTE (©)
1= VELOCITA’ VARIABILE 1000 rpm-190 rpm
2= VELOCITA’ VARIABILE DIFFERENZIALE 900 rpm-10 rpm (§)

MOTORIZZAZIONE OMOGENIZZATORE
+ = ASSENTE (§)
Q = STANDARD 35 rpm
S = SPECIALE 14 rpm (§)

TENSIONE E FREQUENZA
+ = SENZA MOTORE
1 = 220-240 / 380-420 V 50 Hz; 440-480 V 60 Hz (©)
6 = 210-230 / 360-400 V 60 Hz

MOTORIZZAZIONE UTENSILE DOSAGGIO
++++ = SENZA MOTORE
0012= 0,12 kW per D=042 (©)
0018 = 0,18 kW per D=042
0025= 0,25 kW per D= 042-073-114 (©)
0037= 0,37 kW per D= 042-073-114

MOTORIZZAZIONE UTENSILE OMOGENIZZAZIONE
++++ = SENZA MOTORE
0025= 0,25 kW per D=042 (©)
0037= 0,37 kW per D= 042
0055= 0,25 kW per D= 073-114 (©)
0075= 0,75 kW per D= 073-114

LEGENDA:
© STANDARD
§ NO MBF042
# SOLO MBF042

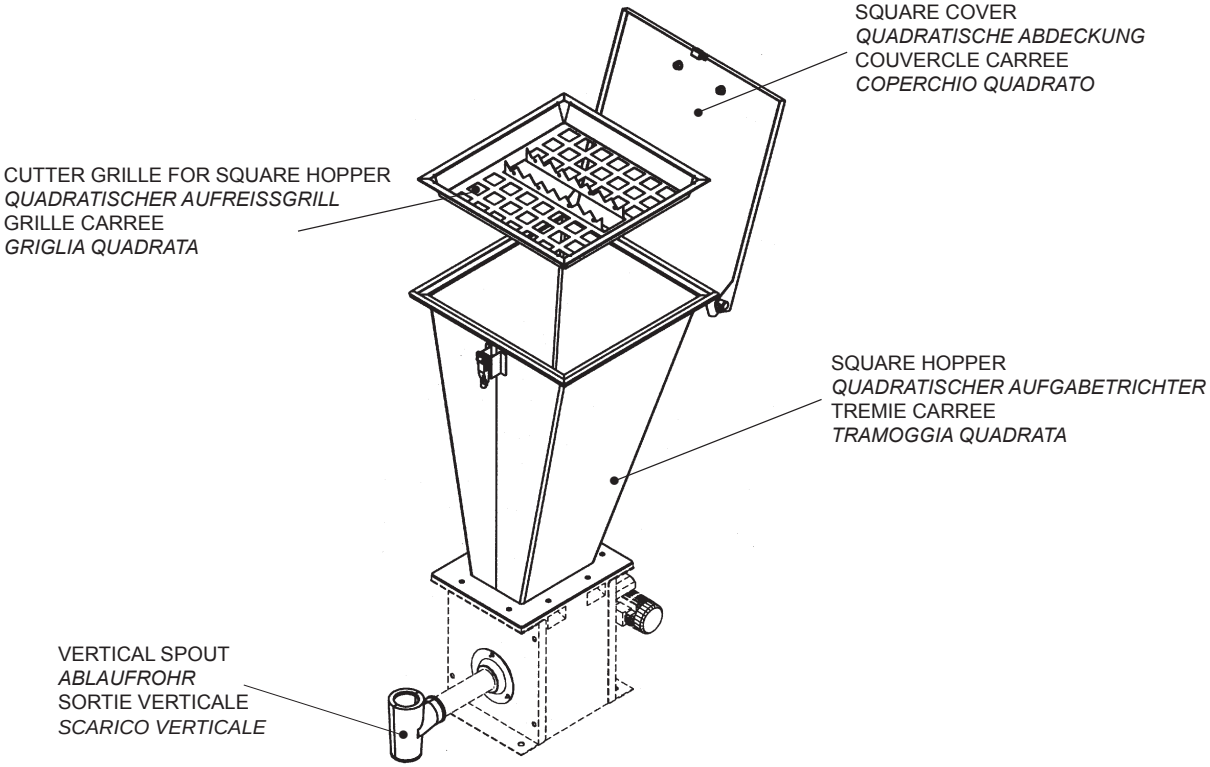
SQUARE COVER
QUADRATISCHE ABDECKUNG
COUVERCLE CARREE
COPERCHIO QUADRATO
CUTTER GRILLE FOR SQUARE HOPPER
QUADRATISCHER AUFREISSGRILL
GRILLE CARREE
GRIGLIA QUADRATA
SQUARE HOPPER
QUADRATISCHER AUFGABETRICHTER
TREMIE CARREE
TRAMOGGIA QUADRATA
VERTICAL SPOUT
ABLAUFROHR
SORTIE VERTICALE
SCARICO VERTICALE

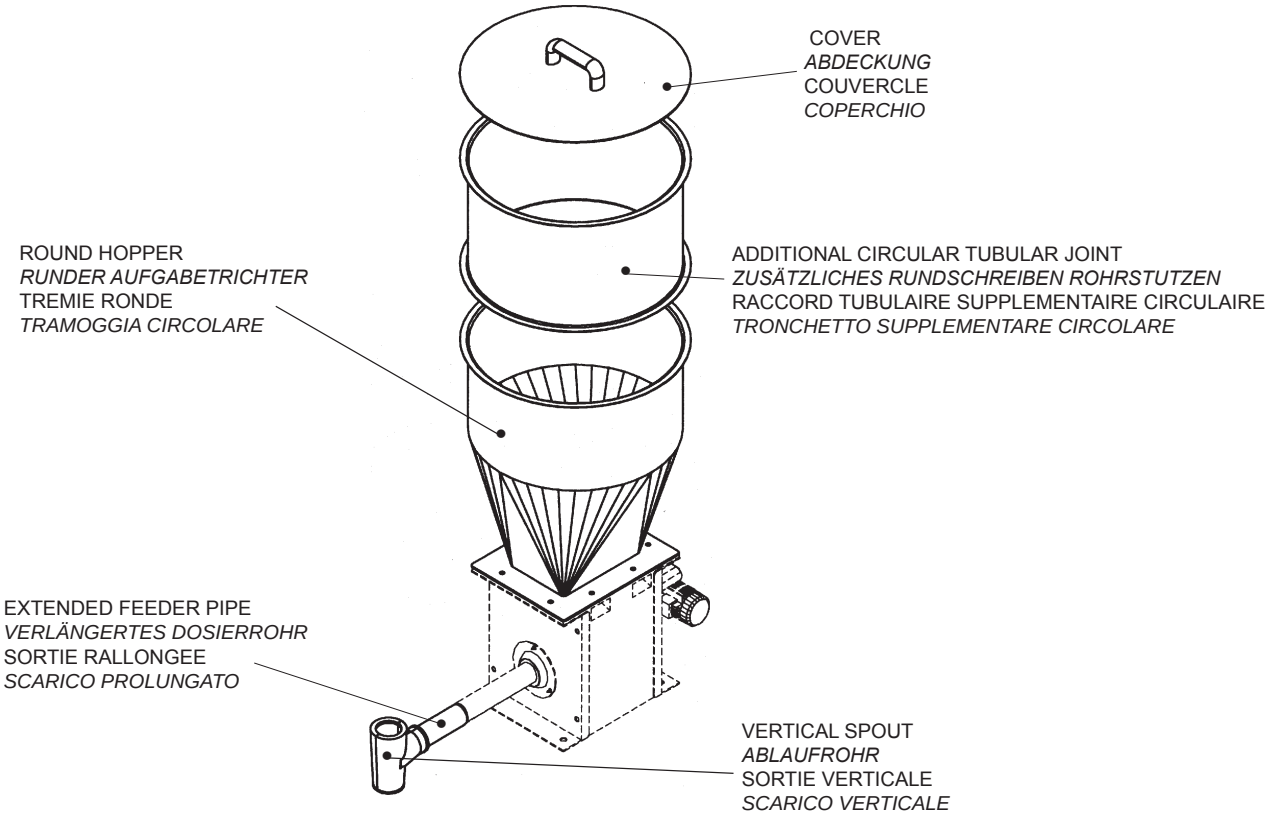
COVER
ABDECKUNG
COUVERCLE
COPERCHIO
ROUND HOPPER
RUNDER AUFGABETRICHTER
TREMIE RONDE
TRAMOGGIA CIRCOLARE
ADDITIONAL CIRCULAR TUBULAR JOINT
ZUSÄTZLICHES RUNDSCHREIBEN ROHRSTUTZEN
RACCORD TUBULAIRE SUPPLEMENTAIRE CIRCULAIRE
TRONCHETTO SUPPLEMENTARE CIRCOLARE
EXTENDED FEEDER PIPE
VERLÄNGERTES DOSIERROHR
SORTIE RALLONGEE
SCARICO PROLUNGATO
VERTICAL SPOUT
ABLAUFROHR
SORTIE VERTICALE
SCARICO VERTICALE

SQUARE HOPPER - *QUADRATISCER AUFGABETRICHTER* -TREMIE CARREE - *TRAMOGGIA QUADRATA*

M	D	X	T	S	1	2

2: Stainless steel - *Edelstahl 1.4301* - Inox 304 - *AISI 304*

Type hopper
Trichtergröße
Type de trémie
Grandezza tramoggia

1	MBF 042
2	MBF 073 -114

Square hopper
Quadratischer Aufgabetrichter
Trémie carrée
Tramoggia quadrata

Micro batch feeder accessories
Zubehör Mikrodosierer
Accessoires microdoseur
Accessori microdosatore

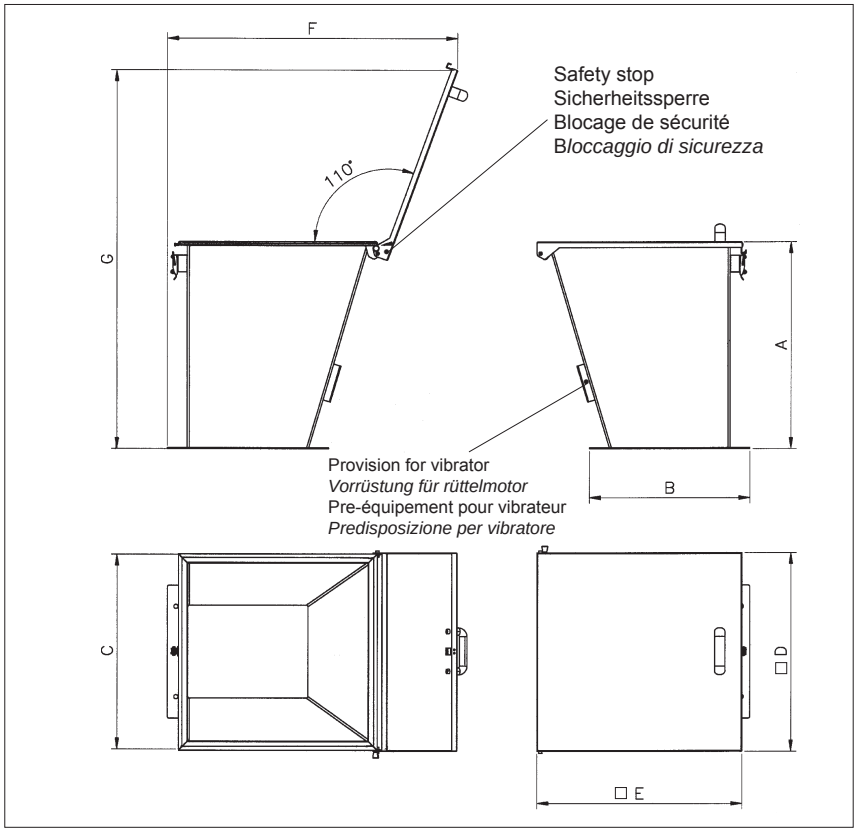

MDXTS	Suitable for - *Passend zu* Pour type - *Idoneo* MBF	A	B	C	□ D	□ E	F	G	dm³	kg
12	042	600	310	428	434	445	640	980	25	12
22	073 - 114	600	466	575	582	595	840	1120	75	19

ROUND HOPPER - *RUNDER AUFGABETRICHTER* - TREMIE RONDE - *TRAMOGGIA CIRCOLARE*

M	D	X	T	R	1	2

2: Stainless steel - *Edelstahl 1.4301* - Inox 304 - *AISI 304*

Type hopper
Trichtergröße
Type de trémie
Grandezza tramoggia

1	MBF 042
2	MBF 073 -114

Round hopper
Runder Aufgabetrichter
Trémie ronde
Tramoggia circolare

Micro batch feeder accessories
Zubehör zu Mikrodosierer
Accessoires microdoseur
Accessori microdosatore

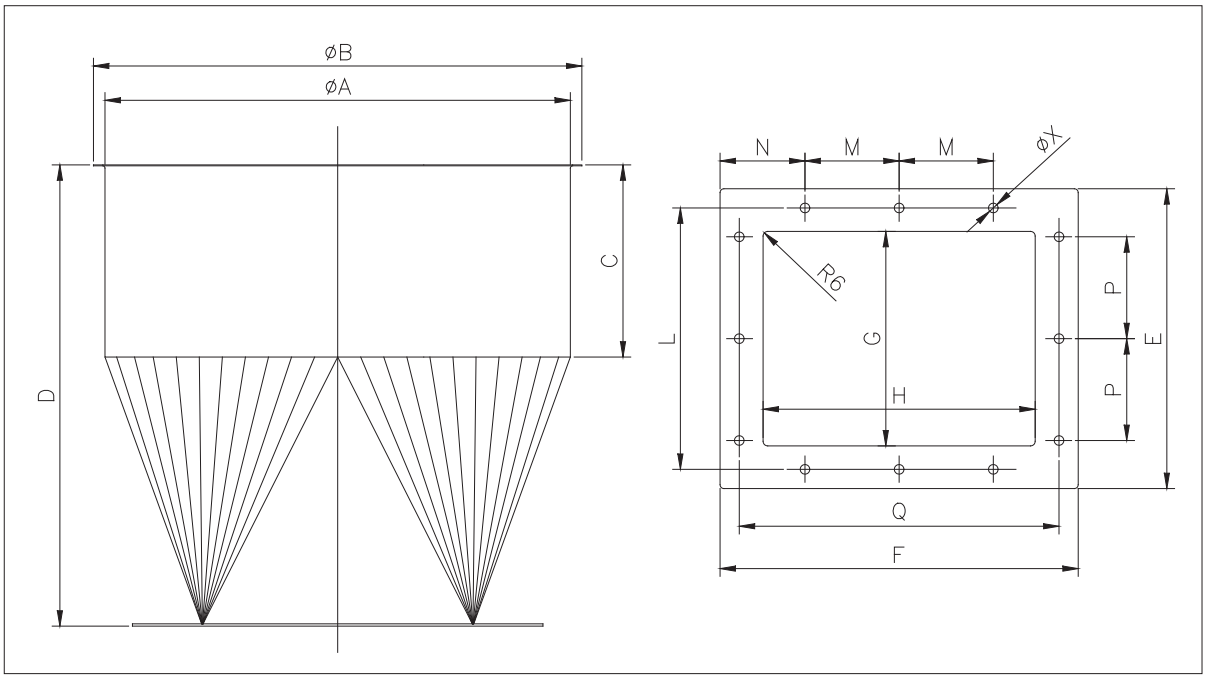

MDXTR	Suitable for - *Passend zu* Pour type - *Idoneo* MBF	Ø A	Ø B	C	D	E	F	G	H	L	M	N	P	Q	Holes - *Bohrungen* Trous - *Fori* X		dm³	kg
															Ø	n°		
12	042	408	436	200	500	250	310	140	200	200	110	100	130	260	9	8	52	12
22	073 - 114	630	636	250	600	390	466	279	354	340	122.5	110.5	132.5	416	12.5	12	120	20

ADDITIONAL CIRCULAR TUBULAR JOINT - *ZUSÄTZLICHES RUNDSCHREIBEN ROHRSTUTZEN*
RACCORD TUBULAIRE SUPPLEMENTAIRE CIRCULAIRE - *TRONCHETTO SUPPLEMENTARE CIRCOLARE*

M	D	X	A	R	1	2

2: Stainless steel - *Edelstahl 1.4301* - Inox 304 - *AISI 304*

Type hopper
Trichtergröße
Type de trémie
Grandezza tramoggia

1	MBF 042
2	MBF 073 -114

Additional circular tubular joint
Zusätzliches rundschreiben Rohrstutzen
Raccord tubulaire supplementaire circulaire
Tronchetto supplementare circolare

Micro batch feeder accessories
Zubehör zu Mikrodosierer
Accessoires microdoseur
Accessori microdosatore

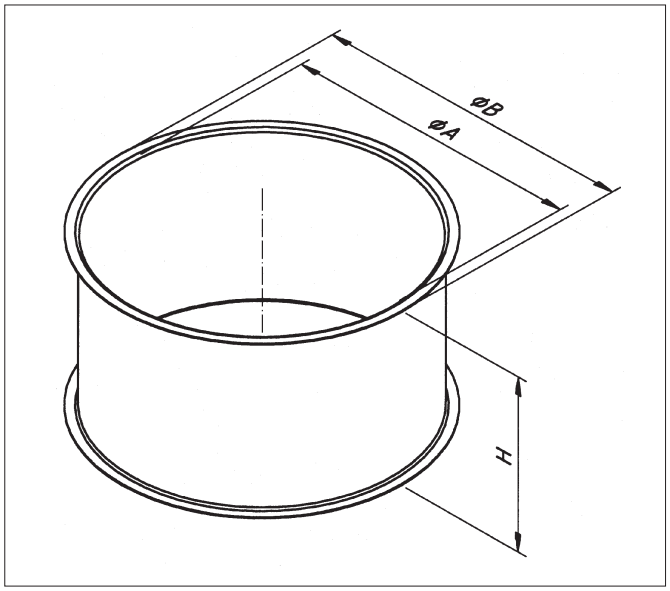

MDXAR	Suitable for - *Passend zu* Pour type - *Idoneo* MBF	Ø A	Ø B	H	dm^3
12	042	406	436	200	25
22	073-114	605	635	180	50

CUTTER GRILLE FOR SQUARE HOPPER - *QUADRATISCHER AUFREISSGRILL* - GRILLE CARREE - *GRIGLIA QUADRATA*

M	D	X	G	S	1	2

2: Stainless steel - *Edelstahl 1.4301* - Inox 304 - *AISI 304*

Type hopper
Trichtergröße
Type de trémie
Grandezza tramoggia

1	MBF 042
2	MBF 073 -114

Type hopper cutter grille
Grill
Type de grille
Griglia quadrata tagliasacchi

Micro batch feeder accessories
Zubehör Mikrodosierer
Accessoires microdoseur
Accessori per microdosatore

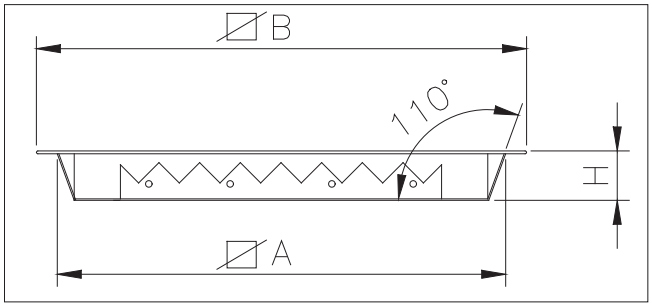

MDXGS	Suitable for - *Passend zu* Pour type - *Idoneo* MBF	□ A	□ B	H	kg
12	042	345	410	40	2
22	073 - 114	495	555	40	3

FLANGES - *FLANSCHE*
BRIDES - *FLANGIATURE*

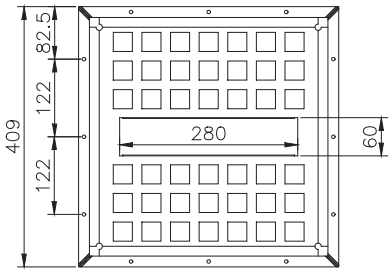

MDXGS12

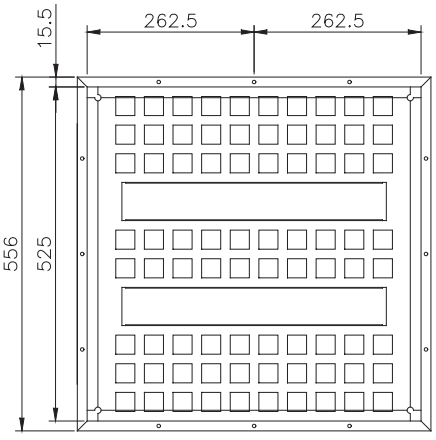

MDXGS22

ROUND COVER - *RUNDE ABDECKUNG* - COUVERCLE ROND - *COPERCHIO TONDO*

M	D	X	C	R	1	2

2: Stainless steel - *Edelstahl 1.4301* - Inox 304 - *AISI 304*

Type hopper
Trichtergröße
Type de trémie
Grandezza tramoggia

1	MBF 042
2	MBF 073 -114

Round cover
Runde Abdeckung
Couvercle rond
Coperchio tondo

Micro- batch fedeer accessories
Zubehör Mikrodosierer
Accessoires microdoseur
Accessori per microdosatore

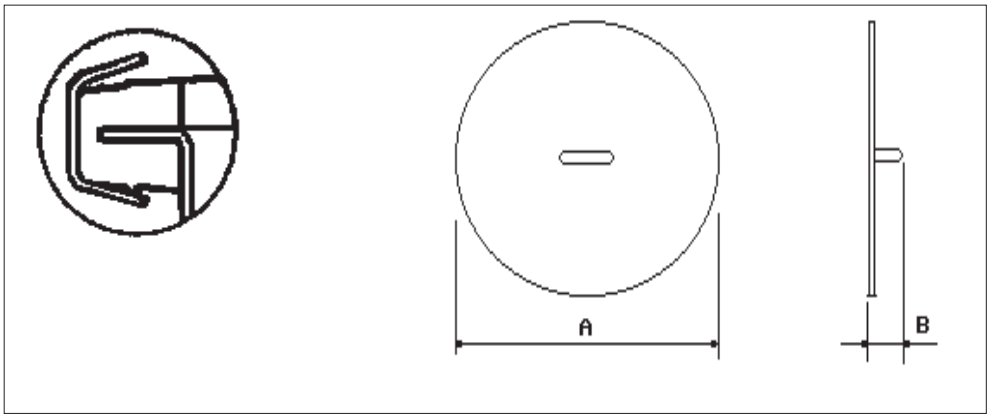

MDXCR	Suitable for - *Passend zu* Pour type - *Idoneo* MBF	A	B	kg
12	042	436	50	2
22	073 - 114	635	50	3

PNEUMATIC BALL VIBRATORS - *DRUCKLUFT-KUGELVIBRATOREN*
VIBRATEURS PNEUMATIQUES A BILLE - *VIBRATORI PNEUMATICI A SFERA*
"S"

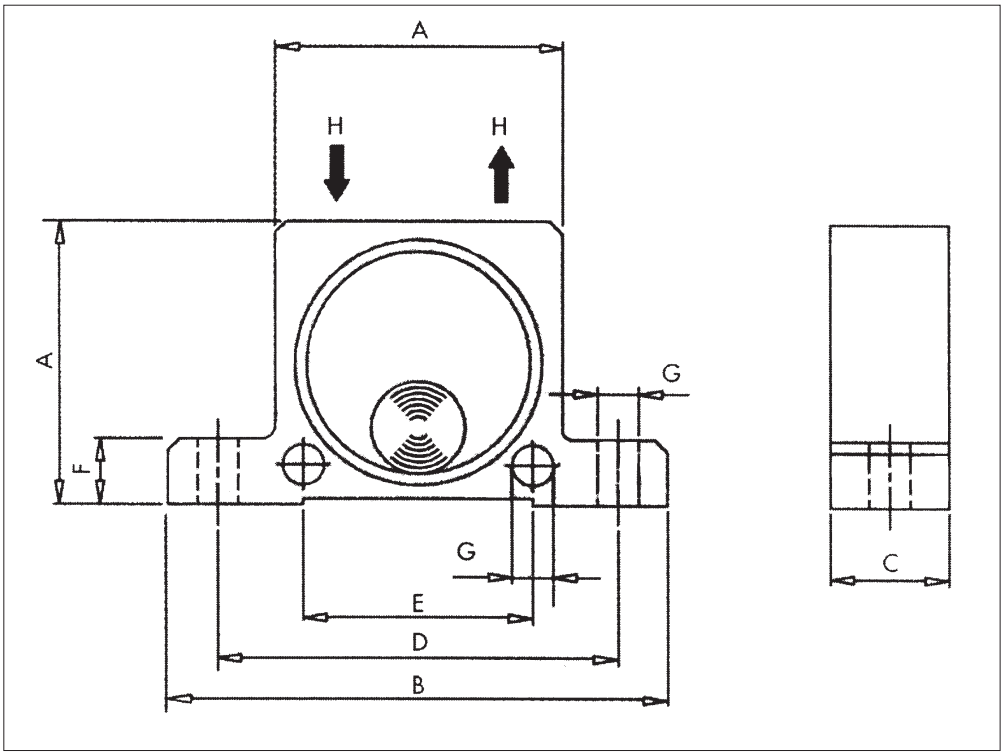

Dimensions - *Abmessungen* - Dimensions - *Dimensioni*

Type	A		B		C		D		E		F		G		H	kg	
	mm	in	mm	in	mm	in	mm	in	mm	in	mm	in	mm	in		kg	lbs
S 20	80	3.15	128	5.04	33	1.30	104	4.09	60	2.36	16	0.63	9	0.35	1/4"	0.53	1.17
S 25					38	1.50										0.63	1.39

Performance data - *Leistungsdaten* - Performances - *Prestazioni*

Type	Vibrations - *Schwingungwen* Vibrations - *Vibrazioni* min			Fc max. kg						Air consumption - *Luftverbrauch* Consommation d'air - *Consumo d'aria* l/min					
	2 bar 29 psi	4 bar 58 psi	6 bar 87 psi	2 bar = 29 psi		4 bar = 58 psi		6 bar = 87 psi		2 bar = 29 psi		4 bar = 58 psi		62 bar = 87psi	
				kg	lbs	kg	lbs	kg	lbs	dm^3	cf	dm^3	cf	dm^3	cf
S 20	10.500	14.500	16.500	72	162	122	275	172	387	130	4.6	230	81	340	12.0
S 25	9.200	12.200	14.000	93	209	157	353	205	461	160	5.6	290	10.2	425	15.0

ELECTRIC EXTERNAL MOTOVIBRATORS - *ELEKTRISCHE VIBRATIONSMOTOREN*
MOTOVIBRATEURS EXTERNES ELECTRIQUES - *MOTOVIBRATORI ELETTRICI*
MVE

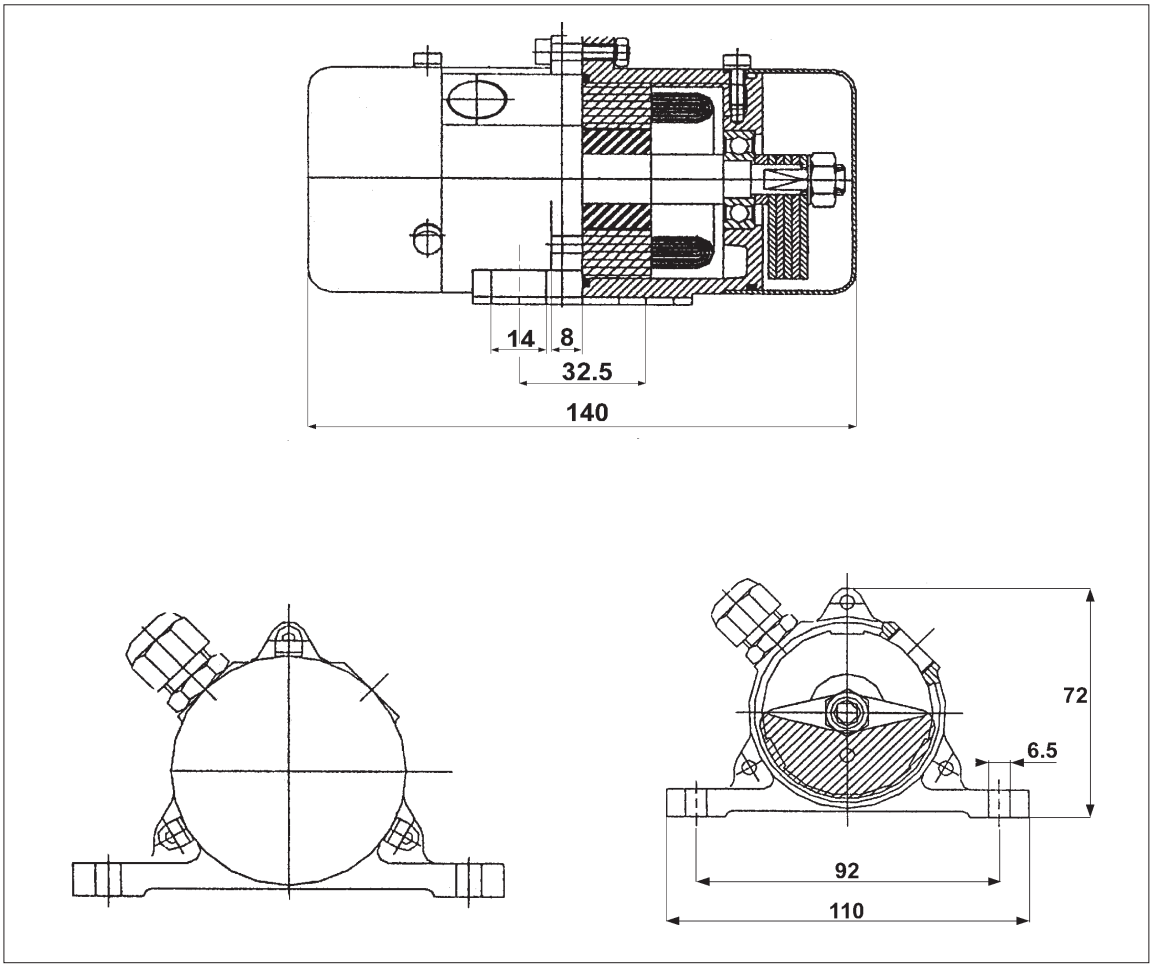

Type	Max. power *Max. Leistung* Puissance max. *Potenza max.* W		Max. current *Max. Stromaufnahme* Courant max. *Assorbimento max.* A		RPM *U/min* TPM *Giri/min*		Centrifugal force *Zentrifugalkraft* Force centrifuge *Forza centrifuga* kg		Weight *Gewicht* Poids *Peso*
	50 Hz	60 Hz	220 V 50 Hz	115 V 60 Hz	50 Hz	60 Hz	50 Hz	60 Hz	kg
MVE 20	32	36	0.10	0.23	2750	3300	0-22	0-32	1.5

TECNICAL FEATURES

- Adjustable Centrifugal Force
- Protection IP 65
- Insulation Class “F”
- Continuous Duty

TECHNISCHE MERKMALE

- Einstellbare Zentrifugalkraft
- Schutzart IP 65
- Iso-Klasse F
- 100% ED

CARACTERISTIQUES TECHNIQUES

- Force centrifuge réglable
- Protection IP 65
- Classe d’isolation F
- Service continu

CARATTERISTICHE TECNICHE

- Forza centrifuga regolabile
- Protezione IP 65
- Classe d’isolamento F
- Servizio continuo

SPECIAL BLENDING TOOLS - *SPEZIAL-HOMOGENISIERWERKZEUGE*
OUTILS DE HOMOGENEISATION SPECIAUX - *UTENSILI OMOGENEIZZAZIONE SPECIALI*

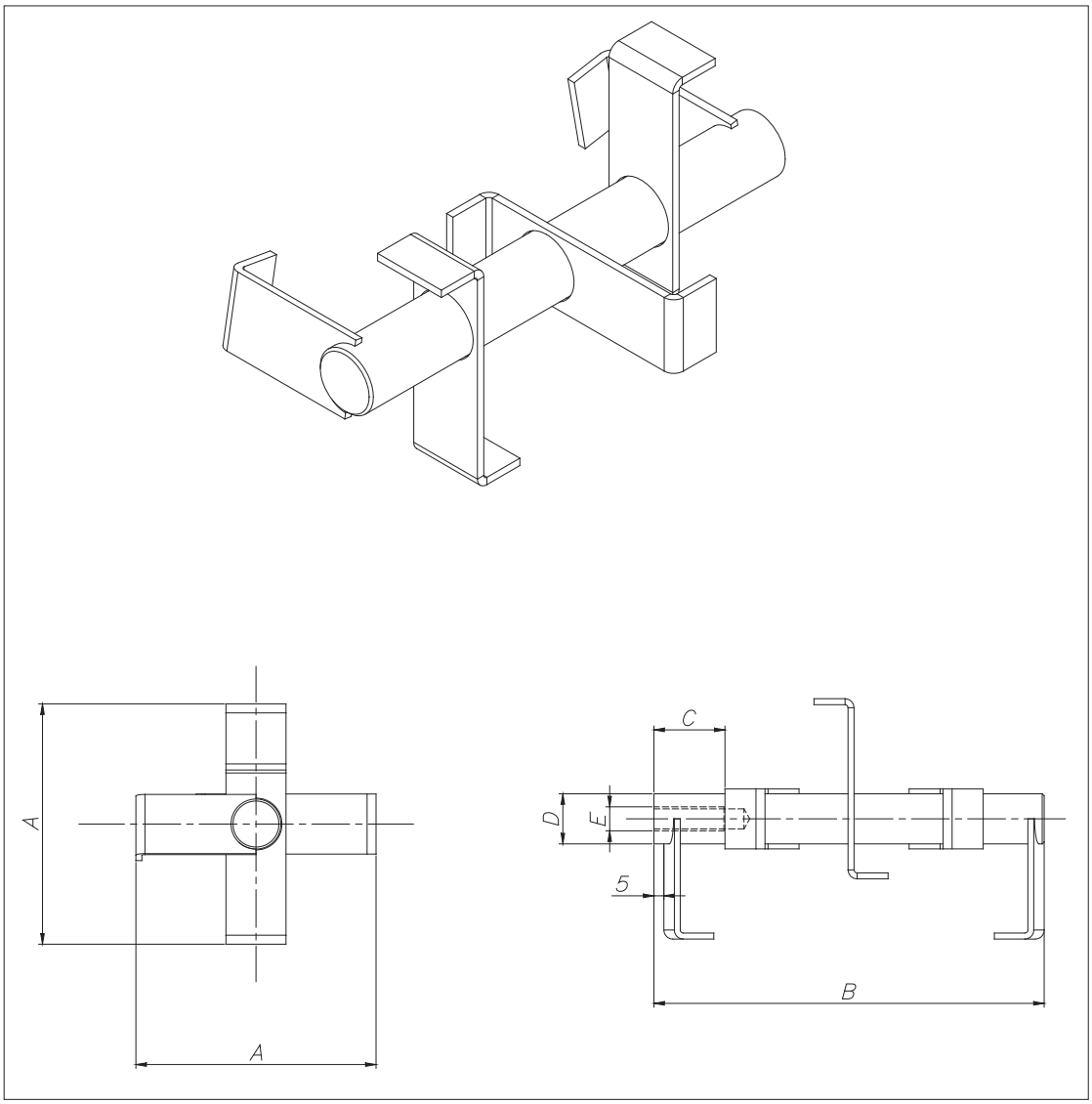

TYPE1

MBF	Code	A	B	D	E	kg
042	**UTO 12**	130	199	25	M 12	1
073	**UTO 13**	260	349	35	M 16	3.5
114	**UTO 13**	260	349	35	M 16	3.5

STD INSPECTION HATCH FOR AISI 304L MBF TYPE - *STD INSPEKTIONSTÜR FÜR MBF IN EDELSTAHL 1.4301*
TRAPPE DE VISITE STD POUR MBF DANS AISI 304L - *PORTELLO DI ISPEZIONE STD PER MBF IN AISI 304L*

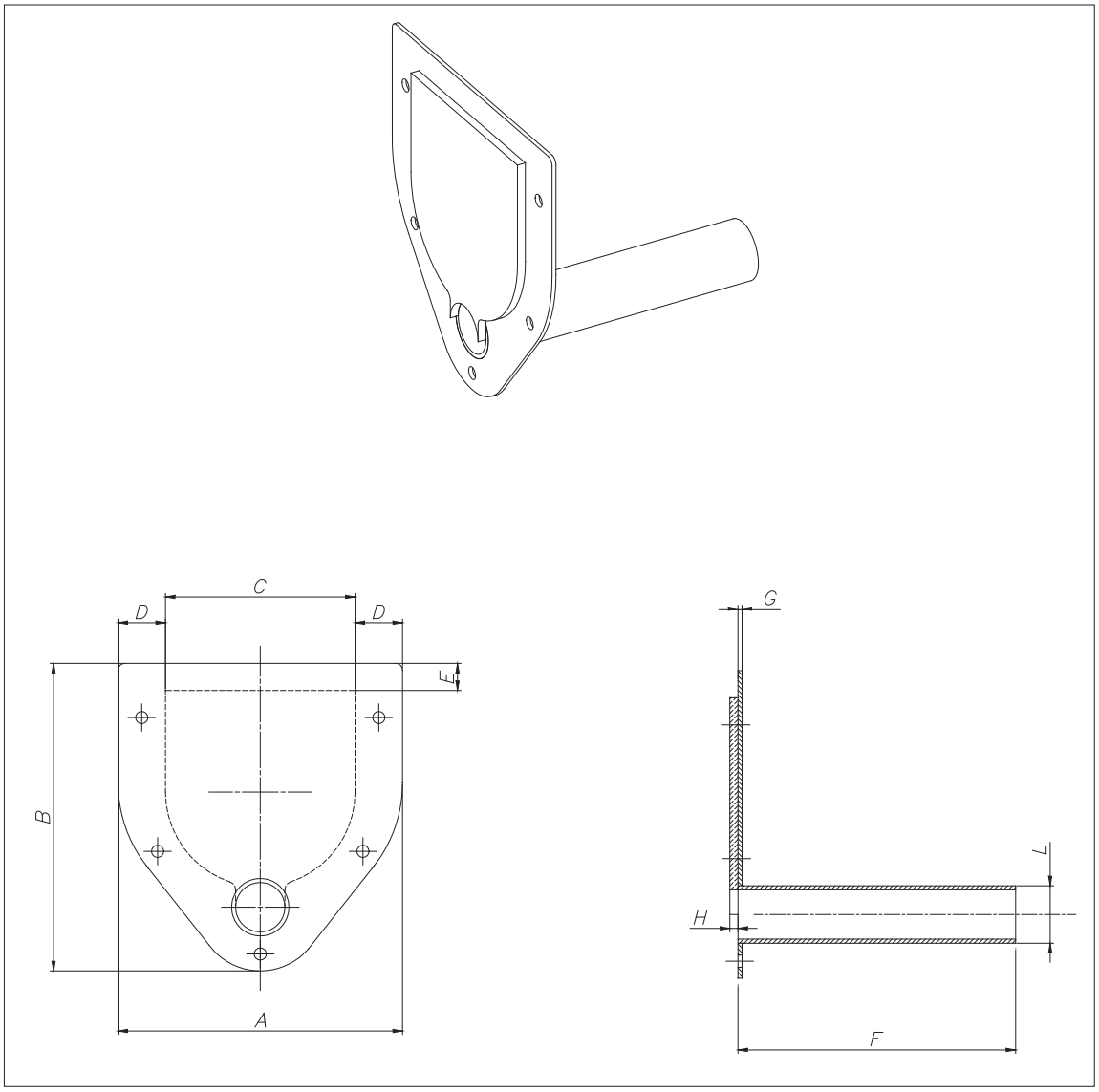

MBF	Code	A	B	C	D	E	F	G	H	Ø L	kg
042	**MBPI 2**	210	227	140	35	20	205	3	6	42	1.4
073	**MBPI 3**	345	395	275	35	20	255	3	6	76	5.6
114	**MBPI 4**	350	431	275	37	20	255	3	6	114	6.3

INSPECTION HATCH FOR AISI 304L MBF TYPE WITH EXTENDED TUBE
INSPEKTIONSTÜR FÜR MBF IN EDELSTAHL 1.4301 MIT* LÄNGLICH*ROHR
TRAPPE DE VISITE POUR MBF DANS AISI 304L AVEC TUBE PROLONGE
PORTELLO DI ISPEZIONE PER MBF IN AISI 304L CON TUBO PROLUNGATO

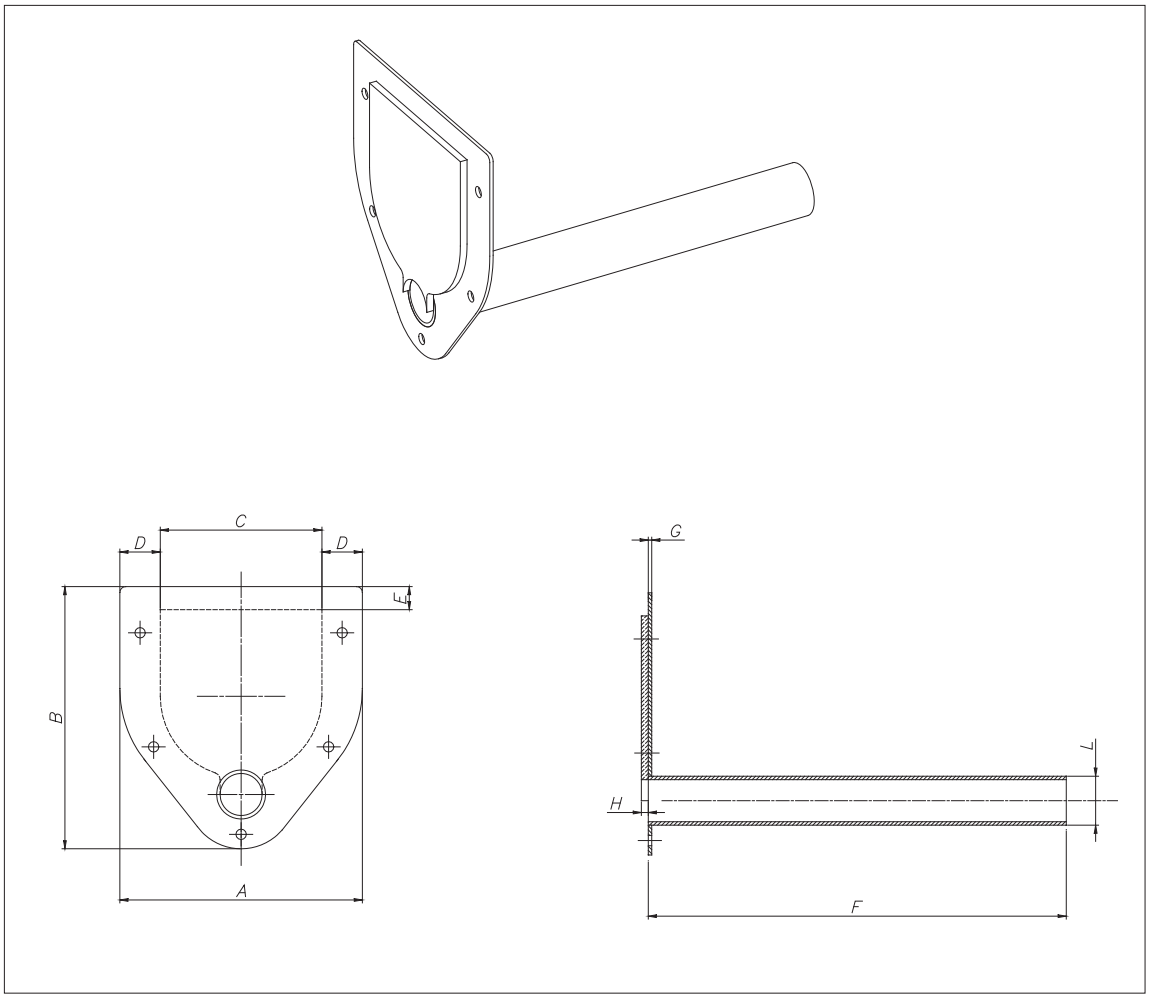

MBF	Code	A	B	C	D	E	F	G	H	Ø L	kg
042	**MBPIP 2**	210	227	140	35	20	362	3	6	42	1.8
073	**MBPIP 3**	345	395	275	35	20	505	3	6	76	6.8
114	**MBPIP 4**	350	431	275	37	20	505	3	6	114	7.4

FEEDER PIPE - *DOSIERROHR* - TUBE DE DOSAGE - *SCARICO*

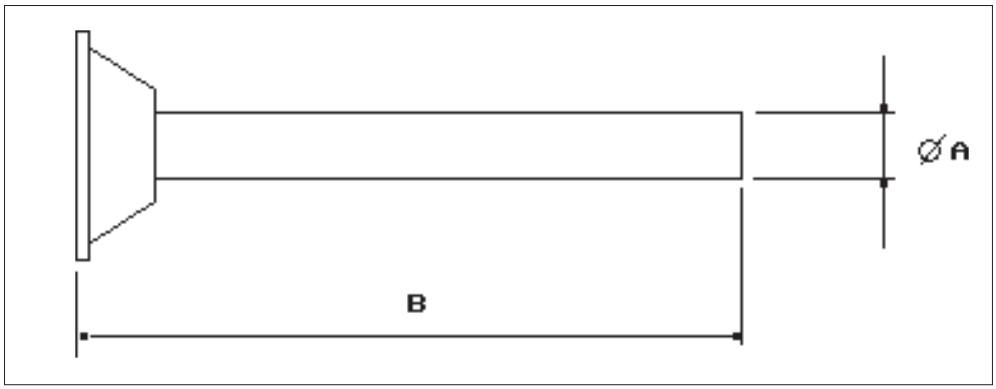

STANDARD FEEDER PIPE - *STANDARD DOSIERROHR* - TUBE DE DOSAGE STANDARD - *SCARICO STANDARD*				
Code	**Suitable for - *Passend zu* Pour type - *Idoneo per* MBF**	**Ø A**	**B**	**kg**
MBT 2	042	42	200	1.0
MBT 3	073	76	250	2.4
MBT 4	114	114	250	4.0

EXTENDED FEEDER PIPE - *VERLÄNGERTES DOSIERROHR* - SORTIE RALLONGEE - *SCARICO PROLUNGATO*				
Code	**Suitable for - *Passend zu* Pour type - *Idoneo per* MBF**	**Ø A**	**B**	**kg**
MBTP 2	042	42	370	1.2
MBTP 3	073	76	500	2.7
MBTP 4	114	114	500	4.4

LINERFEEDER PIPE - *DOSIERROHR MIT INNENAUSKLEIDUNG*
TUBE DE DOSAGE AVEC REVETEMENT INTERIEUR - *SCARICO INTERNAMENTE RIVESTITO*

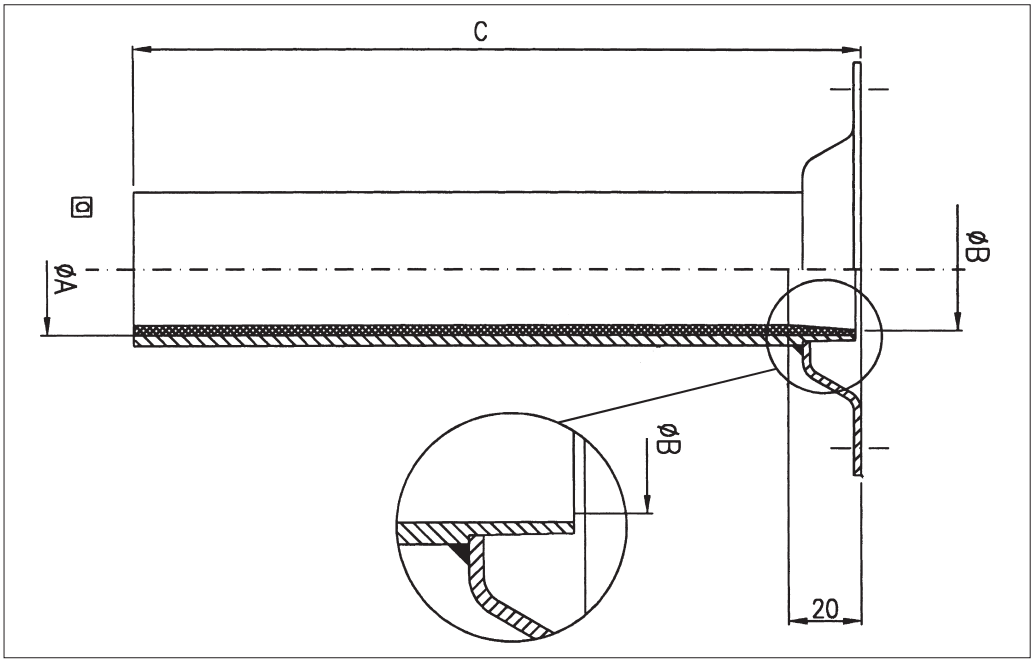

4 SINT®ER
5 SINT®AL

STANDARD LINED FEEDER PIPE - *STANDARD DOSIERROHR MIT INNENAUSKLEIDUNG* TUBE DE DOSAGE AVEC REVETEMENT INTERIEUR - *SCARICO STD INTERNAMENTE RIVESTITO*					
Code	**Suitable for - *Passend zu* Pour type - *Idoneo per* MBF**	**Ø A**	**Ø B**	**C**	**kg**
MBTR 2 .	042	31	34	200	1.2
MBTR 3 .	073	61	63	250	2.7
MBTR 4 .	114	101	104	250	4.4

4 SINT®ER
5 SINT®AL

EXTENDED LINED FEEDER PIPE - *VERLÄNGERTES DOSIERROHR MIT INNENAUSKLEIDUNG* TUBE DE DOSAGE RALLONGE AVEC REVETEMENT INTERIEUR - *SCARICO PROLUNGATO INTERNAMENTE RIVESTITO*					
Code	**Suitable for - *Passend zu* Pour type - *Idoneo per* MBF**	**Ø A**	**Ø B**	**C**	**kg**
MBTRP 2 .	042	31	34	370	1.6
MBTRP 3 .	073	61	63	500	3.2
MBTRP 4 .	114	101	104	500	5.2

VERTICAL SPOUT - *ABLAUFROHR* - SORTIE VERTICALE - *SCARICO VERTICALE*

M	D	X	S	V	2	4

4: SINT®ER
5: SINT®AL

2 = MBF 042
3 = MBF 073
4 = MBF 114

Vertical spout
Ablaufrohr
Sortie verticale
Scarico verticale

Micro-batch fedeer accessories
Zubehör Mikrodosierer
Accessoires microdoseur
Accessori microdosatore

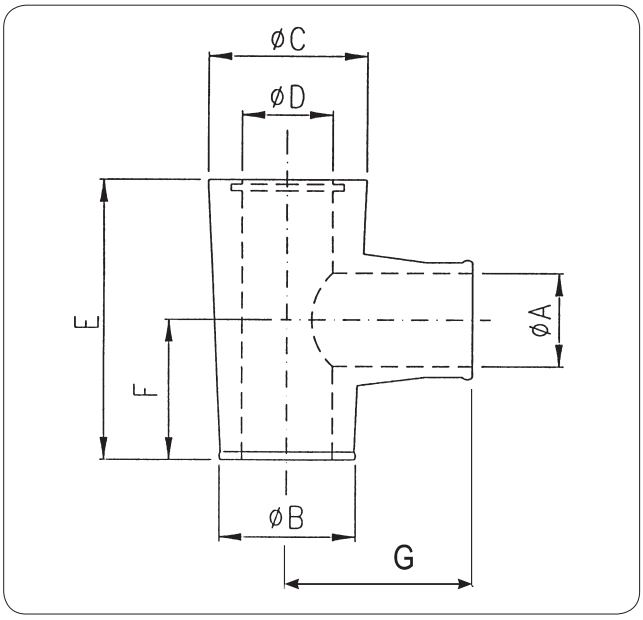

MDXSV	Suitable for - *Passend zu* Pour type - *Idoneo* MBF	Ø A	Ø B	Ø C	Ø D	E	F	G	kg
2.	042	42	60	70	50	126	63	81	0.27
3.	073	75	121	130	100	187.5	95	143.5	1.3
4.	114	114	175	190	150	230	115	191	3

4	SINT®ER
5	SINT®AL

VERTICAL SPOUT WITH PNEUMATIC CLOSURE - *ABLAUFROHR MIT PNEUMATISCHEM VERSCHLUSS*
SORTIE VERTICALE AVEC FERMETEURE PNEUMATIQUE - *SCARICO VERTICALE CON CHIUSURA PNEUMATICA*

M	D	X	S	C	2	4

4: SINT®ER
5: SINT®AL

2 = MBF 042
3 = MBF 073
4 = MBF 114

vertical spout with pneumatic cover
Ablaufrohr mit pneumatischem verschluss
Sortie verticale avec fermeteure pneumatique
Scarico verticale con chiusura pneumatica

Micro-batch fedeer accessories
Zubehör Mikrodosierer
Accessoires microdoseur
Accessori microdosatore

N.B.: Operation P_{max} 4 bar !
N.B.: Betrieb P_{max} 4 bar !
N.B.: P_{max} de travail 4 bar !
N.B.: P_{max} di lavoro 4 bar !

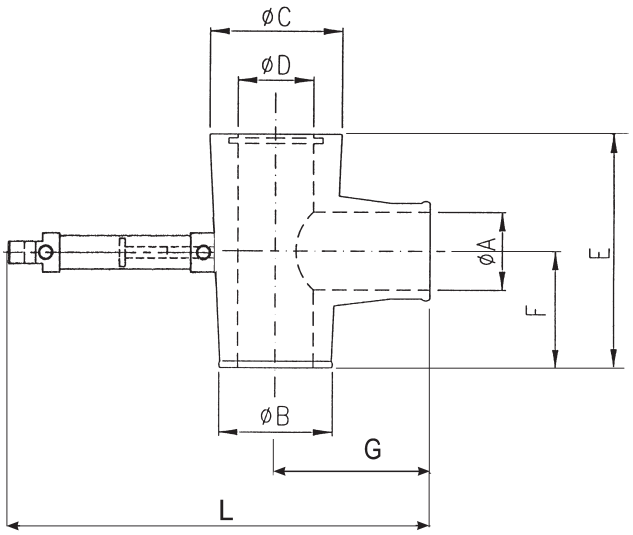

MDXSC	Suitable for - *Passend zu* Pour type - *Idoneo* MBF	Ø A	Ø B	Ø C	Ø D	E	F	G	L	kg
2.	042	42	60	70	50	126	63	81	214.5	0.5
3.	073	75	121	130	100	187.5	95	143.5	353.5	2.8
4.	114	114	175	190	150	230	115	191	472	4.5

4 SINT®ER
5 SINT®AL

Note: Microcylinder ISO 6432 - Anm.: Mikrozylinder ISO 6432
Remarque: Micro-cylindre ISO 6432 - *Nota: Microcilindro ISO 6432*

MAGENTIC SENSOR KIT FOR MICRO-CYLINDER - *MAGNETISCHES SENSORKIT FÜR MIKROZYLINDER*
KIT SENSEUR MEGNETIQUE POUR MICRO-CYLINDRE - *KIT SENSORE MAGNETICO RILEVAMENTO PER MICROCILINDRO*

KXM	Suitable for - *Passend zu* Pour type - *Idoneo* MBF
16	MDXSC2
20	MDXSC3
25	MDXSC4

AUTOMATIC LUBRICATOR | **AUTOMATISCHE SCHMIERVORRICHTUNG** | **GRAISSEUR AUTOMATIQUE** | **LUBRIFICATORE AUTOMATICO**

CARTRIDGE GREASE NIPPLE LIT - *SCHMIERPATRONENSATZ*
KIT GRAISSEUR CARTOUCHE - *KIT INGRASSATORE CARTUCCIA*

M	D	X	I	125

- 125 — Capacity - *Kapazität* - Capacité - *Capacità*
- I — Grease nipple - *Schmiernippel* - Graisseur - *Ingrassatore*
- D — Micro-batch feeders accessories - *Mikrodosierer zubehör* / Accessoires microdoseurs - *Accessori microdosatore*

TECHNICAL SPECIFICATIONS	
Capacity	125 ml
Operating period	Adjustable at 1-12 months
Operating temperature	-20°C a + 55°C°
Max. operating pressure	5 bar**
Activation mechanism	Hydrogen gas release battery (H2)
Threading	G 1/4
Recommended storage temperature	+20°C
Storage period	2 years***
Weight	Approx. 190g (including grease)
Appellative	LAGD 125/WA (filled with SKF LGWA 2 grease) LAGD 125/"lubricant"

TECHNISCHE DATEN	
Kapazität	125 ml
Betriebsdauer	Von 1 bis 12 Monate einstellbar
Betriebstemperatur	-20°C bis + 55°C°
Max. Betriebsdruck	5 bar**
Einschaltmechanismus	Wasserstoff freisetzende Batterie (H2)
Gewinde	G 1/4
Empfohlene Lagerhaltungstemperatur	+20°C
Lagerzeit	2 Jahre ***
Gewicht	circa 190 g (Fett inbegriffen)
Bezeichnung	LAGD 125/WA (mit Fett SKF LGWA 2 gefüllt) LAGD 125/"Schmierstoff"

CARACTÉRISTIQUES TECHNIQUES	
Capacité	125 ml
Période de fonctionnement	Réglable de 1 à 12 mois
Température de fonctionnement	-20°C a + 55°C°
Pression max. de fonctionnement	5 bar**
Mécanisme d'activation	Batterie à dégagement de gaz hydrogène (H2)
Filetage	G 1/4
Température conseillée pour le stockage	+20°C
Période de stockage	2 ans***
Poids	Env. 190jj (graisse incluse)
Désignation	LAGD 125/WA (avec le plein de graisse SKF LGWA 2 grease) LAGD 125/"lubrifiant"

DATI TECNICI	
Capacità	125 ml
Periodo di funzionamento	Regolabile da 1 a 12 mesi
Temperatura di funzionamento	-20°C a + 55°C°
Pressione max. di funzionamento	5 bar**
Meccanismo di attivazione	Batteria a sviluppo di gas idrogeno (H_2)
Filettatura	G 1/4
Temperatura consigliata per lo stoccaggio	+20°C
Periodo di stoccaggio	2 anni***
Peso	Circa 190g (grasso incluso)
Appellativo	LAGD 125/WA (riempito con grasso SKF LGWA 2) LAGD 125/"lubrificante"

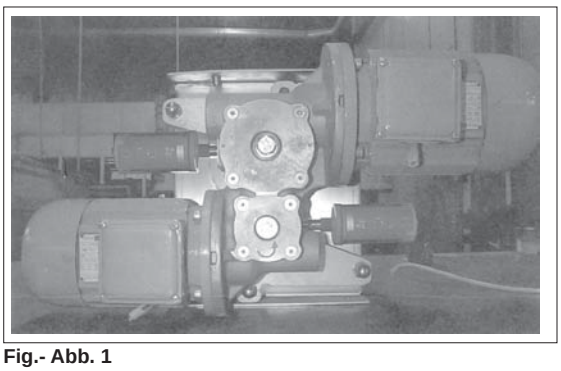

Fig.- Abb. 1
SKF assembly on Batch feeder - *Montage SKF auf Dosierer*
Montage SKF sur doseur - *Montaggio SKF su dosatore*

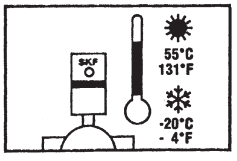

Operatin temperature - *Betriebstemperatur*
Température de fonctionnement
Temperatura di funzionamento

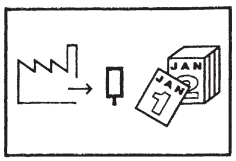

Production date - *Produktionsdatum*
Date de production - *Data di produzione*

WAM®

MBF

- **INQUIRY AND ORDER FORM**
- **ANFRAGE- UND BESTELLBLATT**
- **QUESTIONNAIRE**
- **MODULO DI RICHIESTA**

02.11

1

VAL.062.-.T.4L. 44

MATERIAL TO DOSE
PHYSICAL AND CHEMICAL CHARACTERISTICS

- ☐☐ ☐☐ DENSITY
- ☐☐☐☐ GRANULOMETRY
- ☐ FLUIDITY
- ☐ ABRASIVITY
- ☐ BUILDS UP AND HARDENS
- ☐ STATIC ELECTRICITY GENERATOR
- ☐ DECOMPOSITION - DAMAGING
- ☐ FLAMMABILITY
- ☐ PLASTICITY - TENDENCY TO SOFTEN
- ☐ DUSTINESS
- ☐ AIRATED - FLUIDITY
- ☐ EXPLOSIVITY
- ☐ VISCOSITY - ADHESIVENENESS
- ☐ CONTAMINABILITY
- ☐ DEGRADABILITY
- ☐ PRESENCE OF TOXIC GAS
- ☐ HIGH CORROSIVITY
- ☐ MEDIUM CORROSIVITY
- ☐ HYGROSCOPICITY
- ☐ FORMATION OF GRANULES
- ☐ INTERLOCKS, AGGLOMERATES
- ☐ PRESENCE OF OILS AND GREASE
- ☐ TENDENCY TO COMPACT UNDER PRESSURE
- ☐ LIGHT AND SOFT
- ☐ HIGH TEMPERATURE

REQUEST CAPACITY (dm^3/h) ☐☐☐☐ (kg/h) ☐☐☐☐

TOLERANCE ☐ ☐

LOADING AND HOPPER CAPACITY

MBW MODEL

FEED SCREW AND AGITATOR ☐☐ R ☐

ACCESSORIES

MOTORS V Hz

NOTES

DOSIERMEDIUM
PHYSIKALISCHE UND CHEMISCHE EIGENSCHAFTEN

- ☐☐ ☐☐ SCHÜTTGEWICHT
- ☐☐☐☐ KÖRNUNG
- ☐ FLIESSFÄHIGKEIT
- ☐ ABRASIVITÄT
- ☐ HÄRTET LEICHT AUS
- ☐ LÄDT SICH STATICH AUF
- ☐ VERROTTET LEICHT
- ☐ LEICHT ENTZÜNDBAR
- ☐ PLASTIFIZIERT
- ☐ HOHE STAUBENTWICKLUNG
- ☐ HOHER LUFTANTEIL
- ☐ EXPLOSIV
- ☐ VISKOS, STARK HAFTEND
- ☐ LEICHT ZU VERUNREINIGEN
- ☐ ZERFALLT LEICHT
- ☐ ENTWICKELT GIFTIGE GASE ODER RAUCH
- ☐ SEHR KORROSIV
- ☐ HYGROSKOPISCH
- ☐ NEIGT ZUR KORN-ODER KLUMPENBILDUNG
- ☐ ÖL-ODER FETTHALTIG
- ☐ NEIGT ZUM ANBACKEN
- ☐ SEHR LEICHT
- ☐ HOHE TEMPERATUR

GEFORDERTE DURCHSATZLEISTUNG (dm^3/h) ☐☐☐☐ (kg/h) ☐☐☐☐

TOLERANZ %____*☐ ☐

ART DER BESCHICKUNG:
TRICHTERKAPAZITÄT:
BETRIEBSDAUER :(h/Tag)
EINSCHALTUNGEN PRO STUNDE:
WOHIN WIRD DOSIERT ?
WENN VARIABLE DURCHSATZLEISTUNG GEFORDERT, WARUM ?
DOSIERER TYPE:

DOSIER-/HOMOGENISIERWERKZEUG ☐ ☐ R ☐
ZUBEHÖR:

ELEKTROMOTOR (E) V Hz

BEMERKUNGEN :

MATERIAU A DOSER
CARACTERISTIQUES PHYSICO - CHIMIQUES

- ☐☐ ☐☐ POIDS SPECIFIQUE
- ☐☐☐☐ GRANULOMETRIE
- ☐ CORROSION
- ☐ ABRASIVITE
- ☐ DELATATION ET DURCISEMENT
- ☐ ENGENDRE DE L' ELECTRICITE STATIQUE
- ☐ DECOMPOSITION - DETERIOSATION
- ☐ IMFLAMABLE
- ☐ PLASTIQUE
- ☐ SOUPLE
- ☐ AERE - FLUIDE
- ☐ EXPLOSIF
- ☐ VISCOSITE
- ☐ CONTAMINABLE
- ☐ DEGRADABLE
- ☐ CREATION DE GAZ TOXIDE ET DE FUME NUISIBLE
- ☐ HAUTE CORROSION
- ☐ MOYEN CORROSION
- ☐ HYGROSCOPIQUE
- ☐ FORMATION DE GRANULE
- ☐ PRESENTE HUILE ET GRAISSE
- ☐ TASSEMENT SOUS PRESSION
- ☐ TRES LEGER
- ☐ TEMPERATURE ELEVEE
- ☐

DEBIT DEMANDE (dm^3/h) ☐☐☐☐ (kg/h) ☐☐☐☐

TOLERANCE ☐ ☐

SYSTEME DE CHARGEMENT ET CAPACITE DE LA TREMIE

MICRODOSEUR TYPE

VIS DOSAGE ET HO-MOGENEISATION ☐☐ R ☐

ACCESSOIRES

MOTEURS V Hz

NOTES

MATERIALE DA DOSARE
CARATTERISTICHE FISICO CHIMICHE

- ☐☐ ☐☐ PESO SPECIFICO
- ☐☐☐☐ GRANULOMETRIA
- ☐ SCORREVOLEZZA
- ☐ ABRASIVITA'
- ☐ ACCRESCIMENTO E INDURIMENTO
- ☐ GENERA ELETTRICITA' STATICA
- ☐ DECOMPOSIZIONE - DETERIORAMENTO
- ☐ INFIAMMABILITA'
- ☐ PLASTICITA ' - TENDENZA ALL'AMMORBIDIMENTO
- ☐ POLVEROSITA'
- ☐ AERAZIONE - FLUIDITA'
- ☐ ESPLOSIVITA'
- ☐ VISCOSITA' E ADESIONE
- ☐ CONTABILITA'
- ☐ DEGRADABILITA'
- ☐ CREAZIONE DI GAS TOSSICO DI FUMO NOCIVO
- ☐ ALTA CORROSIVITA'
- ☐ MEDIA CORROSIVITA'
- ☐ IGROSCOPICITA'
- ☐ FORMAZIONE DI GRANULI,INTRECCIAMENTI, E
- ☐ AGGLOMERATI
- ☐ PRESENZA DI OLII E GRASSI
- ☐ IMPACCAMENTO SOTTO PRESSIONE
- ☐ MOLTO LEGGERO E SOFFICE
- ☐ TEMPERATURA ELEVATA

PORTATA RICHIESTA(dm^3/h) ☐☐☐☐ (kg/h) ☐☐☐☐

TOLLERANZA ☐ ☐

SISTEMA DI CARICO E CAPACITA' TRAMOGGIA

MICRODOSATORE TIPO

UTENSILE DOSAGGIO E OMOG. ☐☐ R ☐

ACCESSORI

MOTORI V Hz

NOTE

N.B. Rights reserved to modify technical specifications
N.B. Angaben ohne Gewähr. Änderungen können ohne Vorankündigung vorgenommen werden.
N.B. Toutes données portées dans le présent catalogue n'engagent pas le fabricant. Elles peuvent être modifiéés à tout moment.
N.B. Tutti i dati riportati nel presente catalogo non sono impegnativi e possono subire variazioni in qualsiasi momento.

WAM®

WAMGROUP S.p.A.
Via Cavour, 338
I - 41030 Ponte Motta
Cavezzo (MO) - ITALY

☎ +39 / 0535 / 618111
fax +39 / 0535 / 618226
e-mail info@wamgroup.it
internet www.wamgroup.com
videoconference + 39 / 0535 / 49032

CS-910-405 : Identification sheet

VWTC PROJECT NUMBER:	5000218009	REV:	1
PROJECT NAME:	AEM AMARUQ	SUBMITTED TO (COMPANY):	AGNICO EAGLE MINES
ENGINEER:	Gabriel Hébert	SUBMITTED TO (RESPONSIBLE)	
PROJECT MANAGER:	Clément B	PROJECT NUM REFERENCE.:	
PHONE NUMBER:		LOT NUMBER:	

SUPPLIER	EQPT CODE	EQPT TAG NO	DIA	DESCRIPTION	INFO 1	INFO 2	INFO 3	APPLIC.	NOTE	REV
WAM	CMSPGU320683	FSM9-621-V001		SLIDE GATE VALVE	SLIDE GATE VALVE // Manuf : WAM // Model : VLC0250P3/CMG0250 stainless 304, inlet section made of Polyurethane Incl. Hand wheel	10” slide gate with round inlet, frame and knife blade made of SS 304	Inlet section made of Polyurethane Incl. Hand wheel	HYDRAPOL 3500		

This page is intentionally left blank

Bulk Solids Handling Equipment Bulk Solids Handling Equipment Bulk Solids Handling Equipment Bulk Solids Handling Equipment Bulk Solids Handling Equipment

VL

Slide Gate Valves

Flachschieber

Vannes Guillotine

Valvole a Ghigliottina

INTERNATIONAL PATENT

WAMGROUP

WAM®

VL Slide Valves are used where the flow of a bulk solid caused by gravity or transport has to be intercepted. Valves may be fitted to hopper or silo outlets, to the inlets and outlets of mechanical conveyors and to the inlet of telescopic loading spouts.
VL-type Slide Valves consist of a two piece carbon or stainless steel frame, which is partly coated with WAM's unique SINT™ engineering polymer composite, and a sliding blade manufactured either in the same material or in stainless steel. The use of SINT™ engineering polymer considerably increases resistance to abrasion compared to traditional valves.
The special geometry of the Valve and the different options of blade design enable its application in virtually every sector including the food industry.

VL-Flachschieber finden überall dort Verwendung, wo ein durch Schwerkraft oder Förderung verursachter Schüttgutfluß unterbrochen werden soll. VL-Flachschieber können unter Silo- oder Trichterausläufen, über den Einläufen bzw. unter den Ausläufen von mechanischen Stetigförderern oder über dem Einlauf von Teleskop-Verladegarnituren eingebaut werden. VL-Flachschieber bestehen aus einem zweiteiligen, teilweise mit SINT™-Polymer ausgekleideten Stahl- oder Edelstahlrahmen und einem mit dem gleichen Polymer beschichteten oder aber ganz aus Edelstahl bestehenden Schieberblech.
Die Verwendung von SINT™-Polymer erhöht die Abrasionsresistenz gegenüber traditionellen Flachschiebern beträchtlich.
Die spezielle Geomterie dieser Baureihe und diverse Schieberblechoptionen ermöglichen den Einsatz in allen industriellen Anwendungen inklusive der Nahrungsmittelindustrie.

Les Vannes Guillotine VL sont utilisées pour sectionner l'écoulement d'un flux de matériau vrac. Les Vannes Guillotine VL peuvent être installées sous silos ou trémies, au-dessus des bouches d'entrée et au-dessous des bouches de sortie des transporteurs mécaniques ou en tête des goulottes télescopiques.
Les Vannes Guillotine VL sont composées d'un châssis en deux parties qui est partiellement revêtu en polymère technique SINT™ et d'une lame revêtue du même matériau ou entièrement en acier inox. L'utilisation de SINT™ augmente considérablement la résistance à l'abrasion par rapport aux vannes de type traditionnel.
La géométrie spéciale de cette gamme et lesdiverses options de lames rendent possible leur utilisation dans toutes les industries y compris celles de l'alimentaire.

Le Valvole a Ghigliottina VL sono utilizzate laddove un flusso di materiale alla rinfusa causato o dalla gravità o da un trasporto deve essere intercettato. Le Valvole a Ghigliottina VL possono essere installate sotto le bocche di scarico di sili o tramogge, sulle bocche di carico e scarico dei trasportatori meccanici o sulle bocche di carico degli scaricatori telescopici.
Le Valvole a Ghigliottina VL sono costituite da un telaio in due pezzi che è parzialmente rivestito del tecnopolimero SINT™ e da una lama rivestita dello stesso materiale o interamente in acciaio inossidabile. L'utilizzo del SINT™ aumenta considerevolmente la resistenza all'abrasione rispetto alle valvole ti tipo tradizionale.
La speciale geometria di questa gamma e le diverse opzioni di lame rendono possibile la loro applicazione in tutte le industrie compresa quella alimentare.

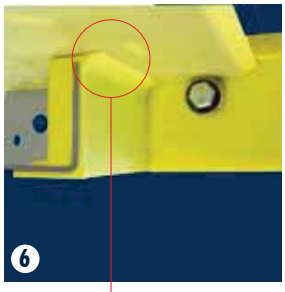

VLQ - VLR - VLS

VLC

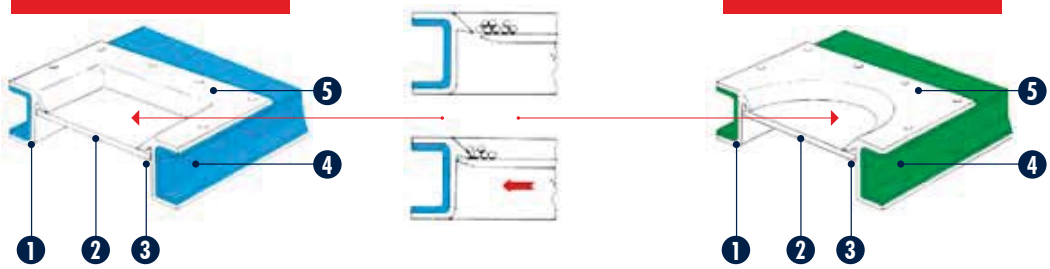

3 interchangeable actuators for valve types VLQ-VLC-VLR

3 Antriebsvarianten bei gleichem Schieberrahmen, Typ VLQ-VLC-VLR

3 actionneurs interchangeables pour les vannes VLQ-VLC-VLR

3 attuatori intercambiabili per tipi di valvole VLQ-VLC-VLR

1. Valve body coated with SINT™MC or SINT™AL in order to avoid contact between product and body.
2. Heavy-duty blade (SINT™MC / SINT™AL, carbon steel, 304 st.st.)
3. Minimum friction contact
4. No additional lateral seals required
5. Dry food quality (coating in SINT™AL)
6. Dustproof (scraper included)

1. Schieberrahmen komplett mit SINT™MC bzw. SINT™AL ummantelt, damit Medium niemals direkt mit dem Rahmen in Kontakt treten kann.
2. Robustes Schieberblech (SINT™MC / SINT™AL, Stahl, Edelstahl 1.4301)
3. Reibungsarmer Werkstoffkontakt
4. Keine zusätzlichen seitlichen Abdichtungen erforderlich
5. Auf Wunsch auch in nahrungsmittauglicher Ausführung (mit SINT™AL ummantelt)
6. Staubdicht (inkl. Abstreifer)

1. Vanne complètement revêtue en SINT™MC ou SINT™AL pour éviter le contact entre le produit et le corps.
2. Lame de forte épaisseur (SINT®MC / SINT™AL, acier au carbone, acier inox 304)
3. Résistance par friction minimum
4. Aucun système d'étanchéité supplémentaire latéral
5. Apte pour produits alimentaires secs (revêtements en SINT™AL)
6. Etanche à la poussière (muni de racleur)

1. Valvola completamente rivestita in SINT™MC o SINT™AL al fine di evitare il contatto tra il prodotto e il corpo.
2. Lama a grosso spessore con smusso per invito (SINT™MC / SINT™AL, acciaio al carbonio, AISI 304).
3. Contatto con minimo attrito
4. Tenuta laterale non necessaria
5. Idonea a prodotti alimentari secchi (rivestimento in SINT™AL)
6. Tenuta polvere (provvista di raschiatore)

User Benefits
- Easy to handle
- Ex-stock delivery
- Highly abrasion-resistant
- Easy to fit
- Time-saving maintenance

Options
- Valve manufactured in carbon steel lined and coated with SINT™MC.
- Valve in 304 stainless steel lined and coated with SINT™AL (FDA-approved)

Vorteile für den Anwender
- *Einfaches Handling*
- *Ab Lager lieferbar*
- *Besonders verschleißresistent*
- *Einfacher Einbau*
- *Extrem wartungsfreundlich*

Optionen
- *Schieber aus Stahl, ausgekleidet mit SINT™MC.*
- *Schieber aus Edelstahl 1.4301, ausgekleidet mit SINT™AL (mit FDA-Zulassung)*

Avantages pour l'utilisateur
- *Légèreté et facilité de manutention*
- *Matériel disponible en stock*
- *Résistance élevée à l'usure*
- *Facilité d'installation*
- *Rapidité d'entretien*

Options
- *Vanne en acier au carbone revêtue en SINT™MC*
- *Vanne en inox 304 revêtue en SINT™AL (approuvée FDA)*

Vantaggi per l'utilizzatore
- *Leggerezza e facilità di movimentazione*
- *Materiale disponibile a magazzino*
- *Elevata resistenza all'usura*
- *Facilità di installazione*
- *Rapidità di manutenzione*

Opzioni
- *Valvola in acciaio al carbonio rivestita in SINT™MC.*
- *Valvola in AISI 304 rivestita in SINT™AL (approvata FDA)*

VLS

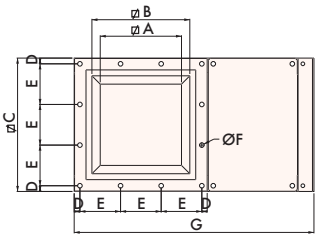

Slide Valve With Internal Actuator
Flachschieber mit innenliegendem Pneumatikantrieb
Vanne à Guillottine avec Vérin Incorporé
Valvola Ghigliottina con Cilindro Interno

TYPE	A	B	C	D	E	N°E	Ø F	Bolts Schrauben Boulons Bulloni	G	H	kg
VLS0150..	120	175	261	15,5	115,0	2	12,5	M10	455	113	16,5
VLS0200..	170	225	311	15,5	93,3	3	12,5	M10	555	113	21,0
VLS0250..	220	275	361	15,5	110,0	3	12,5	M10	650	113	25,5
VLS0300..	270	325	431	23,0	128,3	3	12,5	M10	765	113	34,0

1 Carbon Steel / *Stahl / Acier au carbone / Acciaio al carbonio*
3 304 Stainless Steel / *Edelstahl 1.4301 / Acier inox 304 / Acciaio inox AISI 304*

Valve with single type of actuator (pneumatic cylinder Ø 63 mm) mounted inside the valve frame.

Schieber mit innenliegendem Pneumatikantrieb (Pneumatikzylinder Ø 63 mm) (nur ein Modell)

Vanne commandée par un seul type d'actionneur (cylindre pneumatique Ø 63 mm) monté à l'intérieur du corps.

Valvola azionata da un solo tipo di.comando (cilindro pneumatico Ø 63 mm) situato internamente al corpo stesso.

Pneumatic Actuator Compatibility - *Kombinationen mit Pneumatikantrieb - Accouplements électropneumatiques - Abbinamenti elettropneumatici*

No headload allowed!
Keine Schieberlechbelastung gestattet!
Sans charge!
Senza battente!

Valve viewed upside down
Ansicht Schieber-Unterseite
Vanne renversée
Valvola rovesciata

- VLS 0150 . .
- VLS 0200 . .
- VLS 0250 . .
- VLS 0300 . .

- V5VV8 + 2 BOB
- V5V8 + 1 BOB

- • BOB 02450
- • BOB 04850
- • BOB 11050
- • BOB 22050
- Δ BOB 024CC
- Δ BOB 048CC
- Δ BOB 110CC
- Δ BOB 220CC

• ALTERNATING CURRENT
• *WECHSELSTROM*
• *COURANT ALTERNATIF*
• *CORRENTE ALTERNATA*

Δ DIRECT CURRENT
Δ *GLEICHSTROM*
Δ *COURANT CONTINU*
Δ *CORRENTE CONTINUA*

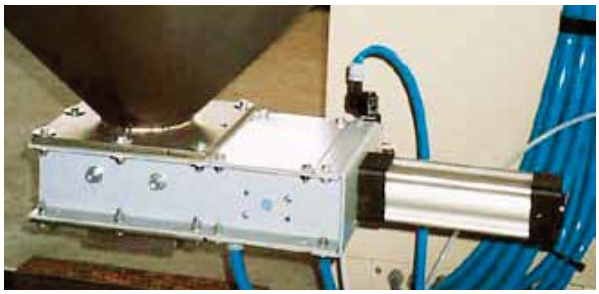

VLQ

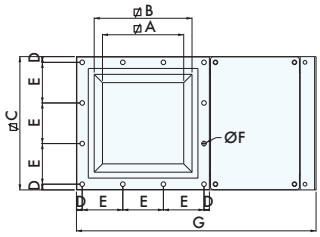

Square Cross Section Valves
Schieber mit quadratischem Querschnitt
Vannes à Section Carrée
Valvole con Sezione Quadrata

TYPE	A	B	C	D	E	N°E	Ø F	Bolts Schrauben Boulons Bulloni	G	H	kg
VLQ0150..	120	175	261	15,5	115,0	2	12,5	M10	455	113	14
VLQ0200..	170	225	311	15,5	93,3	3	12,5	M10	555	113	18
VLQ0250..	220	275	361	15,5	110,0	3	12,5	M10	650	113	22
VLQ0300..	270	325	431	23,0	128,3	3	12,5	M10	765	113	30
VLQ0350..	320	375	481	18,0	89,0	5	12,5	M10	900	125	40
VLQ0400..	370	425	531	15,5	100,0	5	12,5	M10	1.000	125	46

1 Carbon Steel */ Stahl / Acier au carbone / Acciaio al carbonio*
3 304 Stainless Steel */ Edelstahl 1.4301 / Acier inox 304 / Acciaio inox AISI 304*

VLC

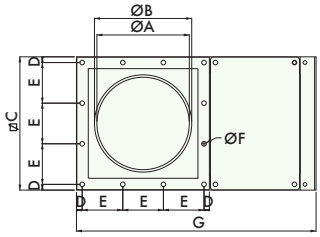

Round Cross Section Valves
Schieber mit rundem Querschnitt
Vannes à Section Circulaire
Valvole a Sezione Circolare

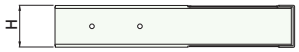

TYPE	A	Ø B	Ø C	D	E	N°E	Ø F	Screw Schrauben Boulons Bulloni	G	H	kg
VLC0150..	150	165	261	15,5	115,0	2	12,5	M10	455	113	14
VLC0200..	200	215	311	15,5	93,3	3	12,5	M10	555	113	18
VLC0250..	250	265	361	15,5	110,0	3	12,5	M10	650	113	22
VLC0300..	300	315	431	23,0	128,3	3	12,5	M10	765	113	30
VLC0350..	350	365	481	18,0	89,0	5	12,5	M10	900	125	40
VLC0400..	400	415	531	15,5	100,0	5	12,5	M10	1.000	125	46

1 Carbon Steel */ Stahl / Acier au carbone / Acciaio al carbonio*
3 304 Stainless Steel */ Edelstahl 1.4301 / Acier inox 304 / Acciaio inox AISI 304*

VLR

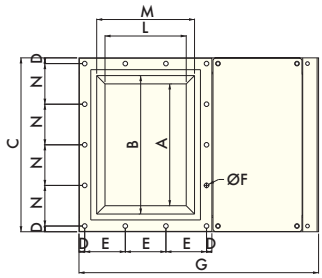

Rectangular Cross Section Valves
Schieber mit rechteckigem Querschnitt
Vannes à Section Rectangulaire
Valvole a Sezione Rettangolare

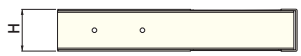

TYPE	A	B	C	D	E	N°E	Ø F	Bolts Schrauben Boulons Bulloni	G	H	L	M	N	N°N	kg
* VLR0150..	204	260	346	15,5	115,0	2	12,5	M10	455	109	119	175	105	3	18
* VLR0200..	281	337	423	15,5	93,3	3	12,5	M10	555	109	169	225	98	4	25
* VLR0250..	353	409	495	15,5	110,0	3	12,5	M10	650	109	219	275	116	4	30
VLR0300..	428	484	592	23,0	128,3	3	12,5	M10	765	109	269	325	136	4	40

1 Carbon Steel */ Stahl / Acier au carbone / Acciaio al carbonio*
3 304 Stainless Steel */ Edelstahl 1.4301 / Acier inox 304 / Acciaio inox AISI 304*

* Not yet in production */ Z. Z. nicht lieferbar / Pas encore en production / Non ancora in produzione*

HAND WHEEL COMPATIBILY
KOMBINATIONSMÖGLICHKEITEN MIT HANDRAD
ACCOUPLEMENTS D'ACTIONNEUR MANUEL
ABBINAMENTI DI ATTUATORE MANUALE

VLQ - VLC 0150 . .	-	CMG0150 I.
VLQ - VLC 0200 . .	-	CMG0200 I.
VLQ - VLC 0250 . .	-	CMG0250 I.
VLQ - VLR-VLC 0300 . .	-	CMG0300 I.
VLQ - VLC 0350 . .	-	CMG0350 I.
VLQ - VLC 0400 . .	-	CMG0400 I.

PNEUMATIC ACTUATOR COMPATIBILY
KOMBINATIOSMÖGLICHKEITEN MIT PNEUMATIKANTRIEB
ACCOUPLEMENTS D'ACTIONNEUR ELECTROPNEUMATIQUE
ABBINAMENTI DI ATTUATORE ELETTROPNEUMATICO

VLQ - VLC 0150 . .	◑ P.N. CYL. Ø 63	KCP 063 1525 - V5V80 - LSM6	• BOB 02450
VLQ - VLC 0200 . .			• BOB 04850
VLQ - VLC 0250 . .	◑ P.N. CYL. Ø 80	KCP 080 1530 - V5V80 - LSM6	• BOB 11050
VLQ - VLR-VLC 0300 . .			• BOB 22050
VLQ - VLC 0350 . .	◑ P.N. CYL. Ø 100	KCP 100 3540 - V5V40 - LSM6	Δ BOB 024CC
VLQ - VLC 0400 . .			Δ BOB 048CC
			Δ BOB 110CC
			Δ BOB 220CC

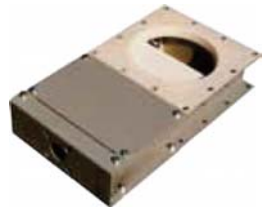

- • ALTERNATING CURRENT
- • *WECHSELSTROM*
- • *COURANT ALTERNATIF*
- • *CORRENTE ALTERNATA*

- Δ DIRECT CURRENT
- Δ *GLEICHSTROM*
- Δ *COURANT CONTINU*
- Δ *CORRENTE CONTINUA*

◑ No WAM supply
Fremdfabrikat beizustellen
Hors fourniture WAM
Non fornitura WAM

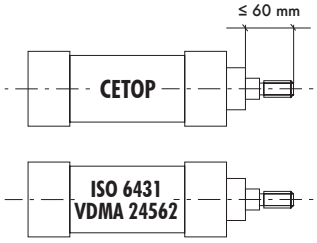

GEAR MOTOR COMPATIBILY
KOMBINATIONSMÖGLICHKEITEN MIT GETRIEBEMOTOR
ACCOUPLEMENTS D'ACTIONNEUR ELECTRIQUE
ABBINAMENTI DI ATTUATORE CON MOTORIDUTTORE

VLQ - VLC 0150 . .	-	CRG010A150 I	LSM6 *
VLQ - VLC 0200 . .	-	CRG010A200 I	
VLQ - VLC 0250 . .	-	CRG010B250 I	
VLQ - VLR - VLC 0300 . .	-	CRG010B300 I	
VLQ - VLC 0350 . .	-	CRG010B350 I	
VLQ - VLC 0400 . .	-	CRG010B400 I	

* Signalling system obligatory
Positionsanzeige erforderlich
Systeme de signalation indispensable
Sistema indispensabile di segnalazione

063001508 September 2012 Rights reserved to modify technical specifications

Further Products - Weitere Produkte - Autre production - Altra produzione

063001436

063001487

063001505

063001513

063001410

063001519

063001591

Bulk Solids Handling Equipment Bulk Solids Handling Equipment Bulk Solids Handling Equipment Bulk Solids Handling Equipment Bulk Solids Handling Equipment

WAM®

UNI EN ISO 9001 Certified Company

www.wamgroup.com

CS-910-406 : Identification sheet

VWTC PROJECT NUMBER:	5000218009	REV:	1
PROJECT NAME:	AEM AMARUQ	SUBMITTED TO (COMPANY):	AGNICO EAGLE MINES
ENGINEER:	Gabriel Hébert	SUBMITTED TO (RESPONSIBLE)	
PROJECT MANAGER:	Clément B	PROJECT NUM REFERENCE.:	
PHONE NUMBER:		LOT NUMBER:	

SUPPLIER	EQPT CODE	EQPT TAG NO	DIA	DESCRIPTION	INFO 1	INFO 2	INFO 3	APPLIC.	NOTE	REV
WAM	CMSPGU320684	FSM9-621-C001		CONE BIG BAG	CONE FOR SUPERSACK // Manuf: WAM // Model : SBB/Cone MS	Cone for Super Sack unloading station type SBB 1250M made of carbon steel, Discharge size D=273mm	avec bride compatible vanne à tiroir WAM VLC250. With stub for flexible hose connection. Comes with black rubber seal	HYDRAPOL 3500		

This page is intentionally left blank

Bulk Solids Handling Equipment Bulk Solids Handling Equipment Bulk Solids Handling Equipment Bulk Solids Handling Equipment Bulk Solids Handling Equipment

FIBC Dischargers

Big-Bag - Entleerstationen
Déchargeuses de Big-Bag
Svuota Big-Bag

SBB

WAMGROUP

EXTRAC®

When discharging an FIBC the following problems can be encountered:

- Dust is produced when the bag is opened;
- Difficulties occur when trying to remove substances from the bag which have been compressed during transportation or storage;
- Substances remain trapped in the corners of the bag, making it necessary for the subsequent discharging to be carried out by hand.

Beim Entleeren von Big-Bags treten oft Probleme auf wie:

- *Staubentwicklung beim Öffnen des Big-Bags;*
- *Big-Bag lässt sich nicht vollständig entleeren, weil sich der Inhalt durch Transport oder längere Lagerung stark verdichtet hat;*
- *In den Ecken des Big-Bags befinden sich Produktreste, die von Hand entfernt werden müssen.*

Au moment de la vidange des Big-Bags, il se posent généralement les problèmes suivants:

- *Dégagement des poussières à l'ouverture du sac;*
- *Extraction difficile des produits dûe au tassement généré par le transport ou le stockage;*
- *Opération manuelle supplémentaire pour vider complètement les sacs du produit restant dans les angles.*

Alcuni dei problemi che si manifestano durante le fasi di svuotamento dei Big-Bag sono:

- *Emissione di polvere durante l'apertura della bocca;*
- *Estrazione difficile del prodotto dovuto alla sua compattazione in seguito allo stoccaggio e a trasporto del Big-Bag;*
- *Svuotamento parziale dei sacconi che contengono prodotti compattati.*

In order to avoid such problems we suggest you use our modular FIBC Discharging System.

Our systems can be extended and a range of accessories is available to satisfy every individual requirement with unrivalled efficiency, simplicity and cost.

Standard material: carbon steel.

On request: 304 or 316 stainless steel.

Bei Big-Bag-Entleerstationen vom Typ SBB werden diese Probleme dank eines Konzepts, welches stark auf individuelle Kundenbedürfnisse ausgerichtet ist, bereits im Vorfeld vermieden.

Die Modulbauweise und eine breite Auswahl an Zubehör bieten effiziente und wirtschaftliche, vor allem aber anwenderfreundliche Lösungen.

Standardausführung aus Stahl.

Auf Wunsch Ausführungen aus Edelstahl 1.4301 oder 1.4401.

Pour éliminer ces inconvénients, nous vous proposons un système de déchargement modulaire et expansible, accompagné de toute une gamme d'accessoires qui permettent de satisfaire aux demandes spécifiques.

Ce système est efficace, simple et économique.

Fabrication de série: en acier au carbone.

Sur demande: en inox AISI 304-316.

Al fine di evitare gli inconvenienti sopra esposti proponiamo un sistema di svuotamento modulare ed espandibile completo di una gamma di accessori che consente di soddisfare richieste specifiche con ineguagliabile efficienza, semplicità ed economicità.

Esecuzione standard: acciaio al carbonio

A richiesta: AISI 304-316

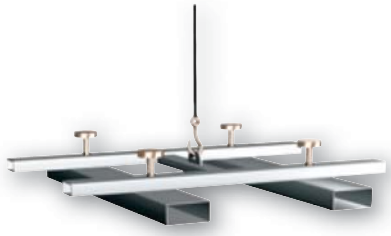

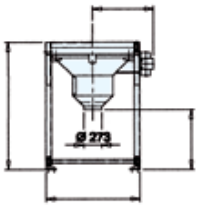

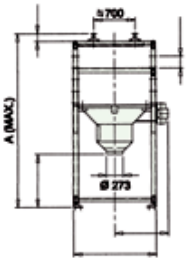

Type C
Typ C
Type C
Tipo C

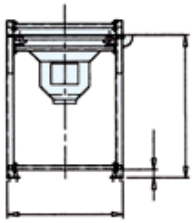

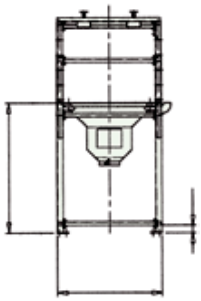

Type S
Typ S
Type S
Tipo S

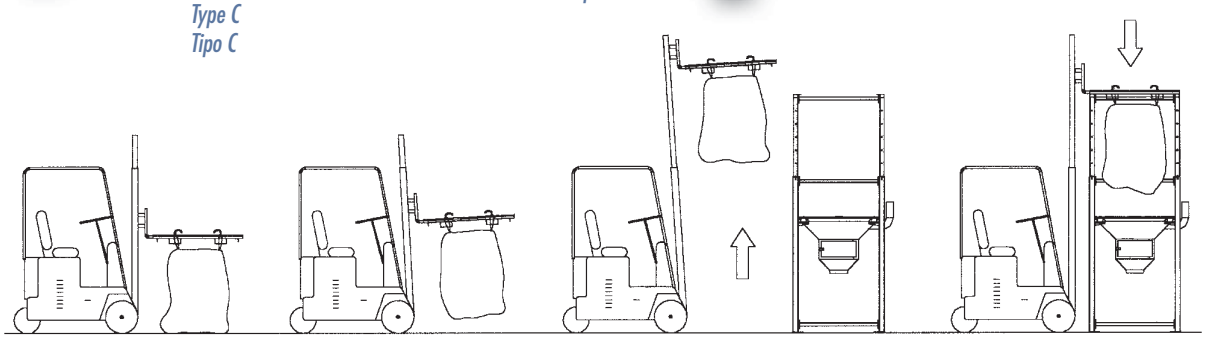

Type	A	B	C	E	F
SBB. 125. C	1.914	1.400	832	100	1.734
SBB. 150. C	2.490	1.800	1.047	160	1.880

Dimensions in mm

Type	A max.	B	C	D	E	F
SBB. 125. S	3.960	1.400	832	130	100	1.734
SBB. 150. S	4.307	1.800	1.047	180	160	1.800

Dimensions in mm

Accessories
Zubehör
Accessoires
Accessori

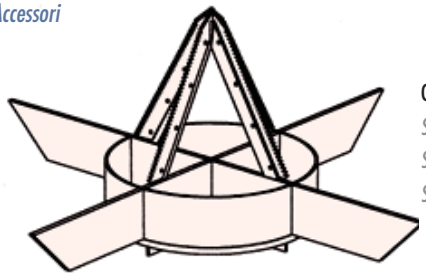

Cutting System
Schnittvorrichtung
Système de coupe
Sistema di taglio

Pneumatic Shaking System
Pneumatische Schüttelvorrichtung
Système pneumatique de secouement
Sistema di scuotimento pneumatico

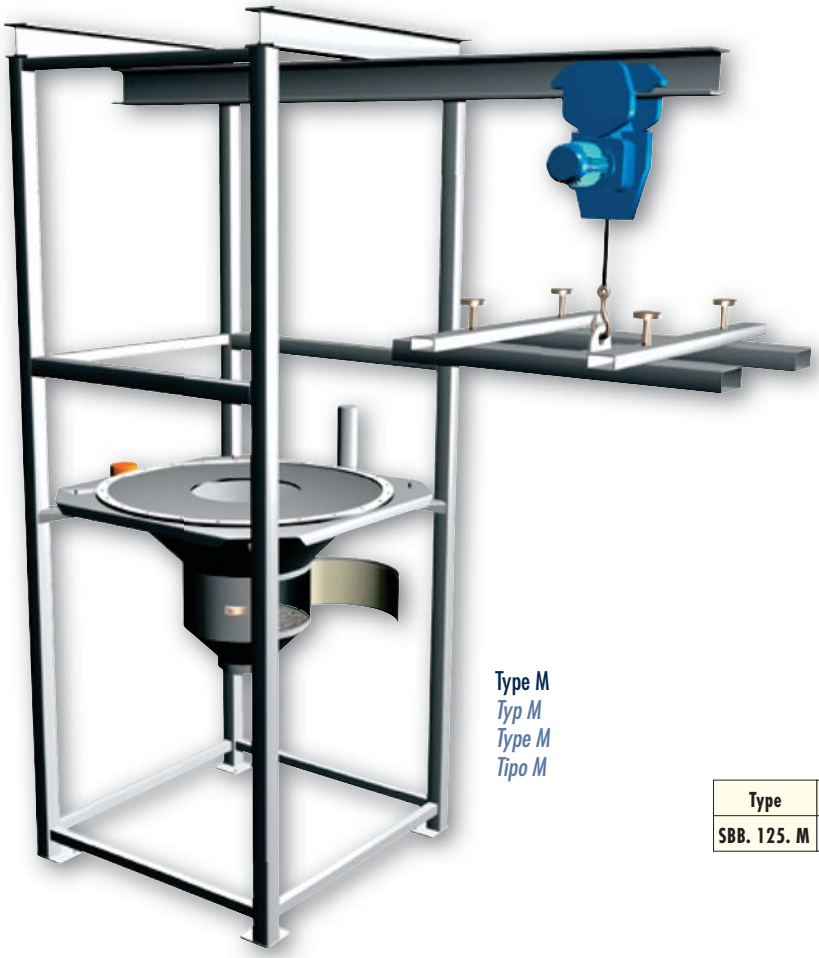

Type M
Typ M
Type M
Tipo M

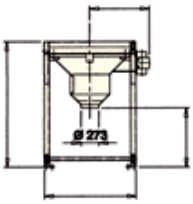

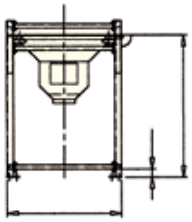

Type	A	B	C	E	F	G	H	L
SBB. 125. M	4.810	1.400	832	160	1.734	2.150	750	3.765

Dimensions in mm

With Rotary Valve
Mit Zellenradschleuse
Avec sas alvéolaire
Con rotovalvola

With Pneumatic Conveying System
Mit pneumatischem Fördersystem
Avec transport pneumatique
Con trasporto pneumatico

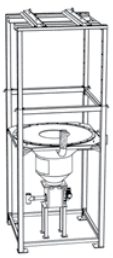

With Micro-Batch Feeder
Mit Mikrodosierer
Avec microdoseur
Con microdosatore

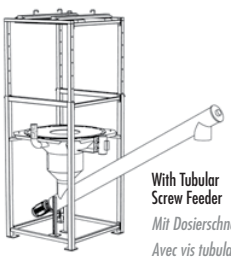

With Tubular Screw Feeder
Mit Dosierschnecke
Avec vis tubulaire
Con coclea tubolare

With Flexible Helix Conveyor
Mit flexibler Schnecke
Avec vis flexible
Con coclea flessibile

063001479 September 2012 Rights reserved to modify technical specifications

Further Products - Outra produção - Otros Productos - Altra produzione

063001569

063001499

063001436

063001963

063001505

063001508

063002238

Bulk Solids Handling Equipment Bulk Solids Handling Equipment Bulk Solids Handling Equipment Bulk Solids Handling Equipment

EXTRAC®

UNI EN ISO 9001
Certified Company

www.wamgroup.com

CS-910-511 : Identification sheet

VWTC PROJECT NUMBER:	5000218009	REV:	1
PROJECT NAME:	AEM AMARUQ	SUBMITTED TO (COMPANY):	AGNICO EAGLE MINES
ENGINEER:	Gabriel Hébert	SUBMITTED TO (RESPONSIBLE)	
PROJECT MANAGER:	Clément B	PROJECT NUM REFERENCE.:	
PHONE NUMBER:		LOT NUMBER:	

SUPPLIER	EQPT CODE	EQPT TAG NO	DIA	DESCRIPTION	INFO 1	INFO 2	INFO 3	APPLIC.	NOTE	REV
ENVIREQUIP	CMSPMI319908	M9-621	N/A	MATURATION MIXER	HP3500 (2016) MIXER // Manuf : Envirequip // EVG1-0.75// Mtl : 304L SS	Impeller Dia : 26.75" //99.36 RPM // Shaft lg : 53.625"	Nord Motor 0.75 HP / 575/3/60	HYDRAPOL 3500		

This page is intentionally left blank

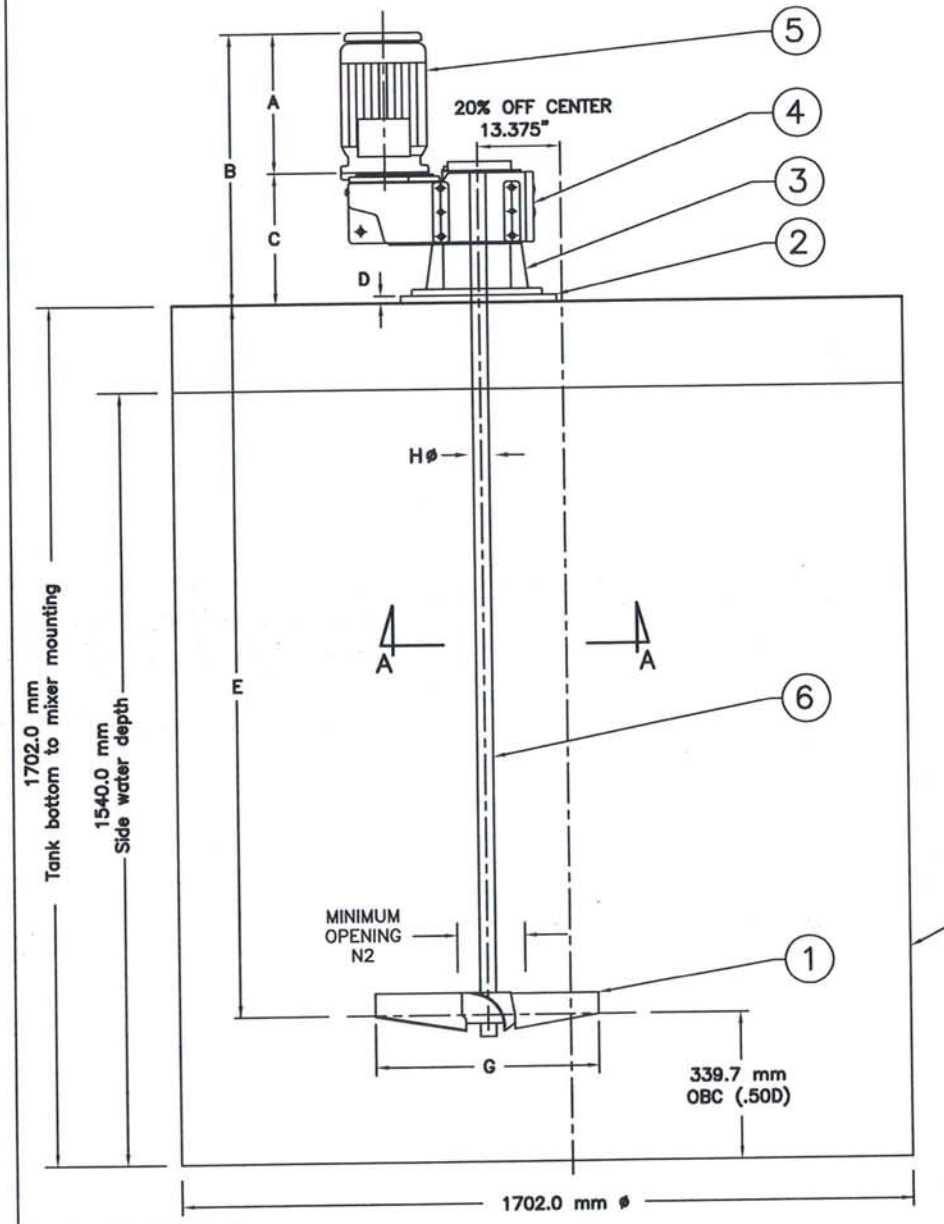

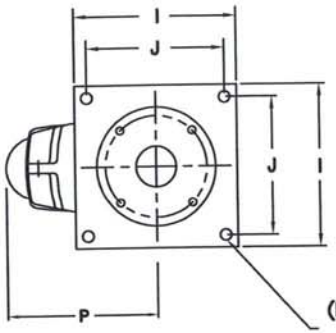

"A–A"

ITEM	DESCRIPTION	MATERIAL
1	Envirofoil impeller 679.4 mm (26.75") ø @13.5°	304L
2	Base 355.6 mm x 355.6 mm (14.0" X 14.0")	Steel
3	Pedestal <B5 Flange>	
4	NORD reducer 99.36 RPM	
5	NORD motor 0.75 Hp, 575/3/60, TEFC	
6	Shaft: (1) section 1365.2 mm (53.75") @ 1.25"ø	304L

APPL'N: POLYMER (QTY 1)
MIX–TECH MIXERS
MODEL: EVG1–0.75
0.56 kW @ 99.36 RPM
S/N
Rotation: Clockwise
Thrust: Down
Tag #:

Poids: 125 Lbs
Mounting loads
Torque reaction = 1,190 in lb
Bending moment = 3,036 in lb
Estimated beam: 6C @ 8.2 # up to 6 ft.

ST #: 910–511
LATIS #: CMSPMI319908

HP 3500

Dimensions: Inches																
MOD.:	A	B	C	D	E	E2	F	Gø	Hø SHAFT	I	J	Kø	Lø	M	N2	P
EVG1	9.15	15.96	6.18	.63	53.75	–	–	26.75	1.25	14.0	12.0	.56	.50	6.20	7.0	7.87

Dimensions: mm																
MOD.:	A	B	C	D	E	E2	F	Gø	Hø SHAFT	I	J	Kø	Lø	M	N2	P
EVG1	232.4	405.3	157.0	16.0	1365.2	–	–	679.4	31.8	355.6	304.8	14.3	12.7	157.5	177.8	200.0

NO	DATE	REVISION	P/B

PROJET/PROJECT
EVG1–0.75/304/575 (CIRT)

ENVIREQUIP WTEM INC.
490 Bord du Lac – Suite 2
Dorval, QC H9S 5A8
Montreal Tel: (514) 338–1043
RR1 (21484 Little Russels Rd.)
Glen Robertson, Ont K0B 1H0
Ontario Tel: (613) 874–2618
Fax: (613) 874–2829
E-mail: envireqp@glen-net.ca

TITRE/TITLE
"MIX–TECH" Mixers
Veolia Water Technologies
EVG SERIES

DESSINÉ PAR: DRAWN BY: PJ	DATE: Jan 2018
DESS. NO: DWG NO: EVG	ECH./SCALE: N.T.S
VÉRIFIÉ PAR: CHECKED BY: PJ	PROJ.NO:
APPROUVÉ PAR: APPROVED BY: RJ	REV. 01

Ce dessin et l'information qu'il contient est la propriété de ENVIREQUIP WTEM Inc. Il est interdit de le copier, le photographier, l'imprimer, le prêter ou de l'utiliser sans la permission de ENVIREQUIP WTEM Inc.

This drawing and the information contained thereon is the property of ENVIREQUIP WTEM Inc. It is not to be printed, photographed, copied, loaned or used without the permission of ENVIREQUIP WTEM Inc.

LEFT BLANK

4 – DETAILED TECHNICAL DOCUMENTATION

4.3 – SHOP DRAWINGS

4.3.6 – $KMnO_4$ PREPARATION SYSTEM – HYDRA-POL 500

LEFT BLANK

Project name:	AMARUQ
Project#:	5000218009
Document #:	SPK_0006_HYDP
by:	GH
chkd:	GP
appvd:	CB

SUBMITTAL PACKAGE

KMnO4 PREP SYSTEM

This page is intentionally left blank

Project name:	AMARUQ
Project#:	5000218009
Document #:	SPK_0006_HYDP
by:	GH
chkd:	GP
appvd:	CB

KMnO4 PREP SYSTEM

PROCESS DATASHEET

OIM manual section: 4.3.6.1

REEFER TO 5000218009_PSDS_0006_HYDP_VWT

This page is intentionally left blank

Project name:	AMARUQ
Project#:	5000218009
Document #:	SPK_0006_HYDP
by:	GH
chkd:	GP
appvd:	CB

KMnO4 PREP SYSTEM

GENERAL ARRANGEMENT DRAWING

OIM manual section: 4.3.6.2

REEFER TO 5000218009_GA_0006_HYDP_VWT

This page is intentionally left blank

Project name: AMARUQ

Project#: 5000218009

Document #: SPK_0006_HYDP

by: GH

chkd: GP

appvd: CB

KMnO4 PREP SYSTEM

SUPPLIER TECHNICAL DATASHEETS

OIM manual section: 4.3.6.3

This page is intentionally left blank

CS-300-2003 : Identification sheet

VWTC PROJECT NUMBER:	5000218009	REV:	1
PROJECT NAME:	AEM AMARUQ	SUBMITTED TO (COMPANY):	AGNICO EAGLE MINES
ENGINEER:	Gabriel Hébert	SUBMITTED TO (RESPONSIBLE)	
PROJECT MANAGER:	Clément B	PROJECT NUM REFERENCE.:	
PHONE NUMBER:		LOT NUMBER:	

SUPPLIER	EQPT CODE	EQPT TAG NO	DIA	DESCRIPTION	INFO 1	INFO 2	INFO 3	APPLIC.	NOTE	REV
CHEMLINE	VABFPV352256	T9-591-V002	50 mm (2")	Actuated Transfer Valve	TYPE: BUTTERFLY | 150 PSI//MANUFACTURER : CHEMLINE//MODEL : 57A020AEL-A / ER20.12//CONNECTION TYPE : WAFER | //BODY : PVC// SEAL | SEAT :EPDM | EPDM// STEM : 403 SS	ACTUATOR TYPE : ELECTRIC// MANUFACTURER : CHEMLINE// MODEL # :ER20.12// 115/220 VAC		KMnO4 PREP SYSTEM		

This page is intentionally left blank

PDF Published December 13, 2017

Type 57α/56/75 Wafer Elastomer Seated Butterfly Valves

CHEMLINE PLASTICS
SUPERIOR FLOW SOLUTIONS

Chemline elastomer seated butterfly valves have a successful history of over 40 years and have replaced metal valves in many difficult process applications. Type 57α body, disc and seat are designed to offer excellent flow characteristics and low closing torques. Stem torques are unaffected by excessive flange bolt torques. Valves up to 16" have corrosion resistant FRP gear operators. Top flange and shaft dimensions are to ISO 5211 standard for easy mounting of actuators. A large selection of body, disc and seat materials permit these valves into a wide range of on/off and throttling control applications in lines up to 24" size.

PVC | PP | PVDF | PDCPD[1]

CRN Registered Consult Chemline

NSF[3] Certified to NSF/ANSI 61

BODY TYPE: Type 57α: 1-1/2" – 14"
Type 56: 16"
Type 75: 18" – 24"

MATERIALS: Body: PVC, PP, PVDF, PDCPD[1]
Disc: PP (standard), PVC, PVDF

SEAT & O-RINGS: EPDM, FKM (Viton®)[2]

Gear Operated
- 8" to 24"

Lever Operated
- 1-1/2" to 8"

features

Compact and Light Weight

High Corrosion Resistance
- Solid plastic body and disc
- Polypropylene hand levers up to 8"
- FRP gear operators up to 16"

Abrasion Resistant
- Solid plastic disc
- PVDF disc available for high abrasion resistance

Easy Actuator Mounting
- Valves up to 16" have standard ISO 5211 top flange and shaft dimensions

Easily Installed
- Full bolt hole circle makes installation and alignment easy

Better Sealing
- Spherical disc/seat seal design offers effective sealing at lower stem torques, and long life for the seat

Better Flow
- Streamlined disc offers higher C_V values

Protection against Flange Bolt Over Tightening
- Body gussets and new seat design prevent excessive flange bolt torques from affecting valve stem torques

CRN Registration numbers by province
- Ontario: OC11045.5
- Newfoundland: OC11045.50
- Saskatchewan/Manitoba/Quebec: OC11045.56
- New Brunswick: OC11045.57
- Nova Scotia: OC11045.58
- P.E.I.: OC11045.59
- British Columbia: not required
- Alberta: not required[4]

[1] PDCPD=Polydicyclopenthadiene.
[2] Other materials are available.
[3] Type 57α PVC valves are certified under NSF/ANSI Standard 61 for contact with drinking water.
[4] Not required for non-expandable fluids.

12/17 ©Chemline Plastics Limited 2017
Chemline is a registered trade mark of Chemline Plastics Limited

Type 57α Butterfly Valves 1-1/4" to 14"

engineered for superior performance

Polypropylene Hand Lever
- Lockable

Sturdy PPG Position Lock
- 19 stops for fine flow control
- Resists high torque loads

Full Bolt Circle
- For easy installation

Gussets on Body
- Prevent excessive compression of seat

Deluxe FRP Gear Operator
- Yellow position indicator is NAMUR design for easy mounting of a limit switch box
- IP 67 enclosure resists short term immersion

Moulded Elastomer Seat
- Easily replaceable
- Flange face has raised "o-ring" profile
  – *Low flange bolt torques to seal*

Special Sealing Design
- Seals and disc have spherical sealing surfaces
  – *Lower stem torques to seal*
  – *Longer seat life compared to conventional designs*

PP Bushing with Double O-Rings
- Proven superior shaft seal design

Streamlined Disc
- High C_V values
- Good flow characteristics, important for control applications

Shaft O-Ring
- For vacuum resistance

Stainless Steel Shaft
- Not wetted
- Engagement over full length of the disc

Type 57α Butterfly Valves 1-1/4" to 14"

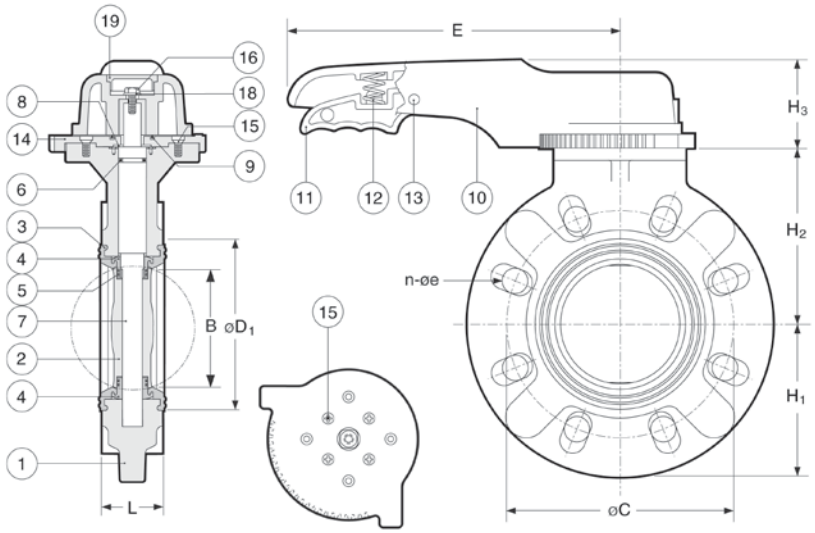

1-1/2" – 8" Lever Operated

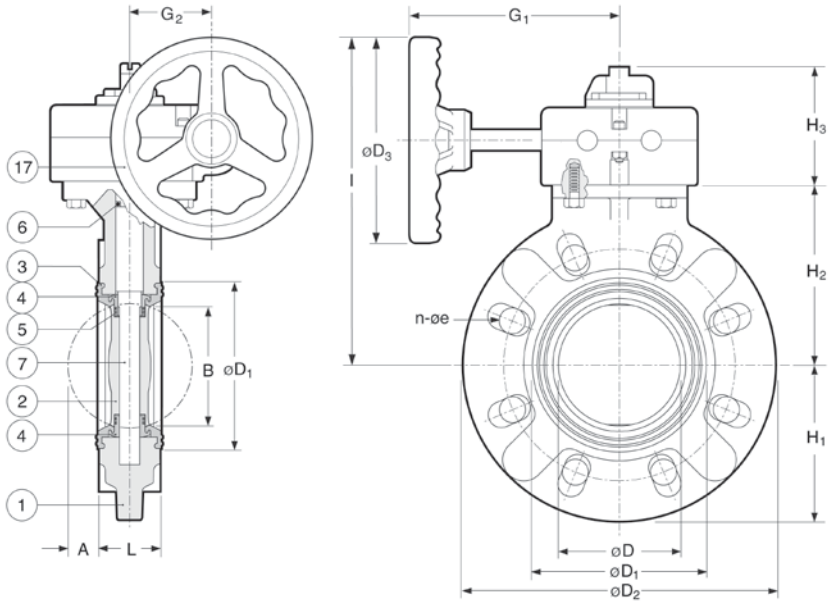

8" to 14" Gear Operated

PARTS

▲ Recommended Spare Parts

No.	Part	Pcs.	Materials
1	Body	1	PVC, PP PVDF, PDCPD[1]
2	Disc	1	PP, PVC, PVDF
3▲	Seat	1	EPDM, FKM (Viton®)
4	Seat Bushing	2	PP, PVC, PVDF
5▲	Bushing O-Ring	4	EPDM, FKM (Viton®)
6▲	Shaft O-Ring	1	EPDM, FKM (Viton®)
7	Shaft	1	403 SS
8	Shaft Retainer	1	PP
9▲	Plate O-Ring	1	EPDM, FKM (Viton®)
10	Hand Lever	1	PP
11	Trigger	1	PPG
12	Spring	1	304 SS
13	Pin	1	PPG
14	Position Lock Plate	1	PPG
15	Plate Screw	4	304 SS
16	Hand Lever Bolt	1	304 SS
17	Gear Operator	1	FRP housing, PP handwheel & 304 SS shaft
18	Handle Lever Washer	1	304 SS
19	Hand Lever Cap	1	PPG

[1] PDCPD=Polydicyclopenthadiene.

DIMENSIONS INCHES

Size	L	A	B*	C	n	e	D	D_1	D_2	D_3	E/G_1	G_2	H_1	H_2	H_3	I
1-1/2"	1.54	0.12	0.87	3.88	4	0.62	1.77	2.80	5.91	–	8.7	–	3.0	3.9	2.2	–
2"	1.65	0.28	1.46	4.75	4	0.75	2.20	3.19	6.50	–	8.7	–	3.3	4.3	2.2	–
2-1/2"	1.81	0.46	2.03	5.50	4	0.75	2.72	3.74	7.28	–	8.7	–	3.6	4.7	2.2	–
3"	1.81	0.61	2.43	6.00	4	0.75	3.03	4.13	8.31	–	9.8	–	4.2	5.3	2.2	–
4"	2.20	0.91	3.36	7.50	8	0.75	4.02	5.28	9.37	–	9.8	–	4.7	5.9	2.2	–
5"	2.60	1.24	4.36	8.50	8	0.88	5.08	6.65	10.35	–	12.6	–	5.2	6.6	2.7	–
6"	2.80	1.56	5.20	9.51	8	0.88	5.91	7.48	11.22	–	12.6	–	5.6	7.2	2.7	–
8" Lever	3.43	2.13	6.87	11.75	8	0.88	7.68	9.53	13.39	–	15.8	–	6.7	8.4	2.7	–
8" Gear	3.43	2.13	6.87	11.75	8	0.88	7.68	9.53	13.39	6.3	6.6	2.5	6.7	8.1	3.6	12.64
10"	4.41	2.72	8.80	14.25	12	1.00	9.84	11.89	16.57	6.3	6.6	2.5	8.3	9.5	3.6	14.02
12"	5.08	3.43	10.79	17.00	12	1.00	11.93	14.17	19.21	11.8	9.5	3.9	9.6	11.7	4.3	19.29
14"	5.08	4.37	12.85	18.75	12	1.12	13.82	15.47	21.22	11.8	9.5	3.9	10.6	12.8	4.3	20.35

* **B**=Minimum inside diameter (I.D.) of mating pipe. If I.D. of pipe is **B** dimension or less, the inside of pipe and must be chamfered or spacers provided. Consult Chemline.

Type 56/75 Series Butterfly Valves 16" to 24"

New PDCPD bodies have full thickness design

- Prevents excessive compression of seat if flange bolts are over torqued

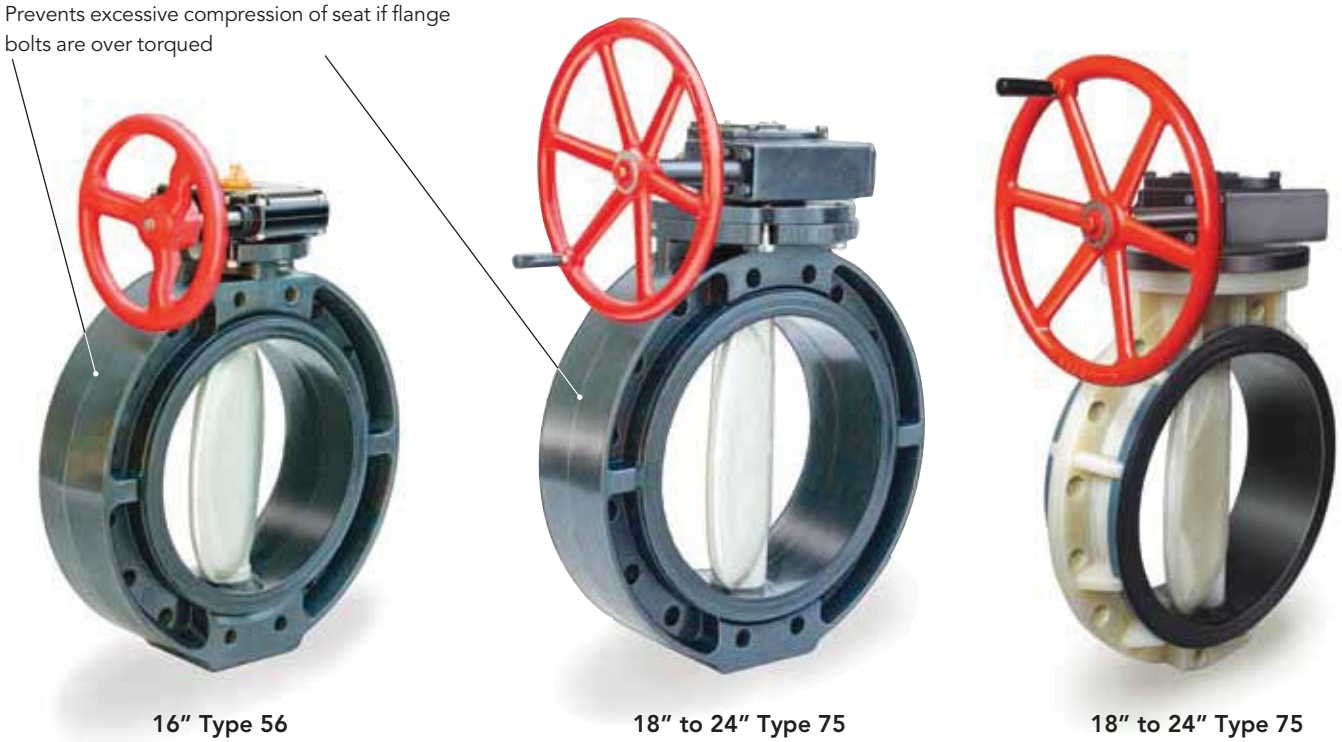

16" Type 56 with PDCPD body, PP disc

18" to 24" Type 75 with PDCPD body, PP disc

18" to 24" Type 75 with PVDF body, PVDF disc

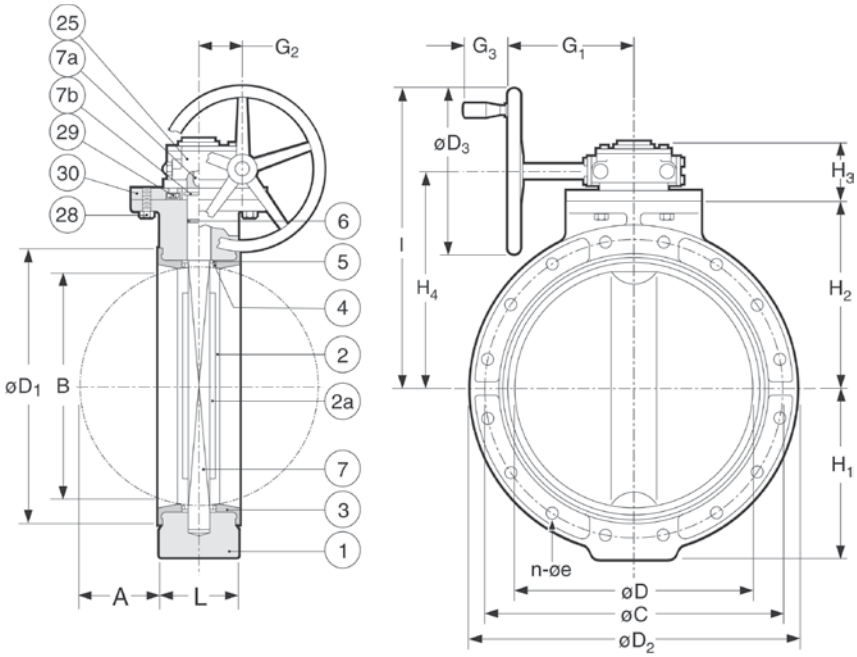

Drawing body detail is for PDCPD version. Detail for PP and PVDF body versions are slightly different. Consult Chemline.

PARTS

▲ Recommended Spare Parts

No.	Part	Pcs.	Materials
1	Body	1	PDCPD[1], PP, PVDF
2	Disc	1	PP, PVDF
2a	Disc Insert	1	Carbon Steel
3▲	Seat	1	EPDM, FKM (Viton®)
4▲	Large Disc O-Ring	2	EPDM, FKM (Viton®)
5▲	Small Disc O-Ring	2	EPDM, FKM (Viton®)
6▲	Shaft O-Ring	1	EPDM, FKM (Viton®)
7	Shaft	1	403 SS
7a	Shaft Key	1	Carbon Steel
7b	Snap Ring	1	304 SS
17	Gear Operator[2]	1	Cast Aluminum Epoxy Coated
28	Bolt	4	304 SS
29	Bolt	4	304 SS
30	Gear Operator Stand	1	400 SS

[1] PDCPD=Polydicyclopenthadiene.

[2] Gear Operator for 16" only is FRP with PP hand wheel and 304 SS shaft.

DIMENSIONS INCHES

Size	Type	L	A	B*	C	n	e	D	D_1	D_2	D_3	G_1	G_2	G_3	H_1	H_2	H_3	H_4	I
16"	56	6.65	4.67	14.53	21.25	16	1.12	15.98	18.50	24.41	11.81	10.7	3.9	–	12.4	13.8	4.3	15.35	21.3
18"	75	7.05	5.38	16.34	22.75	16	1.26	17.80	20.67	26.18	16.14	12.6	4.3	3.4	13.2	14.6	5.5	17.44	25.6
20"	75	7.48	6.15	18.29	25.00	20	1.26	19.76	22.64	28.35	16.14	12.6	4.3	3.4	14.4	15.8	5.5	18.62	26.8
24"	75	8.23	7.76	22.27	29.50	20	1.38	23.74	27.01	32.01	16.14	12.6	4.3	3.4	16.7	18.3	5.5	21.18	29.3

* **B**=Minimum inside diameter (I.D.) of mating pipe. If I.D. of pipe is **B** dimension or less, the inside of pipe and must be chamfered or spacers provided. Consult Chemline. **Note:** Type 75 was formerly referred to as TB Series.

Elastomer Seated Butterfly Valves

WORKING PRESSURES PSI

NET WEIGHTS LB.

Size	Valve Type	PVC Body/PP Disc			PP Body/PP Disc		PVDF Body/PVDF Disc/FKM(Viton®)				Body/Disc		
		0-50°C 32-122°F	60°C 140°F	83°C 181°F	–20-60°C –4-140°F	80°C 176°F	–20-60°C –4-140°F	79°C 175°F	100°C 212°F	121°C 250°F	PVC/ PP	PP/ PP	PVDF/ PVDF
1-1/2″	57α	150	70	30	150	105	150	105	90	75	2.9	2.4	3.1
2″	57α	150	70	30	150	105	150	105	90	75	3.3	2.6	3.7
2-1/2″	57α	150	70	30	150	105	150	105	90	75	3.7	3.1	4.2
3″	57α	150	70	30	150	105	150	105	90	75	4.2	3.5	4.9
4″	57α	150	45	30	150	105	150	105	90	75	5.5	4.4	6.4
5″	57α	150	45	30	150	105	150	105	90	75	10.8	8.8	12.6
6″	57α	150	45	30	150	105	150	105	90	75	12.8	10.1	15.2
8″ Lever	57α	150	40	20	150	90	150	90	75	60	20.5	16.3	24.3
8″ Gear	57α	150	40	20	150	90	150	90	75	60	23.6	19.6	27.6
10″	57α	150	40	20	150	90	150	90	75	60	32.4	26.9	41.0
12″	57α	112	30	15	112	60	112	60	45	30	61.7	52.9	76.1
14″	57α	112	30	7	112	60	112	60	45	30	66.6	58.0	81.1

WORKING PRESSURES PSI

NET WEIGHTS[1] LB.

Size	Valve Type	PDCPD Body/ PP Disc			PDCPD Body/ PVDF Disc/FKM(Viton®)				PP Body/ PP Disc		PVDF Body/ PVDF Disc/FKM(Viton®)				Body/Disc		
		0-50°C 32-122°F	60°C 140°F	83°C 181°F	0-30°C 32-86°F	60°C 140°F	80°C 176°F	100°C 212°F	–20-60°C –4-140°F	80°C 176°F	–20-60°C –4-140°F	79°C 175°F	100°C 212°F	121°C 250°F	PDCPD/ PP	PDCPD/ PVDF	PVDF/ PVDF
16″	56	110	90	15	110	90	45	30	90	45	90	45	30	15	79.4	103	101
18″	75	110	90	15	110	90	45	30	75	45	70	45	30	15	140.	221	227
20″	75	110	90	15	110	90	45	30	50	45	50	30	20	15	170.	252	273
24″	75	110	90	15	110	90	45	30	50	45	50	30	20	15	251.	309	346

Note: Type 75 was formerly referred to as TB Series.

[1] Weights are for valves excluding lugs.

Cv VALUES VS. DISC ANGLE

BOLT TORQUES

Size	15°	30°	45°	60°	75°	90°	Recommended Flange Bolt Torques Foot-Lbs.
1-1/2″	0	3.6	14.2	30.5	49.7	71.	15
2″	0	6.0	24.	51.6	84.	120.	17
2-1/2″	0	12.5	50.	108.	175.	250.	17
3″	0	15.0	60.	129.	210.	300.	22
4″	0	23.5	94.	202.	329.	470.	22
5″	0	41.5	166.	357.	581.	830.	30
6″	0	55.	220.	473.	770.	1,100.	30
8″	0	125.	500.	1,075.	1,750.	2,500.	41
10″	0	193.	772.	1,660.	2,702.	3,860.	41
12″	0	285.	1,140.	2,451.	3,990.	5,700.	44
14″	0	322.	1,288.	2,769.	4,508.	6,440.	44
16″	0	300.	2,277.	4929.	6,822.	8,340.	58
18″	0	392.	2,973.	6436.	8,908.	10,890.	58
20″	0	506.	3,838.	8309.	11,501.	14,060.	72
24″	0	666.	5,051.	10,934.	15,133.	18,500.	72

options + accessories

Shaft Extensions

- Different materials and lengths are available
- Several designs:
  - with no housing for indoors
  - with waterproofed PVC housing for indoors or outdoors
  - with stainless steel housing for buried services

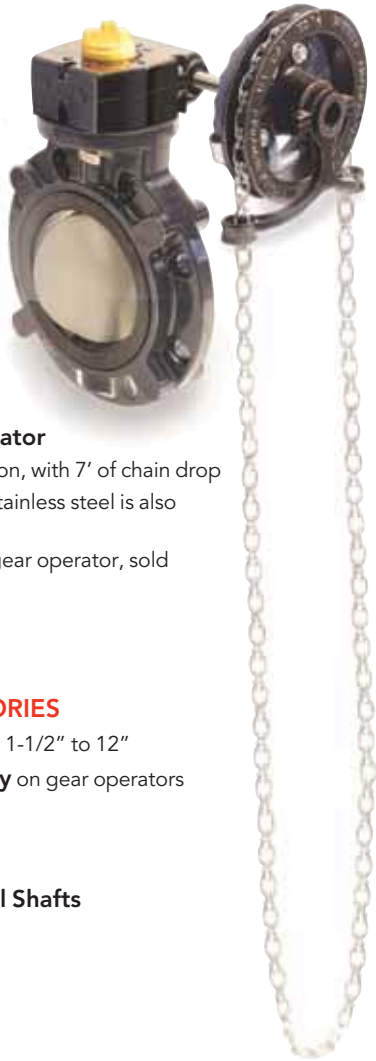

Chain Wheel Operator

- For overhead opeation, with 7' of chain drop
- Cast iron standard, stainless steel is also available
- Requires the use of gear operator, sold separately

OTHER ACCESSORIES

- **Gear Operator** on 1-1/2" to 12"
- **Locking Capability** on gear operators

OPTIONS

- **Different Seats**
- **Different Material Shafts**

Optional Lock-out Handle & Hasp

- To prevent unauthorized operation of the valve during maintenance shut-downs
- Padlocks go through holes in hasp

Limit Switches

- Available for lever and gear operated valves
- Electrical feedback of manual valve position
- NEMA 4X enclosure, position indicator beacon, 2x SPDT switches, stainless steel hardware

Municipal Operating Nut

- For buried service

Elastomer Seated Butterfly Valves

electric + pneumatic actuation

Pneumatic and Electric Actuators

- A complete range of actuators and control accessories are available, mounted to valves using PPG plastic brackets and 304 stainless steel couplings. Refer to separate data sheets.
- All actuators are CSA approved, have NEMA 4S enclosures, stainless steel hardware and permanently lubricated gear train

A Series Electric

- butterfly valves up to 6"
- up to 2000 in-lbs torque
- On-Off (3 wire) adjustable travel, optional On-Off (2 wire), failsafe multi-turn, 3 position modulating, BUS
- Visual feedback, optional 2 feedback switches, feedback potentiometer and feedback transmitter

Q Series Electric

- butterfly valves up to 3"
- 300 in-lbs torque
- On-Off (3 wire) adjustable travel, optional On-Off (2 wire), failsafe 3-position, modulating
- Visual feedback, optional 2 feedback switches, feedback potentiometer and feedback transmitter

V Series Electric

- butterfly valves up to 20"
- up to 8850 in-lbs torque
- On-Off (2/3 wire) adjustable travel, optional failsafe, modulating, BUS
- Visual feedback, 2 feedback switches, optional 2 extra feedback switches, feedback potentiometer and feedback transmitter

Pneumatic Actuators

PA Series

- butterfly valves up to 24"
- up to 40,660 in-lbs torque
- industrial process, submerged
- bleach/water washdown
- Rilsan-coated aluminum

PP Series

- butterfly valves up to 6"
- up to 1,335 in-lbs torque
- industrial process with minimal use of metal
- Glass-filled Polyamide

P3 Series

- butterfly valves up to 10"
- up to 8,850 in-lbs torque
- corrosive, submerged and off-shore applications
- 316 stainless steel

ORDERING EXAMPLE

| **Chemline Butterfly Valves** | | |

This page is intentionally left blank

PDF Published January 10, 2018

E Series Electric Actuators

CHEMLINE PLASTICS
SUPERIOR FLOW SOLUTIONS

The Chemline E Series Electric Actuator is a reversible rotary unit with output torques up to 880 in.-lb. These units are ideal for all Chemline ball and butterfly valves up to 4". The E Series is compact, light weight and has a plastic housing. A large black handle provides manual override and position indicator.

Chemline also offers complete actuated ball, butterfly and diaphragm valves, assembled and bench tested. Actuation service is also available for all quarter-turn metal valves.

for Chemline ball & butterfly valves up to 4"

SERIES: ER10 – 90 in.lb.
ER20 – 180 in.lb.
ER35 – 310 in.lb.
ER60 – 530 in.lb.
ER100 – 880 in.lb.

VOLTAGES: 115/220 VAC, 12/24 VDC, 24 VAC

ENCLOSURE: Polyamide 6.6
NEMA 4X

E Series on SM2 Series True Union Ball Valve

features

Multiple Operation/Control Options
- 2 & 3-wire (standard)
- Adjustable Travel (standard)
- Manual Override (standard)
- Bus communication (optional)
- Digital Positioner (optional)
- Failsafe (optional)
- Cold Weather Heater/Thermostat (standard)

Multiple Feedback Options
- Visual (standard)
- Feedback Switches (standard)
- Extra Feedback Switches (optional)
- Feedback Potentiometer (optional)
- Feedback Transmitter (optional)

Special Inspection Labelled by CSA
(Canadian Standards Association)

NEMA 4X Enclosure
- Waterproof, corrosion proof with high impact Polyamide 6.6 housing and stainless steel fasteners

No Maintenance
- Permanently lubricated gear train
- Designed for 250,000 + cycles

Thermal Overload Protection
- Thermal switch embedded onto control board

Extended Operating Temperature Range
- –10 to 60C (15 to 140°F) (standard)

Standard Mounting Dimensions
- ISO-5211 mounting bolt circle and drive

technical

Operating Voltage
- 115/220 VAC (standard)
- 12/24 VDC or 12 VAC (optional)

Electrical Conduit Entry
- 2 x 1/2" NPT

Motor Direction
- Reversing

Motor Cycle Time
- Fixed (standard)

01/18 ©Chemline Plastics Limited 2018
Chemline is a registered trade mark of Chemline Plastics Limited

DIMENSIONS INCHES

Port View

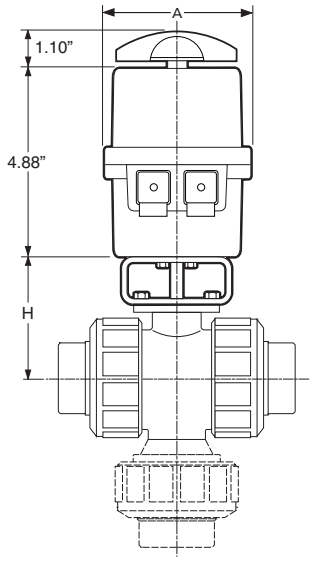

Type 21 True Union and
Type 23 Multi Port Ball Valves

Port View

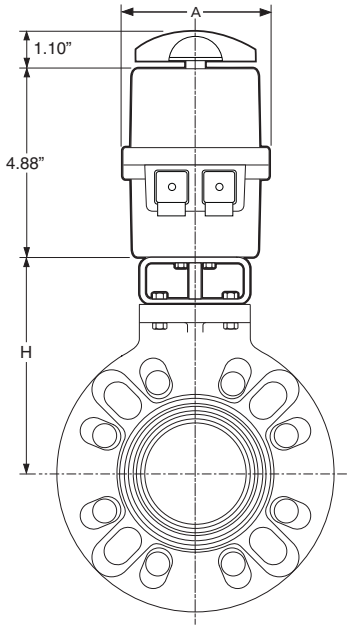

Type 57 Butterfly Valves

Side View

Port View

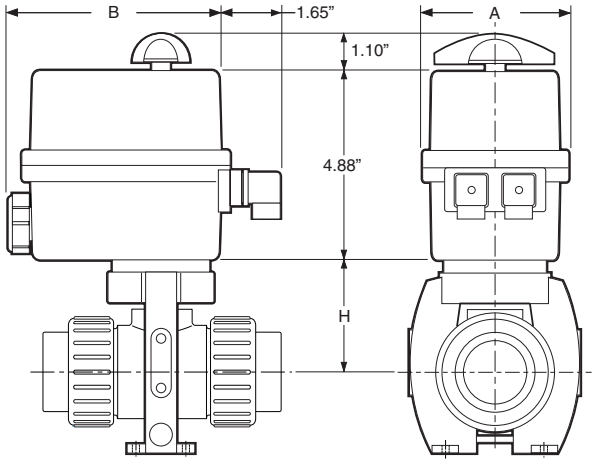

SM Metering and SP Proportional
True Union Ball Valves

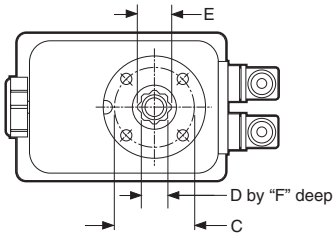

Bottom View

DIMENSION INCHES

Model	A	B	C/Thread	D	E Inches (ISO)	F
ER10	3.62	5.35	1.42 (F03) M5	0.55	0.551” 14mm	0.640
ER20	3.62	5.35	1.65 (F04) M5	0.55	0.551” 14mm	0.640
ER35	5.04	5.94	1.97 (F05) M6	0.87	0.551” 14mm	0.945
ER60	5.04	5.94	1.97 (F05) M6	0.87	0.866” 22mm	0.945
ER100	5.04	5.94	2.76 (F07) M8	0.87	0.866” 22mm	0.945

DIMENSION “H” INCHES

Valve Size	Valve Type				
	Type 21 Ball	Type 23 Multiport Ball	SM Metering/SP Proportional Ball	Type 57 Butterfly	ChemValve Butterfly
1/2”	2.76	2.76	1.97	–	–
3/4”	3.01	3.01	2.36	–	–
1”	3.29	3.29	2.60	–	–
1-1/4”	3.64	3.98	2.91	–	–
1-1/2”	3.98	3.98	3.76	5.65	–
2”	4.43	4.43	4.90	5.95	6.89
2-1/2”	5.12	5.47	–	6.35	7.52
3”	5.47	5.47	–	6.65	8.27
4”	–	–	–	7.35	9.05

Valves not to scale. For valve dimensions and parts refer to separate valve data sheets.

E Series Electric Actuators

SPECIFICATIONS

Model	Running Torques (in.-lbs.)	Nm	115 VAC / 220 VAC (x=12) Power Draw (Watts)[1]	115 VAC / 220 VAC (x=12) Duty Cycle	12 to 24 VDC & 24 VAC (x=346) Power Draw (Watts)[1]	12 to 24 VDC & 24 VAC (x=346) Duty Cycle	Cycle Time/90° (sec.)	Weight (lbs.)
ER10	90	10	15W	80%	15W	80%	11	3.0
ER20	180	20	15W	80%	15W	80%	12	3.0
ER35	310	35	15W	80%	15W	80%	7	6.2
ER60	530	60	45W	80%	45W	80%	12	6.9
ER100	880	100	45W	80%	45W	80%	23	6.9

[1] Power draw values are for actuators with locked rotors.

AC WIRING 115 VAC/220 VAC

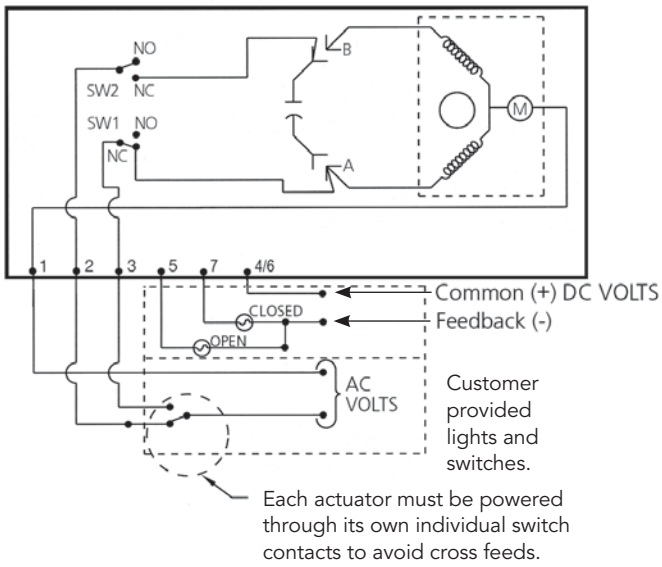

VALVE OPERATION

Neutral – To Terminal 1
To Open – Power to Terminal 2
To Close – Power to Terminal 3

NOTES:

1. Actuator shown in counter clockwise extreme of travel, or 'open' position.
2. Motor has a thermal protector as shown by (M) in the diagram.

OPERATION/CONTROL OPTIONS

- **Bus Communication** – Proprietary bus communication/operation capability
- **Digital Positioner** – Onboard digital position controller accepts 4 to 20 mA, 0 to 20 mA, 0 to 10 VDC or other inputs. These units are easier to calibrate, have faster response and provide more precise proportional control.
- **Failsafe Capability** – Onboard backup battery pack powers actuator in case of power failure

FEEDBACK OPTIONS

- **Extra Feedback Switches** – For extra end-of-travel position feedback
- **Feedback Potentiometer** – To feedback the precise valve position to a remote location, or to allow "jogging" control
- **Feedback Transmitter** – A circuit board coupled with a feedback potentiometer provides 4 to 20 mA output used by other equipment (PLC, data logger, etc.)

55 Guardsman Road, Thornhill, ON, L3T 6L2, Canada | ISO 9001:2008 Certified
1.800.930.2436 (CHEM) | fax.905.889.8553 | request@chemline.com | chemline.com

This page is intentionally left blank

CS-301-100 : Identification sheet

VWTC PROJECT NUMBER:	5000218009	REV:	1
PROJECT NAME:	AEM AMARUQ	SUBMITTED TO (COMPANY):	AGNICO EAGLE MINES
ENGINEER:	Gabriel Hébert	SUBMITTED TO (RESPONSIBLE)	
PROJECT MANAGER:	Clément B	PROJECT NUM REFERENCE.:	
PHONE NUMBER:		LOT NUMBER:	

SUPPLIER	EQPT CODE	EQPT TAG NO	DIA	DESCRIPTION	INFO 1	INFO 2	INFO 3	APPLIC.	NOTE	REV
CHEMLINE	VABLPV200251	V15-041	DIA: 25 mm (1")	ISOLATION VALVE - DRIVING WATER	TYPE: BALL VALVE//MANUFACTURER : CHEMLINE//MODEL : Type21-A-010-E-S//CONNECTION TYPE : SOCKET | 25 mm (1")//BODY : PVC (ASTM D1784)// SEAL | SEAT :PTFE | EPDM// STEM : PVC			KMnO4 PREP SYSTEM		
CHEMLINE	VABLPV200253	T9-591-V001	DIA: 38 mm (1-1/2")	DRAIN VALVE	TYPE: BALL VALVE//MANUFACTURER : CHEMLINE//MODEL : Type21-A-015-E-S//CONNECTION TYPE : FLANGED | N/A//BODY : PVC (ASTM D1784)// SEAL | SEAT :PTFE | EPDM// STEM : PVC			KMnO4 PREP SYSTEM		
CHEMLINE	VABLPV200253	T9-592-V001	DIA: 38 mm (1-1/2")	DRAIN VALVE	TYPE: BALL VALVE//MANUFACTURER : CHEMLINE//MODEL : Type21-A-015-E-S//CONNECTION TYPE : FLANGED | N/A//BODY : PVC (ASTM D1784)// SEAL | SEAT :PTFE | EPDM// STEM : PVC			KMnO4 PREP SYSTEM		

SUPPLIER	EQPT CODE	EQPT TAG NO	DIA	DESCRIPTION	INFO 1	INFO 2	INFO 3	APPLIC.	NOTE	REV
CHEMLINE	VABLPV200253	T9-592-V002	DIA: 38 mm (1-1/2")	ISOLATION VALVE - TANK OUTLET	TYPE: BALL VALVE//MANUFACTURER : CHEMLINE//MODEL : Type21-A-015-E-S//CONNECTION TYPE : FLANGED | N/A//BODY : PVC (ASTM D1784)// SEAL | SEAT :PTFE | EPDM// STEM : PVC			KMnO4 PREP SYSTEM		

PDF Published March 1, 2013

Type 21 Ball Valves

CHEMLINE PLASTICS
SUPERIOR FLOW SOLUTIONS

The Chemline Type 21 True Union Ball valve incorporates state of the art features for long term performance. This is a full port, full blocking True Union valve pressure rated at 16 bar (230 psi)[4]. Double stem o-rings and Safety Shear stem design provide for a high degree of safety on hazardous fluid applications. All sizes have an ISO standard actuator mounting platform integral to the valve body. This provides for sturdy and secure mounting of pneumatic or electric actuators.

PVC | CPVC | PP | PVDF

CRN Registered Consult Chemline

NSF[5] Certified to NSF/ANSI 61

SERIES: Type 21

SIZES: 3/8" – 4"

ENDS: Socket, Threaded, Flanged, Butt[1] or ChemFlare™

SEATS: PTFE

SEALS[2]: EPDM, FKM (Viton®), CPE[3]

features

Pressure rated to 230 psi[4]
- Provides a high factor of safety

Integral Actuator Mounting Platform
- Actuation is easy. Electric or pneumatic actuators may be mounted in the field.

Full Port
- High capacity and low pressure drops

Fully Blocking
- Downstream union nut may be safely disassembled for piping maintenance while valve is closed off under full system pressure

Built-In Spanner Wrench
- Top of the handle is designed to be used as a tool for accessing internal parts

Safety Shear Stem Design
- Stem has double o-rings
- Designed to hold full pressure even if stem breaks due to excessive torque

High Chemical Resistant Material
- PVC and CPVC compounds have an "A" chemical resistance rating as per ASTM D-1784. They have outperformed other PVC and CPVC compounds on aggressive chemicals.

[1] Butt ends for fusion to Chemline metric PP, PVDF or ECTFE (Halar®) piping.
[2] Other materials are available.
[3] CPE=Chlorinated Polyethylene.
[4] PVC, CPVC and PVDF 1/2" to 2" are rated at 230 psi; 2-1/2" to 4" and all size PP valves are rated at 150 psi at 20°C.
[5] PVC valves with EPDM or FKM (Viton®) seals are certified under NSF/ANSI Standard 61 for contact with drinking water.

03/13 ©Chemline Plastics Limited 2013
Chemline is a registered trade mark of Chemline Plastics Limited

Type 21 Ball Valves

features

Double Stem O-Rings – Safety Shear Design

- Upper o-ring groove is deeper than lower. In case of excessive stem torque, stem will shear at the upper groove, leaving the inner o-ring intact to seal against full line pressure.

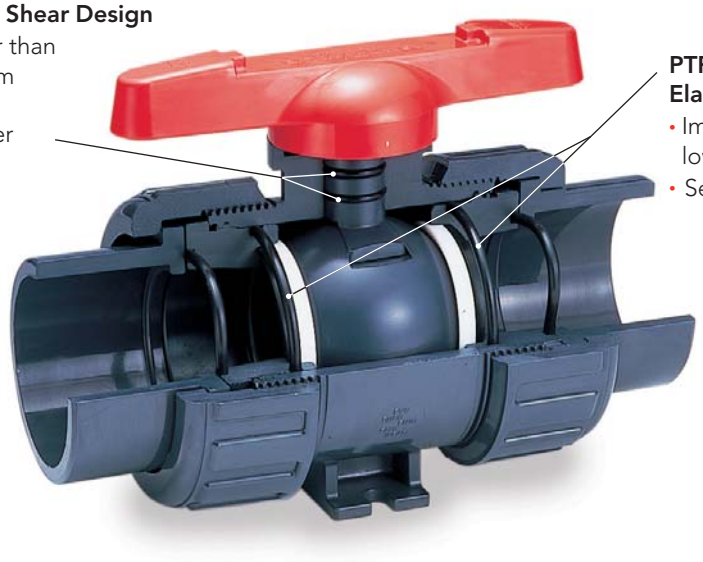

PTFE Seats have Elastomer Cushions

- Improved sealing while lowering stem torques
- Self adjusts for seat wear

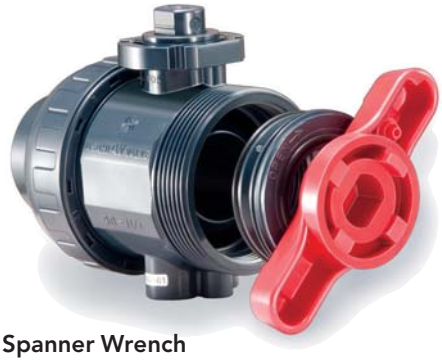

Built in Spanner Wrench

- For removing or tightening the seat carrier
- All parts are replaceable

Integral Actuator Mounting Platform

- Actuation is easy. Electric or pneumatic actuators may be mounted in the field. Simply pull off the handle to reveal a standard ISO 5211 mounting platform which accepts bolt-on hardware.

Fully Blocking

- Downstream pipe may be removed while upstream side is still pressurized. This may be done with valve installed in either direction.

Base Mounting Pad

- Optional threaded inserts allow valves to be securely anchored
- Supplied standard with actuated valves

Type 21 Ball Valves

options + accessories

ChemFlare™ Ends

- For connection to PFA tube. Leak-free connections for difficult services such as sodium hypochlorite

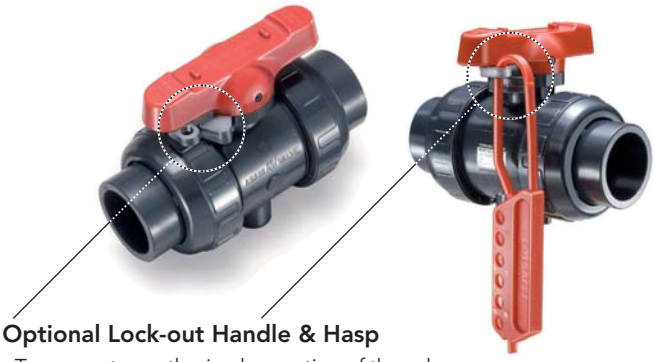

Optional Lock-out Handle & Hasp

- To prevent unauthorized operation of the valve
- Used during maintenance shut-downs

One-piece moulded PVC and CPVC 6" socket ends

- Allows installation of 4" valve in 6" line
- Factory moulded, not fabricated with couplings and reducers cemented together
- Fixed to valve mechanically just like the one-piece moulded factory flanges

Different Colour Handles

- Choose a handle colour other than standard red for colour coding different services

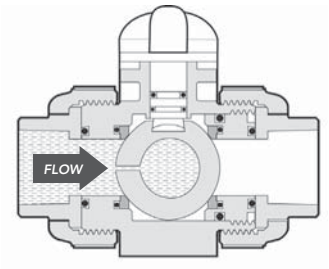

Vented Ball

- For sodium hypochlorite services at any concentration
- Valve shown in closed position

electric + pneumatic actuation

Pneumatic and Electric Actuators

- A complete range of actuators and control accessories are available, mounted to valves using PPG plastic brackets and stainless steel couplings. Refer to separate data sheets.

Electromni® Electric

Q Series Electric

A Series Electric

V Series Electric
with Local Control Station

PA Series Pneumatic

Type 21 Ball Valves

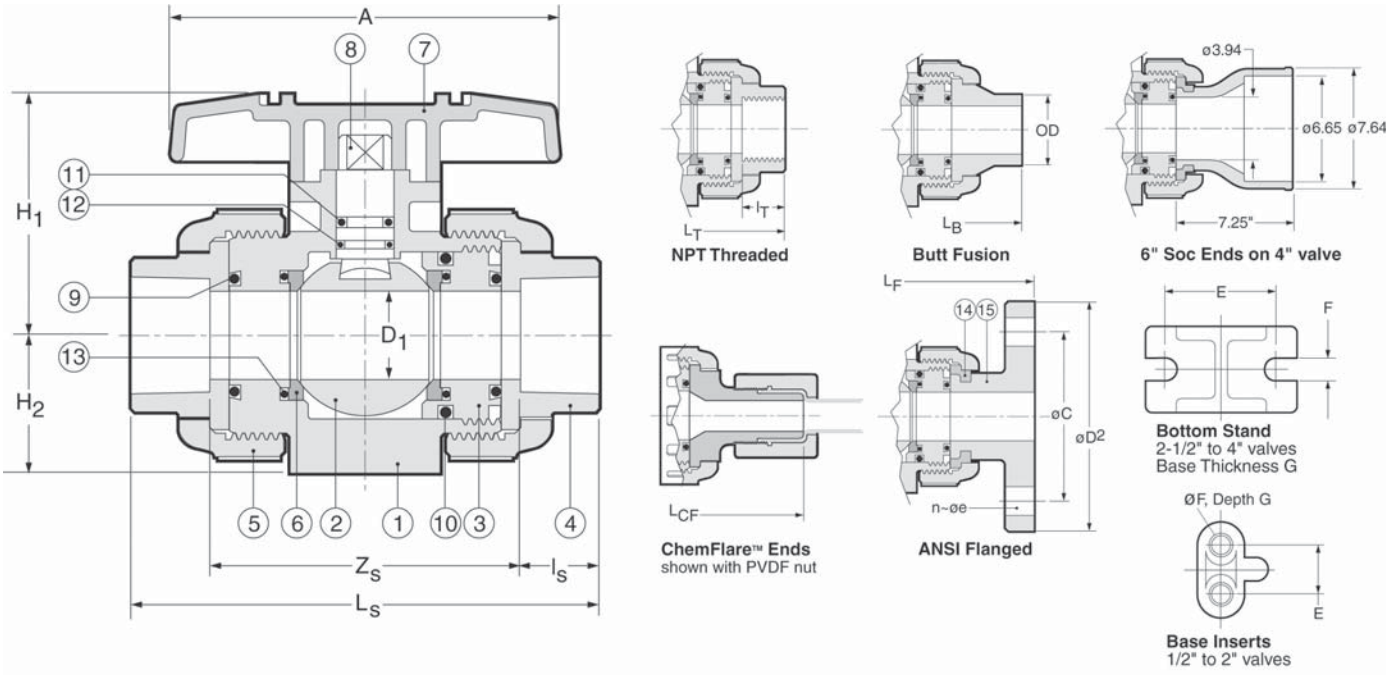

PARTS

▲ Recommended Spare Parts

No.	Part	Pcs.	Materials
1	Body	1	PVC, CPVC, PP, PVDF
2	Ball	1	PVC, CPVC, PP, PVDF
3	Carrier[1]	1/2	PVC, CPVC, PP, PVDF
4	End Connector	2	PVC, CPVC, PP, PVDF
5	Union Nut	2	PVC, CPVC, PP, PVDF
6▲	Ball Seat	2	PTFE
7	Handle	1	ABS

[1] 1 carrier for sizes 1/2" to 2", 2 carriers for sizes 2-1/2" to 4"
[2] EPDM seals standard with PVC, CPVC, PP; FKM (Viton®) with PVDF valves
[3] 2 pcs 1/2" to 2", 6 pcs 2-1/2" to 4"

PARTS

▲ Recommended Spare Parts

No.	Part	Pcs.	Materials
8	Stem	1	PVC, CPVC, PP, PVDF
9▲	Face O-Ring[2]	2	EPDM, FKM (Viton®)
10▲	Carrier O-Ring[2]	2	EPDM, FKM (Viton®)
11▲	Upper Thicker Stem O-Ring[2]	1	EPDM, FKM (Viton®)
12▲	Lower Thinner Stem O-Ring[2]	1	EPDM, FKM (Viton®)
13	Seat Cushion[2]	2	EPDM, FKM (Viton®)
14	Flange Retainer[3]	2/6	PVDF
15	Flange	2	PVC, CPVC, PP, PVDF

DIMENSIONS INCHES

					End Connections														Valve Base		
					Socket			Threaded		Factory Flanged					Butt		ChemFlare™				
Size	D Bore	A	H_1	H_2	L_S	Z_S	l_S	l_T	L_T	L_F	D_2	C	n	e	L_B	OD	L_{CF}	Tube[4]	E	F[5]	G
1/2"	.59	3.6	2.03	1.14	4.45	2.70	.875	.64	4.02	5.63	3.50	2.38	4	.62	4.88	.79	6.12	1/2"	.75	.29	.43
3/4"	.79	3.9	2.34	1.38	5.08	3.08	1.00	.65	4.72	6.77	3.88	2.75	4	.62	5.67	.98	6.52	3/4"	.75	.29	.43
1"	.98	4.3	2.68	1.54	5.75	3.50	1.13	.81	5.16	7.36	4.25	3.12	4	.62	6.06	1.26	7.26	1"	.75	.29	.43
1-1/4"	1.22	4.8	3.17	1.85	6.46	5.21	1.25	.85	5.91	7.48	4.62	3.50	4	.62	6.85	1.57	9.58	1-1/4"	1.18	.35	.59
1-1/2"	1.57	5.2	3.50	2.17	7.24	4.49	1.38	.85	6.42	8.35	5.00	3.88	4	.62	7.64	1.97	–	–	1.18	.35	.59
2"	2.01	6.3	4.02	2.60	8.23	5.23	1.50	1.90	7.76	9.21	6.00	4.75	4	.75	8.82	2.48	–	–	1.18	.35	.59
2-1/2"	2.28	7.87	4.96	2.83	9.45	5.95	1.75	1.21	8.46	10.20	7.00	5.49	4	.75	9.72	2.95	–	–	1.89	.35	.23
3"	2.70	9.45	5.51	3.35	11.10	7.35	1.88	1.30	10.39	11.97	7.50	6.00	4	.75	11.61	3.54	–	–	2.17	.43	.28
4"	3.54	11.81	7.01	4.33	13.88	9.87	2.00	1.38	14.17	14.65	9.00	7.50	8	.75	14.76	4.33	–	–	2.56	.43	.32

[4] ChemFlare™ ends are available for reduced tube sizes down to 1/4".
[5] Optional threaded inserts: 1/2" to 1" valves – UNC 1/4"-20; 1-1/4" to 2" valves – UNC 5/16"-18. 'Recoil' brand inserts require drilling before insertion.

Type 21 Ball Valves

WORKING PRESSURES PSI, Water, Non-Shock

VACUUM RATING • 29.9 inches mercury

Size	PVC			CPVC						PP			PVDF				
	20°C 68°F	40°C 104°F	50°C 122°F	20°C 68°F	40°C 104°F	50°C 122°F	60°C 140°F	80°C 176°F	90°C 194°F	20°C 68°F	60°C 140°F	80°C 176°F	20°C 68°F	40°C 104°F	60°C 140°F	80°C 176°F	100°C 212°F
1/2"– 2"	230	165	150	230	165	150	120	75	55	150	85	55	230	185	150	110	85
2-1/2"– 4"	150	150	150	150	150	150	120	75	55	150	70	40	150	150	150	110	85

Temperature Ranges: PVC 0 to 60°C (32 to 140°F), **CPVC** 0 to 95°C (32 to 203°F), **PP** –20 to 80°C (–4 to 176°F), **PVDF** –40 to 100°C (–40 to 212°F)

WEIGHTS LB. THREADED or SOCKET

WEIGHTS LB. FLANGED

Size	PVC	CPVC	PP	PVDF	PVC	CPVC	PP	PVDF
1/2"	0.4	0.4	0.4	0.4	0.9	0.9	0.7	1.1
3/4"	0.7	0.7	0.7	0.9	1.3	1.5	1.1	1.5
1"	0.9	1.1	0.9	1.1	1.8	2.0	1.5	2.2
1-1/4"	1.5	1.5	1.3	1.8	2.6	2.9	2.0	3.3
1-1/2"	2.4	2.6	1.5	2.9	3.7	4.0	2.6	4.4
2"	4.0	4.4	2.6	4.9	5.5	6.0	4.0	8.2
2-1/2"	5.1	5.5	3.7	6.2	7.3	7.7	5.3	8.8
3"	8.2	8.8	5.5	9.9	10.1	11.0	7.5	12.6
4"	19.4	21.8	13.2	24.9	21.6	23.4	15.4	26.7

Cv VALUES VS. BALL ANGLE

Size	0%	25%	50%	75%	100%
1/2"	0	0.35	1.3	5.5	14.
3/4"	0	0.73	2.8	11.5	29.
1"	0	1.2	4.5	18.6	47.
1-1/4"	0	1.8	6.8	28.4	72.
1-1/2"	0	3.9	14.7	61.2	155.
2"	0	4.8	18.0	75.0	190.
2-1/2"	0	9.1	34.7	144.0	365.
3"	0	10.2	39.0	162.0	410.
4"	0	17.0	64.6	269.0	680.

SAMPLE SPECIFICATION

1. All True Union Ball Valves in PVC, CPVC, PP or PVDF shall be Chemline Type 21 or equal sizes 1/2" to 2" in PVC, CPVC, and PVDF rated at 230 psi and in PP 150 psi maximum working pressure. Sizes 2-1/2", 3" and 4" rated at 150 psi maximum working pressure with EPDM, FKM (Viton®) or CPE seals. Ball seats shall be PTFE with elastomer cushions for closure with minimum stem torques.
2. All valves will have Safety Shear stem design, blowout-proof with double o-rings for safety. The top o-ring groove shall be deeper so that if the stem breaks off under excessive torque the lower o-ring will remain intact and the valve will hold pressure.
3. All valves shall be full port and two-way blocking design.
4. All valves will be CRN (Canadian Registration Number) registered with TSSA.
5. PVC valves with EPDM or FKM (Viton®) seals shall be certified under NSF/ANSI Standard 61 for contact with drinking water.
6. All valves shall have chemical resistant labels permanently marked with manufacturing number to provide production level traceability.
7. PVC compound shall have an ASTM cell classification 12454-A with a minimum suffix "A" designation for chemical resistance as per ASTM D-1784 (CSA report LO 4000-172).
8. CPVC compound shall have an ASTM cell classification 23567-A with a minimum suffix "A" designation for chemical resistance as per ASTM D-1784.
9. PP material will conform to ASTM D-4101 PP 021 B 67272 material requirements.
10. PVDF material shall be unpigmented conforming to ASTM D-3222 material requirements and to be USDA Title 21 Chapter 1 Part 177. 2510 requirements for contact with food.
11. Socket ends in PVC and CPVC shall be Schedule 80 and conform to ASTM D-2467.
12. Threaded ends shall be Schedule 80 and conform to ASTM D-2464.
13. Butt fusion ends in PP or PVDF will be compatible with Chemline PP or PVDF metric piping systems.
14. Flanged ends shall be ANSI Class 150 one-piece factory moulded (not fabricated) to ensure maximum strength and close tolerance end to end dimensions.

ORDERING EXAMPLE

Chemline True Union Ball Valves	21	A	020	E	S
Body Material	**A** – PVC **B** – PP	**C** – CPVC **K** – PVDF			
Size[1]	**002** – 1/4" **010** – 1" **025** – 2-1/2"	**003** – 3/8" **012** – 1-1/4" **030** – 3"	**005** – 1/2" **015** – 1-1/2" **040** – 4"	**007** – 3/4" **020** – 2" **060** – 6"	
Seals	**E** – EPDM	**V** – FKM (Viton®)	**C** – CPE	**B** – Nitrile	**A** – Aflas®
Ends	**S** – Socket	**T** – Threaded	**F** – Flanged	**B** – Butt[2]	**CF** – ChemFlare™

Example: Chemline Type 21 True Union Ball Valve, PVC, 2", with EPDM seals, socket ends.

[1] 1/4" is normally the 3/8" valve reduced. 6" is 4" valve with 6" end connections.

[2] PP, PVDF and ECTFE (Halar®) metric butt fusion ends (1/2" to 4") connect to Chemline PP, PVDF and ECTFE (Halar®) piping systems.

OTHER OPTIONS & ACCESSORIES

- **Alternate O-Ring Seals**
- **Stem Extensions** made to any length
- **Limit Switches** – For open and/or closed position indication
- **Municipal Operating Nut**
- **Lubrication-free Valves** – Factory clean room assembled
- **Vented Ball** – For sodium hypochlorite applications

CHEMLINE PLASTICS
SUPERIOR FLOW SOLUTIONS

55 Guardsman Road, Thornhill, ON, L3T 6L2, Canada | ISO 9001:2008 Certified
tel.905.889.7890 | fax.905.889.8553 | request@chemline.com | chemline.com

This page is intentionally left blank

CS-301-501 : Identification sheet

VWTC PROJECT NUMBER:	5000218009	REV:	1
PROJECT NAME:	AEM AMARUQ	SUBMITTED TO (COMPANY):	AGNICO EAGLE MINES
ENGINEER:	Gabriel Hébert	SUBMITTED TO (RESPONSIBLE)	
PROJECT MANAGER:	Clément B	PROJECT NUM REFERENCE.:	
PHONE NUMBER:		LOT NUMBER:	

SUPPLIER	EQPT CODE	EQPT TAG NO	DIA	DESCRIPTION	INFO 1	INFO 2	INFO 3	APPLIC.	NOTE	REV
CHEMLINE	VABLPV346917	V15-042	DIA: 13 mm (1/2")	METERING VALVE - WETTING CONE	TYPE: BALL VALVE//MANUFACTURER : CHEMLINE//MODEL : SM2-A-005-E-S//CONNECTION TYPE : SOCKET | 13 mm (1/2")//BODY : PVC (ASTM D1784)// SEAL | SEAT : | EPDM// STEM : N/A			KMnO4 PREP SYSTEM		
CHEMLINE	VABLPV346917	V15-043	DIA: 13 mm (1/2")	METERING VALVE - WETTING CONE	TYPE: BALL VALVE//MANUFACTURER : CHEMLINE//MODEL : SM2-A-005-E-S//CONNECTION TYPE : SOCKET | 13 mm (1/2")//BODY : PVC (ASTM D1784)// SEAL | SEAT : | EPDM// STEM : N/A			KMnO4 PREP SYSTEM		

This page is intentionally left blank

PDF Published October 18, 2017

Metering Ball Valves

CHEMLINE PLASTICS
SUPERIOR FLOW SOLUTIONS

Chemline SM Series Metering Ball Valve is designed for fine linear flow control of chemicals or clean fluids. The ball is solid with graduated V-groove cut on the outside surface. Precise linear flow control is accomplished through 180° rotation of the handle. With a positioning electric actuator, this becomes an inexpensive control valve. If higher C_V values are required, refer to SP Series Proportional ball valves.

PVC PP

SERIES: SM2
SIZES: 1/2" – 1"
ENDS: Threaded, Socket, Butt[1] or ChemFlare™ [2]
SEATS: PTFE
O-RINGS: EPDM, FPM (Viton®)

Integral 180° Scale with 5° Increments
- Linear flow control and settable flow rates

features

Precise Linear Flow Control
- Provided by a special V-groove ball and wide handle travel (0° to 180°)

Full Size Range
- 6 valves sizes 1/2" to 2" offers a large selection of C_V values

High End Ball Valve Features
- Full Blocking design
- Double Stem O-Rings for safety
- PTFE seats with elastomer cushion
  - Automatically compensates for seat wear or expansion
- 230 psi pressure rated (PVC)

Low Stem Torques
- Due to floating ball design and cushioned PTFE seats

Bidirectional
- Works with flow in either direction

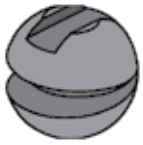

Ball Detail

[1]Butt ends for fusion to Chemline metric PP piping.
[2]For ChemFlare™ end connectors, consult Chemline.

10/17 ©Chemline Plastics Limited 2017
Chemline is a registered trade mark of Chemline Plastics Limited

Metering Ball Valves

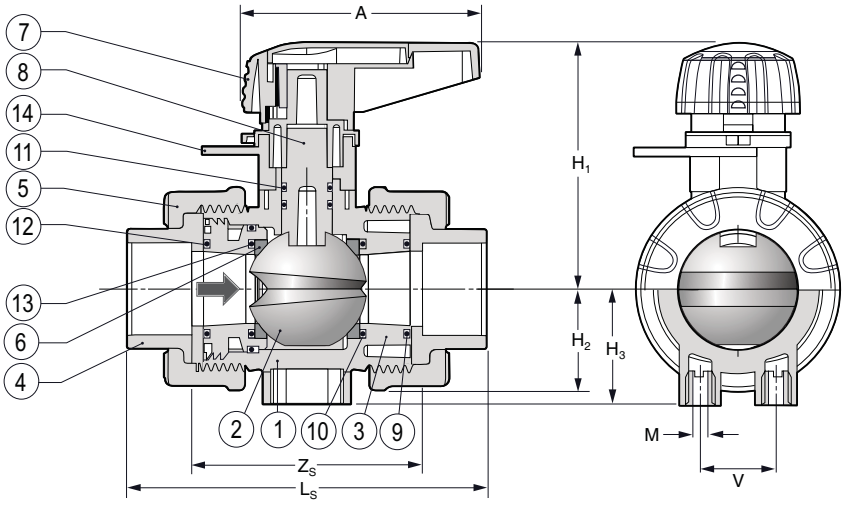

PARTS

No.	Part	Pcs.	Materials
1	Body	1	PVC, PP, PVDF
2	Ball	1	PVC, PP, PVDF
3	Carrier	1	PVC, PP, PVDF
4	End Connector	2	PVC, PP, PVDF
5	Union Nut	5	PVC, PP, PVDF
6	Ball Seat	2	PTFE
7	Handle	1	PVC
8	Stem	1	PVC, PP, PVDF
9	Carrier Face O-Ring	1	EPDM, FPM(Viton®)
10	Carrier O-Ring	1	EPDM, FPM(Viton®)
11	Stem O-Ring[1]	2	EPDM, FPM(Viton®)
12	Face O-Ring	1	EPDM, FPM(Viton®)
13	Seat Cushion[1]	2	EPDM, FPM(Viton®)
14	Position Indicator Scale	1	PVC

DIMENSIONS INCHES

							PVC			PP		
Size	A	H_1	H_3	H	M	V	Z_s	L_s	H_2	Z_s	L_s	H_2
1/2″	2.62	2.48	1.10	2.50	M5	0.98	2.48	3.74	0.99	2.64	3.74	1.06
3/4″	3.21	3.03	1.20	2.70	M5	0.98	2.83	4.33	1.16	3.03	4.29	1.18
1″	3.21	3.39	1.60	3.00	M6	1.02	3.11	4.84	1.39	3.27	4.69	1.57

ELECTRICALLY OR PNEUMATICALLY ACTUATED

The metering ball valve becomes a proportional control valve with the addition of a Q or E Series electric or P Series pneumatic actuator with 4-20 mA positioner

- Thermoplastic housing and mounting bracket
- Manual override
- Position indication
- Mechanical travel stops
- Different voltages are available

Q Series Electric

E Series Electric

P Series Pneumatic

E Series Electric Actuator on a SM2 Valve

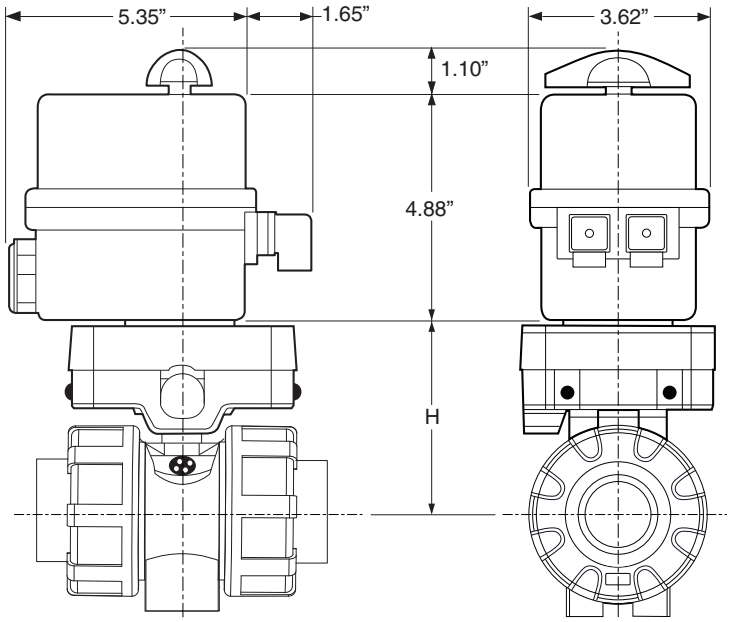

Side View

Port View

Metering Ball Valves

WORKING PRESSURES PSI

NET WEIGHTS LB. Cv VALUES

Size	PVC 20°C 68°F	PVC 40°C 104°F	PVC 60°C 140°F	PP 20°C 68°F	PP 40°C 104°F	PP 60°C 140°F	PP 80°C 176°F	PVC	PP	USGPM Flow at 1 psi △P
1/2″	230	130	30	150	100	65	20	0.35	0.29	1.4
3/4″	230	130	30	150	100	65	20	0.60	0.44	1.9
1″	230	130	30	150	100	65	20	0.84	0.64	2.3

Temperature Ranges: PVC 0 to 60°C (32 to 140°F), PP 0 to 95°C (32 to 203°F)

Cv VALUE vs. VALVE OPENING

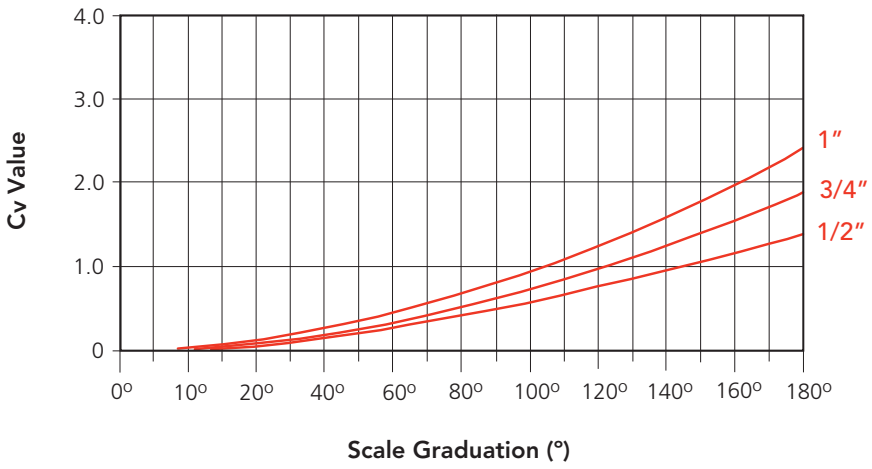

SAMPLE SPECIFICATION

1. All low flow control valves, 1/2″ to 1″, will be Chemline SM Series metering ball valves.
2. Body material will be PVC or PP, and o-rings will be EPDM or FPM (Viton®).
3. Body will be full blocking design with double stem o-rings for safety, rated at 230 psi maximum working pressure for PVC and 150 psi for PP material.
4. Ball will be floating design, molded solid with a V-groove for linear flow control over a 180° range of handle rotation.
5. Seats will be PTFE with elastomer cushions for positive closure with minimum stem torques and automatic compensation for seat wear and expansion.
6. Position indicating scale will be 0° to 180° with 5° increments for fine flow control and settable flow rates.
7. End connections will be 1/2″ to 1″ ANSI socket or FNPT threaded or 150 lb flanged or butt fusion for Chemline metric PP pipe or ChemFlare™ for PFA tubing.

ORDERING EXAMPLE

Chemline Metering Ball Valves	SM2	A	010	E	S
Valve Material	**A** – PVC	**B** – PP			
Size	**005** – 1/2″	**007** – 3/4″	**010** – 1″		
Seals	**E** – EPDM	**V** – FPM (Viton®)			
Ends	**S** – Socket	**T** – Threaded	**B** – Butt[1]	**CF** – ChemFlare™	

Example: SM2 Series Ball Valve, PVC, 1″, EPDM seals, socket ends.

[1] PP metric butt fusion ends (1/2″ to 2″) connect to Chemline PP piping systems.

VACUUM RATING

- 29.9 inches mercury

OPTIONS & ACCESSORIES

- **Reduced Ends**
- **Electric or Pneumatic Actuator with Positioner**
  – Operates as a linear control valve

55 Guardsman Road, Thornhill, ON, L3T 6L2, Canada | ISO 9001:2008 Certified
1.800.930.2436 (CHEM) | fax.905.889.8553 | request@chemline.com | chemline.com

This page is intentionally left blank

CS-302-100 : Identification sheet

VWTC PROJECT NUMBER:	5000218009	REV:	1
PROJECT NAME:	AEM AMARUQ	SUBMITTED TO (COMPANY):	AGNICO EAGLE MINES
ENGINEER:	Gabriel Hébert	SUBMITTED TO (RESPONSIBLE)	
PROJECT MANAGER:	Clément B	PROJECT NUM REFERENCE.:	
PHONE NUMBER:		LOT NUMBER:	

SUPPLIER	EQPT CODE	EQPT TAG NO	DIA	DESCRIPTION	INFO 1	INFO 2	INFO 3	APPLIC.	NOTE	REV
CHEMLINE	VANRPV200667	CV9-591	DIA: 38 mm (1-1/2")	CHECK VALVE - LIQUID POLYMER	TYPE: CHECK | 150 PSI//MANUFACTURER : CHEMLINE//MODEL : BTA015EC//CONNECTION TYPE : COMBO | 1-1/2"//BODY : PVC// SEAL | SEAT :EPDM | // STEM : N/A			KMnO4 PREP SYSTEM		

This page is intentionally left blank

PDF Published March 1, 2013

Ball Check & Foot Valves

CHEMLINE PLASTICS
SUPERIOR FLOW SOLUTIONS

The economical and versatile Chemline Ball Check Valve is the most popular type of non-return valves for pipe sizes under 6". A wide selection of body and seat materials, and end connections are available for many different applications. It has good flow capacity and will handle many slurry and suspended solid services. This valve works in both horizontal and vertical lines. The Foot Valve is for end of line services such as sumps.

PVC | CPVC | PP | PVDF

CRN Registered Consult Chemline

NSF[3] Certified to NSF/ANSI 61

SERIES: BT: True Union Check
BC: Single Union Check
FT: True Union Check
FV: Single Union Check

SIZES: 1/2" – 4"

ENDS: Threaded, Socket, Flanged, Butt[1] or ChemFlare™[2]

SEAT/SEALS: EPDM, FKM (Viton®), PTFE coated FKM (Viton®)

features

- **True Union to 2"**
- **Full Port to 4"**
- **NSF Certified[3]**
- **Built-in Union Design** – For easy installation and maintenance
- **Free Floating Ball** – The only moving part
- **Uniseat/Seal** – Easily removable
- **May be used either horizontally or vertically**
- **Excellent flow characteristics**
- **Low seating and opening pressures**

True Union Check
1/2" to 2" in all materials

Single Union Check
1/2" to 4" in PVC
2-1/2" to 4" in CPVC, PP and PVDF

Foot Valve is light weight and has a low profile basket

[1] PP and PVDF Butt fusion ends (available 1/2" to 2") connect to Chemline PP and PVDF piping systems.
[2] For ChemFlare™ end connectors, consult Chemline.
[3] PVC valves with EPDM or FKM (Viton®) seals are certified under NSF/ANSI Standard 61 for contact with drinking water.

03/13 ©Chemline Plastics Limited 2013
Chemline is a registered trade mark of Chemline Plastics Limited

Ball Check Valves

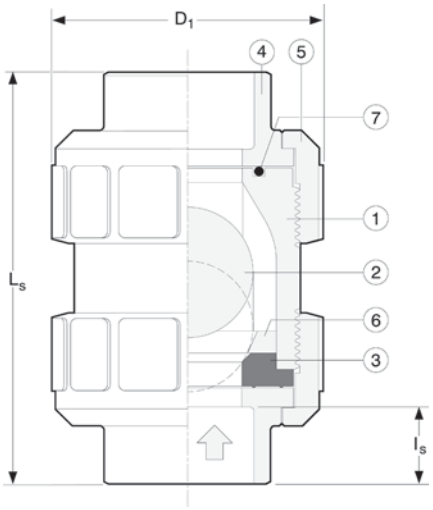

True Union Valve

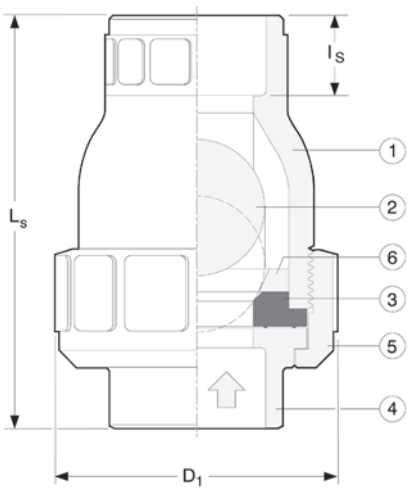

Single Union Valve

PARTS

▲ Recommended Spare Parts

No.	Part	Pcs. T/U	Pcs. S/U	Materials
1	Body	1	1	PVC, CPVC, PP, PVDF
2	Ball	1	1	PVC, CPVC, PP, PVDF
3▲	Uniseat/Seal[1]	1	1	EPDM, FKM(Viton®), PTFE coated FKM (Viton®)
4	End Connector	2	1	PVC, CPVC, PP, PVDF
5	Union Nut	2	1	PVC, CPVC, PP, PVDF
6	Stop Ring	1	1	PVC, CPVC, PP, PVDF
7	Face O-Ring	1	1	EPDM, FKM(Viton®)
9	Flange Retainer[2]	2	1	PVDF
10	Factory Flange[3]	2	1	PVC, CPVC, PP, PVDF

[1] Standard seals are EPDM in PVC, CPVC and PP valves, PTFE coated FKM (Viton®) in PVDF valves. Coating is .002" thick.

[2] True Union: 2 pcs 1/2" to 2", 6 pcs 1-1/2" to 4" Single Union: 1 pcs 1/2" to 2", 3 pcs 2-1/2" to 4".

[3] True Union flanged valves have two factory flanges. Single Union valves have one factory flange and one fabricated flange. Consult Chemline for details on fabricated type.

UNION END CONNECTIONS

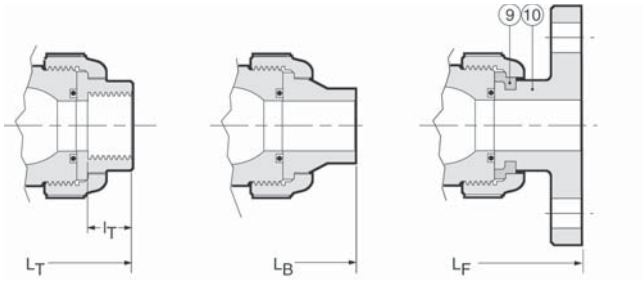

NPT Threaded

Butt Fusion PP and PVDF

Factory Flanged

DIMENSIONS INCHES

WEIGHTS LB.

Size	D_1	I_s	I_T	True Union PVC & CPVC L_T	L_S	L_F	True Union PP & PVDF L_T	L_B	L_F	Single Union PVC L_T	L_S	L_F	True Union Socket or Butt PVC	CPVC	PP	PVDF	Single Union PVC
1/2"	1.9	0.69	0.59	3.4	3.4	5.1	3.4	4.0	5.1	3.2	3.4	5.6	0.3	0.3	0.2	0.3	0.2
3/4"	2.4	0.72	0.67	4.1	3.9	6.1	4.1	4.4	6.1	3.8	3.7	6.6	0.5	0.5	0.3	0.6	0.4
1"	2.8	0.88	0.79	4.5	4.4	6.5	4.5	4.8	6.5	4.2	4.3	7.3	0.7	0.8	0.4	0.9	0.6
1-1/4"	3.1	0.94	0.87	5.0	4.9	6.6	5.0	5.9	6.6	6.2	6.3	12.3	1.1	1.2	0.7	1.5	1.5
1-1/2"	3.7	1.09	0.98	5.9	5.9	7.6	5.9	5.8	7.6	5.6	5.7	9.1	1.6	1.7	1.0	2.0	1.3
2"	4.2	1.16	1.10	7.0	6.8	8.4	7.0	6.5	8.4	6.5	6.5	10.5	2.2	2.4	1.4	2.7	1.8

DIMENSIONS INCHES

WEIGHTS LB.

Size	D_1	I_s[4]	I_T	Single Union PVC & CPVC L_T	L_S	L_F	Single Union PP & PVDF L_T	L_B	L_F	Single Union PVC	CPVC	PP	PVDF
2-1/2"	6.0	2.10	2.17	10.0	10.4	14.3	8.7	*	*	5.7	6.2	*	*
3"	6.0	1.88	1.38	8.7	9.6	12.2	8.7	*	*	5.1	5.5	3.3	6.3
4"	8.3	2.00	1.77	12.1	12.2	15.0	12.1	*	*	12.7	13.9	8.1	15.7

[4] Consult Chemline.

Foot Valves

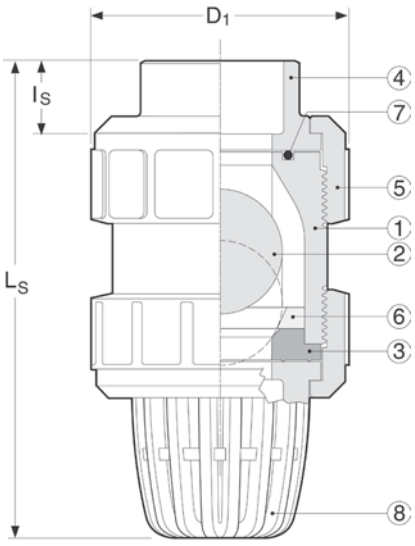

True Union Valve

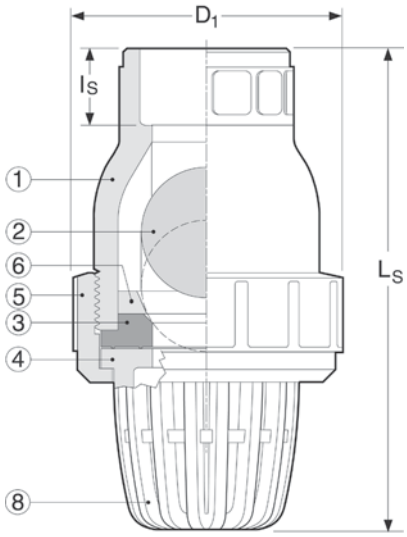

Single Union Valve

PARTS

▲ Recommended Spare Parts

No.	Part	Pcs. T/U	Pcs. S/U	Materials
1	Body	1	1	PVC, CPVC, PP, PVDF
2	Ball	1	1	PVC, CPVC, PP, PVDF
3▲	Uniseat/Seal[1]	1	1	EPDM, FKM(Viton®), PTFE coated FKM (Viton®)
4	End Connector	2	1	PVC, CPVC, PP, PVDF
5	Union Nut	2	1	PVC, CPVC, PP, PVDF
6	Stop Ring	1	1	PVC, CPVC, PP, PVDF
7	Face O-Ring	1	1	EPDM, FKM(Viton®)
8	Foot Valve Basket	1	1	PVC, CPVC, PP, PVDF
9	Flange Retainer[2]	3	0	PVDF
10	Factory Flange[3]	1	0	PVC, CPVC, PP, PVDF

[1] Standard seals are EPDM in PVC, CPVC and PP valves, PTFE coated FKM (Viton®) in PVDF valves. Coating is .002" thick.

[2] True Union: 1 pc 1/2" to 2", 3 pcs 2-1/2" to 4".

[3] True Union valves have factory flanges. Single Union have fabricated flanges. Consult Chemline for details on fabricated type.

END CONNECTIONS FOR TRUE UNION VALVE

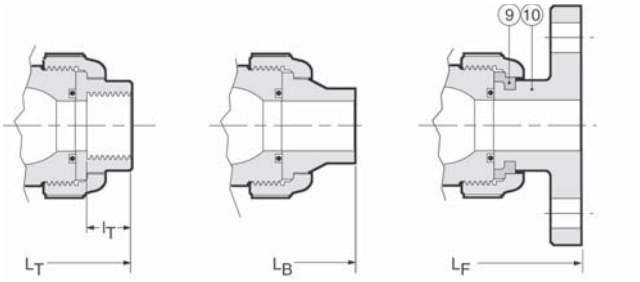

NPT Threaded

Butt Fusion PP and PVDF

Factory Flanged

DIMENSIONS INCHES

WEIGHTS LB.

Size	D_1	I_s Soc	I_T Thd	True Union PVC & CPVC L_T	True Union PVC & CPVC L_S	True Union PVC & CPVC L_F	Single Union PVC L_T	Single Union PVC L_S	Single Union PVC L_F	Single Union PVC Socket
1/2"	1.9	0.69	0.59	2.8	2.9	3.7	3.5	3.7	4.7	0.3
3/4"	2.4	0.72	0.67	3.3	3.3	4.4	4.1	4.2	5.4	0.4
1"	2.8	0.88	0.79	3.7	3.7	4.8	4.5	4.8	6.1	0.8
1-1/4"	3.7	0.94	0.87	*	*	*	*	*	*	1.8
1-1/2"	3.7	1.09	0.98	5.4	5.4	6.3	6.8	7.0	8.5	1.7
2"	4.2	1.16	1.10	6.4	6.4	7.2	7.4	7.6	9.3	2.1
2-1/2"	6.0	2.10	2.17	–	–	–	*	*	*	7.4
3"	6.0	1.88	1.38	–	–	–	11.6	12.1	14.2	7.1
4"	8.3	2.00	1.77	–	–	–	14.7	15.0	17.4	15.7

* Consult Chemline for dimensions.

For CPVC (2-1/2" to 4"), PP and PVDF Foot Valve lengths, consult Chemline.

Ball Check & Foot Valves

WORKING PRESSURES PSI

Size	PVC	CPVC				Polypropylene			PVDF			
	0-50°C 32-122°F	0-50°C 32-122°F	60°C 140°F	80°C 176°F	90°C 194°F	–20-30°C –4-90°F	60°C 140°F	80°C 176°F	–20-60°C –4-140°F	80°C 176°F	90°C 194°F	100°C 212°F
1/2″	150	150	115	85	60	150	90	60	150	120	110	85
3/4″	150	150	115	85	60	150	90	60	150	120	110	85
1″	150	150	115	85	60	150	90	60	150	120	110	85
1-1/4″	150	150	115	85	60	150	90	60	150	120	110	85
1-1/2″	150	150	115	85	60	150	90	60	150	120	110	85
2″	150	150	115	85	60	150	90	60	150	120	110	85
2-1/2″	100	100	90	60	45	100	60	45	100	90	60	45
3″	100	100	90	60	45	100	60	45	100	90	60	45
4″	100	100	90	60	45	100	60	45	100	90	60	45

Maximum Temperatures: PVC 0 to 60°C (32 to 140°F), **CPVC** 0 to 95°C (32 to 203°F), **PP** –20 to 90°C (–4 to194°F), **PVDF** –40 to 100°C (–40 to 212°F)

MINIMUM SEATING AND OPENING PRESSURE PSI

Cv VALVES

Size	Vertical Piping		Horizontal Piping		Check Valves
	Open	Seating	Open	Seating	
1/2″	0.7	2.8	0.1	2.8	6.5
3/4″	0.7	4.3	0.1	4.3	17.
1″	0.7	4.3	0.1	4.3	25.
1-1/4″	1.4	4.3	0.3	4.3	86.
1-1/2″	1.4	4.3	0.3	4.3	86.
2″	1.4	4.3	0.3	4.3	130.
2-1/2″	1.4	2.8	0.3	2.8	280.
3″	1.4	2.8	0.3	2.8	280.
4″	1.4	2.8	0.3	2.8	500.

VACUUM RATING

- 29.9 inches mercury
- Maximum recommended velocity 5 m/s

SAMPLE SPECIFICATION

All Ball Check valves in PVC, CPVC, PP or PVDF shall be Chemline BT or BC Series or equal with EPDM [FKM (Viton®) or PTFE coated FKM (Viton®)] seats and union ends. Sizes 1/2″ to 2″ shall be slip-out True Union style, sizes 2-1/2″ to 4″ shall be single union. The elastomer uniseat/seal shall function as both the ball seat and the union seal. Ball Check valves shall be rated 150 psi up to 2″ and 100 psi for sizes 2-1/2″ to 4″.

ORDERING EXAMPLE

Chemline Ball Check/Foot Valves	BT	A	020	E	S
Valve Type	**BT** – True Union Ball Check **BC** – Single Union Ball Check **FV** – Single Union Foot Valve **FT** – True Union Foot Valve				
Body Material	**A** – PVC **C** – CPVC **B** – PP **K** – PVDF				
Size	**005** – 1/2″ **007** – 3/4″ **010** – 1″ **012** – 1-1/4″ **015** – 1-1/2″ **020** – 2″ **025** – 2-1/2″ **030** – 3″ **040** – 4″				
Seals	**E** – EPDM **V** – FKM (Viton®) **T** – PTFE coated FKM (Viton®)				
Ends	**S** – Socket **T** – Threaded **F** – Flanged **B** – Butt[1] **CF** – ChemFlare™				

Example: Ball Check Valve, PVC, 2″, with EPDM seat, socket ends.

[1] PP and PVDF metric butt fusion ends (1/2″ to 2″) connect to Chemline PP and PVDF piping systems.

OPTIONS & ACCESSORIES

- **PTFE coated Uniseat/Seal**
- **Spring Loaded Ball** – Assists ball to seat faster

55 Guardsman Road, Thornhill, ON, L3T 6L2, Canada | ISO 9001:2008 Certified
tel.905.889.7890 | fax.905.889.8553 | request@chemline.com | chemline.com

CS-304-100 : Identification sheet

VWTC PROJECT NUMBER:	5000218009	REV:	1
PROJECT NAME:	AEM AMARUQ	SUBMITTED TO (COMPANY):	AGNICO EAGLE MINES
ENGINEER:	Gabriel Hébert	SUBMITTED TO (RESPONSIBLE)	
PROJECT MANAGER:	Clément B	PROJECT NUM REFERENCE.:	
PHONE NUMBER:		LOT NUMBER:	

SUPPLIER	EQPT CODE	EQPT TAG NO	DIA	DESCRIPTION	INFO 1	INFO 2	INFO 3	APPLIC.	NOTE	REV
TECKNO VALVE	ST-304-102	SV9-591	N/A	SOLENOID VALVE	TYPE: SOLENOID VALVE//MANUFACTURER : ASCO//MODEL : 8210G094//CONNECTION TYPE : THREADED | 13 mm (1/2") | 13 mm (1/2")//BODY : BRASS// SEAL | SEAT : | // STEM : N/A	ACTING : PILOT	NORMALLY : FERMÉ/CLOSED	KMnO4 PREP SYSTEM		
TECKNO VALVE	VASDBZ336126	SV15-042	DIA: 1"	SOLENOID VALVE - DRIVING WATER	TYPE: SOLENOID VALVE//MANUFACTURER : ASCO//MODEL : EF8210G004-120VAC//CONNECTION TYPE : THREADED | 25 mm (1") | 25 mm (1")//BODY : BRASS// SEAL | SEAT :NBR | PA// STEM : N/A	ACTING : PILOT	NORMALLY : FERMÉ/CLOSED	KMnO4 PREP SYSTEM		

This page is intentionally left blank

Features

- Wide range of pressure ratings, sizes, and resilient materials provide long service life and low internal leakage
- High flow valves for liquid, corrosive, and air/inert gas service
- Industrial applications include:
  - Car wash
  - Laundry equipment
  - Air compressors
  - Industrial water control
  - Pumps

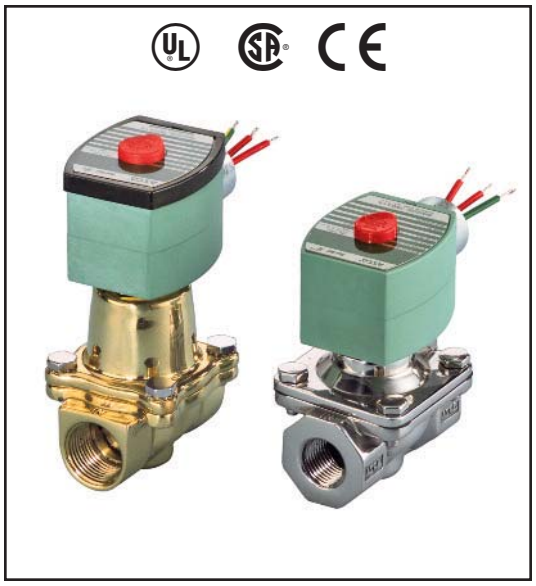

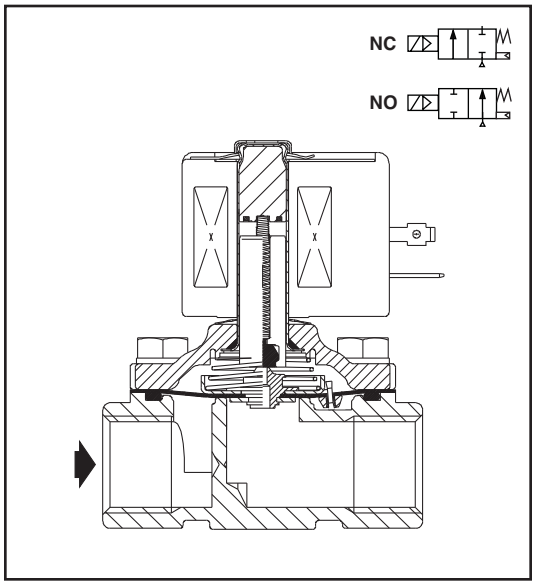

Construction

Valve Parts in Contact with Fluids		
Body	Brass	304 Stainless Steel*
Seals and Discs	NBR or PTFE	
Disc-Holder	PA	
Core Tube	305 Stainless Steel	
Core and Plugnut	430F Stainless Steel	
Springs	302 Stainless Steel	
Shading Coil	Copper	Silver

*Catalog Numbers 8210G127, 8210G129, 8210G132, 8210G133 have 316L Stainless Steel bodies.

Electrical

Standard Coil and Class of Insulation	Watt Rating and Power Consumption				Spare Coil Part Number			
		AC			General Purpose		Explosionproof	
	DC Watts	Watts	VA Holding	VA Inrush	AC	DC	AC	DC
F	-	6.1	16	40	238210	-	238214	-
F	11.6	10.1	25	70	238610	238710	238614	238714
F	16.8	16.1	35	180	272610	97617	272614	97617
F	-	17.1	40	93	238610	-	238614	-
F	-	20	43	240	99257	-	99257	-
F	-	20.1	48	240	272610	-	272614	-
F	30.8	-	-	-	-	501695	-	501696
H	40.6	-	-	-	-	238910	-	238914

Standard Voltages: 24, 120, 240, 480 volts AC, 60 Hz (or 110, 220 volts AC, 50 Hz). 6, 12, 24, 120, 240 volts DC. Must be specified when ordering.
Other voltages available when required.

Solenoid Enclosures

Standard: RedHat II - Watertight, Types 1, 2, 3, 3S, 4, and 4X; RedHat - Type I.

Optional: RedHat II - Explosionproof and Watertight, Types 3, 3S, 4, 4X, 6, 6P, 7, and 9; Red-Hat - Explosionproof and Watertight, Types 3, 4, 4X, 7, and 9.

(To order, add prefix "EF" to catalog number, except Catalog Numbers 8210B057, 8210B058, and 8210B059, which are not available with Explosionproof enclosures.)
See Optional Features Section for other available options.

Nominal Ambient Temp. Ranges

RedHat II/RedHat AC: 32˚F to 125˚F (0˚C to 52˚C)
RedHat II DC: 32˚F to 104˚F (0˚C to 40˚C)
RedHat DC: 32˚F to 77˚F (0˚C to 25˚C)
(104˚F/40˚C occasionally)
8210G227 AC: 32˚F to 130˚F (0˚C to 54˚C)
DC: 32˚F to 90˚F (0˚C to 32˚C)
Refer to Engineering Section for details.

Approvals

UL listed as indicated. CSA certified.
RedHat II meets applicable CE directives.
Refer to Engineering Section for details.

ATEX/IECEx certified with prefix "EV" as listed. *Refer to Optional Features Electrical Section for details.*

2/2 SERIES 8210

ASCO®

Specifications (English units)

Pipe Size (in)	Orifice Size (in)	Cv Flow Factor	Operating Pressure Differential (psi)							Max. Fluid Temp. °F		Brass Body			Stainless Steel Body			Watt Rating/ Class of Coil Insulation ⑦	
				Max. AC			Max. DC												
			Min.	Air-Inert Gas	Water	Light Oil @ 300 SSU	Air-Inert Gas	Water	Light Oil @ 300 SSU	AC	DC	Catalog Number	Const. Ref. ④	UL ⑤ Listing	Catalog Number	Const. Ref. ④	UL ⑤ Listing	AC	DC
NORMALLY CLOSED (Closed when de-energized), NBR or PTFE ② Seating																			
3/8	3/8	1.5	①	150	125	-	40	40	-	180	150	8210G073 ③	1P	●	8210G036 ③	1P	●	6.1/F	11.6/F
3/8	5/8	3	0	150	150	-	40	40	-	180	150	8210G093	5D	❍	-	-	-	10.1/F	11.6/F
3/8	5/8	3	5	200	150	135	125	100	100	180	150	8210G001 ▼	6D	❍	-	-	-	6.1/F	11.6/F
3/8	5/8	3	5	300	300	300	-	-	-	175	-	8210G006 ✓	5D	❍	-	-	-	17.1/F	-
1/2	7/16	2.2	①	150	125	-	40	40	-	180	150	8210G015 ③	2P	●	8210G037 ③	2P	●	6.1/F	11.6/F
1/2	5/8	4	0	150	150	-	40	40	-	180	150	8210G094 ✓	5D	❍	-	-	-	10.1/F	11.6/F
1/2	5/8	4	0	150	150	125	40	40	-	175	150	-	-	-	8210G087 ✓	7D	●	17.1/F	11.6/F
1/2	5/8	4	5	200	150	135	125	100	100	180	150	8210G002 ▼	6D	❍	-	-	-	6.1/F	11.6/F
1/2	5/8	4	5	300	300	300	-	-	-	175	-	8210G007	5D	❍	-	-	-	17.1/F	-
1/2	3/4	4	5	-	300	-	-	300	-	130	90	8210G227	5D	❍ †	-	-	-	17.1/F	40.6/H
3/4	5/8	4.5	0	150	150	125	40	40	-	175	150	-	-	-	8210G088 ✓	7D	●	17.1/F	11.6/F
3/4	3/4	5	5	125	125	125	100	90	75	180	150	8210G009 ▼	9D	❍	-	-	-	6.1/F	11.6/F
3/4	3/4	5	0	150	150	-	40	40	-	180	150	8210G095 ✓	8D	❍	-	-	-	10.1/F	11.6/F
3/4	3/4	6.5	5	250	150	100	125	125	125	180	150	8210G003 ▼	11D	❍	-	-	-	6.1/F	11.6/F
3/4	3/4	6	0	350	300	200	200	200	200	200	180	8210G026 ② ‡ ◆	40P/10D	●	-	-	-	16.1F	30.8/F
1	1	13	0	150	125	125	135	120	120	180	180	8210G054 ‡ ◆	41D/31D	●	8210G089 ‡ ◆	45D/15D	●	16.1/F	30.8/F
1	1	13	5	150	150	100	125	125	125	180	150	8210G004 ▼	12D	❍	-	-	-	6.1/F	11.6/F
1	1	13.5	0	300	225	115	-	-	-	200	-	8210G027 ‡	42P	●	-	-	-	20.1/F	-
1	1	13.5	10	300	300	300	-	-	-	175	-	8210G078 ②	13P	-	-	-	-	17.1/F	-
1 1/4	1 1/8	15	0	150	125	125	135	120	120	180	180	8210G055 ‡ ◆	43D/32D	●	-	-	-	16.1/F	30.8/F
1 1/4	1 1/8	15	5	150	150	100	125	125	125	180	150	8210G008 ▼	16D	❍	-	-	-	6.1/F	11.6/F
1 1/2	1 1/4	22.5	0	150	125	125	135	120	120	180	180	8210G056 ‡ ◆	44D/33D	●	-	-	-	16.1/F	30.8/F
1 1/2	1 1/4	22.5	5	150	150	100	125	125	125	180	150	8210G022 ▼	18D	●	8210G127	-	-	6.1/F	11.6/F
2	1 3/4	43	5	150	125	90	50	50	50	180	150	8210G100	20P	●	8210G129	-	-	6.1/F	11.6/F
2 1/2	1 3/4	45	5	150	125	90	50	50	50	180	150	8210G101	21P	●	-	-	-	6.1/F	11.6/F
NORMALLY OPEN (Open when de-energized), NBR Seating (PA Disc-Holder, except as noted)																			
3/8	5/8	3	0	150	150	125	125	125	80	180	150	8210G033	23D	●	-	-	-	10.1/F	11.6/F
3/8	5/8	3	5	250	200	200	250	200	200	180	180	8210G011 ⑧ ⑨	39D	●	-	-	-	10.1/F	11.6/F
1/2	5/8	4	0	150	150	125	125	125	80	180	150	8210G034 ✓	23D	●	-	-	-	10.1/F	11.6/F
1/2	5/8	3	0	150	150	100	125	125	80	180	150	-	-	-	8210G030 ✓	37D	●	10.1/F	11.6/F
1/2	5/8	4	5	250	200	200	250	200	200	180	180	8210G012 ⑧ ⑨	39D	●	-	-	-	10.1/F	11.6/F
3/4	3/4	5.5	0	150	150	125	125	125	80	180	150	8210G035 ✓	25D	●	-	-	-	10.1/F	11.6/F
3/4	5/8	3	0	150	150	100	125	125	80	180	150	-	-	-	8210G038 ✓	38D	●	10.1/F	11.6/F
3/4	3/4	6.5	5	-	-	-	250	200	200	-	180	8210C013	24D	●	-	-	-	-	16.8/F
3/4	3/4	6.5	5	250	200	200	-	-	-	180	-	8210G013	46D	●	-	-	-	16.1/F	-
1	1	13	0	125	125	125	-	-	-	180	-	8210B057 ⑥ ⑩	34D	●	-	-	-	20/F	-
1	1	13	5	-	-	-	125	125	125	-	180	8210D014	26D	●	-	-	-	-	16.8/F
1	1	13	5	150	150	125	-	-	-	180	-	8210G014	47D	●	-	-	-	16.1/F	-
1 1/4	1 1/8	15	0	125	125	125	-	-	-	180	-	8210B058 ⑥ ⑩	35D	●	-	-	-	20/F	-
1 1/4	1 1/8	15	5	-	-	-	125	125	125	-	180	8210D018	28D	●	-	-	-	-	16.8/F
1 1/4	1 1/8	15	5	150	150	125	-	-	-	180	-	8210G018	48D	●	-	-	-	16.1/F	-
1 1/2	1 1/4	22.5	0	125	125	125	-	-	-	180	-	8210B059 ⑥ ⑩	36D	●	-	-	-	20/F	-
1 1/2	1 1/4	22.5	5	-	-	-	125	125	125	-	180	8210D032	29D	●	-	-	-	-	16.8/F
1 1/2	1 1/4	22.5	5	150	150	125	-	-	-	180	-	8210G032	49D	●	8210G132	-	-	16.1/F	-
2	1 3/4	43	5	-	-	-	125	125	125	-	150	8210 103	30P	●	-	-	-	-	16.8/F
2	1 3/4	43	5	125	125	125	-	-	-	180	-	8210G103	50P	●	8210G133	-	-	16.1/F	-
2 1/2	1 3/4	45	5	-	-	-	125	125	125	-	150	8210 104	27P	●	-	-	-	-	16.8/F
2 1/2	1 3/4	45	5	125	125	125	-	-	-	180	-	8210G104	51P	●	-			16.1/F	-

① 5 psi on Air; 1 psi on Water.
② Valve provided with PTFE main disc.
③ Valve includes Ultem (G.E. trademark) piston.
④ Letter "D" denotes diaphragm construction; "P" denotes piston construction.
⑤ ❍ Safety Shutoff Valve; ● General Purpose Valve.
Refer to Engineering Section (Approvals) for details.
⑥ Valves not available with Explosionproof enclosures.
⑦ On 50 hertz service, the watt rating for the 6.1/F solenoid is 8.1 watts.
⑧ AC construction also has PA seating.
⑨ No disc-holder.
⑩ Stainless steel disc-holder.
† UL listed for fire protection systems per UL429A.
‡ DC constructions must have solenoid mounted vertical and upright.
✓ ATEX/IECEx certified with prefix "EV".
▼ ATEX/IECEx certified for DC only with prefix "EV".
◆ Not available in 6 Volt DC. EF and HB prefix only.

Specifications (Metric units)

Pipe Size (in)	Orifice Size (mm)	Kv Flow Factor (m^3/hr)	Operating Pressure Differential (bar)							Max. Fluid Temp. ˚C		Brass Body			Stainless Steel Body			Watt Rating/ Class of Coil Insulation ⑦	
				Max. AC			Max. DC												
			Min.	Air-Inert Gas	Water	Light Oil @ 300 SSU	Air-Inert Gas	Water	Light Oil @ 300 SSU	AC	DC	Catalog Number	Const. Ref. ④	UL ⑤ Listing	Catalog Number	Const. Ref. ④	UL ⑤ Listing	AC	DC
NORMALLY CLOSED (Closed when de-energized), NBR or PTFE ② Seating																			
3/8	10	1.3	①	10	9	-	3	3	-	82	65	8210G073 ③	1P	●	8210G036 ③	1P	●	6.1/F	11.6/F
3/8	16	2.6	0	10	10	-	3	3	-	82	65	8210G093	5D	❍	-	-	-	10.1/F	11.6/F
3/8	16	2.6	0.3	14	10	9	9	7	7	82	65	8210G001 ▼	6D	❍	-	-	-	6.1/F	11.6/F
3/8	16	2.6	0.3	21	21	21	-	-	-	79	-	8210G006 ✓	5D	❍	-	-	-	17.1/F	-
1/2	11	1.9	①	10	9	-	3	3	-	82	65	8210G015 ③	2P	●	8210G037 ③	2P	●	6.1/F	11.6/F
1/2	16	3.4	0	10	10	-	3	3	-	82	65	8210G094 ✓	5D	❍	-	-	-	10.1/F	11.6/F
1/2	16	3.4	0	10	10	9	3	3	-	79	65	-	-	-	8210G087 ✓	7D	●	17.1/F	11.6/F
1/2	16	3.4	0.3	14	10	9	9	7	7	82	65	8210G002 ▼	6D	❍	-	-	-	6.1/F	11.6/F
1/2	16	3.4	0.3	21	21	21	-	-	-	79	-	8210G007	5D	❍	-	-	-	17.1/F	-
1/2	19	3.4	0.3	-	21	-	-	21	-	54	32	8210G227	5D	❍ †	-	-	-	17.1/F	40.6H
3/4	16	3.9	0	10	10	9	3	3	-	79	65	-	-	-	8210G088 ✓	7D	●	17.1/F	11.6/F
3/4	19	4.3	0.3	9	9	9	7	6	5	82	65	8210G009 ▼	9D	❍	-	-	-	6.1/F	11.6/F
3/4	19	4.3	0	10	10	-	3	3	-	82	65	8210G095 ✓	8D	❍	-	-	-	10.1/F	11.6/F
3/4	19	5.6	0.3	17	10	7	9	9	9	82	65	8210G003 ▼	11D	❍	-	-	-	6.1/F	11.6/F
3/4	19	5.1	0	24	21	14	14	14	14	93	82	8210G026 ② ‡ ◆	40P/10D	●	-	-	-	16.1F	30.8/F
1	25	11	0	10	9	9	9	8	8	82	82	8210G054 ‡ ◆	41D/31D	●	8210G089 ‡ ◆	45D/15D	●	16.1/F	30.8/F
1	25	11	0.3	10	10	7	9	9	9	82	65	8210G004 ▼	12D	❍	-	-	-	6.1/F	11.6/F
1	25	11.5	0	21	16	8	-	-	-	93	-	8210G027 ‡	42P	●	-	-	-	20.1/F	-
1	25	11.5	0.7	21	21	21	-	-	-	79	-	8210G078 ②	13P	-	-	-	-	17.1/F	-
1 1/4	29	13	0	10	9	9	9	8	8	82	82	8210G055 ‡ ◆	43D/32D	●	-	-	-	16.1/F	30.8/F
1 1/4	29	13	0.3	10	10	7	9	9	9	82	65	8210G008 ▼	16D	❍	-	-	-	6.1/F	11.6/F
1 1/2	32	19.5	0	10	9	9	9	8	8	82	82	8210G056 ‡ ◆	44D/33D	●	-	-	-	16.1/F	30.8/F
1 1/2	32	19.5	0.3	10	10	7	9	9	9	82	65	8210G022 ▼	18D	●	8210G127	-	-	6.1/F	11.6/F
2	44	37	0.3	10	9	6	3	3	3	82	65	8210G100	20P	●	8210G129	-	-	6.1/F	11.6/F
2 1/2	44	39	0.3	10	9	6	3	3	3	82	65	8210G101	21P	●	-	-	-	6.1/F	11.6/F
NORMALLY OPEN (Open when de-energized), NBR Seating (PA Disc-Holder, except as noted)																			
3/8	16	2.6	0.0	10	10	9	9	9	6	82	65	8210G033	23D	●	-	-	-	10.1/F	11.6/F
3/8	16	2.6	0.3	17	14	14	17	14	14	82	82	8210G011 ⑧ ⑨	39D	●	-	-	-	10.1/F	11.6/F
1/2	16	3.4	0	10	10	9	9	9	6	82	65	8210G087 ✓	7D	●	-	-	-	10.1/F	11.6/F
1/2	16	2.6	0	10	10	7	9	9	6	82	65	-	-	-	8210G087 ✓	7D	●	10.1/F	11.6/F
1/2	16	3.4	0.3	17	14	14	17	14	14	82	82	8210G012 ⑧ ⑨	39D	●	-	-	-	10.1/F	11.6/F
3/4	19	4.7	0	10	10	9	9	9	6	82	65	8210G087 ✓	7D	●	-	-	-	10.1/F	11.6/F
3/4	16	2.6	0	10	10	7	9	9	6	82	65	-	-	-	8210G087 ✓	7D	●	10.1/F	11.6/F
3/4	19	5.6	0.3	-	-	-	17	14	14	-	82	8210C013	24D	●	-	-	-	-	16.8/F
3/4	19	5.6	0.3	17	14	14	-	-	-	82	-	8210G013	46D	●	-	-	-	16.1/F	-
1	25	11	0	9	9	9	-	-	-	82	-	8210B057 ⑥ ⑩	34D	●	-	-	-	20/F	-
1	25	11	0.3	-	-	-	9	9	9	-	82	8210D014	26D	●	-	-	-	-	16.8/F
1	25	11	0.3	10	10	9	-	-	-	82	-	8210G014	47D	●	-	-	-	16.1/F	-
1 1/4	29	13	0	9	9	9	-	-	-	82	-	8210B058 ⑥ ⑩	35D	●	-	-	-	20/F	-
1 1/4	29	13	0.3	-	-	-	9	9	9	-	82	8210D018	28D	●	-	-	-	-	16.8/F
1 1/4	29	13	0.3	10	10	9	-	-	-	82	-	8210G018	48D	●	-	-	-	16.1/F	-
1 1/2	32	19.5	0	9	9	9	-	-	-	82	-	8210B059 ⑥ ⑩	36D	●	-	-	-	20/F	-
1 1/2	32	19.5	0.3	-	-	-	9	9	9	-	82	8210D032	29D	●	-	-	-	-	16.8/F
1 1/2	32	19.5	0.3	10	10	9	-	-	-	82	-	8210G032	49D	●	8210G132	-	-	16.1/F	-
2	44	37	0.3	-	-	-	9	9	9	-	65	8210 103	30P	●	-	-	-	-	16.8/F
2	44	37	0.3	9	9	9	-	-	-	82	-	8210G103	50P	●	8210G133	-	-	16.1/F	-
2 1/2	44	39	0.3	-	-	-	9	9	9	-	65	8210 104	27P	●	-	-	-	-	16.8/F
2 1/2	44	39	0.3	9	9	9	-	-	-	82	-	8210G104	51P	●	-	-	-	16.1/F	-

① 0.3 bar on Air; 0.0 bar on Water.
② Valve provided with PTFE main disc.
③ Valve includes UItem (G.E. trademark) piston.
④ Letter "D" denotes diaphragm construction; "P" denotes piston construction.
⑤ ❍ Safety Shutoff Valve; ● General Purpose Valve.
Refer to Engineering Section (Approvals) for details.

⑥ Valves not available with Explosionproof enclosures.
⑦ On 50 hertz service, the watt rating for the 6.1/F solenoid is 8.1 watts.
⑧ AC construction also has PA seating.
⑨ No disc-holder.
⑩ Stainless steel disc-holder.
† UL listed for fire protection systems per UL429A.

‡ DC constructions must have solenoid mounted vertical and upright.
✓ ATEX/IECEx certified with prefix "EV".
▼ ATEX/IECEx certified for DC only with prefix "EV".
◆ Not available in 6 Volt DC. EF and HB prefix only.

Dimensions: inches (mm)

Const. Ref.		H	K	L	P	W
1*	in	3.85	3.00	1.91	3.41	1.69
	mm	98	76	49	87	43
2*	in	4.17	3.25	2.28	3.63	1.69
	mm	106	83	58	92	43
5	in	3.84	2.31	2.75	3.28	2.28
	mm	98	59	70	83	58
6*	in	3.38	1.94	2.75	2.80	2.28
	mm	86	49	70	71	58
7	in	4.19	2.50	2.81	3.47	2.39
	mm	106	64	71	88	61
8	in	4.13	2.47	2.81	3.44	2.29
	mm	105	63	71	87	58
9*	in	3.66	2.10	2.81	2.96	2.28
	mm	93	53	71	75	58
10*	in	5.20	3.40	2.80	4.50	2.50
	mm	131	86	71	114	62
11*	in	4.16	2.66	3.84	3.52	2.75
	mm	106	68	98	89	70
12	in	5.64	3.15	3.75	4.01	3.36
	mm	143	80	95	102	85
13	in	4.44	3.22	3.75	4.19	5.81
	mm	113	82	95	106	147
15*	in	5.20	3.30	3.80	4.40	3.80
	mm	133	83	98	111	98
16	in	5.64	3.15	3.66	4.01	3.56
	mm	143	80	93	102	90
18*	in	6.11	3.30	4.38	4.16	3.92
	mm	155	84	111	106	100
20*	in	7.33	3.71	5.06	4.57	4.87
	mm	186	94	129	116	124
21*	in	7.33	3.71	5.50	4.57	4.87
	mm	186	94	140	116	124
23	in	4.35	2.65	2.75	3.79	2.28
	mm	110	67	70	96	58
24	in	5.06	X	3.78	4.44	2.75
	mm	129	X	96	113	70
25	in	4.64	2.81	2.81	3.94	2.28
	mm	118	71	71	100	58
26	in	6.53	X	3.75	4.91	3.19
	mm	166	X	95	125	81
27	in	8.22	X	5.50	5.47	4.87
	mm	209	X	140	139	124
28	in	6.53	X	3.66	4.91	3.19
	mm	166	X	93	125	81
29	in	7.03	X	4.38	5.06	4.40
	mm	179	X	111	129	112

* DC dimensions slightly larger.
IMPORTANT: Valves may be mounted in any position, except as noted in specifications table.

Const. Ref. 1, 2

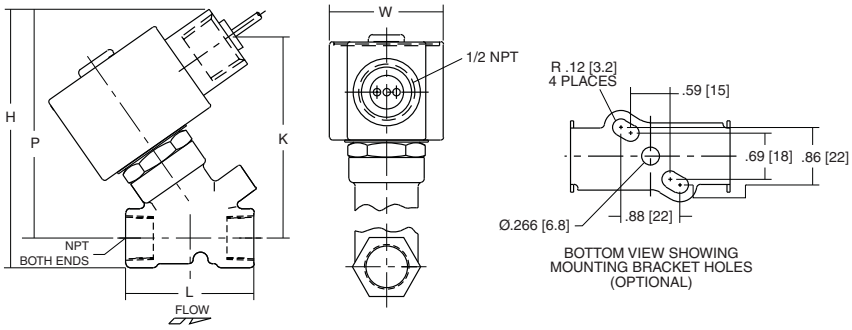

Const. Ref. 13

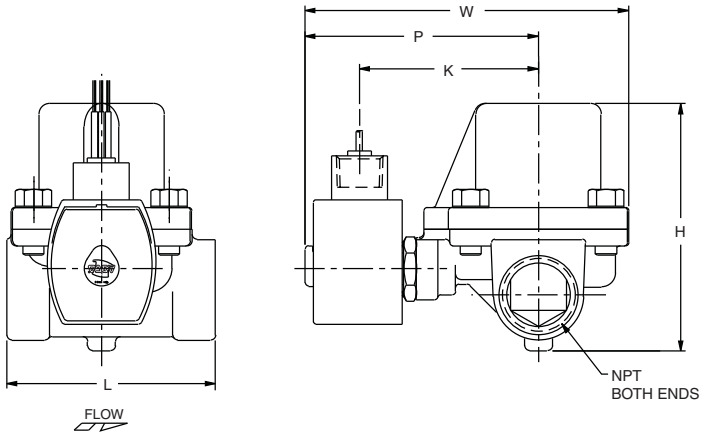

Const. Ref. 5-9, 11, 23 , 25, 37,38, 40-46

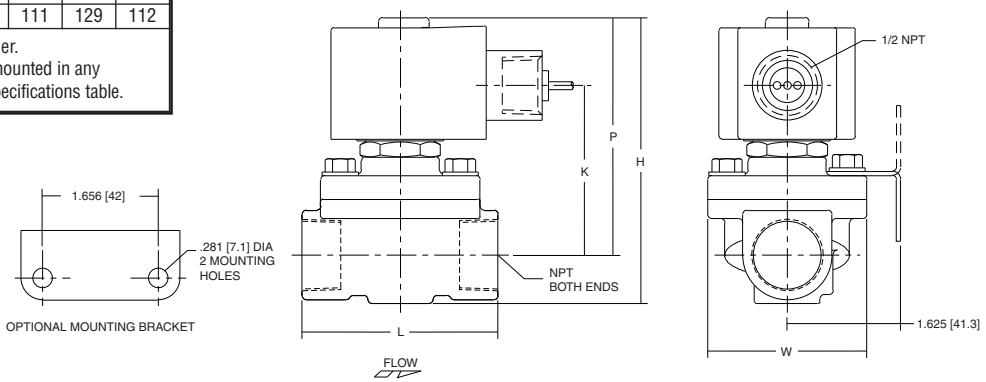

Dimensions: inches (mm)

Const. Ref.		H	K	L	P	W
30	in	8.22	X	5.06	5.47	4.87
	mm	209	X	129	139	124
31	in	5.13	3.19	3.76	4.32	3.27
	mm	130	81	95	110	83
32	in	5.60	3.44	3.66	4.57	3.27
	mm	142	87	93	116	83
33	in	5.92	3.66	4.51	4.80	3.89
	mm	150	93	115	122	99
34	in	6.91	X	3.75	6.09	3.25
	mm	176	X	95	155	83
35	in	7.34	X	3.66	6.34	3.25
	mm	186	X	93	161	83
36	in	7.66	X	4.38	6.56	3.91
	mm	1.95	X	111	167	99
37	in	4.61	2.75	2.81	3.89	2.39
	mm	117	70	71	99	61
38	in	4.61	2.75	2.81	3.89	2.39
	mm	117	70	71	99	61
39	in	5.42	2.31	2.75	4.86	3.80
	mm	138	59	70	123	97
40	in	5.20	3.29	2.81	4.50	2.28
	mm	132	83	71	114	58
41	in	5.13	3.10	3.75	4.32	3.25
	mm	130	79	95	110	83
42	in	6.43	4.40	3.93	5.62	3.25
	mm	163	112	100	143	83
43	in	5.57	3.35	3.66	4.57	3.25
	mm	142	85	93	116	83
44	in	5.90	3.57	4.38	4.79	3.91
	mm	150	91	111	122	99
45	in	5.26	3.17	3.75	4.38	3.84
	mm	134	81	95	111	98
46	in	4.95	3.10	3.84	4.31	2.75
	mm	126	79	98	110	70
47	in	6.43	3.59	3.75	4.81	3.52
	mm	163	91	95	122	90
48	in	6.43	3.59	3.66	4.81	3.73
	mm	163	91	93	122	95
49	in	6.91	3.75	4.38	4.96	4.40
	mm	176	95	111	126	112
50	in	8.13	4.15	5.06	5.37	4.87
	mm	207	105	129	136	124
51	in	8.13	4.15	5.50	5.37	5.18
	mm	207	105	140	136	132

IMPORTANT: Valves may be mounted in any position, except as noted in specifications table.

Const. Ref. 10, 15, 31, 32, 33

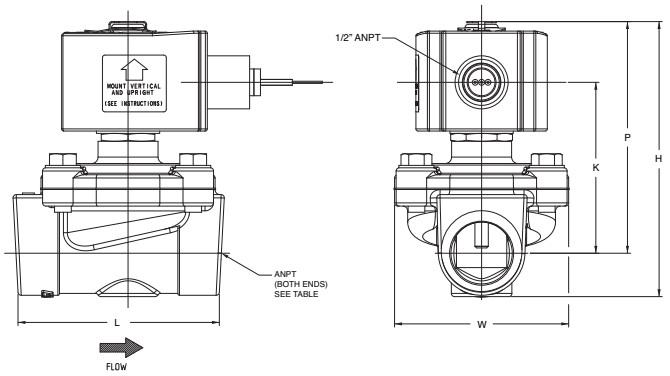

Const. Ref. 24, 34, 35, 36

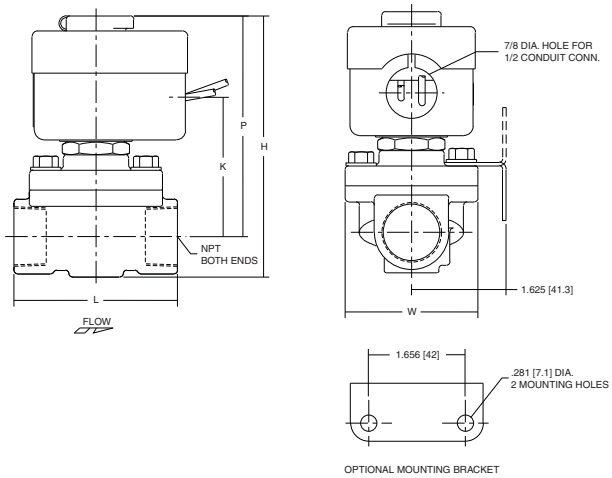

Const. Ref. 12, 16, 26, 28, 47, 48

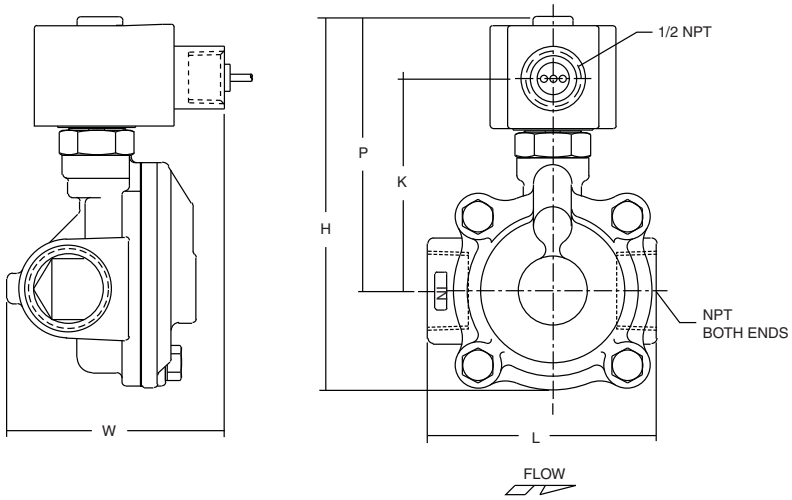

Dimensions: inches (mm)

Const. Ref. 39

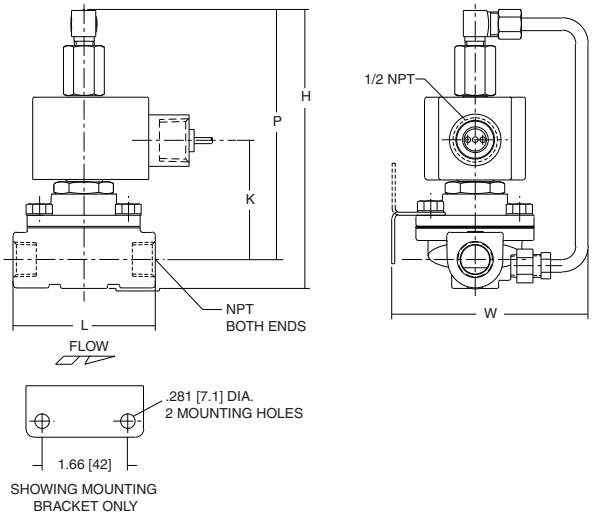

Const. Ref. 18, 29, 49

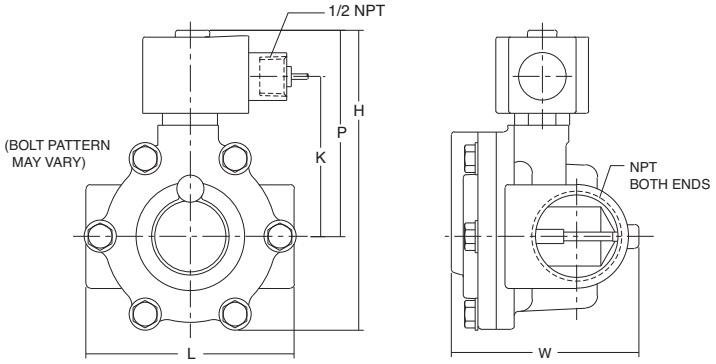

Const. Ref. 20, 21, 27, 30, 50, 51

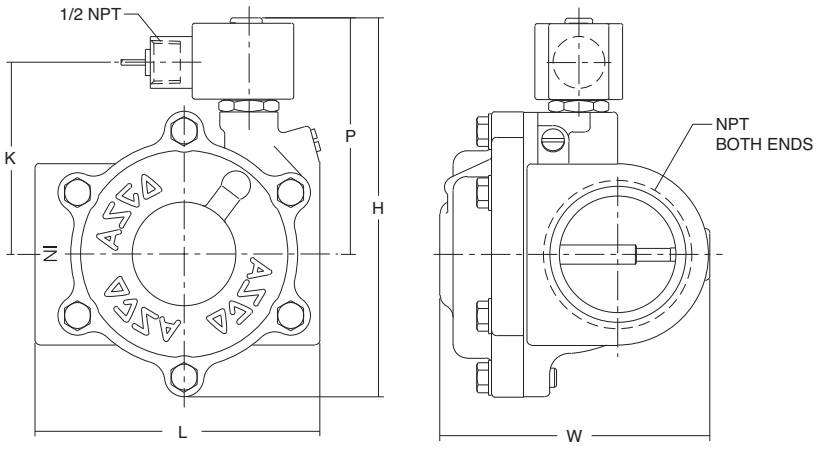

CS-304-507 : Identification sheet

VWTC PROJECT NUMBER:	5000218009	REV:	1
PROJECT NAME:	AEM AMARUQ	SUBMITTED TO (COMPANY):	AGNICO EAGLE MINES
ENGINEER:	Gabriel Hébert	SUBMITTED TO (RESPONSIBLE)	
PROJECT MANAGER:	Clément B	PROJECT NUM REFERENCE.:	
PHONE NUMBER:		LOT NUMBER:	

SUPPLIER	EQPT CODE	EQPT TAG NO	DIA	DESCRIPTION	INFO 1	INFO 2	INFO 3	APPLIC.	NOTE	REV
TECKNO VALVE	VASDBR352337	SV15-041	N/A	SOLENOID VALVE - FEEDER	TYPE: SOLENOID VALVE//MANUFACTURER : ASCO//MODEL : EF8345G001-120VAC//CONNECTION TYPE : THREADED | 6 mm (1/4") | 6 mm (1/4")//BODY : BRASS// SEAL | SEAT :NBR | // STEM : N/A	ACTING :	NORMALLY :	KMnO4 PREP SYSTEM		

This page is intentionally left blank

Features

- Compact valves for general service applications
- Low-cost, 4-way valve when low flow is sufficient
- Mountable in any position

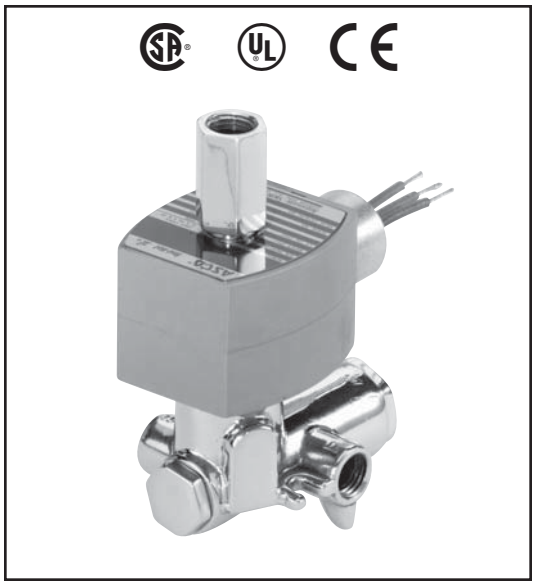

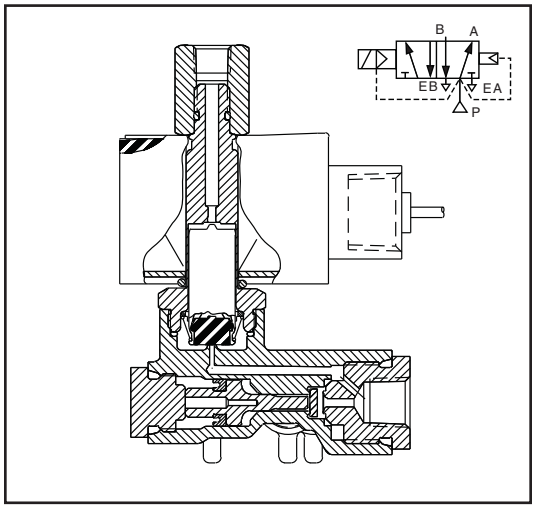

Construction

Valve Parts in Contact with Fluids		
Body	Brass	316 Stainless Steel
Seals and Disc	NBR and PA	FKM, PA and UR
Core Tube	305 Stainless Steel	
Core and Plugnut	430F Stainless Steel	
Springs	302 Stainless Steel	
Shading Coil	Copper	Silver
Piston	PA	

Electrical

Standard Coil and Class of Insulation	Watt Rating and Power Consumption				Spare Coil Part Number					
		AC			General Purpose		Explosionproof (EF)		Explosionproof (EV)	
	DC Watts	Watts	VA Holding	VA Inrush	AC	DC	AC	DC	AC	DC
F	11.6	10.1	25	50	238610	238710	238614	238714	274614	274714

Standard Voltages: 24, 120, 240, 480 volts AC, 60 Hz (or 110, 220 volts AC, 50 Hz).
6, 12, 24, 120, 240 volts DC. Must be specified when ordering.
Other voltages are available when required.

Solenoid Enclosures

Standard: Watertight, Types 1, 2, 3, 3S, 4, and 4X.

Optional: Explosionproof and Watertight, Types 3, 3S, 4, 4X, 6, 6P, 7, and 9. (To order, add prefix "EF" or, for Explosionproof Stainless Steel trim and hub on Brass-Bodied valves, add "EV" to catalog number.)

See Optional Features Section for other available options.

Nominal Ambient Temp. Ranges

AC: 32˚F to 125˚F (0˚C to 52˚C)
DC: 32˚F to 104˚F (0˚C to 40˚C)

Refer to Engineering Section for details.

Approvals

CSA certified. UL listed as General Purpose Valve.
EV8345G081 solenoid only UL approved.
Meets applicable CE directives.

Refer to Engineering Section for details.

Important

A Minimum Operating Pressure Differential must be maintained between the pressure and exhaust ports. Supply and exhaust piping must be full area, unrestricted. ASCO flow controls and other similar components must be installed in the cylinder lines only.

Refer to Engineering Section for details.

ASCO®

Specifications (English units)

Pipe Size (ins.)	Orifice Size (ins.)		Cv Flow Factor		Operating Pressure Differential (psi)							Max. Fluid Temp. ˚F		Brass Body	Stainless Steel Body		Watt Rating/ Class of Coil Insulation	
					Max. AC				Max. DC									
	Press.	Exh.	Inlet	Exh.	Min.	Air-Inert Gas	Water	Lt. Oil @ 50 SSU	Air-Inert Gas	Water	Lt. Oil @ 50 SSU	AC	DC	Catalog Number	Catalog Number	Const. Ref.	AC	DC
SINGLE SOLENOID																		
1/4	1/16	3/32	.09	.09	10	150	150	150	100	100	100	180	104	8345G001	EV8345G081	1	10.1/F	11.6/F
SINGLE SOLENOID AIR-ONLY CONSTRUCTION - Exhaust to Atmosphere																		
1/4	1/16	3/32	.09	.09	10	150	-	-	100	-	-	180	104	8345H003	-	1	10.1/F	11.6/F

Specifications (Metric units)

Pipe Size (ins.)	Orifice Size (mm)		Kv Flow Factor (m3/h)		Operating Pressure Differential (bar)							Max. Fluid Temp. ˚C		Brass Body	Stainless Steel Body		Watt Rating/ Class of Coil Insulation	
					Max. AC				Max. DC									
	Press.	Exh.	Inlet	Exh.	Min.	Air-Inert Gas	Water	Lt. Oil @ 50 SSU	Air-Inert Gas	Water	Lt. Oil @ 50 SSU	AC	DC	Catalog Number	Catalog Number	Const. Ref.	AC	DC
SINGLE SOLENOID																		
1/4	2	2	.08	.08	0.7	10	10	10	7	7	7	82	40	8345G001	EV8345G081	1	10.1/F	11.6/F
SINGLE SOLENOID AIR-ONLY CONSTRUCTION - Exhaust to Atmosphere																		
1/4	2	2	.08	.08	0.7	10	-	-	7	-	-	82	40	8345H003	-	1	10.1/F	11.6/F

Dimensions inches (mm)

Const. Ref. 1

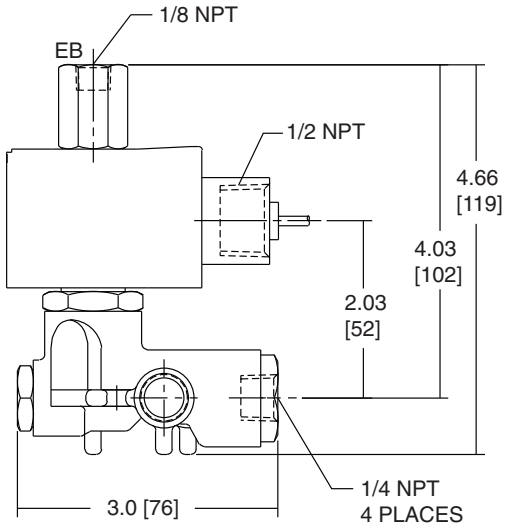

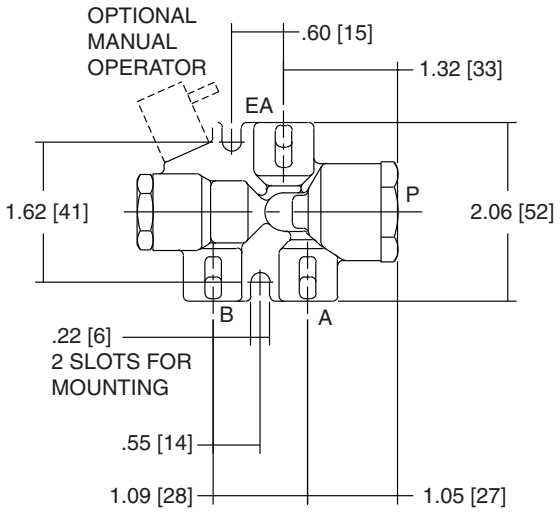

CS-402-400 : Identification sheet

VWTC PROJECT NUMBER:	5000218009	REV:	1
PROJECT NAME:	AEM AMARUQ	SUBMITTED TO (COMPANY):	AGNICO EAGLE MINES
ENGINEER:	Gabriel Hébert	SUBMITTED TO (RESPONSIBLE)	
PROJECT MANAGER:	Clément B	PROJECT NUM REFERENCE.:	
PHONE NUMBER:		LOT NUMBER:	

SUPPLIER	EQPT CODE	EQPT TAG NO	DIA	DESCRIPTION	INFO 1	INFO 2	INFO 3	APPLIC.	NOTE	REV
E&H	IEPOPS340482	LT9-591	N/A	TANK LEVEL TRANSMITTER	PRESSURE TRANSMITTER/MANUFACTURER : ENDRESS AND HAUSER/MODEL: PMC71-UCC1E3RABAA // U Approval: CSA C/US IS Cl.I,II,III Div.1 Gr.A-G, Cl.I Div.2 Gr.A-D, Ex ia, C: zone0,1,2/ US: zone 0,1,2,20,21,22// C Output Operating 4-20 mA Hart, inside	1E Sensor Range; Sensor Overload Limit 250mbar/25kPa3.75psi gauge; 5bar/500kPa/75psi // 3 Calibration; Unit: Sensor range; mmH2O/mH2O // Process Connection: Thread ANSI MNPT	N/A	KMnO4 PREP SYSTEM		rev1
E&H	IEPOPS340482	LT9-592	N/A	TANK LEVEL TRANSMITTER	PRESSURE TRANSMITTER/MANUFACTURER : ENDRESS AND HAUSER/MODEL: PMC71-UCC1E3RABAA // U Approval: CSA C/US IS Cl.I,II,III Div.1 Gr.A-G, Cl.I Div.2 Gr.A-D, Ex ia, C: zone0,1,2/ US: zone 0,1,2,20,21,22// C Output Operating 4-20 mA Hart, inside	1E Sensor Range; Sensor Overload Limit 250mbar/25kPa3.75psi gauge; 5bar/500kPa/75psi // 3 Calibration; Unit: Sensor range; mmH2O/mH2O // Process Connection: Thread ANSI MNPT	N/A	KMnO4 PREP SYSTEM		rev1

This page is intentionally left blank

Technical Information
Cerabar S PMC71, PMP71, PMP75

Process pressure measurement

Pressure transmitter with ceramic and metal sensors

Applications

The device is used for the following measuring tasks:
- Absolute pressure and gauge pressure measurement in gases, steams or liquids in all areas of process engineering and process measurement technology
- Level, volume or mass measurements in liquids
- High process temperatures
  - up to 150 °C (302 °F) without diaphragm seal
  - up to 400 °C (752 °F) with typical diaphragm seals
- High pressures up to 700 bar (10 500 psi)
- MID part certificate according to OIML R117-1 Edition 2007 (E) and EN 12405-1/A1 Edition 2006

Your benefits

- Very good reproducibility and long-term stability
- High reference accuracy up to ±0.025 %
- Turn down up to 100:1, higher on request
- Used for process pressure monitoring up to SIL 3, certified to IEC 61508 by TÜV SÜD
- High level of safety during operation thanks to function monitoring from the measuring cell to the electronics
- The patented TempC membrane for the diaphragm seal reduces measured errors caused by environmental and process temperature influences to a minimum
- Easy electronic replacement guaranteed with HistoROM®/M-DAT
- Uniform platform for differential pressure, hydrostatics and pressure (Deltabar S – Deltapilot S – Cerabar S)
- Practical user navigation for quick and easy commissioning
- Extensive diagnostic functions

Endress+Hauser
People for Process Automation

Table of contents

Document information 4
Document function 4
Symbols used 4
Documentation 5
Terms and abbreviations 5

Function and system design 7
Device features 7
Measuring principle 8
Product design 9
Applications suitable for custody transfer measurement 9
Communication protocol 10

Input 11
Measured variable 11
Measuring range 11

Output 14
Output signal 14
Signal range 4 to 20 mA 14
Signal on alarm 14
Maximum load - 4 to 20 mA HART 15
Dead time, time constant 15
Dynamic behavior: current output 16
Dynamic behavior: Digital output (HART electronics) 16
Dynamic behavior: PROFIBUS PA 16
Dynamic behavior: FOUNDATION Fieldbus 17
Damping 17
Alarm current 18
Firmware version 18
Protocol-specific data 18

Power supply 22
Terminal assignment 22
Supply voltage 23
Current consumption 23
Electrical connection 24
Terminals 24
Cable entries 24
Connector 24
Cable specification 25
Start-up current 26
Residual ripple 26
Overvoltage protection (optional) 26
Influence of power supply 26

Performance characteristics of ceramic process isolating diaphragm 27
Reference operating conditions 27
Measuring uncertainty for small absolute pressure measuring ranges 27
Influence of the installation position 27
Resolution 27
Reference accuracy 27
Thermal change of the zero output and the output span . . . 28
Total performance 28
Long-term stability 28
Total error 29
Warm-up period 29

Performance characteristics of the metallic process isolating diaphragm 30
Reference operating conditions 30
Measuring uncertainty for small absolute pressure measuring ranges 30
Influence of the installation position 30
Resolution 30
Reference accuracy 30
Thermal change of the zero output and the output span . . . 32
Total performance 33
Long-term stability 33
Total error 33
Warm-up period 33

Installation 34
General installation instructions 34
Measuring arrangement for devices without diaphragm seals – PMC71, PMP71 34
Measuring arrangement for devices with diaphragm seals – PMP75 34
Orientation 34
Wall and pipe mounting 34
Heat insulation – PMC71 high-temperature version 35
Mounting of PVDF screw-in fittings 35
"Separate housing" version 36
Turning the housing 37
Oxygen applications 38
Silicone-free applications 38
Ultrapure gas applications 38
Applications with hydrogen 38

Environment 39
Ambient temperature range 39
Storage temperature range 39
Degree of protection 39
Climate class 39
Electromagnetic compatibility 39
Vibration resistance 40

Process 41
Process temperature limits 41
Process temperature limits of flexible capillary armoring: PMP75 42
Pressure specifications 43

Mechanical construction 44
Device height 44
T14 housing, optional display on the side 45
T17 housing (hygienic), optional display on the side 46
Process connections for PMC71 with internal process isolating diaphragm 47
Process connections for PMC71 with internal process isolating diaphragm 49

Process connections for PMC71 with internal process isolating diaphragm - height H 49
Process connections for PMC71 with flush-mounted process isolating diaphragm 50
Process connections for PMC71 with flush-mounted process isolating diaphragm 51
Process connections for PMC71 with flush-mounted process isolating diaphragm - height H 51
Process connections for PMC71 with flush-mounted process isolating diaphragm 52
Hygienic process connections for PMC71 with flush-mounted process isolating diaphragm 55
Process connections for PMP71 with internal process isolating diaphragm 57
Process connections for PMP71 with internal process isolating diaphragm 58
Process connections for PMP71 with internal process isolating diaphragm 59
Process connections for PMP71 with flush-mounted process isolating diaphragm 60
Process connections for PMP71 with flush-mounted process isolating diaphragm 62
Process connections for PMP71 with flush-mounted process isolating diaphragm 63
Process connections for PMP71 with flush-mounted process isolating diaphragm 64
Process connections for PMP71 with flush-mounted process isolating diaphragm 65
Process connections for PMP71 66
Process connections for PMP71 67
Process connections for PMP75 with flush-mounted process isolating diaphragm 68
PMP75 basic device 69
Process connections for PMP75 with flush-mounted process isolating diaphragm 70
Process connections for PMP75 with flush-mounted process isolating diaphragm 71
Process connections for PMP75 with flush-mounted process isolating diaphragm 72
Hygienic process connections for PMP75 with flush-mounted process isolating diaphragm 73
Hygienic process connections for PMP75 with flush-mounted process isolating diaphragm 74
Hygienic process connections for PMP75 with flush-mounted process isolating diaphragm 76
Process connections for PMP75 with flush-mounted process isolating diaphragm 79
Process connections for PMP75 with flush-mounted process isolating diaphragm 81
Process connections for PMP75 84
Separate housing: Wall and pipe mounting with mounting bracket 86
Materials not in contact with process 87
Weight 90
Materials in contact with process 90
Fill fluid 92

Operability 93
Operating concept 93
Local operation 93
Remote operation 96
HistoROM®/M-DAT (optional) 97
System integration 98

Planning instructions, diaphragm seal systems . . . 99
Applications 99
Design and operation mode 100
Diaphragm seal filling oils 101
Information on cleaning 102
Installation instructions 102
Vacuum applications 104

Certificates and approvals 105
CE mark 105
C-tick mark 105
Ex approvals 105
Suitable for hygiene applications 105
Functional safety SIL/ IEC 61508 Declaration of Conformity (optional) 105
Overfill protection 105
CRN approval 106
Other standards and guidelines 106
Pressure Equipment Directive (PED) 106
Marine approval 106
Drinking water approval 106
Approvals for custody transfer 107
MID Parts Certificate 107
Classification of process sealing between electrical systems and (flammable or combustible) process fluids in accordance with ANSI/ISA 12.27.01 107
Inspection certificate 107
Calibration 108

Ordering information 109
Scope of delivery 109
Configuration data sheet 109

Accessories 111
HistoROM®/M-DAT 111
Wall and pipe mounting 111
Welding flanges and welding neck 111

Supplementary documentation 112
Field of Activities 112
Technical Information 112
Operating Instructions 112
Brief Operating Instructions 112
Functional safety manual (SIL) 112
Overfill protection 112
Safety Instructions (XA) 112
Installation/Control Drawings 114

Registered trademarks 115
HART® 115
PROFIBUS® 115
FOUNDATION™ Fieldbus 115

Patents 115

Document information

Document function

The document contains all the technical data on the device and provides an overview of the accessories and other products that can be ordered for the device.

Symbols used

Safety symbols

Symbol	Meaning
DANGER	**DANGER!** This symbol alerts you to a dangerous situation. Failure to avoid this situation will result in serious or fatal injury.
WARNING	**WARNING!** This symbol alerts you to a dangerous situation. Failure to avoid this situation can result in serious or fatal injury.
CAUTION	**CAUTION!** This symbol alerts you to a dangerous situation. Failure to avoid this situation can result in minor or medium injury.
NOTICE	**NOTE!** This symbol contains information on procedures and other facts which do not result in personal injury.

Electrical symbols

Symbol	Meaning	Symbol	Meaning
⎓	Direct current	~	Alternating current
⎓ ~	Direct current and alternating current	⏚	**Ground connection** A grounded terminal which, as far as the operator is concerned, is grounded via a grounding system.
⏚	**Protective ground connection** A terminal which must be connected to ground prior to establishing any other connections.	⏚	**Equipotential connection** A connection that has to be connected to the plant grounding system: This may be a potential equalization line or a star grounding system depending on national or company codes of practice.

Symbols for certain types of information

Symbol	Meaning
✓	**Permitted** Procedures, processes or actions that are permitted.
✓✓	**Preferred** Procedures, processes or actions that are preferred.
✗	**Forbidden** Procedures, processes or actions that are forbidden.
i	**Tip** Indicates additional information.
	Reference to documentation
	Reference to page
	Reference to graphic
	Visual inspection

Symbols in graphics

Symbol	Meaning
1, 2, 3 ...	Item numbers
1., 2., 3. ...	Series of steps
A, B, C, ...	Views
A-A, B-B, C-C, ...	Sections

Documentation

The document types listed are available:
In the Downloads area of the Endress+Hauser website: www.endress.com → Downloads

Brief Operating Instructions (KA): getting the 1st measured value quickly

The Brief Operating Instructions contain all the essential information from incoming acceptance to initial commissioning.

Operating Instructions (BA): your comprehensive reference

These Operating Instructions contain all the information that is required in various phases of the life cycle of the device: from product identification, incoming acceptance and storage, to mounting, connection, operation and commissioning through to troubleshooting, maintenance and disposal.

Description of Device Parameters (GP): reference for your parameters

The document provides a detailed explanation of each individual parameter in the operating menu. The description is aimed at those who work with the device over the entire life cycle and perform specific configurations.

Safety Instructions (XA)

See "Safety instructions" section → 🖹 112

Terms and abbreviations

Term/abbreviation	Explanation
BA	Document type "Operating Instructions"
KA	Document type "Brief Operating Instructions"
SD	Document type "Special Documentation"
XA	Document type "Safety Instructions"
PN	Nominal pressure
MWP	The MWP (maximum working pressure) for the individual sensors depends on the lowest-rated element, with regard to pressure, of the selected components, i.e. the process connection has to be taken into consideration in addition to the measuring cell. Also observe pressure-temperature dependency. For the relevant standards and additional information, see the "Pressure specifications"→ 🖹 43 section. The MWP can also be found on the nameplate.
OPL	The OPL (over pressure limit = sensor overload limit) for the measuring device depends on the lowest-rated element, with regard to pressure, of the selected components, i.e. the process connection has to be taken into consideration in addition to the measuring cell. Also observe pressure-temperature dependency. For the relevant standards and additional information, see the "Pressure specifications"→ 🖹 43 section.
LRL	Lower range limit
URL	Upper range limit
LRV	Lower range value
URV	Upper range value
TD	**Turn down**

Term/abbreviation	Explanation
Case 1 (1 bar (15 psi) measuring cell): Lower range value (LRV) $\lvert \leq \rvert$ Upper range value (URV)$\rvert$ Example: ▪ Lower range value (LRV) = 0 bar ▪ Upper range value (URV) =0.5 bar (7.5 psi) ▪ Nominal value (URL) =1 bar (15 psi) Turn down: TD = URL / $\lvert$ URV $\rvert$ = 2:1 Set span: URV − LRV = 0.5 bar (7.5 psi) This span is based on the zero point.	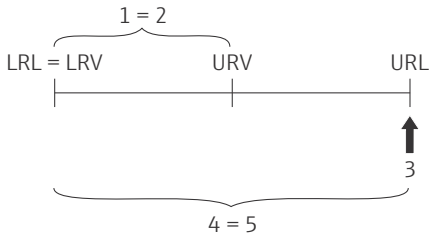 A0019780
Case 2 (1 bar (15 psi) measuring cell): Lower range value (LRV) $\lvert \leq \rvert$ Upper range value (URV)$\rvert$ Example: ▪ Lower range value (LRV) = 0 bar ▪ Upper range value (URV) = 0.5 bar (7.5 psi) ▪ Nominal value (URL) = 1 bar (15 psi) Turn down: TD = URL / $\lvert$ URV $\rvert$ = 2:1 Set span: URV − LRV = 0.5 bar (7.5 psi) This span is based on the zero point.	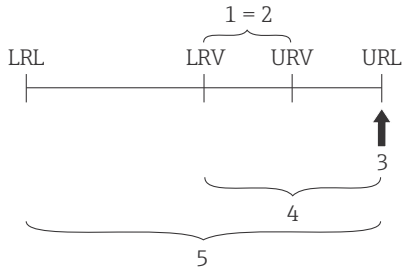 A0019783
Case 3 (1 bar (15 psi) measuring cell): Lower range value (LRV) $\lvert \geq \rvert$ Upper range value (URV)$\rvert$ Example: ▪ Lower range value (LRV) = −0.6 bar (−9 psi) ▪ Upper range value (URV) = 0 bar ▪ Nominal value (URL) = 1 bar (15 psi) Turn down: TD = URL / $\lvert$ LRV $\rvert$ = 1.67:1 Set span: URV − LRV = 0.6 bar (9 psi) This span is based on the zero point.	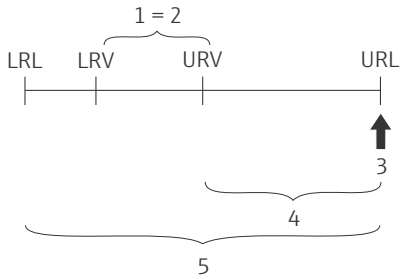 A0016451
	1 Set span *2 Zero-based span* *3 Nominal value ≙ Upper range limit (URL)* *4 Nominal measuring range* *5 Sensor measuring range*

Function and system design

Device features

	PMC71	PMP71	PMP75
	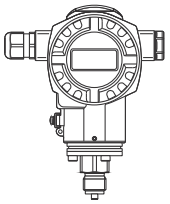 A0020461	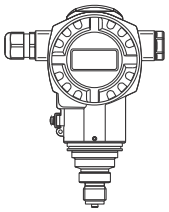 A0020463	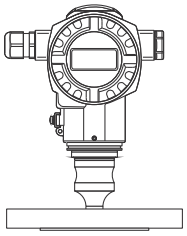 A0020464
	With capacitive measuring cell and ceramic process isolating diaphragm (Ceraphire®)	With piezoresistive measuring cell and metallic welded process isolating diaphragm	With diaphragm seal
Field of application	▪ Gauge pressure and absolute pressure ▪ Level		
Process connections	▪ Diverse thread ▪ DN 25 – DN 80 ▪ ASME 1 ½" – 4" ▪ JIS 50 A – 100 A	▪ Diverse thread ▪ DN 25 – DN 80 ▪ ASME 1 ½" – 4" ▪ JIS 25 A – 100 A ▪ Oval flange adapter ▪ Prepared for diaphragm seal mount	Wide range of diaphragm seals
Measuring ranges	from −100/0 to 100 mbar (−1.5/0 to 1.5 psi) to −1/0 to 40 bar (−15/0 to 600 psi)	from −400/0 to 400 mbar (−6/0 to 6 psi) to −1/0 to 700 bar (−15/0 to 10500 psi)	from −400/0 to 400 mbar (−6/0 to 6 psi) to −1/0 to 400 bar (−15/0 to 6000 psi)
OPL	max. 60 bar (900 psi)	max. 1050 bar (15750 psi)	max. 600 bar (9000 psi)
Process temperature range (temperature at process connection)	−25 to +125 °C (−13 to +257 °F)/ −20 to +150 °C (−4 to +302 °F) [1]	−40 to +125 °C (−40 to +257 °F)	−70 to +400 °C (−94 to +752 °F) (depends on filling oil)
Ambient temperature range	▪ Without LCD display: −40 to +85 °C (−40 to +185 °F) [2] ▪ With LCD display: −20 to +70 °C (−4 to +158 °F) ▪ Separate housing: −20 to +60 °C (−4 to +140 °F) ▪ Diaphragm seal systems depending on the version		
Reference accuracy	▪ Up to ±0.05 % of the set span ▪ PLATINUM version: up to ±0.025 % of the set span		Up to ±0.075 % of the set span
Supply voltage non-Ex	▪ 4 to 20 mA HART: 10.5 to 45 V DC ▪ PROFIBUS PA and FOUNDATION Fieldbus: 9 to 32 V DC		
Supply voltage Ex ia	10.5 to 30 V DC		
Output	4 to 20 mA with superimposed HART protocol, PROFIBUS PA or FOUNDATION Fieldbus		
Options		▪ Gold-rhodium coated process isolating diaphragm ▪ NACE-compliant materials	
	▪ Inspection certificate 3.1 ▪ HistoROM®/M-DAT memory chip ▪ Separate housing		
Specialties	▪ Metal-free measurement with PVDF connection ▪ Special cleaning of the transmitter to remove paint-wetting substances, for use in paint shops	▪ Process connections with minimum oil volume ▪ Gas-tight, elastomer-free	▪ Wide range of diaphragm seals ▪ For high media temperatures ▪ Process connections with minimum oil volume ▪ Completely welded versions

1) High-temperature version, see Product Configurator section "Additional options 1" or 110 "Additional options 2", option "T"
2) PMP71 and PMP75: lower temperatures on request

Measuring principle

Devices with ceramic process isolating diaphragm (Ceraphire®)

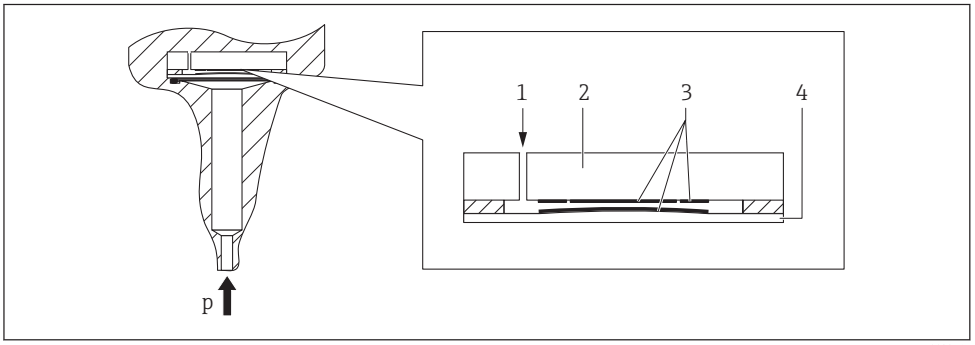

1 *Air pressure (relative pressure sensors)*
2 *Ceramic substrate*
3 *Electrodes*
4 *Ceramic process isolating diaphragm*

The ceramic sensor is an oil-free sensor, i.e. the process pressure acts directly on the robust ceramic process isolating diaphragm and causes it to deflect. A pressure-dependent change in capacitance is measured at the electrodes of the ceramic substrate and the process isolating diaphragm. The measuring range is determined by the thickness of the ceramic process isolating diaphragm.

Advantages:
- Guaranteed overload resistance up to 40 times the nominal pressure (see "OPL" column in table) → 🖹 11)
- The ultrapure 99.9% ceramic (Ceraphire®, see also "www.endress.com/ceraphire") ensures:
  - Extremely high chemical durability
  - Less relaxation
  - High mechanical durability
- Suitable for vacuums
- Secondary containment for enhanced integrity
- Process temperatures up to 150 °C (302 °F)

Devices with metallic process isolating diaphragm

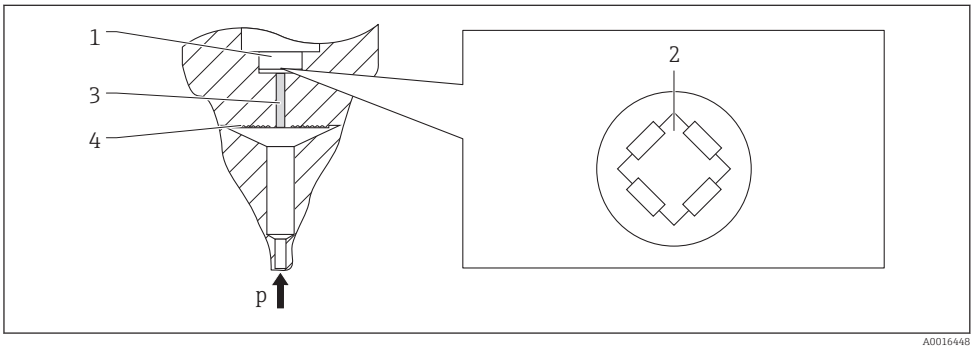

1 *Silicon measuring element, substrate*
2 *Wheatstone bridge*
3 *Channel with fill fluid*
4 *Metal process isolating diaphragm*

PMP71

The process pressure deflects the metal process isolating diaphragm of the sensor and a fill fluid transfers the pressure to a Wheatstone bridge (semiconductor technology). The pressure-dependent change in the bridge output voltage is measured and evaluated.

Advantages:
- Can be used for process pressures up to 700 bar (10 500 psi)
- High long-term stability
- Guaranteed overload resistance up to 4 times the nominal pressure
- Secondary containment for enhanced integrity
- Significantly reduced thermal effect e.g. compared to diaphragm seal systems with capillaries

PMP75

The operating pressure acts on the process isolating diaphragm of the diaphragm seal and is transferred to the process isolating diaphragm of the sensor by a diaphragm seal fill fluid. The process isolating diaphragm is deflected and a fill fluid transfers the pressure to a resistance measuring bridge. The pressure-dependent change in the bridge output voltage is measured and evaluated.

Advantages:
- Depending on the version, can be used for process pressures up to 400 bar (6 000 psi) and for extreme process temperatures
- High long-term stability
- Guaranteed overload resistance up to 4 times the nominal pressure
- Secondary containment for enhanced integrity

Product design

Level measurement (level, volume and mass):

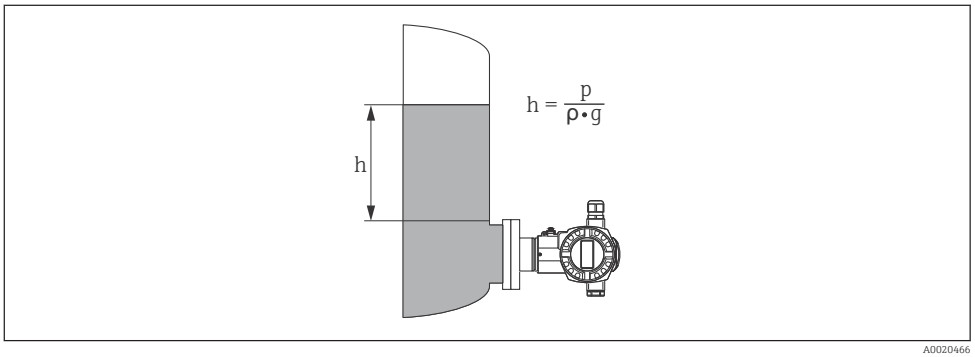

A0020466

h *Height (level)*
p *Pressure*
ρ *Density of the medium*
g *Gravitational constant*

Your benefits

- Selection of the level operating mode which is optimum for your application in the device software.
- Volume and mass measurements in any container shapes by means of a freely programmable characteristic curve.
- Choice of diverse level units with automatic unit conversion.
- A customized unit can be specified.
- Has a wide range of uses, e.g.
  - in the event of foam formation
  - in containers with agitators or screen fittings
  - in the event of liquid gases

Applications suitable for custody transfer measurement

The Parts Certificate is issued on the basis of the following standards:
- WELMEC guide 8.8 "General and Administrative Aspects of the Voluntary System of Modular Evaluation of Measuring instruments under the MID".
- OIML R117-1 Edition 2007 (E) "Dynamic measuring systems for liquids other than water".
- EN 12405-1/A1 Edition 2006 "Gas meters – Conversion devices – Part 1: Volume conversion".

Communication protocol

- 4 to 20 mA with HART communication protocol
- PROFIBUS PA
  - The Endress+Hauser devices meet the requirements of the FISCO model.
  - Due to a low current consumption of 13 mA ± 1 mA, the following number of devices can be operated on one bus segment if installing as per FISCO: up to 7 devices for Ex ia, CSA IS and FM IS applications or up to 27 devices for all other applications e.g. in non-hazardous areas, Ex nA etc.
    Further information on PROFIBUS PA can be found in Operating Instructions BA00034S "PROFIBUS DP/PA: Guidelines for planning and commissioning" and in the PNO Guideline.
- FOUNDATION Fieldbus
  - The Endress+Hauser devices meet the requirements of the FISCO model.
  - Due to a low current consumption of 15.5 mA ± 1 mA, the following number of devices can be operated on one bus segment if installing as per FISCO: up to 6 devices for Ex ia, CSA IS and FM IS applications or up to 24 devices for all other applications e.g. in non-hazardous areas, Ex nA etc.
    Further information on FOUNDATION Fieldbus, such as requirements for bus system components, can be found in Operating Instructions BA00013S "FOUNDATION Fieldbus Overview".

Input

Measured variable

Measured process variables

- Absolute pressure
- Gauge pressure

Calculated process variables

Level (level, volume or mass)

Measuring range

PMC71 – with ceramic process isolating diaphragm (Ceraphire®) for gauge pressure

Nominal value	Range limit		Lowest calibratable Span [1]	MWP	OPL	Vacuum resistance	Option [2]
	lower (LRL)	upper (URL)					
	[bar (psi)]	[bar (psi)]	[bar (psi)]	[bar (psi)]	[bar (psi)]	[bar_{abs} (psi_{abs})]	
100 mbar (1.5 psi)	−0.1 (−1.5)	+0.1 (+1.5)	0.005 (0.075)	2.7 (40.5)	4 (60)	0.7 (10.5)	1C
250 mbar (3.75 psi)	−0.25 (−4)	+0.25 (+4)	0.005 (0.075)	3.3 (49.5)	5 (75)	0.5 (7.5)	1E
400 mbar (6 psi)	−0.4 (−6)	+0.4 (+6)	0.005 (0.075)	5.3 (79.5)	8 (120)	0	1F
1 bar (15 psi)	−1 (−15)	+1 (+15)	0.01 (0.15)	6.7 (100.5)	10 (150)	0	1H
2 bar (30 psi)	−1 (−15)	+2 (+30)	0.02 (0.3)	12 (180)	18 (270)	0	1K
4 bar (60 psi)	−1 (−15)	+4 (+60)	0.04 (0.6)	16.7 (250.5)	25 (375)	0	1M
10 bar (150 psi)	−1 (−15)	+10 (+150)	0.1 (1.5)	26.7 (400.5)	40 (600)	0	1P
40 bar (600 psi)	−1 (−15)	+40 (+600)	0.4 (6)	40 (600)	60 (900)	0	1S

1) Turndown > 100:1 on request or can be set on device
2) Product Configurator, order code for "Sensor range; sensor over pressure limit"

PMC71 – with ceramic process isolating diaphragm (Ceraphire®) for absolute pressure

Nominal value	Range limit		Lowest calibratable Span [1]	MWP	OPL	Vacuum resistance	Option [2]
	lower (LRL)	upper (URL)					
	[bar (psi)]	[bar (psi)]	[bar (psi)]	[bar (psi)]	[bar (psi)]	[bar_{abs} (psi_{abs})]	
100 mbar (1.5 psi)	0	+0.1 (+1.5)	0.005 (0.075)	2.7 (40.5)	4 (60)	0	2C
250 mbar (3.75 psi)	0	+0.25 (+4)	0.005 (0.075)	3.3 (49.5)	5 (75)	0	2E
400 mbar (6 psi)	0	+0.4 (+6)	0.005 (0.075)	5.3 (79.5)	8 (120)	0	2F
1 bar (15 psi)	0	+1 (+15)	0.01 (0.15)	6.7 (100.5)	10 (150)	0	2H
2 bar (30 psi)	0	+2 (+30)	0.02 (0.3)	12 (180)	18 (270)	0	2K
4 bar (60 psi)	0	+4 (+60)	0.04 (0.6)	16.7 (250.5)	25 (375)	0	2M
10 bar (150 psi)	0	+10 (+150)	0.1 (1.5)	26.7 (400.5)	40 (600)	0	2P
40 bar (600 psi)	0	+40 (+600)	0.4 (6)	40 (600)	60 (900)	0	2S

1) Turndown > 100:1 on request or can be set on device
2) Product Configurator, order code for "Sensor range; sensor over pressure limit"

PMP71 and PMP75 – metallic process isolating diaphragm for gauge pressure

Nominal value	Range limit		Lowest calibratable Span [1]	MWP	OPL	Vacuum resistance [2]	Option [3]
	lower (LRL)	upper (URL)				Silicone oil/ Inert oil	
	[bar (psi)]	[bar (psi)]	[bar (psi)]	[bar (psi)]	[bar (psi)]	[bar_{abs} (psi_{abs})]	
400 mbar (6 psi)	−0.4 (−6)	+0.4 (+6)	0.005 (0.075)	4 (60)	6 (90)	0.01/0.04 (0.15/0.6)	1F
1 bar (15 psi)	−1 (−15)	+1 (+15)	0.01 (0.15)	6.7 (100)	10 (150)		1H
2 bar (30 psi)	−1 (−15)	+2 (+30)	0.02 (0.3)	13.3 (200)	20 (300)		1K
4 bar (60 psi)	−1 (−15)	+4 (+60)	0.04 (0.6)	18.7 (280.5)	28 (420)		1M
10 bar (150 psi)	−1 (−15)	+10 (+150)	0.1 (1.5)	26.7 (400.5)	40 (600)		1P
40 bar (600 psi)	−1 (−15)	+40 (+600)	0.4 (6)	100 (1500)	160 (2400)		1S
100 bar (1 500 psi)	−1 (−15)	+100 (+1500)	1.0 (15)	100 (1500)	400 (6000)		1U
400 bar (6 000 psi)	−1 (−15)	+400 (+6000)	4.0 (60)	400 (6000)	600 (9000)		1W
700 bar (10 500 psi) [4]	−1 (−15)	+700 (+10500)	7.0 (105)	700 (10500)	1050 (15750)		1X

1) Turndown > 100:1 on request or can be set on device
2) The vacuum resistance applies to the measuring cell under reference operating conditions. In the case of the PMP75, the pressure and temperature application limits of the selected filling oil must also be observed .
3) Product Configurator, order code for "Sensor range; sensor over pressure limit"
4) PMP71 only, PMP75 on request

PMP71 and PMP75 – metallic process isolating diaphragm for absolute pressure

Nominal value	Range limit		Lowest calibratable Span [1]	MWP	OPL	Vacuum resistance [2]	Option [3]
	lower (LRL)	upper (URL)				Silicone oil/ Inert oil	
	[bar (psi)]	[bar (psi)]	[bar (psi)]	[bar (psi)]	[bar (psi)]	[bar_{abs} (psi_{abs})]	
400 mbar (6 psi)	0	+0.4 (+6)	0.005 (0.075)	4 (60)	6 (90)	0.01/0.04 (0.15/0.6)	2F
1 bar (15 psi)	0	+1 (+15)	0.01 (0.15)	6.7 (100)	10 (150)		2H
2 bar (30 psi)	0	+2 (+30)	0.02 (0.3)	13.3 (200)	20 (300)		2K
4 bar (60 psi)	0	+4 (+60)	0.04 (0.6)	18.7 (280.5)	28 (420)		2M
10 bar (150 psi)	0	+10 (+150)	0.1 (1.5)	26.7 (400.5)	40 (600)		2P
40 bar (600 psi)	0	+40 (+600)	0.4 (6)	100 (1500)	160 (2400)		2S
100 bar (1 500 psi)	0	+100 (+1500)	1.0 (15)	100 (1500)	400 (6000)		2U
400 bar (6 000 psi)	0	+400 (+6000)	4.0 (60)	400 (6000)	600 (9000)		2W
700 bar (10 500 psi) [4]	0	+700 (+10500)	7.0 (105)	700 (10500)	1050 (15750)		2X

1) Turndown > 100:1 on request or can be set on device
2) The vacuum resistance applies to the measuring cell under reference operating conditions. In the case of the PMP75, the pressure and temperature application limits of the selected filling oil must also be observed .
3) Product Configurator, order code for "Sensor range; sensor over pressure limit"
4) PMP71 only, PMP75 on request

PMP71 - metallic process isolating diaphragms for absolute pressure with MID parts certificate

Nominal value	Range limit		Min. WP for gas applications suitable for custody transfer measurement	Min. WP for liquid applications suitable for custody transfer measurement	MWP	OPL	Vacuum resistance [1]	Option [2]
	lower (LRL) [3]	upper (URL) [4]					Silicone oil/ Inert oil	
[bar (psi)]	[bar (psi)]	[bar (psi)]	[bar (psi)]	[bar (psi)]	[bar (psi)]	[bar (psi)]	[bar (psi)]	
10 (150)	0	+10 (150)	0.5 (7.5)	0.5 (7.5)	26.7 (400.5)	40 (600)	0.01/0.04 (0.15/1)	MP
50 (750)	0	+50 (750)	10 (150)	2.5 (37.5)	100 (1500)	400 (6000)	0.01/0.04 (0.15/1)	MT
100 (1500)	0	+100 (1500)	5 (75)	5 (75)	100 (1500)	400 (6000)	0.01/0.04 (0.15/1)	MU

1) The vacuum resistance applies to the measuring cell under reference operating conditions
2) Product Configurator, order code for "Sensor range; sensor over pressure limit"
3) By default, the device is set to a lower range limit of 0 bar. Please specify in the order if the lower range limit is to be set to a different default value.
4) Max. WP for gas and liquid applications suitable for custody transfer measurement

Output

Output signal

- 4 to 20 mA with superimposed digital communication protocol HART, 2-wire
- Digital communication signal PROFIBUS PA (Profile 3.0), 2-wire
  - Signal coding: Manchester Bus Powered (MBP): Manchester II
  - Transmission rate: 31.25 KBit/s voltage mode
- Digital communication signal FOUNDATION Fieldbus, 2-wire
  - Signal coding: Manchester Bus Powered (MBP): Manchester II
  - Transmission rate: 31.25 KBit/s voltage mode

Output	Internal + LCD	External + LCD	Internal
	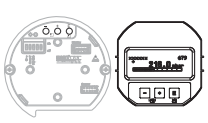 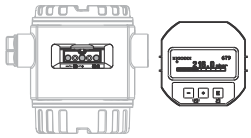 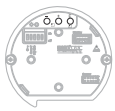 A0021280		
	Option [1]		
4 to 20mA HART	B	A	C
4 to 20mA HART, Li=0	E	D	F
PROFIBUS PA	N	M	O
FOUNDATION Fieldbus	Q	P	R

1) Product Configurator, order code for "Display, operation: "

Signal range 4 to 20 mA

3.8 mA to 20.5 mA

Signal on alarm

As per NAMUR NE43

4 to 20 mA HART

- Max. alarm: Can be set between 21 to 23 mA (factory setting: 22 mA)
- Hold measured value: last measured value is held
- Min. alarm: 3.6 mA

PROFIBUS PA

Can be set in the Analog Input Block.

Options:
- Last Valid Out Value (factory setting)
- Fail Safe Value
- Status bad

FOUNDATION Fieldbus

Can be set in the Analog Input Block.

Options:
- Last Good Value
- Fail Safe Value (factory setting)
- Wrong Value

Maximum load - 4 to 20 mA HART

In order to guarantee sufficient terminal voltage in two-wire devices, a maximum load resistance R (including line resistance) must not be exceeded depending on the supply voltage U_0 of the supply unit. In the following load diagrams, observe the position of the jumper and the explosion protection:

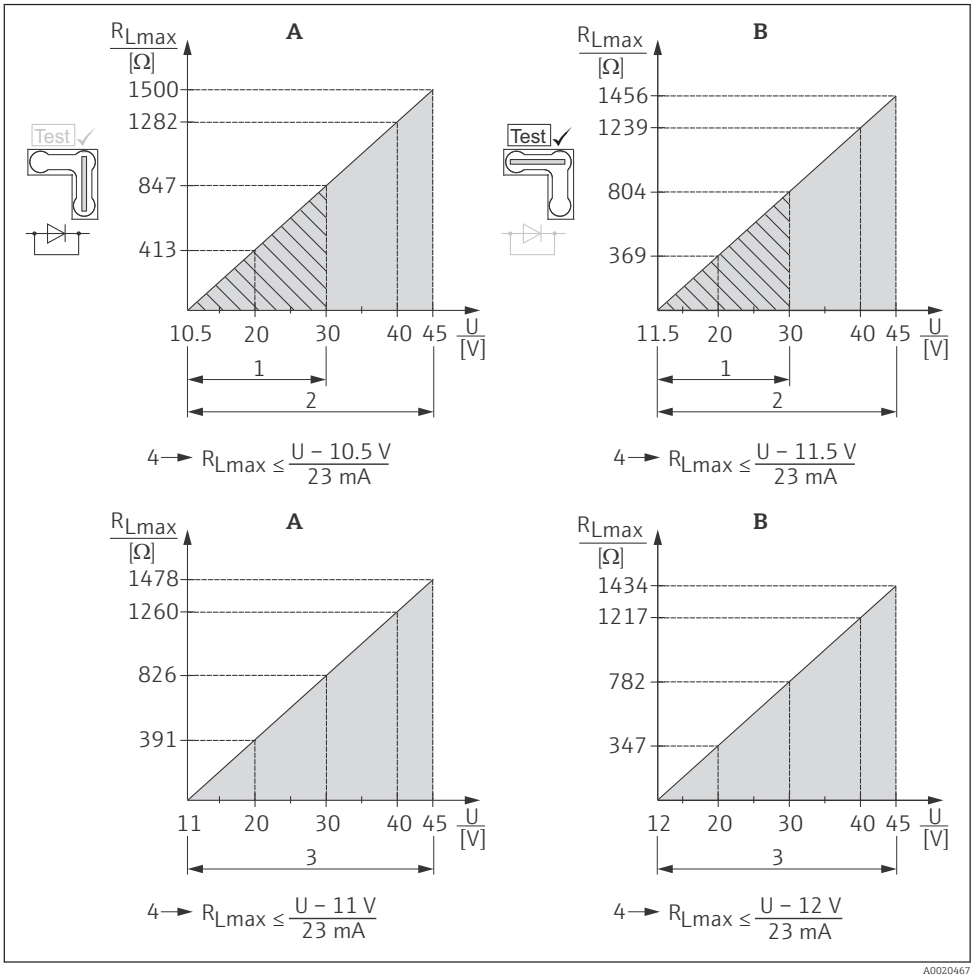

A0020467

A Jumper for 4 to 20 mA test signal set to "Non-test" position
B Jumper for 4 to 20 mA test signal set to "Test" position
1 Power supply 10.5 (11.5) to 30 V DC for 1/2 G, 1 GD, 1/2 GD, FM IS, CSA IS, IECEx ia, NEPSI Ex ia
2 Power supply 10.5 (11.5) to 45 V DC for devices for non-hazardous areas, 1/2 D, 1/3 D, 2 G Ex d, 3 G Ex nA, FM XP, FM DIP, FM NI, CSA XP, CSA dust ignition-proof, NEPSI Ex d
3 Power supply 11 (12) to 45 V DC for PMC71, Ex d[ia], NEPSI Ex d[ia]
4 R_{Lmax} maximum load resistance
U Supply voltage

When operating via a handheld terminal or via a PC with an operating program, a minimum communication resistance of 250 Ω must be taken into account.

Dead time, time constant

Presentation of the dead time and the time constant:

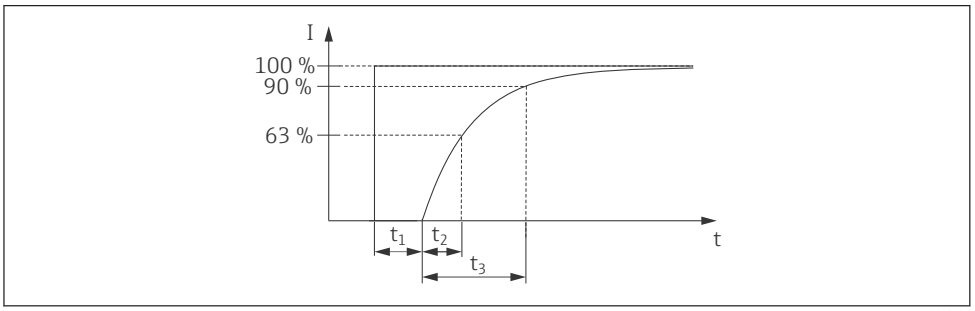

Dynamic behavior: current output

Type		Measuring cell	Dead time (t_1) [ms]	Time constant T63 (t_2) [ms]	Time constant T90 (t_3) [ms]
PMC71	max.	All	90	120	276
PMP71	max.	▪ 400 mbar (6 psi) ▪ ≥ 1 bar (15 psi)	45	▪ 70 ▪ 35	▪ 161 ▪ 81
PMP75	max.	PMP71 + influence of the diaphragm seal			

Dynamic behavior: Digital output (HART electronics)

A typical burst rate of 300 ms results in the following behavior:

Type		Measuring cell	Dead time (t_1) [ms]	Dead time (t_1) [ms] + Time constant T63 (t_2) [ms]	Dead time (t_1) [ms] + Time constant T90 (t_3) [ms]
PMC71	Min.	All	250	370	436
	max.		1050	1170	1236
PMP71	Min.	▪ 400 mbar (6 psi) ▪ ≥ 1 bar (15 psi)	205	▪ 275 ▪ 240	▪ 321 ▪ 241
	max.	▪ 400 mbar (6 psi) ▪ ≥ 1 bar (15 psi)	1005	▪ 1075 ▪ 1040	▪ 1121 ▪ 1041
PMP75	max.	PMP71 + influence of the diaphragm seal			

Reading cycle

- Acyclic: max. 3/s, typically 1/s (depending on command # and number of preambles)
- Cyclic (burst): max. 3/s, typically 2/s

The device commands the BURST MODE functionality for cyclical value transmission via the HART communication protocol.

Cycle time (update time)

Cyclic (burst): min. 300 ms

Response time

- Acyclic: min. 330 ms, typically 590 ms (depending on command # and number of preambles)
- Cyclic (burst): min. 160 ms, typically 350 ms (depending on command # and number of preambles)

Dynamic behavior: PROFIBUS PA

A typical PLC cycle time of 1 s results in the following behavior:

Type		Measuring cell	Dead time (t_1) [ms]	Dead time (t_1) [ms] + Time constant T63 (t_2) [ms]	Dead time (t_1) [ms] + Time constant T90 (t_3) [ms]
PMC71	Min.	All	125	245	311
	max.		1325	1445	1511

Type		Measuring cell	Dead time (t_1) [ms]	Dead time (t_1) [ms] + Time constant T63 (t_2) [ms]	Dead time (t_1) [ms] + Time constant T90 (t_3) [ms]
PMP71	Min.	▪ 400 mbar (6 psi) ▪ ≥ 1 bar (15 psi)	80	▪ 150 ▪ 115	▪ 196 ▪ 116
	max.	▪ 400 mbar (6 psi) ▪ ≥ 1 bar (15 psi)	1280	▪ 1350 ▪ 1315	▪ 1396 ▪ 1316
PMP75	max.	PMP71 + influence of the diaphragm seal			

Reading cycle (PLC)

- Acyclic: Typically 25/s
- Cyclic: Typically 30/s (depending on the number and type of the function blocks used in the closed-control loop)

Cycle time (update time)

Min. 200 ms

The cycle time in a bus segment in cyclic data communication depends on the number of devices, on the segment coupler used and on the internal PLC cycle time. A new measured value can be determined up to five times a second.

Response time

- Acyclic: Approx. 60 ms to 70 ms (depending on Min. Slave Interval)
- Cyclic: Approx. 10 ms to 13 ms (depending on Min. Slave Interval)

Dynamic behavior: FOUNDATION Fieldbus

A typical configuration for the macro cycle time (host system) of 1 s results in the following behavior:

Type		Measuring cell	Dead time (t_1) [ms]	Dead time (t_1) [ms] + Time constant T63 (t_2) [ms]	Dead time (t_1) [ms] + Time constant T90 (t_3) [ms]
PMC71	Min.	All	135	255	321
	max.		1135	1255	1321
PMP71	Min.	▪ 400 mbar (6 psi) ▪ ≥ 1 bar (15 psi)	90	▪ 160 ▪ 125	▪ 206 ▪ 126
	max.	▪ 400 mbar (6 psi) ▪ ≥ 1 bar (15 psi)	1090	▪ 1160 ▪ 1125	▪ 1206 ▪ 1126
PMP75	max.	PMP71 + influence of the diaphragm seal			

Reading cycle

- Acyclic: Typically 10/s
- Cyclic: max. 10/s (dependent on the number and type of function blocks used in a closed-control loop)

Cycle time (update time)

Cyclic: Min. 100 ms

Response time

- Acyclic: Typically 100 ms (for standard bus parameter settings)
- Cyclic: max. 20 ms (for standard bus parameter settings)

Damping

A damping affects all outputs (output signal, display):
- Via onsite display, handheld terminal or PC with operating program, continuous from 0 to 999 s
- Also for HART and PROFIBUS PA: Via DIP switch on the electronic insert, switch position "on" = set value and "off"
- Factory setting: 2 s

Alarm current

Description	Option [1]
Min alarm current	J
HART burst mode PV	
Min alarm current + HART burst mode PV	

1) Product Configurator, order code for "Additional options 1" and "Additional options 2"

Firmware version

Description	Option [1]
02.20.zz, HART, DevRev22	72
02.11.zz, HART, DevRev21	73
04.00.zz, FF, DevRev07	74
04.01.zz, PROFIBUS PA, DevRev03	75
02.10.zz, HART, DevRev21	76
03.00.zz, FF, DevRev06	77
04.00.zz, PROFIBUS PA	78

1) Product Configurator, order code for "Firmware version"

Protocol-specific data

HART

Manufacturer ID	17 (11 hex)
Device type code	24 (18 hex)
Device revision	▪ 21 (15 hex) - SW version 02.1y.zz - HART specification 5 ▪ 22 (16 hex) - SW version 02.2y.zz - HART specification 7
HART specification	▪ 5 ▪ 7
DD revision	▪ 4 (Russian in language selection) for device revision 21 ▪ 3 (Dutch in language selection) for device revision 21 ▪ 1 for device revision 22
Device description files (DTM, DD)	Information and files at: ▪ www.endress.com ▪ www.hartcomm.org
HART load	Min. 250 Ω
HART device variables	The measured values are assigned to the device variables as follows: **Measured values for PV (primary variable)** ▪ Pressure ▪ Level ▪ Tank content **Measured values for SV, TV (second and third variable)** Pressure **Measured values for QV (fourth variable)** Temperature
Supported functions	▪ Burst mode ▪ Additional transmitter status ▪ Device locking ▪ Alternative operating modes

PROFIBUS PA

Manufacturer ID	17 (11 hex)
Identification number	1541 hex

Profile version	3.0 ▪ SW version 03.00.zz ▪ SW version 04.00.zz 3.02 SW version 04.01.zz (device revision 3) Compatibility with SW version 03.00.zz and higher.
GSD revision	▪ 4 (SW version 3.00.zz and 4.00.zz) ▪ 5 (device revision 3)
DD revision	▪ 1 (SW version 3.00.zz and 4.00.zz) ▪ 1 (device revision 3)
GSD file	Information and files at: ▪ www.endress.com ▪ www.profibus.org
DD files	
Output values	**Measured value for PV (via Analog Input Function Block)** ▪ Pressure ▪ Level ▪ ▪ Tank content **Measured value for SV** ▪ Pressure ▪ Temperature
Input values	Input value sent from PLC, can be shown on display
Supported functions	▪ Identification & maintenance Simplest device identifier on the control system and nameplate ▪ Condensed status (only with Profile Version 3.02) ▪ Automatic ID number adjustment and switchable to the following ID numbers (only with Profile Version 3.02): – 9700: Profile-specific transmitter identification number with the "Classic" or "Condensed" status". – 1501: Compatibility mode for the old Cerabar S generation (PMC731, PMP731, PMC631, PMP635). – 1541: Identification number for the new Cerabar S generation (PMC71, PMP71, PMP75). ▪ Device locking: The device can be locked by hardware or software.

FOUNDATION Fieldbus

Manufacturer ID	452B48 hex
Device type	1007 hex
Device revision	▪ 6 - SW version 03.00.zz ▪ 7 - SW version 04.00.zz (FF-912)
DD revision	▪ 3 (device revision 6) ▪ 2 (device revision 7)
CFF revision	▪ 4 (device revision 6) ▪ 1 (device revision 7)
DD files	Information and files at: ▪ www.endress.com ▪ www.fieldbus.org
CFF files	
Device tester version (ITK version)	▪ 5.0 (device revision 6) ▪ 6.01 (device revision 7)
Number of ITK test campaign	▪ IT054600 (Device Revision 6) ▪ IT085500 (Device Revision 7)
Link Master (LAS) capable	Yes
Choice of "Link Master" and "Basic Device"	Yes, factory setting is Basic Device
Node address	Factory setting: 247 (F7 hex)

Supported functions	Field diagnostics profile (only with FF912) The following methods are supported: ▪ Restart ▪ Configure error as warning or alarm ▪ HistoROM ▪ Peakhold ▪ Alarm info ▪ Sensor trim
Number of VCRs	▪ 44 (device revision 6) ▪ 24 (device revision 7)
Number of link objects in VFD	50

Virtual communication references (VCRs)

	Device revision 6	Device revision 7
Permanent entries	44	1
Client VCRs	0	0
Server VCRs	5	10
Source VCRs	8	43
Sink VCRs	0	0
Subscriber VCRs	12	43
Publisher VCRs	19	43

Link settings

	Device revision 6	Device revision 7
Slot time	4	4
Min. Inter PDU delay	12	10
Max. response delay	10	10

Transducer Blocks

Block	Content	Output values
TRD1 Block	Contains all parameters related to the measurement	▪ Pressure or level (channel 1) ▪ Process temperature (channel 2)
Service Block	Contains service information	▪ Pressure after damping (channel 3) ▪ Pressure peakhold indicator (channel 4) ▪ Counter for max. pressure transgressions (channel 5)
Diagnostic Block	Contains diagnostic information	Error code via DI channels (channel 0 to 16)
Display Block	Contains parameters to configure the onsite display	No output values

Function blocks

Block	Content	Number blocks	Execution time		Functionality	
			Device Revision 6	Device Revision 7	Device Revision 6	Device Revision 7
Resource Block	This block contains all the data that uniquely identifies the device; it is an electronic version of a nameplate for the device.	1			enhanced	enhanced
Analog Input Block 1 Analog Input Block 2	The AI Block receives the measuring data from the Sensor Block, (selectable via a channel number) and makes the data available to other function blocks at its output. Enhancement: Digital outputs for process alarms, fail safe mode	2	45 ms	45 ms (without trend and alarm reports)	enhanced	enhanced
Digital Input Block	This block contains the discrete data of the Diagnose Block (selectable via a channel number 0 to 16) and provides them for other blocks at the output.	1	40 ms	30 ms	standard	enhanced
Digital Output Block	This block converts the discrete input and thus initiates an action (selectable via a channel number) in the DP Flow Block or in the Service Block. Channel 1 resets the counter for max. pressure transgressions.	1	60 ms	40 ms	standard	enhanced
PID Block	This block is used as a proportional-integral-derivative controller and can be used universally for closed-loop-control in the field. It enables cascade mode and feedforward control. Input IN can be indicated on the display. The selection is performed in the Display Block (DISPLAY_MAIN_LINE_CONTENT).	1	120 ms	70 ms	standard	enhanced
Arithmetic Block	This block is designed to permit simple use of popular measurement math functions. The user does not have to know how to write equations. The math algorithm is selected by name, chosen by the user for the function to be performed.	1	50 ms	40 ms	standard	enhanced
Input Selector Block	The Input Selector Block facilitates the selection of up to four inputs and generates an output based on the configured action. This block normally receives its inputs from AI Blocks. The block performs maximum, minimum, average and 'first good' signal selection. Inputs IN1 to IN4 can be indicated on the display. The selection is performed in the Display Block (DISPLAY_MAIN_LINE_CONTENT).	1	35 ms	35 ms	standard	enhanced
Signal Characterizer Block	The Signal Characterizer Block has two sections, each with an output that is a non-linear function of the respective input. The non-linear function is generated by a single look-up table with 21 arbitrary x-y pairs.	1	30 ms	40 ms	standard	enhanced
Integrator Block	The Integrator Block integrates a variable as a function of the time or accumulates the counts from a Pulse Input Block. The block can be used as a totalizer that counts up until a reset, or as a batch totalizer whereby the integrated value is compared against a target value generated before or during the control routine and generates a binary signal when the target value is reached.	1	35 ms	40 ms	standard	enhanced
Analog Alarm Block	This block contains all process alarm conditions (working like a comparator) and represents them at the output.	1	35 ms	35 ms	standard	enhanced

Additional function block information:

Instantiatable function blocks	YES	YES
Number of additional instantiatable function blocks	11	5

Power supply

WARNING

Electrical safety is compromised by an incorrect connection.

- When using the measuring device in hazardous areas, the relevant national standards and regulations as well as the Safety Instructions or Installation or Control Drawings must be observed → 112.
- All explosion protection data are given in separate documentation which is available upon request. The Ex documentation is supplied as standard with all Ex-systems → 112.
- Devices with integrated overvoltage protection must be grounded → 26.
- Protective circuits against reverse polarity, HF influences and overvoltage peaks are integrated.

Terminal assignment

4 to 20 mA HART

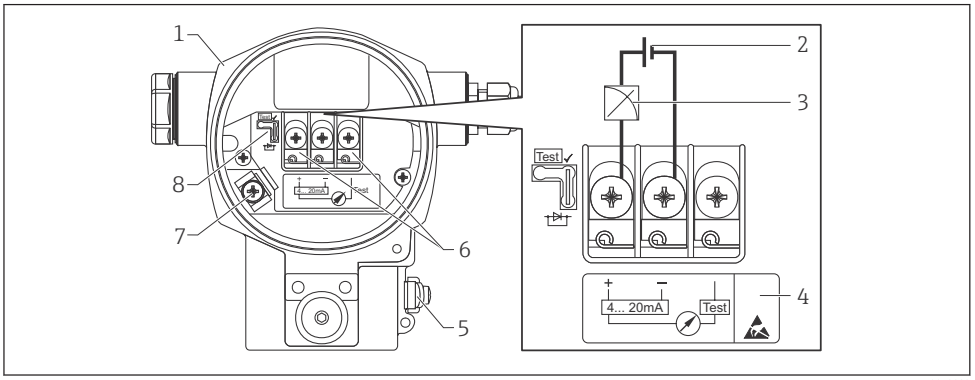

A0019989

1 *Housing*
2 *Supply voltage*
3 *4 to 20 mA*
4 *Devices with integrated overvoltage protection are labeled "OVP" (overvoltage protection) here.*
5 *External ground terminal*
6 *4 to 20 mA test signal between positive and test terminal*
7 *Internal ground terminal*
8 *Jumper for 4 to 20 mA test signal*

PROFIBUS PA and FOUNDATION Fieldbus

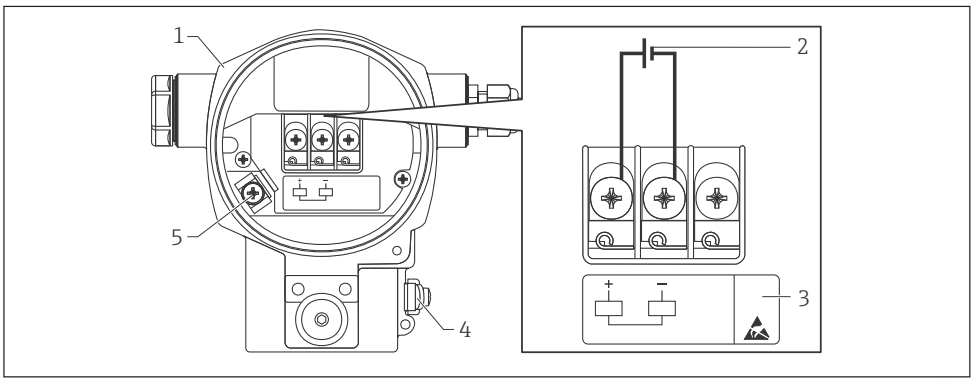

A0020158

1 *Housing*
2 *Supply voltage*
3 *Devices with integrated overvoltage protection are labeled "OVP" (overvoltage protection) here.*
4 *External ground terminal*
5 *Internal ground terminal*

Supply voltage

4 to 20 mA HART

Electronic version	Jumper for 4 to 20 mA test signal in "Test" position (delivery status)	Jumper for 4 to 20 mA test signal in "Non-test" position
Version for non-hazardous area	11.5 to 45 V DC	10.5 to 45 V DC
Intrinsically safe	11.5 to 30 V DC	10.5 to 30 V DC
▪ Other types of protection ▪ Devices without certificate	11.5 to 45 V DC (versions with 35 V DC plug-in connection)	10.5 to 45 V DC (versions with 35 V DC plug-in connection)

Measuring a 4 to 20 mA test signal

A 4 to 20 mA test signal may be measured via the positive and test terminal without interrupting the measurement. The minimum supply voltage of the device can be reduced by simply changing the position of the jumper. As a result, operation is also possible with lower voltage sources. Observe the position of the jumper in accordance with the following table.

Jumper position for test signal	Description
A0019992	▪ Measurement of 4 to 20 mA test signal via the positive and test terminal: Possible. (Thus, the output current can be measured without interruption via the diode.) ▪ Delivery status ▪ Minimum supply voltage: 11.5 V DC
A0019993	▪ Measurement of 4 to 20 mA test signal via positive and test terminal: Not possible. ▪ Minimum supply voltage: 10.5 V DC

PROFIBUS PA

- Version for non-hazardous areas: 9 to 32 V DC
- Ex ia: 10.5 to 30 V DC

FOUNDATION Fieldbus

- Version for non-hazardous areas: 9 to 32 V DC
- Ex ia: 10.5 to 30 V DC

Current consumption

- PROFIBUS PA: 13 mA ±1 mA, switch-on current corresponds to IEC 61158-2, Clause 21
- FOUNDATION Fieldbus: 15.5 mA ±1 mA, switch-on current corresponds to IEC 61158-2, Clause 21

Electrical connection

PROFIBUS PA

The digital communication signal is transmitted to the bus via a 2-wire connection. The bus also provides the power supply. For further information on the network structure and grounding, and for further bus system components such as bus cables, see the relevant documentation, e.g. Operating Instructions BA00034S "PROFIBUS DP/PA: Guidelines for planning and commissioning" and the PNO Guideline.

FOUNDATION Fieldbus

The digital communication signal is transmitted to the bus via a 2-wire connection. The bus also provides the power supply. For further information on the network structure and grounding and for further bus system components such as bus cables, see the relevant documentation, e.g. Operating Instructions BA00013S "FOUNDATION Fieldbus Overview" and the FOUNDATION Fieldbus Guideline.

Terminals

- Supply voltage and internal ground terminal: 0.5 to 2.5 mm² (20 to 14 AWG)
- External ground terminal: 0.5 to 4 mm² (20 to 12 AWG)

Cable entries

Approval	Cable gland	Clamping area
Standard, II 1/2 G Ex ia, IS	Plastic M20x1.5	5 to 10 mm (0.2 to 0.39 in)
ATEX II 1/2 D, II 1/3 D, II 1/2 GD Ex ia, II 1 GD Ex ia, II 3 G Ex nA	Metal M20x1.5 (Ex e)	7 to 10.5 mm (0.28 to 0.41 in)

For additional technical data, see section on housing → 📄 45

Connector

Devices with Harting plug Han7D

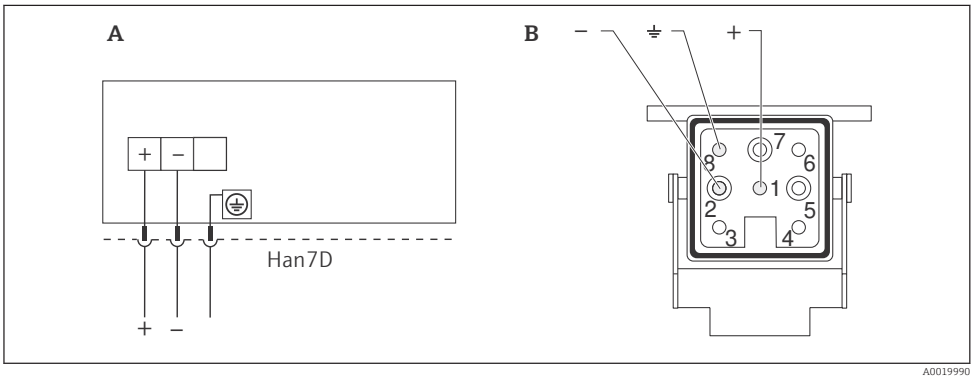

A0019990

A Electrical connection for devices with Harting plug Han7D
B View of the plug-in connection on the device

Material: CuZn, gold-plated plug-in jack and plug

Cable version connection

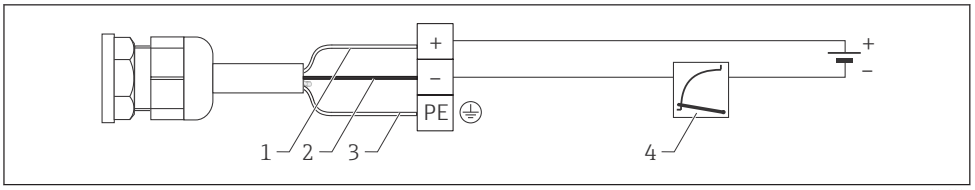

A0019991

1 rd = red
2 bk = black
3 gnye = green
4 4 to 20 mA

Devices with M12 plug

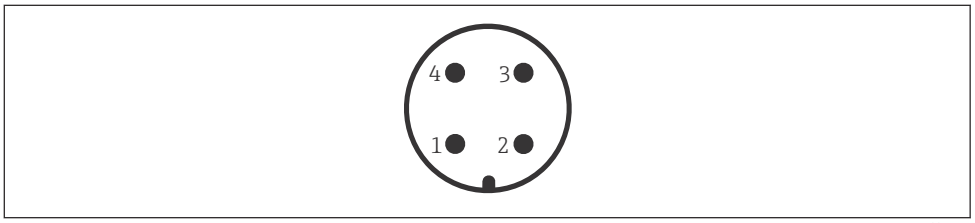

A0011175

1 Signal +
2 Not assigned
3 Signal –
4 Ground

Endress+Hauser offers the following accessories for devices with an M12 plug:

Plug-in jack M 12x1, straight
- Material: Body PA; coupling nut CuZn, nickel-plated
- Degree of protection (fully locked): IP67
- Order number: 52006263

Plug-in jack M 12x1, elbowed
- Material: Body PBT/PA; coupling nut GD-Zn, nickel-plated
- Degree of protection (fully locked): IP67
- Order number: 71114212

Cable 4x0.34 mm^2 (20 AWG) with M12 socket, elbowed, screw plug, length 5 m (16 ft)
- Material: Body PUR; coupling nut CuSn/Ni; cable PVC
- Degree of protection (fully locked): IP67
- Order number: 52010285

Devices with 7/8" plug

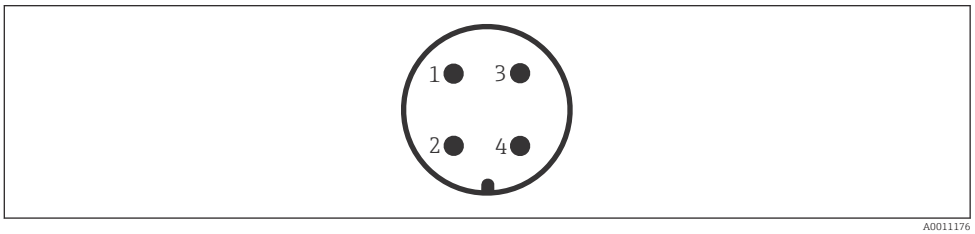

A0011176

1 Signal –
2 Signal +
3 Not assigned
4 Shielding

External thread: 7/8 - 16 UNC
- Material: 316L (1.4401)
- Degree of protection: IP68

Cable specification

HART

- Endress+Hauser recommends using shielded, twisted-pair two-wire cables.
- Cable outer diameter: 5 to 9 mm (0.2 to 0.35 in) depending on the cable entry used → 📄 24

PROFIBUS PA

Use a twisted, shielded twin-core cable, preferably cable type A.

For further information regarding cable specifications, see the Operating Instructions BA00034S "PROFIBUS DP/PA: Guidelines for planning and commissioning", the PNO guideline 2.092 "PROFIBUS PA User and Installation Guideline" and IEC 61158-2 (MBP).

FOUNDATION Fieldbus

Use a twisted, shielded twin-core cable, preferably cable type A.

For further information on the cable specifications, see Operating Instructions BA00013S "FOUNDATION Fieldbus Overview", FOUNDATION Fieldbus Guideline and IEC 61158-2 (MBP).

Start-up current

12 mA

Residual ripple

Without influence on 4 to 20 mA signal up to ±5% residual ripple within the permitted voltage range [according to HART hardware specification HCF_SPEC-54 (DIN IEC 60381-1)].

Overvoltage protection (optional)

- Overvoltage protection:
  - Nominal functioning DC voltage: 600 V
  - Nominal discharge current: 10 kA
- Surge current check î = 20 kA satisfied as per DIN EN 60079-14: 8/20 µs
- Arrester AC current check I = 10 A satisfied

Ordering information: Product Configurator, order code for "Additional options 1" or Additional options 2", version "M"

NOTICE

Device could be destroyed!

► Devices with integrated overvoltage protection must be grounded.

Influence of power supply

≤0.0006 % of URL/1 V

Performance characteristics of ceramic process isolating diaphragm

Reference operating conditions

- As per IEC 60770
- Ambient temperature T_U = constant, in range: +21 to +33 °C (+70 to +91 °F)
- Humidityφ= constant, in range: 5 to 80 % rH
- Ambient pressure p_A = constant, in range: 860 to 1060 mbar (12.47 to 15.37 psi)
- Position of measuring cell = constant, in range: horizontal ±1° (see also "Influence of the installation position" section → 27)
- Input of LOW SENSOR TRIM and HIGH SENSOR TRIM for lower range value and upper range value
- Zero based span
- Material of process isolating diaphragm: Al_2O_3 (aluminum-oxide ceramic, Ceraphire®)
- Supply voltage: 24 V DC ±3 V DC
- Load with HART: 250 Ω

Measuring uncertainty for small absolute pressure measuring ranges

The smallest expanded uncertainty of measurement that can be returned by our calibration standards is:
- in range 1 to 30 mbar (0.0145 to 0.435 psi): 0.4 % of reading
- in range < 1 mbar (0.0145 psi): 1 % of reading.

Influence of the installation position

≤ 0.18 mbar (0.003 psi). Device has rotated 180° and process connection is pointing upwards.

A position-dependent zero point shift can be corrected → 34 and → 102.

Different tightening torques (e.g. for Clamp or Varivent connections) can merely cause a shift in the zero point. This effect is corrected by position adjustment during commissioning.

Resolution

- Current output: 1 µA
- Display: can be set (factory setting: presentation of the maximum accuracy of the transmitter)

Reference accuracy

The reference accuracy contains the non-linearity [DIN EN 61298-2 3.11] including the pressure hysteresis [DIN EN 61298-23.13] and non-repeatability [DIN EN 61298-2 3.11] in accordance with the limit point method as per [DIN EN 60770].

Measuring cell standard	Sensor	Reference accuracy in %
100 mbar (1.5 psi)	Gauge pressure	▪ TD 1:1 to TD 10:1 = ±0.075 ▪ TD > 10:1 = ±0.0075 x TD
100 mbar (1.5 psi)	Absolute pressure	▪ TD 1:1 to TD 5:1 = ±0.075 ▪ TD > 5:1 = ±0.015 x TD
250 mbar (3.75 psi)	Gauge pressure/ Absolute pressure	▪ TD 1:1 to TD 10:1 = ±0.075 ▪ TD > 10:1 = ±0.0075 x TD
400 mbar (6 psi), 1 bar (15 psi), 2 bar (30 psi), 4 bar (60 psi), 10 bar (150 psi), 40 bar (600 psi)	Gauge pressure/ Absolute pressure	▪ TD 1:1 to TD 10:1 = ±0.05 ▪ TD > 10:1 = ±0.005 x TD

Platinum measuring cell	Sensor	Reference accuracy in %
100 mbar (1.5 psi), 250 mbar (3.75 psi)	Gauge pressure/ Absolute pressure	TD 1:1 = ±0.05
400 mbar (6 psi), 1 bar (15 psi)	Gauge pressure/ Absolute pressure	TD 1:1 = ±0.035
2 bar (30 psi), 4 bar (60 psi)	Gauge pressure	TD 1:1 = ±0.025
2 bar (30 psi), 4 bar (60 psi)	Absolute pressure	TD 1:1 = ±0.035
10 bar (150 psi), 40 bar (600 psi)	Gauge pressure/ Absolute pressure	TD 1:1 = ±0.035

Thermal change of the zero output and the output span

Standard version

Measuring cell	−10 to +60 °C (+14 to +140 °F)	−20 to −10 °C (−4 to +14 °F) +60 to +125 °C (+140 to +257 °F)
	% of the set span	
100 mbar (1.5 psi), 250 mbar (3.75 psi), 400 mbar (6 psi)	±(0.088 x TD + 0.088)	±(0.138 x TD + 0.138)
1 bar (15 psi), 2 bar (30 psi), 4 bar (60 psi), 10 bar (150 psi), 40 bar (600 psi)	±(0.088 x TD + 0.04)	±(0.175 x TD + 0.075)

High-temperature version

Measuring cell	Sensor	−10 to +60 °C (+14 to +140 °F)	+60 to +150 °C (140 to +302 °F)
		% of the set span	
100 mbar (1.5 psi), 250 mbar (3.75 psi), 400 mbar (6 psi)	Gauge pressure	±(0.088 x TD + 0.088)	±(0.75 x TD)
1 bar (15 psi), 2 bar (30 psi), 4 bar (60 psi), 10 bar (150 psi), 40 bar (600 psi)	Gauge pressure	±(0.088 x TD + 0.040)	±(0.50 x TD)
100 mbar (1.5 psi)	Absolute pressure	±(0.088 x TD + 0.088)	±(1.25 x TD)
250 mbar (4 psi), 400 mbar (6 psi)	Absolute pressure	±(0.088 x TD + 0.088)	±(0.75 x TD)
1 bar (15 psi), 2 bar (30 psi), 4 bar (60 psi), 10 bar (150 psi)	Absolute pressure	±(0.088 x TD + 0.040)	±(0.75 x TD)
40 bar (600 psi)	Absolute pressure	±(0.088 x TD + 0.040)	±(0.50 x TD)

Total performance

The "Total performance" specification comprises the non-linearity including hysteresis and non-reproducibility as well as the thermal change of the zero point. For devices with NBR or HNBR seals, the values must be multiplied by a factor of 3. All specifications apply to the temperature range−10 to +60 °C (+14 to +140 °F)and a turndown of 1:1.

Measuring cell	Standard version	High-temperature version
	% of URL	
100 mbar (1.5 psi), 250 mbar (3.75 psi), 400 mbar (6 psi)	±0.2	±0.46
1 bar (15 psi), 2 bar (30 psi), 4 bar (60 psi), 10 bar (150 psi), 40 bar (600 psi)	±0.15	±0.46

Long-term stability

- For measuring ranges ≥ 1 bar (15 psi) ± 0.05 % of URL/year
- 100 mbar (1.5 psi)to40 bar (600 psi): ± 0.2 % of URL/10 years
- 100 mbar (1.5 psi)to40 bar (600 psi) (absolute pressure sensor): ± 0.3 % of URL/10 years

Total error

The total error comprises the total performance and long-term stability. For devices with NBR or HNBR seals, the values must be multiplied by a factor of 3. All specifications apply to the temperature range −10 to +60 °C (+14 to +140 °F) and a turndown of 1:1.

Measuring cell	Standard version	High-temperature version
	% of URL/year	
100 mbar (1.5 psi), 250 mbar (3.75 psi), 400 mbar (6 psi)	±0.25	±0.51
1 bar (15 psi), 2 bar (30 psi), 4 bar (60 psi), 10 bar (150 psi), 40 bar (600 psi)	±0.2	±0.51

Warm-up period

- 4 to 20 mA HART: < 10 s
- PROFIBUS PA: 6 s
- FOUNDATION Fieldbus: 50 s

Performance characteristics of the metallic process isolating diaphragm

Reference operating conditions

- As per IEC 60770
- Ambient temperature T_U = constant, in range: +21 to +33 °C (+70 to +91 °F)
- Humidityφ= constant, in range: 5 to 80 % rH
- Ambient pressure p_A = constant, in range: 860 to 1060 mbar (12.47 to 15.37 psi)
- Position of measuring cell = constant, in range: horizontal ±1° (see also "Influence of the installation position" section → 30)
- Input of LOW SENSOR TRIM and HIGH SENSOR TRIM for lower range value and upper range value
- Zero based span
- Material of the process isolating diaphragm: AISI 316L (1.4435)
- Filling oil: silicone oil
- Supply voltage: 24 V DC ±3 V DC
- Load with HART: 250 Ω

Measuring uncertainty for small absolute pressure measuring ranges

The smallest expanded uncertainty of measurement that can be returned by our calibration standards is:
- in range 1 to 30 mbar (0.0145 to 0.435 psi): 0.4 % of reading
- in range < 1 mbar (0.0145 psi): 1 % of reading.

Influence of the installation position

PMP71: Device rotated 180°, process connection pointing upwards.
- Process connections thread G 1 A, G 1 ½, G 2, 1 ½ MNPT, 2 MNPT, M 44x1,25, EN/DIN, ASME and JIS flanges: ≤ 10 mbar (0.15 psi).
- Process connections thread: G ½, ½ MNPT, JIS G ½, JIS R ½, M20x1.5: ≤ 4 mbar (0.06 psi).

The value is doubled for devices with inert oil.

A position-dependent zero point shift can be corrected → 34 and → 102.

Different tightening torques (e.g. for Clamp or Varivent connections) can merely cause a shift in the zero point. This effect is corrected by position adjustment during commissioning.

Resolution

- Current output: 1 µA
- Display: can be set (factory setting: presentation of the maximum accuracy of the transmitter)

Reference accuracy

The reference accuracy contains the non-linearity [DIN EN 61298-2 3.11] including the pressure hysteresis [DIN EN 61298-23.13] and non-repeatability [DIN EN 61298-2 3.11] in accordance with the limit point method as per [DIN EN 60770]. The specifications refer to the calibrated span.

PMP71

Measuring cell standard	Sensor	Reference accuracy in %
400 mbar (6 psi)	Gauge pressure/ Absolute pressure	▪ TD 1:1 = ±0.05 ▪ TD > 1:1 = ±0.05 x TD
1 bar (15 psi)	Gauge pressure/ Absolute pressure	▪ TD 1:1 to TD 2.5:1 = ±0.05 ▪ TD > 2.5:1 = ±0.02 x TD
2 bar (30 psi)	Gauge pressure	▪ TD 1:1 to TD 5:1 = ±0.05 ▪ TD > 5:1 = ±0.01 x TD
2 bar (30 psi)	Absolute pressure	▪ TD 1:1 to TD 5:1 = ±0.05 ▪ TD > 5:1 = ±0.01 x TD
4 bar (60 psi), 10 bar (150 psi)	Gauge pressure/ Absolute pressure	▪ TD 1:1 to TD 10:1 = ±0.05 ▪ TD > 10:1 = ±0.005 x TD
40 bar (600 psi)	Gauge pressure/ Absolute pressure	▪ TD 1:1 to TD 15:1 = ±0.075 ▪ TD > 15:1 = ±0.005 x TD
100 bar (1500 psi)	Gauge pressure/ Absolute pressure	▪ TD 1:1 to TD 10:1 = ±0.075 ▪ TD > 10:1 = ±0.0075 x TD

Measuring cell standard	Sensor	Reference accuracy in %
400 bar (6 000 psi)	Gauge pressure/ Absolute pressure	▪ TD 1:1 to TD 5:1 = ±0.15 ▪ TD > 5:1 = ±0.03 x TD
700 bar (10 500 psi)	Absolute pressure	▪ TD 1:1 to TD 5:1 = ±0.15 ▪ TD > 5:1 = ±0.03 x TD

Platinum measuring cell [1]	Sensor	Reference accuracy in %
400 mbar (6 psi), 1 bar (15 psi)	Gauge pressure/ Absolute pressure	TD 1:1 = ±0.035
2 bar (30 psi), 4 bar (60 psi), 10 bar (150 psi)	Gauge pressure	TD 1:1 = ±0.025
2 bar (30 psi), 4 bar (60 psi), 10 bar (150 psi)	Absolute pressure	TD 1:1 = ±0.035
40 bar (600 psi)	Gauge pressure/ Absolute pressure	TD 1:1 = ±0.05
100 bar (1 500 psi)	Absolute pressure	TD 1:1 = ±0.05
400 bar (6 000 psi), 700 bar (10 500 psi)	Gauge pressure/ Absolute pressure	TD 1:1 = ±0.075

1) Platinum version not for flush-mounted process connections G ½ and M20.

Ordering information

Description	Option [1]
Platinum	"K" or "L" or "M"

1) Product Configurator, order code for "Calibration; unit"

PMP75

Measuring cell standard	Sensor	PMP75 without capillary in %	PMP75 with capillary in %
400 mbar (6 psi)	Gauge pressure/ Absolute pressure	▪ TD 1:1 = ±0.15 ▪ TD > 1:1 = ±0.15 x TD	▪ TD 1:1 = ±0.15 ▪ TD > 1:1 = ±0.15 x TD
1 bar (15 psi)	Gauge pressure/ Absolute pressure	▪ TD 1:1 to TD 2.5:1 = ±0.075 ▪ TD > 2.5:1 = ±0.03 x TD	▪ TD 1:1 to TD 2.5:1 = ±0.1 ▪ TD > 2.5:1 = ±0.04 x TD
2 bar (30 psi)	Gauge pressure	▪ TD 1:1 to TD 5:1 = ±0.075 ▪ TD > 5:1 = ±0.015 x TD	▪ TD 1:1 to TD 2.5:1 = ±0.1 ▪ TD > 2.5:1 = ±0.04 x TD
2 bar (30 psi)	Absolute pressure	▪ TD 1:1 to TD 5:1 = ±0.075 ▪ TD > 5:1 = ±0.015 x TD	▪ TD 1:1 to TD 5:1 = ±0.075 ▪ TD > 5:1 = ±0.015 x TD
4 bar (60 psi)	Gauge pressure/ Absolute pressure	▪ TD 1:1 to TD 10:1 = ±0.075 ▪ TD > 10:1 = ±0.0075 x TD	▪ TD 1:1 to TD 10:1 = ±0.075 ▪ TD > 10:1 = ±0.0075 x TD
10 bar (150 psi), 40 bar (600 psi)	Gauge pressure/ Absolute pressure	▪ TD 1:1 to TD 15:1 = ±0.075 ▪ TD > 15:1 = ±0.005 x TD	▪ TD 1:1 to TD 15:1 = ±0.075 ▪ TD > 15:1 = ±0.005 x TD
100 bar (1 500 psi)	Gauge pressure/ Absolute pressure	▪ TD 1:1 to TD 10:1 = ±0.075 ▪ TD > 10:1 = ±0.0075 x TD	▪ TD 1:1 to TD 10:1 = ±0.075 ▪ TD > 10:1 = ±0.0075 x TD
400 bar (6 000 psi)	Gauge pressure/ Absolute pressure	▪ TD 1:1 to TD 5:1 = ±0.15 ▪ TD > 5:1 = ±0.03 x TD	▪ TD 1:1 to TD 5:1 = ±0.15 ▪ TD > 5:1 = ±0.03 x TD
700 bar (10 500 psi)	Absolute pressure	▪ TD 1:1 to TD 5:1 = ±0.15 ▪ TD > 5:1 = ±0.03 x TD	–

Platinum measuring cell [1]	Sensor	PMP75 without capillary in %		PMP75 without capillary in %
1 bar (15 psi), 2 bar (30 psi), 4 bar (60 psi), 10 bar (150 psi), 40 bar (600 psi), 400 bar (6 000 psi), 700 bar (10 500 psi)	Gauge pressure/ Absolute pressure	TD 1:1	= ±0.05	–

1) Platinum version not for flush-mounted process connections G ½ and M20.

Thermal change of the zero output and the output span

When using a PMP75, the influence of the respective diaphragm seal must also be taken into account → 99.

PMP71 and PMP75 (basic device), internal process isolating diaphragm

Measuring cell	Material of the Process isolating diaphragm		−10 to +60 °C (+14 to +140 °F)	−40 to −10 °C (−40 to +14 °F) +60 to +80 °C (+140 to +176 °F)
	316 L	Gold/ rhodium	% of the set span	
400 mbar (6 psi)	✔	✔	±(0.2 x TD + 0.015)	±(0.4 x TD + 0.03)
1 bar (15 psi), 2 bar (30 psi), 4 bar (60 psi), 10 bar (150 psi)	✔	✔	±(0.1 x TD + 0.01)	±(0.4 x TD + 0.02)
40 bar (600 psi)	✔	–	±(0.1 x TD + 0.01)	±(0.4 x TD + 0.02)
100 bar (1 500 psi)	✔	–	±(0.2 x TD + 0.015)	±(0.4 x TD + 0.03)
400 bar (6 000 psi)	✔	–	±(0.35 x TD + 0.02)	±(0.7 x TD + 0.04)
700 bar (10 500 psi)	✔	–	±(0.4 x TD + 0.03)	±(0.7 x TD + 0.04)

PMP71, flush-mounted process isolating diaphragm made of 316L with gold-rhodium coating

Measuring cell	−10 to +60 °C (+14 to +140 °F)	−40 to −10 °C (−40 to +14 °F) +60 to +80 °C (+140 to +176 °F)
	% of the set span	
400 mbar (6 psi)	±(0.2 x TD + 0.015) x 5	±(0.4 x TD + 0.03) x 5
1 bar (15 psi), 2 bar (30 psi), 4 bar (60 psi), 10 bar (150 psi), 40 bar (600 psi)	±(0.1 x TD + 0.01) x 5	±(0.4 x TD + 0.02) x 5
100 bar (1 500 psi)	±(0.2 x TD + 0.015) x 5	±(0.4 x TD + 0.03) x 5
400 bar (6 000 psi)	±(0.35 x TD + 0.02) x 5	±(0.7 x TD + 0.04) x 5
700 bar (10 500 psi)	±(0.4 x TD + 0.03) x 5	±(0.7 x TD + 0.04) x 5

Total performance

The "Total performance" specification comprises the non-linearity including hysteresis and non-reproducibility as well as the thermal change of the zero point.

All specifications apply to the temperature range −10 to +60 °C (+14 to +140 °F) and a turndown of 1:1.

PMP71

Measuring cell	PMP71	PMP71 with gold-rhodium coated Process isolating diaphragm
	% of URL	
400 mbar (6 psi)	±0.25	±1.25
1 bar (15 psi)	±0.15	±0.75
2 bar (30 psi)	±0.15	±0.45
4 bar (60 psi)	±0.15	±0.3
10 bar (150 psi), 40 bar (600 psi)	±0.15	±0.15
100 bar (1 500 psi)	±0.25	±0.25
400 bar (6 000 psi)	±0.3	±0.3
700 bar (10 500 psi)	±0.3	±0.3

Long-term stability

	Measuring cell	1 year	5 years	10 years
		% of URL		
PMP71	400 mbar (6 psi)	±0.05	±0.07	±0.10
	1 bar (15 psi)	±0.05	±0.07	±0.10
	2 bar (30 psi)	±0.07	±0.12	±0.15
	4 bar (60 psi), 10 bar (150 psi), 40 bar (600 psi), 100 bar (1 500 psi), 400 bar (6 000 psi), 700 bar (10 500 psi)	±0.05	±0.07	±0.10
PMP75	To determine long-term stability, the basic device is observed without the attached diaphragm seal.			

Total error

PMP71

The total error comprises the total performance and long-term stability. All specifications apply to the temperature range −10 to +60 °C (+14 to +140 °F) and a turndown of 1:1.

Measuring cell	% of URL/year
400 mbar (6 psi)	±0.3
1 bar (15 psi), 2 bar (30 psi), 4 bar (60 psi), 10 bar (150 psi), 40 bar (600 psi)	±0.2
100 bar (1 500 psi)	±0.3
400 bar (6 000 psi)	±0.35
700 bar (10 500 psi)	±0.35

Warm-up period

- 4 to 20 mA HART: < 10 s
- PROFIBUS PA: 6 s
- FOUNDATION Fieldbus: 50 s

Installation

General installation instructions

- For PMP75: → 📄 99 "Installation instructions" section.
- A position-dependent zero point shift can be corrected directly at the device via operating keys, and also in hazardous areas in the case of devices with external operation.
  Diaphragm seals also shift the zero point, depending on the installation position→ 📄 102.
- The device housing can be rotated up to 380° .
- Endress+Hauser offers a mounting bracket for installing the device on pipes or walls → 📄 34.
- Use flushing rings for flange and cell diaphragm seals if buildup or clogging can be expected at the diaphragm seal connection. The flushing ring can be fitted between the process connection and diaphragm seal. Material buildup in front of the process isolating diaphragm can be flushed away, and the pressure chamber vented, via the two lateral flushing holes.
- When measuring in media containing solids, such as dirty liquids, installing separators and drain valves is useful for capturing and removing sediment.
- Point the cable and connector downwards where possible to prevent moisture from entering (e.g. rain or condensation water).

Measuring arrangement for devices without diaphragm seals – PMC71, PMP71

Cerabar S transmitters without diaphragm seals are mounted as per the norms for a manometer (DIN EN 837-2). We recommend the use of shutoff devices and siphons. The orientation depends on the measuring application.

Pressure measurement in gases

Mount Cerabar S with shutoff device above the tapping point so that any condensate can flow into the process.

Pressure measurement in vapors

Use siphons for pressure measurement in steam. The siphon reduces the temperature to almost ambient temperature. Fill the siphon with liquid before commissioning. Preferably mount the Cerabar S with the siphon below the tapping point.

Advantages:
- defined water column only causes minimal/negligible measured errors
- only minimal/negligible thermal effects on the device

Mounting above the tapping point is also possible. Note the max. permitted ambient temperature of the transmitter.

Pressure measurement in liquids

Mount Cerabar S with shutoff device below or at the same level as the tapping point.

Level measurement

- Mount Cerabar S below the lowest measuring point.
- Do not install the device in the following positions: In the filling curtain, in the tank outlet or at a point in the container which could be affected by pressure pulses from an agitator or a pump.
- The calibration and functional test can be carried out more easily if you mount the device downstream from a shutoff device.

Measuring arrangement for devices with diaphragm seals – PMP75

→ 📄 99

Orientation

The orientation may cause a zero point shift, see → 📄 27 and → 📄 30.

This position-dependent zero point shift can be corrected directly at the device via the operating key, and also in hazardous areas in the case of devices with external operation (position adjustment).

Wall and pipe mounting

Endress+Hauser offers a mounting bracket for installing the device on pipes or walls. The mounting bracket can be installed on pipes with a diameter of 1¼" to 2" or on walls.

Ordering information:
- Product Configurator, order code for "Additional options 2", version "U" or
  Product Configurator, order code for "Accessory enclosed", version "PA" or
- as a separate accessory (part no.: 71102216).

Dimensions → 86.

Heat insulation – PMC71 high-temperature version

The PMC71 high-temperature version must only be insulated up to a certain height. The maximum permitted insulation height is indicated on the devices and applies to an insulation material with a heat conductivity ≤ 0.04 W/(m x K) and to the maximum permitted ambient and process temperature (see table below). The data were determined under the most critical application "quiescent air".

The data were determined under the most critical application "quiescent air".

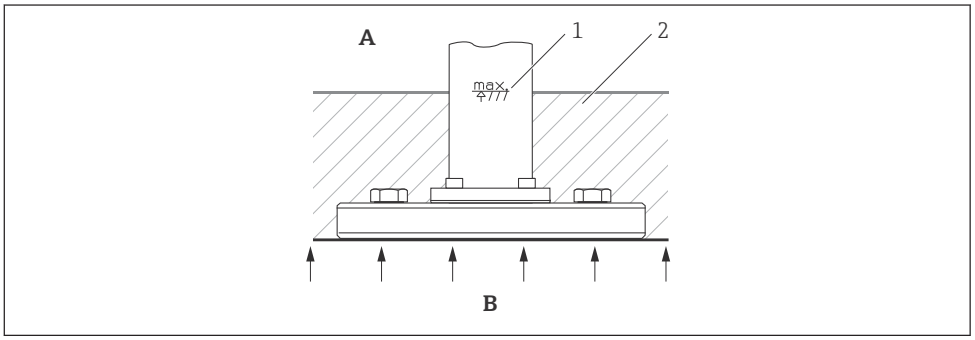

A Ambient temperature
B Process temperature
1 Insulation height
2 Insulation material

	Temperature
Ambient temperature	≤ 70 °C (158 °F)
Process temperature	≤ 150 °C (302 °F)

Mounting of PVDF screw-in fittings

WARNING

Risk of damage to process connection!
Risk of injury!
► PVDF process connections with threaded connections must be installed with the mounting bracket supplied.

The mounting bracket can be installed on pipes with a diameter of 1¼" to 2" or on walls.

- The mounting bracket is included in the delivery.
- Ordering information:
  Product Configurator, order code for "Accessory enclosed", version "PA" or
  as a separate accessory (part no.: 71102216).
- Dimensions .

"Separate housing" version

With the "separate housing" version, you are able to mount the housing with the electronics insert at a distance from the measuring point. This version facilitates trouble-free measurement:
- Under particularly difficult measuring conditions (at installation locations that are cramped or difficult to access)
- If rapid cleaning of the measuring point is required and
- If the measuring point is exposed to vibrations
- For compact installations

You can choose between different cable versions:
- PE: 2 m (6.6 ft), 5 m (16 ft) and 10 m (33 ft)
- FEP: 5 m (16 ft).

Ordering information: Product Configurator, order code for "Additional options 2", version "G".

Dimensions → 🖹 86

In the case of the "separate housing" version, the sensor is delivered with the process connection and cable ready mounted. The housing and a mounting bracket are enclosed as separate units. The cable is provided with a socket at both ends. These sockets are simply connected to the housing and the sensor.

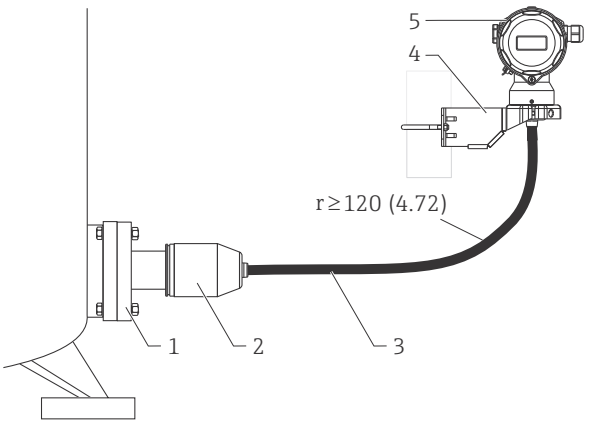

1 Process connection with sensor - For degrees of protection, see the following section
2 Process connection adapter
3 Cable, both ends are fitted with a socket
4 Mounting bracket provided, suitable for pipe and wall mounting
5 Housing with electronic insert - degrees of protection → 🖹 45

Engineering unit mm (in)

Degree of protection for the process connection and sensor with the use of
- FEP cable:
  - IP 69
  - IP 66 NEMA 4/6P
  - IP 68 (1.83 mH_2O for 24 h) NEMA 4/6P
- PE cable:
  - IP 66 NEMA 4/6P
  - IP 68 (1.83 mH_2O for 24 h) NEMA 4/6P

Technical data of the PE and FEP cable:
- Minimum bending radius: 120 mm (4.72 in)
- Cable extraction force: max. 450 N (101.16 lbf)
- Resistance to UV light

Use in hazardous area:
- Intrinsically safe installations (Ex ia/IS)
- FM/CSA IS: for Div. 1 installation only

Description	Weight
Process connection adapter	0.93 kg (2.05 lb)
Cable	0.05 kg/meter (0.11 lb)

Reduction of the installation height

If the separate housing is used, the installation height of the process connection is reduced compared to the dimensions of the standard version.

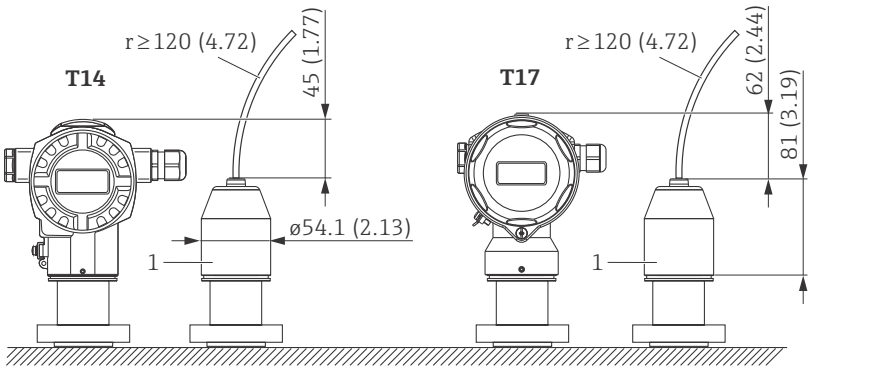

1 Process connection adapter

Engineering unit mm (in)

Turning the housing

The housing can be rotated up to 380° by loosening the Allen screw.

Your benefits

- Easy mounting due to optimum alignment of housing
- Good, accessible device operation
- Optimum readability of the onsite display (optional).

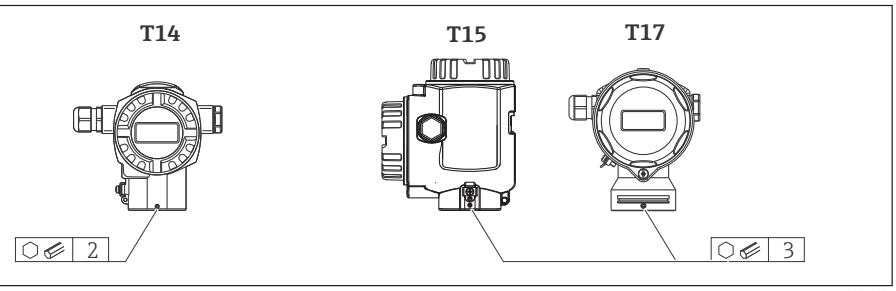

Oxygen applications

Oxygen and other gases can react explosively to oils, grease and plastics, such that, among other things, the following precautions must be taken:
- All components of the system, such as measuring devices, must be cleaned in accordance with the BAM (DIN 19247) requirements.
- Dependent on the materials used, a certain maximum temperature and a maximum pressure for oxygen applications must not be exceeded.

The devices suitable for gaseous oxygen applications are listed in the following table with the specification p_{max}.

Order code for devices [1], cleaned for oxygen applications	p_{max} for oxygen applications	T_{max} for oxygen applications
PMC71 – * * * * * * ** 2 * *, Devices with sensors, nominal value < 10 bar (150 psi)	Over pressure limit (OPL) [2] [3] of sensor	60 °C (140 °F)
PMC71 – * * * * * * ** 2 * *, Devices with sensors, nominal value ≥ 10 bar (150 psi)	30 bar (450 psi)	60 °C (140 °F)
PMP71 – * * * ** * * ** N * *	depends on the lowest-rated element, with regard to pressure, of the selected components: over pressure limit (OPL) of the sensor, process connection (1.5 x PN) or fill fluid (160 bar (2 400 psi))	85 °C (185 °F)
PMP75 – * * * ** * * * ** N * *	depends on the lowest-rated element, with regard to pressure, of the selected components: over pressure limit (OPL) of the sensor, process connection (1.5 x PN) or fill fluid (160 bar (2 400 psi))	85 °C (185 °F)

1) Devices only, not accessories or enclosed accessories.
2) Product Configurator, order code for "Sensor range; sensor over pressure limit (= OPL)"
3) PMC71 with PVDF thread or flange: To be mounted only with mounting bracket. MWP 10 bar (150 psi), OPL max. 15 bar (225 psi). Process temperature range −10 to +60 °C (+14 to +140 °F)

Silicone-free applications

Special cleaning of the transmitter to remove paint-wetting substances, for use in paint shops for example.

Ordering information:

Product Configurator, order code for "Seal", option "L" or "M".

Ultrapure gas applications

Endress+Hauser also offers devices for special applications, such as ultrapure gas, cleaned from oil and grease. No special restrictions regarding the process conditions apply to these devices.

Ordering information:
- Product Configurator, order code for "Seal" or
- Product Configurator, order code for "Fill fluid".

Applications with hydrogen

Liquid applications with hydrogen separation from an electrolyte

The gold-rhodium coating, which can be ordered in the order code, offers protection only against hydrogen diffusion through the process isolating diaphragm in liquids (e.g. electrolytes or aqueous solutions).

Ordering information:

Product Configurator, order code for "Membrane material", option "6".

In gas applications and also in liquid applications with hydrogen separation from an electrolyte with a process temperature >100 °C (212 °F) , the gold-rhodium coating does **not** offer effective protection against hydrogen diffusion through the process isolating diaphragm. The diaphragm requires a pure gold coating. Endress+Hauser offers this product version with a gold coating of 25 µm (984.3 µin) as a **T**echnical **S**pecial **P**roduct.

Gas applications with hydrogen content

In the case of a gas application with hydrogen content, the diaphragm requires a pure gold coating. Endress+Hauser offers this product version with a gold coating of 25 µm (984.3 µin) as a **T**echnical **S**pecial **P**roduct.

Environment

Ambient temperature range

Version	PMC71 High-temperature version	PMC71	PMP71 [1]	PMP75 [1]
Without LCD display	−20 to +70 °C (−4 to +158 °F)	−40 to +85 °C (−40 to +185 °F)		
With LCD display [2]		−20 to +70 °C (−4 to +158 °F)		
With M12 connector, elbowed		−25 to +85 °C (−13 to +185 °F)		
With separate housing	–	−20 to +60 °C (−4 to +140 °F)		–
Diaphragm seal systems [3]	–	–	–	→ 99
MID parts certificate	–	–	−25 to +55 °C (−13 to +131 °F)	–

1) Lower temperatures on request
2) Extended temperature application range (−40 to +85 °C (−40 to +185 °F)) with restrictions in optical properties, such as display speed and contrast
3) Ambient temperature range and process temperature range are mutually dependent - see "Heat insulation" section → 103

For high-temperature applications, either a PMP75 with a temperature isolator or with a capillary can be used. If vibrations also occur in the application, Endress+Hauser recommends using a PMP75 with a capillary. If a PMP75 with a temperature isolator or capillary is used, we recommend a suitable bracket for mounting (see "Wall and pipe mounting" section)→ 34.

Hazardous areas

- For devices for use in hazardous areas, see Safety Instructions, Installation or Control Drawing → 112.
- Pressure measuring devices that have the usual explosion protection certificates (e.g. ATEX/ FM/ CSA/ IEC Ex,...) can be used in hazardous areas at ambient temperatures down to −50 °C (−58 °F). The functionality of the explosion protection is also guaranteed for ambient temperatures down to −50 °C (−58 °F).
- The nameplate specification is limited to an ambient temperature of −40 °C (−40 °F), as all measurement-specific testing of the device is performed only down to −40 °C (−40 °F). If the device is operated at an ambient temperature below −40 °C (−40 °F), the technical data in this document are no longer valid. Functional restrictions can be expected.

Storage temperature range

- −40 to +90 °C (−40 to +194 °F)
- Local display: −40 to +85 °C (−40 to +185 °F)
- Separate housing −40 to +60 °C (−40 to +140 °F)
- Devices with PVC-sheathed capillary: −25 to +90 °C (−13 to +194 °F)

Degree of protection

- Housing→ 45
- Separate housing → 36

Climate class

Class 4K4H (air temperature: −20 to +55 °C (−4 to +131 °F), relative humidity: 4 to 100 %) fulfilled as per DIN EN 60721-3-4 (condensation possible. With PMC71, avoid condensate in the device.)

Electromagnetic compatibility

- Electromagnetic compatibility as per EN 61326 and NAMUR recommendation EMC (NE21).
- With enhanced immunity against electromagnetic fields as per EN 61000-4-3: 30 V/m with closed cover (for devices with T14 housing)
- Maximum deviation: < 0.5 % of span
- All EMC measurements were performed with a turn down (TD) = 2:1.
- Class E3 as per OIML R75-2

For further details refer to the Declaration of Conformity. A description of how to download this document is provided in the next section.

Downloading the Declaration of Conformity

http://www.endress.com/en/download

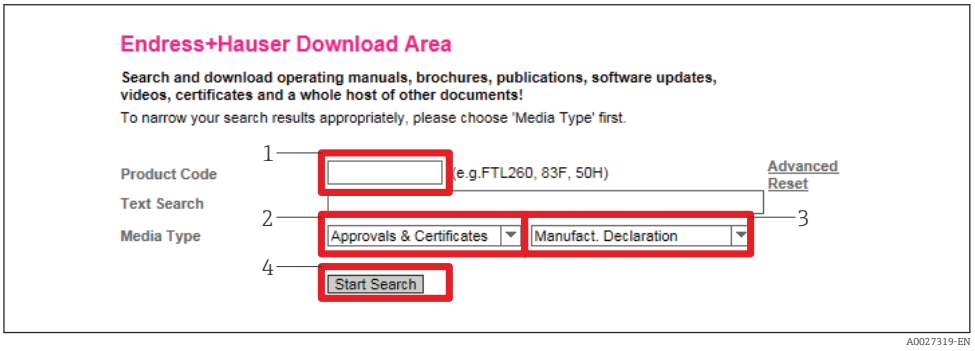

1. Enter the required product code
2. Select "Approvals & Certificates"
3. Select "Manufact. Declaration"
4. Click on "Start Search"

The available downloads are displayed.

Vibration resistance

Device/accessory	Test standard	Vibration resistance
PMC71 [1]	GL	Guaranteed for 3 to 25 Hz: ±1.6 mm (0.063 in); 25 to 100 Hz: 4 g in all 3 planes
PMP71		
PMP75 [2] [3]		
With mounting bracket	IEC 61298-3	Guaranteed for 10 to 60 Hz: ±0.15 mm (0.0059 in); 60 to 500 Hz: 2 g in all 3 planes
PMP71 with MID parts certificate	OIML R117-1	Class M3

1) Not for high-temperature version with Ex d[ia], CSA XP or FM XP
2) With aluminum T14 housing only
3) For applications with very high temperatures, a PMP75 with either a temperature isolator or a capillary can be used. If vibrations also occur in the application, Endress+Hauser recommends using a PMP75 with a capillary. If a PMP75 with a temperature isolator or capillary is used, it must be mounted with a mounting bracket

Process

Process temperature limits

For oxygen applications → 38

PMC71 (with ceramic process isolating diaphragm)

- −25 to +125 °C (−13 to +257 °F)
- High-temperature version: −20 to +150 °C (−4 to +302 °F); Product Configurator, order code for "Additional options 1", version "T".
- For saturated steam applications, use a device with a metal process isolating diaphragm, or provide a siphon for temperature isolation when installing.
- Observe the process temperature range of the seal in the following table.

Seal	Notes	Process temperature range	Option [1]
FKM Viton	–	−25 to +125 °C (−13 to +257 °F)/ 150 °C (302 °F) [2]	A, L
EPDM	FDA 21CFR177.2600; 3A Class II; USP Class VI DVGW (KTW, W270, W534), WRAS, ACS, NSF61	−20 to +125 °C (−4 to +257 °F)/ 150 °C (302 °F) [2]	B
EPDM		−20 to +150 °C (−4 to +302 °F)	B
Kalrez, Compound 4079	–	+5 to +125 °C (+41 to +257 °F)/ 150 °C (302 °F) [2]	D, M
Chemraz, Compound 505	–	−10 to +125 °C (+14 to +257 °F)/ 150 °C (302 °F) [2]	E
HNBR	FDA 21CFR177.2600; 3A Class II; KTW; AFNOR; BAM	−25 to +125 °C (−13 to +257 °F)	F [3]
NBR	–	−10 to +100 °C (+14 to +212 °F)	F
FKM Viton	FDA 21CFR177.2600	−5 to +125 °C (+23 to +257 °F)	G
FKM Viton	cleaned of oil and grease	−10 to +125 °C (+14 to +257 °F)/ 150 °C (302 °F) [2]	1
FKM Viton	cleaned for oxygen service	−10 to +60 °C (+14 to +140 °F)	2
The process temperature ranges specified here refer to permanent application of the PMC71. They may be exceeded for a short time (e.g. for cleaning).			

1) Product Configurator, order code for "Seal"
2) 150 °C (302 °F) for high-temperature version
3) These seals are used for devices with 3A-approved process connections.

Applications with jumps in temperature

Extreme jumps in temperature can result in temporary measuring errors. Temperature compensation takes effect after several minutes. Internal temperature compensation is faster the smaller the jump in temperature and the longer the time interval involved. For further information please contact your local Endress+Hauser Sales Center.

PMP71 (with metallic process isolating diaphragm)

Description	Limits
Process connections with internal process isolating diaphragm	−40 to +125 °C (−40 to +257 °F) (150 °C (302 °F) for max. one hour)
Process connections with flush-mounted process isolating diaphragm, G 1 A, G 1 ½ A, G 2 A, 1 NPT, 1 ½ NPT, 2 NPT, M 44x1.25, EN/DIN, ASME and JIS flanges	−40 to +100 °C (−40 to +212 °F)
Process connections with flush-mounted process isolating diaphragm, G ½ A, M20x1.5	−20 to +85 °C (−4 to +185 °F)

PMP71 (with metallic process isolating diaphragm) with MID parts certificate

−25 to +55 °C (−13 to +131 °F)

PMP75 (with diaphragm seal)

- Depending on the design and depending on the diaphragm seal and filling oil: −70 °C (−94 °F) up to +400 °C (+752 °F). Please note the temperature application limits of the diaphragm seal oil → 🖹 101.
- Please observe the maximum gauge pressure and maximum temperature.

Devices with PTFE-coated process isolating diaphragm

The non-stick coating has excellent gliding properties and is used to protect the process isolating diaphragm against abrasive media.

NOTICE

Incorrect use of the PTFE foil will destroy the device!

► The PTFE foil used is designed to protect the unit against abrasion. It does not provide protection against corrosive media.

For the range of application of the 0.25 mm (0.01 in) PTFE foil on an AISI 316L (1.4404/1.4435) process isolating diaphragm, see the following diagram:

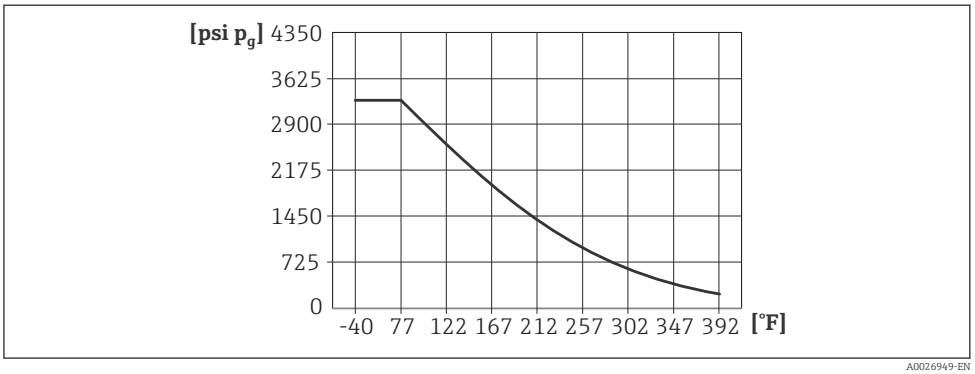

A0026949-EN

For vacuum applications: p_{abs} ≤ 1 bar (14.5 psi) to 0.05 bar (0.725 psi) up to max. +150 °C (302 °F).

Process temperature limits of flexible capillary armoring: PMP75

- 316L: No restrictions
- PTFE: No restrictions
- PVC: See the following diagram

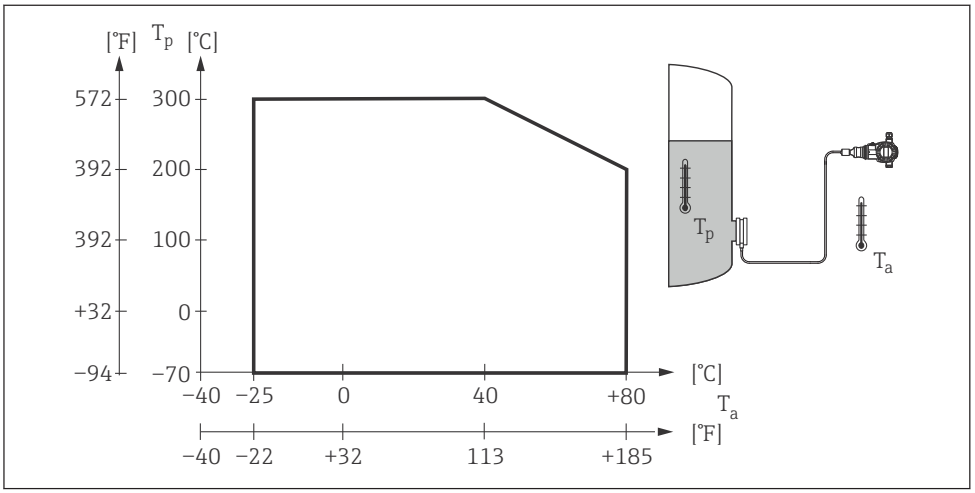

A0028220

Pressure specifications

⚠ WARNING

The maximum pressure for the measuring device depends on the lowest-rated element with regard to pressure.

- For pressure specifications, see the "Measuring range" section and the "Mechanical construction" section.
- The measuring device must be operated only within the specified limits!
- The MWP (maximum working pressure) is specified on the nameplate of the individual sensor module. This value refers to a reference temperature of +20 °C (+68 °F), or +38 °C (+100 °F) for ASME flanges, and can be present at the device for an unlimited period. Observe the pressure-temperature dependency of the MWP.
- Please refer to the standards EN 1092-1: 2001 Tab. 18 for the pressure values permitted in the case of higher temperatures. (With regard to their stability-temperature property, the materials 1.4435 and 1.4404 are grouped together under 13E0 in EN 1092-1 Tab. 18. The chemical composition of the two materials can be identical). // ASME B 16.5a – 1998 Tab. 2-2.2 F316 // ASME B 16.5a – 1998 Tab. 2.3.8 N10276 // JIS B 2220
- The test pressure corresponds to the over pressure limit of the individual sensors (OPL = 1.5 x MWP (formula does not apply to the PMP71 or PMP75 with a 40 bar (600 psi) or 100 bar (1500 psi) measuring cell)) and may be applied only for a limited period of time to prevent any lasting damage.
- The Pressure Equipment Directive (EC Directive 97/23/EC) uses the abbreviation "PS". The abbreviation "PS" corresponds to the MWP (maximum working pressure) of the measuring device.
- In the case of sensor range and process connections where the over pressure limit (OPL) of the process connection is smaller than the nominal value of the sensor, the device is set at the factory, at the very maximum, to the OPL value of the process connection. If you want to use the entire sensor range, select a process connection with a higher OPL value (1.5 x PN; MWP = PN)
- In oxygen applications, the values for "p_{max} and T_{max} for oxygen applications must not be exceeded → 🖹 38.
- Steam hammering must be avoided. Steam hammering can cause zero point drifts. Recommendation: Residue (water droplets or condensation) may remain on the process isolating diaphragm following CIP cleaning and can result in local steam hammering the next time steam cleaning takes place. In practice, drying the process isolating diaphragm (e.g. by blowing) has proved to prevent steam hammering.

Mechanical construction

Device height

The device height is calculated from

- the height of the housing
- the height of optional mounted parts such as temperature isolators or capillaries
- the height of the relevant process connection.

The individual heights of the components can be found in the following sections. To calculate the device height, simply add up the individual heights of the components. If necessary, the installation space (the space used to install the device) must also be taken into account. You can use the following table for this:

Section	Page	Height	Example
Height of housing	→ 📄 45 ff.	(A)	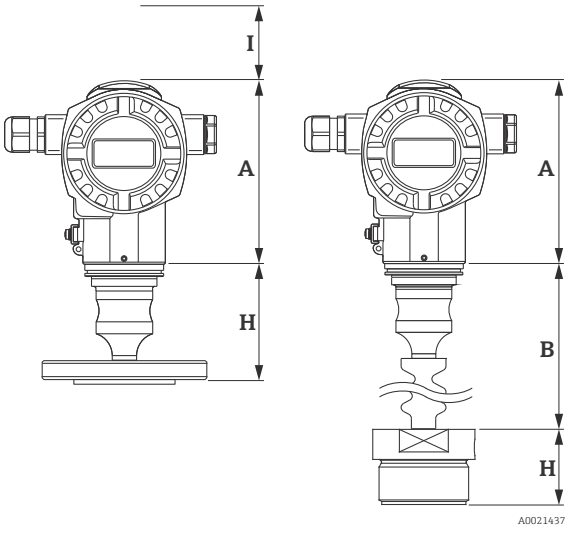
Optional mounted parts	→ 📄 49	(B)	
Process connections	→ 📄 49	(H)	
Installation space	-	(I)	
Device height			

T14 housing, optional display on the side

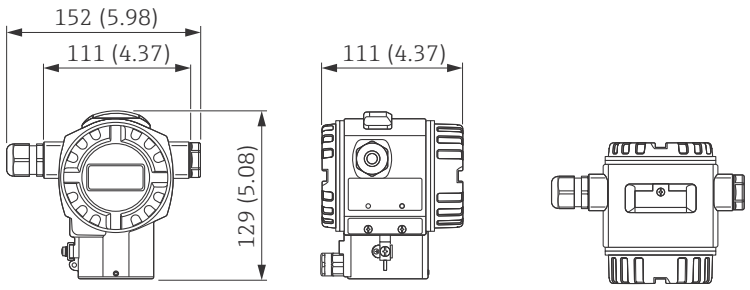

Engineering unit mm (in). Front view, left-hand side view, top view

Material		Degree of protection	Cable entry	Weight in kg (lb)		Option [1]
Housing	Cover seal			with display	without display	
Aluminum	EPDM	IP66/67 NEMA 6P	M20 gland	1.2 (2.65)	1.1 (2.43)	A
		IP66/67 NEMA 6P	G ½" thread			B
		IP66/67 NEMA 6P	NPT ½" thread			C
		IP66/67 NEMA 6P	M12 plug			D
		IP66/67 NEMA 6P	7/8" plug			E
		IP65 NEMA 4	HAN7D plug 90 degrees			F
316L	EPDM	IP66/67 NEMA 6P	M20 gland	2.1 (4.63)	2.0 (4.41)	1
		IP66/67 NEMA 6P	G ½" thread			2
		IP66/67 NEMA 6P	NPT ½" thread			3
		IP66/67 NEMA 6P	M12 plug			4
		IP66/67 NEMA 6P	7/8" plug			5
		IP65 NEMA 4	HAN7D plug 90 degrees			6
	FVMQ	IP66/67 NEMA 6P	M20 gland			7
	FVMQ	IP66/67 NEMA 6P	NPT ½" thread			8

1) Product Configurator, order code for "Housing, cover seal, cable entry, degree of protection"

T17 housing (hygienic), optional display on the side

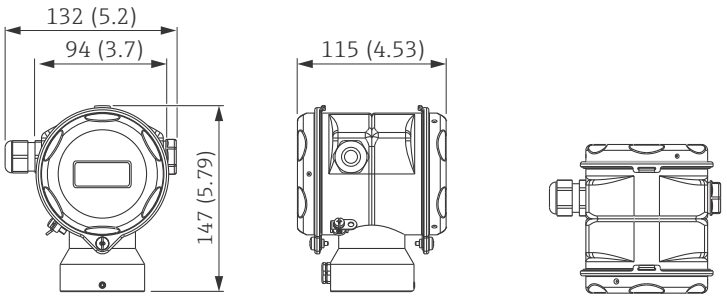

Engineering unit mm (in). Front view, left-hand side view, top view

Material		Degree of protection [1]	Cable entry	Weight in kg (lb)		Option [2]
Housing	Cover seal			with display	without display	
316L	EPDM	IP66/68 NEMA 6P	M20 gland	1.2 (2.65)	1.1 (2.43)	R
		IP66/68 NEMA 6P	G ½" thread			S
		IP66/68 NEMA 6P	NPT ½" thread			T
		IP66/68 NEMA 6P	M12 plug			U
		IP66/68 NEMA 6P	7/8" plug			V

1) Degree of protection IP 68: 1.83 mH_2O for 24 h
2) Product Configurator, order code for "Housing, cover seal, cable entry, degree of protection"

Process connections for PMC71 with internal process isolating diaphragm

Threaded connection ISO 228 G

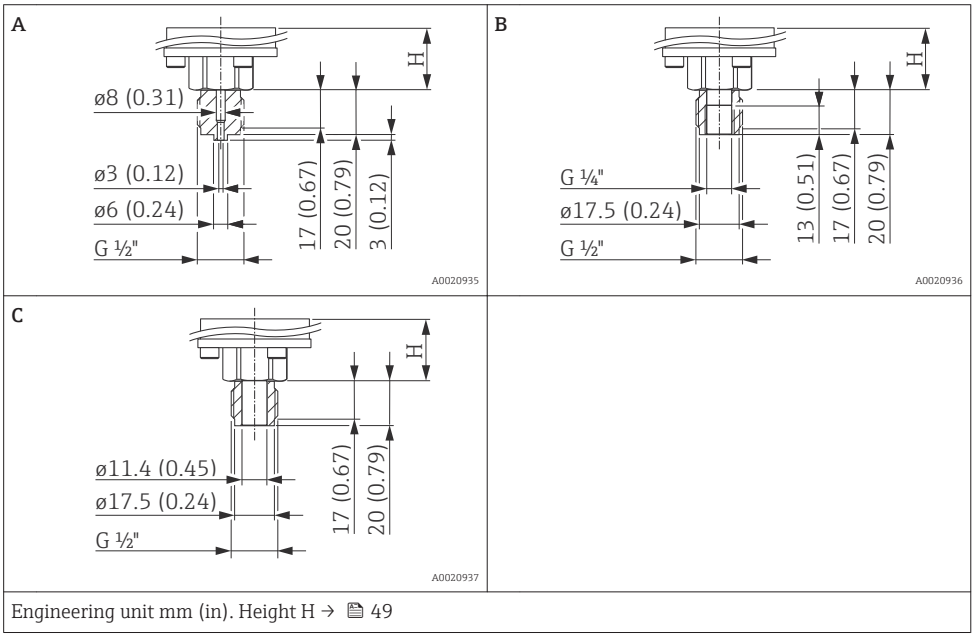

Engineering unit mm (in). Height H → 🖹 49

Item	Description	Material	Weight	Approval [1]	Option [2]
			kg (lb)		
A	Thread ISO 228 G ½" A EN 837	AISI 316L	0.63 (1.39)	CRN	GA
		Alloy C276 (2.4819)		CRN	GB
		Monel (2.4360)		-	GC
		PVDF ▪ Only mount with a mounting bracket (included) ▪ MWP 10 bar (150 psi), OPL max. 15 bar (225 psi) ▪ Process temperature range: +10 to +60 °C (+14 to +140 °F)		-	GD
B	Thread ISO 228 G ½" A, G ¼" (internal)	AISI 316L		CRN	GE
		Alloy C276 (2.4819)		CRN	GF
		Monel (2.4360)		-	GG
C	Thread ISO 228 G ½" A, Hole11.4 mm (0.45 in)	AISI 316L		CRN	GH
		Alloy C276 (2.4819)		CRN	GJ
		Monel (2.4360)		-	GK

1) CSA approval: Product Configurator, order code for "Approval"
2) Product Configurator, order code for "Process connection"

Threaded connection ANSI

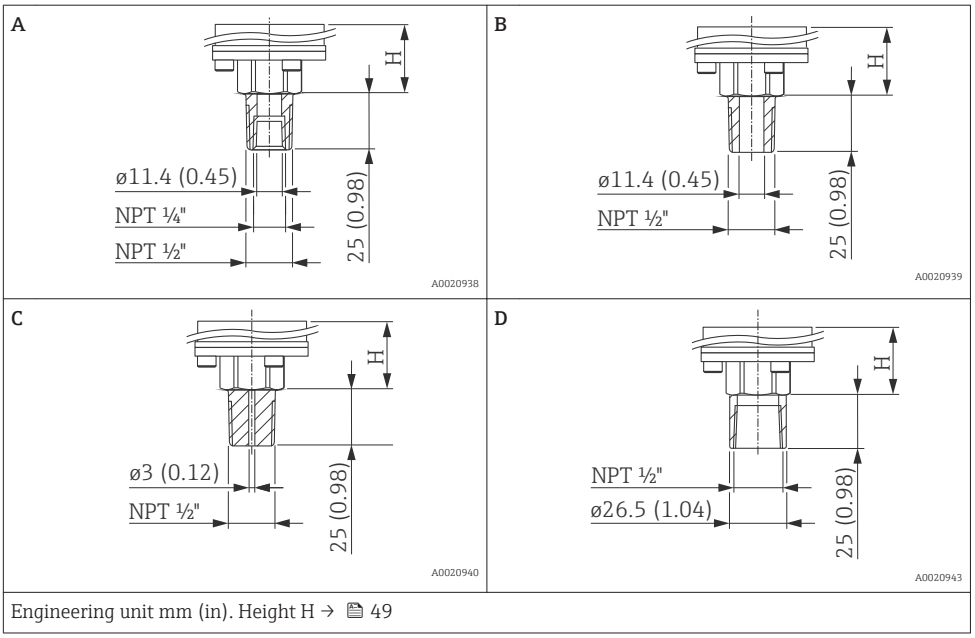

Engineering unit mm (in). Height H → 49

Item	Description	Material	Weight	Approval [1]	Option [2]
			kg (lb)		
A	ANSI ½" MNPT, ¼" FNPT	AISI 316L	0.63 (1.39)	CRN	RA
		Alloy C276 (2.4819)		CRN	RB
		Monel (2.4360)		-	RC
B	ANSI ½" MNPT, Hole11.4 mm (0.45 in)	AISI 316L		CRN	RD
		Alloy C276 (2.4819)		CRN	RE
		Monel (2.4360)		-	RF
C	ANSI ½" MNPT, Hole3 mm (0.12 in)	**PVDF** ▪ Only mount with a mounting bracket (included) ▪ MWP 10 bar (150 psi), OPL max. 15 bar (225 psi) ▪ Process temperature range: +10 to +60 °C (+14 to +140 °F)		-	RG
D	ANSI ½" FNPT Hole11.4 mm (0.45 in)	AISI 316L		CRN	RH
		Alloy C276 (2.4819)		CRN	RJ
		Monel (2.4360)		-	RK

1) CSA approval: Product Configurator, order code for "Approval"
2) Product Configurator, order code for "Process connection"

Process connections for PMC71 with internal process isolating diaphragm

Threaded connection JIS

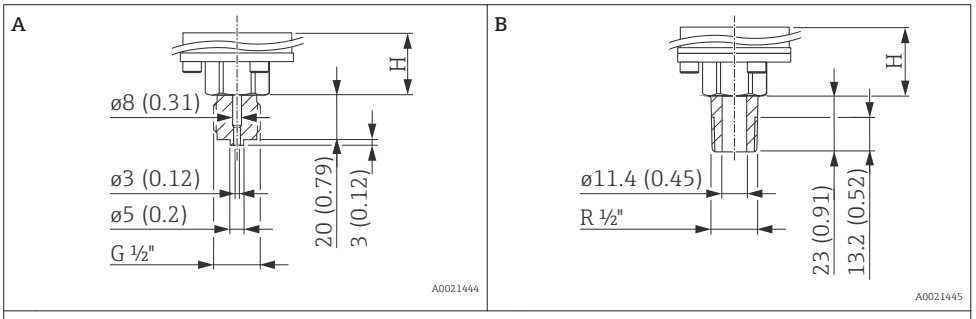

Engineering unit mm (in). Height H → 🖹 49

Item	Description	Material	Weight	Option [1]
			kg (lb)	
A	JIS B0202 G ½" (male)	AISI 316L	0.63 (1.39)	GL
B	JIS B0203 R ½" (male)			RL

1) Product Configurator, order code for "Process connection"

Threaded connection DIN 13

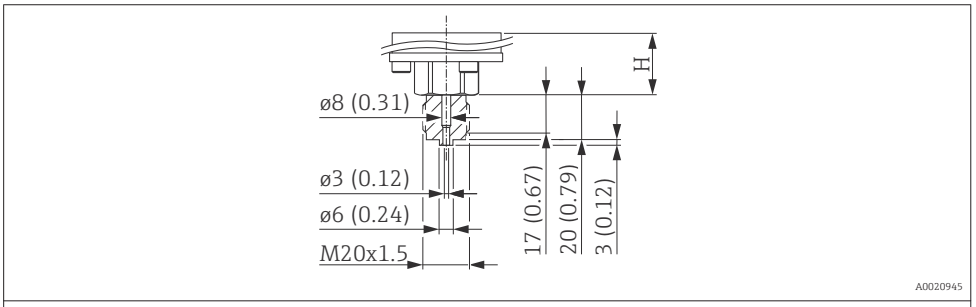

Engineering unit mm (in). Height H → 🖹 49

Description	Material	Weight	Option [1]
		kg (lb)	
DIN 13 M20 x 1.5, EN 837 3 mm (0.12 in)	AISI 316L	0.63 (1.39)	GP
	Alloy C276 (2.4819)		GQ

1) Product Configurator, order code for "Process connection"

Process connections for PMC71 with internal process isolating diaphragm - height H

Description	Height H
Standard height	26 mm (1.02 in)
Device with Ex d[ia], CSA XP or FM XP	96 mm (3.78 in)
High-temperature version	106 mm (4.17 in)
High-temperature version with Ex d[ia], CSA XP or FM XP	176 mm (6.93 in)

Process connections for PMC71 with flush-mounted process isolating diaphragm

Threaded connection DIN 13

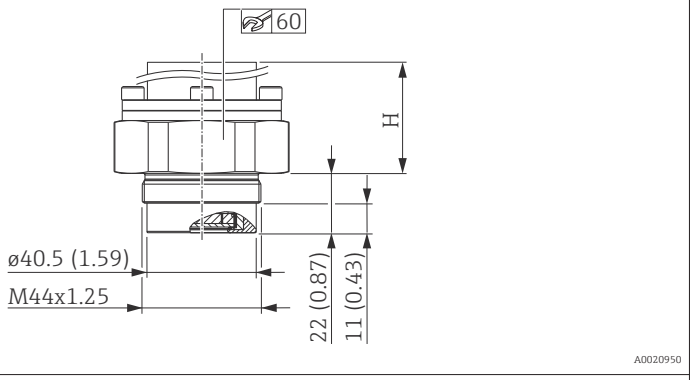

Engineering unit mm (in). Height H → 🖹 51

Description	Material	Weight	Option [1]
		kg (lb)	
DIN 13 M44 x 1.25	AISI 316L	0.63 (1.39)	1R
	Alloy C276 (2.4819)		1S

1) Product Configurator, order code for "Process connection"

Threaded connection ISO 228 G

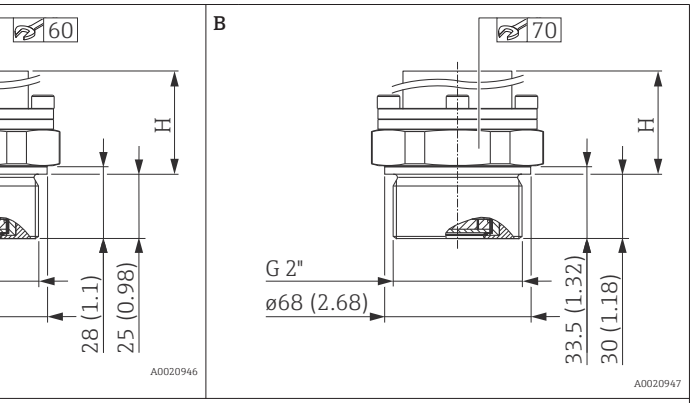

Engineering unit mm (in). Height H → 🖹 51

Item	Description	Material	Weight	Option [1]
			kg (lb)	
A	Thread ISO 228 G 1 ½" A	AISI 316L	0.63 (1.39)	1G
		Alloy C276 (2.4819)		1H
		Monel (2.4360)		1J
B	Thread ISO 228 G 2" A	AISI 316L		1K
		Alloy C276 (2.4819)		1L
		Monel (2.4360)		1M

1) Product Configurator, order code for "Process connection"

Process connections for PMC71 with flush-mounted process isolating diaphragm

Threaded connection ANSI

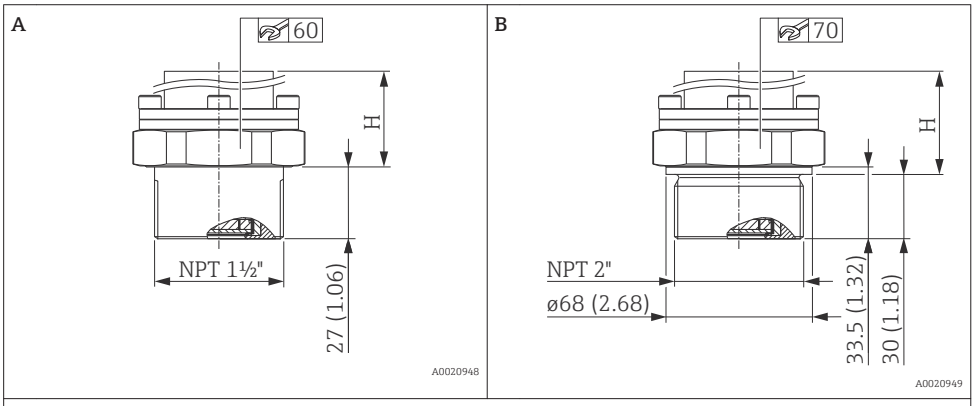

Engineering unit mm (in). Height H → 📄 51

Item	Description	Material	Weight	Approval [1]	Option [2]
			kg (lb)		
A	ANSI 1 ½" MNPT	AISI 316L (CRN)	0.63 (1.39)	CRN	2D
		Alloy C276 (2.4819) (CRN)		CRN	2E
		Monel (2.4360)		-	2F
B	ANSI 2" MNPT	AISI 316L (CRN)		CRN	2G
		Alloy C276 (2.4819) (CRN)		CRN	2H
		Monel (2.4360)		-	2J

1) CSA approval: Product Configurator, order code for "Approval"
2) Product Configurator, order code for "Process connection"

Process connections for PMC71 with flush-mounted process isolating diaphragm - height H

Description	Height H
High-temperature version	86 mm (3.39 in)
High-temperature version with Ex d[ia], CSA XP or FM XP	151 mm (5.94 in)

Process connections for PMC71 with flush-mounted process isolating diaphragm

EN/DIN flanges, connection dimensions in accordance with EN 1092-1/DIN 2527

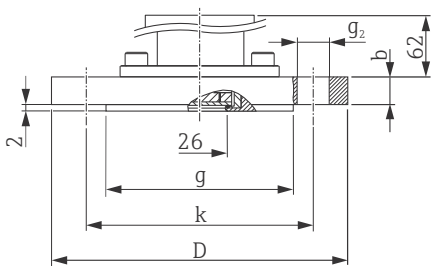

Engineering unit mm

Flange							Boltholes			Weight	Option [1]
Material	Nominal diameter	Nominal pressure	Shape [2]	D	Thickness b	Raised face g	Number	g_2	Hole circle k		
				mm	mm	mm		mm	mm	kg (lb)	
AISI 316L	DN 25	PN 10-40	B1 (D)	115	18	68	4	14	85	1.4 (3.09)	BA
AISI 316L	DN 32	PN 10-40	B1 (D)	140	18	78	4	18	100	2.0 (4.41)	CP
AISI 316L	DN 40	PN 10-40	B1 (D)	150	18	88	4	18	110	2.4 (5.29)	CQ
AISI 316L	DN 50	PN 10-40	B1 (D)	165	20	102	4	18	125	3.2 (7.06)	B3
PVDF	DN 50	PN 10-16	B1 (D)	165	21.4	102	4	18	125	0.6 (1.32)	BR
AISI 316L	DN 50	PN 63	B2 (E)	180	26	102	4	22	135	4.6 (10.14)	C3
PVDF	DN 80	PN 10-16	B1 (D)	200	21.4	138	8	18	160	1.0 (2.21)	BS
AISI 316L	DN 80	PN 10-40	B1 (D)	200	24	138	8	18	160	5.4 (11.91)	B4

1) Product Configurator, order code for "Process connection"
2) Description as per DIN 2527 provided in brackets

ASME flanges, connection dimensions in accordance with ASME B 16.5, raised face RF

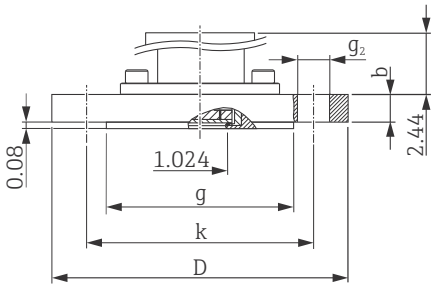

Engineering unit in.

Flange						Boltholes			Weight	Approval [1]	Option [2]
Material	Nominal diameter	Class	D	Thickness	Raised face	Number	g_2	Hole circle			
				b	g			k			
	[in]	[lb./sq.in]	[in]	[in]	[in]		[in]	[in]	[kg (lb)]		
AISI 316/316L [3]	1	150	4.25	1.18	2	4	0.62	3.12	0.9 (1.98)	-	AA [4]
AISI 316/316L [3]	1	300	4.88	1.18	2	4	0.75	3.5	1.4 (3.09)	-	AB [4]
AISI 316/316L [3]	1 ½	150	5	0.69	2.88	4	0.62	3.88	1.0 (2.21)	CRN	AE
AISI 316/316L [3]	1 ½	300	6.12	0.81	2.88	4	0.88	4.5	2.6 (5.73)	CRN	AQ
AISI 316/316L [3]	2	150	6	0.75	3.62	4	0.75	4.75	2.4 (5.29)	CRN	AF
ECTFE [5]	2	150	6	0.75	3.62	4	0.75	4.75	2.4 (5.29)	-	JR
PVDF	2	150	6	0.75	3.62	4	0.75	4.75	0.5 (1.1)	-	A3
AISI 316/316L [3]	2	300	6.5	0.88	3.62	8	0.75	5	3.2 (7.06)	CRN	AR
AISI 316/316L [3]	3	150	7.5	0.94	5	4	0.75	6	4.9 (10.8)	CRN	AG
ECTFE [5]	3	150	7.5	0.94	5	4	0.75	6	4.9 (10.8)	-	JS
PVDF	3	150	7.5	0.94	5	4	0.75	6	0.9 (1.98)	-	A4
AISI 316/316L [3]	3	300	8.25	1.12	5	8	0.88	6.62	6.8 (14.99)	CRN	AS
AISI 316/316L [3]	4	150	9	0.94	6.19	8	0.75	7.5	7.1 (15.66)	CRN	AH
ECTFE [5]	4	150	9	0.94	6.19	8	0.75	7.5	7.1 (15.66)	-	JT
AISI 316/316L [3]	4	300	10	1.25	6.19	8	0.88	7.88	11.6 (25.58)	CRN	AT

1) CSA approval: Product Configurator, order code for "Approval"
2) Product Configurator, order code for "Process connection"
3) Combination of AISI 316 for required pressure resistance and AISI 316L for required chemical resistance (dual rated)
4) Screws must be 15 mm (0.59 in) longer than the standard flange screws
5) ECTFE coating on AISI 316/316L. When operating in hazardous areas, avoid electrostatic charge on the plastic surfaces.

JIS flanges, connection dimensions in accordance with JIS B 2220 BL, raised face RF

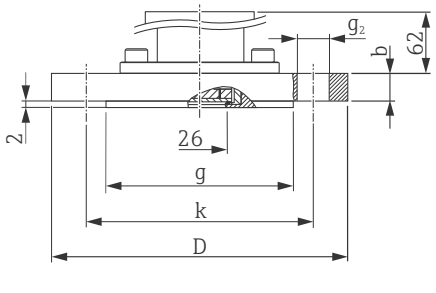

Engineering unit mm

Flange						Boltholes			Weight	Option [1]
Material	Nominal diameter	Nominal pressure	D	Thickness	Raised face	Number	g_2	Hole circle		
				b	g			k		
			mm	mm	mm		mm	mm	kg (lb)	
AISI 316L (1.4435)	50 A	10 K	155	16	96	4	19	120	2.0 (4.41)	KF
	80 A	10 K	185	18	127	8	19	150	3.3 (7.28)	KL
	100 A	10 K	210	18	151	8	19	175	4.4 (9.7)	KH

1) Product Configurator, order code for "Process connection"

Hygienic process connections for PMC71 with flush-mounted process isolating diaphragm

Many process connections with an EPDM or HNBR seal are approved for the PMC71 in accordance with the guidelines of the 3A Sanitary Standard. To ensure that the 3A approval is valid for the PMC71 version, a 3A-approved process connection together with an EPDM or HNBR seal must be selected when ordering (Product Configurator, order code for "Seal").

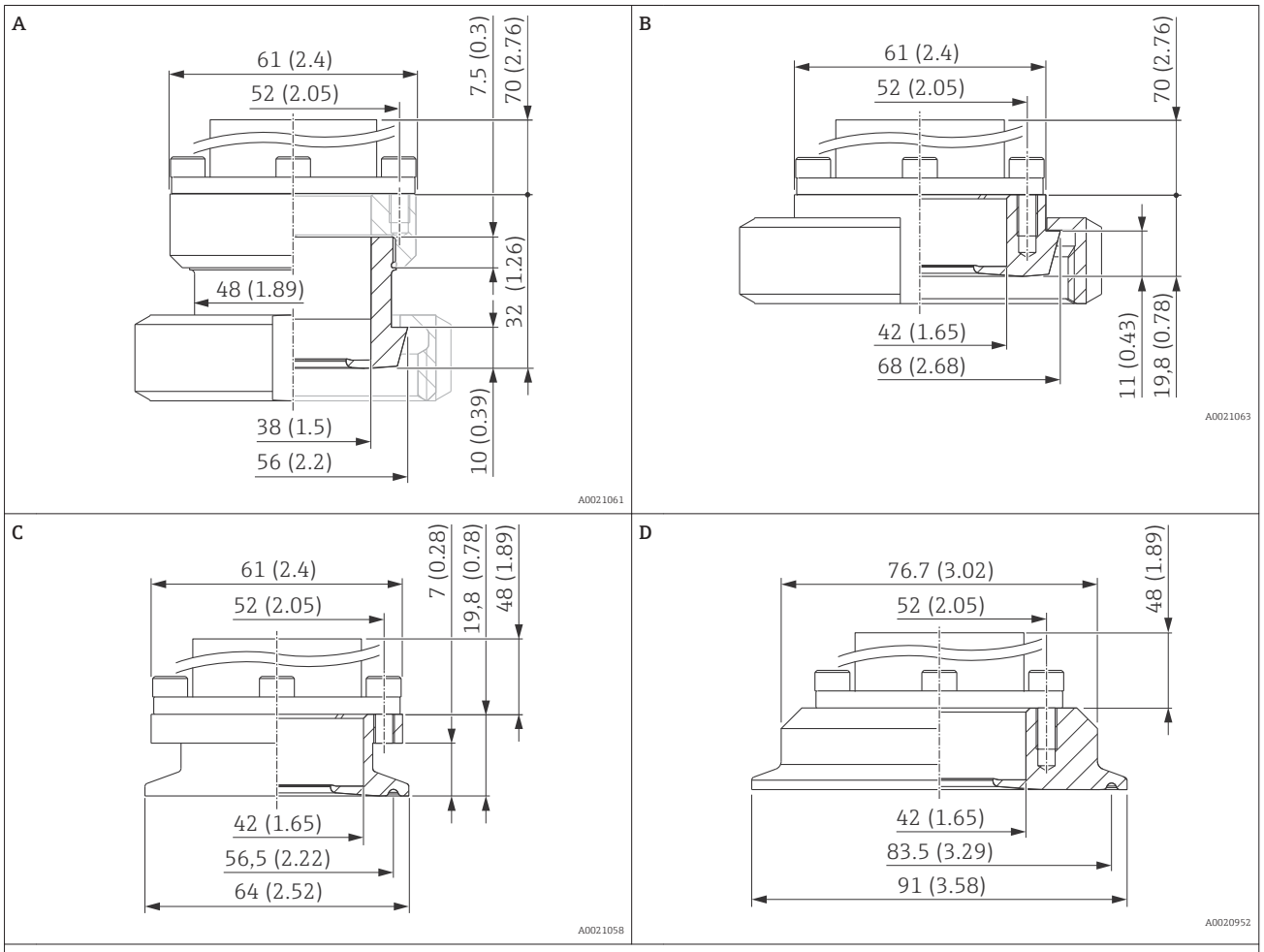

Engineering unit mm (in)

Item	Description	Nominal pressure	Material [1]	Weight	Approval [2]	Option [3]
				kg (lb)		
A	DIN 11851 DN 40 PN 25, with HNBR or EPDM seal	PN 25	AISI 316L (1.4435)	0.7 (1.54)	EHEDG, 3A, CRN	MP [4]
B	DIN 11851 DN 50 PN 25, with HNBR or EPDM seal	PN 25		0.9 (1.98)	EHEDG, 3A, CRN	MR [4]
C	Tri-Clamp ISO 2852 DN 51 (2"), with HNBR or EPDM seal	PN 40 [5]		0.7 (1.54)	EHEDG, 3A, CRN	TD [4]
D	Tri-Clamp ISO 2852 DN 76.1 (3"), with NBR or EPDM seal	PN 40 [5]		0.9 (1.98)	EHEDG, 3A, CRN	TF [4]

1) Delta-ferrite content < 1 %. Roughness of wetted surfaces R_a < 0.80 µm (31.5 µin) as standard. Lower surface roughness on request.
2) CSA approval: Product Configurator, order code for "Approval"
3) Product Configurator, order code for "Process connection"
4) Endress+Hauser supplies these slotted nuts in stainless steel AISI 304 (DIN/EN material number 1.4301) or in AISI 304L (DIN/EN material number 1.4307).
5) Restricted nominal pressure (13.8 bar (200 psi)) for the following approvals: Product Configurator, order code for "Approval", option "E", "U" and "V".

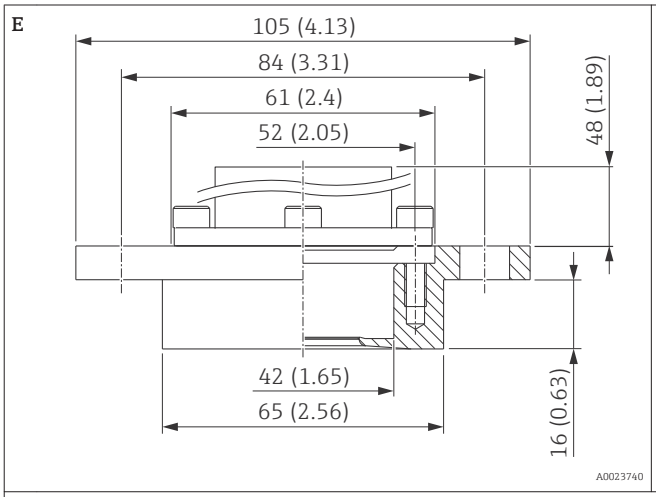

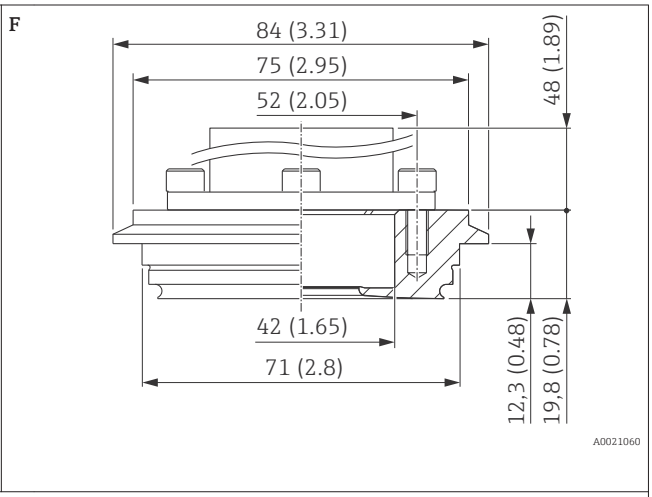

Engineering unit mm (in)

Item	Description	Nominal pressure	Material [1]	Weight	Approval [2]	Option [3]
				kg (lb)		
E	DRD DN50 (65 mm) with HNBR or EPDM seal	PN 25	AISI 316L (1.4435)	0.9 (1.98)	EHEDG	TK [4]
F	Varivent type N for pipes 40 – 162, with HNBR or EPDM seal	PN 40		1 (2.21)	EHEDG, 3A, CRN	TR

1) Delta-ferrite content < 1 %. Roughness of wetted surfaces R_a < 0.80 µm (31.5 µin) as standard. Lower surface roughness on request.
2) CSA approval: Product Configurator, order code for "Approval"
3) Product Configurator, order code for "Process connection"
4) Endress+Hauser supplies these slotted nuts in stainless steel AISI 304 (DIN/EN material number 1.4301) or in AISI 304L (DIN/EN material number 1.4307).

Process connections for PMP71 with internal process isolating diaphragm

Threaded connection ISO 228 G

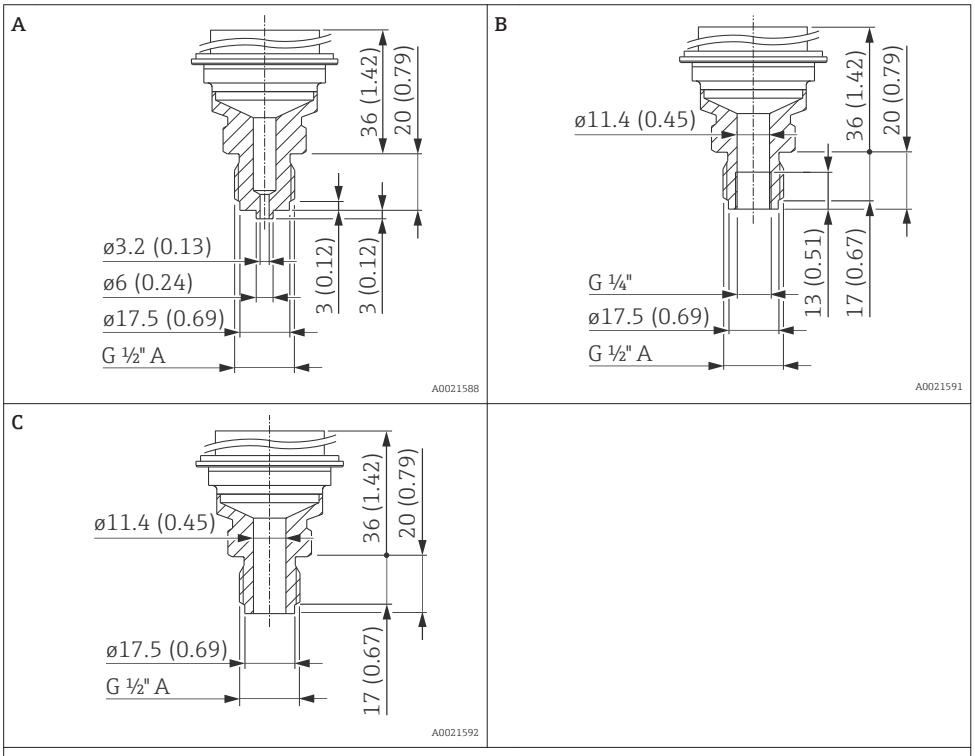

Engineering unit mm (in)

Item	Description	Material	Weight	Option [1]
			kg (lb)	
A	Thread ISO 228 G ½" A EN 837	AISI 316L	0.63 (1.39)	GA
		Alloy C276 (2.4819)		GB
B	Thread ISO 228 G ½" A, G ¼" (internal)	AISI 316L		GE
		Alloy C276 (2.4819)		GF
C	Thread ISO 228 G ½" A, Hole11.4 mm (0.45 in)	AISI 316L		GH
		Alloy C276 (2.4819)		GJ

1) Product Configurator, order code for "Process connection"

Process connections for PMP71 with internal process isolating diaphragm

Threaded connection ANSI

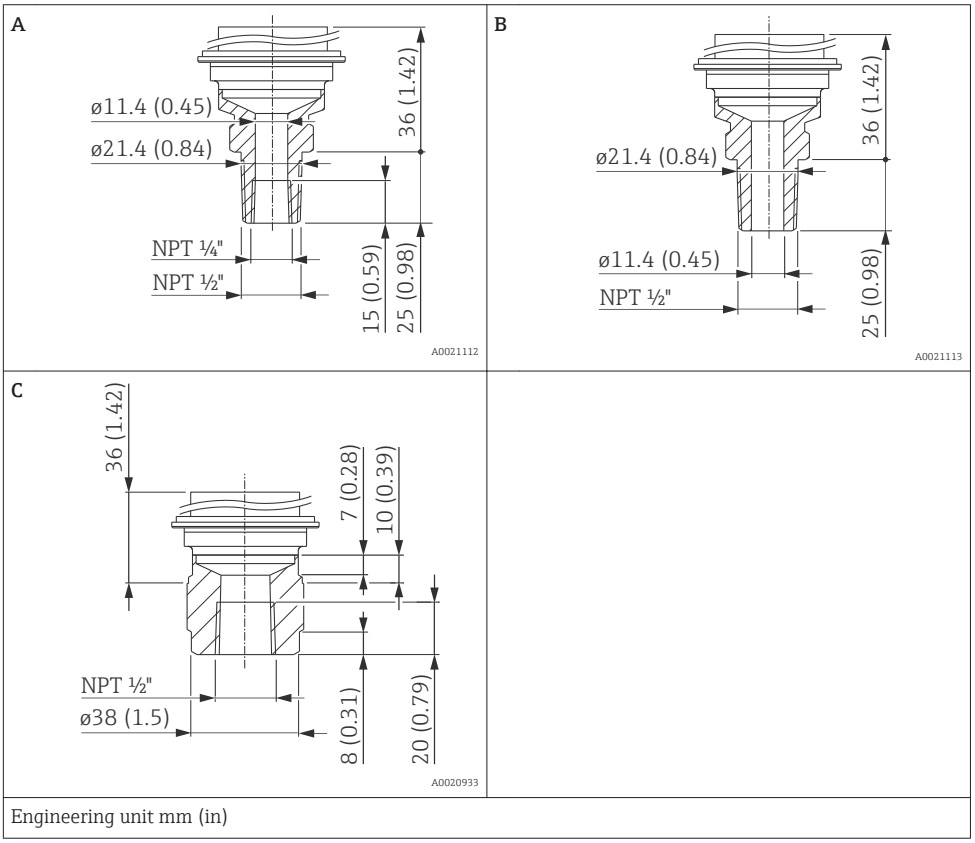

Engineering unit mm (in)

Item	Description	Material	Weight	Approval [1]	Option [2]
			kg (lb)		
A	ANSI ½" MNPT, ¼" FNPT	AISI 316L	0.63 (1.39)	CRN	RA
		Alloy C276 (2.4819)		CRN	RB
B	ANSI ½" MNPT, Hole 11.4 mm (0.45 in) = 400 bar (6 000 psi) Hole 3.2 mm (0.13 in) = 700 bar (10 500 psi)	AISI 316L		CRN	RD
		Alloy C276 (2.4819)		CRN	RE
C	ANSI ½" FNPT	AISI 316L	0.7 (1.54)	CRN	RH
		Alloy C276 (2.4819)		CRN	RJ

1) CSA approval: Product Configurator, order code for "Approval"
2) Product Configurator, order code for "Process connection"

Process connections for PMP71 with internal process isolating diaphragm

Threaded connection JIS

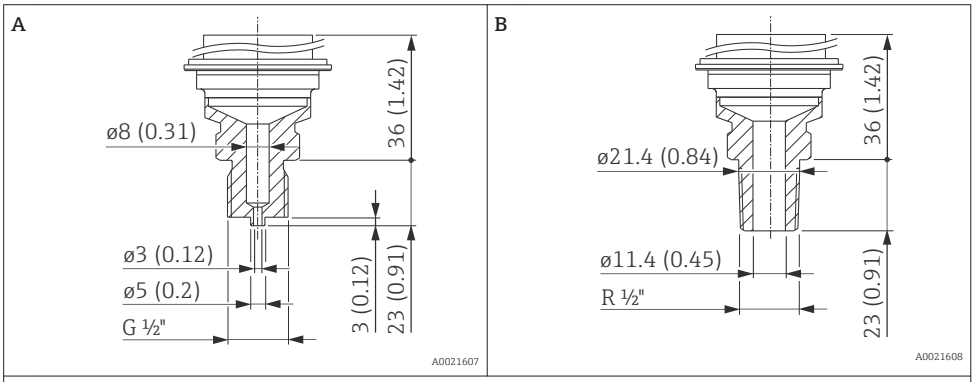

Engineering unit mm (in)

Item	Description	Material	Weight	Option [1]
			kg (lb)	
A	JIS B0202 G ½" (male)	AISI 316L	0.6 (1.32)	GL
B	JIS B0203 R ½" (male)			RL

1) Product Configurator, order code for "Process connection"

Threaded connection DIN 13

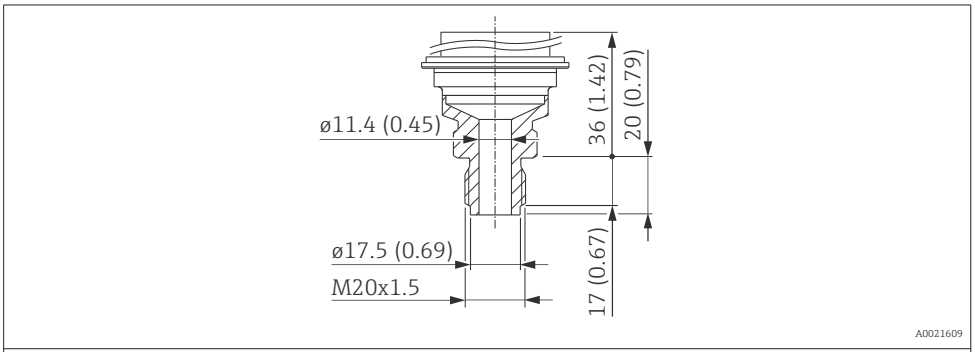

Engineering unit mm (in)

Description	Material	Weight	Option [1]
		kg (lb)	
DIN 13 M20 x 1.5, EN 837 11.4 mm (0.45 in)	AISI 316L	0.6 (1.32)	GP
	Alloy C276 (2.4819)		GQ

1) Product Configurator, order code for "Process connection"

Process connections for PMP71 with flush-mounted process isolating diaphragm

Threaded connection ISO 228 G

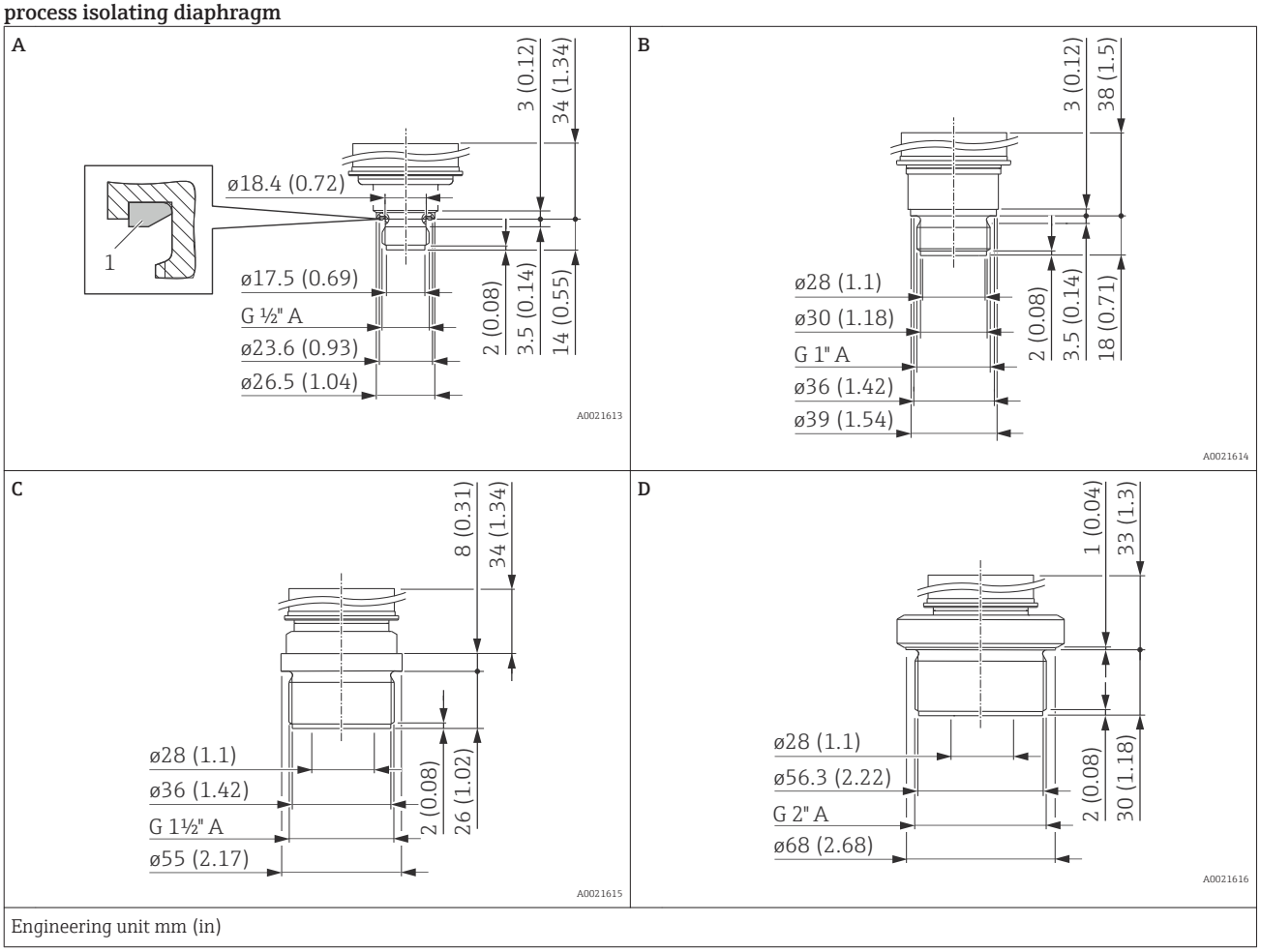

Engineering unit mm (in)

Item	Description	Material	Weight	Option [1]
			kg (lb)	
A	Thread ISO 228 G ½" A, DIN 3852 FKM seal (item 1) pre-installed	AISI 316L	0.4 (0.88)	1A
		Alloy C276 (2.4819)		1B
B	Thread ISO 228 G 1" A	AISI 316L	0.7 (1.54)	1D
		Alloy C276 (2.4819)		1E
C	Thread ISO 228 G 1 ½" A	AISI 316L	1.1 (2.43)	1G
		Alloy C276 (2.4819)		1H
D	Thread ISO 228 G 2" A	AISI 316L	1.5 (3.31)	1K
		Alloy C276 (2.4819)		1L

1) Product Configurator, order code for "Process connection"

Threaded connection DIN

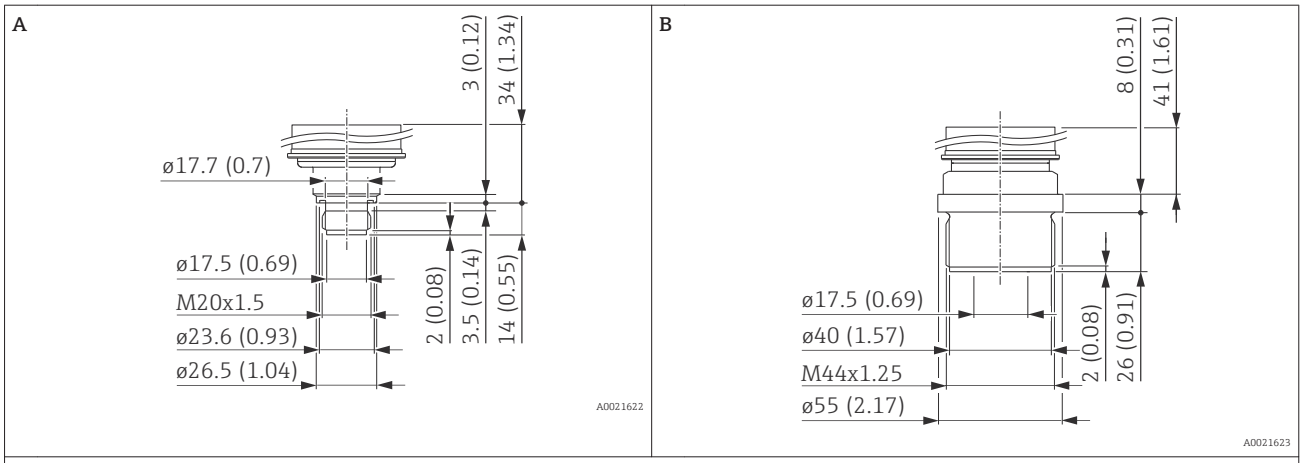

Engineering unit mm (in)

Item	Description	Material	Weight	Option [1]
			kg (lb)	
A	Thread DIN 16288 M20	AISI 316L	0.4 (0.88)	1N
		Alloy C276 (2.4819)		1P
B	Thread DIN 13 M44 x 1.25	AISI 316L	1.1 (2.43)	1R
		Alloy C276 (2.4819)		1S

1) Product Configurator, order code for "Process connection"

Process connections for PMP71 with flush-mounted process isolating diaphragm

Threaded connection ANSI

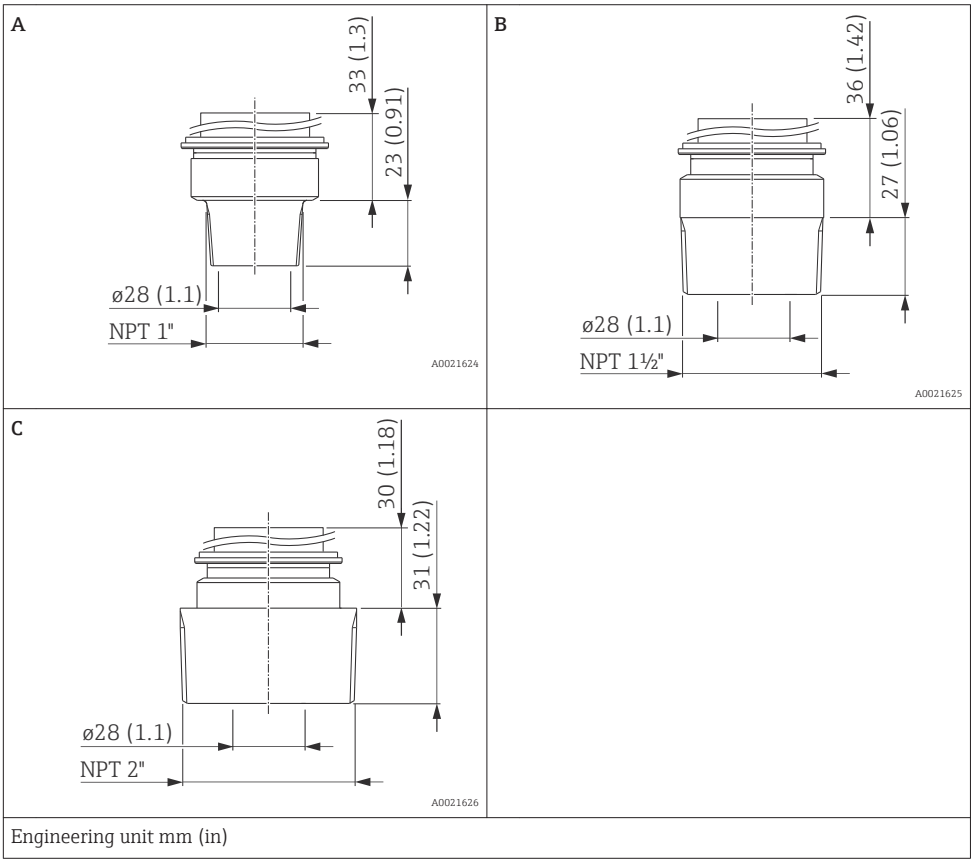

Engineering unit mm (in)

Item	Description	Material	Weight	Approval [1]	Option [2]
			kg (lb)		
A	ANSI 1" MNPT	AISI 316L	0.7 (1.54)	CRN	2A
		Alloy C276 (2.4819)		CRN	2B
B	ANSI 1 ½" MNPT	AISI 316L	1 (2.21)	CRN	2D
		Alloy C276 (2.4819)		CRN	2E
C	ANSI 2" MNPT	AISI 316L	1.3 (2.87)	CRN	2G
		Alloy C276 (2.4819)		CRN	2H

1) CSA approval: Product Configurator, order code for "Approval"
2) Product Configurator, order code for "Process connection"

Process connections for PMP71 with flush-mounted process isolating diaphragm

EN/DIN flanges, connection dimensions in accordance with EN 1092-1/DIN 2527

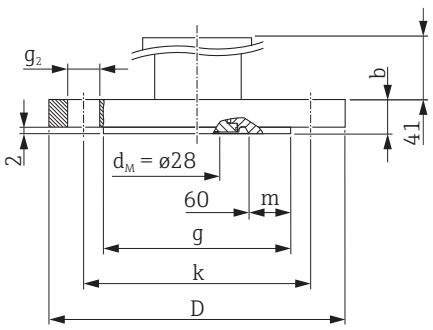

Engineering unit mm

Flange [1]							Boltholes			Weight Flange	Option [2]
Nominal diameter	Nominal pressure	Shape [3]	D	Thickness	Raised face	Width of Raised face	Number	g_2	Hole circle		
				b	g	m			k		
			[mm]	[mm]	[mm]	[mm]		[mm]	[mm]	[kg]	
DN 25	PN 10-40	B1 (D)	115	18	68 [4]	4	4	14	85	1.2 (2.65)	CN
DN 32	PN 10-40	B1 (D)	140	18	78 [4]	9	4	18	100	1.9 (4.19)	CP
DN 40	PN 10-40	B1 (D)	150	18	88 [4]	14	4	18	110	2.2 (4.85)	CQ
DN 50	PN 10-40	B1 (D)	165	20	102	-	4	18	125	3.0 (6.62)	B3
DN 80	PN 10-40	B1 (D)	200	24	138	-	8	18	160	5.3 (11.69)	B4

1) Material: AISI 316L
2) Product Configurator, order code for "Process connection"
3) Name as per DIN 2527 provided in brackets
4) With these process connections the raised face is smaller than described in the standard. Due to a smaller raised face a special seal must be used. For further information, please contact a seal manufacturer or your local Endress+Hauser Sales Center.

Process connections for PMP71 with flush-mounted process isolating diaphragm

ASME flanges, connection dimensions in accordance with ASME B 16.5, raised face RF*

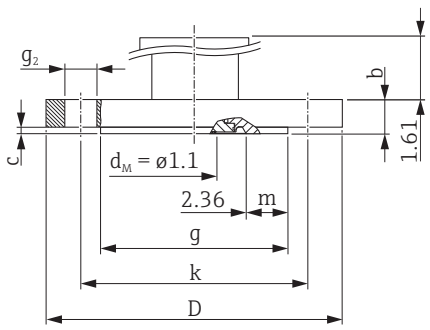

Engineering unit in.
(*all apart from AN, see table below)

Flange [1]							Boltholes			Weight	Approval [2]	Option [3]
Nominal diameter	Class/ nominal pressure	D	Thickness	Raised face	Thickness of raised face	Width of Raised face	Number	g_2	Hole circle			
			b	g	c	m			k			
[in]	lb./sq.in	[in]	[in]	[in]	[in]	[in]		[in]	[in]	[kg]		
1	300	4.88	0.69	2 [4]	0.06	0.2	4	0.75	3.5	1.3 (2.87)	CRN	AN
1 ½	150	5	0.69	2.88 [4]	0.08	0.52	4	0.62	3.88	1.5 (3.31)	CRN	AE
1 ½	300	6.12	0.81	2.88 [4]	0.08	0.52	4	0.88	4.5	2.6 (5.73)	CRN	AQ
2	150	6	0.75	3.62	0.08	-	4	0.75	4.75	2.4 (5.29)	CRN	AF
2	300	6.5	0.88	3.62	0.08	-	8	0.75	5	3.2 (7.06)	CRN	AR
3	150	7.5	0.94	5	0.08	-	4	0.75	6	4.9 (10.8)	CRN	AG
3	300	8.25	1.12	5	0.08	-	8	0.88	6.62	6.7 (14.77)	CRN	AS
4	150	9	0.94	6.19	0.08	-	8	0.75	7.5	7.1 (15.66)	CRN	AH
4	300	10	1.25	6.19	0.08	-	8	0.88	7.88	11.6 (25.88)	CRN	AT

1) Material: AISI 316/316L; Combination of AISI 316 for required pressure resistance and AISI 316L for required chemical resistance (dual rated)
2) CSA approval: Product Configurator, order code for "Approval"
3) Product Configurator, order code for "Process connection"
4) With these process connections the raised face is smaller than described in the standard. Due to a smaller raised face a special seal must be used. For further information, please contact a seal manufacturer or your local Endress+Hauser Sales Center.

Process connections for PMP71 with flush-mounted process isolating diaphragm

JIS flanges, connection dimensions in accordance with JIS B 2220 BL, raised face RF

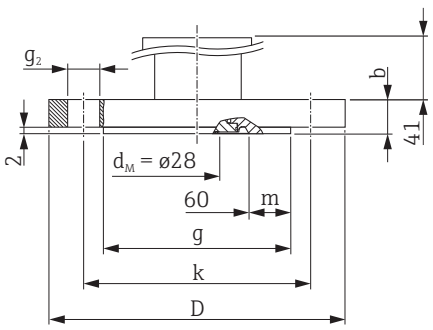

Engineering unit mm

Flange							Boltholes			Weight Flange	Option [1]
Material	Nominal diameter	Class/ Nominal pressure	D	Thickness	Raised face	Width of Raised face	Number	g_2	Hole circle		
				b	g	m			k		
			[mm]	[mm]	[mm]	[mm]		[mm]	[mm]	[kg]	
AISI 316L	25 A	20 K	125	16	67 [2]	3.5	4	19	90	1.5 (3.31)	KA
AISI 316L	50 A	10 K	155	16	96	-	4	19	120	2.0 (4.41)	KF
AISI 316L	80 A	10 K	185	18	127	-	8	19	150	3.3 (7.28)	KL
AISI 316L	100 A	10 K	210	18	151	-	8	19	175	4.4 (9.7)	KH

1) Product Configurator, order code for "Process connection"
2) With these process connections the raised face is smaller than described in the standard. Due to a smaller raised face a special seal must be used. For further information, please contact a seal manufacturer or your local Endress+Hauser Sales Center.

Process connections for PMP71

Oval flange

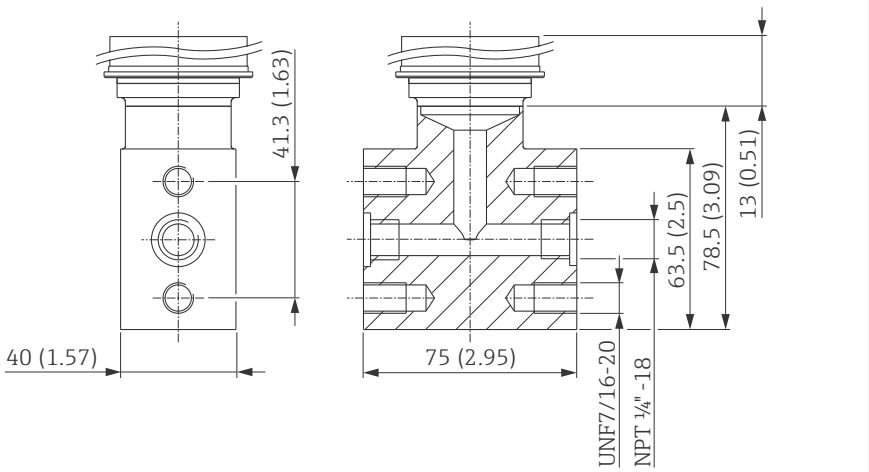

Engineering unit mm (in)

Material	Description	Weight	Approval [1]	Option [2]
		kg (lb)		
AISI 316L (1.4404)	Oval flange adapter 1/4-18 NPT as per IEC 61518 Mounting: 7/16-20 UNF	1.9 (4.19)	CRN	UR

1) CSA approval: Product Configurator, order code for "Approval"
2) Product Configurator, order code for "Process connection"

Process connections for PMP71

Prepared for diaphragm seal mount

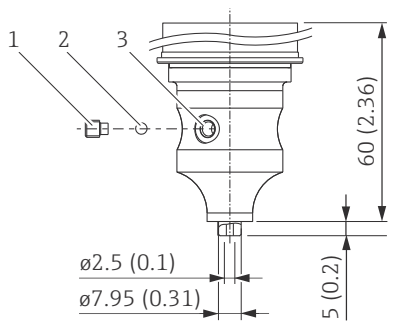

1 Setscrew with hexagonal recess4 mm (0.16 in), material A2-70
2 Bearing DIN 5401 (1.3505)
3 Hole for filling fluid

Engineering unit mm (in)

Material	Description	Weight in kg (lb)	Approval [1]	Option [2]
AISI 316L (1.4404)	Prepared for diaphragm seal mount	1.9 (4.19)	CRN	U1

1) CSA approval: Product Configurator, order code for "Approval"
2) Product Configurator, order code for "Process connection"

Process connections for PMP75 with flush-mounted process isolating diaphragm

- The weights of the diaphragm seals are given in the tables. For the weight of the housing, see
- The following drawings are drawings that illustrate how the system works in principle. In other words, the dimensions of a diaphragm seal supplied can deviate from the dimensions given in this document.
- With the use of high-temperature oils the design can deviate strongly.
- Note "Planning instructions, diaphragm seal systems" section→ 🖹 99
- For further information please contact your local Endress+Hauser Sales Center.

Diaphragm seal cell structure

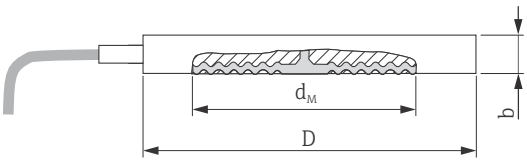

Engineering unit mm (in)

Flange					Diaphragm seal		Approval [1]	Option [2]
Material	Nominal diameter	Nominal pressure [3]	D	Thickness b	Max. diameter of the process isolating diaphragm d_M	Weight [kg (lb)]		
			[mm]	[mm]	[mm]			
AISI 316L	DN 50	PN 16-400	102	20	59	1.3 (2.87)	-	UI
	DN 80	PN 16-400	138	20	89	2.3 (5.07)	-	UJ
	DN 100	PN 16-400	162	20	89	3.1 (6.84)	-	UK
	[in]	[lb/sq.in]	[in (mm)]	[in (mm)]	[in (mm)]			
	2	150-2500	4.01 (102)	0.79 (20)	2.32 (59)	1.3 (2.87)	CRN	UL
	3	150-2500	5.35 (136)	0.79 (20)	3.50 (89)	2.3 (5.07)	CRN	UM
	4	150-2500	6.22 (158)	0.79 (20)	3.50 (89)	3.1 (6.84)	CRN	UR

1) CSA approval: Product Configurator, order code for "Approval"
2) Product Configurator, order code for "Process connection"
3) The specified nominal pressure applies to the diaphragm seal. The maximum pressure for the measuring device is dependent on the lowest-rated element, with regard to pressure, of the selected components → 🖹 43.

PMP75 basic device

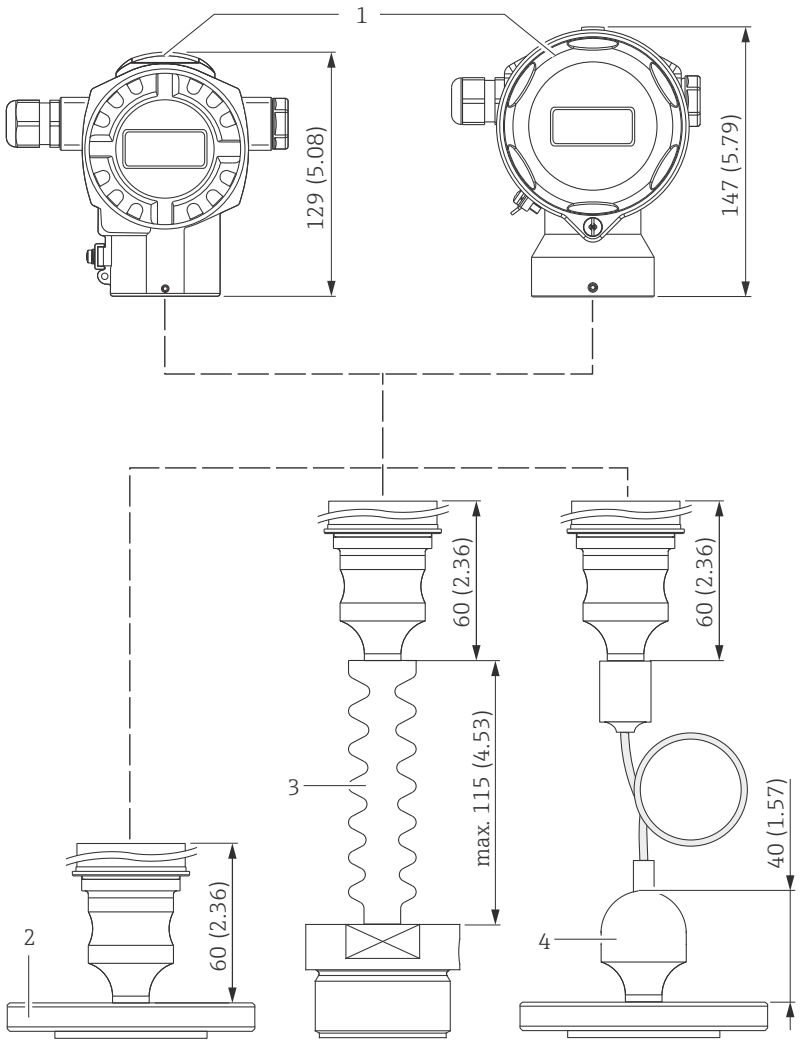

1 PMP75 basic device
2 Diaphragm seal, here, e.g. flange diaphragm seal
3 Diaphragm seal with temperature isolator
4 Process connections with capillary lines are 40 mm (1.57 in) higher than process connections without capillary lines

Engineering unit mm (in). PMP75 basic device with diaphragm seal.

Process connections for PMP75 with flush-mounted process isolating diaphragm

Thread ISO 228 and ANSI

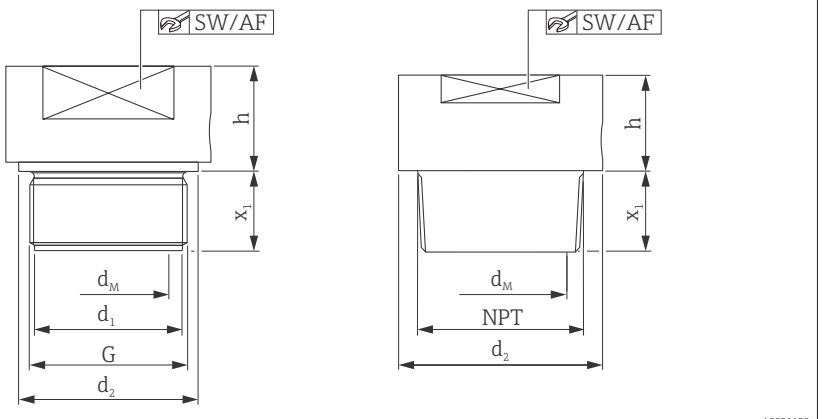

Engineering unit mm (in). Left: thread ISO 228, right: thread ANSI

Threaded connection							Diaphragm seal			Approval [1]	Option [2]
Material	Thread	Nominal pressure	d_1	d_2	Screw-in length	Across flats	Max. diameter of the process isolating diaphragm	Height	Weight		
		PN				SW/AF		h			
			[mm]	[mm]	[mm]		[mm]	[mm]	[kg (lb)]		
AISI 316L	G 1" A	400	30	39	21 [3]	32	30	19	0.4 (0.88)	-	1D
Alloy C276									0.5 (1.1)	-	1E
AISI 316L	G 1 ½" A	400	44	55	30	50	42	20	0.9 (1.98)	-	1G
Alloy C276									1.0 (2.21)	-	1H
AISI 316L	G 2"	400	56	68	30	65	50	20	1.9 (4.19)	-	1K
Alloy C276									2.1 (4.63)	-	1L
AISI 316L	1" MNPT	400	–	48	28	41	24	37	0.6 (1.32)	CRN	2A
Alloy C276									0.7 (1.54)	CRN	2B
AISI 316L	1 ½" MNPT	400	–	60	30	41	36	20	0.9 (1.98)	CRN	2D
Alloy C276									1.0 (2.21)	CRN	2E
AISI 316L	2" MNPT	400	–	78	30	65	38	35	1.8 (3.97)	CRN	2G
Alloy C276									2.0 (4.41)	CRN	2H

1) CSA approval: Product Configurator, order code for "Approval"
2) Product Configurator, order code for "Process connection"
3) 28 mm (1.1 in) in conjunction with high-temperature oil

Process connections for PMP75 with flush-mounted process isolating diaphragm

Tri-Clamp ISO 2852

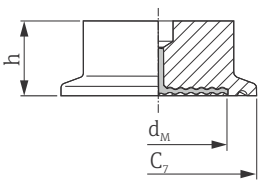

Engineering unit mm (in)

Material [1]	Nominal diameter ISO 2852	Nominal diameter DIN 32676	Nominal diameter	Diameter	Max. diameter of the process isolating diaphragm		Height	Weight	Approval [2]	Option [3]
					Standard	with TempC membrane				
				C_7	d_M	d_M	h			
			[in]	[mm]	[mm]	[mm]	[mm]	[kg (lb)]		
AISI 316L	ND 25 / 33.7	DN 25	1	50.5	24	-	37	0.32 (0.71)	EHEDG, 3A, CRN	TB
	ND 38	DN 40	1 ½	50.5	36	36	30	1 (2.21)	EHEDG, 3A, CRN	TC [4) 5)]
	ND 51 / 40	DN 50	2	64	48	41	30	1.1 (2.43)	EHEDG, 3A, CRN	TD [4) 5)]
	ND 63.5	DN 50	2 ½	77.5	61	61	30	0.7 (1.54)	EHEDG, 3A	TE [6)]
	ND 76.1	–	3	91	73	61	30	1.2 (2.65)	EHEDG, 3A, CRN	TF [5)]

1) Surface roughness of the wetted surfaces R_a < 0.76 µm (29.9 µin) as standard. Lower surface roughness on request.
2) CSA approval: Product Configurator, order code for "Approval"
3) Product Configurator, order code for "Process connection"
4) Optionally available as an ASME-BPE-compliant diaphragm seal version for use in biochemical processes, surfaces in contact with medium R_a < 0.38 µm (15 µin)) , electropolished; order using order code for "Additional options", option "P".
5) Alternatively available with TempC membrane.
6) With TempC membrane

PN max. = 40 bar (580 psi). The maximum PN depends on the clamp used.

Process connections for PMP75 with flush-mounted process isolating diaphragm

Tri-Clamp pipe diaphragm seal ISO 2852

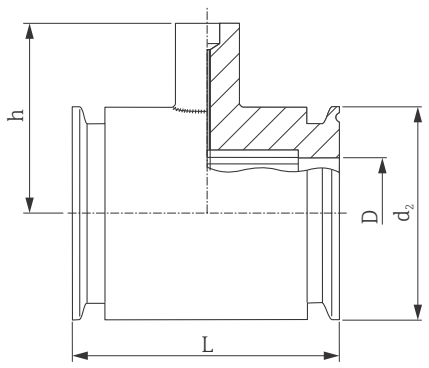

Engineering unit mm (in)

Material [1]	Nominal diameter ISO 2852	Nominal diameter	Nominal pressure	D	d_2	Height	Installation length	Weight	Approval [2]	Option [3]
						h	L			
		[in]		[in]	[mm]	[mm]	[mm]	[kg (lb)]		
AISI 316L	DN 25	1	PN 40	22.5	50.5	67	126	1.7 (3.75)	3A, CRN	SB
	DN 38	1 ½	PN 40	35.5	50.5	67	126	1.0 (2.21)	3A, CRN	SC [4]
	DN 51	2	PN 40	48.6	64	79	100	1.7 (3.75)	3A, CRN	SD [4]

1) Surface roughness of the wetted surfaces R_a < 0.8 µm (31.5 µin) as standard.
2) CSA approval: Product Configurator, order code for "Approval"
3) Product Configurator, order code for "Process connection"
4) incl. 3.1 and pressure test in accordance with the Pressure Equipment Directive, category II

Hygienic process connections for PMP75 with flush-mounted process isolating diaphragm

Varivent for pipes

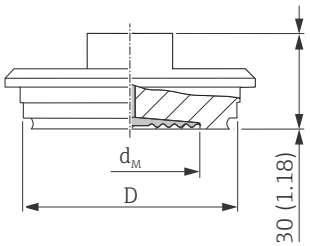

Engineering unit mm (in)

Material [1]	Description	Nominal pressure	D	Max. diameter of the process isolating diaphragm		Weight	Approval	Option [2]
				Standard	with TempC membrane			
				d_M	d_M			
			[mm]	[mm]	[mm]	[kg (lb)]		
AISI 316L	Type F for pipes DN 25 - DN 32	PN 40	50	34	36	0.4 (0.88)	EHEDG, 3A	TU [3]
AISI 316L	Type N for pipes DN 40 - DN 162	PN 40	68	58	61	0.8 (1.76)	EHEDG, 3A	TR [4] [5]

1) Surface roughness of the wetted surfaces R_a < 0.76 µm (29.9 µin) as standard.
2) Product Configurator, order code for "Process connection"
3) With TempC membrane
4) Optionally available as an ASME-BPE-compliant diaphragm seal version for use in biochemical processes, surfaces in contact with medium R_a < 0.38 µm (15 µin)) , electropolished; order using order code for "Additional options", option "P". Reduced surface roughness on request.
5) Alternatively available with TempC membrane.

Hygienic process connections for PMP75 with flush-mounted process isolating diaphragm

DRD DN50 (65 mm)

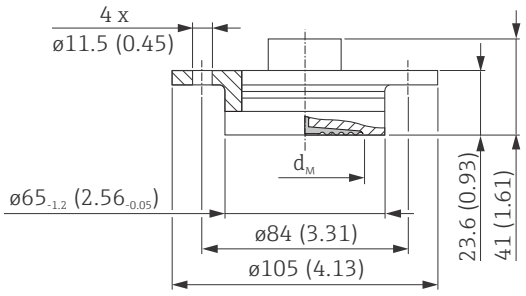

Engineering unit mm (in)

Material [1]	Nominal pressure	Max. diameter of the process isolating diaphragm		Weight	Option [2]
		Standard	with TempC membrane		
		d_M	d_M		
		[mm]	[mm]	[kg (lb)]	
AISI 316L	PN 25	50	48	0.75 (1.65)	TK [3]

1) Surface roughness of the wetted surfaces R_a < 0.76 µm (29.9 µin) as standard.
2) Product Configurator, order code for "Process connection"
3) Alternatively available with TempC membrane.

SMS nozzles with coupling nut

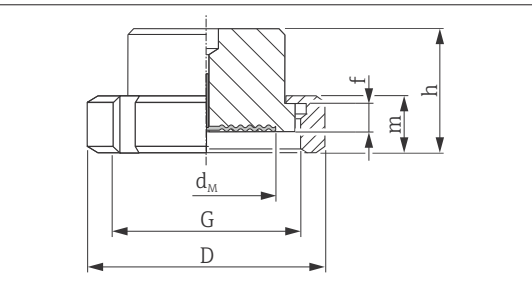

Engineering unit mm (in)

Material [1]	Nominal diameter	Nominal pressure	D	Nozzle height	Thread	Height	Height	max. diameter of the diaphragm	Weight	Approval	Option [2]
				f	G	m	h	d_M			
			[mm]	[mm]		[mm]	[mm]	[mm]	[kg (lb)]		
AISI 316L	1	PN 25	54	3.5	Rd 40 – 1/6	20	42.5	24	0.25 (0.55)	3A, EHEDG	TG
	1 ½	PN 25	74	4	Rd 60 – 1/6	25	57	36	0.65 (1.43)	3A, EHEDG	TH [3]
	2	PN 25	84	4	Rd 70 – 1/6	26	62	48	1.05 (2.32)	3A, EHEDG	TI [3]

1) Surface roughness of the wetted surfaces R_a < 0.76 µm (29.9 µin) as standard.
2) Product Configurator, order code for "Process connection"
3) Alternatively available with TempC diaphragm.

APV-RJT nozzles with coupling nut

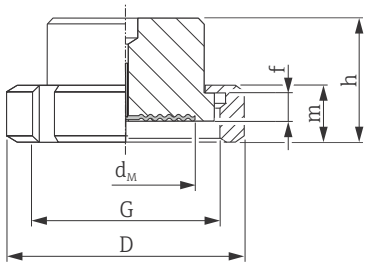

Engineering unit mm (in)

Material [1]	Nominal diameter	Nominal pressure	D	Nozzle height	Thread	Height	Height	Max. diameter of the process isolating diaphragm	Weight	Option [2]
		PN		f	G	m	h	d_M		
	[in]	[bar]	[mm]	[mm]		[mm]	[mm]	[mm]	[kg (lb)]	
AISI 316L	1	PN 40	77	6.5	1 13/16 – 1/8"	22	42.6	21	0.45 (0.99)	TL
	1 ½	PN 40	72	6.4	2 5/16 – 1/8"	22	42.6	28	0.75 (1.65)	TM
	2	PN 40	86	6.4	2 7/8 – 1/8"	22	42.6	38	1.2 (2.65)	TN

1) Surface roughness of the wetted surfaces R_a < 0.8 µm (31.5 µin) as standard.
2) Product Configurator, order code for "Process connection"

APV-ISS nozzles with coupling nut

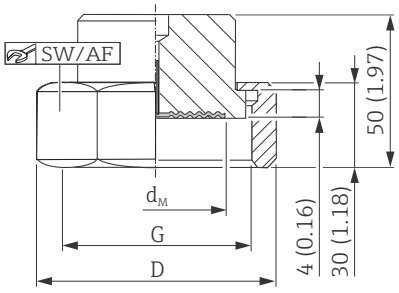

Engineering unit mm (in)

Material [1]	Nominal diameter	Nominal pressure	D	Thread	Across flats	Max. diameter of the process isolating diaphragm	Weight	Option [2]
		PN		G	AF	d_M		
	[in]	[bar]	[mm]			[mm]	[kg (lb)]	
AISI 316L	1	PN 40	54.1	1 ½" – 1/8"	46.8	24	0.4 (0.88)	TP
	1 ½	PN 40	72	2" – 1/8"	62	34	0.6 (1.32)	TQ
	2	PN 40	89	2 ½" – 1/8"	77	45	1.1 (2.43)	TS

1) Surface roughness of the wetted surfaces R_a < 0.8 µm (31.5 µin) as standard.
2) Product Configurator, order code for "Process connection"

Hygienic process connections for PMP75 with flush-mounted process isolating diaphragm

Taper adapter with coupling nut, DIN 11851

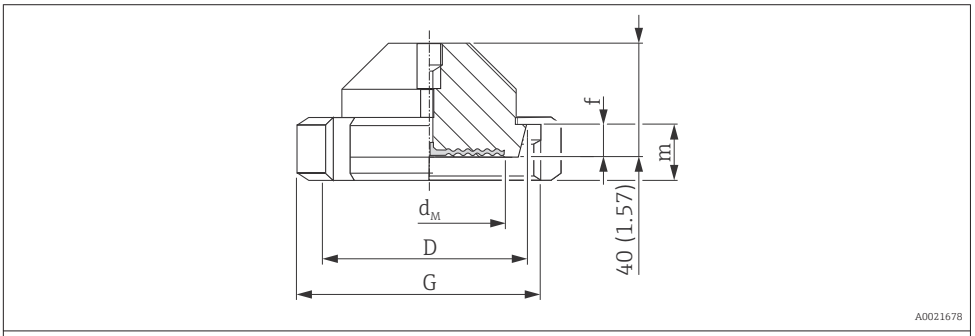

Engineering unit mm (in)

Material [1]	Taper adapter				Slotted nut		Diaphragm seal			Approval	Option [2]
							Max. diameter of the process isolating diaphragm		Weight		
	Description	Nominal pressure	D	Nozzle height	Thread	Height	Standard	with TempC membrane			
		PN		f	G	m	d_M	d_M			
		[bar]	[mm]	[mm]		[mm]	[mm]	[mm]	[kg (lb)]		
AISI 316L	DN 32	PN 40	50	10	Rd 58 x 1/6"	21	32	28	0.45 (0.99)	3A, EHEDG	MI [3]
	DN 40	PN 40	56	10	Rd 65 x 1/6"	21	38	36	0.45 (0.99)	3A, EHEDG	MZ [3]
	DN 50	PN 25	68.5	11	Rd 78 x 1/6"	19	52	48	1.1 (2.43)	3A, EHEDG	MR [4]
	DN 65	PN 25	86	12	Rd 95 x 1/6"	21	66	61	2.0 (4.41)	3A, EHEDG	MS [4]
	DN 80	PN 25	100	12	Rd 110 x 1/4"	26	81	61	2.55 (5.62)	3A, EHEDG	MT [4]

1) Surface roughness of the wetted surfaces R_a < 0.76 µm (29.9 µin) as standard.
2) Product Configurator, order code for "Process connection"
3) With TempC diaphragm
4) Alternatively available with TempC membrane.

NEUMO BioControl

Process temperature range: −10 to +200 °C (+14 to +392 °F)

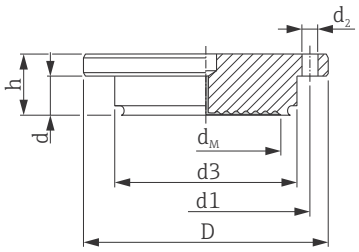

Engineering unit mm (in)

Material [1]	NEUMO BioControl								Diaphragm seal			Approval	Option [2]
									Max. diameter of the process isolating diaphragm		Weight		
	Nominal of the diaphragm	Nominal pressure	Diameter					Height	Standard	with TempC membrane			
		PN	D	d	d_2	d_3	d_1	m	d_M	d_M			
		[bar]	[mm]	[mm]	[mm]	[mm]	[mm]	[mm]	[mm]	[mm]	[kg (lb)]		
AISI 316L	DN 50	PN 16	90	17	4 x Ø 9	50	70	27	40	36	1.1 (2.43)	3A	S4 [3]
	DN 80	PN 16	140	25	4 x Ø 11	87.4	115	37	61	61	2.6 (5.73)	3A	S6 [3]

1) Surface roughness of the wetted surfaces R_a < 0.76 µm (29.9 µin) as standard.
2) Product Configurator, order code for "Process connection"
3) With TempC membrane

Universal process adapter

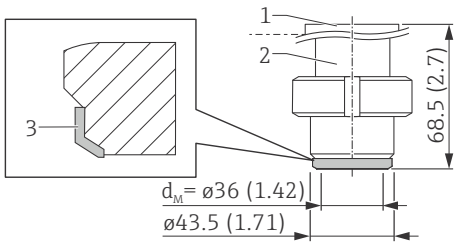

Engineering unit mm (in)

Description	Material [1]	Weight [kg (lb)]	Approval	Option [2]
Universal process adapter with pre-installed silicone molded seal (item 3) (spare part no.: 52023572) FDA 21CFR177.2600/USP Class VI-70C	▪ Item 1: Top section AISI 316L (1.4404) ▪ Item 2: Bottom section AISI 316L (1.4435)	0.8 (1.76)	3A, EHEDG	00 [3] [4]

1) Surface roughness of the wetted surfaces R_a < 0.76 µm (29.9 µin) as standard. Surface quality R_a< 0.38 µm (15 µin) electropolished (wetted)
Ordering information: Product Configurator, order code for "Additional options 2", option "P".
2) Product Configurator, order code for "Process connection"
3) Endress+Hauser supplies these slotted nuts in stainless steel AISI 304 (DIN/EN material number 1.4301) or in AISI 304L (DIN/EN material number 1.4307).
4) Alternatively available with TempC membrane.

Process connections for PMP75 with flush-mounted process isolating diaphragm

EN/DIN flanges, connection dimensions in accordance with EN 1092-1/DIN 2527 and DIN 2501-1

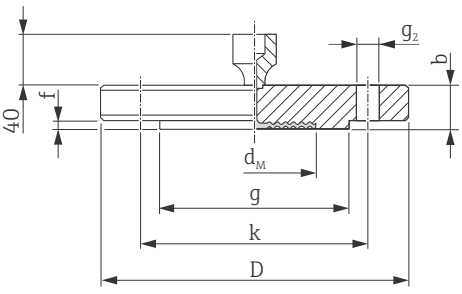

Engineering unit mm

Flange [1) 2) 3)]							Boltholes			Diaphragm seal		Option [4)]
Nominal diameter	Nominal pressure	Shape [5)]	D	Thickness	Raised face		Number	g_2	Hole circle	max. diameter process isolating diaphragm	Weight	
				b	g	f			k			
			[mm]	[mm]	[mm]	[mm]		[mm]	[mm]	d_M	[kg (lb)]	
DN 25	PN 10-40	B1 (D)	115	18	68	3	4	14	85	32	2.1 (4.63)	CN
DN 25	PN 63-160	B2 (E)	140	24	68	2	4	18	100	28	2.5 (5.51)	DN
DN 25	PN 250	B2 (E)	150	28	68	2	4	22	105	28	3.7 (8.16)	EN
DN 25	PN 400	B2 (E)	180	38	68	2	4	26	130	28	7.0 (15.44)	E1
DN 32	PN 10-40	B1 (D)	140	18	77	2.6	4	18	100	34	1.9 (4.19)	CP
DN 40	PN 10-40	B1 (D)	150	18	87	2.6	4	18	110	48	2.2 (4.85)	CQ
DN 50	PN 10-40	B1 (D)	165	20	102	3	4	18	125	59	3.0 (6.62)	B3
DN 50	PN 63	B2 (E)	180	26	102	3	4	22	135	59	4.6 (10.14)	C3
DN 50	PN 100-160	B2 (E)	195	30	102	3	4	26	145	59	6.2 (13.67)	EF
DN 50	PN 250	B2 (E)	200	38	102	3	8	26	150	59	7.7 (16.98)	ER
DN 50	PN 400	B2 (E)	235	52	102	3	8	30	180	59	14.7 (32.41)	E3
DN 80	PN 10-40	B1 (D)	200	24	138	3.5	8	18	160	89	5.3 (11.69)	B4
DN 80	PN 100	B2 (E)	230	32	138	4	8	24	180	89	8.9 (19.62)	C4
DN 100	PN 100	B2 (E)	265	36	175	5	8	30	210	89	13.7 (30.21)	C5

1) material: AISI 316L
2) The roughness of the surface in contact with the medium including the raised face of the flanges (all standards) made of Alloy C276, Monel, tantalum, rhodium-gold or PTFE is R_a< 0.8 µm (31.5 µin). Reduced surface roughness on request.
3) The raised face of the flange is made of the same material as the process isolating diaphragm.
4) Product Configurator, order code for "Process connection"
5) Description as per DIN 2527 provided in brackets

EN/DIN flanges with barrel (extended diaphragm seal), connection dimensions in accordance with EN 1092-1/DIN 2527 and DIN 2501-1

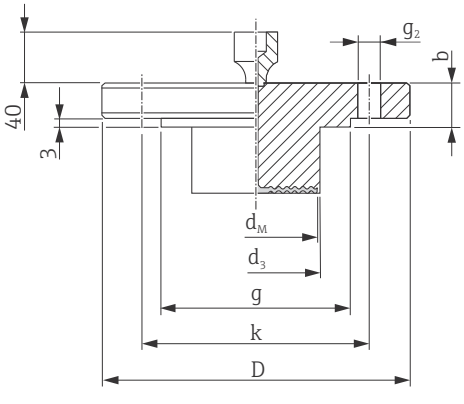

Engineering unit mm

Flange [1) 2)]						Boltholes			Diaphragm seal		Option [3)]
Nominal diameter	Nominal pressure	Shape [4)]	D	Thickness	Raised face	Number	g_2	Hole circle	max. diameter of the process isolating diaphragm	Weight	
				b	g			k			
			[mm]	[mm]	[mm]		[mm]	[mm]	d_M	[kg (lb)]	
DN 50	PN 10-40	B1 (D)	165	20	102	4	18	125	47	[5)]	D3 [5)]
DN 80	PN 10-40	B1 (D)	200	24	138	8	18	160	72	[5)]	D4 [5)]

1) Material: AISI 316L
2) In the case of process isolating diaphragms made of Alloy C276, Monel or tantalum, the raised face of the flange and the barrel pipe are made of 316L
3) Product Configurator, order code for "Process connection"
4) Description as per DIN 2527 provided in brackets
5) Available with 50 mm (1.97 in), 100 mm (3.94 in) and 200 mm (7.87 in) barrel, (extended diaphragm seal), for barrel (extended diaphragm seal) diameter and weight see the following table

Option [1)]	Nominal diameter	Nominal pressure	Barrel (extended diaphragm seal) length	Barrel (extended diaphragm seal) diameter	Weight
			(L)	d_3	
			[mm]	[mm]	[kg (lb)]
D3	DN 50	PN 10-40	50 / 100 / 200	48.3	3.2 (7.1)/ 3.8 (8.4)/ 4.4 (9.7)
D4	DN 80	PN 10-40	50 /100 / 200	76	6.2 (13.7)/ 6.7 (14.8)/ 7.8 (17.2)

1) Product Configurator, order code for "Process connection"

Process connections for PMP75 with flush-mounted process isolating diaphragm

ASME flanges, in accordance with connection dimensions ASME B 16.5, raised face RF

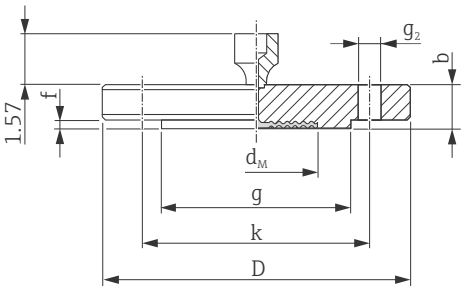

Engineering unit in

Flange [1) 2) 3)]						Boltholes			Diaphragm seal		Approval [4)]	Option [5)]
Nominal diameter	Class	D	Thickness	Raised face		Number	g_2	Hole circle	max. diameter of the process isolating diaphragm	Weight		
			b	g	f			k	d_M			
[in]	[lb./sq.in]	[in]	[in]	[in]	[in]		[in]	[in]	[in]	[kg (lb)]		
1	150	4.25	0.56	2	0.08	4	0.62	3.12	1.26	1.2 (2.65)	CRN	AC
1	300	4.88	0.69	2	0.08	4	0.75	3.5	1.26	1.3 (2.87)	CRN	AN
1	400/600	4.88	0.69	2	0.25	4	0.75	3.5	1.26	1.4 (3.09)	CRN	HC
1	900/1500	5.88	1.12	2	0.25	4	1	4	1.26	3.2 (7.06)	CRN	HN
1	2500	6.25	1.38	2	0.25	4	1	4.25	1.26	4.6 (10.14)	CRN	HO
1 ½	150	5	0.69	2.88	0.06	4	0.62	3.88	1.89	1.5 (3.31)	CRN	AE
1 ½	300	6.12	0.81	2.88	0.06	4	0.88	4.5	1.89	2.6 (5.73)	CRN	AQ
2	150	6	0.75	3.62	0.06	4	0.75	4.75	2.32	2.2 (4.85)	CRN	AF
2	300	6.5	0.88	3.62	0.06	8	0.75	5	2.32	3.4 (7.5)	CRN	AR
2	400/600	6.5	1	3.62	0.25	8	0.75	5	2.32	4.3 (9.48)	CRN	HF
2	900/1500	8.5	1.5	3.62	0.25	8	1	6.5	2.32	10.3 (22.71)	CRN	HR
2	2500	9.25	2	3.62	0.25	8	1.12	6.75	2.32	15.8 (34.84)	-	H3
3	150	7.5	0.94	5	0.06	4	0.75	6	3.5	5.1 (11.25)	CRN	AG
3	300	8.25	1.12	5	0.06	8	0.75	6	3.5	7.0 (15.44)	CRN	AS
4	150	9	0.94	6.19	0.06	8	0.75	7.5	3.5	7.2 (15.88)	CRN	AH
4	300	10	1.25	6.19	0.06	8	0.88	7.88	3.5	11.7 (25.8)	CRN	AT

1) Material AISI 316/316L: Combination of AISI 316 for required pressure resistance and AISI 316L for required chemical resistance (dual rated)
2) The roughness of the surface in contact with the medium including the raised face of the flanges (all standards) made of Alloy C276, Monel, tantalum, rhodium-gold or PTFE is $R_a < 0.8$ µm (31.5 µin). Lower surface roughness on request.
3) The flange raised face is made of the same material as the process isolating diaphragm.
4) CSA approval: Product Configurator, order code for "Approval"
5) Product Configurator, order code for "Process connection"

ASME flanges with barrel (extended diaphragm seal), connection dimensions in accordance with ASME B 16.5, raised face RF

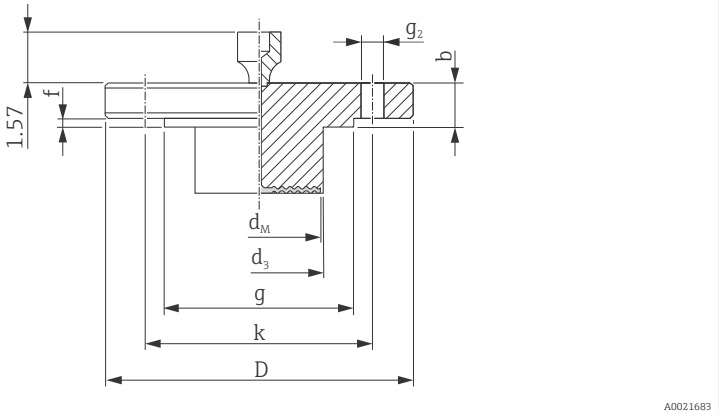

Engineering unit in

Flange [1) 2)]						Boltholes			Diaphragm seal		Approval [3)]	Option [4)]
Nominal diameter	Class	D	Thickness	Raised face		Number	g_2	Hole circle	max. Ø membrane	Weight		
			b	g	f			k	d_M			
[in]	[lb./sq.in]	[in]	[in]	[in]	[in]		[in]	[in]	[in]	[kg (lb)]		
2	150	6	0.75	3.62	0.06	4	0.75	4.75	1.85	[5)]	CRN	J3 [5)]
3	150	7.5	0.94	5	0.06	4	0.75	6	2.83	[5)]	CRN	J4 [5)]
3	300	8.25	1.12	5	0.06	8	0.88	6.62	2.83	[5)]	CRN	J7 [5)]
4	150	9	0.94	6.19	0.06	8	0.75	7.5	3.5	[5)]	CRN	J5 [5)]
4	300	10	1.25	6.19	0.06	8	0.88	7.88	3.5	[5)]	CRN	J8 [5)]

1) Material: AISI 316/316L. Combination of AISI 316 for required pressure resistance and AISI 316L for required chemical resistance (dual rated)
2) In the case of process isolating diaphragms made of Alloy C276, Monel or tantalum, the raised face of the flange and the barrel pipe are made of 316L.
3) CSA approval: Product Configurator, order code for "Approval"
4) Product Configurator, order code for "Process connection"
5) Choice of 2", 4", 6" or 8" barrel (extended diaphragm seal), for diameter and weight of barrel (extended diaphragm seal) see the following table

Option [1)]	Nominal diaphragm	Class	Barrel (extended diaphragm seal) length	Barrel (extended diaphragm seal) process isolating diaphragm	Weight
			(L)	d_3	
	[in]	[lb./sq.in]	in (mm)	in (mm)	[kg (lb)]
J3	2	150	2 (50.8) / 4 (101.6) / 6 (152.4) / 8 (203.2)	1.9 (48.3)	3.0 (6.6)/ 3.4 (7.5)/ 3.9 (8.6)/ 4.4 (9.7)
J4	3	150	2 (50.8) / 4 (101.6) / 6 (152.4) / 8 (203.2)	2.99 (76)	6.0 (13.2) / 6.6 (14.5) / 7.1 (15.7) / 7.8 (17.2)
J7	3	300	2 (50.8) / 4 (101.6) / 6 (152.4) / 8 (203.2)	2.99 (76)	7.9 (17.4) / 8.5 (18.7) / 9.0 (19.9) / 9.6 (21.2)
J5	4	150	2 (50.8) / 4 (101.6) / 6 (152.4) / 8 (203.2)	3.7 (94)	8.6 (19) / 9.9 (21.8) / 11.2 (24.7) / 12.4 (27.3)
J8	4	300	2 (50.8) / 4 (101.6) / 6 (152.4) / 8 (203.2)	3.7 (94)	13.1 (28.9)/ 14.4 (31.6)/ 15.7 (34.6)/ 16.9 (37.3)

1) Product Configurator, order code for "Process connection"

JIS flanges, connection dimensions in accordance with JIS B 2220 BL, raised face RF

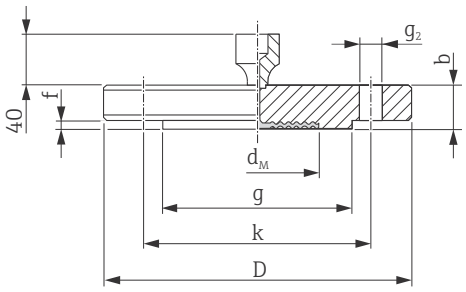

Engineering unit mm

Flange [1) 2) 3)]						Boltholes			Diaphragm seal		Option [4)]
Nominal diameter	Nominal pressure	D	Thickness	Raised face		Number	g_2	Hole circle	max. Ø membrane	Weight	
			b	g	f			k	d_M		
		[mm]	[mm]	[mm]	[mm]		[mm]	[mm]	[mm]	[kg (lb)]	
25 A	10 K	125	14	67	1	4	19	90	32	1.5 (3.31)	KC
50 A	10 K	155	16	96	2	4	19	120	59	2.3 (5.07)	KF
80 A	10 K	185	18	127	2	8	19	150	89	3.3 (7.28)	KL
100 A	10 K	210	18	151	2	8	19	175	89	4.4 (9.7)	KH

1) Material: AISI 316L
2) The roughness of the surface in contact with the medium including the raised face of the flanges (all standards) made of Alloy C276, Monel, tantalum, rhodium-gold or PTFE is R_a< 0.8 µm (31.5 µin). Lower surface roughness on request.
3) The flange raised face is made of the same material as the process isolating diaphragm.
4) Product Configurator, order code for "Process connection"

Process connections for PMP75

Thread ½ NPT and 1 NPT, separator

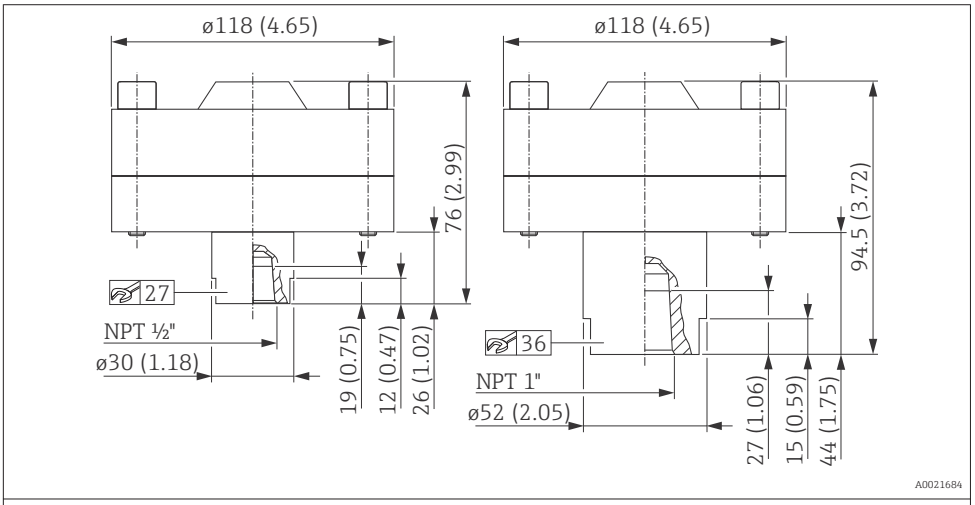

Engineering unit mm (in)

Material	Description	Measuring range [bar (psi)]	Nominal pressure	Weight [kg (lb)]	Option [1]
AISI 316L	Threaded, ½" NPT with Viton seal (200 °C (392 °F)	≤ 250 (3625)	PN 250	4.75 (10.47)	UG
	Threaded, 1" NPT with Viton seal			5.0 (11.03)	UH

1) Product Configurator, order code for "Process connection"

Thread ISO 228 G ½ A and ANSI ½ MNPT, separator

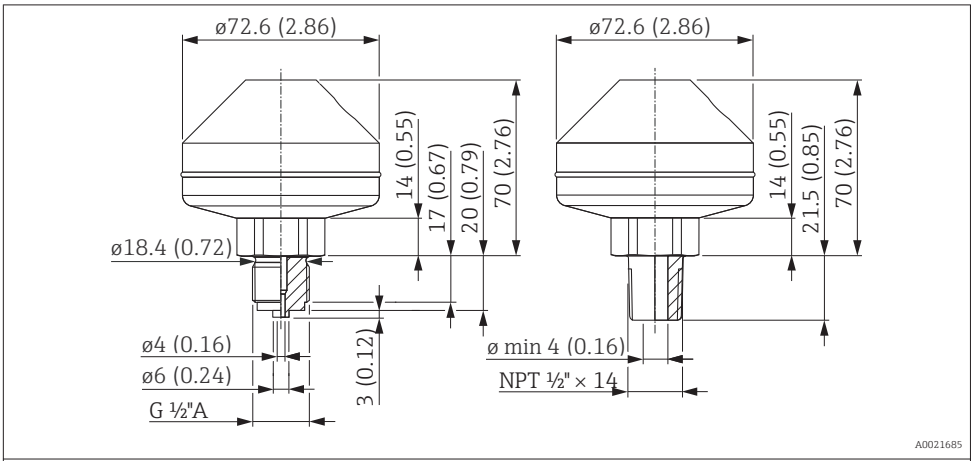

Engineering unit mm (in)

Material	Description	Measuring range [bar (psi)]	Nominal pressure	Approval	Weight [kg (lb)]	Option [1]
AISI 316L	Welded, ISO 228 G ½ A EN837	≤ 160 (2320)	PN 160	-	1.43 (3.15)	UA
	Welded, ANSI ½ MNPT			CRN [2]		UB

1) Product Configurator, order code for "Process connection"
2) CSA approval: Product Configurator, order code for "Approval"

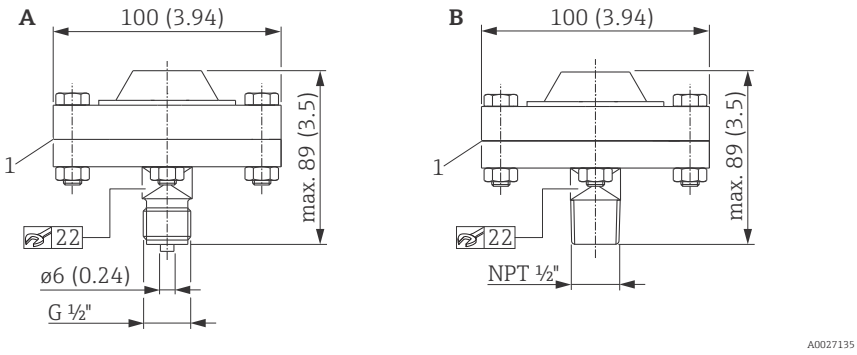

A Option "UC" with threaded connection ISO 228 G ½ B
B Option "UD" with threaded connection ANSI ½ MNPT
1 PTFE seal as standard max. 260 °C (500 °F) (higher temperatures on request)

Engineering unit mm (in)

Material	Description	Measuring range [bar (psi)]	Nominal pressure	Weight [kg (lb)]	Option [1]
AISI 316L (1.4404), screws made of A2	ISO 228 G ½ B EN837	≤ 40 (580)	PN 40	1.43 (3.15)	UC
	ANSI ½ MNPT				UD

1) Product Configurator, order code for "Process connection"

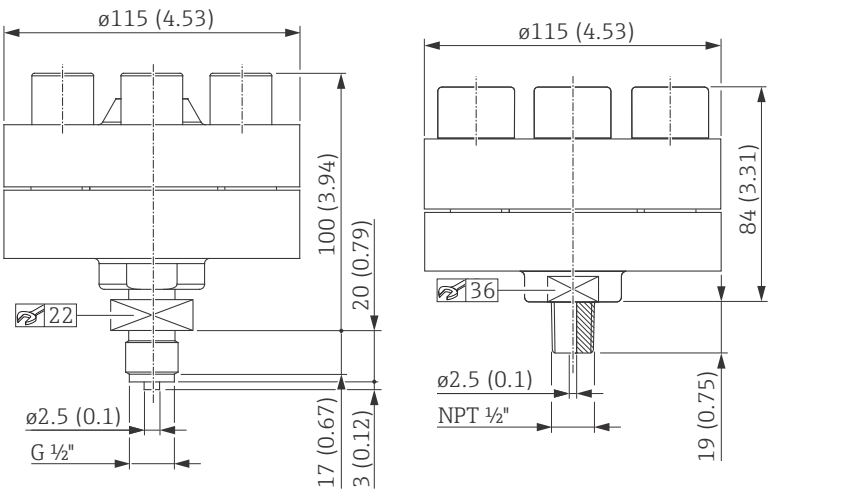

Engineering unit mm (in)

Material	Description	Measuring range [bar (psi)]	Nominal pressure	Weight [kg (lb)]	Option [1]
AISI 316L (1.4404), screws made of A2	Threaded, ISO 228 G ½ B EN837, with integrated seal lip	> 40 bar (580)	PN 400	4.75 (10.47)	UC
	Threaded, ANSI ½ MNPT, with integrated seal lip				UD

1) Product Configurator, order code for "Process connection"

Separate housing: Wall and pipe mounting with mounting bracket

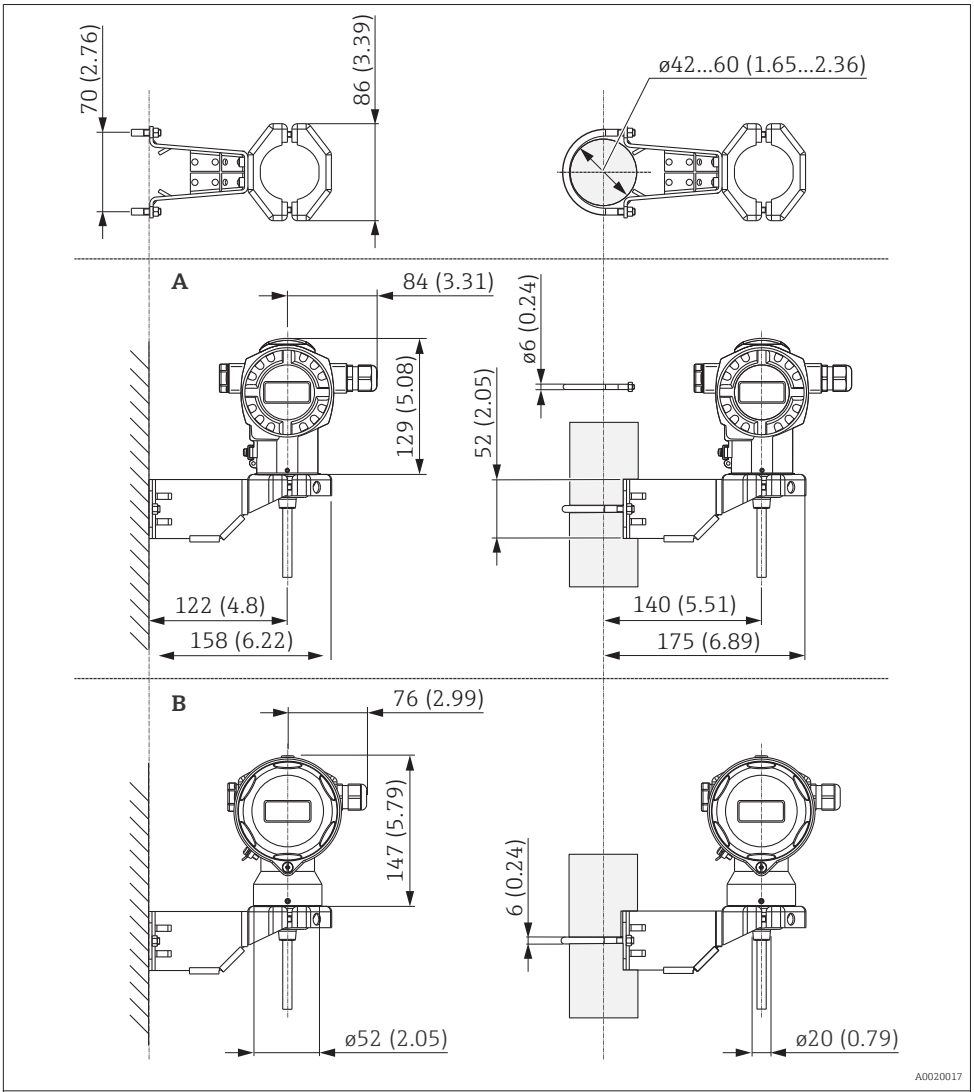

Engineering unit mm (in)

Item	Description	Weight in kg (lb)		Option [1]
		Housing (T14 or T17)	Mounting bracket	
A	Dimensions with T14 housing, optional side display	→ 🖹 45	0.5 (1.10)	U
B	Dimensions with T17 housing, optional side display			

1) Product Configurator, order code for "Additional options 2", version "G"

Also available for order as a separate accessory: Part number 71102216

Materials not in contact with process

Transmitter housing

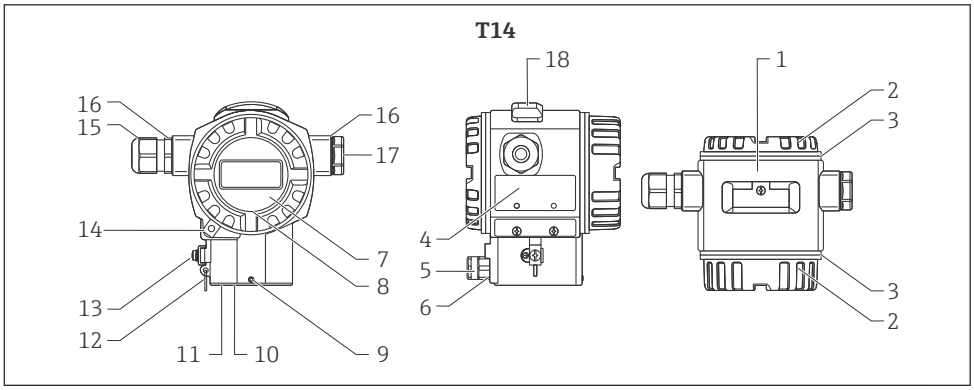

Item number	Component part	Material
1	T14 housing, RAL 5012 (blue)	▪ Die-cast aluminum with protective powder-coating on polyester base ▪ Thread coating: Heat-curing lubricant varnish
1	T14 housing	▪ Precision casting AISI 316L (1.4435) ▪ Thread coating: Heat-curing lubricant varnish
2	Cover, RAL 7035 (gray)	Die-cast aluminum with protective powder-coating on polyester base
3	Cover seal	EPDM
4	Nameplates	▪ AISI 316L (1.4404), if T14 housing is precision-cast ▪ Anodized aluminum, if housing T14/T15 of die-cast aluminum
5	Pressure compensation filter	AISI 316L (1.4404) and PBT-FR
6	Pressure compensation filter, O-ring	VMQ or EPDM
7	Sight glass	Mineral glass
8	Sight glass seal	Silicone (VMQ)
9	Screw	A4
10	Sealing ring	EPDM
11	Snap ring	PA66-GF25
12	Snap ring for nameplates	AISI 304 (1.4301)/AISI 316 (1.4401)
13	External ground terminal	AISI 304 (1.4301)
14	Cover clamp	Clamp AISI 316L (1.4435), screw A4
15	Cable entry	Polyamide (PA) or CuZn nickel-plated
16	Seal of cable entry and plug	Silicone (VMQ)
17	Blind plug	PBT-GF30 FR, for dust ignition-proof: AISI 316L (1.4435)
18	External operation (keys and key cover), RAL 7035 (gray)	Polycarbonate PC-FR, screw A4
Devices with MID parts certificate	Seal wire	DIN 1367-0 St/Zn (soft galvanized steel)
Devices with MID parts certificate	Seals	Pb (lead)

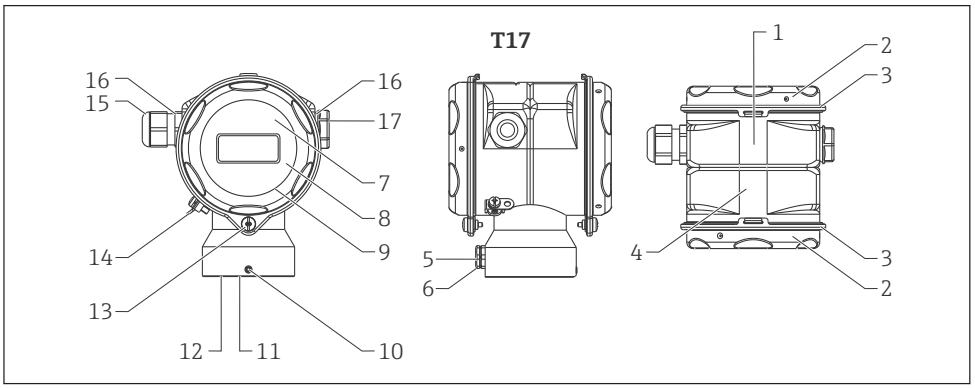

A0020021

Item number	Component part	Material
1	T17 housing	AISI 316L (1.4404)
2	Cover	
3	Cover seal	EPDM
4	Nameplates	Lasered on
5	Pressure compensation filter	AISI 316L (1.4404) and PBT-FR
6	Pressure compensation filter, O-ring	VMQ or EPDM
7	Sight glass for non-hazardous area, ATEX Ex ia, NEPSI Zone 0/1 Ex ia, IECEx Zone 0/1 Ex ia, FM NI, FM IS, CSA IS	Polycarbonate (PC)
8	Sight glass for ATEX 1/2 D, ATEX 1/3 D, ATEX 1 GD, ATEX 1/2 GD, ATEX 3 G, FM DIP, CSA dust ignition-proof	Mineral glass
9	Sight glass seal	EPDM
10	Screw	A2-70
11	Sealing ring	EPDM
12	Snap ring	PA6
13	Screw	A4-50 Thread coating: Heat-curing lubricant varnish
14	External ground terminal	AISI 304 (1.4301)
15	Cable entry	Polyamide PA, for dust ignition-proof: CuZn nickel-plated
16	Seal of cable entry and plug	Silicone (VMQ)
17	Blind plug	PBT-GF30 FR, for dust ignition-proof: AISI 316L (1.4435)
Devices with MID parts certificate	Seal wire	DIN 1367-0 St/Zn (soft galvanized steel)
Devices with MID parts certificate	Seals	Pb (lead)

Connecting parts

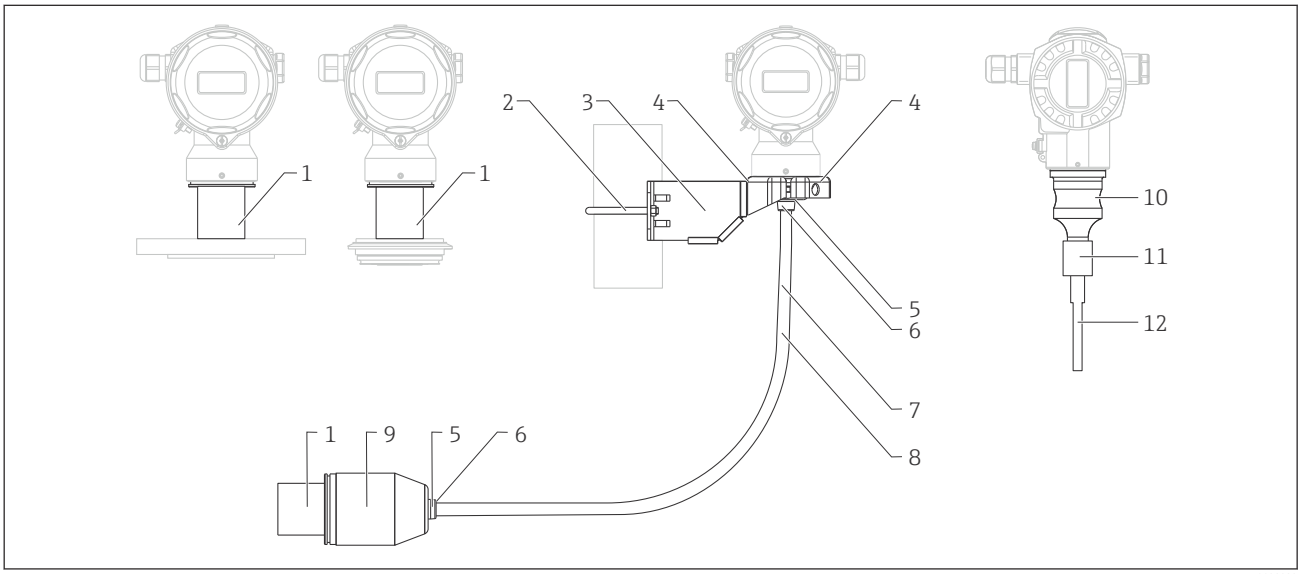

Item number	Component part	Material
1	Connection between the housing and process connection	AISI 316L (1.4404)
2	Mounting bracket	Bracket AISI 316L (1.4404)
3		Screw and nuts A4-70
4		Half-shells: AISI 316L (1.4404)
5	Seal for cable from separate housing	EPDM
6	Gland for cable from separate housing	AISI 316L (1.4404)
7	PE cable for separate housing	abrasion-proof cable with strain-relief Dynema members; shielded using aluminum-coated foil; insulated with polyethylene (PE-LD), black; copper wires, twisted, UV-resistant
8	FEP cable for separate housing	Abrasion-proof cable; shielded using galvanized steel wire netting; insulated with fluorinated ethylene propylene (FEP), black; copper cores, twisted, UV-resistant
9	Process connection adapter for separate housing	AISI 316L (1.4404)
10	Cell body	AISI 316L (1.4404)
11	Connection between body of measuring cell and capillary	AISI 316L (1.4404)
12	Heat-shrink tube (available only if capillary has PTFE or PVC sheath)	Polyolefin

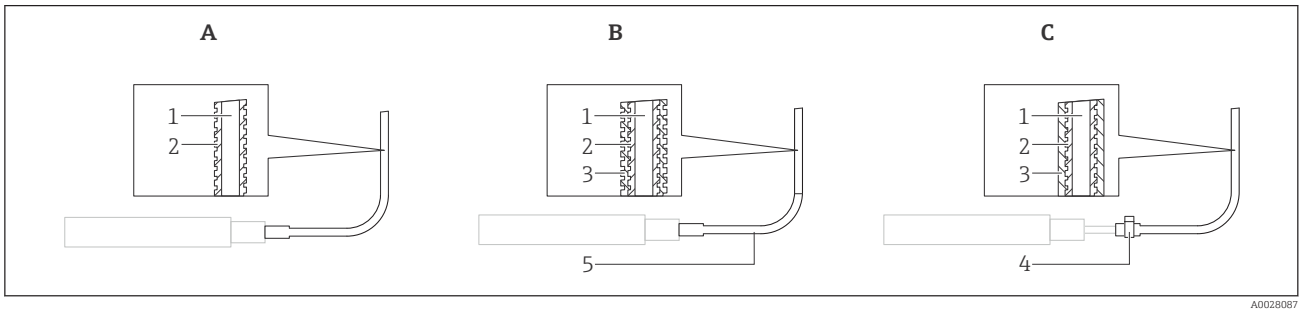

Item	Component part	A Standard flexible capillary armoring	B PVC-coated flexible capillary armoring	C PTFE-hose flexible capillary armoring
1	Capillary	AISI 316 Ti (1.4571) [1]	AISI 316 Ti (1.4571)	AISI 316 Ti (1.4571)
2	Flexible armor for capillary	AISI 316L (1.4404)	AISI 316L (1.4404)	AISI 316L (1.4404)
3	Coating/Hose	-	PVC [2]	PTFE [3]
4	Single-ear clamp	-	-	1.4301
5	Shrink tubing at capillary junction	-	Polyolefin	-

1) Product Configurator, order code for "Capillary armoring:" option "SA"
2) Product Configurator, order code for "Capillary armoring:" option "SB"
3) Product Configurator, order code for "Capillary armoring:" option "SC"

Weight

Component part	Weight
Housing	See "Housing" section
Process connection	See "Process connections" section
Capillary with armoring made of AISI 316L (1.4404)	0.16 kg/m (0.35 lb/m) + 0.35 kg (0.77 lb)
Capillary with armoring made of AISI 316L (PVC)	0.21 kg/m (0.46 lb/m) + 0.35 kg (0.77 lb)
Capillary with armoring made of AISI 316L (PTFE)	0.29 kg/m (0.64 lb/m) + 0.35 kg (0.77 lb)

Materials in contact with process

NOTICE

► The device components in contact with the process are specified in the "Mechanical construction" → 📄 44 and "Ordering information" → 📄 109 sections.

Delta-ferrite content

A delta-ferrite content of ≤ 3% can be guaranteed and certified for the wetted parts if option "8" is selected in the "Additional options 1" or "Additional options 2" order code in the Product Configurator.

If the PMC71 with hygienic process connections is selected, a delta-ferrite content of ≤ 1% can be guaranteed and certified if option "8" is selected in the "Additional options 1" or "Additional options 2" order code in the Product Configurator.

TSE Certificate of Suitability (Transmissible Spongiform Encephalopathy)

The following applies to all device components in contact with the process:

- They do not contain any materials derived from animals.
- No additives or operating materials derived from animals are used in production or processing.

Process connections

- "Clamp connections" and "Hygienic process connections": AISI 316L (DIN/EN material number 1.4435)
- Endress+Hauser supplies process connections with a threaded connection as well as DIN/ EN flanges made of stainless steel as per AISI 316L (DIN/EN material number 1.4404 or 1.4435). With regard to their stability-temperature property, the materials 1.4404 and 1.4435 are grouped together under 13E0 in EN 1092-1: 2001 Tab. 18. The chemical composition of the two materials can be identical.
- Some process connections are also available in alloy C276 (DIN/EN material number 2.4819). For this purpose see the information in the "Mechanical construction" section.

Process isolating diaphragm

Sensor	Description	Option [1]
PMC71	Al_2O_3 aluminum-oxide ceramic FDA, ultra-pure 99.9 % [2] Ceraphire® (see also www.endress.com/ceraphire)	Standard
PMP71	AISI 316L	1
	AISI 316L with gold-rhodium coating	6
	Alloy C276 (2.4819)	2
PMP75	AISI 316L	1
	AISI 316L, TempC	E
	AISI 316L with gold-rhodium coating	6
	AISI 316L with 0.25 mm (0.01 in)PTFE coating	8
	Alloy C276 (2.4819)	2 [3]
	Monel (2.4360)	3 [3]
	Tantalum (UNS R05200)	5 [3]

1) Product Configurator, order code for "Membrane material"
2) The US Food & Drug Administration (FDA) has no objections to the use of ceramics made of aluminum oxide as a surface material in contact with foodstuffs. This declaration is based on the FDA certificates of our ceramic suppliers
3) The material of the flange raised face is the same material as is used for the process isolating diaphragm. For devices with a barrel (extended diaphragm seal), the flange raised face and the barrel pipe are made of 316L.

Seals

Device	Description	Option [1]
PMC71	FKM Viton	A
	FKM Viton, FDA	G
	EPDM	B
	Kalrez	D
	Chemraz	E
	NBR (FDA)/3A: HNBR (FDA)	F
	FKM Viton, cleaned for silicone-free applications	L
	Kalrez, cleaned for silicone-free applications	M
	FKM Viton, cleaned from oil and grease	1
	FKM Viton, cleaned for oxygen service, note pressure and temperature application limits	2

1) Product Configurator, order code for "Seal"

Fill fluid

PMP71

Description	Option [1]
Silicone oil	A
Inert oil	F
Inert oil, cleaned from oil and grease	K
Inert oil, cleaned for oxygen service (observe application limits pressure/temperature)	N

1) Product Configurator, order code for "Fill fluid"

PMP75

Description	Option [1]
Silicone oil	A
...m capillary, inert oil	B
...ft capillary, inert oil	C
Vegetable oil	D
Inert oil	F
High-temperature oil, temperature isolator	G
Silicon oil, temperature isolator	H
Inert oil, cleaned from oil and grease	K
Inert oil, cleaned for oxygen service	N
...m capillary, silicone oil	1
...ft capillary, silicone oil	2
...m capillary, high-temperature oil	3
...ft capillary, high-temperature oil	4
...m capillary, vegetable oil	5
...ft capillary, vegetable oil	6
...m capillary, low-temperature oil	7
...ft capillary, low-temperature oil	8

1) Product Configurator, order code for "Fill fluid"

Operability

Operating concept

Operator-oriented menu structure for user-specific tasks

- Commissioning
- Operation
- Diagnosis

Fast and safe commissioning

Guided menus for applications

Reliable operation

- Local operation possible in several languages
- Standardized operation at the device and in the operating tools
- Parameters relating to measured values can be locked/unlocked using the device's write protection switch, using the device software or via remote operation

Efficient diagnostics increase measurement availability

- Remedial measures are integrated in plain text
- Diverse simulation options

Local operation

Functions

Function	External operation (operating keys, optional, not T17 housing)	Internal operation (electronic insert)	Onsite display (optional)
Position adjustment (zero point correction)	✔	✔	✔
Setting lower-range value and upper-range value - reference pressure present at the device	✔ (HART only)	✔ (HART only)	✔
Device reset	✔	✔	✔
Locking and unlocking parameters relevant to the measured value	—	✔	✔
Value acceptance indicated by green LED	✔	✔	✔
Switching damping on and off	✔ (only if display is connected)	✔ (HART and PA only)	✔
Configuring the bus address of the device (PA)	—	✔	✔
Switching simulation mode on and off (FOUNDATION Fieldbus)	—	✔	✔

Operating the device using onsite display (optional)

A 4-line liquid crystal display (LCD) is used for display and operation. The onsite display shows measured values, dialog text as well as fault and notice messages in plain text, thereby supporting the user in every stage of operation.

The display can be removed for easy operation.

The device display can be turned in 90° steps.

Depending on the installation position of the device, this makes it easy to operate the device and read the measured value.

Functions:
- 8-digit measured value display incl. leading sign and decimal point, bar graph for
  - 4 to 20 mA HART as current display
  - PROFIBUS PA as graphic display of the standardized value of the AI block
  - FOUNDATION Fieldbus as graphic display of the transducer output.
- Simple and complete menu guidance due to breakdown of parameters into several levels and groups
- Menu guidance in up to 8 languages
- Each parameter is given a 3-digit ID number for easy navigation.
- Option for configuring the display according to individual requirements and preferences, such as language, alternating display, display of other measured values such as sensor temperature, contrast setting.
- Comprehensive diagnostic functions (fault and warning message, peak-hold indicators, etc.).
- Rapid and safe commissioning with the Quick Setup menus.

Overview

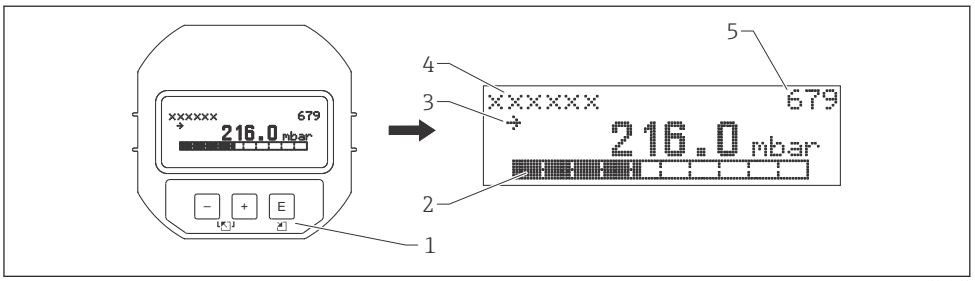

A0016498

1 Operating keys
2 Bargraph
3 Symbol
4 Header
5 Parameter ID number

Operating keys on the exterior of the device

With the aluminum housing (T14), the operating keys are located either outside on the housing, under the protection cap or inside on the electronic insert. With the stainless steel housing (T17), the operating keys are always located inside the housing on the electronic insert.

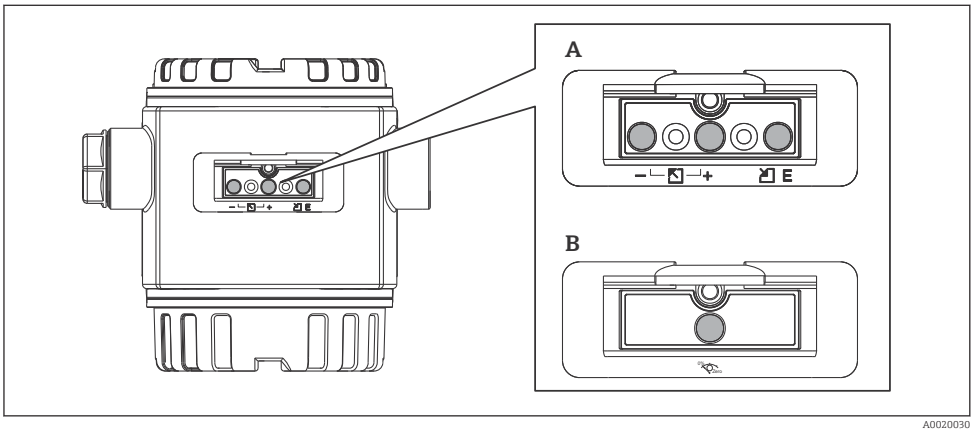

A0020030

A 4 to 20 mA HART
B PROFIBUS PA and FOUNDATION Fieldbus

The operating keys located externally on the device work on the Hall sensor principle. As a result, no additional openings are required in the device. This guarantees:

- Complete protection against environmental influences such as moisture and contamination.
- Simple operation without any tools.
- No wear.

Ordering information:

Product Configurator, order code for "Output, operation"

Operating keys and elements located internally on the electronic insert

Ordering information:

Product Configurator, order code for "Output, operation"

HART

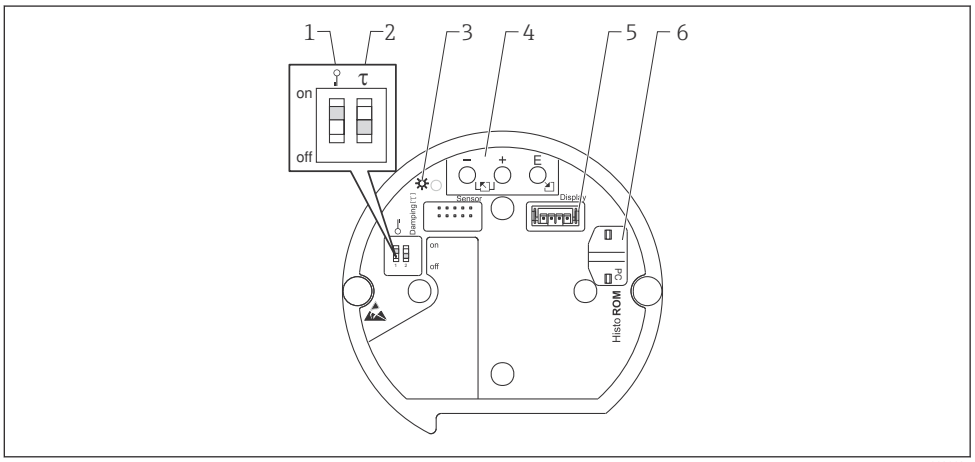

A0020031

1 DIP switch for locking/unlocking parameters relevant to the measured value
2 DIP switch for switching damping on/off
3 Green LED to indicate value being accepted
4 Operating keys
5 Slot for optional display
6 Slot for optional HistoROM®/M-DAT

PROFIBUS PA

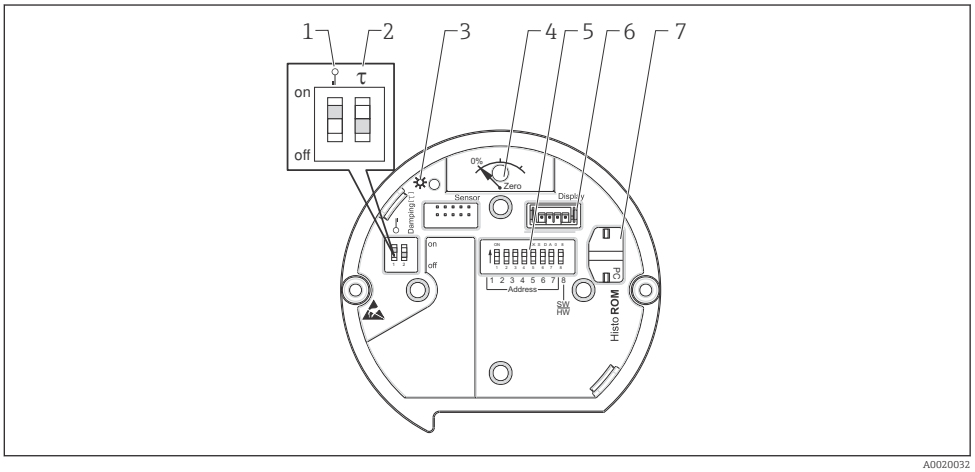

A0020032

1 DIP switch for locking/unlocking parameters relevant to the measured value
2 DIP switch for switching damping on/off
3 Green LED to indicate value being accepted
4 Key for position adjustment and device reset
5 DIP switch for bus address
6 Slot for optional display
7 Slot for optional HistoROM®/M-DAT

FOUNDATION Fieldbus

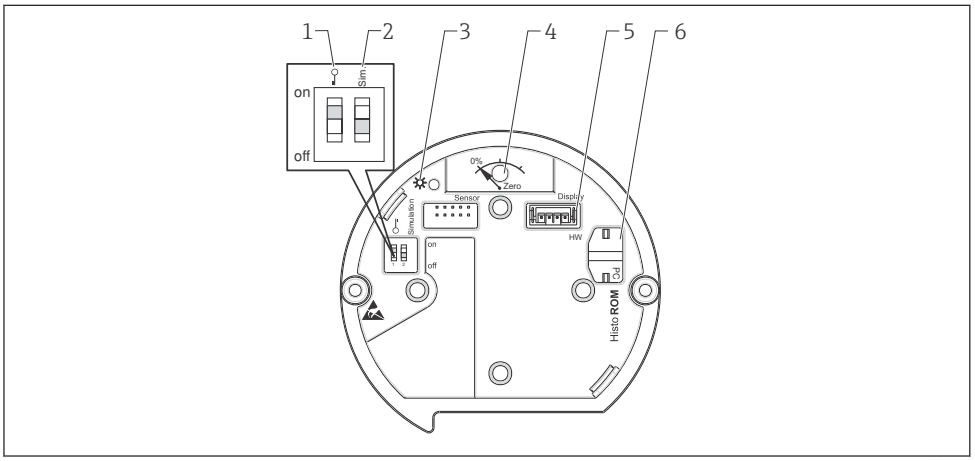

1 DIP switch for locking/unlocking parameters relevant to the measured value
2 DIP switch for simulation mode on/off
3 Green LED to indicate value being accepted
4 Key for position adjustment and device reset
5 Slot for optional display
6 Slot for optional HistoROM®/M-DAT

Remote operation

All software parameters are accessible depending on the position of the write protection switch on the device.

Hardware and software for remote operation	HART	PROFIBUS PA	FOUNDATION Fieldbus
FieldCare	✔	✔	✔
FieldXpert SFX100	✔	—	✔
NI-FBUS Configurator	—	—	✔
HistoROM®/M-DAT	✔	✔	✔

FieldCare

FieldCare is an Endress+Hauser asset management tool based on FDT technology. With FieldCare, you can configure all Endress+Hauser devices as well as devices from other manufacturers that support the FDT standard.

FieldCare supports the following functions:
- Configuration of transmitters in offline and online mode
- Loading and saving device data (upload/download)
- HistoROM®/M-DAT analysis
- Documentation of the measuring point

Connection options:
- HART via Commubox FXA195 and the USB port on a computer
- PROFIBUS PA via segment coupler and PROFIBUS interface card
- Service interface with Commubox FXA291 and ToF adapter FXA291 (USB).

For further information please contact your local Endress+Hauser Sales Center.

Field Xpert SFX100

Field Xpert is an industrial PDA with integrated 3.5" touchscreen from Endress+Hauser based on Windows Mobile. It offers wireless communication via the optional VIATOR Bluetooth modem from Endress+Hauser. Field Xpert also works as a stand-alone device for asset management applications. For details, refer to BA00060S/04/EN.

Commubox FXA195

For intrinsically safe HART communication with FieldCare via the USB interface. For details refer to TI00404F/00/EN.

Commubox FXA291

The Commubox FXA291 connects Endress+Hauser field devices with a CDI interface (=Endress +Hauser Common Data Interface) to the USB interface of a personal computer or a notebook. For details refer to TI00405C/07/EN.

For the following Endress+Hauser devices you need the "ToF adapter FXA291" as an additional accessory:
- Cerabar S PMC71, PMP7x
- Deltabar S PMD7x, FMD7x
- Deltapilot S FMB70

ToF adapter FXA291

The ToF adapter FXA291 connects the Commubox FXA291 with devices of the ToF platform, pressure equipment and Gammapilot via the USB interface of a personal computer or a notebook. For details refer to KA00271F.

Profiboard

For connecting a PC to PROFIBUS.

Proficard

For connecting a laptop to PROFIBUS

FF configuration program

FF configuration program, such as NI-FBUS Configurator, to
- connect devices with "FOUNDATION Fieldbus signal" into an FF network
- set FF-specific parameters

Remote operation via the NI-FBUS Configurator:

The NI-FBUS Configurator is an easy-to-use graphical environment for creating linkages, field-based control loops and schedules based on the FOUNDATION Fieldbus concept.

You can use the NI-FBUS Configurator to configure a fieldbus network as follows:
- Set block and device tags
- Set device addresses
- Create and edit function block control strategies (function block applications)
- Configure vendor-defined function and transducer blocks
- Create and edit schedules
- Read and write to function block control strategies (function block applications)
- Invoke Device Description (DD) methods
- Display DD menus
- Download a configuration
- Verify a configuration and compare it to a saved configuration
- Monitor a downloaded configuration
- Replace a virtual device by a real device
- Save and print a configuration

HistoROM®/M-DAT (optional)

HistoROM®/M-DAT is a memory module which can be attached to every electronic insert. HistoROM®/M-DAT can be retrofitted at any stage (order number: 52027785).

Your benefits
- Quick and safe commissioning of the same measuring points by copying the configuration data of one transmitter to another transmitter.
- Reliable process monitoring thanks to cyclical recording of pressure and sensor temperature measured values.
- Simple diagnosis by recording diverse events such as alarms, configuration changes, counters for measuring range undershoot and overshoot for pressure and temperature as well as user limit overshoot and undershoot for pressure and temperature etc.
- Analysis and graphic evaluation of the events and process parameters via software (contained in scope of supply).

A CD with an Endress+Hauser operating program is also included in the scope of delivery. You can copy data from one transmitter to another transmitter when operating a FOUNDATION Fieldbus device via an FF configuration program. You need the Endress+Hauser FieldCare operating program and the Commubox FXA291 service interface and the ToF adapter FXA291 to be able to access the data and events saved in the HistoROM®/M-DAT.

Ordering information:
Product Configurator, order code for "Additional options:", version "N" or
Product Configurator, order code for "Application package:", option "EN" or
as a separate accessory (part no.: 52027785).

For further information please contact your local Endress+Hauser Sales Center.

System integration

The device can be given a tag name (max. 8 alphanumeric characters)

Description	Option [1]
Measuring point (TAG), see additional spec.	Z1
Bus address, see additional spec.	Z2

1) Product Configurator, order code for "Identification"

Planning instructions, diaphragm seal systems

NOTICE

Incorrect sizing/ordering of diaphragm seal systems

The performance and the permitted range of application of a diaphragm seal system depend on the process isolating diaphragm used, the filling oil, the coupling, the unit design and on the process and ambient conditions present in the individual application.

- ▶ To help you select the right diaphragm seal system for your applications, Endress+Hauser provides its customers with the free "Applicator Sizing Diaphragm Seal" tool, which is available on DVD or at "www.endress.com/applicator".

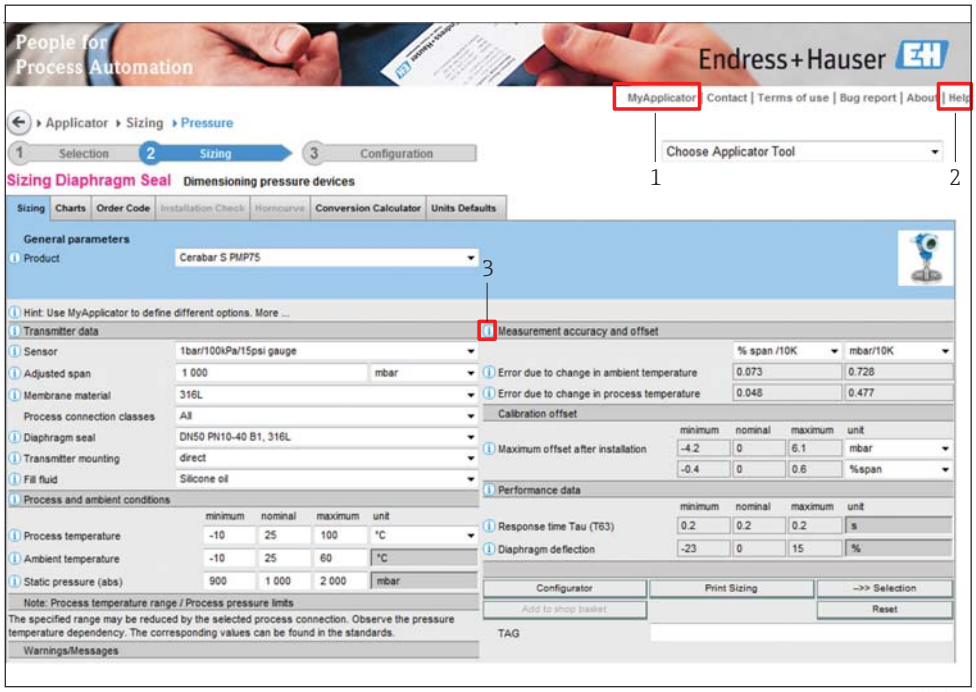

A0021695-EN

1 *My Applicator - configuration of the Applicator settings*
2 *Applicator help*
3 *Mouse-over help - hover the cursor over these fields for brief information*

For more detailed information or the layout of the optimum diaphragm seal solution for your application, please contact your local Endress+Hauser Sales Center.

Applications

Diaphragm seal systems should be used if the process and the device should be separated. Diaphragm seal systems offer clear advantages in the following instances:

- In the case of extreme process temperatures
- For aggressive media
- In the case of process media that crystallize
- In the case of corrosive or highly various process media or process media with solids content
- In the case of heterogeneous and fibrous process media
- If extreme measuring point cleaning is necessary, or for very humid mounting locations
- If the measuring point is exposed to severe vibrations
- For mounting locations that are difficult to access

Design and operation mode

Diaphragm seals are separating equipment between the measuring system and the process.

A diaphragm seal system consists of:
- A diaphragm seal
- If necessary, a capillary tube or temperature isolator
- Fill fluid
- A pressure transmitter

The process pressure acts via the process isolating diaphragm of a diaphragm seal on the liquid-filled system, which transfers the process pressure onto the sensor of the pressure transmitter.

Endress+Hauser delivers all diaphragm seal systems as welded versions. The system is hermetically sealed, which ensures the highest reliability.

The diaphragm seal determines the application range of the system by:
- The process isolating diaphragm diameter
- The process isolating diaphragm stiffness and material
- The design (oil volume)

diameter of the process isolating diaphragm

The greater the diameter of the process isolating diaphragm (less stiff), the smaller the temperature effect on the measurement result.

Stiffness of the process isolating diaphragm

The stiffness depends on the diameter of the process isolating diaphragm, the material, any existing coating and the thickness and shape of the process isolating diaphragm. The process isolating diaphragm thickness and the shape are determined by the design. The stiffness of a process isolating diaphragm of a diaphragm seal influences the temperature operating range and the measuring error caused by temperature effects.

The new TempC membrane: Highest accuracy and process safety in pressure and differential pressure measurement with diaphragm seals

To measure even more precisely in such applications and to increase process safety, Endress+Hauser has developed the TempC membrane based on a completely revolutionary technology. This diaphragm guarantees the highest level of accuracy and process safety in diaphragm seal applications.
- The very low temperature effect minimizes the influence of fluctuations of both process and ambient temperatures, thus guaranteeing accurate and stable measurements. Measurement inaccuracies caused by temperature are reduced to a minimum.
- The TempC membrane can be used at temperatures between −40 °C (−40 °F) and +250 °C (+482 °F). This guarantees maximum process safety even for very long sterilization and cleaning cycles (SIP/CIP) in tanks and pipes at high temperatures.
- Thanks to the TempC membrane, smaller dimension process connections are possible. With a smaller process connection, the new diaphragm measures at least as accurately as a conventional diaphragm with a larger diameter.
- Short recovery times after temperature shocks mean less downtime during batch processes and therefore a far higher level of availability of the production facilities.
- In addition, the TempC membrane excels in terms of its improved hygienic cleanability and its insensitivity to substantial changes in the pressure load.

Ordering information:

See the Product Configurator for the individual process connection and the choice of process isolating diaphragm.

Selection in the Applicator:

Under "Transmitter data" in the "Diaphragm material" field.

Capillary

As standard, capillaries with an internal diameter of 1 mm (0.04 in) are used.

The capillary tube influences the thermal change, the ambient temperature operating range and the response time of a diaphragm seal system as a result of its length and internal diameter.

Filling oil

When selecting the filling oil, the media and ambient temperature as well as the operating pressure are of crucial importance. Observe the temperatures and pressures during commissioning and cleaning. A further selection criterion is the compatibility of the filling oil with the requirements of the process media. For this reason, only filling oils that are harmless to health may be used in the food industry, such as vegetable oil or silicone oil (see also the following section on "diaphragm seal filling oils").

The filling oil used influences the thermal change, the temperature operating range of a diaphragm seal system and the response time. A temperature change results in a volume change of the filling oil. The volume change is dependent on the expansion coefficient and on the volume of the filling oil at calibration temperature (constant in range: +21 to +33 °C (+70 to +91 °F)). The application range can be extended by a filling oil with a lower expansion coefficient and a shorter capillary.

For example, the filling oil expands in the event of a temperature increase. The additional volume presses against the process isolating diaphragm of a diaphragm seal. The stiffer a diaphragm is, the greater its return force, which counteracts a volume change and acts on the measuring cell together with the operating pressure, thus shifting the zero point.

Pressure transmitter

The pressure transmitter influences the temperature operating range, the TK zero point and the response time as a result of its volume change. The volume change is the volume that has to be shifted to pass through the complete measuring range.

Pressure transmitters from Endress+Hauser are optimized with regard to minimum volume change.

Diaphragm seal filling oils

Filling oil	Permitted temperature range [1] at 0.05 bar (0.725 psi) ≤ p_{abs} ≤ 1 bar (14.5 psi)	Permitted temperature range [1] at p_{abs} ≥1 bar (14.5 psi)	Density [g/cm3] / [SGU]	Viscosity [mm²/s] / [cSt] at 25 °C (77 °F)	Expansion coefficient [2] [1/K]	Notes	Option [3]
Silicone oil	−40 to +180 °C (−40 to +356 °F)	−40 to +250 °C (−40 to +482 °F)	0.96	100	0.00096	(Suitable for use in food FDA 21 CFR 175.105)	A, H, 1 or 2
High-temperature oil	−10 to +200 °C (+14 to +392 °F)	−10 to +400 °C (+14 to +752 °F) [4] [5] [6]	1.00	150	0.00096	(High temperatures)	G, 3 or 4
Inert oil	−40 to +80 °C (−40 to +176 °F)	−40 to +175 °C (−40 to +347 °F)	1.87	27	0.000876	(For ultrapure gas and oxygen applications)	F or N
Vegetable oil	−10 to +120 °C (+14 to +248 °F)	−10 to +200 °C (+14 to +392 °F)	0.94	9.5	0.00101	(Suitable for use in food FDA 21 CFR 172.856)	D, 5 or 6
Low-temperature oil	−70 to +80 °C (−94 to +176 °F)	−70 to +180 °C (−94 to +356 °F)	0.92	4.4	0.00108	(Low temperatures)	7 or 8

1) Observe temperature limits of the device and the system.
2) Please refer to the "Applicator Sizing Diaphragm Seal" selection tool for the thermal change of the diaphragm seal and other important technical features.
3) Product Configurator, order code for "Fill fluid"
4) 325 °C (617 °F) at an absolute pressure of ≥1 bar (14.5 psi) .
5) 350 °C (662 °F) at an absolute pressure of ≥1 bar (14.5 psi) (max. 200 hours).
6) 400 °C (752 °F) at an absolute pressure of ≥1 bar (14.5 psi) (max. 10 hours).

Information on cleaning

- Endress+Hauser provides flushing rings as an accessory to enable cleaning of the process isolating diaphragm without removing the transmitter from the process. For further information please contact your local Endress+Hauser Sales Center.
- We recommend you perform CIP (cleaning in place (hot water)) before SIP (sterilization in place (steam)) for pipe diaphragm seals. A frequent use of sterilization in place (SIP) will increase the stress on the process isolating diaphragm. Under unfavorable circumstances in the long term view we cannot exclude that a frequent temperature change could lead to a material fatigue of the process isolating diaphragm and possibly to a leakage.

Installation instructions

Diaphragm seal systems

- The diaphragm seal together with the transmitter form a closed, calibrated system, which is filled through ports in the diaphragm seal and in the measuring system of the transmitter. These ports are sealed and must not be opened.
- For devices with a temperature isolator or capillary, a suitable fastening device (mounting bracket) is recommended.
- When mounting, sufficient strain relief must be provided for the capillary line to prevent the capillary from bending (capillary bending radius ≥ 100 mm (3.94 in)
- For more detailed installation instructions, Endress+Hauser provides its customers with the free "Applicator Sizing Diaphragm Seal" tool, which is available on CD or can be downloaded online at "www.endress.com/applicator".

Capillary

In order to obtain more precise measurement results and to avoid a defect in the device, mount the capillaries as follows:

- vibration-free (in order to avoid additional pressure fluctuations)
- not in the vicinity of heating or cooling lines
- insulate if the ambient temperature is below or above the reference temperature
- with a bending radius ≥ 100 mm (3.94 in)
- When using diaphragm seal systems with a capillary, sufficient strain relief must be provided to prevent the capillary from bending (capillary bending radius ≥ 100 mm (3.94 in)).
- In the case of devices with diaphragm seals and capillaries, the zero point shift caused by the hydrostatic pressure of the filling liquid column in the capillaries must be taken into account when selecting the measuring cell. If a measuring cell with a small measuring range is selected, a position adjustment can cause range violation.

Heat insulation

The PMP75 must only be insulated up to a certain height. The maximum permitted insulation height is indicated on the devices and applies to an insulation material with a heat conductivity ≤ 0.04 W/(m x K) and to the maximum permitted ambient and process temperature. The data were determined under the most critical application "quiescent air". Maximum permitted insulation height, here indicated on a PMP75 with a flange:

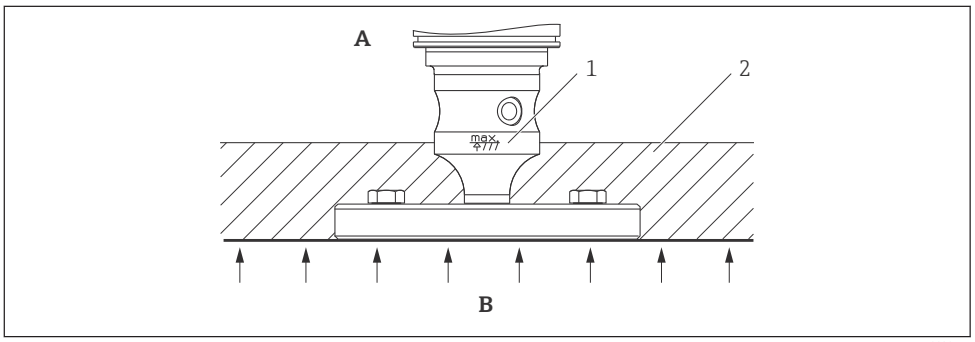

A Ambient temperature ≤ 70 °C (158 °F)
B Process temperature max. 400 °C (752 °F), depending on the diaphragm seal filling oil used
1 Maximum insulation height
2 Insulation material

Mounting with temperature isolator

Endress+Hauser recommends the use of temperature isolators in the event of constant extreme fluid temperatures which cause the maximum permitted electronics temperature of +85 °C (+185 °F) to be exceeded.

Depending on the filling oil used, diaphragm seal systems with temperature isolators can be used up to a maximum of +260 °C (+500 °F).

To minimize the influence of rising heat, Endress+Hauser recommends the device be mounted horizontally or with the housing pointing downwards. The additional installation height also brings about a zero point shift of maximum 21 mbar (0.315 psi) due to the hydrostatic column in the temperature isolator. You can correct this zero point shift at the device.

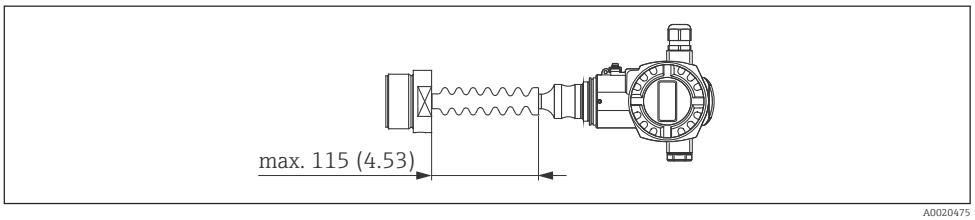

1 PMP75 with temperature isolator, material 316L (1.4404)

Vacuum applications

Installation instructions

For applications under vacuum, Endress+Hauser recommends mounting the pressure transmitter below the diaphragm seal. This prevents vacuum loading of the diaphragm seal caused by the presence of fill fluid in the capillary.

When the pressure transmitter is mounted above the diaphragm seal, the maximum height difference H1 in accordance with the illustration below must not be exceeded. The following graphic depicts mounting above the lower diaphragm seal:

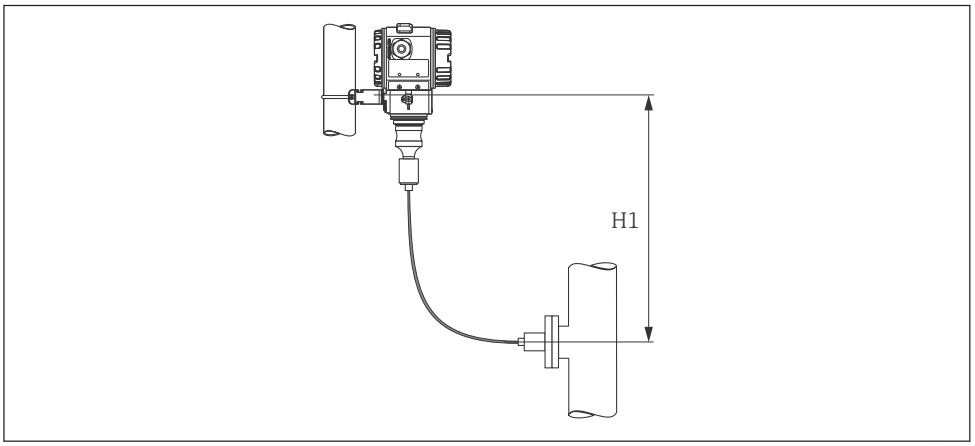

The maximum height difference depends on the density of the filling oil and the smallest ever pressure that is permitted to occur at the diaphragm seal (empty container), see the following diagram. The following diagram depicts the maximum installation height above the diaphragm seal for vacuum applications.

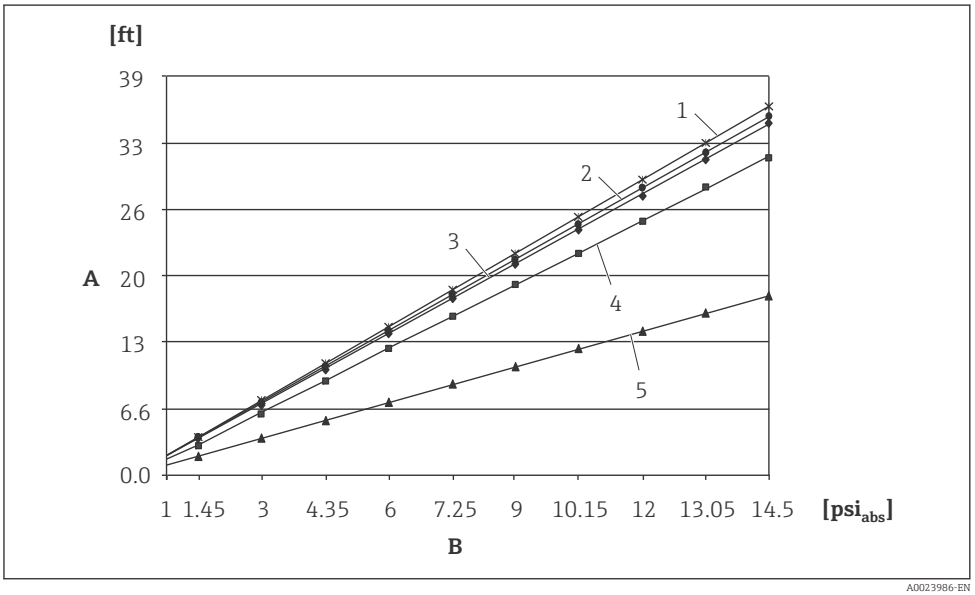

A Height difference H1
B Pressure at diaphragm seal
1 Low-temperature oil
2 Vegetable oil
3 Silicone oil
4 High-temperature oil
5 Inert oil

Certificates and approvals

CE mark

The device meets the legal requirements of the relevant EC directives. Endress+Hauser confirms that the device has been successfully tested by applying the CE mark.

C-tick mark

The measuring system complies with EMC requirements of the "Australian Communications and Media Authority (ACMA)".

Ex approvals

- ATEX
- FM
- CSA
- NEPSI
- IECEx
- TIIS
- GOST
- Also combinations of different approvals

All explosion protection data are given in separate documentation which is available upon request. The Ex documentation is supplied as standard with all Ex-systems → 112.

Suitable for hygiene applications

All materials in contact with foodstuffs comply with framework regulation (EC) 1935/2004. The device is available with hygienic process connections (overview: see order code).

CAUTION

Contamination in the process!

Risk of contamination if incorrect seals and parts are used!

- ▶ To avoid the risk of contamination, when installing the device comply with the design principles of EHEDG, Guideline 37 "Hygienic Design and Application of Sensors" and Guideline 16 "Hygienic Pipe Couplings".
- ▶ Suitable assemblies and seals must be used to ensure hygienic design in accordance with 3-A SSI and EHEDG specifications.
- ▶ The leak-proof connections can be cleaned with the cleaning methods typical of this industry (CIP and SIP). Attention must be paid to the pressure and temperature specifications of the sensor and process connections for CIP and SIP processes (clean in place/sterilize in place).

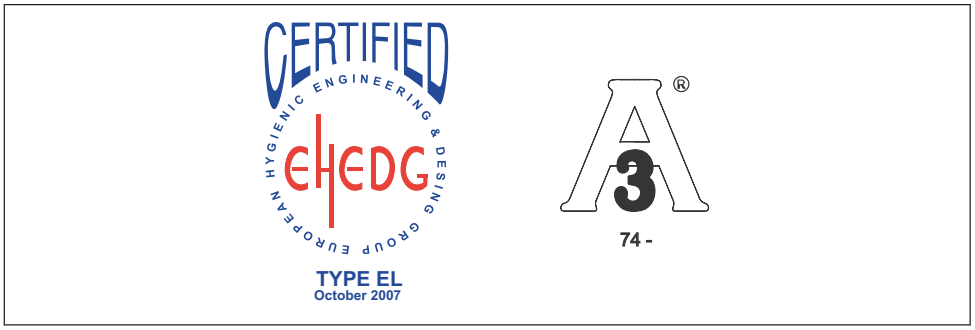

A0026782

The gap-free connections can be cleaned of all residue using the usual cleaning methods within this industry.

Functional safety SIL/ IEC 61508 Declaration of Conformity (optional)

The Cerabar S devices with a 4 to 20 mA output signal have been developed in accordance with the IEC 61508 standard. These devices can be used to monitor the process level and pressure up to SIL 3. For a detailed description of the safety functions with Cerabar S, settings and functional safety data, see the "Functional safety manual - Cerabar S" SD00190P/00.

For devices up to SIL 3 / IEC 61508 Declarations of Conformity see:

Ordering information:

Product Configurator, order code for "Additional options 1" and "Additional options 2", version "E".

Overfill protection

WHG (see document ZE00260P/00/DE)

Ordering information:

Product Configurator, order code for "Approval", option "6".

CRN approval

Some device versions have CRN approval. A CRN-approved process connection with a CSA approval must be ordered for a CRN-approved device. These devices are fitted with a separate nameplate with the registration number CRN 0F10525.5C .

PMP75 devices with a capillary are not CRN-approved.

Ordering information:

Product Configurator, order code for "Process connection; material" and

Product Configurator, order code for "Approval"

Other standards and guidelines

The applicable European guidelines and standards can be found in the relevant EU Declarations of Conformity. The following were also applied:

DIN EN 60770 (IEC 60770):

Transmitters for use in industrial-process control systems. Part 1: Methods for operating performance evaluation

DIN 16086:

Electrical pressure measuring instruments, pressure sensors, pressure transmitters, pressure measuring instruments, concepts, specifications on data sheets

EN 61326-X:

EMC product family standard for electrical equipment for measurement, control and laboratory use.

EN 60529:

Degrees of protection provided by enclosures (IP code)

WELMEC guide 8.8:

General and Administrative Aspects of the Voluntary System of Modular Evaluation of Measuring instruments under the MID.

OIML R117-1 Edition 2007 (E):

Dynamic measuring systems for liquids other than water.

EN 12405-1/A1 Edition 2006:

Gas meters – Conversion devices – Part 1: Volume conversion

Pressure Equipment Directive (PED)

The device corresponds to Article 3 (3) of the EC directive 97/23/EC (Pressure Equipment Directive) and has been designed and manufactured in accordance with good engineering practice.

The following also applies:
- PMP71 with threaded connection and internal process isolating diaphragm PN > 200 as well as oval flange adapter PN > 200:
  Suitable for stable gases in group 1, category I
- PMP75 with pipe diaphragm seal ≥ 1.5"/PN40:
  Suitable for stable gases in group 1, category II
- PMP75 with barriers PN > 200 ≥ 1.5"/PN40:
  Suitable for stable gases in group 1, category I
- PMP75 with threaded connection PN > 200

Marine approval

- GL (German Lloyd)
- ABS

Ordering information:

Product Configurator, order code for "Additional options 1" or "Additional options 2", version "S".

Drinking water approval

PMC71/PMP71: NSF 61 approval

Ordering information:

Product Configurator, order code for "Additional options 1" or Additional options 2", version "F".

Approvals for custody transfer

All aspects of OIML R117-1 Edition 2007 (E) and EN 12405-1/A1 Edition 2006 are fulfilled.

MID Parts Certificate

TC7975

Classification of process sealing between electrical systems and (flammable or combustible) process fluids in accordance with ANSI/ISA 12.27.01

Endress+Hauser devices are designed in accordance with ANSI/ISA 12.27.01. allowing the user to waive the use and save the cost of installing external secondary process seals in the conduit as required by the process sealing sections of ANSI/NFPA 70 (NEC) and CSA 22.1 (CEC). These instruments comply with the North American installation practice and provide a very safe and cost-saving installation for pressurized applications with hazardous fluids. Please refer to the following table for the seal class assigned (single seal or dual seal):

Device	Approval	Remark	Single seal MWP	Dual seal MWP
PMC71	CSA C/US IS, XP	except separate housing	-	60 bar (900 psi)
	CSA C/US IS	With separate housing	40 bar (600 psi)	-
PMP71	CSA C/US XP, XP+IS	except separate housing	400 bar (6 000 psi)	-
	CSA C/US IS	except separate housing	>200 to 400 bar (3 000 to 6 000 psi)	≤200 bar (3 000 psi)
	CSA C/US IS	With separate housing	400 bar (6 000 psi)	-
PMP75	XP, XP+IS	except separate housing	400 bar (6 000 psi)	-
	CSA C/US IS	except separate housing	>200 to 400 bar (3 000 to 6 000 psi)	≤200 bar (3 000 psi)
	CSA C/US IS	With separate housing	400 bar (6 000 psi)	-

Further information can be found in the control drawings of the relevant devices.

Inspection certificate

Description	PMC71	PMP71	PMP75	Option
Material test certificate for wetted components, inspection certificate as per EN10204-3.1 acc. to specification 52005759	✔	✔	✔	B [1]
Declaration of Conformity NACE MR0175, wetted metal parts	—	✔	✔	C [1]
Material test certificate for wetted components as per EN 10204 3.1 and NACE MR0175 material, inspection certificate as per EN10204-3.1 acc. to specification 52010806	—	✔	✔	D [1]
Individual testing with test certificate, inspection certificate as per EN10204-3.1	✔	✔	✔	3 [1]
Overpressure testing with test certificate, inspection certificate as per EN10204-3.1	✔	✔	✔	4 [1]
Helium leak test EN 1518 with test certificate, inspection certificate as per EN10204-3.1	✔	✔	—	5 [1]
EN10204-3.1 material wetted parts +Ra, Ra= surface roughness, dimensional check, inspection certificate	✔	—	—	6 [1]
EN10204-3.1 measurement of delta ferrite content, inspection certificate	✔	—	—	8 [1]
3.1 Material documentation, wetted metal parts, EN10204-3.1 inspection certificate	✔	✔	✔	JA [2]
Declaration of Conformity NACE MR0175, wetted metal parts	—	✔	✔	JB [2]
Declaration of Conformity NACE MR0103, wetted metal parts	✔	✔	✔	JE
PMI test (XRF), internal procedure, metal parts in contact with the medium	✔	✔	✔	KG
Welding documentation, wetted/pressurized seams	—	✔	—	KS

1) Product Configurator, order code for "Additional options 1" and "Additional options 2"
2) Product Configurator, order code for "Test, certificate"

Calibration

Description	PMC71	PMP71	PMP75	Option [1]
Sensor range; mbar/bar	✔	✔	✔	1
Sensor range; kPa/MPa	✔	✔	✔	2
Sensor range; mmH2O/mH2O	✔	✔	✔	3
Sensor range; inH2O/ftH2O	✔	✔	✔	4
Sensor range; psi	✔	✔	✔	6
Customer-specific; see additional specification	✔	✔	✔	B
Factory calibration certificate, 5-point; see additional specification	✔	✔	✔	C
DKD/DAkkS certificate; see additional specification	✔	✔	✔	D
Customized pressure; see additional specification	✔	✔	✔	E
Customized level; see additional specification	✔	✔	✔	F
Customized pressure + 5-point factory calibration certificate; see additional specification	✔	✔	✔	H
Customized level + 5-point factory calibration certificate; see additional specification	✔	✔	✔	I
Platinum; see additional specification	✔	✔	—	K
Platinum + factory calibration certificate 5-point; see additional specification	✔	✔	—	L
Platinum + DKD/DAkkS certificate; see additional specification	✔	✔	—	M

1) Product Configurator, order code for "Calibration; unit"

Ordering information

Detailed ordering information is available from the following sources:
- In the Product Configurator on the Endress+Hauser website: www.endress.com → Select country → Products → Select product → Product page function: Configure this product
- From your Endress+Hauser Sales Center: www.endress.com/worldwide

Product Configurator - the tool for individual product configuration
- Up-to-the-minute configuration data
- Depending on the device: Direct input of information specific to measuring point, e.g. measuring range
- Automatic verification of exclusion criteria
- Automatic creation of the order code and its breakdown in PDF or Excel output format
- Ability to order directly from the Endress+Hauser Online Shop

Scope of delivery

- Measuring device
- Optional accessories
- Brief Operating Instructions
- Certificates

Configuration data sheet

Pressure

The following configuration data sheet must be completed and included with the order if the option "E" or "H" has been selected in the Product Configurator, order code for "Calibration; Unit".

Pressure unit

❑ mbar	❑ mmH_2O 1)	❑ mmHg 2)	❑ Pascal	❑ torr
❑ bar	❑ mH_2O 1)	❑ inHg 2)	❑ hPa	❑ g/cm^2
❑ psi	❑ ftH_2O 1)	❑ gf/cm^2	❑ kPa	❑ kg/cm^2
	❑ inH_2O 1)	❑ kgf/cm^2	❑ MPa	❑ lb/ft^2
				❑ atm

1) The conversion factor for the pressure unit is based on a reference temperature of 4 °C (39.2 °F).
2) The conversion factor of the pressure unit refers to a reference temperature of 0 °C (32 °F).

Calibration range / Output

Lower range value (LRV): _____ [pressure unit]
Upper range value (URV): _____ [pressure unit]

Display

Display of the content of the main line (option depends on sensor and communication variant)

- ❑ Primary value [PV] (default)
- ❑ Primary value [%]
- ❑ Pressure
- ❑ Current [mA] (HART only)
- ❑ Temperature
- ❑ Error number
- ❑ Alternating display

Damping

Damping: _____ sec (Default 2 sec)

Smallest span (factory calibration)

Level

The following configuration data sheet must be completed and included with the order if the option "F" or "T" has been selected in the Product Configurator, order code for "Calibration; Unit".

Pressure unit

❑ mbar ❑ bar ❑ psi ❑ mmH_2O [1] ❑ mH_2O [1] ❑ ftH_2O [1] ❑ inH_2O [1] ❑ mmHg [2] ❑ inHg [2] ❑ gf/cm^2 ❑ kgf/cm^2 ❑ Pascal ❑ hPa ❑ kPa ❑ MPa ❑ torr ❑ g/cm^2 ❑ kg/cm^2 ❑ lb/ft^2 ❑ atm

Output unit (scaled unit)

Mass	Lengths	Volume	Volume	Percent
❑ kg	❑ m	❑ l	❑ USgal	❑ %
❑ t	❑ dm	❑ hl	❑ impgal	
❑ lb	❑ cm	❑ m^3	❑ USbblPE TR	
	❑ mm	❑ ft^3		
	❑ ft			
	❑ inch			

Empty calibration [a]: Low pressure value (empty) _____ [pressure unit]

Empty calibration [a]: Low measured value (empty) _____ [Scaled unit]

Full calibration [b]: High pressure value (full) _____ [pressure unit]

Full calibration [b]: High level value (full) _____ [Scaled unit]

Example

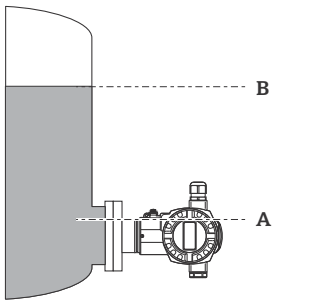

A 0 mbar/0 m
B 300 mbar (4.5 psi) / 3 m (9.8 ft)

1) The conversion factor for the pressure unit is based on a reference temperature of 4 °C (39.2 °F).
2) The conversion factor of the pressure unit refers to a reference temperature of 0 °C (32 °F).

Display

Display of the content of the main line (option depends on sensor and communication variant)

❑ Primary value [PV] (default)
❑ Primary value [%]
❑ Pressure
❑ Current [mA] (HART only)
❑ Temperature
❑ Level before lin.
❑ Tank content
❑ Error number
❑ Alternating display

Damping

Damping: _____ sec (Default 2 sec)

Accessories

HistoROM®/M-DAT	HistoROM®/M-DAT is a memory module which can be attached to every electronic insert. Ordering information: Product Configurator, order code for "Additional options 1" or Additional options 2", version "N" or as a separate accessory (part no.: 52027785).
Wall and pipe mounting	Endress+Hauser offers a mounting bracket for installing the device on pipes or walls. Ordering information: Product Configurator, order code for "Additional options 2", version "U" or as a separate accessory (part no.: 71102216). Dimensions → 🖹 34
Welding flanges and welding neck	For details refer to TI00426F/00/EN "Weld-in adapter and flanges".

Supplementary documentation

Field of Activities

Pressure measurement, powerful instruments for process pressure, differential pressure, level and flow:

FA00004P/00/EN

Technical Information

- EMC test procedures: TI00241F/00/EN
- Deltabar S: TI00382P/00/EN
- Deltapilot S: TI00416P/00/EN
- EMC test procedures: TI00241F/00/EN

Operating Instructions

4 to 20 mA HART:
- Cerabar S: BA00271P/00/EN
- Description of device functions Cerabar S/Deltabar S/Deltapilot S: BA00274P/00/EN

4 to 20 mA HART with MID parts certificate:
- BA00412P/00/EN
- Description of Device Functions: BA00413P/00/EN

PROFIBUS PA:
- Cerabar S: BA00295P/00/EN
- Description of device functions Cerabar S/Deltabar S/Deltapilot S: BA00296P/00/EN

FOUNDATION Fieldbus:
- Cerabar S: BA00302P/00/EN
- Description of device functions Cerabar S/Deltabar S/Deltapilot S: BA00303P/00/EN

Brief Operating Instructions

- 4 to 20 mA HART, Cerabar S: KA01019P/00/EN
- PROFIBUS PA, Cerabar S: KA01022P/00/EN
- FOUNDATION Fieldbus, Cerabar S: KA01025P/00/EN

Functional safety manual (SIL)

Cerabar S (4 to 20 mA): SD00190P/00/EN

Overfill protection

WHG: ZE00260P/00/DE

Safety Instructions (XA)

Depending on the approval, the following Safety Instructions (XA) are supplied with the device. They are an integral part of the Operating Instructions.

Directive	Device	Electronics	Documentation	Option [1)]
ATEX II 1/2 G Ex ia IIC T6	PMC71, PMP71, PMP75	4 to 20 mA HART, PROFIBUS PA, FOUNDATION Fieldbus	XA00244P	1
ATEX II 1/2 D Ex ia	PMP71, PMP75	4 to 20 mA HART, PROFIBUS PA, FOUNDATION Fieldbus	▪ XA00246P ▪ XA00289P	2
ATEX II 1/2D Ex tD	PMC71	4 to 20 mA HART, PROFIBUS PA, FOUNDATION Fieldbus	▪ XA00247P ▪ XA00290P	2
ATEX II 1/3D Ex tD	PMP71, PMP75	4 to 20 mA HART, PROFIBUS PA, FOUNDATION Fieldbus	▪ XA00248P ▪ XA00291P	4
ATEX II 2G Ex d IIC T6 Gb	PMP71, PMP75	4 to 20 mA HART, PROFIBUS PA, FOUNDATION Fieldbus	XA00249P	5
ATEX II 2G Ex d [ia] IIC T6 Gb	PMC71	4 to 20 mA HART, PROFIBUS PA, FOUNDATION Fieldbus	XA00250P	5
ATEX II 1/2G Ex ia IIC T6, WHG (German Water Resources Act)	PMC71, PMP71, PMP75	4 to 20 mA HART, PROFIBUS PA, FOUNDATION Fieldbus	XA00244P	6
ATEX II 3 G Ex nA II T6	PMC71, PMP71, PMP75	4 to 20 mA HART, PROFIBUS PA, FOUNDATION Fieldbus	XA00251P	7
ATEX II 1/2G Ex ia + II 1/2D Ex iaD	PMC71, PMP71, PMP75	4 to 20 mA HART, PROFIBUS PA, FOUNDATION Fieldbus	XA00253P	3

Directive	Device	Electronics	Documentation	Option [1]
ATEX II 1G Ex ia + II 1D Ex iaD	PMC71, PMP71, PMP75	4 to 20 mA HART, PROFIBUS PA, FOUNDATION Fieldbus	XA00276P	8
ATEX II 1/2G Ex ia IIC T6+II 2G Ex d IIC T6	PMP71, PMP75	4 to 20 mA HART, PROFIBUS PA, FOUNDATION Fieldbus	XA00252P	B
ATEX II Ex ia + FM IS + CSA IS ATEX II 1/2G Ex ia IIC T6 + FM/CSA IS Cl.I,II,III Div. 1 Gr.A-G, FM/CSA: Zone 0,1,2	PMC71	▪ 4 to 20 mA HART, PROFIBUS PA, FOUNDATION Fieldbus ▪ HART ▪ PROFIBUS PA, FOUNDATION Fieldbus	▪ XA00244P ▪ XA00593P + XA01059P ▪ XA00596P + XA01060P	E
ATEX II Ex ia / Ex d + FM/CSA IS + XP ATEX II 1/2G Ex ia IIC T6+ ATEX II 2G Ex d IIC T6+ FM/CSA IS + XP Cl.I.II Div.1 Gr.A-G/B-G FM: Zone 1.2/CSA: Zone 1,2	PMP71, PMP75	▪ 4 to 20 mA HART, PROFIBUS PA, FOUNDATION Fieldbus ▪ HART ▪ PROFIBUS PA, FOUNDATION Fieldbus	▪ XA00252P ▪ XA00592P + XA01197P ▪ XA00590P + XA01198P	F

1) Product Configurator, order code for "Approval"

Directive	Device	Electronics	Documentation	Option [1]
IECEx Zone 0/1 Ex ia IIC T6	PMC71, PMP71, PMP75	4 to 20 mA HART	XB00005P	I
IEC Ex d[ia] IIC T6 Gb	PMC71	4 to 20 mA HART, PROFIBUS PA, FOUNDATION Fieldbus	XA00511P	B
IEC Ex d IIC T6 Gb	PMP71, PMP75	4 to 20 mA HART, PROFIBUS PA, FOUNDATION Fieldbus	XA00510P	M

1) Product Configurator, order code for "Approval"

Directive	Device	Electronics	Documentation	Option [1]
NEPSI Ex ia IIC T6	PMC71, PMP71, PMP75	4 to 20 mA HART, PROFIBUS PA, FOUNDATION Fieldbus	XA00549P	H
NEPSI Ex d IIC T6	PMP71, PMP75	4 to 20 mA HART, PROFIBUS PA, FOUNDATION Fieldbus	XA00551P	G
NEPSI Ex d[ia] IIC T6	PMC71	4 to 20 mA HART, PROFIBUS PA, FOUNDATION Fieldbus	XA00551P	G

1) Product Configurator, order code for "Approval"

Directive	Device	Electronics	Documentation	Option [1]
TIIS Ex d [ia] IIC T6	PMC71	4 to 20 mA HART	TC17436	L
TIIS Ex d [ia] IIC T4	PMC71	4 to 20 mA HART	TC17398, TC17399	M
TIIS Ex d IIC T6	PMP71 (700 bar version)	4 to 20 mA HART	TC17445	L
TIIS Ex d IIC T6	PMP71, PMP75	4 to 20 mA HART	TC17446	L

1) Product Configurator, order code for "Approval"

Directive	Device	Electronics	Documentation	Option [1]
INMETRO Ex ia IIC T6 Ga/Gb	PMC71, PMP71, PMP75	4 to 20 mA HART, PROFIBUS PA, FOUNDATION Fieldbus	XA01315P	J
INMETRO Ex d IIC T6 Gb	PMP71, PMP75	4 to 20 mA HART, PROFIBUS PA, FOUNDATION Fieldbus	XA01279P	O
INMETRO Ex ta IIIC Da/Db	PMP71, PMP75	4 to 20 mA HART, PROFIBUS PA, FOUNDATION Fieldbus	XA01313P	Z
INMETRO Ex d ia IIC T6 Gb	PMC71	4 to 20 mA HART, PROFIBUS PA, FOUNDATION Fieldbus	XA01280P	P
INMETRO Ex ia IIIC Da/Db	PMC71	4 to 20 mA HART, PROFIBUS PA, FOUNDATION Fieldbus	XA01314P	Z

1) Product Configurator, order code for "Approval"

Installation/Control Drawings

Directive	Device	Electronics	Documentation	Option [1]
FM IS Class I, II, III, Division 1, Groups A – G; NI, Class I Division 2, Groups A – D; AEx ia	PMC71, PMP71, PMP75	▪ 4 to 20 mA HART ▪ PROFIBUS PA, FOUNDATION Fieldbus	▪ XA01059P ▪ XA01060P	S
CSA IS Class I, II, III, Division 1, Groups A – G; Class I Division 2, Groups A – G	PMC71, PMP71, PMP75	▪ 4 to 20 mA HART ▪ PROFIBUS PA, FOUNDATION Fieldbus	▪ XA00593P ▪ XA00596P	U
FM IS + XP Class I, Division 1, Groups A – D	PMP71, PMP75	▪ 4 to 20 mA HART ▪ PROFIBUS PA, FOUNDATION Fieldbus	▪ XA01197P ▪ XA01198P	C
CSA IS + XP Class I Division 1, Groups A – D	PMP71, PMP75	▪ 4 to 20 mA HART ▪ PROFIBUS PA, FOUNDATION Fieldbus	▪ XA00592P ▪ XA00590P	D
FM/CSA IS + XP Class I Division 1, Groups A – D	PMP71, PMP75	▪ 4 to 20 mA HART ▪ PROFIBUS PA, FOUNDATION Fieldbus	▪ XA00592P + XA01197P ▪ XA01198P + XA00590P	E
FM NI Cl.I Div.2 Groups A - D, Zone 2	PMC71, PMP71, PMP75	4 to 20 mA HART, PROFIBUS PA, FOUNDATION Fieldbus	XA01063P	R
FM XP Cl.I Div.1 Groups A - D, AEx d, Zone 1,2	PMC71, PMP71, PMP75	4 to 20 mA HART, PROFIBUS PA, FOUNDATION Fieldbus	XA01070P	T
FM DIP Cl.II,III Div.1 Gr.E-G, Zone 21,22	PMP71, PMP75	4 to 20 mA HART, PROFIBUS PA, FOUNDATION Fieldbus	FM3017778	Q
CSA C/US XP Cl.I Div.1 Gr.B-D, Ex d, Zone 1,2	PMC71, PMP71, PMP75	4 to 20 mA HART, PROFIBUS PA, FOUNDATION Fieldbus	ZD00230P + XA00599P	V
CSA C/US General Purpose	PMD75, FMD77, FMD78	4 to 20 mA HART, PROFIBUS PA, FOUNDATION Fieldbus	-	X

1) Product Configurator, order code for "Approval"

Registered trademarks

HART®	Registered trademark of the HART Communication Foundation, Austin, USA
PROFIBUS®	Registered trademark of the PROFIBUS User Organization, Karlsruhe, Germany
FOUNDATION™ Fieldbus	Registered trademark of the Fieldbus Foundation, Austin, Texas, USA

Patents

This product is protected by at least one of the following patents. Further patents are pending.

DE patents	US patents	EP patents
-	US 5,836,063 A1	EP 0 797 084 B1
-	US 5,877,424 A1	EP 0 780 674 B1
DE 203 05 869 U1	-	-
-	US 6,363,790 A1	EP 0 995 979 B1
-	US 5,670,063 A1	EP 0 516 579 B1
-	US 5,539,611 A1	-
-	US 5,050,034 A1	EP 0 445 382 B1
-	US 5,005,421 A1	EP 0 351 701 B1
-	-	EP 0 414 871 B1
-	-	EP 1 061 351 B1
-	US 5,334,344 A1	EP 0 490 807 B1
-	US 6,703,943 A1	-

www.addresses.endress.com

Endress+Hauser

People for Process Automation

CS-413-300 : Identification sheet

VWTC PROJECT NUMBER:	5000218009	REV:	1
PROJECT NAME:	AEM AMARUQ	SUBMITTED TO (COMPANY):	AGNICO EAGLE MINES
ENGINEER:	Gabriel Hébert	SUBMITTED TO (RESPONSIBLE)	
PROJECT MANAGER:	Clément B	PROJECT NUM REFERENCE.:	
PHONE NUMBER:		LOT NUMBER:	

SUPPLIER	EQPT CODE	EQPT TAG NO	DIA	DESCRIPTION	INFO 1	INFO 2	INFO 3	APPLIC.	NOTE	REV
TECKNO VALVE	IMPSGG300380	PI15-041	DIA. CADRAN: 2.5"	SERVICE WATER PRESSURE GAUGE	PRESSURE GAUGE/MANUFACTURER: ASHCROFT// MODEL: 25-1009SWL-02L-160PSIG// 1/4''	N/A	N/A	KMnO4 PREP SYSTEM		rev1

This page is intentionally left blank

ASHCROFT®

Duralife® Pressure Gauge
Type 1009, ASME B 40.1
Grade 1A (±1% of span)

DESIGNED FOR SAFETY AND LONGER LIFE

- ***5-year limited warranty***
- ***Patented PowerFlex™ movement isolates movement from shock and vibration for longer life***
- ***All stainless, all-welded construction for long life***
- ***ASME Grade 1A, 1% accuracy full scale***
- ***True Zero™ pointer indication – no stop pin to mask false zero reading – ensures safety and process control***

The following Table is *not* for conversion purposes.

STANDARD RANGES [3][4][5]

Pressure psi	kg/cm² - bar	kPa
0/15	0/1	0/100
0/30	0/1.6	0/160
0/60	0/2.5	0/250
0/100	0/4	0/400
0/160	0/6	0/600
0/200	0/10	0/1000
0/300	0/16	0/1600
0/400	0/25	0/2500
0/600	0/40	0/4000
0/800	0/60	0/6000
0/1000	0/100	0/10,000
0/1500	0/160	0/16,000
0/2000	0/250	0/25,000
0/3000	0/400	0/40,000
0/4000	0/600	0/60,000
0/5000	0/1000	0/100,000
0/6000		
0/7500		
0/10,000		
0/15,000		
Vacuum		
30 in./0 in.Hg	–1/0	–100/0
Compound		
30 in.Hg/15 psi	–1/0/1.5	–100/0/150
30 in.Hg /30 psi	–1/0/3	–100/0/300
30 in.Hg /60 psi	–1/0/5	–100/0/500
30 in.Hg /100 psi	–1/0/9	–100/0/900
30 in.Hg /150 psi	–1/0/15	–100/0/1500
30 in.Hg /300 psi	–1/0/24	–100/0/2400

- ***New PLUS!™ Performance Option:***
  - ***Liquid-filled performance in a dry gauge***
  - ***Fights vibration and pulsations without liquid-fill headaches***
  - ***See pages 6-7 for details***
  - ***Order as option XLL***

OTHER FEATURES:

Available in 2½˝ and 3½˝ dial sizes, Duralife® pressure gauges are liquid fillable and field convertible for panel mounting. Both zero and span adjustments are standard.

The gauge is available dry, liquid-filled weatherproof or hermetically sealed and *now* with *PLUS!™* performance option. A five year limited warranty is standard with the Duralife® 1009.

BOURDON SYSTEM SELECTION[1]

Ordering Code	Bourdon Tube & Tip Material[1]	Socket Material	Tube Type	Range Selection Limits (psi)	NPT Conn.[6]
AW	316 stainless steel	Bronze	C-Tube	Vac/600	¼
AW	316 stainless steel	Bronze	Helical	1000	¼
SW	316 stainless steel	316 stainless steel	C-Tube	Vac/600	¼ & ½[2]
SW	316 stainless steel	316 stainless steel	Helical	800/15,000	¼ & ½[2]

(1) For selection of the correct Bourdon system material, see the media application table on page 243.
(2) ½ NPT available 3½˝ lower SW system only.
(3) Type 1009 gauges may be ordered with metric single-scale dial: kPa,bar or kg/cm².
(4) Dual-scale dials will be supplied with standard metric inner scale and equivalent psi outer scale or with standard psi inner scale and equivalent metric outer scale–please specify.
(5) Special logos and scales available upon request.
(6) ¼˝ JIS, BSP or DIN threads available on SW systems.

TO ORDER THIS 1009 DURALIFE PRESSURE GAUGE:

Select:	35	1009	SW	(L)	02L	XXX	1000#

1. Dial size–2½˝, 3½˝
2. Case type–1009
3. Tube and socket material
4. Liquid filled (glycerin), leave blank if dry
5. Connection size–⅛ (01), ¼ (02) ½ (04)
6. Connection location–Lower (L), Back (B)
7. Optional Features–see page 176
8. Standard pressure range–1000 psi

Accessories: see pages 233-238

Consult factory for guidance in product selection
Phone (203) 385-0217, Fax (203) 385-0602 or
visit our web site at www.ashcroft.com

DRESSER Instruments

This page is intentionally left blank

ASHCROFT®
Trust the shield.™

Type 310, 315 All-Welded "Mini" Diaphragm Seal

PRODUCT FEATURES

- Compact size to fit space-restricted areas
- Designed to protect transducers, mini-switches and 3½″ or smaller pressure gauges from corrosion, plugging or freeze-up
- All-welded metal construction prevents leakage of process media
- Rated for 2500 psi at 100°F
- Fill/bleed connection is standard
- Available with male process connection (Type 310)

The compact size of the Ashcroft® 310 mini-seal allows it to fit into space-restricted areas and is designed to protect transducers, mini-switches, and 3½" or smaller dial size pressure gauges from corrosion, plugging or freeze- up. All welded metal construction prevents leakage of process media. It is rated for 2500 psi at 100°F and has a 316L stainless steel top housing standard. Lower housing materials include 316L stainless steel or Hastelloy C. Diaphragm materials include 316L stainless, Hastelloy C or Tantalum. ¼ NPT or ½ NPT process connection sizes are available.

PRODUCT SPECIFICATIONS

Model Number:	Type 310, 315
Process Connection Size:	¼″, ½″ (⅛″, ¾″, 1″- 310 only) (see table A)
Instrument Connection Size:	⅛, ¼ NPT
Diaphragm Material:	316L SS, Hastelloy C276, Tantalum, Monel
Bottom Housing Materials:	316L SS, Hastelloy C276, Monel, Hastelloy B
Filling Fluid:	Glycerin, Silicone, Halocarbon, Syltherm

All specifications are subject to change without notice.
All sales subject to standard terms and conditions.
© Ashcroft Inc. 2015 09/15

Ashcroft Inc., 250 East Main Street, Stratford, CT 06614 USA
Tel: 203-378-8281 • Fax: 203-385-0408
email: info@ashcroft.com • www.ashcroft.com

Type 310, 315 All-Welded "Mini" Diaphragm Seal

Table A – Process Connection

Process Connection	Size	Code
Threaded – male NPT*	⅛	01
Threaded – male NPT*	¼	02
Threaded – male NPT*	½	04
Threaded – male NPT*	¾	06
Threaded – male NPT*	1	08
Threaded – female NPT†	¼	25
Threaded – female NPT†	½	50

*Available in Type 310 only.
†Available in Types 310 & 315.

Pressure Ratings – All 2500 psi except flanged seals are per ASME B 16.5, temperature limit determined by diaphragm, bottom housing and/or filling fluid.

Table B – Type

Description	Code
All-welded mini-seal	310
All-welded midi-seal w/flushing connection	315

Table C – Diaphragm Materials

Materials	Code
316L stainless steel	S
Hastelloy C-276	H
Tantalum	U
Monel	P

Table D – Housing Materials

Bottom(1)	Code	Top(2)
316L SS	S	316L SS
Hastelloy C-276	H	316L SS
Monel	M	Monel

(1) Other bottom housing materials on application.
(2) Top housing material is 316L SS (standard). Monel mini-seal standard with monel top housing.

Table E – Instrument Connection

Instrument Connection	Size	Code
Threaded – female NPT	¼	02T
Threaded – female NPT	⅛	01T

NOTES:
(1) For use with most 3½″ and smaller gauges. Movementless gauge 4½″ (exception).
(2) Other bottom housing materials on application.
(3) Top housing material is 316L SS (standard). Monel mini-seal standard with monel top housing.
(4) Not available with monel bottom housing.

Table F – Filling Fluid

Fill	Service	Connection to Instrument	Temperature Range °F	Code
Glycerin	Pressure	Direct Only	0/400	CG
Silicone	Pressure/Vacuum	Direct or Flexible Line	–40/600	CK
Halocarbon	Pressure/Vacuum in presence of strong oxidizing agent	Direct or Flexible Line	–70/300	CF
Syltherm	Pressure	Direct or Flexible Line	–40/750	HA

Monel is a registered trademark of Huntington Alloys, Inc.
Hastelloy is a registered trademark of Cabot Corp.
Halocarbon is a registered trademark of Halocarbon Products
GYLON 3510 is a registered trademark of Garlock Inc.

HOW TO ORDER:

1. **From Table A...** select PROCESS CONNECTION (e.g., 1/4″ process code 25)
2. **From Table B...** select TYPE (310)
3. **From Table B...** select DIAPHRAGM MATERIAL. (e.g., 316L stainless steel–code S)
4. **From Table C...** select BOTTOM HOUSING MATERIAL. (e.g., 316 stainless steel–code S)
5. **From Table D...** select INSTRUMENT CONNECTION size. (e.g., 1/4 NPT–code 02T)
6. **From Table E...** select FILLING FLUID, if diaphragm seal will be attached to instrument. (e.g., Glycerin–code CG)

Coded order: **25-310SS-02T-CG**

Dimension

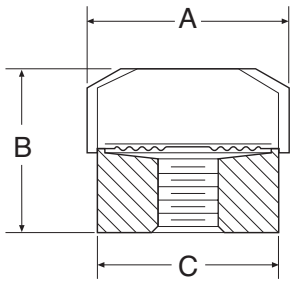

Types 310 mini-seal – Threaded ¼, ½, ¾, NPT

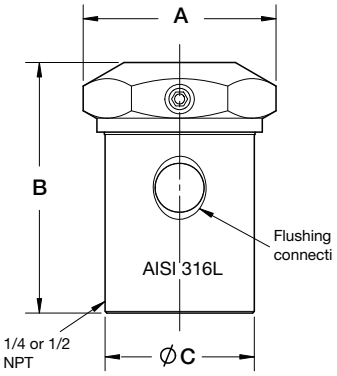

Types 315 mini-seal – Threaded ¼, ½, ¾, NPT

	A		B		C	
	in	mm	in	mm	in	mm
Type 310	1.75	(38)	.81	(30)	1.34	(34)
Type 315	1.73	(44)	2.25	(57.2)	1.34	(34)

All specifications are subject to change without notice.
All sales subject to standard terms and conditions.
© Ashcroft Inc. 2015 09/15

Ashcroft Inc., 250 East Main Street, Stratford, CT 06614 USA
Tel: 203-378-8281 • Fax: 203-385-0408
email: info@ashcroft.com • www.ashcroft.com

CS-434-100 : Identification sheet

VWTC PROJECT NUMBER:	5000218009	REV:	1
PROJECT NAME:	AEM AMARUQ	SUBMITTED TO (COMPANY):	AGNICO EAGLE MINES
ENGINEER:	Gabriel Hébert	SUBMITTED TO (RESPONSIBLE)	
PROJECT MANAGER:	Clément B	PROJECT NUM REFERENCE.:	
PHONE NUMBER:		LOT NUMBER:	

SUPPLIER	EQPT CODE	EQPT TAG NO	DIA	DESCRIPTION	INFO 1	INFO 2	INFO 3	APPLIC.	NOTE	REV
LUMEN	IEPOPS201955	PSL15-041	N/A	SERVICE WATER PRESSURE SWITCH	PRESSURE SWITCH/MANUFACTURER: ALLEN BRADLEY// MODEL: 836T-T253J	1/4" FNPT female pipe connection	Adjustable Range : 12-150 psi	KMnO4 PREP SYSTEM		rev1

This page is intentionally left blank

Bulletin 836T Pressure Controls

- Operating ranges from 30 in. Hg vacuum…5000 psi
- Independently adjustable range and differential
- Copper alloy and stainless steel bellows
- 2- and 4-Circuit contact block
- Pressure difference controls available
- 1/4 in. and 3/8 in. N.P.T. and O-ring straight thread connections
- Type 4 & 13 and Type 7 & 9 and 4 & 13 combination enclosures

Table of Contents

Product Overview ..... this page
Technical Data 13-26
Product Selection 13-34
Modifications 13-41
Accessories 13-42
Conversion Kits 13-43
Factory Options 13-44
Wiring Diagrams 13-45
Approximate Dimensions 13-48

Standards Compliance and Certification

(For file and guide numbers, see page 13-44)

Product Overview

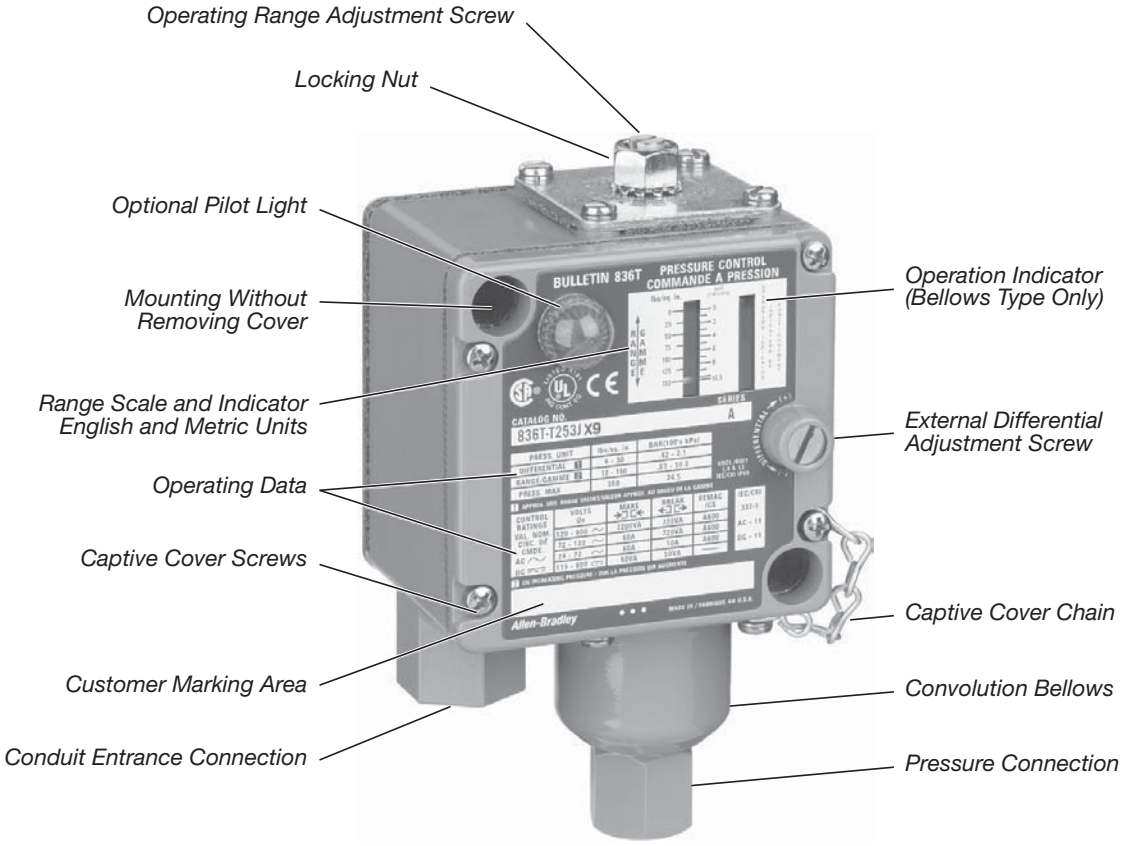

Bulletin 836T Style T Bellows Type Enclosure Type 1, 4 & 13, IEC IP66

Description

Bulletin 836T Pressure Controls are control circuit devices designed to meet the traditional requirements of the transportation, machine tool, and other heavy-duty industries. Allen-Bradley Bulletin 836T Pressure Controls can be used in pneumatic and hydraulic applications. The copper alloy bellows actuators can be used with air, water, oil, vapor, and other non-corrosive gases and liquids. Type 316 stainless steel bellows are available for more corrosive gases, vapors, and fluids.

A rugged stainless steel cylinder and stainless steel piston assembly is used for the higher-pressure coolant and hydraulic oil applications. May also be used with water and water-based fluids. The controls feature snap-action precision switches equipped with silver contacts. A relatively friction-free mechanism provides consistent operation regardless of mounting position. Devices are designed to allow easy adjustment of pressure settings.

Allen-Bradley Bulletin 836T Pressure Controls are used in many types of applications with adjustable ranges from 30 in. Hg vacuum…5000 psi. They can be used to control pneumatic systems and maintain a pressure tank within a preset and constant pressure range. They can be used to detect over-pressures of gases and liquids to prevent damage to valuable equipment. Pressure controls can also detect low pressure to protect equipment from loss of coolants and lubrication.

Bulletin 836T Pressure Controls are offered in a variety of styles to fit a wide range of applications. The devices are available with either a Type 1, 4 & 13, or 7 & 9 and 4 & 13 combined enclosure. They are available with two-circuit or four-circuit contact blocks. Accessories and modifications are available to tailor the devices to meet most application requirements.

Applications

- Machine tools
- Machine hydraulic pressures
- Material clamping fixtures
- Lubricant and coolant pressures
- Compactor ram pressures
- Air compressors

Style T — Pressure Control

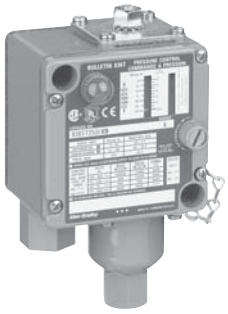

Style T

- Independently adjustable operating range and differential
- Single bellows or piston operation

Copper Alloy Bellows

- 1/4 in. N.P.T. female pipe connection
- Adjustable operating range — 30 in. Hg vacuum…650 psi
- Maximum line pressure — up to 1300 psi
- Occasional surge pressure — up to 1600 psi

Type 316 Stainless Steel Bellows

- 1/4 in. N.P.T. female pipe connection
- Adjustable operating range — 30 in. Hg vacuum…375 psi
- Maximum line pressure — up to 600 psi
- Occasional surge pressure — up to 600 psi

Piston

- 3/8 in. N.P.T. female pipe connection
- SAE 7/16-20 UNF-2B thread O-ring boss seal
- SAE 9/16-18 UNF-2B thread O-ring boss seal
- Adjustable operating range — 40…5000 psi
- Occasional surge pressure — up to 15,000 psi

Style D — Pressure Difference Control

Style D

- Independently adjustable system difference range and differential
- Two-bellows operation, one bellows connected to each system

Copper Alloy Bellows

- 1/4 in. N.P.T. female pipe connection
- Adjustable system difference range — 1…70 psi
- Maximum line pressure — up to 600 psi
- Occasional surge pressure — up to 650 psi

Type 316 Stainless Steel Bellows

- 1/4 in. N.P.T. female pipe connection
- Adjustable system difference range — 1…70 psi
- Maximum line pressure — up to 500 psi
- Occasional surge pressure — up to 500 psi

Technical Terms

Adjustable operating range — Total span within which the contacts can be adjusted to trip and reset.

Trip setting — Higher pressure setting at which value the contacts transfer from their normal state to a change state.

Reset setting — Lower pressure setting at which value the contacts return to their normal state.

Adjustable differential — Difference between the trip and reset values

Minimum differential — When the differential is set to the lowest possible difference between trip and reset.

Maximum differential — When the differential is set to the highest possible difference between trip and reset.

Max. occasional surge pressure — Maximum surge pressure that can be applied to the actuator. Surges or ransients can occur during start-up and shut-down of a machine or system. Expressed in milliseconds, complex electronic instrumentation is required to measure the varying amplitude, frequency, and duration of this wave form. Extreme surges that occur approximately 8 times in a 24-hour period are negligible.

Maximum line pressure — Maximum sustained pressure that can be applied to the actuator without permanent damage. The control should not be cycled at this pressure. **Note:** Does not apply to piston type controls.

psi — Pounds per square inch gauge (positive pressure). Devices listed are in gauge pressure units which use atmospheric pressure as a reference. Atmospheric pressure at sea level is approximately 14.7 psi or 30 in. Hg.

Vacuum — Inches of mercury (in. Hg) vacuum (negative pressure).

Operating range adjustment screw — This screw is used to adjust the trip setting by varying the force of the main spring.

Differential adjustment screw — This screw is used to adjust reset setting by varying the force of the differential blade spring.

Pressure media — There are many types of pressure media that can be controlled. Examples include air, water, hydraulic fluids, and other types of gases and liquids. The type of media and the maximum system pressure will determine the type of actuator used for the pressure control application. See page 13-33.

Pressure connection — Common standard types of pressure connections used in control systems are 1/4 in. and 3/8 in. N.P.T. female pipe threads. SAE 7/16 and SAE 9/16 O-ring boss seals are also available (piston versions only).

Contact configuration — Bulletin 836T controls are available with either a 2-circuit or 4-circuit contact block. See page 13-31.

Style D

Style D — pressure difference controls adjustable system difference range — The adjustable operating range for a pressure difference control.

System difference pressure bushing — This bushing is used to adjust the trip setting by varying the force on the main spring.

Trip setting — Desired difference in pressure between the two bellows at which value the contacts transfer from their normal state to a changed state. This occurs in one of the following conditions:

- The pressure in the bottom bellows is higher than the pressure in the top bellows by a value equal to the trip setting.
- The pressure in the bottom bellows remains constant and the pressure in the top bellows decreases by a value equal to the trip setting.

Reset setting — Predetermined normal difference in pressure between the two bellows, at which value the contacts return to their normal state. This occurs in one of the following conditions:

- The pressure in the bottom bellows is lower than the top bellows.
- The pressure in the bottom bellows remains constant and the pressure in the top bellows increases.

Figure 1
Graphics to illustrate technical terms

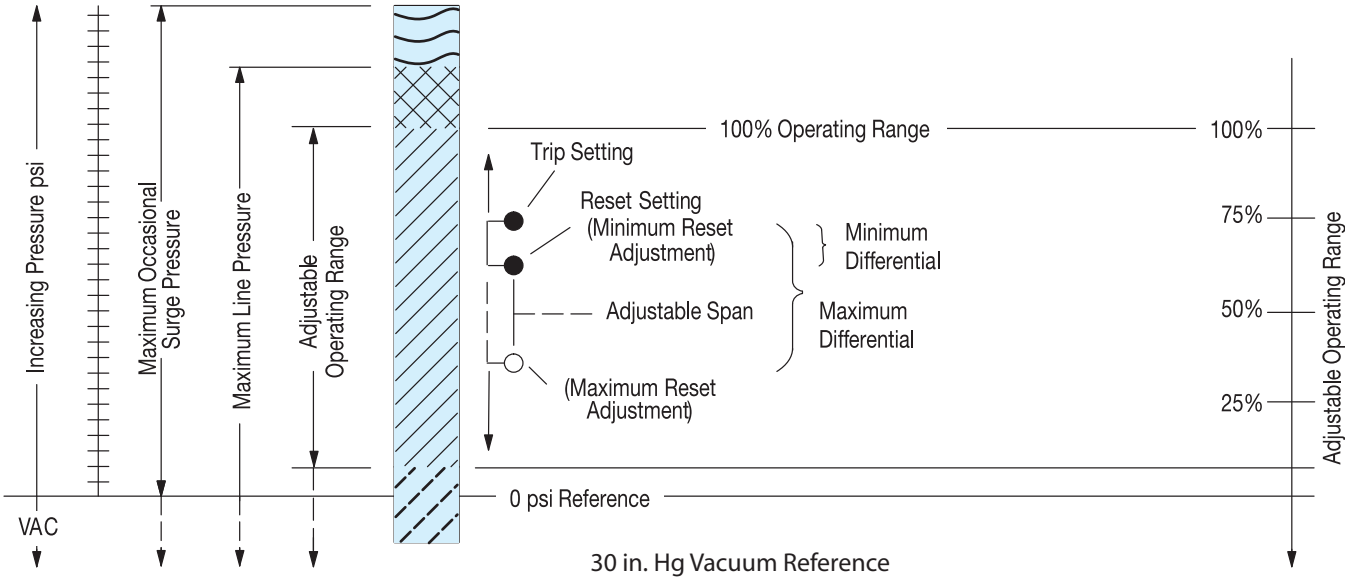

Visit our website: www.ab.com/catalogs
Preferred availability cat. nos. are printed in **bold**

Allen-Bradley

Theory of Operation

Bulletin 836T Pressure Controls are designed to open or close electrical circuits in response to changes in pneumatic (air or gas) or hydraulic (oil or non-corrosive liquids) pressure. Piston controls are not intended for use with air or water. Figure 2 shows the basic operating mechanism.

Pressure is applied to the actuator which can be either a bellows or piston type. As pressure rises, the actuator exerts force on the main spring. When the threshold force of the main spring is overcome, levers transfer the motion to the contact block, displacing the contacts — this is referred to as the trip setting. The unique lever design amplifies the actuator motion, providing shorter stroke, which results in maximizing bellows life.

The lever assembly also includes a virtually friction-free over-center toggle arrangement, providing positive snap action to the contact block for long contact life. As pressure falls, force on the differential spring increases and contacts return to their normal state — this is referred to as reset setting. Varying the force of the main spring (by turning the operating range adjustment screw) determines when the contacts will trip. Varying the force of the differential spring (by turning the differential adjustment screw) determines when the contacts will reset. Setting trip and reset values determines the operating parameters of the application.

Figure 2
Basic mechanical structure

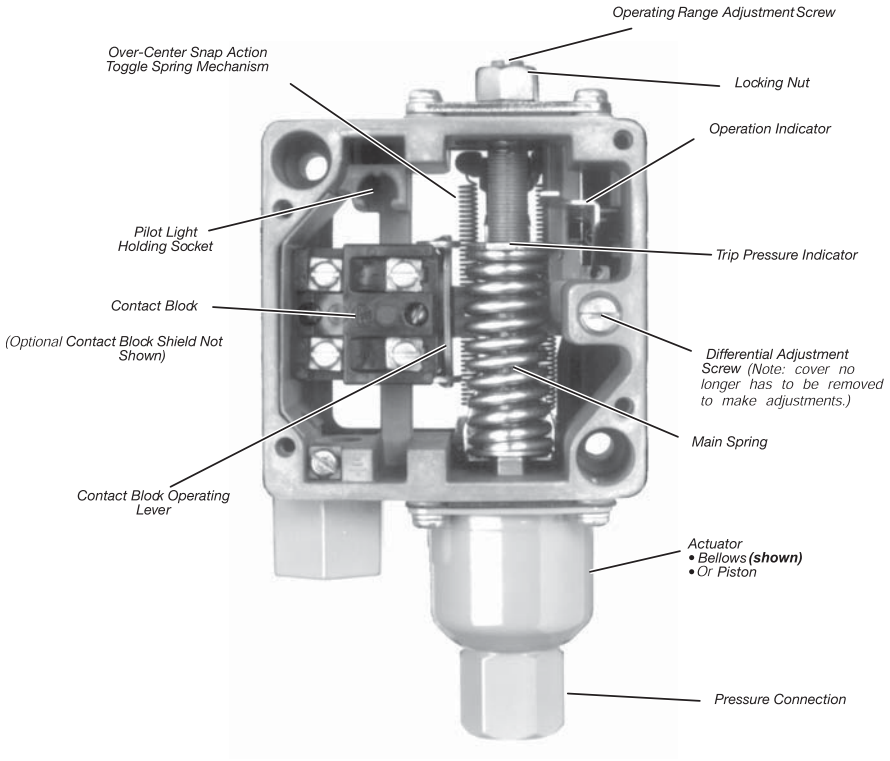

Applications for Control

Pressure controls can be used to either control or monitor a machine or process. Figure 3 shows a typical control application. Here, pressure is controlled within predetermined high and low values. Figure 4 shows a typical monitoring application. Here, pressure is monitored between a high and low value, signaling when a preset limit has been exceeded.

Figure 3
Typical control application

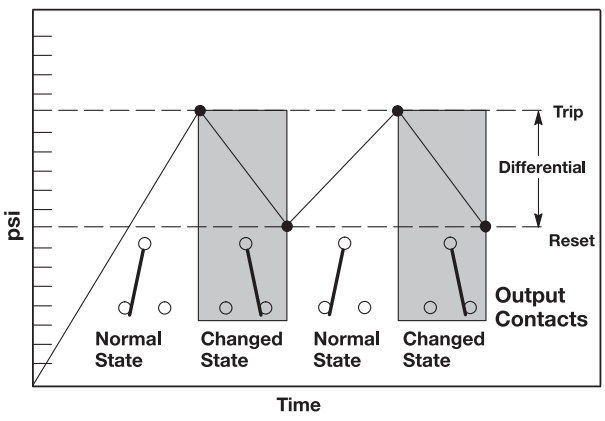

Figure 4
Typical monitoring application

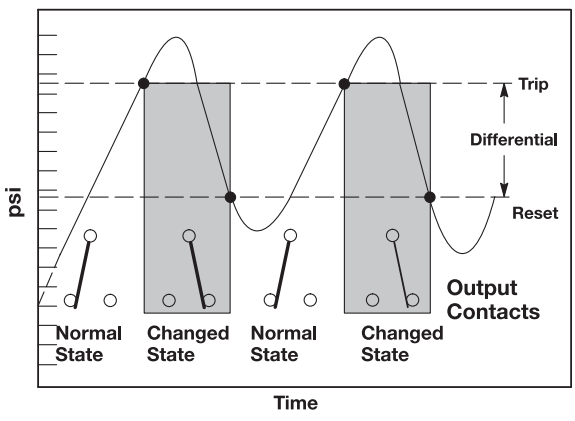

Control Setting — Style T Pressure Controls

Allen-Bradley controls are designed for ease of setting to help minimize installation time. Standard pressure controls shipped from the factory are set at the maximum operating range and minimum differential. By using a pressure gauge and following these simple directions, the control can be set to the specific requirements for each application. See Figure 5.

Step 1 — Adjust trip setting
The trip setting is controlled by the operating range adjustment screw and is adjusted externally. After loosening the lock nut, the trip setting is set by turning the operating range adjustment screw counterclockwise to lower the trip setting or clockwise to raise the trip setting. The approximate trip setting is shown on the indicating scale. When the proper setting is reached, simply tighten the lock nut.
Note: Turning the operating range adjustment screw will cause both the trip and reset settings to change in virtually equal increments.

Step 2 — Adjust reset setting
The reset setting is controlled by an external differential adjustment screw. The reset setting is set by turning the differential adjustment screw clockwise to increase the differential or counterclockwise to decrease the differential.
Note: Adjusting the differential has little or no affect on the trip setting.

Figure 5
Trip and reset adjustment for pressure controls

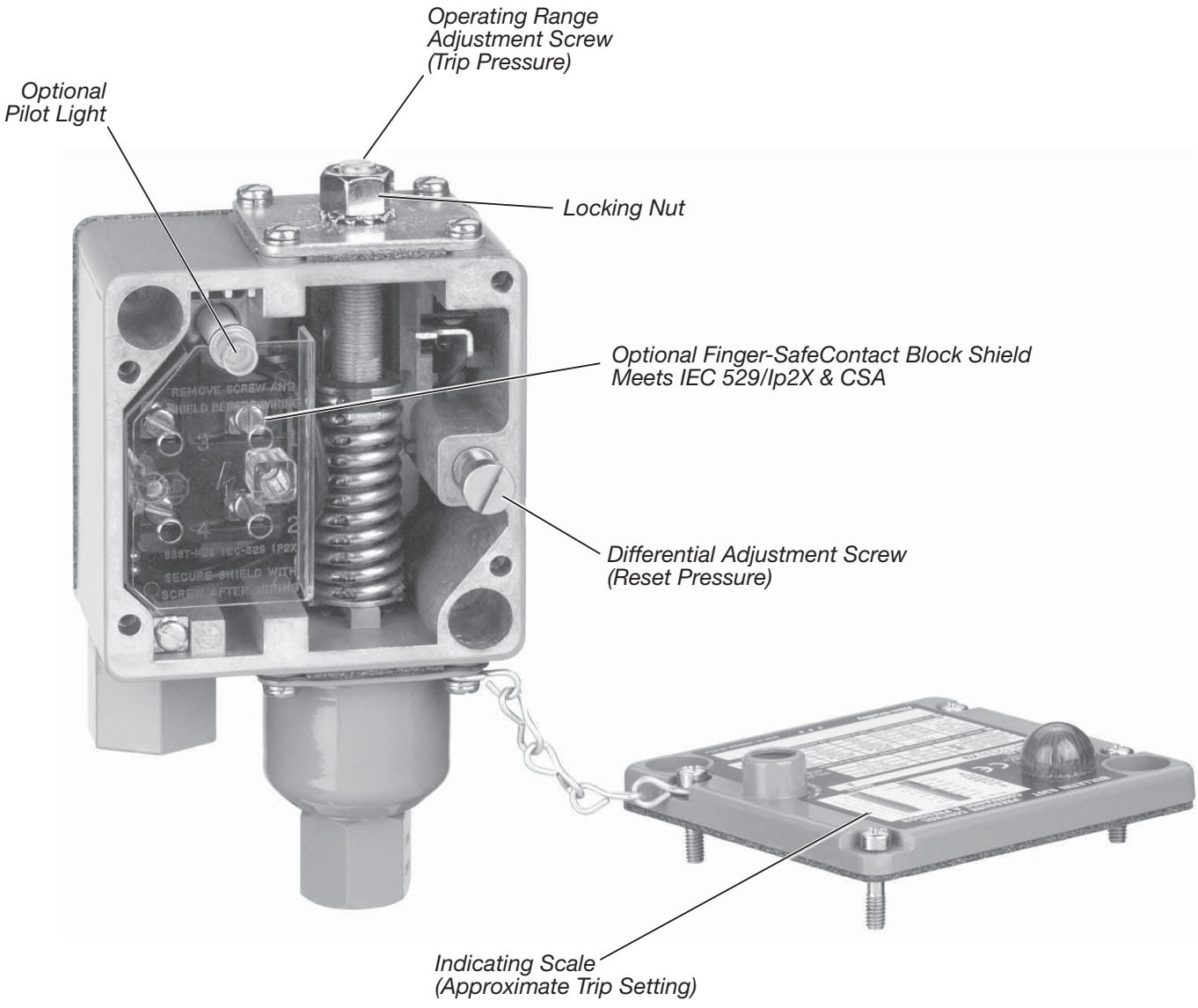

Control Setting — Style D Pressure Difference Controls

Standard pressure difference controls shipped from the factory are set at the maximum adjustable difference range and minimum differential. Remove the front cover and use a pressure gauge to make the following adjustments. See Figure 6.

Step 1 — Adjust trip setting (difference pressure)

The trip setting is controlled by the system difference pressure bushing and is adjusted internally. With no pressure (open to atmosphere) applied to top bellows, apply a constant pressure to bottom bellows equal to the desired difference in pressure at which the contacts are to trip. Insert a 1/8 in. diameter rod into a hole in the bushing and turn bushing to the left. Continue to turn bushing until the mechanism trips; circuit 1-2 will open. At this value, the trip setting is set at the pressure which is being applied to the bottom bellows.
Note: Turning the system difference pressure bushing will cause both the trip and reset settings to change in virtually equal increments.

Step 2 — Adjust reset setting (differential pressure)

The reset setting is controlled by differential adjustment screw (this adjustment can be made with the cover on). The reset setting is adjusted by turning the differential adjustment screw clockwise to increase the differential or counterclockwise to decrease the differential.
Note: Adjusting the differential has little or no affect upon the trip setting (difference pressure).

Figure 6
Trip and reset adjustment for pressure difference controls — 4-circuit contact block

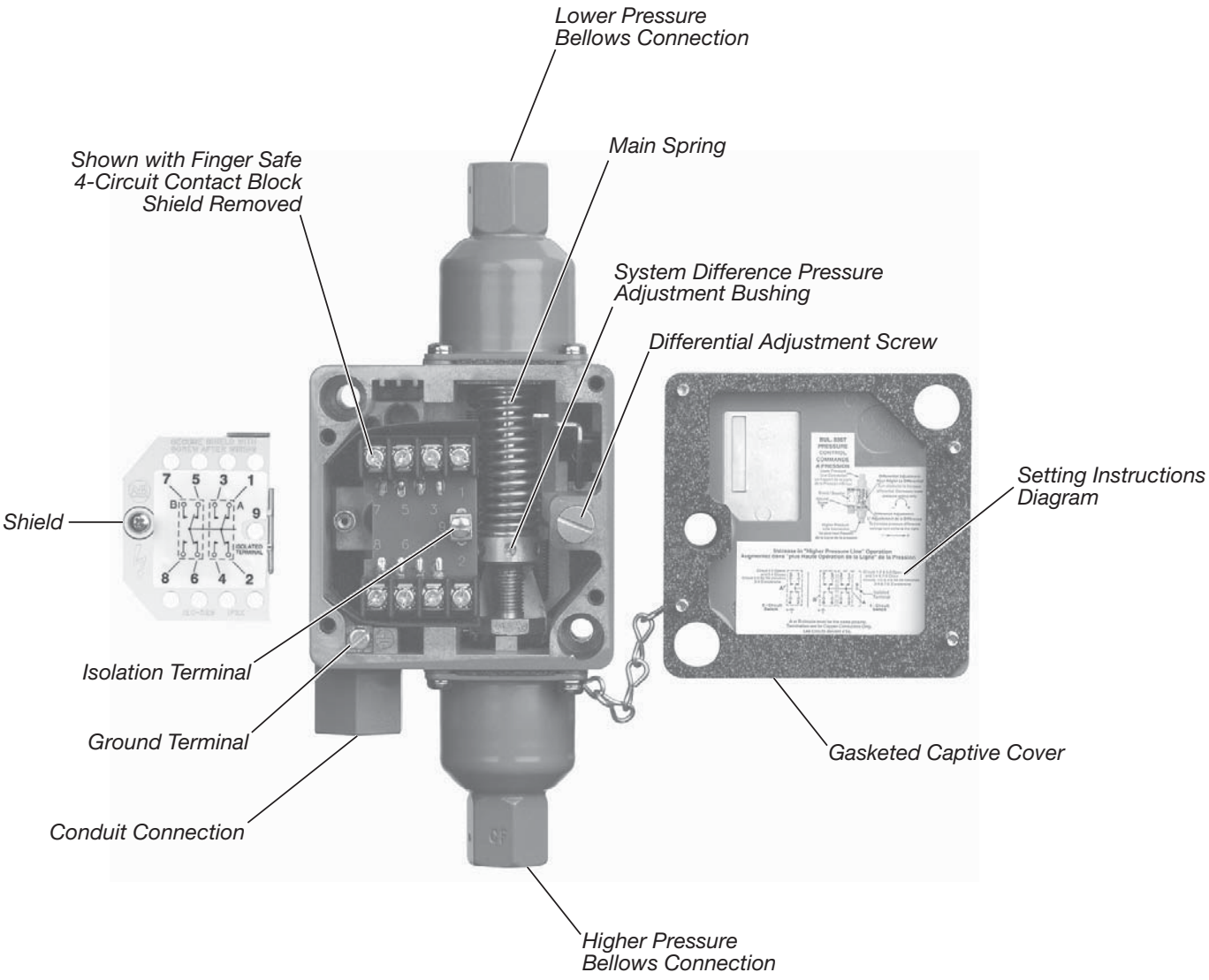

Repeat Accuracy and Mechanical Life

The design and construction of Bulletin 836T Pressure Controls provide a typical repeat accuracy equal to or better than the values shown in the repeat accuracy table below. Repeat accuracy is based on percent of maximum range, evaluated from test data and calculated using the formula per ICS 2-225 standards. Repeat accuracy and mechanical life of bellows type controls is graphically illustrated in Figure 7. The life curve does not apply to piston type controls.

For general applications, controls selected where the contacts operate between 30% and 80% of the operating range and where the maximum line and surge pressures do not exceed the specified values will provide excellent life and repeat accuracy. For more specific applications, it is important to note that the controls are designed to operate below or above these values. However, there may be a small trade-off between the factors of repeat accuracy and mechanical life.

Figure 7
Repeat accuracy versus mechanical life graph

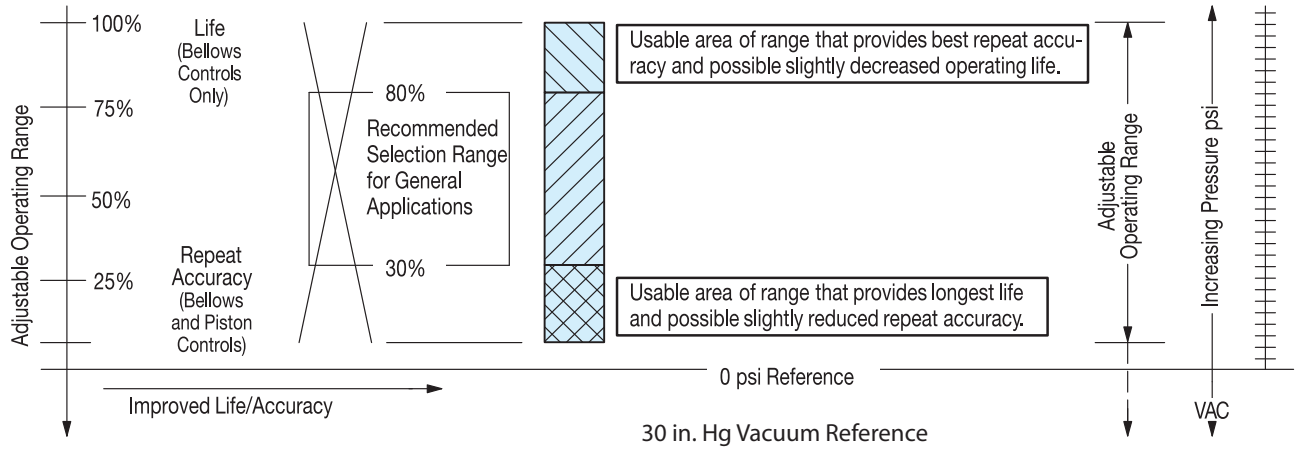

Repeat Accuracy

Type	Typical Characteristics (% of Maximum Range) ✶
Bellows	± 1%
Piston with seal	± 5% ❄
Piston without seal	± 3%

✶ Evaluation made from test data and calculated using formula per ICS 2-225 standards.

❄ Seal adds additional friction and value shown takes into consideration initial breakaway frictional force incurred during start-up or infrequent cycle operation. On continual cycle operation the repeat accuracy approaches ±3%.

Conversion Factors (Rounded)

psi x 703.1 = mm/H_2O
psi x 27.68 = in. H_2O
psi x 51.71 = mm/Hg
psi x 2.036 = in. Hg
psi x 0.0703 = kg/cm^2
psi x 0.0689 = bar
psi x 68.95 = mbar
psi x 6895 = Pa
psi x 6.895 = kPa

Note: psi - pounds per square inch (gauge).
H_2O at 39.2 °F
Hg at 32 °F

Mounting without Removing Cover

Bulletin 836T controls can be mounted without removing the front cover. This helps prevent foreign materials from entering the opened enclosure during the interval between mounting and wiring of the control.

Factory Set Pressure Controls

Rockwell Automation will factory set pressure controls to customer specified values. Unspecified pressure controls shipped from the factory are set at the maximum operating range and minimum differential. See Factory-Set Pressure Controls, page 13-44.

Temperature Range

The temperature range at +32 °F (0 °C) or below is based on the absence of freezing moisture, water, or other fluids that may solidify and impede the operation of the control. Temperature ratings:

Operating: –22… +150 °F (–30…+66 °C)
Storage: –22…+200 °F (–30…+93 °C)

Contacts

Bulletin 836T controls feature 2- and 4-circuit contact blocks for added control circuit flexibility. Two-circuit contact blocks have one normally open contact and one normally closed contact and may be arranged for single-pole double-throw operation or separate circuit operation having the same polarity. Four-circuit contact blocks may be arranged for double-pole double-throw operation or separate circuit operation having the same polarity.

2-Circuit Contact Ratings — NEMA A600 (ICS 2-125)

AC						DC	
Maximum AC Voltage	A		Continuous Carrying Current	VA		Maximum Voltage	[A]
	Make	Break		Make	Break		
120	60	6.00	10	7200	720	115…125	0.4
240	30	3.00	10	7200	720	230…250	0.2
480	15	1.50	10	7200	720	550…600	0.1
600	12	1.20	10	7200	720	—	—

IEC 337-1					
Maximum Operational Voltage U_e	Utilization Category	Maximum Continuous Current I_{th}	Volts U_e	Rated Operational Current Make	Rated Operational Current Break
AC600	AC-11	10	120…600 AC	7200 VA	720 VA
		10	72…120 AC	60 A	720 VA
DC600	DC-11	10	24…72 AC	60 A	10 A
		—	115…600 DC	50 VA	50 VA

4-Circuit Contact Ratings — NEMA B150 (ICS 2-125)

AC						DC	
Maximum AC Voltage	A		Continuous Carrying Current	VA		Maximum Voltage	[A]
	Make	Break		Make	Break		
120	30	3.00	5	3600	360	115…120	0.33
240	27.5	2.80	5	6600	660	230…240	0.17

IEC 337-1					
Maximum Operational Voltage U_e	Utilization Category	Maximum Continuous Current I_{th}	Volts U_e	Rated Operational Current Make	Rated Operational Current Break
AC150	AC-11	5	72…120 AC	30 A	360 VA
		5	24…72 AC	30 A	3 A
DC150	DC-11	—	115…240 DC	40 VA	40 VA

Note: NEMA does not rate contacts to switch low voltage and current. Bulletin 836T Styles T and D Pressure Controls are supplied with silver contacts. The devices are designed to deliver high force snap action to the contacts. This provides exceptional contact fidelity at 24V DC I/O card current level entry when the integrity of the enclosure is maintained.

Contact Wiring Configurations

2-Circuit Contact Blocks

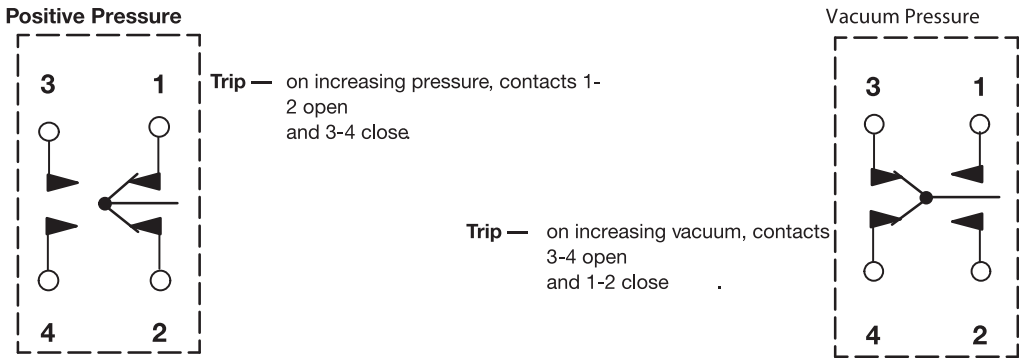

4-Circuit Contact Blocks

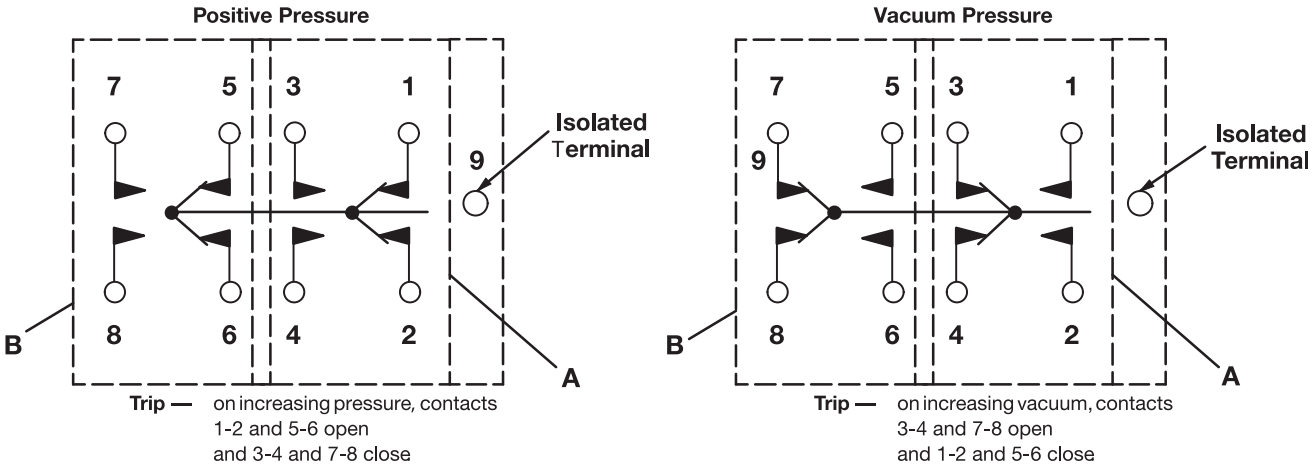

Note: Circuits A and B are electrically isolated from one another.
A or B circuits must be the same polarity.

Nameplate with Removable Paint Mask

The masks are convenient for the many users who repaint controls to match the machine or color code equipment. Saves costly time-consuming hand masking necessary so as not to conceal product functional specifications and approval listings. This feature is standard on most controls at no additional cost. The paint mask feature cannot be supplied on controls with pilot lights. They are also not available on those devices where it is necessary to remove the mask and add suffix modifications to the catalog number or specific customer identification in the space provided.

Figure 8
Removable paint mask

Cover with Transparent Mask and Instruction Label in Place

Cover with Mask Partially Removed

Pressure Control Selection

The selection table below is an overview of the five types of Bulletin 836T Pressure Controls Rockwell Automation offers. Each type of control is suitable for use on many types of applications. Pressure ranges, pressure connections, enclosure types, and the compatibility of the actulator with different types of pressure media are given to assist in the selection of which type of control to use.

836T				
Actuator Type	Copper Alloy Bellows	Type 316 Stainless Steel Bellows	Piston Type Without Seal	Piston Type With Seal
Adjustable operating ranges	30 in. Hg vacuum…650 psi	30 in. Hg vacuum…375 psi	40…5000 psi	80…5000 psi
Adjustable differentials	2…125 psi	2…90 psi	20…650 psi	40…650 psi
Maximum line pressures	up to 1300 psi	up to 600 psi	—	—
Occasional surge pressures	up to 1600 psi	up to 600 psi	up to 15,000 psi	up to 15,000 psi
Pressure Media				
Air	•	•		
Water	•	•	•	•
Hydraulic fluids	•	•	•	•
Corrosive liquids ∗		•		
Non-corrosive liquids	•	•	•	•
Corrosive gases ∗		•		
Non-corrosive gases	•	•		
Enclosures				
Type 1, 4 & 13	•	•	•	•
Type 7 & 9 and 4 & 13, IP66	•	•	•	•
Pipe Connections				
Standard pressure connection	1/4 in. N.P.T. female pipe thread	1/4 in. N.P.T. female pipe thread	3/8 in. N.P.T. female pipe thread SAE 7/16-20 UNF-2B thread O-ring boss seal SAE 9/16-18 UNF-2B thread O-ring boss seal	3/8 in. N.P.T. female pipe thread SAE 7/16-20 UNF-2B thread O-ring boss seal SAE 9/16-18 UNF-2B thread O-ring boss seal

∗ Corrosive liquids and gases must be compatible with Type 316 Stainless Steel Bellows.

Note: Pressure difference controls are supplied with either copper alloy or stainless steel bellows. See Product Selection on page 13-39 and page 13-40 for details.

Ordering Bulletin 836T Pressure Controls

When ordering Bulletin 836T Pressure Controls, consider the following:

- Device style
- Adjustable operating range
- Adjustable differential
- Maximum line pressure
- Occasional surge pressure
- Pressure media
- Enclosure type
- Pressure connection

How to Order

Step 1: Basic Device
Select a catalog number for the basic device.....**See pages 13-35…13-40.**

Step 2: Modifications
If required, add the appropriate modification suffix code(s) to the catalog number of the basic device.....**See page 13-41.**

Step 3: Accessories
If required, order accessories.....**See page 13-42.**

Step 4: Factory Options
Factory-set pressure controls.....**See page 13-44 .**

Catalog Number Explanation

Note: Catalog number must not include blank spaces.

836T –	T	25	1	J	X40	X15
	a	*b*	*c*	*d*	*e*	*f*

a

Style of Device	
Code	Description
T	Pressure control
D	Pressure difference control

b

Operator Type		
Code	Style	Description
25	T	Copper alloy bellows
26	T	Type 316 stainless steel bellows
30	T	Piston without seal
35	T	Piston with seal
40	T	Piston with seal (independent trip and reset adjustment)
45	D	Copper alloy bellows
46	D	Type 316 stainless steel bellows

c

Pressure Specifications
See “Pressure Specifications” on pages 13-35…13-40

d

Enclosure Type	
Code	Description
J	1, 4 & 13 Industrial use
E	7 & 9 and 4 & 13 Combined hazardous locations

e

Contact Block Type	
Code	Description
None	2-circuit contact block - standard
X40	4-circuit contact block

f

Modification 1
Add suffix codes in descending order whenever possible. (Optional. See page 13-41.)

Product Selection

Style T — Type 1, 4 & 13 with Pilot Light Option

Style T — Type 1, 4 & 13 with Pilot Light, Range Locking Cap, and 5-Pin Mini-Receptacle

Style T Pressure Controls with Copper Alloy Bellows∗ — S.P.D.T. 2-Circuit Contact Block

Standard Pressure Controls shipped from the factory are set at the maximum operating range and minimum differential.

Pressure Specifications				Enclosure Type	
	Adjustable Differential [psi] (Approximate Mid-Range Values)	Maximum psi		Type 1, 4 & 13	Type 7 & 9 and 4 & 13 ‡
Adjustable Operating Range [psi]		Line Pressure	Occasional Surge Pressure❄	Cat. No.	Cat. No.
30 in. Hg vacuum…35	2…7	80	90	**836T-T251J**	836T-T251E
6…75	3…15	200	220	**836T-T252J**	836T-T252E
12…150	6…30	350	450	**836T-T253J**	836T-T253E
20…300	10…55	600	750	**836T-T254J**	836T-T254E
40…450	20…90	900	1200	**836T-T255J**	836T-T255E
60…650	30…125	1300	1600	**836T-T256J**	836T-T256E

Style T Pressure Controls with Copper Alloy Bellows∗ — D.P.D.T. 4-Circuit Contact Block

Standard Pressure Controls shipped from the factory are set at the maximum operating range and minimum differential.

Pressure Specifications				Enclosure Type	
	Adjustable Differential [psi] (Approximate Mid-Range Values)	Maximum psi		Type 1, 4 & 13	Type 7 & 9 and 4 & 13 ‡
Adjustable Operating Range [psi]		Line Pressure	Occasional Surge Pressure❄	Cat. No.	Cat. No.
30 in. Hg vacuum…35	2.2…7	80	90	836T-T251JX40	836T-T251EX40
6…75	4.5…15	200	220	**836T-T252JX40**	836T-T252EX40
12…150	9…30	350	450	**836T-T253JX40**	836T-T253EX40
20…300	15…55	600	750	836T-T254JX40	836T-T254EX40
40…450	30…90	900	1200	836T-T255JX40	836T-T255EX40
60…650	45…125	1300	1600	836T-T256JX40	836T-T256EX40

∗ Copper alloy bellows may be used on water or air, and other liquids or gases not corrosive to this alloy.

❄ Transients (pulses) can occur in a system prior to reaching a steady-state condition. Surge pressures within published values generated during startup or shutdown of a machine or system, not exceeding eight times in a 24-hour period, are negligible.

‡ The combined Type 7 & 9 and 4 & 13 hazardous gas and dust service enclosure is supplied with special gasket and O-ring seal to diminish/exclude moisture, fluids, and dust from entering the enclosure. Enclosure is rated for the following environments:
CLASS I Groups C,D
CLASS II Groups E,F,G
CLASS III

Ordering Modifications

Modifications are ordered by adding the appropriate modification suffix code to the catalog number of the basic device. Add suffix codes to the catalog number in descending order.

Item	Description	Suffix Code
Oxygen/nitrous oxide service	Bellows and fittings specially prepared for oxygen and nitrous oxide service. Devices tested with pure oxygen, bellows plugged for protection from contamination and a tag warning against contamination is applied.	X2
External adjustment sealed	The 836T external adjustment is sealed, requiring cover removal to adjust differential (includes contact block shield)	X3
Tamper resistant setting	Range and differential adjustments are factory sealed. Price includes factory setting charge.✶	X4
SAE 7/16-20 UNF thread O-ring boss seal (piston type pressure control)	Female SAE straight thread O-ring seal designed to prevent leaks and minimize loss of hydraulic fluids.	X6
SAE 9/16-18 UNF thread O-ring boss seal (piston type pressure control)		X7
Neon pilot light 120V AC	A high-intensity neon pilot light for 120V AC, 60 Hz applications is available and can be wired for ON or OFF operation. The current rating is 1.0 mA.❄	X9
Red LED pilot light 24V DC	A high-intensity LED 24V DC pilot light is available to meet the requirements of the automotive, machine tool builders, and other industries. The current rating is 22 mA and can be wired for ON or OFF operation.❄	X15
Green LED pilot light 24V DC		X18
Special diaphragm assembly (piston type pressure control)	Diaphragm is made of Viton® and Nomex® fabric. Required when phosphate ester base and other adverse hydraulic fluids are present. Use on Catalog Numbers **836T-T300J** through **836T-T303J** series controls.	X25
Special diaphragm and O-ring assembly (piston type pressure control)	Diaphragm is made of Viton® and Nomex® fabric, O-ring is made of Viton® . Required when phosphate esterbase and other adverse hydraulic fluids are present. Use on Catalog Numbers **836T-T350J, -T351J, -T352J, -T353J** and **-T400J** series controls.	X26
Viton® enclosure gaskets	Special enclosure gaskets made of Viton® are available for applications where the standard gasket materials are not fluid compatible. Viton® is generally specified by the user for use with existing and newly developed coolants and hydraulic fluids to maintain enclosure integrity. These include cover, backplate, cover, and bellows or piston gaskets. **Note**: Viton® enclosure gaskets are often used with special diaphragm assemblies **(X25 or X26)**. See description above.	X29
5-Pin mini-type receptacle without pilot light❄	Select the desired pin wiring configuration from the diagrams on pages 13-45…13-47. Rated at 8 A, 600V.	See pages 13-45…13-47.
5-Pin mini-type receptacle with prewired pilot light❄	Select the desired pin wiring, pilot light wiring, and voltage from the diagrams on pages 13-45…13-47. Includes receptacle and pilot light. Rated at 8 A, 600V.	See pages 13-45…13-47.
5-Pin micro-connect receptacle without pilot light❄	Select the desired pin wiring configuration from the diagrams on pages 13-45…13-47. Add number "1" to the suffix number immediately following the letter "X." **Example: "X19" becomes "X119."** Rated at 3 A, 300V. Pin/Wiring Code: 1 – Red with white tracer, 2 – Red, 3 – Green (Gnd), 4 – Red with yellow tracer, 5 – Red with Black Tracer	See pages 13-45…13-47.
5-Pin micro-connect receptacle with prewired pilot light❄	Select the desired pin wiring configuration and pilot light (X9 or X15, see above for specifications) from the diagrams on pages 13-45…13-47. Add number "1" to the Suffix Number immediately following the letter "X." **Example: "X12X9" becomes "X121X9."** Rated at 3 A, 300V. Pin/Wiring Code: 1 – Red with white tracer, 2 – Red, 3 – Green (Gnd), 4 – Red with yellow tracer, 5 – Red with black tracer	See pages 13-45…13-47.
Additional optional receptacles and wiring❄	For assistance, please consult your local Rockwell Automation sales office or Allen-Bradley distributor.	

✶ See paragraph entitled "Factory-Set Pressure Controls" on page 13-44.
❄ Not available on the Type 7 & 9 and 4 & 13 combined enclosed devices.

Ordering Accessories

Accessories are ordered as separate catalog numbers. Select the required accessories from the accessories table below.

Item	Description	Type	Cat. No.
External fixed pulsation snubbers	Controls are supplied as standard with an internal pulsation snubber. However, a control properly selected and used within the adjustable range values, yet having a short bellows life, is a good indication of the presence of extreme surge pressures. External fixed pulsation snubbers are available to provide **additional** dampening when extreme pulsations or surges are present. Recommended if more than eight line surges occur in a 24-hour time period.	Snubber for bellows control 1/4-18 N.P.T. thread	**836-N7**
		Snubber for piston control 3/8-18 N.P.T. thread	**836T-N8**
Selectable element pulsation snubbers	Controls are supplied as standard with an internal pulsation snubber. However, a control properly selected and used within the adjustable range values, yet having a short bellows life, is a good indication of the presence of extreme surge pressures. Selectable element pulsation snubbers are supplied with five different elements to provide a selectable balance between maximizing pressure control life and minimizing control response time. Pulsation snubbers are supplied with the mid-range element already mounted and four other color-coded porosity elements included in the package. See "Selectable Pulsation Snubber Porosity Elements" table on this page for porosity specifications.	Snubber for bellows control 1/4-18 N.P.T. thread	**836-N40**
		Snubber for piston control 3/8-18 N.P.T. thread	**836T-N41**
	Female SAE straight thread O-ring seal designed to prevent leaks and minimize loss of hydraulic fluids. Use on applications with a pressure range of 550…5000 psi.	SAE 7/16-20 UNF-2B thread O-ring boss seal for piston controls	836T-N49
		SAE 9/16-18 UNF-2B thread O-ring boss seal for piston controls	**836T-N50**
Selectable pulsation snubber porosity elements	Package consists of five porosity elements and complete instructions. Elements are color-coded for easy identification. Elements are available in five different porosities for a wide range of applications. See selectable pulsation snubber porosity elements table.		See Table on this page
Locking cap	Deters unauthorized tampering of range setting. Once installed, the locking cap can be removed with a screwdriver to re-adjust the control.	—	**836T-N13**
Isolation trap with two 1/4 in. male pipe fittings	An isolation trap is available for high-temperature media applications from 150…600 °F or corrosive applications compatible with Type 316 stainless steel tubing and fittings. The isolation coil is inserted between the bellows of the pressure control and the elevated temperature line of the system. The isolation trap will fill with condensed water or can be filled with water or suitable fluid when installed. A silicone buffer fluid is available in a convenient dispenser. Copper alloy lower and higher pressure range bellows can be applied to many applications using the isolation trap. The silicone buffer fluid is used to isolate many corrosive substances from coming in contact with the bellows. The isolation trap is rated at 3000 psi working pressure. Not available for piston-type controls. See photo on this page.		836-N25
Isolation trap with one 1/4 in. male and one 1/4 in. female pipe fittings			836-N26
2 oz. of buffer fluid to fill bellows and tubing			836-N27
Metric electrical entry conduit adapters	BS 20 mm thread adapter		**836T-N36**
	Pg 13.5 thread adapter		836T-N37

Selectable Pulsation Snubber Porosity Elements

Recommended Type of Service	Color Code	Porosity	Cat. No.
Viscous fluids (over 500 SSU)*	None	Coarser	836-N43
Medium type oils (225…500 SSU)*	Black		**836-N44**
Water and light oils (30… 225 SSU)*	Brown		**836-N45**
Low viscosity fluids (under 30 SSU)*	Green		**836-N46**
Air and other gases	Red	Finer	**836-N47**
One of each of the above	—	Assorted	836-N48

* Saybolt Seconds Universal (SSU) — units of viscosity measurement.

Note: Color code is located on end of element.

Isolation Trap and Silicone Buffer Fluid

Fixed Pulsation Snubbers

Male/Female Pipe Threads

Selectable Element Pulsation Snubbers

Male/Female Pipe Threads

Pulsation Snubbers

Conversion Kits

Ordering Conversion Kits

Conversion Kits are ordered by adding the appropriate suffix code to the catalog number of the basic device. Select the required conversion kits from the table below.

Conversion Kits

Item	Description	Suffix Code
Neon pilot light conversion kit	Converts standard control to control with 120V AC neon pilot light. Not available on Type 7 & 9 devices. Kit includes pilot light and cover assembly.	N9
Red LED pilot light conversion kit	Converts standard control to control with 24V DC LED pilot light; has a 22 mA current rating. Not available on Type 7 & 9 devices. Kit includes pilot light and cover assembly.	N15
Green LED pilot light conversion kit	Converts standard control to control with 24V DC LED pilot light; has a 22 mA current rating. Not available on Type 7 & 9 devices. Kit includes pilot light and cover assembly.	N18

Example:
To convert a **Cat. No. 836T-T301J** to a **Cat. No. 836T-T301JX15**, order **Cat. No. 836T-T301JN15**.

Renewal Parts

Ordering Renewal Parts

Renewal Parts are ordered as separate catalog numbers. Select the required renewal parts from the table below.

Renewal Parts

Item	Description	Cat. No.
2-Circuit contact block renewal kit	Allows renewal of worn contacts for Bulletin 836T controls.	**836T-N1**
4-Circuit contact block renewal kit	Allows renewal of worn contacts for Bulletin 836T controls.	836T-N2
Renewal seals for piston-type controls	For use on Cat. No. 836T-T350J.	836T-N20
	For use on Cat. No. 836T-T351J.	836T-N21
	For use on Cat. No. 836T-T352J and 836T-T400J.	836T-N22
	For use on Cat. No. 836T-T353J.	836T-N23

Factory-Set Pressure Controls

Ordering factory-set pressure controls

- When a specific factory setting is requested, the specific terminal connections must be specified — e.g., N.O. or N.C. It must also be specified whether the contact operation is occurring on either increasing or decreasing pressure. For example:

Normally Closed (N.C.) contacts to open at∗ psi increasing pressure and close at∗ psi decreasing pressure.

—OR—

Normally Open (N.O.) contacts to close at∗ psi increasing pressure and open at∗ psi decreasing pressure.

- If minimum differential is not critical and the inherent minimum differential satisfies the application, specify the factory setting as follows:

Normally Closed (N.C.) contacts to open at∗ psi increasing pressure minimum differential.

—OR—

Normally Open (N.O.) contacts to close at∗ psi increasing pressure minimum differential.

Quality analog test gauges§ are used when applying requested factory settings to these rugged industrial grade pressure controls. (Gauges are calibrated and accuracy is traceable to the The National Institute of Standards and Technology.)

The actual requested setting is applied to the control by reading the set point directly from the test gauge being used. However, traceable gauge tolerance variance between source and user, and possible severe shock during shipping and installation, may contribute to the factory settings deviating slightly from the specified values. Slight recalibration can easily be accomplished upon final installation to meet specific requirements for the more demanding applications.

When installed, the controls will perform with a repeat accuracy as established in the paragraph entitled “Repeat Accuracy" (see page 13-54). Special service is available to factory-set controls on digital laboratory instruments, up to 600 psi, when required for more critical applications. An additional charge may be added for this service contingent upon setting tolerance and quantity. Please contact your local Rockwell Automation sales office or Allen-Bradley distributor.

∗ Specify psi (pounds per square inch) or, in. Hg vac (inches of mercury vacuum).

❄ Per ANSI B40.1 Grade 2A (0.5% accuracy full scale), Grade 3A (0.25% accuracy full scale).

If not specified, setting tolerances will be as shown in the table below.

Pressure Range	Tolerance
30 in. Hg Vac....0	+/- 1 in. Hg vac.
> 0...100 psi	+/- 1 psi
> 100...300 psi	+/- 2 psi
> 300...500 psi	+/- 5 psi
> 500...1000 psi	+/- 10 psi
> 1000...5000 psi	+/- 50 psi

Standards Compliance

- UL508
- CSA 22,2 No. 14
- UL698, 1604 (Haz. Loc.)
- NEMA ICS-2

Certifications

File and Guide Numbers

	UL		CSA	
	File Number	Guide Number	File Number	Class
Bulletin 836T	E14842	NKPZ	LR1234	3211-03
	E53048 (Haz. Loc.)	NOWT	LR11924 (Haz. Loc.)	3218-05
	Hazardous Location enclosure devices are not CE compliant. All other enclosed devices are CE compliant.			

Approximate Dimensions and Shipping Weights

Dimensions in inches (millimeters). Dimensions are not intended to be used for manufacturing purposes.

Type 4 & 13 (Bellows)

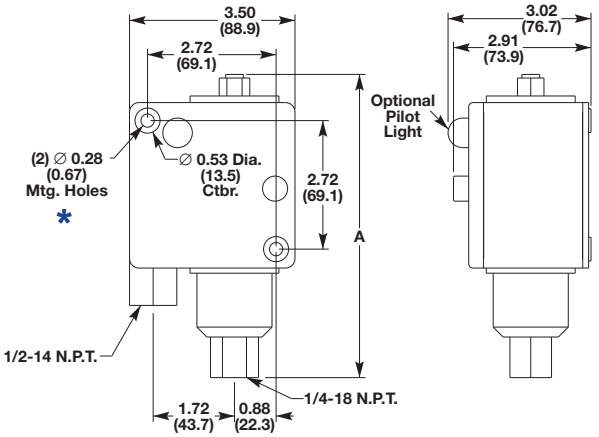

Approximate Shipping Weight 3-1/2 lbs. (1.6 kg)

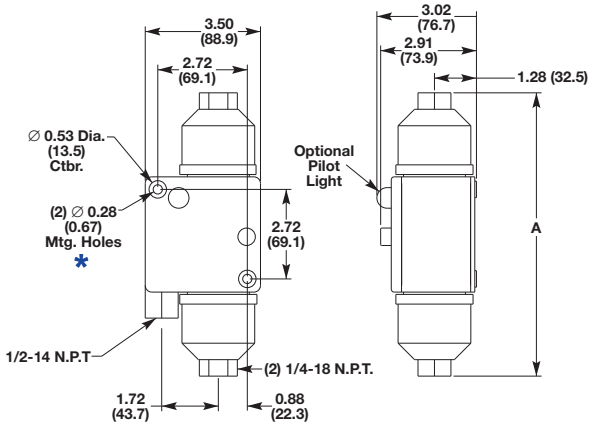

Approximate Shipping Weight 4 lbs. (1.8 kg)

Cat. No.	A Dimensions	Cat. No.	A Dimensions	Cat. No.	A Dimensions	Cat. No.	A Dimensions
836T-T251J	6.65 (169)	**836T-T254J**	6.95 (176)	**836T-D450J**	8.60 (218)	836T-D460J	8.60 (218)
836T-T260J		**836T-T255J**					
—	—	**836T-T256J**	7.09 (180)	**836T-D451J**	8.14 (207)		
836T-T252J	6.41(163)	**836T-T262J**	7.33 (186)	**836T-D452J**		**836T-T252J**	8.5 (216)
836T-T253J		**836T-T263J**	7.25 (184)			836T-D463J	10.06 (256)
836T-T261J				**836T-D453J**	9.5 (241)		

Type 4 & 13 (Piston)

(Does not include Dual Bellows Devices)

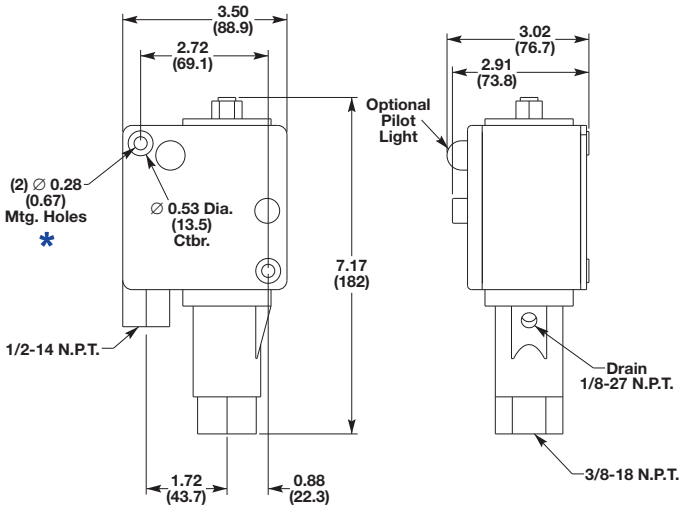

Approximate Shipping Weight 4.5 lbs. (2.0 kg)

Type 4 & 13 and 7 & 9 Bellows and Piston Type

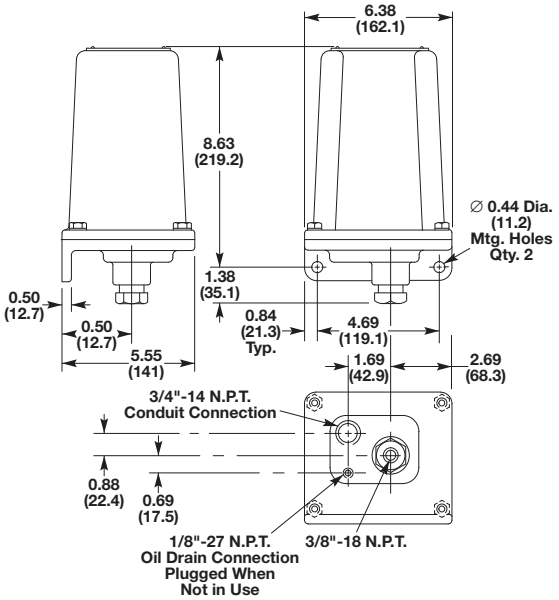

Approximate Shipping Weight 10 lbs. (4.5 kg)

∗ (2) mounting screws are required: 3/16 x 20 x 2 in. Counterbore depth is 1-1/8 in. Overall depth of mtg hole (front to back) is 2-1/4 in.

Cat. No.	
836T-T300J	836T-T350J
	836T-T351J
836T-T301J	836T-T352J
836T-T302J	836T-T353J
836T-T303J	836T-T400J

This page is intentionally left blank

CS-451-200 : Identification sheet

VWTC PROJECT NUMBER:	5000218009	REV:	1
PROJECT NAME:	AEM AMARUQ	SUBMITTED TO (COMPANY):	AGNICO EAGLE MINES
ENGINEER:	Gabriel Hébert	SUBMITTED TO (RESPONSIBLE)	
PROJECT MANAGER:	Clément B	PROJECT NUM REFERENCE.:	
PHONE NUMBER:		LOT NUMBER:	

SUPPLIER	EQPT CODE	EQPT TAG NO	DIA	DESCRIPTION	INFO 1	INFO 2	INFO 3	APPLIC.	NOTE	REV
E&H	IESWLE5204819	LSL9-591	ENCLOSURE: 110 x 218 mm, SHAFT:	HOPPER LOW LEVEL SWITCH	LEVEL SWITCH // MANUF: E&H// MODEL :FTE31-C6DB11 Soliswitch FTE31, thread NPT Level limit switch, Paddel. Solid >= 100 g/dm3. 1x relay double pole change over switch.	Housing: Plastics PBT, IP65 NEMA4 Rod: steel 1.4305 (303). 1x Cable entry NPT 1/2. Appval:C CSA DIP Cl. II,III, Div.1, Gr.EFG Power : 24VDC relay	Paddel; Additional Option:1 316Ti; basic version Version:1 Basic version B Marking: 71072711: TAG on device	KMnO4 PREP SYSTEM		rev1

This page is intentionally left blank

Level | Pressure | Flow | Temperature | Liquid Analysis | Registration | Systems Components | Services | Solutions

Technical Information

Soliswitch FTE31

Level Limit Switch
Economical paddle limit switch
For application in dust hazardous explosive areas

Application areas

The universal paddle level limit switch FTE 31 is used as a full, empty and demand alarm on silos containing solids. Its construction and materials make the unit suitable for use in the food industry.
The unit is suitable as a level limit switch in dust explosion hazardous areas.
Typical applications are level detection in:

- Cereals
- Sugar
- Cacao
- Animal feeds
- Washing powders
- Chalk
- Dry plaster
- Cement
- Granulates
- Wood chips

Features and benefits

- Simple operation
- Proven principle
- Slip clutch
- Ingress protection to IP 65 / NEMA 4x / Type 4x

TI068R/09/en
51002384

Endress+Hauser
People for Process Automation

Function and system construction

Measurement principle

The shaft and paddle are driven using a reduction gear and synchronous motor. If the paddle is stopped by material covering it, the hinged motor in the housing moves from the rest to the switch position. This movement operates two switch contacts, the first is for external level indication and the second switches the power off to the motor.
The paddle starts to rotate once the medium level falls below the paddle, the hinged motor returns to its rest position and the two contacts switch to normal operation. Intermittent loads that operate against or even in the same direction of rotation are evened out by using a slip clutch.

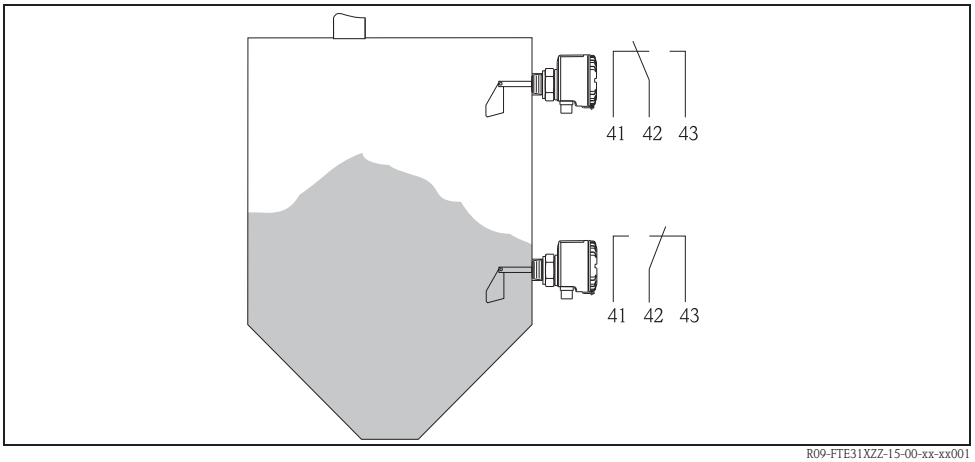

Level measurement changeover contact

System

Complete level measurement limit switch, paddle, shaft with synchronous motor and slip clutch, single pole double throw switch.

Input values

Measurement value

Level of solids

Range

Variable types dependent on:
- Installation point
- Length of shaft or rope

Output values

Output signal

Binary, once the set level is reached the micro switch contact changes.

Output circuit

Connectable load:
≤ 250 VAC, 10 A nominal current, 3 A on motor

Switch output

Potential free changeover contact (SPDT)

Switch delay

Approx. 2 seconds

Mechanical life time

min. 500 000 switch cycles

Power supply

Electrical connection

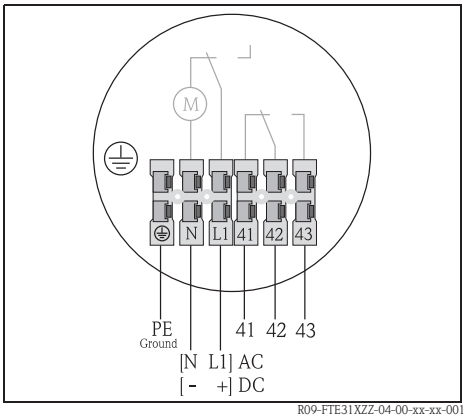

Terminal layout FTE31

AC	DC	
PE		Earth (ground) connection
N	-	Power connection
L	+	Power connection
41		Normally closed contact
42		Common contact
43		Normally open contact

Cable entry

Power supply and signal cable (in-/output):
- Thread for cable gland [½" NPT]

Power supply

Standard:
- 230 V AC, 50/60 Hz (±10%)

Option:
- 115 V AC, 50/60 Hz (±10%)
- 20...28 V DC

Power consumption

AC: P < 4,5 VA; DC: P < 3,5 W

Current requirement

DC: $I_{max} \leq 66$ mA

Installation conditions

Installation hints

Installation position:
- horizontal up to shaft length > 300 mm (11.8") or vertical (see diagram)
- side load on the shaft max. 60 N
- Load on the rope max. 1500 N

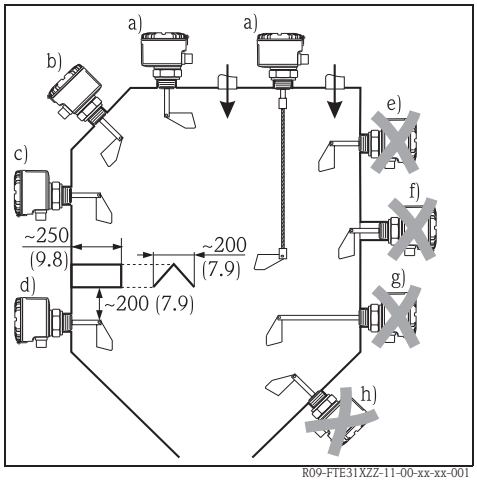

Installation of the FTE31 paddle level limit switch, dimensions in mm (inch).

Correct installation	Incorrect installation
a) Vertical from top of silo	e) In dierction of solids flow
b) Angled from the top	f) Installation coupling too long
c) From the side	g) Horizontal with shaft length > 300 mm
d) With protective cover against falling solids	h) Angled from below

The FTE31 paddle limit switch can be installed in solids silos as shown under points a, b, c and d.

Environment conditions

Ambient temperature	- 20 °C ... + 60 °C (-4 °F ... + 140 °F)
Storage temperature	- 20 °C ... + 60 °C (-4 °F ... + 140 °F)
Ingress protection	■ IP 65 / NEMA 4x / Type 4x with closed cover ■ IP 20 / NEMA 1 with open cover
Vibration protection	IEC 654-3, dimension V.S.1 (v<3 mm/s, 1<f<150 Hz)
EMC	To EN 61 326, Class B
Protection class	I
Over voltage protection category	II
Altitude	Up to 2000 m (6560 ft) above sea level.

Process conditions

Material temperature range	- 20 °C ... + 80 °C (-4 °F ... 176 °F)
Operating pressure range	0.5 bar ... 1.8 bar (7.25 PSI ... 26.1 PSI)
Material conditions	Solids - grain size ≤ 50 mm (1.97")
Product density (solids weight)	100 g/l

Mechanical construction

Model/dimensions

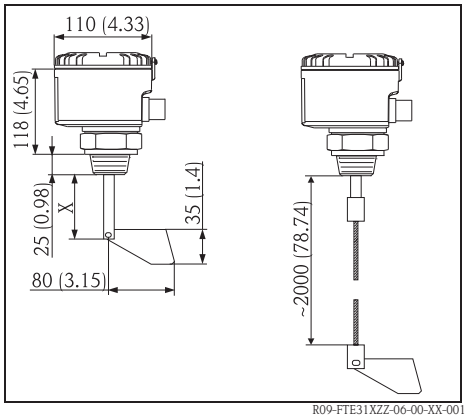

Construction of the compact unit - dimensions in mm (inch).

Shaft variations:

Standard shaft X = 75 mm (2.95")
Special length X:
100 mm (3.94"), 200 mm (7.87"), 300 mm (11.8"), 400 mm (15.75"), 500 mm (19.7"), 600 mm (23.6")

Rope version:

Rope length approx. 2000 mm (78.7"), can be shortened.

Caution!
If the shaft length is > 300 mm (11.8") the FTE31 can only be installed vertically downwards.

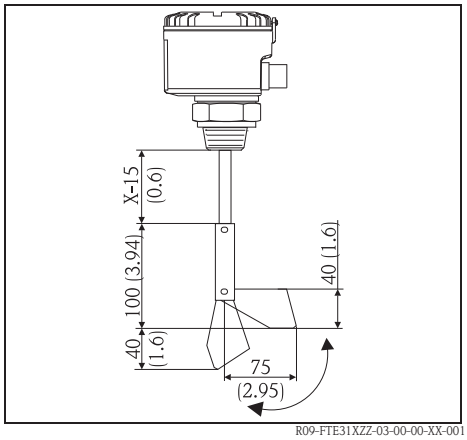

Hinged paddle - dimensions in mm (inch)

Option hinged paddle:

The paddle is hinged so that it can be easily mounted through a threaded mounting boss. Because it is spring loaded the paddle retuns to its normal operation once inside the vessel. Removal of the unit is always possible.

The hinged paddle can be mounted to both the solid shaft as well as the rope extension versions.

Weight	approx. 1 kg (2.2 lb)
Materials	Housing, cover and process connection: – VALOX 553 plastic with 30% fibre glass. Shaft: – Corrosion resistant steel 1.4435 Paddle: – Corrosion reseitant steel 1.4435 Option: – Process connection - corrosion resistant steel 1.4435 – Rope extension- corrosion resistant1.4571 with corrosion resistant steel 1.4305 weight – Hinged paddle - corrosion resistant steel 1.4435 O-ring seal: – NBR Shaft sealing ring: – NBR Perbunan Cable entries NPT ½": – Nickel plated brass
Shaft bearing	High performance friction bearing - maintenance free
Shaft revolution	approx. 1 revolution per minute
Process connection	Threaded boss - thread NPT 1¼" or NPT 1½"
Electrical connection	Plug-in terminals 2.5 mm^2 (14 AWG) solid core, 1.5 mm^2 (16 AWG) stranded with ferrule

Certification

CE approval	The measurement system fulfils the requirements demanded by the EU regulations. Endress+Hauser acknowledges successful unit testing by adding the CE mark.
FM	DIP Class II, Div. 1+2, Groups E, F, G and Class III
CSA	DIP Class II, Div. 1+2, Groups E, F, G and Class III

Ordering information

Soliswitch FTE31, Thread NPT

Approval:							
A	Non-hazardous area						
B	FM DIP Cl. II, III, Div. 1, Gr. EFG						
C	CSA DIP Cl. II, III, Div. 1, Gr. EFG						
		Power supply:					
		1	230 V AC, relay 250 V AC, 100 mA-10 A				
		2	115 V AC, relay 250 V AC, 100 mA-10 A				
		3	20...28 V DC, relay 250 V AC, 100 mA-10 A				
		4	230 V AC, relay PLC 48 V DC, 10 mA-100 mA				
		5	115 V AC, relay PLC 48 V DC, 10 mA-100 mA				
		6	20...28 V DC, relay PLC 48 V DC, 10 mA-100 mA				
				Process connection:			
				A	Thread NPT 1¼", Valox553 (PBT)		
				B	Thread NPT 1¼", 316L		
				C	Thread NPT 1½", Valox553 (PBT)		
				D	Thread NPT 1½", 316L		
						Version:	
						A	Shaft 100 mm
						B	Shaft 200 mm
						C	Shaft 300 mm
						D	Shaft 400 mm, vertical installation
						E	Shaft 500 mm, vertical installation
						F	Shaft 600 mm, vertical installation
						Y	Other
						1	Shaft 75 mm, compact
						2	Rope 2 m, 316, shortable
							Paddle; Additionla option:
						1	316Ti; basic version
						2	316L; fold-away, w/o signal lamp
FTE31-							⇐ **Ordercode**

This ordering information can give an overview about the available order options. The Endress+Hauser sales organization can provide detailed ordering information and information on the order code.

Accessories

Hinged paddle for retro-fitting
Order no. 50089768

Further documentation

Short form operating manual KA094R/09/a3

Instruments International

Endress+Hauser
Instruments International AG
Kaegenstrasse 2
4153 Reinach
Switzerland

Tel. +41 61 715 81 00
Fax +41 61 715 25 00
www.endress.com
info@ii.endress.com

Endress+Hauser
People for Process Automation

CS-504-100 : Identification sheet

VWTC PROJECT NUMBER:	5000218009	REV:	1
PROJECT NAME:	AEM AMARUQ	SUBMITTED TO (COMPANY):	AGNICO EAGLE MINES
ENGINEER:	Gabriel Hébert	SUBMITTED TO (RESPONSIBLE)	
PROJECT MANAGER:	Clément B	PROJECT NUM REFERENCE.:	
PHONE NUMBER:		LOT NUMBER:	

SUPPLIER	EQPT CODE	EQPT TAG NO	DIA	DESCRIPTION	INFO 1	INFO 2	INFO 3	APPLIC.	NOTE	REV
SHUTTE&KOERTING	EJGUEJ200371	IJ9-591	N/A	EDUCTOR	MANUFACTURER: SHUTTE&KOERTING / MODEL: 1,5"- Fig264 PVC Eductor	N/A	N/A	KMnO4 PREP SYSTEM		

This page is intentionally left blank

Schutte & Koerting

Water Jet Eductors

Introduction

The Water Jet Eductor is a type of ejector which utilizes the kinetic energy of a pressurized liquid to entrain another liquid, mix the two, and discharge the mixture against a counter pressure. Ejectors of this type are used throughout industry for pumping and mixing operations.

Application

Water jet eductors have numerous uses in the plant such as lifting, pumping, mixing and agitation of liquids, granular solids and slurries. Some specific applications are: draining flooded areas, emptying tanks and sumps, pumping and mixing operations in oil treating systems, dewatering sand and coal barges, introducing anti-knock agents and coloring additives into gasoline, continuous blending, acidifying, causticizing of oils, producing emulsions, pumping food products, pumping sand and filter clay, tank mixing, and various proportioning operations. As an example of eductor performance in a typical use, a jet eductor measuring 8½" in length will empty a 500 gallon water tank in less than half an hour, using water at 60 psig, as the sole source of motive power.

Features

Self Priming Eductors require no priming and can be used for either continuous or intermittent operation.
Simple and Reliable Since the basic eductor has no moving parts to wear or break, only periodic inspection is required.
Corrosion and Erosion Resistant Because they can be made from most materials, or coated with corrosion resistant materials, eductors can be made resistant to the corrosive effects of the liquids handled and the environment.
Automatic Control Units can be adapted for automatic operation by means of a regulating spindle or a snap valve and float arrangement.
Non-Electrical Eductors can be used in hazardous locations where electrically operated alternatives would require expensive explosion-proofing.
Easy to Install Either threaded or flanged connections are available. Units are compact, relatively light and can be adapted to a variety of piping configurations.
Low Cost Water eductors are inexpensive in relation to the work they do.

Construction

Water Jet Eductors consist of only three basic components: a converging nozzle, a diffuser (or venturi) and a body to hold these parts in their proper relative positions and provide a suction chamber.

Converging Nozzle | Diffuser (or Venturi) | Body - holds diffuser and nozzle in position

Jet ejectors can be made from most workable materials, such as: cast iron, bronze, stainless steel, aluminum, polyvinyl chloride, polyester fiberglass, Phenolic Fiberglass Reinforced Plastic (FRP), Teflon[2] and Hastelloy[3].

A variety of types and sizes are available as noted on the following pages. Certain variables such as pressure, temperature, viscosity, density, operating conditions of suction and discharge fluids, and desired results must be considered in determining the type of eductor best suited to your needs. S&K engineers will work with you to select the proper eductor for your application.

Request Performance Data Supplement 2M for operating characteristics of water jet eductors.

Index

Description	Page
Fig. 264 Water Jet Eductor	2
Fig. 266 Water Jet Eductor	2
Fig. 264 PVC and Kynar Water Jet Eductor	3
Fig. 2645 Automatic Eductor	4
Fig. 265 Liquid Jet Eductor	5
Fig. 242 Condensate and Mixing Eductor	6
Fig. 258 Tank Mixing Eductor	7
Fig. 268 Tank Mixing Eductor	7
Fig. 254 Hopper-Equipped Eductor	9
Fig. 267 Hopper-Equipped Eductor	9
Fig. 227 Hopper-Equipped Eductor	9
Fig. 224 Water Jet Sand and Mud Eductor	10
Fig. 235 Annular Multi-Nozzle Water Jet Eductor	11
Fig. 222 Portable Eductor	12
Fig. 212 Corrosion Resistant Eductor	12
Typical Applications of S&K Water Jet Eductors	12

Fig. 264 and Fig. 266 Water Jet Eductors

S&K Fig. 264 and Fig. 266 Water Jet Eductors are designed for liquid pumping and mixing operations and for the handling of some solids where requirements do not necessitate capacities greater than those obtained with sizes up to and including 6". They are considered the standard eductors within this size range. Typical applications begin on page 12.

In operation, pressure liquid enters the eductor through the pressure nozzle and produces a high velocity jet. This jet action creates a vacuum in the line which causes the suction liquid to flow up into the body of the eductor where it is entrained by the pressure liquid. Both liquids are thoroughly mixed in the throat of the eductor and are discharged against back pressure. The streamlined body with no pockets permits the pressure liquid to move straight through the eductor and reduces the possibility of solids in the suction material collecting and clogging. In addition, pressure drop in the suction chamber is held to a minimum.

Accompanying Bulletin 2M Supplement Performance Data provides performance information.

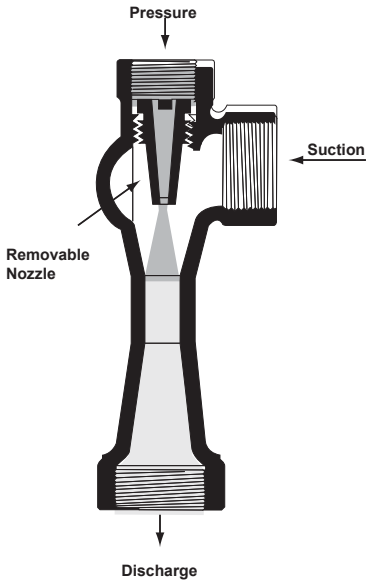

Fig 1. FIG. 264 EDUCTOR
Eductors of this type have streamlined bodies with threaded pipe connections. They are made in sizes ranging from 1/2" to 3" and are stocked in these sizes in ductile iron and bronze and Fig. 316 stainless steel. They are stocked in sizes from 1/2", 2", and 3" in PVC. Other materials are available on order.

Fig. 2. FIG. 264 EDUCTOR

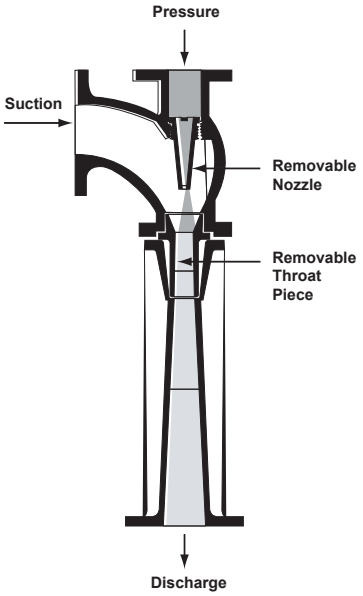

Fig. 3. FIG. 266 EDUCTOR.
These eductors are similar to Fig. 264 Eductors except that they have flanged connections and removable throat bushings along with removable nozzles. They are supplied in cast iron, bronze-mounted in 4" and 6" sizes. Other materials can be supplied on special order.

Table 1. Sizes and Dimensions, Fig. 264 and Fig. 266 Water Jet Eductors

Size In Inches	Connections In Inches		Wgt. In Lbs.	Working Pressures						Dimensions in Inches			Max. Round Particle Size In Inches
	Suction Disch.	Pressure		Cast Iron		Bronze		Stainless Steel		A	B	C	
				Motive psi	Body psi	Motive psi	Body psi	Motive psi	Body psi				
Fig. 264 Eductor													
1/2	1/2	3/8	3/4	150	125	125	100	600	500	1 1/16	2 9/16	1 1/8	1/16
3/4	3/4	1/2	1 1/4	125	125	100	100	500	500	1 3/8	3 3/8	1 1/4	1/8
1	1	3/4	2	150	150	150	125	600	600	1 1/2	4 3/16	1 5/8	5/32
1 1/2	1 1/2	1	4	150	100	125	90	600	400	2	6 1/2	2	5/16
2	2	1 1/4	6	150	100	125	85	600	400	2 1/4	7 5/8	2 1/4	3/8
2 1/2	2 1/2	1 1/2	11	200	150	200	125	600	300	2 11/16	9 1/4	3 1/8	3/8
3	3	2	20	250	150	225	125	600	400	3 1/8	11 1/4	3 1/2	13/16
Fig. 266 Eductor													
4	4	2 1/2	100	125	125	-	-	-	-	4 3/8	19 1/4	7 13/16	1
6	6	4	180	125	125	-	-	-	-	6 1/16	28 3/8	9 1/8	1 1/8

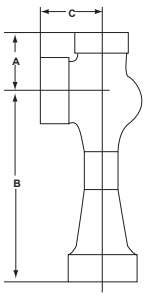

Fig. 264

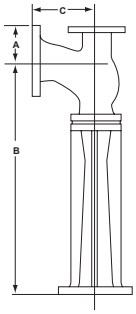

Fig. 266

Schutte & Koerting • 2510 Metropolitan Drive • Trevose, PA 19053 • USA • tel: (215) 639-0900 • fax: (215) 639-1597 • www.s-k.com • sales@s-k.com

Fig. 264 PVC and Kynar Water Jet Eductors

Fig. 264 PVC and Kynar Eductors offer resistance to many corrosive media. PVC Eductors are not recommended, however, for acetone, ketones, ether, esters, aromatic hydrocarbons or chlorinated hydrocarbons. A table of recommended uses is available on request. Maximum temperature rating is 150°F. Kynar Eductors will handle PVC applications including those mentioned above. Kynar's temperature limitation is 250°F. Pressure ratings are given in Table 2.

Fig. 264 PVC and Kynar Eductors operate on the same principle as do all other S&K Eductors. Performance characteristics with water are shown in Bulletin 2M Supplement Technical Data. For performance with other liquids, contact S&K.

Nozzles and diffusers are not removable on these eductors. Sizes 1" and smaller are of molded construction.

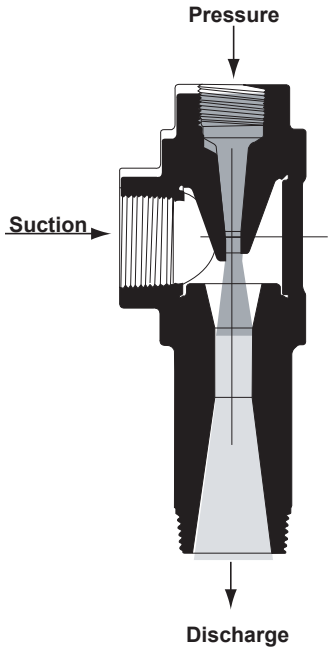

Fig. 4. FIG. 264 PVC EDUCTOR. Sizes from 1 1/2" up are designed as shown here and in Fig. 5. On these sizes, the pressure and suction connections are female and the discharge connection is male. All connections are threaded.

Fig. 5. FIG. 264 PVC EDUCTOR.

Table 2. Sizes, Dimensions, and Particle Size Data, Fig. 264 Water Jet Eductor

Size in Inches	Connections in Inches		Wgt. In Lbs.	Dimensions in Inches			Working Pressure (psig) at 75°F	Max. Round Particle Sizes (in inches) Eductors will Handle
	Suction Disch.	Pressure		A	B	C		
1/2s	1/2s	3/8s	1/2	1 7/16	3 1/4	1 7/16	325	1/16
1/2	1/2	3/8	1/2	1 7/16	3 1/4	1 7/16	325	1/16
3/4	3/4	1/2	1/2	1 11/16	3 1/2	1 11/16	275	1/8
1	1	3/4	1/2	1 7/8	3 11/16	1 7/8	250	5/32
1 1/2	1 1/2	1	1 1/2	2 9/16	5 11/32	2 1/16	200	5/16
2	2	1 1/4	2 1/2	3 1/32	6 21/32	2 5/32	185	3/8
3	3	2	6 3/4	4 1/8	9 1/2	3 7/8	165	13/16

s = denotes smaller internals.

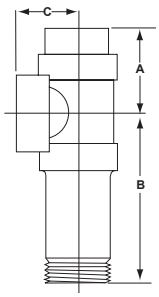

Fig. 6. FIG. 264 KYNAR EDUCTOR. 1/2" to 1" Design. Sizes 1/2", 3/4", and 1" look like this. All connections are female and are threaded.

Fig. 2645 Automatic Eductor

Fig. 2645 Automatic Water Jet Eductors are used to pump out sumps (pits, tanks, etc.) where liquid accumulates slowly but must be evacuated when it reaches a predetermined level.

As the liquid in the sump (basin, tank, cellar, bilge, etc.) accumulates, it raises the ball float until the upward action of the float opens the snap-acting valve, admitting motive fluid into the pressure connection of the eductor.

The jet action of the motive fluid creates a vacuum in the eductor and entrains the suction fluid, discharging both fluids under pressure. As the suction fluid is thus pumped out, the sump level drops to a point where the snap-acting valve shuts off. No further pumping action takes place until the sump again fills to the operating level.

Operation of the Fig. 2645 Eductor is completely automatic. It is self-operated, requires no electrical connections or any external power other than the motive fluid. The snap-acting valve and ball float are the only moving parts. The full assembly is so compact it can be installed in tanks as small as 13 1/2" diameter.

For performance information, see accompanying Bulletin 2M Supplement Performance Data.

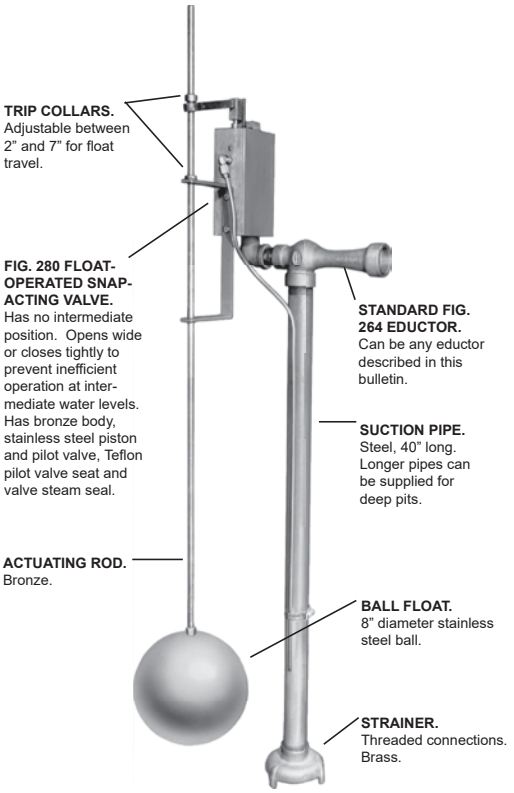

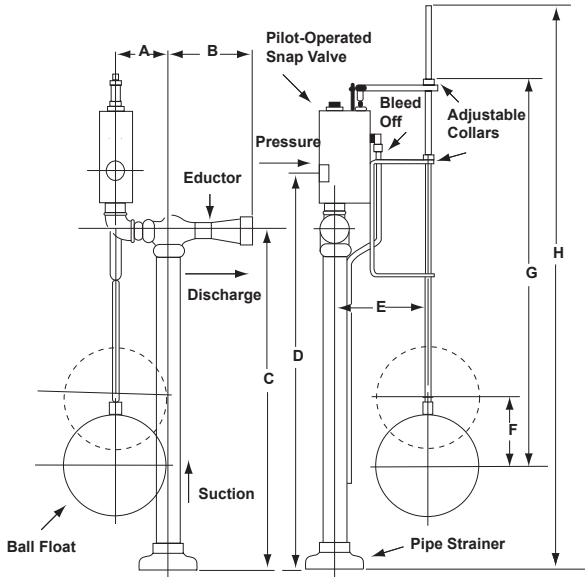

Table 3. Sizes and Dimensions, Fig. 2645 Automatic Eductor

Eductor Size In Inches	Connections In Inches N.P.T.		Wgt. In Lbs.	Working Pressure (Bronze)		Dimensions in Inches							
	Suc.-Disch.	Pressure (Snap-Valve)		Motive* (psig)	Body (psig)	A	B	C	D	E	F	G	H
3/4	3/4	1	24	100	100	3 11/16	3 3/8	41	44 7/8	7 5/6	5 3/8	47 1/8	60
1	1	1	26	150	125	4 5/16	4 3/16	41	44 7/8	7 5/6	5 3/8	47 1/8	60
1 1/2	1 1/2	1	32	125	90	4 1/8	6 1/2	41	44 7/8	7 5/6	5 3/8	47 1/8	60
2	2	2	43	125	85	6 1/4	7 5/8	38 3/8	43 15/16	7 7/16	5 3/8	47 1/8	60
2 1/2	2 1/2	2	65	200	125	6 11/16	9 1/4	38 3/8	43 15/16	7 7/16	5 3/8	47 1/8	60
3	3	2	81	200	125	6 3/8	11 1/4	38 3/8	43 15/16	7 7/16	5 3/8	47 1/8	60

*Minimum motive pressure for all Fig. 2645 Eductors: 40 psig

Fig. 265 Liquid Jet Eductor

Fig. 265 Liquid Jet Eductor is similar in design to the Fig. 264 Water Jet Eductor and is made for liquid pumping and mixing operations and for handling some solids where requirements do not necessitate capacities greater than those obtained with sizes up to and including 3". Typical applications begin on page 12.

The Fig. 265 Liquid Jet Eductor provides higher discharge pressures and higher suction flow capacities than other standard eductors.

In operation, pressure liquid enters the eductor through the pressure nozzle and produces a high velocity jet. This jet action creates a vacuum in the line which causes the suction liquid to flow up into the body of the eductor where it is entrained by the pressure liquid. Both liquids are thoroughly mixed in the throat of the eductor and are discharged against back pressure. The streamlined body with no pockets permits the pressure liquid to move straight through the eductor and reduces the possibility of solids in the suction material collecting and clogging. In addition, pressure drop in the suction chamber is held to a minimum.

Accompanying Bulletin 2M Supplement Performance Data provides performance information.

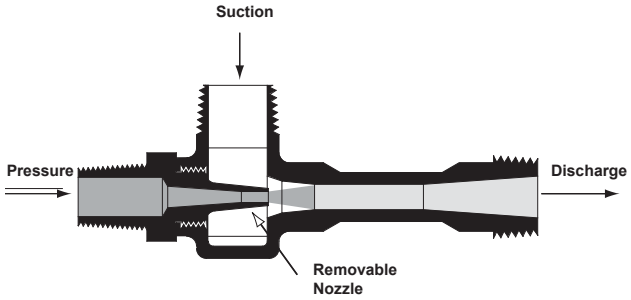

Fig 8. FIG. 265 LIQUID JET EDUCTOR
Eductors of this type have streamlined investment cast bodies with threaded NPT male pipe connections. They are made in sizes ranging from 3/4" to 3" and are stocked in these sizes in Fig. 316 stainless steel. Other materials are available on order.

Fig. 9. FIG. 265 EDUCTOR.

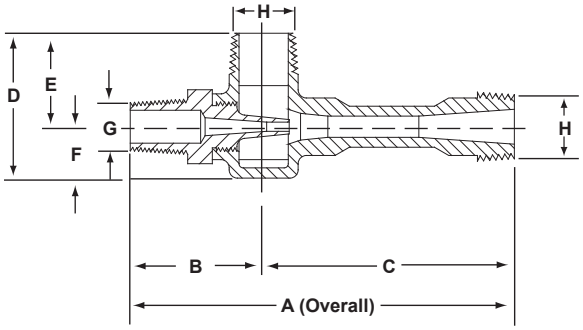

Table 265. Sizes and Dimensions, Fig. 265 Liquid Jet Eductor

Size (In Inches)	Wgt.	Dimensions						Connections	
		A	B	C	D	E	F	G	H
3/4	1	5 7/8	2	3 7/8	2 1/4	1 1/2	3/4	3/8	3/4
1	2	7 1/8	2 1/4	4 7/8	2 3/4	1 3/4	1	1/2	1
1 1/2	4	11	2 3/4	8 1/4	3 21/32	2 1/2	1 5/16	1	1 1/2
2	8	14 3/8	3 1/8	11 1/4	5	2 7/8	2 1/8	1 1/4	2
3	30	23 7/8	4	19 7/8	8	5	3	2	3

Fig. 242 Condensate and Mixing Eductor

Fig. 242 Water Jet Eductors are designed to mix two liquids intimately in various proportions in operations where the pressure liquid is the greater proportion of the mixture. Typical applications include: removal of condensate; mixing gasoline with acid; blending and proportioning chemical solutions; and diluting acids and alkali.

In operation, the pressure liquid issues from the nozzle at high velocity and entrains the suction liquid. The extreme turbulence in the throat of the eductor mixes the two liquids, blending and emulsifying thoroughly and completely. Colloidal suspensions can also be produced.

Entrainment ratio is dependent upon the eductor design. Close regulation within the design limits is usually obtained by a valve in the suction liquid line.

The pressure drop between the pressure liquid and the discharge should be at least 10 psi to give adequate mixing, and the difference between the discharge pressure and the suction pressure should not exceed 75% of the difference between the operating pressure and the suction pressure.

When used for removal of condensate, the eductor should be installed three feet below the condensate level at the drain of the condenser. For performance information, see Technical Data Supplement to Bulletin 2M.

Fig. 10. FIG. 242 EDUCTOR.

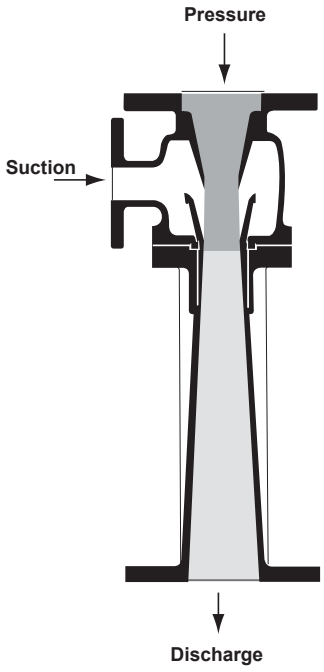

Fig. 11. FIG. 242 EDUCTOR.
The 242 is the flanged type Condensate and Mixing Eductor. This style, too, is made in bronze or cast iron, bronze mounted, but can be supplied in other materials. Nozzles and throat bushings are removable.

Table 4. Sizes and Dimensions, Fig. 242 Condensate and Mixing Eductor

Size No.	Connection in Inches			Dimensions in Inches			Weight in Lbs.
	Pressure	Suction*	Discharge	A	B	C	
2	2	1 - 2	2	4 3/4	11 3/4	3 3/4	50
2 1/2	2 1/2	1 1/4 - 2 1/2	2 1/2	3 1/2	15 1/4	4	60
3	3	2 - 3	3	4	17 15/16	4 5/8	70
4	4	2 - 4	4	5 9/16	20 3/8	5 1/2	80
6	6	3 - 6	6	6 1/4	29	6	270
8	8	4 - 8	8	14 1/16	35 1/2	7 13/16	450

*Note: Suction connection may vary to suit conditions.

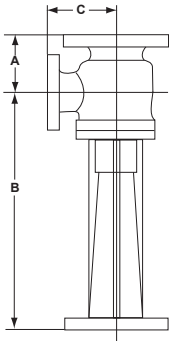

Fig. 258 and Fig. 268 Tank Mixing Eductors

Fig. 258 and Fig. 268 Tank Mixing Eductors are used to agitate liquid, dissolve powdered solids in liquid, and to mix two or more liquids intimately within a tank or other vessel without the use of baffles or moving parts inside the tank. These units take the place of mechanical agitators.

The 268 is used in preference to the 258 in operations where it is desirable to start mixing from a shallow level or where uniform local agitation is required over large, shallow tank area. Typical applications of each are shown in the application section beginning on page 12.

Fig. 258 and 268 Eductors are operated by a flow of pressure liquid through the nozzle. As shown in the sectional drawings, the motive liquid entrains suction liquid, the two are mixed intimately in the venturi, and the mixture is discharged into the tank. Pressure liquid can be taken from the tank by means of a pump or it can be a new liquid. Standard, stock units are designed to entrain 3 gallons of suction fluid for each gallon of motive fluid. (Special designs of the 258 Eductor can be made to give 1 to 1 ratio.)

Normally, the tank is filled by means of the eductors. Mixing occurs as soon as the level of liquid in the tank covers the suction of the eductor. In addition to the mixing obtained between suction and motive fluids in the eductor, the jet action of the discharge from the eductor serves to agitate the tank and prevents stratification.

If a drawing or sketch of the mixing tank is furnished, S&K will recommend and quote on the proper type of distribution system.

Performance information is given in accompanying Performance Data, Bulletin 2M Supplement. Similar units using steam as motive fluid for heating, circulating and mixing are described in Bulletin 3A as “Fig. 314” units.

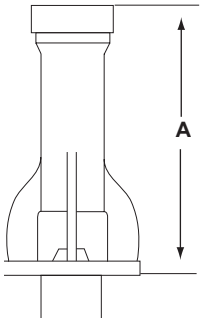

Table 5. Sizes and Dimensions, Fig. 258 Tank Mixing Eductor

Size in Inches	Connections in Inches		Wgt. in Lbs.	Dimensions in Inches
	Disch.	Pressure		A
1/2	1	1/2	2	5 1/2
3/4	1 1/2	3/4	6	8 1/2
1	2	1	22 1/2	12 5/16
1 1/4	2 1/2	1 1/4	29	11 1/8
1 1/2	3	1 1/2	36 1/2	15 7/8
2	4*	2	78	19 5/8
3	6*	3	ON APPL.	28 13/16
4	†	4*		†
5	†	5*		†
6	†	6*		†

*Flanged Connection
† Varies with performance and application
Note: A discharge flange is not supplied on large fabricated units unless required by the application.
(See Fig. 16 for dimensions of Fig. 268 Eductor).

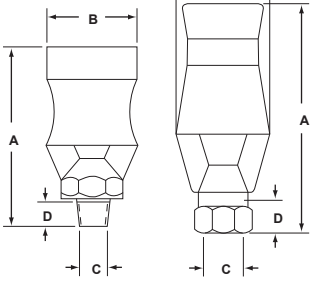

Sizes 3/8, 3/4 Sizes 1 1/2, 2, 3

Table 5-A. Sizes and Dimensions, Fig. 268 Tank Mixing Eductor

Size in Inches	A	B	C	D	Wgt. in Lbs.
3/8	3 3/4	1 3/4	3/8	7/16	3/4
3/4	5 1/4	2 3/8	3/4	9/16	2 1/2
1 1/2	8 13/16	4 1/16	1 1/2	13/16	6 1/4
2	12 1/4	5 13/16	2	45/64	22
3	17	8 1/8	3	15/16	48

Fig. 258 and Fig. 268 Tank Mixing Eductors

Fig. 12. FIG. 258 TANK MIXING EDUCTOR.

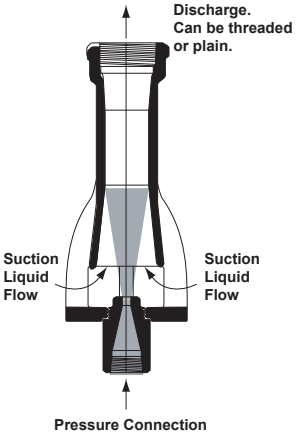

Fig. 13. FIG. 258 TANK MIXING EDUCTOR.
Standard units are made in cast iron and bronze but can be made in many other materials on special order. Large sizes can be fabricated instead of cast.

Fig. 14. FIG. 268 TANK MIXING EDUCTOR. 3/8" and 3/4" sizes.

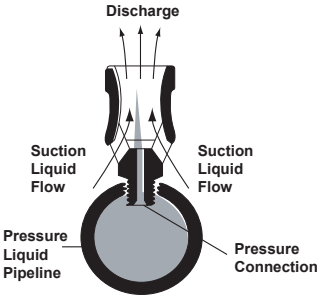

Fig. 15. FIG. 268 TANK MIXING EDUCTOR.
This design is used for 3/8" (3 3/4" overall length and 1 3/4" overall width), and 3/4" (5 1/4" overall length and 2 3/8" overall width) pressure connection sizes. It is threaded directly into threads tapped into the 1 1/2" diameter or larger pressure liquid pipeline. It is cast in one piece and is stocked in cast iron, bronze and 316 stainless steel. Other materials can be supplied on special order.

Fig. 17. FIG. 268 TANK MIXING EDUCTOR. 1 1/2" size and over.

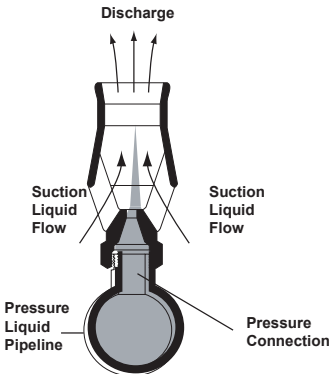

Fig. 16. FIG. 268 TANK MIXING EDUCTOR.
This design is used for 1 1/2" (8 7/8" overall length x 4 1/8" overall width), 2" (12 1/4" overall length x 5 7/8" overall width) and 3" (17" overall length x 8 1/8" overall width) pressure connection sizes. All are cast in one piece and have female thread connections for installation on nipples welded into the pressure liquid piping. The 1 1/2" and 2" sizes are stocked in cast iron, bronze, and 316 stainless steel. The 3" size is stocked in cast iron and stainless steel only. Other materials can be supplied on special order.

Fig. 254 and Fig. 267 and Fig. 227 Hopper-Equipped Eductors

Fig. 254 and Fig. 267 Hopper-Type Eductors are made for handling slurries or dry solids in granular form and are used extensively for ejecting sludges from tank bottoms, for pumping sand from filter beds and for washing and conveying granular materials. Typical materials handled include: borax, charcoal, diatomaceous earth, lime, mash, fly ash, rosin, rock and granulated salt, sand, dry sawdust, light soda ash, dry sodium nitrate, powdered sulphur, wheat and many others.

A typical application of Fig. 254 Eductor is shown in the application section of this bulletin, beginning on page 12. the material from adhering to the sides of the hopper and keep it moving down into the eductor. Pressure water, passing through the eductor nozzle, entrains the sand, sludge or other materials and discharges into the piping system.

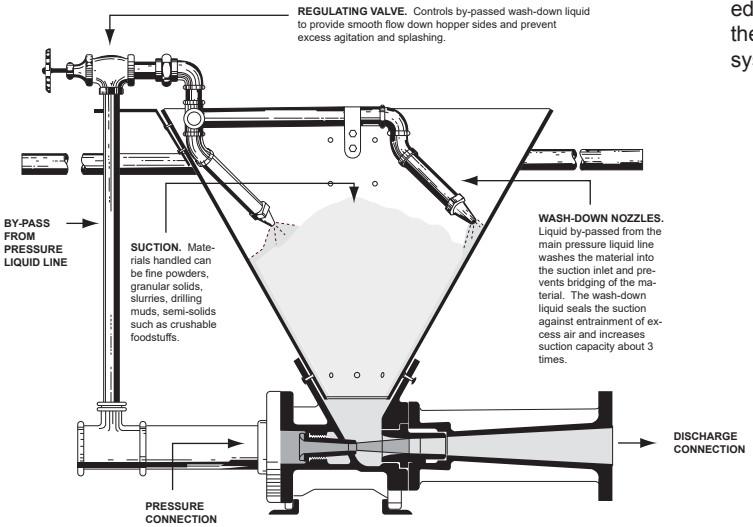

Fig. 18. FIG. 254 HOPPER-EQUIPPED EDUCTOR.
Standard units are made in cast iron and have hardened steel nozzles and throat bushings. Special materials are also available on special order. Both nozzles and throat pieces are removable and pressure and discharge connections can be fitted for hose where maximum portability is desired. Handles and supporting feet are optional.

Fig. 19. FIG. 267 HOPPER-EQUIPPED EDUCTOR.
This economical unit is available from stock with body and nozzle in cast iron, bronze, 316 stainless steel, Kynar and PVC. Hoppers are stocked in Type 304 stainless steel (1, 1 1/2 & 2" sizes) and are also available in galvanized steel, brass, aluminum and PVC.

Table 6. Sizes and Dimensions, Fig. 254(1) and Fig. 267(2) Hopper-Equipped Eductors

Size in Inches	Connection (Inches)		Dimension (Inches)			
	Disch.	Press.	A	B	C	D
FIG. 254(1)						
1 1/2	1 1/2	1 1/2	13 1/4	11 1/2	18	15 1/4
2	2	2	14 1/2	13 3/4	21	17 3/4
3	3	2 1/2	17 3/4	17 1/2	23 3/8	19 3/4
4	4	4	19 5/8	24 3/16	27	22 1/2
6	6	6	28 1/16	36 7/16	38	28 5/16
FIG. 267(2)						
1	1	3/4	1 1/2	4 3/16	24	42
1 1/2	1 1/2	1	2	6 1/2	24	41 1/2
2	2	1 1/4	2 1/4	7 5/8	24	41
2 1/2	2 1/2	1 1/2	2 11/16	9 1/4	24	41 1/4
3	3	2	3 1/8	11 1/4	24	40 3/4

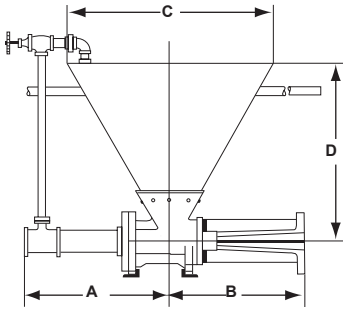

Fig. 254(1)

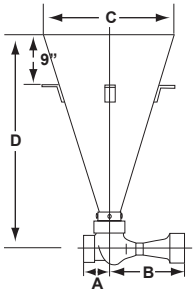

Fig. 267(2)

Fig. 227 Hopper-Equipped Eductor

Furnished with a stainless steel funnel, the eductor can be made of any machinable material. Bronze units up to and including 3" and cast iron units up to and including 4" sizes are available from stock. Prices, delivery or a sectional outline drawing 67-XS-081-J will be furnished on request. Stainless steel funnels are stocked in 1-1/4", 1-1/2" and 2" sizes.

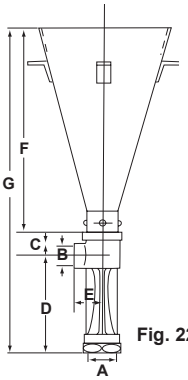

Fig. 227

Table 227. Sizes and Dimensions of Fig. 227 Hopper-Equipped Eductor

Dimensions in Inches							Wgt. (Lbs)
A	B	C	D	E	F	G	
1 1/4	3/4	1 9/16	6 7/16	1 13/16	39 5/8	47 5/8	31
1 1/2	3/4	2	8 13/16	2	39 1/4	50	36
2	1	2 1/2	9 1/8	2 1/4	38 1/2	49 7/8	45
2 1/2	1 1/4	2 3/4	11 1/4	2 3/8	37 7/8	51 7/8	51
3	1 1/2	3 1/16	13 5/16	2 3/4	37	53 3/8	58
4	2	3 5/8	17 1/16	3 3/16	35 1/2	56 3/16	70

Fig. 224 Water Jet Sand and Mud Eductor

Fig. 224 Water Jet Sand and Mud Eductors are used in pumping out wells, pits, tanks, or sumps where there is an accumulation of sand, mud, or other material not easily handled by the standard eductor. They are ideal for handling the heavy sludge residue from refining operations. A typical application of a Fig. 224 Eductor is shown in the application section beginning on page 12.

These eductors have an open suction and are designed to be submerged in the material being handled. The pressure liquid, passing through the nozzle, produces a high velocity jet which entrains the sludge or mud. This mixture is then discharged through a vertical pipe or hose. For performance information, see Bulletin 2M Supplement.

Similar units which use steam as the motive power are described in Bulletin 2A under “Fig. 225 Syphons”.

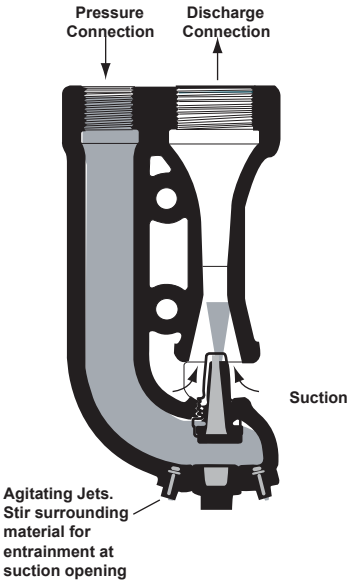

Fig. 20. FIG. 224 WATER JET SAND AND MUD EDUCTOR.
Standard units are made of cast iron with bronze pressure nozzles. Other corrosion-resistant materials are available on special order.

Fig. 21. FIG. 224 EDUCTOR.

Table 7. Sizes and Dimensions, Fig. 224 Sand and Mud Eductor

Size in Inches	Connections in Inches		Wgt in Lbs.	Dimensions in Inches	
	Disch.	Pressure		A	B
1 1/2	1 1/2	1	8	9 3/8	4 5/8
2 1/2	2 1/2	2	42	16 3/4	7 7/8
3	3	2 1/2	87	21 7/8	10 1/4
4	4	3	130	25 1/2	11
5*	5	4	-	30 1/4	17 3/8
6*	6	4	-	35 5/16	18

*Flanged Connections.

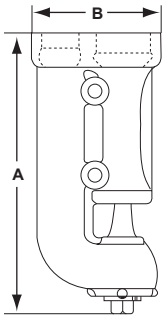

Fig. 235 Annular Multi-Nozzle Water Jet Eductor

Fig. 235 Annular Multi-Nozzle Water Jet Eductors are designed to handle solids and semi-solids. They operate at highest efficiency in large sizes and at low discharge heads. Because these eductors have high air handling capacities, they are particularly well suited for priming large pumps such as dredging pumps which frequently encounter air pockets.

Nozzles on the periphery of the throat introduce the pressure water. The pressure water creates a vacuum which draws in and entrains the material being handled and all flow discharges through the discharge connection. All suction flow is in a straight line through the eductor. For performance information, see Bulletin 2M Supplement.

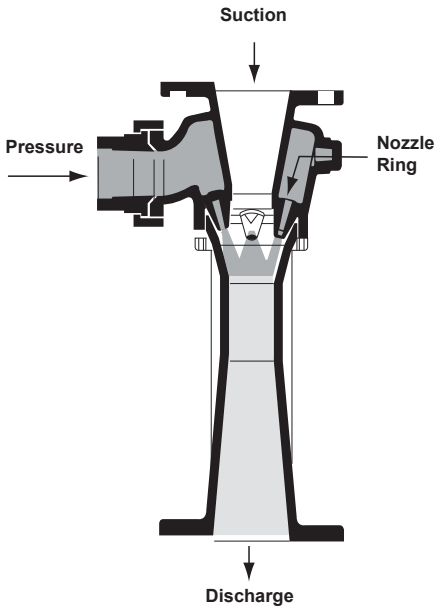

Fig. 22. FIG. 235 ANNULAR MULTI-NOZZLE WATER JET EDUCTOR.
These eductors are made to order from any workable material. Sizes from 1 1/2" to 6" are cast with flanged suction, discharge and pressure connections, except 2" size which has sil-brazed pressure connection. Sizes above 6" (to 28" and up) are generally fabricated.

Table 8. Sizes and Dimensions, Fig. 235 Annular Multi-Nozzle Water Jet Eductor

Size in Inches	Connections in Inches		Wgt. In Lbs.	Dimensions in Inches		
	Suction Disch.	Pressure		A	B	C
1 1/2	1 1/2	1	16	2 7/8	8 7/16	3 3/8
2	2	1 1/4	22	3 1/8	11 7/8	3 3/4
2 1/2	2 1/2	1 1/2	27	3 1/4	12 5/16	4
4	4	2 1/2	65	4 1/8	18 11/16	5 1/8
5	5	3	100	4 5/8	24 7/16	6
6	6	4	150	5 1/4	30	7 1/4

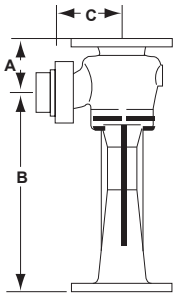

Fig. 23. FIG. 235 EDUCTOR.
(2" size with sil-brazed connection).

Special Purpose Eductors

The special-purpose eductors illustrated here are similar in operation to the basic Fig. 264 Eductor described on page 3.

Fig. 24. FIG. 222 PORTABLE EDUCTOR.
Is designed for use as an auxiliary with a pump where the suction lift is too great for the pump alone. Made of anodized aluminum, bronze or other materials as required.

Fig. 25. FIG. 212 CORROSION RESISTANT EDUCTOR.
Is made of Phenolic Fiberglass Reinforced Plastic (FRP). Body is of one-piece construction.

TYPICAL APPLICATIONS OF S&K WATER JET EDUCTORS

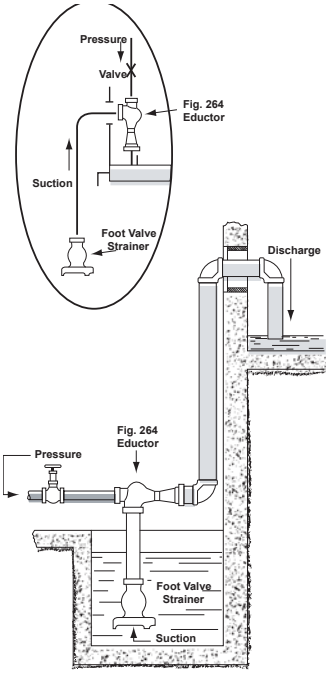

Fig. 26. FIG. 264 EDUCTOR USED TO EMPTY TANKS.
Water jet eductors are often used to empty tanks or to pump out sumps, penstocks, cellars, and the like. The pressure line should be fitted with a regulating stop valve and a pressure gauge while the suction line should be provided with an S&K Strainer. Discharge lines should be sealed for a positive pick-up of the liquid by turning the discharge line up or by submerging the end of the discharge line. It is recommended that the eductor be installed a short distance above the liquid to be handled and that short suction lines be used. Eductors will operate with long suction lines, as shown in the line drawing, however, with suction lifts greater than 15', capacities are reduced considerably. When handling hot liquid the eductor must be arranged with a short suction line or must be submerged.

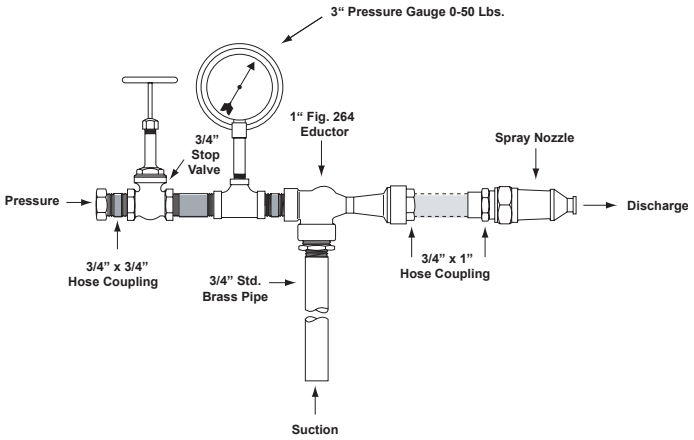

Fig. 27. FIG. 264 EDUCTOR USED IN MIXING LIQUIDS.
This illustration shows a typical arrangement used in mixing liquids such as chemicals or fertilizers in proportion for spraying. The solution to be applied is mixed in a container in approximately twice the strength at which it is to be used. The water jet proportioning apparatus is operated by a jet of high pressure water and is controlled by a 3/4" stop valve. A 3" pressure gauge indicates pressure. The jet action of the pressure water draws the solution from the container and the water and solution are mixed in the throat of the eductor and are discharged through a standard 3/4" hose to a spray nozzle. Solids can be handled and sprayed through a non-clogging type spray nozzle.

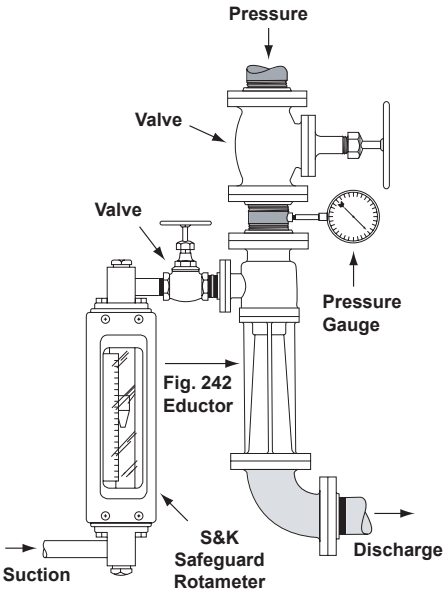

Fig. 28. FIG. 242 EDUCTOR USED IN TYPICAL PROPORTIONING SYSTEM.
This shows a typical proportioning system using a Fig. 242 Eductor. Rate of flow is measured by a Rotameter and is controlled by a valve in the line. A valve in the pressure line and orifice of the eductor nozzle control the flow of the pressure liquid. Fluids are thoroughly mixed in the desired proportions and are then discharged.

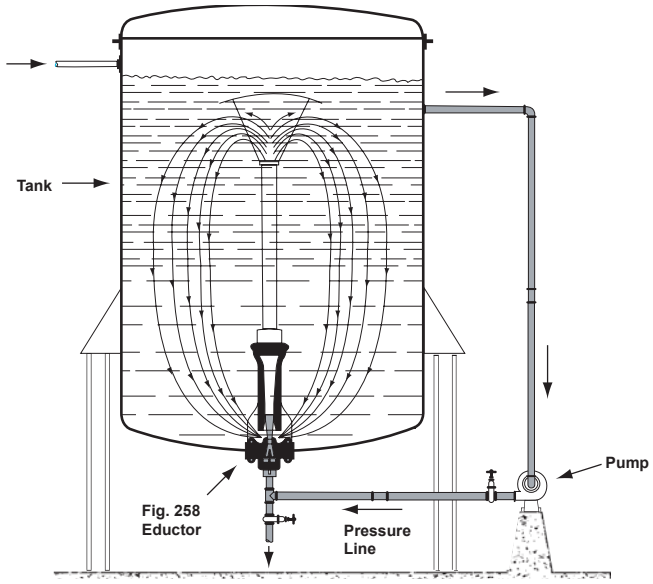

Fig. 30. FIG. 258 EDUCTOR IN BATCH MIXING APPLICATION.
This illustrates the batch mixing of two or more liquids with an S&K Fig. 258 Eductor. The pressure liquid, taken from the top of the tank is passed through a pump to the eductor. The jet action of this fluid entrains the liquid at the bottom of the tank and proper mixing results.

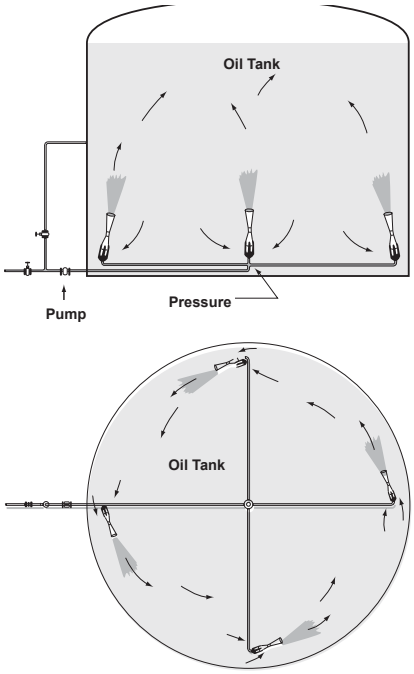

Fig. 29. FIG. 258 EDUCTORS FOR TANK BLENDING OF OILS.
For the tank blending of oils, the arrangement shown has proved highly satisfactory. In this particular installation five 8" Fig. 258 Eductors are used in a 100' tank. Initially, the eductors are used to fill the tank during which time they provide continuous agitation. After the tank is filled, the oil is drawn off and recirculated by means of the same pumps. Oil from the top of the tank issues through the eductor nozzle and entrains oil from the bottom of the tank. The two are mixed in the throat of the eductor and are discharged with sufficient force to maintain constant agitation and further blending in the tank.

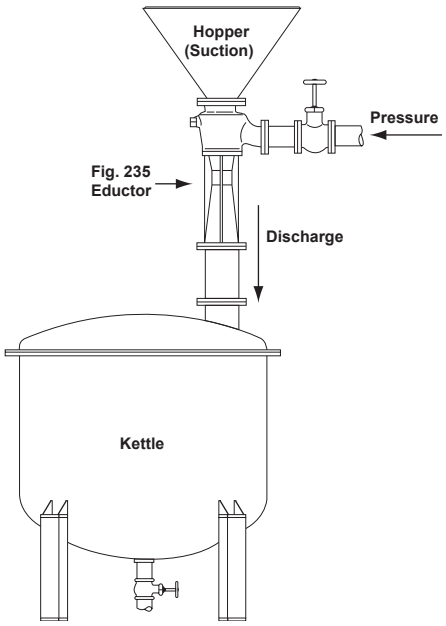

Fig. 31. FIG. 235 EDUCTOR USED IN MIXING DRY POWDER.
Mixing dry powder and a liquid prior to discharge into a tank is accomplished through the use of a Fig. 235 Eductor as shown here.
Pressure liquid enters the eductor, entrains the powder, mixes the two in the venturi of the eductor and discharges the mixture into a receptacle. The streamline eductor design provides maximum efficiency in this operation.

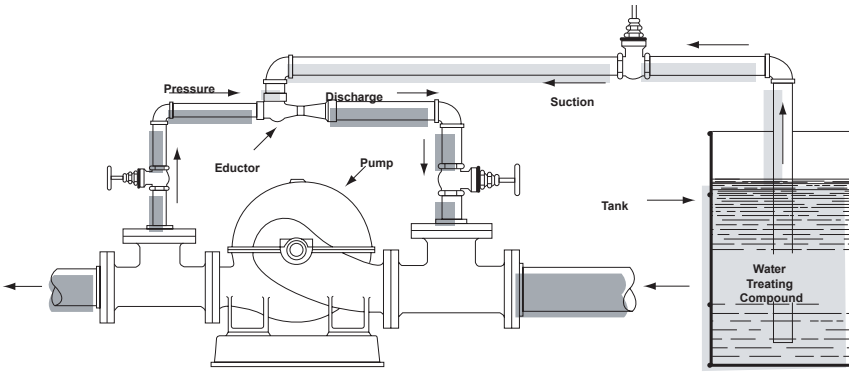

Fig. 32. FIG. 264 OR FIG. 265 WATER JET EDUCTORS USED TO ENTRAIN ANOTHER LIQUID.
This illustration shows a Fig. 264 or Fig. 265 Eductor being used to introduce a water treating compound into boiler feed water. A portion of the water issuing from the pump is bypassed into the eductor where it acts as the pressure medium to draw in and entrain the water treating compound.

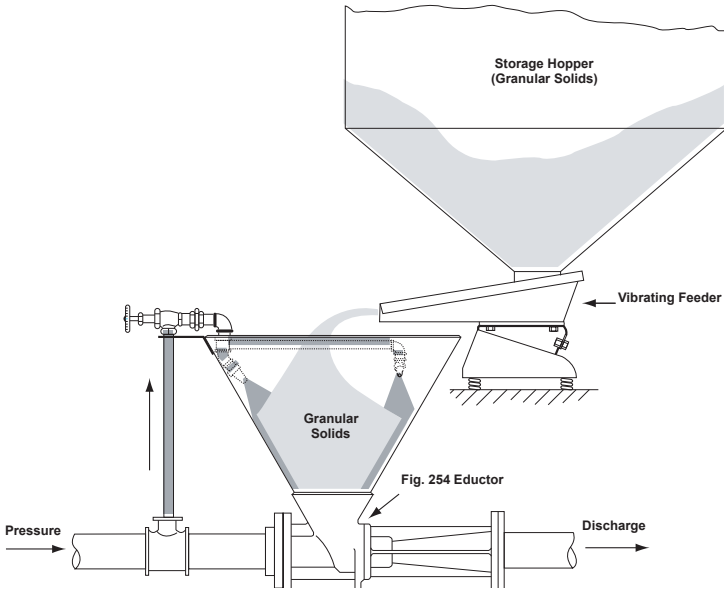

Fig. 33. APPLICATION OF FIG. 254 SOLIDS/LIQUID HOPPER EDUCTOR.
One arrangement for handling granular solids with the Fig. 254 Eductor is illustrated here. In this installation, granular solids drop from a storage hopper into a vibrating feeder which feeds the solids into the eductor hopper at a controlled rate. Water, bypassed from the pressure line, flows through nozzles located in the hopper and washes the solids into the eductor. There they are entrained by the jet action of the pressure water and are discharged. Although the material can be placed in the hopper manually, this system reduces handling and controls the flow of solids.

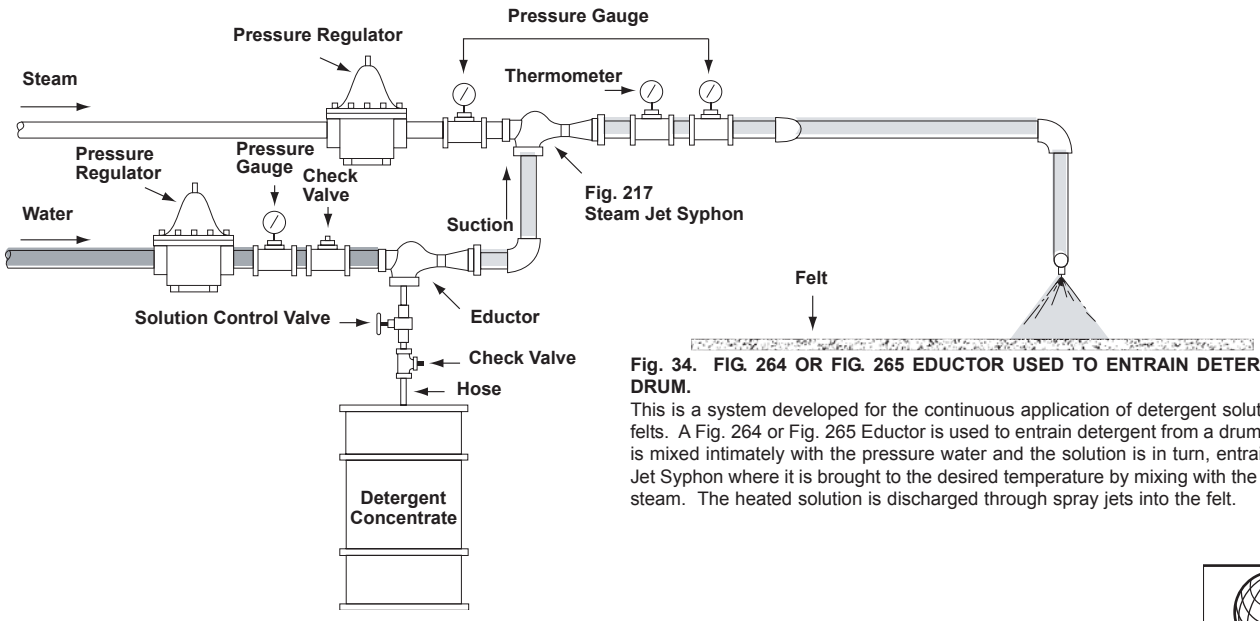

Fig. 34. FIG. 264 OR FIG. 265 EDUCTOR USED TO ENTRAIN DETERGENT FROM A DRUM.
This is a system developed for the continuous application of detergent solution to paper mill felts. A Fig. 264 or Fig. 265 Eductor is used to entrain detergent from a drum. This detergent is mixed intimately with the pressure water and the solution is in turn, entrained by a Steam Jet Syphon where it is brought to the desired temperature by mixing with the syphon's motive steam. The heated solution is discharged through spray jets into the felt.

ISO 9001 Certified

CS-650-600 : Identification sheet

VWTC PROJECT NUMBER:	5000218009	REV:	1
PROJECT NAME:	AEM AMARUQ	SUBMITTED TO (COMPANY):	AGNICO EAGLE MINES
ENGINEER:	Gabriel Hébert	SUBMITTED TO (RESPONSIBLE)	
PROJECT MANAGER:	Clément B	PROJECT NUM REFERENCE.:	
PHONE NUMBER:		LOT NUMBER:	

SUPPLIER	EQPT CODE	EQPT TAG NO	DIA	DESCRIPTION	INFO 1	INFO 2	INFO 3	APPLIC.	NOTE	REV
KOFLO	FPMIPV202516	SM9-591	Dia.= 1-1/2"/ Length=15"	STATIC MIXER	STATIC MIXER / MANUFACTURER : KOFLO / MODEL : / 1.5-40C-4-6-21-1/2"	N/A	N/A	KMnO4 PREP SYSTEM		

This page is intentionally left blank

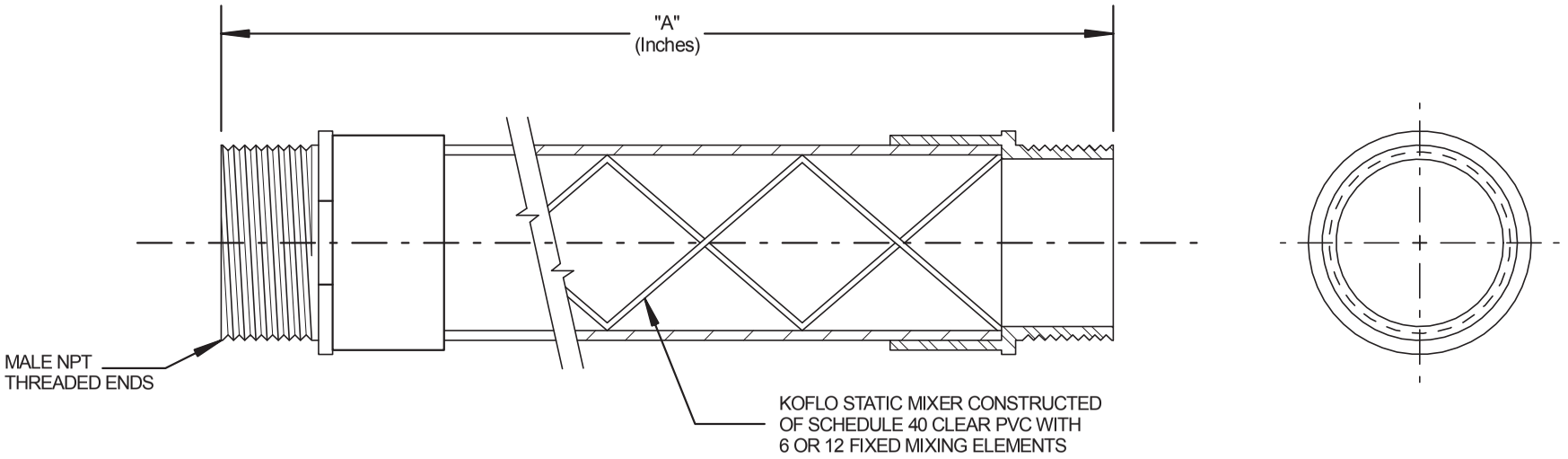

Size	6 Element Model Number	"A" 6 Element	12 Element Model Number	"A" 12 Element
3/8"	3/8-40C-4-6-2	6-1/2	3/8-40C-4-12-2	11
1/2"	1/2-40C-4-6-2	7	1/2-40C-4-12-2	12
3/4"	3/4-40C-4-6-2	9	3/4-40C-4-12-2	15
1"	1-40C-4-6-2	11	1-40C-4-12-2	18
1-1/4"	1.25-40C-4-6-2	14	1.25-40C-4-12-2	25
1-1/2"	1.5-40C-4-6-2	15	1.5-40C-4-12-2	28
2"	2-40C-4-6-2	19	2-40C-4-12-2	35

Koflo Corporation
309 CARY POINT DR.
CARY, IL 60013

SCALE: NONE	APPROVED BY JJT	DRAWN BY NJF
DATE: 1/18/94		REVISED 10/15/01
CUSTOMER:		REVISED 5/22/08
		REVISED 6/12/09
MODEL NO: CLEAR PVC SCHEDULE 40 MIXER		DRAWING NUMBER: KD-993

This page is intentionally left blank

CS-910-502 : Identification sheet

VWTC PROJECT NUMBER:	5000218009	REV:	1
PROJECT NAME:	AEM AMARUQ	SUBMITTED TO (COMPANY):	AGNICO EAGLE MINES
ENGINEER:	Gabriel Hébert	SUBMITTED TO (RESPONSIBLE)	
PROJECT MANAGER:	Clément B	PROJECT NUM REFERENCE.:	
PHONE NUMBER:		LOT NUMBER:	

SUPPLIER	EQPT CODE	EQPT TAG NO	DIA	DESCRIPTION	INFO 1	INFO 2	INFO 3	APPLIC.	NOTE	REV
ENVIREQUIP	CMSPMI319898	M9-591	N/A	MATURATION MIXER	HP500 (2016) MIXER // Manuf : Envirequip // Model: EVG01-0.5 // Mtl : 304L SS	Impeller Dia : 13.5" // 181,24 RPM // Shaft lg : 29.25"	Nord Motor 0.5 HP / 575/3/60	KMnO4 PREP SYSTEM		

This page is intentionally left blank

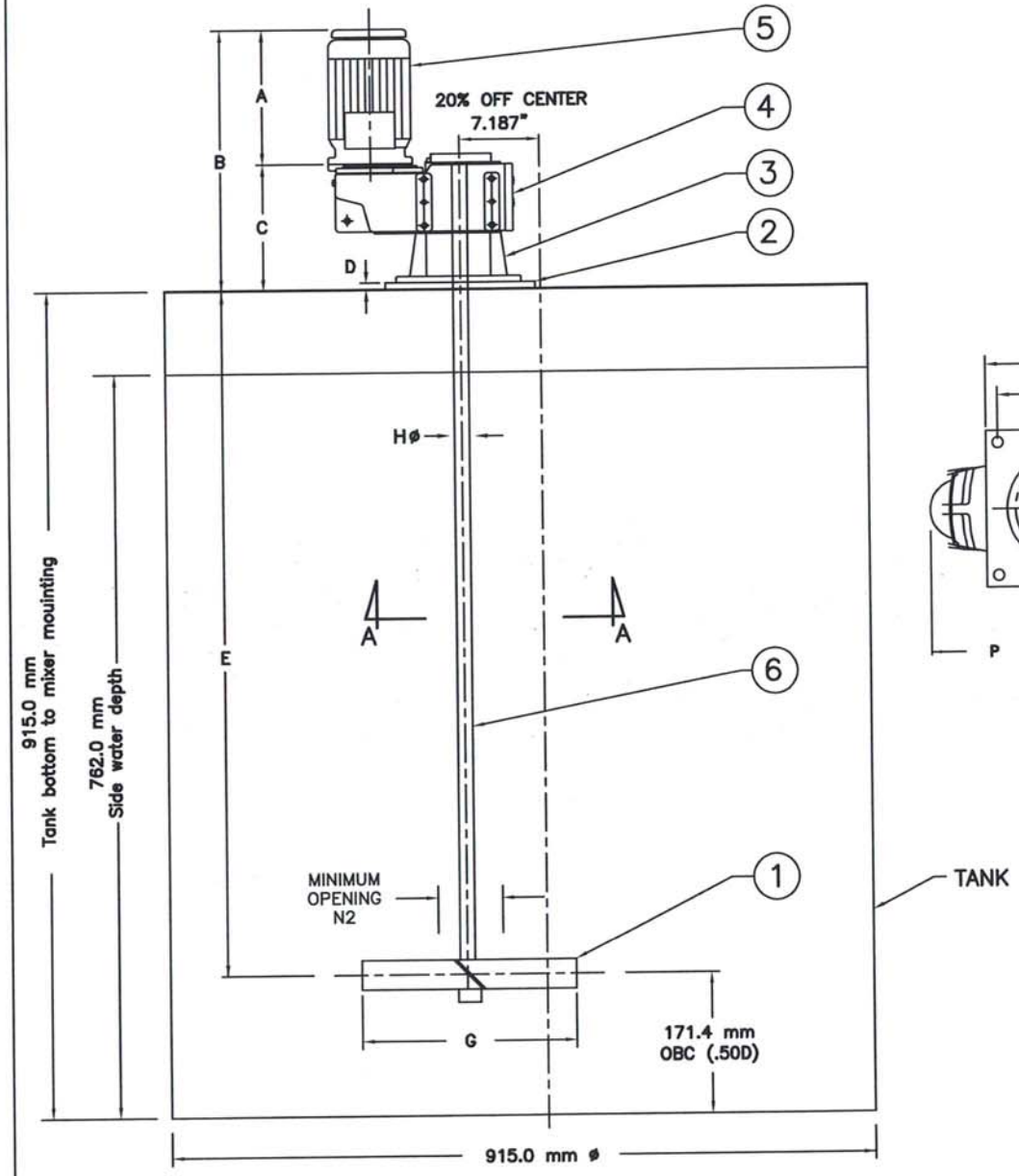

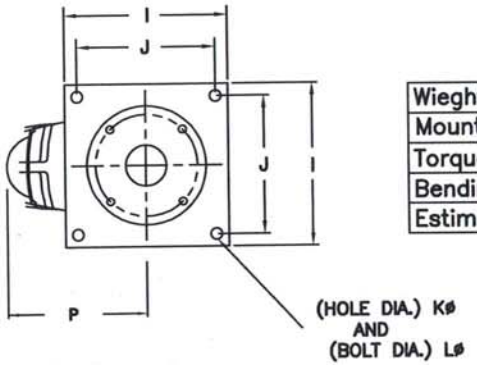

"A–A"

ITEM	DESCRIPTION	MATERIAL
1	Axial impeller (P–4) 342.9 mm (13.50") ø @ 45.0°	304L
2	Base 304.8 mm x 304.8 mm (12.0" X 12.0")	Steel
3	Pedestal <B5 Flange>	
4	NORD Reducer 180.24 RPM	
5	NORD Motor 0.5 Hp, 575/3/60, TEFC	
6	Shaft: (1) section 742.9 mm (29.25") @ 1.25"ø	304L

APPL'N: POLYMER (QTY 1)
MIX–TECH MIXERS
MODEL: EVG01–0.50
0.37 kW @ 180.24 RPM
S/N
Rotation: Clockwise
Thrust: Down
Tag #:

Wieght: 75 Lbs
Mounting loads
Torque reaction = 435 in lb
Bending moment= 490 in lb
Estimated beam: 7C @ 9.8 # up to 4 Ft.

ST #: 910–502
LATIS #: CMSPMI319898

HP 500

Dimensions: Inches																
MOD.:	A	B	C	D	E	E2	F	Gø	Hø SHAFT	I	J	Kø	Lø	M	N2	P
EVG01	8.12	13.98	5.36	.50	29.25	–	–	13.50	1.25	12.0	10.5	.562	.50	–	6.25	6.0

Dimensions: mm																
MOD.:	A	B	C	D	E	E2	F	Gø	Hø SHAFT	I	J	Kø	Lø	M	N2	P
EVG01	206.2	355.1	136.1	12.7	742.9	–	–	342.9	31.8	304.8	266.7	14.3	12.7	–	158.8	152.4

Ce dessin et l'information qu'il contient est la propriété de ENVIREQUIP WTEM inc. Il est interdit de le copier, le photographier, l'imprimer, le prêter ou de l'utiliser sans la permission de ENVIREQUIP WTEM inc.

This drawing and the information contained thereon is the property of ENVIREQUIP WTEM inc. It is not to be printed, photographed, copied, loaned or used without the permission of ENVIREQUIP WTEM inc.

NO	DATE	REVISION	P/B

PROJET/PROJECT
EVG01–0.5/304/575 (CIRT)

ENVIREQUIP WTEM INC.
460 Bord du Lac – Suite 2
Dorval, QC H9S 3A8
Montreal Tel: (514) 338-1043
RR1 (21494 Little Russia Rd.)
Glen Robertson, Ont K0B 1H0
Ontario Tel: (613) 874-2618
Fax: (613) 874-2828
E-mail: envireqp@glen-net.ca

TITRE/TITLE
"MIX–TECH" Mixers
Veolia Water Technologies
EVG SERIES

DESSINÉ PAR: DRAWN BY: PJ	DATE: March 2016
DESS. NO: DWG NO: EVG	ECH./SCALE: N.T.S
VÉRIFIÉ PAR: CHECKED BY: PJ	PROJ.NO:
APPROUVÉ PAR: APPROVED BY: RJ	REV.: 01

This page is intentionally left blank

CS-999-001 : Identification sheet

VWTC PROJECT NUMBER:	5000218009	REV:	1
PROJECT NAME:	AEM AMARUQ	SUBMITTED TO (COMPANY):	AGNICO EAGLE MINES
ENGINEER:	Gabriel Hébert	SUBMITTED TO (RESPONSIBLE)	
PROJECT MANAGER:	Clément B	PROJECT NUM REFERENCE.:	
PHONE NUMBER:		LOT NUMBER:	

SUPPLIER	EQPT CODE	EQPT TAG NO	DIA	DESCRIPTION	INFO 1	INFO 2	INFO 3	APPLIC.	NOTE	REV
WAM	ST-999-001	FSM9-591		FEEDER SREW	KMNO4 FEEDER // MANUF. : WAM // Model : MBF/073.A/TT/UD4.SST.UO2/F. 0.Q.+.++++.++++ Feeding rate:2,28 Liter/min at 24,8 rpm For material: Potassium Permanganate (KMNO4), approx 1.52 Kg/L	C/w Vertical discharge tube MDXSC34 c/w K539.227.N056 Adapter flange from Varvel c/w K532.227.N056 Adapter flange from Varvel	Baldor 0.75 HP blending tool motor, EX-rated c/w 2 motors E-motor Baldor, 0.75 HP & 0.5 HP, 1750rpm, Nema 056, 575V-60Hz, Inverter	KMnO4 PREP SYSTEM		

REFER TO HAPMAN VACUUM CONVEYER (NEXT SECTION)

CS-999-010 : Identification sheet

VWTC PROJECT NUMBER:	5000218009	REV:	1
PROJECT NAME:	AEM AMARUQ	SUBMITTED TO (COMPANY):	AGNICO EAGLE MINES
ENGINEER:	Gabriel Hébert	SUBMITTED TO (RESPONSIBLE)	
PROJECT MANAGER:	Clément B	PROJECT NUM REFERENCE.:	
PHONE NUMBER:		LOT NUMBER:	

SUPPLIER	EQPT CODE	EQPT TAG NO	DIA	DESCRIPTION	INFO 1	INFO 2	INFO 3	APPLIC.	NOTE	REV
HAPMAN	ST-999-010	VCM9-591		CONVEYER MOTOR	HAPMAN 16R Model & rotary valve // Potassium Permanganate // Bulk Density: 94 Lbs/Ft³ // Voltage Service Available: 575V/3Ph/60Hz // Capacity: 25 kg/hr // CW safety interlock switch to shut down system if side access is open	Integral regenerative vacuum blower assembly complete with exhaust silencer and 2.5 HP, 575 volt, 3 phase, 60 Hertz, TEFC motor. // Adjustable material pick-up	Filter/receiver housing complete with flanged outlet to mate with dump gate, and quick release side access door for tool-less filter	KMnO4 PREP SYSTEM		

NOTES:

(1) PURCHASE ORDER NUMBER: 18000190HD0500

(2) MATERIAL CONVEYED: POTASSIUM PERMANGANATE
COMPOSITION: POWDER
BULK DENSITY: 94 LBS/ CU FT
PARTICLE SIZE: POWDER
CHARACTER: NA
MOISTURE CONTENT: DRY
ABRASIVENESS: MILDLY
FLOWABILITY: FREE FLOWING
CAPACITY RATE: 25KGS/HR
TEMPERATURE: AMBIENT

(3) MATERIAL CONTACT SURFACES: STAINLESS STEEL

(4) SUPPORT AND INSTALLATION LABOR FURNISHED BY OTHER.

(5) HAPMAN STANDARD GRADE FINISH SPECIFICATION #40-108, REV "C"

(6) VOLTAGE 575V/3PH/60HZ

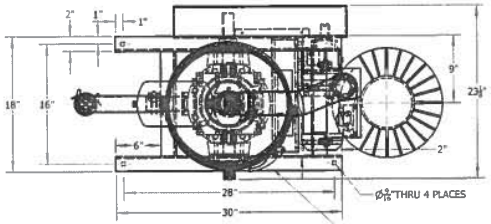

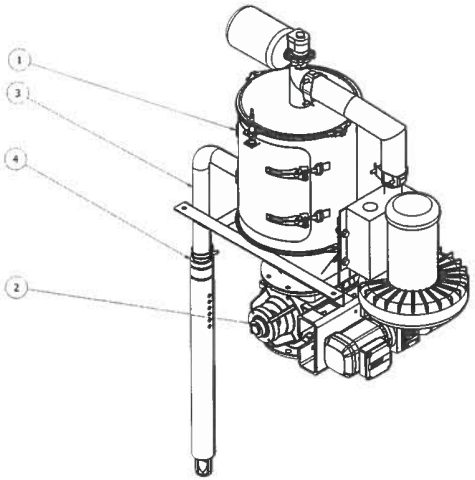

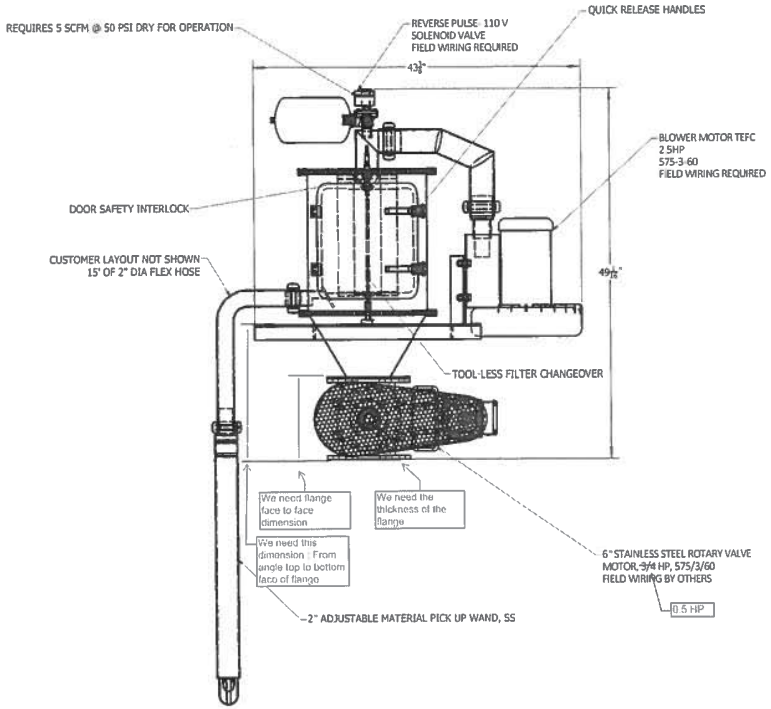

CONTROLS, FILTER PULSE TIMER & MOTOR STARTER BY OTHERS

APPROVAL DRAWING

Ryadh Dahli P.Eng. 2018-03-28

16R

REV.	SUF	ITEM NO.	DRAWING / PART NO.	DESCRIPTION	ITEM QTY
	AA	1	H1692SAA D00	16D PNEUMATIC RECEIVER ASSY, SS	1
	AB	2	ACE M D.S. DP REV. A	ROTARY VALVE, 6", SS	1
	AC	3	H1692SAC-L00	HOSE, TIGERFLEX, 2" x 15' LG. (WE200)	1
	AD	4	H1692SAD D00	INLET WAND ASSY, 2", SS	1

UNLESS OTHERWISE SPECIFIED
DIMENSIONS ARE ENGLISH (FEET AND/OR INCHES)
TOLERANCES

DECIMALS	INCHES	FEET	ANGLES
.X ±.030"	X/X" = ± 1/16"	.X'-X" = ± 1/4" UP TO 20 FEET	± .1°
.XX ±.015"		.X'-X" = 1/2" OVER 20 FEET	
.XXX ±.005"			

DO NOT SCALE DRAWING — REMOVE ALL SHARP EDGES

HAPMAN
Ideas that move

5944 E. N AVE. KALAMAZOO, MICHIGAN 49048
PHONE (269) 343-1675 FAX (269) 349-2477

DATE: 2/1/2018	KIT NO. H16925	DRAWN: mlesiie
SCALE:		WEIGHT: N/A

16" PNEUMATIC RECEIVER W/ 6" ~~DUMP GATE~~ ROTARY VALVE & WAND, SS

CUSTOMER: VEOLIA WATER TECHNOLOGIES

SHEET 1 OF 1

H1692500-D00

This page is intentionally left blank

HAPMAN
Ideas that move

Vacuum Conveyor

Installation, Operation and Maintenance Manual

©2013 HP9000

www.hapman.com

All owners and operators should read this manual and/or be instructed on safe operating and maintenance procedures before attempting to uncrate, install, operate, adjust or service this equipment

Following are symbols used in this manual along with a description of their meanings:

DANGER
Indicates an imminently hazardous situation which, if not avoided, will result in death or severe injury.

WARNING
Indicates a potentially hazardous situation which, if not avoided, will result in death or severe injury

CAUTION
Indicates a potentially hazardous situation which, if not avoided, may result in minor/moderate injury and/or damage to equipment.

HAPMAN

MiniVac™ PNEUMATIC CONVEYOR

Table of Contents

Definition of Warning Symbols 2

Major Feature Index 4

1.0 Warranty 4

2.0 Safety Instructions 5

3.0 General Description and Installation 6

4.0 Hapman Pneumatic Conveyor Equipment 7

Major Components of the Filter/Receiver -

Discharge Gate 8

Solenoid Cabinet 8

Rotary Discharge Valve 8

5.0 Material Feed Devices 9

5.1 Flooded Well Inlet 10

5.2 Rotary Inlet Valve 10

5.3 Manual Pick Up Wand 10

6.0 Blower Packages

6.1 Regenerative 10

6.2 Positive Displacement 10

7.0 Electronic Control Systems 11

8.0 Installation Instructions 14

9.0 General Maintenance 14

9.1 Weekly 10

9.2 Monthly 10

10.0 Replacement Parts

For Filter Receiver with Rotary Discharge Valve 15

For Filter Receiver with Discharge Gate 16

Major Features Index

1. Filter Plenum
2. Material Inlet
3. Cartridge Filter
4. Solenoid Cabinet (If Required)
5. Cam Latch
6. Removable Top Cover (Lid Assembly)
7. Pulse Air Reservoir
8. Quick Disconnect
9. Vacuum Breaker (If Required)
10. Regenerative Blower
11. 80 PSI (Dry) Air Connection
12. Discharge Gate
13. Rotary Valve

NOTE: The marker numerical designations listed in this illustration are for reference purposes only within this manual.

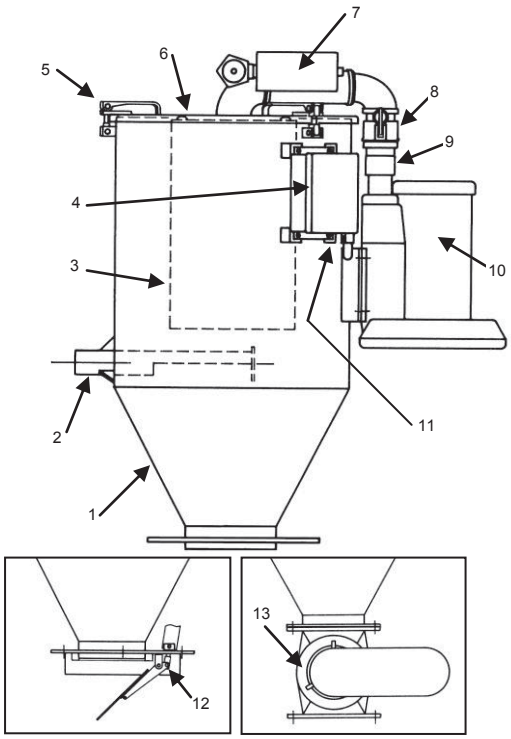

1.0 Warranty

Equipment manufactured by Hapman is warranted to be free of defective material and workmanship under the use and service quoted for a period of one year after date of shipment. This warranty is void if serviced by anyone other than Hapman service personnel.

Hapman agrees to replace or repair any defective parts it has manufactured as covered under this warranty. F.O.B. our plant, subject to inspection of the part in question by Hapman's personnel. No article may be returned to Hapman without Hapman's written consent.

Parts supplied but not manufactured by Hapman are subject to the warranties extended to Hapman by its suppliers. Hapman's liability is limited to such adjustment as the respective manufacturer makes to the seller.

In no event shall Hapman be liable for costs incurred due to equipment malfunction such as consequential damages, lost production or the expenses or losses incurred due to geographical location or fault of the product, difficulty of access to the product as installed, or time urgency on the part of the user and/or buyer of the equipment.

NOTICE:
While all information in this manual has been checked for accuracy, changes in design or specifications may occur at any time in HAPMAN's continuing program of product improvement. HAPMAN cannot assume responsibility for errors in the production of this manual, or for unsafe operating practice of those employing HAPMAN equipment.

WARNING

BEFORE INSTALLING, OPERATING OR MAINTAINING ANY EQUIPMENT, THE CONTENTS OF THIS MANUAL SHOULD BE THOROUGHLY REVIEWED AND UNDERSTOOD.

Statements and instructions set forth herein are based upon the best information and practices known to HAPMAN, but this may not be construed to suggest that every conceivable safety precaution is contained herein. As a matter of practicality, HAPMAN cannot guarantee that actions in accordance with such statements and instructions will result in the complete elimination of all hazards and thus assumes no liability for accidents which may occur.

For further information regarding installation, operation and maintenance please contact the factory service department.

HAPMAN Customer Service
5944 East N Avenue, Kalamazoo, MI 49048-2321 (US/Can): 800.427.6260
Phone: 269.343.1675, Fax: 269.382.8266 E-mail: service@hapman.com

2.0 Safety Instructions

⚠ CAUTION

All Hapman furnished equipment must be installed, operated and maintained in accordance with service instructions. Failure to follow these instructions may result in serious personal injury or property damage.

2.1 Once the pneumatic conveyor (sometimes referred to as the MiniVac™) has been properly positioned in the desired location, it must be securely fastened (anchored) to approved structural supporting beams or equipment before connecting the electric and air utilities.

2.2 Installation, operation and maintenance of electrical machinery must be performed only by qualified, trained and experienced personnel. Make sure that the motor and conveyor body is effectively grounded in accordance with OSHA safety and health standards, the National Electric Code and local codes.

2.3 Avoid physical contact in and around the pneumatically operated discharge gate because it can cause injury to the operator when it closes. The gate can severely pinch fingers and hands when it is activated.

2.4 Likewise, when a rotary valve is used for controlled discharge of product, it too can present a significant “pinch-point” hazard.

2.5 Keep clothing, hair, hands and other body parts away from the rotary valve and receiving pickup wand when the unit is operational.

2.6 Do not manually override or electrically bypass any protective device.

2.7 Periodically inspect the bolts and welds of the frame to ensure their continued integrity and tightness.

⚠ WARNING

2.8 Do not attempt to open, work on, clean, service, remove any protective cover, guard, or maintenance panel on the pneumatic conveyor until the **POWER IS TURNED OFF AND LOCKED OUT.**

2.9 Use extreme care and caution when handling combustible dusts, powders, and vapors because such conditions can introduce a potential fire/explosive hazard which may be caused by sparks (electrical, electrostatic, metal against metal) in the filter receiver or transport pipe.

Pneumatic filter receivers do not contain extinguishing or suppression equipment.

Should combustible dusts or explosive vapors be introduced to the conveyed material, consult NFPA (National Fire Prevention Association) guideline for recommended explosion relief (vent) devices and/or fire extinguishing equipment. Hapman conveyor equipment hoppers, filter/receivers and dust collectors do not contain explosion relief vents, except on special order.

2.10 Any equipment which is used in the processing or transporting of explosive materials in hazardous environments requires an evaluation on the part of the user and operator or proper and adequate equipment enclosures. Do not use your equipment in hazardous environments unless it has been properly equipped for the hazard.

2.11 Protective gloves, breathing masks, and other protective clothing required for the material being conveyed must be worn when using the pickup wand and when changing the cartridge filter to prevent over exposure to the material.

2.12 It is ultimately the operator's responsibility to implement the above-listed precautions and ensure proper use of the equipment. Keep these instructions and list of warnings with your machines at all times. **WORK SAFELY AT ALL TIMES**.

3.0 General Description and Installation

Designed for in-plant handling of most dry solids and powders, Hapman Mini-Vacuum conveyors deliver high performance, ultra-compact size, and cost effectiveness. Operating under negative pressure, or "vacuum"; material is drawn directly into the conveying line by airflow via pick up nozzle or hopper. Product loss and dusting is minimal as accidental leakage is drawn inward, providing maximum safety in handling toxic products.

The Hapman Mini-Vacuum system is particularly adaptable to providing material pick up from single or multiple hoppers, or open containers and delivering to one discharge point. Material laden air is transported through the line by induced air flow created by a positive-displacement blower or regenerative centrifugal fan. Material/air separation and discharge is accomplished by Hapman's compact receiver unit. The Hapman receiver provides highly-efficient final filtration through application of cartridge-type filtration technology.

Available in both standard and custom arrangements, each Hapman pneumatic conveyor system is designed for your specific application. The success of your conveyor installation will be dependent on understanding the operation of each component and its operation.

Please review the following guidelines when installing your pneumatic conveyor system. In addition, carefully review specific construction drawings that have been prepared by Hapman engineers for your applications.

TYPICAL SYSTEM COMPONENTS
Figure 7

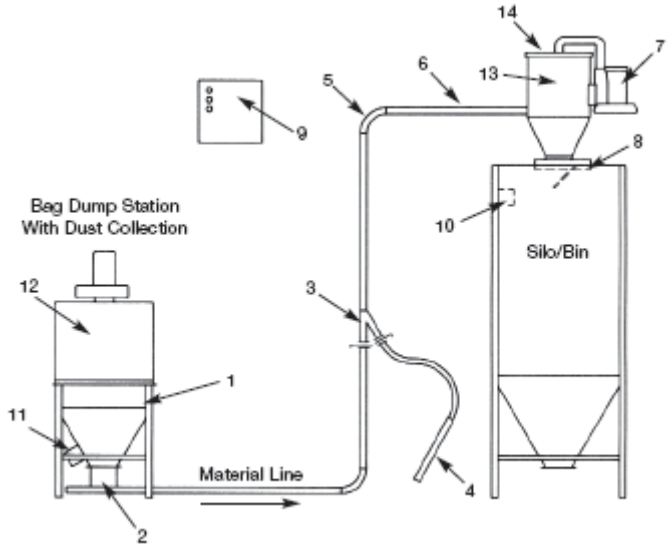

1. Air Intake
2. Self-Feeding Material Intake
3. Y Branch
4. Pick-Up Wand
5. Elbow
6. Transport Pipe
7. Regenerative Blower
8. Discharge Gate
9. Control Panel
10. High Level Sensor-Silo
11. Low Level Probe-Material Inlet
12. Bag Dump Station
13. Filter Receiver
14. Receiver Lid

4.0 Hapman Pneumatic Conveyor Equipment

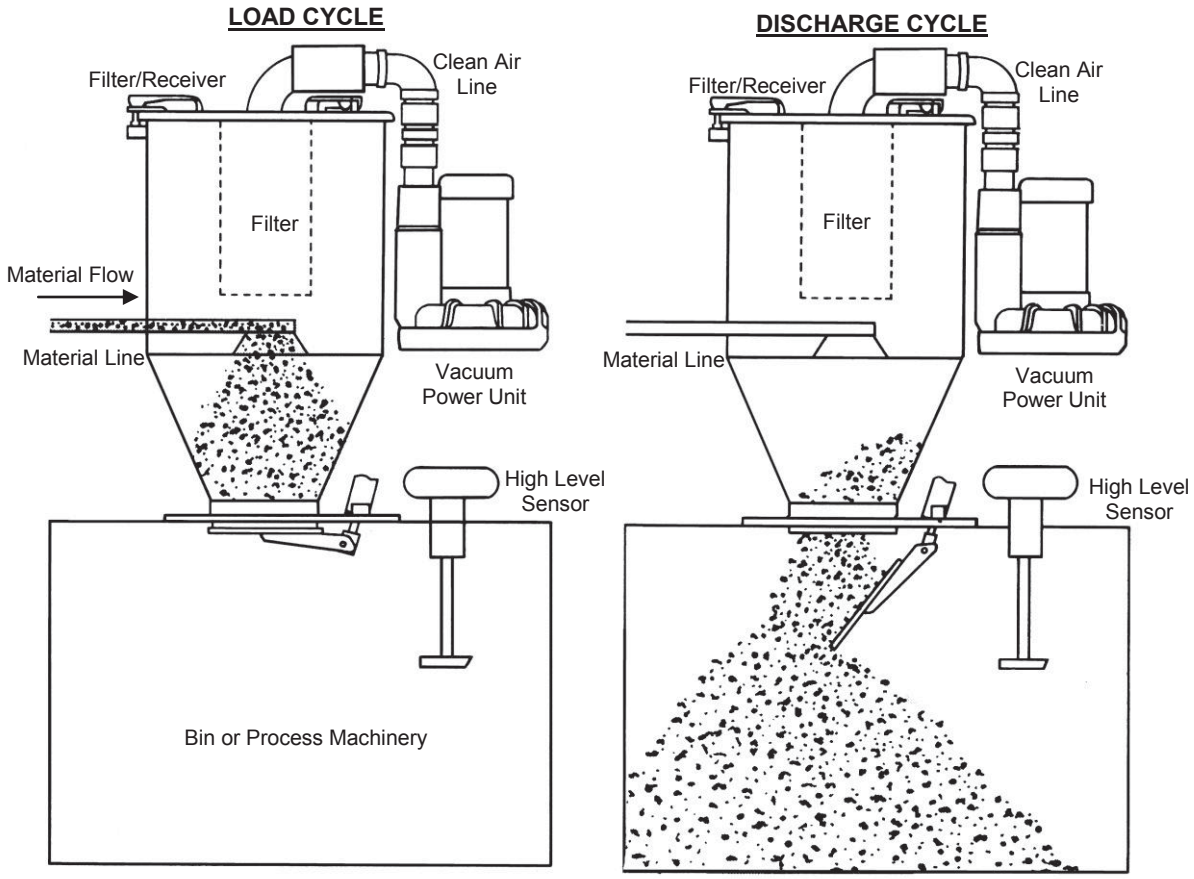

Hapman's miniature filter receiver units provide efficient separation and collection of air-borne solids that have been introduced into the conveying system. The air/material mixture enters the receiver plenum chamber and immediately begins to decelerate. Larger particles quickly fall from the air stream and collect in the receiver. Smaller particles remain entrained in the air flow, migrating upward and collecting on the filter media. The filtered air passes up through the receiver "lid" and continues to the vacuum blower inlet.

Collected dust begins to densify on the filter membrane. A solid state timer periodically energizes a solenoid operated air valve resulting in a burst of compressed air directed into the inside of the cartridge filter. The compressed air expands inside the filter and provides a momentary reverse air flow across the filter membrane. This dislodges the collected dust which falls into the receiver. The filter is now clean and resumes collecting dust from the conveying air stream.

NOTE: The filter cartridge, when reversed pulsed, may contain a significant amount of the material being conveyed. This material accumulates within the filter pleats and on end-caps. It is normal for the cartridge to look "dirty" as the material buildup densifies. This buildup of densified conveyed material actually aids in the air/material separation. The Hapman MiniVac™ receiver includes a side access door for filter access and ease of cleaning. See Major Features Index on Page 4.

Note: When preparing to clean the filter receiver, use extreme care when removing the filter from the filter receiver. Do not rest the filter cartridge on the edge of the receiver housing. The cartridge's delicate filter membrane will be damaged by the exposed receiver housing edge.

4.1 Major Components of Filter/Receiver Unit Include:

Discharge Gate

Standard filter receivers are equipped with a cylinder operated "dump" gate to periodically empty the filter plenum of collected material.

During normal operation, the discharge gate is in the closed position, sealing the receiver chamber. Once closed, a vacuum develops inside the receiver causing the material/air to flow through the transport line. At the beginning of the cycle, a solid state timer (located in the operators control station) energizes. This timer is adjustable; however, the factory setting is 4 seconds.

When the timer de-energizes, two events simultaneously occur. First, the vacuum breaker valve (located on blower inlet) opens and relieves the vacuum from the receiver chamber. In the absence of vacuum, material ceases to flow through the transport line. Next, the discharge gate is signaled to open allowing collected material to discharge from the receiver. After 4 seconds, the discharge gate is signaled to close and prepare for the next conveying cycle. The vacuum breaker valve is held open by a delay timer for a short time period to allow the dump gate to fully close. When the delay timer de-energizes, the vacuum breaker valve is closed and the convey cycle is repeated.

Solenoid Cabinet (Dump Gate model only)

The discharge gate and vacuum breaker valve are cylinder operated and controlled via electrically operated solenoids (110VAC). These solenoids, as well as the filter cleaning pilot solenoid, are mounted and wired inside a NEMA 4 enclosure mounted to the filter/receiver housing. Field wiring and compressed air connections are furnished for ease of installation.

NOTE: Solenoids are equipped with flow control fittings to control the Speed of the cylinder operated discharge gate.

Rotary Discharge Valve

An optional rotary discharge valve may be installed in lieu of a cylinder operated dump valve. This effectively increases the net conveyor capacity by eliminating the delay period necessary for dump gate discharge. The application of a rotary valve is usually limited to fine, free-flowing materials.

The rotary discharge valve provides an airlock seal between the interior of the filter/receiver chamber (under vacuum) and the discharge chute or hopper vessel (ambient pressure).

Rotary valves are normally supplied with 1/2 HP gear motor arrangement including shear-pin overload.

5.0 Material Feed Devices

5.1 Flooded Well Inlet

The Hapman flooded well inlet provides a controllable means of introducing most free-flowing solids into the conveying air stream. The inlet is attached to the discharge of material supply hoppers and can be fitted with a cylinder or manually operated shut-off gate to allow several feed points to be arranged on a single vacuum conveyor line.

Figure 11

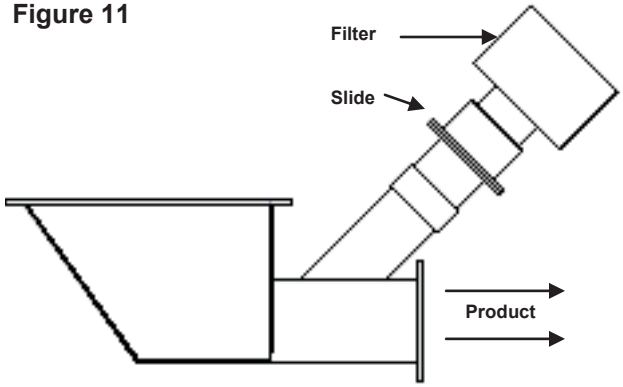

Its design directs material to the bottom of the pneumatic conveyor line where it is swept away by the conveying air stream. Volumetric feeding is achieved by the natural angle of repose of the material. Adjustable flow rates are achieved by a movable slide. See Figure 11.

5.2 Rotary Inlet Valve (Figure 12)

Rotary valves are often utilized to provide more positive feed control into pneumatic conveyors. This type of valve more readily controls fluid material and prevents surging or flooding the conveyor line. See Figure 12.

5.3 Manual Pickup Wand (Figure 13)

Material can be unloaded from open containers using a hand-held pick-up lance or wand. The wand is constructed of concentric steel tubes which maintain infeed air flow when the wand top is buried deep into the material container. The wand can be adjusted to provide optimum material-to-air ratios to increase or decrease conveying rates as required. See Figure 13.

Figure 12
ROTARY INLET VALVE

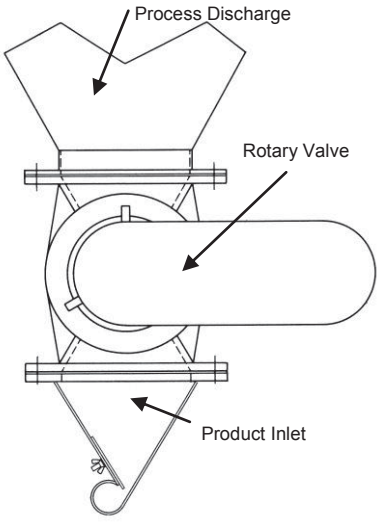

Figure 13
PICKUP WAND

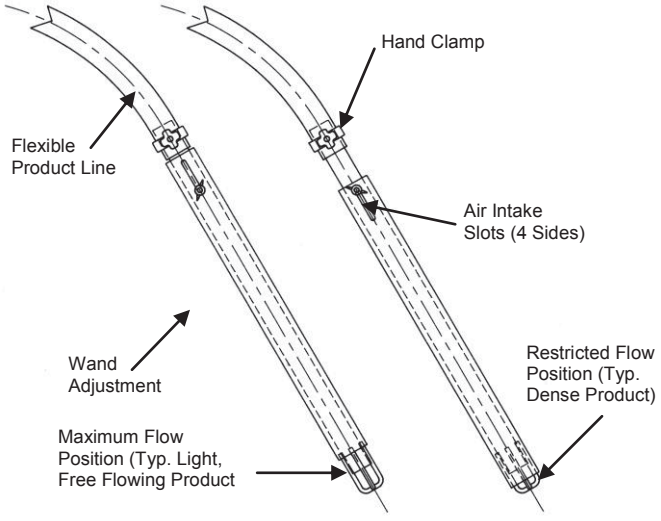

6.0 Blower Packages

6.1 Regenerative

The regenerative blower utilizes a motor driven impeller that draws in air from the inlet port and then by centrifugal force, accelerates the air out through the discharge.

The regenerative blower works in principle by utilizing an annular shaped housing that turns air back to the base of the following blades where it is again hurled outward. Each regeneration imparts additional pressure to the air until it reaches the discharge where air is then diverted out of the blower.

Each blower is assembled as an integral part of the pneumatic receiver. A quick disconnect-cam/lever type coupling is furnished on the blower inlet. This coupling allows the vacuum line-top cover assembly to be easily removed for inspection of the filter cartridge. See Figure 14.

Figure 14

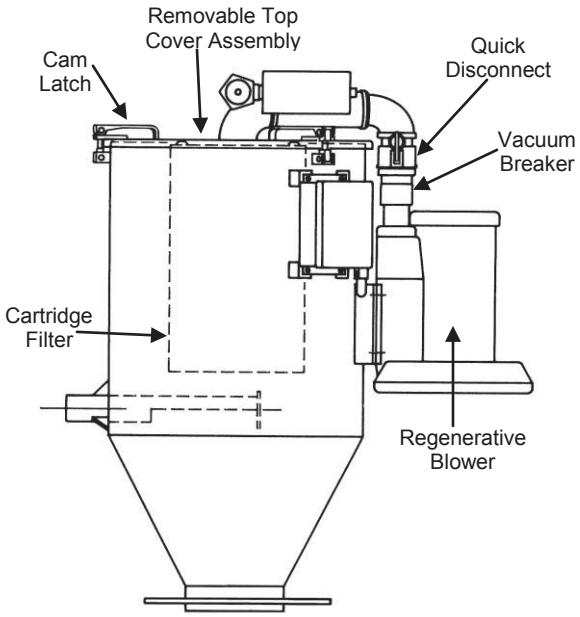

NOTE: Blower motor must be wired for clockwise rotation and should be verified before running the unit.

6.2 Positive Displacement

A positive displacement system utilizes a rotary blower that is either belt driven or direct coupled to the drive motor. The blower has two impellers rotating in opposite directions. As each impeller lobe passes the blower inlet, air is trapped and routed around the case and to the blower outlet.

Positive displacement blower systems are normally furnished with inlet and discharge silencers and a foam lined enclosure that will effectively dampen the noise level. A spring loaded vacuum relief valve is furnished in the clean air-vacuum line. The relief valve is factory set at a predetermined value.

The blower system may also be furnished with an auxiliary air inlet valve (manual ball valve). This valve can be used to bleed air into the clean air side of the receiver thus reducing both vacuum and system capacity.

A positive displacement blower system is normally located remote from the pneumatic receiver. Clean air-vacuum piping is furnished either in random lengths or cut to length as dictated by job requirements. A quick disconnect cam/lever type coupling is furnished at the filter receiver-top cover assembly. This coupling allows the vacuum line-top cover to be easily removed for inspection of the filter cartridge. See Figure 16.

Figure 16
POSITIVE DISPLACEMENT SYSTEM

1. Inlet Silencer
2. Auxiliary Air Inlet Valve
3. Vacuum Relief Valve
4. Positive Displacement Blower
5. Discharge Silencer
6. Drive Motor
7. V-Belt

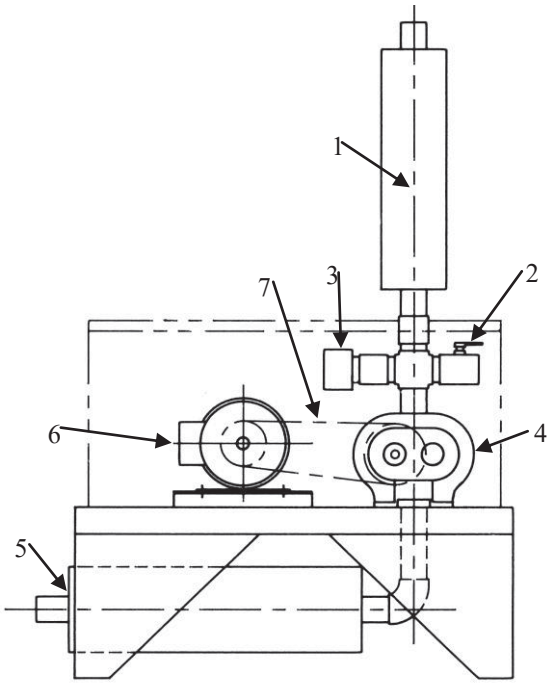

7.0 Electronic Control Systems (Figure 17)

Inlet Rotary Timer:
Delays the starting of the inlet rotary valve after the pneumatic conveyor has started.
Typical setting = 5 seconds

Conveyor Delay Timer:
Delays the starting of the conveyor if a rotary valve is located on the discharge
Typical setting = 3 Seconds

Fill Timer:
When a dump gate is purchased this timer is used to set the fill time in between dumps.
Typical setting = 30 seconds

Dump Timer:
When a dump gate is purchased this timer is used to set the dump duration time.
Typical setting = 4 seconds

Vacuum Break Timer:
Used to set the amount of time the vacuum is vented to atmosphere.
Typical setting is 2 seconds longer then dump timer setting.

Pulse#1 on Timer:
Sets the duration of time an air pulse is delivered to clean filter#1.
Typical setting = 0.5 seconds

Pulse#1 off Timer:
Sets the amount of off time between each pulse for filter#1.
Typical setting = 30 seconds

Pulse#2 on Timer:
Sets the duration of time an air pulse is delivered to clean filter#2.
Typical setting = 0.5 seconds

Pulse#2 off Timer:
Sets the amount of off time between each pulse for filter#2.
Typical setting = 30 seconds

Pulse#3 on Timer:
Sets the duration of time an air pulse is delivered to clean filter#3.
Typical setting = 0.5 seconds

Pulse#3 off Timer:
Sets the amount of off time between each pulse for filter#3.
Typical setting = 30 seconds

Pulse#4 on Timer:
Sets the duration of time an air pulse is delivered to clean filter#4.
Typical setting = 0.5 seconds

Pulse#4 off Timer:
Sets the amount of off time between each pulse for filter#4.
Typical setting = 30 seconds

High level discharge Timer:
This timer is used when there is a high level sensor located at the discharge and when product falls below the high level this timer will start and once expired will restart the pneumatic conveyor
Typical setting = varies per receiver.

Discharge off delay Timer:
When a discharge rotary valve is purchased this timer is used to set the amount of time the discharge rotary valve continues to run after the pneumatic conveyor shuts off allowing the receiver to be emptied
Typical setting = 5 seconds

Clean out Timer:
When a dump gate is purchased this timer is used to clean out the pneumatic conveyors pipes in between dumping the product. This timer is only needed when there is long vertical drops.
Typical setting = 5 seconds.

Note:
Depending on options purchased only some of these 1imers will be visible when shipped to the end user.

How to enter values into a Timer:
When the auto mode is showing press right arrow to first Timer then press the 0 key until desired digit then enter correct value. If there is a Timer that you do not want to adjust then just press the enter key then the right arrow.

Isolate and lock power source prior to inspecting control panel wiring. Inspect control panel wiring for tightness

FIGURE 17
PNEUMATIC RECEIVER PLC FLOW DIAGRAM

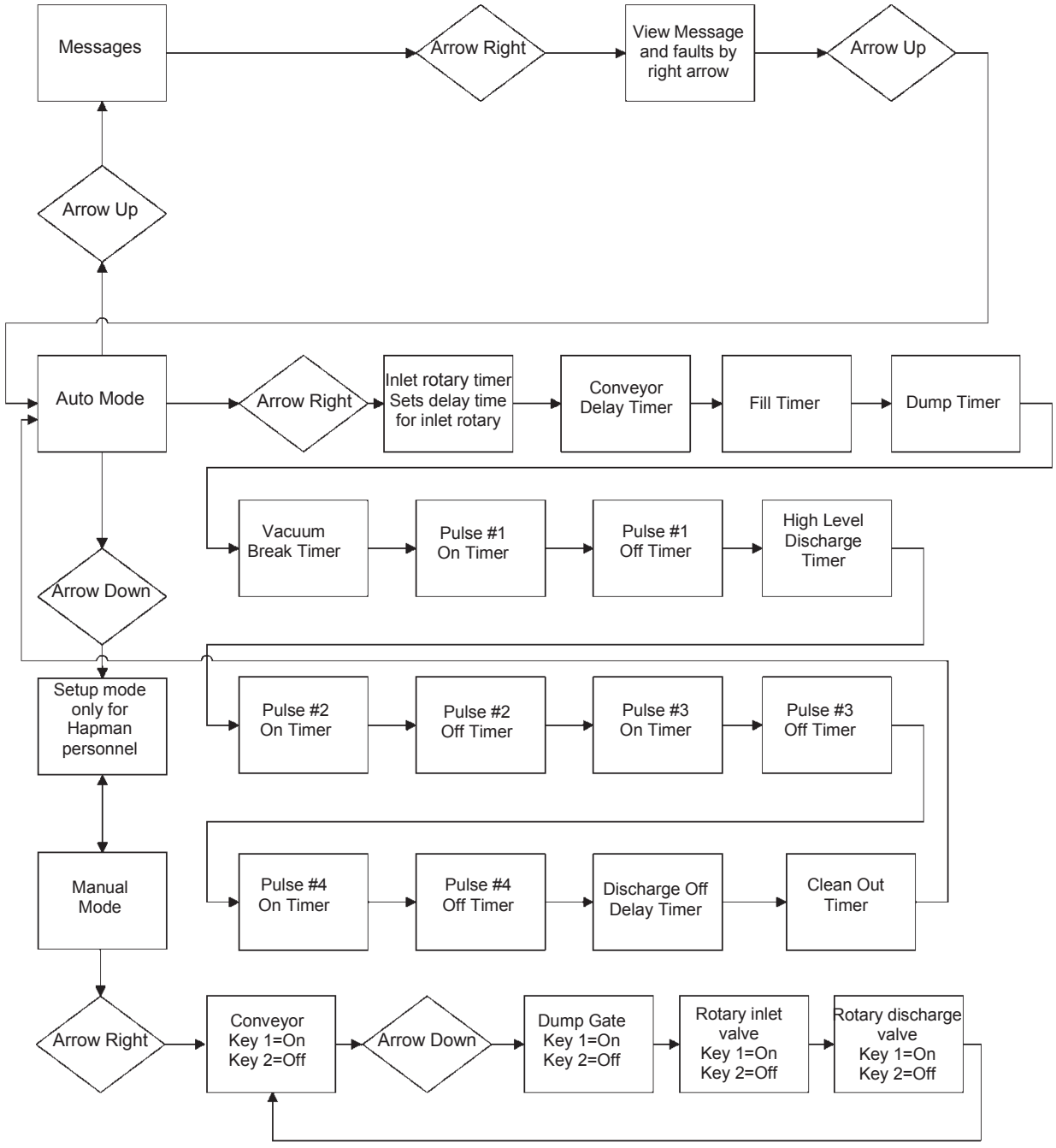

8.0 Installation Instructions

8.1 Refer to Hapman general arrangement drawings when installing air-handling piping. The material handling capacity of your conveyor system has been calculated based upon a pre-determined number of straight lengths and bends of piping. Deviations or additions to the layout may impact the performance and capacity of the conveyor system. Piping runs should be kept in a horizontal and vertical axis at all times. Avoid sloped routing (upward or downward).

8.2 Inspect your equipment for loosening and breakage that may occur during shipment.
a. Inspect compressed air connections on the filter/receiver for tightness.
b. Check the tightness of the cartridge filter in the filter/receiver chamber.

8.3 Compressed air requirements:
a. Install 1/2" (minimum) air supply line to filter/receiver unit.
b. Compressed air should be 60-80 PSI; the filter/receiver will consume 2-3 SCFM of air (per unit maximum).

NOTE: Install regulator should plant air exceed 90 PSI.

c. Compressed air should be free from water, oil and solids. Oil will eventually plug the filter media and solids may cause solenoid malfunctions.

NOTE: Install a mist eliminator if the plant air quality is poor.

d. If pneumatic conveyor is installed outdoors or in unheated areas, the compressed air must be dried to appropriate dew point to prevent air lines from freezing.

8.4 Control System:

Isolate and lock power source prior to inspecting control panel wiring. Inspect control panel wiring for tightness. Verify timer settings (see illustrations for correct settings), and reinsert timers and relays that may have loosened during shipment.

8.5 Motor-Driven Devices: Check for correct rotation as indicated by the "rotation" arrow on housings of vacuum blower, fan or rotary valve.

8.6 Re-inspect conveyor piping for tightness, rigidly and leaks. Be sure that all piping connections have static grounding straps correctly installed.

8.7 Adjust, if necessary, flow control valves controlling speed of cylinder operated discharge gate. Gate should not slam open or closed.

8.8 Check lubrication levels, motor driven devices such as gearboxes and positive displacement blowers. Follow suggested lubrication inspection and replenishment according to manufacturer's instructions.

9.0 General Maintenance

An air conveying system that has been properly engineered, checked out, and adjusted for start-up is subject to little trouble. A regular maintenance schedule will help prevent malfunctions.

9.1 Weekly

1. Inspect blower discharge air for presence of dust, indicating filter failure.
2. Inspect compressed air line filter/oil separators for accumulation of oil, water and debris.
3. Check for smooth operation of air operated devices such as slide gates, discharge gates and vacuum breakers.

9.2 Monthly

1. Remove receiver lid and inspect for cartridge filter wear and excessive product buildup on filter media.
   Remove excess product buildup as necessary.
2. Check lubrication levels of positive displacement blower and gear boxes.
   Consult Appendix for further lubrication information.
3. Inspect conveyor piping for leaks and wear.
4. Energize pulse timer circuit (with blower off) and observe operation of the filter cleaning mechanism.

10.0 Replacement Parts for Receiver with Rotary Discharge Valve

When calling or writing for replacement parts, please reference the equipment serial number embossed on the Hapman nameplate affixed to equipment. See back of this manual for phone number and address of Hapman Service.

Hapman Filter Receivers – Rotary Discharge Valve Model "R"					
Item No.	Description	Model			
		16R/20R/24R	30R	36R	42R
1	Blower Assembly	1	1	1	1
2	Filter Cartridge	1	2	3	4
3	Pulse Air Valve	1	2	3	4
4	Rotary Valve	1	1	1	1
5	Solenoid NC 2-Way (Pulse)	1	2	3	4

NOTE: For Replacement Parts and Service for the Filter Receiver Discharge Gate See Page 18

Figure 27
PARTS DIAGRAM FILTER RECEIVER WITH ROTARY DISCHARGE VALVE

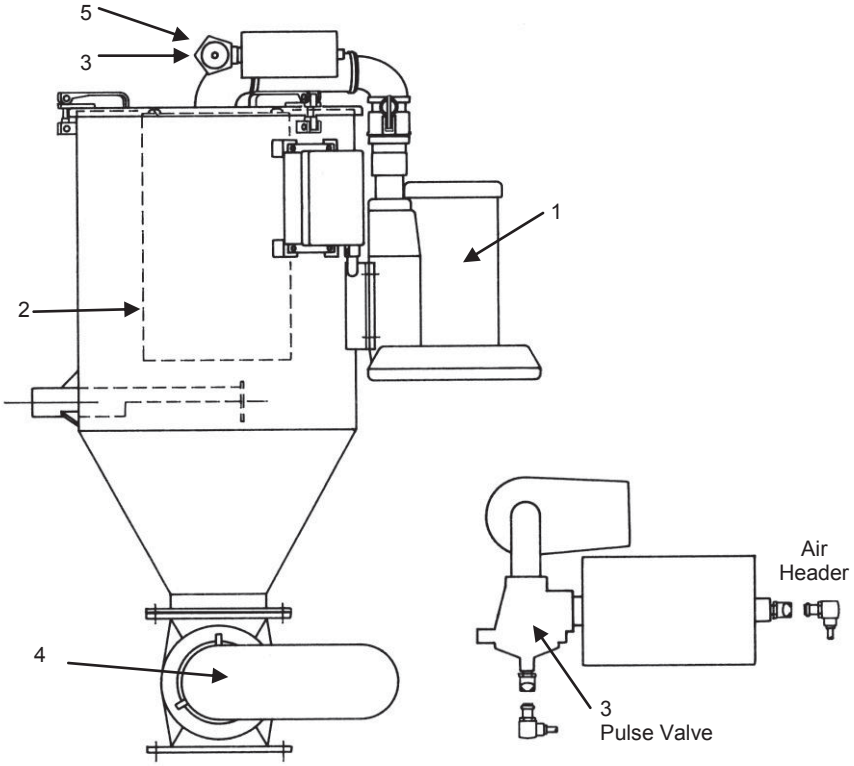

Replacem

When calling or writing for replacement parts, please reference the equipment serial number embossed on the Hapman nameplate affixed to equipment. See back of this manual for phone number and address of Hapman Service.

Hapman Filter Receivers –Discharge Gate Model "D"					
Item No.	Description	Model			
		16D / 20D / 24D	30D	36D	42D
1	Blower Assembly	1	1	1	1
2	Filter Cartridge	1	2	3	4
3	Pulse Air Valve	1	2	3	4
4	Discharge Gate Cylinder	1	1	1	1
5	Vacuum Breaker Cylinder	1	1	1	1
6	Solenoid NC 3-Way (Dump gate, vacuum break)	3	3	3	3
7	Solenoid NC 2-Way (Pulse)	1	2	3	4
8	Discharge Gate	1	1	1	1

Note:
For Replacement Parts and Service for the Filter Receiver Rotary Discharge Valve See Page 17

Figure 28 - PARTS DIAGRAM FILTER RECEIVER WITH DISCHARGE GATE

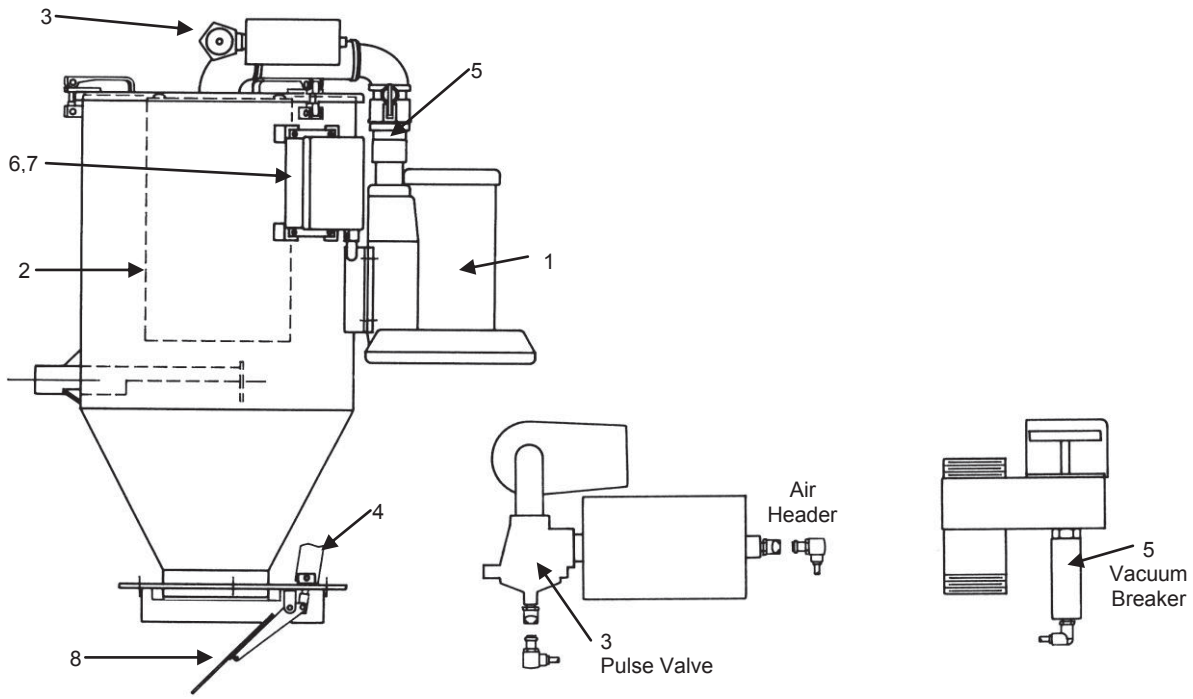

Record of Important Information for This Machine

Serial Number_____

Model Number_____

For Operational Information in This Plant Contact

Name_____

Department / Phone Number_____

Notes

_____

_____

_____

_____

_____

_____

_____

_____

_____

_____

HAPMAN

5944 East N Avenue • Kalamazoo, MI 49048

800-427-6260 • Ph: 269-343-1675 • Fax 269-349-2477 • www.hapman.com

LEFT BLANK

4 – DETAILED TECHNICAL DOCUMENTATION

4.3 – SHOP DRAWINGS

4.3.7 – $KMnO_4$ DOSING SKID

LEFT BLANK

Project name:	AMARUQ
Project#:	5000218009
Document #:	SPK_0007_PCH
by:	GH
chkd:	GP
appvd:	CB

SUBMITTAL PACKAGE

KMnO4 DOSING SKID

This page is intentionally left blank

Project name:	AMARUQ
Project#:	5000218009
Document #:	SPK_0007_PCH
by:	GH
chkd:	GP
appvd:	CB

KMnO4 DOSING SKID

PROCESS DATASHEET

OIM manual section: 4.3.7.1

REFER TO 5000216065_PSDS_0007_PCH_VWT

This page is intentionally left blank

Project name: AMARUQ

Project#: 5000218009

Document #: SPK_0007_PCH

by: GH

chkd: GP

appvd: CB

KMnO4 DOSING SKID

GENERAL ARRANGEMENT DRAWING

OIM manual section: 4.3.7.2

REFER TO 5000218009_GA_0007_PCH_VWT

This page is intentionally left blank

Project name: AMARUQ

Project#: 5000218009

Document #: SPK_0007_PCH

by: GH

chkd: GP

appvd: CB

KMnO4 DOSING SKID

PUMP(S)

OIM manual section: 4.3.7.3

This page is intentionally left blank

CS-999-003 : Identification sheet

VWTC PROJECT NUMBER:	5000218009	REV:	1
PROJECT NAME:	AEM AMARUQ	SUBMITTED TO (COMPANY):	AGNICO EAGLE MINES
ENGINEER:	Gabriel Hébert	SUBMITTED TO (RESPONSIBLE)	
PROJECT MANAGER:	Clément B	PROJECT NUM REFERENCE.:	
PHONE NUMBER:		LOT NUMBER:	

SUPPLIER	EQPT CODE	EQPT TAG NO	DIA	DESCRIPTION	INFO 1	INFO 2	INFO 3	APPLIC.	NOTE	REV
PULSAFEEDER	ST-999-003	P9-591		KMnO4 METERING PUMP	KMnO4 Shadow pumps // 55BF-EZ000234U1 // 55BF Mechanical Diaphragm, 316/316L Stainless Steel [316], 400 LPH, 75 PSIG, 0000140-MM Diaphragm, NPT Connections, Manual Stroke Length Control, Stock Motor, 1750 RPM, 1 Horsepower, EAR99			KMnO4 DOSING SKID		
PULSAFEEDER	ST-999-003	P9-592		KMnO4 METERING PUMP	KMnO4 Shadow pumps // 55BF-EZ000234U1 // 55BF Mechanical Diaphragm, 316/316L Stainless Steel [316], 400 LPH, 75 PSIG, 0000140-MM Diaphragm, NPT Connections, Manual Stroke Length Control, Stock Motor, 1750 RPM, 1 Horsepower, EAR99			KMnO4 DOSING SKID		

This page is intentionally left blank

PULSAFEEDER®
ENGINEERED PRODUCTS

PULSAR Shadow®

The PULSAR Shadow® sets a new standard for the mechanically actuated diaphragm metering pump. It features rugged and reliable construction, delivering superior value. The Shadow is easy to operate and simple to maintain. The Shadow HYPOPump configuration is the ideal choice for sodium hypochlorite or other off-gassing and difficult to handle fluids.
It is commonly used in water & wastewater treatment.

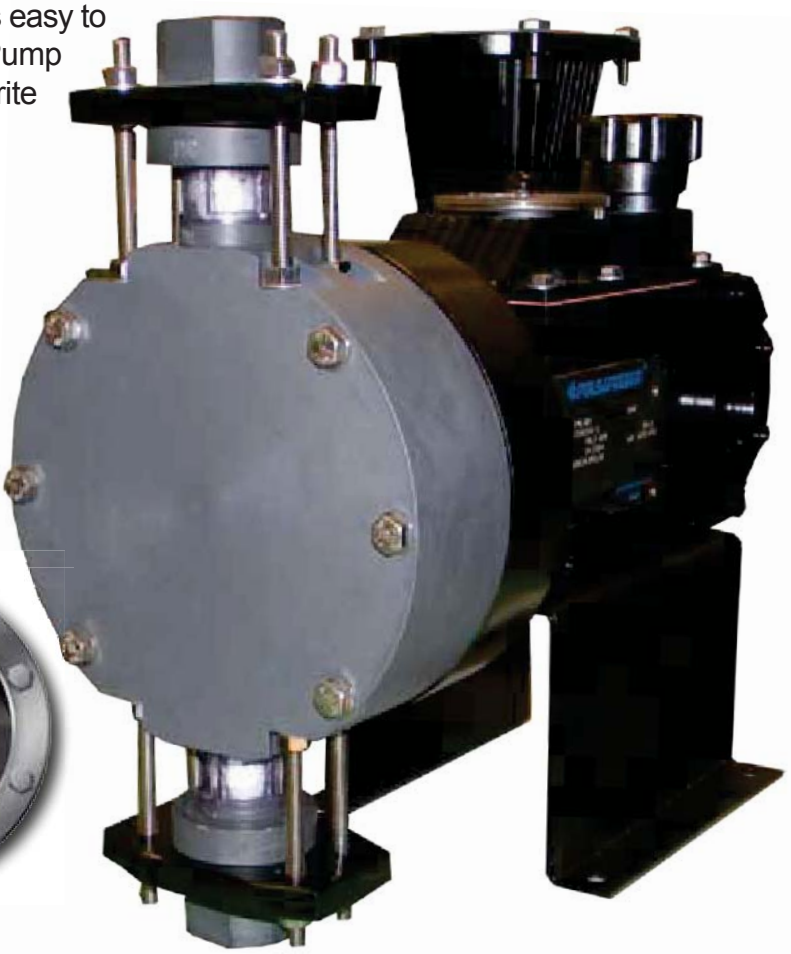

Applications
sodium hypochlorite injection, disinfection, pH and odor control

Flow
up to 170 gph (643 lph)

Pressure
up to 305 psi (21 bar)

Temperature
up to 150°F (65°C)

5 YEAR DRIVE TRAIN WARRANTY

CE • ATEX

Mechanical diaphragm metering delivers more than you expect.

PULSAR Shadow HYPOPump

- The solution for injection of sodium hypochlorite and other off gassing fluids
- Fully integrated closed loop design, no external valves or piping required
- Balanced, low stress, dynamic seal ensures extended operating life
- 3 year HYPO valve warranty

Features & Benefits

- Mechanically actuated diaphragm for simple maintenance
- Four bolt tie bar design provides ultimate resistance to piping moments and forces
- Three component check valves for controlled rise, assuring proper valve operation, extende valve seat life, and metering accuracy
- Manual self-locking stroke length adjustment with resolution of 0.5% for set point accuracy

Custom Engineering

- Compatible materials: PVDF
- Multiplex configurations
- Manual Degass Valve
- Custom electronic controls
- Chemical feed systems
- Application consulting

Specifications

Max temp	150°F (65°C)
Min temp	40°F (4.4°C)
Accuracy	±2%
Standards	CE,

The dimensions given may differ depending on pump configuration.

For More Information, Contact Your Authorized Pulsafeeder Engineered Products Representative

VISIT OUR REPRESENTATIVE LOOKUP

Pulsafeeder Engineered Products
2883 Brighton Henrietta Town Line Rd.
Rochester, NY 14623
Phone: +1 (585) 292-8000
pulsa@idexcorp.com • **pulsa.com**

Pulsafeeder is an ISO 9001:2008 and 14001:2004 certified company.

IDEX FLUID & METERING

shdwspec_Rev0814

Spec Pulsafeeder.
Get more than you expect.

© Copyright 2014 Pulsafeeder. All rights reserved.

PULSAR SHADOW SERIES

SPECIFICATION
DATA SHEET

PULSAFEEDER® ENGINEERED PRODUCTS
2883 BRIGHTON-HENRIETTA TL RD.
ROCHESTER, NEW YORK 14623 USA
585-292-8000 FAX 585-424-5619

CUSTOMER	END USER	SERIAL NO.	DATE
VEOLIA WATER TECHNOLOGIES CANADA INC	VEOLIA WATER TECHNOLOGIES CANADA INC	18EZ000234U1N1-2	4/19/2018

MODEL NO: 55BF	QTY: 2	REF. ID NO.: SQEZ000234_1.1.1	REV: 1	BY: IPASS2			
PURCHASE ORDER NO.:	ITEM REFERENCE:						
JOB REFERENCE:	PUMP TAG:						
ITEM NUMBER: 55BF-EZ000234U1	KOPKIT NUMBER: KK5BF-53631-AATY	DIM DWG. NO.: 25969_000.PDF	FLOW CURVE NO.: EZ000234U1~1~PFC~000~PMP.PDF				

JOB CONDITIONS							
LIQUID: KMNO4 - POTASSIUM PERMANGANATE				FLOW MAX: 400.0000 LPH		FLOW MIN: 0.00 LPH	
LIQUID TEMPERATURE: 75 F	OPERATING PRESS. (MAX) (1): 75.00 PSIG			SPECIFIC GRAVITY: 0		PERCENT SOLIDS: 0	
VAPOR PRESSURE @ TEMP.: 0 PSIA	SUCTION PRESSURE (2): PSIG			VISCOSITY @ TEMP: 0 CP		SOLIDS SIZE (MICRON): 0	
DUTY CYCLE: CONTINUOUS	ATMOSPHERIC PRESSURE: 14.7 PSIA			NPSH: 5 PSIA			
PULSAR NOTES: (1) MUST BE AT LEAST 5 PSI (0.35 BAR) ABOVE SUCTION PRESSURE, (2) MUST BE AT LEAST 5.0 PSIA (0.35 BAR(A)) AND 3 PSI (0.21 BAR) ABOVE FLUID VAPOR PRESSURE.							
COMMENTS:							

SPECIFICATIONS							
BUILD TO API STDS: NO	HIGH VISCOSITY: NO	DISH SIZE: CF	MULTIPLEX ARRANGEMENT: SIMPLEX				
RATED CAPACITY: 507.24 LPH	VALVE TYPE: BALL	GEAR RATIO: 12.5:1	PISTON SIZE: NA				
RATED PRESSURE: 75 PSIG	SUCTION VALVE QTY: 1	SUCTION VALVE SIZE: 20 MM	MECH. DIAPHRAGM SIZE: 140 MM				
HYD. BY-PASS VALVE SET:	DISCHARGE VALVE QTY: 1	DISCHARGE VALVE SIZE: 20 MM	STROKE LENGTH: 5 MM				
SUCTION CONNECTION: MNPT	SUCTION CONNECTION SIZE: 1.5 INCH	SUCTION FLANGE RATING:	STROKE RATE: 140 SPM				
DISCHARGE CONNECTION: FNPT	DISCHARGE CONNECTION SIZE: 1 INCH	DISCH. FLANGE RATING:	CE/CE-ATEX: NONE	TRCU010: NO			
HYD/GEAR OIL: PULSALUBE ULTRA 8GS/PULSALUBE PREMIUM 9M	GEAR OIL: PULSALUBE ULTRA 8GS	GEARBOX MTL: ALUMINUM	TRCU012: NO				
COMMENTS:							

MATERIALS							
VALVE BALL/DISC: 316 SS	VALVE GASKETS: PTFE	VALVE CAP: 316/316L	VALVE GUIDE: 316/316L				
VALVE SEAT: 316/316L	VALVE SEAT TYPE: HARD	REAGENT HEAD: 316/316L	PASSIVATE:	FLANGE:			
DIAPHRAGM: PTFE/HYP	DIAPHRAGM TYPE: MECH	DIAPHRAGM GASKET:	HARDWARE (HEAD/TIEBAR): STAINLESS				
DOUBLE DIAPHRAGM: NO	INTERMEDIATE HEAD:	INTERMEDIATE DIAPHRAGM:	INTERMEDIATE FLUID:				
MATERIALS NOTE: THE END USER, WITH KNOWLEDGE OF PUMPED CHEMICAL, OPERATING AND ENVIROMENTAL CONDITIONS, IS RESPONSIBLE FOR THE FINAL SELECTION OF ALL RELATED MATERIALS.							
COMMENTS:							

LEAK DETECTION			
SETUP:	OPTION:	TYPE:	
ENCLOSURE:	VOLTAGE:	OPTION:	
COMMENTS:			

FEATURES		
DEGAS VALVE:		HYPO SYSTEM VOLTAGE:
SPLASH GUARDS: NO	PUMP BASE MATERIAL: STEEL	SPECIAL OPTIONS:

CONTROLS							
TYPE: MANUAL STROKE LENGTH CONTROL	DEVICE: STROKE LENGTH CONTROLLER	ITEM NUMBER:					
VOLTAGE:	INPUT SIGNAL:	OUTPUT SIGNAL:	ENCLOSURE:				
ENGINEERING NO.:	WIRING NO.:	EUROPEAN RATING:	REMOTE CABLE:				
OP STATION:	METER READ OUT:	OP STATION ENCLOSURE:	OP PUMP MOUNT:				
OP STATION-PART NO.:	OP STATION INST DWG. NO.:	OP STATION WIRING NO.:					
PNEUMATIC SERVICE TYPE:	RATIO CTL.:	TRANSDUCER:	REMOTE LOAD STN:	AUTO/MAN:	FILTER REG.:		
COMMENTS:							

DRIVE				
CURRENT:	VOLTAGE:	DRIVE ENCL.:	AGENCY APPROVAL:	
INPUT SIGNAL:	OUTPUT SIGNAL:	WIRING DIAGRAM:		

MOTOR							
MOTOR INFO: PUMP COMPLETE WITH MOTOR							
POWER: 1.0 HP	VOLTAGE: 575	HZ: 60	PHASE: 3	TYPE: AC	SPEED: 1750	FRAME: 143TC	
MANUFACTURER: BALDOR	MOTOR NO.: TSEZ000234-002	ENCLOSURE: TOTALLY ENCLOSED	MOTOR TYPE: STANDARD EFFICIENCY				
DESCRIPTION: BALDOR, XP, DIV 1, CLASS II, GROUP F&G, 575V, 60HZ, 3PH, INVERTER DUTY VEM7014T-5							
MOTOR NOTE: SPEED IS NOMINAL FULL LOAD. ACTUAL NAMEPLATE SPEED MAY VARY BY +/- 3% DEPENDING ON MOTOR MANUFACTURER. CONSULT MOTOR SPECIFICATION FOR ACTUAL NAMEPLATE RATINGS.							
COMMENTS:							

PAINT					
MFG & BRAND: DEVOE DEVRAN 224V	TOP COAT: TWO-PART EPOXY	TOP COAT COLOR: BLACK	PAINT THICKNESS: SINGLE (1.5 MILS DFT)		
INTERMEDIATE COAT:	PRIMER COLOR:	PAINT WET END: NO	SAND BLAST:	DFT CERT.:	
COMMENTS:					

TEST						
STANDARD TEST:	PERFORMANCE (1-PT): YES	CALIBRATION (3-PT): NO	HYDROSTATIC (15MIN): NO	WITNESSED: NO	JOB INSPECTION: NO	
API 675 TESTING (W=WITNESSED)	PERFORMANCE [STROKE] (3-PT):	REPEATABILITY (+2-PT):	HYDROSTATIC (30MIN):	SOUND LEVEL:	JOB INSPECTION:	
	PERFORMANCE [SPEED] (3-PT):	HIGH DISCHARGE PRESURE:	MECHANICAL RUN:	CHLORIDE CONT.:	NPIP TEST:	
MILL (MTL) CERTS: NO	POSITIVE MTL. ID (PMI): NO	CERT. OF CONF. NO	RADIOGRAPHIC-PROCESS SIDE:	RADIOGRAPHIC-DRIVE SIDE:	LIQUID PENETRANT:	
COMMENTS:						

DOCUMENTATION											
API 675 CERTIFICATE: NO		TEST REPORT: YES		MILL (MTL) CERTIFICATE: NO		CONFORMANCE CERT.: NO		MANUAL (IOM): YES	
PUMP DIM DRAWING: NO	MOTOR DIM DRAWING: NO	FLOW CURVE: NO		PMI TEST CERTIFICATE: NO		CERTIFICATE OF ORIGIN: NO		ISO CERTIFICATES: NO	
PARTS LIST: NO	MOTOR WIRING DIA.: NO	CALIBRATION CURVE: NO		MTL. COMPLIANCE CERT.: NO		ACCESSORY DIM DRAWING: NO		PROCESS DOCUMENTS: NO	
KOPKIT INFORMATION: NO	CONTROL WIRING DIA.: NO	HYDRO TEST REPORT: NO		SPEC. COMPLIANCE CERT.: NO		ACCESSORY CUT SHEETS: NO		WEB LINKS: NO	

OTHER					
EXPORT CONTROL CLASS: EAR99	EXP. LICENSE CANDIDATE:	6-MONTH STORAGE:	PACKING: STANDARD	OIL:2/0 KK: 1	
COMMENTS:				ACC: NO TYP: C	

4E20AC73-9B75-4ECD-9C4C-6C0EAA14244C

18EZ000234U1N1-2

18EZ000234U1N1-2

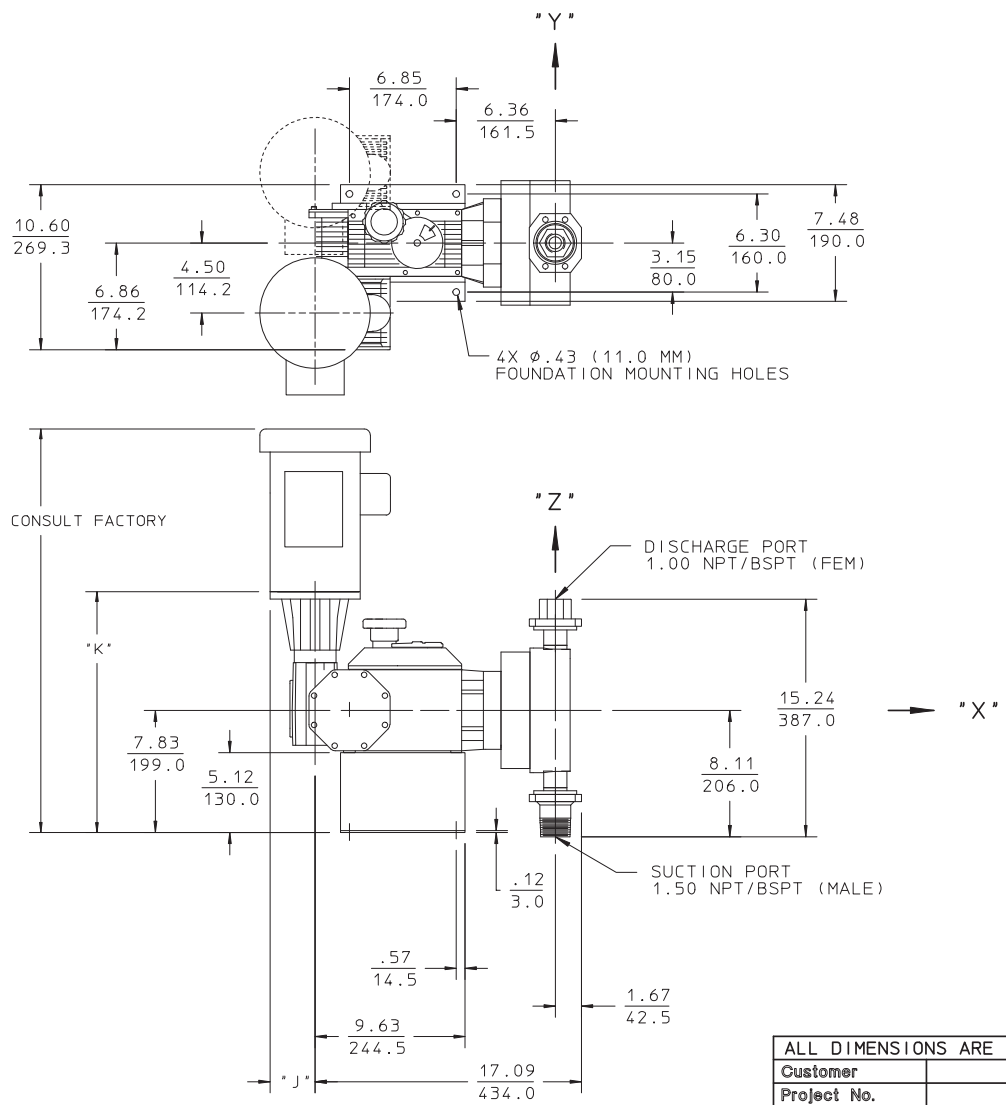

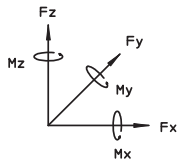

FORCES STATIC & DYNAMIC		SUCTION	DISCHARGE
	Fx(LB)	15	15
NOZZLE FORCES	Fy(LB)	15	15
	Fz(LB)	45	45
	Mx(FT-LB)	15	15
NOZZLE FORCES	My(FT-LB)	15	15
	Mz(FT-LB)	15	15

MOTOR FRAME	"J"	"K"
56C	2.89 73.5	15.4 392.0
80	2.36 60.0	14.9 379.0
71	2.07 52.5	14.5 369.0
143TC 145TC	2.89 73.5	15.4 392.0
182C 184C	2.89 73.5	15.4 392.0

ALL DIMENSIONS ARE IN INCHES/mm		RHA: E HEAD SGL VALVE			SCALE: 1:8		Item – No.	
Customer							Model	55BF – METAL
Project No.							Motor Pwr/Fr	SEE CHART
Po No./SO No.							Unit Weight	lb kg
CONNECTIONS: HP/GP OR HB/GB							PULSAR SHADOW	PULSAFEEDER A Unit of IDEX Corporation
					Name	Date		
A	UPDATED DWG FORMAT	KMG	02/28/14	Drawn	KMG	04/06/09	Drawing No.	25969–000
Rev	Revision Description	Name	Date	Checked	KMG	04/06/09		

PULSAFEEDER PRF 3/4-3H 9.8.4

PULSAFEEDER
ENGINEERED PRODUCTS

PUMP PERFORMANCE CURVE

PUMP DATA		ORDER DATA	
MODEL NUMBER:	55BF	CUSTOMER:	VEOLIA WATER TECHNOLOGIES CANADA INC
PISTON DIAMETER:	NA	CUSTOMER PO:	18000751HD
STROKING RATE:	140 SPM	CUSTOMER ITEM:	P9-591/2
RATED PRESSURE:	75 PSIG	PART NUMBER:	55BF-EZ000234U1
MAXIMUM RATED FLOW (◆):	**507.24 LPH (100%)**	SERIAL NUMBER:	
MINIMUM RATED FLOW (◆):	50.7 LPH (10%)	DATED:	4/19/2018
EXPECTED OPERATING POINT (◆):	400.0 LPH (78.9%)	TAGGING:	

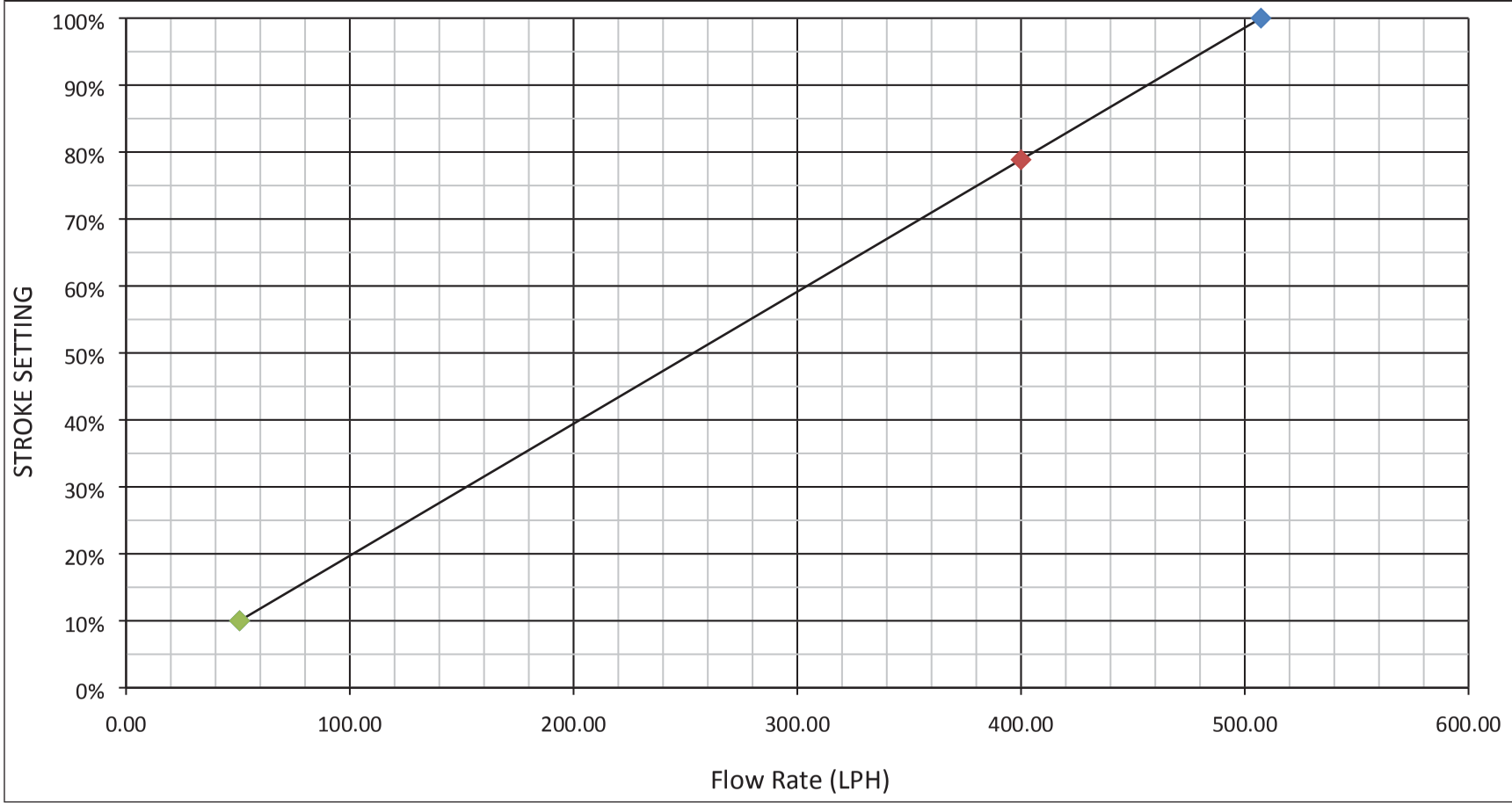

©Pulsafeeder, Inc. 2015 All Rights Reserved v018

This page is intentionally left blank

TSEZ000234-002

BALDOR • RELIANCE

Product Information Packet

PULSAFEEDER, INC.

VEM7014T-5

1HP,1760RPM,3PH,60HZ,143TC,3520M,XPFC,F1

Copyright © All product information within this document is subject to ABB Motors and Mechanical Inc. copyright © protection, unless otherwise noted.

Part Detail

Revision:	M	**Status:**	PRD/A	**Change #:**		**Proprietary:**	No
Type:	AC	**Elec. Spec:**	35WGM849	**CD Diagram:**	CD0006	**Mfg Plant:**	
Mech. Spec:	35E380	**Layout:**	35LYE380	**Poles:**	04	**Created Date:**	08-03-2010
Base:	N	**Eff. Date:**	08-08-2017	**Leads:**	3#18		

Specs

Catalog Number:	VEM7014T-5	**Inverter Code:**	Not Inverter
Enclosure:	XPFC	**KVA Code:**	L
Frame:	143TC	**Lifting Lugs:**	No Lifting Lugs
Frame Material:	Steel	**Locked Bearing Indicator:**	Locked Bearing
Output @ Frequency:	1.000 HP @ 60 HZ	**Motor Lead Quantity/Wire Size:**	3 @ 18 AWG
Synchronous Speed @ Frequency:	1800 RPM @ 60 HZ	**Motor Lead Exit:**	Ko Box
Voltage @ Frequency:	575.0 V @ 60 HZ	**Motor Lead Termination:**	Flying Leads
XP Class and Group:	CLI GP D; CLII GP F,G	**Motor Type:**	3520M
XP Division:	Division I	**Mounting Arrangement:**	F1
Agency Approvals:	CSA	**Power Factor:**	71
	CSA EEV	**Product Family:**	General Purpose
	UL	**Pulley End Bearing Type:**	Ball
	UR	**Pulley Face Code:**	C-Face
Auxillary Box:	No Auxillary Box	**Pulley Shaft Indicator:**	Standard
Auxillary Box Lead Termination:	None	**Rodent Screen:**	None
Base Indicator:	No Mounting	**RoHS Status:**	ROHS COMPLIANT
Bearing Grease Type:	Polyrex EM (-20F +300F)	**Shaft Extension Location:**	Pulley End
Blower:	None	**Shaft Ground Indicator:**	No Shaft Grounding

Current @ Voltage:	1.200 A @ 575.0 V
Design Code:	B
Drip Cover:	No Drip Cover
Duty Rating:	CONT
Electrically Isolated Bearing:	Not Electrically Isolated
Feedback Device:	NO FEEDBACK
Front Face Code:	Standard
Front Shaft Indicator:	None
Heater Indicator:	No Heater
Insulation Class:	B

Shaft Rotation:	Reversible
Shaft Slinger Indicator:	No Slinger
Speed Code:	Single Speed
Motor Standards:	NEMA
Starting Method:	Direct on line
Thermal Device - Bearing:	NONE (OLD)
Thermal Device - Winding:	Normally Closed Thermostat
Vibration Sensor Indicator:	No Vibration Sensor
Winding Thermal 1:	None
Winding Thermal 2:	None
XP Temp Code:	T3C

Nameplate NP1426XPSLEV

NO.		CC	010A			
SER.						
SPEC.	35E380M849G1					
CAT.NO.	VEM7014T-5					
HP	1	T. CODE	T3C			
VOLTS	575					
AMPS	1.2					
RPM	1760					
HZ	60	PH	3	CL	B	
SER.F.	1.00	DES	B	CODE	L	
RATING	40C AMB-CONT					
FRAME	143TC	NEMA-NOM-EFF	85.5			
USABLE AT 208V		PF	71			
BLANK						

Parts List

Part Number	Description	Quantity
SA200774	SA 35E380M849G1	1.000 EA
RA188087	RA 35E380M849G1	1.000 EA
34FN3002B01	EXTERNAL FAN, PLASTIC, .637/.639 HUB W/	1.000 EA
35CB3001A02SP	EXPL PROOF CONDUIT BOX, 3/4"PIPE TAP LEA	1.000 EA
11XW1032G06	10-32 X .38, TAPTITE II, HEX WSHR SLTD U	1.000 EA
HW3001B01	BRASS CUP WASHER, FOR #10 SCREW	1.000 EA
35EP3700A01SP	FR ENDPLATE, XPFC	1.000 EA
HW5100A03	WAVY WASHER (W1543-017)	1.000 EA
35EP3702A01SP	PU EP-205 BRG-35X-56C-143-5TC	1.000 EA
51XN1032A20	10-32 X 1 1/4 HX WS SL SR	2.000 EA
HA3013A01	1/2-20X5/8 SPL.HX BOLT	2.000 EA
HW3021C06	3/32 DI X .625 PIN (F/S)	2.000 EA
XY3118A12	5/16-18 HEX NUT DIRECTIONAL SERRATION	4.000 EA
51XB1214A16	12-14X1.00 HXWSSLD SERTYB	1.000 EA
35FH4005A01SP	IEC FH NO GREASER W/PRIMED	1.000 EA
51XW1032A06	10-32 X .38, TAPTITE II, HEX WSHR SLTD S	3.000 EA
35CB3500A01SP	CONDUIT BOX LID, MACH	1.000 EA
51XN2520A16	SCREW, HEX WS SLT, ZN, 1/4-20 X 1.00	4.000 EA
HW2501D13	KEY, 3/16 SQ X 1.375	1.000 EA
HA7000A01	KEY RETAINER 7/8" DIA SHAFT	1.000 EA
85XU0407S04	4X1/4 U DRIVE PIN STAINLESS	6.000 EA
NP0018F	ALUM UL XP CONDUIT BOX NAMEPLATE	1.000 EA
MJ1000A02	GREASE, POLYREX EM EXXON (USe 4824-15A)	0.050 LB
MG1025G29	WILKOFAST, 789.229, DARK CHARCOAL GRAY	0.017 GA

Parts List (continued)

Part Number	Description	Quantity
HA3104A06	THRUBOLT 5/16-18 X 8.50 OHIO ROD	4.000 EA
LB1119N	WARNING LABEL	1.000 EA
LC0006	CONNECTION LABEL	1.000 EA
NP1426XPSLEV	SS XP UL CSA-EEV CC CL-I GP-D	1.000 EA
36PA1000	PKG GRP, PRINT PK1016A06	1.000 EA
PK3082	STYROFOAM CRADLE	1.000 EA
MN416A01	TAG-INSTAL-MAINT no wire (1100/bx) 11/14	1.000 EA

Performance Graph at 575V, 60Hz, 1.0HP Typical performance - Not guaranteed values

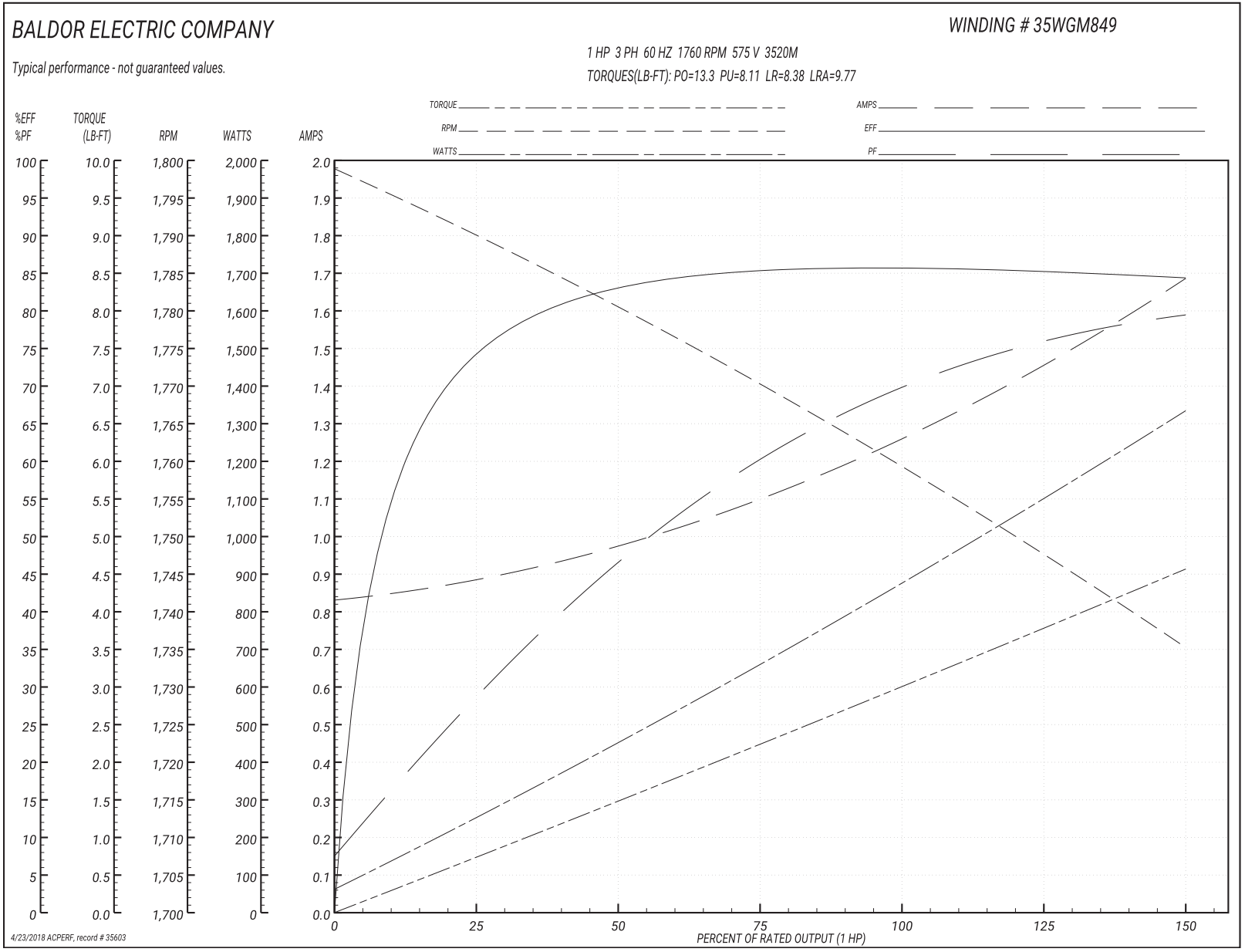

35LYE380

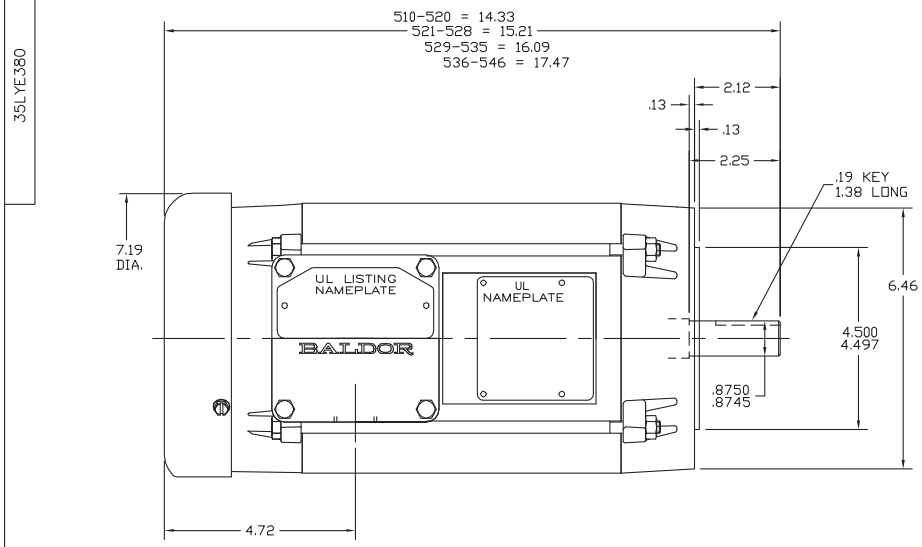

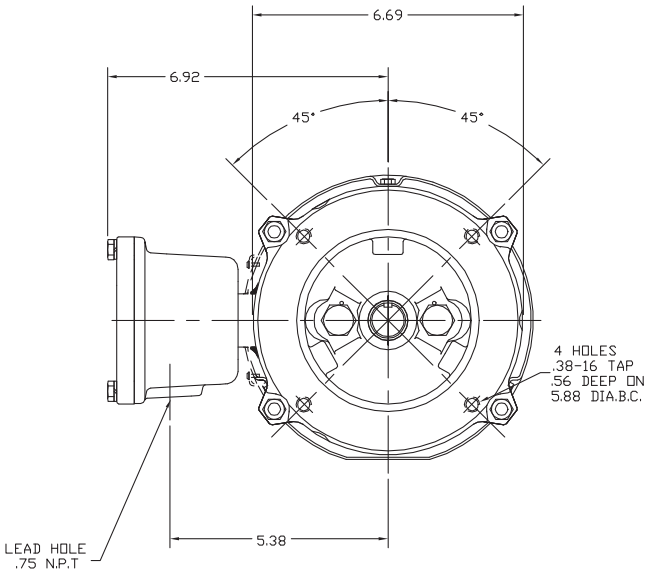

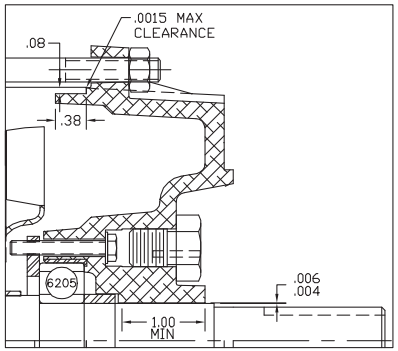

PULLEY END DETAIL

35LYE380

CUSTOMER IS RESPONSIBLE FOR DETERMINING THAT BALDOR'S PRODUCT WILL PERFORM SUITABLY IN THE INTENDED APPLICATION.

REV. DESC: ADD PULLEY END DETAIL		
REV. LTR: L	VERSION: 03	TDR: 000001064811
FILE: \AAA\00005\398	REVISED: 11:08:15 03/19/2018	BY: ENALEM0
MTL: –		

BALDOR

STD VERT 143-5TC XPFC X35M CL-I GP-D, CL-II GP-F&G

SH 1 of 1

CD0006

TYPICAL WYE–CONNECTED MOTOR

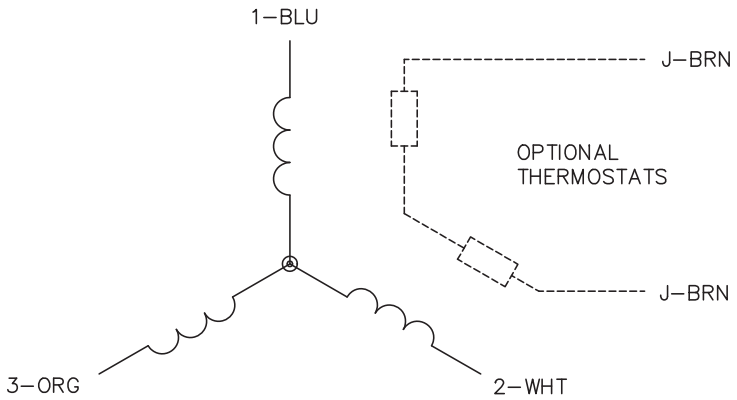

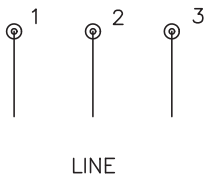

TYPICAL DELTA–CONNECTED MOTOR

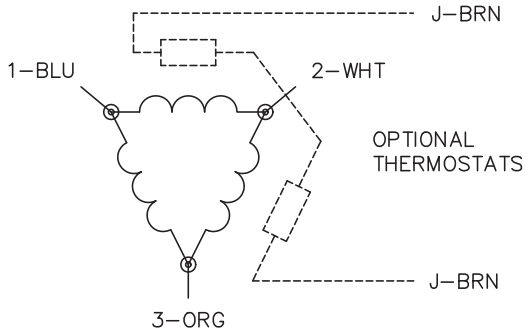

NOTES:

1. THREE LEAD MOTOR MAY BE EITHER WYE CONNECTED OR DELTA CONNECTED.
2. INTERCHANGE ANY TWO LINE LEADS TO REVERSE ROTATION.
3. OPTIONAL THERMOSTATS ARE PROVIDED WHEN SPECIFIED.
4. ACTUAL NUMBER OF INTERNAL PARALLEL CIRCUITS MAY VARY.
5. LEAD COLORS ARE OPTIONAL. LEADS MUST BE NUMBERED AS SHOWN.

CD0006

REV. DESC: REVISE TO SHOW OPTIONAL COLORS			BALDOR ELECTRIC Co.
REV. LTR: D	BY: JLP	REVISED: 01/21/99 4:02	TDR: 0171435
9000CD		FILE: AAA00005141	MDL: –
		MTL: –	3PH, SV, 3 LEADS, WYE OR DELTA CONNECTED

This page is intentionally left blank

Project name: AMARUQ

Project#: 5000218009

Document #: SPK_0007_PCH

by: GH

chkd: GP

appvd: CB

KMnO4 DOSING SKID

VALVES

OIM manual section: 4.3.7.4

This page is intentionally left blank

CS-301-100 : Identification sheet

VWTC PROJECT NUMBER:	5000218009	REV:	1
PROJECT NAME:	AEM AMARUQ	SUBMITTED TO (COMPANY):	AGNICO EAGLE MINES
ENGINEER:	Gabriel Hébert	SUBMITTED TO (RESPONSIBLE)	
PROJECT MANAGER:	Clément B	PROJECT NUM REFERENCE.:	
PHONE NUMBER:		LOT NUMBER:	

SUPPLIER	EQPT CODE	EQPT TAG NO	DIA	DESCRIPTION	INFO 1	INFO 2	INFO 3	APPLIC.	NOTE	REV
CHEMLINE	VABLPV200249	CYL9-591-V002	DIA: 13 mm (1/2")	CLEANING VALVE	TYPE: BALL VALVE//MANUFACTURER : CHEMLINE//MODEL : Type21-A-005-E-C//CONNECTION TYPE : COMBO | 13 mm (1/2")//BODY : PVC (ASTM D1784)// SEAL | SEAT :PTFE | EPDM// STEM : PVC			KMnO4 DOSING SKID		
CHEMLINE	VABLPV200249	P9-591-V003	DIA: 13 mm (1/2")	CLEANING VALVE	TYPE: BALL VALVE//MANUFACTURER : CHEMLINE//MODEL : Type21-A-005-E-C//CONNECTION TYPE : COMBO | 13 mm (1/2")//BODY : PVC (ASTM D1784)// SEAL | SEAT :PTFE | EPDM// STEM : PVC			KMnO4 DOSING SKID		
CHEMLINE	VABLPV200249	P9-592-V003	DIA: 13 mm (1/2")	CLEANING VALVE	TYPE: BALL VALVE//MANUFACTURER : CHEMLINE//MODEL : Type21-A-005-E-C//CONNECTION TYPE : COMBO | 13 mm (1/2")//BODY : PVC (ASTM D1784)// SEAL | SEAT :PTFE | EPDM// STEM : PVC			KMnO4 DOSING SKID		

SUPPLIER	EQPT CODE	EQPT TAG NO	DIA	DESCRIPTION	INFO 1	INFO 2	INFO 3	APPLIC.	NOTE	REV
CHEMLINE	VABLPV200249	PD9-591-V002	DIA: 13 mm (1/2")	CLEANING VALVE	TYPE: BALL VALVE//MANUFACTURER : CHEMLINE//MODEL : Type21-A-005-E-C//CONNECTION TYPE : COMBO | 13 mm (1/2")//BODY : PVC (ASTM D1784)// SEAL | SEAT :PTFE | EPDM// STEM : PVC			KMnO4 DOSING SKID		
CHEMLINE	VABLPV200250	P9-591-V005	DIA: 20 mm (3/4")	ISOLATION VALVE (DISCHARGE)	TYPE: BALL VALVE//MANUFACTURER : CHEMLINE//MODEL : Type21-A-007-E-S//CONNECTION TYPE : SOCKET | 20 mm (3/4")//BODY : PVC (ASTM D1784)// SEAL | SEAT :PTFE | EPDM// STEM : PVC			KMnO4 DOSING SKID		
CHEMLINE	VABLPV200250	PD9-591-V001	DIA: 20 mm (3/4")	ISOLATION VALVE (DISCHARGE)	TYPE: BALL VALVE//MANUFACTURER : CHEMLINE//MODEL : Type21-A-007-E-S//CONNECTION TYPE : SOCKET | 20 mm (3/4")//BODY : PVC (ASTM D1784)// SEAL | SEAT :PTFE | EPDM// STEM : PVC			KMnO4 DOSING SKID		
CHEMLINE	VABLPV200251	CYL9-591-V001	DIA: 25 mm (1")	ISOLATION VALVE (SUCTION)	TYPE: BALL VALVE//MANUFACTURER : CHEMLINE//MODEL : Type21-A-010-E-S//CONNECTION TYPE : SOCKET | 25 mm (1")//BODY : PVC (ASTM D1784)// SEAL | SEAT :PTFE | EPDM// STEM : PVC			KMnO4 DOSING SKID		
CHEMLINE	VABLPV200251	P9-591-V001	DIA: 25 mm (1")	ISOLATION VALVE (SUCTION)	TYPE: BALL VALVE//MANUFACTURER : CHEMLINE//MODEL : Type21-A-010-E-S//CONNECTION TYPE : SOCKET | 25 mm (1")//BODY : PVC (ASTM D1784)// SEAL | SEAT :PTFE | EPDM// STEM : PVC			KMnO4 DOSING SKID		

SUPPLIER	EQPT CODE	EQPT TAG NO	DIA	DESCRIPTION	INFO 1	INFO 2	INFO 3	APPLIC.	NOTE	REV
CHEMLINE	VABLPV200251	P9-591-V002	DIA: 25 mm (1")	ISOLATION VALVE (SUCTION)	TYPE: BALL VALVE//MANUFACTURER : CHEMLINE//MODEL : Type21-A-010-E-S//CONNECTION TYPE : SOCKET | 25 mm (1")//BODY : PVC (ASTM D1784)// SEAL | SEAT :PTFE | EPDM// STEM : PVC			KMnO4 DOSING SKID		
CHEMLINE	VABLPV200251	P9-591-V004	DIA: 25 mm (1")	ISOLATION VALVE (DISCHARGE)	TYPE: BALL VALVE//MANUFACTURER : CHEMLINE//MODEL : Type21-A-010-E-S//CONNECTION TYPE : SOCKET | 25 mm (1")//BODY : PVC (ASTM D1784)// SEAL | SEAT :PTFE | EPDM// STEM : PVC			KMnO4 DOSING SKID		
CHEMLINE	VABLPV200251	P9-591-V006	DIA: 25 mm (1")	ISOLATION VALVE (DISCHARGE)	TYPE: BALL VALVE//MANUFACTURER : CHEMLINE//MODEL : Type21-A-010-E-S//CONNECTION TYPE : SOCKET | 25 mm (1")//BODY : PVC (ASTM D1784)// SEAL | SEAT :PTFE | EPDM// STEM : PVC			KMnO4 DOSING SKID		
CHEMLINE	VABLPV200251	P9-592-V001	DIA: 25 mm (1")	ISOLATION VALVE (SUCTION)	TYPE: BALL VALVE//MANUFACTURER : CHEMLINE//MODEL : Type21-A-010-E-S//CONNECTION TYPE : SOCKET | 25 mm (1")//BODY : PVC (ASTM D1784)// SEAL | SEAT :PTFE | EPDM// STEM : PVC			KMnO4 DOSING SKID		
CHEMLINE	VABLPV200251	P9-592-V002	DIA: 25 mm (1")	ISOLATION VALVE (SUCTION)	TYPE: BALL VALVE//MANUFACTURER : CHEMLINE//MODEL : Type21-A-010-E-S//CONNECTION TYPE : SOCKET | 25 mm (1")//BODY : PVC (ASTM D1784)// SEAL | SEAT :PTFE | EPDM// STEM : PVC			KMnO4 DOSING SKID		

SUPPLIER	EQPT CODE	EQPT TAG NO	DIA	DESCRIPTION	INFO 1	INFO 2	INFO 3	APPLIC.	NOTE	REV
CHEMLINE	VABLPV200251	P9-592-V004	DIA: 25 mm (1")	ISOLATION VALVE (DISCHARGE)	TYPE: BALL VALVE//MANUFACTURER : CHEMLINE//MODEL : Type21-A-010-E-S//CONNECTION TYPE : SOCKET | 25 mm (1")//BODY : PVC (ASTM D1784)// SEAL | SEAT :PTFE | EPDM// STEM : PVC			KMnO4 DOSING SKID		
CHEMLINE	VABLPV200251	V9-591	DIA: 25 mm (1")	ISOLATION VALVE (COMMON SUCTION)	TYPE: BALL VALVE//MANUFACTURER : CHEMLINE//MODEL : Type21-A-010-E-S//CONNECTION TYPE : SOCKET | 25 mm (1")//BODY : PVC (ASTM D1784)// SEAL | SEAT :PTFE | EPDM// STEM : PVC			KMnO4 DOSING SKID		

PDF Published March 1, 2013

Type 21 Ball Valves

CHEMLINE PLASTICS
SUPERIOR FLOW SOLUTIONS

The Chemline Type 21 True Union Ball valve incorporates state of the art features for long term performance. This is a full port, full blocking True Union valve pressure rated at 16 bar (230 psi)[4]. Double stem o-rings and Safety Shear stem design provide for a high degree of safety on hazardous fluid applications. All sizes have an ISO standard actuator mounting platform integral to the valve body. This provides for sturdy and secure mounting of pneumatic or electric actuators.

PVC | CPVC | PP | PVDF

CRN Registered Consult Chemline

NSF[5] Certified to NSF/ANSI 61

SERIES: Type 21

SIZES: 3/8" – 4"

ENDS: Socket, Threaded, Flanged, Butt[1] or ChemFlare™

SEATS: PTFE

SEALS[2]: EPDM, FKM (Viton®), CPE[3]

features

Pressure rated to 230 psi[4]
- Provides a high factor of safety

Integral Actuator Mounting Platform
- Actuation is easy. Electric or pneumatic actuators may be mounted in the field.

Full Port
- High capacity and low pressure drops

Fully Blocking
- Downstream union nut may be safely disassembled for piping maintenance while valve is closed off under full system pressure

Built-In Spanner Wrench
- Top of the handle is designed to be used as a tool for accessing internal parts

Safety Shear Stem Design
- Stem has double o-rings
- Designed to hold full pressure even if stem breaks due to excessive torque

High Chemical Resistant Material
- PVC and CPVC compounds have an "A" chemical resistance rating as per ASTM D-1784. They have outperformed other PVC and CPVC compounds on aggressive chemicals.

[1] Butt ends for fusion to Chemline metric PP, PVDF or ECTFE (Halar®) piping.
[2] Other materials are available.
[3] CPE=Chlorinated Polyethylene.
[4] PVC, CPVC and PVDF 1/2" to 2" are rated at 230 psi; 2-1/2" to 4" and all size PP valves are rated at 150 psi at 20°C.
[5] PVC valves with EPDM or FKM (Viton®) seals are certified under NSF/ANSI Standard 61 for contact with drinking water.

03/13 ©Chemline Plastics Limited 2013
Chemline is a registered trade mark of Chemline Plastics Limited

Type 21 Ball Valves

features

Double Stem O-Rings – Safety Shear Design

- Upper o-ring groove is deeper than lower. In case of excessive stem torque, stem will shear at the upper groove, leaving the inner o-ring intact to seal against full line pressure.

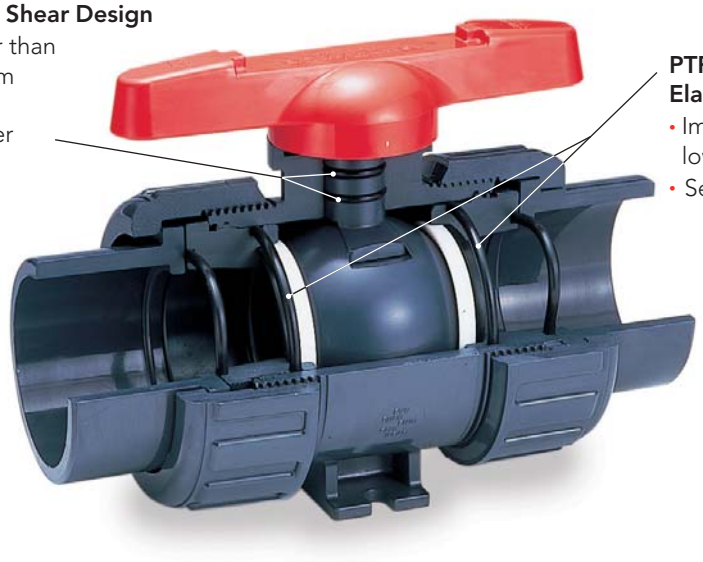

PTFE Seats have Elastomer Cushions

- Improved sealing while lowering stem torques
- Self adjusts for seat wear

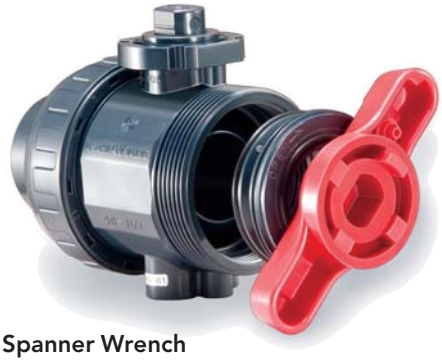

Built in Spanner Wrench

- For removing or tightening the seat carrier
- All parts are replaceable

Integral Actuator Mounting Platform

- Actuation is easy. Electric or pneumatic actuators may be mounted in the field. Simply pull off the handle to reveal a standard ISO 5211 mounting platform which accepts bolt-on hardware.

Fully Blocking

- Downstream pipe may be removed while upstream side is still pressurized. This may be done with valve installed in either direction.

Base Mounting Pad

- Optional threaded inserts allow valves to be securely anchored
- Supplied standard with actuated valves

Type 21 Ball Valves

options + accessories

ChemFlare™ Ends

- For connection to PFA tube. Leak-free connections for difficult services such as sodium hypochlorite

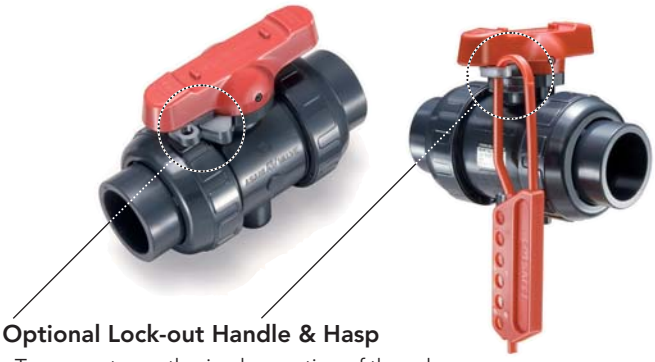

Optional Lock-out Handle & Hasp

- To prevent unauthorized operation of the valve
- Used during maintenance shut-downs

One-piece moulded PVC and CPVC 6" socket ends

- Allows installation of 4" valve in 6" line
- Factory moulded, not fabricated with couplings and reducers cemented together
- Fixed to valve mechanically just like the one-piece moulded factory flanges

Different Colour Handles

- Choose a handle colour other than standard red for colour coding different services

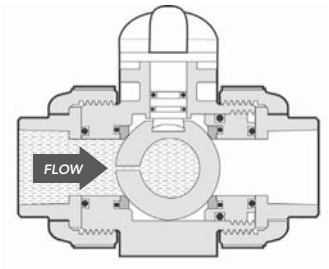

Vented Ball

- For sodium hypochlorite services at any concentration
- Valve shown in closed position

electric + pneumatic actuation

Pneumatic and Electric Actuators

- A complete range of actuators and control accessories are available, mounted to valves using PPG plastic brackets and stainless steel couplings. Refer to separate data sheets.

Electromni® Electric

Q Series Electric

A Series Electric

V Series Electric
with Local Control Station

PA Series Pneumatic

Type 21 Ball Valves

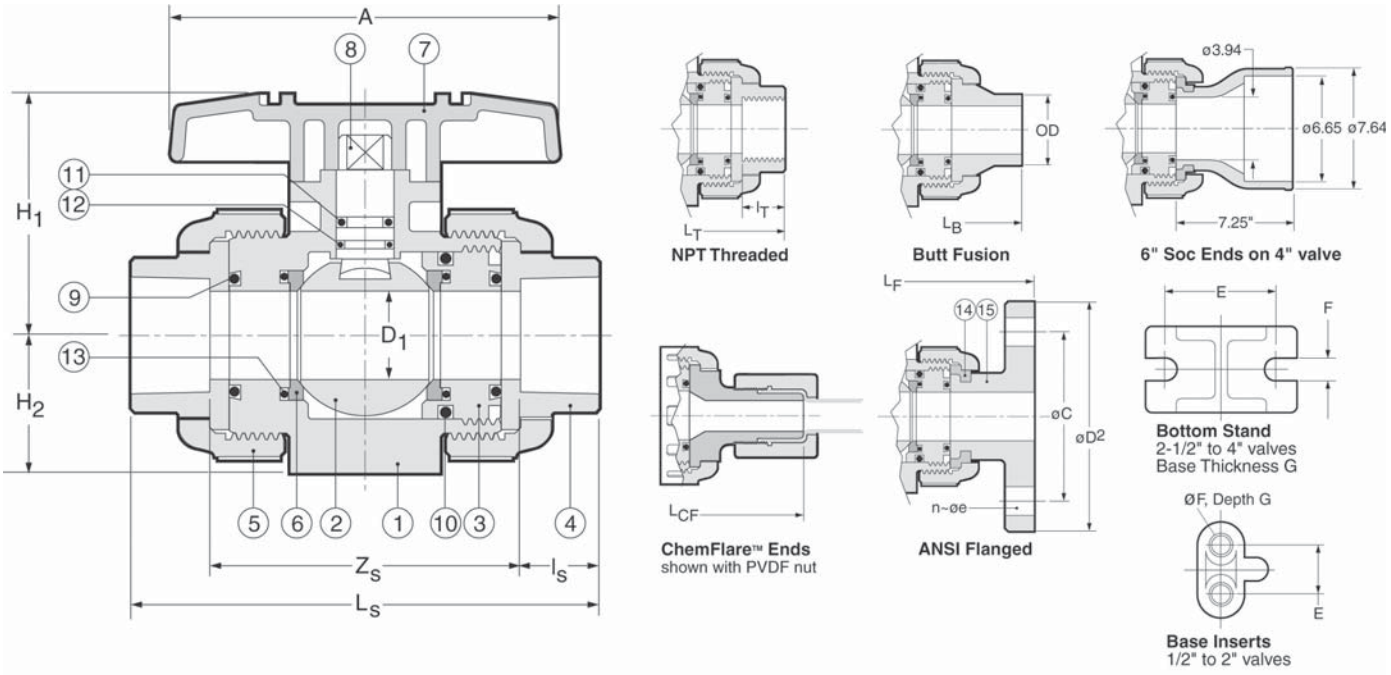

PARTS

▲ Recommended Spare Parts

No.	Part	Pcs.	Materials
1	Body	1	PVC, CPVC, PP, PVDF
2	Ball	1	PVC, CPVC, PP, PVDF
3	Carrier[1]	1/2	PVC, CPVC, PP, PVDF
4	End Connector	2	PVC, CPVC, PP, PVDF
5	Union Nut	2	PVC, CPVC, PP, PVDF
6▲	Ball Seat	2	PTFE
7	Handle	1	ABS

[1] 1 carrier for sizes 1/2" to 2", 2 carriers for sizes 2-1/2" to 4"
[2] EPDM seals standard with PVC, CPVC, PP; FKM (Viton®) with PVDF valves
[3] 2 pcs 1/2" to 2", 6 pcs 2-1/2" to 4"

PARTS

▲ Recommended Spare Parts

No.	Part	Pcs.	Materials
8	Stem	1	PVC, CPVC, PP, PVDF
9▲	Face O-Ring[2]	2	EPDM, FKM (Viton®)
10▲	Carrier O-Ring[2]	2	EPDM, FKM (Viton®)
11▲	Upper Thicker Stem O-Ring[2]	1	EPDM, FKM (Viton®)
12▲	Lower Thinner Stem O-Ring[2]	1	EPDM, FKM (Viton®)
13	Seat Cushion[2]	2	EPDM, FKM (Viton®)
14	Flange Retainer[3]	2/6	PVDF
15	Flange	2	PVC, CPVC, PP, PVDF

DIMENSIONS INCHES

					End Connections														Valve Base		
					Socket			Threaded		Factory Flanged					Butt		ChemFlare™				
Size	D Bore	A	H_1	H_2	L_S	Z_S	l_S	l_T	L_T	L_F	D_2	C	n	e	L_B	OD	L_{CF}	Tube[4]	E	F[5]	G
1/2"	.59	3.6	2.03	1.14	4.45	2.70	.875	.64	4.02	5.63	3.50	2.38	4	.62	4.88	.79	6.12	1/2"	.75	.29	.43
3/4"	.79	3.9	2.34	1.38	5.08	3.08	1.00	.65	4.72	6.77	3.88	2.75	4	.62	5.67	.98	6.52	3/4"	.75	.29	.43
1"	.98	4.3	2.68	1.54	5.75	3.50	1.13	.81	5.16	7.36	4.25	3.12	4	.62	6.06	1.26	7.26	1"	.75	.29	.43
1-1/4"	1.22	4.8	3.17	1.85	6.46	5.21	1.25	.85	5.91	7.48	4.62	3.50	4	.62	6.85	1.57	9.58	1-1/4"	1.18	.35	.59
1-1/2"	1.57	5.2	3.50	2.17	7.24	4.49	1.38	.85	6.42	8.35	5.00	3.88	4	.62	7.64	1.97	–	–	1.18	.35	.59
2"	2.01	6.3	4.02	2.60	8.23	5.23	1.50	1.90	7.76	9.21	6.00	4.75	4	.75	8.82	2.48	–	–	1.18	.35	.59
2-1/2"	2.28	7.87	4.96	2.83	9.45	5.95	1.75	1.21	8.46	10.20	7.00	5.49	4	.75	9.72	2.95	–	–	1.89	.35	.23
3"	2.70	9.45	5.51	3.35	11.10	7.35	1.88	1.30	10.39	11.97	7.50	6.00	4	.75	11.61	3.54	–	–	2.17	.43	.28
4"	3.54	11.81	7.01	4.33	13.88	9.87	2.00	1.38	14.17	14.65	9.00	7.50	8	.75	14.76	4.33	–	–	2.56	.43	.32

[4] ChemFlare™ ends are available for reduced tube sizes down to 1/4".
[5] Optional threaded inserts: 1/2" to 1" valves – UNC 1/4"-20; 1-1/4" to 2" valves – UNC 5/16"-18. 'Recoil' brand inserts require drilling before insertion.

Type 21 Ball Valves

WORKING PRESSURES PSI, Water, Non-Shock

VACUUM RATING • 29.9 inches mercury

Size	PVC			CPVC						PP			PVDF				
	20°C 68°F	40°C 104°F	50°C 122°F	20°C 68°F	40°C 104°F	50°C 122°F	60°C 140°F	80°C 176°F	90°C 194°F	20°C 68°F	60°C 140°F	80°C 176°F	20°C 68°F	40°C 104°F	60°C 140°F	80°C 176°F	100°C 212°F
1/2"– 2"	230	165	150	230	165	150	120	75	55	150	85	55	230	185	150	110	85
2-1/2"– 4"	150	150	150	150	150	150	120	75	55	150	70	40	150	150	150	110	85

Temperature Ranges: PVC 0 to 60°C (32 to 140°F), **CPVC** 0 to 95°C (32 to 203°F), **PP** –20 to 80°C (–4 to 176°F), **PVDF** –40 to 100°C (–40 to 212°F)

WEIGHTS LB. THREADED or SOCKET

WEIGHTS LB. FLANGED

Size	PVC	CPVC	PP	PVDF	PVC	CPVC	PP	PVDF
1/2"	0.4	0.4	0.4	0.4	0.9	0.9	0.7	1.1
3/4"	0.7	0.7	0.7	0.9	1.3	1.5	1.1	1.5
1"	0.9	1.1	0.9	1.1	1.8	2.0	1.5	2.2
1-1/4"	1.5	1.5	1.3	1.8	2.6	2.9	2.0	3.3
1-1/2"	2.4	2.6	1.5	2.9	3.7	4.0	2.6	4.4
2"	4.0	4.4	2.6	4.9	5.5	6.0	4.0	8.2
2-1/2"	5.1	5.5	3.7	6.2	7.3	7.7	5.3	8.8
3"	8.2	8.8	5.5	9.9	10.1	11.0	7.5	12.6
4"	19.4	21.8	13.2	24.9	21.6	23.4	15.4	26.7

Cv VALUES VS. BALL ANGLE

Size	0%	25%	50%	75%	100%
1/2"	0	0.35	1.3	5.5	14.
3/4"	0	0.73	2.8	11.5	29.
1"	0	1.2	4.5	18.6	47.
1-1/4"	0	1.8	6.8	28.4	72.
1-1/2"	0	3.9	14.7	61.2	155.
2"	0	4.8	18.0	75.0	190.
2-1/2"	0	9.1	34.7	144.0	365.
3"	0	10.2	39.0	162.0	410.
4"	0	17.0	64.6	269.0	680.

SAMPLE SPECIFICATION

1. All True Union Ball Valves in PVC, CPVC, PP or PVDF shall be Chemline Type 21 or equal sizes 1/2" to 2" in PVC, CPVC, and PVDF rated at 230 psi and in PP 150 psi maximum working pressure. Sizes 2-1/2", 3" and 4" rated at 150 psi maximum working pressure with EPDM, FKM (Viton®) or CPE seals. Ball seats shall be PTFE with elastomer cushions for closure with minimum stem torques.
2. All valves will have Safety Shear stem design, blowout-proof with double o-rings for safety. The top o-ring groove shall be deeper so that if the stem breaks off under excessive torque the lower o-ring will remain intact and the valve will hold pressure.
3. All valves shall be full port and two-way blocking design.
4. All valves will be CRN (Canadian Registration Number) registered with TSSA.
5. PVC valves with EPDM or FKM (Viton®) seals shall be certified under NSF/ANSI Standard 61 for contact with drinking water.
6. All valves shall have chemical resistant labels permanently marked with manufacturing number to provide production level traceability.
7. PVC compound shall have an ASTM cell classification 12454-A with a minimum suffix "A" designation for chemical resistance as per ASTM D-1784 (CSA report LO 4000-172).
8. CPVC compound shall have an ASTM cell classification 23567-A with a minimum suffix "A" designation for chemical resistance as per ASTM D-1784.
9. PP material will conform to ASTM D-4101 PP 021 B 67272 material requirements.
10. PVDF material shall be unpigmented conforming to ASTM D-3222 material requirements and to be USDA Title 21 Chapter 1 Part 177. 2510 requirements for contact with food.
11. Socket ends in PVC and CPVC shall be Schedule 80 and conform to ASTM D-2467.
12. Threaded ends shall be Schedule 80 and conform to ASTM D-2464.
13. Butt fusion ends in PP or PVDF will be compatible with Chemline PP or PVDF metric piping systems.
14. Flanged ends shall be ANSI Class 150 one-piece factory moulded (not fabricated) to ensure maximum strength and close tolerance end to end dimensions.

ORDERING EXAMPLE

Chemline True Union Ball Valves	21	A	020	E	S
Body Material	**A** – PVC **B** – PP	**C** – CPVC **K** – PVDF			
Size[1]	**002** – 1/4" **010** – 1" **025** – 2-1/2"	**003** – 3/8" **012** – 1-1/4" **030** – 3"	**005** – 1/2" **015** – 1-1/2" **040** – 4"	**007** – 3/4" **020** – 2" **060** – 6"	
Seals	**E** – EPDM	**V** – FKM (Viton®)	**C** – CPE	**B** – Nitrile	**A** – Aflas®
Ends	**S** – Socket	**T** – Threaded	**F** – Flanged	**B** – Butt[2]	**CF** – ChemFlare™

Example: Chemline Type 21 True Union Ball Valve, PVC, 2", with EPDM seals, socket ends.

[1] 1/4" is normally the 3/8" valve reduced. 6" is 4" valve with 6" end connections.

[2] PP, PVDF and ECTFE (Halar®) metric butt fusion ends (1/2" to 4") connect to Chemline PP, PVDF and ECTFE (Halar®) piping systems.

OTHER OPTIONS & ACCESSORIES

- **Alternate O-Ring Seals**
- **Stem Extensions** made to any length
- **Limit Switches** – For open and/or closed position indication
- **Municipal Operating Nut**
- **Lubrication-free Valves** – Factory clean room assembled
- **Vented Ball** – For sodium hypochlorite applications

CHEMLINE PLASTICS
SUPERIOR FLOW SOLUTIONS

55 Guardsman Road, Thornhill, ON, L3T 6L2, Canada | ISO 9001:2008 Certified
tel.905.889.7890 | fax.905.889.8553 | request@chemline.com | chemline.com

This page is intentionally left blank

CS-303-100 : Identification sheet

VWTC PROJECT NUMBER:	5000218009	REV:	1
PROJECT NAME:	AEM AMARUQ	SUBMITTED TO (COMPANY):	AGNICO EAGLE MINES
ENGINEER:	Gabriel Hébert	SUBMITTED TO (RESPONSIBLE)	
PROJECT MANAGER:	Clément B	PROJECT NUM REFERENCE.:	
PHONE NUMBER:		LOT NUMBER:	

SUPPLIER	EQPT CODE	EQPT TAG NO	DIA	DESCRIPTION	INFO 1	INFO 2	INFO 3	APPLIC.	NOTE	REV
CHEMLINE	VARFPV207282	PRV9-591	DIA: 25 mm (1")	RELIEF VALVE	TYPE: RELIEF VALVE | 150#//MANUFACTURER : CHEMLINE//MODEL : SB12A010EU//CONNECTION TYPE : UNION SOCKET | 25 mm (1")//BODY : PVC// SEAL | SEAT :EPDM | EPDM// STEM : N/A			KMnO4 DOSING SKID		
CHEMLINE	VARFPV207282	PRV9-592	DIA: 25 mm (1")	RELIEF VALVE	TYPE: RELIEF VALVE | 150#//MANUFACTURER : CHEMLINE//MODEL : SB12A010EU//CONNECTION TYPE : UNION SOCKET | 25 mm (1")//BODY : PVC// SEAL | SEAT :EPDM | EPDM// STEM : N/A			KMnO4 DOSING SKID		

This page is intentionally left blank

PDF Published September 17, 2014

SB12 Series Back Pressure/Relief Valves

CHEMLINE PLASTICS
SUPERIOR FLOW SOLUTIONS

PVC PP PVDF

CRN Registered as Category C Fittings Consult Chemline

NSF[3] Certified to NSF/ANSI 61

SERIES: SB12

SIZES: 3/8" – 4"

ENDS: True Union Socket, Threaded or ChemFlare™[1] Spigot[2] Bodies with Plain, Socket, Threaded or Flanged ends

DIAPHRAGM: PTFE Bonded EPDM

SEALS: EPDM, FKM (Viton®)

The Chemline SB Series Back Pressure/ Relief Valve has two functions. As a ***back pressure valve***, installed in-line downstream of a pump, the back pressure below the metering pump is maintained. When installed in the branch of a tee it is a ***pressure relief valve***. The valve stays closed until inlet pressure reaches the set pressure which is adjusted by turning the spring tensioning bolt. Inlet pressure acts upward against the piston allowing excess pressure to flow upwards through the orifice.

The SB12 Series has a built-in check valve function, desirable for dosing applications. It is not so sensitive as to open with every pulsation from a metering pump.

features

True Union Ends

- Easy installation and maintenance
- Eliminate chemical leakage problems common with old fashioned threaded connections

Long Cycling Life

- Dynamic seal is PTFE bonded EPDM for high chemical resistance
- This moulded diaphragm is designed for superior sealing and flex life

Superior Performance in Dosing Systems

- Valves are hydraulically designed for very low hysteresis ("backlash") and to eliminate chatter
- Built-in check (non-return) function
- Valve opening depends on inlet pressure only and is uneffected by changes in downstream (back) pressure

CRN Registration numbers by province

- Ontario: OC10134.5
- Newfoundland: OC10134.50
- Alberta: OC10134.52
- Saskatchewan/Manitoba/Quebec: OC10134.56
- New Brunswick: OC10134.57
- Nova Scotia: OC10134.58
- P.E.I.: OC10134.59
- British Columbia: not required

technical

Set Pressure Ranges

- 1/2" to 2" – 5 to 150 psi
- 2-1/2" and 3" – 7.5 to 150 psi
- 2-1/2" to 4" – 4 to 60 psi (optional)
- 4" – 7.5 to 90 psi

Maximum Viscosity

- 120cP is maximum recommended service viscosity

[1] For ChemFlare™ end connectors, consult Chemline.
[2] PP and PVDF spigot ends have DIN dimensions and will butt fuse directly to Chemline PP and PVDF piping systems.
[3] PVC valves with EPDM or FKM (Viton®) seals are certified under NSF/ANSI Standard 61 for contact with drinking water.

09/14 ©Chemline Plastics Limited 2014
Chemline is a registered trade mark of Chemline Plastics Limited

SB12 Series Back Pressure/Relief Valves 1/2" to 2"

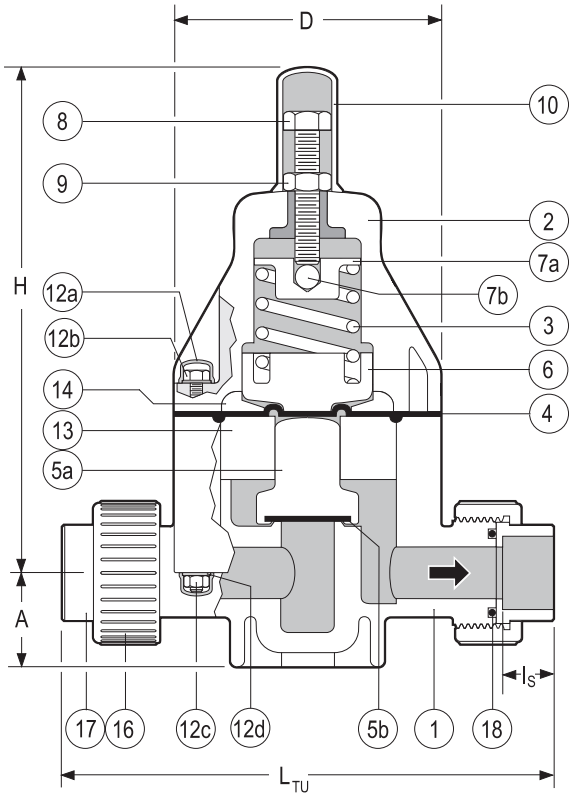

True Union Body

PARTS

▲ Recommended Spare Parts

No.	Part	Pcs.	Materials
1	Body	1	PVC, PP, PVDF
2	Bonnet	1	PPG
3	Spring	1	Galvanized Steel
4▲	Control Diaphragm	1	PTFE bonded EPDM
5a▲	Piston	1	PVC, PP, PVDF
5b▲	Seat	1	EPDM, FPM(Viton®)
6	Lower Spring Retainer	1	PPG
7a	Upper Spring Retainer	1	Cad. Plated Steel
7b	Ball	1	304 SS
8	Spring Tensioning Bolt	1	304 SS
9	Lock Nut	1	304 SS
10	Spring Bolt Cap	1	PE
12a	Bolt/Nut Cap	8/12[1]	PE
12b	Hex Bolt	4/6[1]	304 SS
12c	Hex Nut	4/6[1]	304 SS
12d	Washer	8/12[1]	304 SS
13	Spacer Disc	1	PVC, PP, PVDF
14	Pressure Plate	1	PP
16	Union Nut	2	PVC, PP, PVDF
17	End Connector	2	PVC, PP, PVDF
18▲	Face O-Ring	2	EPDM, FPM(Viton®)

[1] 1/2" size / 3/4" to 2" sizes

OTHER ENDS

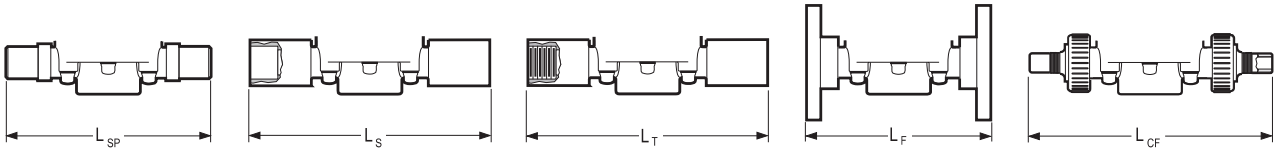

Spigot Body | Socket | Threaded | Flanged | ChemFlare™

DIMENSIONS INCHES

WEIGHTS LB.

Cv VALUES

Size	D	H	PVC A	PVC I_S	PVC L_{TU}[2]	PVC L_{SP}[3]	PVC L_S	PVC L_T	PVC L_F	PVC L_{CF}	PP and PVDF A	PP and PVDF L_{SP}[3]	PP and PVDF L_{TU}[2]	PVC	PP	PVDF	USGPM Flow at 1 psi △P
3/8"	3.2	6.9	1.0	0.6	6.5	5.7	7.4	7.2	4.5	8.2	0.9	5.7	**	1.8	1.5	2.2	2.1
1/2"	3.2	6.9	1.0	0.6	6.8	5.7	8.0	7.8	6.3	8.3[4]	0.9	5.7	7.1	1.9	1.6	2.4	3.0
3/4"	4.2	8.0	1.5	0.7	8.3	6.9	9.3	8.9	7.4	9.7	1.4	6.9	8.4	4.1	3.5	4.6	6.6
1"	4.2	8.0	1.5	0.9	8.5	6.9	9.6	9.3	7.4	10.2	1.4	6.9	8.7	4.2	3.5	4.7	8.7
1-1/4"	5.8	10.3	2.2	1.0	10.9	8.8	11.6	11.2	9.2	13.5	2.1	8.8	10.9	11.0	9.0	12.0	18.0
1-1/2"	5.8	10.3	2.2	1.2	11.1	8.8	12.2	11.5	9.5	–	2.1	8.8	11.2	11.2	9.2	12.2	20.0
2"	5.8	10.3	2.2	1.5	11.3	9.6	12.9	12.0	10.0	–	2.1	8.8	13.2	11.4	9.4	12.4	21.4

[2] True Union bodies come standard with socket ends. Threaded union ends are available. ** Consult Chemline.

[3] Spigot bodies are used for non union socket, threaded or flanged ends. All spigot ends have metric dimensions and the PP and PVDF spigots butt fuse directly to Chemline PP and PVDF piping. [4] Tube size can be reduced to 1/4" tube, LCF = 7.74" for 1/4", 8.26" for 3/8".

MAXIMUM PRESSURES PSI

Size	PVC 20°C 68°F	PVC 30°C 86°F	PVC 40°C 104°F	PVC 50°C 122°F	PP 30°C 86°F	PP 40°C 104°F	PP 50°C 122°F	PP 60°C 140°F	PP 70°C 158°F	PVDF 30°C 86°F	PVDF 50°C 122°F	PVDF 70°C 158°F	PVDF 80°C 176°F	PVDF 90°C 194°F	PVDF 100°C 212°F
1/2"– 2"	150	105	60	15	150	90	60	37.5	15	150	100	60	45	30	15

Temperature Ranges: PVC 0 to 50°C (32 to 122°F), **PP** 10 to 70°C (50 to 158°F), **PVDF** –30 to 100°C (–22 to 212°F).

SB12 Series Back Pressure/Relief Valves 1/2" to 2"

pressure loss nomogram for SB12 valves 3/8" to 2"

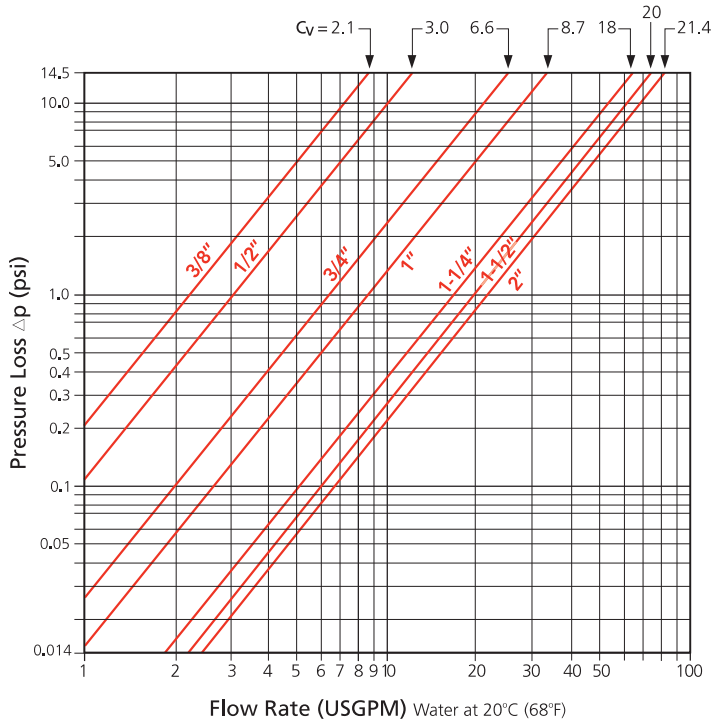

typical dosing system schematic

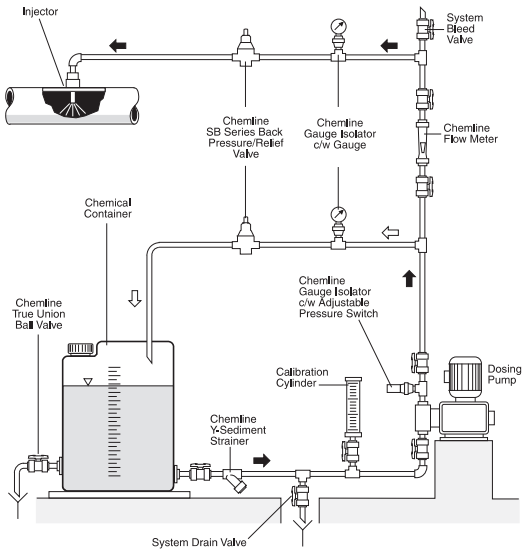

application of pressure relief valves

Constant System Pressure

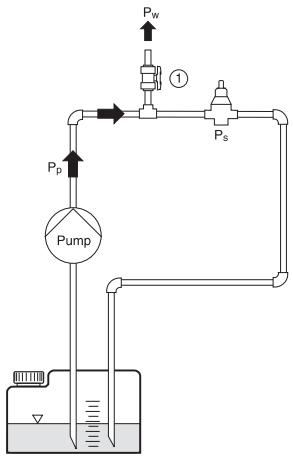

$P_p \geq P_w$
$P_p \geq P_s$ → valve opens
$P_p \leq P_s$ → valve closed

P_w = Working Pressure
P_p = Pump Pressure
P_s = Set Pressure

Consumer 1 and/or 2 Open, Valve Closes

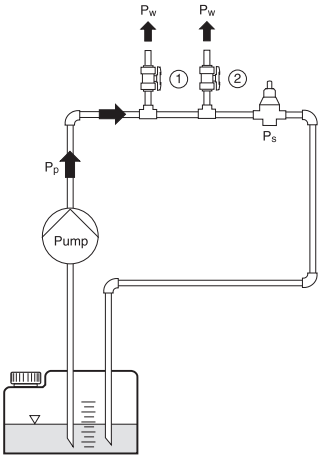

$P_p \geq P_s$ → valve opens
$P_p \leq P_s$ → valve closed

Non-Return Valve

Container 1 is located above the pump

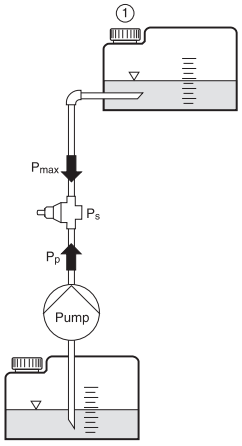

$P_s \geq P_{max}$
$P_p \geq P_s$ → valve opens
$P_p \leq P_s$ → valve closed

Overflow Valve

Pressure of container or application system should not exceed the maximum pressure value

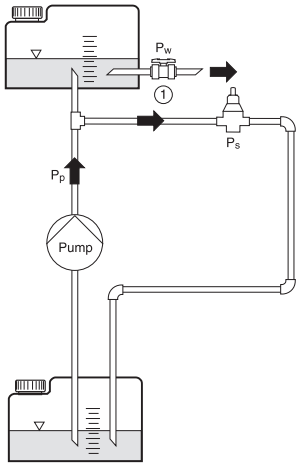

$P_s \leq P_w$
$P_p \geq P_s$ → valve opens
$P_p \leq P_s$ → valve closed

SB12 Series Back Pressure/Relief Valves 1/2" to 2"

working pressure vs. flow rate

The curves show the relationship between the working pressure and the approximate flow rate through the valve for water at 20°C (68°F) . These values will vary depending on:

- The configuration of the piping and the pressure losses associated with it
- The fluid if not water at 20°C (68°F)
- Whether the pressure is rising or falling, hysteresis is approximately 4 psi for 1/2" to 2" valves. For valves 2-1/2" to 4", hysteresis is approximately 14.5 psi.

operation examples

1. The valve is set closed at 100 psi. At a pressure increase of 10 psi, a flow of approximately 1.0 USGPM will be reached.
   - set pressure = 100 psi
   - working pressure = 110 psi
   - opening pressure = approximately 104 psi
2. The valve is set closed at 50 psi. At a pressure increase of 10 psi, a flow of approximately 1.0 USGPM will be reached.
   - set pressure = 50 psi
   - working pressure = 60 psi
   - opening pressure = approximately 54 psi

3/8" Valves

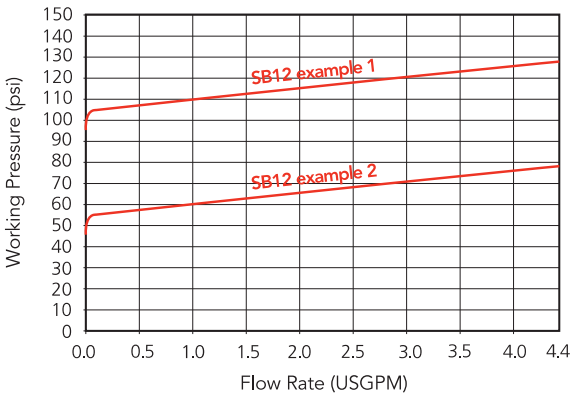

1/2" Valves

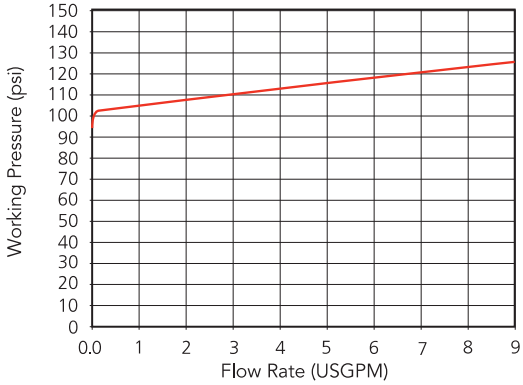

3/4" Valves

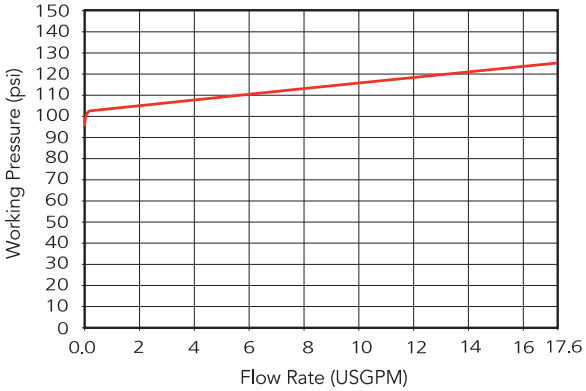

1" Valves

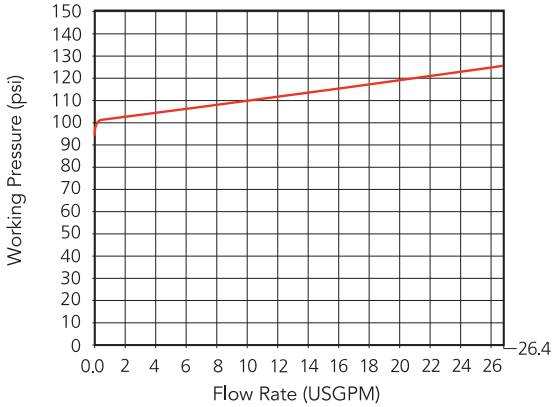

1-1/4" Valves

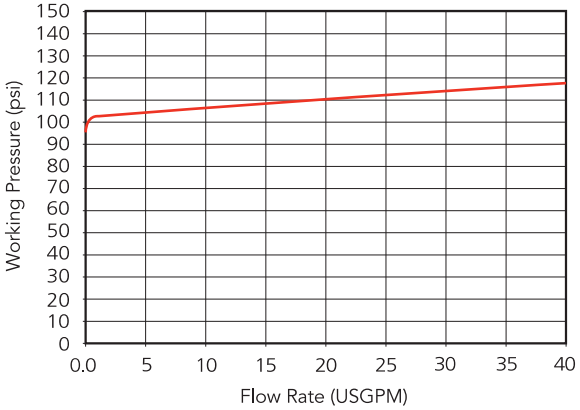

1-1/2" Valves

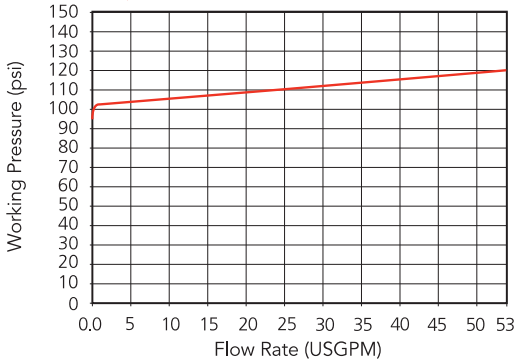

2" Valves

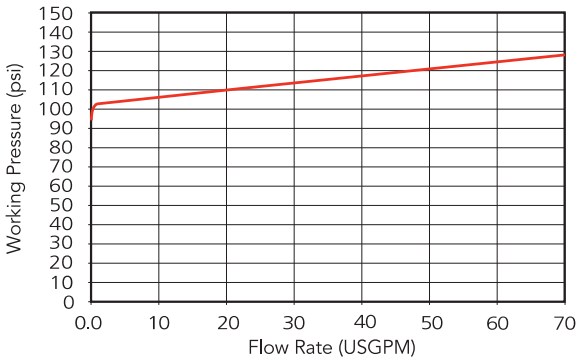

SB12 Series Back Pressure/Relief Valves 2-1/2" to 4"

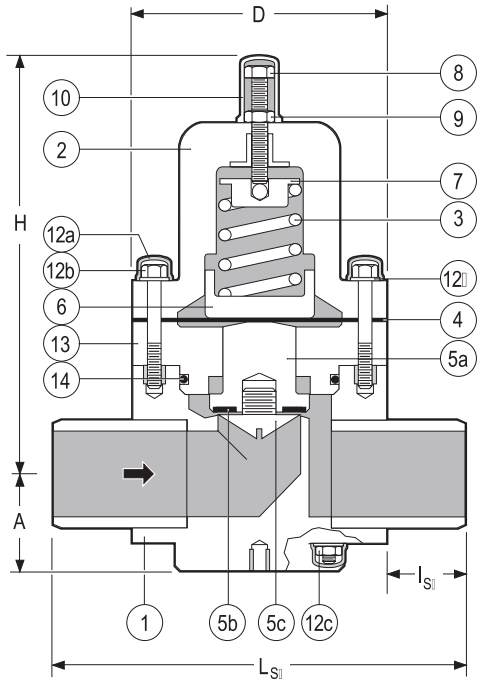

Spigot Body

PARTS

▲ Recommended Spare Parts

No.	Part	Pcs.	Materials
1	Body	1	PVC, PP, PVDF
2	Bonnet	1	PPG
3	Spring	1	Galvanized Steel
4▲	Control Diaphragm	1	PTFE bonded EPDM
5a▲	Piston	2	PVC, PP, PVDF
5b▲	Seat	1	EPDM, FPM(Viton®)
5c▲	Seat Retainer	1	PVC, PP, PVDF
6	Lower Spring Retainer	1	PPG
7	Upper Spring Retauner	1	304 SS
8	Spring Tensioning Bolt	1	304 SS
9	Lock Nut	1	304 SS
10	Spring Bolt Cap	1	PE
12a	Hex Bolt/Nut Cap	20	PE
12b	Hex Bolt/Stud	12[1]	304 SS
12c	Hex Nut	20	304 SS
12d	Washer	20	304 SS
13	Spacer Disc	1	PVC, PP, PVDF
14	Spacer O ring	1	EPDM, FPM(Viton®)

[1] 2 large upper bolts, 2 shorter lower bolts, 8 studs

OTHER ENDS

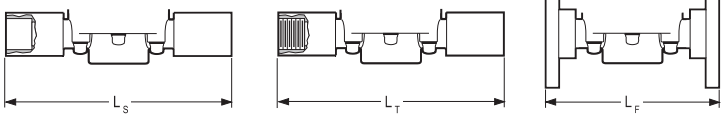

Socket Threaded Flanged

ChemFlare™ Ends
- For connection to PFA tube. Leak-free connections for difficult services such as sodium hypochlorite

DIMENSIONS INCHES

WEIGHTS LB.

Cv VALUES

Size	PVC, PP & PVDF A	D	H	L_{SP}[2]	I_{SP}	PVC L_F	PVC	PP	PVDF	USGPM Flow at 1 psi △P
2-1/2"	2.7	6.9	11.1	11.2	2.1	12.2	20.9	15.4	24.6	41
3"	3.0	7.9	12.2	14.2	3.1	15.0	26.4	23.8	30.8	63
4"	3.7	9.8	14.2	16.5	3.3	16.9	33.0	26.4	37.4	98

[2] Plain spigot ends in PP & PVDF may be butt fused directly to Chemline PP & PVDF piping systems. Weights based on spigot bodies.

MAXIMUM PRESSURES PSI

Size	PVC 20°C 68°F	30°C 86°F	40°C 104°F	50°C 122°F	PP 20°C 68°F	30°C 86°F	40°C 104°F	50°C 122°F	60°C 140°F	70°C 158°F	PVDF 30°C 86°F	50°C 122°F	70°C 158°F	80°C 176°F	90°C 194°F	100°C 212°F
2-1/2"–4"	150	90	44	15	150	116	90	60	37.5	15	150	90	55	40	30	15

Temperature Ranges: PVC 0 to 50°C (32 to 122°F), **PP** 10 to 70°C (50 to 158°F), **PVDF** –30 to 100°C (–22 to 212°F).

ORDERING EXAMPLE

Chemline Back Pressure/ Relief Valves	SB12	A	005	V	U
Body Material	**A** – PVC	**B** – PP	**K** – PVDF		
Size	**003** – 3/8" **010** – 1" **020** – 2"	**005** – 1/2" **012** – 1-1/4" **025** – 2-1/2"	**007** – 3/4" **015** – 1-1/2" **030** – 3"	**040** – 4"		
Elastomers	**E** – EPDM	**V** – FPM (Viton®)				
Ends	**S** – Socket **CFx** – ChemFlare™	**T** – Threaded	**F** – Flanged **Blank** – Spigot (Butt)	**U** – Union Socket		

Example: Chemline SB 12 Series, PVC, 1/2" diameter, FPM (Viton®) seals, Union socket ends.
x = 4 for 1/4", **6** for 3/8", **8** for 1/2", **12** for 1" ID tube connections.

OPTIONS

- 4 to 60 psi Pressure Range springs for 2-1/2" to 4" valves
- **Integral Pressure Gauge** – for inlet and/or outlet
- Bodies in 316 Stainless Steel and PTFE

Optional Pressure Gauge
- For inlet and/or outlet

SB12 Series Back Pressure/Relief Valves 2-1/2" to 4"

working pressure vs. flow rate

• Whether the pressure is rising or falling, hysteresis is approximately 14.5 psi for 2-1/2" to 4" valves

2-1/2" Valves / 4 to 60 psi set pressure range

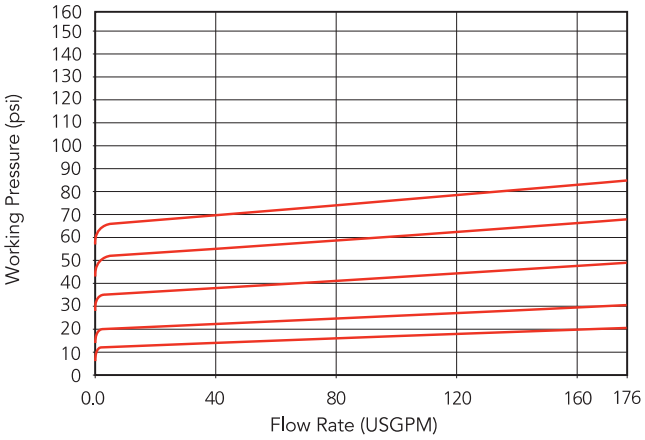

2-1/2" Valves / 7.5 to 150 psi set pressure range

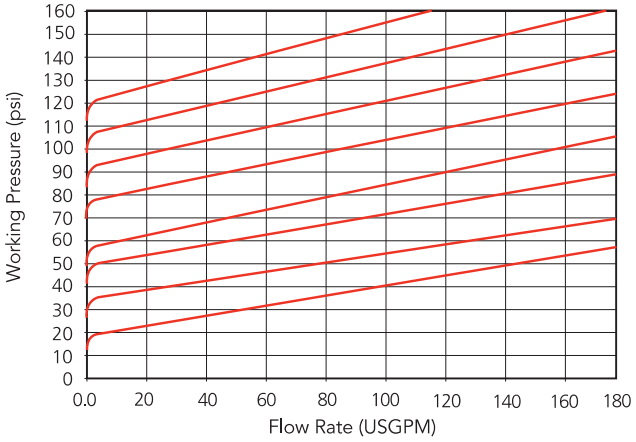

3" Valves / 4 to 60 psi set pressure range

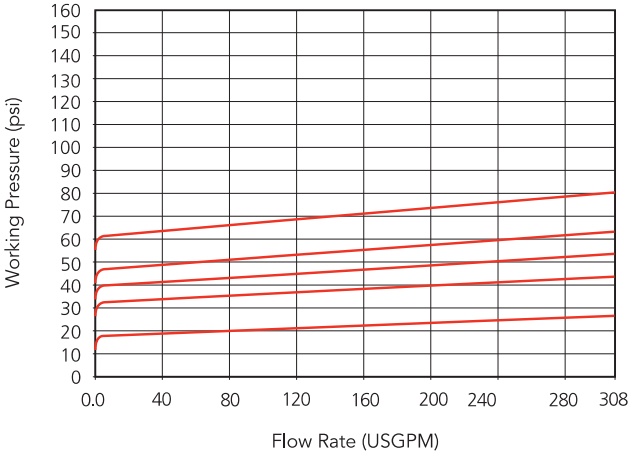

3" Valves / 7.5 to 150 psi set pressure range

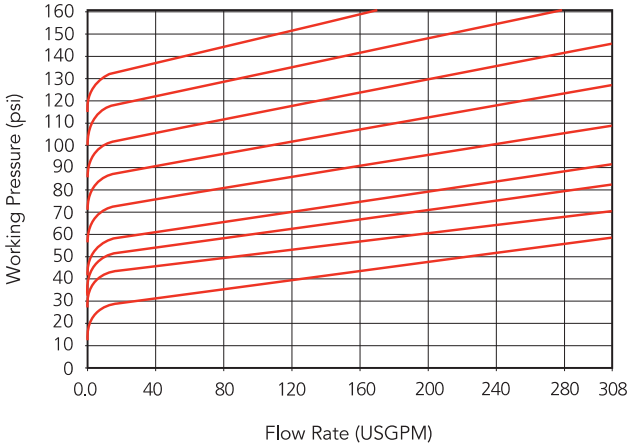

4" Valves / 4 to 60 psi set pressure range

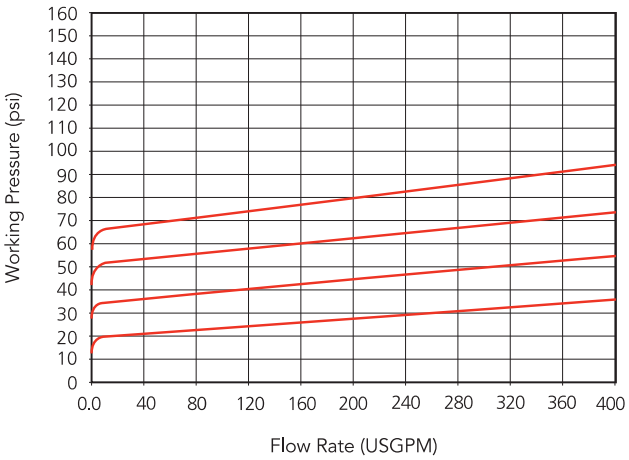

4" Valves / 7.5 to 90 psi set pressure range

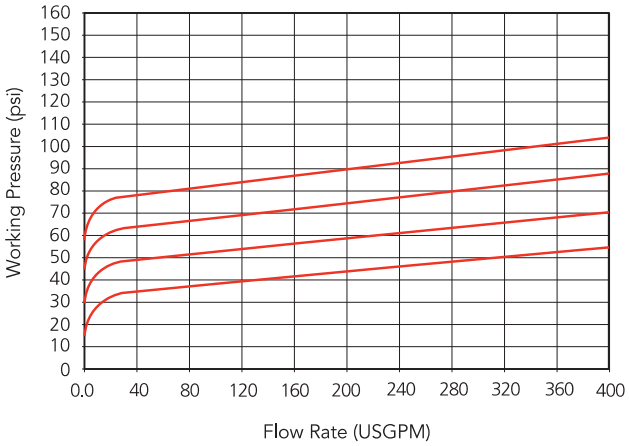

CHEMLINE PLASTICS
SUPERIOR FLOW SOLUTIONS

55 Guardsman Road, Thornhill, ON, L3T 6L2, Canada | ISO 9001:2008 Certified
tel.905.889.7890 | fax.905.889.8553 | request@chemline.com | chemline.com

CS-305-170 : Identification sheet

VWTC PROJECT NUMBER:	5000218009	REV:	1
PROJECT NAME:	AEM AMARUQ	SUBMITTED TO (COMPANY):	AGNICO EAGLE MINES
ENGINEER:	Gabriel Hébert	SUBMITTED TO (RESPONSIBLE)	
PROJECT MANAGER:	Clément B	PROJECT NUM REFERENCE.:	
PHONE NUMBER:		LOT NUMBER:	

SUPPLIER	EQPT CODE	EQPT TAG NO	DIA	DESCRIPTION	INFO 1	INFO 2	INFO 3	APPLIC.	NOTE	REV
CHEMLINE	VARFPV348515	BPV9-591	DIA: 20 mm (3/4")	BACKPRESSURE VALVE	TYPE: BACK PRESSURE VALVE | 150#//MANUFACTURER : CHEMLINE//MODEL : SB12A007EU + SGA-005-002-P-G + P025-160-BM//CONNECTION TYPE : UNION SOCKET | 18 mm (3/4")//BODY : PVC// SEAL | SEAT :EPDM | EPDM// STEM : N/A	(CONFIG. L_U)		KMnO4 DOSING SKID		

This page is intentionally left blank

PDF Published September 17, 2014

SB12 Series Back Pressure/Relief Valves

CHEMLINE PLASTICS
SUPERIOR FLOW SOLUTIONS

PVC PP PVDF

CRN Registered as Category C Fittings Consult Chemline

NSF[3] Certified to NSF/ANSI 61

SERIES: SB12

SIZES: 3/8" – 4"

ENDS: True Union Socket, Threaded or ChemFlare™[1] Spigot[2] Bodies with Plain, Socket, Threaded or Flanged ends

DIAPHRAGM: PTFE Bonded EPDM

SEALS: EPDM, FKM (Viton®)

The Chemline SB Series Back Pressure/ Relief Valve has two functions. As a ***back pressure valve***, installed in-line downstream of a pump, the back pressure below the metering pump is maintained. When installed in the branch of a tee it is a ***pressure relief valve***. The valve stays closed until inlet pressure reaches the set pressure which is adjusted by turning the spring tensioning bolt. Inlet pressure acts upward against the piston allowing excess pressure to flow upwards through the orifice.

The SB12 Series has a built-in check valve function, desirable for dosing applications. It is not so sensitive as to open with every pulsation from a metering pump.

features

True Union Ends

- Easy installation and maintenance
- Eliminate chemical leakage problems common with old fashioned threaded connections

Long Cycling Life

- Dynamic seal is PTFE bonded EPDM for high chemical resistance
- This moulded diaphragm is designed for superior sealing and flex life

Superior Performance in Dosing Systems

- Valves are hydraulically designed for very low hysteresis ("backlash") and to eliminate chatter
- Built-in check (non-return) function
- Valve opening depends on inlet pressure only and is uneffected by changes in downstream (back) pressure

CRN Registration numbers by province

- Ontario: OC10134.5
- Newfoundland: OC10134.50
- Alberta: OC10134.52
- Saskatchewan/Manitoba/Quebec: OC10134.56
- New Brunswick: OC10134.57
- Nova Scotia: OC10134.58
- P.E.I.: OC10134.59
- British Columbia: not required

technical

Set Pressure Ranges

- 1/2" to 2" – 5 to 150 psi
- 2-1/2" and 3" – 7.5 to 150 psi
- 2-1/2" to 4" – 4 to 60 psi (optional)
- 4" – 7.5 to 90 psi

Maximum Viscosity

- 120cP is maximum recommended service viscosity

[1] For ChemFlare™ end connectors, consult Chemline.
[2] PP and PVDF spigot ends have DIN dimensions and will butt fuse directly to Chemline PP and PVDF piping systems.
[3] PVC valves with EPDM or FKM (Viton®) seals are certified under NSF/ANSI Standard 61 for contact with drinking water.

09/14 ©Chemline Plastics Limited 2014
Chemline is a registered trade mark of Chemline Plastics Limited

SB12 Series Back Pressure/Relief Valves 1/2" to 2"

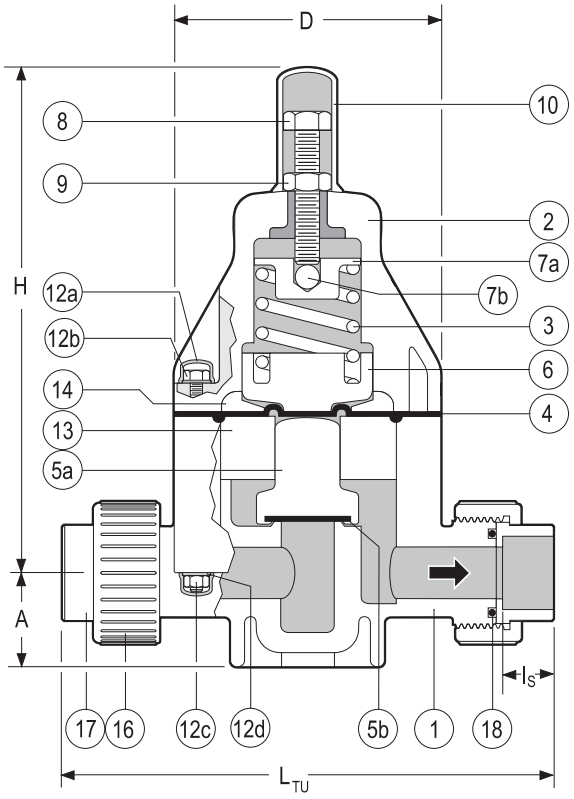

True Union Body

PARTS

▲ Recommended Spare Parts

No.	Part	Pcs.	Materials
1	Body	1	PVC, PP, PVDF
2	Bonnet	1	PPG
3	Spring	1	Galvanized Steel
4▲	Control Diaphragm	1	PTFE bonded EPDM
5a▲	Piston	1	PVC, PP, PVDF
5b▲	Seat	1	EPDM, FPM(Viton®)
6	Lower Spring Retainer	1	PPG
7a	Upper Spring Retainer	1	Cad. Plated Steel
7b	Ball	1	304 SS
8	Spring Tensioning Bolt	1	304 SS
9	Lock Nut	1	304 SS
10	Spring Bolt Cap	1	PE
12a	Bolt/Nut Cap	8/12[1]	PE
12b	Hex Bolt	4/6[1]	304 SS
12c	Hex Nut	4/6[1]	304 SS
12d	Washer	8/12[1]	304 SS
13	Spacer Disc	1	PVC, PP, PVDF
14	Pressure Plate	1	PP
16	Union Nut	2	PVC, PP, PVDF
17	End Connector	2	PVC, PP, PVDF
18▲	Face O-Ring	2	EPDM, FPM(Viton®)

[1] 1/2" size / 3/4" to 2" sizes

OTHER ENDS

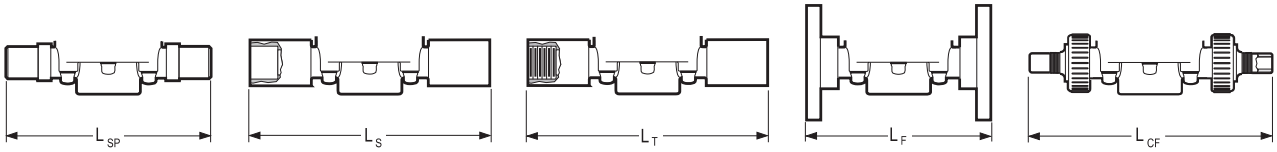

Spigot Body | Socket | Threaded | Flanged | ChemFlare™

DIMENSIONS INCHES

WEIGHTS LB.

Cv VALUES

Size	D	H	PVC A	PVC I_S	PVC L_{TU}[2]	PVC L_{SP}[3]	PVC L_S	PVC L_T	PVC L_F	PVC L_{CF}	PP and PVDF A	PP and PVDF L_{SP}[3]	PP and PVDF L_{TU}[2]	PVC	PP	PVDF	USGPM Flow at 1 psi △P
3/8"	3.2	6.9	1.0	0.6	6.5	5.7	7.4	7.2	4.5	8.2	0.9	5.7	**	1.8	1.5	2.2	2.1
1/2"	3.2	6.9	1.0	0.6	6.8	5.7	8.0	7.8	6.3	8.3[4]	0.9	5.7	7.1	1.9	1.6	2.4	3.0
3/4"	4.2	8.0	1.5	0.7	8.3	6.9	9.3	8.9	7.4	9.7	1.4	6.9	8.4	4.1	3.5	4.6	6.6
1"	4.2	8.0	1.5	0.9	8.5	6.9	9.6	9.3	7.4	10.2	1.4	6.9	8.7	4.2	3.5	4.7	8.7
1-1/4"	5.8	10.3	2.2	1.0	10.9	8.8	11.6	11.2	9.2	13.5	2.1	8.8	10.9	11.0	9.0	12.0	18.0
1-1/2"	5.8	10.3	2.2	1.2	11.1	8.8	12.2	11.5	9.5	–	2.1	8.8	11.2	11.2	9.2	12.2	20.0
2"	5.8	10.3	2.2	1.5	11.3	9.6	12.9	12.0	10.0	–	2.1	8.8	13.2	11.4	9.4	12.4	21.4

[2] True Union bodies come standard with socket ends. Threaded union ends are available. ** Consult Chemline.

[3] Spigot bodies are used for non union socket, threaded or flanged ends. All spigot ends have metric dimensions and the PP and PVDF spigots butt fuse directly to Chemline PP and PVDF piping. [4] Tube size can be reduced to 1/4" tube, LCF = 7.74" for 1/4", 8.26" for 3/8".

MAXIMUM PRESSURES PSI

Size	PVC 20°C 68°F	PVC 30°C 86°F	PVC 40°C 104°F	PVC 50°C 122°F	PP 30°C 86°F	PP 40°C 104°F	PP 50°C 122°F	PP 60°C 140°F	PP 70°C 158°F	PVDF 30°C 86°F	PVDF 50°C 122°F	PVDF 70°C 158°F	PVDF 80°C 176°F	PVDF 90°C 194°F	PVDF 100°C 212°F
1/2"– 2"	150	105	60	15	150	90	60	37.5	15	150	100	60	45	30	15

Temperature Ranges: PVC 0 to 50°C (32 to 122°F), **PP** 10 to 70°C (50 to 158°F), **PVDF** –30 to 100°C (–22 to 212°F).

SB12 Series Back Pressure/Relief Valves 1/2" to 2"

pressure loss nomogram for SB12 valves 3/8" to 2"

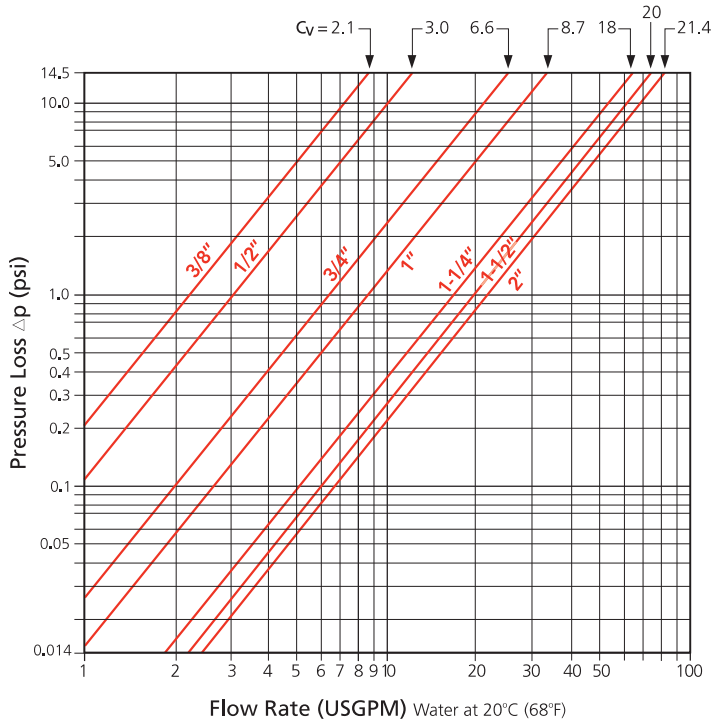

typical dosing system schematic

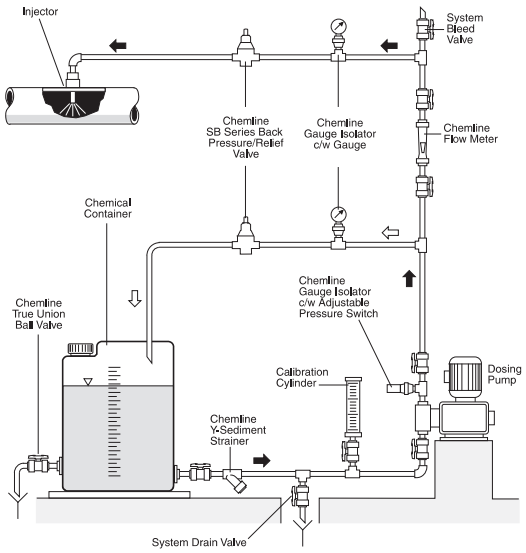

application of pressure relief valves

Constant System Pressure

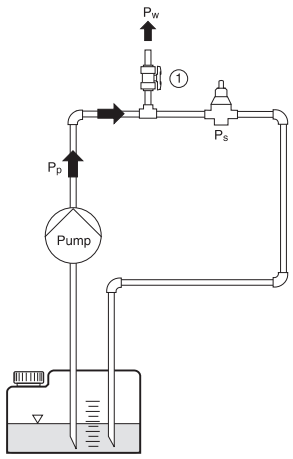

$P_p \geq P_w$
$P_p \geq P_s$ → valve opens
$P_p \leq P_s$ → valve closed

P_w = Working Pressure
P_p = Pump Pressure
P_s = Set Pressure

Consumer 1 and/or 2 Open, Valve Closes

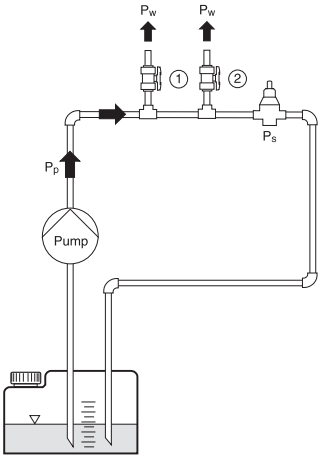

$P_p \geq P_s$ → valve opens
$P_p \leq P_s$ → valve closed

Non-Return Valve

Container 1 is located above the pump

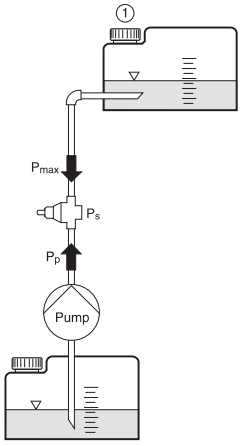

$P_s \geq P_{max}$
$P_p \geq P_s$ → valve opens
$P_p \leq P_s$ → valve closed

Overflow Valve

Pressure of container or application system should not exceed the maximum pressure value

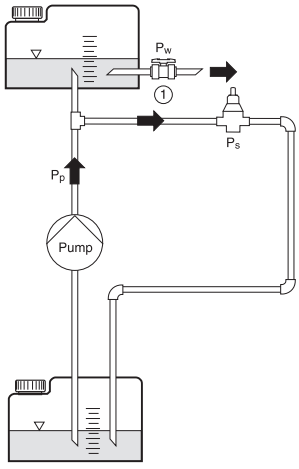

$P_s \leq P_w$
$P_p \geq P_s$ → valve opens
$P_p \leq P_s$ → valve closed

SB12 Series Back Pressure/Relief Valves 1/2" to 2"

working pressure vs. flow rate

The curves show the relationship between the working pressure and the approximate flow rate through the valve for water at 20°C (68°F) . These values will vary depending on:

- The configuration of the piping and the pressure losses associated with it
- The fluid if not water at 20°C (68°F)
- Whether the pressure is rising or falling, hysteresis is approximately 4 psi for 1/2" to 2" valves. For valves 2-1/2" to 4", hysteresis is approximately 14.5 psi.

operation examples

1. The valve is set closed at 100 psi. At a pressure increase of 10 psi, a flow of approximately 1.0 USGPM will be reached.
   - set pressure = 100 psi
   - working pressure = 110 psi
   - opening pressure = approximately 104 psi
2. The valve is set closed at 50 psi. At a pressure increase of 10 psi, a flow of approximately 1.0 USGPM will be reached.
   - set pressure = 50 psi
   - working pressure = 60 psi
   - opening pressure = approximately 54 psi

3/8" Valves

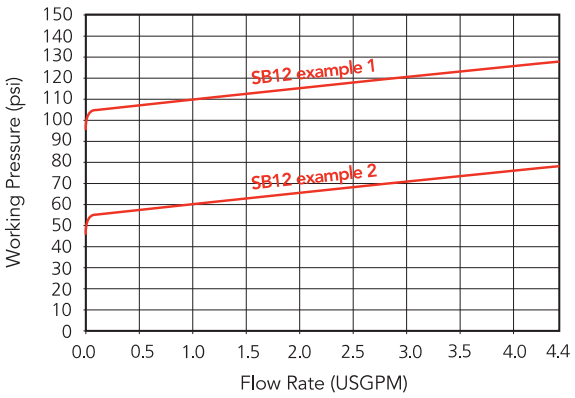

1/2" Valves

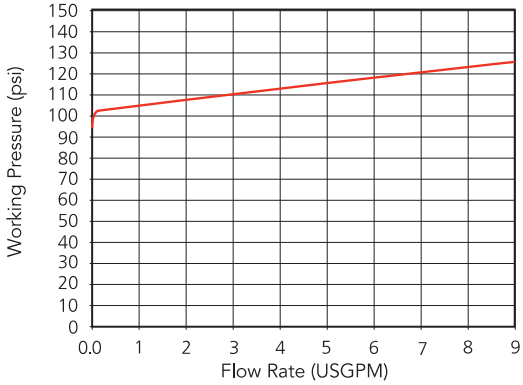

3/4" Valves

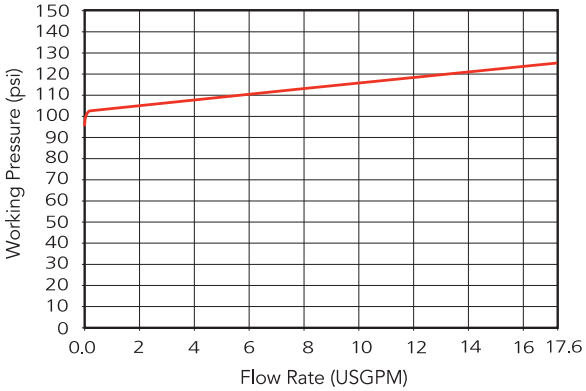

1" Valves

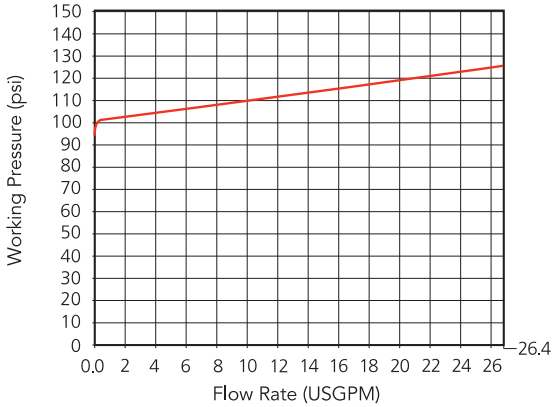

1-1/4" Valves

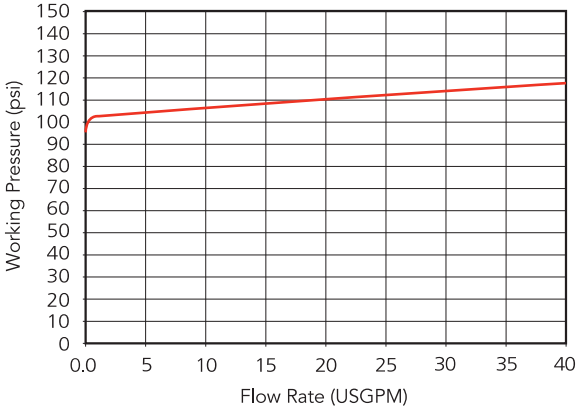

1-1/2" Valves

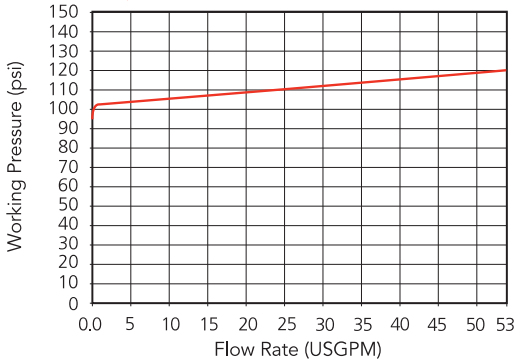

2" Valves

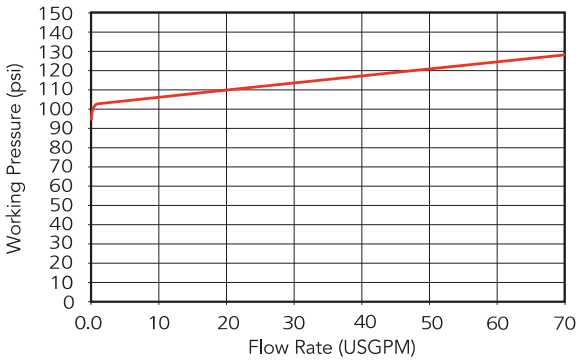

SB12 Series Back Pressure/Relief Valves 2-1/2" to 4"

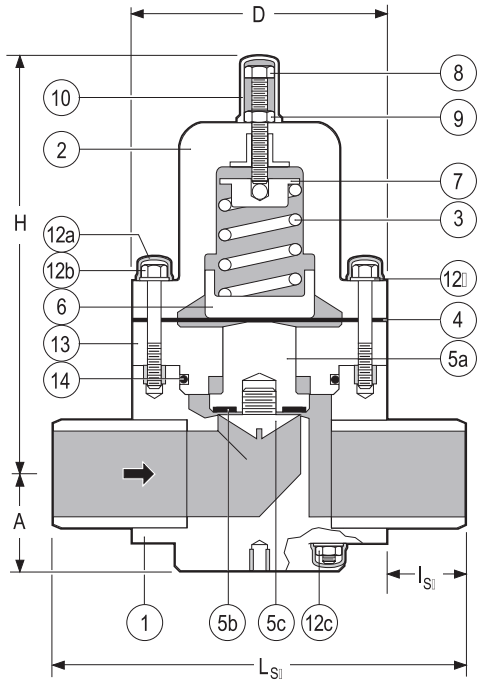

Spigot Body

PARTS

▲ Recommended Spare Parts

No.	Part	Pcs.	Materials
1	Body	1	PVC, PP, PVDF
2	Bonnet	1	PPG
3	Spring	1	Galvanized Steel
4▲	Control Diaphragm	1	PTFE bonded EPDM
5a▲	Piston	2	PVC, PP, PVDF
5b▲	Seat	1	EPDM, FPM(Viton®)
5c▲	Seat Retainer	1	PVC, PP, PVDF
6	Lower Spring Retainer	1	PPG
7	Upper Spring Retauner	1	304 SS
8	Spring Tensioning Bolt	1	304 SS
9	Lock Nut	1	304 SS
10	Spring Bolt Cap	1	PE
12a	Hex Bolt/Nut Cap	20	PE
12b	Hex Bolt/Stud	12[1]	304 SS
12c	Hex Nut	20	304 SS
12d	Washer	20	304 SS
13	Spacer Disc	1	PVC, PP, PVDF
14	Spacer O ring	1	EPDM, FPM(Viton®)

[1] 2 large upper bolts, 2 shorter lower bolts, 8 studs

OTHER ENDS

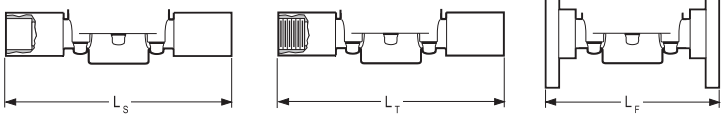

Socket Threaded Flanged

ChemFlare™ Ends
- For connection to PFA tube. Leak-free connections for difficult services such as sodium hypochlorite

DIMENSIONS INCHES

WEIGHTS LB.

Cv VALUES

Size	PVC, PP & PVDF A	D	H	L_{SP}[2]	I_{SP}	PVC L_F	PVC	PP	PVDF	USGPM Flow at 1 psi △P
2-1/2"	2.7	6.9	11.1	11.2	2.1	12.2	20.9	15.4	24.6	41
3"	3.0	7.9	12.2	14.2	3.1	15.0	26.4	23.8	30.8	63
4"	3.7	9.8	14.2	16.5	3.3	16.9	33.0	26.4	37.4	98

[2] Plain spigot ends in PP & PVDF may be butt fused directly to Chemline PP & PVDF piping systems. Weights based on spigot bodies.

MAXIMUM PRESSURES PSI

Size	PVC 20°C 68°F	30°C 86°F	40°C 104°F	50°C 122°F	PP 20°C 68°F	30°C 86°F	40°C 104°F	50°C 122°F	60°C 140°F	70°C 158°F	PVDF 30°C 86°F	50°C 122°F	70°C 158°F	80°C 176°F	90°C 194°F	100°C 212°F
2-1/2"–4"	150	90	44	15	150	116	90	60	37.5	15	150	90	55	40	30	15

Temperature Ranges: PVC 0 to 50°C (32 to 122°F), **PP** 10 to 70°C (50 to 158°F), **PVDF** –30 to 100°C (–22 to 212°F).

ORDERING EXAMPLE

Chemline Back Pressure/ Relief Valves	SB12	A	005	V	U
Body Material	**A** – PVC	**B** – PP	**K** – PVDF		
Size	**003** – 3/8" **010** – 1" **020** – 2"	**005** – 1/2" **012** – 1-1/4" **025** – 2-1/2"	**007** – 3/4" **015** – 1-1/2" **030** – 3"	**040** – 4"		
Elastomers	**E** – EPDM	**V** – FPM (Viton®)				
Ends	**S** – Socket **CFx** – ChemFlare™	**T** – Threaded	**F** – Flanged **Blank** – Spigot (Butt)	**U** – Union Socket		

Example: Chemline SB 12 Series, PVC, 1/2" diameter, FPM (Viton®) seals, Union socket ends.
x = 4 for 1/4", **6** for 3/8", **8** for 1/2", **12** for 1" ID tube connections.

OPTIONS

- 4 to 60 psi Pressure Range springs for 2-1/2" to 4" valves
- **Integral Pressure Gauge** – for inlet and/or outlet
- Bodies in 316 Stainless Steel and PTFE

Optional Pressure Gauge
- For inlet and/or outlet

SB12 Series Back Pressure/Relief Valves 2-1/2" to 4"

working pressure vs. flow rate

• Whether the pressure is rising or falling, hysteresis is approximately 14.5 psi for 2-1/2" to 4" valves

2-1/2" Valves / 4 to 60 psi set pressure range

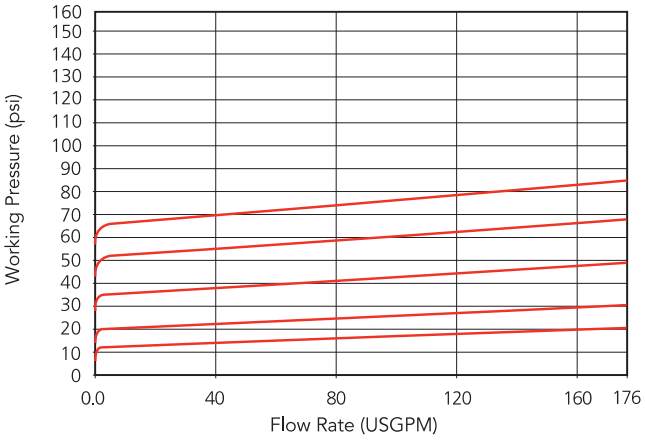

2-1/2" Valves / 7.5 to 150 psi set pressure range

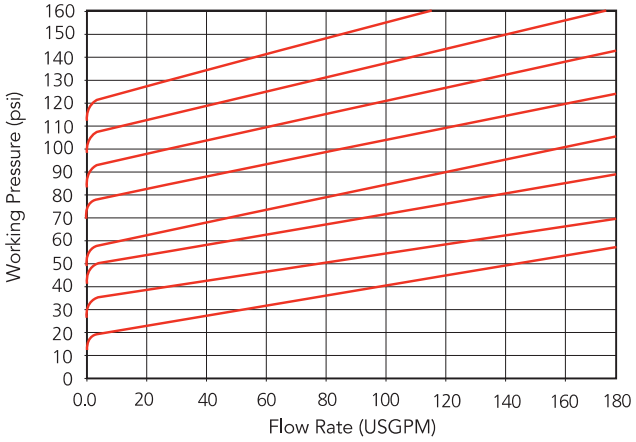

3" Valves / 4 to 60 psi set pressure range

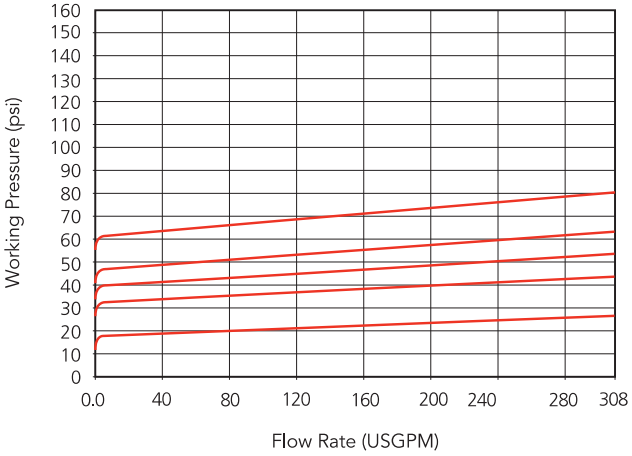

3" Valves / 7.5 to 150 psi set pressure range

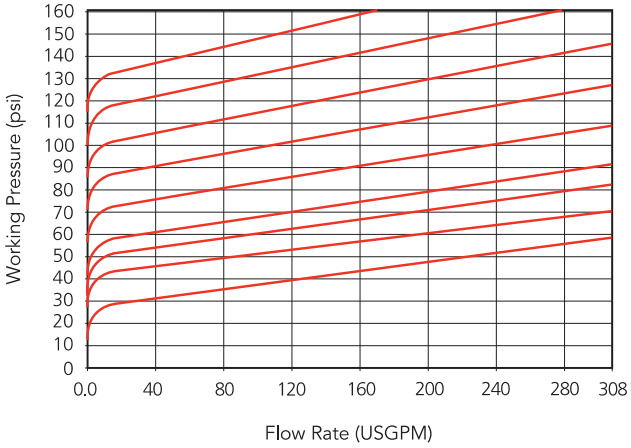

4" Valves / 4 to 60 psi set pressure range

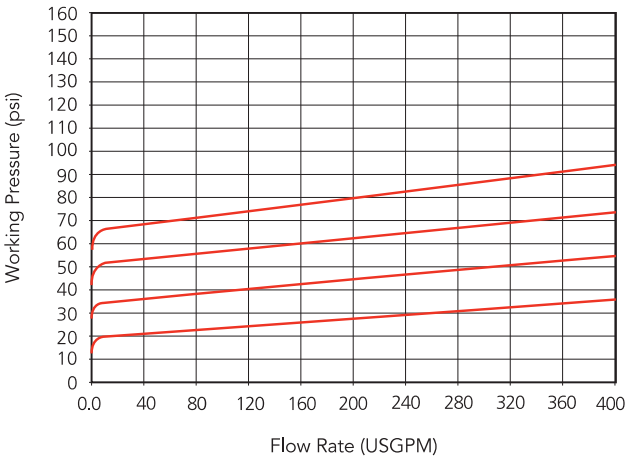

4" Valves / 7.5 to 90 psi set pressure range

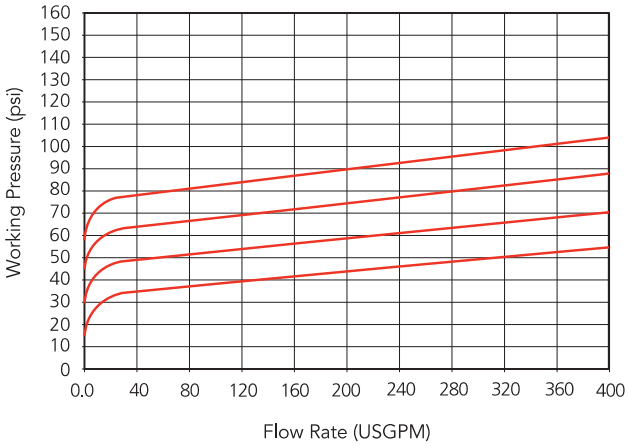

CHEMLINE PLASTICS
SUPERIOR FLOW SOLUTIONS

55 Guardsman Road, Thornhill, ON, L3T 6L2, Canada | ISO 9001:2008 Certified
tel.905.889.7890 | fax.905.889.8553 | request@chemline.com | chemline.com

PDF Published June 23, 2014

Gauge Isolators

CHEMLINE PLASTICS
SUPERIOR FLOW SOLUTIONS

PVC PP PVDF

CRN Registered Consult Chemline

NSF[4] Certified to NSF/ANSI 61

SERIES: SG

INLET CONNECTION: 1/4" or 1/2" Threaded[1]

INSTRUMENT CONNECTION: 1/4" or 1/2" Threaded

DIAPHRAGM: PTFE

[1] Other available inlet connections are 1/2" socket or 1/2" to 1" flanged.
[2] Other fluids are available for special applications such as chlorine service.
[3] Glass reinforced polypropylene.
[4] PVC isolators are certified under NSF/ANSI Standard 61 for contact with drinking water.

Chemline SG Series Gauge Isolators allow inexpensive pressure gauges, or any other pressure instrument to be used in corrosive services. The upper chamber (gauge side) is filled with a stable fluid such as glycol or glycerine[2]. A diaphragm separates it from the lower chamber which receives the media under pressure.

The 1/2" gauge connection allows use of the popular 4" and 4-1/2" diameter gauges. Pressure switches or transmitters may also be installed. Customers can easily fill isolators and install their own gauges.

features

Easy to Mount Gauges

- It is easy to fill an isolator and field mount a gauge. No special equipment is required.
- Will accept popular 4" and 4-1/2" diameter gauges

Provision for Fill Port

- Housing may be drilled and tapped by Chemline or customer for a threaded fill port. This is used for filling isolator using a vacuum filling station

High Chemical Resistance

- Choice of body materials for a wide range of applications
- PTFE bonded EPDM dished diaphragm for high chemical resistance and sensitivity

Heavy Duty Design for Safety

- PPG[3] top chamber
- Heavy wall connection ports

CRN Registration number by province

- Ontario: OH16085.5

Optional Gauges

- Isolators are available alone or with gauge mounted and prefilled with glycol[2]

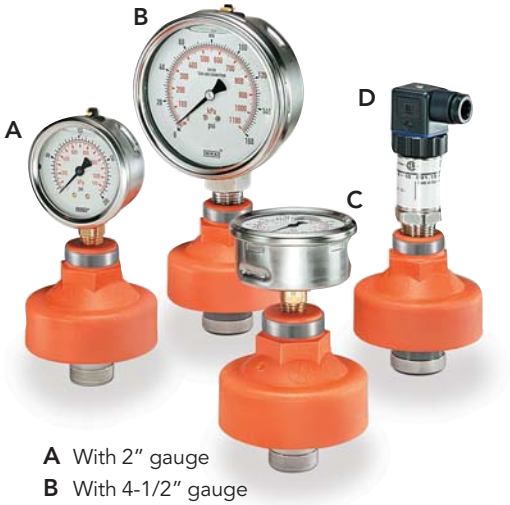

A With 2" gauge
B With 4-1/2" gauge
C With 2" back mount gauge
D With pressure transmitter

06/14 ©Chemline Plastics Limited 2014
Chemline is a registered trade mark of Chemline Plastics Limited

Gauge Isolators

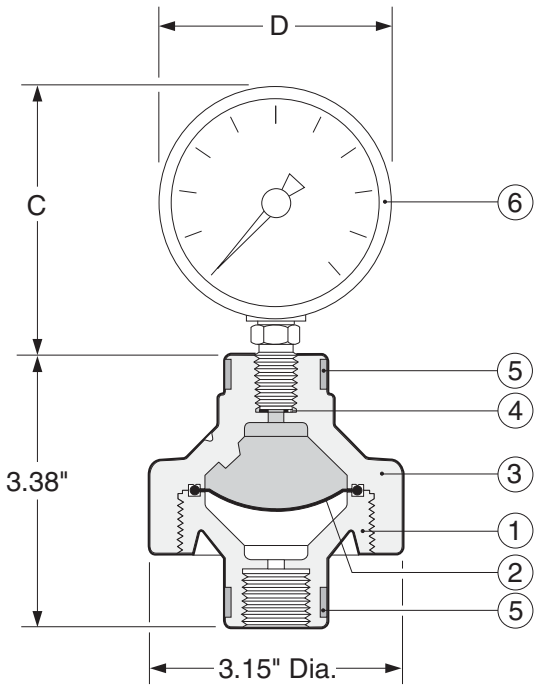

PARTS

No.	Part	Pcs.	Materials
1	Body	1	PVC, PP, PVDF
2	Diaphragm	1	PTFE
3	Bonnet	1	PPG[1]
4	Gasket	1	EPDM
5	Stainless Steel Bands	2	304 SS
6	Optional Gauge	1	See below

[1]PPG = Glass reinforced polypropylene

OPTIONAL GAUGES

- Chemline offers the gauges listed below mounted to isolator and prefilled with glycol, glycerine or special fluid for chlorine applications. These gauges have dials and cases filled with either glycol (standard), glycerine or silicon for corrosion resistance and dampening.
- Chemline SG gauge isolators are not recommended for vacuum applications. They will not affect the gauge accuracy as low as approximately 3 psi. The accuracy depends on the process conditions and the gauge installed on it.

OTHER OPTIONS

- **Flanged** inlet connections
- **Threaded Fill Port** – drilled, tapped and plugged
- Chemline will mount any pressure instrument supplied free issue by customer

DIMENSIONS (Gauge Isolator with optional gauge installed) INCHES

Optional Gauge Ordering No.	Gauge Diameter	Gauge Connection	Housing	Bourdon Tube	Window	Accuracy	Dimensions C	Dimensions D(max.)
P025-xx	2-1/2"	1/4"	316 SS	Brass	Polycarbonate	±1.5% of span	3.1	2.5
P025-xx-SS	2-1/2"	1/4"	316 SS	316 SS	Polycarbonate	±1.5% of span	3.1	2.5
P025-xx-SS/BM	2-1/2" Back Mount	1/4"	316 SS	316 SS	Polycarbonate	±1.5% of span	1.6	2.5
P025-xx-BM	2-1/2" Back Mount	1/4"	316 SS	Brass	Polycarbonate	±1.5% of span	1.6	2.5
P040-xx-SS	4"	1/2"	316 SS	316 SS	Safety Glass	±1% of span	4.5	4.0
P045-xx-SS	4-1/2"	1/2"	PBTP Plastic[2]	316 SS	Acrylic	±0.5% of span	6.3	5.8

xx denotes the maximum gauge pressure i.e., 30, 60, 100, 160 or 200 psi. See data page for recommended working pressures.
[2] PBTP = glass filled polyester.

WORKING PRESSURES PSI

WEIGHTS

Material	10 – 20°C 50 – 68°F	30°C 86°F	40°C 104°F	50°C 122°F	60°C 140°F	70°C 158°F	80°C 176°F	90°C 194°F	100°C 212°F	120°C 248°F	Net Weights Pounds[3]
PVC	150	100	80	45	15	–	–	–	–	–	1.0
PP	150	125	100	80	65	45	–	–	–	–	0.7
PVDF	150	150	150	125	105	85	70	60	45	30	1.3

Temperature Ranges: PVC 0 to 60°C (32 to 140°F), **PP** 10 to 80°C (50 to 176°F), **PVDF** –30 to 120°C (–22 to 248°F).
NR = Not Recommended. [3] Weights are for unfilled 1/2" x 1/2" isolators without gauges. 1/2" x 1/4" isolators are 20% lighter.

ORDERING EXAMPLE

Chemline Gauge Isolators SG		A	005-	002	P	G
Body Material	**A** – PVC	**B** – PP	**K** – PVDF			
Inlet Size	**002** – 1/4"	**005** – 1/2"(Standard)				
Instrument Connection	**002** – 1/4"	**005** – 1/2"				
Diaphragm	**P** – PTFE bonded EPDM					
Filling & Mounting	**G** –Add only if isolator is supplied filled with glycol and gauge or pressure instrument is mounted by Chemline. Separate gauge item numbers are listed above.					

Example: Chemline SG Series Gauge Isolator, PVC, 1/2" x 1/4" FNPT inlet x instrument connections, PTFE diaphragm.

CHEMLINE PLASTICS
SUPERIOR FLOW SOLUTIONS
55 Guardsman Road, Thornhill, ON, L3T 6L2, Canada | ISO 9001:2008 Certified
tel.905.889.7890 | fax.905.889.8553 | request@chemline.com | chemline.com

Project name: AMARUQ

Project#: 5000218009

Document #: SPK_0007_PCH

by: GH

chkd: GP

appvd: CB

KMnO4 DOSING SKID

CALIBRATION CYLINDER

OIM manual section: 4.3.7.5

This page is intentionally left blank

CS-500-100 : Identification sheet

VWTC PROJECT NUMBER:	5000218009	REV:	1
PROJECT NAME:	AEM AMARUQ	SUBMITTED TO (COMPANY):	AGNICO EAGLE MINES
ENGINEER:	Gabriel Hébert	SUBMITTED TO (RESPONSIBLE)	
PROJECT MANAGER:	Clément B	PROJECT NUM REFERENCE.:	
PHONE NUMBER:		LOT NUMBER:	

SUPPLIER	EQPT CODE	EQPT TAG NO	DIA	DESCRIPTION	INFO 1	INFO 2	INFO 3	APPLIC.	NOTE	REV
PRIMARY FLUID	PUSPPV200288	CYL9-591	N/A	CALIBRATION CYLINDER	CALIBRATION CYLINDER/MANUFACTURER: PRIMARY FLUID/MODEL: PV2-4000	N/A	N/A	KMnO4 DOSING SKID		

This page is intentionally left blank

ACCUDRAW® Calibration Cylinders

Polypropylene

PVC

Glass

- PVC with removable "O" ring sealed top for easy cleaning

- yellow polypropylene level indicator float for high visibility

ACCUDRAW® ***has been developed for the accurate calibration of metering pumps. Standard features include:***

- translucent
- chemical resistant
- break resistant
- threaded, socket or flanged
- colored graduations and lettering
- PVC has dual scale USGPH & ml
- PVC sizes 100 - 20000 ml
- POLY sizes 100 - 4000 ml
- POLY meets ISO standards
- Glass sizes 100 - 20000 ml
- custom designs available

For detailed product information visit our website: primaryfluid.com

PRIMARY FLUID SYSTEMS INC.
Call Toll Free 1-800-776-6580
Tel (905) 333-8743 Fax (905) 333-8746
E-Mail: primary@primaryfluid.com
www.primaryfluid.com

ACCUDRAW® Calibration Cylinders

"For Accuracy That Counts"

For complete product information visit our website: primaryfluid.com

Flanged: Glass, PVC

Flanged: PVC

PV#4

Sizing and Ordering Information:

ACCUDRAW Standard Materials of Construction

AC = All polypropylene construction (see below for options)
PV = All polyvinylchloride construction (see below for options)
ACS = Glass*

Note: Cylinders are NOT pressure vessels

Example: AC#1-1000B

AC = PP (polypropylene)
#1 = Bottom threaded connection only
1000 = 1000 ml
B = BSP Thread

e.g. Part # AC #1 - 1000 B

Type:
AC = Polypropylene
PV = PVC
ACS = Glass

Style:
1 = Bottom threaded conn. only
2 = Top and Bottom threaded conn.
3 = Bottom threaded conn. c/w removable vented dust cap
4 = Top/Bottom threaded conn. c/w removable "O" ring sealed top and float ring level indicator
**** Glass calibration cylinders available in Style 2 only***

Graduation Scale:
PP - ml only
PVC - ml and GPH
Glass - ml only

Std. connection is NPT thread
Optional: add suffix as follows
S = Socket weld connection (PVC only)
GTV = Glass/TFE construction
GKV = Glass/PVDF construction
GCV = Glass/CPVC construction
GSV = Glass/SS construction
B = BSP Thread
F = Flanged

Substitute **E** for **V**
for **EPDM** wetted "O" ring seal

Sizes:		**Material**
100 =	100 ml (1.6 GPH)	PP, PVC, Glass
250 =	250 ml (4 GPH)	PP, PVC, Glass
500 =	500 ml (8 GPH)	PP, PVC, Glass
1000 =	1000 ml (16 GPH)	PP, PVC, Glass
2000 =	2000 ml (32 GPH)	PP, PVC, Glass
4000 =	4000 ml (64 GPH)	PP, PVC, Glass
6000 =	6000 ml	Glass only
8000 =	8000 ml	Glass only
10000 =	10000 ml (160 GPH)	PVC, Glass
20000 =	20000 ml (320 GPH)	PVC, Glass

Custom sizes and materials available.

ACCUDRAW® Calibration Cylinders

ACCUDRAW® Glass Calibration Cylinders ***are ideal for the calibration of metering pumps, batch systems and for handling hazardous chemicals.***

- **volumes calibrated in ml**
- **construction materials available include TFE, PVDF, CPVC and 316 stainless steel**
- **sealing "O" rings are Viton and Buna N**
- **outer shield of acrylic construction**
- **port connections in NPT, metric or flanged**
- **standard sizes 100 - 20,000 ml**
- **custom designs available to your specifications**

Sizing and Ordering Information: Glass Construction

Size	Conn.	Model # For TFE End Flgs	Model # For 316 S/S End Flgs	Model # For PVDF End Flgs	Model # For CPVC End Flgs
100 ml	1/2" NPT	ACS#2-100-GTV	ACS#2-100-GSV	ACS#2-100-GKV	ACS#2-100-GCV
250 ml	1/2" NPT	ACS#2-250-GTV	ACS#2-250-GSV	ACS#2-250-GKV	ACS#2-250-GCV
500 ml	1/2" NPT	ACS#2-500-GTV	ACS#2-500-GSV	ACS#2-500-GKV	ACS#2-500-GCV
1000 ml	1/2" NPT	ACS#2-1000-GTV	ACS#2-1000-GSV	ACS#2-1000-GKV	ACS#2-1000-GCV
2000 ml	1 " NPT	ACS#2-2000-GTV	ACS#2-2000-GSV	ACS#2-2000-GKV	ACS#2-2000-GCV
4000 ml	1" NPT	ACS#2-4000-GTV	ACS#2-4000-GSV	ACS#2-4000-GKV	ACS#2-4000-GCV
6000 ml	1" NPT	ACS#2-6000-GTV	ACS#2-6000-GSV	ACS#2-6000-GKV	ACS#2-6000-GCV
8000 ml	2" NPT	ACS#2-8000-GTV	ACS#2-8000-GSV	ACS#2-8000-GKV	ACS#2-8000-GCV
10000 ml	2" NPT	ACS#2-10000-GTV	ACS#2-10000-GSV	ACS#2-10000-GKV	ACS#2-10000-GCV
20000 ml	2" NPT	ACS#2-20000-GTV	ACS#2-20000-GSV	ACS#2-20000-GKV	ACS#2-20000-GCV

Cylinders are bolted together using stainless steel rods with Viton "O" rings for the glass seal and Buna N "O" rings for the acrylic seal. For EPDM "O" rings, subsititute "E" for "V".

Options available: (may affect price and delivery)

- **different type or size of thread connection, different "O" ring material, different flange material**

Descriptions:

TFE, PVDF and CPVC End Flanges:
Glass cylinder with acrylic outer shield and 3/4" thick (TFE, PVDF or CPVC) end flanges

316 S/S End Flanges:
Glass cylinder with acrylic outer shield and 1/2" thick 316 Stainless Steel end flanges

Glass Dimensional Information

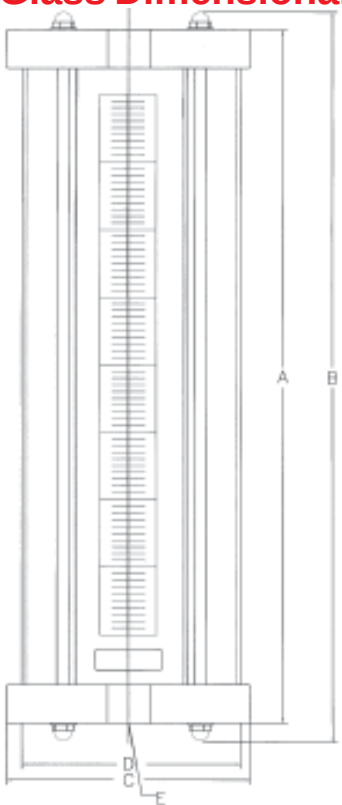

Note: Cylinders are <u>not</u> pressure vessels.

Dimensions subject to change without notice.

Glass cylinders with TFE, PVDF or CPVC End Flanges

Size ml	DIV ml	A inches	B inches	C inches	D inches	E thread
100	1.00	10.00	11.00	3.00	2.50	1/2" FNPT
250	2.00	12.75	13.50	3.50	3.00	1/2" FNPT
500	5.00	14.50	15.50	4.00	3.50	1/2" FNPT
1000	10.00	16.75	17.75	4.75	4.25	1/2" FNPT
2000	20.00	18.75	19.75	5.50	5.00	1" FNPT
4000	25.00	22.50	23.50	6.50	6.00	1" FNPT
6000	50.00	20.13	21.16	8.00	7.50	1" FNPT
8000	50.00	24.63	25.66	8.00	7.50	2" FNPT
10000	50.00	30.13	31.16	8.00	7.50	2" FNPT
20000	200.00	43.25	44.25	9.00	8.50	2" FNPT

Glass cylinders with 316 Stainless Steel End Flanges

Size ml	DIV ml	A inches	B inches	C inches	D inches	E thread
100	1.00	9.50	10.50	3.00	2.50	1/2" FNPT
250	2.00	12.25	13.00	3.50	3.00	1/2" FNPT
500	5.00	14.00	15.00	4.00	3.50	1/2" FNPT
1000	10.00	16.25	17.25	4.75	4.25	1/2" FNPT
2000	20.00	18.25	19.25	5.50	5.00	1" FNPT
4000	25.00	22.00	23.00	6.50	6.00	1" FNPT
6000	50.00	19.63	20.66	8.00	7.50	1" FNPT
8000	50.00	24.13	25.16	8.00	7.50	2" FNPT
10000	50.00	29.63	30.66	8.00	7.50	2" FNPT
20000	200.00	42.75	43.75	9.00	8.50	2" FNPT

ACCUDRAW® Calibration Cylinders

Installations

Conversion Factors
1 ml = 1 cc
1000 ml = 1 liter
ml/sec X 60 = ml/min
1 US gal/min X 0.063 = liters/sec
1 US gal = 3.786 liters

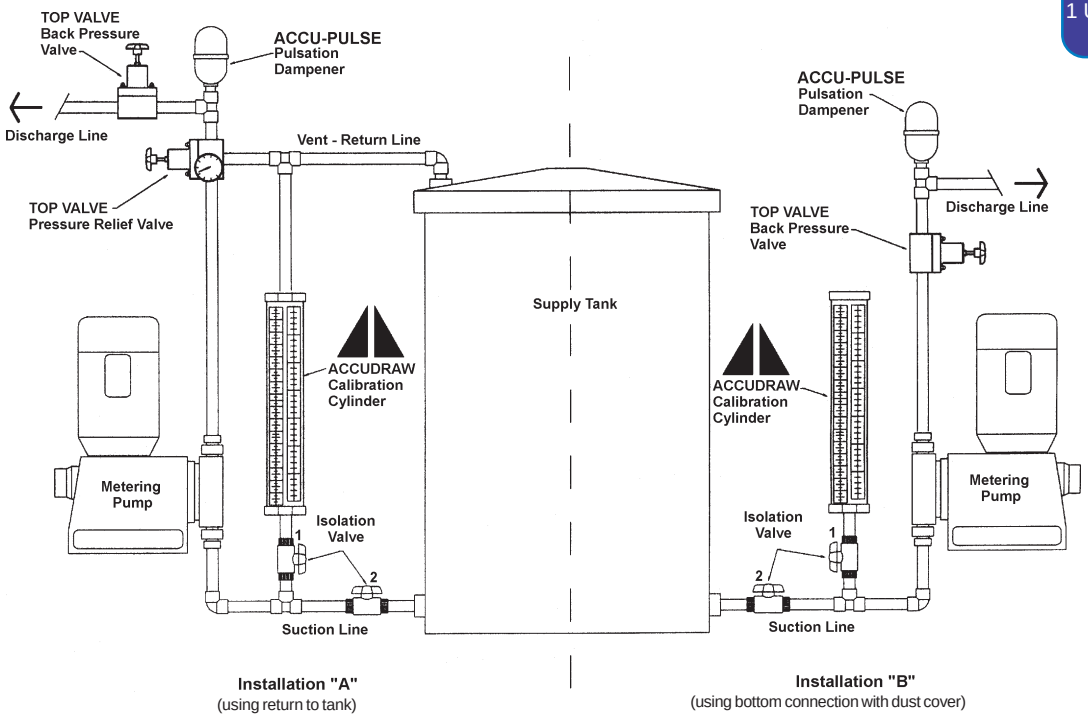

Installation "A"
(using return to tank)

Installation "B"
(using bottom connection with dust cover)

Other available products at www.primaryfluid.com

TOP VALVE Back Pressure/Pressure Relief

- *long life diaphragm*
- *range of 15 - 350 PSIG*
- *air release, optional gauge port*
- *PVC, CPVC, PVDF, Teflon, polypropylene, stainless, Alloy 20 and Hastelloy C*
- *7 sizes 1/4" - 2" NPT*
- *color coded handles indicate size*
- *higher pressure & temperature available*

PFS Corporation Stops

Designed to inject chemical into the center stream of process.

- *isolation valve allows for ease of maintenance*
- *available in 6 materials of construction*
- *wetted components have comparable or greater chemical resistance than quill construction material*
- *standard and custom lengths available*
- *connection in NPT, metric or flanged*

Custom built in other sizes & materials.

ACCUPULSE Pulsation Dampeners

Designed to remove pulsatingflows from positive displacement pumps.

- *increase system efficiency and pump life; decrease maintenance and costs*
- *protect pipes, meters, valves and instrumentation from pulsation and vibration*
- *ensure meter accuracy, longevity and repeatability*
- *prevent foaming and splashing*
- *extensive range of materials and sizes with lightweight, compact design*

Distributed By:

PRIMARY FLUID SYSTEMS INC.

Call Toll Free 1-800-776-6580
Tel: (905) 333-8743
Fax: (905) 333-8746

Distribution Territories Available

E:Mail: primary@primaryfluid.com
www.primaryfluid.com

® Registered Trade Mark of Primary Fluid Systems

Project name: AMARUQ

Project#: 5000218009

Document #: SPK_0007_PCH

by: GH

chkd: GP

appvd: CB

KMnO4 DOSING SKID

PULSATION DAMPENER

OIM manual section: 4.3.7.6

This page is intentionally left blank

CS-501-100 : Identification sheet

VWTC PROJECT NUMBER:	5000218009	REV:	1
PROJECT NAME:	AEM AMARUQ	SUBMITTED TO (COMPANY):	AGNICO EAGLE MINES
ENGINEER:	Gabriel Hébert	SUBMITTED TO (RESPONSIBLE)	
PROJECT MANAGER:	Clément B	PROJECT NUM REFERENCE.:	
PHONE NUMBER:		LOT NUMBER:	

SUPPLIER	EQPT CODE	EQPT TAG NO	DIA	DESCRIPTION	INFO 1	INFO 2	INFO 3	APPLIC.	NOTE	REV
PRIMARY FLUID	PUSPPV304128	PD9-591	N/A	PULSTAION DAMPENER	PULSATION DAMPENER/MANUF.: ACCU-PULSE// MODEL: APII-PVC-E-2	Vol.: 85 in3/Body Mtl: PVC/Bellows Mtl: EPDM (NORDEL)/Size: 3/4" FNPT	N/A	KMnO4 DOSING SKID		

This page is intentionally left blank

ACCU-PULSE
Pulsation Dampeners

ACCU-PULSE Pulsation Dampeners have been developed to remove pulsating flows from positive displacement pumps providing:

- **increased system efficiency and pump life**
- **protection of pipes, meters, valves and instrumentation from pulsation and vibration**
- **meter accuracy, longevity and repeatability**
- **prevention of foaming and splashing**
- **decreased maintenance and costs**

Standard Features Include:

- **lightweight, compact design**
- **extensive range of materials and sizes**
- **easy in-line maintenance**
- **2 year warranty**

For detailed product information visit our website: primaryfluid.com

PRIMARY FLUID SYSTEMS INC.

Call Toll Free 1-800-776-6580
Tel (905) 333-8743 Fax (905) 333-8746

E-Mail: primary@primary fluid.com
www.primaryfluid.com

ACCU-PULSE Pulsation Dampeners

Dampener Sizing Guide

Note: Separate sizing guide available for air operated double diaphragm pumps.

Standard Simplex Metering Pumps:

The following are general ranges for sizing ACCU-Pulse Pulsation dampeners for metering pump applications. Models stated are based on 10% pressure fluctuations and a Simplex single acting metering pump. For 5% pressure fluctuation, divide the Capacity per Stroke Range numbers in the chart below by 2.

To calculate cubic inches per stroke: $\frac{\text{gallons per minute}}{\text{strokes per minute}}$ = gallons per stroke

Gallons per stroke X 231 cu inches per gallon = cubic inch per stroke

Example: $\frac{.15}{100}$ = .0015 GPS **Therefore:** .0015 X 231 = 0.3465 Cubic inches per stroke = API Dome Top Dampener

Capacity per Stroke Range	ACCU-Pulse Dampener
0 to 0.22 Cubic Inches	API F Flat Top
0.23 to 0.75 Cubic Inches	API Dome Top
0.76 to 2.71 Cubic Inches	API IIF Flat Top
2.72 to 6.40 Cubic Inches	API II Dome Top
6.41 to 12.96 Cubic Inches	API IIIF Flat Top
12.97 to 27.89 Cubic Inches	API III Dome Top

Note:
For other pump factors, or residual pulsation, contact factory.

Ordering Information

Example: Part # AP - I - PVC - E - 1 - F

ACCU-PULSE
- AP = Standard 150/300 PSIG
- APH = High Pressure 1000/600 PSIG
- APX = High Pressure 4000 PSIG

Series
- I = 10 cu in capacity
- IF = 4 cu in capacity
- II = 85 cu in capacity
- IIF = 36 cu in capacity
- III = 370 cu in capacity
- IIIF = 175 cu in capacity
- IV = 1155 cu in capacity (AP only)
- 8 = 8 cu in capacity (APX only)
- 12 = 12 cu in capacity (APX only)
- 16 = 16 cu in capacity (APX only)
- 24 = 24 cu in capacity (APX only)

Body Material
- PP = Polypropylene
- PVC = Polyvinylchoride (not available in Series IV)
- PVDF = Polyvinylidene Fluoride
- S/S = 316L Stainless Steel
- ALL20 = Alloy 20 (not available in Series IV)
- HAST = Hastelloy C
- CS = Carbon Steel
- CPVC = Chlorinated Polyvinyl Chloride*

* (available in Series I only)

Optional Flanges
Add suffix -F for flanges

Size
- 0 = 3/8" npt(f) series I Std Metal
- 1 = 1/2" npt(f) series I Std Plastic
- 2 = 3/4" npt(f) series II Std All
- 3 = 1" npt(f) series II (Optional)
- 4 = 2" npt(f) series III
- 5 = 3" flanged series IV
- 6 = 4" flanged series IV

Bellows material
- N = Neoprene
- B = Buna-N
- H = Hypalon
- E = EPDM (Nordel)
- V = Viton
- T = Teflon
- S = Santoprene
- P = Polyvinylchloride

APX Series available ONLY with:
Body: 316L Stainless Steel
Size: 1/2" npt(f)
Bellows: Buna-N, EPDM & Viton

Note:
CRN certification available.
Food grade material available.
Other sizes and materials available.
Please contact factory.

For detailed product information visit our website: primaryfluid.com

Distributed By:

PRIMARY FLUID SYSTEMS INC.

Call Toll Free 1-800-776-6580
Tel: (905) 333-8743
Fax: (905) 333-8746
E:Mail: primary@primaryfluid.com
www.primaryfluid.com

Distribution Territories Available

*PAT 5,857,486/5,944,050
® Registered Trade Mark of Primary Fluid Systems

4 – DETAILED TECHNICAL DOCUMENTATION

4.3 – SHOP DRAWINGS

4.3.8 – COAGULANT DOSING SKID

LEFT BLANK

Project name:	AMARUQ
Project#:	5000218009
Document #:	SPK_0008_PCH
by:	GH
chkd:	GP
appvd:	CB

SUBMITTAL PACKAGE

COAGULANT DOSING SKID

This page is intentionally left blank

Project name:	AMARUQ
Project#:	5000218009
Document #:	SPK_0008_PCH
by:	GH
chkd:	GP
appvd:	CB

COAGULANT DOSING SKID

PROCESS DATASHEET

OIM manual section: 4.3.8.1

REFER TO 5000218009_PSDS_0008_PCH_VWT

This page is intentionally left blank

Project name:	AMARUQ
Project#:	5000218009
Document #:	SPK_0008_PCH
by:	GH
chkd:	GP
appvd:	CB

COAGULANT DOSING SKID

GENERAL ARRANGEMENT DRAWING

OIM manual section: 4.3.8.2

REFER TO 5000218009_GA_0008_PCH_VWT

This page is intentionally left blank

Project name:	AMARUQ
Project#:	5000218009
Document #:	SPK_0008_PCH
by:	GH
chkd:	GP
appvd:	CB

COAGULANT DOSING SKID

PUMP(S)

OIM manual section: 4.3.8.3

This page is intentionally left blank

CS-999-004 : Identification sheet

VWTC PROJECT NUMBER:	5000218009	REV:	1
PROJECT NAME:	AEM AMARUQ	SUBMITTED TO (COMPANY):	AGNICO EAGLE MINES
ENGINEER:	Gabriel Hébert	SUBMITTED TO (RESPONSIBLE)	
PROJECT MANAGER:	Clément B	PROJECT NUM REFERENCE.:	
PHONE NUMBER:		LOT NUMBER:	

SUPPLIER	EQPT CODE	EQPT TAG NO	DIA	DESCRIPTION	INFO 1	INFO 2	INFO 3	APPLIC.	NOTE	REV
PULSAFEEDER	ST-999-004	P9-513		COAGULANT METERING PUMP	Coagulant Shadow pumps // 55BF-EZ000234U6 // 55BF Mechanical Diaphragm, 316/316L Stainless Steel [316], 500 LPH, 75 PSIG, 0000140-MM Diaphragm, NPT Connections, Manual Stroke Length Control, Stock Motor, 1750 RPM, 1 Horsepower, EAR99			COAGULANT DOSING SKID		
PULSAFEEDER	ST-999-004	P9-514		COAGULANT METERING PUMP	Coagulant Shadow pumps // 55BF-EZ000234U6 // 55BF Mechanical Diaphragm, 316/316L Stainless Steel [316], 500 LPH, 75 PSIG, 0000140-MM Diaphragm, NPT Connections, Manual Stroke Length Control, Stock Motor, 1750 RPM, 1 Horsepower, EAR99			COAGULANT DOSING SKID		

This page is intentionally left blank

PULSAFEEDER®
ENGINEERED PRODUCTS

PULSAR Shadow®

The PULSAR Shadow® sets a new standard for the mechanically actuated diaphragm metering pump. It features rugged and reliable construction, delivering superior value. The Shadow is easy to operate and simple to maintain. The Shadow HYPOPump configuration is the ideal choice for sodium hypochlorite or other off-gassing and difficult to handle fluids.
It is commonly used in water & wastewater treatment.

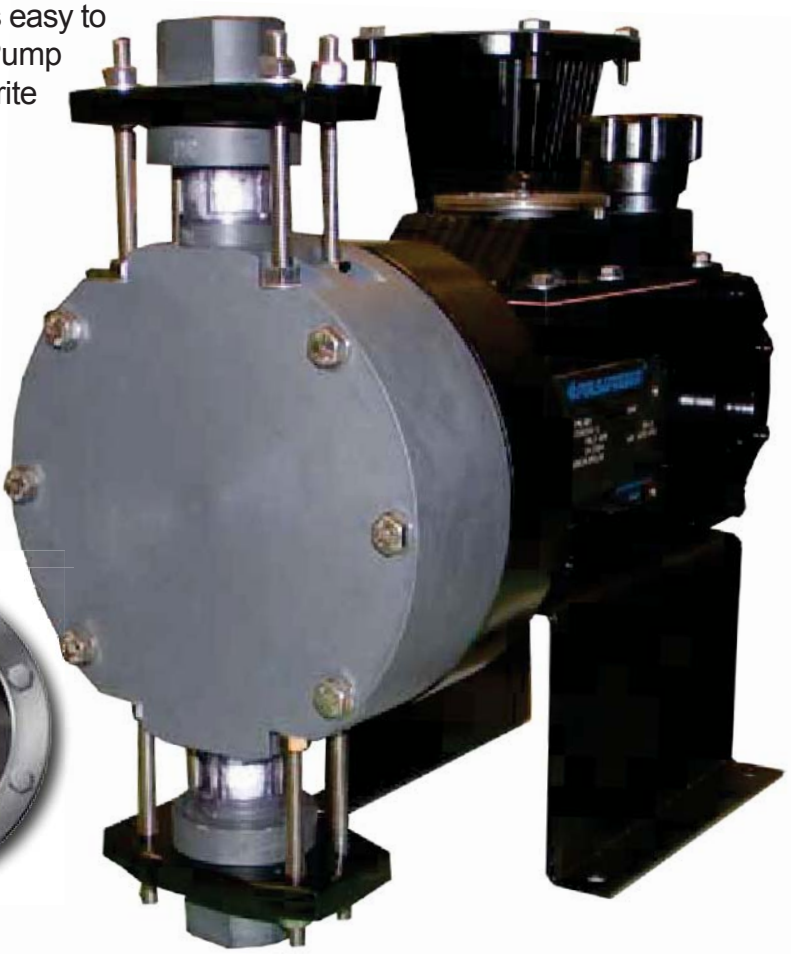

Applications
sodium hypochlorite injection, disinfection, pH and odor control

Flow
up to 170 gph (643 lph)

Pressure
up to 305 psi (21 bar)

Temperature
up to 150°F (65°C)

5 YEAR DRIVE TRAIN WARRANTY

CE • ATEX

Mechanical diaphragm metering delivers more than you expect.

PULSAR Shadow HYPOPump

- The solution for injection of sodium hypochlorite and other off gassing fluids
- Fully integrated closed loop design, no external valves or piping required
- Balanced, low stress, dynamic seal ensures extended operating life
- 3 year HYPO valve warranty

Features & Benefits

- Mechanically actuated diaphragm for simple maintenance
- Four bolt tie bar design provides ultimate resistance to piping moments and forces
- Three component check valves for controlled rise, assuring proper valve operation, extende valve seat life, and metering accuracy
- Manual self-locking stroke length adjustment with resolution of 0.5% for set point accuracy

Custom Engineering

- Compatible materials: PVDF
- Multiplex configurations
- Manual Degass Valve
- Custom electronic controls
- Chemical feed systems
- Application consulting

Specifications

Max temp	150°F (65°C)
Min temp	40°F (4.4°C)
Accuracy	±2%
Standards	CE,

The dimensions given may differ depending on pump configuration.

For More Information, Contact Your Authorized Pulsafeeder Engineered Products Representative

VISIT OUR REPRESENTATIVE LOOKUP

Pulsafeeder Engineered Products
2883 Brighton Henrietta Town Line Rd.
Rochester, NY 14623
Phone: +1 (585) 292-8000
pulsa@idexcorp.com • **pulsa.com**

Pulsafeeder is an ISO 9001:2008 and 14001:2004 certified company.

IDEX FLUID & METERING

shdwspec_Rev0814

Spec Pulsafeeder.
Get more than you expect.

© Copyright 2014 Pulsafeeder. All rights reserved.

PULSAR SHADOW SERIES
STATUS: ORDERED

SPECIFICATION
DATA SHEET

PULSAFEEDER® ENGINEERED PRODUCTS
2883 BRIGHTON-HENRIETTA TL RD.
ROCHESTER, NEW YORK 14623 USA
585-292-8000 FAX 585-424-5619

CUSTOMER	END USER	SERIAL NO.	DATE
VEOLIA WATER TECHNOLOGIES CANADA INC	VEOLIA WATER TECHNOLOGIES CANADA INC	18EZ000234U6N1-2	4/19/2018

MODEL NO: 55BF	QTY: 2	REF. ID NO.: SQEZ000234_1.1.1	REV: 1	BY: IPASS2			
PURCHASE ORDER NO.:	ITEM REFERENCE:						
JOB REFERENCE:	PUMP TAG:						
ITEM NUMBER: 55BF-EZ000234U6	KOPKIT NUMBER: KK5BF-53631-AATY	DIM DWG. NO.: 25969_000.PDF	FLOW CURVE NO.: EZ000234U6~1~PFC~000~PMP.PDF				

JOB CONDITIONS							
LIQUID: COAGULANT				FLOW MAX: 500.0000 LPH		FLOW MIN: 0.00 LPH	
LIQUID TEMPERATURE: 75 F	OPERATING PRESS. (MAX) (1): 75.00 PSIG			SPECIFIC GRAVITY: 0		PERCENT SOLIDS: 0	
VAPOR PRESSURE @ TEMP.: 0 PSIA	SUCTION PRESSURE (2): PSIG			VISCOSITY @ TEMP: 0 CP		SOLIDS SIZE (MICRON): 0	
DUTY CYCLE: CONTINUOUS	ATMOSPHERIC PRESSURE: 14.7 PSIA			NPSH: 5 PSIA			

PULSAR NOTES: (1) MUST BE AT LEAST 5 PSI (0.35 BAR) ABOVE SUCTION PRESSURE, (2) MUST BE AT LEAST 5.0 PSIA (0.35 BAR(A)) AND 3 PSI (0.21 BAR) ABOVE FLUID VAPOR PRESSURE.

COMMENTS:

SPECIFICATIONS							
BUILD TO API STDS: NO	HIGH VISCOSITY: NO	DISH SIZE: CF	MULTIPLEX ARRANGEMENT: SIMPLEX				
RATED CAPACITY: 507.24 LPH	VALVE TYPE: BALL	GEAR RATIO: 12.5:1	PISTON SIZE: NA				
RATED PRESSURE: 75 PSIG	SUCTION VALVE QTY: 1	SUCTION VALVE SIZE: 20 MM	MECH. DIAPHRAGM SIZE: 140 MM				
HYD. BY-PASS VALVE SET:	DISCHARGE VALVE QTY: 1	DISCHARGE VALVE SIZE: 20 MM	STROKE LENGTH: 5 MM				
SUCTION CONNECTION: MNPT	SUCTION CONNECTION SIZE: 1.5 INCH	SUCTION FLANGE RATING:	STROKE RATE: 140 SPM				
DISCHARGE CONNECTION: FNPT	DISCHARGE CONNECTION SIZE: 1 INCH	DISCH. FLANGE RATING:	CE/CE-ATEX: NONE	TRCU010: NO			
HYD/GEAR OIL: PULSALUBE ULTRA 8GS/PULSALUBE PREMIUM 9M	GEAR OIL: PULSALUBE ULTRA 8GS	GEARBOX MTL: ALUMINUM	TRCU012: NO				
COMMENTS:							

MATERIALS							
VALVE BALL/DISC: 316 SS	VALVE GASKETS: PTFE	VALVE CAP: 316/316L	VALVE GUIDE: 316/316L				
VALVE SEAT: 316/316L	VALVE SEAT TYPE: HARD	REAGENT HEAD: 316/316L	PASSIVATE:	FLANGE:			
DIAPHRAGM: PTFE/HYP	DIAPHRAGM TYPE: MECH	DIAPHRAGM GASKET:	HARDWARE (HEAD/TIEBAR): STAINLESS				
DOUBLE DIAPHRAGM: NO	INTERMEDIATE HEAD:	INTERMEDIATE DIAPHRAGM:	INTERMEDIATE FLUID:				

MATERIALS NOTE: THE END USER, WITH KNOWLEDGE OF PUMPED CHEMICAL, OPERATING AND ENVIROMENTAL CONDITIONS, IS RESPONSIBLE FOR THE FINAL SELECTION OF ALL RELATED MATERIALS.

COMMENTS:

LEAK DETECTION			
SETUP:	OPTION:	TYPE:	
ENCLOSURE:	VOLTAGE:	OPTION:	
COMMENTS:			

FEATURES		
DEGAS VALVE:		HYPO SYSTEM VOLTAGE:
SPLASH GUARDS: NO	PUMP BASE MATERIAL: STEEL	SPECIAL OPTIONS:

CONTROLS							
TYPE: MANUAL STROKE LENGTH CONTROL	DEVICE: STROKE LENGTH CONTROLLER	ITEM NUMBER:					
VOLTAGE:	INPUT SIGNAL:	OUTPUT SIGNAL:	ENCLOSURE:				
ENGINEERING NO.:	WIRING NO.:	EUROPEAN RATING:	REMOTE CABLE:				
OP STATION:	METER READ OUT:	OP STATION ENCLOSURE:	OP PUMP MOUNT:				
OP STATION-PART NO.:	OP STATION INST DWG. NO.:	OP STATION WIRING NO.:					
PNEUMATIC SERVICE TYPE:	RATIO CTL.:	TRANSDUCER:	REMOTE LOAD STN:	AUTO/MAN:	FILTER REG.:		
COMMENTS:							

DRIVE				
CURRENT:	VOLTAGE:	DRIVE ENCL.:	AGENCY APPROVAL:	
INPUT SIGNAL:	OUTPUT SIGNAL:	WIRING DIAGRAM:		

MOTOR							
MOTOR INFO: PUMP COMPLETE WITH MOTOR							
POWER: 1.0 HP	VOLTAGE: 575	HZ: 60	PHASE: 3	TYPE: AC	SPEED: 1750	FRAME: 56C	
MANUFACTURER: BALDOR	MOTOR NO.:	ENCLOSURE: TOTALLY ENCLOSED	MOTOR TYPE: STANDARD EFFICIENCY				
DESCRIPTION: BALDOR, GENERAL PURPOSE, 575V, 60HZ, 3PH, INVERTER READY VEM3546-5							

MOTOR NOTE: SPEED IS NOMINAL FULL LOAD. ACTUAL NAMEPLATE SPEED MAY VARY BY +/- 3% DEPENDING ON MOTOR MANUFACTURER. CONSULT MOTOR SPECIFICATION FOR ACTUAL NAMEPLATE RATINGS.

COMMENTS:

PAINT					
MFG & BRAND: DEVOE DEVRAN 224V	TOP COAT: TWO-PART EPOXY	TOP COAT COLOR: BLACK	PAINT THICKNESS: SINGLE (1.5 MILS DFT)		
INTERMEDIATE COAT:	PRIMER COLOR:	PAINT WET END: NO	SAND BLAST:	DFT CERT.:	
COMMENTS:					

TEST						
STANDARD TEST:	PERFORMANCE (1-PT): YES	CALIBRATION (3-PT): NO	HYDROSTATIC (15MIN): NO	WITNESSED: NO	JOB INSPECTION: NO	
API 675 TESTING (W=WITNESSED)	PERFORMANCE [STROKE] (3-PT):	REPEATABILITY (+2-PT):	HYDROSTATIC (30MIN):	SOUND LEVEL:	JOB INSPECTION:	
	PERFORMANCE [SPEED] (3-PT):	HIGH DISCHARGE PRESURE:	MECHANICAL RUN:	CHLORIDE CONT.:	NPIP TEST:	
MILL (MTL) CERTS: NO	POSITIVE MTL. ID (PMI): NO	CERT. OF CONF. NO	RADIOGRAPHIC-PROCESS SIDE:	RADIOGRAPHIC-DRIVE SIDE:	LIQUID PENETRANT:	
COMMENTS:						

DOCUMENTATION											
API 675 CERTIFICATE: NO		TEST REPORT: YES		MILL (MTL) CERTIFICATE: NO		CONFORMANCE CERT.: NO		MANUAL (IOM): YES	
PUMP DIM DRAWING: NO	MOTOR DIM DRAWING: NO	FLOW CURVE: NO		PMI TEST CERTIFICATE: NO		CERTIFICATE OF ORIGIN: NO		ISO CERTIFICATES: NO	
PARTS LIST: NO	MOTOR WIRING DIA.: NO	CALIBRATION CURVE: NO		MTL. COMPLIANCE CERT.: NO		ACCESSORY DIM DRAWING: NO		PROCESS DOCUMENTS: NO	
KOPKIT INFORMATION: NO	CONTROL WIRING DIA.: NO	HYDRO TEST REPORT: NO		SPEC. COMPLIANCE CERT.: NO		ACCESSORY CUT SHEETS: NO		WEB LINKS: NO	

OTHER					
EXPORT CONTROL CLASS: EAR99	EXP. LICENSE CANDIDATE:	6-MONTH STORAGE:	PACKING: STANDARD	OIL:2/0 KK: 1	
COMMENTS:				ACC: NO TYP: C	

063E2753-BBA5-4C14-BBEB-A6DF29E85CC0

18EZ000234U6N1-2

18EZ000234U6N1-2

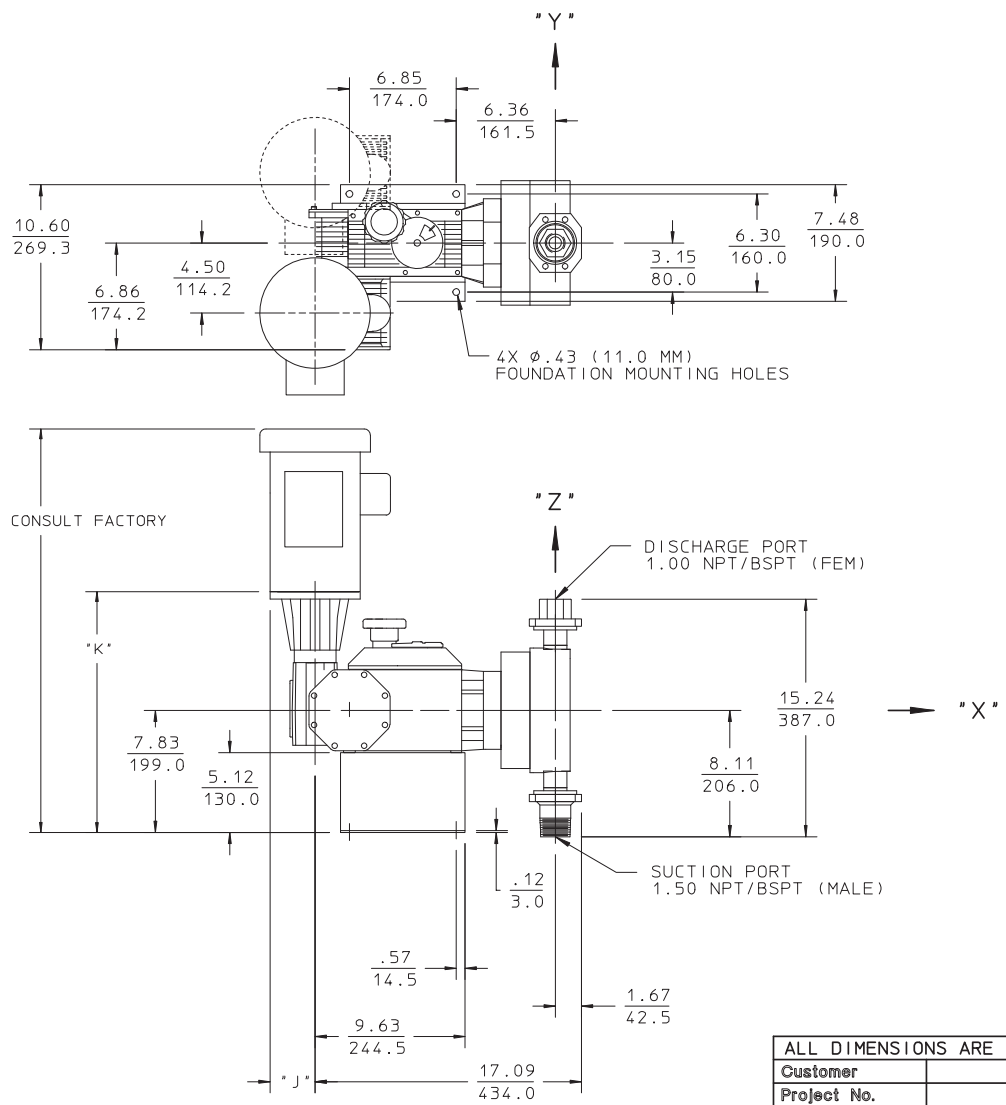

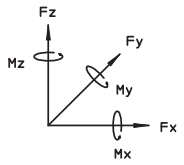

FORCES STATIC & DYNAMIC		SUCTION	DISCHARGE
	Fx(LB)	15	15
NOZZLE FORCES	Fy(LB)	15	15
	Fz(LB)	45	45
	Mx(FT-LB)	15	15
NOZZLE FORCES	My(FT-LB)	15	15
	Mz(FT-LB)	15	15

MOTOR FRAME	"J"	"K"
56C	2.89 73.5	15.4 392.0
80	2.36 60.0	14.9 379.0
71	2.07 52.5	14.5 369.0
143TC 145TC	2.89 73.5	15.4 392.0
182C 184C	2.89 73.5	15.4 392.0

ALL DIMENSIONS ARE IN INCHES/mm		RHA: E HEAD SGL VALVE			SCALE: 1:8		Item – No.	
Customer							Model	55BF – METAL
Project No.							Motor Pwr/Fr	SEE CHART
Po No./SO No.							Unit Weight	lb kg
CONNECTIONS: HP/GP OR HB/GB							PULSAR SHADOW	PULSAFEEDER A Unit of IDEX Corporation
					Name	Date		
A	UPDATED DWG FORMAT	KMG	02/28/14	Drawn	KMG	04/06/09	Drawing No.	25969–000
Rev	Revision Description	Name	Date	Checked	KMG	04/06/09		

PULSAFEEDER PRF 3/4-3H 9.8.4

PULSAFEEDER
ENGINEERED PRODUCTS

PUMP PERFORMANCE CURVE

PUMP DATA		ORDER DATA	
MODEL NUMBER:	55BF	CUSTOMER:	VEOLIA WATER TECHNOLOGIES CANADA INC
PISTON DIAMETER:	NA	CUSTOMER PO:	18000751HD
STROKING RATE:	140 SPM	CUSTOMER ITEM:	P9-514/5
RATED PRESSURE:	75 PSIG	PART NUMBER:	55BF-EZ000234UX
MA(IMUM RATED FLOW) ◆ %	**507.24 LPH (100%)**	SERIAL NUMBER:	
MINIMUM RATED FLOW) ◆ %	50.7 LPH)106 %	DATED:	4/19/2018
E(PECTED OPERATING POINT) ◆ %	500.0 LPH)98.X6 %	TAGGING:	

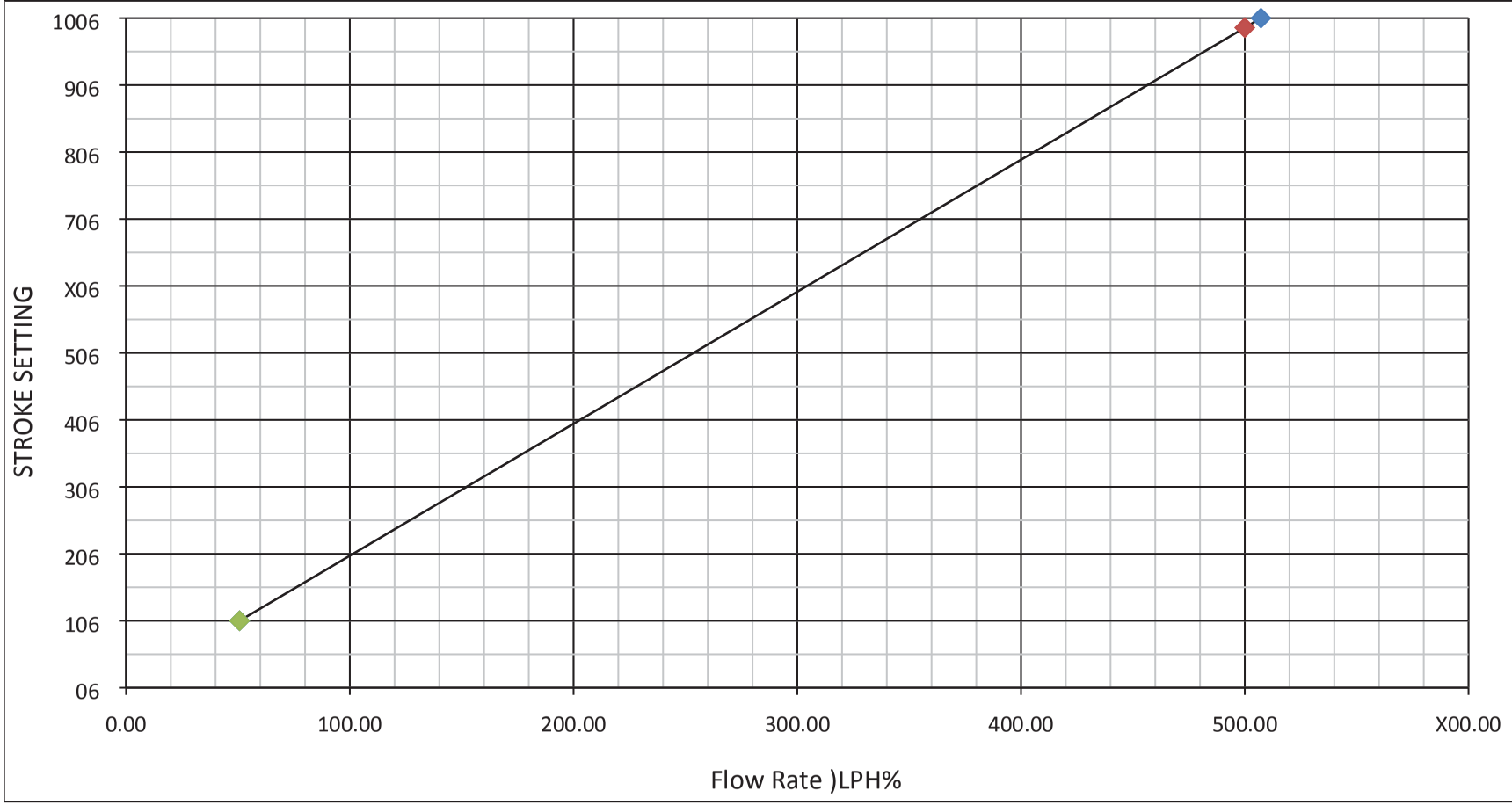

©Pulsafeeder, Inc. 2015 All Rights Reserved v018

This page is intentionally left blank

TSEZ000234-001

BALDOR • RELIANCE

Product Information Packet

PULSAFEEDER, INC.

VEM3546-5

1HP,1760RPM,3PH,60HZ,56C,3520M,TEFC,F1,N

Copyright © All product information within this document is subject to ABB Motors and Mechanical Inc. copyright © protection, unless otherwise noted.

Part Detail

Revision:	M	**Status:**	PRD/A	**Change #:**		**Proprietary:**	No
Type:	AC	**Elec. Spec:**	35WGM849	**CD Diagram:**	CD0006	**Mfg Plant:**	
Mech. Spec:	35A013	**Layout:**	35LYA013	**Poles:**	04	**Created Date:**	10-22-2011
Base:	N	**Eff. Date:**	03-02-2018	**Leads:**	3#18		

Specs

Catalog Number:	VEM3546-5	**Inverter Code:**	Inverter Ready
Enclosure:	TEFC	**KVA Code:**	L
Frame:	56C	**Lifting Lugs:**	No Lifting Lugs
Frame Material:	Steel	**Locked Bearing Indicator:**	Locked Bearing
Output @ Frequency:	1.000 HP @ 60 HZ	**Motor Lead Quantity/Wire Size:**	3 @ 18 AWG
Synchronous Speed @ Frequency:	1800 RPM @ 60 HZ	**Motor Lead Exit:**	Ko Box
Voltage @ Frequency:	575.0 V @ 60 HZ	**Motor Lead Termination:**	Flying Leads
XP Class and Group:	None	**Motor Type:**	3520M
XP Division:	Not Applicable	**Mounting Arrangement:**	F1
Agency Approvals:	CSA	**Power Factor:**	71
	CSA EEV	**Product Family:**	General Purpose
	UR	**Pulley End Bearing Type:**	Ball
Auxillary Box:	No Auxillary Box	**Pulley Face Code:**	C-Face
Auxillary Box Lead Termination:	None	**Pulley Shaft Indicator:**	Standard
Base Indicator:	No Mounting	**Rodent Screen:**	None
Bearing Grease Type:	Polyrex EM (-20F +300F)	**RoHS Status:**	ROHS COMPLIANT
Blower:	None	**Shaft Extension Location:**	Pulley End
Current @ Voltage:	1.200 A @ 575.0 V	**Shaft Ground Indicator:**	No Shaft Grounding

Design Code:	B
Drip Cover:	No Drip Cover
Duty Rating:	CONT
Electrically Isolated Bearing:	Not Electrically Isolated
Feedback Device:	NO FEEDBACK
Front Face Code:	Standard
Front Shaft Indicator:	None
Heater Indicator:	No Heater
Insulation Class:	F

Shaft Rotation:	Reversible
Shaft Slinger Indicator:	No Slinger
Speed Code:	Single Speed
Motor Standards:	NEMA
Starting Method:	Direct on line
Thermal Device - Bearing:	None
Thermal Device - Winding:	None
Vibration Sensor Indicator:	No Vibration Sensor
Winding Thermal 1:	None
Winding Thermal 2:	None

Nameplate NP3441L

CAT.NO.	VEM3546-5								
SPEC.	35A013M849G1								
HP	1								
VOLTS	575								
AMP	1.2								
RPM	1760								
FRAME	56C	**HZ**	60			**PH**	3		
SER.F.	1.15	**CODE**	L	**DES**	B	**CL**	F		
NEMA-NOM-EFF	85.5	**PF**	71						
RATING	40C AMB-CONT								
CC	010A			**USABLE AT 208V**					
DE	6205	**ODE**	6203						
ENCL	TEFC	**SN**							
VPWM INVERTER READY									
CT6-60H(10:1)VT3-60H(20:1									

Parts List

Part Number	Description	Quantity
SA233681	SA 35A013M849G1	1.000 EA
RA220666	RA 35A013M849G1	1.000 EA
34FN3002B01	EXTERNAL FAN, PLASTIC, .637/.639 HUB W/	1.000 EA
NS2512A01	INSULATOR, CONDUIT BOX X	1.000 EA
35CB3007	35 CB CASTING W/.88 DIA. LEAD HOLE	1.000 EA
36GS1000SP	GASKET-CONDUIT BOX, .06 THICK #SV-330 LE	1.000 EA
51XB1016A07	10-16 X 7/16 HXWSSLD SERTYB	2.000 EA
11XW1032G06	10-32 X .38, TAPTITE II, HEX WSHR SLTD U	1.000 EA
35EP3122K00	MASTER ODE,203 BRG,.683SH,#26 DRN,FH MTG	1.000 EA
HW5100A03	WAVY WASHER (W1543-017)	1.000 EA
35EP3307F00	MASTER DE,205 BRG,.998SH,#26 DRN	1.000 EA
51XN1032A20	10-32 X 1 1/4 HX WS SL SR	2.000 EA
51XB1214A16	12-14X1.00 HXWSSLD SERTYB	1.000 EA
35FH4005A32SP	IEC FH NO GRSR W/3 HOLES - PRIMED	1.000 EA
51XW1032A06	10-32 X .38, TAPTITE II, HEX WSHR SLTD S	3.000 EA
35CB4521GX	CONDUIT BOX LID KIT	1.000 EA
51XW0832A07	8-32 X .44, TAPTITE II, HEX WSHR SLTD SE	4.000 EA
HW2501D13	KEY, 3/16 SQ X 1.375	1.000 EA
HA7000A04	KEY RETAINER 0.625 DIA SHAFTS	1.000 EA
85XU0407S04	4X1/4 U DRIVE PIN STAINLESS	2.000 EA
MJ1000A02	GREASE, POLYREX EM EXXON (USe 4824-15A)	0.050 LB
MG1000Y03	MUNSELL 2.53Y 6.70/ 4.60, GLOSS 20,	0.017 GA
HA3100A12	THRUBOLT 10-32 X 7.375	4.000 EA
LC0006	CONNECTION LABEL	1.000 EA

Parts List (continued)

Part Number	Description	Quantity
LB1119N	WARNING LABEL	1.000 EA
NP3441L	ALUM SUPER-E VPWM INVERTER READY UL	1.000 EA
35PA1066	PKG GRP, PRINT PK1008A06	1.000 EA
PK3082	STYROFOAM CRADLE	1.000 EA
MN416A01	TAG-INSTAL-MAINT no wire (1100/bx) 11/14	1.000 EA
FE-0000001	ZRTG FE ASSEMBLY	1.000 EA
PE-0000001	ZRTG PE ASSEMBLY	1.000 EA

Performance Graph at 575V, 60Hz, 1.0HP Typical performance - Not guaranteed values

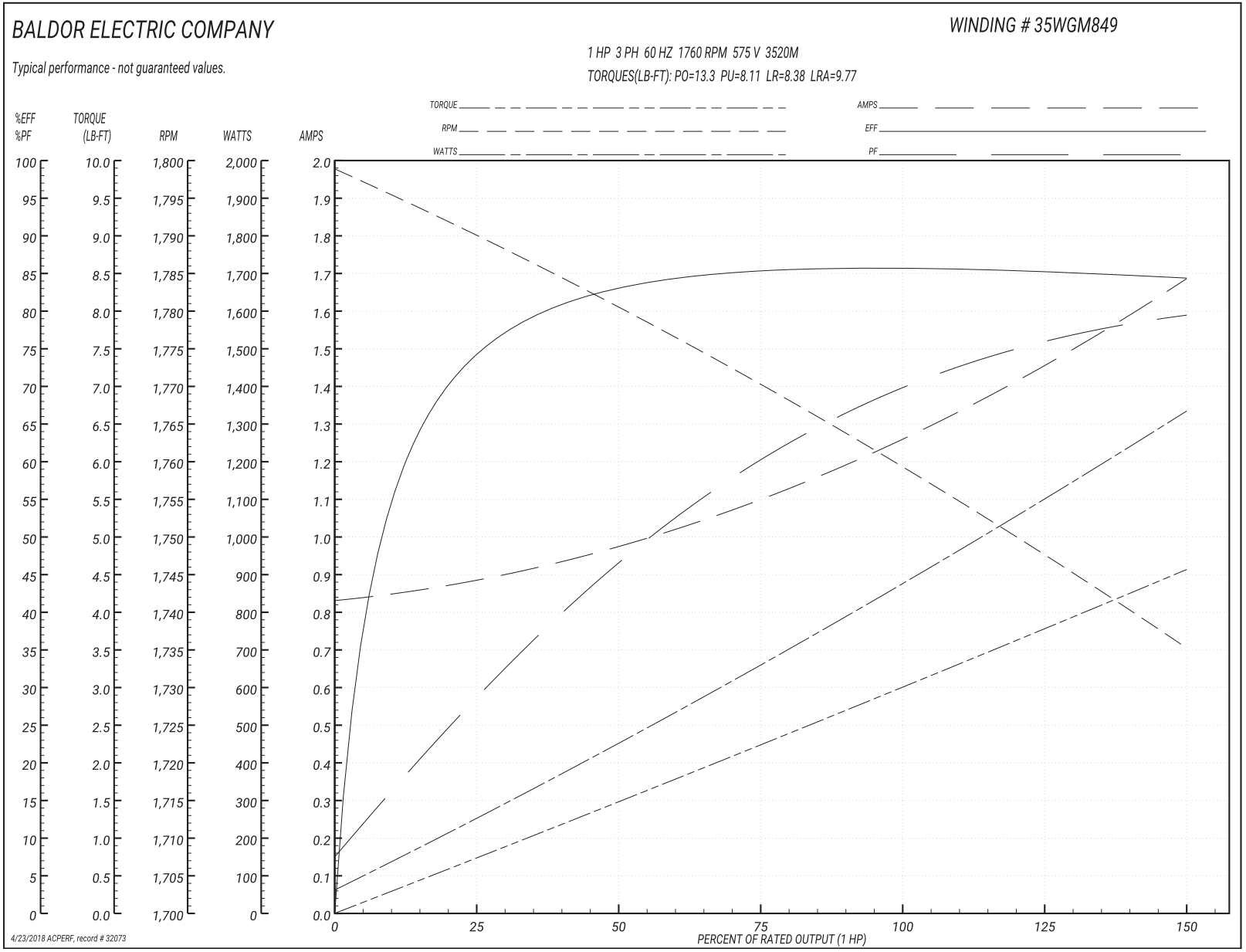

35LYA013

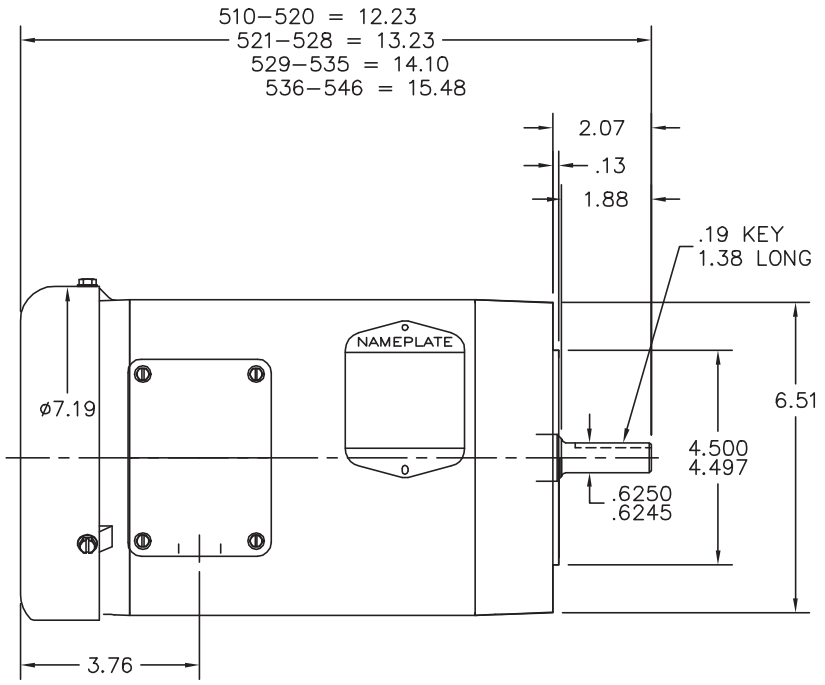

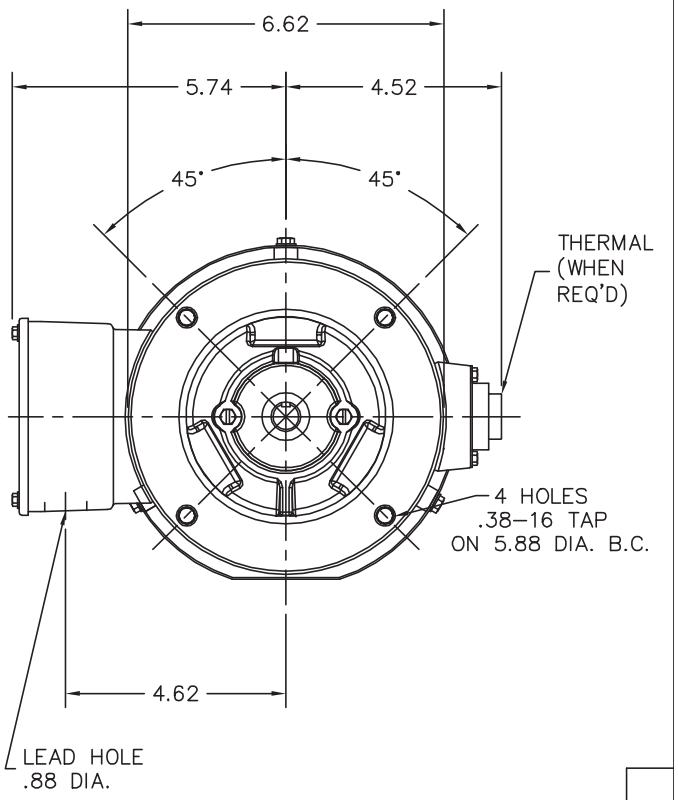

35LYA013

CUSTOMER IS RESPONSIBLE FOR DETERMINING THAT BALDOR'S PRODUCT WILL PERFORM SUITABLY IN THE INTENDED APPLICATION.

REV. DESC: REPLACE ENDPLATES			BALDOR
REV. LTR: N	VERSION: 05	TDR: 000001063223	
FILE: \AAA\00004\894	REVISED: 09:23:18 03/06/2018	BY: USJOBUR22	STD VERT 56C TEFC 35M
MTL: –			SH 1 of 1

CD0006

TYPICAL WYE–CONNECTED MOTOR

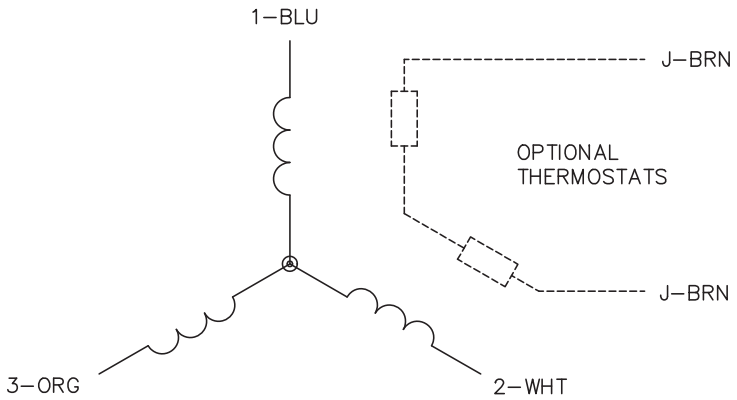

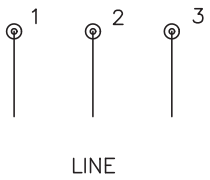

TYPICAL DELTA–CONNECTED MOTOR

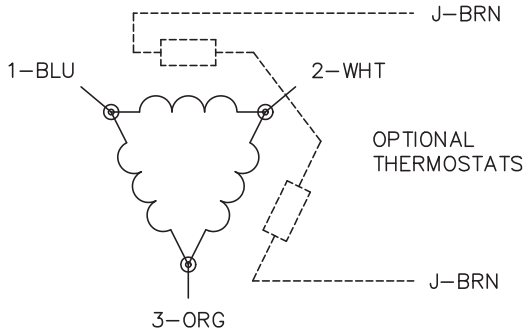

NOTES:

1. THREE LEAD MOTOR MAY BE EITHER WYE CONNECTED OR DELTA CONNECTED.
2. INTERCHANGE ANY TWO LINE LEADS TO REVERSE ROTATION.
3. OPTIONAL THERMOSTATS ARE PROVIDED WHEN SPECIFIED.
4. ACTUAL NUMBER OF INTERNAL PARALLEL CIRCUITS MAY VARY.
5. LEAD COLORS ARE OPTIONAL. LEADS MUST BE NUMBERED AS SHOWN.

CD0006

REV. DESC: REVISE TO SHOW OPTIONAL COLORS			BALDOR ELECTRIC Co.
REV. LTR: D	BY: JLP	REVISED: 01/21/99 4:02	TDR: 0171435
9000CD		FILE: AAA00005141	MDL: –
		MTL: –	3PH, SV, 3 LEADS, WYE OR DELTA CONNECTED

This page is intentionally left blank

Project name: AMARUQ

Project#: 5000218009

Document #: SPK_0008_PCH

by: GH

chkd: GP

appvd: CB

COAGULANT DOSING SKID

VALVES

OIM manual section: 4.3.8.4

This page is intentionally left blank

CS-301-100 : Identification sheet

VWTC PROJECT NUMBER:	5000218009	REV:	1
PROJECT NAME:	AEM AMARUQ	SUBMITTED TO (COMPANY):	AGNICO EAGLE MINES
ENGINEER:	Gabriel Hébert	SUBMITTED TO (RESPONSIBLE)	
PROJECT MANAGER:	Clément B	PROJECT NUM REFERENCE.:	
PHONE NUMBER:		LOT NUMBER:	

SUPPLIER	EQPT CODE	EQPT TAG NO	DIA	DESCRIPTION	INFO 1	INFO 2	INFO 3	APPLIC.	NOTE	REV
CHEMLINE	VABLPV200249	P9-513-V003	DIA: 13 mm (1/2")	CLEANING VALVE	TYPE: BALL VALVE//MANUFACTURER : CHEMLINE//MODEL : Type21-A-005-E-C//CONNECTION TYPE : COMBO | 13 mm (1/2")//BODY : PVC (ASTM D1784)// SEAL | SEAT :PTFE | EPDM// STEM : PVC			COAGULANT DOSING SKID		
CHEMLINE	VABLPV200249	P9-514-V003	DIA: 13 mm (1/2")	CLEANING VALVE	TYPE: BALL VALVE//MANUFACTURER : CHEMLINE//MODEL : Type21-A-005-E-C//CONNECTION TYPE : COMBO | 13 mm (1/2")//BODY : PVC (ASTM D1784)// SEAL | SEAT :PTFE | EPDM// STEM : PVC			COAGULANT DOSING SKID		
CHEMLINE	VABLPV200249	P9-514-V006	DIA: 13 mm (1/2")	ISOLATION VALVE (DISCHARGE)	TYPE: BALL VALVE//MANUFACTURER : CHEMLINE//MODEL : Type21-A-005-E-C//CONNECTION TYPE : COMBO | 13 mm (1/2")//BODY : PVC (ASTM D1784)// SEAL | SEAT :PTFE | EPDM// STEM : PVC			COAGULANT DOSING SKID		

SUPPLIER	EQPT CODE	EQPT TAG NO	DIA	DESCRIPTION	INFO 1	INFO 2	INFO 3	APPLIC.	NOTE	REV
CHEMLINE	VABLPV200249	P9-514-V007	DIA: 13 mm (1/2")	CLEANING VALVES	TYPE: BALL VALVE//MANUFACTURER : CHEMLINE//MODEL : Type21-A-005-E-C//CONNECTION TYPE : COMBO | 13 mm (1/2")//BODY : PVC (ASTM D1784)// SEAL | SEAT :PTFE | EPDM// STEM : PVC			COAGULANT DOSING SKID		
CHEMLINE	VABLPV200249	PD9-514-V002	DIA: 13 mm (1/2")	CLEANING VALVES	TYPE: BALL VALVE//MANUFACTURER : CHEMLINE//MODEL : Type21-A-005-E-C//CONNECTION TYPE : COMBO | 13 mm (1/2")//BODY : PVC (ASTM D1784)// SEAL | SEAT :PTFE | EPDM// STEM : PVC			COAGULANT DOSING SKID		
CHEMLINE	VABLPV200251	P9-513-V001	DIA: 25 mm (1")	ISOLATION VALVE (SUCTION)	TYPE: BALL VALVE//MANUFACTURER : CHEMLINE//MODEL : Type21-A-010-E-S//CONNECTION TYPE : SOCKET | 25 mm (1")//BODY : PVC (ASTM D1784)// SEAL | SEAT :PTFE | EPDM// STEM : PVC			COAGULANT DOSING SKID		
CHEMLINE	VABLPV200251	P9-513-V002	DIA: 25 mm (1")	ISOLATION VALVE (SUCTION)	TYPE: BALL VALVE//MANUFACTURER : CHEMLINE//MODEL : Type21-A-010-E-S//CONNECTION TYPE : SOCKET | 25 mm (1")//BODY : PVC (ASTM D1784)// SEAL | SEAT :PTFE | EPDM// STEM : PVC			COAGULANT DOSING SKID		
CHEMLINE	VABLPV200251	P9-513-V004	DIA: 25 mm (1")	ISOLATION VALVE (DISCHARGE)	TYPE: BALL VALVE//MANUFACTURER : CHEMLINE//MODEL : Type21-A-010-E-S//CONNECTION TYPE : SOCKET | 25 mm (1")//BODY : PVC (ASTM D1784)// SEAL | SEAT :PTFE | EPDM// STEM : PVC			COAGULANT DOSING SKID		

SUPPLIER	EQPT CODE	EQPT TAG NO	DIA	DESCRIPTION	INFO 1	INFO 2	INFO 3	APPLIC.	NOTE	REV
CHEMLINE	VABLPV200251	P9-513-V005	DIA: 25 mm (1")	ISOLATION VALVE (DISCHARGE)	TYPE: BALL VALVE//MANUFACTURER : CHEMLINE//MODEL : Type21-A-010-E-S//CONNECTION TYPE : SOCKET | 25 mm (1")//BODY : PVC (ASTM D1784)// SEAL | SEAT :PTFE | EPDM// STEM : PVC			COAGULANT DOSING SKID		
CHEMLINE	VABLPV200251	P9-514-V001	DIA: 25 mm (1")	ISOLATION VALVE (SUCTION)	TYPE: BALL VALVE//MANUFACTURER : CHEMLINE//MODEL : Type21-A-010-E-S//CONNECTION TYPE : SOCKET | 25 mm (1")//BODY : PVC (ASTM D1784)// SEAL | SEAT :PTFE | EPDM// STEM : PVC			COAGULANT DOSING SKID		
CHEMLINE	VABLPV200251	P9-514-V002	DIA: 25 mm (1")	ISOLATION VALVE (SUCTION)	TYPE: BALL VALVE//MANUFACTURER : CHEMLINE//MODEL : Type21-A-010-E-S//CONNECTION TYPE : SOCKET | 25 mm (1")//BODY : PVC (ASTM D1784)// SEAL | SEAT :PTFE | EPDM// STEM : PVC			COAGULANT DOSING SKID		
CHEMLINE	VABLPV200251	P9-514-V004	DIA: 25 mm (1")	ISOLATION VALVE (DISCHARGE)	TYPE: BALL VALVE//MANUFACTURER : CHEMLINE//MODEL : Type21-A-010-E-S//CONNECTION TYPE : SOCKET | 25 mm (1")//BODY : PVC (ASTM D1784)// SEAL | SEAT :PTFE | EPDM// STEM : PVC			COAGULANT DOSING SKID		
CHEMLINE	VABLPV200251	P9-514-V005	DIA: 25 mm (1")	ISOLATION VALVE (DISCHARGE)	TYPE: BALL VALVE//MANUFACTURER : CHEMLINE//MODEL : Type21-A-010-E-S//CONNECTION TYPE : SOCKET | 25 mm (1")//BODY : PVC (ASTM D1784)// SEAL | SEAT :PTFE | EPDM// STEM : PVC			COAGULANT DOSING SKID		

SUPPLIER	EQPT CODE	EQPT TAG NO	DIA	DESCRIPTION	INFO 1	INFO 2	INFO 3	APPLIC.	NOTE	REV
CHEMLINE	VABLPV200251	PD9-514-V001	DIA: 25 mm (1")	ISOLATION VALVE (DISCHARGE)	TYPE: BALL VALVE//MANUFACTURER : CHEMLINE//MODEL : Type21-A-010-E-S//CONNECTION TYPE : SOCKET | 25 mm (1")//BODY : PVC (ASTM D1784)// SEAL | SEAT :PTFE | EPDM// STEM : PVC			COAGULANT DOSING SKID		

PDF Published March 1, 2013

Type 21 Ball Valves

CHEMLINE PLASTICS
SUPERIOR FLOW SOLUTIONS

The Chemline Type 21 True Union Ball valve incorporates state of the art features for long term performance. This is a full port, full blocking True Union valve pressure rated at 16 bar (230 psi)[4]. Double stem o-rings and Safety Shear stem design provide for a high degree of safety on hazardous fluid applications. All sizes have an ISO standard actuator mounting platform integral to the valve body. This provides for sturdy and secure mounting of pneumatic or electric actuators.

PVC | CPVC | PP | PVDF

CRN Registered Consult Chemline

NSF[5] Certified to NSF/ANSI 61

SERIES: Type 21

SIZES: 3/8" – 4"

ENDS: Socket, Threaded, Flanged, Butt[1] or ChemFlare™

SEATS: PTFE

SEALS[2]: EPDM, FKM (Viton®), CPE[3]

features

Pressure rated to 230 psi[4]
- Provides a high factor of safety

Integral Actuator Mounting Platform
- Actuation is easy. Electric or pneumatic actuators may be mounted in the field.

Full Port
- High capacity and low pressure drops

Fully Blocking
- Downstream union nut may be safely disassembled for piping maintenance while valve is closed off under full system pressure

Built-In Spanner Wrench
- Top of the handle is designed to be used as a tool for accessing internal parts

Safety Shear Stem Design
- Stem has double o-rings
- Designed to hold full pressure even if stem breaks due to excessive torque

High Chemical Resistant Material
- PVC and CPVC compounds have an "A" chemical resistance rating as per ASTM D-1784. They have outperformed other PVC and CPVC compounds on aggressive chemicals.

[1] Butt ends for fusion to Chemline metric PP, PVDF or ECTFE (Halar®) piping.
[2] Other materials are available.
[3] CPE=Chlorinated Polyethylene.
[4] PVC, CPVC and PVDF 1/2" to 2" are rated at 230 psi; 2-1/2" to 4" and all size PP valves are rated at 150 psi at 20°C.
[5] PVC valves with EPDM or FKM (Viton®) seals are certified under NSF/ANSI Standard 61 for contact with drinking water.

03/13 ©Chemline Plastics Limited 2013
Chemline is a registered trade mark of Chemline Plastics Limited

Type 21 Ball Valves

features

Double Stem O-Rings – Safety Shear Design

- Upper o-ring groove is deeper than lower. In case of excessive stem torque, stem will shear at the upper groove, leaving the inner o-ring intact to seal against full line pressure.

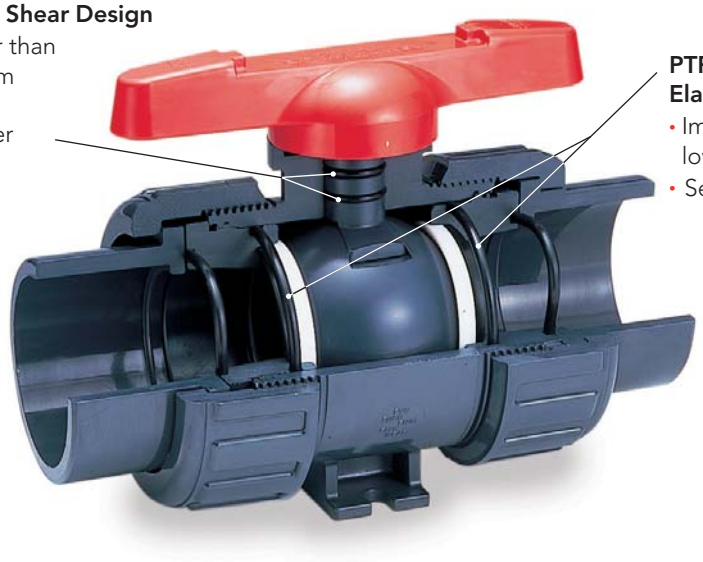

PTFE Seats have Elastomer Cushions

- Improved sealing while lowering stem torques
- Self adjusts for seat wear

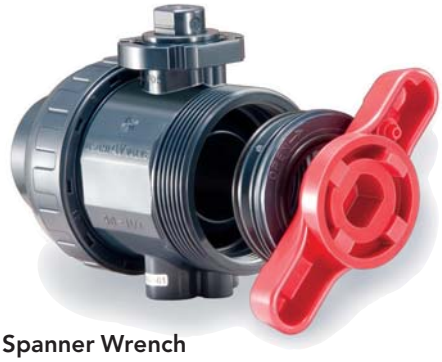

Built in Spanner Wrench

- For removing or tightening the seat carrier
- All parts are replaceable

Integral Actuator Mounting Platform

- Actuation is easy. Electric or pneumatic actuators may be mounted in the field. Simply pull off the handle to reveal a standard ISO 5211 mounting platform which accepts bolt-on hardware.

Fully Blocking

- Downstream pipe may be removed while upstream side is still pressurized. This may be done with valve installed in either direction.

Base Mounting Pad

- Optional threaded inserts allow valves to be securely anchored
- Supplied standard with actuated valves

Type 21 Ball Valves

options + accessories

ChemFlare™ Ends

- For connection to PFA tube. Leak-free connections for difficult services such as sodium hypochlorite

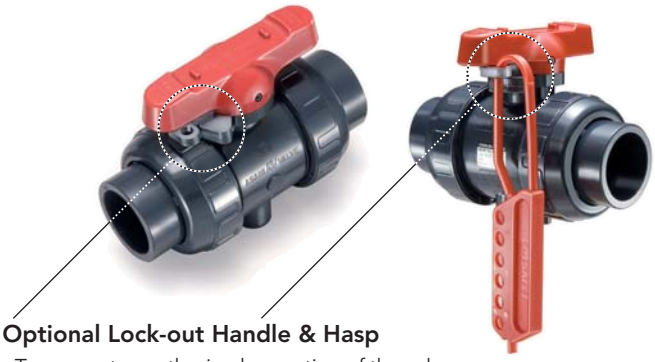

Optional Lock-out Handle & Hasp

- To prevent unauthorized operation of the valve
- Used during maintenance shut-downs

One-piece moulded PVC and CPVC 6" socket ends

- Allows installation of 4" valve in 6" line
- Factory moulded, not fabricated with couplings and reducers cemented together
- Fixed to valve mechanically just like the one-piece moulded factory flanges

Different Colour Handles

- Choose a handle colour other than standard red for colour coding different services

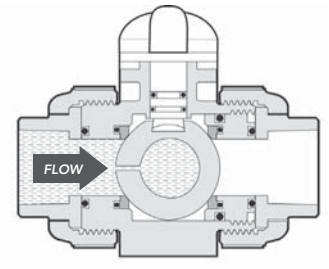

Vented Ball

- For sodium hypochlorite services at any concentration
- Valve shown in closed position

electric + pneumatic actuation

Pneumatic and Electric Actuators

- A complete range of actuators and control accessories are available, mounted to valves using PPG plastic brackets and stainless steel couplings. Refer to separate data sheets.

Electromni® Electric

Q Series Electric

A Series Electric

V Series Electric
with Local Control Station

PA Series Pneumatic

Type 21 Ball Valves

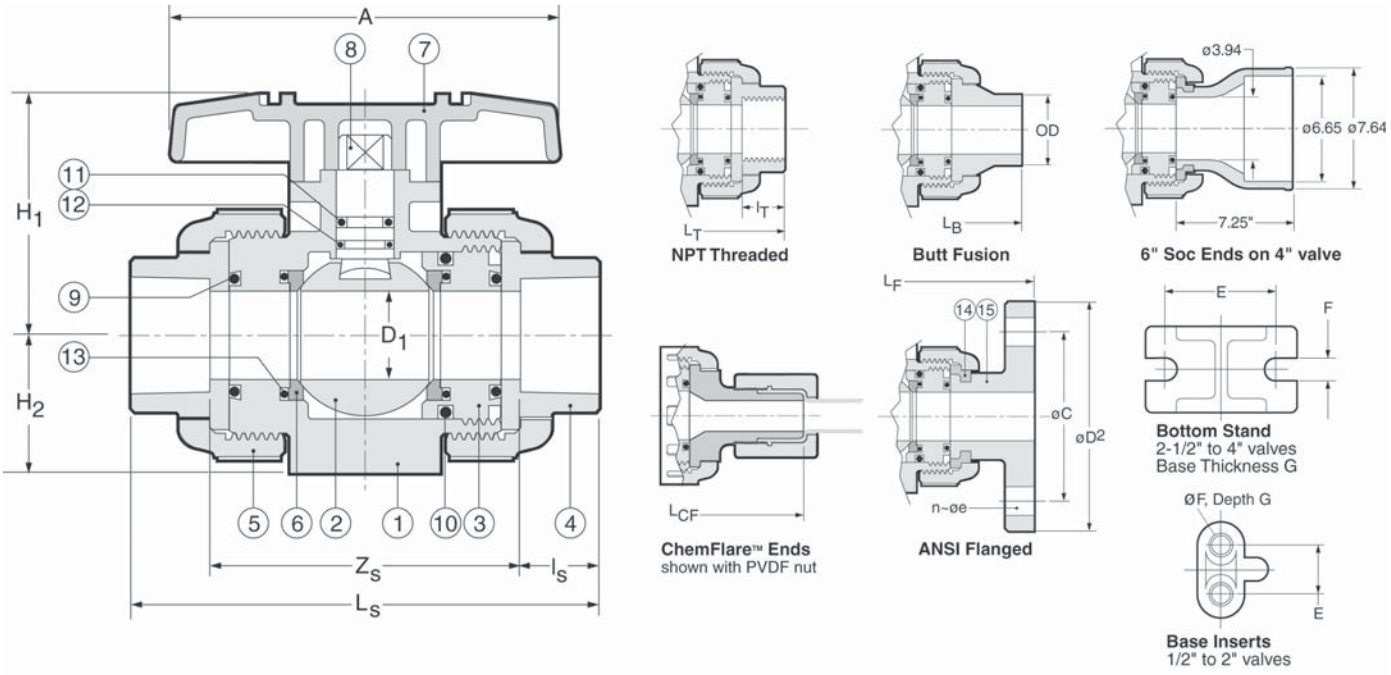

PARTS

▲ Recommended Spare Parts

No.	Part	Pcs.	Materials
1	Body	1	PVC, CPVC, PP, PVDF
2	Ball	1	PVC, CPVC, PP, PVDF
3	Carrier[1]	1/2	PVC, CPVC, PP, PVDF
4	End Connector	2	PVC, CPVC, PP, PVDF
5	Union Nut	2	PVC, CPVC, PP, PVDF
6▲	Ball Seat	2	PTFE
7	Handle	1	ABS

[1] 1 carrier for sizes 1/2" to 2", 2 carriers for sizes 2-1/2" to 4"
[2] EPDM seals standard with PVC, CPVC, PP; FKM (Viton®) with PVDF valves
[3] 2 pcs 1/2" to 2", 6 pcs 2-1/2" to 4"

PARTS

▲ Recommended Spare Parts

No.	Part	Pcs.	Materials
8	Stem	1	PVC, CPVC, PP, PVDF
9▲	Face O-Ring[2]	2	EPDM, FKM (Viton®)
10▲	Carrier O-Ring[2]	2	EPDM, FKM (Viton®)
11▲	Upper Thicker Stem O-Ring[2]	1	EPDM, FKM (Viton®)
12▲	Lower Thinner Stem O-Ring[2]	1	EPDM, FKM (Viton®)
13	Seat Cushion[2]	2	EPDM, FKM (Viton®)
14	Flange Retainer[3]	2/6	PVDF
15	Flange	2	PVC, CPVC, PP, PVDF

DIMENSIONS INCHES

					End Connections														Valve Base		
					Socket			Threaded		Factory Flanged					Butt		ChemFlare™				
Size	D Bore	A	H_1	H_2	L_S	Z_S	l_S	l_T	L_T	L_F	D_2	C	n	e	L_B	OD	L_{CF}	Tube[4]	E	F[5]	G
1/2"	.59	3.6	2.03	1.14	4.45	2.70	.875	.64	4.02	5.63	3.50	2.38	4	.62	4.88	.79	6.12	1/2"	.75	.29	.43
3/4"	.79	3.9	2.34	1.38	5.08	3.08	1.00	.65	4.72	6.77	3.88	2.75	4	.62	5.67	.98	6.52	3/4"	.75	.29	.43
1"	.98	4.3	2.68	1.54	5.75	3.50	1.13	.81	5.16	7.36	4.25	3.12	4	.62	6.06	1.26	7.26	1"	.75	.29	.43
1-1/4"	1.22	4.8	3.17	1.85	6.46	5.21	1.25	.85	5.91	7.48	4.62	3.50	4	.62	6.85	1.57	9.58	1-1/4"	1.18	.35	.59
1-1/2"	1.57	5.2	3.50	2.17	7.24	4.49	1.38	.85	6.42	8.35	5.00	3.88	4	.62	7.64	1.97	–	–	1.18	.35	.59
2"	2.01	6.3	4.02	2.60	8.23	5.23	1.50	1.90	7.76	9.21	6.00	4.75	4	.75	8.82	2.48	–	–	1.18	.35	.59
2-1/2"	2.28	7.87	4.96	2.83	9.45	5.95	1.75	1.21	8.46	10.20	7.00	5.49	4	.75	9.72	2.95	–	–	1.89	.35	.23
3"	2.70	9.45	5.51	3.35	11.10	7.35	1.88	1.30	10.39	11.97	7.50	6.00	4	.75	11.61	3.54	–	–	2.17	.43	.28
4"	3.54	11.81	7.01	4.33	13.88	9.87	2.00	1.38	14.17	14.65	9.00	7.50	8	.75	14.76	4.33	–	–	2.56	.43	.32

[4] ChemFlare™ ends are available for reduced tube sizes down to 1/4".
[5] Optional threaded inserts: 1/2" to 1" valves – UNC 1/4"-20; 1-1/4" to 2" valves – UNC 5/16"-18. 'Recoil' brand inserts require drilling before insertion.

Type 21 Ball Valves

WORKING PRESSURES PSI, Water, Non-Shock

VACUUM RATING • 29.9 inches mercury

Size	PVC			CPVC						PP			PVDF				
	20°C 68°F	40°C 104°F	50°C 122°F	20°C 68°F	40°C 104°F	50°C 122°F	60°C 140°F	80°C 176°F	90°C 194°F	20°C 68°F	60°C 140°F	80°C 176°F	20°C 68°F	40°C 104°F	60°C 140°F	80°C 176°F	100°C 212°F
1/2"– 2"	230	165	150	230	165	150	120	75	55	150	85	55	230	185	150	110	85
2-1/2"– 4"	150	150	150	150	150	150	120	75	55	150	70	40	150	150	150	110	85

Temperature Ranges: PVC 0 to 60°C (32 to 140°F), **CPVC** 0 to 95°C (32 to 203°F), **PP** –20 to 80°C (–4 to 176°F), **PVDF** –40 to 100°C (–40 to 212°F)

WEIGHTS LB. THREADED or SOCKET

WEIGHTS LB. FLANGED

Size	PVC	CPVC	PP	PVDF	PVC	CPVC	PP	PVDF
1/2"	0.4	0.4	0.4	0.4	0.9	0.9	0.7	1.1
3/4"	0.7	0.7	0.7	0.9	1.3	1.5	1.1	1.5
1"	0.9	1.1	0.9	1.1	1.8	2.0	1.5	2.2
1-1/4"	1.5	1.5	1.3	1.8	2.6	2.9	2.0	3.3
1-1/2"	2.4	2.6	1.5	2.9	3.7	4.0	2.6	4.4
2"	4.0	4.4	2.6	4.9	5.5	6.0	4.0	8.2
2-1/2"	5.1	5.5	3.7	6.2	7.3	7.7	5.3	8.8
3"	8.2	8.8	5.5	9.9	10.1	11.0	7.5	12.6
4"	19.4	21.8	13.2	24.9	21.6	23.4	15.4	26.7

Cv VALUES VS. BALL ANGLE

Size	0%	25%	50%	75%	100%
1/2"	0	0.35	1.3	5.5	14.
3/4"	0	0.73	2.8	11.5	29.
1"	0	1.2	4.5	18.6	47.
1-1/4"	0	1.8	6.8	28.4	72.
1-1/2"	0	3.9	14.7	61.2	155.
2"	0	4.8	18.0	75.0	190.
2-1/2"	0	9.1	34.7	144.0	365.
3"	0	10.2	39.0	162.0	410.
4"	0	17.0	64.6	269.0	680.

SAMPLE SPECIFICATION

1. All True Union Ball Valves in PVC, CPVC, PP or PVDF shall be Chemline Type 21 or equal sizes 1/2" to 2" in PVC, CPVC, and PVDF rated at 230 psi and in PP 150 psi maximum working pressure. Sizes 2-1/2", 3" and 4" rated at 150 psi maximum working pressure with EPDM, FKM (Viton®) or CPE seals. Ball seats shall be PTFE with elastomer cushions for closure with minimum stem torques.
2. All valves will have Safety Shear stem design, blowout-proof with double o-rings for safety. The top o-ring groove shall be deeper so that if the stem breaks off under excessive torque the lower o-ring will remain intact and the valve will hold pressure.
3. All valves shall be full port and two-way blocking design.
4. All valves will be CRN (Canadian Registration Number) registered with TSSA.
5. PVC valves with EPDM or FKM (Viton®) seals shall be certified under NSF/ANSI Standard 61 for contact with drinking water.
6. All valves shall have chemical resistant labels permanently marked with manufacturing number to provide production level traceability.
7. PVC compound shall have an ASTM cell classification 12454-A with a minimum suffix "A" designation for chemical resistance as per ASTM D-1784 (CSA report LO 4000-172).
8. CPVC compound shall have an ASTM cell classification 23567-A with a minimum suffix "A" designation for chemical resistance as per ASTM D-1784.
9. PP material will conform to ASTM D-4101 PP 021 B 67272 material requirements.
10. PVDF material shall be unpigmented conforming to ASTM D-3222 material requirements and to be USDA Title 21 Chapter 1 Part 177. 2510 requirements for contact with food.
11. Socket ends in PVC and CPVC shall be Schedule 80 and conform to ASTM D-2467.
12. Threaded ends shall be Schedule 80 and conform to ASTM D-2464.
13. Butt fusion ends in PP or PVDF will be compatible with Chemline PP or PVDF metric piping systems.
14. Flanged ends shall be ANSI Class 150 one-piece factory moulded (not fabricated) to ensure maximum strength and close tolerance end to end dimensions.

ORDERING EXAMPLE

Chemline True Union Ball Valves	21	A	020	E	S
Body Material	**A** – PVC **B** – PP	**C** – CPVC **K** – PVDF			
Size[1]	**002** – 1/4" **010** – 1" **025** – 2-1/2"	**003** – 3/8" **012** – 1-1/4" **030** – 3"	**005** – 1/2" **015** – 1-1/2" **040** – 4"	**007** – 3/4" **020** – 2" **060** – 6"	
Seals	**E** – EPDM	**V** – FKM (Viton®)	**C** – CPE	**B** – Nitrile	**A** – Aflas®
Ends	**S** – Socket	**T** – Threaded	**F** – Flanged	**B** – Butt[2]	**CF** – ChemFlare™

Example: Chemline Type 21 True Union Ball Valve, PVC, 2", with EPDM seals, socket ends.

[1] 1/4" is normally the 3/8" valve reduced. 6" is 4" valve with 6" end connections.

[2] PP, PVDF and ECTFE (Halar®) metric butt fusion ends (1/2" to 4") connect to Chemline PP, PVDF and ECTFE (Halar®) piping systems.

OTHER OPTIONS & ACCESSORIES

- **Alternate O-Ring Seals**
- **Stem Extensions** made to any length
- **Limit Switches** – For open and/or closed position indication
- **Municipal Operating Nut**
- **Lubrication-free Valves** – Factory clean room assembled
- **Vented Ball** – For sodium hypochlorite applications

CHEMLINE PLASTICS
SUPERIOR FLOW SOLUTIONS

55 Guardsman Road, Thornhill, ON, L3T 6L2, Canada | ISO 9001:2008 Certified
tel.905.889.7890 | fax.905.889.8553 | request@chemline.com | chemline.com

This page is intentionally left blank

CS-303-100 : Identification sheet

VWTC PROJECT NUMBER:	5000218009	REV:	1
PROJECT NAME:	AEM AMARUQ	SUBMITTED TO (COMPANY):	AGNICO EAGLE MINES
ENGINEER:	Gabriel Hébert	SUBMITTED TO (RESPONSIBLE)	
PROJECT MANAGER:	Clément B	PROJECT NUM REFERENCE.:	
PHONE NUMBER:		LOT NUMBER:	

SUPPLIER	EQPT CODE	EQPT TAG NO	DIA	DESCRIPTION	INFO 1	INFO 2	INFO 3	APPLIC.	NOTE	REV
CHEMLINE	VARFPV207282	PRV9-513	DIA: 25 mm (1")	RELIEF VALVE	TYPE: RELIEF VALVE | 150#//MANUFACTURER : CHEMLINE//MODEL : SB12A010EU//CONNECTION TYPE : UNION SOCKET | 25 mm (1")//BODY : PVC// SEAL | SEAT :EPDM | EPDM// STEM : N/A			COAGULANT DOSING SKID		
CHEMLINE	VARFPV207282	PRV9-514	DIA: 25 mm (1")	RELIEF VALVE	TYPE: RELIEF VALVE | 150#//MANUFACTURER : CHEMLINE//MODEL : SB12A010EU//CONNECTION TYPE : UNION SOCKET | 25 mm (1")//BODY : PVC// SEAL | SEAT :EPDM | EPDM// STEM : N/A			COAGULANT DOSING SKID		

This page is intentionally left blank

PDF Published September 17, 2014

SB12 Series Back Pressure/Relief Valves

CHEMLINE PLASTICS
SUPERIOR FLOW SOLUTIONS

PVC PP PVDF

CRN Registered as Category C Fittings Consult Chemline

NSF[3] Certified to NSF/ANSI 61

SERIES: SB12

SIZES: 3/8" – 4"

ENDS: True Union Socket, Threaded or ChemFlare™[1] Spigot[2] Bodies with Plain, Socket, Threaded or Flanged ends

DIAPHRAGM: PTFE Bonded EPDM

SEALS: EPDM, FKM (Viton®)

The Chemline SB Series Back Pressure/ Relief Valve has two functions. As a ***back pressure valve***, installed in-line downstream of a pump, the back pressure below the metering pump is maintained. When installed in the branch of a tee it is a ***pressure relief valve***. The valve stays closed until inlet pressure reaches the set pressure which is adjusted by turning the spring tensioning bolt. Inlet pressure acts upward against the piston allowing excess pressure to flow upwards through the orifice.

The SB12 Series has a built-in check valve function, desirable for dosing applications. It is not so sensitive as to open with every pulsation from a metering pump.

features

True Union Ends

- Easy installation and maintenance
- Eliminate chemical leakage problems common with old fashioned threaded connections

Long Cycling Life

- Dynamic seal is PTFE bonded EPDM for high chemical resistance
- This moulded diaphragm is designed for superior sealing and flex life

Superior Performance in Dosing Systems

- Valves are hydraulically designed for very low hysteresis ("backlash") and to eliminate chatter
- Built-in check (non-return) function
- Valve opening depends on inlet pressure only and is uneffected by changes in downstream (back) pressure

CRN Registration numbers by province

- Ontario: OC10134.5
- Newfoundland: OC10134.50
- Alberta: OC10134.52
- Saskatchewan/Manitoba/Quebec: OC10134.56
- New Brunswick: OC10134.57
- Nova Scotia: OC10134.58
- P.E.I.: OC10134.59
- British Columbia: not required

technical

Set Pressure Ranges

- 1/2" to 2" – 5 to 150 psi
- 2-1/2" and 3" – 7.5 to 150 psi
- 2-1/2" to 4" – 4 to 60 psi (optional)
- 4" – 7.5 to 90 psi

Maximum Viscosity

- 120cP is maximum recommended service viscosity

[1] For ChemFlare™ end connectors, consult Chemline.
[2] PP and PVDF spigot ends have DIN dimensions and will butt fuse directly to Chemline PP and PVDF piping systems.
[3] PVC valves with EPDM or FKM (Viton®) seals are certified under NSF/ANSI Standard 61 for contact with drinking water.

09/14 ©Chemline Plastics Limited 2014
Chemline is a registered trade mark of Chemline Plastics Limited

SB12 Series Back Pressure/Relief Valves 1/2" to 2"

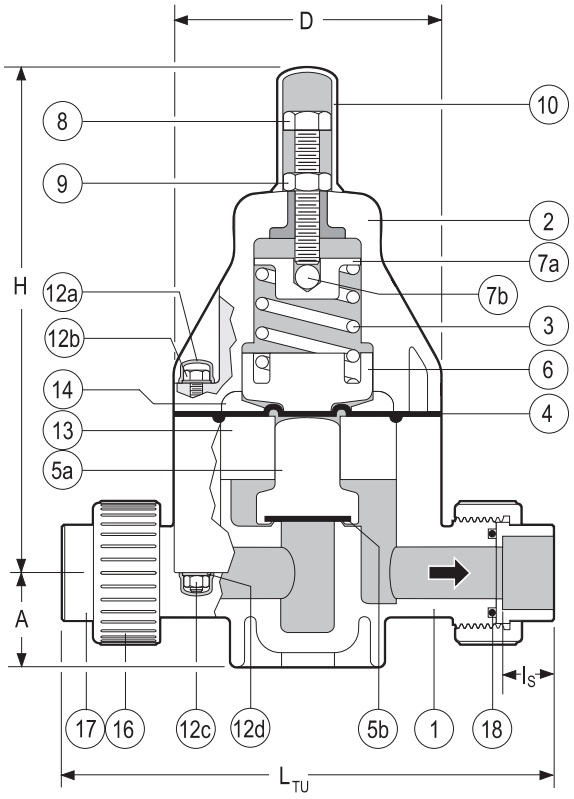

True Union Body

PARTS

▲ Recommended Spare Parts

No.	Part	Pcs.	Materials
1	Body	1	PVC, PP, PVDF
2	Bonnet	1	PPG
3	Spring	1	Galvanized Steel
4▲	Control Diaphragm	1	PTFE bonded EPDM
5a▲	Piston	1	PVC, PP, PVDF
5b▲	Seat	1	EPDM, FPM(Viton®)
6	Lower Spring Retainer	1	PPG
7a	Upper Spring Retainer	1	Cad. Plated Steel
7b	Ball	1	304 SS
8	Spring Tensioning Bolt	1	304 SS
9	Lock Nut	1	304 SS
10	Spring Bolt Cap	1	PE
12a	Bolt/Nut Cap	8/12[1]	PE
12b	Hex Bolt	4/6[1]	304 SS
12c	Hex Nut	4/6[1]	304 SS
12d	Washer	8/12[1]	304 SS
13	Spacer Disc	1	PVC, PP, PVDF
14	Pressure Plate	1	PP
16	Union Nut	2	PVC, PP, PVDF
17	End Connector	2	PVC, PP, PVDF
18▲	Face O-Ring	2	EPDM, FPM(Viton®)

[1] 1/2" size / 3/4" to 2" sizes

OTHER ENDS

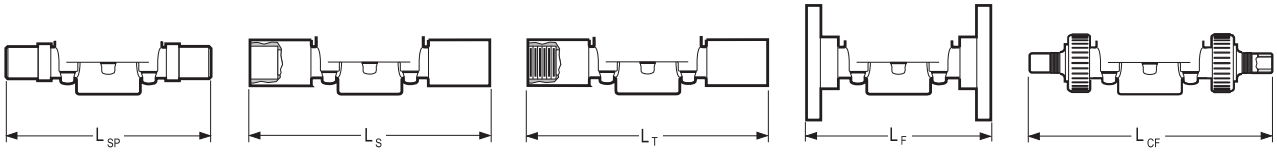

Spigot Body | Socket | Threaded | Flanged | ChemFlare™

DIMENSIONS INCHES

WEIGHTS LB.

Cv VALUES

Size	D	H	PVC A	PVC I_S	PVC L_{TU}[2]	PVC L_{SP}[3]	PVC L_S	PVC L_T	PVC L_F	PVC L_{CF}	PP and PVDF A	PP and PVDF L_{SP}[3]	PP and PVDF L_{TU}[2]	PVC	PP	PVDF	USGPM Flow at 1 psi △P
3/8"	3.2	6.9	1.0	0.6	6.5	5.7	7.4	7.2	4.5	8.2	0.9	5.7	**	1.8	1.5	2.2	2.1
1/2"	3.2	6.9	1.0	0.6	6.8	5.7	8.0	7.8	6.3	8.3[4]	0.9	5.7	7.1	1.9	1.6	2.4	3.0
3/4"	4.2	8.0	1.5	0.7	8.3	6.9	9.3	8.9	7.4	9.7	1.4	6.9	8.4	4.1	3.5	4.6	6.6
1"	4.2	8.0	1.5	0.9	8.5	6.9	9.6	9.3	7.4	10.2	1.4	6.9	8.7	4.2	3.5	4.7	8.7
1-1/4"	5.8	10.3	2.2	1.0	10.9	8.8	11.6	11.2	9.2	13.5	2.1	8.8	10.9	11.0	9.0	12.0	18.0
1-1/2"	5.8	10.3	2.2	1.2	11.1	8.8	12.2	11.5	9.5	–	2.1	8.8	11.2	11.2	9.2	12.2	20.0
2"	5.8	10.3	2.2	1.5	11.3	9.6	12.9	12.0	10.0	–	2.1	8.8	13.2	11.4	9.4	12.4	21.4

[2] True Union bodies come standard with socket ends. Threaded union ends are available. ** Consult Chemline.

[3] Spigot bodies are used for non union socket, threaded or flanged ends. All spigot ends have metric dimensions and the PP and PVDF spigots butt fuse directly to Chemline PP and PVDF piping. [4] Tube size can be reduced to 1/4" tube, LCF = 7.74" for 1/4", 8.26" for 3/8".

MAXIMUM PRESSURES PSI

Size	PVC 20°C 68°F	PVC 30°C 86°F	PVC 40°C 104°F	PVC 50°C 122°F	PP 30°C 86°F	PP 40°C 104°F	PP 50°C 122°F	PP 60°C 140°F	PP 70°C 158°F	PVDF 30°C 86°F	PVDF 50°C 122°F	PVDF 70°C 158°F	PVDF 80°C 176°F	PVDF 90°C 194°F	PVDF 100°C 212°F
1/2"– 2"	150	105	60	15	150	90	60	37.5	15	150	100	60	45	30	15

Temperature Ranges: PVC 0 to 50°C (32 to 122°F), **PP** 10 to 70°C (50 to 158°F), **PVDF** –30 to 100°C (–22 to 212°F).

SB12 Series Back Pressure/Relief Valves 1/2" to 2"

pressure loss nomogram for SB12 valves 3/8" to 2"

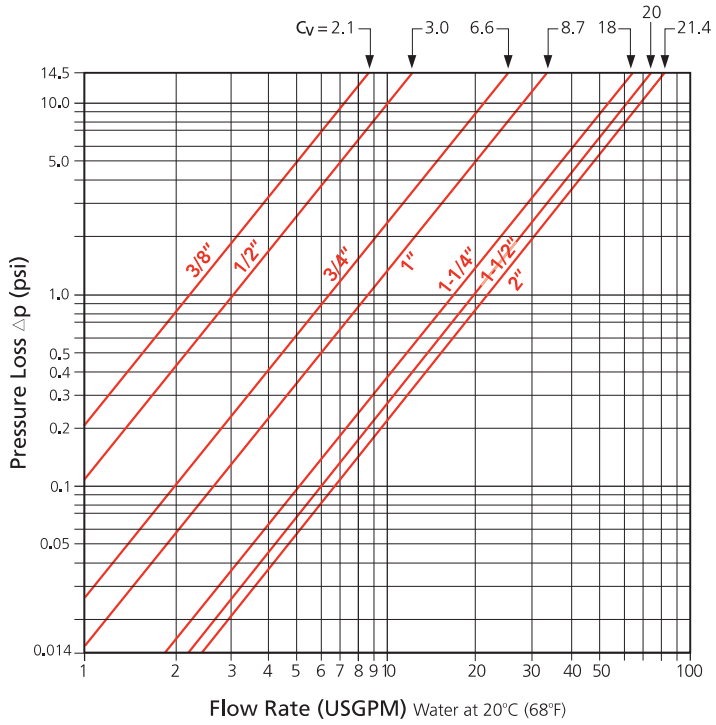

typical dosing system schematic

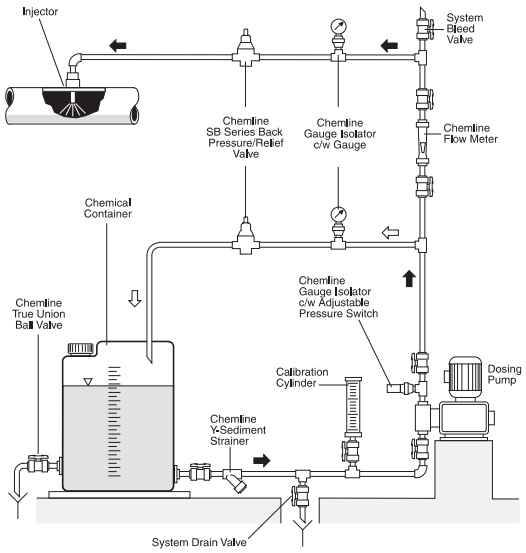

application of pressure relief valves

Constant System Pressure

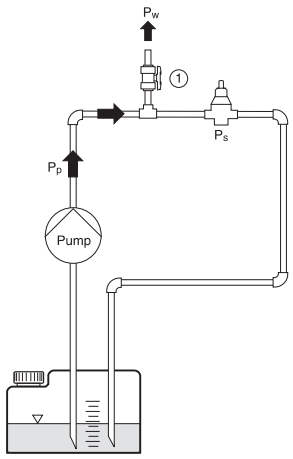

$P_p \geq P_w$
$P_p \geq P_s$ → valve opens
$P_p \leq P_s$ → valve closed

P_w = Working Pressure
P_p = Pump Pressure
P_s = Set Pressure

Consumer 1 and/or 2 Open, Valve Closes

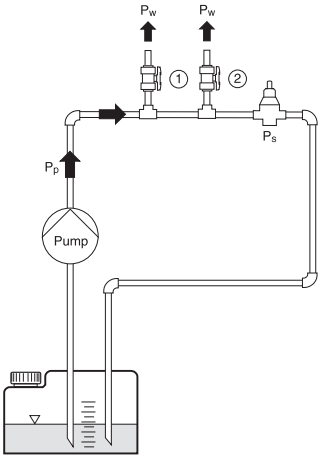

$P_p \geq P_s$ → valve opens
$P_p \leq P_s$ → valve closed

Non-Return Valve

Container 1 is located above the pump

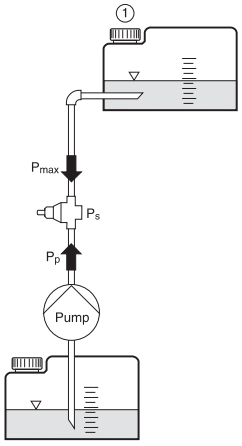

$P_s \geq P_{max}$
$P_p \geq P_s$ → valve opens
$P_p \leq P_s$ → valve closed

Overflow Valve

Pressure of container or application system should not exceed the maximum pressure value

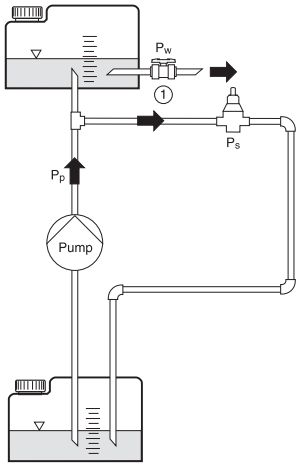

$P_s \leq P_w$
$P_p \geq P_s$ → valve opens
$P_p \leq P_s$ → valve closed

SB12 Series Back Pressure/Relief Valves 1/2" to 2"

working pressure vs. flow rate

The curves show the relationship between the working pressure and the approximate flow rate through the valve for water at 20°C (68°F) . These values will vary depending on:

- The configuration of the piping and the pressure losses associated with it
- The fluid if not water at 20°C (68°F)
- Whether the pressure is rising or falling, hysteresis is approximately 4 psi for 1/2" to 2" valves. For valves 2-1/2" to 4", hysteresis is approximately 14.5 psi.

operation examples

1. The valve is set closed at 100 psi. At a pressure increase of 10 psi, a flow of approximately 1.0 USGPM will be reached.
   - set pressure = 100 psi
   - working pressure = 110 psi
   - opening pressure = approximately 104 psi
2. The valve is set closed at 50 psi. At a pressure increase of 10 psi, a flow of approximately 1.0 USGPM will be reached.
   - set pressure = 50 psi
   - working pressure = 60 psi
   - opening pressure = approximately 54 psi

3/8" Valves

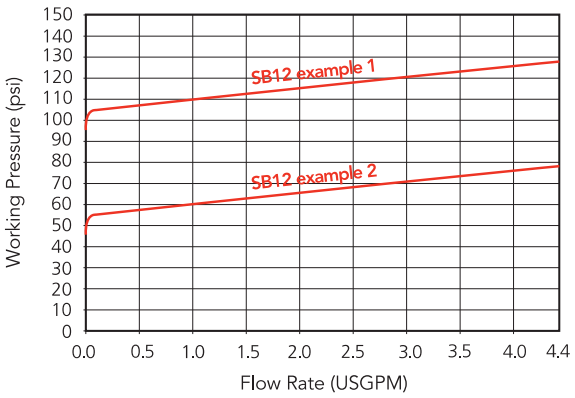

1/2" Valves

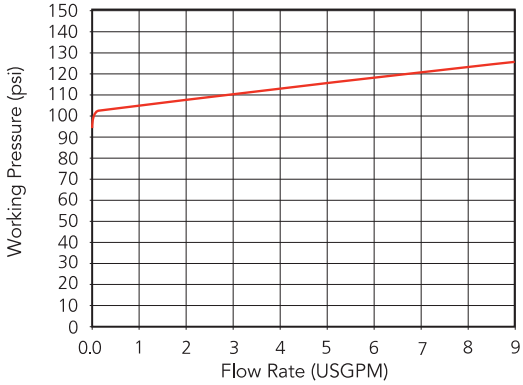

3/4" Valves

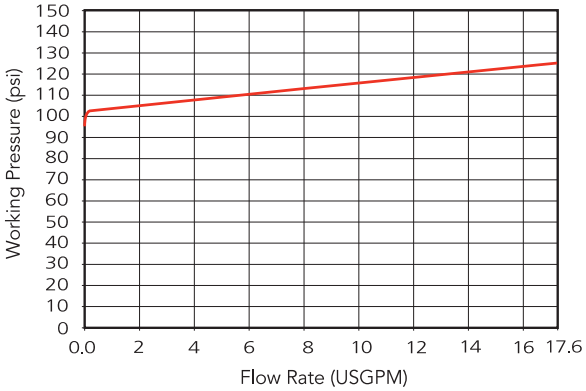

1" Valves

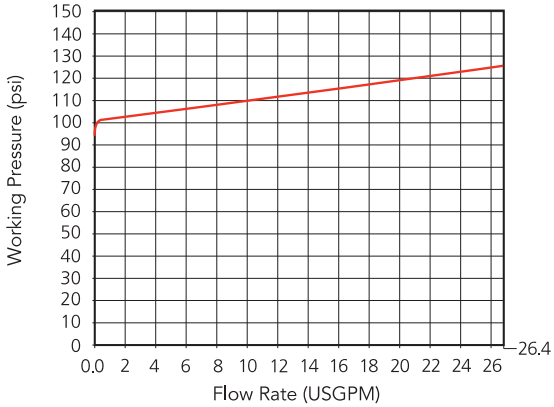

1-1/4" Valves

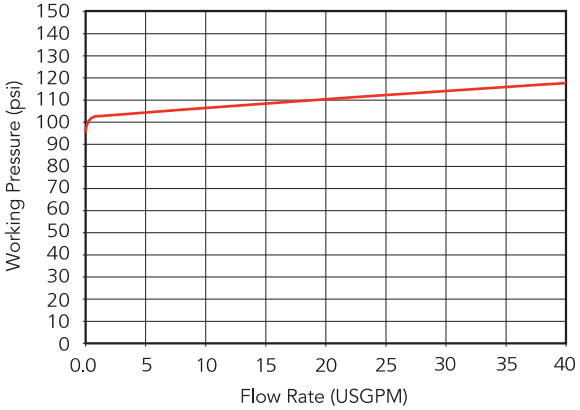

1-1/2" Valves

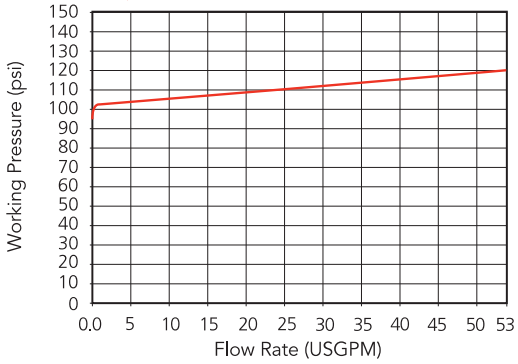

2" Valves

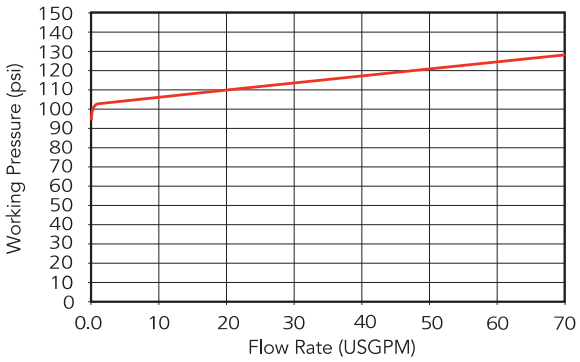

SB12 Series Back Pressure/Relief Valves 2-1/2" to 4"

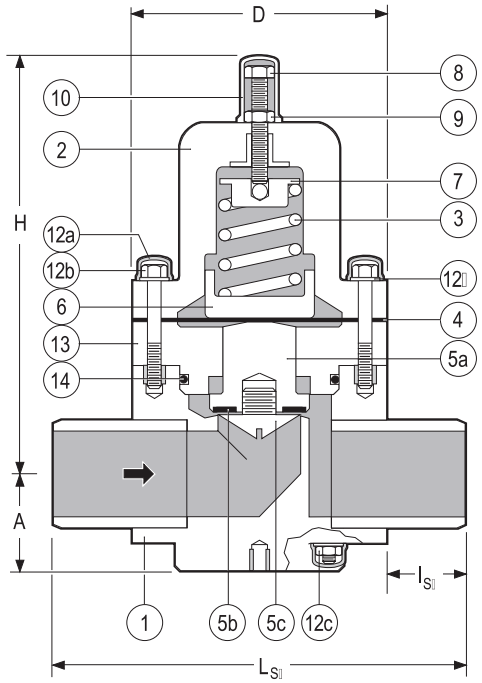

Spigot Body

PARTS

▲ Recommended Spare Parts

No.	Part	Pcs.	Materials
1	Body	1	PVC, PP, PVDF
2	Bonnet	1	PPG
3	Spring	1	Galvanized Steel
4▲	Control Diaphragm	1	PTFE bonded EPDM
5a▲	Piston	2	PVC, PP, PVDF
5b▲	Seat	1	EPDM, FPM(Viton®)
5c▲	Seat Retainer	1	PVC, PP, PVDF
6	Lower Spring Retainer	1	PPG
7	Upper Spring Retauner	1	304 SS
8	Spring Tensioning Bolt	1	304 SS
9	Lock Nut	1	304 SS
10	Spring Bolt Cap	1	PE
12a	Hex Bolt/Nut Cap	20	PE
12b	Hex Bolt/Stud	12[1]	304 SS
12c	Hex Nut	20	304 SS
12d	Washer	20	304 SS
13	Spacer Disc	1	PVC, PP, PVDF
14	Spacer O ring	1	EPDM, FPM(Viton®)

[1] 2 large upper bolts, 2 shorter lower bolts, 8 studs

OTHER ENDS

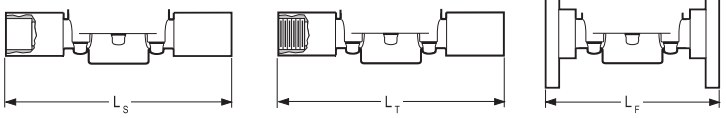

Socket Threaded Flanged

ChemFlare™ Ends
- For connection to PFA tube. Leak-free connections for difficult services such as sodium hypochlorite

DIMENSIONS INCHES

WEIGHTS LB.

Cv VALUES

Size	PVC, PP & PVDF A	D	H	L_{SP}[2]	I_{SP}	PVC L_F	PVC	PP	PVDF	USGPM Flow at 1 psi △P
2-1/2"	2.7	6.9	11.1	11.2	2.1	12.2	20.9	15.4	24.6	41
3"	3.0	7.9	12.2	14.2	3.1	15.0	26.4	23.8	30.8	63
4"	3.7	9.8	14.2	16.5	3.3	16.9	33.0	26.4	37.4	98

[2] Plain spigot ends in PP & PVDF may be butt fused directly to Chemline PP & PVDF piping systems. Weights based on spigot bodies.

MAXIMUM PRESSURES PSI

Size	PVC 20°C 68°F	30°C 86°F	40°C 104°F	50°C 122°F	PP 20°C 68°F	30°C 86°F	40°C 104°F	50°C 122°F	60°C 140°F	70°C 158°F	PVDF 30°C 86°F	50°C 122°F	70°C 158°F	80°C 176°F	90°C 194°F	100°C 212°F
2-1/2"–4"	150	90	44	15	150	116	90	60	37.5	15	150	90	55	40	30	15

Temperature Ranges: PVC 0 to 50°C (32 to 122°F), **PP** 10 to 70°C (50 to 158°F), **PVDF** –30 to 100°C (–22 to 212°F).

ORDERING EXAMPLE

Chemline Back Pressure/ Relief Valves	SB12	A	005	V	U
Body Material	**A** – PVC	**B** – PP	**K** – PVDF		
Size	**003** – 3/8" **010** – 1" **020** – 2"	**005** – 1/2" **012** – 1-1/4" **025** – 2-1/2"	**007** – 3/4" **015** – 1-1/2" **030** – 3"	**040** – 4"		
Elastomers	**E** – EPDM	**V** – FPM (Viton®)				
Ends	**S** – Socket **CFx** – ChemFlare™	**T** – Threaded	**F** – Flanged **Blank** – Spigot (Butt)	**U** – Union Socket		

Example: Chemline SB 12 Series, PVC, 1/2" diameter, FPM (Viton®) seals, Union socket ends.
x = 4 for 1/4", **6** for 3/8", **8** for 1/2", **12** for 1" ID tube connections.

OPTIONS

- 4 to 60 psi Pressure Range springs for 2-1/2" to 4" valves
- **Integral Pressure Gauge** – for inlet and/or outlet
- Bodies in 316 Stainless Steel and PTFE

Optional Pressure Gauge
- For inlet and/or outlet

SB12 Series Back Pressure/Relief Valves 2-1/2" to 4"

working pressure vs. flow rate

• Whether the pressure is rising or falling, hysteresis is approximately 14.5 psi for 2-1/2" to 4" valves

2-1/2" Valves / 4 to 60 psi set pressure range

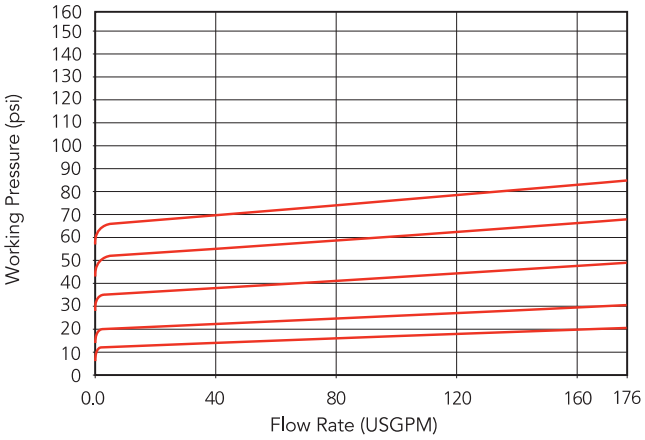

2-1/2" Valves / 7.5 to 150 psi set pressure range

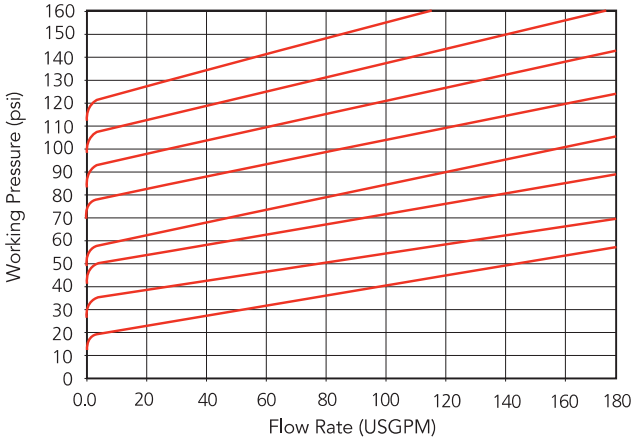

3" Valves / 4 to 60 psi set pressure range

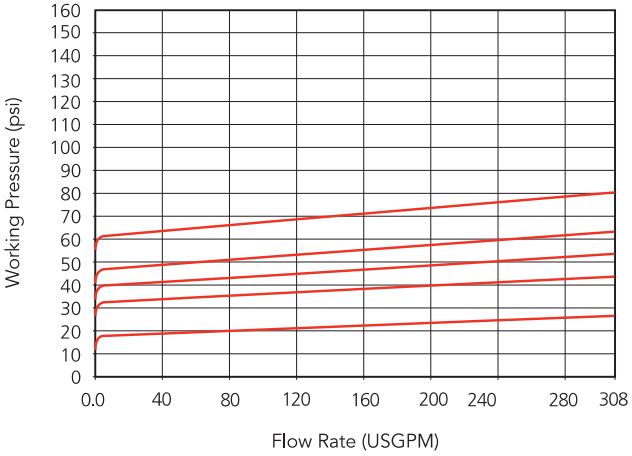

3" Valves / 7.5 to 150 psi set pressure range

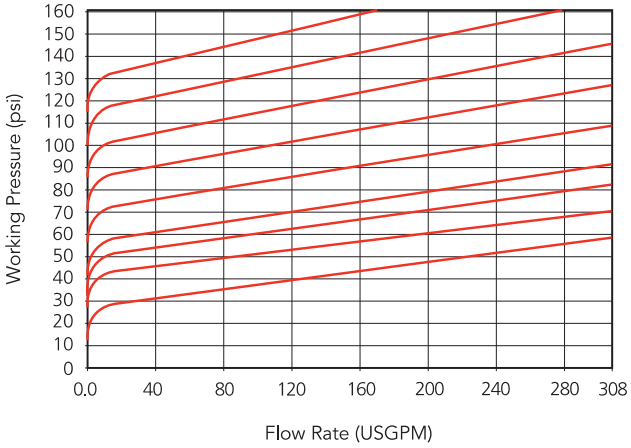

4" Valves / 4 to 60 psi set pressure range

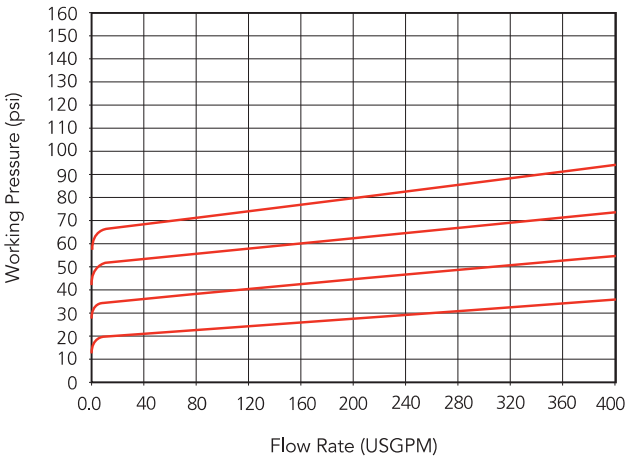

4" Valves / 7.5 to 90 psi set pressure range

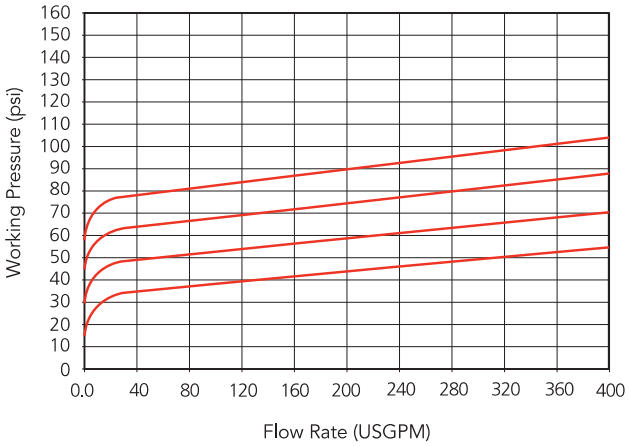

CHEMLINE PLASTICS
SUPERIOR FLOW SOLUTIONS

55 Guardsman Road, Thornhill, ON, L3T 6L2, Canada | ISO 9001:2008 Certified
tel.905.889.7890 | fax.905.889.8553 | request@chemline.com | chemline.com

CS-305-170 : Identification sheet

VWTC PROJECT NUMBER:	5000218009	REV:	1
PROJECT NAME:	AEM AMARUQ	SUBMITTED TO (COMPANY):	AGNICO EAGLE MINES
ENGINEER:	Gabriel Hébert	SUBMITTED TO (RESPONSIBLE)	
PROJECT MANAGER:	Clément B	PROJECT NUM REFERENCE.:	
PHONE NUMBER:		LOT NUMBER:	

SUPPLIER	EQPT CODE	EQPT TAG NO	DIA	DESCRIPTION	INFO 1	INFO 2	INFO 3	APPLIC.	NOTE	REV
CHEMLINE	VARFPV348512	BPV9-514	DIA: 25 mm (1")	BACKPRESSURE VALVE	TYPE: BACK PRESSURE VALVE | 150#//MANUFACTURER : CHEMLINE//MODEL : SB12A010EU + SGA-005-002-P-G + P025-160-BM//CONNECTION TYPE : UNION SOCKET | 25 mm (1")//BODY : PVC// SEAL | SEAT :EPDM | EPDM// STEM : N/A	(CONFIG. L_U)		COAGULANT DOSING SKID		

This page is intentionally left blank

PDF Published September 17, 2014

SB12 Series Back Pressure/Relief Valves

CHEMLINE PLASTICS
SUPERIOR FLOW SOLUTIONS

PVC PP PVDF

CRN Registered as Category C Fittings Consult Chemline

NSF[3] Certified to NSF/ANSI 61

SERIES: SB12

SIZES: 3/8" – 4"

ENDS: True Union Socket, Threaded or ChemFlare™[1] Spigot[2] Bodies with Plain, Socket, Threaded or Flanged ends

DIAPHRAGM: PTFE Bonded EPDM

SEALS: EPDM, FKM (Viton®)

The Chemline SB Series Back Pressure/ Relief Valve has two functions. As a ***back pressure valve***, installed in-line downstream of a pump, the back pressure below the metering pump is maintained. When installed in the branch of a tee it is a ***pressure relief valve***. The valve stays closed until inlet pressure reaches the set pressure which is adjusted by turning the spring tensioning bolt. Inlet pressure acts upward against the piston allowing excess pressure to flow upwards through the orifice.

The SB12 Series has a built-in check valve function, desirable for dosing applications. It is not so sensitive as to open with every pulsation from a metering pump.

features

True Union Ends

- Easy installation and maintenance
- Eliminate chemical leakage problems common with old fashioned threaded connections

Long Cycling Life

- Dynamic seal is PTFE bonded EPDM for high chemical resistance
- This moulded diaphragm is designed for superior sealing and flex life

Superior Performance in Dosing Systems

- Valves are hydraulically designed for very low hysteresis ("backlash") and to eliminate chatter
- Built-in check (non-return) function
- Valve opening depends on inlet pressure only and is uneffected by changes in downstream (back) pressure

CRN Registration numbers by province

- Ontario: OC10134.5
- Newfoundland: OC10134.50
- Alberta: OC10134.52
- Saskatchewan/Manitoba/Quebec: OC10134.56
- New Brunswick: OC10134.57
- Nova Scotia: OC10134.58
- P.E.I.: OC10134.59
- British Columbia: not required

technical

Set Pressure Ranges

- 1/2" to 2" – 5 to 150 psi
- 2-1/2" and 3" – 7.5 to 150 psi
- 2-1/2" to 4" – 4 to 60 psi (optional)
- 4" – 7.5 to 90 psi

Maximum Viscosity

- 120cP is maximum recommended service viscosity

[1] For ChemFlare™ end connectors, consult Chemline.
[2] PP and PVDF spigot ends have DIN dimensions and will butt fuse directly to Chemline PP and PVDF piping systems.
[3] PVC valves with EPDM or FKM (Viton®) seals are certified under NSF/ANSI Standard 61 for contact with drinking water.

09/14 ©Chemline Plastics Limited 2014
Chemline is a registered trade mark of Chemline Plastics Limited

SB12 Series Back Pressure/Relief Valves 1/2" to 2"

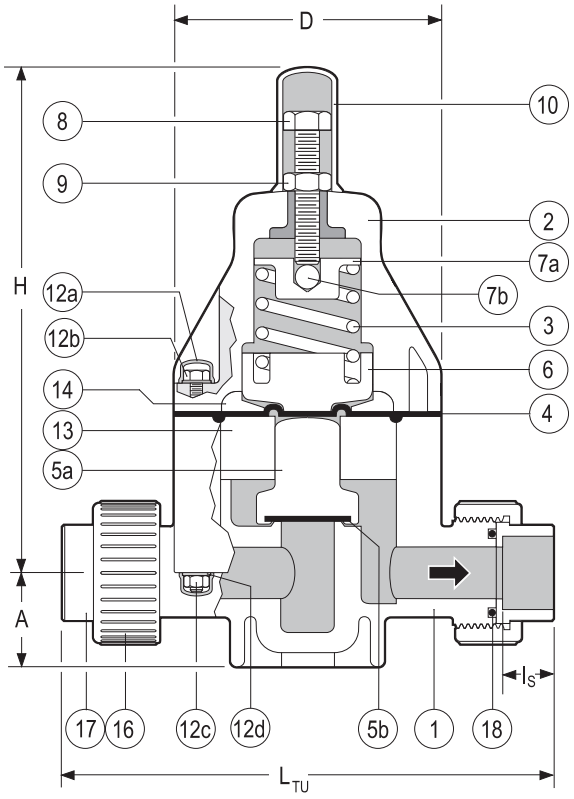

True Union Body

PARTS

▲ Recommended Spare Parts

No.	Part	Pcs.	Materials
1	Body	1	PVC, PP, PVDF
2	Bonnet	1	PPG
3	Spring	1	Galvanized Steel
4▲	Control Diaphragm	1	PTFE bonded EPDM
5a▲	Piston	1	PVC, PP, PVDF
5b▲	Seat	1	EPDM, FPM(Viton®)
6	Lower Spring Retainer	1	PPG
7a	Upper Spring Retainer	1	Cad. Plated Steel
7b	Ball	1	304 SS
8	Spring Tensioning Bolt	1	304 SS
9	Lock Nut	1	304 SS
10	Spring Bolt Cap	1	PE
12a	Bolt/Nut Cap	8/12[1]	PE
12b	Hex Bolt	4/6[1]	304 SS
12c	Hex Nut	4/6[1]	304 SS
12d	Washer	8/12[1]	304 SS
13	Spacer Disc	1	PVC, PP, PVDF
14	Pressure Plate	1	PP
16	Union Nut	2	PVC, PP, PVDF
17	End Connector	2	PVC, PP, PVDF
18▲	Face O-Ring	2	EPDM, FPM(Viton®)

[1] 1/2" size / 3/4" to 2" sizes

OTHER ENDS

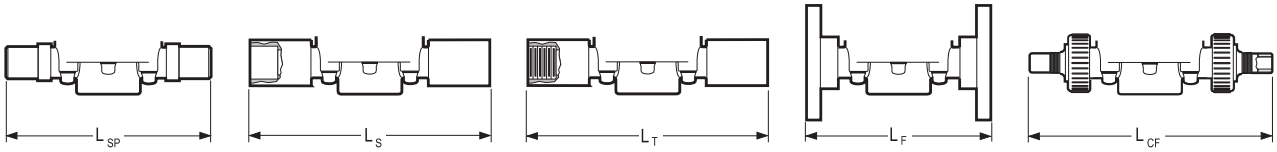

Spigot Body | Socket | Threaded | Flanged | ChemFlare™

DIMENSIONS INCHES

WEIGHTS LB.

Cv VALUES

Size	D	H	PVC A	PVC I_S	PVC L_{TU}[2]	PVC L_{SP}[3]	PVC L_S	PVC L_T	PVC L_F	PVC L_{CF}	PP and PVDF A	PP and PVDF L_{SP}[3]	PP and PVDF L_{TU}[2]	PVC	PP	PVDF	USGPM Flow at 1 psi △P
3/8"	3.2	6.9	1.0	0.6	6.5	5.7	7.4	7.2	4.5	8.2	0.9	5.7	**	1.8	1.5	2.2	2.1
1/2"	3.2	6.9	1.0	0.6	6.8	5.7	8.0	7.8	6.3	8.3[4]	0.9	5.7	7.1	1.9	1.6	2.4	3.0
3/4"	4.2	8.0	1.5	0.7	8.3	6.9	9.3	8.9	7.4	9.7	1.4	6.9	8.4	4.1	3.5	4.6	6.6
1"	4.2	8.0	1.5	0.9	8.5	6.9	9.6	9.3	7.4	10.2	1.4	6.9	8.7	4.2	3.5	4.7	8.7
1-1/4"	5.8	10.3	2.2	1.0	10.9	8.8	11.6	11.2	9.2	13.5	2.1	8.8	10.9	11.0	9.0	12.0	18.0
1-1/2"	5.8	10.3	2.2	1.2	11.1	8.8	12.2	11.5	9.5	–	2.1	8.8	11.2	11.2	9.2	12.2	20.0
2"	5.8	10.3	2.2	1.5	11.3	9.6	12.9	12.0	10.0	–	2.1	8.8	13.2	11.4	9.4	12.4	21.4

[2] True Union bodies come standard with socket ends. Threaded union ends are available. ** Consult Chemline.

[3] Spigot bodies are used for non union socket, threaded or flanged ends. All spigot ends have metric dimensions and the PP and PVDF spigots butt fuse directly to Chemline PP and PVDF piping. [4] Tube size can be reduced to 1/4" tube, LCF = 7.74" for 1/4", 8.26" for 3/8".

MAXIMUM PRESSURES PSI

Size	PVC 20°C 68°F	PVC 30°C 86°F	PVC 40°C 104°F	PVC 50°C 122°F	PP 30°C 86°F	PP 40°C 104°F	PP 50°C 122°F	PP 60°C 140°F	PP 70°C 158°F	PVDF 30°C 86°F	PVDF 50°C 122°F	PVDF 70°C 158°F	PVDF 80°C 176°F	PVDF 90°C 194°F	PVDF 100°C 212°F
1/2"– 2"	150	105	60	15	150	90	60	37.5	15	150	100	60	45	30	15

Temperature Ranges: PVC 0 to 50°C (32 to 122°F), **PP** 10 to 70°C (50 to 158°F), **PVDF** –30 to 100°C (–22 to 212°F).

SB12 Series Back Pressure/Relief Valves 1/2" to 2"

pressure loss nomogram for SB12 valves 3/8" to 2"

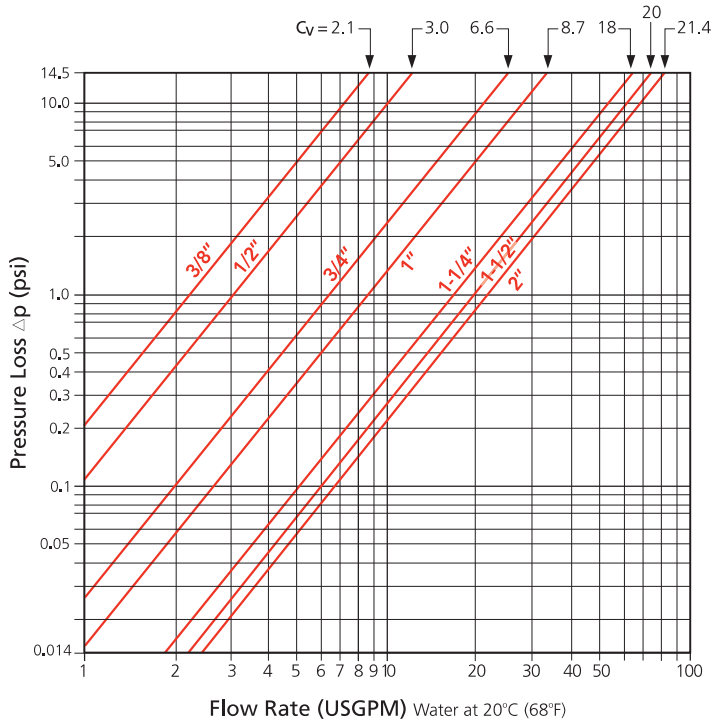

typical dosing system schematic

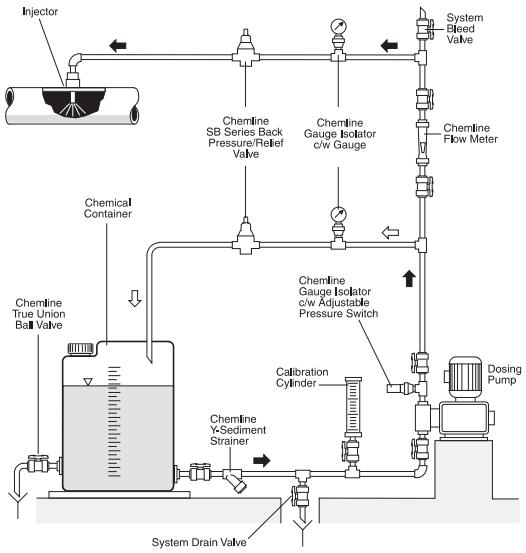

application of pressure relief valves

Constant System Pressure

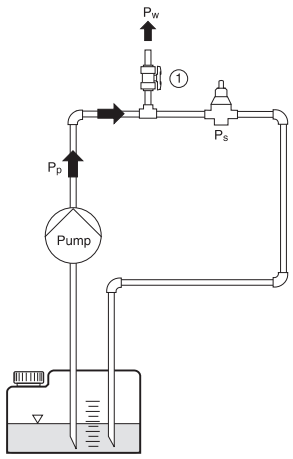

$P_p \geq P_w$
$P_p \geq P_s$ → valve opens
$P_p \leq P_s$ → valve closed

P_w = Working Pressure
P_p = Pump Pressure
P_s = Set Pressure

Consumer 1 and/or 2 Open, Valve Closes

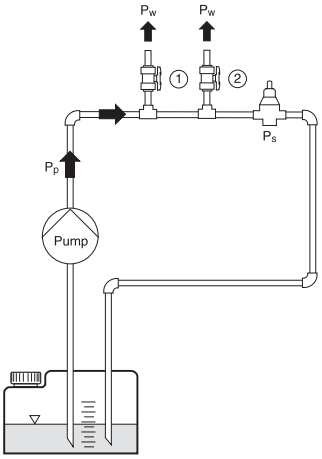

$P_p \geq P_s$ → valve opens
$P_p \leq P_s$ → valve closed

Non-Return Valve

Container 1 is located above the pump

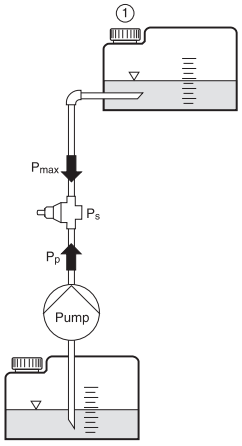

$P_s \geq P_{max}$
$P_p \geq P_s$ → valve opens
$P_p \leq P_s$ → valve closed

Overflow Valve

Pressure of container or application system should not exceed the maximum pressure value

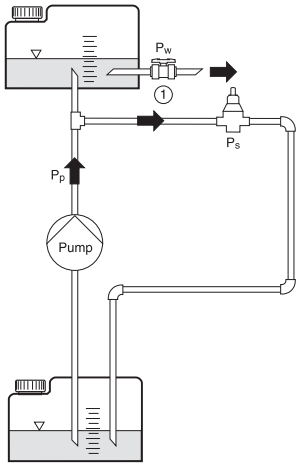

$P_s \leq P_w$
$P_p \geq P_s$ → valve opens
$P_p \leq P_s$ → valve closed

SB12 Series Back Pressure/Relief Valves 1/2" to 2"

working pressure vs. flow rate

The curves show the relationship between the working pressure and the approximate flow rate through the valve for water at 20°C (68°F) . These values will vary depending on:

- The configuration of the piping and the pressure losses associated with it
- The fluid if not water at 20°C (68°F)
- Whether the pressure is rising or falling, hysteresis is approximately 4 psi for 1/2" to 2" valves. For valves 2-1/2" to 4", hysteresis is approximately 14.5 psi.

operation examples

1. The valve is set closed at 100 psi. At a pressure increase of 10 psi, a flow of approximately 1.0 USGPM will be reached.
   - set pressure = 100 psi
   - working pressure = 110 psi
   - opening pressure = approximately 104 psi
2. The valve is set closed at 50 psi. At a pressure increase of 10 psi, a flow of approximately 1.0 USGPM will be reached.
   - set pressure = 50 psi
   - working pressure = 60 psi
   - opening pressure = approximately 54 psi

3/8" Valves

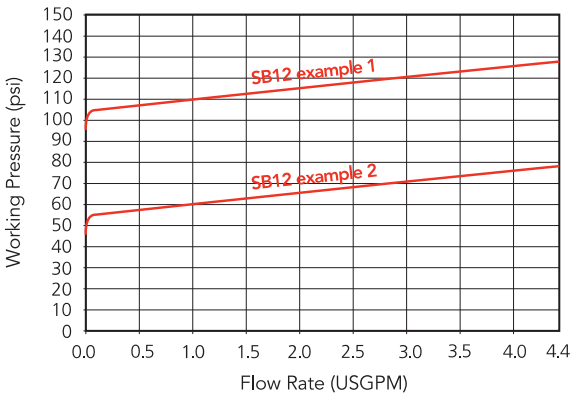

1/2" Valves

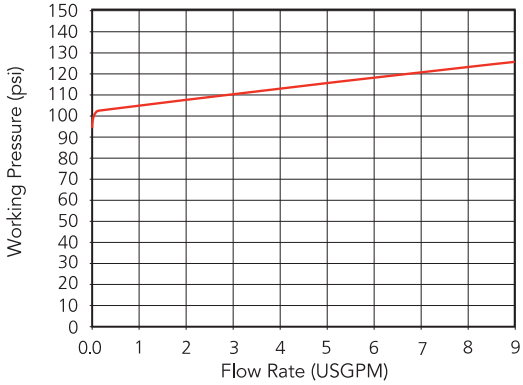

3/4" Valves

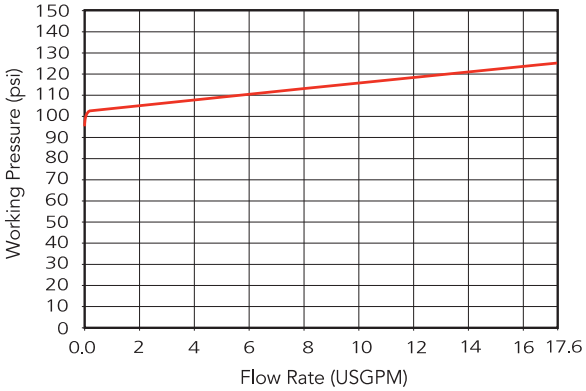

1" Valves

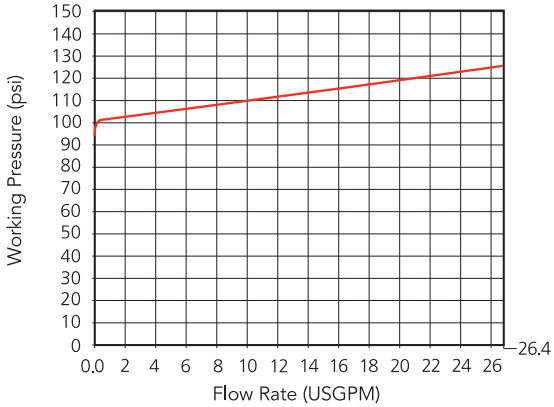

1-1/4" Valves

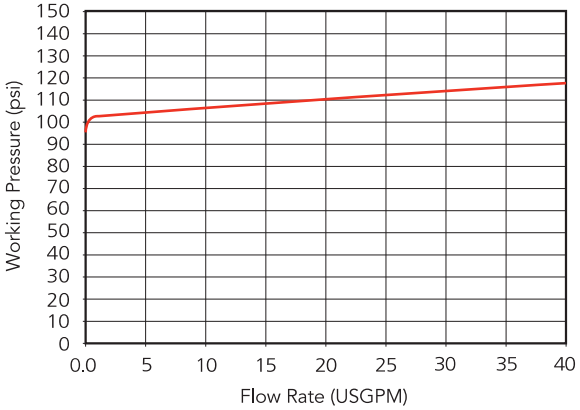

1-1/2" Valves

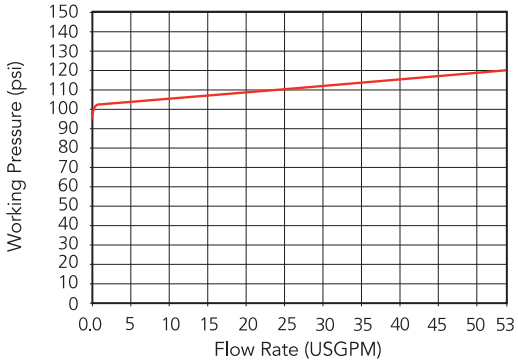

2" Valves

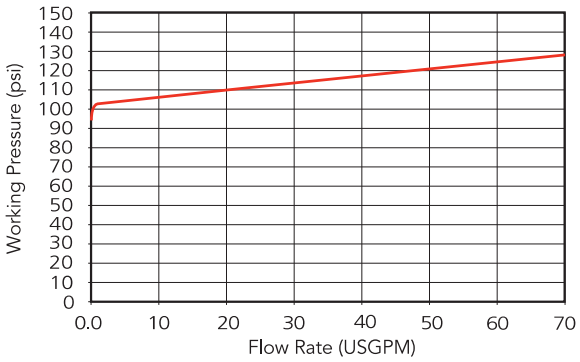

SB12 Series Back Pressure/Relief Valves 2-1/2" to 4"

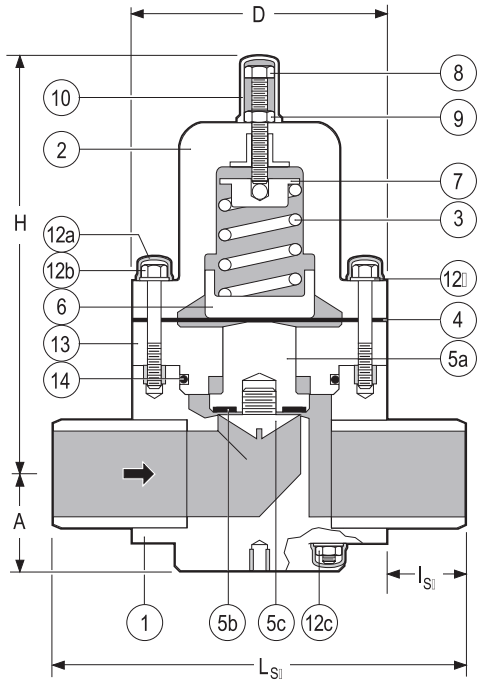

Spigot Body

PARTS

▲ Recommended Spare Parts

No.	Part	Pcs.	Materials
1	Body	1	PVC, PP, PVDF
2	Bonnet	1	PPG
3	Spring	1	Galvanized Steel
4▲	Control Diaphragm	1	PTFE bonded EPDM
5a▲	Piston	2	PVC, PP, PVDF
5b▲	Seat	1	EPDM, FPM(Viton®)
5c▲	Seat Retainer	1	PVC, PP, PVDF
6	Lower Spring Retainer	1	PPG
7	Upper Spring Retauner	1	304 SS
8	Spring Tensioning Bolt	1	304 SS
9	Lock Nut	1	304 SS
10	Spring Bolt Cap	1	PE
12a	Hex Bolt/Nut Cap	20	PE
12b	Hex Bolt/Stud	12[1]	304 SS
12c	Hex Nut	20	304 SS
12d	Washer	20	304 SS
13	Spacer Disc	1	PVC, PP, PVDF
14	Spacer O ring	1	EPDM, FPM(Viton®)

[1] 2 large upper bolts, 2 shorter lower bolts, 8 studs

OTHER ENDS

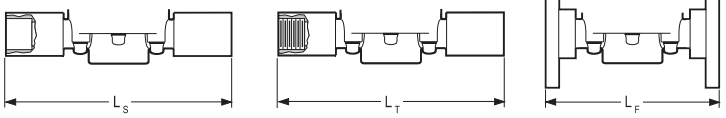

Socket Threaded Flanged

ChemFlare™ Ends
- For connection to PFA tube. Leak-free connections for difficult services such as sodium hypochlorite

DIMENSIONS INCHES

WEIGHTS LB.

Cv VALUES

Size	PVC, PP & PVDF A	D	H	L_{SP}[2]	I_{SP}	PVC L_F	PVC	PP	PVDF	USGPM Flow at 1 psi △P
2-1/2"	2.7	6.9	11.1	11.2	2.1	12.2	20.9	15.4	24.6	41
3"	3.0	7.9	12.2	14.2	3.1	15.0	26.4	23.8	30.8	63
4"	3.7	9.8	14.2	16.5	3.3	16.9	33.0	26.4	37.4	98

[2] Plain spigot ends in PP & PVDF may be butt fused directly to Chemline PP & PVDF piping systems. Weights based on spigot bodies.

MAXIMUM PRESSURES PSI

Size	PVC 20°C 68°F	30°C 86°F	40°C 104°F	50°C 122°F	PP 20°C 68°F	30°C 86°F	40°C 104°F	50°C 122°F	60°C 140°F	70°C 158°F	PVDF 30°C 86°F	50°C 122°F	70°C 158°F	80°C 176°F	90°C 194°F	100°C 212°F
2-1/2"–4"	150	90	44	15	150	116	90	60	37.5	15	150	90	55	40	30	15

Temperature Ranges: PVC 0 to 50°C (32 to 122°F), **PP** 10 to 70°C (50 to 158°F), **PVDF** –30 to 100°C (–22 to 212°F).

ORDERING EXAMPLE

Chemline Back Pressure/ Relief Valves	SB12	A	005	V	U
Body Material	**A** – PVC	**B** – PP	**K** – PVDF		
Size	**003** – 3/8" **010** – 1" **020** – 2"	**005** – 1/2" **012** – 1-1/4" **025** – 2-1/2"	**007** – 3/4" **015** – 1-1/2" **030** – 3"	**040** – 4"		
Elastomers	**E** – EPDM	**V** – FPM (Viton®)				
Ends	**S** – Socket **CFx** – ChemFlare™	**T** – Threaded	**F** – Flanged **Blank** – Spigot (Butt)	**U** – Union Socket		

Example: Chemline SB 12 Series, PVC, 1/2" diameter, FPM (Viton®) seals, Union socket ends.
x = 4 for 1/4", **6** for 3/8", **8** for 1/2", **12** for 1" ID tube connections.

OPTIONS

- 4 to 60 psi Pressure Range springs for 2-1/2" to 4" valves
- **Integral Pressure Gauge** – for inlet and/or outlet
- Bodies in 316 Stainless Steel and PTFE

Optional Pressure Gauge
- For inlet and/or outlet

SB12 Series Back Pressure/Relief Valves 2-1/2" to 4"

working pressure vs. flow rate

• Whether the pressure is rising or falling, hysteresis is approximately 14.5 psi for 2-1/2" to 4" valves

2-1/2" Valves / 4 to 60 psi set pressure range

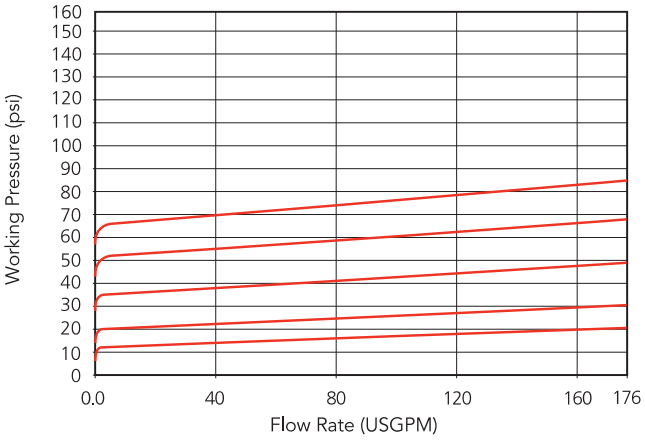

2-1/2" Valves / 7.5 to 150 psi set pressure range

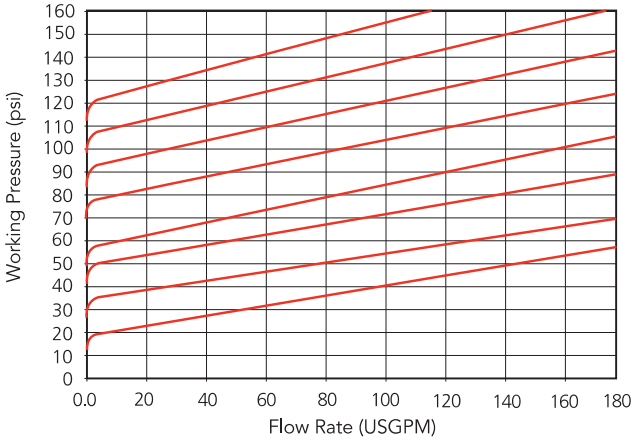

3" Valves / 4 to 60 psi set pressure range

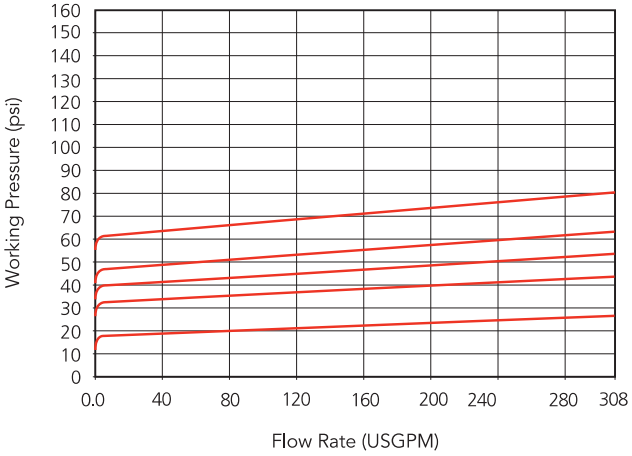

3" Valves / 7.5 to 150 psi set pressure range

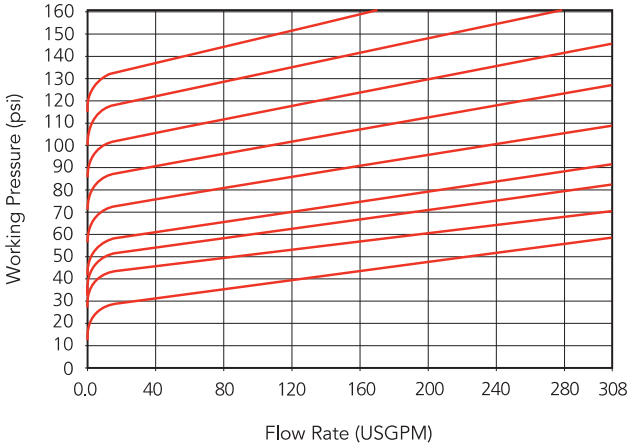

4" Valves / 4 to 60 psi set pressure range

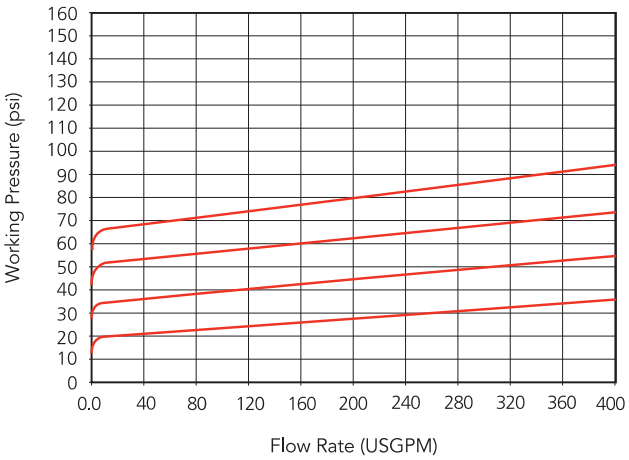

4" Valves / 7.5 to 90 psi set pressure range

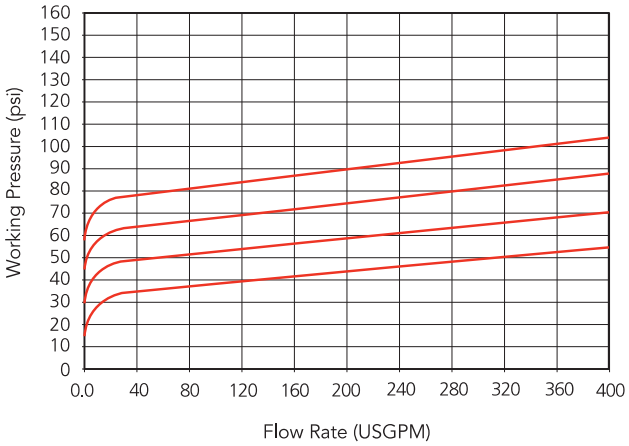

CHEMLINE PLASTICS
SUPERIOR FLOW SOLUTIONS

55 Guardsman Road, Thornhill, ON, L3T 6L2, Canada | ISO 9001:2008 Certified
tel.905.889.7890 | fax.905.889.8553 | request@chemline.com | chemline.com

PDF Published June 23, 2014

Gauge Isolators

CHEMLINE PLASTICS
SUPERIOR FLOW SOLUTIONS

PVC PP PVDF

CRN Registered Consult Chemline

NSF[4] Certified to NSF/ANSI 61

SERIES: SG

INLET CONNECTION: 1/4" or 1/2" Threaded[1]

INSTRUMENT CONNECTION: 1/4" or 1/2" Threaded

DIAPHRAGM: PTFE

[1] Other available inlet connections are 1/2" socket or 1/2" to 1" flanged.
[2] Other fluids are available for special applications such as chlorine service.
[3] Glass reinforced polypropylene.
[4] PVC isolators are certified under NSF/ANSI Standard 61 for contact with drinking water.

Chemline SG Series Gauge Isolators allow inexpensive pressure gauges, or any other pressure instrument to be used in corrosive services. The upper chamber (gauge side) is filled with a stable fluid such as glycol or glycerine[2]. A diaphragm separates it from the lower chamber which receives the media under pressure.

The 1/2" gauge connection allows use of the popular 4" and 4-1/2" diameter gauges. Pressure switches or transmitters may also be installed. Customers can easily fill isolators and install their own gauges.

features

Easy to Mount Gauges

- It is easy to fill an isolator and field mount a gauge. No special equipment is required.
- Will accept popular 4" and 4-1/2" diameter gauges

Provision for Fill Port

- Housing may be drilled and tapped by Chemline or customer for a threaded fill port. This is used for filling isolator using a vacuum filling station

High Chemical Resistance

- Choice of body materials for a wide range of applications
- PTFE bonded EPDM dished diaphragm for high chemical resistance and sensitivity

Heavy Duty Design for Safety

- PPG[3] top chamber
- Heavy wall connection ports

CRN Registration number by province

- Ontario: OH16085.5

Optional Gauges

- Isolators are available alone or with gauge mounted and prefilled with glycol[2]

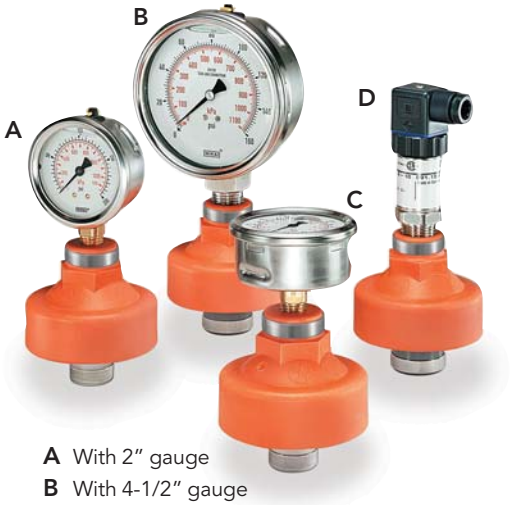

A With 2" gauge
B With 4-1/2" gauge
C With 2" back mount gauge
D With pressure transmitter

06/14 ©Chemline Plastics Limited 2014
Chemline is a registered trade mark of Chemline Plastics Limited

Gauge Isolators

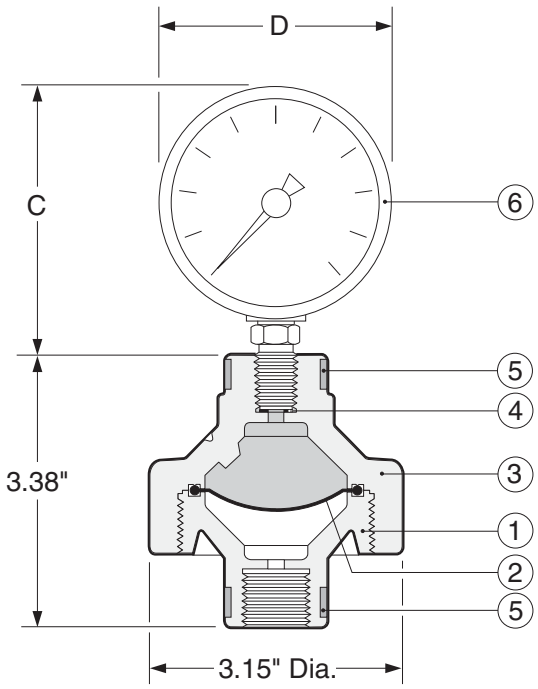

PARTS

No.	Part	Pcs.	Materials
1	Body	1	PVC, PP, PVDF
2	Diaphragm	1	PTFE
3	Bonnet	1	PPG[1]
4	Gasket	1	EPDM
5	Stainless Steel Bands	2	304 SS
6	Optional Gauge	1	See below

[1]PPG = Glass reinforced polypropylene

OPTIONAL GAUGES

- Chemline offers the gauges listed below mounted to isolator and prefilled with glycol, glycerine or special fluid for chlorine applications. These gauges have dials and cases filled with either glycol (standard), glycerine or silicon for corrosion resistance and dampening.
- Chemline SG gauge isolators are not recommended for vacuum applications. They will not affect the gauge accuracy as low as approximately 3 psi. The accuracy depends on the process conditions and the gauge installed on it.

OTHER OPTIONS

- **Flanged** inlet connections
- **Threaded Fill Port** – drilled, tapped and plugged
- Chemline will mount any pressure instrument supplied free issue by customer

DIMENSIONS (Gauge Isolator with optional gauge installed) INCHES

Optional Gauge Ordering No.	Gauge Diameter	Gauge Connection	Housing	Bourdon Tube	Window	Accuracy	Dimensions C	Dimensions D(max.)
P025-xx	2-1/2"	1/4"	316 SS	Brass	Polycarbonate	±1.5% of span	3.1	2.5
P025-xx-SS	2-1/2"	1/4"	316 SS	316 SS	Polycarbonate	±1.5% of span	3.1	2.5
P025-xx-SS/BM	2-1/2" Back Mount	1/4"	316 SS	316 SS	Polycarbonate	±1.5% of span	1.6	2.5
P025-xx-BM	2-1/2" Back Mount	1/4"	316 SS	Brass	Polycarbonate	±1.5% of span	1.6	2.5
P040-xx-SS	4"	1/2"	316 SS	316 SS	Safety Glass	±1% of span	4.5	4.0
P045-xx-SS	4-1/2"	1/2"	PBTP Plastic[2]	316 SS	Acrylic	±0.5% of span	6.3	5.8

xx denotes the maximum gauge pressure i.e., 30, 60, 100, 160 or 200 psi. See data page for recommended working pressures.
[2] PBTP = glass filled polyester.

WORKING PRESSURES PSI

WEIGHTS

Material	10 – 20°C 50 – 68°F	30°C 86°F	40°C 104°F	50°C 122°F	60°C 140°F	70°C 158°F	80°C 176°F	90°C 194°F	100°C 212°F	120°C 248°F	Net Weights Pounds[3]
PVC	150	100	80	45	15	–	–	–	–	–	1.0
PP	150	125	100	80	65	45	–	–	–	–	0.7
PVDF	150	150	150	125	105	85	70	60	45	30	1.3

Temperature Ranges: PVC 0 to 60°C (32 to 140°F), **PP** 10 to 80°C (50 to 176°F), **PVDF** –30 to 120°C (–22 to 248°F).
NR = Not Recommended. [3] Weights are for unfilled 1/2" x 1/2" isolators without gauges. 1/2" x 1/4" isolators are 20% lighter.

ORDERING EXAMPLE

Chemline Gauge Isolators SG		A	005-	002	P	G
Body Material	**A** – PVC	**B** – PP	**K** – PVDF			
Inlet Size	**002** – 1/4"	**005** – 1/2"(Standard)				
Instrument Connection	**002** – 1/4"	**005** – 1/2"				
Diaphragm	**P** – PTFE bonded EPDM					
Filling & Mounting	**G** –Add only if isolator is supplied filled with glycol and gauge or pressure instrument is mounted by Chemline. Separate gauge item numbers are listed above.					

Example: Chemline SG Series Gauge Isolator, PVC, 1/2" x 1/4" FNPT inlet x instrument connections, PTFE diaphragm.

CHEMLINE PLASTICS
SUPERIOR FLOW SOLUTIONS
55 Guardsman Road, Thornhill, ON, L3T 6L2, Canada | ISO 9001:2008 Certified
tel.905.889.7890 | fax.905.889.8553 | request@chemline.com | chemline.com

Project name: AMARUQ

Project#: 5000218009

Document #: SPK_0008_PCH

by: GH

chkd: GP

appvd: CB

COAGULANT DOSING SKID

CALIBRATION CYLINDER

OIM manual section: 4.3.8.5

This page is intentionally left blank

CS-500-100 : Identification sheet

VWTC PROJECT NUMBER:	5000218009	REV:	1
PROJECT NAME:	AEM AMARUQ	SUBMITTED TO (COMPANY):	AGNICO EAGLE MINES
ENGINEER:	Gabriel Hébert	SUBMITTED TO (RESPONSIBLE)	
PROJECT MANAGER:	Clément B	PROJECT NUM REFERENCE.:	
PHONE NUMBER:		LOT NUMBER:	

SUPPLIER	EQPT CODE	EQPT TAG NO	DIA	DESCRIPTION	INFO 1	INFO 2	INFO 3	APPLIC.	NOTE	REV
PRIMARY FLUID	PUSPPV200288	CYL9-514	N/A	CALIBRATION CYLINDER	CALIBRATION CYLINDER/MANUFACTURER: PRIMARY FLUID/MODEL: PV2-4000	N/A	N/A	COAGULANT DOSING SKID		

This page is intentionally left blank

ACCUDRAW® Calibration Cylinders

Polypropylene

PVC

Glass

- PVC with removable "O" ring sealed top for easy cleaning

- yellow polypropylene level indicator float for high visibility

ACCUDRAW® ***has been developed for the accurate calibration of metering pumps. Standard features include:***

- translucent
- chemical resistant
- break resistant
- threaded, socket or flanged
- colored graduations and lettering
- PVC has dual scale USGPH & ml
- PVC sizes 100 - 20000 ml
- POLY sizes 100 - 4000 ml
- POLY meets ISO standards
- Glass sizes 100 - 20000 ml
- custom designs available

For detailed product information visit our website: primaryfluid.com

PRIMARY FLUID SYSTEMS INC.
Call Toll Free 1-800-776-6580
Tel (905) 333-8743 Fax (905) 333-8746
E-Mail: primary@primaryfluid.com
www.primaryfluid.com

ACCUDRAW® Calibration Cylinders

"For Accuracy That Counts"

For complete product information visit our website: primaryfluid.com

Flanged: Glass, PVC

Flanged: PVC

PV#4

Sizing and Ordering Information:

ACCUDRAW Standard Materials of Construction

AC = All polypropylene construction (see below for options)
PV = All polyvinylchloride construction (see below for options)
ACS = Glass*

Note: Cylinders are NOT pressure vessels

Example: AC#1-1000B

AC = PP (polypropylene)
#1 = Bottom threaded connection only
1000 = 1000 ml
B = BSP Thread

e.g. Part # AC #1 - 1000 B

Type:
AC = Polypropylene
PV = PVC
ACS = Glass

Style:
1 = Bottom threaded conn. only
2 = Top and Bottom threaded conn.
3 = Bottom threaded conn. c/w removable vented dust cap
4 = Top/Bottom threaded conn. c/w removable "O" ring sealed top and float ring level indicator
**** Glass calibration cylinders available in Style 2 only***

Graduation Scale:
PP - ml only
PVC - ml and GPH
Glass - ml only

Std. connection is NPT thread
Optional: add suffix as follows
S = Socket weld connection (PVC only)
GTV = Glass/TFE construction
GKV = Glass/PVDF construction
GCV = Glass/CPVC construction
GSV = Glass/SS construction
B = BSP Thread
F = Flanged

Substitute **E** for **V**
for **EPDM** wetted "O" ring seal

Sizes:		**Material**
100 =	100 ml (1.6 GPH)	PP, PVC, Glass
250 =	250 ml (4 GPH)	PP, PVC, Glass
500 =	500 ml (8 GPH)	PP, PVC, Glass
1000 =	1000 ml (16 GPH)	PP, PVC, Glass
2000 =	2000 ml (32 GPH)	PP, PVC, Glass
4000 =	4000 ml (64 GPH)	PP, PVC, Glass
6000 =	6000 ml	Glass only
8000 =	8000 ml	Glass only
10000 =	10000 ml (160 GPH)	PVC, Glass
20000 =	20000 ml (320 GPH)	PVC, Glass

Custom sizes and materials available.

ACCUDRAW® Calibration Cylinders

ACCUDRAW® Glass Calibration Cylinders ***are ideal for the calibration of metering pumps, batch systems and for handling hazardous chemicals.***

- **volumes calibrated in ml**
- **construction materials available include TFE, PVDF, CPVC and 316 stainless steel**
- **sealing "O" rings are Viton and Buna N**
- **outer shield of acrylic construction**
- **port connections in NPT, metric or flanged**
- **standard sizes 100 - 20,000 ml**
- **custom designs available to your specifications**

Sizing and Ordering Information: Glass Construction

Size	Conn.	Model # For TFE End Flgs	Model # For 316 S/S End Flgs	Model # For PVDF End Flgs	Model # For CPVC End Flgs
100 ml	1/2" NPT	ACS#2-100-GTV	ACS#2-100-GSV	ACS#2-100-GKV	ACS#2-100-GCV
250 ml	1/2" NPT	ACS#2-250-GTV	ACS#2-250-GSV	ACS#2-250-GKV	ACS#2-250-GCV
500 ml	1/2" NPT	ACS#2-500-GTV	ACS#2-500-GSV	ACS#2-500-GKV	ACS#2-500-GCV
1000 ml	1/2" NPT	ACS#2-1000-GTV	ACS#2-1000-GSV	ACS#2-1000-GKV	ACS#2-1000-GCV
2000 ml	1 " NPT	ACS#2-2000-GTV	ACS#2-2000-GSV	ACS#2-2000-GKV	ACS#2-2000-GCV
4000 ml	1" NPT	ACS#2-4000-GTV	ACS#2-4000-GSV	ACS#2-4000-GKV	ACS#2-4000-GCV
6000 ml	1" NPT	ACS#2-6000-GTV	ACS#2-6000-GSV	ACS#2-6000-GKV	ACS#2-6000-GCV
8000 ml	2" NPT	ACS#2-8000-GTV	ACS#2-8000-GSV	ACS#2-8000-GKV	ACS#2-8000-GCV
10000 ml	2" NPT	ACS#2-10000-GTV	ACS#2-10000-GSV	ACS#2-10000-GKV	ACS#2-10000-GCV
20000 ml	2" NPT	ACS#2-20000-GTV	ACS#2-20000-GSV	ACS#2-20000-GKV	ACS#2-20000-GCV

Cylinders are bolted together using stainless steel rods with Viton "O" rings for the glass seal and Buna N "O" rings for the acrylic seal. For EPDM "O" rings, subsititute "E" for "V".

Options available: (may affect price and delivery)

- **different type or size of thread connection, different "O" ring material, different flange material**

Descriptions:

TFE, PVDF and CPVC End Flanges:
Glass cylinder with acrylic outer shield and 3/4" thick (TFE, PVDF or CPVC) end flanges

316 S/S End Flanges:
Glass cylinder with acrylic outer shield and 1/2" thick 316 Stainless Steel end flanges

Glass Dimensional Information

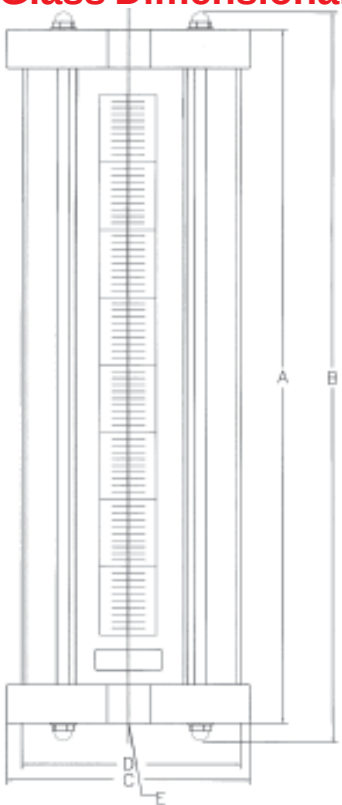

Note: Cylinders are <u>not</u> pressure vessels.

Dimensions subject to change without notice.

Glass cylinders with TFE, PVDF or CPVC End Flanges

Size ml	DIV ml	A inches	B inches	C inches	D inches	E thread
100	1.00	10.00	11.00	3.00	2.50	1/2" FNPT
250	2.00	12.75	13.50	3.50	3.00	1/2" FNPT
500	5.00	14.50	15.50	4.00	3.50	1/2" FNPT
1000	10.00	16.75	17.75	4.75	4.25	1/2" FNPT
2000	20.00	18.75	19.75	5.50	5.00	1" FNPT
4000	25.00	22.50	23.50	6.50	6.00	1" FNPT
6000	50.00	20.13	21.16	8.00	7.50	1" FNPT
8000	50.00	24.63	25.66	8.00	7.50	2" FNPT
10000	50.00	30.13	31.16	8.00	7.50	2" FNPT
20000	200.00	43.25	44.25	9.00	8.50	2" FNPT

Glass cylinders with 316 Stainless Steel End Flanges

Size ml	DIV ml	A inches	B inches	C inches	D inches	E thread
100	1.00	9.50	10.50	3.00	2.50	1/2" FNPT
250	2.00	12.25	13.00	3.50	3.00	1/2" FNPT
500	5.00	14.00	15.00	4.00	3.50	1/2" FNPT
1000	10.00	16.25	17.25	4.75	4.25	1/2" FNPT
2000	20.00	18.25	19.25	5.50	5.00	1" FNPT
4000	25.00	22.00	23.00	6.50	6.00	1" FNPT
6000	50.00	19.63	20.66	8.00	7.50	1" FNPT
8000	50.00	24.13	25.16	8.00	7.50	2" FNPT
10000	50.00	29.63	30.66	8.00	7.50	2" FNPT
20000	200.00	42.75	43.75	9.00	8.50	2" FNPT

ACCUDRAW® Calibration Cylinders

Installations

Conversion Factors
1 ml = 1 cc
1000 ml = 1 liter
ml/sec X 60 = ml/min
1 US gal/min X 0.063 = liters/sec
1 US gal = 3.786 liters

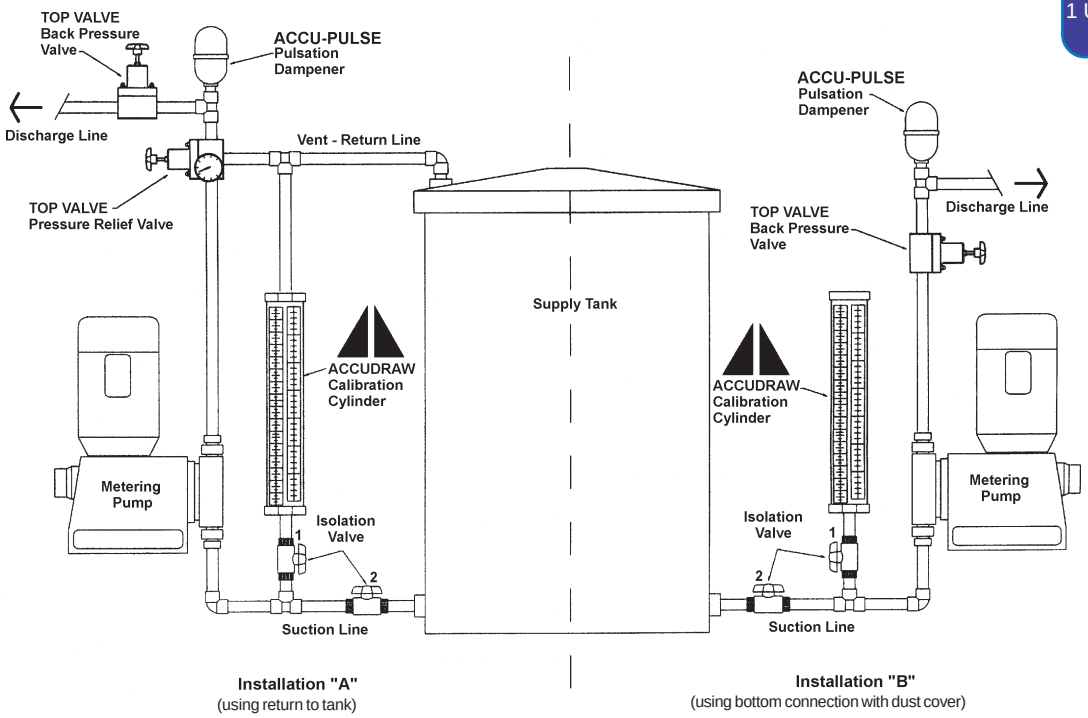

Installation "A"
(using return to tank)

Installation "B"
(using bottom connection with dust cover)

Other available products at www.primaryfluid.com

TOP VALVE Back Pressure/Pressure Relief

- *long life diaphragm*
- *range of 15 - 350 PSIG*
- *air release, optional gauge port*
- *PVC, CPVC, PVDF, Teflon, polypropylene, stainless, Alloy 20 and Hastelloy C*
- *7 sizes 1/4" - 2" NPT*
- *color coded handles indicate size*
- *higher pressure & temperature available*

PFS Corporation Stops

Designed to inject chemical into the center stream of process.

- *isolation valve allows for ease of maintenance*
- *available in 6 materials of construction*
- *wetted components have comparable or greater chemical resistance than quill construction material*
- *standard and custom lengths available*
- *connection in NPT, metric or flanged*

Custom built in other sizes & materials.

ACCUPULSE Pulsation Dampeners

Designed to remove pulsatingflows from positive displacement pumps.

- *increase system efficiency and pump life; decrease maintenance and costs*
- *protect pipes, meters, valves and instrumentation from pulsation and vibration*
- *ensure meter accuracy, longevity and repeatability*
- *prevent foaming and splashing*
- *extensive range of materials and sizes with lightweight, compact design*

Distributed By:

PRIMARY FLUID SYSTEMS INC.

Call Toll Free 1-800-776-6580
Tel: (905) 333-8743
Fax: (905) 333-8746

Distribution Territories Available

E:Mail: primary@primaryfluid.com
www.primaryfluid.com

® Registered Trade Mark of Primary Fluid Systems

Project name: AMARUQ

Project#: 5000218009

Document #: SPK_0008_PCH

by: GH

chkd: GP

appvd: CB

COAGULANT DOSING SKID

PULSATION DAMPENER

OIM manual section: 4.3.8.6

This page is intentionally left blank

CS-501-100 : Identification sheet

VWTC PROJECT NUMBER:	5000218009	REV:	1
PROJECT NAME:	AEM AMARUQ	SUBMITTED TO (COMPANY):	AGNICO EAGLE MINES
ENGINEER:	Gabriel Hébert	SUBMITTED TO (RESPONSIBLE)	
PROJECT MANAGER:	Clément B	PROJECT NUM REFERENCE.:	
PHONE NUMBER:		LOT NUMBER:	

SUPPLIER	EQPT CODE	EQPT TAG NO	DIA	DESCRIPTION	INFO 1	INFO 2	INFO 3	APPLIC.	NOTE	REV
PRIMARY FLUID	PUSPPV200278	PD9-514	N/A	PULSATION DAMPENER	PULSATION DAMPENER/MANUF.: ACCU-PULSE// MODEL: APII-PVC-N-2	Vol.: 85 in3/Body Mtl: PVC/Bellows Mtl: NEOPRENE/Size: 3/4" FNPT	N/A	COAGULANT DOSING SKID		

This page is intentionally left blank

ACCU-PULSE
Pulsation Dampeners

ACCU-PULSE Pulsation Dampeners have been developed to remove pulsating flows from positive displacement pumps providing:

- **increased system efficiency and pump life**
- **protection of pipes, meters, valves and instrumentation from pulsation and vibration**
- **meter accuracy, longevity and repeatability**
- **prevention of foaming and splashing**
- **decreased maintenance and costs**

Standard Features Include:

- **lightweight, compact design**
- **extensive range of materials and sizes**
- **easy in-line maintenance**
- **2 year warranty**

For detailed product information visit our website: primaryfluid.com

PRIMARY FLUID SYSTEMS INC.

Call Toll Free 1-800-776-6580
Tel (905) 333-8743 Fax (905) 333-8746

E-Mail: primary@primary fluid.com
www.primaryfluid.com

ACCU-PULSE Pulsation Dampeners

Dampener Sizing Guide

Note: Separate sizing guide available for air operated double diaphragm pumps.

Standard Simplex Metering Pumps:

The following are general ranges for sizing ACCU-Pulse Pulsation dampeners for metering pump applications. Models stated are based on 10% pressure fluctuations and a Simplex single acting metering pump. For 5% pressure fluctuation, divide the Capacity per Stroke Range numbers in the chart below by 2.

To calculate cubic inches per stroke: $\frac{\text{gallons per minute}}{\text{strokes per minute}}$ = gallons per stroke

Gallons per stroke X 231 cu inches per gallon = cubic inch per stroke

Example: $\frac{.15}{100}$ = .0015 GPS **Therefore:** .0015 X 231 = 0.3465 Cubic inches per stroke = API Dome Top Dampener

Capacity per Stroke Range	ACCU-Pulse Dampener
0 to 0.22 Cubic Inches	API F Flat Top
0.23 to 0.75 Cubic Inches	API Dome Top
0.76 to 2.71 Cubic Inches	API IIF Flat Top
2.72 to 6.40 Cubic Inches	API II Dome Top
6.41 to 12.96 Cubic Inches	API IIIF Flat Top
12.97 to 27.89 Cubic Inches	API III Dome Top

Note:
For other pump factors, or residual pulsation, contact factory.

Ordering Information

Example: Part # AP - I - PVC - E - 1 - F

ACCU-PULSE
- AP = Standard 150/300 PSIG
- APH = High Pressure 1000/600 PSIG
- APX = High Pressure 4000 PSIG

Series
- I = 10 cu in capacity
- IF = 4 cu in capacity
- II = 85 cu in capacity
- IIF = 36 cu in capacity
- III = 370 cu in capacity
- IIIF = 175 cu in capacity
- IV = 1155 cu in capacity (AP only)
- 8 = 8 cu in capacity (APX only)
- 12 = 12 cu in capacity (APX only)
- 16 = 16 cu in capacity (APX only)
- 24 = 24 cu in capacity (APX only)

Body Material
- PP = Polypropylene
- PVC = Polyvinylchoride (not available in Series IV)
- PVDF = Polyvinylidene Fluoride
- S/S = 316L Stainless Steel
- ALL20 = Alloy 20 (not available in Series IV)
- HAST = Hastelloy C
- CS = Carbon Steel
- CPVC = Chlorinated Polyvinyl Chloride*

* (available in Series I only)

Optional Flanges
Add suffix -F for flanges

Size
- 0 = 3/8" npt(f) series I Std Metal
- 1 = 1/2" npt(f) series I Std Plastic
- 2 = 3/4" npt(f) series II Std All
- 3 = 1" npt(f) series II (Optional)
- 4 = 2" npt(f) series III
- 5 = 3" flanged series IV
- 6 = 4" flanged series IV

Bellows material
- N = Neoprene
- B = Buna-N
- H = Hypalon
- E = EPDM (Nordel)
- V = Viton
- T = Teflon
- S = Santoprene
- P = Polyvinylchloride

APX Series available ONLY with:
Body: 316L Stainless Steel
Size: 1/2" npt(f)
Bellows: Buna-N, EPDM & Viton

Note:
CRN certification available.
Food grade material available.
Other sizes and materials available.
Please contact factory.

For detailed product information visit our website: primaryfluid.com

Distributed By:

PRIMARY FLUID SYSTEMS INC.

Call Toll Free 1-800-776-6580
Tel: (905) 333-8743
Fax: (905) 333-8746
E:Mail: primary@primaryfluid.com
www.primaryfluid.com

Distribution Territories Available

*PAT 5,857,486/5,944,050
® Registered Trade Mark of Primary Fluid Systems

4 – DETAILED TECHNICAL DOCUMENTATION

4.3 – SHOP DRAWINGS

4.3.9 – CATIONIC POLYMER DOSING SKID

LEFT BLANK

Project name:	AMARUQ
Project#:	5000218009
Document #:	SPK_0009_PCH
by:	GH
chkd:	GP
appvd:	CB

SUBMITTAL PACKAGE

CATIONIC POLYMER DOSING SKID

This page is intentionally left blank

Project name:	AMARUQ
Project#:	5000218009
Document #:	SPK_0009_PCH
by:	GH
chkd:	GP
appvd:	CB

CATIONIC POLYMER DOSING SKID

PROCESS DATASHEET

OIM manual section: 4.3.9.1

REFER TO 5000218009_PSDS_0009_PCH_VWT

This page is intentionally left blank

Project name: AMARUQ

Project#: 5000218009

Document #: SPK_0009_PCH

by: GH

chkd: GP

appvd: CB

CATIONIC POLYMER DOSING SKID

GENERAL ARRANGEMENT DRAWING

OIM manual section: 4.3.9.2

REFER TO 5000218009_GA_0009_PCH_VWT

This page is intentionally left blank

Project name: AMARUQ

Project#: 5000218009

Document #: SPK_0009_PCH

by: GH

chkd: GP

appvd: CB

CATIONIC POLYMER DOSING SKID

PUMP(S)

OIM manual section: 4.3.9.3

This page is intentionally left blank

CS-999-006 : Identification sheet

VWTC PROJECT NUMBER:	5000218009	REV:	1
PROJECT NAME:	AEM AMARUQ	SUBMITTED TO (COMPANY):	AGNICO EAGLE MINES
ENGINEER:	Gabriel Hébert	SUBMITTED TO (RESPONSIBLE)	
PROJECT MANAGER:	Clément B	PROJECT NUM REFERENCE.:	
PHONE NUMBER:		LOT NUMBER:	

SUPPLIER	EQPT CODE	EQPT TAG NO	DIA	DESCRIPTION	INFO 1	INFO 2	INFO 3	APPLIC.	NOTE	REV
SEEPEX	ST-999-006	P9-621		CAVITY PROGRESSIVE PUMP	CATIONIC POLYMER DOSING SKID // Model BN // 60 - 670 LPH // 80 psi // Vertical installation // Rotate motor so that conduit box is on top // Burgmann mechanical seal // 316SS for wetted parts and NBR for seals // NPT inlet and outlet // TSE device //	Steel painted base plate // CW rotation // CW Marathon Motors 575V/3PH/60HZ		CATIONIC POLYMER DOSING SKID		
SEEPEX	ST-999-006	P9-622		CAVITY PROGRESSIVE PUMP	CATIONIC POLYMER DOSING SKID // Model BN // 60 - 670 LPH // 80 psi // Vertical installation // Rotate motor so that conduit box is on top // Burgmann mechanical seal // 316SS for wetted parts and NBR for seals // NPT inlet and outlet // TSE device //	Steel painted base plate // CW rotation // CW Marathon Motors 575V/3PH/60HZ		CATIONIC POLYMER DOSING SKID		
SEEPEX	ST-999-006	P9-623		CAVITY PROGRESSIVE PUMP	CATIONIC POLYMER DOSING SKID // Model BN // 60 - 670 LPH // 80 psi // Vertical installation // Rotate motor so that conduit box is on top // Burgmann mechanical seal // 316SS for wetted parts and NBR for seals // NPT inlet and outlet // TSE device //	Steel painted base plate // CW rotation // CW Marathon Motors 575V/3PH/60HZ		CATIONIC POLYMER DOSING SKID		

This page is intentionally left blank

SEEPEX.
ALL THINGS FLOW

4/23/2018	**Item 10 (cationic Polymer)**
qty.: 3	**Progressive cavity pump**
	BN 05-12

Application data

Conveyed product	Polymer
Flowability	flowable
Viscosity	low viscosity (<500 cP/mPas)
Solids content	not specified
Size of solids	not specified
Specific gravity	unknown, 1 kg/dm³ assumed
Product temperature	32°F - 113°F
pH value	5-9
Kind of operation	continuous
Operating hours	8h/day
Location	indoor, dry atmosphere
Altitude of installation	up to 1000 m assumed
Surrounding temperature	normal (32-113°F)

Performance data

	Capacity	**Pressure**	**Speed**	
	0.26 USGPM	80 psi	41 rpm	min
	3 USGPM	80 psi	390 rpm	max
Starting torque	30 lb.ft			
Req. power at pump shaft	0.75 HP			
Inlet pressure	flooded suction (up to 0,5bar)			
NPSHr	7 ft			

Tolerances according to SEEPEX standards.

Materials and executions

Installation	vertical, drive on top
Direction of rotation	counter clockwise (left)
Lantern - Design	with cover plates
Lantern - Material	EN-JL 1040 (gci-25)
Suction casing - Design	standard
Suction casing - Material	1.4408 / ASTM A351 grade CF8M
Pressure branch - Design	standard
Pressure branch - Material	1.4408 / ASTM A351 grade CF8M
Position of branch	position 1
Suction connection	1 1/2" NPT
Pressure connection	1 1/4" NPT
Joint - Design	pin joint with joint sleeve, grease filled
Joint - Material	standard
Joint - Universal joint sleeve: material	NBR - Perbunan
Coupling rod - Design	standard
Coupling rod - Material	1.6582 encapsulated
Rotor - Design	standard
Rotor - Material	1.4404 / AISI 316L
Rotor - Coating	ductile chromium coating
Stator - Design	standard with TSE, sensor sleeve 1.4404
Stator - Material	NBR - Perbunan
Shaft sealing	mechanical seal
Code	back-to-back GLRD - LA
Shaft diameter	30 mm
Make	Burgmann
Rotating/stationary seal face	SiC SiC
Elastomers	FPM - Viton

Spring	1.4571 / AISI 316Ti
Metal parts	1.4571 / AISI 316Ti
Type	MG1-G60 Q1Q1 VGG
Casing - material	1.4404 / AISI 316L
Casing - connection standard	NPT
Plug-in Shaft - Design	standard
Plug-in Shaft - Material	1.4404 / AISI 316L
Bolting - Design	completely stainless steel
Painting - Number of colors	single-colored standard
Painting - Painted components	1 complete combination
Painting - Color	Standard Enamel (SEEPEX Blue)

Drive

Type	Gear & Motor at freq. inv.
Make	Nord
Model	SK12VLF/140TC
Mounting position	V1
Ratio (i)	4.49

	Norm	**Min**	**Max**
Speed	401 rpm	41 rpm	390 rpm
Motor speed	1800 rpm	182 rpm	1751 rpm
Frequency	60 Hz	6 Hz	58 Hz

Make	Marathon Motors
Model	145THTN6060
Rated output	2 HP
Rated speed	1800 rpm
Starting	direct on frequency inverter
Explosion proof	Weatherproof
Efficiency class	IE1
Terminal box position acc. to supplier	not specified
Cable entry position acc. to supplier	not specified

Voltage	rated voltage 575V
Frequency	60Hz
Enclosure	TENV
Thermal class	F
Winding protection	Thermostats

The frequency inverter has to follow a linear U/f characteristic curve (constant torque).
It's essential to have a minimum overload capability of 150% for at least 3 seconds. (see technical data sheet)

Baseplate

Design	baseplate for block pump, design with side feet
Material	steel, painted
GPU Type Code	B-ST-LS

Dry running protection device (TSE)

Design	standard design, complete - sensor sleeve fitted to the stator of the pump with integrated temperature sensor - connection head (IP55) - separate TSE control device suitable for mounting inside a control panel
Voltage	110-115V/50-60Hz
Temperature coefficient	NTC

Material sensor sleeve	1.4404
Material connection head	aluminium

Packing

Type of packing	cardboard box (US)
Type of transport	truck / railway
Quantity of pumps per package	1 pump per package

Optional: Seal flush system

Design	SEEPEX standard double mechanical seal flush system: - Isolation valve - Strainer, 20 mesh - Needle valve - Pressure regulator, 10-125psi adjust - Solenoid valve, 120VAC, NC - ¼" NPT seal water connection plumbed to inlet of gland housing. - ¼" NPT drain connection plumbed to outlet of gland housing. Solenoid and needle valve located on the discharge.
Type	SEEPEX standard double acting mechanical seal flush system
Connection	1/8" NPT connection
Pressure Range	10 - 125 psi
Solenoid valve voltage	120V AC

Characteristic Curves
Size
05–12

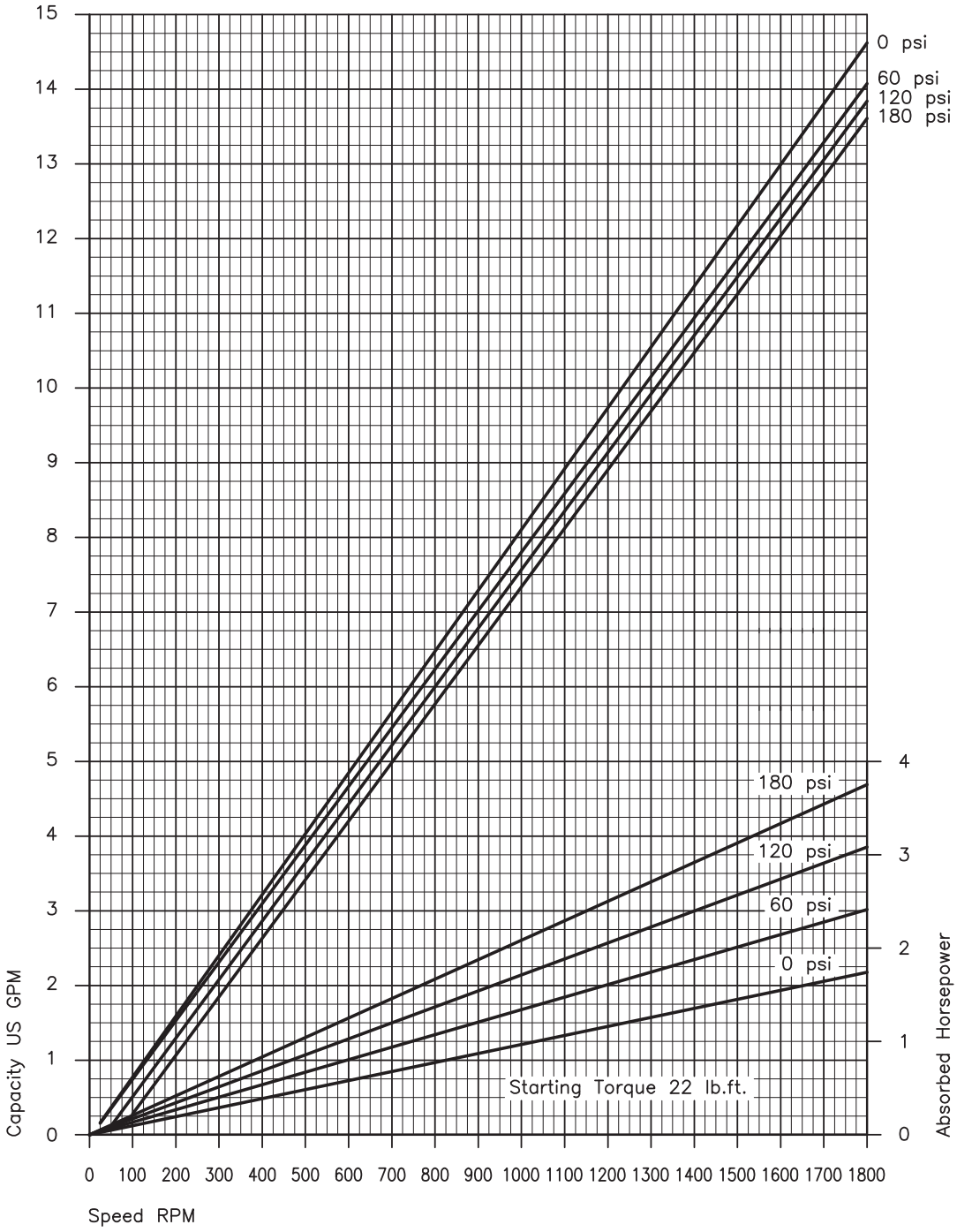

Values based upon water 68°F ; For notes on drive selection refer to PER

Copyright: This drawing is our property and patented for us according to the law of copyright and associated rights !

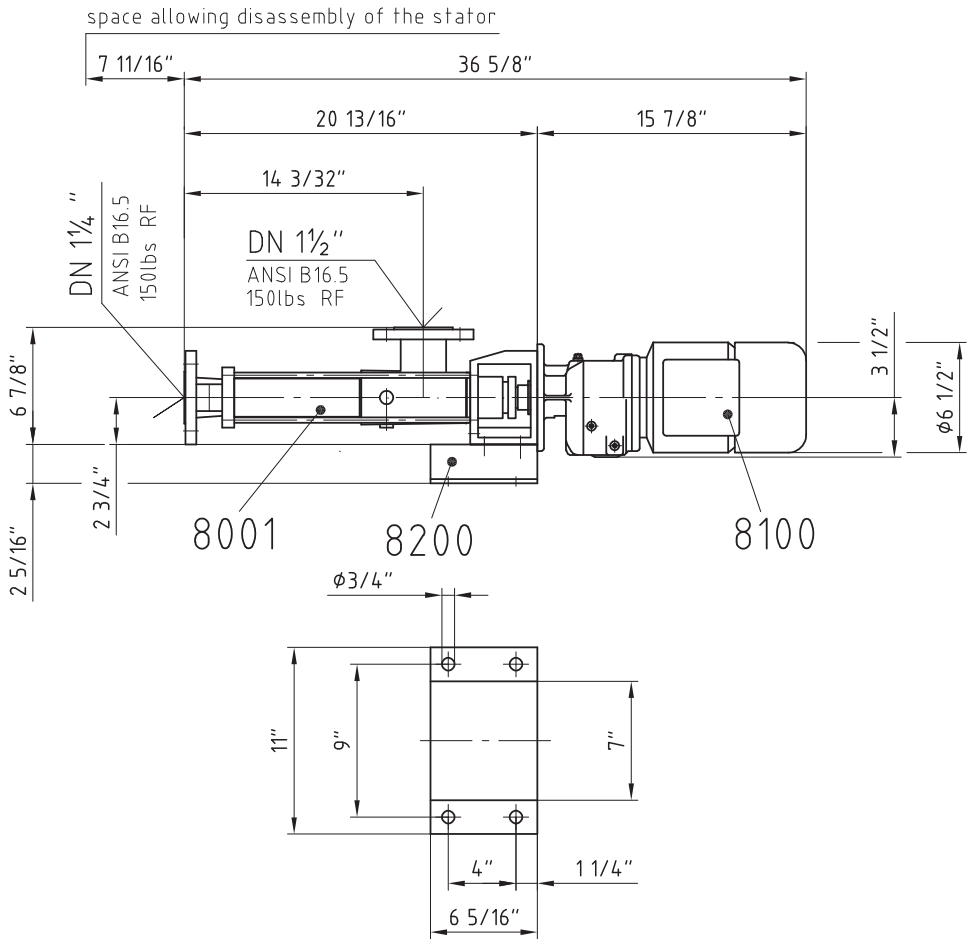

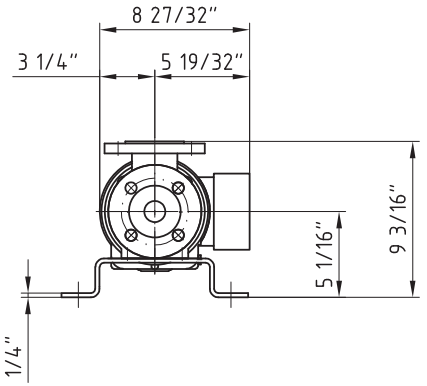

✳ design see pump data sheet

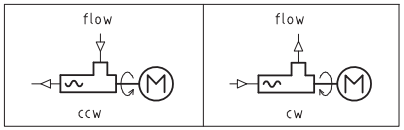

Quant.	Denomination	Item	Material	Note	Weight / kg
1	baseplate:	8200		Var.: 801-200/M500-C-100	4
1	drive: Nord Sk02F-80.	8100			18
1	pump: BN 05-12 / 1-6L	8001			14

seepex.com

seepex, Inc.
511 Speedway Drive
Enon, OH 45323
www.seepex.com

		Name	Day	Scale	Weight	Denomination
2002	Drawn	her	18.10.	◎▷ 1:10	36kg	dimensional drawing
	Checked	goe	18.10.	EDP-No. L:\Lfdzchng.520\52168.dwg		Drawing-no. 262-C18/M500-C-146A4

changes of dimensions reserved

This page is intentionally left blank

Project name: AMARUQ

Project#: 5000218009

Document #: SPK_0009_PCH

by: GH

chkd: GP

appvd: CB

CATIONIC POLYMER DOSING SKID

VALVES

OIM manual section: 4.3.9.4

This page is intentionally left blank

CS-301-100 : Identification sheet

VWTC PROJECT NUMBER:	5000218009	REV:	1
PROJECT NAME:	AEM AMARUQ	SUBMITTED TO (COMPANY):	AGNICO EAGLE MINES
ENGINEER:	Gabriel Hébert	SUBMITTED TO (RESPONSIBLE)	
PROJECT MANAGER:	Clément B	PROJECT NUM REFERENCE.:	
PHONE NUMBER:		LOT NUMBER:	

SUPPLIER	EQPT CODE	EQPT TAG NO	DIA	DESCRIPTION	INFO 1	INFO 2	INFO 3	APPLIC.	NOTE	REV
CHEMLINE	VABLPV200249	P9-621-V003	DIA: 13 mm (1/2")	CLEANING VALVE	TYPE: BALL VALVE//MANUFACTURER : CHEMLINE//MODEL : Type21-A-005-E-C//CONNECTION TYPE : COMBO | 13 mm (1/2")//BODY : PVC (ASTM D1784)// SEAL | SEAT :PTFE | EPDM// STEM : PVC			CATIONIC POLYMER DOSING SKID		
CHEMLINE	VABLPV200249	P9-621-V004	DIA: 13 mm (1/2")	CLEANING VALVE	TYPE: BALL VALVE//MANUFACTURER : CHEMLINE//MODEL : Type21-A-005-E-C//CONNECTION TYPE : COMBO | 13 mm (1/2")//BODY : PVC (ASTM D1784)// SEAL | SEAT :PTFE | EPDM// STEM : PVC			CATIONIC POLYMER DOSING SKID		
CHEMLINE	VABLPV200249	P9-622-V003	DIA: 13 mm (1/2")	CLEANING VALVE	TYPE: BALL VALVE//MANUFACTURER : CHEMLINE//MODEL : Type21-A-005-E-C//CONNECTION TYPE : COMBO | 13 mm (1/2")//BODY : PVC (ASTM D1784)// SEAL | SEAT :PTFE | EPDM// STEM : PVC			CATIONIC POLYMER DOSING SKID		

SUPPLIER	EQPT CODE	EQPT TAG NO	DIA	DESCRIPTION	INFO 1	INFO 2	INFO 3	APPLIC.	NOTE	REV
CHEMLINE	VABLPV200249	P9-622-V004	DIA: 13 mm (1/2")	CLEANING VALVE	TYPE: BALL VALVE//MANUFACTURER : CHEMLINE//MODEL : Type21-A-005-E-C//CONNECTION TYPE : COMBO | 13 mm (1/2")//BODY : PVC (ASTM D1784)// SEAL | SEAT :PTFE | EPDM// STEM : PVC			CATIONIC POLYMER DOSING SKID		
CHEMLINE	VABLPV200249	P9-623-V003	DIA: 13 mm (1/2")	CLEANING VALVE	TYPE: BALL VALVE//MANUFACTURER : CHEMLINE//MODEL : Type21-A-005-E-C//CONNECTION TYPE : COMBO | 13 mm (1/2")//BODY : PVC (ASTM D1784)// SEAL | SEAT :PTFE | EPDM// STEM : PVC			CATIONIC POLYMER DOSING SKID		
CHEMLINE	VABLPV200249	P9-623-V004	DIA: 13 mm (1/2")	CLEANING VALVE	TYPE: BALL VALVE//MANUFACTURER : CHEMLINE//MODEL : Type21-A-005-E-C//CONNECTION TYPE : COMBO | 13 mm (1/2")//BODY : PVC (ASTM D1784)// SEAL | SEAT :PTFE | EPDM// STEM : PVC			CATIONIC POLYMER DOSING SKID		
CHEMLINE	VABLPV200251	V9-623	DIA: 25 mm (1")	ISOLATION VALVE (DISCHARGE)	TYPE: BALL VALVE//MANUFACTURER : CHEMLINE//MODEL : Type21-A-010-E-S//CONNECTION TYPE : SOCKET | 25 mm (1")//BODY : PVC (ASTM D1784)// SEAL | SEAT :PTFE | EPDM// STEM : PVC			CATIONIC POLYMER DOSING SKID		
CHEMLINE	VABLPV200251	V9-624	DIA: 25 mm (1")	ISOLATION VALVE (DISCHARGE)	TYPE: BALL VALVE//MANUFACTURER : CHEMLINE//MODEL : Type21-A-010-E-S//CONNECTION TYPE : SOCKET | 25 mm (1")//BODY : PVC (ASTM D1784)// SEAL | SEAT :PTFE | EPDM// STEM : PVC			CATIONIC POLYMER DOSING SKID		

SUPPLIER	EQPT CODE	EQPT TAG NO	DIA	DESCRIPTION	INFO 1	INFO 2	INFO 3	APPLIC.	NOTE	REV
CHEMLINE	VABLPV200251	V9-625	DIA: 25 mm (1")	ISOLATION VALVE (DISCHARGE)	TYPE: BALL VALVE//MANUFACTURER : CHEMLINE//MODEL : Type21-A-010-E-S//CONNECTION TYPE : SOCKET | 25 mm (1")//BODY : PVC (ASTM D1784)// SEAL | SEAT :PTFE | EPDM// STEM : PVC			CATIONIC POLYMER DOSING SKID		
CHEMLINE	VABLPV200251	V9-627	DIA: 25 mm (1")	ISOLATION VALVE (DISCHARGE)	TYPE: BALL VALVE//MANUFACTURER : CHEMLINE//MODEL : Type21-A-010-E-S//CONNECTION TYPE : SOCKET | 25 mm (1")//BODY : PVC (ASTM D1784)// SEAL | SEAT :PTFE | EPDM// STEM : PVC			CATIONIC POLYMER DOSING SKID		
CHEMLINE	VABLPV200251	V9-628	DIA: 25 mm (1")	ISOLATION VALVE (DISCHARGE)	TYPE: BALL VALVE//MANUFACTURER : CHEMLINE//MODEL : Type21-A-010-E-S//CONNECTION TYPE : SOCKET | 25 mm (1")//BODY : PVC (ASTM D1784)// SEAL | SEAT :PTFE | EPDM// STEM : PVC			CATIONIC POLYMER DOSING SKID		
CHEMLINE	VABLPV200253	P9-621-V001	DIA: 38 mm (1-1/2")	ISOLATION VALVE (SUCTION)	TYPE: BALL VALVE//MANUFACTURER : CHEMLINE//MODEL : Type21-A-015-E-S//CONNECTION TYPE : FLANGED | N/A//BODY : PVC (ASTM D1784)// SEAL | SEAT :PTFE | EPDM// STEM : PVC			CATIONIC POLYMER DOSING SKID		
CHEMLINE	VABLPV200253	P9-621-V002	DIA: 38 mm (1-1/2")	ISOLATION VALVE (SUCTION)	TYPE: BALL VALVE//MANUFACTURER : CHEMLINE//MODEL : Type21-A-015-E-S//CONNECTION TYPE : FLANGED | N/A//BODY : PVC (ASTM D1784)// SEAL | SEAT :PTFE | EPDM// STEM : PVC			CATIONIC POLYMER DOSING SKID		

SUPPLIER	EQPT CODE	EQPT TAG NO	DIA	DESCRIPTION	INFO 1	INFO 2	INFO 3	APPLIC.	NOTE	REV
CHEMLINE	VABLPV200253	P9-622-V001	DIA: 38 mm (1-1/2")	ISOLATION VALVE (SUCTION)	TYPE: BALL VALVE//MANUFACTURER : CHEMLINE//MODEL : Type21-A-015-E-S//CONNECTION TYPE : FLANGED | N/A//BODY : PVC (ASTM D1784)// SEAL | SEAT :PTFE | EPDM// STEM : PVC			CATIONIC POLYMER DOSING SKID		
CHEMLINE	VABLPV200253	P9-622-V002	DIA: 38 mm (1-1/2")	ISOLATION VALVE (SUCTION)	TYPE: BALL VALVE//MANUFACTURER : CHEMLINE//MODEL : Type21-A-015-E-S//CONNECTION TYPE : FLANGED | N/A//BODY : PVC (ASTM D1784)// SEAL | SEAT :PTFE | EPDM// STEM : PVC			CATIONIC POLYMER DOSING SKID		
CHEMLINE	VABLPV200253	P9-623-V001	DIA: 38 mm (1-1/2")	ISOLATION VALVE (SUCTION)	TYPE: BALL VALVE//MANUFACTURER : CHEMLINE//MODEL : Type21-A-015-E-S//CONNECTION TYPE : FLANGED | N/A//BODY : PVC (ASTM D1784)// SEAL | SEAT :PTFE | EPDM// STEM : PVC			CATIONIC POLYMER DOSING SKID		
CHEMLINE	VABLPV200253	P9-623-V002	DIA: 38 mm (1-1/2")	ISOLATION VALVE (SUCTION)	TYPE: BALL VALVE//MANUFACTURER : CHEMLINE//MODEL : Type21-A-015-E-S//CONNECTION TYPE : FLANGED | N/A//BODY : PVC (ASTM D1784)// SEAL | SEAT :PTFE | EPDM// STEM : PVC			CATIONIC POLYMER DOSING SKID		
CHEMLINE	VABLPV200253	V9-622	DIA: 38 mm (1-1/2")	ISOLATION VALVE (SUCTION)	TYPE: BALL VALVE//MANUFACTURER : CHEMLINE//MODEL : Type21-A-015-E-S//CONNECTION TYPE : FLANGED | N/A//BODY : PVC (ASTM D1784)// SEAL | SEAT :PTFE | EPDM// STEM : PVC			CATIONIC POLYMER DOSING SKID		

PDF Published March 1, 2013

Type 21 Ball Valves

CHEMLINE PLASTICS
SUPERIOR FLOW SOLUTIONS

The Chemline Type 21 True Union Ball valve incorporates state of the art features for long term performance. This is a full port, full blocking True Union valve pressure rated at 16 bar (230 psi)[4]. Double stem o-rings and Safety Shear stem design provide for a high degree of safety on hazardous fluid applications. All sizes have an ISO standard actuator mounting platform integral to the valve body. This provides for sturdy and secure mounting of pneumatic or electric actuators.

PVC | CPVC | PP | PVDF

CRN Registered Consult Chemline

NSF[5] Certified to NSF/ANSI 61

SERIES: Type 21

SIZES: 3/8" – 4"

ENDS: Socket, Threaded, Flanged, Butt[1] or ChemFlare™

SEATS: PTFE

SEALS[2]: EPDM, FKM (Viton®), CPE[3]

features

Pressure rated to 230 psi[4]
- Provides a high factor of safety

Integral Actuator Mounting Platform
- Actuation is easy. Electric or pneumatic actuators may be mounted in the field.

Full Port
- High capacity and low pressure drops

Fully Blocking
- Downstream union nut may be safely disassembled for piping maintenance while valve is closed off under full system pressure

Built-In Spanner Wrench
- Top of the handle is designed to be used as a tool for accessing internal parts

Safety Shear Stem Design
- Stem has double o-rings
- Designed to hold full pressure even if stem breaks due to excessive torque

High Chemical Resistant Material
- PVC and CPVC compounds have an "A" chemical resistance rating as per ASTM D-1784. They have outperformed other PVC and CPVC compounds on aggressive chemicals.

[1] Butt ends for fusion to Chemline metric PP, PVDF or ECTFE (Halar®) piping.
[2] Other materials are available.
[3] CPE=Chlorinated Polyethylene.
[4] PVC, CPVC and PVDF 1/2" to 2" are rated at 230 psi; 2-1/2" to 4" and all size PP valves are rated at 150 psi at 20°C.
[5] PVC valves with EPDM or FKM (Viton®) seals are certified under NSF/ANSI Standard 61 for contact with drinking water.

03/13 ©Chemline Plastics Limited 2013
Chemline is a registered trade mark of Chemline Plastics Limited

Type 21 Ball Valves

features

Double Stem O-Rings – Safety Shear Design

- Upper o-ring groove is deeper than lower. In case of excessive stem torque, stem will shear at the upper groove, leaving the inner o-ring intact to seal against full line pressure.

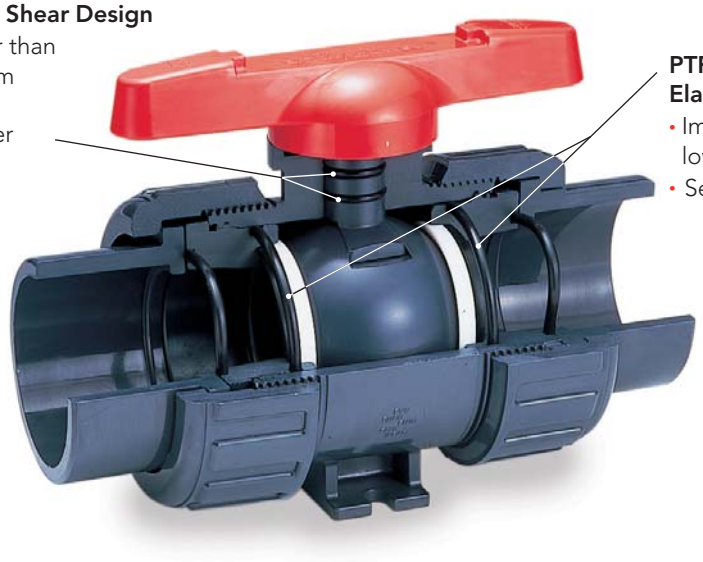

PTFE Seats have Elastomer Cushions

- Improved sealing while lowering stem torques
- Self adjusts for seat wear

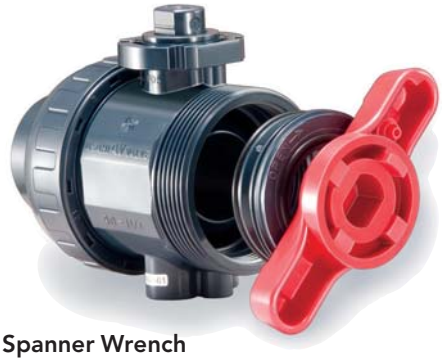

Built in Spanner Wrench

- For removing or tightening the seat carrier
- All parts are replaceable

Integral Actuator Mounting Platform

- Actuation is easy. Electric or pneumatic actuators may be mounted in the field. Simply pull off the handle to reveal a standard ISO 5211 mounting platform which accepts bolt-on hardware.

Fully Blocking

- Downstream pipe may be removed while upstream side is still pressurized. This may be done with valve installed in either direction.

Base Mounting Pad

- Optional threaded inserts allow valves to be securely anchored
- Supplied standard with actuated valves

Type 21 Ball Valves

options + accessories

ChemFlare™ Ends

- For connection to PFA tube. Leak-free connections for difficult services such as sodium hypochlorite

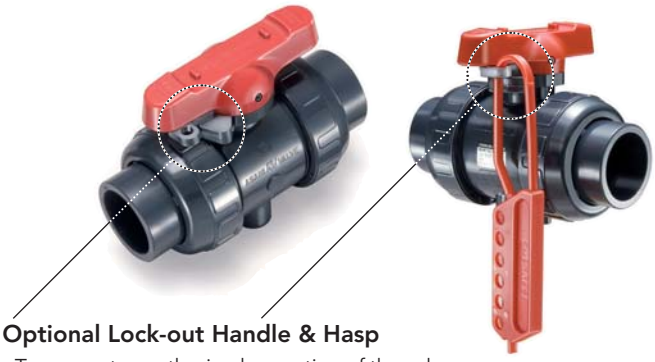

Optional Lock-out Handle & Hasp

- To prevent unauthorized operation of the valve
- Used during maintenance shut-downs

One-piece moulded PVC and CPVC 6" socket ends

- Allows installation of 4" valve in 6" line
- Factory moulded, not fabricated with couplings and reducers cemented together
- Fixed to valve mechanically just like the one-piece moulded factory flanges

Different Colour Handles

- Choose a handle colour other than standard red for colour coding different services

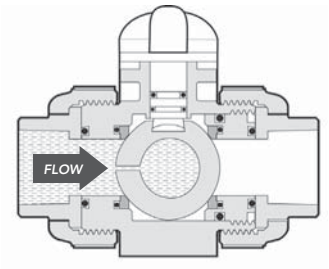

Vented Ball

- For sodium hypochlorite services at any concentration
- Valve shown in closed position

electric + pneumatic actuation

Pneumatic and Electric Actuators

- A complete range of actuators and control accessories are available, mounted to valves using PPG plastic brackets and stainless steel couplings. Refer to separate data sheets.

Electromni® Electric

Q Series Electric

A Series Electric

V Series Electric
with Local Control Station

PA Series Pneumatic

Type 21 Ball Valves

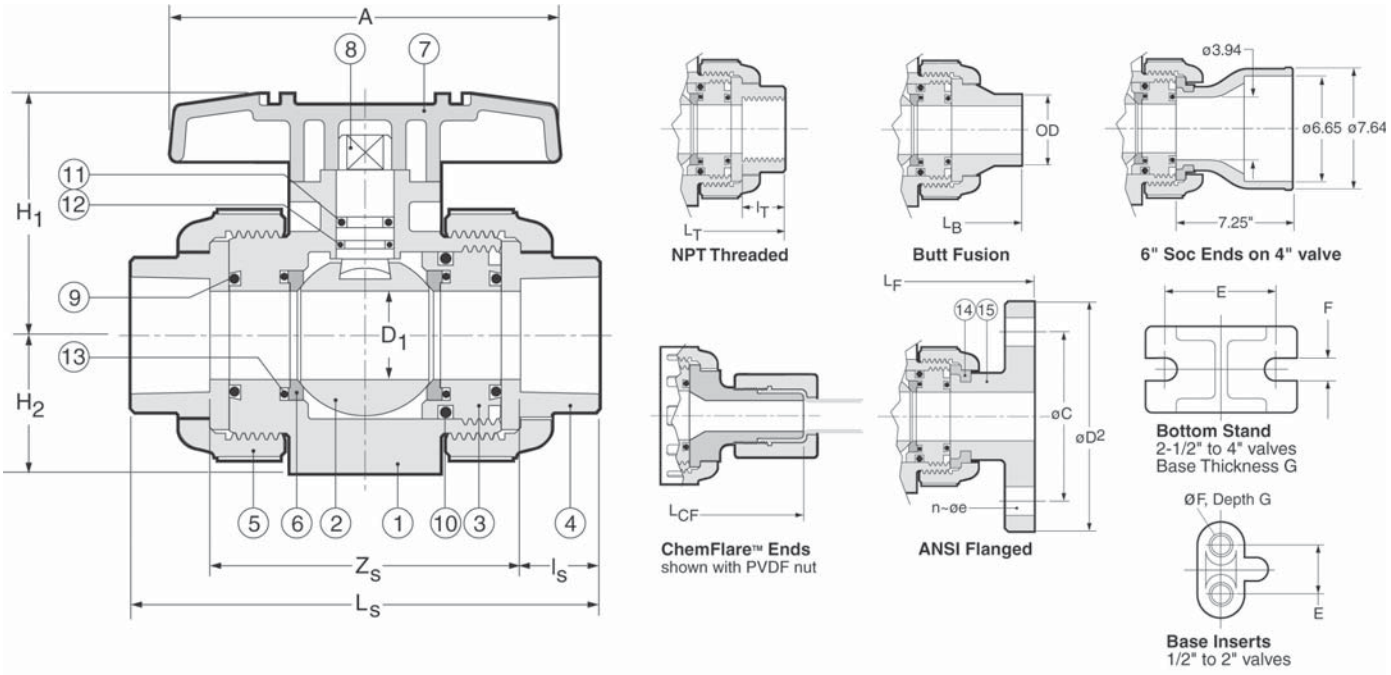

PARTS

▲ Recommended Spare Parts

No.	Part	Pcs.	Materials
1	Body	1	PVC, CPVC, PP, PVDF
2	Ball	1	PVC, CPVC, PP, PVDF
3	Carrier[1]	1/2	PVC, CPVC, PP, PVDF
4	End Connector	2	PVC, CPVC, PP, PVDF
5	Union Nut	2	PVC, CPVC, PP, PVDF
6▲	Ball Seat	2	PTFE
7	Handle	1	ABS

[1] 1 carrier for sizes 1/2" to 2", 2 carriers for sizes 2-1/2" to 4"
[2] EPDM seals standard with PVC, CPVC, PP; FKM (Viton®) with PVDF valves
[3] 2 pcs 1/2" to 2", 6 pcs 2-1/2" to 4"

PARTS

▲ Recommended Spare Parts

No.	Part	Pcs.	Materials
8	Stem	1	PVC, CPVC, PP, PVDF
9▲	Face O-Ring[2]	2	EPDM, FKM (Viton®)
10▲	Carrier O-Ring[2]	2	EPDM, FKM (Viton®)
11▲	Upper Thicker Stem O-Ring[2]	1	EPDM, FKM (Viton®)
12▲	Lower Thinner Stem O-Ring[2]	1	EPDM, FKM (Viton®)
13	Seat Cushion[2]	2	EPDM, FKM (Viton®)
14	Flange Retainer[3]	2/6	PVDF
15	Flange	2	PVC, CPVC, PP, PVDF

DIMENSIONS INCHES

					End Connections														Valve Base		
					Socket			Threaded		Factory Flanged					Butt		ChemFlare™				
Size	D Bore	A	H_1	H_2	L_S	Z_S	l_S	l_T	L_T	L_F	D_2	C	n	e	L_B	OD	L_{CF}	Tube[4]	E	F[5]	G
1/2"	.59	3.6	2.03	1.14	4.45	2.70	.875	.64	4.02	5.63	3.50	2.38	4	.62	4.88	.79	6.12	1/2"	.75	.29	.43
3/4"	.79	3.9	2.34	1.38	5.08	3.08	1.00	.65	4.72	6.77	3.88	2.75	4	.62	5.67	.98	6.52	3/4"	.75	.29	.43
1"	.98	4.3	2.68	1.54	5.75	3.50	1.13	.81	5.16	7.36	4.25	3.12	4	.62	6.06	1.26	7.26	1"	.75	.29	.43
1-1/4"	1.22	4.8	3.17	1.85	6.46	5.21	1.25	.85	5.91	7.48	4.62	3.50	4	.62	6.85	1.57	9.58	1-1/4"	1.18	.35	.59
1-1/2"	1.57	5.2	3.50	2.17	7.24	4.49	1.38	.85	6.42	8.35	5.00	3.88	4	.62	7.64	1.97	–	–	1.18	.35	.59
2"	2.01	6.3	4.02	2.60	8.23	5.23	1.50	1.90	7.76	9.21	6.00	4.75	4	.75	8.82	2.48	–	–	1.18	.35	.59
2-1/2"	2.28	7.87	4.96	2.83	9.45	5.95	1.75	1.21	8.46	10.20	7.00	5.49	4	.75	9.72	2.95	–	–	1.89	.35	.23
3"	2.70	9.45	5.51	3.35	11.10	7.35	1.88	1.30	10.39	11.97	7.50	6.00	4	.75	11.61	3.54	–	–	2.17	.43	.28
4"	3.54	11.81	7.01	4.33	13.88	9.87	2.00	1.38	14.17	14.65	9.00	7.50	8	.75	14.76	4.33	–	–	2.56	.43	.32

[4] ChemFlare™ ends are available for reduced tube sizes down to 1/4".
[5] Optional threaded inserts: 1/2" to 1" valves – UNC 1/4"-20; 1-1/4" to 2" valves – UNC 5/16"-18. 'Recoil' brand inserts require drilling before insertion.

Type 21 Ball Valves

WORKING PRESSURES PSI, Water, Non-Shock

VACUUM RATING • 29.9 inches mercury

Size	PVC			CPVC						PP			PVDF				
	20°C 68°F	40°C 104°F	50°C 122°F	20°C 68°F	40°C 104°F	50°C 122°F	60°C 140°F	80°C 176°F	90°C 194°F	20°C 68°F	60°C 140°F	80°C 176°F	20°C 68°F	40°C 104°F	60°C 140°F	80°C 176°F	100°C 212°F
1/2"– 2"	230	165	150	230	165	150	120	75	55	150	85	55	230	185	150	110	85
2-1/2"– 4"	150	150	150	150	150	150	120	75	55	150	70	40	150	150	150	110	85

Temperature Ranges: PVC 0 to 60°C (32 to 140°F), **CPVC** 0 to 95°C (32 to 203°F), **PP** –20 to 80°C (–4 to 176°F), **PVDF** –40 to 100°C (–40 to 212°F)

WEIGHTS LB. THREADED or SOCKET

WEIGHTS LB. FLANGED

Size	PVC	CPVC	PP	PVDF	PVC	CPVC	PP	PVDF
1/2"	0.4	0.4	0.4	0.4	0.9	0.9	0.7	1.1
3/4"	0.7	0.7	0.7	0.9	1.3	1.5	1.1	1.5
1"	0.9	1.1	0.9	1.1	1.8	2.0	1.5	2.2
1-1/4"	1.5	1.5	1.3	1.8	2.6	2.9	2.0	3.3
1-1/2"	2.4	2.6	1.5	2.9	3.7	4.0	2.6	4.4
2"	4.0	4.4	2.6	4.9	5.5	6.0	4.0	8.2
2-1/2"	5.1	5.5	3.7	6.2	7.3	7.7	5.3	8.8
3"	8.2	8.8	5.5	9.9	10.1	11.0	7.5	12.6
4"	19.4	21.8	13.2	24.9	21.6	23.4	15.4	26.7

Cv VALUES VS. BALL ANGLE

Size	0%	25%	50%	75%	100%
1/2"	0	0.35	1.3	5.5	14.
3/4"	0	0.73	2.8	11.5	29.
1"	0	1.2	4.5	18.6	47.
1-1/4"	0	1.8	6.8	28.4	72.
1-1/2"	0	3.9	14.7	61.2	155.
2"	0	4.8	18.0	75.0	190.
2-1/2"	0	9.1	34.7	144.0	365.
3"	0	10.2	39.0	162.0	410.
4"	0	17.0	64.6	269.0	680.

SAMPLE SPECIFICATION

1. All True Union Ball Valves in PVC, CPVC, PP or PVDF shall be Chemline Type 21 or equal sizes 1/2" to 2" in PVC, CPVC, and PVDF rated at 230 psi and in PP 150 psi maximum working pressure. Sizes 2-1/2", 3" and 4" rated at 150 psi maximum working pressure with EPDM, FKM (Viton®) or CPE seals. Ball seats shall be PTFE with elastomer cushions for closure with minimum stem torques.
2. All valves will have Safety Shear stem design, blowout-proof with double o-rings for safety. The top o-ring groove shall be deeper so that if the stem breaks off under excessive torque the lower o-ring will remain intact and the valve will hold pressure.
3. All valves shall be full port and two-way blocking design.
4. All valves will be CRN (Canadian Registration Number) registered with TSSA.
5. PVC valves with EPDM or FKM (Viton®) seals shall be certified under NSF/ANSI Standard 61 for contact with drinking water.
6. All valves shall have chemical resistant labels permanently marked with manufacturing number to provide production level traceability.
7. PVC compound shall have an ASTM cell classification 12454-A with a minimum suffix "A" designation for chemical resistance as per ASTM D-1784 (CSA report LO 4000-172).
8. CPVC compound shall have an ASTM cell classification 23567-A with a minimum suffix "A" designation for chemical resistance as per ASTM D-1784.
9. PP material will conform to ASTM D-4101 PP 021 B 67272 material requirements.
10. PVDF material shall be unpigmented conforming to ASTM D-3222 material requirements and to be USDA Title 21 Chapter 1 Part 177. 2510 requirements for contact with food.
11. Socket ends in PVC and CPVC shall be Schedule 80 and conform to ASTM D-2467.
12. Threaded ends shall be Schedule 80 and conform to ASTM D-2464.
13. Butt fusion ends in PP or PVDF will be compatible with Chemline PP or PVDF metric piping systems.
14. Flanged ends shall be ANSI Class 150 one-piece factory moulded (not fabricated) to ensure maximum strength and close tolerance end to end dimensions.

ORDERING EXAMPLE

Chemline True Union Ball Valves	21	A	020	E	S
Body Material	**A** – PVC **B** – PP	**C** – CPVC **K** – PVDF			
Size[1]	**002** – 1/4" **010** – 1" **025** – 2-1/2"	**003** – 3/8" **012** – 1-1/4" **030** – 3"	**005** – 1/2" **015** – 1-1/2" **040** – 4"	**007** – 3/4" **020** – 2" **060** – 6"	
Seals	**E** – EPDM	**V** – FKM (Viton®)	**C** – CPE	**B** – Nitrile	**A** – Aflas®
Ends	**S** – Socket	**T** – Threaded	**F** – Flanged	**B** – Butt[2]	**CF** – ChemFlare™

Example: Chemline Type 21 True Union Ball Valve, PVC, 2", with EPDM seals, socket ends.

[1] 1/4" is normally the 3/8" valve reduced. 6" is 4" valve with 6" end connections.

[2] PP, PVDF and ECTFE (Halar®) metric butt fusion ends (1/2" to 4") connect to Chemline PP, PVDF and ECTFE (Halar®) piping systems.

OTHER OPTIONS & ACCESSORIES

- **Alternate O-Ring Seals**
- **Stem Extensions** made to any length
- **Limit Switches** – For open and/or closed position indication
- **Municipal Operating Nut**
- **Lubrication-free Valves** – Factory clean room assembled
- **Vented Ball** – For sodium hypochlorite applications

CHEMLINE PLASTICS
SUPERIOR FLOW SOLUTIONS

55 Guardsman Road, Thornhill, ON, L3T 6L2, Canada | ISO 9001:2008 Certified
tel.905.889.7890 | fax.905.889.8553 | request@chemline.com | chemline.com

This page is intentionally left blank

CS-305-170 : Identification sheet

VWTC PROJECT NUMBER:	5000218009	REV:	1
PROJECT NAME:	AEM AMARUQ	SUBMITTED TO (COMPANY):	AGNICO EAGLE MINES
ENGINEER:	Gabriel Hébert	SUBMITTED TO (RESPONSIBLE)	
PROJECT MANAGER:	Clément B	PROJECT NUM REFERENCE.:	
PHONE NUMBER:		LOT NUMBER:	

SUPPLIER	EQPT CODE	EQPT TAG NO	DIA	DESCRIPTION	INFO 1	INFO 2	INFO 3	APPLIC.	NOTE	REV
CHEMLINE	VARFPV348512	PRV9-621	DIA: 25 mm (1")	RELIEF VALVE	TYPE: BACK PRESSURE VALVE | 150#//MANUFACTURER : CHEMLINE//MODEL : SB12A010EU + SGA-005-002-P-G + P025-160-BM//CONNECTION TYPE : UNION SOCKET | 25 mm (1")//BODY : PVC// SEAL | SEAT :EPDM | EPDM// STEM : N/A	(CONFIG. L_U)		CATIONIC POLYMER DOSING SKID		
CHEMLINE	VARFPV348512	PRV9-622	DIA: 25 mm (1")	RELIEF VALVE	TYPE: BACK PRESSURE VALVE | 150#//MANUFACTURER : CHEMLINE//MODEL : SB12A010EU + SGA-005-002-P-G + P025-160-BM//CONNECTION TYPE : UNION SOCKET | 25 mm (1")//BODY : PVC// SEAL | SEAT :EPDM | EPDM// STEM : N/A	(CONFIG. L_U)		CATIONIC POLYMER DOSING SKID		
CHEMLINE	VARFPV348512	PRV9-623	DIA: 25 mm (1")	RELIEF VALVE	TYPE: BACK PRESSURE VALVE | 150#//MANUFACTURER : CHEMLINE//MODEL : SB12A010EU + SGA-005-002-P-G + P025-160-BM//CONNECTION TYPE : UNION SOCKET | 25 mm (1")//BODY : PVC// SEAL | SEAT :EPDM | EPDM// STEM : N/A	(CONFIG. L_U)		CATIONIC POLYMER DOSING SKID		

This page is intentionally left blank

PDF Published September 17, 2014

SB12 Series Back Pressure/Relief Valves

CHEMLINE PLASTICS
SUPERIOR FLOW SOLUTIONS

PVC PP PVDF

CRN Registered as Category C Fittings Consult Chemline

NSF[3] Certified to NSF/ANSI 61

SERIES: SB12

SIZES: 3/8" – 4"

ENDS: True Union Socket, Threaded or ChemFlare™[1] Spigot[2] Bodies with Plain, Socket, Threaded or Flanged ends

DIAPHRAGM: PTFE Bonded EPDM

SEALS: EPDM, FKM (Viton®)

The Chemline SB Series Back Pressure/ Relief Valve has two functions. As a ***back pressure valve***, installed in-line downstream of a pump, the back pressure below the metering pump is maintained. When installed in the branch of a tee it is a ***pressure relief valve***. The valve stays closed until inlet pressure reaches the set pressure which is adjusted by turning the spring tensioning bolt. Inlet pressure acts upward against the piston allowing excess pressure to flow upwards through the orifice.

The SB12 Series has a built-in check valve function, desirable for dosing applications. It is not so sensitive as to open with every pulsation from a metering pump.

features

True Union Ends

- Easy installation and maintenance
- Eliminate chemical leakage problems common with old fashioned threaded connections

Long Cycling Life

- Dynamic seal is PTFE bonded EPDM for high chemical resistance
- This moulded diaphragm is designed for superior sealing and flex life

Superior Performance in Dosing Systems

- Valves are hydraulically designed for very low hysteresis ("backlash") and to eliminate chatter
- Built-in check (non-return) function
- Valve opening depends on inlet pressure only and is uneffected by changes in downstream (back) pressure

CRN Registration numbers by province

- Ontario: OC10134.5
- Newfoundland: OC10134.50
- Alberta: OC10134.52
- Saskatchewan/Manitoba/Quebec: OC10134.56
- New Brunswick: OC10134.57
- Nova Scotia: OC10134.58
- P.E.I.: OC10134.59
- British Columbia: not required

technical

Set Pressure Ranges

- 1/2" to 2" – 5 to 150 psi
- 2-1/2" and 3" – 7.5 to 150 psi
- 2-1/2" to 4" – 4 to 60 psi (optional)
- 4" – 7.5 to 90 psi

Maximum Viscosity

- 120cP is maximum recommended service viscosity

[1] For ChemFlare™ end connectors, consult Chemline.
[2] PP and PVDF spigot ends have DIN dimensions and will butt fuse directly to Chemline PP and PVDF piping systems.
[3] PVC valves with EPDM or FKM (Viton®) seals are certified under NSF/ANSI Standard 61 for contact with drinking water.

09/14 ©Chemline Plastics Limited 2014
Chemline is a registered trade mark of Chemline Plastics Limited

SB12 Series Back Pressure/Relief Valves 1/2" to 2"

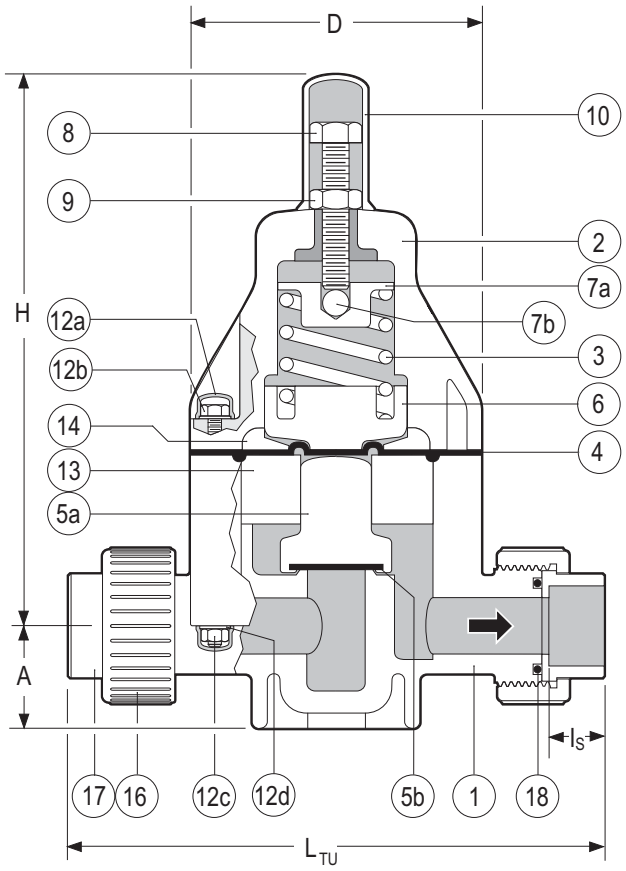

True Union Body

PARTS

▲ Recommended Spare Parts

No.	Part	Pcs.	Materials
1	Body	1	PVC, PP, PVDF
2	Bonnet	1	PPG
3	Spring	1	Galvanized Steel
4▲	Control Diaphragm	1	PTFE bonded EPDM
5a▲	Piston	1	PVC, PP, PVDF
5b▲	Seat	1	EPDM, FPM(Viton®)
6	Lower Spring Retainer	1	PPG
7a	Upper Spring Retainer	1	Cad. Plated Steel
7b	Ball	1	304 SS
8	Spring Tensioning Bolt	1	304 SS
9	Lock Nut	1	304 SS
10	Spring Bolt Cap	1	PE
12a	Bolt/Nut Cap	8/12[1]	PE
12b	Hex Bolt	4/6[1]	304 SS
12c	Hex Nut	4/6[1]	304 SS
12d	Washer	8/12[1]	304 SS
13	Spacer Disc	1	PVC, PP, PVDF
14	Pressure Plate	1	PP
16	Union Nut	2	PVC, PP, PVDF
17	End Connector	2	PVC, PP, PVDF
18▲	Face O-Ring	2	EPDM, FPM(Viton®)

[1] 1/2" size / 3/4" to 2" sizes

OTHER ENDS

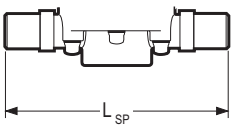

Spigot Body

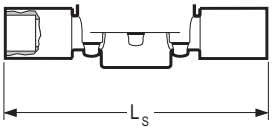

Socket

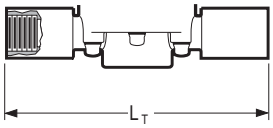

Threaded

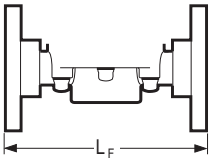

Flanged

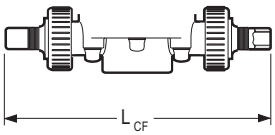

ChemFlare™

DIMENSIONS INCHES

WEIGHTS LB.

Cv VALUES

Size	D	H	PVC A	PVC I_S	PVC L_{TU}[2]	PVC L_{SP}[3]	PVC L_S	PVC L_T	PVC L_F	PVC L_{CF}	PP and PVDF A	PP and PVDF L_{SP}[3]	PP and PVDF L_{TU}[2]	PVC	PP	PVDF	USGPM Flow at 1 psi △P
3/8"	3.2	6.9	1.0	0.6	6.5	5.7	7.4	7.2	4.5	8.2	0.9	5.7	**	1.8	1.5	2.2	2.1
1/2"	3.2	6.9	1.0	0.6	6.8	5.7	8.0	7.8	6.3	8.3[4]	0.9	5.7	7.1	1.9	1.6	2.4	3.0
3/4"	4.2	8.0	1.5	0.7	8.3	6.9	9.3	8.9	7.4	9.7	1.4	6.9	8.4	4.1	3.5	4.6	6.6
1"	4.2	8.0	1.5	0.9	8.5	6.9	9.6	9.3	7.4	10.2	1.4	6.9	8.7	4.2	3.5	4.7	8.7
1-1/4"	5.8	10.3	2.2	1.0	10.9	8.8	11.6	11.2	9.2	13.5	2.1	8.8	10.9	11.0	9.0	12.0	18.0
1-1/2"	5.8	10.3	2.2	1.2	11.1	8.8	12.2	11.5	9.5	–	2.1	8.8	11.2	11.2	9.2	12.2	20.0
2"	5.8	10.3	2.2	1.5	11.3	9.6	12.9	12.0	10.0	–	2.1	8.8	13.2	11.4	9.4	12.4	21.4

[2] True Union bodies come standard with socket ends. Threaded union ends are available. ** Consult Chemline.
[3] Spigot bodies are used for non union socket, threaded or flanged ends. All spigot ends have metric dimensions and the PP and PVDF spigots butt fuse directly to Chemline PP and PVDF piping. [4] Tube size can be reduced to 1/4" tube, LCF = 7.74" for 1/4", 8.26" for 3/8".

MAXIMUM PRESSURES PSI

Size	PVC 20°C 68°F	PVC 30°C 86°F	PVC 40°C 104°F	PVC 50°C 122°F	PP 30°C 86°F	PP 40°C 104°F	PP 50°C 122°F	PP 60°C 140°F	PP 70°C 158°F	PVDF 30°C 86°F	PVDF 50°C 122°F	PVDF 70°C 158°F	PVDF 80°C 176°F	PVDF 90°C 194°F	PVDF 100°C 212°F
1/2"– 2"	150	105	60	15	150	90	60	37.5	15	150	100	60	45	30	15

Temperature Ranges: PVC 0 to 50°C (32 to 122°F), **PP** 10 to 70°C (50 to 158°F), **PVDF** –30 to 100°C (–22 to 212°F).

SB12 Series Back Pressure/Relief Valves 1/2” to 2”

pressure loss nomogram for SB12 valves 3/8” to 2”

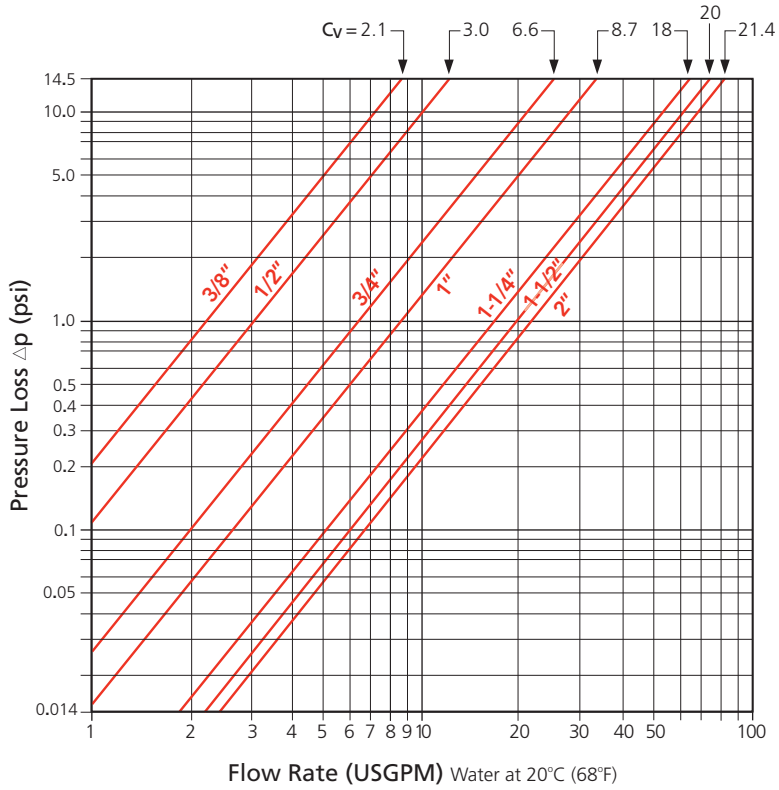

typical dosing system schematic

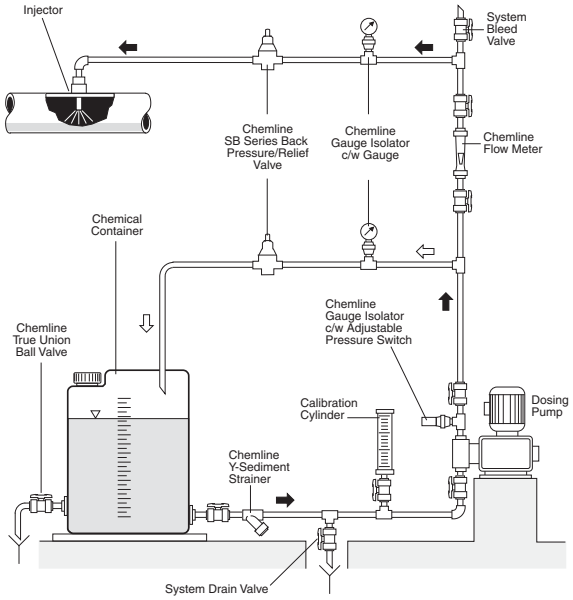

application of pressure relief valves

Constant System Pressure

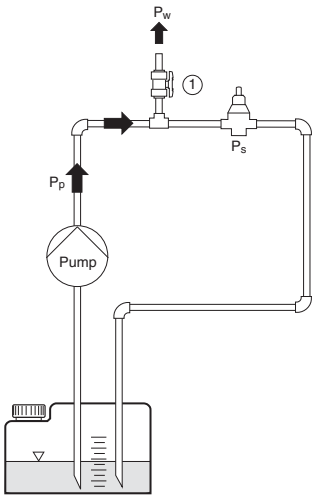

$P_p \geq P_w$
$P_p \geq P_s$ → valve opens
$P_p \leq P_s$ → valve closed

Consumer 1 and/or 2 Open, Valve Closes

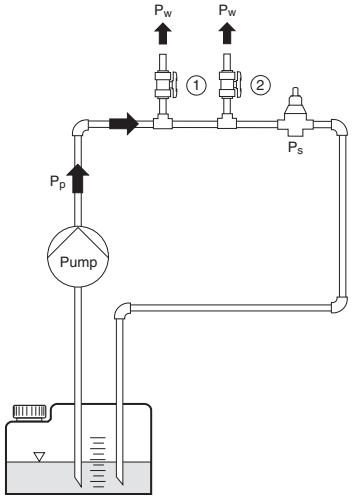

$P_p \geq P_s$ → valve opens
$P_p \leq P_s$ → valve closed

Non-Return Valve

Container 1 is located above the pump

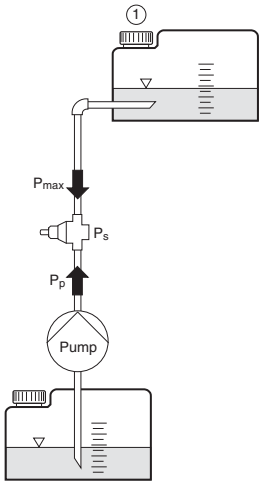

$P_s \geq P_{max}$
$P_p \geq P_s$ → valve opens
$P_p \leq P_s$ → valve closed

Overflow Valve

Pressure of container or application system should not exceed the maximum pressure value

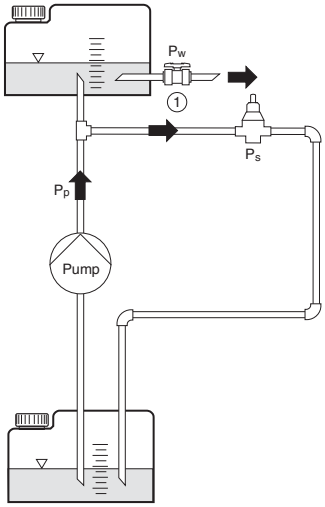

$P_s \leq P_w$
$P_p \geq P_s$ → valve opens
$P_p \leq P_s$ → valve closed

P_w = Working Pressure
P_p = Pump Pressure
P_s = Set Pressure

SB12 Series Back Pressure/Relief Valves 1/2" to 2"

working pressure vs. flow rate

The curves show the relationship between the working pressure and the approximate flow rate through the valve for water at 20°C (68°F) . These values will vary depending on:

- The configuration of the piping and the pressure losses associated with it
- The fluid if not water at 20°C (68°F)
- Whether the pressure is rising or falling, hysteresis is approximately 4 psi for 1/2" to 2" valves. For valves 2-1/2" to 4", hysteresis is approximately 14.5 psi.

operation examples

1. The valve is set closed at 100 psi. At a pressure increase of 10 psi, a flow of approximately 1.0 USGPM will be reached.
   - set pressure = 100 psi
   - working pressure = 110 psi
   - opening pressure = approximately 104 psi
2. The valve is set closed at 50 psi. At a pressure increase of 10 psi, a flow of approximately 1.0 USGPM will be reached.
   - set pressure = 50 psi
   - working pressure = 60 psi
   - opening pressure = approximately 54 psi

3/8" Valves

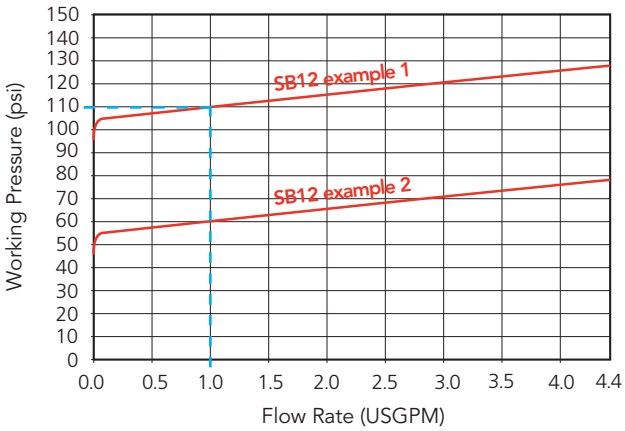

1/2" Valves

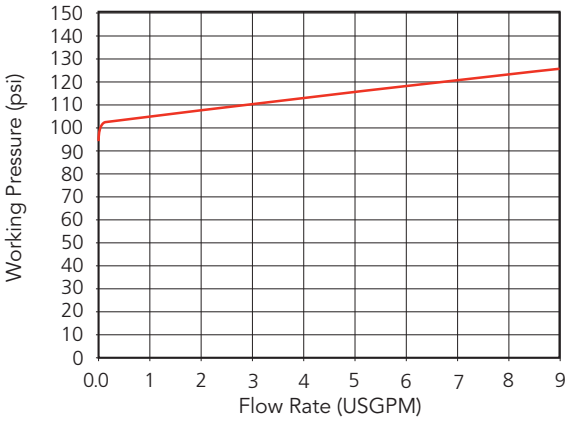

3/4" Valves

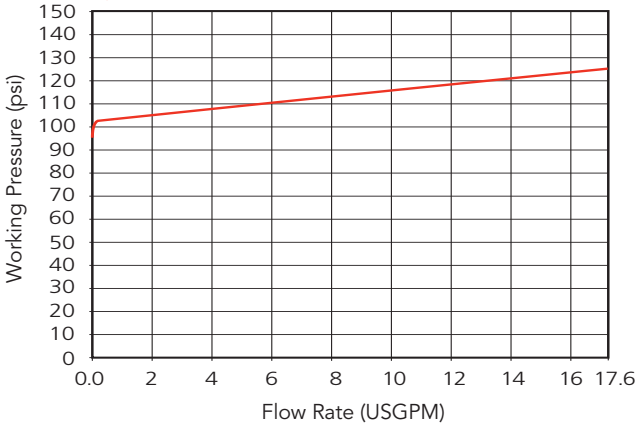

1" Valves

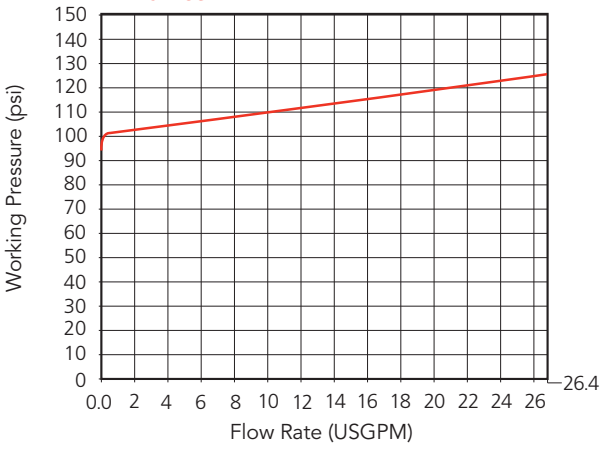

1-1/4" Valves

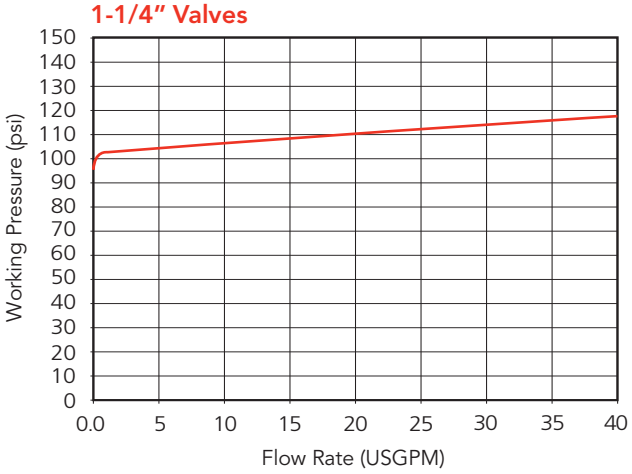

1-1/2" Valves

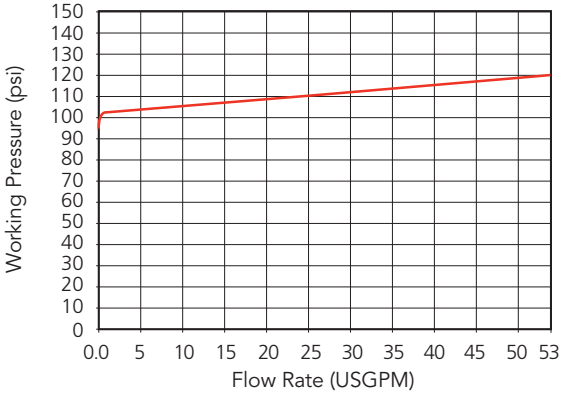

2" Valves

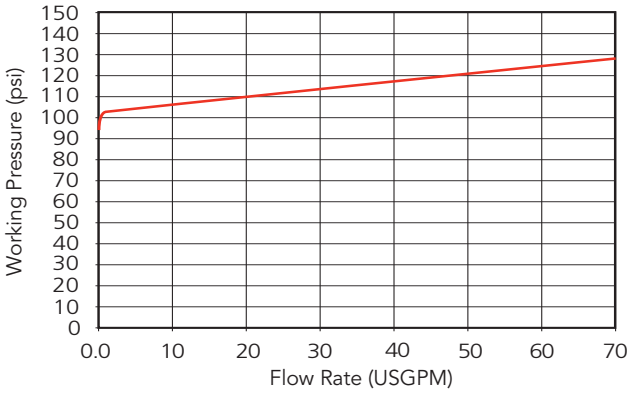

SB12 Series Back Pressure/Relief Valves 2-1/2" to 4"

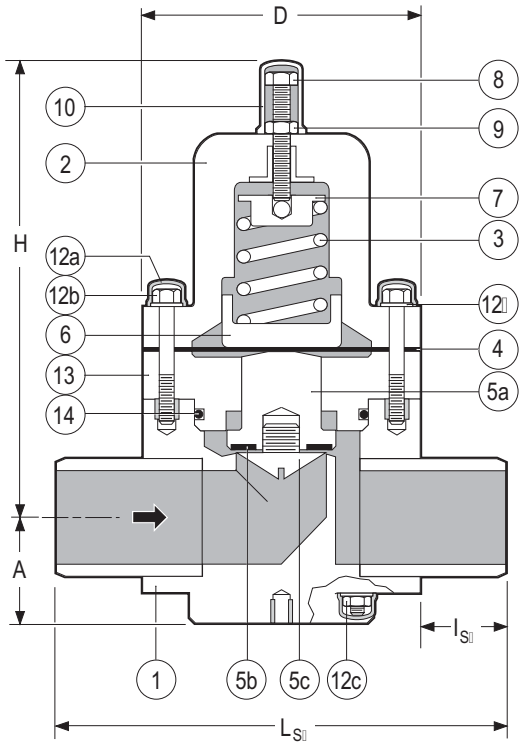

Spigot Body

PARTS

▲ Recommended Spare Parts

No.	Part	Pcs.	Materials
1	Body	1	PVC, PP, PVDF
2	Bonnet	1	PPG
3	Spring	1	Galvanized Steel
4▲	Control Diaphragm	1	PTFE bonded EPDM
5a▲	Piston	2	PVC, PP, PVDF
5b▲	Seat	1	EPDM, FPM(Viton®)
5c▲	Seat Retainer	1	PVC, PP, PVDF
6	Lower Spring Retainer	1	PPG
7	Upper Spring Retauner	1	304 SS
8	Spring Tensioning Bolt	1	304 SS
9	Lock Nut	1	304 SS
10	Spring Bolt Cap	1	PE
12a	Hex Bolt/Nut Cap	20	PE
12b	Hex Bolt/Stud	12[1]	304 SS
12c	Hex Nut	20	304 SS
12d	Washer	20	304 SS
13	Spacer Disc	1	PVC, PP, PVDF
14	Spacer O ring	1	EPDM, FPM(Viton®)

[1] 2 large upper bolts, 2 shorter lower bolts, 8 studs

OTHER ENDS

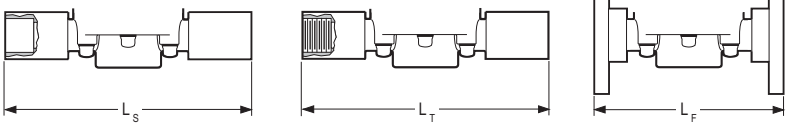

Socket | Threaded | Flanged

ChemFlare™ Ends
- For connection to PFA tube. Leak-free connections for difficult services such as sodium hypochlorite

DIMENSIONS INCHES

WEIGHTS LB.

Cv VALUES

Size	PVC, PP & PVDF A	D	H	L_{SP}[2]	l_{SP}	PVC L_F	WEIGHTS PVC	PP	PVDF	Cv VALUES USGPM Flow at 1 psi △P
2-1/2"	2.7	6.9	11.1	11.2	2.1	12.2	20.9	15.4	24.6	41
3"	3.0	7.9	12.2	14.2	3.1	15.0	26.4	23.8	30.8	63
4"	3.7	9.8	14.2	16.5	3.3	16.9	33.0	26.4	37.4	98

[2] Plain spigot ends in PP & PVDF may be butt fused directly to Chemline PP & PVDF piping systems.

Weights based on spigot bodies.

MAXIMUM PRESSURES PSI

Size	PVC 20°C 68°F	30°C 86°F	40°C 104°F	50°C 122°F	PP 20°C 68°F	30°C 86°F	40°C 104°F	50°C 122°F	60°C 140°F	70°C 158°F	PVDF 30°C 86°F	50°C 122°F	70°C 158°F	80°C 176°F	90°C 194°F	100°C 212°F
2-1/2"– 4"	150	90	44	15	150	116	90	60	37.5	15	150	90	55	40	30	15

Temperature Ranges: PVC 0 to 50°C (32 to 122°F), **PP** 10 to 70°C (50 to 158°F), **PVDF** –30 to 100°C (–22 to 212°F).

ORDERING EXAMPLE

Chemline Back Pressure/ Relief Valves	SB12	A	005	V	U
Body Material	**A** – PVC	**B** – PP	**K** – PVDF		
Size	**003** – 3/8" **010** – 1" **020** – 2"	**005** – 1/2" **012** – 1-1/4" **025** – 2-1/2"	**007** – 3/4" **015** – 1-1/2" **030** – 3"	**040** – 4"		
Elastomers	**E** – EPDM	**V** – FPM (Viton®)				
Ends	**S** – Socket **CFx** – ChemFlare™	**T** – Threaded	**F** – Flanged **Blank** – Spigot (Butt)	**U** – Union Socket		

Example: Chemline SB 12 Series, PVC, 1/2" diameter, FPM (Viton®) seals, Union socket ends.
x = 4 for 1/4", **6** for 3/8", **8** for 1/2", **12** for 1" ID tube connections.

OPTIONS

- 4 to 60 psi Pressure Range springs for 2-1/2" to 4" valves
- **Integral Pressure Gauge** – for inlet and/or outlet
- Bodies in 316 Stainless Steel and PTFE

Optional Pressure Gauge
- For inlet and/or outlet

SB12 Series Back Pressure/Relief Valves 2-1/2" to 4"

working pressure vs. flow rate

• Whether the pressure is rising or falling, hysteresis is approximately 14.5 psi for 2-1/2" to 4" valves

2-1/2" Valves / 4 to 60 psi set pressure range

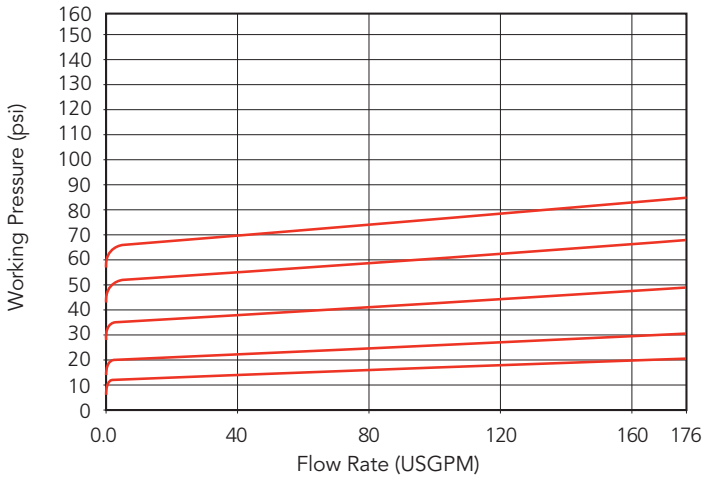

2-1/2" Valves / 7.5 to 150 psi set pressure range

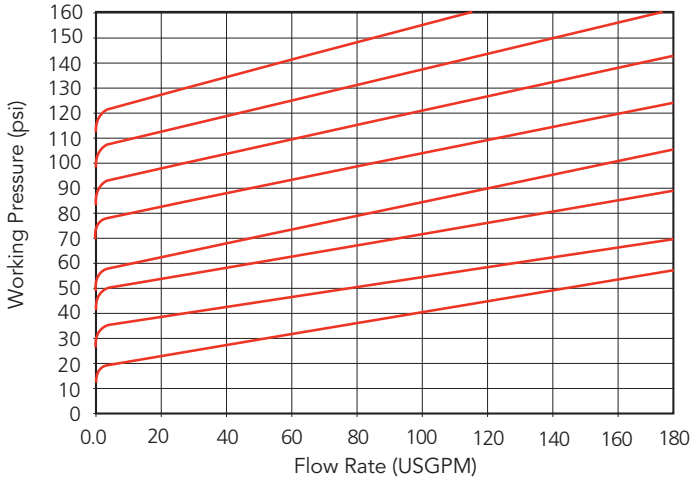

3" Valves / 4 to 60 psi set pressure range

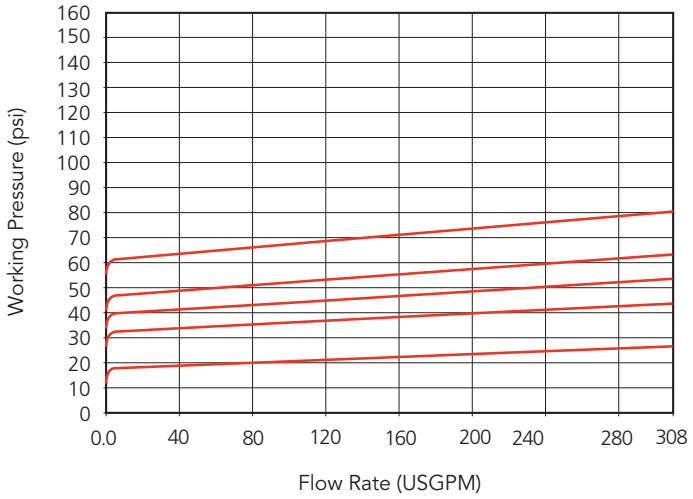

3" Valves / 7.5 to 150 psi set pressure range

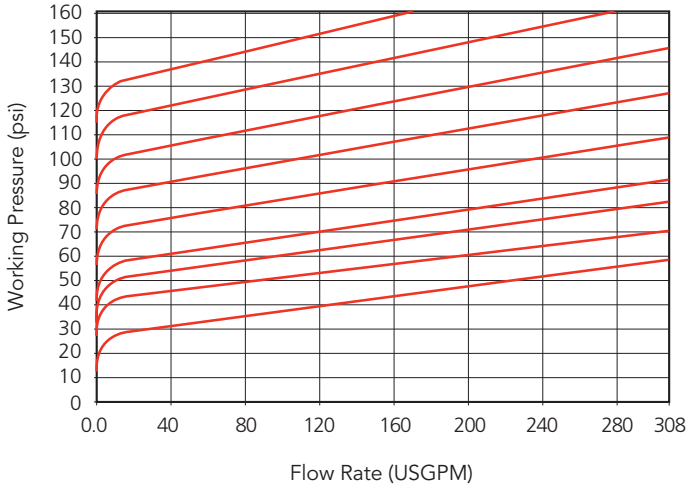

4" Valves / 4 to 60 psi set pressure range

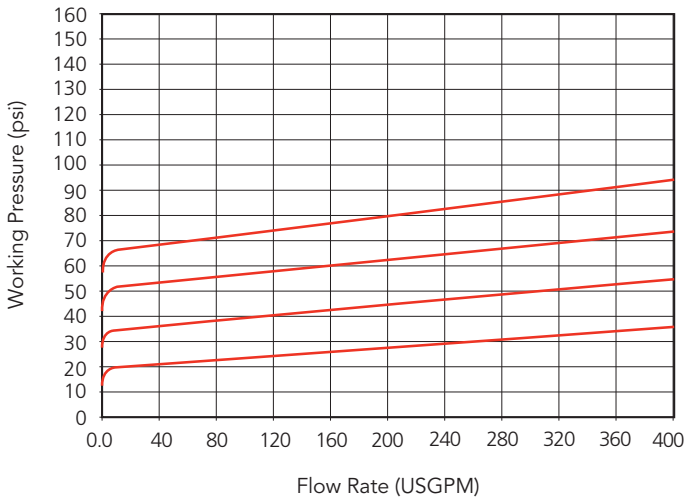

4" Valves / 7.5 to 90 psi set pressure range

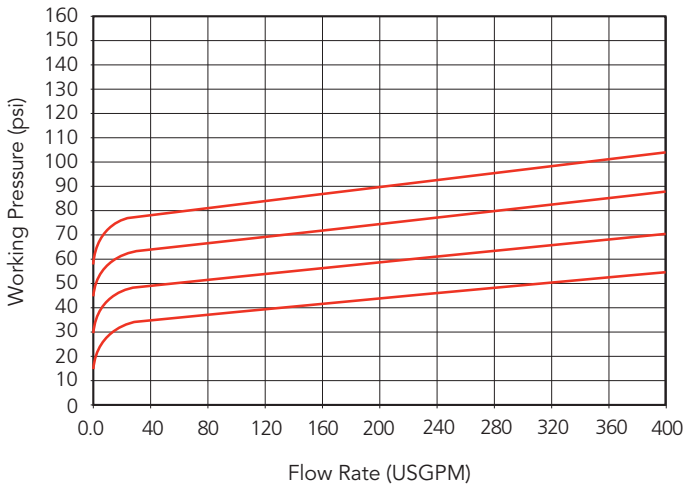

CHEMLINE PLASTICS
SUPERIOR FLOW SOLUTIONS

55 Guardsman Road, Thornhill, ON, L3T 6L2, Canada | ISO 9001:2008 Certified
tel.905.889.7890 | fax.905.889.8553 | request@chemline.com | chemline.com

PDF Published June 23, 2014

Gauge Isolators

CHEMLINE PLASTICS
SUPERIOR FLOW SOLUTIONS

PVC PP PVDF

CRN Registered Consult Chemline

NSF[4] Certified to NSF/ANSI 61

SERIES: SG

INLET CONNECTION: 1/4" or 1/2" Threaded[1]

INSTRUMENT CONNECTION: 1/4" or 1/2" Threaded

DIAPHRAGM: PTFE

[1] Other available inlet connections are 1/2" socket or 1/2" to 1" flanged.
[2] Other fluids are available for special applications such as chlorine service.
[3] Glass reinforced polypropylene.
[4] PVC isolators are certified under NSF/ANSI Standard 61 for contact with drinking water.

Chemline SG Series Gauge Isolators allow inexpensive pressure gauges, or any other pressure instrument to be used in corrosive services. The upper chamber (gauge side) is filled with a stable fluid such as glycol or glycerine[2]. A diaphragm separates it from the lower chamber which receives the media under pressure.

The 1/2" gauge connection allows use of the popular 4" and 4-1/2" diameter gauges. Pressure switches or transmitters may also be installed. Customers can easily fill isolators and install their own gauges.

features

Easy to Mount Gauges

- It is easy to fill an isolator and field mount a gauge. No special equipment is required.
- Will accept popular 4" and 4-1/2" diameter gauges

Provision for Fill Port

- Housing may be drilled and tapped by Chemline or customer for a threaded fill port. This is used for filling isolator using a vacuum filling station

High Chemical Resistance

- Choice of body materials for a wide range of applications
- PTFE bonded EPDM dished diaphragm for high chemical resistance and sensitivity

Heavy Duty Design for Safety

- PPG[3] top chamber
- Heavy wall connection ports

CRN Registration number by province

- Ontario: OH16085.5

Optional Gauges

- Isolators are available alone or with gauge mounted and prefilled with glycol[2]

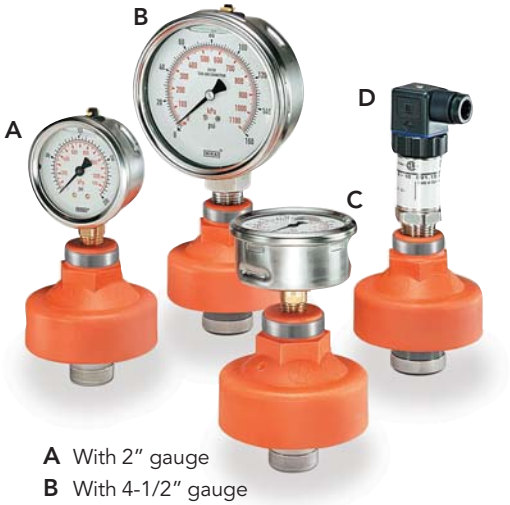

A With 2" gauge
B With 4-1/2" gauge
C With 2" back mount gauge
D With pressure transmitter

06/14 ©Chemline Plastics Limited 2014
Chemline is a registered trade mark of Chemline Plastics Limited

Gauge Isolators

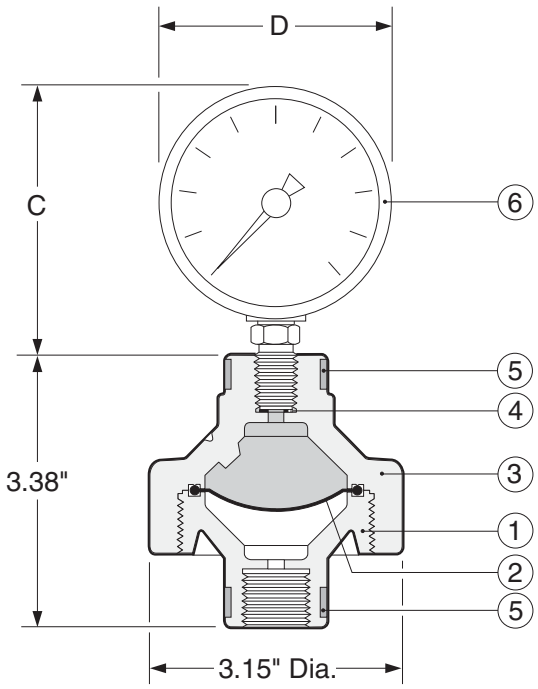

PARTS

No.	Part	Pcs.	Materials
1	Body	1	PVC, PP, PVDF
2	Diaphragm	1	PTFE
3	Bonnet	1	PPG[1]
4	Gasket	1	EPDM
5	Stainless Steel Bands	2	304 SS
6	Optional Gauge	1	See below

[1]PPG = Glass reinforced polypropylene

OPTIONAL GAUGES

- Chemline offers the gauges listed below mounted to isolator and prefilled with glycol, glycerine or special fluid for chlorine applications. These gauges have dials and cases filled with either glycol (standard), glycerine or silicon for corrosion resistance and dampening.
- Chemline SG gauge isolators are not recommended for vacuum applications. They will not affect the gauge accuracy as low as approximately 3 psi. The accuracy depends on the process conditions and the gauge installed on it.

OTHER OPTIONS

- **Flanged** inlet connections
- **Threaded Fill Port** – drilled, tapped and plugged
- Chemline will mount any pressure instrument supplied free issue by customer

DIMENSIONS (Gauge Isolator with optional gauge installed) INCHES

Optional Gauge Ordering No.	Gauge Diameter	Gauge Connection	Housing	Bourdon Tube	Window	Accuracy	Dimensions C	Dimensions D(max.)
P025-xx	2-1/2"	1/4"	316 SS	Brass	Polycarbonate	±1.5% of span	3.1	2.5
P025-xx-SS	2-1/2"	1/4"	316 SS	316 SS	Polycarbonate	±1.5% of span	3.1	2.5
P025-xx-SS/BM	2-1/2" Back Mount	1/4"	316 SS	316 SS	Polycarbonate	±1.5% of span	1.6	2.5
P025-xx-BM	2-1/2" Back Mount	1/4"	316 SS	Brass	Polycarbonate	±1.5% of span	1.6	2.5
P040-xx-SS	4"	1/2"	316 SS	316 SS	Safety Glass	±1% of span	4.5	4.0
P045-xx-SS	4-1/2"	1/2"	PBTP Plastic[2]	316 SS	Acrylic	±0.5% of span	6.3	5.8

xx denotes the maximum gauge pressure i.e., 30, 60, 100, 160 or 200 psi. See data page for recommended working pressures.
[2] PBTP = glass filled polyester.

WORKING PRESSURES PSI

WEIGHTS

Material	10 – 20°C 50 – 68°F	30°C 86°F	40°C 104°F	50°C 122°F	60°C 140°F	70°C 158°F	80°C 176°F	90°C 194°F	100°C 212°F	120°C 248°F	Net Weights Pounds[3]
PVC	150	100	80	45	15	–	–	–	–	–	1.0
PP	150	125	100	80	65	45	–	–	–	–	0.7
PVDF	150	150	150	125	105	85	70	60	45	30	1.3

Temperature Ranges: PVC 0 to 60°C (32 to 140°F), **PP** 10 to 80°C (50 to 176°F), **PVDF** –30 to 120°C (–22 to 248°F).
NR = Not Recommended. [3] Weights are for unfilled 1/2" x 1/2" isolators without gauges. 1/2" x 1/4" isolators are 20% lighter.

ORDERING EXAMPLE

Chemline Gauge Isolators SG		A	005-	002	P	G
Body Material	**A** – PVC	**B** – PP	**K** – PVDF			
Inlet Size	**002** – 1/4"	**005** – 1/2"(Standard)				
Instrument Connection	**002** – 1/4"	**005** – 1/2"				
Diaphragm	**P** – PTFE bonded EPDM					
Filling & Mounting	**G** –Add only if isolator is supplied filled with glycol and gauge or pressure instrument is mounted by Chemline. Separate gauge item numbers are listed above.					

Example: Chemline SG Series Gauge Isolator, PVC, 1/2" x 1/4" FNPT inlet x instrument connections, PTFE diaphragm.

CHEMLINE PLASTICS
SUPERIOR FLOW SOLUTIONS
55 Guardsman Road, Thornhill, ON, L3T 6L2, Canada | ISO 9001:2008 Certified
tel.905.889.7890 | fax.905.889.8553 | request@chemline.com | chemline.com

Project name: AMARUQ

Project#: 5000218009

Document #: SPK_0009_PCH

by: GH

chkd: GP

appvd: CB

CATIONIC POLYMER DOSING SKID

CALIBRATION CYLINDER

OIM manual section: 4.3.9.5

This page is intentionally left blank

CS-500-100 : Identification sheet

VWTC PROJECT NUMBER:	5000218009	REV:	1
PROJECT NAME:	AEM AMARUQ	SUBMITTED TO (COMPANY):	AGNICO EAGLE MINES
ENGINEER:	Gabriel Hébert	SUBMITTED TO (RESPONSIBLE)	
PROJECT MANAGER:	Clément B	PROJECT NUM REFERENCE.:	
PHONE NUMBER:		LOT NUMBER:	

SUPPLIER	EQPT CODE	EQPT TAG NO	DIA	DESCRIPTION	INFO 1	INFO 2	INFO 3	APPLIC.	NOTE	REV
PRIMARY FLUID	PUSPPV200284	CYL9-621	L: 23,16 " X W: 6,906 "	CALIBRATION CYLINDER	CALIBRATION CYLINDER/MANUFACTURER: PRIMARY FLUID/MODEL: PV2-10000	N/A	N/A	CATIONIC POLYMER DOSING SKID		

This page is intentionally left blank

ACCUDRAW® Calibration Cylinders

Polypropylene

PVC

Glass

- PVC with removable "O" ring sealed top for easy cleaning

- yellow polypropylene level indicator float for high visibility

ACCUDRAW® ***has been developed for the accurate calibration of metering pumps. Standard features include:***

- translucent
- chemical resistant
- break resistant
- threaded, socket or flanged
- colored graduations and lettering
- PVC has dual scale USGPH & ml
- PVC sizes 100 - 20000 ml
- POLY sizes 100 - 4000 ml
- POLY meets ISO standards
- Glass sizes 100 - 20000 ml
- custom designs available

For detailed product information visit our website: primaryfluid.com

PRIMARY FLUID SYSTEMS INC.
Call Toll Free 1-800-776-6580
Tel (905) 333-8743 Fax (905) 333-8746
E-Mail: primary@primaryfluid.com
www.primaryfluid.com

ACCUDRAW® Calibration Cylinders

"For Accuracy That Counts"

For complete product information visit our website: primaryfluid.com

Flanged: Glass, PVC

Flanged: PVC

PV#4

Sizing and Ordering Information:

ACCUDRAW Standard Materials of Construction

AC = All polypropylene construction (see below for options)
PV = All polyvinylchloride construction (see below for options)
ACS = Glass*

Note: Cylinders are NOT pressure vessels

Example: AC#1-1000B

AC = PP (polypropylene)
#1 = Bottom threaded connection only
1000 = 1000 ml
B = BSP Thread

e.g. Part # AC #1 - 1000 B

Type:
AC = Polypropylene
PV = PVC
ACS = Glass

Style:
1 = Bottom threaded conn. only
2 = Top and Bottom threaded conn.
3 = Bottom threaded conn. c/w removable vented dust cap
4 = Top/Bottom threaded conn. c/w removable "O" ring sealed top and float ring level indicator
**** Glass calibration cylinders available in Style 2 only***

Graduation Scale:
PP - ml only
PVC - ml and GPH
Glass - ml only

Std. connection is NPT thread
Optional: add suffix as follows
S = Socket weld connection (PVC only)
GTV = Glass/TFE construction
GKV = Glass/PVDF construction
GCV = Glass/CPVC construction
GSV = Glass/SS construction
B = BSP Thread
F = Flanged

Substitute **E** for **V**
for **EPDM** wetted "O" ring seal

Sizes:		**Material**
100 =	100 ml (1.6 GPH)	PP, PVC, Glass
250 =	250 ml (4 GPH)	PP, PVC, Glass
500 =	500 ml (8 GPH)	PP, PVC, Glass
1000 =	1000 ml (16 GPH)	PP, PVC, Glass
2000 =	2000 ml (32 GPH)	PP, PVC, Glass
4000 =	4000 ml (64 GPH)	PP, PVC, Glass
6000 =	6000 ml	Glass only
8000 =	8000 ml	Glass only
10000 =	10000 ml (160 GPH)	PVC, Glass
20000 =	20000 ml (320 GPH)	PVC, Glass

Custom sizes and materials available.

ACCUDRAW® Calibration Cylinders

ACCUDRAW® Glass Calibration Cylinders ***are ideal for the calibration of metering pumps, batch systems and for handling hazardous chemicals.***

- **volumes calibrated in ml**
- **construction materials available include TFE, PVDF, CPVC and 316 stainless steel**
- **sealing "O" rings are Viton and Buna N**
- **outer shield of acrylic construction**
- **port connections in NPT, metric or flanged**
- **standard sizes 100 - 20,000 ml**
- **custom designs available to your specifications**

Sizing and Ordering Information: Glass Construction

Size	Conn.	Model # For TFE End Flgs	Model # For 316 S/S End Flgs	Model # For PVDF End Flgs	Model # For CPVC End Flgs
100 ml	1/2" NPT	ACS#2-100-GTV	ACS#2-100-GSV	ACS#2-100-GKV	ACS#2-100-GCV
250 ml	1/2" NPT	ACS#2-250-GTV	ACS#2-250-GSV	ACS#2-250-GKV	ACS#2-250-GCV
500 ml	1/2" NPT	ACS#2-500-GTV	ACS#2-500-GSV	ACS#2-500-GKV	ACS#2-500-GCV
1000 ml	1/2" NPT	ACS#2-1000-GTV	ACS#2-1000-GSV	ACS#2-1000-GKV	ACS#2-1000-GCV
2000 ml	1 " NPT	ACS#2-2000-GTV	ACS#2-2000-GSV	ACS#2-2000-GKV	ACS#2-2000-GCV
4000 ml	1" NPT	ACS#2-4000-GTV	ACS#2-4000-GSV	ACS#2-4000-GKV	ACS#2-4000-GCV
6000 ml	1" NPT	ACS#2-6000-GTV	ACS#2-6000-GSV	ACS#2-6000-GKV	ACS#2-6000-GCV
8000 ml	2" NPT	ACS#2-8000-GTV	ACS#2-8000-GSV	ACS#2-8000-GKV	ACS#2-8000-GCV
10000 ml	2" NPT	ACS#2-10000-GTV	ACS#2-10000-GSV	ACS#2-10000-GKV	ACS#2-10000-GCV
20000 ml	2" NPT	ACS#2-20000-GTV	ACS#2-20000-GSV	ACS#2-20000-GKV	ACS#2-20000-GCV

Cylinders are bolted together using stainless steel rods with Viton "O" rings for the glass seal and Buna N "O" rings for the acrylic seal. For EPDM "O" rings, subsititute "E" for "V".

Options available: (may affect price and delivery)

- **different type or size of thread connection, different "O" ring material, different flange material**

Descriptions:

TFE, PVDF and CPVC End Flanges:
Glass cylinder with acrylic outer shield and 3/4" thick (TFE, PVDF or CPVC) end flanges

316 S/S End Flanges:
Glass cylinder with acrylic outer shield and 1/2" thick 316 Stainless Steel end flanges

Glass Dimensional Information

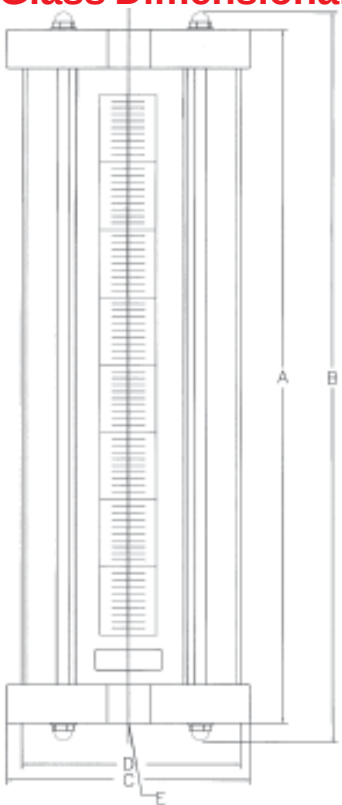

Note: Cylinders are <u>not</u> pressure vessels.

Dimensions subject to change without notice.

Glass cylinders with TFE, PVDF or CPVC End Flanges

Size ml	DIV ml	A inches	B inches	C inches	D inches	E thread
100	1.00	10.00	11.00	3.00	2.50	1/2" FNPT
250	2.00	12.75	13.50	3.50	3.00	1/2" FNPT
500	5.00	14.50	15.50	4.00	3.50	1/2" FNPT
1000	10.00	16.75	17.75	4.75	4.25	1/2" FNPT
2000	20.00	18.75	19.75	5.50	5.00	1" FNPT
4000	25.00	22.50	23.50	6.50	6.00	1" FNPT
6000	50.00	20.13	21.16	8.00	7.50	1" FNPT
8000	50.00	24.63	25.66	8.00	7.50	2" FNPT
10000	50.00	30.13	31.16	8.00	7.50	2" FNPT
20000	200.00	43.25	44.25	9.00	8.50	2" FNPT

Glass cylinders with 316 Stainless Steel End Flanges

Size ml	DIV ml	A inches	B inches	C inches	D inches	E thread
100	1.00	9.50	10.50	3.00	2.50	1/2" FNPT
250	2.00	12.25	13.00	3.50	3.00	1/2" FNPT
500	5.00	14.00	15.00	4.00	3.50	1/2" FNPT
1000	10.00	16.25	17.25	4.75	4.25	1/2" FNPT
2000	20.00	18.25	19.25	5.50	5.00	1" FNPT
4000	25.00	22.00	23.00	6.50	6.00	1" FNPT
6000	50.00	19.63	20.66	8.00	7.50	1" FNPT
8000	50.00	24.13	25.16	8.00	7.50	2" FNPT
10000	50.00	29.63	30.66	8.00	7.50	2" FNPT
20000	200.00	42.75	43.75	9.00	8.50	2" FNPT

ACCUDRAW® Calibration Cylinders

Installations

Conversion Factors
1 ml = 1 cc
1000 ml = 1 liter
ml/sec X 60 = ml/min
1 US gal/min X 0.063 = liters/sec
1 US gal = 3.786 liters

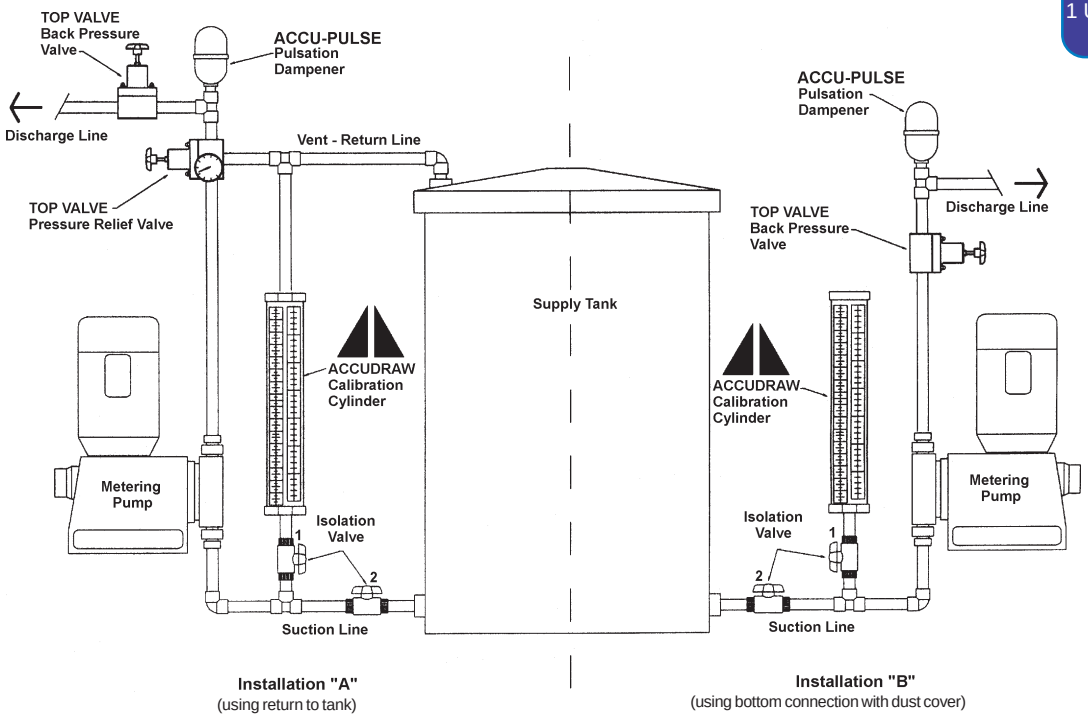

Installation "A"
(using return to tank)

Installation "B"
(using bottom connection with dust cover)

Other available products at www.primaryfluid.com

TOP VALVE Back Pressure/Pressure Relief

- *long life diaphragm*
- *range of 15 - 350 PSIG*
- *air release, optional gauge port*
- *PVC, CPVC, PVDF, Teflon, polypropylene, stainless, Alloy 20 and Hastelloy C*
- *7 sizes 1/4" - 2" NPT*
- *color coded handles indicate size*
- *higher pressure & temperature available*

PFS Corporation Stops

Designed to inject chemical into the center stream of process.

- *isolation valve allows for ease of maintenance*
- *available in 6 materials of construction*
- *wetted components have comparable or greater chemical resistance than quill construction material*
- *standard and custom lengths available*
- *connection in NPT, metric or flanged*

Custom built in other sizes & materials.

ACCUPULSE Pulsation Dampeners

Designed to remove pulsatingflows from positive displacement pumps.

- *increase system efficiency and pump life; decrease maintenance and costs*
- *protect pipes, meters, valves and instrumentation from pulsation and vibration*
- *ensure meter accuracy, longevity and repeatability*
- *prevent foaming and splashing*
- *extensive range of materials and sizes with lightweight, compact design*

Distributed By:

PRIMARY FLUID SYSTEMS INC.

Call Toll Free 1-800-776-6580
Tel: (905) 333-8743
Fax: (905) 333-8746

Distribution Territories Available

E:Mail: primary@primaryfluid.com
www.primaryfluid.com

® Registered Trade Mark of Primary Fluid Systems

4 – DETAILED TECHNICAL DOCUMENTATION

4.3 – SHOP DRAWINGS

4.3.10 – ANIONIC POLYMER DOSING SKID

LEFT BLANK

Project name:	AMARUQ
Project#:	5000218009
Document #:	SPK_0010_PCH
by:	GH
chkd:	GP
appvd:	CB

SUBMITTAL PACKAGE

ANIONIC POLYMER DOSING SKID

This page is intentionally left blank

Project name:	AMARUQ
Project#:	5000218009
Document #:	SPK_0010_PCH
by:	GH
chkd:	GP
appvd:	CB

ANIONIC POLYMER DOSING SKID

PROCESS DATASHEET

OIM manual section: 4.3.10.1

REFER TO 5000218009_PSDS_0010_PCH_VWT

This page is intentionally left blank

Project name: AMARUQ

Project#: 5000218009

Document #: SPK_0010_PCH

by: GH

chkd: GP

appvd: CB

ANIONIC POLYMER DOSING SKID

GENERAL ARRANGEMENT DRAWING

OIM manual section: 4.3.10.2

REFER TO 5000218009_GA_0010_PCH_VWT

This page is intentionally left blank

Project name:	AMARUQ
Project#:	5000218009
Document #:	SPK_0010_PCH
by:	GH
chkd:	GP
appvd:	CB

ANIONIC POLYMER DOSING SKID

PUMP(S)

OIM manual section: 4.3.10.3

This page is intentionally left blank

CS-999-007 : Identification sheet

VWTC PROJECT NUMBER:	5000218009	REV:	1
PROJECT NAME:	AEM AMARUQ	SUBMITTED TO (COMPANY):	AGNICO EAGLE MINES
ENGINEER:	Gabriel Hébert	SUBMITTED TO (RESPONSIBLE)	
PROJECT MANAGER:	Clément B	PROJECT NUM REFERENCE.:	
PHONE NUMBER:		LOT NUMBER:	

SUPPLIER	EQPT CODE	EQPT TAG NO	DIA	DESCRIPTION	INFO 1	INFO 2	INFO 3	APPLIC.	NOTE	REV
SEEPEX	ST-999-007	P9-524		ANIONIC POLYMER METERING PUMP	ANIONIC POLYMER DOSING SKID // Model BN // 60 - 670 LPH // 80 psi // Vertical installation // Rotate motor so that conduit box is on top // Burgmann mechanical seal // 316SS for wetted parts and NBR for seals // NPT inlet and outlet // TSE device //	Steel painted base plate // CW rotation // CW Marathon Motors 575V/3PH/60HZ		ANIONIC POLYMER DOSING SKID		
SEEPEX	ST-999-007	P9-525		ANIONIC POLYMER METERING PUMP	ANIONIC POLYMER DOSING SKID // Model BN // 60 - 670 LPH // 80 psi // Vertical installation // Rotate motor so that conduit box is on top // Burgmann mechanical seal // 316SS for wetted parts and NBR for seals // NPT inlet and outlet // TSE device //	Steel painted base plate // CW rotation // CW Marathon Motors 575V/3PH/60HZ		ANIONIC POLYMER DOSING SKID		
SEEPEX	ST-999-007	P9-526		ANIONIC POLYMER METERING PUMP	ANIONIC POLYMER DOSING SKID // Model BN // 60 - 670 LPH // 80 psi // Vertical installation // Rotate motor so that conduit box is on top // Burgmann mechanical seal // 316SS for wetted parts and NBR for seals // NPT inlet and outlet // TSE device //	Steel painted base plate // CW rotation // CW Marathon Motors 575V/3PH/60HZ		ANIONIC POLYMER DOSING SKID		

This page is intentionally left blank

SEEPEX.
ALL THINGS FLOW

4/23/2018	**Item 10 (cationic Polymer)**
qty.: 3	**Progressive cavity pump**
	BN 05-12

Application data

Conveyed product	Polymer
Flowability	flowable
Viscosity	low viscosity (<500 cP/mPas)
Solids content	not specified
Size of solids	not specified
Specific gravity	unknown, 1 kg/dm³ assumed
Product temperature	32°F - 113°F
pH value	5-9
Kind of operation	continuous
Operating hours	8h/day
Location	indoor, dry atmosphere
Altitude of installation	up to 1000 m assumed
Surrounding temperature	normal (32-113°F)

Performance data

	Capacity	**Pressure**	**Speed**	
	0.26 USGPM	80 psi	41 rpm	min
	3 USGPM	80 psi	390 rpm	max
Starting torque	30 lb.ft			
Req. power at pump shaft	0.75 HP			
Inlet pressure	flooded suction (up to 0,5bar)			
NPSHr	7 ft			

Tolerances according to SEEPEX standards.

Materials and executions

Installation	vertical, drive on top
Direction of rotation	counter clockwise (left)
Lantern - Design	with cover plates
Lantern - Material	EN-JL 1040 (gci-25)
Suction casing - Design	standard
Suction casing - Material	1.4408 / ASTM A351 grade CF8M
Pressure branch - Design	standard
Pressure branch - Material	1.4408 / ASTM A351 grade CF8M
Position of branch	position 1
Suction connection	1 1/2" NPT
Pressure connection	1 1/4" NPT
Joint - Design	pin joint with joint sleeve, grease filled
Joint - Material	standard
Joint - Universal joint sleeve: material	NBR - Perbunan
Coupling rod - Design	standard
Coupling rod - Material	1.6582 encapsulated
Rotor - Design	standard
Rotor - Material	1.4404 / AISI 316L
Rotor - Coating	ductile chromium coating
Stator - Design	standard with TSE, sensor sleeve 1.4404
Stator - Material	NBR - Perbunan
Shaft sealing	mechanical seal
Code	back-to-back GLRD - LA
Shaft diameter	30 mm
Make	Burgmann
Rotating/stationary seal face	SiC SiC
Elastomers	FPM - Viton

Spring	1.4571 / AISI 316Ti
Metal parts	1.4571 / AISI 316Ti
Type	MG1-G60 Q1Q1 VGG
Casing - material	1.4404 / AISI 316L
Casing - connection standard	NPT
Plug-in Shaft - Design	standard
Plug-in Shaft - Material	1.4404 / AISI 316L
Bolting - Design	completely stainless steel
Painting - Number of colors	single-colored standard
Painting - Painted components	1 complete combination
Painting - Color	Standard Enamel (SEEPEX Blue)

Drive

Type	Gear & Motor at freq. inv.
Make	Nord
Model	SK12VLF/140TC
Mounting position	V1
Ratio (i)	4.49

	Norm	**Min**	**Max**
Speed	401 rpm	41 rpm	390 rpm
Motor speed	1800 rpm	182 rpm	1751 rpm
Frequency	60 Hz	6 Hz	58 Hz

Make	Marathon Motors
Model	145THTN6060
Rated output	2 HP
Rated speed	1800 rpm
Starting	direct on frequency inverter
Explosion proof	Weatherproof
Efficiency class	IE1
Terminal box position acc. to supplier	not specified
Cable entry position acc. to supplier	not specified

Voltage	rated voltage 575V
Frequency	60Hz
Enclosure	TENV
Thermal class	F
Winding protection	Thermostats

The frequency inverter has to follow a linear U/f characteristic curve (constant torque).
It's essential to have a minimum overload capability of 150% for at least 3 seconds. (see technical data sheet)

Baseplate

Design	baseplate for block pump, design with side feet
Material	steel, painted
GPU Type Code	B-ST-LS

Dry running protection device (TSE)

Design	standard design, complete - sensor sleeve fitted to the stator of the pump with integrated temperature sensor - connection head (IP55) - separate TSE control device suitable for mounting inside a control panel
Voltage	110-115V/50-60Hz
Temperature coefficient	NTC

Material sensor sleeve	1.4404
Material connection head	aluminium

Packing

Type of packing	cardboard box (US)
Type of transport	truck / railway
Quantity of pumps per package	1 pump per package

Optional: Seal flush system

Design	SEEPEX standard double mechanical seal flush system: - Isolation valve - Strainer, 20 mesh - Needle valve - Pressure regulator, 10-125psi adjust - Solenoid valve, 120VAC, NC - ¼" NPT seal water connection plumbed to inlet of gland housing. - ¼" NPT drain connection plumbed to outlet of gland housing. Solenoid and needle valve located on the discharge.
Type	SEEPEX standard double acting mechanical seal flush system
Connection	1/8" NPT connection
Pressure Range	10 - 125 psi
Solenoid valve voltage	120V AC

Characteristic Curves
Size
05–12

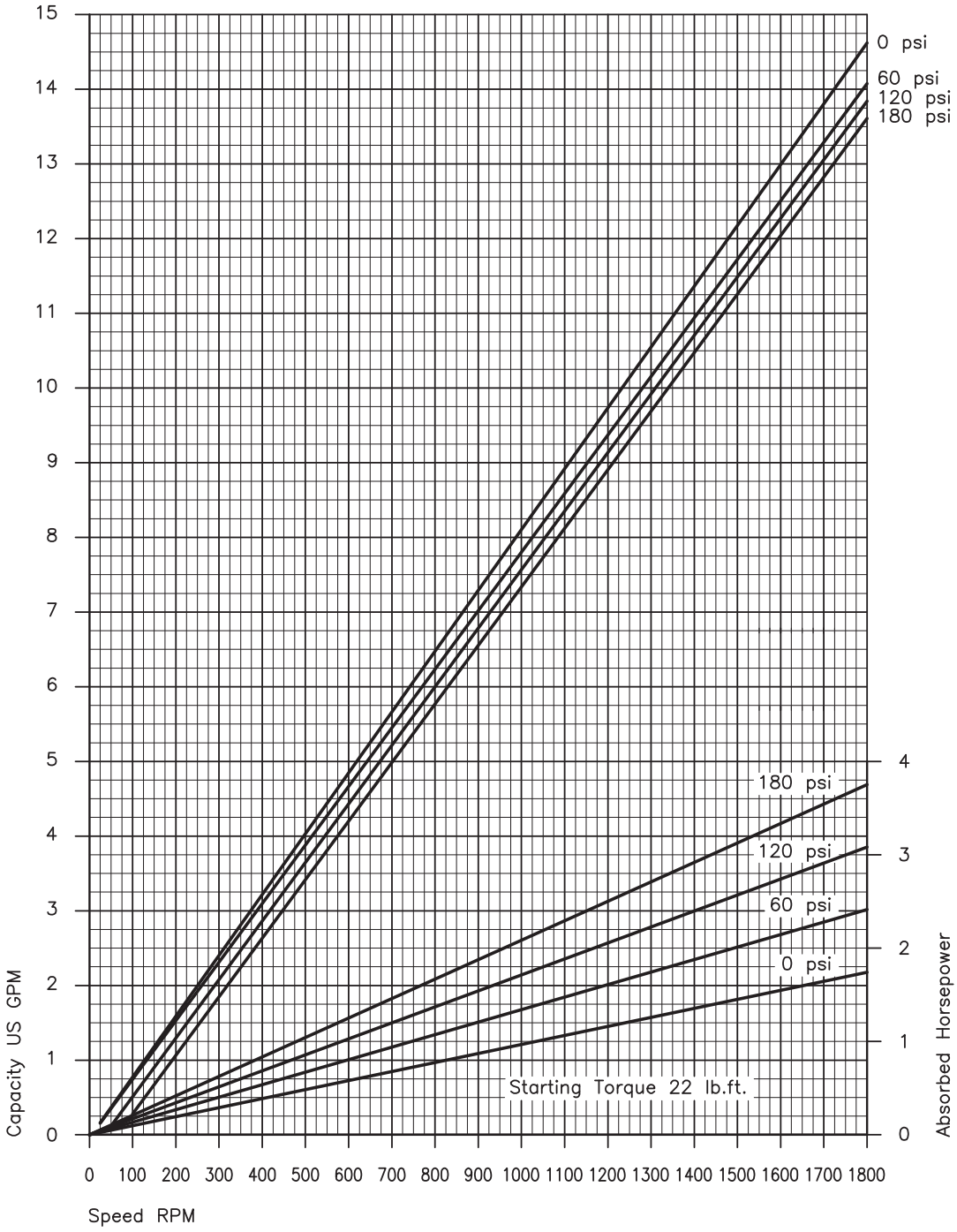

Values based upon water 68°F ; For notes on drive selection refer to PER

Copyright: This drawing is our property and patented for us according to the law of copyright and associated rights !

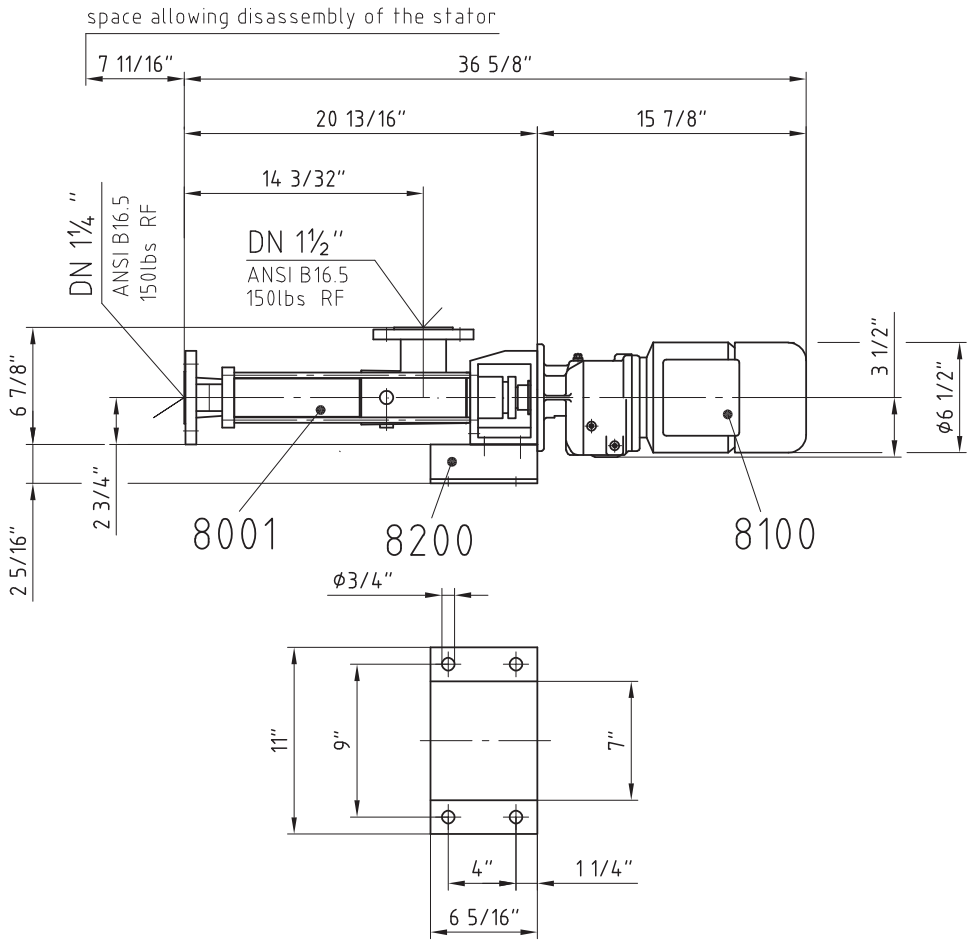

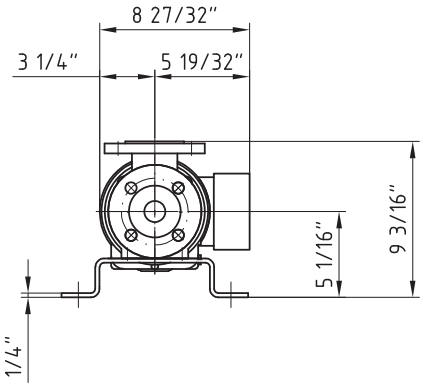

✳ design see pump data sheet

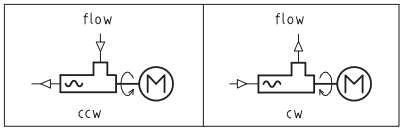

Quant.	Denomination	Item	Material	Note	Weight / kg
1	baseplate:	8200		Var.: 801-200/M500-C-100	4
1	drive: Nord Sk02F-80.	8100			18
1	pump: BN 05-12 / 1-6L	8001			14

seepex.com

seepex, Inc.
511 Speedway Drive
Enon, OH 45323
www.seepex.com

		Name	Day	Scale	Weight	Denomination
2002	Drawn	her	18.10.	◎▷ 1:10	36kg	dimensional drawing
	Checked	goe	18.10.	EDP-No. L:\Lfdzchng.520\52168.dwg		Drawing-no. 262-C18/M500-C-146A4

changes of dimensions reserved

This page is intentionally left blank

Project name: AMARUQ

Project#: 5000218009

Document #: SPK_0010_PCH

by: GH

chkd: GP

appvd: CB

ANIONIC POLYMER DOSING SKID

VALVES

OIM manual section: 4.3.10.4

This page is intentionally left blank

CS-301-100 : Identification sheet

VWTC PROJECT NUMBER:	5000218009	REV:	1
PROJECT NAME:	AEM AMARUQ	SUBMITTED TO (COMPANY):	AGNICO EAGLE MINES
ENGINEER:	Gabriel Hébert	SUBMITTED TO (RESPONSIBLE)	
PROJECT MANAGER:	Clément B	PROJECT NUM REFERENCE.:	
PHONE NUMBER:		LOT NUMBER:	

SUPPLIER	EQPT CODE	EQPT TAG NO	DIA	DESCRIPTION	INFO 1	INFO 2	INFO 3	APPLIC.	NOTE	REV
CHEMLINE	VABLPV200249	P9-524-V003	DIA: 13 mm (1/2")	CLEANING VALVE	TYPE: BALL VALVE//MANUFACTURER : CHEMLINE//MODEL : Type21-A-005-E-C//CONNECTION TYPE : COMBO | 13 mm (1/2")//BODY : PVC (ASTM D1784)// SEAL | SEAT :PTFE | EPDM// STEM : PVC			ANIONIC POLYMER DOSING SKID		
CHEMLINE	VABLPV200249	P9-525-V003	DIA: 13 mm (1/2")	CLEANING VALVE	TYPE: BALL VALVE//MANUFACTURER : CHEMLINE//MODEL : Type21-A-005-E-C//CONNECTION TYPE : COMBO | 13 mm (1/2")//BODY : PVC (ASTM D1784)// SEAL | SEAT :PTFE | EPDM// STEM : PVC			ANIONIC POLYMER DOSING SKID		
CHEMLINE	VABLPV200249	P9-526-V003	DIA: 13 mm (1/2")	CLEANING VALVE	TYPE: BALL VALVE//MANUFACTURER : CHEMLINE//MODEL : Type21-A-005-E-C//CONNECTION TYPE : COMBO | 13 mm (1/2")//BODY : PVC (ASTM D1784)// SEAL | SEAT :PTFE | EPDM// STEM : PVC			ANIONIC POLYMER DOSING SKID		

SUPPLIER	EQPT CODE	EQPT TAG NO	DIA	DESCRIPTION	INFO 1	INFO 2	INFO 3	APPLIC.	NOTE	REV
CHEMLINE	VABLPV200251	P9-524-V005	DIA: 25 mm (1")	ISOLATION VALVE (DISCHARGE)	TYPE: BALL VALVE//MANUFACTURER : CHEMLINE//MODEL : Type21-A-010-E-S//CONNECTION TYPE : SOCKET | 25 mm (1")//BODY : PVC (ASTM D1784)// SEAL | SEAT :PTFE | EPDM// STEM : PVC			ANIONIC POLYMER DOSING SKID		
CHEMLINE	VABLPV200251	P9-525-V005	DIA: 25 mm (1")	ISOLATION VALVE (DISCHARGE)	TYPE: BALL VALVE//MANUFACTURER : CHEMLINE//MODEL : Type21-A-010-E-S//CONNECTION TYPE : SOCKET | 25 mm (1")//BODY : PVC (ASTM D1784)// SEAL | SEAT :PTFE | EPDM// STEM : PVC			ANIONIC POLYMER DOSING SKID		
CHEMLINE	VABLPV200251	P9-526-V005	DIA: 25 mm (1")	ISOLATION VALVE (DISCHARGE)	TYPE: BALL VALVE//MANUFACTURER : CHEMLINE//MODEL : Type21-A-010-E-S//CONNECTION TYPE : SOCKET | 25 mm (1")//BODY : PVC (ASTM D1784)// SEAL | SEAT :PTFE | EPDM// STEM : PVC			ANIONIC POLYMER DOSING SKID		
CHEMLINE	VABLPV200251	V9-523	DIA: 25 mm (1")	ISOLATION VALVE (DISCHARGE)	TYPE: BALL VALVE//MANUFACTURER : CHEMLINE//MODEL : Type21-A-010-E-S//CONNECTION TYPE : SOCKET | 25 mm (1")//BODY : PVC (ASTM D1784)// SEAL | SEAT :PTFE | EPDM// STEM : PVC			ANIONIC POLYMER DOSING SKID		
CHEMLINE	VABLPV200251	V9-524	DIA: 25 mm (1")	ISOLATION VALVE (DISCHARGE)	TYPE: BALL VALVE//MANUFACTURER : CHEMLINE//MODEL : Type21-A-010-E-S//CONNECTION TYPE : SOCKET | 25 mm (1")//BODY : PVC (ASTM D1784)// SEAL | SEAT :PTFE | EPDM// STEM : PVC			ANIONIC POLYMER DOSING SKID		

SUPPLIER	EQPT CODE	EQPT TAG NO	DIA	DESCRIPTION	INFO 1	INFO 2	INFO 3	APPLIC.	NOTE	REV
CHEMLINE	VABLPV200251	V9-525	DIA: 25 mm (1")	ISOLATION VALVE (DISCHARGE)	TYPE: BALL VALVE//MANUFACTURER : CHEMLINE//MODEL : Type21-A-010-E-S//CONNECTION TYPE : SOCKET | 25 mm (1")//BODY : PVC (ASTM D1784)// SEAL | SEAT :PTFE | EPDM// STEM : PVC			ANIONIC POLYMER DOSING SKID		
CHEMLINE	VABLPV200251	V9-526	DIA: 25 mm (1")	ISOLATION VALVE (DISCHARGE)	TYPE: BALL VALVE//MANUFACTURER : CHEMLINE//MODEL : Type21-A-010-E-S//CONNECTION TYPE : SOCKET | 25 mm (1")//BODY : PVC (ASTM D1784)// SEAL | SEAT :PTFE | EPDM// STEM : PVC			ANIONIC POLYMER DOSING SKID		
CHEMLINE	VABLPV200253	P9-524-V001	DIA: 38 mm (1-1/2")	ISOLATION VALVE (SUCTION)	TYPE: BALL VALVE//MANUFACTURER : CHEMLINE//MODEL : Type21-A-015-E-S//CONNECTION TYPE : FLANGED | N/A//BODY : PVC (ASTM D1784)// SEAL | SEAT :PTFE | EPDM// STEM : PVC			ANIONIC POLYMER DOSING SKID		
CHEMLINE	VABLPV200253	P9-524-V002	DIA: 38 mm (1-1/2")	ISOLATION VALVE (SUCTION)	TYPE: BALL VALVE//MANUFACTURER : CHEMLINE//MODEL : Type21-A-015-E-S//CONNECTION TYPE : FLANGED | N/A//BODY : PVC (ASTM D1784)// SEAL | SEAT :PTFE | EPDM// STEM : PVC			ANIONIC POLYMER DOSING SKID		
CHEMLINE	VABLPV200253	P9-525-V001	DIA: 38 mm (1-1/2")	ISOLATION VALVE (SUCTION)	TYPE: BALL VALVE//MANUFACTURER : CHEMLINE//MODEL : Type21-A-015-E-S//CONNECTION TYPE : FLANGED | N/A//BODY : PVC (ASTM D1784)// SEAL | SEAT :PTFE | EPDM// STEM : PVC			ANIONIC POLYMER DOSING SKID		

SUPPLIER	EQPT CODE	EQPT TAG NO	DIA	DESCRIPTION	INFO 1	INFO 2	INFO 3	APPLIC.	NOTE	REV
CHEMLINE	VABLPV200253	P9-525-V002	DIA: 38 mm (1-1/2")	ISOLATION VALVE (SUCTION)	TYPE: BALL VALVE//MANUFACTURER : CHEMLINE//MODEL : Type21-A-015-E-S//CONNECTION TYPE : FLANGED | N/A//BODY : PVC (ASTM D1784)// SEAL | SEAT :PTFE | EPDM// STEM : PVC			ANIONIC POLYMER DOSING SKID		
CHEMLINE	VABLPV200253	P9-526-V001	DIA: 38 mm (1-1/2")	ISOLATION VALVE (SUCTION)	TYPE: BALL VALVE//MANUFACTURER : CHEMLINE//MODEL : Type21-A-015-E-S//CONNECTION TYPE : FLANGED | N/A//BODY : PVC (ASTM D1784)// SEAL | SEAT :PTFE | EPDM// STEM : PVC			ANIONIC POLYMER DOSING SKID		
CHEMLINE	VABLPV200253	P9-526-V002	DIA: 38 mm (1-1/2")	ISOLATION VALVE (SUCTION)	TYPE: BALL VALVE//MANUFACTURER : CHEMLINE//MODEL : Type21-A-015-E-S//CONNECTION TYPE : FLANGED | N/A//BODY : PVC (ASTM D1784)// SEAL | SEAT :PTFE | EPDM// STEM : PVC			ANIONIC POLYMER DOSING SKID		
CHEMLINE	VABLPV200253	V9-522	DIA: 38 mm (1-1/2")	ISOLATION VALVE (SUCTION)	TYPE: BALL VALVE//MANUFACTURER : CHEMLINE//MODEL : Type21-A-015-E-S//CONNECTION TYPE : FLANGED | N/A//BODY : PVC (ASTM D1784)// SEAL | SEAT :PTFE | EPDM// STEM : PVC			ANIONIC POLYMER DOSING SKID		

PDF Published March 1, 2013

Type 21 Ball Valves

CHEMLINE PLASTICS
SUPERIOR FLOW SOLUTIONS

The Chemline Type 21 True Union Ball valve incorporates state of the art features for long term performance. This is a full port, full blocking True Union valve pressure rated at 16 bar (230 psi)[4]. Double stem o-rings and Safety Shear stem design provide for a high degree of safety on hazardous fluid applications. All sizes have an ISO standard actuator mounting platform integral to the valve body. This provides for sturdy and secure mounting of pneumatic or electric actuators.

PVC | CPVC | PP | PVDF

CRN Registered Consult Chemline

NSF[5] Certified to NSF/ANSI 61

SERIES: Type 21

SIZES: 3/8" – 4"

ENDS: Socket, Threaded, Flanged, Butt[1] or ChemFlare™

SEATS: PTFE

SEALS[2]: EPDM, FKM (Viton®), CPE[3]

features

Pressure rated to 230 psi[4]
- Provides a high factor of safety

Integral Actuator Mounting Platform
- Actuation is easy. Electric or pneumatic actuators may be mounted in the field.

Full Port
- High capacity and low pressure drops

Fully Blocking
- Downstream union nut may be safely disassembled for piping maintenance while valve is closed off under full system pressure

Built-In Spanner Wrench
- Top of the handle is designed to be used as a tool for accessing internal parts

Safety Shear Stem Design
- Stem has double o-rings
- Designed to hold full pressure even if stem breaks due to excessive torque

High Chemical Resistant Material
- PVC and CPVC compounds have an "A" chemical resistance rating as per ASTM D-1784. They have outperformed other PVC and CPVC compounds on aggressive chemicals.

[1] Butt ends for fusion to Chemline metric PP, PVDF or ECTFE (Halar®) piping.
[2] Other materials are available.
[3] CPE=Chlorinated Polyethylene.
[4] PVC, CPVC and PVDF 1/2" to 2" are rated at 230 psi; 2-1/2" to 4" and all size PP valves are rated at 150 psi at 20°C.
[5] PVC valves with EPDM or FKM (Viton®) seals are certified under NSF/ANSI Standard 61 for contact with drinking water.

03/13 ©Chemline Plastics Limited 2013
Chemline is a registered trade mark of Chemline Plastics Limited

Type 21 Ball Valves

features

Double Stem O-Rings – Safety Shear Design

- Upper o-ring groove is deeper than lower. In case of excessive stem torque, stem will shear at the upper groove, leaving the inner o-ring intact to seal against full line pressure.

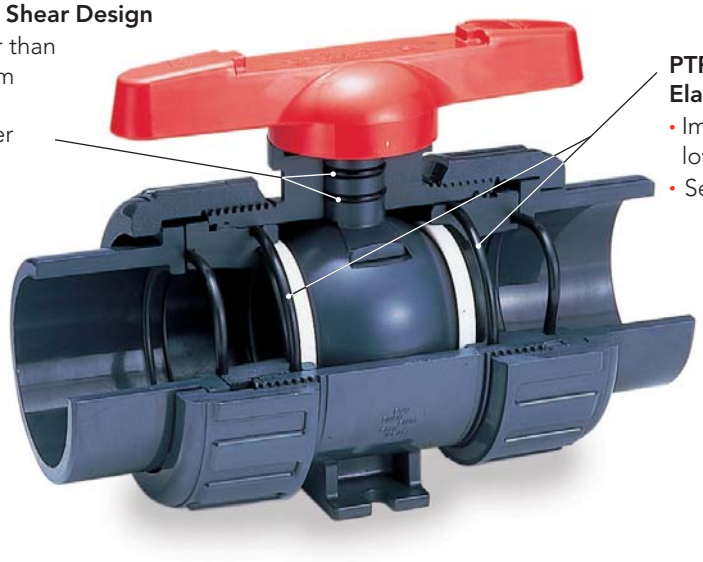

PTFE Seats have Elastomer Cushions

- Improved sealing while lowering stem torques
- Self adjusts for seat wear

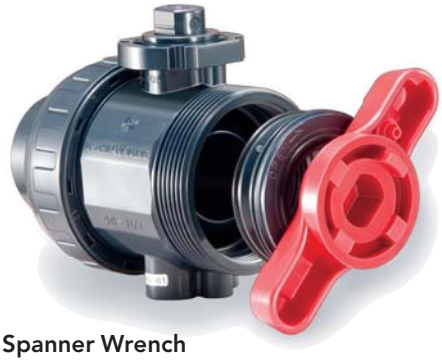

Built in Spanner Wrench

- For removing or tightening the seat carrier
- All parts are replaceable

Integral Actuator Mounting Platform

- Actuation is easy. Electric or pneumatic actuators may be mounted in the field. Simply pull off the handle to reveal a standard ISO 5211 mounting platform which accepts bolt-on hardware.

Fully Blocking

- Downstream pipe may be removed while upstream side is still pressurized. This may be done with valve installed in either direction.

Base Mounting Pad

- Optional threaded inserts allow valves to be securely anchored
- Supplied standard with actuated valves

Type 21 Ball Valves

options + accessories

ChemFlare™ Ends

- For connection to PFA tube. Leak-free connections for difficult services such as sodium hypochlorite

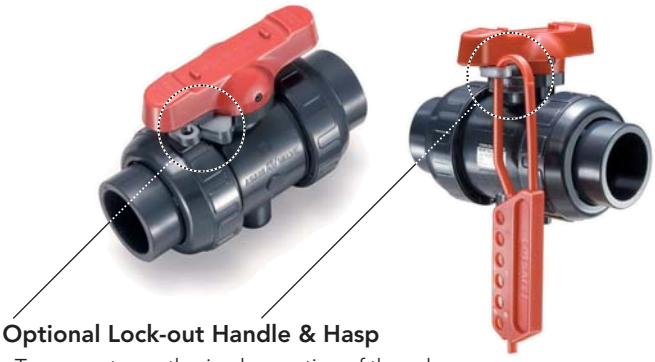

Optional Lock-out Handle & Hasp

- To prevent unauthorized operation of the valve
- Used during maintenance shut-downs

One-piece moulded PVC and CPVC 6" socket ends

- Allows installation of 4" valve in 6" line
- Factory moulded, not fabricated with couplings and reducers cemented together
- Fixed to valve mechanically just like the one-piece moulded factory flanges

Different Colour Handles

- Choose a handle colour other than standard red for colour coding different services

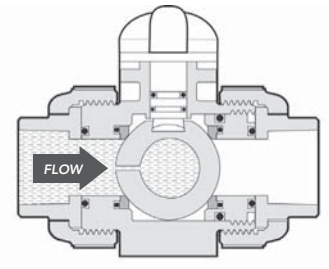

Vented Ball

- For sodium hypochlorite services at any concentration
- Valve shown in closed position

electric + pneumatic actuation

Pneumatic and Electric Actuators

- A complete range of actuators and control accessories are available, mounted to valves using PPG plastic brackets and stainless steel couplings. Refer to separate data sheets.

Electromni® Electric

Q Series Electric

A Series Electric

V Series Electric
with Local Control Station

PA Series Pneumatic

Type 21 Ball Valves

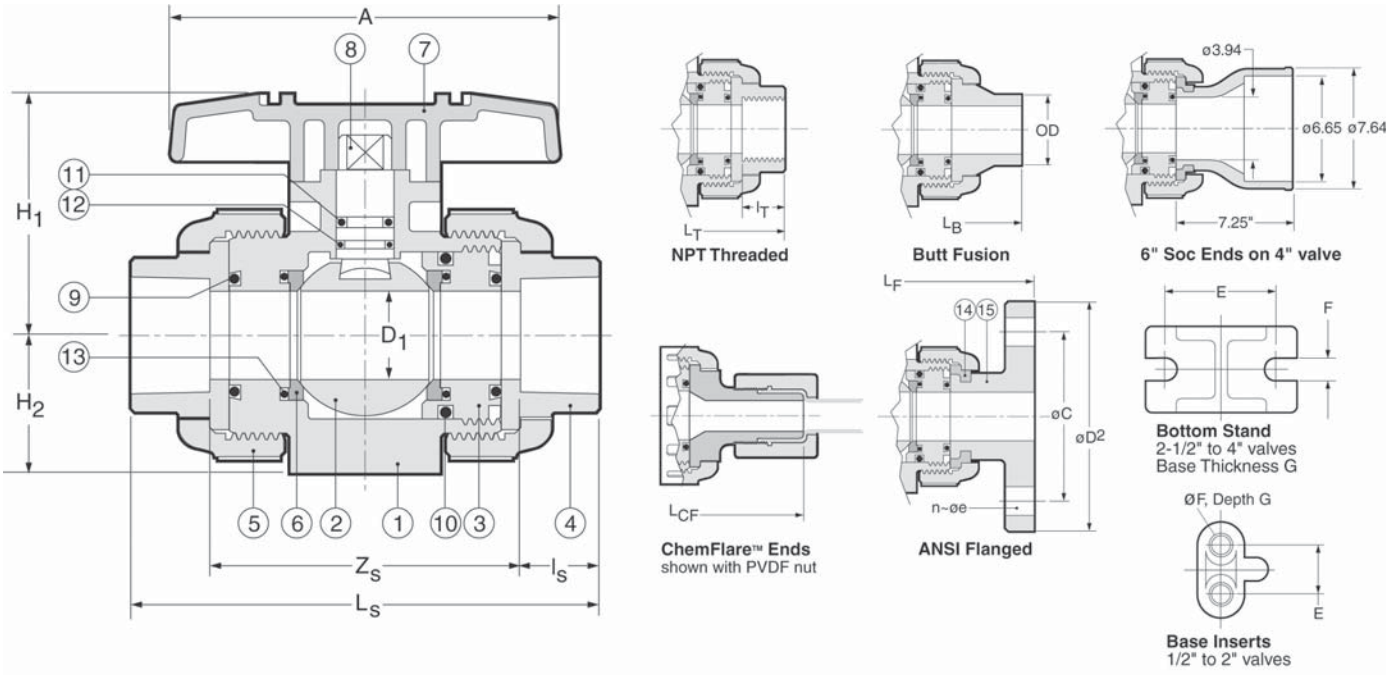

PARTS

▲ Recommended Spare Parts

No.	Part	Pcs.	Materials
1	Body	1	PVC, CPVC, PP, PVDF
2	Ball	1	PVC, CPVC, PP, PVDF
3	Carrier[1]	1/2	PVC, CPVC, PP, PVDF
4	End Connector	2	PVC, CPVC, PP, PVDF
5	Union Nut	2	PVC, CPVC, PP, PVDF
6▲	Ball Seat	2	PTFE
7	Handle	1	ABS

[1] 1 carrier for sizes 1/2" to 2", 2 carriers for sizes 2-1/2" to 4"
[2] EPDM seals standard with PVC, CPVC, PP; FKM (Viton®) with PVDF valves
[3] 2 pcs 1/2" to 2", 6 pcs 2-1/2" to 4"

PARTS

▲ Recommended Spare Parts

No.	Part	Pcs.	Materials
8	Stem	1	PVC, CPVC, PP, PVDF
9▲	Face O-Ring[2]	2	EPDM, FKM (Viton®)
10▲	Carrier O-Ring[2]	2	EPDM, FKM (Viton®)
11▲	Upper Thicker Stem O-Ring[2]	1	EPDM, FKM (Viton®)
12▲	Lower Thinner Stem O-Ring[2]	1	EPDM, FKM (Viton®)
13	Seat Cushion[2]	2	EPDM, FKM (Viton®)
14	Flange Retainer[3]	2/6	PVDF
15	Flange	2	PVC, CPVC, PP, PVDF

DIMENSIONS INCHES

					End Connections														Valve Base		
					Socket			Threaded		Factory Flanged					Butt		ChemFlare™				
Size	D Bore	A	H_1	H_2	L_S	Z_S	l_S	l_T	L_T	L_F	D_2	C	n	e	L_B	OD	L_{CF}	Tube[4]	E	F[5]	G
1/2"	.59	3.6	2.03	1.14	4.45	2.70	.875	.64	4.02	5.63	3.50	2.38	4	.62	4.88	.79	6.12	1/2"	.75	.29	.43
3/4"	.79	3.9	2.34	1.38	5.08	3.08	1.00	.65	4.72	6.77	3.88	2.75	4	.62	5.67	.98	6.52	3/4"	.75	.29	.43
1"	.98	4.3	2.68	1.54	5.75	3.50	1.13	.81	5.16	7.36	4.25	3.12	4	.62	6.06	1.26	7.26	1"	.75	.29	.43
1-1/4"	1.22	4.8	3.17	1.85	6.46	5.21	1.25	.85	5.91	7.48	4.62	3.50	4	.62	6.85	1.57	9.58	1-1/4"	1.18	.35	.59
1-1/2"	1.57	5.2	3.50	2.17	7.24	4.49	1.38	.85	6.42	8.35	5.00	3.88	4	.62	7.64	1.97	–	–	1.18	.35	.59
2"	2.01	6.3	4.02	2.60	8.23	5.23	1.50	1.90	7.76	9.21	6.00	4.75	4	.75	8.82	2.48	–	–	1.18	.35	.59
2-1/2"	2.28	7.87	4.96	2.83	9.45	5.95	1.75	1.21	8.46	10.20	7.00	5.49	4	.75	9.72	2.95	–	–	1.89	.35	.23
3"	2.70	9.45	5.51	3.35	11.10	7.35	1.88	1.30	10.39	11.97	7.50	6.00	4	.75	11.61	3.54	–	–	2.17	.43	.28
4"	3.54	11.81	7.01	4.33	13.88	9.87	2.00	1.38	14.17	14.65	9.00	7.50	8	.75	14.76	4.33	–	–	2.56	.43	.32

[4] ChemFlare™ ends are available for reduced tube sizes down to 1/4".
[5] Optional threaded inserts: 1/2" to 1" valves – UNC 1/4"-20; 1-1/4" to 2" valves – UNC 5/16"-18. 'Recoil' brand inserts require drilling before insertion.

Type 21 Ball Valves

WORKING PRESSURES PSI, Water, Non-Shock

VACUUM RATING • 29.9 inches mercury

Size	PVC			CPVC						PP			PVDF				
	20°C 68°F	40°C 104°F	50°C 122°F	20°C 68°F	40°C 104°F	50°C 122°F	60°C 140°F	80°C 176°F	90°C 194°F	20°C 68°F	60°C 140°F	80°C 176°F	20°C 68°F	40°C 104°F	60°C 140°F	80°C 176°F	100°C 212°F
1/2"– 2"	230	165	150	230	165	150	120	75	55	150	85	55	230	185	150	110	85
2-1/2"– 4"	150	150	150	150	150	150	120	75	55	150	70	40	150	150	150	110	85

Temperature Ranges: PVC 0 to 60°C (32 to 140°F), **CPVC** 0 to 95°C (32 to 203°F), **PP** –20 to 80°C (–4 to 176°F), **PVDF** –40 to 100°C (–40 to 212°F)

WEIGHTS LB. THREADED or SOCKET

WEIGHTS LB. FLANGED

Size	PVC	CPVC	PP	PVDF	PVC	CPVC	PP	PVDF
1/2"	0.4	0.4	0.4	0.4	0.9	0.9	0.7	1.1
3/4"	0.7	0.7	0.7	0.9	1.3	1.5	1.1	1.5
1"	0.9	1.1	0.9	1.1	1.8	2.0	1.5	2.2
1-1/4"	1.5	1.5	1.3	1.8	2.6	2.9	2.0	3.3
1-1/2"	2.4	2.6	1.5	2.9	3.7	4.0	2.6	4.4
2"	4.0	4.4	2.6	4.9	5.5	6.0	4.0	8.2
2-1/2"	5.1	5.5	3.7	6.2	7.3	7.7	5.3	8.8
3"	8.2	8.8	5.5	9.9	10.1	11.0	7.5	12.6
4"	19.4	21.8	13.2	24.9	21.6	23.4	15.4	26.7

Cv VALUES VS. BALL ANGLE

Size	0%	25%	50%	75%	100%
1/2"	0	0.35	1.3	5.5	14.
3/4"	0	0.73	2.8	11.5	29.
1"	0	1.2	4.5	18.6	47.
1-1/4"	0	1.8	6.8	28.4	72.
1-1/2"	0	3.9	14.7	61.2	155.
2"	0	4.8	18.0	75.0	190.
2-1/2"	0	9.1	34.7	144.0	365.
3"	0	10.2	39.0	162.0	410.
4"	0	17.0	64.6	269.0	680.

SAMPLE SPECIFICATION

1. All True Union Ball Valves in PVC, CPVC, PP or PVDF shall be Chemline Type 21 or equal sizes 1/2" to 2" in PVC, CPVC, and PVDF rated at 230 psi and in PP 150 psi maximum working pressure. Sizes 2-1/2", 3" and 4" rated at 150 psi maximum working pressure with EPDM, FKM (Viton®) or CPE seals. Ball seats shall be PTFE with elastomer cushions for closure with minimum stem torques.
2. All valves will have Safety Shear stem design, blowout-proof with double o-rings for safety. The top o-ring groove shall be deeper so that if the stem breaks off under excessive torque the lower o-ring will remain intact and the valve will hold pressure.
3. All valves shall be full port and two-way blocking design.
4. All valves will be CRN (Canadian Registration Number) registered with TSSA.
5. PVC valves with EPDM or FKM (Viton®) seals shall be certified under NSF/ANSI Standard 61 for contact with drinking water.
6. All valves shall have chemical resistant labels permanently marked with manufacturing number to provide production level traceability.
7. PVC compound shall have an ASTM cell classification 12454-A with a minimum suffix "A" designation for chemical resistance as per ASTM D-1784 (CSA report LO 4000-172).
8. CPVC compound shall have an ASTM cell classification 23567-A with a minimum suffix "A" designation for chemical resistance as per ASTM D-1784.
9. PP material will conform to ASTM D-4101 PP 021 B 67272 material requirements.
10. PVDF material shall be unpigmented conforming to ASTM D-3222 material requirements and to be USDA Title 21 Chapter 1 Part 177. 2510 requirements for contact with food.
11. Socket ends in PVC and CPVC shall be Schedule 80 and conform to ASTM D-2467.
12. Threaded ends shall be Schedule 80 and conform to ASTM D-2464.
13. Butt fusion ends in PP or PVDF will be compatible with Chemline PP or PVDF metric piping systems.
14. Flanged ends shall be ANSI Class 150 one-piece factory moulded (not fabricated) to ensure maximum strength and close tolerance end to end dimensions.

ORDERING EXAMPLE

Chemline True Union Ball Valves	21	A	020	E	S
Body Material	**A** – PVC **B** – PP	**C** – CPVC **K** – PVDF			
Size[1]	**002** – 1/4" **010** – 1" **025** – 2-1/2"	**003** – 3/8" **012** – 1-1/4" **030** – 3"	**005** – 1/2" **015** – 1-1/2" **040** – 4"	**007** – 3/4" **020** – 2" **060** – 6"	
Seals	**E** – EPDM	**V** – FKM (Viton®)	**C** – CPE	**B** – Nitrile	**A** – Aflas®
Ends	**S** – Socket	**T** – Threaded	**F** – Flanged	**B** – Butt[2]	**CF** – ChemFlare™

Example: Chemline Type 21 True Union Ball Valve, PVC, 2", with EPDM seals, socket ends.

[1] 1/4" is normally the 3/8" valve reduced. 6" is 4" valve with 6" end connections.

[2] PP, PVDF and ECTFE (Halar®) metric butt fusion ends (1/2" to 4") connect to Chemline PP, PVDF and ECTFE (Halar®) piping systems.

OTHER OPTIONS & ACCESSORIES

- **Alternate O-Ring Seals**
- **Stem Extensions** made to any length
- **Limit Switches** – For open and/or closed position indication
- **Municipal Operating Nut**
- **Lubrication-free Valves** – Factory clean room assembled
- **Vented Ball** – For sodium hypochlorite applications

CHEMLINE PLASTICS
SUPERIOR FLOW SOLUTIONS

55 Guardsman Road, Thornhill, ON, L3T 6L2, Canada | ISO 9001:2008 Certified
tel.905.889.7890 | fax.905.889.8553 | request@chemline.com | chemline.com

This page is intentionally left blank

CS-302-100 : Identification sheet

VWTC PROJECT NUMBER:	5000218009	REV:	1
PROJECT NAME:	AEM AMARUQ	SUBMITTED TO (COMPANY):	AGNICO EAGLE MINES
ENGINEER:	Gabriel Hébert	SUBMITTED TO (RESPONSIBLE)	
PROJECT MANAGER:	Clément B	PROJECT NUM REFERENCE.:	
PHONE NUMBER:		LOT NUMBER:	

SUPPLIER	EQPT CODE	EQPT TAG NO	DIA	DESCRIPTION	INFO 1	INFO 2	INFO 3	APPLIC.	NOTE	REV
CHEMLINE	VANRPV302912	CV15-011	DIA: 25 mm (1")	CHECK VALVE - CARRIER WATER	TYPE: CHECK | 150 PSI//MANUFACTURER : CHEMLINE//MODEL : BTA010EC//CONNECTION TYPE :COMBO | 1"//BODY : PVC// SEAL | SEAT :EPDM | // STEM : N/A			ANIONIC POLYMER DOSING SKID		
CHEMLINE	VANRPV302912	CV15-021	DIA: 25 mm (1")	CHECK VALVE - CARRIER WATER	TYPE: CHECK | 150 PSI//MANUFACTURER : CHEMLINE//MODEL : BTA010EC//CONNECTION TYPE :COMBO | 1"//BODY : PVC// SEAL | SEAT :EPDM | // STEM : N/A			ANIONIC POLYMER DOSING SKID		

This page is intentionally left blank

PDF Published March 1, 2013

Ball Check & Foot Valves

CHEMLINE PLASTICS
SUPERIOR FLOW SOLUTIONS

The economical and versatile Chemline Ball Check Valve is the most popular type of non-return valves for pipe sizes under 6". A wide selection of body and seat materials, and end connections are available for many different applications. It has good flow capacity and will handle many slurry and suspended solid services. This valve works in both horizontal and vertical lines. The Foot Valve is for end of line services such as sumps.

PVC | CPVC | PP | PVDF

CRN Registered Consult Chemline

NSF[3] Certified to NSF/ANSI 61

SERIES: BT: True Union Check
BC: Single Union Check
FT: True Union Check
FV: Single Union Check

SIZES: 1/2" – 4"

ENDS: Threaded, Socket, Flanged, Butt[1] or ChemFlare™[2]

SEAT/SEALS: EPDM, FKM (Viton®), PTFE coated FKM (Viton®)

features

- **True Union to 2"**
- **Full Port to 4"**
- **NSF Certified[3]**
- **Built-in Union Design** – For easy installation and maintenance
- **Free Floating Ball** – The only moving part
- **Uniseat/Seal** – Easily removable
- **May be used either horizontally or vertically**
- **Excellent flow characteristics**
- **Low seating and opening pressures**

True Union Check
1/2" to 2" in all materials

Single Union Check
1/2" to 4" in PVC
2-1/2" to 4" in CPVC, PP and PVDF

Foot Valve is light weight and has a low profile basket

[1] PP and PVDF Butt fusion ends (available 1/2" to 2") connect to Chemline PP and PVDF piping systems.
[2] For ChemFlare™ end connectors, consult Chemline.
[3] PVC valves with EPDM or FKM (Viton®) seals are certified under NSF/ANSI Standard 61 for contact with drinking water.

03/13 ©Chemline Plastics Limited 2013
Chemline is a registered trade mark of Chemline Plastics Limited

Ball Check Valves

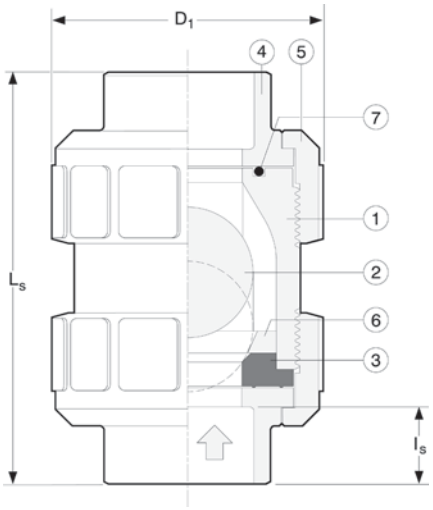

True Union Valve

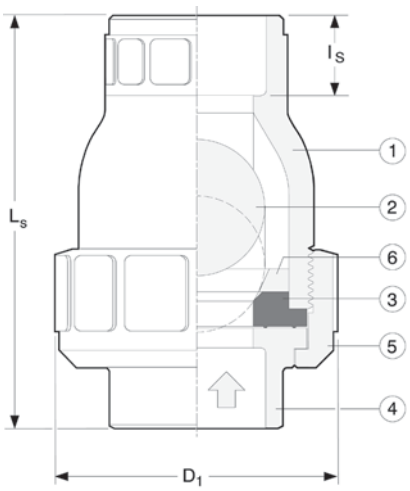

Single Union Valve

PARTS

▲ Recommended Spare Parts

No.	Part	Pcs. T/U	Pcs. S/U	Materials
1	Body	1	1	PVC, CPVC, PP, PVDF
2	Ball	1	1	PVC, CPVC, PP, PVDF
3▲	Uniseat/Seal[1]	1	1	EPDM, FKM(Viton®), PTFE coated FKM (Viton®)
4	End Connector	2	1	PVC, CPVC, PP, PVDF
5	Union Nut	2	1	PVC, CPVC, PP, PVDF
6	Stop Ring	1	1	PVC, CPVC, PP, PVDF
7	Face O-Ring	1	1	EPDM, FKM(Viton®)
9	Flange Retainer[2]	2	1	PVDF
10	Factory Flange[3]	2	1	PVC, CPVC, PP, PVDF

[1] Standard seals are EPDM in PVC, CPVC and PP valves, PTFE coated FKM (Viton®) in PVDF valves. Coating is .002" thick.

[2] True Union: 2 pcs 1/2" to 2", 6 pcs 1-1/2" to 4" Single Union: 1 pcs 1/2" to 2", 3 pcs 2-1/2" to 4".

[3] True Union flanged valves have two factory flanges. Single Union valves have one factory flange and one fabricated flange. Consult Chemline for details on fabricated type.

UNION END CONNECTIONS

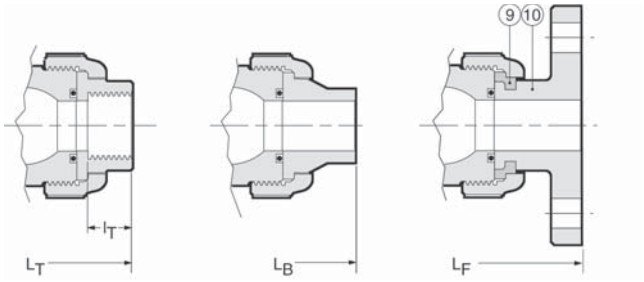

NPT Threaded

Butt Fusion PP and PVDF

Factory Flanged

DIMENSIONS INCHES

WEIGHTS LB.

Size	D_1	I_s	I_T	True Union PVC & CPVC L_T	L_S	L_F	True Union PP & PVDF L_T	L_B	L_F	Single Union PVC L_T	L_S	L_F	True Union Socket or Butt PVC	CPVC	PP	PVDF	Single Union PVC
1/2"	1.9	0.69	0.59	3.4	3.4	5.1	3.4	4.0	5.1	3.2	3.4	5.6	0.3	0.3	0.2	0.3	0.2
3/4"	2.4	0.72	0.67	4.1	3.9	6.1	4.1	4.4	6.1	3.8	3.7	6.6	0.5	0.5	0.3	0.6	0.4
1"	2.8	0.88	0.79	4.5	4.4	6.5	4.5	4.8	6.5	4.2	4.3	7.3	0.7	0.8	0.4	0.9	0.6
1-1/4"	3.1	0.94	0.87	5.0	4.9	6.6	5.0	5.9	6.6	6.2	6.3	12.3	1.1	1.2	0.7	1.5	1.5
1-1/2"	3.7	1.09	0.98	5.9	5.9	7.6	5.9	5.8	7.6	5.6	5.7	9.1	1.6	1.7	1.0	2.0	1.3
2"	4.2	1.16	1.10	7.0	6.8	8.4	7.0	6.5	8.4	6.5	6.5	10.5	2.2	2.4	1.4	2.7	1.8

DIMENSIONS INCHES

WEIGHTS LB.

Size	D_1	I_s[4]	I_T	Single Union PVC & CPVC L_T	L_S	L_F	Single Union PP & PVDF L_T	L_B	L_F	Single Union PVC	CPVC	PP	PVDF
2-1/2"	6.0	2.10	2.17	10.0	10.4	14.3	8.7	*	*	5.7	6.2	*	*
3"	6.0	1.88	1.38	8.7	9.6	12.2	8.7	*	*	5.1	5.5	3.3	6.3
4"	8.3	2.00	1.77	12.1	12.2	15.0	12.1	*	*	12.7	13.9	8.1	15.7

[4] Consult Chemline.

Foot Valves

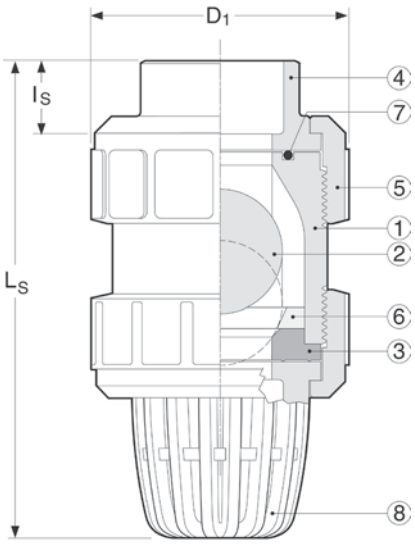

True Union Valve

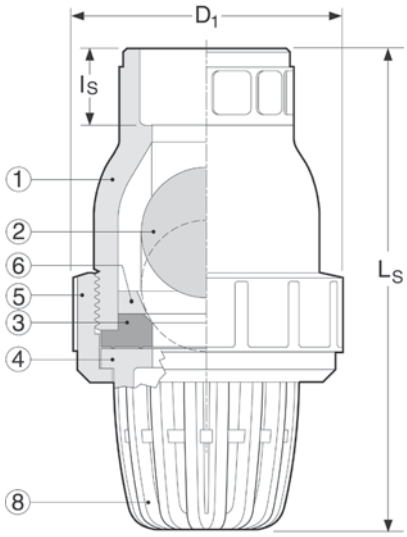

Single Union Valve

PARTS

▲ Recommended Spare Parts

No.	Part	Pcs. T/U	Pcs. S/U	Materials
1	Body	1	1	PVC, CPVC, PP, PVDF
2	Ball	1	1	PVC, CPVC, PP, PVDF
3▲	Uniseat/Seal[1]	1	1	EPDM, FKM(Viton®), PTFE coated FKM (Viton®)
4	End Connector	2	1	PVC, CPVC, PP, PVDF
5	Union Nut	2	1	PVC, CPVC, PP, PVDF
6	Stop Ring	1	1	PVC, CPVC, PP, PVDF
7	Face O-Ring	1	1	EPDM, FKM(Viton®)
8	Foot Valve Basket	1	1	PVC, CPVC, PP, PVDF
9	Flange Retainer[2]	3	0	PVDF
10	Factory Flange[3]	1	0	PVC, CPVC, PP, PVDF

[1] Standard seals are EPDM in PVC, CPVC and PP valves, PTFE coated FKM (Viton®) in PVDF valves. Coating is .002" thick.

[2] True Union: 1 pc 1/2" to 2", 3 pcs 2-1/2" to 4".

[3] True Union valves have factory flanges. Single Union have fabricated flanges. Consult Chemline for details on fabricated type.

END CONNECTIONS FOR TRUE UNION VALVE

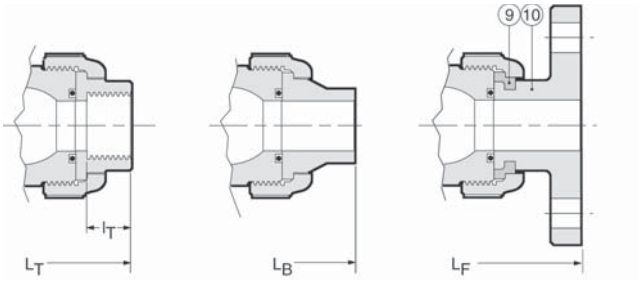

NPT Threaded

Butt Fusion PP and PVDF

Factory Flanged

DIMENSIONS INCHES

WEIGHTS LB.

Size	D_1	I_s Soc	I_T Thd	True Union PVC & CPVC L_T	True Union PVC & CPVC L_S	True Union PVC & CPVC L_F	Single Union PVC L_T	Single Union PVC L_S	Single Union PVC L_F	Single Union PVC Socket
1/2"	1.9	0.69	0.59	2.8	2.9	3.7	3.5	3.7	4.7	0.3
3/4"	2.4	0.72	0.67	3.3	3.3	4.4	4.1	4.2	5.4	0.4
1"	2.8	0.88	0.79	3.7	3.7	4.8	4.5	4.8	6.1	0.8
1-1/4"	3.7	0.94	0.87	*	*	*	*	*	*	1.8
1-1/2"	3.7	1.09	0.98	5.4	5.4	6.3	6.8	7.0	8.5	1.7
2"	4.2	1.16	1.10	6.4	6.4	7.2	7.4	7.6	9.3	2.1
2-1/2"	6.0	2.10	2.17	–	–	–	*	*	*	7.4
3"	6.0	1.88	1.38	–	–	–	11.6	12.1	14.2	7.1
4"	8.3	2.00	1.77	–	–	–	14.7	15.0	17.4	15.7

* Consult Chemline for dimensions.

For CPVC (2-1/2" to 4"), PP and PVDF Foot Valve lengths, consult Chemline.

Ball Check & Foot Valves

WORKING PRESSURES PSI

Size	PVC	CPVC				Polypropylene			PVDF			
	0-50°C 32-122°F	0-50°C 32-122°F	60°C 140°F	80°C 176°F	90°C 194°F	–20-30°C –4-90°F	60°C 140°F	80°C 176°F	–20-60°C –4-140°F	80°C 176°F	90°C 194°F	100°C 212°F
1/2″	150	150	115	85	60	150	90	60	150	120	110	85
3/4″	150	150	115	85	60	150	90	60	150	120	110	85
1″	150	150	115	85	60	150	90	60	150	120	110	85
1-1/4″	150	150	115	85	60	150	90	60	150	120	110	85
1-1/2″	150	150	115	85	60	150	90	60	150	120	110	85
2″	150	150	115	85	60	150	90	60	150	120	110	85
2-1/2″	100	100	90	60	45	100	60	45	100	90	60	45
3″	100	100	90	60	45	100	60	45	100	90	60	45
4″	100	100	90	60	45	100	60	45	100	90	60	45

Maximum Temperatures: PVC 0 to 60°C (32 to 140°F), **CPVC** 0 to 95°C (32 to 203°F), **PP** –20 to 90°C (–4 to194°F), **PVDF** –40 to 100°C (–40 to 212°F)

MINIMUM SEATING AND OPENING PRESSURE PSI

Cv VALVES

Size	Vertical Piping		Horizontal Piping		Check Valves
	Open	Seating	Open	Seating	
1/2″	0.7	2.8	0.1	2.8	6.5
3/4″	0.7	4.3	0.1	4.3	17.
1″	0.7	4.3	0.1	4.3	25.
1-1/4″	1.4	4.3	0.3	4.3	86.
1-1/2″	1.4	4.3	0.3	4.3	86.
2″	1.4	4.3	0.3	4.3	130.
2-1/2″	1.4	2.8	0.3	2.8	280.
3″	1.4	2.8	0.3	2.8	280.
4″	1.4	2.8	0.3	2.8	500.

VACUUM RATING

- 29.9 inches mercury
- Maximum recommended velocity 5 m/s

SAMPLE SPECIFICATION

All Ball Check valves in PVC, CPVC, PP or PVDF shall be Chemline BT or BC Series or equal with EPDM [FKM (Viton®) or PTFE coated FKM (Viton®)] seats and union ends. Sizes 1/2″ to 2″ shall be slip-out True Union style, sizes 2-1/2″ to 4″ shall be single union. The elastomer uniseat/seal shall function as both the ball seat and the union seal. Ball Check valves shall be rated 150 psi up to 2″ and 100 psi for sizes 2-1/2″ to 4″.

ORDERING EXAMPLE

Chemline Ball Check/Foot Valves	BT	A	020	E	S
Valve Type	**BT** – True Union Ball Check **BC** – Single Union Ball Check **FV** – Single Union Foot Valve **FT** – True Union Foot Valve				
Body Material	**A** – PVC **C** – CPVC **B** – PP **K** – PVDF				
Size	**005** – 1/2″ **007** – 3/4″ **010** – 1″ **012** – 1-1/4″ **015** – 1-1/2″ **020** – 2″ **025** – 2-1/2″ **030** – 3″ **040** – 4″				
Seals	**E** – EPDM **V** – FKM (Viton®) **T** – PTFE coated FKM (Viton®)				
Ends	**S** – Socket **T** – Threaded **F** – Flanged **B** – Butt[1] **CF** – ChemFlare™				

Example: Ball Check Valve, PVC, 2″, with EPDM seat, socket ends.

[1] PP and PVDF metric butt fusion ends (1/2″ to 2″) connect to Chemline PP and PVDF piping systems.

OPTIONS & ACCESSORIES

- **PTFE coated Uniseat/Seal**
- **Spring Loaded Ball** – Assists ball to seat faster

55 Guardsman Road, Thornhill, ON, L3T 6L2, Canada | ISO 9001:2008 Certified
tel.905.889.7890 | fax.905.889.8553 | request@chemline.com | chemline.com

CS-303-100 : Identification sheet

VWTC PROJECT NUMBER:	5000218009	REV:	1
PROJECT NAME:	AEM AMARUQ	SUBMITTED TO (COMPANY):	AGNICO EAGLE MINES
ENGINEER:	Gabriel Hébert	SUBMITTED TO (RESPONSIBLE)	
PROJECT MANAGER:	Clément B	PROJECT NUM REFERENCE.:	
PHONE NUMBER:		LOT NUMBER:	

SUPPLIER	EQPT CODE	EQPT TAG NO	DIA	DESCRIPTION	INFO 1	INFO 2	INFO 3	APPLIC.	NOTE	REV
CHEMLINE	VARFPV207282	PRV9-524	DIA: 25 mm (1")	RELIEF VALVE	TYPE: RELIEF VALVE | 150#//MANUFACTURER : CHEMLINE//MODEL : SB12A010EU//CONNECTION TYPE : UNION SOCKET | 25 mm (1")//BODY : PVC// SEAL | SEAT :EPDM | EPDM// STEM : N/A			ANIONIC POLYMER DOSING SKID		
CHEMLINE	VARFPV207282	PRV9-525	DIA: 25 mm (1")	RELIEF VALVE	TYPE: RELIEF VALVE | 150#//MANUFACTURER : CHEMLINE//MODEL : SB12A010EU//CONNECTION TYPE : UNION SOCKET | 25 mm (1")//BODY : PVC// SEAL | SEAT :EPDM | EPDM// STEM : N/A			ANIONIC POLYMER DOSING SKID		
CHEMLINE	VARFPV207282	PRV9-526	DIA: 25 mm (1")	RELIEF VALVE	TYPE: RELIEF VALVE | 150#//MANUFACTURER : CHEMLINE//MODEL : SB12A010EU//CONNECTION TYPE : UNION SOCKET | 25 mm (1")//BODY : PVC// SEAL | SEAT :EPDM | EPDM// STEM : N/A			ANIONIC POLYMER DOSING SKID		

This page is intentionally left blank

PDF Published September 17, 2014

SB12 Series Back Pressure/Relief Valves

CHEMLINE PLASTICS
SUPERIOR FLOW SOLUTIONS

PVC PP PVDF

CRN Registered as Category C Fittings Consult Chemline

NSF[3] Certified to NSF/ANSI 61

SERIES: SB12

SIZES: 3/8" – 4"

ENDS: True Union Socket, Threaded or ChemFlare™[1] Spigot[2] Bodies with Plain, Socket, Threaded or Flanged ends

DIAPHRAGM: PTFE Bonded EPDM

SEALS: EPDM, FKM (Viton®)

The Chemline SB Series Back Pressure/ Relief Valve has two functions. As a ***back pressure valve***, installed in-line downstream of a pump, the back pressure below the metering pump is maintained. When installed in the branch of a tee it is a ***pressure relief valve***. The valve stays closed until inlet pressure reaches the set pressure which is adjusted by turning the spring tensioning bolt. Inlet pressure acts upward against the piston allowing excess pressure to flow upwards through the orifice.

The SB12 Series has a built-in check valve function, desirable for dosing applications. It is not so sensitive as to open with every pulsation from a metering pump.

features

True Union Ends

- Easy installation and maintenance
- Eliminate chemical leakage problems common with old fashioned threaded connections

Long Cycling Life

- Dynamic seal is PTFE bonded EPDM for high chemical resistance
- This moulded diaphragm is designed for superior sealing and flex life

Superior Performance in Dosing Systems

- Valves are hydraulically designed for very low hysteresis ("backlash") and to eliminate chatter
- Built-in check (non-return) function
- Valve opening depends on inlet pressure only and is uneffected by changes in downstream (back) pressure

CRN Registration numbers by province

- Ontario: OC10134.5
- Newfoundland: OC10134.50
- Alberta: OC10134.52
- Saskatchewan/Manitoba/Quebec: OC10134.56
- New Brunswick: OC10134.57
- Nova Scotia: OC10134.58
- P.E.I.: OC10134.59
- British Columbia: not required

technical

Set Pressure Ranges

- 1/2" to 2" – 5 to 150 psi
- 2-1/2" and 3" – 7.5 to 150 psi
- 2-1/2" to 4" – 4 to 60 psi (optional)
- 4" – 7.5 to 90 psi

Maximum Viscosity

- 120cP is maximum recommended service viscosity

[1] For ChemFlare™ end connectors, consult Chemline.
[2] PP and PVDF spigot ends have DIN dimensions and will butt fuse directly to Chemline PP and PVDF piping systems.
[3] PVC valves with EPDM or FKM (Viton®) seals are certified under NSF/ANSI Standard 61 for contact with drinking water.

09/14 ©Chemline Plastics Limited 2014
Chemline is a registered trade mark of Chemline Plastics Limited

SB12 Series Back Pressure/Relief Valves 1/2" to 2"

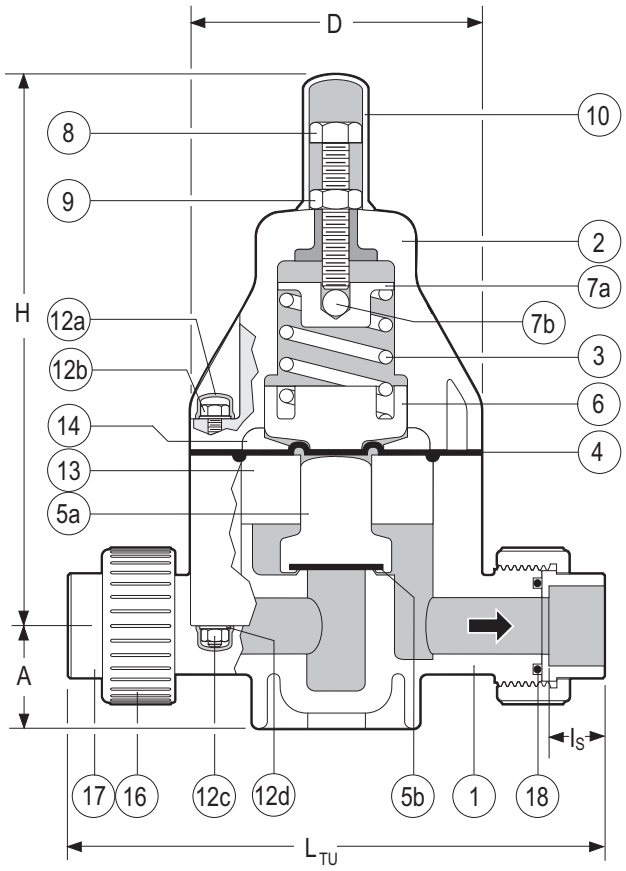

True Union Body

PARTS

▲ Recommended Spare Parts

No.	Part	Pcs.	Materials
1	Body	1	PVC, PP, PVDF
2	Bonnet	1	PPG
3	Spring	1	Galvanized Steel
4▲	Control Diaphragm	1	PTFE bonded EPDM
5a▲	Piston	1	PVC, PP, PVDF
5b▲	Seat	1	EPDM, FPM(Viton®)
6	Lower Spring Retainer	1	PPG
7a	Upper Spring Retainer	1	Cad. Plated Steel
7b	Ball	1	304 SS
8	Spring Tensioning Bolt	1	304 SS
9	Lock Nut	1	304 SS
10	Spring Bolt Cap	1	PE
12a	Bolt/Nut Cap	8/12[1]	PE
12b	Hex Bolt	4/6[1]	304 SS
12c	Hex Nut	4/6[1]	304 SS
12d	Washer	8/12[1]	304 SS
13	Spacer Disc	1	PVC, PP, PVDF
14	Pressure Plate	1	PP
16	Union Nut	2	PVC, PP, PVDF
17	End Connector	2	PVC, PP, PVDF
18▲	Face O-Ring	2	EPDM, FPM(Viton®)

[1] 1/2" size / 3/4" to 2" sizes

OTHER ENDS

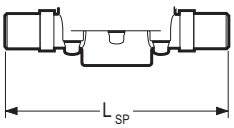

Spigot Body

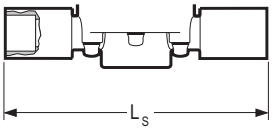

Socket

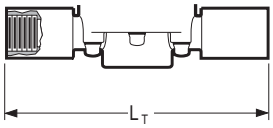

Threaded

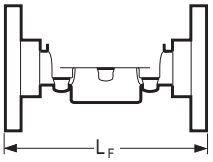

Flanged

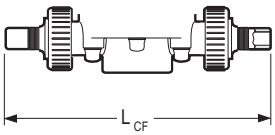

ChemFlare™

DIMENSIONS INCHES

WEIGHTS LB.

Cv VALUES

Size	D	H	PVC A	PVC I_S	PVC L_{TU}[2]	PVC L_{SP}[3]	PVC L_S	PVC L_T	PVC L_F	PVC L_{CF}	PP and PVDF A	PP and PVDF L_{SP}[3]	PP and PVDF L_{TU}[2]	PVC	PP	PVDF	USGPM Flow at 1 psi △P
3/8"	3.2	6.9	1.0	0.6	6.5	5.7	7.4	7.2	4.5	8.2	0.9	5.7	**	1.8	1.5	2.2	2.1
1/2"	3.2	6.9	1.0	0.6	6.8	5.7	8.0	7.8	6.3	8.3[4]	0.9	5.7	7.1	1.9	1.6	2.4	3.0
3/4"	4.2	8.0	1.5	0.7	8.3	6.9	9.3	8.9	7.4	9.7	1.4	6.9	8.4	4.1	3.5	4.6	6.6
1"	4.2	8.0	1.5	0.9	8.5	6.9	9.6	9.3	7.4	10.2	1.4	6.9	8.7	4.2	3.5	4.7	8.7
1-1/4"	5.8	10.3	2.2	1.0	10.9	8.8	11.6	11.2	9.2	13.5	2.1	8.8	10.9	11.0	9.0	12.0	18.0
1-1/2"	5.8	10.3	2.2	1.2	11.1	8.8	12.2	11.5	9.5	–	2.1	8.8	11.2	11.2	9.2	12.2	20.0
2"	5.8	10.3	2.2	1.5	11.3	9.6	12.9	12.0	10.0	–	2.1	8.8	13.2	11.4	9.4	12.4	21.4

[2] True Union bodies come standard with socket ends. Threaded union ends are available. ** Consult Chemline.
[3] Spigot bodies are used for non union socket, threaded or flanged ends. All spigot ends have metric dimensions and the PP and PVDF spigots butt fuse directly to Chemline PP and PVDF piping. [4] Tube size can be reduced to 1/4" tube, LCF = 7.74" for 1/4", 8.26" for 3/8".

MAXIMUM PRESSURES PSI

Size	PVC 20°C 68°F	PVC 30°C 86°F	PVC 40°C 104°F	PVC 50°C 122°F	PP 30°C 86°F	PP 40°C 104°F	PP 50°C 122°F	PP 60°C 140°F	PP 70°C 158°F	PVDF 30°C 86°F	PVDF 50°C 122°F	PVDF 70°C 158°F	PVDF 80°C 176°F	PVDF 90°C 194°F	PVDF 100°C 212°F
1/2"– 2"	150	105	60	15	150	90	60	37.5	15	150	100	60	45	30	15

Temperature Ranges: PVC 0 to 50°C (32 to 122°F), **PP** 10 to 70°C (50 to 158°F), **PVDF** –30 to 100°C (–22 to 212°F).

SB12 Series Back Pressure/Relief Valves 1/2” to 2”

pressure loss nomogram for SB12 valves 3/8” to 2”

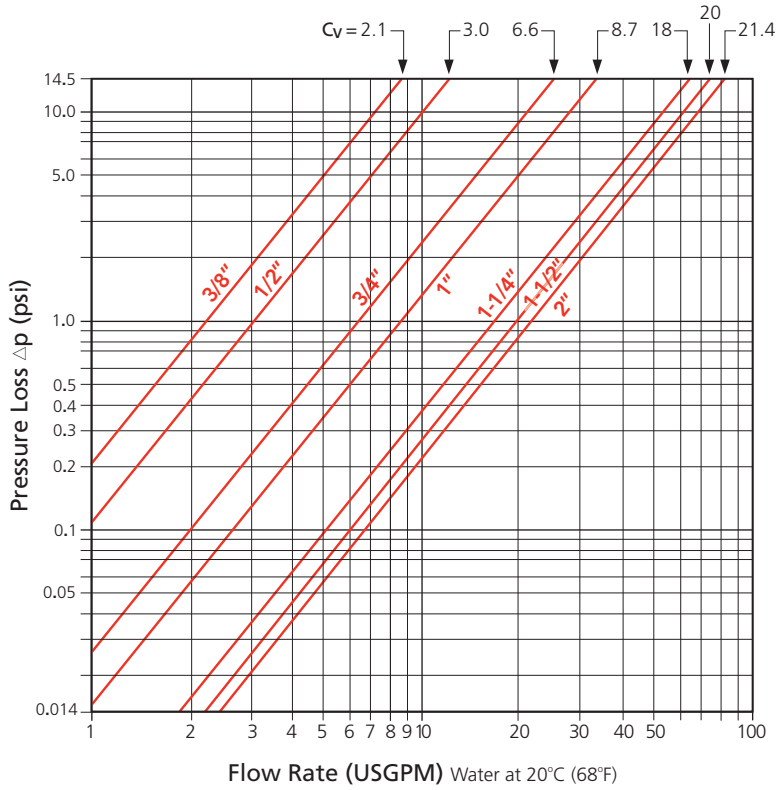

typical dosing system schematic

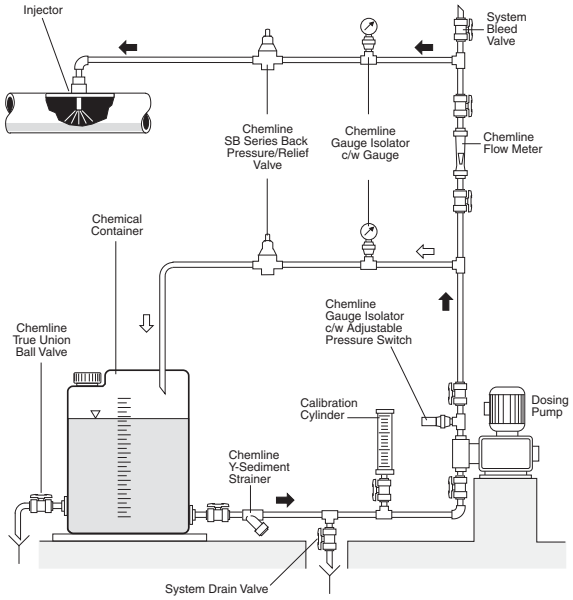

application of pressure relief valves

Constant System Pressure

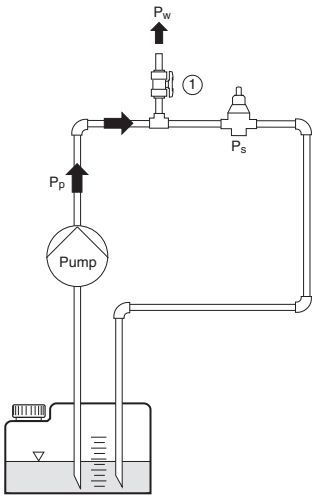

$P_p \geq P_w$
$P_p \geq P_s$ → valve opens
$P_p \leq P_s$ → valve closed

Consumer 1 and/or 2 Open, Valve Closes

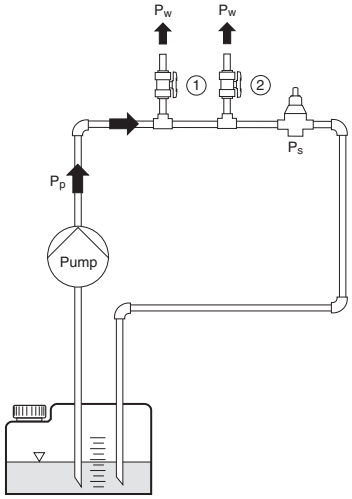

$P_p \geq P_s$ → valve opens
$P_p \leq P_s$ → valve closed

Non-Return Valve

Container 1 is located above the pump

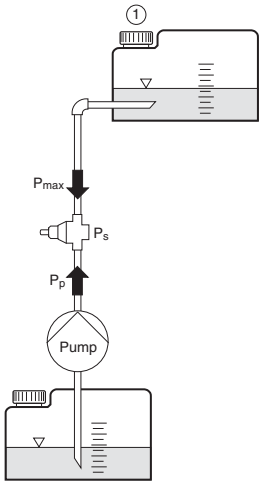

$P_s \geq P_{max}$
$P_p \geq P_s$ → valve opens
$P_p \leq P_s$ → valve closed

Overflow Valve

Pressure of container or application system should not exceed the maximum pressure value

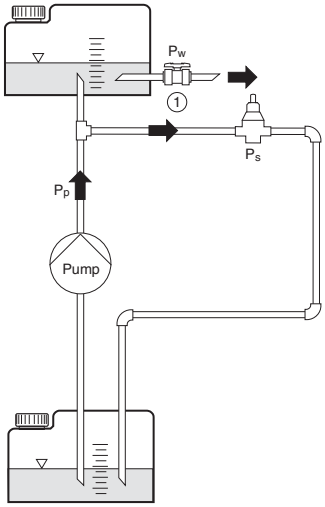

$P_s \leq P_w$
$P_p \geq P_s$ → valve opens
$P_p \leq P_s$ → valve closed

P_w = Working Pressure
P_p = Pump Pressure
P_s = Set Pressure

SB12 Series Back Pressure/Relief Valves 1/2" to 2"

working pressure vs. flow rate

The curves show the relationship between the working pressure and the approximate flow rate through the valve for water at 20°C (68°F) . These values will vary depending on:

- The configuration of the piping and the pressure losses associated with it
- The fluid if not water at 20°C (68°F)
- Whether the pressure is rising or falling, hysteresis is approximately 4 psi for 1/2" to 2" valves. For valves 2-1/2" to 4", hysteresis is approximately 14.5 psi.

operation examples

1. The valve is set closed at 100 psi. At a pressure increase of 10 psi, a flow of approximately 1.0 USGPM will be reached.
   - set pressure = 100 psi
   - working pressure = 110 psi
   - opening pressure = approximately 104 psi
2. The valve is set closed at 50 psi. At a pressure increase of 10 psi, a flow of approximately 1.0 USGPM will be reached.
   - set pressure = 50 psi
   - working pressure = 60 psi
   - opening pressure = approximately 54 psi

3/8" Valves

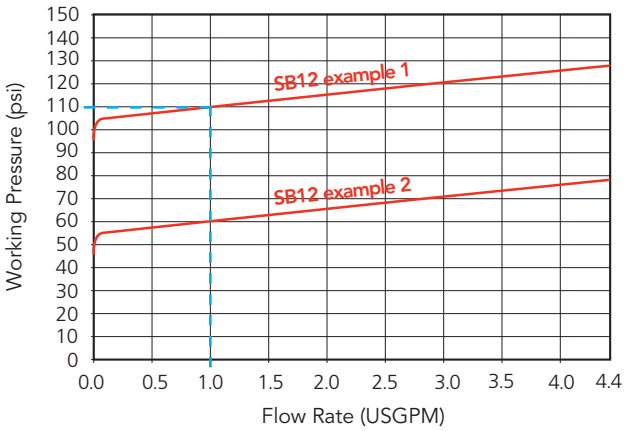

1/2" Valves

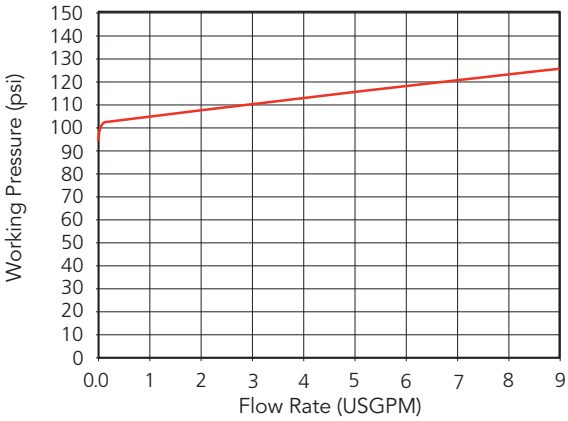

3/4" Valves

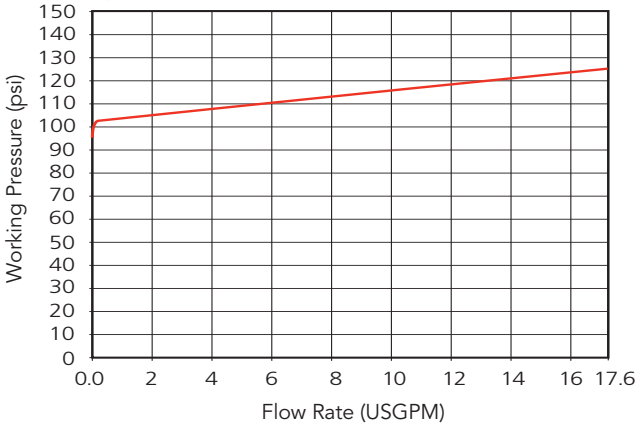

1" Valves

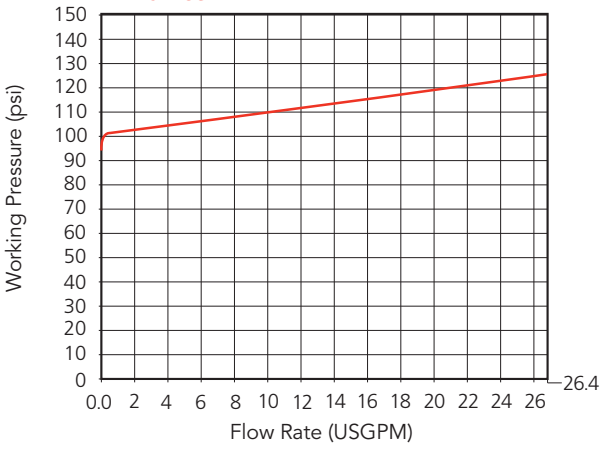

1-1/4" Valves

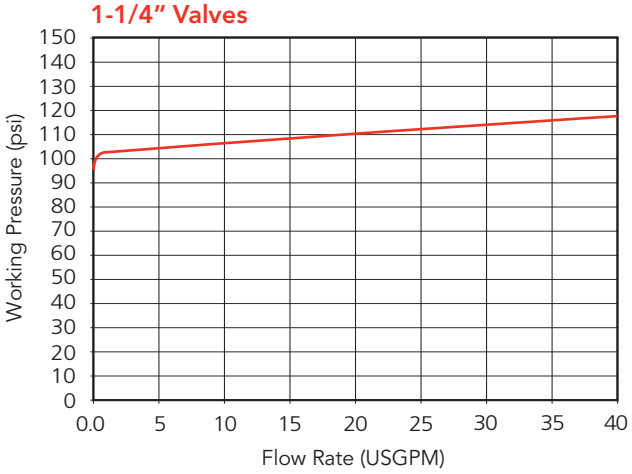

1-1/2" Valves

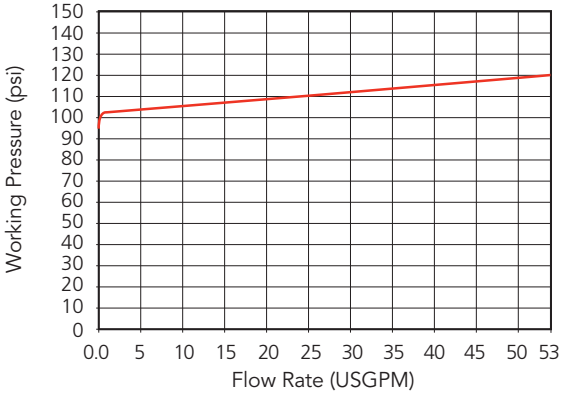

2" Valves

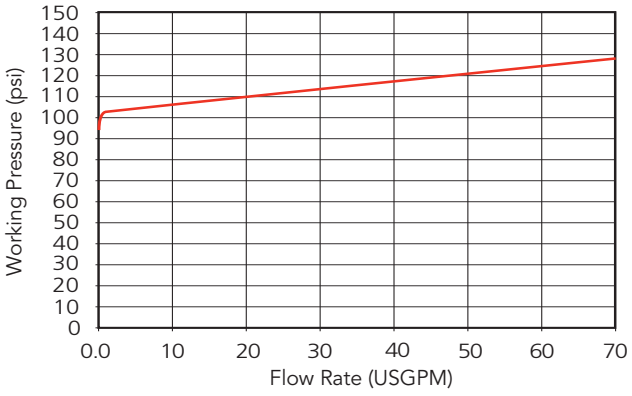

SB12 Series Back Pressure/Relief Valves 2-1/2" to 4"

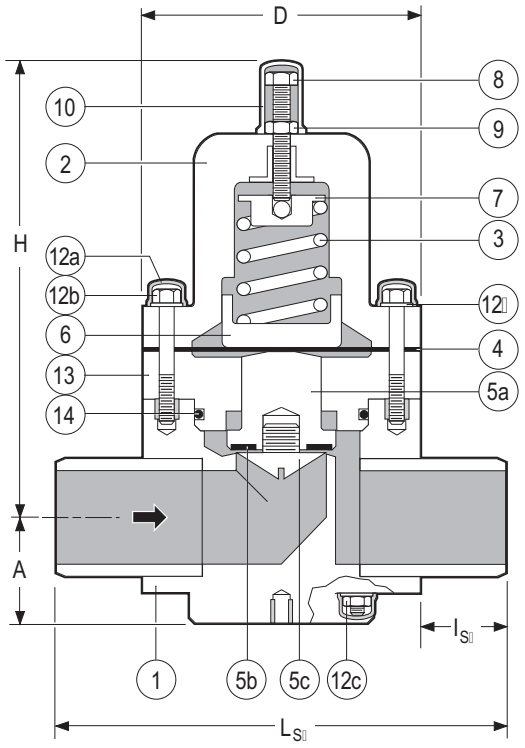

Spigot Body

PARTS

▲ Recommended Spare Parts

No.	Part	Pcs.	Materials
1	Body	1	PVC, PP, PVDF
2	Bonnet	1	PPG
3	Spring	1	Galvanized Steel
4▲	Control Diaphragm	1	PTFE bonded EPDM
5a▲	Piston	2	PVC, PP, PVDF
5b▲	Seat	1	EPDM, FPM(Viton®)
5c▲	Seat Retainer	1	PVC, PP, PVDF
6	Lower Spring Retainer	1	PPG
7	Upper Spring Retauner	1	304 SS
8	Spring Tensioning Bolt	1	304 SS
9	Lock Nut	1	304 SS
10	Spring Bolt Cap	1	PE
12a	Hex Bolt/Nut Cap	20	PE
12b	Hex Bolt/Stud	12[1]	304 SS
12c	Hex Nut	20	304 SS
12d	Washer	20	304 SS
13	Spacer Disc	1	PVC, PP, PVDF
14	Spacer O ring	1	EPDM, FPM(Viton®)

[1] 2 large upper bolts, 2 shorter lower bolts, 8 studs

OTHER ENDS

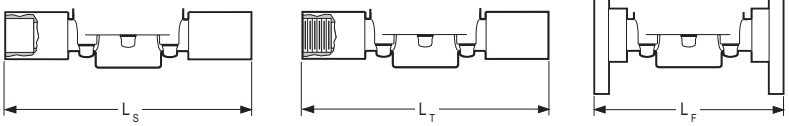

Socket | Threaded | Flanged

ChemFlare™ Ends
- For connection to PFA tube. Leak-free connections for difficult services such as sodium hypochlorite

DIMENSIONS INCHES

WEIGHTS LB.

Cv VALUES

Size	PVC, PP & PVDF A	D	H	L_{SP}[2]	l_{SP}	PVC L_F	WEIGHTS PVC	PP	PVDF	Cv VALUES USGPM Flow at 1 psi △P
2-1/2"	2.7	6.9	11.1	11.2	2.1	12.2	20.9	15.4	24.6	41
3"	3.0	7.9	12.2	14.2	3.1	15.0	26.4	23.8	30.8	63
4"	3.7	9.8	14.2	16.5	3.3	16.9	33.0	26.4	37.4	98

[2] Plain spigot ends in PP & PVDF may be butt fused directly to Chemline PP & PVDF piping systems.

Weights based on spigot bodies.

MAXIMUM PRESSURES PSI

Size	PVC 20°C 68°F	30°C 86°F	40°C 104°F	50°C 122°F	PP 20°C 68°F	30°C 86°F	40°C 104°F	50°C 122°F	60°C 140°F	70°C 158°F	PVDF 30°C 86°F	50°C 122°F	70°C 158°F	80°C 176°F	90°C 194°F	100°C 212°F
2-1/2"– 4"	150	90	44	15	150	116	90	60	37.5	15	150	90	55	40	30	15

Temperature Ranges: PVC 0 to 50°C (32 to 122°F), **PP** 10 to 70°C (50 to 158°F), **PVDF** –30 to 100°C (–22 to 212°F).

ORDERING EXAMPLE

Chemline Back Pressure/ Relief Valves	SB12	A	005	V	U
Body Material	**A** – PVC	**B** – PP	**K** – PVDF		
Size	**003** – 3/8" **010** – 1" **020** – 2"	**005** – 1/2" **012** – 1-1/4" **025** – 2-1/2"	**007** – 3/4" **015** – 1-1/2" **030** – 3"	**040** – 4"		
Elastomers	**E** – EPDM	**V** – FPM (Viton®)				
Ends	**S** – Socket **CFx** – ChemFlare™	**T** – Threaded	**F** – Flanged **Blank** – Spigot (Butt)	**U** – Union Socket		

Example: Chemline SB 12 Series, PVC, 1/2" diameter, FPM (Viton®) seals, Union socket ends.
x = 4 for 1/4", **6** for 3/8", **8** for 1/2", **12** for 1" ID tube connections.

OPTIONS

- 4 to 60 psi Pressure Range springs for 2-1/2" to 4" valves
- **Integral Pressure Gauge** – for inlet and/or outlet
- Bodies in 316 Stainless Steel and PTFE

Optional Pressure Gauge
- For inlet and/or outlet

SB12 Series Back Pressure/Relief Valves 2-1/2" to 4"

working pressure vs. flow rate

• Whether the pressure is rising or falling, hysteresis is approximately 14.5 psi for 2-1/2" to 4" valves

2-1/2" Valves / 4 to 60 psi set pressure range

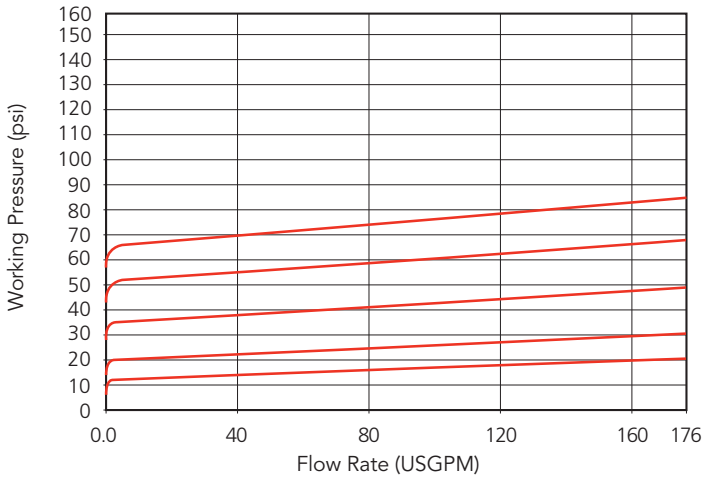

2-1/2" Valves / 7.5 to 150 psi set pressure range

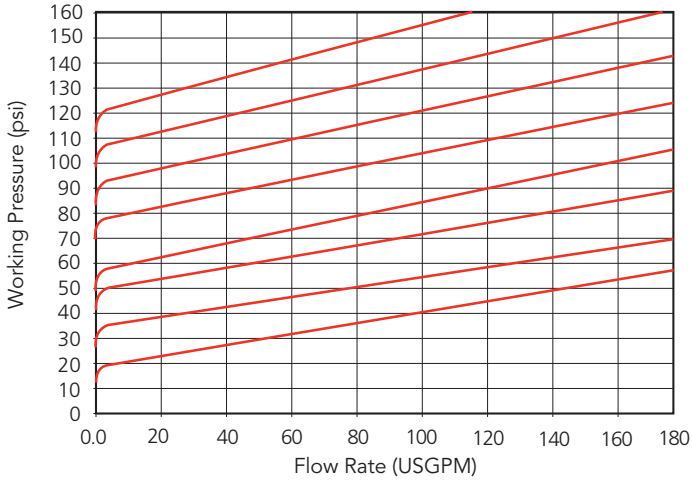

3" Valves / 4 to 60 psi set pressure range

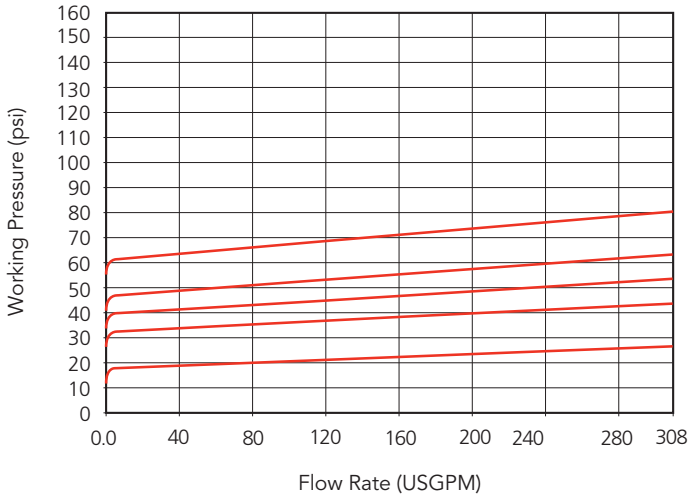

3" Valves / 7.5 to 150 psi set pressure range

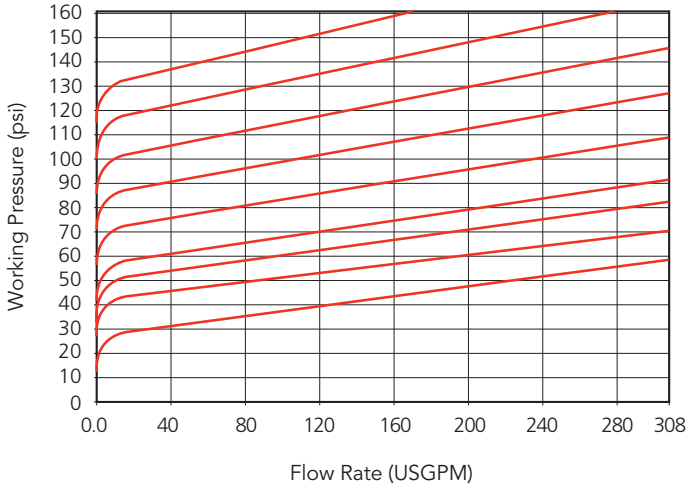

4" Valves / 4 to 60 psi set pressure range

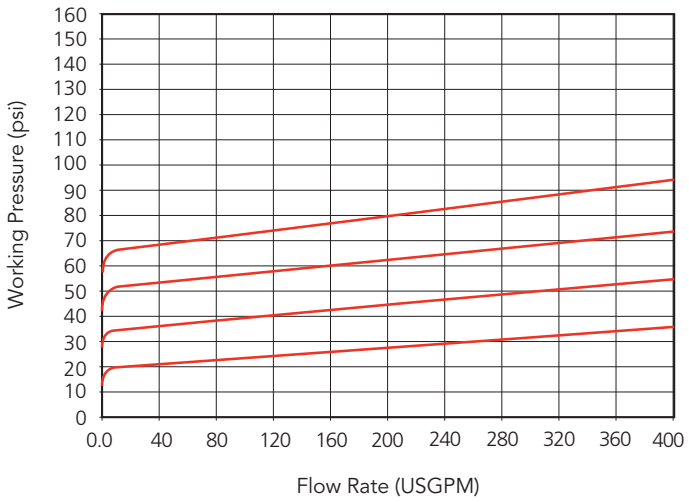

4" Valves / 7.5 to 90 psi set pressure range

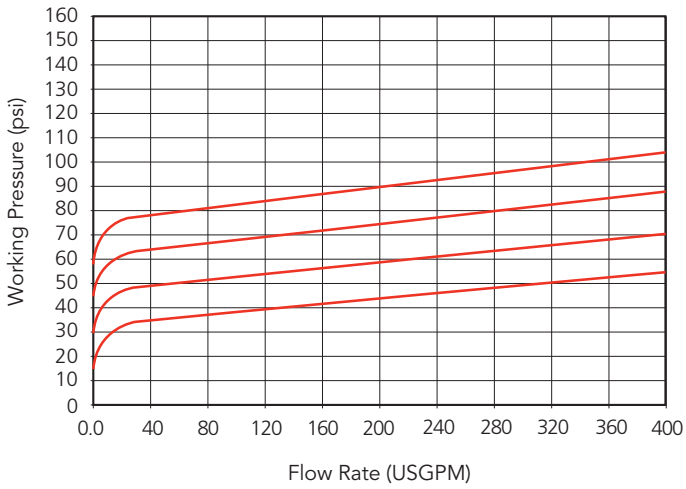

CHEMLINE PLASTICS
SUPERIOR FLOW SOLUTIONS

55 Guardsman Road, Thornhill, ON, L3T 6L2, Canada | ISO 9001:2008 Certified
tel.905.889.7890 | fax.905.889.8553 | request@chemline.com | chemline.com

CS-304-100 : Identification sheet

VWTC PROJECT NUMBER:	5000218009	REV:	1
PROJECT NAME:	AEM AMARUQ	SUBMITTED TO (COMPANY):	AGNICO EAGLE MINES
ENGINEER:	Gabriel Hébert	SUBMITTED TO (RESPONSIBLE)	
PROJECT MANAGER:	Clément B	PROJECT NUM REFERENCE.:	
PHONE NUMBER:		LOT NUMBER:	

SUPPLIER	EQPT CODE	EQPT TAG NO	DIA	DESCRIPTION	INFO 1	INFO 2	INFO 3	APPLIC.	NOTE	REV
TECKNO VALVE	VASDSS351509	SV15-011	N/A	ON/OFF VALVE - CARRIER WATER	TYPE: SOLENOID VALVE//MANUFACTURER : ASCO//MODEL : 8210G089-120VAC//CONNECTION TYPE : THREADED | 25 mm (1") | 25 mm (1")//BODY : 304 SS// SEAL | SEAT : | // STEM : N/A	ACTING : PILOT	NORMALLY : FERMÉ/CLOSED	ANIONIC POLYMER DOSING SKID		
TECKNO VALVE	VASDSS351509	SV15-021	N/A	ON/OFF VALVE - CARRIER WATER	TYPE: SOLENOID VALVE//MANUFACTURER : ASCO//MODEL : 8210G089-120VAC//CONNECTION TYPE : THREADED | 25 mm (1") | 25 mm (1")//BODY : 304 SS// SEAL | SEAT : | // STEM : N/A	ACTING : PILOT	NORMALLY : FERMÉ/CLOSED	ANIONIC POLYMER DOSING SKID		

This page is intentionally left blank

Features

- Wide range of pressure ratings, sizes, and resilient materials provide long service life and low internal leakage
- High flow valves for liquid, corrosive, and air/inert gas service
- Industrial applications include:
  - Car wash
  - Laundry equipment
  - Air compressors
  - Industrial water control
  - Pumps

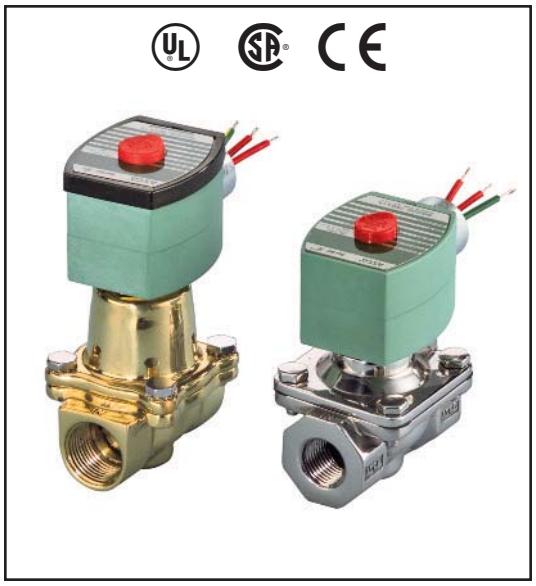

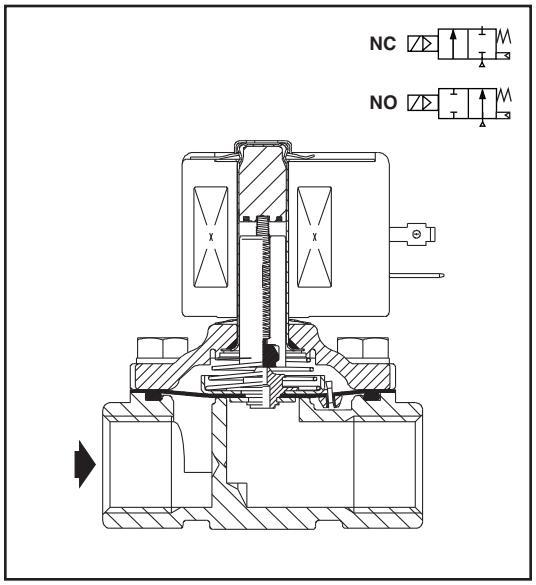

Construction

Valve Parts in Contact with Fluids		
Body	Brass	304 Stainless Steel*
Seals and Discs	NBR or PTFE	
Disc-Holder	PA	
Core Tube	305 Stainless Steel	
Core and Plugnut	430F Stainless Steel	
Springs	302 Stainless Steel	
Shading Coil	Copper	Silver

*Catalog Numbers 8210G127, 8210G129, 8210G132, 8210G133 have 316L Stainless Steel bodies.

Electrical

Standard Coil and Class of Insulation	Watt Rating and Power Consumption				Spare Coil Part Number			
		AC			General Purpose		Explosionproof	
	DC Watts	Watts	VA Holding	VA Inrush	AC	DC	AC	DC
F	-	6.1	16	40	238210	-	238214	-
F	11.6	10.1	25	70	238610	238710	238614	238714
F	16.8	16.1	35	180	272610	97617	272614	97617
F	-	17.1	40	93	238610	-	238614	-
F	-	20	43	240	99257	-	99257	-
F	-	20.1	48	240	272610	-	272614	-
F	30.8	-	-	-	-	501695	-	501696
H	40.6	-	-	-	-	238910	-	238914

Standard Voltages: 24, 120, 240, 480 volts AC, 60 Hz (or 110, 220 volts AC, 50 Hz). 6, 12, 24, 120, 240 volts DC. Must be specified when ordering.
Other voltages available when required.

Solenoid Enclosures

Standard: RedHat II - Watertight, Types 1, 2, 3, 3S, 4, and 4X; RedHat - Type I.

Optional: RedHat II - Explosionproof and Watertight, Types 3, 3S, 4, 4X, 6, 6P, 7, and 9; Red-Hat - Explosionproof and Watertight, Types 3, 4, 4X, 7, and 9.

(To order, add prefix "EF" to catalog number, except Catalog Numbers 8210B057, 8210B058, and 8210B059, which are not available with Explosionproof enclosures.)
See Optional Features Section for other available options.

Nominal Ambient Temp. Ranges

RedHat II/RedHat AC: 32˚F to 125˚F (0˚C to 52˚C)
RedHat II DC: 32˚F to 104˚F (0˚C to 40˚C)
RedHat DC: 32˚F to 77˚F (0˚C to 25˚C)
(104˚F/40˚C occasionally)
8210G227 AC: 32˚F to 130˚F (0˚C to 54˚C)
DC: 32˚F to 90˚F (0˚C to 32˚C)
Refer to Engineering Section for details.

Approvals

UL listed as indicated. CSA certified.
RedHat II meets applicable CE directives.
Refer to Engineering Section for details.

ATEX/IECEx certified with prefix "EV" as listed. *Refer to Optional Features Electrical Section for details.*

2/2 SERIES 8210

ASCO®

Specifications (English units)

Pipe Size (in)	Orifice Size (in)	Cv Flow Factor	Operating Pressure Differential (psi)							Max. Fluid Temp. °F		Brass Body			Stainless Steel Body			Watt Rating/ Class of Coil Insulation ⑦	
				Max. AC			Max. DC												
			Min.	Air-Inert Gas	Water	Light Oil @ 300 SSU	Air-Inert Gas	Water	Light Oil @ 300 SSU	AC	DC	Catalog Number	Const. Ref. ④	UL ⑤ Listing	Catalog Number	Const. Ref. ④	UL ⑤ Listing	AC	DC
NORMALLY CLOSED (Closed when de-energized), NBR or PTFE ② Seating																			
3/8	3/8	1.5	①	150	125	-	40	40	-	180	150	8210G073 ③	1P	●	8210G036 ③	1P	●	6.1/F	11.6/F
3/8	5/8	3	0	150	150	-	40	40	-	180	150	8210G093	5D	❍	-	-	-	10.1/F	11.6/F
3/8	5/8	3	5	200	150	135	125	100	100	180	150	8210G001 ▼	6D	❍	-	-	-	6.1/F	11.6/F
3/8	5/8	3	5	300	300	300	-	-	-	175	-	8210G006 ✓	5D	❍	-	-	-	17.1/F	-
1/2	7/16	2.2	①	150	125	-	40	40	-	180	150	8210G015 ③	2P	●	8210G037 ③	2P	●	6.1/F	11.6/F
1/2	5/8	4	0	150	150	-	40	40	-	180	150	8210G094 ✓	5D	❍	-	-	-	10.1/F	11.6/F
1/2	5/8	4	0	150	150	125	40	40	-	175	150	-	-	-	8210G087 ✓	7D	●	17.1/F	11.6/F
1/2	5/8	4	5	200	150	135	125	100	100	180	150	8210G002 ▼	6D	❍	-	-	-	6.1/F	11.6/F
1/2	5/8	4	5	300	300	300	-	-	-	175	-	8210G007	5D	❍	-	-	-	17.1/F	-
1/2	3/4	4	5	-	300	-	-	300	-	130	90	8210G227	5D	❍ †	-	-	-	17.1/F	40.6/H
3/4	5/8	4.5	0	150	150	125	40	40	-	175	150	-	-	-	8210G088 ✓	7D	●	17.1/F	11.6/F
3/4	3/4	5	5	125	125	125	100	90	75	180	150	8210G009 ▼	9D	❍	-	-	-	6.1/F	11.6/F
3/4	3/4	5	0	150	150	-	40	40	-	180	150	8210G095 ✓	8D	❍	-	-	-	10.1/F	11.6/F
3/4	3/4	6.5	5	250	150	100	125	125	125	180	150	8210G003 ▼	11D	❍	-	-	-	6.1/F	11.6/F
3/4	3/4	6	0	350	300	200	200	200	200	200	180	8210G026 ② ‡ ◆	40P/10D	●	-	-	-	16.1F	30.8/F
1	1	13	0	150	125	125	135	120	120	180	180	8210G054 ‡ ◆	41D/31D	●	8210G089 ‡ ◆	45D/15D	●	16.1/F	30.8/F
1	1	13	5	150	150	100	125	125	125	180	150	8210G004 ▼	12D	❍	-	-	-	6.1/F	11.6/F
1	1	13.5	0	300	225	115	-	-	-	200	-	8210G027 ‡	42P	●	-	-	-	20.1/F	-
1	1	13.5	10	300	300	300	-	-	-	175	-	8210G078 ②	13P	-	-	-	-	17.1/F	-
1 1/4	1 1/8	15	0	150	125	125	135	120	120	180	180	8210G055 ‡ ◆	43D/32D	●	-	-	-	16.1/F	30.8/F
1 1/4	1 1/8	15	5	150	150	100	125	125	125	180	150	8210G008 ▼	16D	❍	-	-	-	6.1/F	11.6/F
1 1/2	1 1/4	22.5	0	150	125	125	135	120	120	180	180	8210G056 ‡ ◆	44D/33D	●	-	-	-	16.1/F	30.8/F
1 1/2	1 1/4	22.5	5	150	150	100	125	125	125	180	150	8210G022 ▼	18D	●	8210G127	-	-	6.1/F	11.6/F
2	1 3/4	43	5	150	125	90	50	50	50	180	150	8210G100	20P	●	8210G129	-	-	6.1/F	11.6/F
2 1/2	1 3/4	45	5	150	125	90	50	50	50	180	150	8210G101	21P	●	-	-	-	6.1/F	11.6/F
NORMALLY OPEN (Open when de-energized), NBR Seating (PA Disc-Holder, except as noted)																			
3/8	5/8	3	0	150	150	125	125	125	80	180	150	8210G033	23D	●	-	-	-	10.1/F	11.6/F
3/8	5/8	3	5	250	200	200	250	200	200	180	180	8210G011 ⑧ ⑨	39D	●	-	-	-	10.1/F	11.6/F
1/2	5/8	4	0	150	150	125	125	125	80	180	150	8210G034 ✓	23D	●	-	-	-	10.1/F	11.6/F
1/2	5/8	3	0	150	150	100	125	125	80	180	150	-	-	-	8210G030 ✓	37D	●	10.1/F	11.6/F
1/2	5/8	4	5	250	200	200	250	200	200	180	180	8210G012 ⑧ ⑨	39D	●	-	-	-	10.1/F	11.6/F
3/4	3/4	5.5	0	150	150	125	125	125	80	180	150	8210G035 ✓	25D	●	-	-	-	10.1/F	11.6/F
3/4	5/8	3	0	150	150	100	125	125	80	180	150	-	-	-	8210G038 ✓	38D	●	10.1/F	11.6/F
3/4	3/4	6.5	5	-	-	-	250	200	200	-	180	8210C013	24D	●	-	-	-	-	16.8/F
3/4	3/4	6.5	5	250	200	200	-	-	-	180	-	8210G013	46D	●	-	-	-	16.1/F	-
1	1	13	0	125	125	125	-	-	-	180	-	8210B057 ⑥ ⑩	34D	●	-	-	-	20/F	-
1	1	13	5	-	-	-	125	125	125	-	180	8210D014	26D	●	-	-	-	-	16.8/F
1	1	13	5	150	150	125	-	-	-	180	-	8210G014	47D	●	-	-	-	16.1/F	-
1 1/4	1 1/8	15	0	125	125	125	-	-	-	180	-	8210B058 ⑥ ⑩	35D	●	-	-	-	20/F	-
1 1/4	1 1/8	15	5	-	-	-	125	125	125	-	180	8210D018	28D	●	-	-	-	-	16.8/F
1 1/4	1 1/8	15	5	150	150	125	-	-	-	180	-	8210G018	48D	●	-	-	-	16.1/F	-
1 1/2	1 1/4	22.5	0	125	125	125	-	-	-	180	-	8210B059 ⑥ ⑩	36D	●	-	-	-	20/F	-
1 1/2	1 1/4	22.5	5	-	-	-	125	125	125	-	180	8210D032	29D	●	-	-	-	-	16.8/F
1 1/2	1 1/4	22.5	5	150	150	125	-	-	-	180	-	8210G032	49D	●	8210G132	-	-	16.1/F	-
2	1 3/4	43	5	-	-	-	125	125	125	-	150	8210 103	30P	●	-	-	-	-	16.8/F
2	1 3/4	43	5	125	125	125	-	-	-	180	-	8210G103	50P	●	8210G133	-	-	16.1/F	-
2 1/2	1 3/4	45	5	-	-	-	125	125	125	-	150	8210 104	27P	●	-	-	-	-	16.8/F
2 1/2	1 3/4	45	5	125	125	125	-	-	-	180	-	8210G104	51P	●	-			16.1/F	-

① 5 psi on Air; 1 psi on Water.
② Valve provided with PTFE main disc.
③ Valve includes Ultem (G.E. trademark) piston.
④ Letter "D" denotes diaphragm construction; "P" denotes piston construction.
⑤ ❍ Safety Shutoff Valve; ● General Purpose Valve.
Refer to Engineering Section (Approvals) for details.
⑥ Valves not available with Explosionproof enclosures.
⑦ On 50 hertz service, the watt rating for the 6.1/F solenoid is 8.1 watts.
⑧ AC construction also has PA seating.
⑨ No disc-holder.
⑩ Stainless steel disc-holder.
† UL listed for fire protection systems per UL429A.
‡ DC constructions must have solenoid mounted vertical and upright.
✓ ATEX/IECEx certified with prefix "EV".
▼ ATEX/IECEx certified for DC only with prefix "EV".
◆ Not available in 6 Volt DC. EF and HB prefix only.

Specifications (Metric units)

Pipe Size (in)	Orifice Size (mm)	Kv Flow Factor (m^3/hr)	Operating Pressure Differential (bar)							Max. Fluid Temp. ˚C		Brass Body			Stainless Steel Body			Watt Rating/ Class of Coil Insulation ⑦	
				Max. AC			Max. DC												
			Min.	Air-Inert Gas	Water	Light Oil @ 300 SSU	Air-Inert Gas	Water	Light Oil @ 300 SSU	AC	DC	Catalog Number	Const. Ref. ④	UL ⑤ Listing	Catalog Number	Const. Ref. ④	UL ⑤ Listing	AC	DC
NORMALLY CLOSED (Closed when de-energized), NBR or PTFE ② Seating																			
3/8	10	1.3	①	10	9	-	3	3	-	82	65	8210G073 ③	1P	●	8210G036 ③	1P	●	6.1/F	11.6/F
3/8	16	2.6	0	10	10	-	3	3	-	82	65	8210G093	5D	❍	-	-	-	10.1/F	11.6/F
3/8	16	2.6	0.3	14	10	9	9	7	7	82	65	8210G001 ▼	6D	❍	-	-	-	6.1/F	11.6/F
3/8	16	2.6	0.3	21	21	21	-	-	-	79	-	8210G006 ✓	5D	❍	-	-	-	17.1/F	-
1/2	11	1.9	①	10	9	-	3	3	-	82	65	8210G015 ③	2P	●	8210G037 ③	2P	●	6.1/F	11.6/F
1/2	16	3.4	0	10	10	-	3	3	-	82	65	8210G094 ✓	5D	❍	-	-	-	10.1/F	11.6/F
1/2	16	3.4	0	10	10	9	3	3	-	79	65	-	-	-	8210G087 ✓	7D	●	17.1/F	11.6/F
1/2	16	3.4	0.3	14	10	9	9	7	7	82	65	8210G002 ▼	6D	❍	-	-	-	6.1/F	11.6/F
1/2	16	3.4	0.3	21	21	21	-	-	-	79	-	8210G007	5D	❍	-	-	-	17.1/F	-
1/2	19	3.4	0.3	-	21	-	-	21	-	54	32	8210G227	5D	❍ †	-	-	-	17.1/F	40.6H
3/4	16	3.9	0	10	10	9	3	3	-	79	65	-	-	-	8210G088 ✓	7D	●	17.1/F	11.6/F
3/4	19	4.3	0.3	9	9	9	7	6	5	82	65	8210G009 ▼	9D	❍	-	-	-	6.1/F	11.6/F
3/4	19	4.3	0	10	10	-	3	3	-	82	65	8210G095 ✓	8D	❍	-	-	-	10.1/F	11.6/F
3/4	19	5.6	0.3	17	10	7	9	9	9	82	65	8210G003 ▼	11D	❍	-	-	-	6.1/F	11.6/F
3/4	19	5.1	0	24	21	14	14	14	14	93	82	8210G026 ② ‡ ◆	40P/10D	●	-	-	-	16.1F	30.8/F
1	25	11	0	10	9	9	9	8	8	82	82	8210G054 ‡ ◆	41D/31D	●	8210G089 ‡ ◆	45D/15D	●	16.1/F	30.8/F
1	25	11	0.3	10	10	7	9	9	9	82	65	8210G004 ▼	12D	❍	-	-	-	6.1/F	11.6/F
1	25	11.5	0	21	16	8	-	-	-	93	-	8210G027 ‡	42P	●	-	-	-	20.1/F	-
1	25	11.5	0.7	21	21	21	-	-	-	79	-	8210G078 ②	13P	-	-	-	-	17.1/F	-
1 1/4	29	13	0	10	9	9	9	8	8	82	82	8210G055 ‡ ◆	43D/32D	●	-	-	-	16.1/F	30.8/F
1 1/4	29	13	0.3	10	10	7	9	9	9	82	65	8210G008 ▼	16D	❍	-	-	-	6.1/F	11.6/F
1 1/2	32	19.5	0	10	9	9	9	8	8	82	82	8210G056 ‡ ◆	44D/33D	●	-	-	-	16.1/F	30.8/F
1 1/2	32	19.5	0.3	10	10	7	9	9	9	82	65	8210G022 ▼	18D	●	8210G127	-	-	6.1/F	11.6/F
2	44	37	0.3	10	9	6	3	3	3	82	65	8210G100	20P	●	8210G129	-	-	6.1/F	11.6/F
2 1/2	44	39	0.3	10	9	6	3	3	3	82	65	8210G101	21P	●	-	-	-	6.1/F	11.6/F
NORMALLY OPEN (Open when de-energized), NBR Seating (PA Disc-Holder, except as noted)																			
3/8	16	2.6	0.0	10	10	9	9	9	6	82	65	8210G033	23D	●	-	-	-	10.1/F	11.6/F
3/8	16	2.6	0.3	17	14	14	17	14	14	82	82	8210G011 ⑧ ⑨	39D	●	-	-	-	10.1/F	11.6/F
1/2	16	3.4	0	10	10	9	9	9	6	82	65	8210G087 ✓	7D	●	-	-	-	10.1/F	11.6/F
1/2	16	2.6	0	10	10	7	9	9	6	82	65	-	-	-	8210G087 ✓	7D	●	10.1/F	11.6/F
1/2	16	3.4	0.3	17	14	14	17	14	14	82	82	8210G012 ⑧ ⑨	39D	●	-	-	-	10.1/F	11.6/F
3/4	19	4.7	0	10	10	9	9	9	6	82	65	8210G087 ✓	7D	●	-	-	-	10.1/F	11.6/F
3/4	16	2.6	0	10	10	7	9	9	6	82	65	-	-	-	8210G087 ✓	7D	●	10.1/F	11.6/F
3/4	19	5.6	0.3	-	-	-	17	14	14	-	82	8210C013	24D	●	-	-	-	-	16.8/F
3/4	19	5.6	0.3	17	14	14	-	-	-	82	-	8210G013	46D	●	-	-	-	16.1/F	-
1	25	11	0	9	9	9	-	-	-	82	-	8210B057 ⑥ ⑩	34D	●	-	-	-	20/F	-
1	25	11	0.3	-	-	-	9	9	9	-	82	8210D014	26D	●	-	-	-	-	16.8/F
1	25	11	0.3	10	10	9	-	-	-	82	-	8210G014	47D	●	-	-	-	16.1/F	-
1 1/4	29	13	0	9	9	9	-	-	-	82	-	8210B058 ⑥ ⑩	35D	●	-	-	-	20/F	-
1 1/4	29	13	0.3	-	-	-	9	9	9	-	82	8210D018	28D	●	-	-	-	-	16.8/F
1 1/4	29	13	0.3	10	10	9	-	-	-	82	-	8210G018	48D	●	-	-	-	16.1/F	-
1 1/2	32	19.5	0	9	9	9	-	-	-	82	-	8210B059 ⑥ ⑩	36D	●	-	-	-	20/F	-
1 1/2	32	19.5	0.3	-	-	-	9	9	9	-	82	8210D032	29D	●	-	-	-	-	16.8/F
1 1/2	32	19.5	0.3	10	10	9	-	-	-	82	-	8210G032	49D	●	8210G132	-	-	16.1/F	-
2	44	37	0.3	-	-	-	9	9	9	-	65	8210 103	30P	●	-	-	-	-	16.8/F
2	44	37	0.3	9	9	9	-	-	-	82	-	8210G103	50P	●	8210G133	-	-	16.1/F	-
2 1/2	44	39	0.3	-	-	-	9	9	9	-	65	8210 104	27P	●	-	-	-	-	16.8/F
2 1/2	44	39	0.3	9	9	9	-	-	-	82	-	8210G104	51P	●	-	-	-	16.1/F	-

① 0.3 bar on Air; 0.0 bar on Water.
② Valve provided with PTFE main disc.
③ Valve includes UItem (G.E. trademark) piston.
④ Letter "D" denotes diaphragm construction; "P" denotes piston construction.
⑤ ❍ Safety Shutoff Valve; ● General Purpose Valve.
Refer to Engineering Section (Approvals) for details.

⑥ Valves not available with Explosionproof enclosures.
⑦ On 50 hertz service, the watt rating for the 6.1/F solenoid is 8.1 watts.
⑧ AC construction also has PA seating.
⑨ No disc-holder.
⑩ Stainless steel disc-holder.
† UL listed for fire protection systems per UL429A.

‡ DC constructions must have solenoid mounted vertical and upright.
✓ ATEX/IECEx certified with prefix "EV".
▼ ATEX/IECEx certified for DC only with prefix "EV".
◆ Not available in 6 Volt DC. EF and HB prefix only.

Dimensions: inches (mm)

Const. Ref.		H	K	L	P	W
1*	in	3.85	3.00	1.91	3.41	1.69
	mm	98	76	49	87	43
2*	in	4.17	3.25	2.28	3.63	1.69
	mm	106	83	58	92	43
5	in	3.84	2.31	2.75	3.28	2.28
	mm	98	59	70	83	58
6*	in	3.38	1.94	2.75	2.80	2.28
	mm	86	49	70	71	58
7	in	4.19	2.50	2.81	3.47	2.39
	mm	106	64	71	88	61
8	in	4.13	2.47	2.81	3.44	2.29
	mm	105	63	71	87	58
9*	in	3.66	2.10	2.81	2.96	2.28
	mm	93	53	71	75	58
10*	in	5.20	3.40	2.80	4.50	2.50
	mm	131	86	71	114	62
11*	in	4.16	2.66	3.84	3.52	2.75
	mm	106	68	98	89	70
12	in	5.64	3.15	3.75	4.01	3.36
	mm	143	80	95	102	85
13	in	4.44	3.22	3.75	4.19	5.81
	mm	113	82	95	106	147
15*	in	5.20	3.30	3.80	4.40	3.80
	mm	133	83	98	111	98
16	in	5.64	3.15	3.66	4.01	3.56
	mm	143	80	93	102	90
18*	in	6.11	3.30	4.38	4.16	3.92
	mm	155	84	111	106	100
20*	in	7.33	3.71	5.06	4.57	4.87
	mm	186	94	129	116	124
21*	in	7.33	3.71	5.50	4.57	4.87
	mm	186	94	140	116	124
23	in	4.35	2.65	2.75	3.79	2.28
	mm	110	67	70	96	58
24	in	5.06	X	3.78	4.44	2.75
	mm	129	X	96	113	70
25	in	4.64	2.81	2.81	3.94	2.28
	mm	118	71	71	100	58
26	in	6.53	X	3.75	4.91	3.19
	mm	166	X	95	125	81
27	in	8.22	X	5.50	5.47	4.87
	mm	209	X	140	139	124
28	in	6.53	X	3.66	4.91	3.19
	mm	166	X	93	125	81
29	in	7.03	X	4.38	5.06	4.40
	mm	179	X	111	129	112

* DC dimensions slightly larger.
IMPORTANT: Valves may be mounted in any position, except as noted in specifications table.

Const. Ref. 1, 2

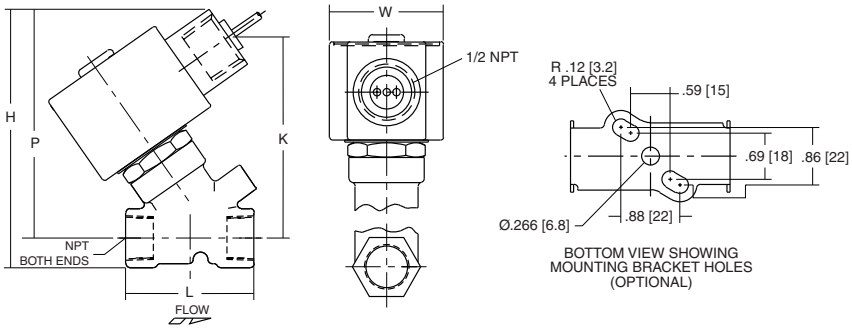

Const. Ref. 13

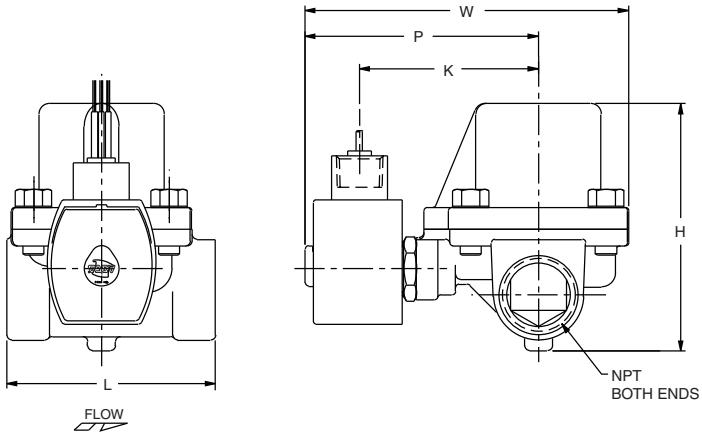

Const. Ref. 5-9, 11, 23 , 25, 37,38, 40-46

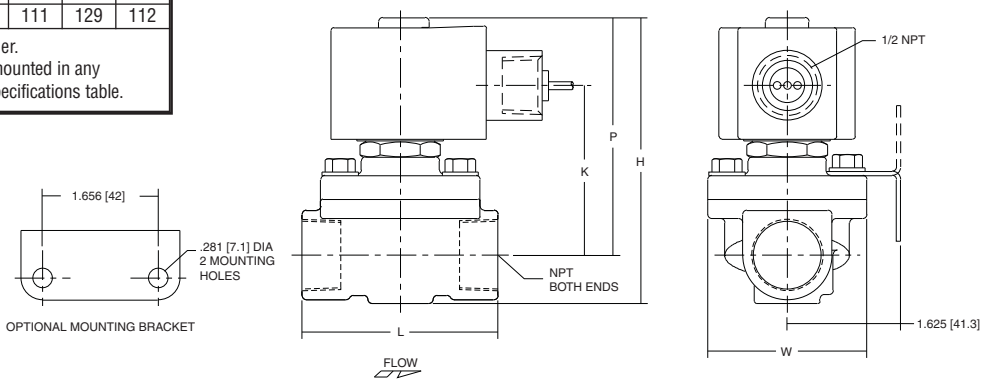

Dimensions: inches (mm)

Const. Ref.		H	K	L	P	W
30	in	8.22	X	5.06	5.47	4.87
	mm	209	X	129	139	124
31	in	5.13	3.19	3.76	4.32	3.27
	mm	130	81	95	110	83
32	in	5.60	3.44	3.66	4.57	3.27
	mm	142	87	93	116	83
33	in	5.92	3.66	4.51	4.80	3.89
	mm	150	93	115	122	99
34	in	6.91	X	3.75	6.09	3.25
	mm	176	X	95	155	83
35	in	7.34	X	3.66	6.34	3.25
	mm	186	X	93	161	83
36	in	7.66	X	4.38	6.56	3.91
	mm	1.95	X	111	167	99
37	in	4.61	2.75	2.81	3.89	2.39
	mm	117	70	71	99	61
38	in	4.61	2.75	2.81	3.89	2.39
	mm	117	70	71	99	61
39	in	5.42	2.31	2.75	4.86	3.80
	mm	138	59	70	123	97
40	in	5.20	3.29	2.81	4.50	2.28
	mm	132	83	71	114	58
41	in	5.13	3.10	3.75	4.32	3.25
	mm	130	79	95	110	83
42	in	6.43	4.40	3.93	5.62	3.25
	mm	163	112	100	143	83
43	in	5.57	3.35	3.66	4.57	3.25
	mm	142	85	93	116	83
44	in	5.90	3.57	4.38	4.79	3.91
	mm	150	91	111	122	99
45	in	5.26	3.17	3.75	4.38	3.84
	mm	134	81	95	111	98
46	in	4.95	3.10	3.84	4.31	2.75
	mm	126	79	98	110	70
47	in	6.43	3.59	3.75	4.81	3.52
	mm	163	91	95	122	90
48	in	6.43	3.59	3.66	4.81	3.73
	mm	163	91	93	122	95
49	in	6.91	3.75	4.38	4.96	4.40
	mm	176	95	111	126	112
50	in	8.13	4.15	5.06	5.37	4.87
	mm	207	105	129	136	124
51	in	8.13	4.15	5.50	5.37	5.18
	mm	207	105	140	136	132

IMPORTANT: Valves may be mounted in any position, except as noted in specifications table.

Const. Ref. 10, 15, 31, 32, 33

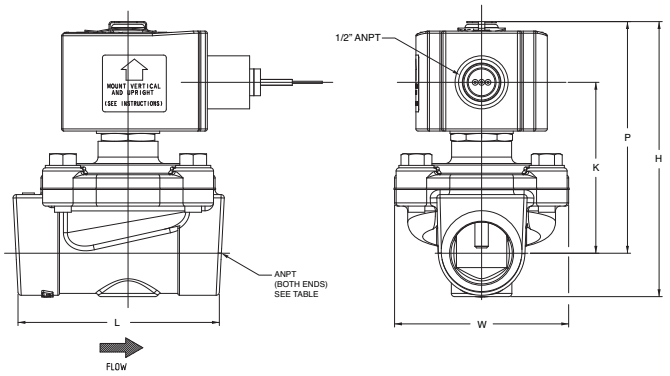

Const. Ref. 24, 34, 35, 36

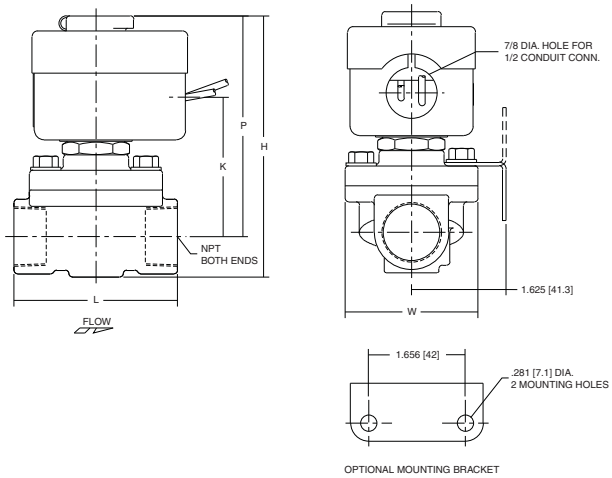

Const. Ref. 12, 16, 26, 28, 47, 48

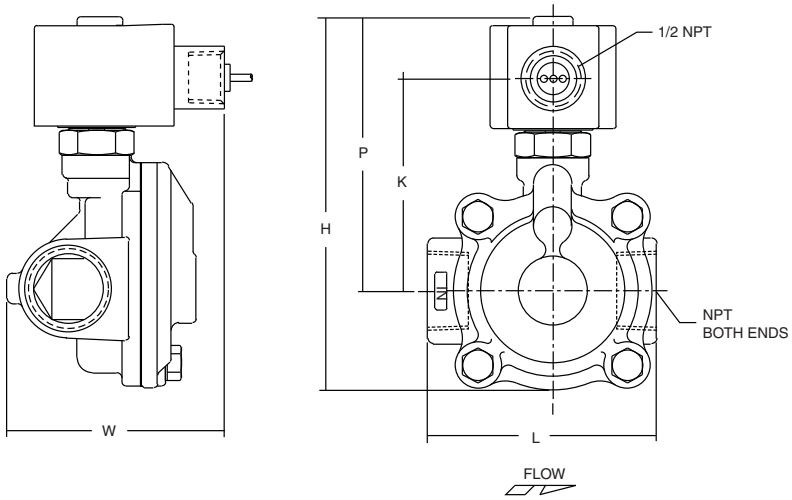

Dimensions: inches (mm)

Const. Ref. 39

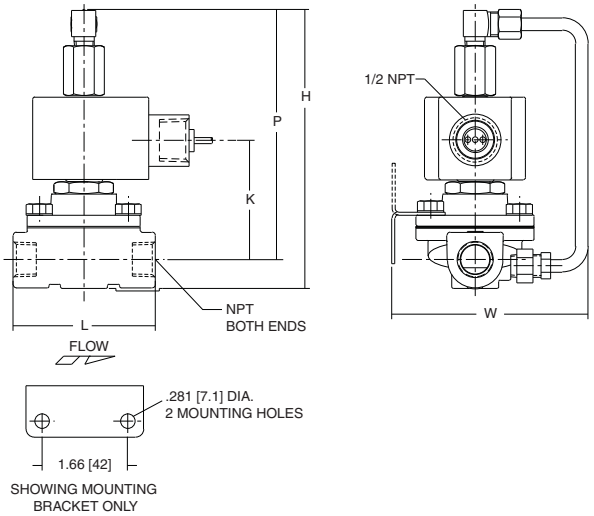

Const. Ref. 18, 29, 49

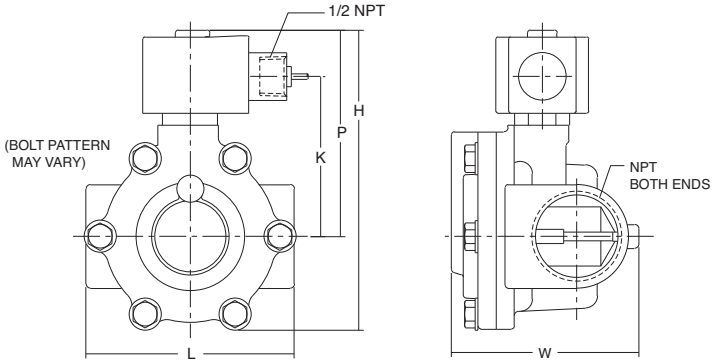

Const. Ref. 20, 21, 27, 30, 50, 51

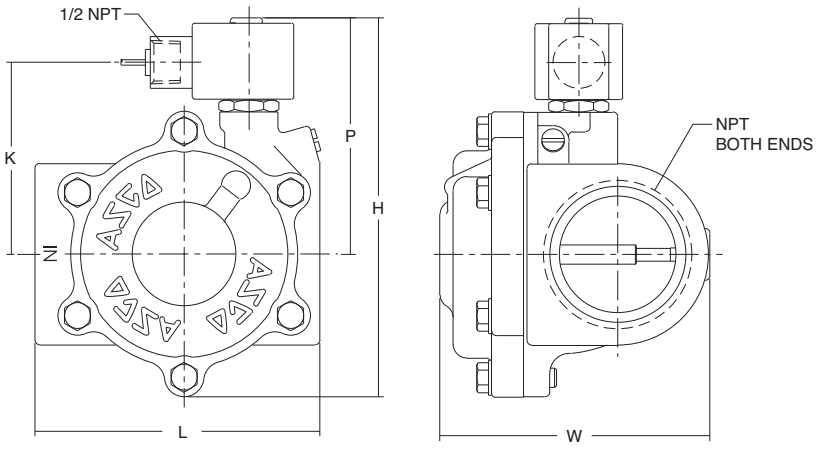

CS-305-170 : Identification sheet

VWTC PROJECT NUMBER:	5000218009	REV:	1
PROJECT NAME:	AEM AMARUQ	SUBMITTED TO (COMPANY):	AGNICO EAGLE MINES
ENGINEER:	Gabriel Hébert	SUBMITTED TO (RESPONSIBLE)	
PROJECT MANAGER:	Clément B	PROJECT NUM REFERENCE.:	
PHONE NUMBER:		LOT NUMBER:	

SUPPLIER	EQPT CODE	EQPT TAG NO	DIA	DESCRIPTION	INFO 1	INFO 2	INFO 3	APPLIC.	NOTE	REV
CHEMLINE	VARFPV348512	BPV9-524	DIA: 25 mm (1")	BACKPRESSURE VALVE	TYPE: BACK PRESSURE VALVE | 150#//MANUFACTURER : CHEMLINE//MODEL : SB12A010EU + SGA-005-002-P-G + P025-160-BM//CONNECTION TYPE : UNION SOCKET | 25 mm (1")//BODY : PVC// SEAL | SEAT :EPDM | EPDM// STEM : N/A	(CONFIG. L_U)		ANIONIC POLYMER DOSING SKID		
CHEMLINE	VARFPV348512	BPV9-525	DIA: 25 mm (1")	BACKPRESSURE VALVE	TYPE: BACK PRESSURE VALVE | 150#//MANUFACTURER : CHEMLINE//MODEL : SB12A010EU + SGA-005-002-P-G + P025-160-BM//CONNECTION TYPE : UNION SOCKET | 25 mm (1")//BODY : PVC// SEAL | SEAT :EPDM | EPDM// STEM : N/A	(CONFIG. L_U)		ANIONIC POLYMER DOSING SKID		
CHEMLINE	VARFPV348512	BPV9-526	DIA: 25 mm (1")	BACKPRESSURE VALVE	TYPE: BACK PRESSURE VALVE | 150#//MANUFACTURER : CHEMLINE//MODEL : SB12A010EU + SGA-005-002-P-G + P025-160-BM//CONNECTION TYPE : UNION SOCKET | 25 mm (1")//BODY : PVC// SEAL | SEAT :EPDM | EPDM// STEM : N/A	(CONFIG. L_U)		ANIONIC POLYMER DOSING SKID		

This page is intentionally left blank

PDF Published September 17, 2014

SB12 Series Back Pressure/Relief Valves

CHEMLINE PLASTICS
SUPERIOR FLOW SOLUTIONS

PVC PP PVDF

CRN Registered as Category C Fittings Consult Chemline

NSF[3] Certified to NSF/ANSI 61

SERIES: SB12

SIZES: 3/8" – 4"

ENDS: True Union Socket, Threaded or ChemFlare™[1] Spigot[2] Bodies with Plain, Socket, Threaded or Flanged ends

DIAPHRAGM: PTFE Bonded EPDM

SEALS: EPDM, FKM (Viton®)

The Chemline SB Series Back Pressure/ Relief Valve has two functions. As a ***back pressure valve***, installed in-line downstream of a pump, the back pressure below the metering pump is maintained. When installed in the branch of a tee it is a ***pressure relief valve***. The valve stays closed until inlet pressure reaches the set pressure which is adjusted by turning the spring tensioning bolt. Inlet pressure acts upward against the piston allowing excess pressure to flow upwards through the orifice.

The SB12 Series has a built-in check valve function, desirable for dosing applications. It is not so sensitive as to open with every pulsation from a metering pump.

features

True Union Ends

- Easy installation and maintenance
- Eliminate chemical leakage problems common with old fashioned threaded connections

Long Cycling Life

- Dynamic seal is PTFE bonded EPDM for high chemical resistance
- This moulded diaphragm is designed for superior sealing and flex life

Superior Performance in Dosing Systems

- Valves are hydraulically designed for very low hysteresis ("backlash") and to eliminate chatter
- Built-in check (non-return) function
- Valve opening depends on inlet pressure only and is uneffected by changes in downstream (back) pressure

CRN Registration numbers by province

- Ontario: OC10134.5
- Newfoundland: OC10134.50
- Alberta: OC10134.52
- Saskatchewan/Manitoba/Quebec: OC10134.56
- New Brunswick: OC10134.57
- Nova Scotia: OC10134.58
- P.E.I.: OC10134.59
- British Columbia: not required

technical

Set Pressure Ranges

- 1/2" to 2" – 5 to 150 psi
- 2-1/2" and 3" – 7.5 to 150 psi
- 2-1/2" to 4" – 4 to 60 psi (optional)
- 4" – 7.5 to 90 psi

Maximum Viscosity

- 120cP is maximum recommended service viscosity

[1] For ChemFlare™ end connectors, consult Chemline.
[2] PP and PVDF spigot ends have DIN dimensions and will butt fuse directly to Chemline PP and PVDF piping systems.
[3] PVC valves with EPDM or FKM (Viton®) seals are certified under NSF/ANSI Standard 61 for contact with drinking water.

09/14 ©Chemline Plastics Limited 2014
Chemline is a registered trade mark of Chemline Plastics Limited

SB12 Series Back Pressure/Relief Valves 1/2" to 2"

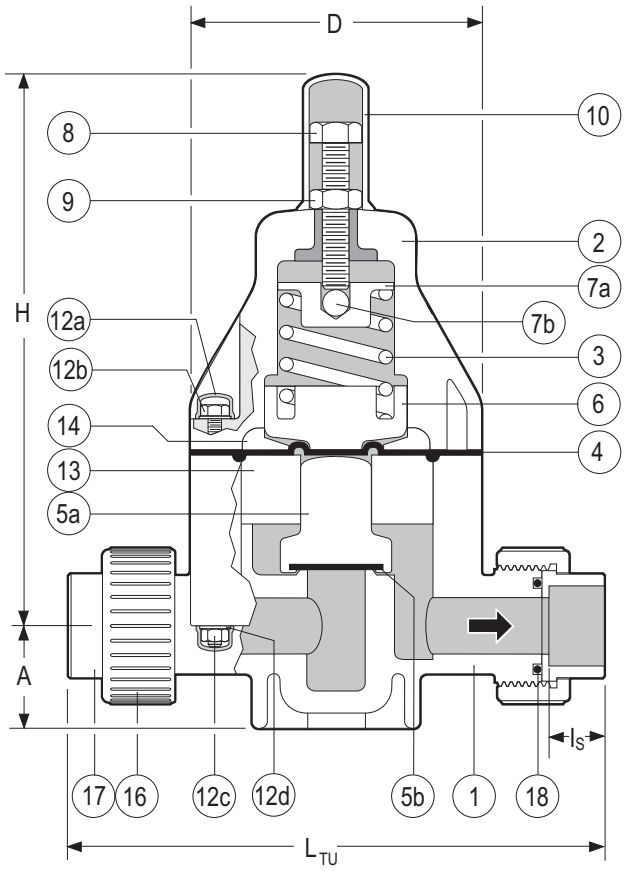

True Union Body

PARTS

▲ Recommended Spare Parts

No.	Part	Pcs.	Materials
1	Body	1	PVC, PP, PVDF
2	Bonnet	1	PPG
3	Spring	1	Galvanized Steel
4▲	Control Diaphragm	1	PTFE bonded EPDM
5a▲	Piston	1	PVC, PP, PVDF
5b▲	Seat	1	EPDM, FPM(Viton®)
6	Lower Spring Retainer	1	PPG
7a	Upper Spring Retainer	1	Cad. Plated Steel
7b	Ball	1	304 SS
8	Spring Tensioning Bolt	1	304 SS
9	Lock Nut	1	304 SS
10	Spring Bolt Cap	1	PE
12a	Bolt/Nut Cap	8/12[1]	PE
12b	Hex Bolt	4/6[1]	304 SS
12c	Hex Nut	4/6[1]	304 SS
12d	Washer	8/12[1]	304 SS
13	Spacer Disc	1	PVC, PP, PVDF
14	Pressure Plate	1	PP
16	Union Nut	2	PVC, PP, PVDF
17	End Connector	2	PVC, PP, PVDF
18▲	Face O-Ring	2	EPDM, FPM(Viton®)

[1] 1/2" size / 3/4" to 2" sizes

OTHER ENDS

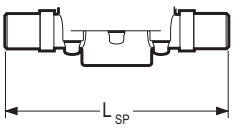

Spigot Body

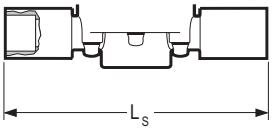

Socket

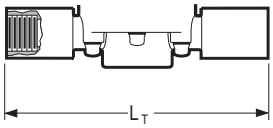

Threaded

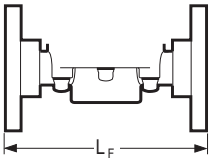

Flanged

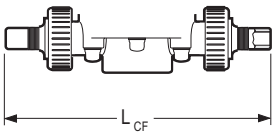

ChemFlare™

DIMENSIONS INCHES

WEIGHTS LB.

Cv VALUES

Size	D	H	PVC A	PVC I_S	PVC L_{TU}[2]	PVC L_{SP}[3]	PVC L_S	PVC L_T	PVC L_F	PVC L_{CF}	PP and PVDF A	PP and PVDF L_{SP}[3]	PP and PVDF L_{TU}[2]	PVC	PP	PVDF	USGPM Flow at 1 psi △P
3/8"	3.2	6.9	1.0	0.6	6.5	5.7	7.4	7.2	4.5	8.2	0.9	5.7	**	1.8	1.5	2.2	2.1
1/2"	3.2	6.9	1.0	0.6	6.8	5.7	8.0	7.8	6.3	8.3[4]	0.9	5.7	7.1	1.9	1.6	2.4	3.0
3/4"	4.2	8.0	1.5	0.7	8.3	6.9	9.3	8.9	7.4	9.7	1.4	6.9	8.4	4.1	3.5	4.6	6.6
1"	4.2	8.0	1.5	0.9	8.5	6.9	9.6	9.3	7.4	10.2	1.4	6.9	8.7	4.2	3.5	4.7	8.7
1-1/4"	5.8	10.3	2.2	1.0	10.9	8.8	11.6	11.2	9.2	13.5	2.1	8.8	10.9	11.0	9.0	12.0	18.0
1-1/2"	5.8	10.3	2.2	1.2	11.1	8.8	12.2	11.5	9.5	–	2.1	8.8	11.2	11.2	9.2	12.2	20.0
2"	5.8	10.3	2.2	1.5	11.3	9.6	12.9	12.0	10.0	–	2.1	8.8	13.2	11.4	9.4	12.4	21.4

[2] True Union bodies come standard with socket ends. Threaded union ends are available. ** Consult Chemline.
[3] Spigot bodies are used for non union socket, threaded or flanged ends. All spigot ends have metric dimensions and the PP and PVDF spigots butt fuse directly to Chemline PP and PVDF piping. [4] Tube size can be reduced to 1/4" tube, LCF = 7.74" for 1/4", 8.26" for 3/8".

MAXIMUM PRESSURES PSI

Size	PVC 20°C 68°F	PVC 30°C 86°F	PVC 40°C 104°F	PVC 50°C 122°F	PP 30°C 86°F	PP 40°C 104°F	PP 50°C 122°F	PP 60°C 140°F	PP 70°C 158°F	PVDF 30°C 86°F	PVDF 50°C 122°F	PVDF 70°C 158°F	PVDF 80°C 176°F	PVDF 90°C 194°F	PVDF 100°C 212°F
1/2"– 2"	150	105	60	15	150	90	60	37.5	15	150	100	60	45	30	15

Temperature Ranges: PVC 0 to 50°C (32 to 122°F), **PP** 10 to 70°C (50 to 158°F), **PVDF** –30 to 100°C (–22 to 212°F).

SB12 Series Back Pressure/Relief Valves 1/2” to 2”

pressure loss nomogram for SB12 valves 3/8” to 2”

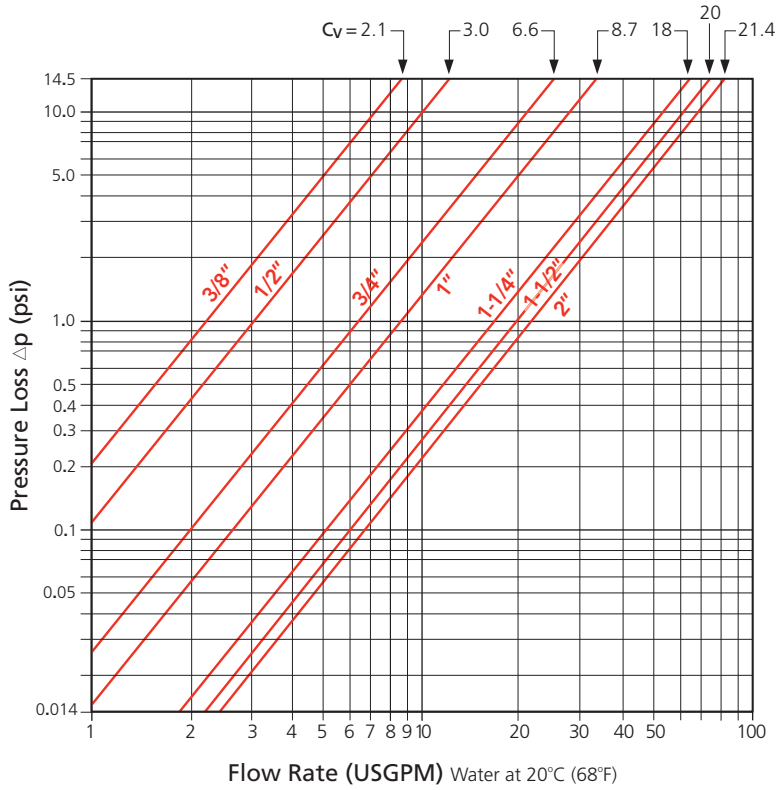

typical dosing system schematic

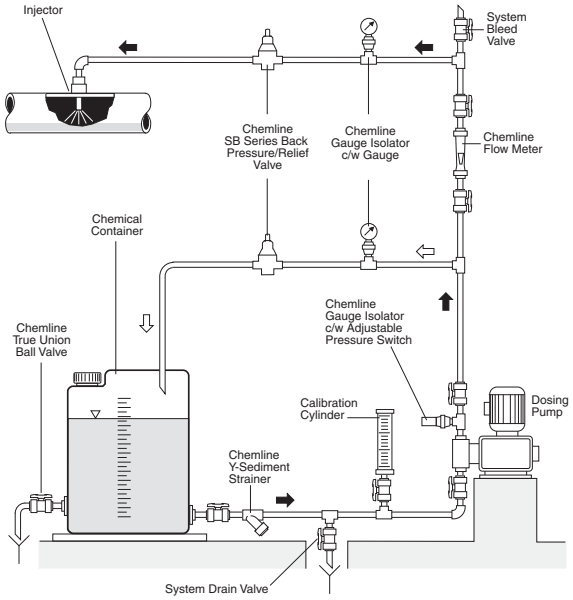

application of pressure relief valves

Constant System Pressure

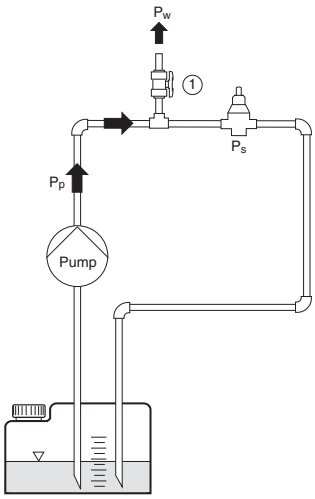

$P_p \geq P_w$
$P_p \geq P_s$ → valve opens
$P_p \leq P_s$ → valve closed

Consumer 1 and/or 2 Open, Valve Closes

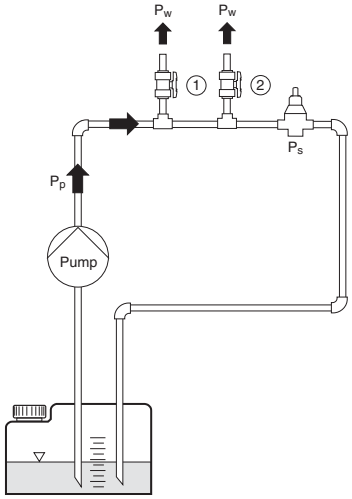

$P_p \geq P_s$ → valve opens
$P_p \leq P_s$ → valve closed

Non-Return Valve

Container 1 is located above the pump

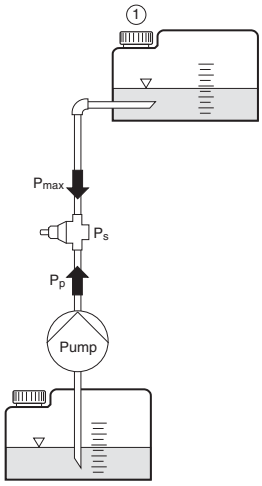

$P_s \geq P_{max}$
$P_p \geq P_s$ → valve opens
$P_p \leq P_s$ → valve closed

Overflow Valve

Pressure of container or application system should not exceed the maximum pressure value

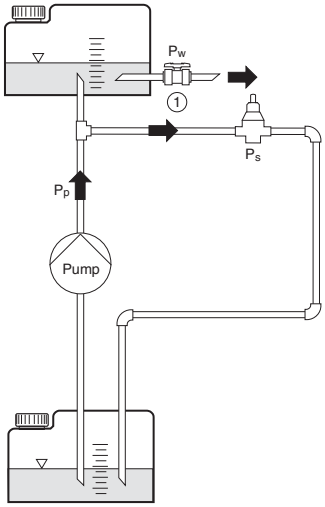

$P_s \leq P_w$
$P_p \geq P_s$ → valve opens
$P_p \leq P_s$ → valve closed

P_w = Working Pressure
P_p = Pump Pressure
P_s = Set Pressure

SB12 Series Back Pressure/Relief Valves 1/2" to 2"

working pressure vs. flow rate

The curves show the relationship between the working pressure and the approximate flow rate through the valve for water at 20°C (68°F) . These values will vary depending on:

- The configuration of the piping and the pressure losses associated with it
- The fluid if not water at 20°C (68°F)
- Whether the pressure is rising or falling, hysteresis is approximately 4 psi for 1/2" to 2" valves. For valves 2-1/2" to 4", hysteresis is approximately 14.5 psi.

operation examples

1. The valve is set closed at 100 psi. At a pressure increase of 10 psi, a flow of approximately 1.0 USGPM will be reached.
   - set pressure = 100 psi
   - working pressure = 110 psi
   - opening pressure = approximately 104 psi
2. The valve is set closed at 50 psi. At a pressure increase of 10 psi, a flow of approximately 1.0 USGPM will be reached.
   - set pressure = 50 psi
   - working pressure = 60 psi
   - opening pressure = approximately 54 psi

3/8" Valves

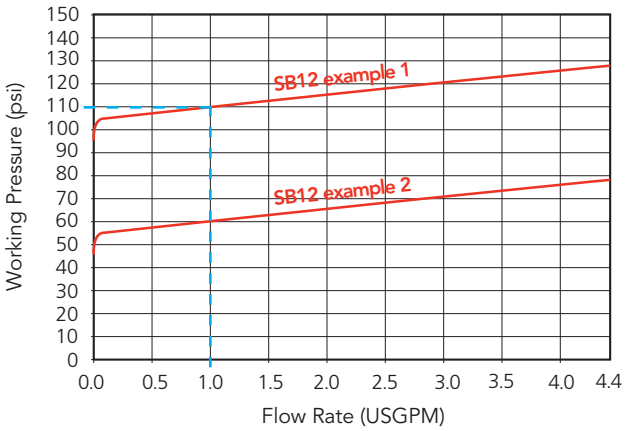

1/2" Valves

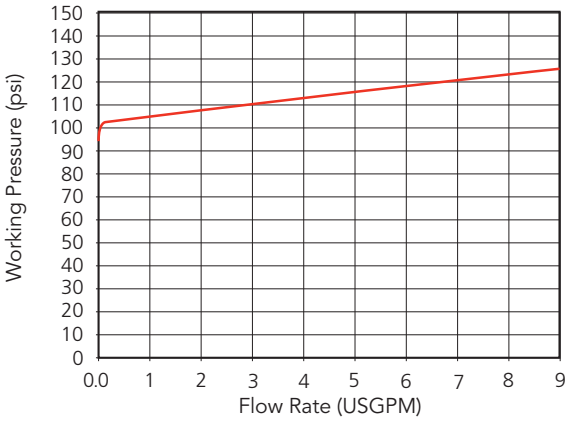

3/4" Valves

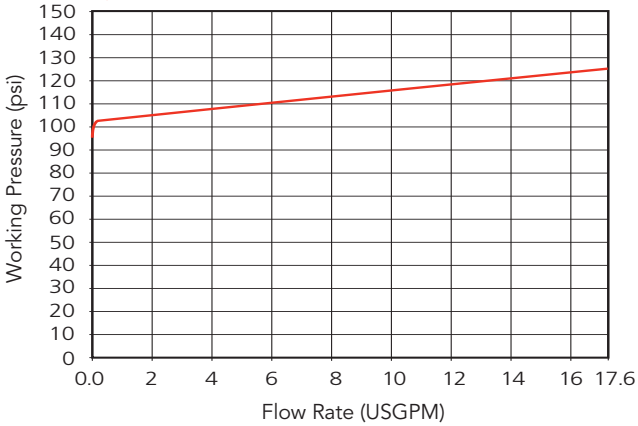

1" Valves

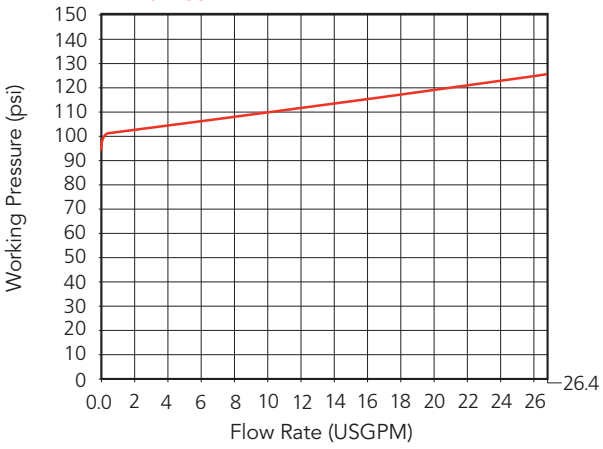

1-1/4" Valves

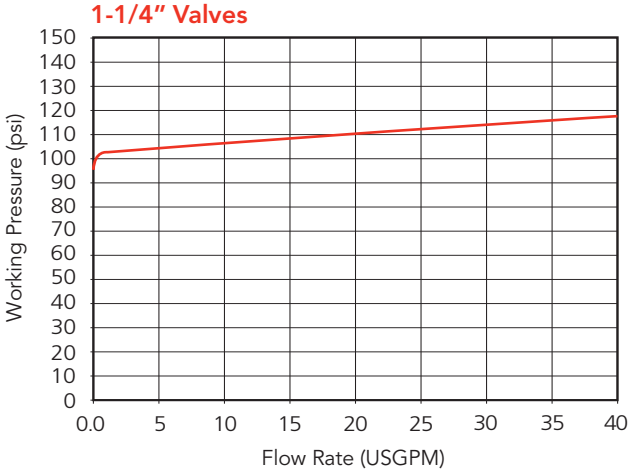

1-1/2" Valves

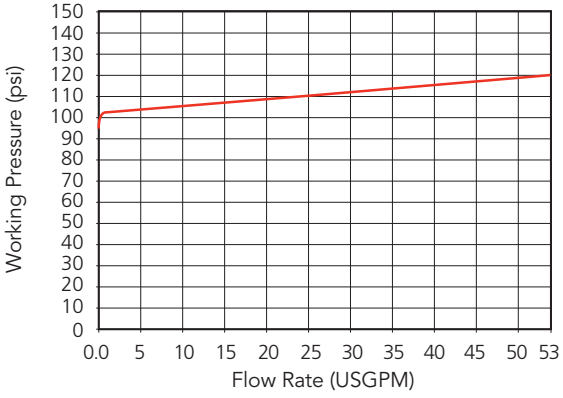

2" Valves

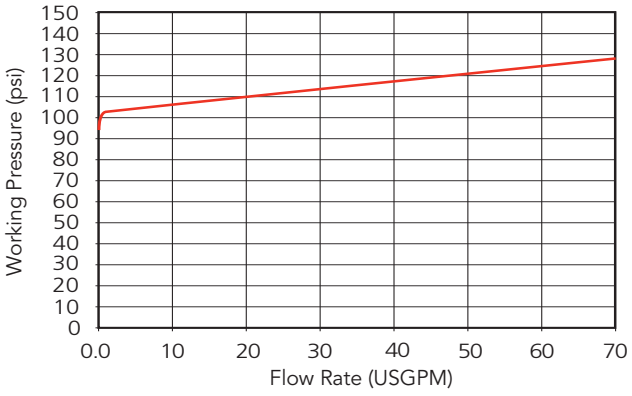

SB12 Series Back Pressure/Relief Valves 2-1/2" to 4"

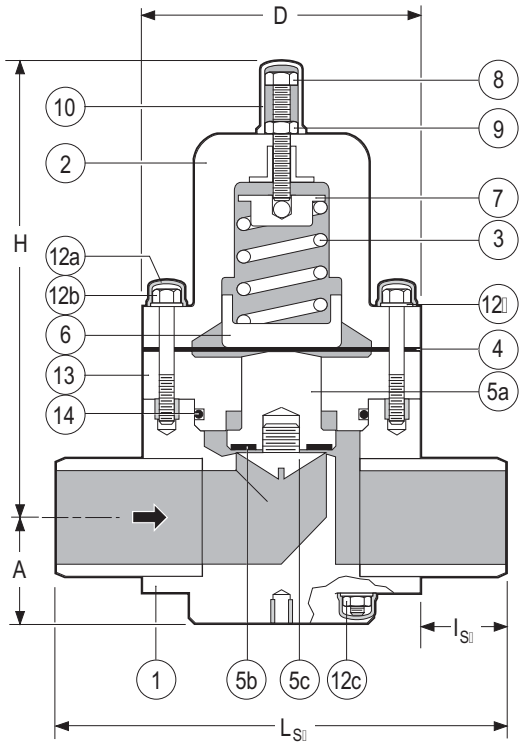

Spigot Body

PARTS

▲ Recommended Spare Parts

No.	Part	Pcs.	Materials
1	Body	1	PVC, PP, PVDF
2	Bonnet	1	PPG
3	Spring	1	Galvanized Steel
4▲	Control Diaphragm	1	PTFE bonded EPDM
5a▲	Piston	2	PVC, PP, PVDF
5b▲	Seat	1	EPDM, FPM(Viton®)
5c▲	Seat Retainer	1	PVC, PP, PVDF
6	Lower Spring Retainer	1	PPG
7	Upper Spring Retauner	1	304 SS
8	Spring Tensioning Bolt	1	304 SS
9	Lock Nut	1	304 SS
10	Spring Bolt Cap	1	PE
12a	Hex Bolt/Nut Cap	20	PE
12b	Hex Bolt/Stud	12[1]	304 SS
12c	Hex Nut	20	304 SS
12d	Washer	20	304 SS
13	Spacer Disc	1	PVC, PP, PVDF
14	Spacer O ring	1	EPDM, FPM(Viton®)

[1] 2 large upper bolts, 2 shorter lower bolts, 8 studs

OTHER ENDS

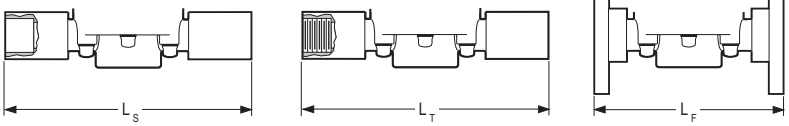

Socket | Threaded | Flanged

ChemFlare™ Ends
- For connection to PFA tube. Leak-free connections for difficult services such as sodium hypochlorite

DIMENSIONS INCHES

WEIGHTS LB.

Cv VALUES

Size	PVC, PP & PVDF A	D	H	L_{SP}[2]	l_{SP}	PVC L_F	WEIGHTS PVC	PP	PVDF	Cv VALUES USGPM Flow at 1 psi △P
2-1/2"	2.7	6.9	11.1	11.2	2.1	12.2	20.9	15.4	24.6	41
3"	3.0	7.9	12.2	14.2	3.1	15.0	26.4	23.8	30.8	63
4"	3.7	9.8	14.2	16.5	3.3	16.9	33.0	26.4	37.4	98

[2] Plain spigot ends in PP & PVDF may be butt fused directly to Chemline PP & PVDF piping systems.

Weights based on spigot bodies.

MAXIMUM PRESSURES PSI

Size	PVC 20°C 68°F	30°C 86°F	40°C 104°F	50°C 122°F	PP 20°C 68°F	30°C 86°F	40°C 104°F	50°C 122°F	60°C 140°F	70°C 158°F	PVDF 30°C 86°F	50°C 122°F	70°C 158°F	80°C 176°F	90°C 194°F	100°C 212°F
2-1/2"– 4"	150	90	44	15	150	116	90	60	37.5	15	150	90	55	40	30	15

Temperature Ranges: PVC 0 to 50°C (32 to 122°F), **PP** 10 to 70°C (50 to 158°F), **PVDF** –30 to 100°C (–22 to 212°F).

ORDERING EXAMPLE

Chemline Back Pressure/ Relief Valves	SB12	A	005	V	U
Body Material	**A** – PVC	**B** – PP	**K** – PVDF		
Size	**003** – 3/8" **010** – 1" **020** – 2"	**005** – 1/2" **012** – 1-1/4" **025** – 2-1/2"	**007** – 3/4" **015** – 1-1/2" **030** – 3"	**040** – 4"		
Elastomers	**E** – EPDM	**V** – FPM (Viton®)				
Ends	**S** – Socket **CFx** – ChemFlare™	**T** – Threaded	**F** – Flanged **Blank** – Spigot (Butt)	**U** – Union Socket		

Example: Chemline SB 12 Series, PVC, 1/2" diameter, FPM (Viton®) seals, Union socket ends.
x = 4 for 1/4", **6** for 3/8", **8** for 1/2", **12** for 1" ID tube connections.

OPTIONS

- 4 to 60 psi Pressure Range springs for 2-1/2" to 4" valves
- **Integral Pressure Gauge** – for inlet and/or outlet
- Bodies in 316 Stainless Steel and PTFE

Optional Pressure Gauge
- For inlet and/or outlet

SB12 Series Back Pressure/Relief Valves 2-1/2" to 4"

working pressure vs. flow rate

• Whether the pressure is rising or falling, hysteresis is approximately 14.5 psi for 2-1/2" to 4" valves

2-1/2" Valves / 4 to 60 psi set pressure range

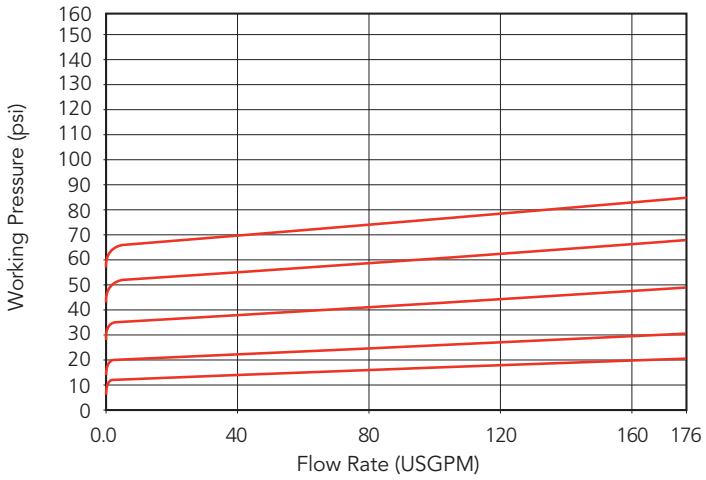

2-1/2" Valves / 7.5 to 150 psi set pressure range

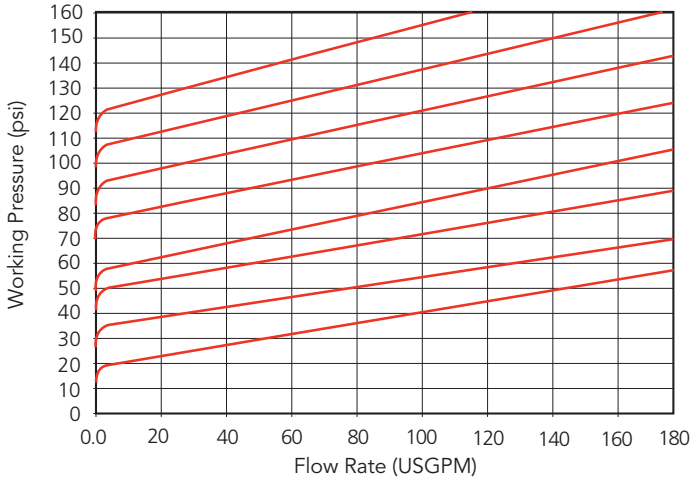

3" Valves / 4 to 60 psi set pressure range

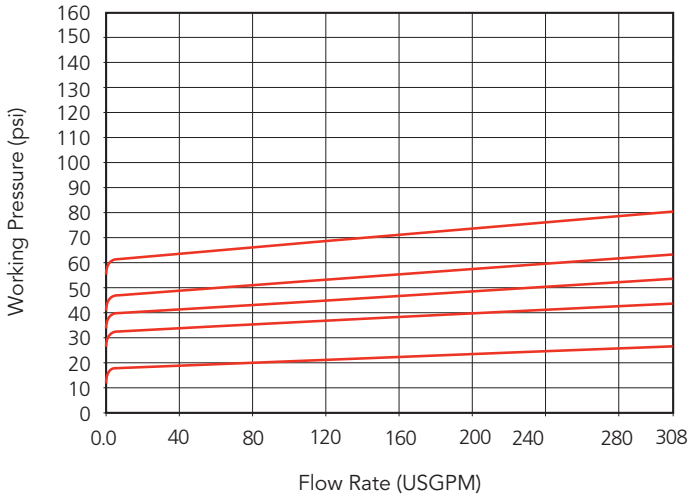

3" Valves / 7.5 to 150 psi set pressure range

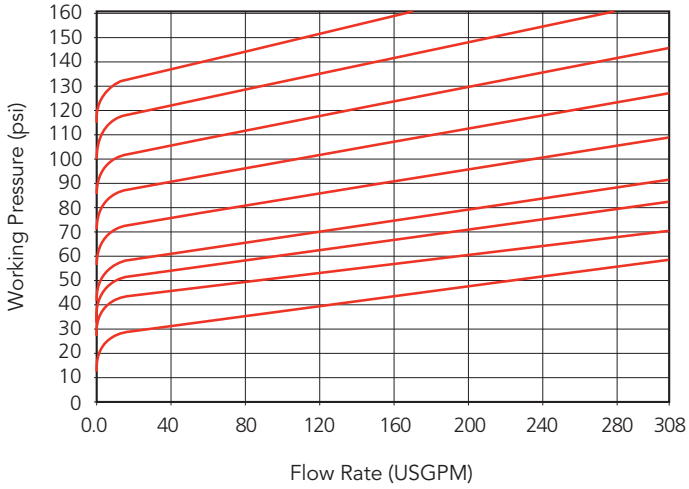

4" Valves / 4 to 60 psi set pressure range

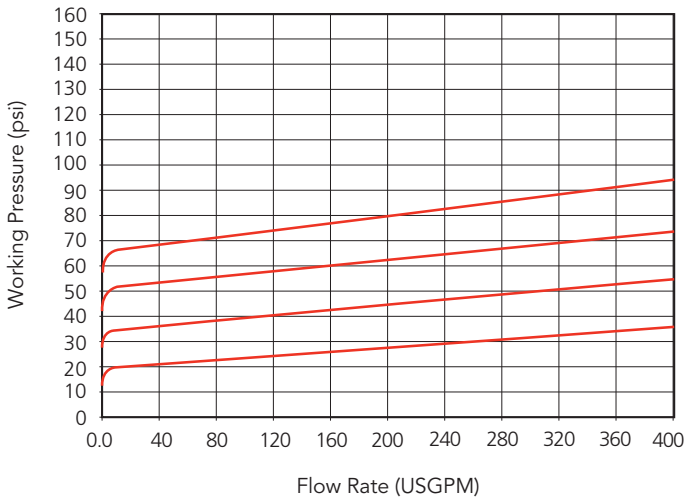

4" Valves / 7.5 to 90 psi set pressure range

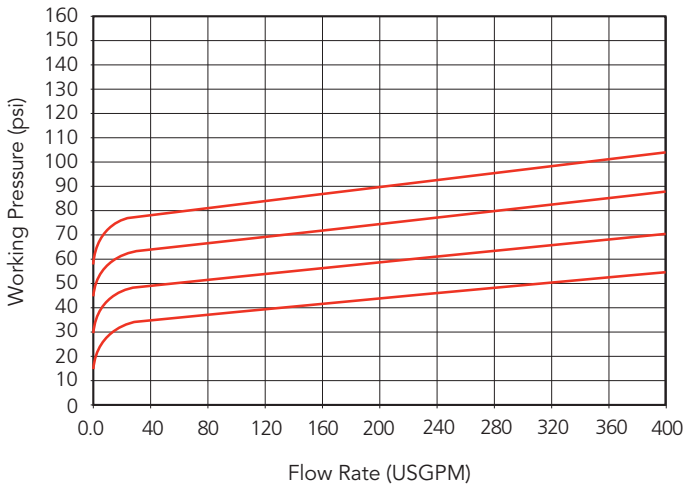

CHEMLINE PLASTICS
SUPERIOR FLOW SOLUTIONS

55 Guardsman Road, Thornhill, ON, L3T 6L2, Canada | ISO 9001:2008 Certified
tel.905.889.7890 | fax.905.889.8553 | request@chemline.com | chemline.com

PDF Published June 23, 2014

Gauge Isolators

CHEMLINE PLASTICS
SUPERIOR FLOW SOLUTIONS

PVC PP PVDF

CRN Registered Consult Chemline

NSF[4] Certified to NSF/ANSI 61

SERIES: SG

INLET CONNECTION: 1/4" or 1/2" Threaded[1]

INSTRUMENT CONNECTION: 1/4" or 1/2" Threaded

DIAPHRAGM: PTFE

[1] Other available inlet connections are 1/2" socket or 1/2" to 1" flanged.
[2] Other fluids are available for special applications such as chlorine service.
[3] Glass reinforced polypropylene.
[4] PVC isolators are certified under NSF/ANSI Standard 61 for contact with drinking water.

Chemline SG Series Gauge Isolators allow inexpensive pressure gauges, or any other pressure instrument to be used in corrosive services. The upper chamber (gauge side) is filled with a stable fluid such as glycol or glycerine[2]. A diaphragm separates it from the lower chamber which receives the media under pressure.

The 1/2" gauge connection allows use of the popular 4" and 4-1/2" diameter gauges. Pressure switches or transmitters may also be installed. Customers can easily fill isolators and install their own gauges.

features

Easy to Mount Gauges

- It is easy to fill an isolator and field mount a gauge. No special equipment is required.
- Will accept popular 4" and 4-1/2" diameter gauges

Provision for Fill Port

- Housing may be drilled and tapped by Chemline or customer for a threaded fill port. This is used for filling isolator using a vacuum filling station

High Chemical Resistance

- Choice of body materials for a wide range of applications
- PTFE bonded EPDM dished diaphragm for high chemical resistance and sensitivity

Heavy Duty Design for Safety

- PPG[3] top chamber
- Heavy wall connection ports

CRN Registration number by province

- Ontario: OH16085.5

Optional Gauges

- Isolators are available alone or with gauge mounted and prefilled with glycol[2]

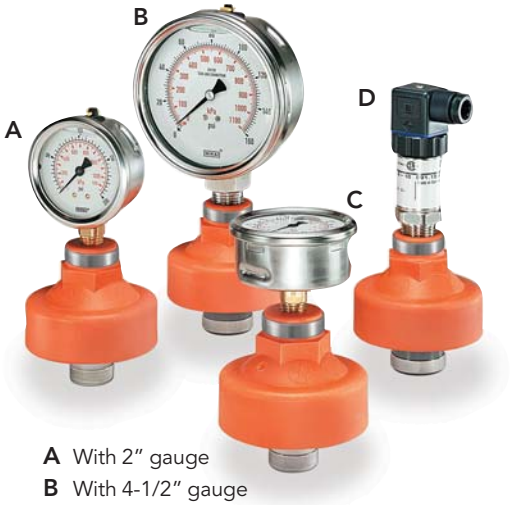

A With 2" gauge
B With 4-1/2" gauge
C With 2" back mount gauge
D With pressure transmitter

06/14 ©Chemline Plastics Limited 2014
Chemline is a registered trade mark of Chemline Plastics Limited

Gauge Isolators

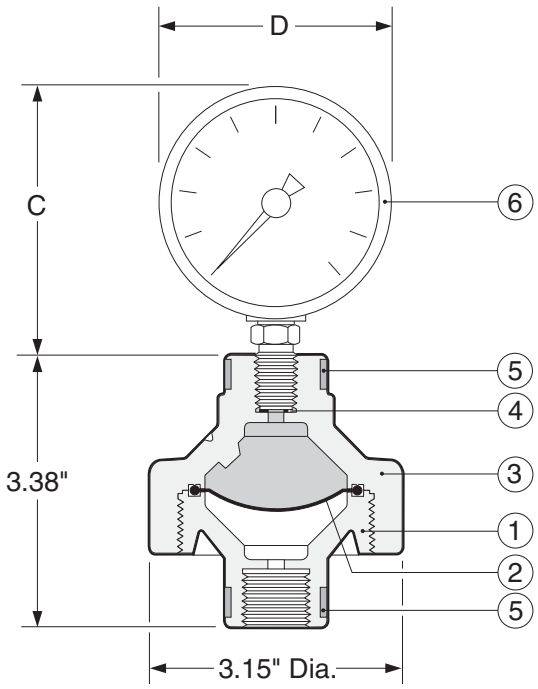

PARTS

No.	Part	Pcs.	Materials
1	Body	1	PVC, PP, PVDF
2	Diaphragm	1	PTFE
3	Bonnet	1	PPG[1]
4	Gasket	1	EPDM
5	Stainless Steel Bands	2	304 SS
6	Optional Gauge	1	See below

[1]PPG = Glass reinforced polypropylene

OPTIONAL GAUGES

- Chemline offers the gauges listed below mounted to isolator and prefilled with glycol, glycerine or special fluid for chlorine applications. These gauges have dials and cases filled with either glycol (standard), glycerine or silicon for corrosion resistance and dampening.
- Chemline SG gauge isolators are not recommended for vacuum applications. They will not affect the gauge accuracy as low as approximately 3 psi. The accuracy depends on the process conditions and the gauge installed on it.

OTHER OPTIONS

- **Flanged** inlet connections
- **Threaded Fill Port** – drilled, tapped and plugged
- Chemline will mount any pressure instrument supplied free issue by customer

DIMENSIONS (Gauge Isolator with optional gauge installed) INCHES

Optional Gauge Ordering No.	Gauge Diameter	Gauge Connection	Housing	Bourdon Tube	Window	Accuracy	Dimensions C	Dimensions D(max.)
P025-xx	2-1/2"	1/4"	316 SS	Brass	Polycarbonate	±1.5% of span	3.1	2.5
P025-xx-SS	2-1/2"	1/4"	316 SS	316 SS	Polycarbonate	±1.5% of span	3.1	2.5
P025-xx-SS/BM	2-1/2" Back Mount	1/4"	316 SS	316 SS	Polycarbonate	±1.5% of span	1.6	2.5
P025-xx-BM	2-1/2" Back Mount	1/4"	316 SS	Brass	Polycarbonate	±1.5% of span	1.6	2.5
P040-xx-SS	4"	1/2"	316 SS	316 SS	Safety Glass	±1% of span	4.5	4.0
P045-xx-SS	4-1/2"	1/2"	PBTP Plastic[2]	316 SS	Acrylic	±0.5% of span	6.3	5.8

xx denotes the maximum gauge pressure i.e., 30, 60, 100, 160 or 200 psi. See data page for recommended working pressures.
[2] PBTP = glass filled polyester.

WORKING PRESSURES PSI

WEIGHTS

Material	10 – 20°C 50 – 68°F	30°C 86°F	40°C 104°F	50°C 122°F	60°C 140°F	70°C 158°F	80°C 176°F	90°C 194°F	100°C 212°F	120°C 248°F	Net Weights Pounds[3]
PVC	150	100	80	45	15	–	–	–	–	–	1.0
PP	150	125	100	80	65	45	–	–	–	–	0.7
PVDF	150	150	150	125	105	85	70	60	45	30	1.3

Temperature Ranges: PVC 0 to 60°C (32 to 140°F), **PP** 10 to 80°C (50 to 176°F), **PVDF** –30 to 120°C (–22 to 248°F).
NR = Not Recommended. [3] Weights are for unfilled 1/2" x 1/2" isolators without gauges. 1/2" x 1/4" isolators are 20% lighter.

ORDERING EXAMPLE

Chemline Gauge Isolators SG		A	005-	002	P	G
Body Material	**A** – PVC	**B** – PP	**K** – PVDF			
Inlet Size	**002** – 1/4"	**005** – 1/2"(Standard)				
Instrument Connection	**002** – 1/4"	**005** – 1/2"				
Diaphragm	**P** – PTFE bonded EPDM					
Filling & Mounting	**G** –Add only if isolator is supplied filled with glycol and gauge or pressure instrument is mounted by Chemline. Separate gauge item numbers are listed above.					

Example: Chemline SG Series Gauge Isolator, PVC, 1/2" x 1/4" FNPT inlet x instrument connections, PTFE diaphragm.

CHEMLINE PLASTICS
SUPERIOR FLOW SOLUTIONS
55 Guardsman Road, Thornhill, ON, L3T 6L2, Canada | ISO 9001:2008 Certified
tel.905.889.7890 | fax.905.889.8553 | request@chemline.com | chemline.com

CS-314-100 : Identification sheet

VWTC PROJECT NUMBER:	5000218009	REV:	1
PROJECT NAME:	AEM AMARUQ	SUBMITTED TO (COMPANY):	AGNICO EAGLE MINES
ENGINEER:	Gabriel Hébert	SUBMITTED TO (RESPONSIBLE)	
PROJECT MANAGER:	Clément B	PROJECT NUM REFERENCE.:	
PHONE NUMBER:		LOT NUMBER:	

SUPPLIER	EQPT CODE	EQPT TAG NO	DIA	DESCRIPTION	INFO 1	INFO 2	INFO 3	APPLIC.	NOTE	REV
CHEMLINE	VAGLPV207831	V15-011	25 mm (1")	GLOVE VALVE - CARRIER WATER	TYPE: GLOBE VALVE | 150 PSI//MANUFACTURER : CHEMLINE//MODEL : GVA010S//CONNECTION TYPE : SOCKET | 25 mm (1")//BODY : PVC// SEAL | SEAT :EPDM | N/A// STEM : PVC	ACTUATOR TYPE : MANUAL HANDWHEEL// MANUFACTURER : N/A// MODEL # :N/A//		ANIONIC POLYMER DOSING SKID		
CHEMLINE	VAGLPV207831	V15-012	25 mm (1")	GLOVE VALVE - CARRIER WATER	TYPE: GLOBE VALVE | 150 PSI//MANUFACTURER : CHEMLINE//MODEL : GVA010S//CONNECTION TYPE : SOCKET | 25 mm (1")//BODY : PVC// SEAL | SEAT :EPDM | N/A// STEM : PVC	ACTUATOR TYPE : MANUAL HANDWHEEL// MANUFACTURER : N/A// MODEL # :N/A//		ANIONIC POLYMER DOSING SKID		
CHEMLINE	VAGLPV207831	V15-021	25 mm (1")	GLOVE VALVE - CARRIER WATER	TYPE: GLOBE VALVE | 150 PSI//MANUFACTURER : CHEMLINE//MODEL : GVA010S//CONNECTION TYPE : SOCKET | 25 mm (1")//BODY : PVC// SEAL | SEAT :EPDM | N/A// STEM : PVC	ACTUATOR TYPE : MANUAL HANDWHEEL// MANUFACTURER : N/A// MODEL # :N/A//		ANIONIC POLYMER DOSING SKID		
CHEMLINE	VAGLPV207831	V15-022	25 mm (1")	GLOVE VALVE - CARRIER WATER	TYPE: GLOBE VALVE | 150 PSI//MANUFACTURER : CHEMLINE//MODEL : GVA010S//CONNECTION TYPE : SOCKET | 25 mm (1")//BODY : PVC// SEAL | SEAT :EPDM | N/A// STEM : PVC	ACTUATOR TYPE : MANUAL HANDWHEEL// MANUFACTURER : N/A// MODEL # :N/A//		ANIONIC POLYMER DOSING SKID		

This page is intentionally left blank

PDF Published March 1, 2013

Globe Valves

CHEMLINE PLASTICS
SUPERIOR FLOW SOLUTIONS

The Chemline Globe Valve is an economical throttling valve. Its heavy duty design provides for long service life. The in-line globe design causes relatively high pressure drops, however this is a desirable valve due to its economy and reliability.

PVC PP

CRN Registered Consult Chemline

SERIES: GV

SIZES: 1/2" – 4"

ENDS: Socket, Threaded[1], Flanged

SEALS: EPDM[2]

features

- **Slow Closing**
  – Prevents water hammer in PVC piping
- **Heavy Duty Construction**
  – Long service life
- **An economical throttling valve**

2-1/2" – 4" Outside Spindle and Yolk Type

Union Bonnet Design 1/2" – 2"

[1] Socket ends are available custom basis.
[2] Other seal materials are available special order.

03/13 ©Chemline Plastics Limited 2013
Chemline is a registered trade mark of Chemline Plastics Limited

Globe Valves

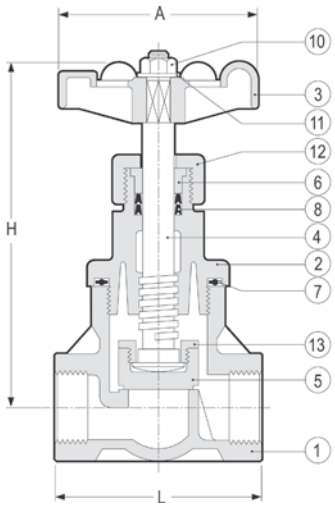

1/2" – 2" Valves

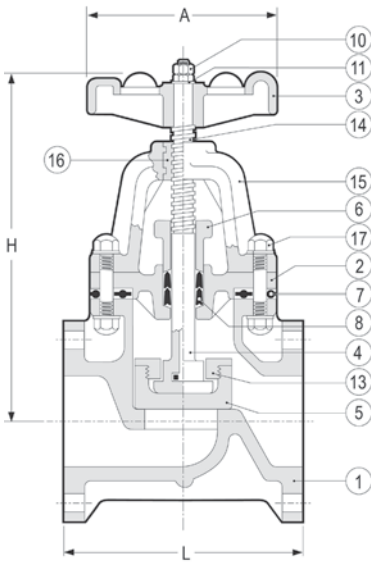

2-1/2" – 4" Valves

PARTS

▲ Recommended Spare Parts

No.	Part	Pcs.	Materials
1	Body	1	PVC, PP
2	Bonnet	1	PVC, PP
3	Handwheel	1	PP
4	Stem	1	PVC, PP
5	Disc	1	PP
6	Gland	1	PVC, PP
7▲	Bonnet Seal	1	EPDM
8▲	Stem Packing	2	EPDM
10	Nut	1	PVC
11	Washer	1	PVC
12	Gland Nut	1	PVC, PP
13	Disc Retainer	1	PP
14	Stem Top[1]	1	Brass, 400 SS
15	Yolk	1	PP
16	Yolk Sleeve	1	Bronze
17	Bolt & Nut	8 sets	304 SS
18	Stud & Nut	2 sets	304 SS

[1] Stem top for valves up to 2" stem are brass. For valves 2-1/2" to 4" stem tops are 400 SS.

DIMENSIONS INCHES

Cv VALUES VS % OPEN

WEIGHTS LB.

Size	A	L Soc	L[2] Thd	L[3] Flg	H Open	Valve Opening (%) 20	40	60	80	100	No. Turns to Open	PVC Soc/Thd	PVC Flg	PP Thd	PP Flg
1/2"	2.6	4.33	3.35	5.3	5.3	2.6	3.5	3.9	4.0	4.1	2.75	0.64	1.0	0.37	0.66
3/4"	2.6	5.12	3.74	6.0	5.5	4.0	5.5	6.1	6.3	6.4	3.25	1.1	1.3	0.55	0.84
1"	3.6	5.19	4.33	6.8	6.4	6.1	8.4	9.2	9.5	9.7	3.25	1.1	2.2	0.77	1.3
1-1/4"	3.6	–	5.32	8.2	6.6	11.3	15.5	17.1	17.7	18.0	2.50	1.3	2.9	–	–
1-1/2"	5.3	–	5.51	8.4	9.1	13.8	19.0	20.9	21.6	22.0	3.75	2.6	4.6	–	2.9
2"	5.3	–	7.09	11.0	9.9	18.2	25.0	27.5	28.5	29.0	3.25	3.5	5.7	–	3.5
2-1/2"	7.3	–	–	8.7	13.6	35.7	49.2	54.1	56.1	57.0	7.50	–	13.0	–	11.0
3"	7.3	–	–	9.5	14.1	48.9	67.3	74.1	76.7	78.0	7.50	–	15.0	–	11.0
4"	7.3	–	–	11.4	16.5	72.1	99.2	109.0	113.0	115.0	8.50	–	22.0	–	18.0

Note: 1-1/4" size is not available in PP. [2]**Threaded** ends are available in PVC 1/2" to 2" and PP 1/2" to 1".
[3]**L Flanged** is for fabricated flanged valves normally supplied 1/2" to 2". Solid flanged (special order) 1/2" to 2" valves have shorter dimensions. Consult Chemline.

WORKING PRESSURES PSI

Size	PVC 0-20°C 32-68°F	PVC 40°C 104°F	PVC 50°C 122°F	Polypropylene –20-20°C –4-68°F	Polypropylene 60°C 140°F	Polypropylene 80°C 176°F
1/2" – 1-1/2"	150	105	105	105	90	65
2"	150	105	90	105	70	40
2-1/2" – 3"	150	105	90	105	60	35
4"	150	80	65	105	60	35

Temperature Ranges: PVC 0 to 60°C (32 to 140°F), **PP** –20 to 90°C (–4 to 194°F).

VACUUM RATING

- 29.9 inches mercury

ACCESSORY

- Handwheel lockout

ORDERING EXAMPLE

Chemline Globe Valves	GV	A	015	T
Body Material	**A** – PVC **B** – Polypropylene			
Size	**005** – 1/2" **007** – 3/4" **010** – 1" **012** – 1-1/4" **015** – 1-1/2" **020** – 2" **025** – 2-1/2" **030** – 3" **040** – 4"			
Ends	**S** – Socket **T** – Threaded **F** – Flanged			

Example: Chemline Globe Valve, PVC, 1-1/2", threaded ends.

CHEMLINE PLASTICS
SUPERIOR FLOW SOLUTIONS

55 Guardsman Road, Thornhill, ON, L3T 6L2, Canada | ISO 9001:2008 Certified
tel.905.889.7890 | fax.905.889.8553 | request@chemline.com | chemline.com

Project name: AMARUQ

Project#: 5000218009

Document #: SPK_0010_PCH

by: GH

chkd: GP

appvd: CB

ANIONIC POLYMER DOSING SKID

CALIBRATION CYLINDER

OIM manual section: 4.3.10.5

This page is intentionally left blank

CS-500-100 : Identification sheet

VWTC PROJECT NUMBER:	5000218009	REV:	1
PROJECT NAME:	AEM AMARUQ	SUBMITTED TO (COMPANY):	AGNICO EAGLE MINES
ENGINEER:	Gabriel Hébert	SUBMITTED TO (RESPONSIBLE)	
PROJECT MANAGER:	Clément B	PROJECT NUM REFERENCE.:	
PHONE NUMBER:		LOT NUMBER:	

SUPPLIER	EQPT CODE	EQPT TAG NO	DIA	DESCRIPTION	INFO 1	INFO 2	INFO 3	APPLIC.	NOTE	REV
PRIMARY FLUID	PUSPPV200284	CLY9-521	L: 23,16 " X W: 6,906 "	Calibration Cylinder	CALIBRATION CYLINDER/MANUFACTURER: PRIMARY FLUID/MODEL: PV2-10000	N/A	N/A	ANIONIC POLYMER DOSING SKID		

This page is intentionally left blank

ACCUDRAW® Calibration Cylinders

Polypropylene

PVC

Glass

- PVC with removable "O" ring sealed top for easy cleaning

- yellow polypropylene level indicator float for high visibility

ACCUDRAW® ***has been developed for the accurate calibration of metering pumps. Standard features include:***

- translucent
- chemical resistant
- break resistant
- threaded, socket or flanged
- colored graduations and lettering
- PVC has dual scale USGPH & ml
- PVC sizes 100 - 20000 ml
- POLY sizes 100 - 4000 ml
- POLY meets ISO standards
- Glass sizes 100 - 20000 ml
- custom designs available

For detailed product information visit our website: primaryfluid.com

PRIMARY FLUID SYSTEMS INC.
Call Toll Free 1-800-776-6580
Tel (905) 333-8743 Fax (905) 333-8746
E-Mail: primary@primaryfluid.com
www.primaryfluid.com

ACCUDRAW® Calibration Cylinders

"For Accuracy That Counts"

For complete product information visit our website: primaryfluid.com

Flanged: Glass, PVC

Flanged: PVC

PV#4

Sizing and Ordering Information:

ACCUDRAW Standard Materials of Construction

AC = All polypropylene construction (see below for options)
PV = All polyvinylchloride construction (see below for options)
ACS = Glass*

Note: Cylinders are NOT pressure vessels

Example: AC#1-1000B

AC = PP (polypropylene)
#1 = Bottom threaded connection only
1000 = 1000 ml
B = BSP Thread

e.g. Part # AC #1 - 1000 B

Type:
AC = Polypropylene
PV = PVC
ACS = Glass

Style:
1 = Bottom threaded conn. only
2 = Top and Bottom threaded conn.
3 = Bottom threaded conn. c/w removable vented dust cap
4 = Top/Bottom threaded conn. c/w removable "O" ring sealed top and float ring level indicator
**** Glass calibration cylinders available in Style 2 only***

Graduation Scale:
PP - ml only
PVC - ml and GPH
Glass - ml only

Std. connection is NPT thread
Optional: add suffix as follows
S = Socket weld connection (PVC only)
GTV = Glass/TFE construction
GKV = Glass/PVDF construction
GCV = Glass/CPVC construction
GSV = Glass/SS construction
B = BSP Thread
F = Flanged

Substitute **E** for **V**
for **EPDM** wetted "O" ring seal

Sizes:		**Material**
100 =	100 ml (1.6 GPH)	PP, PVC, Glass
250 =	250 ml (4 GPH)	PP, PVC, Glass
500 =	500 ml (8 GPH)	PP, PVC, Glass
1000 =	1000 ml (16 GPH)	PP, PVC, Glass
2000 =	2000 ml (32 GPH)	PP, PVC, Glass
4000 =	4000 ml (64 GPH)	PP, PVC, Glass
6000 =	6000 ml	Glass only
8000 =	8000 ml	Glass only
10000 =	10000 ml (160 GPH)	PVC, Glass
20000 =	20000 ml (320 GPH)	PVC, Glass

Custom sizes and materials available.

ACCUDRAW® Calibration Cylinders

ACCUDRAW® Glass Calibration Cylinders ***are ideal for the calibration of metering pumps, batch systems and for handling hazardous chemicals.***

- **volumes calibrated in ml**
- **construction materials available include TFE, PVDF, CPVC and 316 stainless steel**
- **sealing "O" rings are Viton and Buna N**
- **outer shield of acrylic construction**
- **port connections in NPT, metric or flanged**
- **standard sizes 100 - 20,000 ml**
- **custom designs available to your specifications**

Sizing and Ordering Information: Glass Construction

Size	Conn.	Model # For TFE End Flgs	Model # For 316 S/S End Flgs	Model # For PVDF End Flgs	Model # For CPVC End Flgs
100 ml	1/2" NPT	ACS#2-100-GTV	ACS#2-100-GSV	ACS#2-100-GKV	ACS#2-100-GCV
250 ml	1/2" NPT	ACS#2-250-GTV	ACS#2-250-GSV	ACS#2-250-GKV	ACS#2-250-GCV
500 ml	1/2" NPT	ACS#2-500-GTV	ACS#2-500-GSV	ACS#2-500-GKV	ACS#2-500-GCV
1000 ml	1/2" NPT	ACS#2-1000-GTV	ACS#2-1000-GSV	ACS#2-1000-GKV	ACS#2-1000-GCV
2000 ml	1 " NPT	ACS#2-2000-GTV	ACS#2-2000-GSV	ACS#2-2000-GKV	ACS#2-2000-GCV
4000 ml	1" NPT	ACS#2-4000-GTV	ACS#2-4000-GSV	ACS#2-4000-GKV	ACS#2-4000-GCV
6000 ml	1" NPT	ACS#2-6000-GTV	ACS#2-6000-GSV	ACS#2-6000-GKV	ACS#2-6000-GCV
8000 ml	2" NPT	ACS#2-8000-GTV	ACS#2-8000-GSV	ACS#2-8000-GKV	ACS#2-8000-GCV
10000 ml	2" NPT	ACS#2-10000-GTV	ACS#2-10000-GSV	ACS#2-10000-GKV	ACS#2-10000-GCV
20000 ml	2" NPT	ACS#2-20000-GTV	ACS#2-20000-GSV	ACS#2-20000-GKV	ACS#2-20000-GCV

Cylinders are bolted together using stainless steel rods with Viton "O" rings for the glass seal and Buna N "O" rings for the acrylic seal. For EPDM "O" rings, subsititute "E" for "V".

Options available: (may affect price and delivery)

- **different type or size of thread connection, different "O" ring material, different flange material**

Descriptions:

TFE, PVDF and CPVC End Flanges:
Glass cylinder with acrylic outer shield and 3/4" thick (TFE, PVDF or CPVC) end flanges

316 S/S End Flanges:
Glass cylinder with acrylic outer shield and 1/2" thick 316 Stainless Steel end flanges

Glass Dimensional Information

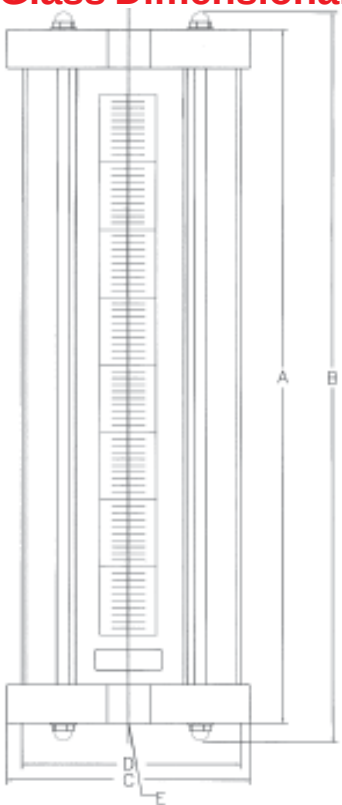

Note: Cylinders are <u>not</u> pressure vessels.

Dimensions subject to change without notice.

Glass cylinders with TFE, PVDF or CPVC End Flanges

Size ml	DIV ml	A inches	B inches	C inches	D inches	E thread
100	1.00	10.00	11.00	3.00	2.50	1/2" FNPT
250	2.00	12.75	13.50	3.50	3.00	1/2" FNPT
500	5.00	14.50	15.50	4.00	3.50	1/2" FNPT
1000	10.00	16.75	17.75	4.75	4.25	1/2" FNPT
2000	20.00	18.75	19.75	5.50	5.00	1" FNPT
4000	25.00	22.50	23.50	6.50	6.00	1" FNPT
6000	50.00	20.13	21.16	8.00	7.50	1" FNPT
8000	50.00	24.63	25.66	8.00	7.50	2" FNPT
10000	50.00	30.13	31.16	8.00	7.50	2" FNPT
20000	200.00	43.25	44.25	9.00	8.50	2" FNPT

Glass cylinders with 316 Stainless Steel End Flanges

Size ml	DIV ml	A inches	B inches	C inches	D inches	E thread
100	1.00	9.50	10.50	3.00	2.50	1/2" FNPT
250	2.00	12.25	13.00	3.50	3.00	1/2" FNPT
500	5.00	14.00	15.00	4.00	3.50	1/2" FNPT
1000	10.00	16.25	17.25	4.75	4.25	1/2" FNPT
2000	20.00	18.25	19.25	5.50	5.00	1" FNPT
4000	25.00	22.00	23.00	6.50	6.00	1" FNPT
6000	50.00	19.63	20.66	8.00	7.50	1" FNPT
8000	50.00	24.13	25.16	8.00	7.50	2" FNPT
10000	50.00	29.63	30.66	8.00	7.50	2" FNPT
20000	200.00	42.75	43.75	9.00	8.50	2" FNPT

ACCUDRAW® Calibration Cylinders

Installations

Conversion Factors
1 ml = 1 cc
1000 ml = 1 liter
ml/sec X 60 = ml/min
1 US gal/min X 0.063 = liters/sec
1 US gal = 3.786 liters

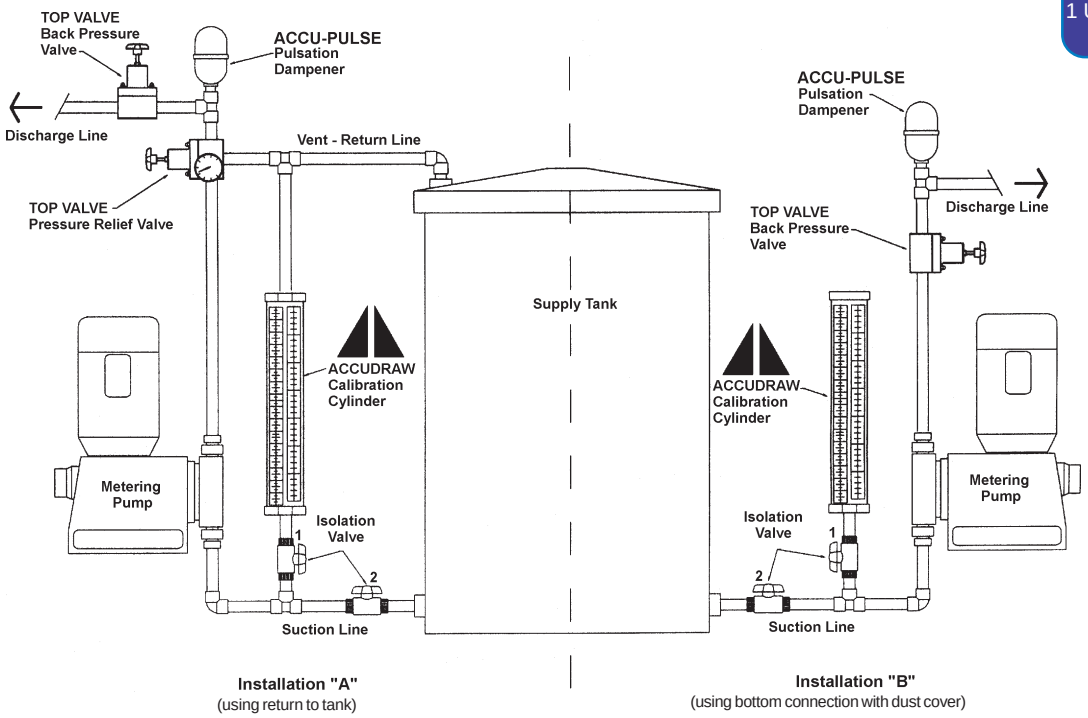

Installation "A"
(using return to tank)

Installation "B"
(using bottom connection with dust cover)

Other available products at www.primaryfluid.com

TOP VALVE Back Pressure/Pressure Relief

- *long life diaphragm*
- *range of 15 - 350 PSIG*
- *air release, optional gauge port*
- *PVC, CPVC, PVDF, Teflon, polypropylene, stainless, Alloy 20 and Hastelloy C*
- *7 sizes 1/4" - 2" NPT*
- *color coded handles indicate size*
- *higher pressure & temperature available*

PFS Corporation Stops

Designed to inject chemical into the center stream of process.

- *isolation valve allows for ease of maintenance*
- *available in 6 materials of construction*
- *wetted components have comparable or greater chemical resistance than quill construction material*
- *standard and custom lengths available*
- *connection in NPT, metric or flanged*

Custom built in other sizes & materials.

ACCUPULSE Pulsation Dampeners

Designed to remove pulsatingflows from positive displacement pumps.

- *increase system efficiency and pump life; decrease maintenance and costs*
- *protect pipes, meters, valves and instrumentation from pulsation and vibration*
- *ensure meter accuracy, longevity and repeatability*
- *prevent foaming and splashing*
- *extensive range of materials and sizes with lightweight, compact design*

Distributed By:

PRIMARY FLUID SYSTEMS INC.

Call Toll Free 1-800-776-6580
Tel: (905) 333-8743
Fax: (905) 333-8746

Distribution Territories Available

E:Mail: primary@primaryfluid.com
www.primaryfluid.com

® Registered Trade Mark of Primary Fluid Systems

Project name: AMARUQ

Project#: 5000218009

Document #: SPK_0010_PCH

by: GH

chkd: GP

appvd: CB

ANIONIC POLYMER DOSING SKID

INSTRUMENTS

OIM manual section: 4.3.10.6

This page is intentionally left blank

CS-449-100 : Identification sheet

VWTC PROJECT NUMBER:	5000218009	REV:	1
PROJECT NAME:	AEM AMARUQ	SUBMITTED TO (COMPANY):	AGNICO EAGLE MINES
ENGINEER:	Gabriel Hébert	SUBMITTED TO (RESPONSIBLE)	
PROJECT MANAGER:	Clément B	PROJECT NUM REFERENCE.:	
PHONE NUMBER:		LOT NUMBER:	

SUPPLIER	EQPT CODE	EQPT TAG NO	DIA	DESCRIPTION	INFO 1	INFO 2	INFO 3	APPLIC.	NOTE	REV
CHEMLINE	IMFWGG301907	FI15-011	1	VARIABLE AREA FLOWMETER	VARIABLE AREA FLOWMETER/MANUFACTURER: CHEMLINE/ MODEL: FSA02500	N/A	N/A	ANIONIC POLYMER DOSING SKID		rev1
CHEMLINE	IMFWGG301907	FI15-021	1	VARIABLE AREA FLOWMETER	VARIABLE AREA FLOWMETER/MANUFACTURER: CHEMLINE/ MODEL: FSA02500	N/A	N/A	ANIONIC POLYMER DOSING SKID		rev1

This page is intentionally left blank

PDF Published March 1, 2013

Variable Area Flow Meters

CHEMLINE PLASTICS
SUPERIOR FLOW SOLUTIONS

Chemline F Series Variable Area Flow Meters are ideal for plastic piping. They provide a combination of accurate visual flow rate measurement and clear flow indication from a distance. Optional limit switches allow the units to signal a low or high flow alarm. An optional flow transmitter provides a 4 to 20 mA signal output. These flow meters must be installed vertically with flow upward.

PVC PA PSU PVDF Tube

PVC CPVC PP PVDF Ends

CRN Registered Consult Chemline

SERIES: FC – Compact – 5" Single Scale
FS – Full Size – 7" Dual Scale[1]

MATERIALS: Tube: Clear PVC, Polyamide (PA), Polysulfone (PSU) or PVDF[2]
Float: PVDF
Ends: PVC, CPVC, PP, PVDF, Socket, Threaded, Flanged, Butt or ChemFlare™[3]

O-RINGS: EPDM, FPM (Viton®)

CAPACITIES: Up to 220 USGPM (50,000 litres per hour)

features

Clear Visual Indication

- Large orange float is visible from a distance
- Range indicators slide along dovetail track

Easy Installation and Maintenance

- Just unscrew union nuts and tube slides out of line

Choice of Four Tube Materials for Many Applications:

- ***Clear PVC*** – For Water or Chemicals up to 60°C (140°F) – High Chemical resistance at low cost
- ***Polyamide (PA)*** – For Water or Air up to 75°C (167°F) – High impact strength and optical clarity
- ***Polysulfone (PSU)*** – For Chemicals and Gases up to 100°C (212°F) – High impact strength and good chemical resistance
- ***PVDF[2]*** – For Chemicals and Ultrapure fluids up to 110°C (230°F) – High impact strength and excellent chemical resistance.

Ideal for All Types of Plastic Piping

- All types of end connections in PVC, CPVC, PP & PVDF

- **Low Pressure Drop**

Good Measuring Accuracy – Class IV

- ± 3% of indicated value, plus ± 1% of full scale.
  – Read scale at top (largest diameter) of float

Non Fouling

- Float is self supporting in the flow. No guide rod (which can cause the float to jam) is necessary.

[1] USGPM and litres per hour (water) scale is supplied as standard on full size meters.
[2] Because PVDF is translucent, a magnetic float and limit switches are usually used.
[3] For ChemFlare™ end connectors, consult Chemline.

03/13 ©Chemline Plastics Limited 2013
Chemline is a registered trade mark of Chemline Plastics Limited

Variable Area Flow Meters

NOTES:

PVDF flow meters are available in all sizes. Change third letter in item number to **K**.
[1] △P = Pressure loss through flow meter with water at 20°C (68°F).
[2] Dimension **L** is for PVC Socket ends.

FC SERIES – COMPACT SIZE – 5″ SCALE

Single USGPM (water) scale is supplied standard

End Conn. Size	Item Number			Flow Range (water)		Dimensions (inches)			Pressure Drop (psi)[1]	
	PVC Tube	Polyamide Tube	Polysulfone Tube	USGPM	Litres per hour	A	L[2]	D	Water	Air
3/8″	FCA00020	FCT00020	FCP00020	0.0132 – 0.106	3 – 24	6.50	8.2	1.38	0.05	0.07
	FCA00060	FCT00060	FCP00060	0.022 – 0.264	5 – 60	6.50	8.2	1.38	0.05	0.07
	FCA00100	FCT00100	FCP00100	0.04 – 0.44	10 – 100	6.50	8.2	1.38	0.05	0.07
	FCA00250	FCT00250	FCP00250	0.11 – 1.10	25 – 250	6.50	8.2	1.38	0.05	0.07
1/2″	FCA00051	FCT00051	FCP00051	0.02 – 0.22	5 – 50	6.69	8.7	1.69	0.04	0.06
	FCA00151	FCT00151	FCP00151	0.07 – 0.66	15 – 150	6.69	8.7	1.69	0.04	0.06
	FCA00251	FCT00251	FCP00251	0.11 – 1.10	25 – 250	6.69	8.7	1.69	0.04	0.06
	FCA00401	FCT00401	FCP00401	0.18 – 1.76	40 – 400	6.69	8.7	1.69	0.04	0.06
3/4″	FCA00152	FCT00152	FCP00152	0.07 – 0.66	15 – 150	7.28	9.6	2.09	0.09	0.12
	FCA00402	FCT00402	FCP00402	0.22 – 1.76	40 – 400	7.28	9.6	2.09	0.09	0.12
	FCA00602	FCT00602	FCP00602	0.26 – 2.64	60 – 600	7.28	9.6	2.09	0.09	0.12
	FCA01002	FCT01002	FCP01002	0.44 – 4.40	100 – 1,000	7.28	9.6	2.09	0.09	0.12
1″	FCA00253	FCT00253	FCP00253	0.11 – 1.10	25 – 250	7.87	10.5	2.36	0.09	0.12
	FCA00403	FCT00403	FCP00403	0.18 – 1.76	40 – 400	7.87	10.5	2.36	0.09	0.12
	FCA01003	FCT01003	FCP01003	0.44 – 4.40	100 – 1,000	7.87	10.5	2.36	0.09	0.12
	FCA01503	FCT01503	FCP01503	0.66 – 6.60	150 – 1,500	7.87	10.5	2.36	0.09	0.12

FS SERIES – STANDARD FULL SIZE – 7″ SCALE

Dual USGPM (water) and litres per hour scales are supplied standard

End Conn. Size	Item Number			Flow Range (water)		Dimensions (inches)			Pressure Drop (psi)[1]	
	PVC Tube	Polyamide Tube	Polysulfone Tube	USGPM	Litres per hour	A	L[2]	D	Water	Air
1″	FSA00600	FST00600	FSP00600	0.26 – 2.64	60 – 600	13.78	16.3	2.36	0.18	0.23
	FSA01000	FST01000	FSP01000	0.44 – 4.40	100 – 1,000	13.78	16.3	2.36	0.18	0.23
1-1/4″	FSA01500	FST01500	FSP01500	0.66 – 6.60	150 – 1,500	13.78	16.6	2.83	0.18	0.23
	FSA02500	FST02500	FSP02500	1.10 – 11.00	250 – 2,500	13.78	16.6	2.83	0.18	0.23
1-1/2″	FSA02000	FST02000	FSP02000	0.88 – 8.80	200 – 2,000	13.78	16.8	3.27	0.18	0.23
	FSA03000	FST03000	FSP03000	1.32 – 13.20	300 – 3,000	13.78	16.8	3.27	0.18	0.23
2″	FSA04000	FST04000	FSP04000	1.76 – 17.60	400 – 4,000	13.78	17.2	4.06	0.32	0.39
	FSA06000	FST06000	FSP06000	2.64 – 26.40	600 – 6,000	13.78	17.2	4.06	0.32	0.39
	FSA10000	FST10000	FSP10000	4.40 – 44.00	1,000 – 10,000	13.78	17.2	4.06	0.32	0.39
2-1/2″	FSA15000	FST15000	FSP15000	6.60 – 66.00	1,500 – 15,000	13.78	17.7	4.80	0.49	0.58
	FSA25000	FST25000	FSP25000	11.00 – 110.00	2,500 – 25,000	13.78	17.7	4.80	0.49	0.58
	FSA50000	FST50000	FSP50000	44.00 – 220.00	10,000 – 50,000	13.78	17.7	4.80	0.49	0.58

CONVERSION CHART – FLOW UNITS

From To	m^3/hr	litres/hr	USGPM	ImpGPM	ft^3/min
m^3/hr	1	1000	4.4029	3.6662	0.5886
litres/hr	0.001	1	.004403	.003666	.000589
USGPM	0.2271	227.12	1	0.8327	0.1337
ImpGPM	0.2728	272.77	1.2009	1	0.1605
ft^3/min	1.6990	1699	7.4806	6.2289	1

Values based on water at 20°C (68°F).

Variable Area Flow Meters

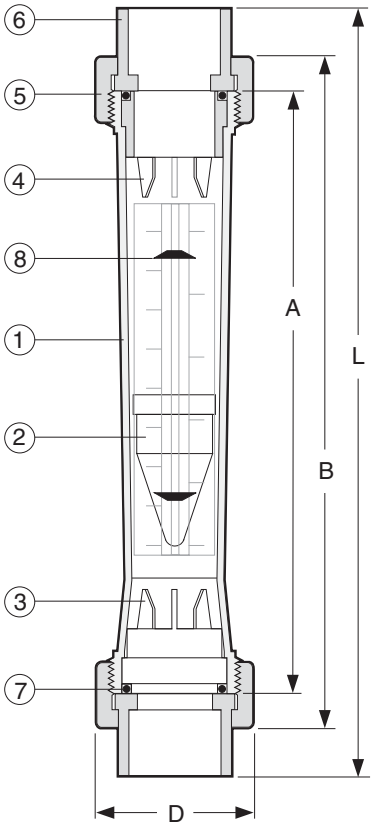

PARTS

▲ Recommended Spare Parts

No.	Part	Pcs.	Materials
1	Tube	1	Polyamide (PA), Polysulfone (PSU), Clear PVC, PVDF
2	Float	1	PVDF (standard or magnetic)
3	Lower Float Stop	1	PVDF
4	Upper Float Stop	1	PVDF
5	Union Nut	2	PVC, PPG, PVDF
6	End Connector	2	PVC, CPVC, PP or PVDF
7▲	O-Rings	2	EPDM, FPM(Viton®)
8▲	Range Indicator	2	ABS

ACCESSORIES

- **Limit Switches** – One switch for both maximum or minimum. A magnetic float is required.
- **Switch Ratings** – P (max) = 10 VA, E (max) = 470VAC, I (max) = 0.5A
- **Throttling Valve** for flow control
- **4–20 mA Output Signal Unit** must be factory calibrated for specific service

OPTIONS

- **Custom Direct Reading Scale** for services other than water
- **Alternate O-Rings** – ie. FPM (Viton®)
- **End Size Reduction** – Accuracy is not significantly affected by end reduction
- **Other Ends** – Threaded, socket or flanged end connections in PVC, CPVC, PP or PVDF. Butt ends in PP or PVDF.

MAXIMUM WORKING PRESSURES AND TEMPERATURE RANGES

Construction (‡ = Optional Materials)				Maximum	
Tube	O-Rings	Union Nuts	Ends	Pressure[2]	Temperature Range
PVC	EPDM	PVC	PVC	150 psi	0 to 60°C (32 to 140°F)
Polyamide (PA)	EPDM	PVC	PVC	150 psi	0 to 60°C (32 to 140°F)
Polyamide (PA)	EPDM	PPG‡	PP or CPVC‡	150 psi	0 to 75°C (32 to 167°F)
Polysulfone (PSU)	EPDM	PVC	PVC	150 psi	0 to 60°C (32 to 140°F)
Polysulfone (PSU)	EPDM	PPG‡	PP or CPVC‡	150 psi	0 to 90°C (32 to 194°F)
PVDF	FPM(Viton®)	PVDF	PVDF	150 psi	–40 to 110°C (–40 to 230°F)

[2] 150 psi is not recommended at maximum temperatures. Consult Chemline.

flow meter sizing – liquid flow

Standard Scale values are for clean water flow at 20°C (68°F). For liquids with densities and viscosities similar to water (ie. specific gravity of 1.0 and viscosities between 0.5 cP and 1.3 cP) the standard water scale will be accurate enough.

The table below shows correction factors to be applied for liquids with specific gravities other then 1.0. Multiply the correction factor by the water scale value to obtain actual flow rate. Example: For a liquid of specific gravity of 1.66, the correction factor is 0.740. For water flow range of 100 to 1000 litres/hr, corrected range becomes 74 to 740 litres/hr. Viscosity should be between 0.5 cP and 1.3 cP for standard scales to be accurate.

For "sizing" liquid flows ie. determining actual flow range of a tube, please advise the **chemical name, concentration, temperature, specific gravity** and **viscosity.** Custom direct reading scales in any units are available special order.

SCALE CORRECTION FACTORS – FOR LIQUIDS WITH SPECIFIC GRAVITIES OTHER THAN 1.00

Specific Gravity	.00	.01	.02	.03	.04	.05	.06	.07	.08	.09
	Scale Correction Factor									
0.4	1.647	1.626	1.605	1.585	1.565	1.548	1.529	1.513	1.495	1.479
0.5	1.462	1.447	1.433	1.418	1.404	1.391	1.377	1.364	1.351	1.339
0.6	1.326	1.316	1.304	1.292	1.282	1.271	1.259	1.250	1.239	1.229
0.7	1.220	1.211	1.202	1.192	1.183	1.175	1.167	1.157	1.149	1.142
0.8	1.134	1.125	1.117	1.111	1.104	1.096	1.089	1.082	1.075	1.068
0.9	1.062	1.055	1.048	1.042	1.035	1.030	1.024	1.017	1.011	1.005
1.0	1.000	0.994	0.988	0.982	0.978	0.972	0.967	0.962	0.956	0.951
1.1	0.947	0.943	0.936	0.932	0.927	0.923	0.917	0.913	0.909	0.904
1.2	0.900	0.895	0.891	0.887	0.883	0.878	0.874	0.870	0.866	0.862
1.3	0.858	0.854	0.850	0.846	0.842	0.838	0.835	0.831	0.827	0.824
1.4	0.820	0.818	0.814	0.810	0.806	0.803	0.800	0.797	0.794	0.791
1.5	0.787	0.784	0.781	0.778	0.776	0.773	0.770	0.767	0.764	0.759
1.6	0.756	0.754	0.751	0.748	0.745	0.742	0.740	0.737	0.734	0.730
1.7	0.728	0.726	0.723	0.720	0.717	0.714	0.712	0.709	0.706	0.704
1.8	0.701	0.699	0.696	0.694	0.691	0.689	0.686	0.684	0.682	0.679
1.9	0.677	0.674	0.672	0.669	0.667	0.665	0.663	0.661	0.658	0.657
2.0	0.654	0.652	0.650	0.648	0.646	0.644	0.641	0.604	0.637	0.636

flow meter sizing – gas flow

FLOW RANGES FOR AIR – AT STANDARD CONDITIONS (atmospheric pressure 14.7 psia/20°C).

FC SERIES – COMPACT SIZE – 5" SCALE

Flow Meter Item No.	Normal m_3/hr	Standard CFM
FCT00020	0.2 – 1.0	0.1 – 0.6
FCT00060	0.2 – 2.5	0.1 – 1.5
FCT00100	0.6 – 3.6	0.4 – 2.1
FCT00250	0.5 – 9.0	0.3 – 5.3
FCT00051	0.4 – 2.8	0.2 – 1.6
FCT00151	0.8 – 6.2	0.5 – 3.6
FCT00251	0.9 – 9.5	0.5 – 5.6
FCT00401	2.0 – 15.0	1.2 – 8.8
FCT00152	0.5 – 5.5	0.3 – 3.2
FCT00402	2.0 – 14.0	1.2 – 8.2
FCT00602	2.5 – 22.0	1.5 – 12.9
FCT01002	4.0 – 34.0	2.4 – 20.0
FCT00253	1.0 – 8.0	0.6 – 4.7
FCT00403	2.0 – 14.0	1.2 – 8.2
FCT01003	4.0 – 34.0	2.4 – 20.0
FCT01503	5.0 – 50.0	2.9 – 29.4

FS SERIES – STANDARD FULL SIZE – 7" SCALE

Flow Meter Item No.	Normal m_3/hr	Standard CFM
FST00600	2.5 – 20	1.5 – 12
FST01000	4 – 34	2.4 – 20
FST01500	5 – 50	2.9 – 29
FST02000	8.5 – 76	5.0 – 45
FST02500	8 – 70	4.7 – 41
FST03000	10 – 90	5.9 – 53
FST04000	14 – 125	8.2 – 74
FST06000	22 – 190	13 – 112
FST10000	35 – 300	21 – 177
FST15000	50 – 500	29 – 294
FST25000	80 – 720	47 – 424
FST50000	400 – 1,500	234 – 883

SCALE CORRECTION FACTORS – FOR AIR AT NON-STANDARD TEMPERATURES AND PRESSURES

Air density is dependent on the actual pressure and temperature.
Calculate the Scale Correction Factor using either Method 1 or 2. Multiply the standard air flow ranges above by the Factor to obtain actual flow rates.

Method 1

Calculate the Factor with the following formula.

$$\text{Factor} = \frac{1}{3.7005}\sqrt{\frac{\text{psia}}{(1+0.00367t)}}$$

psia = pressure of the air absolute
= psig + 14.7 (atmospheric pressure = 14.7 psia)
t = temperature of the air °C

Method 2

Calculate the density of the air at conditions and find factor from the chart below.

$$\text{Air Density (g/ml)} = \frac{\text{psia}}{11{,}360\,(1+0.00367t)}$$

psia = pressure of the air absolute
= psig + 14.7 (atmospheric pressure = 14.7 psia)
t = temperature of the air °C

Air Density vs. Flow Factor

Temperature vs. Pressure

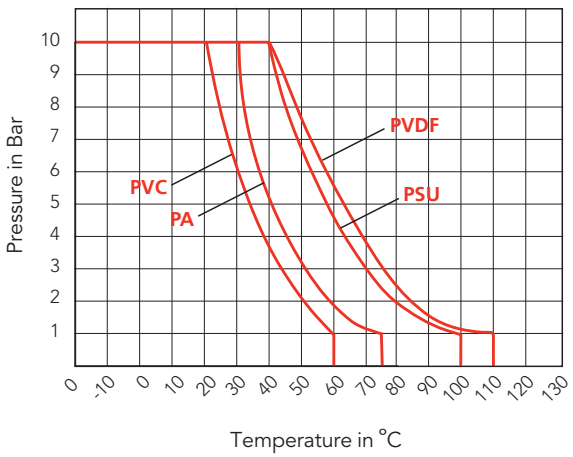

55 Guardsman Road, Thornhill, ON, L3T 6L2, Canada | ISO 9001:2008 Certified
tel.905.889.7890 | fax.905.889.8553 | request@chemline.com | chemline.com

LSFLO Reed Limit Switch

for FC & FS flow meters

The **LSFLO** limit switches serve as switches for minimum or maximum flow values. The normally open latching reed switch closes when the float in the measuring tube reaches and exceedes the switching position. The switch condition is maintained as long as the float is above the limit switch and will open when the float in the tube drops below the switch.

Normally closed switches are available on request.

technical

- **Operating voltage:** maximum 230 VAC
- **Operating current:** maximum 0.5 A
- **Constant current when switched:** maximum 1 A
- **Rupturing capacity:** maximum 10 W/10 VA
- **Closed resistance:** < 150 mΩ
- **Open resistance:** > 10^{10} Ω
- **Operating temperature:** 0°C(32°F) to 55°C(131°F)
- **Protection:** IP 65 (DIN EN 60528)
- **Hysteresis (switch on and off point):** 3 mm
- **Protection:** IP 65 (DIN EN 60528)
- **Dimensions:** 34 x 17 x 41 mm
- **Weight (with plug):** 40 g
- **Connections:** the polarity of the connections has no influence on the function

INSTALLATION

Screw clamps are used to fit the LSFLO on the dovetail guide of the flow meter.

CONNECTIONS

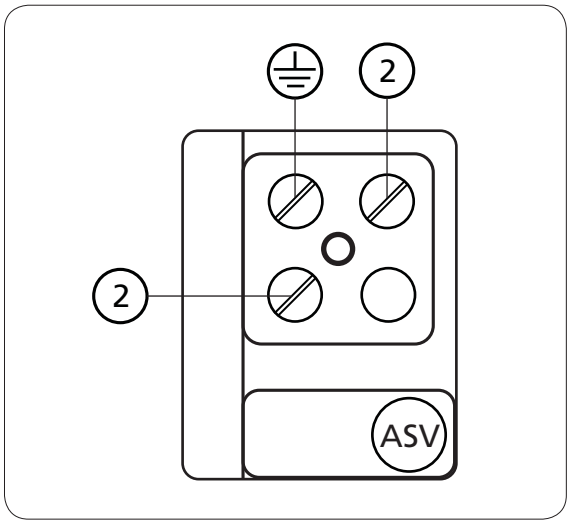

START-UP

Prior to the first start up it is important that the float passes the LSFLO switch three times to ensure the electronics inside recognize the magnetic field from the floats properly.

CHEMLINE PLASTICS
SUPERIOR FLOW SOLUTIONS

55 Guardsman Road, Thornhill, ON, L3T 6L2, Canada | ISO 9001:2008 Certified
tel.905.889.7890 | fax.905.889.8553 | request@chemline.com | chemline.com

ZE3000 Flow Transmitters

for FS flow meters

The **ZE300**0 flow transmitter provides a 4–20 mA output signal, generated by detection of the position of the magnetic float.

IMPORTANT: This micro-processor controlled unit is factory calibrated and unique to each flowmeter model. Flowmeter model must be advised when ordering.

technical

- **2-Wire technology**
- **4–20 mA analog output** (4-20.1 for 8 VDC supply; 4-22.0 for 28 VDC supply
- **8–28 VDC input**
- **Factory calibrated (flow meter to be specified when ordering)**
- **11 point calibration**
- **Non-volatile value storage**
- **0 Button to compensate for the surrounding magnetic influences**
- **Factory setting of the lower limit value (low-cut-off) 0-99% according to customer's specificaitons**
- **Factory time lag (low-pass filter) 0.1-2.5 sec. according to customer's specifications**
- **Measuring accuracy:** < 0.5%
- **Temperature range:** –30°C(–20°F) to 65°C(150°F)

INSTALLATION

Screw clamps are used to fit the ZE3000 on the dovetail guide of the flow meter.

During installation, ensure that the notch of the ZE3000 coincides with the 50% mark on the flow meter scale.

Following this, proceed with the wiring according to the diagram.

WIRING

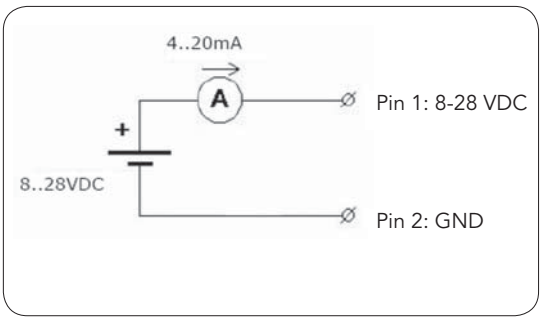

DIMENSIONS

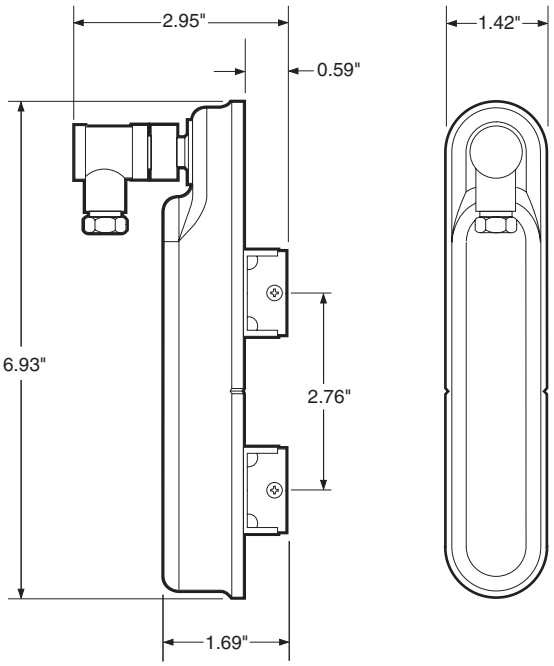

START-UP

After installation and wiring, press the 0 button for at least 2 sec. to compensate for possible electro-magnetic interference. During this time make sure the float is at the bottom of the flowmeter (ie. no flow condition).

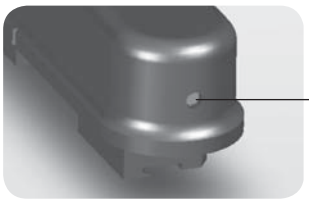

Note:
Do not press button during normal operation.

CHEMLINE PLASTICS
SUPERIOR FLOW SOLUTIONS

55 Guardsman Road, Thornhill, ON, L3T 6L2, Canada | ISO 9001:2008 Certified
tel.905.889.7890 | fax.905.889.8553 | request@chemline.com | chemline.com

ZE3075 Flow Transmitters

for FC flow meters

The **ZE3075** flow transmitter provides a 2- wire 4–20 mA output signal omit generated by precise detection of the position of the magnetic float.

The magnetic float travels along the reed chain of switches activating them.

This micro-processor controlled unit is field calibrated.

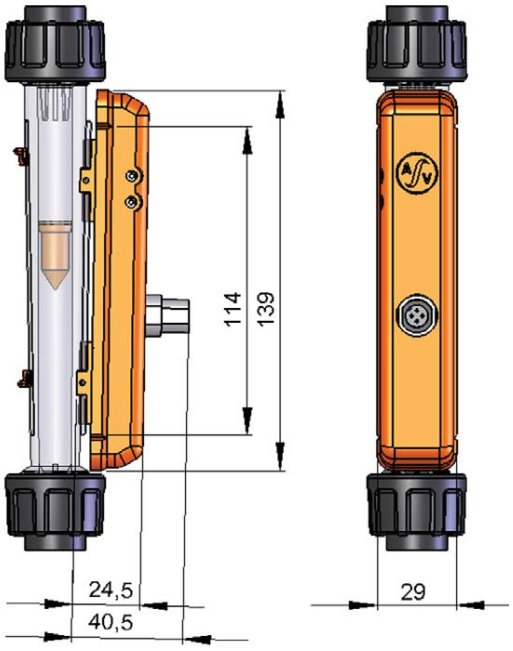

technical

- **2-Wire technology**
- **4–20 mA analog output** (4-20.1 for 8 VDC supply; 4-22.0 for 28 VDC supply
- **18–30 VDC input**
- **Field calibration**
- **Non-volatile value storage**
- **Measuring length:** 114 mm (4.5")
- **Measuring resolution:** 3.5 mm (0.138")
- **Measuring accuracy:** 3%
- **Temperature range:** –20°C(–4°F) to 70°C(158°F)

INSTALLATION

Screw clamps are used to fit the ZE3075 on the dovetail guide of the flow meter.

During installation, ensure that the top and bottom notches of the ZE3075 coincide with the 10% and 100% marks on the flow meter scale.

Following this, proceed with the wiring according to the diagram.

COMPONENTS

1. Alignment notches for the proper location of the transmitter
2. Potentiometer for the upper limit value of the output signal
3. Potentiometer for the lower limit value of the output signal
4. Plug connector

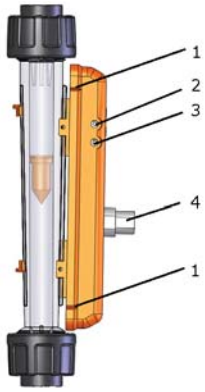

WIRING

The unit is connected with a commercially available unshielded cable.

Where electro-magnetic interference is to be expected, we recommend the use of a shielded cable.

Cable cross section: max. 0.75 mm² cable outer diameter: 6 to 8 mm.

Flange Connector

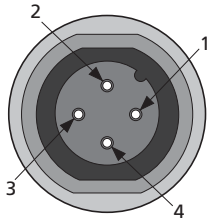

1. Signal (+)
2. Signal (+)
3. n.c.
4. n.c.

Circuit Diagram

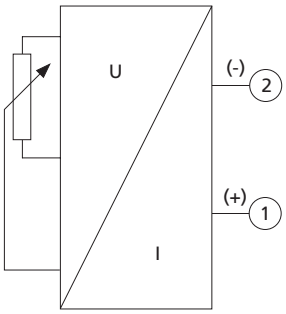

CALIBRATION

Compensation between the non-linear scaling of the flowmeter and the linear output signal of the flow data sensor must be performed by adjusting, preferably between 20% and 80% of the flow rate.

20% corresponds to 7.2mA and 80% to 16.8mA.

- Connect the ampermeter and the respective voltage supply to the flow data sensor
- Allow 20% of the flow to pass through the FC flow meter
- Set the min. trimmer potentiometer (3) such that the corresponding current (7.2mA) is shown in the ampermeter
- Allow 80% of the flow to pass through the FC flow meter
- Set the max. trimmer potentiometer (3) such that the corresponding current (16.8mA) is shown in the ampermeter
- Check the values at 20% and 80% several times and repeat the adjustment, if required

CHEMLINE PLASTICS
SUPERIOR FLOW SOLUTIONS

55 Guardsman Road, Thornhill, ON, L3T 6L2, Canada | ISO 9001:2008 Certified
tel.905.889.7890 | fax.905.889.8553 | request@chemline.com | chemline.com

LEFT BLANK

4 – DETAILED TECHNICAL DOCUMENTATION

4.3 – SHOP DRAWINGS

4.3.11 – ACTIFLO RECIRCULATION LINE MODIFICATION

LEFT BLANK

Project name:	AMARUQ
Project#:	5000218009
Document #:	SPK_0011_ACP
by:	LJ
chkd:	GP
appvd:	CB

SUBMITTAL PACKAGE

ACTIFLO RECIRCULATION LINE

This page is intentionally left blank

Project name: AMARUQ

Project#: 5000218009

Document #: SPK_0011_ACP

by: LJ

chkd: GP

appvd: CB

ACTIFLO RECIRCULATION LINE

FIELD INSTALLATION DRAWING

OIM manual section: 4.3.11.1

REFER TO 5000218009_FI_0002_ACP_VWT

This page is intentionally left blank

Project name: AMARUQ

Project#: 5000218009

Document #: SPK_0011_ACP

by: LJ

chkd: GP

appvd: CB

ACTIFLO RECIRCULATION LINE

HYDRAULIC PROFILE

OIM manual section: 4.3.11.2

REFER TO 5000218009_HY_0001_GEN_VWT

This page is intentionally left blank

Project name: AMARUQ

Project#: 5000218009

Document #: SPK_0011_ACP

by: LJ

chkd: GP

appvd: CB

ACTIFLO RECIRCULATION LINE

VALVES

OIM manual section: 4.3.11.4

This page is intentionally left blank

CS-301-400 : Identification sheet

VWTC PROJECT NUMBER:	5000218009	REV:	1
PROJECT NAME:	AEM AMARUQ	SUBMITTED TO (COMPANY):	AGNICO EAGLE MINES
ENGINEER:	Gabriel Hébert	SUBMITTED TO (RESPONSIBLE)	
PROJECT MANAGER:	Clément B	PROJECT NUM REFERENCE.:	
PHONE NUMBER:		LOT NUMBER:	

SUPPLIER	EQPT CODE	EQPT TAG NO	DIA	DESCRIPTION	INFO 1	INFO 2	INFO 3	APPLIC.	NOTE	REV
CFF	VABLSS305300	C2-022	DIA: 38 mm (1-1/2")	HYDROCYCLONE	TYPE: BALL VALVE//MANUFACTURER : PMP//MODEL : A201 (1-1/2")//CONNECTION TYPE : THREADED | 38 mm (1-1/2")//BODY : ASTM 351 GR. CF8M// SEAL | SEAT :RPTFE | PTFE// STEM : SS 316			ACTIFLO RECIRCULATION LINE MODIFICATION		

This page is intentionally left blank

2 Piece Ball Valve
Full Port

A201
1000 WOG
1/4" – 3" NPT

Adjustable PTFE Packing

Investment Cast Body CF8M Body

PTFE Body Seal

Full Bore Design

Stainless Steel Latch Lock Handle

Blow-out Proof Stem

Solid Ball & Stem

Bi-Directional RPTFE Seats

Pressure Rating
- 1/4" – 2" 1000 WOG
- 2-1/2" – 3" 800 WOG

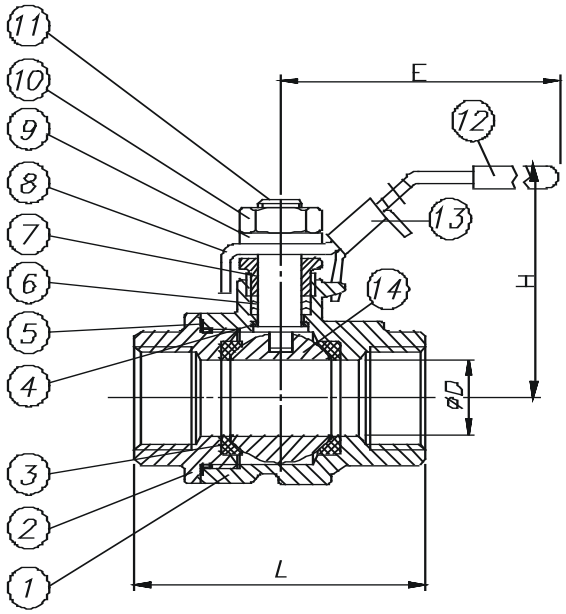

NO	PART NAME	QTY	SPECIFICATION	
1	BODY	1	WCB	CF8M
2	END CAP	1	WCB	CF8M
3	SEATS	2	RPTFE	RPTFE
4	THRUST WASHER	1	PTFE	PTFE
5	BODY GASKET	1	PTFE	PTFE
6	STEM PACKING	3	PTFE	PTFE
7	PACKING GLAND	1	SS304	SS304
8	HANDLE	1	C.S.	SS304
9	HANDLE WASHER	1	C.S.	SS304
10	HANDLE NUT	1	C.S.	SS304
11	STEM	1	SS304	SS316
12	HANDLE SLEEVE	1	PLASTIC	PLASTIC
13	LOCKING DEVICE	1	C.S.	SS304
14	BALL	1	SS304	SS316

SIZE		1/4"	3/8"	1/2"	3/4"	1"	1-1/4"	1-1/2"	2"	2-1/2"	3"
D	in	0.46	0.50	0.50	0.75	1.00	1.25	1.50	2.00	2.50	3.00
	mm	10	12	15	20	25	32	40	50	65	80
L	in	2.13	2.13	2.68	3.03	3.58	3.98	4.25	4.88	7.28	8.07
	mm	54	54	68	77	91	101	108	124	185	205
H	in	2.32	2.32	2.36	2.91	3.03	3.43	3.66	4.21	5.71	6.10
	mm	59	59	60	74	77	87	93	107	145	155
E	in	4.49	4.49	4.49	5.43	5.43	7.28	7.68	7.68	10.24	10.24
	mm	114	114	114	138	138	185	195	195	260	260

PMP Precision Valve Company Ltd. Is a progressive supplier of current products. The features, materials of construction and dimensional data as detailed in this bulletin are intended for your reference only, and should not be relied upon unless confirmed in writing by PMP Precision Valve Co. Ltd.. Certified dimensional drawings are available upon order receipt.

This page is intentionally left blank

CS-301-1110 : Identification sheet

VWTC PROJECT NUMBER:	5000218009	REV:	1
PROJECT NAME:	AEM AMARUQ	SUBMITTED TO (COMPANY):	AGNICO EAGLE MINES
ENGINEER:	Gabriel Hébert	SUBMITTED TO (RESPONSIBLE)	
PROJECT MANAGER:	Clément B	PROJECT NUM REFERENCE.:	
PHONE NUMBER:		LOT NUMBER:	

SUPPLIER	EQPT CODE	EQPT TAG NO	DIA	DESCRIPTION	INFO 1	INFO 2	INFO 3	APPLIC.	NOTE	REV
CFF	VABLSS200267	PI2-011-V001	DIA: 13 mm (1/2")	ISOLATION VALVE	TYPE: TWO PIECE BALL VALVE | 1000 psi W.O.G.//MANUFACTURER : CFF//MODEL : SS-2 (1/2")//CONNECTION TYPE : THREADED | 13 mm (1/2")//BODY : 316 SS// SEAL | SEAT :PTFE | TEFLON// STEM : 316 SS | C/W MANUAL LEVER			ACTIFLO RECIRCULATION LINE MODIFICATION		
CFF	VABLSS200267	PI2-011-V002	DIA: 13 mm (1/2")	ISOLATION VALVE	TYPE: TWO PIECE BALL VALVE | 1000 psi W.O.G.//MANUFACTURER : CFF//MODEL : SS-2 (1/2")//CONNECTION TYPE : THREADED | 13 mm (1/2")//BODY : 316 SS// SEAL | SEAT :PTFE | TEFLON// STEM : 316 SS | C/W MANUAL LEVER			ACTIFLO RECIRCULATION LINE MODIFICATION		
CFF	VABLSS200267	PI2-012-V001	DIA: 13 mm (1/2")	ISOLATION VALVE	TYPE: TWO PIECE BALL VALVE | 1000 psi W.O.G.//MANUFACTURER : CFF//MODEL : SS-2 (1/2")//CONNECTION TYPE : THREADED | 13 mm (1/2")//BODY : 316 SS// SEAL | SEAT :PTFE | TEFLON// STEM : 316 SS | C/W MANUAL LEVER			ACTIFLO RECIRCULATION LINE MODIFICATION		

SUPPLIER	EQPT CODE	EQPT TAG NO	DIA	DESCRIPTION	INFO 1	INFO 2	INFO 3	APPLIC.	NOTE	REV
CFF	VABLSS200267	PI2-012-V002	DIA: 13 mm (1/2")	ISOLATION VALVE	TYPE: TWO PIECE BALL VALVE | 1000 psi W.O.G.//MANUFACTURER : CFF//MODEL : SS-2 (1/2")//CONNECTION TYPE : THREADED | 13 mm (1/2")//BODY : 316 SS// SEAL | SEAT :PTFE | TEFLON// STEM : 316 SS | C/W MANUAL LEVER			ACTIFLO RECIRCULATION LINE MODIFICATION		
CFF	VABLSS200267	PI2-021-V001	DIA: 13 mm (1/2")	ISOLATION VALVE	TYPE: TWO PIECE BALL VALVE | 1000 psi W.O.G.//MANUFACTURER : CFF//MODEL : SS-2 (1/2")//CONNECTION TYPE : THREADED | 13 mm (1/2")//BODY : 316 SS// SEAL | SEAT :PTFE | TEFLON// STEM : 316 SS | C/W MANUAL LEVER			ACTIFLO RECIRCULATION LINE MODIFICATION		
CFF	VABLSS200267	PI2-021-V002	DIA: 13 mm (1/2")	ISOLATION VALVE	TYPE: TWO PIECE BALL VALVE | 1000 psi W.O.G.//MANUFACTURER : CFF//MODEL : SS-2 (1/2")//CONNECTION TYPE : THREADED | 13 mm (1/2")//BODY : 316 SS// SEAL | SEAT :PTFE | TEFLON// STEM : 316 SS | C/W MANUAL LEVER			ACTIFLO RECIRCULATION LINE MODIFICATION		
CFF	VABLSS200267	PI2-022-V001	DIA: 13 mm (1/2")	ISOLATION VALVE	TYPE: TWO PIECE BALL VALVE | 1000 psi W.O.G.//MANUFACTURER : CFF//MODEL : SS-2 (1/2")//CONNECTION TYPE : THREADED | 13 mm (1/2")//BODY : 316 SS// SEAL | SEAT :PTFE | TEFLON// STEM : 316 SS | C/W MANUAL LEVER			ACTIFLO RECIRCULATION LINE MODIFICATION		

SUPPLIER	EQPT CODE	EQPT TAG NO	DIA	DESCRIPTION	INFO 1	INFO 2	INFO 3	APPLIC.	NOTE	REV
CFF	VABLSS200267	PI2-022-V002	DIA: 13 mm (1/2")	ISOLATION VALVE	TYPE: TWO PIECE BALL VALVE | 1000 psi W.O.G.//MANUFACTURER : CFF//MODEL : SS-2 (1/2")//CONNECTION TYPE : THREADED | 13 mm (1/2")//BODY : 316 SS// SEAL | SEAT :PTFE | TEFLON// STEM : 316 SS | C/W MANUAL LEVER			ACTIFLO RECIRCULATION LINE MODIFICATION		
CFF	VABLSS200268	V2-012	DIA: 20 mm (3/4")	DRAIN VALVE	TYPE: TWO PIECE BALL VALVE | 1000 psi W.O.G.//MANUFACTURER : CFF//MODEL : SS-2 (3/4")//CONNECTION TYPE : THREADED | 20 mm (3/4")//BODY : 316 SS// SEAL | SEAT :PTFE | TEFLON// STEM : 316 SS | C/W MANUAL LEVER			ACTIFLO RECIRCULATION LINE MODIFICATION		
CFF	VABLSS200268	V2-013	DIA: 20 mm (3/4")	DRAIN VALVE	TYPE: TWO PIECE BALL VALVE | 1000 psi W.O.G.//MANUFACTURER : CFF//MODEL : SS-2 (3/4")//CONNECTION TYPE : THREADED | 20 mm (3/4")//BODY : 316 SS// SEAL | SEAT :PTFE | TEFLON// STEM : 316 SS | C/W MANUAL LEVER			ACTIFLO RECIRCULATION LINE MODIFICATION		
CFF	VABLSS200268	V2-022	DIA: 20 mm (3/4")	DRAIN VALVE	TYPE: TWO PIECE BALL VALVE | 1000 psi W.O.G.//MANUFACTURER : CFF//MODEL : SS-2 (3/4")//CONNECTION TYPE : THREADED | 20 mm (3/4")//BODY : 316 SS// SEAL | SEAT :PTFE | TEFLON// STEM : 316 SS | C/W MANUAL LEVER			ACTIFLO RECIRCULATION LINE MODIFICATION		

SUPPLIER	EQPT CODE	EQPT TAG NO	DIA	DESCRIPTION	INFO 1	INFO 2	INFO 3	APPLIC.	NOTE	REV
CFF	VABLSS200268	V2-023	DIA: 20 mm (3/4")	DRAIN VALVE	TYPE: TWO PIECE BALL VALVE | 1000 psi W.O.G.//MANUFACTURER : CFF//MODEL : SS-2 (3/4")//CONNECTION TYPE : THREADED | 20 mm (3/4")//BODY : 316 SS// SEAL | SEAT :PTFE | TEFLON// STEM : 316 SS | C/W MANUAL LEVER			ACTIFLO RECIRCULATION LINE MODIFICATION		

SS·2 BALL

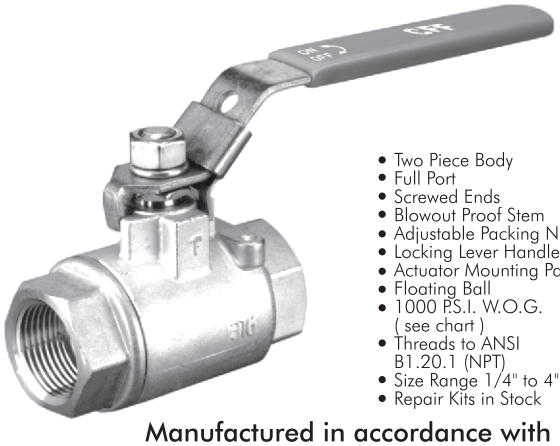

- Two Piece Body
- Full Port
- Screwed Ends
- Blowout Proof Stem
- Adjustable Packing Nut
- Locking Lever Handle
- Actuator Mounting Pad
- Floating Ball
- 1000 P.S.I. W.O.G. (see chart)
- Threads to ANSI B1.20.1 (NPT)
- Size Range 1/4" to 4"
- Repair Kits in Stock

Manufactured in accordance with ISO 9002 quality standards.

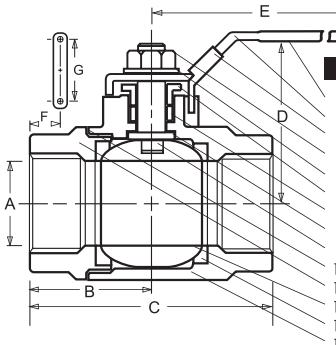

	NAME/MATERIAL
1	Plastic Cover/ Plastic
2	Handle/ Stainless Steel 304
3	Lock Device/ Stainless Steel 304
4	Stem Nut/ Stainless Steel 304
5	Stem Washer/ Stainless Steel 304
6	Gland Nut/ Stainless Steel 304
7	Stem Packing/ Teflon
8	Thrust Washer/ Rein. Teflon 15% GFT
9	Stem/ Stainless Steel 316
10	Joint Gasket/ Teflon
11	Cap/ Stainless Steel 316; CF 8M
12	Ball/ Stainless Steel 316
13	Seat/ Rein. Teflon 15% GFT
14	Body/ Stainless Steel 316; CF 8M

SS · 2 BALL VALVE

DIMENSIONS								
	Nominal Size	(mm/in) A	(mm/in) B	(mm/in) C	(mm/in) D	(mm/in) E	(mm/in) F	(mm/in) G
8	¼	11.6	30	60	45	110	12.7	28.45
		0.457	1.181	2.362	1.772	433.1	0.50	1.120
10	⅜	12.7	30	60	45	110	12.7	28.45
		0.50	1.181	2.362	1.772	433.1	0.50	1.120
15	½	15	32	64	45	130	12.7	28.45
		0.591	1.260	2.520	1.772	5.118	0.50	1.120
20	¾	20	38.5	77	50	130	22.10	34.80
		0.787	1.516	3.032	1.969	5.118	0.87	1.37
25	1	25.4	45	90	65	155	22.10	38.10
		1.00	1.772	3.543	2.559	6.102	0.87	1.37
32	1¼	32	50	100	70	155	23.62	38.10
		1.260	1.967	3.937	2.756	6.102	0.93	1.50
40	1½	38.1	59	118	75	185	23.62	38.10
		1.50	2.323	4.646	2.953	7.283	0.93	1.50
50	2	50.8	68.5	137	85	185	23.62	38.10
		2.00	2.697	5.398	3.346	7.283	0.93	1.50
65	2½	65	82.5	165	136	250	—	70
		2.561	3.248	6.496	5.364	9.843	—	2.756
80	3	80	97.5	195	149	250	—	70
		3.152	3.839	7.677	5.866	9.843	—	2.756

Design and materials are subject to change without notice.

PRESSURE/TEMP. RATING

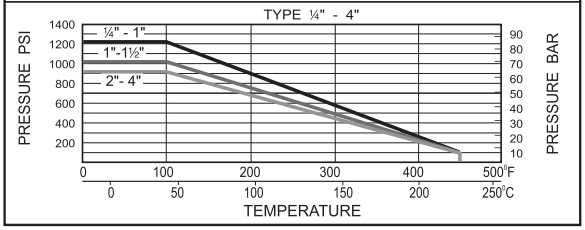

FLOW COEFFICIENT CV										
Size (in.)	¼	⅜	½	¾	1	1¼	1½	2	2½	3
Cv	6	7	10	25	35	46	80	110	310	360
Operating Torques (lbs.)	36	36	43	65	101	158	187	230	430	1380

Visit us on-line at:
www.cffstainless.com

CS-312-110 : Identification sheet

VWTC PROJECT NUMBER:	5000218009	REV:	1
PROJECT NAME:	AEM AMARUQ	SUBMITTED TO (COMPANY):	AGNICO EAGLE MINES
ENGINEER:	Gabriel Hébert	SUBMITTED TO (RESPONSIBLE)	
PROJECT MANAGER:	Clément B	PROJECT NUM REFERENCE.:	
PHONE NUMBER:		LOT NUMBER:	

SUPPLIER	EQPT CODE	EQPT TAG NO	DIA	DESCRIPTION	INFO 1	INFO 2	INFO 3	APPLIC.	NOTE	REV
PMP	ST-312-110	V2-010	DIA: 63 mm (2-1/2")	DRAIN VALVE	TYPE: PLUG | 175 PSI//MANUFACTURER : PRATT//MODEL : 601N1-L/2-1/2"//CONNECTION TYPE : FLANGED | 63 mm (2-1/2")//BODY : CAST IRON// SEAL | SEAT :FONTE DUCTILE REVETUE EN CAOUTCHOU | NICKEL// STEM : N/A			ACTIFLO RECIRCULATION LINE MODIFICATION		
PMP	ST-312-110	V2-011	DIA: 63 mm (2-1/2")	DRAIN VALVE	TYPE: PLUG | 175 PSI//MANUFACTURER : PRATT//MODEL : 601N1-L/2-1/2"//CONNECTION TYPE : FLANGED | 63 mm (2-1/2")//BODY : CAST IRON// SEAL | SEAT :FONTE DUCTILE REVETUE EN CAOUTCHOU | NICKEL// STEM : N/A			ACTIFLO RECIRCULATION LINE MODIFICATION		
PMP	ST-312-110	V2-020	DIA: 63 mm (2-1/2")	DRAIN VALVE	TYPE: PLUG | 175 PSI//MANUFACTURER : PRATT//MODEL : 601N1-L/2-1/2"//CONNECTION TYPE : FLANGED | 63 mm (2-1/2")//BODY : CAST IRON// SEAL | SEAT :FONTE DUCTILE REVETUE EN CAOUTCHOU | NICKEL// STEM : N/A			ACTIFLO RECIRCULATION LINE MODIFICATION		

SUPPLIER	EQPT CODE	EQPT TAG NO	DIA	DESCRIPTION	INFO 1	INFO 2	INFO 3	APPLIC.	NOTE	REV
PMP	ST-312-110	V2-021	DIA: 63 mm (2-1/2")	DRAIN VALVE	TYPE: PLUG | 175 PSI//MANUFACTURER : PRATT//MODEL : 601N1-L/2-1/2"//CONNECTION TYPE : FLANGED | 63 mm (2-1/2")//BODY : CAST IRON// SEAL | SEAT :FONTE DUCTILE REVETUE EN CAOUTCHOU | NICKEL// STEM : N/A			ACTIFLO RECIRCULATION LINE MODIFICATION		

ISO 9001 CERTIFIED

MILLIKEN
VALVE COMPANY

MILLCENTRIC®
ECCENTRIC PLUG VALVE

MILLIKEN
VALVE COMPANY

Milliken Valve offers the following for your water and wastewater needs:

- Eccentric Plug Valves
  - Series 601/600 Flanged & MJ
  - Series 601S Stainless Steel
  - Series 601RL Rubber Lined
  - Series 602 High Pressure
  - Series 603 Threaded End
  - Series 604E Three Way
  - Series 606 Grooved End
  - Series 611/610 Flanged & MJ
  - Model 625 UL /CGA Listed
- AWWA Swing Check Valves
- Wafer Check Valves
- Flex Check
- Spring Loaded Check Valves
- AWWA Butterfly Valves
- General Service Butterfly Valves

The Milliken Valve Company designs, develops, manufactures and markets plug, butterfly, and check valves and their respective controls and actuators. These valves are used primarily in the water, wastewater, and industrial markets.

Milliken Valve was started over two decades ago manufacturing the eccentric plug valve for the waste water and HVAC marketplace. Growth has been constant with the addition of a AWWA butterfly valve, general service butterfly valve, swing check valve, rubber flapper check valve, double disc check valve, wafer (outside spring) check valve, globe style check valve and compact wafer check valve.

Milliken believes that in order to satisfy customers, our products need to be considered the best design and the highest quality within the industry. All of our valves have had extensive testing before they are marketed or sold. Milliken's quality standards are a step above the industry norm, and Milliken is committed to standing behind its products in the field. All valves are tested in complete conformance to applicable standards before shipment. In addition, valve designs are routinely sent to independent testing facilities to ensure they meet or exceed expectations.

MILLIKEN
VALVE COMPANY

Millcentric Eccentric Plug Valve

Suggested Specifications 2-3
Technical Data 4
Standard Materials of Construction, Fig. 601/600, 12" & Smaller 5
Standard Materials of Construction, Fig. 601/600, 14" & Larger 6
Flanged End, Fig. 601 Cast Iron / 611 Ductile Iron 2½" – 12" 7
Mechanical Joint, Fig. 600 Cast Iron / 610 Ductile Iron 3" – 12" 8
Larger Flanged End, Fig. 601 Cast Iron / 611 Ductile Iron and Mechanical Joint End, Fig. 600 Cast Iron / 610 Ductile Iron 14" & Larger 9
Flanged End Fig. 602 Class 250 2½" & Larger 10
Flanged End, Fig. 601RL Rubberlined 3" & Larger 11
Grooved End, Fig. 606 2½" – 20" 12
Adaption 13
Technical Specification Series 601/600 Cast Iron Valves 14
Technical Specification Series 602 Class 250 Valves 15
Technical Specification Series 601RL Rubberlined Valves 16
Technical Specification Series 601S Stainless Steel Valves 17
Technical Specification Series 611/610 Ductile Iron Valves 18
Technical Specification Series 601GL Glass Lined Valves 19

Suggested Specifications

The Milliken criteria of quality, reliability, safety and value are embodied in the Millcentric® Eccentric valve, setting higher standards for dependable performance with excellent features achieved by the utilization of the very latest design and manufacturing techniques.

- Computer Aided Design
- High Integrity Casting
- CNC manufacturing delivers consistent sizes on all components

All complemented by rigorous Quality Control System

Body

Conforming to AWWA C504 wall thickness, the MILLCENTRIC valve body casting is in ASTM A126 CL B cast iron using high pressure molding techniques. Alternative flanged, grooved or mechanical joint ends are available.

Flange diameter, thickness and drilling conform to ANSI B16.1 Class 125 or 250.

Grooved ends meet AWWA C-606 for ductile or steel pipe. Mechanical joints to AWWA C111 (ANSI A21.11).

Seat

The MILLCENTRIC valve incorporates as standard, on 3" and larger, a ⅛" thick welded 99% nickel seat for corrosion and erosion resistance specifically profiled for low torque and extended seat life.

Stem Seal

High integrity sealing by combining the advantages of a resilient and abrasion resistant U-Cup seal. From vacuum to high pressure, the self-adjusting sealing system (per AWWA C504) gives positive, trouble-free service and is retained independently of the plug stem or external torque device, therely eliminating periodic maintenance.

Bearings

The plug rotates in permanently lubricated 316 grade stainless steel bearings, located in the body and bonnet, along with upper and lower PTFE thrust washers, which ensure consistently low operating torque.

Plug

Supported on integral trunnions, the plug is totally encapsulated with an elastomer that is molded on 2½" – 48" and vulcanized on 54" and larger to the casting providing tight shut off even under vacuum conditions. High integrity corrosion-free sealing is achieved by a variety of abrasion resistant elastomers which protect the plug right up to the trunnions. When assembled, the light compression of the elastomers onto PTFE thrust washers, prevents entry of abrasive materials into the bearings.

Bonnet Seal

Superior "O" ring sealing with metal/metal contact means lower bolting stresses compared with compression gaskets.

Flow

The port design (round on 2½" – 12" and rectangular on 14" and larger) with streamlined internal contours gives the highest industry capacity straight through flow in the full open position, reducing turbulence and pressure drop and the effect of erosive media. Handling of sludges and slurries is therefore enhanced.

Interchangeable

Because of the common face to face dimension with wedge gate valves (3" – 12"), fitting the tight shut-off rotary MILLCENTRIC valve into existing systems is accomplished without pipeline modifications.

Travel Stops

Adjustable open and closed travel stops are fitted as standard on both wrench and gear operated MILLCENTRIC valves.

Suggested Specifications

- Valve in closed position for bubble tight shut-off
- Normal flow direction gives pressure assisted sealing
- Torques are low even in reverse flow

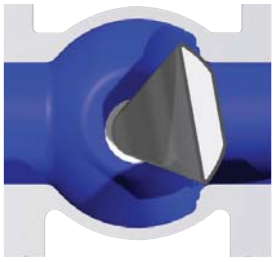

- Plug rotates away from the seat for instant opening
- Seat wear and operating torque reduced
- No further seat contact until valve is closed again

- Design of Millcentric plug valve allows modulating control over the full 90˚ travel
- Ideally suited for balancing service
- Standard rotary valve provides control and tight shut off in one valve

- Plug is out of flow path when fully open
- Straight through, uninterrupted smooth flow
- Round port reduces turbulence and erosion, lowers pumping costs and can be “pigged” to clean the pipeline

Installation

The Millcentric® plug valve is suitable for flow and shut-off in either direction. Seat end downstream is the preferred orientation and any reverse flow requirement should be stated at the time of order. For use on fluids with suspended solids, installation with the seat upstream and the valve stem horizontal is recommended with, plug rotation to the top of the valve will ensure smooth operation.

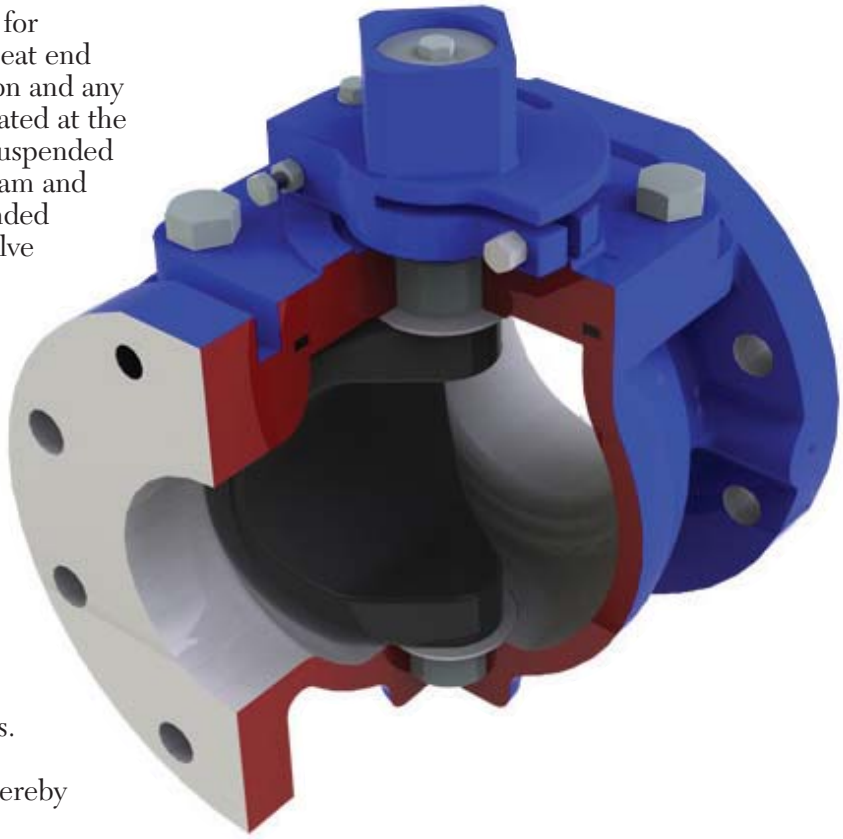

In-Line Maintenance

In the unlikely event of stem leakage, the stem seals can be easily replaced without removing the bonnet. Access to the body for cleaning or inspection does not require removal from the line.

Modular Construction

Design of the bonnet and stem allows for on-site adaption of gear operators, power actuators, or extension devices on to standard valves. Conversion can be easily undertaken without removing the valve bonnet, thereby minimizing downtime.

Power Operation

Pneumatic, electric or hydraulic operation is available, complete with accessories such as limit switches, solenoid valves and positioners when required.

Technical Data

ORDERING INFORMATION

Valve Types	Designation
Mechanical Joint Cast Iron	600
Mechanical Joint Ductile Iron	610
ANSI 125 Flanged Cast Iron	601
ANSI 125 Flanged Ductile Iron	611
ANSI 150 Flanged Ductile Iron	621
ANSI 250 Flanged Ductile Iron	602
ANSI 125 Grooved for Steel Pipe	606S
ANSI 125 Grooved for Ductile Pipe	606D
ANSI 150 Flanged 316SS	601S
SEAT	
Nickel (3" & Larger)	N
Epoxy (2½" ONLY)	E
316SS (on stainless steel valve only)	S
Rubberlined	RL
Glasslined	GL
ELASTOMER TRIM	
EPDM	0
Buna-Nitrile	1
Viton	2
Neoprene	3
Natural	4
MANUAL OPERATORS	
Above Ground Gear and Handwheel	AGHW
Above Ground Gear with 2" Nut	AGNUT
Buried Gear with 2" Nut	BG
Memory Stop Gear with Handwheel	MGHW
Lever / Wrench (8" & smaller)	L
Direct Nut (8" & smaller)	TC

Example: 4" 601N3AGHW = 4" ANSI 125 Flanged, Nickel Seat, Neoprene plug with Above Ground Gear and Handwheel

Valves are only tested for bi-directional shut-off if specified at time of order. Contact Milliken for bi-directional ratings.

NOTE: We recommend mechanical joint or buried flanged valves to have gear operators

NOTE: We recommend valves for bi-directional service to have gear operators

PRESSURE RATING

12" and smaller	ANSI 125	175 psi
14" and larger	ANSI 125	150 psi
20" and smaller	ANSI 150	285 psi
12" and smaller	ANSI 250	400 psi
14" and larger	ANSI 250	300 psi

Body Hydrotest = 150% of rated pressure / Seat Test = 100% of rated pressure
Testing per AWWA C517

ELASTOMERS AVAILABLE FOR MILLCENTRIC VALVE

Natural rubber is also available.

Nitrile

A general purpose material sometimes referred to as BUNA-N or HYCAR with a –20°F to 212°F temperature range. Used on sewage, water, hydrocarbon and mineral oils.

EPDM

An excellent polymer for use on chilled water through to LP steam applications having a temperature range of –35°F to 250°F. Resistance to many acids, alkalies, detergents, phosphate esters, alcohols and glycols is an added benefit.

Neoprene

This versatile material shows outstanding resistance to abrasion and ozone. Chemical resistance to a wide range of petroleum base products and dilute acids and alkalies. Temperature range –20°F to 225°F.

Viton

Retention of mechanical properties at high temperature is an important feature of this elastomer: temperature range is –10°F to 300°F. It also has excellent resistance to oils, fuels, lubricants and most mineral acids and aromatic hydrocarbons.
Note: Not for water or steam applications.

Elastomer Selection Chart

Service	Elastomer	Average Useful Temp. Range	Service	Elastomer	Average Useful Temp. Range	Service	Elastomer	Average Useful Temp. Range
Acetone	EPDM	–35°F to 250°F	Caustic Soda	EPDM	–35°F to 250°F	Oil, Animal	Nitrile	–20°F to 212°F
Air	EPDM	–35°F to 250°F	Cement Slurry	EPDM	–35°F to 250°F	Oil, Mobil Therm Light	Viton	10°F to 250°F
Air w/Oil	Nitrile	0°F to 212°F	Copper Sulphate	EPDM	–35°F to 250°F	Oil, Mobil Therm 600	Viton	10°F to 250°F
Alcohol AMYL	EPDM	0°F to 212°F	Creosote (Coal)	Nitrile	–20°F to 212°F	Oil, Mobil Therm 603	Nitrile	–20°F to 212°F
Alcohol Aromatic	Viton	10°F to 250°F	Coal Slurry	Nitrile	–20°F to 212°F	Oil, Lubricating	Nitrile	–20°F to 212°F
Alcohol Butyl	Neoprene	–20°F to 225°F	Diesel Fuel No. 3	Nitrile	–20°F to 212°F	Oil, Vegetable	Nitrile	–20°F to 212°F
Alcohol Denatured	Nitrile	–20°F to 212°F	Diethylene Glycol	EPDM	–35°F to 250°F	Paint, Latex	Nitrile	–20°F to 212°F
Alcohol Ethyl	EPDM	–20°F to 250°F	Ethylene Glycol	EPDM	–35°F to 250°F	Phosphate Ester	EPDM	–35°F to 250°F
Alcohol Grain	Nitrile	–20°F to 212°F	Fatty Acid	Nitrile	–20°F to 212°F	Propane	Nitrile	–20°F to 212°F
Alcohol Isopropyl	Neoprene	–20°F to 225°F	Fuel Oil No. 2	Nitrile	–20°F to 212°F	Rape Seed Oil	EPDM	–35°F to 250°F
Alcohol Methyl	EPDM	–20°F to 250°F	Fertilizer Liquid $H_4N_2O_2$	EPDM	–35°F to 250°F	Sewage with Oils	Nitrile	–20°F to 212°F
Ammonia Anhydrous	Neoprene	–20°F to 225°F	Gasoline Keg	Nitrile	–20°F to 212°F	Sodium Hydroxide 20%	EPDM	–35°F to 250°F
Ammonium Nitrate	EPDM	–20°F to 250°F	Gas Natural	Nitrile	–20°F to 212°F	Starch	EPDM	–35°F to 250°F
Ammonia, water	EPDM	–20°F to 250°F	Glue, Animal	Nitrile	–20°F to 212°F	Steam to 250°F	EPDM	–35°F to 250°F
Animal Fats	Nitrile	–20°F to 212°F	Green Liquor	EPDM	–20°F to 212°F	Stoddard, Solvent	Nitrile	–20°F to 80°F
Black Liquor	EPDM	–20°F to 250°F	Hydraulic Oil (Petro)	Nitrile	–20°F to 212°F	Sulphuric Acid 10% 50%	Neoprene	–20°F to 158°F
Blast Furnace Gas	Neoprene	–20°F to 225°F	Hydrogen	Nitrile	–20°F to 212°F	Sulphuric Acid 100%	Viton	10°F to 300°F
Butane	Nitrile	–20°F to 212°F	JF4, JP5	Viton	–20°F to 212°F	Trichloroethylene Dry	Viton	10°F to 300°F
Bunker Oil "C"	Nitrile	–20°F to 212°F	Kerosene	Nitrile	0°F to 212°F	Triethanol Amine	EPDM	–35°F to 250°F
Calcium Chloride	EPDM	–20°F to 250°F	Ketone	EPDM	–35°F to 250°F	Varnish	Viton	10°F to 300°F
Carbon Dioxide	EPDM	–20°F to 250°F	Lime Slurry	EPDM	–35°F to 250°F	Water, Fresh	EPDM	–35°F to 250°F
Carbon Monoxide (Cold)	Neoprene	–20°F to 150°F	Methane	Nitrile	–20°F to 212°F	Water, Salt	EPDM	–35°F to 250°F
Carbon Monoxide (Hot)	Viton	10°F to 300°F	Methyl Ethyl Ketone	EPDM	–35°F to 250°F	Xylene	Viton	10°F to 300°F
Carbon Tetrachloride	Viton	10°F to 300°F	Naptha (Berzin)	Nitrile	–20°F to 212°F			

NOTE: Above elastomer/temperature chart are guidelines only. See Milliken Compatibility Chart for specific applications.

Standard Materials of Construction, Fig. 601/600, 12" & Smaller

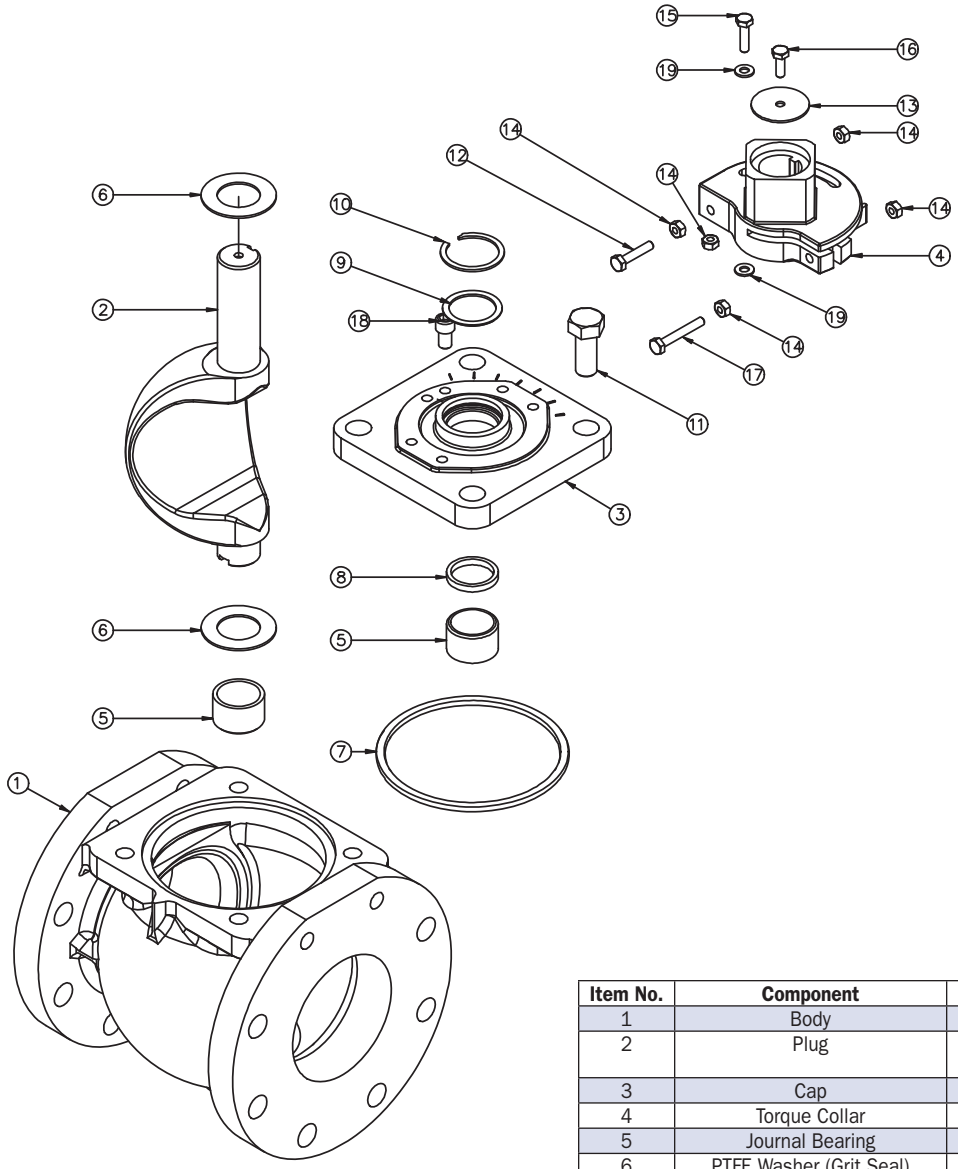

Item No.	Component	Material
1	Body	Cast Iron A126 Class B
2	Plug	Rubber Coated Ductile Iron ASTM A536
3	Cap	Cast Iron A126 Class B
4	Torque Collar	Ductile Iron ASTM A536
5	Journal Bearing	St.Steel — ANSI 316
6	PTFE Washer (Grit Seal)	PTFE
7	O Ring	Elas. as Spec.
8	U Cup Seal	Elas. as Spec.
9	Washer	Brass — ASTM B-138-675
10	Internal Snap Ring	Spring Steel
11	Setscrew	Steel (Zinc Plated)
12*	Closed Stop	Steel (Zinc Plated)
13*	Locking Washer	Steel
14*	Nut	Steel (Zinc Plated)
15*	Open Stop	Steel (Zinc Plated)
16*	Setscrew	Steel (Zinc Plated)
17*	Torque Bolt	Steel (Zinc Plated)
18*	Travel Stop	Steel
19*	Washer	Steel

*NOTE: Torque Collar Assembly on 8" and Smaller

Standard Materials of Construction, Fig. 601/600, 14" & Larger

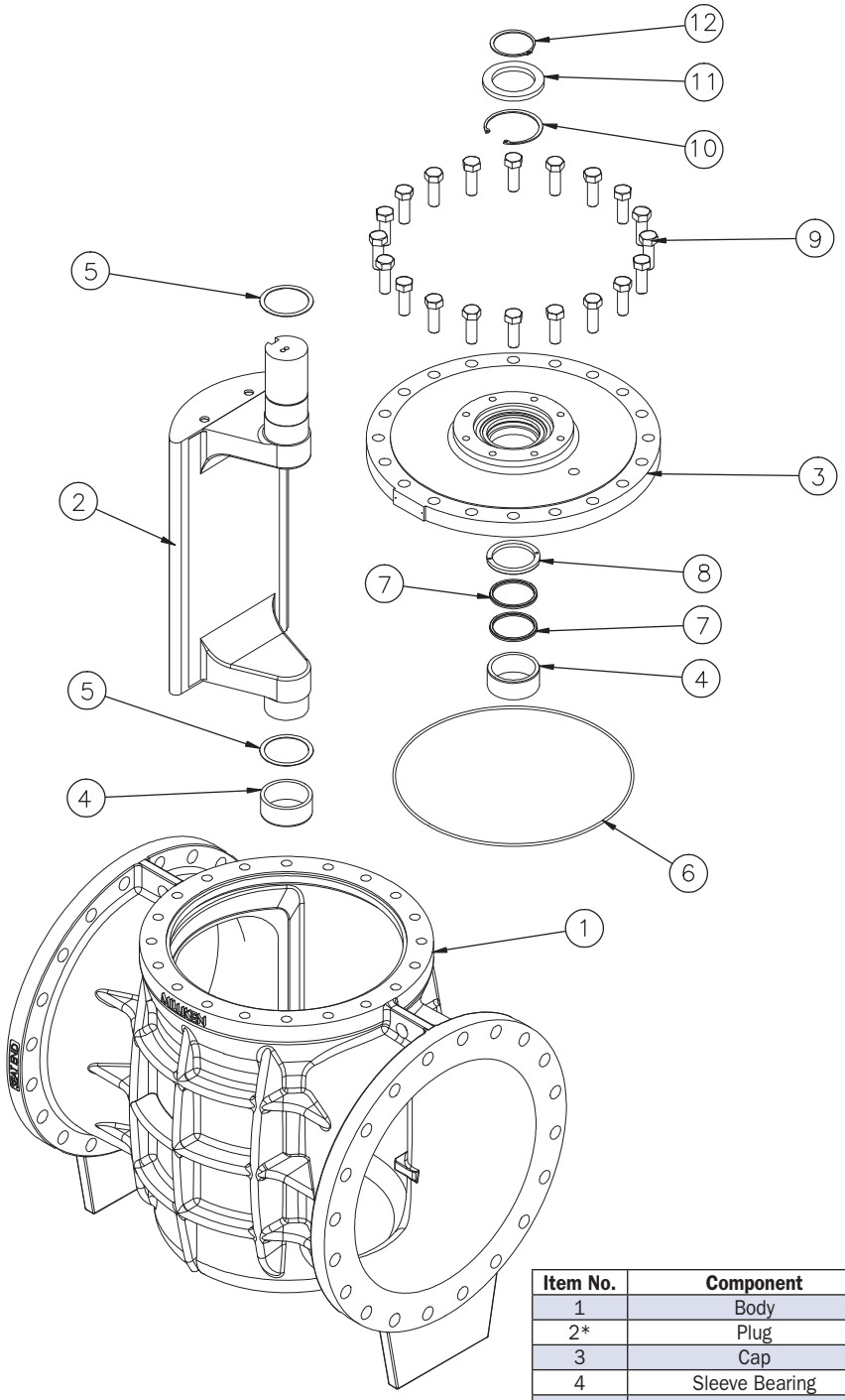

Item No.	Component	Material	Qty.
1	Body	Cast Iron A126 Class B	1
2*	Plug	Rubber Coated See Note 1	1
3	Cap	Cast Iron A126 Class B	1
4	Sleeve Bearing	Stainless Steel/Bronze	2
5	PTFE Washer (Grit Seal)	PTFE	2
6	Cap "O" Ring	Elas. as Spec.	1
7	U Cup Seal	Elas. as Spec.	2
8*	Seal Retaining Ring	See Note 2	1
9	Cap Screw	Steel (Zinc Plated)	A/R
10	Internal Snap Ring	Spring Steel	1
11	Support Collar	Steel	1
12	External Snap Ring	Spring Seal	1

*NOTE 1: Plugs: Ductile Iron — ASTM A536 on 14" – 20"
Cast Iron — A126 Class B on 24" and larger

*NOTE 2: Seal Retaining Ring: Brass — ASTM B-138-675 on 14" – 20"
Steel on 24" and larger

Fig. 601 Cast Iron / 611 Ductile Iron – Flanged End
2½" – 12", 175 PSI

2½" – 8" VALVES ONLY

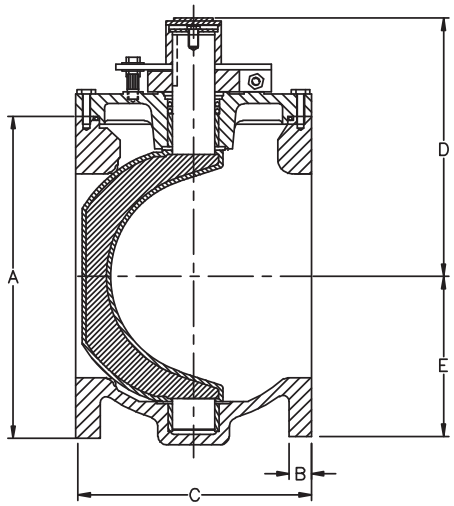

2½" – 12" VALVES

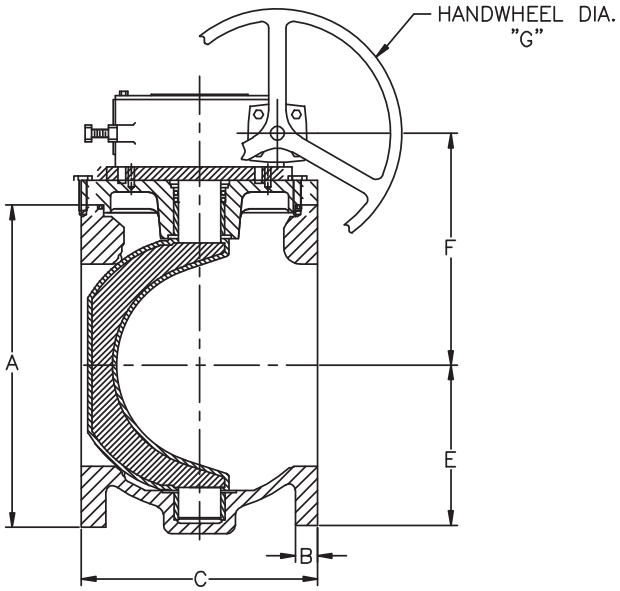

FLANGED END — ANSI 125								
SIZE	2.50	3	4	5	6	8	10*	12*
A	7.00	7.50	9.00	10.00	11.00	13.50	16.00	19.00
B	.69	.75	.94	.94	1.00	1.13	1.19	1.25
C	7.50	8.00	9.00	10.00	10.50	11.50	13.00	14.00
D	6.19	6.19	7.25	8.38	8.38	10.69	—	—
E	3.50	3.75	4.50	5.75	5.75	7.63	8.88	10.00
F	5.16	5.16	6.31	7.56	7.56	9.63	11.13	12.81
G	6.00	6.00	6.00	6.00	6.00	12.00	12.00	12.00
WEIGHT (approx.)	30	40	70	105	115	190	345**	440**

*10" & above have gear operators as standard

**Weight includes gear operator

NOTE: Drawings are for information purposes only; please request certified drawings before preparing piping diagrams

Fig. 600 Cast Iron / 610 Ductile Iron – Mechanical Joint 3" – 12", 175 PSI

3" – 8" VALVES ONLY

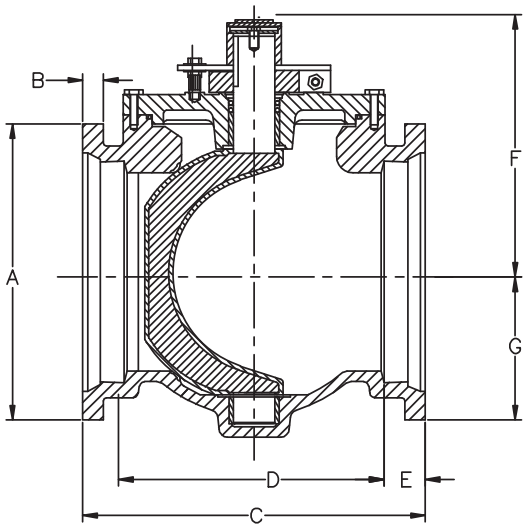

3" – 12" VALVES

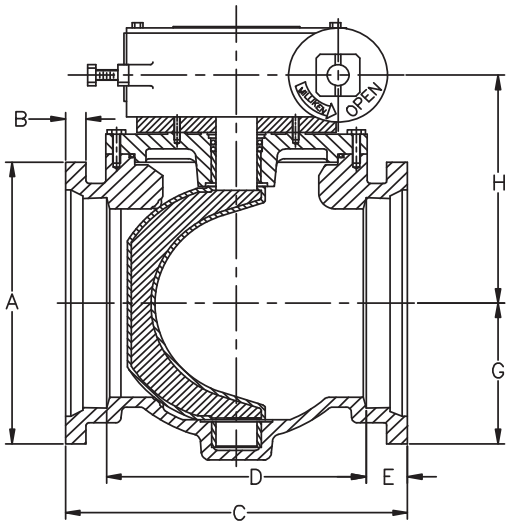

MECHANICAL JOINT END						
SIZE	3	4	6	8	10*	12*
A	7.69	9.00	11.13	13.38	15.63	17.94
B	.94	1.00	1.06	1.13	1.19	1.25
C	11.50	14.25	15.75	17.38	15.63	20.75
D	6.00	9.25	10.75	12.39	14.39	15.75
E	2.75	2.50	2.50	2.50	2.50	2.50
F	6.19	7.25	8.38	10.69	—	—
G	3.84	4.50	5.56	6.69	7.81	8.97
H	5.16	6.31	7.56	9.63	11.13	12.81
WEIGHT (approx.)	50	80	125	200	360**	480**

*10" & above have gear operators as standard

**Weight includes gear operator

We recommend gears on all Mechanical Joint Valves

NOTE: Drawings are for information purposes only; please request certified drawings before preparing piping diagrams

Fig. 601 Cast Iron / 611 Ductile Iron Flanged End
Fig. 600/610 Ductile Iron Mechanical Joint End
14" & Larger, 150 PSI

14" –20" VALVES

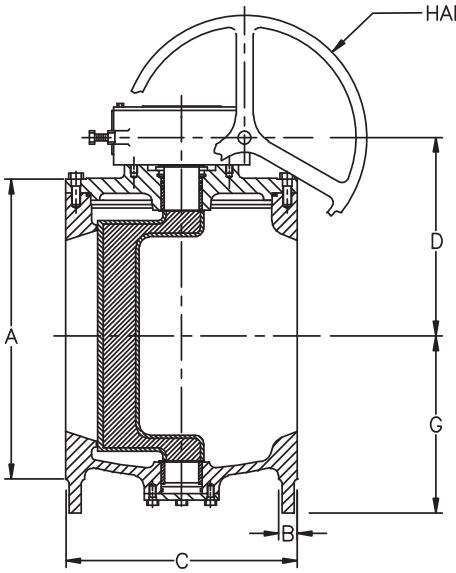

14" –20" VALVES

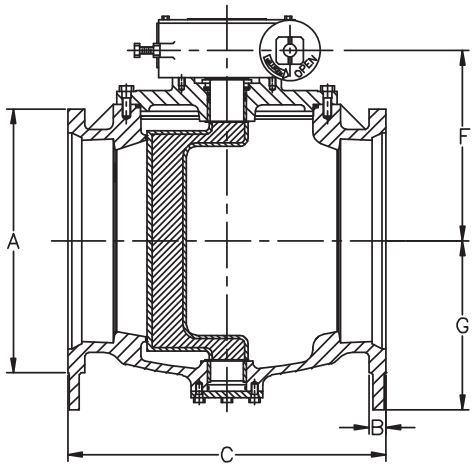

24" VALVES AND LARGER

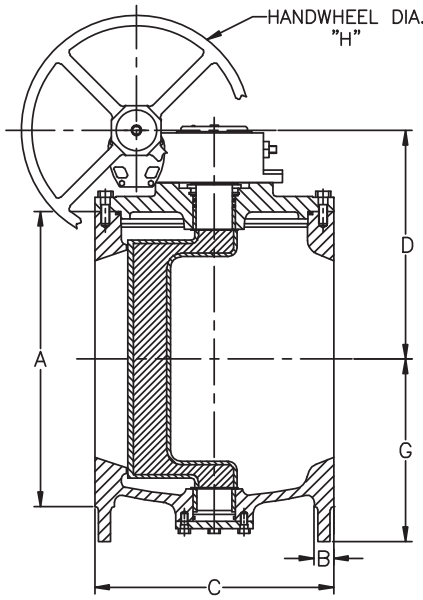

24" VALVES AND LARGER

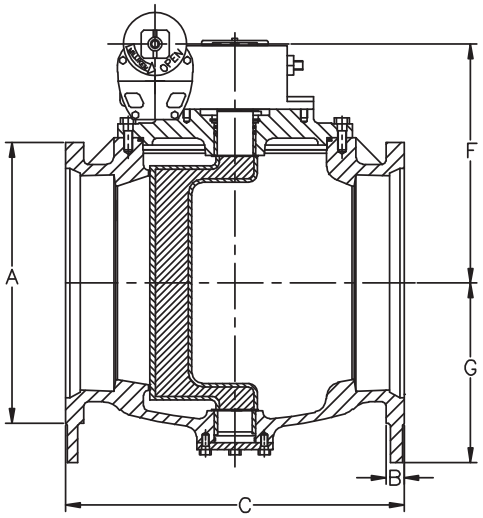

FLANGED END — ANSI 125										
SIZE	14	16	18	20	24	30	36	42	48	54
A	21.00	23.50	25.00	27.50	32.00	38.75	46.00	53.00	59.00	66.25
B	1.38	1.44	1.56	1.69	1.88	2.13	2.38	2.63	2.75	3.00
C	17.00	17.75	21.50	23.50	42.00	51.00	60.00	72.00	84.00	96.00
D	14.56	15.81	16.36	17.63	25.13	29.00	33.51	33.88	39.57	50.86
G	13.00	14.00	15.00	16.00	21.62	24.43	29.00	29.00	36.00	36.00
H	18.00	18.00	18.00	18.00	24.00	24.00	24.00	30.33	30.00	30.00
WEIGHT (approx.)	905	1030	1355	1880	3800	5200	6950	10160	13350	15100

Flanged Valves Meet ANSI B16.1

MECHANICAL JOINT END									
SIZE	14	16	18	20	24	30	36	42	48
A	20.13	22.56	24.84	27.06	31.50	39.13	46.00	53.13	60.00
B	1.31	1.38	1.43	1.50	1.62	1.68	2.00	2.00	2.00
C	24.50	27.25	29.25	31.00	42.00	51.00	60.00	72.00	84.00
F	14.56	15.81	16.36	17.63	25.13	29.00	33.51	33.88	39.57
G	13.00	14.00	15.00	16.00	21.62	24.75	29.00	29.00	36.00
WEIGHT (approx.)	905	1030	1355	1880	3800	5200	6950	10160	13350

Mechanical Joint Valves Meet ANSI 21.11 & AWWA C-111

Weight includes gear operator

NOTE: Drawings are for information purposes only; please request certified drawings before preparing piping diagrams.

NOTE: Dimensions on 60" and larger available upon request.

Fig. 602 Class 250 Flanged End
2½" – 12", 400 PSI, 14" – 36", 300 PSI

2½" – 12" VALVES

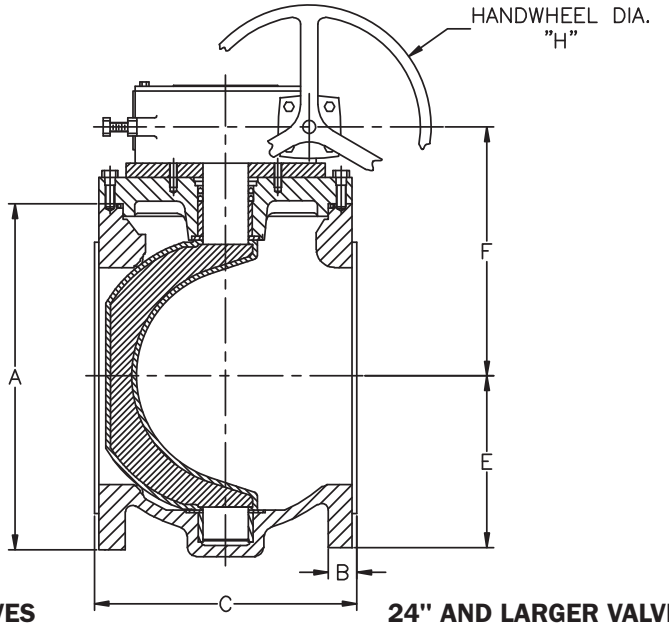

14" – 20" VALVES

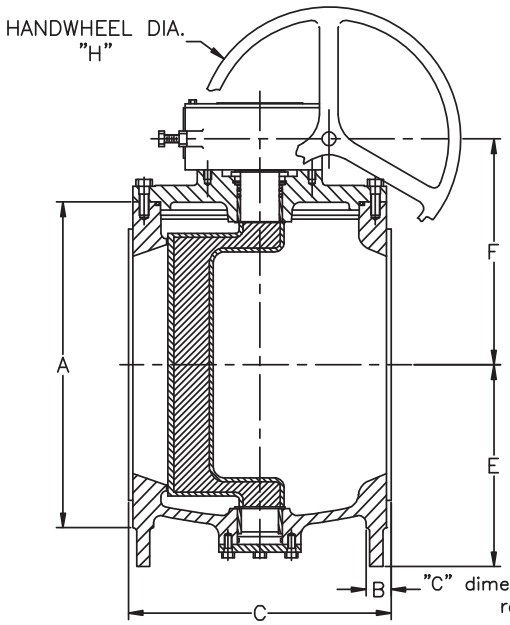

24" AND LARGER VALVES

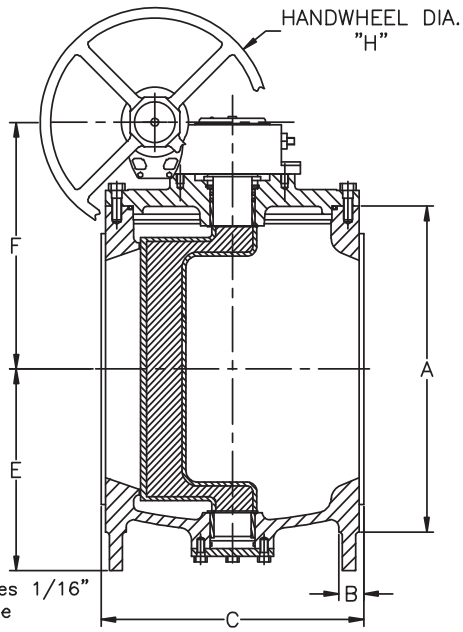

"C" dimen. includes 1/16" raised face

FLANGED END — ANSI 250															
SIZE	2.50	3	4	5	6	8	10	12	14	16	18	20	24	30	36
A	7.50	8.25	10.00	11.00	12.50	15.00	17.50	20.50	23.00	25.50	28.00	30.50	36.00	43.00	50.00
B	1.06	1.13	1.25	1.38	1.44	1.63	1.88	2.00	2.12	2.25	2.38	2.50	2.75	3.00	3.38
C	9.50	11.13	12.00	15.00	15.88	16.50	18.00	19.75	18.50	19.38	23.13	25.00	42.88	51.88	61.00
E	3.50	3.75	4.50	5.75	5.75	17.63	8.88	10.00	13.00	14.00	15.00	16.00	21.62	24.75	29.00
F	5.16	5.16	6.31	7.56	7.56	9.63	11.13	12.81	14.56	15.81	16.36	17.63	22.81	27.59	33.00
H	6.00	6.00	6.00	6.00	6.00	12.00	12.00	12.00	18.00	18.00	18.00	18.00	24.00	24.00	24.00
WEIGHT (approx.)	70	80	120	162	170	275	398	590	980	1125	1830	2060	4160	5700	7670

All above have gear operators as standard

Weight includes gear operator

NOTE: Drawings are for information purposes only; please request certified drawings before preparing piping diagrams

NOTE: Dimensions on 42" and larger available upon request

Fig. 601RL Rubberlined – Flanged End
3" – 12", 175 PSI, 14" & Larger, 150 PSI

3" – 12" VALVES

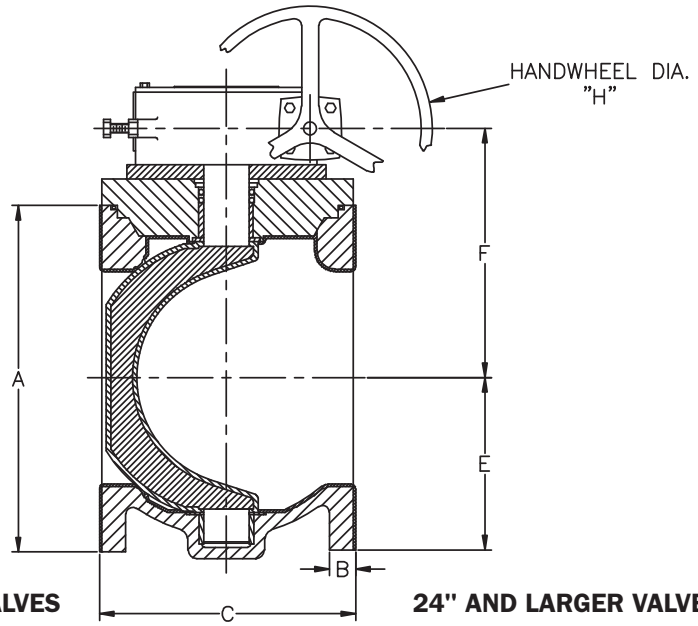

14" – 20" VALVES

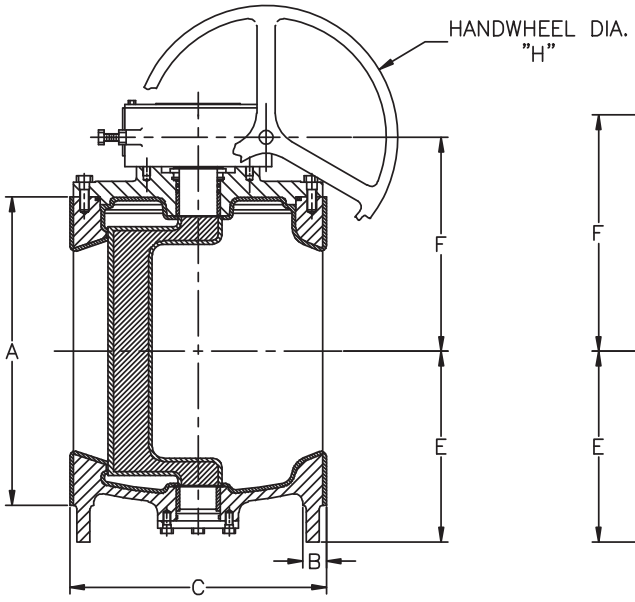

24" AND LARGER VALVES

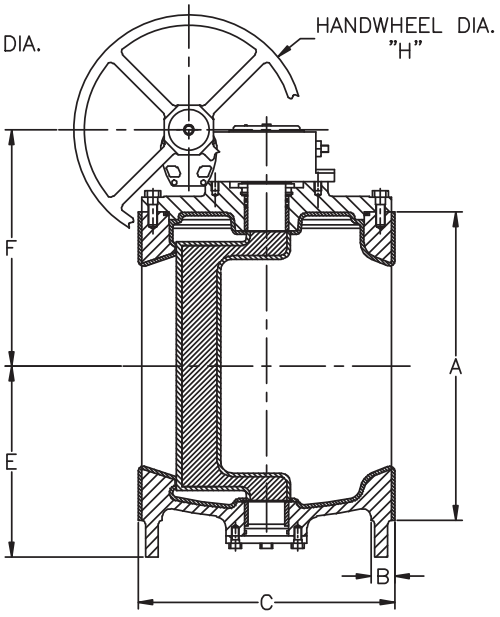

FLANGED END — ANSI 125 RUBBER LINED															
SIZE	3	4	5	6	8	10	12	14	16	18	20	24	30	36	42
A	7.50	9.00	10.00	11.00	13.50	16.00	19.00	21.00	23.25	25.00	27.50	32	38.75	46.00	53.00
B	.88	1.07	1.07	1.13	1.26	1.32	1.38	1.26	2.25	2.38	2.50	2.75	3.00	3.38	3.38
C	8.25	9.25	10.25	10.75	11.75	13.25	14.25	17.25	18.00	21.75	23.75	42.25	51.25	60.25	72.25
E	3.75	4.50	7.75	7.75	7.63	8.88	10.00	13.00	14.00	15.00	16.00	21.63	24.75	29.00	29.00
F	5.16	6.31	7.56	7.56	9.63	11.13	12.81	14.56	15.81	16.36	17.63	25.13	29.00	33.51	33.88
H	6.00	6.00	6.00	6.00	12.00	12.00	12.00	18.00	18.00	18.00	18.00	24.00	24.00	24.00	24.00
WEIGHT (approx.)	70	100	135	145	240	345	440	905	1030	1355	1880	3800	5200	6940	10160

All above have gear operators as standard

Weight includes gear operator

NOTE: Drawings are for information purposes only; please request certified drawings before preparing piping diagrams

NOTE: Dimensions on 48" and larger available upon request

Fig. 606 Grooved End
2½" – 12", 175 PSI, 14" – 20", 150 PSI

2½" – 8" VALVES

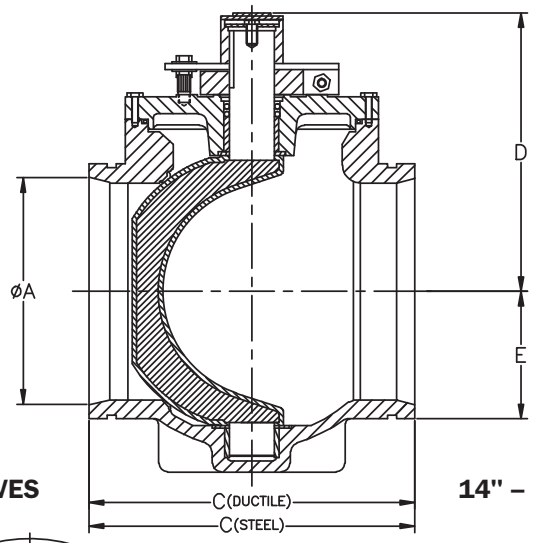

2½" – 12" VALVES

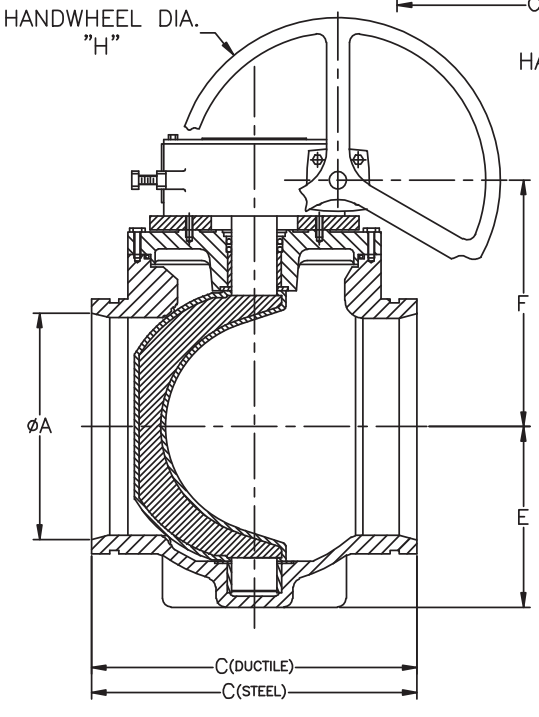

14" – 20" VALVES

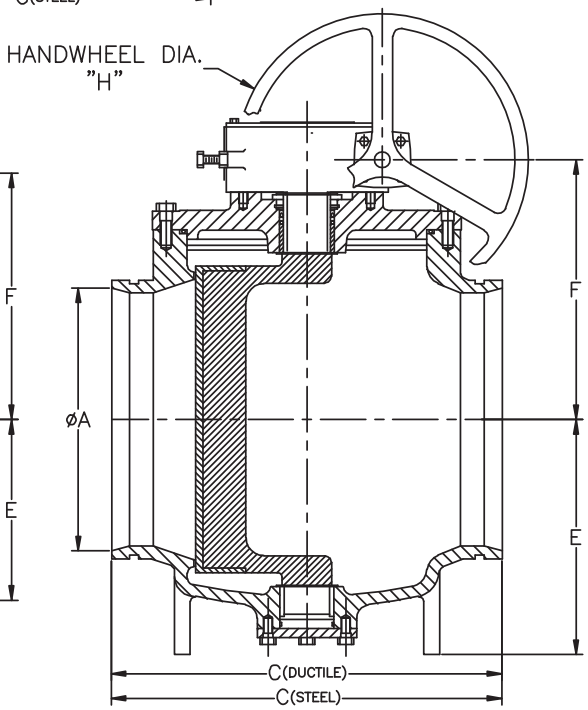

GROOVED END — AWWA 606												
SIZE	2.50	3	4	5	6	8	10*	12*	14*	16*	18*	20*
A	2.50	3.00	4.00	5.00	6.00	8.00	10.00	12.00	14.00	15.25	16.19	18.06
C (Duct.)	N/A	9.06	10.25	N/A	12.50	14.00	16.56	18.00	21.63	N/A	27.50	30.00
C (Steel)	7.13	8.50	10.13	12.38	12.38	13.88	16.44	17.88	21.63	22.50	27.50	30.00
D	6.19	6.19	7.25	8.38	8.38	10.69	—	—	—	—	—	—
E	3.50	3.75	4.50	5.75	5.75	7.63	8.88	10.00	10.00	14.00	15.00	16.00
F	5.16	5.16	6.31	7.56	7.56	9.63	11.13	12.86	13.56	15.81	16.35	17.63
H	6.00	6.00	6.00	6.00	6.00	12.00	12.00	12.00	12.00	18.00	18.00	18.00
WEIGHT (approx.)	20	30	50	70	80	145	325**	420**	RTF	RTF	RTF	RTF

*10" & above have gear operators as standard

**Weight includes gear operator

NOTE: Drawings are for information purposes only; please request certified drawings before preparing piping diagrams

NOTE: Larger sizes are available. Contact Milliken Valve for data.

Adaption

A range of extended stems & floor mounted stands for remote operation, particularly in buried service, are available.
Chainwheels & locking devices are readily incorporated onto the Millcentric Valve.

Valve with extended stem & 2" nut (Only for 8" and smaller valves)

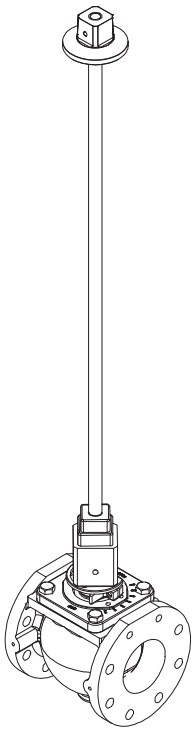

Valve with extended stem, buried gear and 2" nut

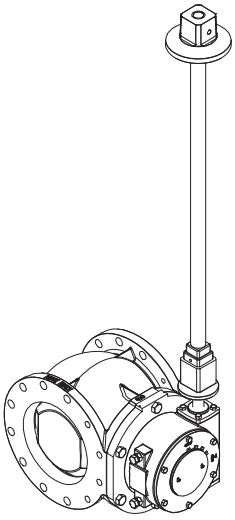

Valve with indicating floorstand

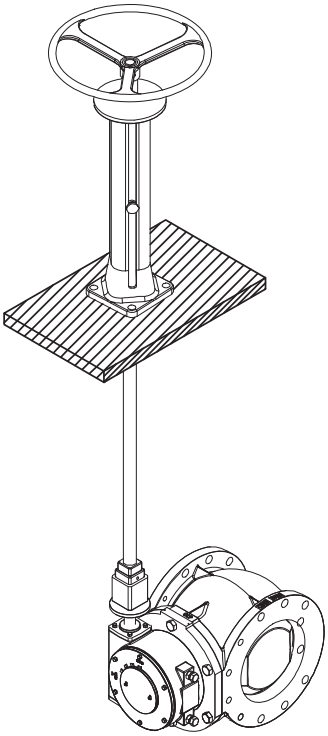

Valve with non-indicating floorstand & motor operator

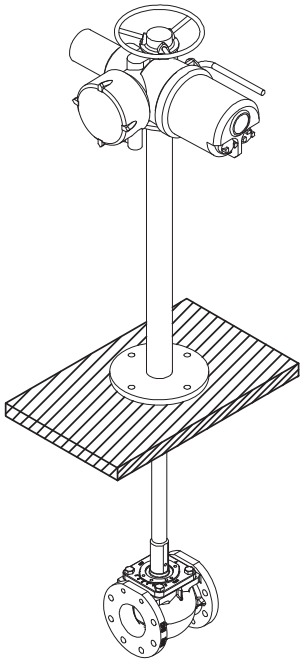

Valve with extended bonnet & motor operator

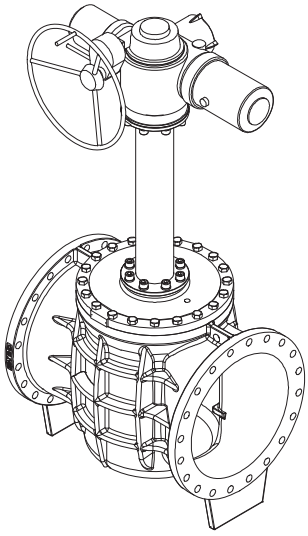

Valve with extended bonnet with gear

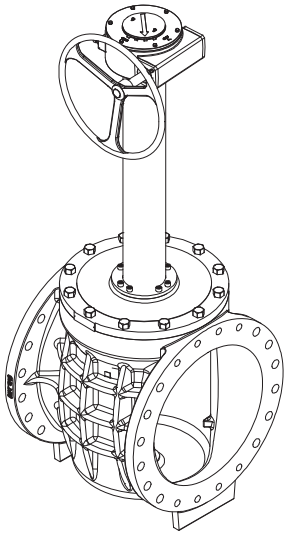

Technical Specification Series 601/600 Valves

TECHNICAL SPECIFICATION
ECCENTRIC PLUG VALVES
AWWA C517-09 Standards
Series 601/600 Valves

Valves shall be of the non-lubricated eccentric type with an elastomer covering all seating surfaces. The elastomer shall be suitable for the service intended. Flanged valves shall be manufactured in accordance with **ANSI B16.1 Class 125/150** including facing, drilling and flange thickness. Mechanical joint ends shall be in compliance with **AWWA/ANSI C-111-92**. Grooved ends shall be manufactured to the dimensions of **ANSI/AWWA C606** for ductile or steel pipe as required. Ports shall be round on sizes 2½"-12" and rectangular port design on valves 14" and larger. All valves shall be capable of being "pigged" with a soft pig when required.

Valve bodies shall be of **ASTM A-126 Class B** cast iron in accordance with **AWWA C-517-09 Section 4.3.3.1**. Valves 3" and larger shall be furnished with a welded-in overlay seat of ⅛" thick of not less than 99% nickel in accordance with **AWWA C-517-09, Section 4.3.3.4**. Sprayed, plated or screwed-in seats are not acceptable.

Plugs shall be of **ASTM A-536-Grade 65-45-12** for sizes 20" and smaller, and **ASTM A126 Class B Cast Iron** for sizes 24" and larger in compliance with **AWWA C-517-09 Sections 4.3.3.1 and 4.3.3.2**. The plugs shall be of one piece solid construction with PTFE thrust bearings on the upper and lower bearing journals to reduce torque and prevent dirt and grit from entering the bearing and seal area.

Valves shall be furnished with replaceable sleeve type bearings conforming to **AWWA C-517-09, Section 4.3.3.6**. Bearings shall be of sintered, oil impregnated type 316 stainless steel **ASTM A-743 Grade CF-8M**. Valve shaft seals shall be of the "U" cup type in accordance with **AWWA C-517-09 Section 4.4.7**. Seals shall be self adjusting and repackable without removing the bonnet from the valve.

Wrench operated valves 2½"-8" shall be capable of being converted to worm gear or automated operation without removing the bonnet or plug from the valve. All wrench operated valves shall be equipped with a 2" square nut for use with removeable levers or extended "T" handles.

Worm gear operators, where required, shall be of the heavy duty construction with the ductile iron quadrant supported on the top and bottom by oil impregnated bronze bearings. The worm gear and shaft shall be manufactured of hardened steel and run on high efficiency roller bearings.

Valves shall be designed and manufactured to shut off bubble tight at 175 psi for valves 2½"-12" and 150 psi for valves 14" and larger. Each valve shall be given a hydrostatic and seat test with the test results being certified when required by the customer. Certified copies of Proof-of-Design test reports shall be furnished as outlined in **AWWA C-517-09 Section 5.2.2** when requested.

Plug valves shall be Millcentric **Series 601/600** as manufactured by **Milliken Valve Company of Bethlehem, Pennsylvania**.

Technical Specification Series 602 Class 250 Valves

TECHNICAL SPECIFICATION
ANSI CLASS 250 ECCENTRIC PLUG VALVES
AWWA C517-09 Standards
Series 602 Valves

Valves shall be of the non-lubricated eccentric type with an elastomer covering all seating surfaces. The elastomer shall be suitable for the service intended. Flanged valves shall be manufactured in accordance with **ANSI B16.1 Class 250** including facing, drilling and flange thickness. Ports shall be round on sizes 2½" through 12" to facilitate "pigging" when required. Valves 14" and larger shall be of a rectangular port design.

Valve bodies shall be of **ASTM A-536 Grade 65-45-12** ductile iron in accordance with **AWWA C-517-09 Section 4.3.3.2**. Valves 3" and larger shall be furnished with a welded-in overlay seat of ⅛" thick of not less than 99% nickel in accordance with **AWWA C-517-09 Section 4.3.3.4**. Sprayed, plated or screwed-in seats are not acceptable.

Plugs shall be of **ASTM A-536-Grade 65-45-12** in compliance with **AWWA C-517-09 Section 4.3.3.2**. The plugs shall be of one piece solid construction with PTFE thrust bearings on the upper and lower bearing journals to reduce torque and prevent dirt and grit form entering the bearing and seal area.

Valves shall be furnished with replaceable sleeve type bearings conforming to **AWWA C-517- 09 Section 4.3.3.6**. Bearings shall be of sintered, oil impregnated type 316 stainless steel **ASTM A-743 Grade CF-8M**. Valve shaft seals shall be of the "U" cup type in accordance with **AWWA C-517-09 Section 4.4.7**. Seals shall be self adjusting and repackable without removing the bonnet from the valve.

Worm gear operators shall be of the heavy duty construction with the ductile iron quadrant supported on the top and bottom by oil impregnated bronze bearings. The worm gear and shaft shall be manufactured of hardened steel and run on high efficiency roller bearings. All worm gear operators shall be sized for bi-directional shutoff at the valves design pressure rating.

Valves shall be designed and manufactured to shut off bubble tight at 400 psi for valves 2½"-12" and 300 psi for valves 14"-48" with pressure behind the plug.

Each valve shall be given a hydrostatic and seat test with the test results being certified when required by the customer. Certified copies of Proof-of-Design test reports shall be furnished as outlined in **AWWA C-517-09 Section 5.2.2** when requested.

Plug valves shall be **Series 602** as manufactured by **Milliken Valve Company of Bethlehem, Pennsylvania**.

Technical Specification Series 601RL Rubberlined Valves

TECHNICAL SPECIFICATION
RUBBERLINED ECCENTRIC PLUG VALVES
AWWA C517-09 Standards
Series 601RL Valves

Valves shall be of the non-lubricated eccentric type with an elastomer covering all seating surfaces. The elastomer shall be suitable for the service intended. Flanged valves shall be manufactured in accordance with **ANSI B16.1 Class 125/150** including facing, drilling and flange thickness. Mechanical joint ends shall be in compliance with **AWWA/ANSI C-111- 92**. Grooved ends shall be manufactured to the dimensions of **ANSI/AWWA C606** for ductile or steel pipe as required. Ports shall be round on sizes 2½"-12" and rectangular port design on valves 14" and larger. All valves shall be capable of being "pigged" with a soft pig when required.

Valve bodies shall be of **ASTM A-126 Class B** cast iron in accordance with **AWWA C- 517-09 Section 4.3.3.1**. The interior of the valve bodies shall be covered with a suitable elastomer with a minimum thickness of ⅛". The elastomer shall extend through the valve flow way and onto the flanges to ensure a positive seal.

Plugs shall be of **ASTM A-536-Grade 65-45-12** for sizes 20" and smaller, and **ASTM A126 Class B Cast Iron** for sizes 24" and larger in compliance with **AWWA C-517-09 Sections 4.3.3.1 and 4.3.3.2**. The plugs shall be of one piece solid construction with PTFE thrust bearings on the upper and lower bearing journals to reduce torque and prevent dirt and grit from entering the bearing and seal area.

Valves shall be furnished with replaceable sleeve type bearings conforming to **AWWA C-517-09, Section 4.3.3.6**. Bearings shall be of sintered, oil impregnated type 316 stainless steel **ASTM A-743 Grade CF-8M**. Valve shaft seals shall be of the "U" cup type in accordance with **AWWA C-517-09 Section 4.4.7**. Seals shall be self adjusting and repackable without removing the bonnet from the valve.

Worm gear operators shall be of the heavy duty construction with the ductile iron quadrant supported on the top and bottom by oil impregnated bronze bearings. The worm gear and shaft shall be manufactured of hardened steel and run on high efficiency roller bearings. All worm gear operators shall be sized for bi-directional shutoff at the valves design pressure rating.

Valves shall be designed and manufactured to shut off bubble tight at 175 psi for valves 2½"-12" and 150 psi for valves 14" and larger. Each valve shall be given a hydrostatic and seat test with the test results being certified when required by the customer. Certified copies of Proof-of-Design test reports shall be furnished as outlined in **AWWA C-517-09 Section 5.2.2** when requested.

Plug valves shall be Millcentric® **Series 601RL** as manufactured by **Milliken Valve Company of Bethlehem, Pennsylvania**.

Technical Specification Series 601S – Stainless Steel Valves

TECHNICAL SPECIFICATION
STAINLESS STEEL ECCENTRIC PLUG VALVES
AWWA C517-09 Standards
Series 601S Valves

Valves shall be of the non-lubricated eccentric type with an elastomer covering all seating surfaces. The elastomer shall be suitable for the service intended. Flanged valves shall be manufactured in accordance with **ANSI B16.1 Class 125** including facing, drilling and flange thickness. Ports shall be round on sizes 2½"-12" and rectangular port design on valves 14" and larger. All valves shall be capable of being "pigged" with a soft pig when required.

Valve bodies shall be of **CF8M (316 stainless steel)**. Valves shall be furnished with 316 stainless steel seat in accordance with **AWWA C-517-09 Section 4.3.3.4**.

Plugs shall be of **CF8M (316 stainless steel)**. The plugs shall be of one piece solid construction with PTFE thrust bearings on the upper and lower bearing journals to reduce torque and prevent dirt and grit from entering the bearing and seal area.

Valves shall be furnished with replaceable sleeve type bearings conforming to **AWWA C-517-09 Section 4.3.3.6**. Bearings shall be of sintered, oil impregnated type 316 stainless steel **ASTM A-743 Grade CF-8M**. Valve shaft seals shall be of the "U" cup type in accordance with **AWWA C-517-09 Section 4.4.7**. Seals shall be self adjusting and repackable without removing the bonnet from the valve.

Wrench operated valves 2½"-8" shall be capable of being converted to worm gear or automated operation without removing the bonnet or plug from the valve. All wrench operated valves shall be equipped with a 2" square nut for use with removable levers or extended "T" handles.

Worm gear operators, where required, shall be of the heavy duty construction with the ductile iron quadrant supported on the top and bottom by oil impregnated bronze bearings. The worm gear and shaft shall be manufactured of hardened steel and run on high efficiency roller bearings. All worm gear operators shall be sized for bi-directional shutoff at the valves design pressure rating.

Valves shall be designed and manufactured to shut off bubble tight at 175 psi for valves 2½"-12" and 150 psi for valves 14" and larger. Each valve shall be given a hydrostatic and seat test with the test results being certified when required by the customer. Certified copies of Proof-of-Design test reports shall be furnished as outlined in **AWWA C-517-09 Section 5.2.2** when requested.

Plug valves shall be Millcentric® **Series 601S** as manufactured by **Milliken Valve Company of Bethlehem, Pennsylvania**.

Technical Specification Series 611/610 Ductile Iron Valves

TECHNICAL SPECIFICATION
DUCTILE IRON ECCENTRIC PLUG VALVES
AWWA C517-09 Standards
Series 611/610 Valves

Valves shall be of the non-lubricated eccentric type with an elastomer covering all seating surfaces. The elastomer shall be suitable for the service intended. Flanged valves shall be manufactured in accordance with **ANSI B16.1 Class 125/150** including facing, drilling and flange thickness. Mechanical joint ends shall be in compliance with **AWWA/ANSI C-111-92**.Grooved ends shall be manufactured to the dimensions of **ANSI/AWWA C606** for ductile or steel pipe as required. Ports shall be round on sizes 2½"-12" and rectangular port design on valves 14" and larger. All valves shall be capable of being "pigged" with a soft pig when required.

Valve bodies shall be of **ASTM A-536 Grade 65-45-12** in accordance with **AWWA C-517-09 Section 4.3.3.2**. Valves 3" and larger shall be furnished with a welded-in overlay seat of ⅛" thick of not less than 99% nickel in accordance with **AWWA C-517-09, Section 4.3.3.4**. Sprayed, plated or screwed-in seats are not acceptable.

Plugs shall be of **ASTM A-536-Grade 65-45-12** for all sizes in accordance with **AWWA C-517-09 Section 4.3.3.2**. The plugs shall be of one piece solid construction with PTFE thrust bearings on the upper and lower bearing journals to reduce torque and prevent dirt and grit from entering the bearing and seal area.

Valves shall be furnished with replaceable sleeve type bearings conforming to **AWWA C-517-09, Section 4.3.3.6**. Bearings shall be of sintered, oil impregnated type 316 stainless steel **ASTM A-743 Grade CF-8M**. Valve shaft seals shall be of the "U" cup type in accordance with **AWWA C-517-09 Section 4.4.7**. Seals shall be self adjusting and repackable without removing the bonnet from the valve.

Wrench operated valves 2½"-8" shall be capable of being converted to worm gear or automated operation without removing the bonnet or plug from the valve. All wrench operated valves shall be equipped with a 2" square nut for use with removeable levers or extended "T" handles.

Worm gear operators, where required, shall be of the heavy duty construction with the ductile iron quadrant supported on the top and bottom by oil impregnated bronze bearings. The worm gear and shaft shall be manufactured of hardened steel and run on high efficiency roller bearings. All worm gear operators shall be sized for bi-directional shutoff at the valves design pressure rating.

Valves shall be designed and manufactured to shut off bubble tight at 175 psi for valves 2½"-12" and 150 psi for valves 14" and larger. Each valve shall be given a hydrostatic and seat test with the test results being certified when required by the customer. Certified copies of Proof-of-Design test reports shall be furnished as outlined in **AWWA C-517-09 Section 5.2.2** when requested.

Plug valves shall be Millcentric® **Series 611/610** as manufactured by **Milliken Valve Company of Bethlehem, Pennsylvania**.

Technical Specification Series 601GL Glass Lined Valves

TECHNICAL SPECIFICATION
GLASS LINED ECCENTRIC PLUG VALVES 3"-30"
AWWA C517-09 Standards
Series 601GL/600GL Valves

Valves shall be of the non-lubricated eccentric type with an elastomer covering all seating surfaces. The elastomer shall be suitable for the service intended. Flanged valves shall be manufactured in accordance with **ANSI B16.1 Class 125/150** including facing, drilling and flange thickness. Mechanical joint ends shall be in compliance with **AWWA/ANSI C-111-92**. Grooved ends shall be manufactured to the dimensions of **ANSI/AWWA C606** for ductile or steel pipe as required. Ports shall be round on sizes 3"-12" and rectangular port design on valves 14" and larger. All valves shall be capable of being "pigged" with a soft pig when required.

Valve bodies shall be of **ASTM A-126 Class B** cast iron in accordance with **AWWA C-517-09 Section 4.3.3.1**. Interior of valves shall be glass lined at .008-.012 mils thickness, covering the entire interior of valve bodies and stopping at the flange faces.

Plugs shall be of **ASTM A-536-Grade 65-45-12** for sizes 20" and smaller, and **ASTM A126 Class B Cast Iron** for sizes 24" and larger in compliance with **AWWA C-517-09 Sections 4.3.3.1 and 4.3.3.2**. The plugs shall be of one piece solid construction with PTFE thrust bearings on the upper and lower bearing journals to reduce torque and prevent dirt and grit from entering the bearing and seal area.

Valves shall be furnished with replaceable sleeve type bearings conforming to **AWWA C-517-09, Section 4.3.3.6**. Bearings shall be of sintered, oil impregnated type 316 stainless steel **ASTM A-743 Grade CF-8M**. Valve shaft seals shall be of the "U" cup type in accordance with **AWWA C-517-09 Section 4.4.7**. Seals shall be self adjusting and repackable without removing the bonnet from the valve.

Wrench operated valves 2½"-8" shall be capable of being converted to worm gear or automated operation without removing the bonnet or plug from the valve. All wrench operated valves shall be equipped with a 2" square nut for use with removeable levers or extended "T" handles.

Worm gear operators, where required, shall be of the heavy duty construction with the ductile iron quadrant supported on the top and bottom by oil impregnated bronze bearings. The worm gear and shaft shall be manufactured of hardened steel and run on high efficiency roller bearings. All worm gear operators shall be sized for bi-directional shutoff at the valves design pressure rating.

Valves shall be designed and manufactured to shut off bubble tight at 175 psi for valves 2½"-12" and 150 psi for valves 14" and larger. Each valve shall be given a hydrostatic and seat test with the test results being certified when required by the customer. Certified copies of Proof-of-Design test reports shall be furnished as outlined in **AWWA C-517-09 Section 5.2.2** when requested.

Plug valves shall be Millcentric Series **601GL/600GL** as manufactured by **Milliken Valve Company of Bethlehem, Pennsylvania**.

Notes

MILLIKEN
VALVE COMPANY

Series 600/601
Eccentric Plug Valve

Flanged and MJ

Welded Nickel Seat
Stainless Steel Bearings
ANSI-B16.1 Flanges
Solid Ductile Iron Plug
Low Pressure Drop
Flanged & MJ Ends
Sizes 2"-72" FL
Sizes 3"-48" MJ

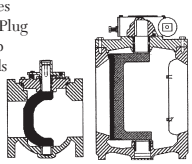

Series 601SS
Eccentric Plug Valve

Integral Stainless Seat
Stainless Bearings
Stainless Steel Body
ANSI B16.5 Class 150 Flanges
Solid Stainless Steel Plug
Low Pressure Drop
Size: 1/2"-24"

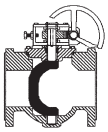

Series 601RL
Eccentric Plug Valve

Rubber Lined

Soft or Hard Rubber Lining
Stainless Steel Bearings
ANSI B16.1 Flanges
Solid Ductile Iron Plug
Low Pressure Drop
Sizes 3"-54"
Metal Plugs Available
– Consult Factory

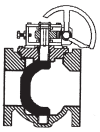

Series 602
Eccentric Plug Valve

High Pressure

Welded Nickel Seat
Stainless Steel Bearings
ANSI B16.1 Class 250 Flanges
Solid Ductile Iron Plug
Low Pressure Drop
Sizes 2-1/2"-54"

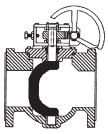

Series 603
Eccentric Plug Valve

Threaded End

Solid Ductile Iron Plug
Round Port
Low Pressure Drop
Memory Stop
NPT End Connections
Sizes 1/2"-2"

Series 604E
Eccentric Plug Valve

Three Way Valve

Epoxy Seat
Solid Ductile Iron Plug
Stainless Steel Bearings
Low Pressure Drop
Lift & Turn NOT Required
High Solids & Flow Capacity
Sizes 3"-16"

Series 606
Eccentric Plug Valve

Grooved End

Welded Nickel Seat
Stainless Steel Bearings
AWWA C-606 Grooved
Solid Ductile Iron Plug
Low Pressure Drop
Ductile or Steel Pipe
Sizes 3"-24"

Series 611/610
Eccentric Plug Valve

Flanged and MJ

Ductile Iron Body
ANSI B16.1 Flanges
MJ AWWA C111
Welded Nickel Seat
Solid Ductile Iron Plug
Low Pressure Drop
Sizes 2"-72" FL
Sizes 3"-48" MJ

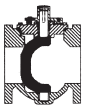

Model 625
Eccentric Plug Valve

Available in Threaded
and Flanged Ends
Rated for 175 psi
Sizes 1/2"-4"
UL/CGA Listed

Series 8000
AWWA Swing Check

Full waterway
Weight or Spring
Bronze/SS Body Seat Ring
Bronze/Buna/EPDM disc insert
Sizes 2"-36"

Series 8500
AWWA Swing Check

Full waterway
Ductile Iron Construction
Weight or Spring
Air Cushion
SS body seat ring
Buna disc insert
Sizes 3"-24"

Series 9000
AWWA Swing Check

Clear waterway
Weight or Spring
Air or Oil Cushion
Bronze/SS Body seat ring
Bronze/Buna/EPDM disc insert
Sizes 3"-72"

Model 720A
Wafer Check Valve

Center Guided
Check Valve
Rated for 250 psi
SS Disc/EPDM Seat
Sizes 2"-12"

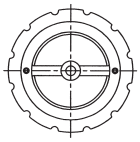

Series 700
Wafer Check Valve

Wafer Check Valve

ANSI Class 125/150
High Flow Capacity
Narrow Face-to-Face
Sizes 3"-12"
316 SS Internals
Disc Position Indicator

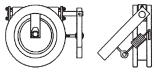

Figure 851
Flex Check

Million Cycle Certification
Complete Ductile Iron Construction
285 psi Pressure Rating
Fully Epoxy Lined Interior
No Internal Shafts, Bearings or Bushings
No External Levers, Weights or Springs
Hard or Soft
Rubberlining Available
2"-24" Size Range
Backflush Devices
Proximity Switches

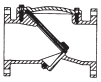

Figure 510A/511A
AWWA Butterfly Valve

Complies with AWWA C-504
Class 150B Flanged or MJ
Cast iron body and disc
Seat in body
Flow through disc on
24" and larger
Epoxy Paint on all sizes
standard
3" - 72"

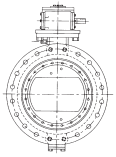

Figure 565/566
General Service
Butterfly Valve

Meets MSS SP 67
Cast Iron Body
Bronze Disc
Other Materials Upon Request
Wrench or Gear
Operated Available
2"-24" Size Range

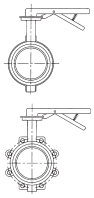

Figure 740A
Double Disc Check Valve

Wafer pattern
check valve
rated for 250 psi.
Available in sizes
2"-36" with a
SS Disc/EPDM Seat

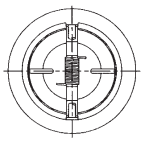

Figure 821A
Globe Style Check Valve

Center guided
check valve.
SS Disc/EPDM Seat
and is available
in sizes 2"-24".

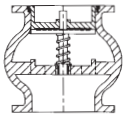

- ***ISO 9001:2000 Certified***
- ***Field Services Available***
- ***Engineering Services***

MILLIKEN
VALVE COMPANY

Bethlehem, PA
Phone (610) 861-8803
Fax (610) 861-8094

www.millikenvalve.com

MILLIKEN VALVE

ISO 9001 Certified

1/2” - 2” MILLCENTRIC® ECCENTRIC PLUG VALVE

MILLIKEN VALVE

Milliken Valve offers the following for your water and wastewater needs:

- Eccentric Plug Valves
  - Series 601/600 Flanged & MJ
  - Series 601S Stainless Steel
  - Series 601RL Rubber Lined
  - Series 602 High Pressure
  - Series 613 Threaded End
  - Series 604 Three Way
  - Series 606 Grooved End
  - Series 611/610 Flanged & MJ
  - Series 625 UL/CGA Listed
- AWWA Swing Check Valves
- Wafer Check Valves
- Flex Check Valves
- Spring Loaded Check Valves
- AWWA Butterfly Valves
- General Service Butterfly Valves

Milliken Valve designs, develops, manufactures and markets plug valves and check valves which are available with various accessories, controls and actuators. These valves are used primarily in the water, wastewater and industrial markets.

Milliken Valve was founded over 25 years ago and manufactures the eccentric plug valve for water, wastewater and industrial applications. Milliken has grown consistently until it is now a leading manufacturer of high quality plug valves.

Milliken has a quality management system independently certified to ISO 9001.

A market leading, wide selection of plug valves are available for most water, wastewater and industrial applications:

Multiport 100% Port 3-Way Plug Valve

- 3-Way Valve 3" – 16", suitable for flow diversion and isolation.

Eccentric Plug Valve

- Size range ½" - 72"
- Pressure rating up to Class 250
- Rubber lined 3" and larger
- Glass lined 3" and larger
- Stainless steel ½" - 48"

Flex Check Valve

The eccentric plug valve is perfectly complemented by a soft-seated flexible-disc check valve in sizes 2" to 24" and is available with manual back-flushing device, position indicator and limit switch.

Swing Check Valve

Milliken Valve also has a wide selection of high quality metal or soft seated swing check valves in sizes 2" to 72" with accessories available for spring or weight assisted closing and air cushion or oil decelerator anti-slam devices under the respected CCNE brand.

Overview of Valve Details - 1/2" - 2"

The Milliken criteria of quality, reliability, safety and value are embodied in the MILLCENTRIC® Eccentric valve, setting higher standards for dependable performance with excellent features achieved by the utilization of the very latest design and manufacturing techniques.

- Computer Aided Design
- High Integrity Casting
- CNC manufacturing delivers consistent sizes on all components

All complemented by a rigorous Quality Control System

Body

The MILLCENTRIC valve body casting is ASTM A536 65-45-12 ductile iron using high pressure molding techniques. Threaded connection available on 1/2"-2" sizes. Flanged connection available on 2" size.

Flange diameter, thickness and drilling conform to ANSI B16.1 Class 125.

Seat

The valve seat shall be furnished with an overlay of corrosion and abrasion resistant epoxy.

Stem Seal

High integrity sealing by combining the advantages of a resilient and abrasion resistant U-Cup seal. From vacuum to high pressure, the self-adjusting sealing system (per AWWA C504) gives positive, trouble-free service and is retained independently of the plug stem or external torque device, thereby eliminating periodic maintenance.

Bearings

The plug rotates in permanently lubricated stainless steel bearings, located in the body and bonnet, along with upper and lower PTFE thrust washers which ensure consistently low operating torque.

Plug

Supported on integral trunnions, the plug is totally encapsulated with an elastomer that is molded to the casting providing tight shut off even under vacuum conditions. High integrity corrosion-free sealing is achieved by a variety of abrasion resistant elastomers which protect the plug right up to the trunnions. When assembled, the light compression of the elastomers onto PTFE thrust washers prevents entry of abrasive materials into the bearings.

Bonnet Seal

Superior “O” ring sealing with metal/metal contact means lower bolting stresses compared with compression gaskets.

Flow

The full round port design with streamlined internal contours gives the highest industry capacity straight through flow in the full open position, reducing turbulence and pressure drop and the effect of erosive media. Handling of sludges and slurries is therefore enhanced.

Travel Stops

Adjustable open and closed travel stops are fitted as standard on both wrench and gear operated MILLCENTRIC valves.

- Valve in closed position for bubble tight shut-off
- Normal flow direction gives pressure assisted sealing
- Torques are low even in reverse flow

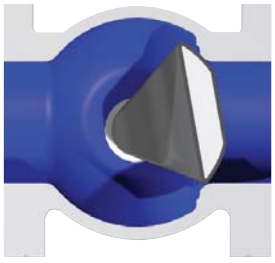

- Plug rotates away from the seat for instant opening
- Seat wear and operating torque reduced
- No further seat contact until valve is closed again

- Design of MILLCENTRIC® plug valve allows modulating control over the full 90˚ travel
- Ideally suited for balancing service
- Standard rotary valve provides control and tight shut off in one valve

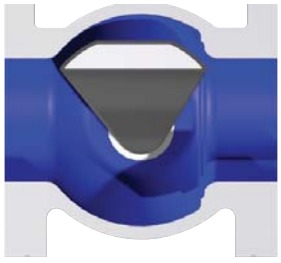

- Plug is out of flow path when fully open
- Straight through, uninterrupted smooth flow
- Round port reduces turbulence and erosion, lowers pumping costs and can be “pigged” to clean the pipeline

Installation

The MILLCENTRIC® plug valve is suitable for flow and shut-off in either direction. Seat end downstream is the preferred orientation and any reverse flow requirement should be stated at the time of order. For use on fluids with suspended solids, installation with the seat upstream and the valve stem horizontal is recommended with plug rotation to the top of the valve.

In-Line Maintenance

In the unlikely event of stem leakage, the stem seals can be easily replaced without removing the bonnet. Access to the body for cleaning or inspection does not require removal from the line.

Modular Construction

Design of the bonnet and stem allows for on-site adaption of gear operators, power actuators, or extension devices on to standard valves. Conversion can be easily undertaken without removing the valve bonnet, thereby minimizing downtime.

Power Operation

Pneumatic, electric or hydraulic operation is available, complete with accessories such as limit switches, solenoid valves and positioners when required.

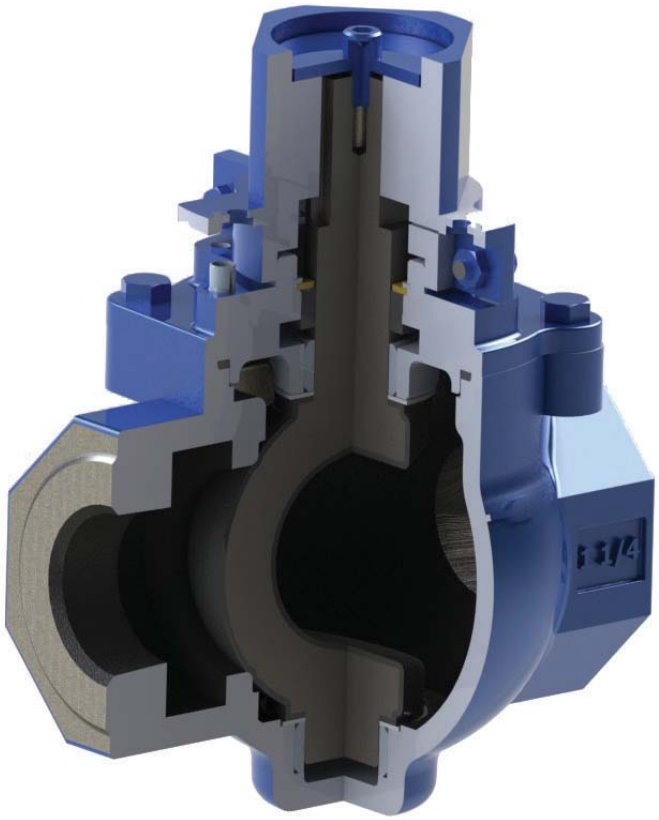

Standard Materials of Construction, Fig. 613A/611A, 1/2" - 2"

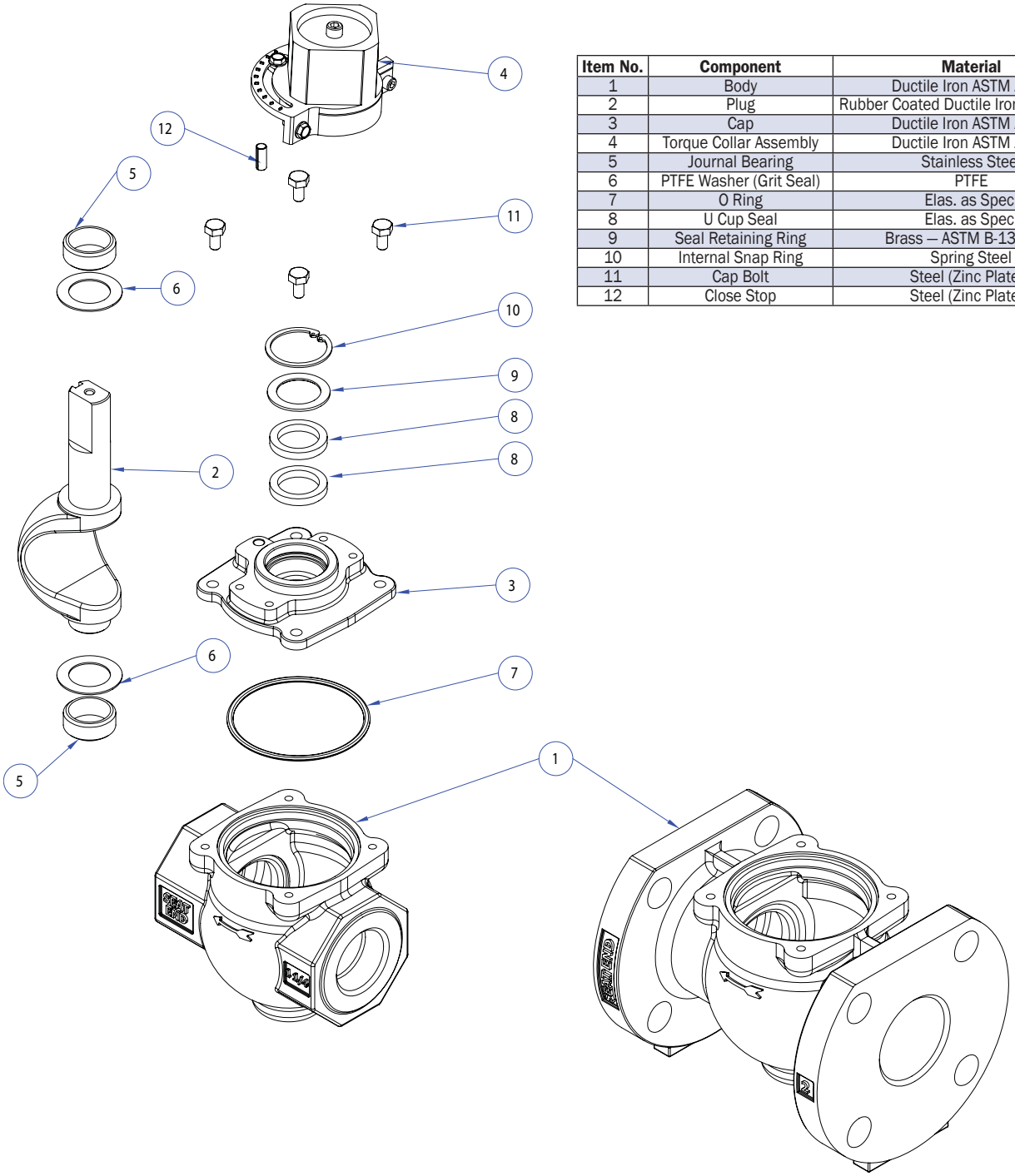

Item No.	Component	Material	Qty.
1	Body	Ductile Iron ASTM A536	1
2	Plug	Rubber Coated Ductile Iron ASTM A536	1
3	Cap	Ductile Iron ASTM A536	1
4	Torque Collar Assembly	Ductile Iron ASTM A536	1
5	Journal Bearing	Stainless Steel	2
6	PTFE Washer (Grit Seal)	PTFE	2
7	O Ring	Elas. as Spec.	1
8	U Cup Seal	Elas. as Spec.	2
9	Seal Retaining Ring	Brass – ASTM B-138-675	1
10	Internal Snap Ring	Spring Steel	1
11	Cap Bolt	Steel (Zinc Plated)	AR
12	Close Stop	Steel (Zinc Plated)	1

Technical Data

ORDERING INFORMATION

Valve Types	Designation
Threaded NPT Ductile Iron	613A
ANSI 125 Flanged Ductile Iron (2" only)	611A
Threaded NPT 316 SS	603AS
ANSI 150 Flanged 316SS (2" only)	601AS

SEAT

Epoxy	E
316SS (on stainless steel valve only)	S

ELASTOMER TRIM

EPDM	0
Buna-Nitrile	1
Viton*	2
Neoprene*	3

* Consult factory for availability

MANUAL OPERATORS

Lever/Wrench	L
Direct Nut	TC
Above Ground Gear & Handwheel	AGHW
Above Ground Gear & 2" Nut	AGNUT
Buried Gear with 2" Nut	BG
Memory Stop Gear & Handwheel	MGHW
Above Ground Gear & Chainwheel	AGCW

Valves are only tested for bi-directional shut-off if specified at time of order. Contact Milliken for bi-directional ratings.

PRESSURE RATING

613A	NPT	400 PSI
611A	ANSI 125	175 PSI
603AS	NPT	400 PSI
601AS	ANSI 150	275 PSI

Body Hydrotest = 150% of rated pressure
Seat Test = 100% of rated pressure
Testing per AWWA C517

ELASTOMERS AVAILABLE FOR MILLCENTRIC VALVE

Nitrile

A general purpose material sometimes referred to as BUNA-N or HYCAR with a -20°F to 212°F temperature range. Used on sewage, water, hydrocarbon and mineral oils.

EPDM

An excellent polymer for use on chilled water through to LP steam applications having a temperature range of -35°F to 250F. Resistance to many acids, alkalies, detergents, phosphate esters, alcohols and glycols is an added benefit.

Neoprene

This versatile material shows outstanding resistance to abrasion and ozone. Chemical resistance to a wide range of petroleum base products and dilute acids and alkalies. Temperature range -20°F to 225°F.

Viton

Retention of mechanical properties at high temperature is an important feature of this elastomer: temperature range is -10°F to 300°F. It also has excellent resistance to oils, fuels, lubricants and most mineral acids and aromatic hydrocarbons. Note: Viton not for water or steam applications.

Elastomer Selection Chart

Service	Elastomer	Average Useful Temperature Range	Service	Elastomer	Average Useful Temperature Range	Service	Elastomer	Average Useful Temperature Range
Acetone	EPDM	-35˚F to 250˚F	Caustic Soda	EPDM	-35˚F to 250˚F	Oil Animal	Nitrile	-20˚F to 212˚F
Air	EPDM	-35˚F to 250˚F	Cement Slurry	EPDM	-35˚F to 250˚F	Oil Mobil Therm Light	Viton	10˚F to 250˚F
Air w/Oil	Nitrile	0˚F to 212˚F	Copper Sulphate	EPDM	-35˚F to 250˚F	Oil Mobil Therm 600	Viton	10˚F to 250˚F
Alcohol, Amyl	EPDM	0˚F to 212˚F	Creosote (Coal)	Nitrile	-20˚F to 212˚F	Oil Mobil Therm 603	Nitrile	-20˚F to 212˚F
Alcohol, Aromatic	Viton	10˚F to 250˚F	Coal Slurry	Nitrile	-20˚F to 212˚F	Oil Lubricating	Nitrile	-20˚F to 212˚F
Alcohol, Butyl	Neoprene	-20˚F to 225˚F	Diesel Fuel No. 3	Nitrile	-20˚F to 212˚F	Oil Vegetable	Nitrile	-20˚F to 212˚F
Alcohol, Denatured	Nitrile	-20˚F to 212˚F	Diethylene Glycol	EPDM	-35˚F to 250˚F	Paint Latex	Nitrile	-20˚F to 212˚F
Alcohol, Ethyl	EPDM	-20˚F to 250˚F	Ethylene Glycol	EPDM	-35˚F to 250˚F	Phosphate Ester	EPDM	-35˚F to 250˚F
Alcohol, Grain	Nitrile	-20˚F to 212˚F	Fatty Acid	Nitrile	-20˚F to 212˚F	Propane	Nitrile	-20˚F to 212˚F
Alcohol, Isosproply	Neoprene	-20˚F to 225˚F	Fuel Oil No. 2	Nitrile	-20˚F to 212˚F	Rape Seed Oil	EPDM	-35˚F to 250˚F
Alcohol, Methyl	EPDM	-20˚F to 250˚F	Fertilizer Liquid ($H_4N_2O_2$)	EPDM	-35˚F to 250˚F	Sewage with Oil	Nitrile	-20˚F to 212˚F
Ammonia, Anhydrous	Neoprene	-20˚F to 225˚F	Gasoline Keg	Nitrile	-20˚F to 212˚F	Sodium Hydroxide 20%	EPDM	-35˚F to 250˚F
Ammonia, Nitrate	EPDM	-20˚F to 250˚F	Gas Natural	Nitrile	-20˚F to 212˚F	Starch	EPDM	-35˚F to 250˚F
Ammonia, Water	EPDM	-20˚F to 250˚F	Glue Animal	Nitrile	-20˚F to 212˚F	Steam 250˚F	EPDM	-35˚F to 250˚F
Animal Fats	Nitrile	-20˚F to 212˚F	Green Liquor	EPDM	-20˚F to 212˚F	Stoffard Solvent	Nitrile	-20˚F to 80˚F
Black Liquor	EPDM	-20˚F to 250˚F	Hydraulic oil	Nitrile	-20˚F to 212˚F	Sulphuric Acid 10% 50%	Neoprene	-20˚F to 158˚F
Blast Furnace Gas	Neoprene	-20˚F to 225˚F	Hydrogen	Nitrile	-20˚F to 212˚F	Sulphuric Acid 100%	Viton	10˚F to 300˚F
Butane	Nitrile	-20˚F to 212˚F	JP4 JP5	Viton	-20˚F to 212˚F	Trichlorethylene Dry	Viton	10˚F to 300˚F
Bunker Oil “C”	Nitrile	-20˚F to 212˚F	Kerosene	Nitrile	0˚F to 212˚F	Triethanol Amine	EPDM	-35˚F to 250˚F
Calcium Chloride	EPDM	-20˚F to 250˚F	Ketone	EPDM	-35˚F to 250˚F	Varnish	Viton	10˚F to 300˚F
Carbon Dioxide	EPDM	-20˚F to 250˚F	Lime Slurry	EPDM	-35˚F to 250˚F	Water, Fresh	EPDM	-35˚F to 250˚F
Carbon Monoxide (Cold)	Neoprene	-20˚F to 150˚F	Methane	Nitrile	-20˚F to 212˚F	Water, Salt	EPDM	-35˚F to 250˚F
Carbon Monoxide (Hot)	Viton	10˚F to 300˚F	Methyl Ethyl Ketone	EPDM	-35˚F to 250˚F	Xylene	Viton	10˚F to 300˚F
Carbon Tetrachloride	Viton	10˚F to 300˚F	Naptha (Berzin)	Nitrile	-20˚F to 212˚F			

NOTE: Above elastomer/temperature chart are guidelines only. See Milliken Compatibility Chart for specific applications.

Threaded End:
Fig. 613A Ductile Iron/603AS Stainless Steel 1/2" - 2"

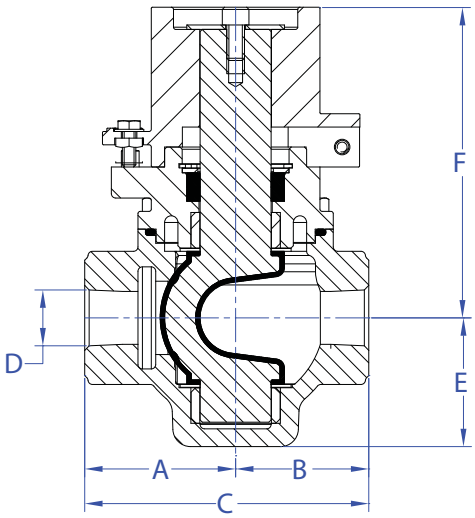

THREADED ENDS						
SIZE	1/2	3/4	1	1-1/4	1-1/2	2
A	2.13	2.13	2.13	3.00	3.00	3.00
B	1.88	1.88	1.88	2.50	2.50	2.50
C	4.00	4.00	4.00	5.50	5.50	5.50
D	½ " NPT	¾" NPT	1" NPT	1¼" NPT	1½" NPT	2" NPT
E	1.81	1.81	1.81	2.50	2.50	2.50
F	4.38	4.38	4.38	5.00	5.00	5.00
WEIGHT (approx.)	7.50	7.25	7.00	13.00	11.75	10.00

Flanged End:
Fig. 611A Ductile Iron/601AS Stainless Steel 2"

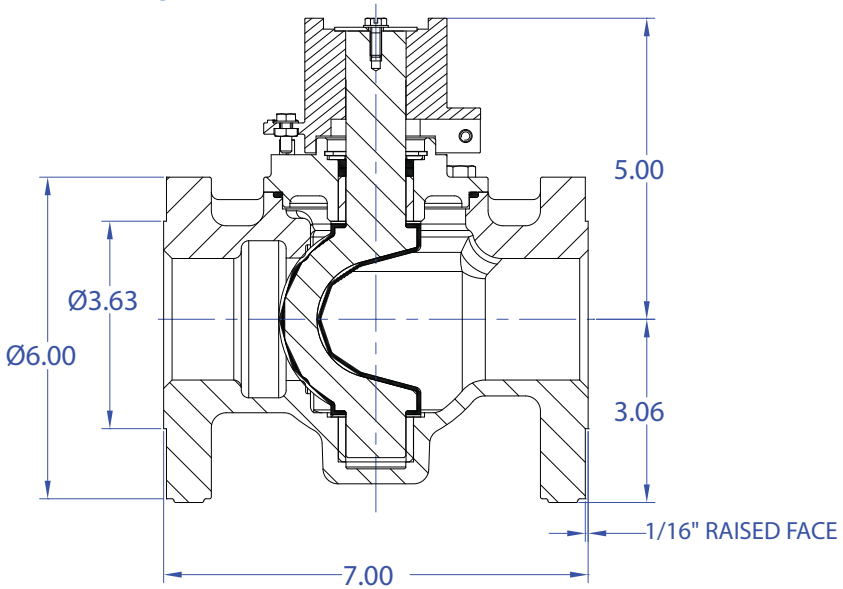

FLANGED ENDS	
SIZE	2
WEIGHT (approx.)	18.00

Note: RAISED FACE IS ONLY ON THE 2" FIG. 601AS STAINLESS STEEL.

Series 600/601
Eccentric Plug Valve

Flanged and MJ

Welded Nickel Seat
Stainless Steel Bearings
ANSI-B16.1 Flanges
Solid Ductile Iron Plug
Low Pressure Drop
Flanged & MJ Ends
Sizes 2"-72" FL
Sizes 3"-48" MJ

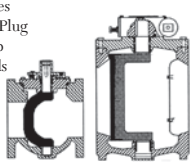

Series 601S
Eccentric Plug Valve

All Stainless Steel Construction
ANSI B16.5 Class 150 Flanges
Low Pressure Drop
Size: 1/2"-24"

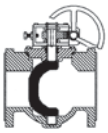

Series 601RL
Eccentric Plug Valve

Rubber Lined

Soft Rubber Lining
Stainless Steel Bearings
ANSI B16.1 Flanges
Solid Ductile Iron Plug
Low Pressure Drop
Sizes 3"-54"

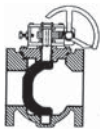

Series 602
Eccentric Plug Valve

High Pressure

Welded Nickel Seat
Stainless Steel Bearings
ANSI B16.1 Class 250 Flanges
Solid Ductile Iron Plug
Low Pressure Drop
Sizes 2-1/2"-54"

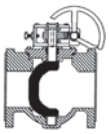

Series 613A
Eccentric Plug Valve

Threaded End

Ductile Iron Construction
Round Port
Stainless Steel Bearings
Low Pressure Drop
Memory Stop
NPT End Connections
Sizes 1/2"-2"

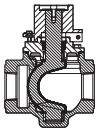

Series 604
100% Port 3 Way Plug Valve

Three Way Valve

Solid Ductile Iron Plug
Stainless Steel Bearings
Low Pressure Drop
Lift & Turn NOT Required
High Solids & Flow Capacity
Sizes 3"-16"

Series 606
Eccentric Plug Valve

Grooved End

Welded Nickel Seat
Stainless Steel Bearings
AWWA C-606 Grooved
Solid Ductile Iron Plug
Low Pressure Drop
Ductile or Steel Pipe
Sizes 3"-24"

Series 611/610
Eccentric Plug Valve

Flanged and MJ

Ductile Iron Body
ANSI B16.1 Flanges
MJ AWWA C111
Welded Nickel Seat
Solid Ductile Iron Plug
Low Pressure Drop
Sizes 2"-72" FL
Sizes 3"-48" MJ

Model 625
Eccentric Plug Valve

Available in Threaded and Flanged Ends
Rated for 175 psi
Sizes 1/2"-4"
UL/CGA Listed

Series 600FP/601FP
Eccentric Plug Valve

Full/100% Port
Welded Nickel Seat
Stainless Steel Bearings
ANSI-B16.1 Flanges
Solid Ductile Iron Plug
Low Pressure Drop
Flanged & MJ Ends
Sizes 2"-48" FL
Sizes 3"-48" MJ

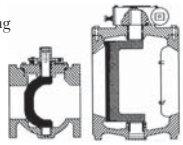

Figure 396/397
General Service Butterfly Valve

Complies with MSS SP 67
Ductile Iron Body
DI-NP Disc
Other Materials Upon Request
Wrench or Gear Operated Available
2"-48" Size Range

Figure 510A/511A
AWWA Butterfly Valve

Complies with AWWA C-504
Class 150B Flanged or MJ
Cast iron body and disc
Seat in body
Flow through disc on 24" and larger
Epoxy Paint on all sizes standard
3" -72"

Series 8500
AWWA Swing Check

Full waterway
Ductile Iron Construction
Weight or Spring
Air Cushion
SS body seat ring
Buna disc insert
Sizes 3"-24"

Series 8000
AWWA Swing Check

Full waterway
Weight or Spring
Bronze/SS Body Seat Ring
Bronze/Buna/EPDM disc insert
Sizes 2"-36"

Series 9000
AWWA Swing Check

Clear waterway
Weight or Spring
Air or Oil Cushion
Bronze/SS Body seat ring
Bronze/Buna/EPDM disc insert
Sizes 3"-72"

Model 720A
Wafer Check Valve

Center Guided
Check Valve
Rated for 250 psi
SS Disc/EPDM Seat
Sizes 2"-12"

Series 700
Wafer Check Valve

Wafer Check Valve

ANSI Class 125/150
High Flow Capacity
Narrow Face-to-Face
Sizes 3"-12"
316 SS Internals
Disc Position Indicator

Figure 851
Flex Check

Million Cycle Certification
Complete Ductile Iron Construction
250 psi Pressure Rating
Fully Epoxy Lined Interior
No Internal Shafts, Bearings or Bushings
No External Levers, Weights or Springs
Mechanical Indicator (3"-16")
2"-24" Size Range
Backflush Devices
Proximity Switches

Figure 740A
Double Disc Check Valve

Wafer pattern check valve rated for 250 psi. Available in sizes 2"-48" with a SS Disc/EPDM Seat

Figure 821A
Globe Style Check Valve

Center guided check valve. SS Disc/EPDM Seat and is available in sizes 2"-36".

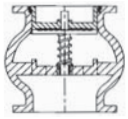

MILLIKEN VALVE

www.millikenvalve.com

190 Brodhead Road • Suite 100
Bethlehem, PA 18017
Phone (610) 861-8803 Fax (610) 861-8094

CS-312-200 : Identification sheet

VWTC PROJECT NUMBER:	5000218009	REV:	1
PROJECT NAME:	AEM AMARUQ	SUBMITTED TO (COMPANY):	AGNICO EAGLE MINES
ENGINEER:	Gabriel Hébert	SUBMITTED TO (RESPONSIBLE)	
PROJECT MANAGER:	Clément B	PROJECT NUM REFERENCE.:	
PHONE NUMBER:		LOT NUMBER:	

SUPPLIER	EQPT CODE	EQPT TAG NO	DIA	DESCRIPTION	INFO 1	INFO 2	INFO 3	APPLIC.	NOTE	REV
PRATT	ST-312-112	P2-011-V001	DIA: 100 mm (4")	ISOLATION VALVE	TYPE: PLUG | 175 PSI//MANUFACTURER : PRATT//MODEL : 601N1-L/4''/CONNECTION TYPE : FLANGED | DIA. 100 mm (4")//BODY : CAST IRON// ELASTOMER TRIM: BUNA-N | SEAT :| NICKEL// STEM : N/A			ACTIFLO RECIRCULATION LINE MODIFICATION		
PRATT	ST-312-112	P2-012-V001	DIA: 100 mm (4")	ISOLATION VALVE	TYPE: PLUG | 175 PSI//MANUFACTURER : PRATT//MODEL : 601N1-L/4''/CONNECTION TYPE : FLANGED | DIA. 100 mm (4")//BODY : CAST IRON// ELASTOMER TRIM: BUNA-N | SEAT :| NICKEL// STEM : N/A			ACTIFLO RECIRCULATION LINE MODIFICATION		
PRATT	ST-312-112	P2-014-V001	DIA: 100 mm (4")	ISOLATION VALVE	TYPE: PLUG | 175 PSI//MANUFACTURER : PRATT//MODEL : 601N1-L/4''/CONNECTION TYPE : FLANGED | DIA. 100 mm (4")//BODY : CAST IRON// ELASTOMER TRIM: BUNA-N | SEAT :| NICKEL// STEM : N/A			ACTIFLO RECIRCULATION LINE MODIFICATION		

SUPPLIER	EQPT CODE	EQPT TAG NO	DIA	DESCRIPTION	INFO 1	INFO 2	INFO 3	APPLIC.	NOTE	REV
PRATT	ST-312-112	P2-021-V001	DIA: 100 mm (4")	ISOLATION VALVE	TYPE: PLUG | 175 PSI//MANUFACTURER : PRATT//MODEL : 601N1-L/4''/CONNECTION TYPE : FLANGED | DIA. 100 mm (4")//BODY : CAST IRON// ELASTOMER TRIM: BUNA-N | SEAT :| NICKEL// STEM : N/A			ACTIFLO RECIRCULATION LINE MODIFICATION		
PRATT	ST-312-112	P2-022-V001	DIA: 100 mm (4")	ISOLATION VALVE	TYPE: PLUG | 175 PSI//MANUFACTURER : PRATT//MODEL : 601N1-L/4''/CONNECTION TYPE : FLANGED | DIA. 100 mm (4")//BODY : CAST IRON// ELASTOMER TRIM: BUNA-N | SEAT :| NICKEL// STEM : N/A			ACTIFLO RECIRCULATION LINE MODIFICATION		
PRATT	ST-312-112	P2-023-V001	DIA: 100 mm (4")	ISOLATION VALVE	TYPE: PLUG | 175 PSI//MANUFACTURER : PRATT//MODEL : 601N1-L/4''/CONNECTION TYPE : FLANGED | DIA. 100 mm (4")//BODY : CAST IRON// ELASTOMER TRIM: BUNA-N | SEAT :| NICKEL// STEM : N/A			ACTIFLO RECIRCULATION LINE MODIFICATION		

PRATT

Henry Pratt Company

Ballcentric® Plug Valve

Engineering Creative Solutions
for Fluid Systems Since 1901

A Tradition of Excellence

With the development of the first rubber seated butterfly valve more than 70 years ago, the Henry Pratt Company became a trusted name in the flow control industry, setting the standard for product quality and customer service. Today Pratt provides the following range of superior products to the water, wastewater and power generation industries.

Butterfly Valves: from 3" to 162"

Rectangular Valves: 1' x 1' to 14' x 16'

Ball Valves –
Rubber Seated: from 4" to 60"
Metal Seated: from 6" to 48"

Plug Valves: from 1/2" to 72", 100% port available up to 48", 3 ways

Air Valves for Water and Wastewater: from 1/2" to 20"

Hydraulic Control Systems

Valve Controls

Energy Dissipating Valves and Fixed Energy Dissipaters

Cone Valves

Check Valves

Plunger Valves

A Commitment to Meeting The Customers' Needs

Henry Pratt valves represent a long-term commitment to both the customer and to a tradition of product excellence. This commitment is evident in the number of innovations we have brought to the industries we serve. In fact, the Henry Pratt Company was the first to introduce many of the flow control products in use today, including the first rubber seated butterfly valve, one of the first nuclear N-Stamp valves, and the bonded seat butterfly valve.

Innovative Products For Unique Applications

Though many of the standard valves we produce are used in water filtration and distribution applications, Pratt has built a reputation on the ability to develop specialized products that help customers to meet their individual operational challenges.

Creative Engineering for Fluid Systems

Pratt's ability to provide practical solutions to complex issues is demonstrated by the following case histories.

Earthquake Proof Valves

Pratt designed and manufactured hydraulically actuated valves for a water storage application so that the valves would automatically operate in the event of earthquakes. This led to the development of a valve that will withstand acceleration forces of up to 6gs.

Custom Actuation/Isolation Valves

Pratt has designed and manufactured nuclear quality quarter-turn valves and parts since the first nuclear-powered generating plants were built. Our custom valves are able to close in a millisecond, using specially designed Pratt electro-pneumatic actuators.

Valves Designed for Harsh Environments

Pratt designed and manufactured a 144" diameter butterfly valve for the emergency cooling system at a jet engine test facility. The valve was designed to supply water to help dissipate the tremendous heat generated by the engines during testing.

PRATT
Henry Pratt Company

Through experience, commitment and creative engineering, Pratt is uniquely suited to provide superior products for our customers' special needs.
For more information, contact our corporate headquarters in Aurora, Illinois.

PRATT
Henry Pratt Company

401 South Highland Avenue
Aurora, Illinois 60506-5563
www.henrypratt.com
phone: 630.844.4000
fax: 630.844.4160

Table of Contents

Ballcentric® Plug Valve

Scope of Line 2
Features and Benefits 3
Dimensional Data 4
Standard Materials of Construction, Fig. 601/600, 12" & Smaller 5
Standard Materials of Construction, Fig. 601/600, 14" & Larger 6
Flanged End, Fig. 601 Cast Iron/611 Ductile Iron 2 $^{1}/_{2}$" - 12" 7
Mechanical Joint, Fig. 600 Cast Iron/610 Ductile Iron 3" - 12" 8
Flanged End Fig. 601 Cast Iron/611 Ductile Iron and Mechanical Joint
End, Fig. 600 Cast Iron/610 Ductile Iron 14" & Larger 9
Flanged End Fig. 602 Class 250 2 $^{1}/_{2}$" and Larger 10
Flanged End Fig. 601RL Rubberlined 3" & Larger 11
Grooved End, Fig. 606 2 $^{1}/_{2}$" - 20" 12
Adaption 13
Technical Specification Series 601/600 Cast Iron Valves 14
Technical Specification Series 602 Class 250 Valves 15
Technical Specification Series 601RL Rubberlined Valves 16
Technical Specification Series 601S Stainless Steel Valves 17
Technical Specification Series 611/610 Ductile Iron Valves 18
Technical Specification Series 601GL Glass Lined Valves 19

Scope of Line

The Henry Pratt criteria of quality, reliability, safety and value are embodied in the Ballcentric® plug valve, setting higher standards for dependable performance with excellent features achieved by the utilization of the very latest design and manufacturing techniques.

- Computer Aided Design
- High Integrity Casting
- CNC manufacturing delivers consistent sizes on all components

All complemented by rigorous Quality Control System

Body

Conforming to AWWA C504 wall thickness, the Ballcentric® plug valve body casting is in ASTM A126 CL B cast iron using high pressure molding techniques. Alternative flanged, grooved or mechanical joint ends are available.

Flange diameter, thickness and drilling conform to ANSI B16.1 Class 125 or 250.

Grooved ends meet AWWA C-606 for ductile or steel pipe. Mechanical joints to AWWA C111 (ANSI A21.11).

Seat

The Ballcentric® plug valve incorporates as standard, on 3" and larger, a 1/8" thick welded 99% nickel seat for corrosion and erosion resistance specifically profiled for low torque and extended seat life.

Stem Seal

High integrity sealing by combining the advantages of a resilient and abrasion resistant U-Cup seal. From vacuum to high pressure, the self-adjusting sealing system (per AWWA C504) gives positive, trouble-free service and is retained independently of the plug stem or external torque device, thereby eliminating periodic maintenance.

Bearings

The plug rotates in permanently lubricated 316 grade stainless steel bearings, located in the body and bonnet, along with upper and lower PTFE thrust washers, which ensure consistently low operating torque.

Plug

Supported on integral trunnions, the plug is totally encapsulated with an elastomer that is molded on 2 1/2" – 48" and vulcanized on 54" and larger to the casting providing tight shut off even under vacuum conditions. High integrity corrosion-free sealing is achieved by a variety of abrasion resistant elastomers which protect the plug right up to the trunnions. When assembled, the light compression of the elastomers onto PTFE thrust washers, prevents entry of abrasive materials into the bearings.

Bonnet Seal

Superior "O" ring sealing with metal/metal contact means lower bolting stresses compared with compression gaskets.

Flow

The port design (round on 2 1/2" – 12" and rectangular on 14" and larger) with streamlined internal contours gives the highest industry capacity straight through flow in the full open position, reducing turbulence and pressure drop and the effect of erosive media. Handling of sludges and slurries is therefore enhanced.

Interchangeable

Because of the common face to face dimension with wedge gate valves (3" – 12"), fitting the tight shut-off rotary Ballcentric® plug valve into existing systems is accomplished without pipeline modifications.

Travel Stops

Adjustable open and closed travel stops are fitted as standard on both wrench and gear operated Ballcentric® plug valves.

Features and Benefits

- Valve in closed position for bubble tight shut-off
- Normal flow direction gives pressure assisted sealing
- Torques are low even in reverse flow

- Plug rotates away from the seat for instant opening
- Seat wear and operating torque reduced
- No further seat contact until valve is closed again

- Design of Ballcentric® plug valve allows modulating control over the full 90˚ travel
- Ideally suited for balancing service
- Standard rotary valve provides control and tight shut off in one valve

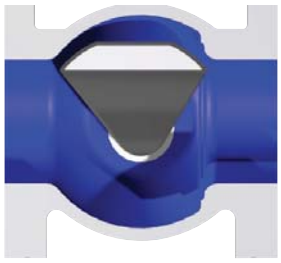

- Plug is out of flow path when fully open
- Straight through, uninterrupted smooth flow
- Round port reduces turbulence and erosion, lowers pumping costs and can be "pigged" to clean the pipeline

Installation

The Ballcentric® plug valve is suitable for flow and shut-off in either direction. Seat end downstream is the preferred orientation and any reverse flow requirement should be stated at the time of order. For use on fluids with suspended solids, it is recommended that the valve should be installed with the seat upstream and the valve stem horizontal with plug rotation to the top of the valve ensuring smooth operation.

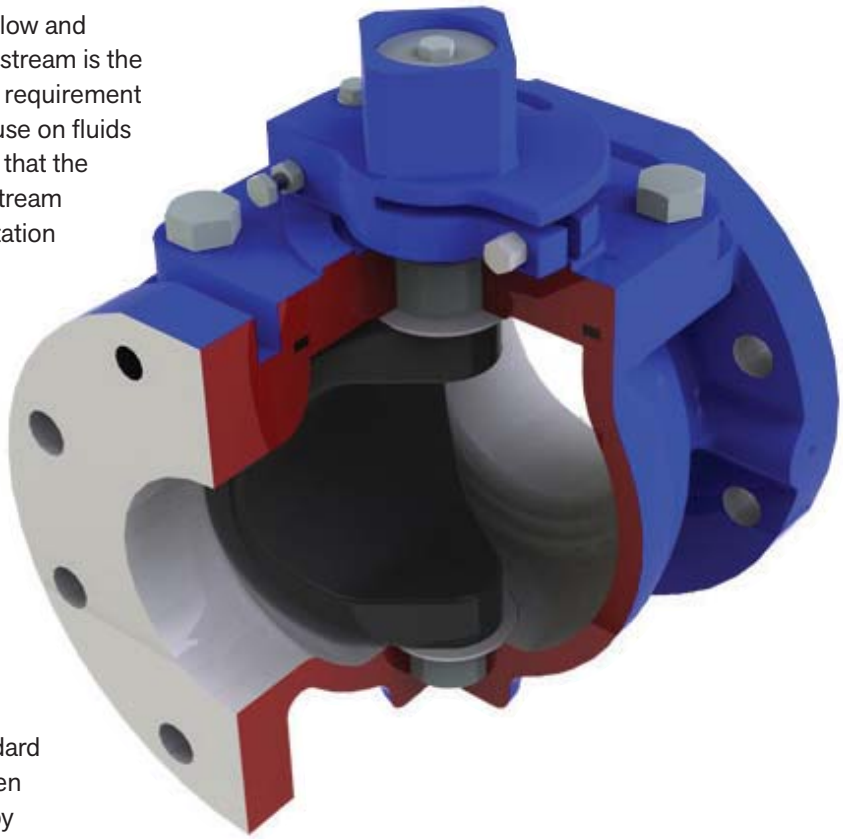

In-Line Maintenance

In the unlikely event of stem leakage, the stem seals can be easily replaced without removing the bonnet. Access to the body for cleaning or inspection does not require removal from the line.

Modular Construction

Design of the bonnet and stem allows for on-site adaption of gear operators, power actuators, or extension devices on to standard valves. Conversion can be easily undertaken without removing the valve bonnet, thereby minimizing downtime.

Power Operation

Pneumatic, electric or hydraulic operation is available, complete with accessories such as limit switches, solenoid valves and positioners when required.

Dimensional Data

ORDERING INFORMATION

Valve Types	Designation
Mechanical Joint Cast Iron	600
Mechanical Joint Ductile Iron	610
ANSI 125 Flanged Cast Iron	601
ANSI 125 Flanged Ductile Iron	611
ANSI 150 Flanged Ductile Iron	621
ANSI 250 Flanged Ductile Iron	602
ANSI 125 Grooved for Steel Pipe	606S
ANSI 125 Grooved for Ductile Pipe	606D
ANSI 150 Flanged 316SS	601S
SEAT	
Nickel (3" & Larger)	N
Epoxy (2½" ONLY)	E
316SS (on stainless steel valve only)	S
Rubberlined	RL
Glasslined	GL
ELASTOMER TRIM	
EPDM	0
Buna-Nitrile	1
Viton	2
Neoprene	3
Natural	4
MANUAL OPERATORS	
Above Ground Gear and Handwheel	AGHW
Above Ground Gear with 2" Nut	AGNUT
Buried Gear with 2" Nut	BG
Memory Stop Gear with Handwheel	MGHW
Lever / Wrench (8" & smaller)	L
Direct Nut (8" & smaller)	TC

Example: 4" 601N3AGHW = 4" ANSI 125 Flanged, Nickel Seat, Neoprene plug with Above Ground Gear and Handwheel

Valves are only tested for bi-directional shut-off if specified at time of order. Contact Henry Pratt for bi-directional ratings.

NOTE: We recommend mechanical joint or buried flanged valves to have gear operators

NOTE: We recommend valves for bi-directional service to have gear operators

PRESSURE RATING

12" and smaller	ANSI 125	175 psi
14" and larger	ANSI 125	150 psi
20" and smaller	ANSI 150	285 psi
12" and smaller	ANSI 250	400 psi
14" and larger	ANSI 250	300 psi

Body Hydrotest = 150% of rated pressure / Seat Test = 100% of rated pressure Testing per AWWA C517

ELASTOMERS AVAILABLE FOR BALLCENTRIC® PLUG VALVE

Natural rubber is also available.

Nitrile

A general purpose material sometimes referred to as BUNA-N or HYCAR with a –20°F to 212°F temperature range. Used on sewage, water, hydrocarbon and mineral oils.

EPDM

An excellent polymer for use on chilled water through to LP steam applications having a temperature range of –35°F to 250°F. Resistance to many acids, alkalies, detergents, phosphate esters, alcohols and glycols is an added benefit.

Neoprene

This versatile material shows outstanding resistance to abrasion and ozone. Chemical resistance to a wide range of petroleum base products and dilute acids and alkalies. Temperature range –20°F to 225°F.

Viton

Retention of mechanical properties at high temperature is an important feature of this elastomer: temperature range is –10°F to 300°F. It also has excellent resistance to oils, fuels, lubricants and most mineral acids and aromatic hydrocarbons.
Note: Not for water or steam applications.

Elastomer Selection Chart

Service	Elastomer	Average Useful Temp. Range	Service	Elastomer	Average Useful Temp. Range	Service	Elastomer	Average Useful Temp. Range
Acetone	EPDM	–35°F to 250°F	Caustic Soda	EPDM	–35°F to 250°F	Oil, Animal	Nitrile	–20°F to 212°F
Air	EPDM	–35°F to 250°F	Cement Slurry	EPDM	–35°F to 250°F	Oil, Mobil Therm Light	Viton	10°F to 250°F
Air w/Oil	Nitrile	0°F to 212°F	Copper Sulphate	EPDM	–35°F to 250°F	Oil, Mobil Therm 600	Viton	10°F to 250°F
Alcohol AMYL	EPDM	0°F to 212°F	Creosote (Coal)	Nitrile	–20°F to 212°F	Oil, Mobil Therm 603	Nitrile	–20°F to 212°F
Alcohol Aromatic	Viton	10°F to 250°F	Coal Slurry	Nitrile	–20°F to 212°F	Oil, Lubricating	Nitrile	–20°F to 212°F
Alcohol Butyl	Neoprene	–20°F to 225°F	Diesel Fuel No. 3	Nitrile	–20°F to 212°F	Oil, Vegetable	Nitrile	–20°F to 212°F
Alcohol Denatured	Nitrile	–20°F to 212°F	Diethylene Glycol	EPDM	–35°F to 250°F	Paint, Latex	Nitrile	–20°F to 212°F
Alcohol Ethyl	EPDM	–20°F to 250°F	Ethylene Glycol	EPDM	–35°F to 250°F	Phosphate Ester	EPDM	–35°F to 250°F
Alcohol Grain	Nitrile	–20°F to 212°F	Fatty Acid	Nitrile	–20°F to 212°F	Propane	Nitrile	–20°F to 212°F
Alcohol Isopropyl	Neoprene	–20°F to 225°F	Fuel Oil No. 2	Nitrile	–20°F to 212°F	Rape Seed Oil	EPDM	–35°F to 250°F
Alcohol Methyl	EPDM	–20°F to 250°F	Fertilizer Liquid H4N2O2	EPDM	–35°F to 250°F	Sewage with Oils	Nitrile	–20°F to 212°F
Ammonia Anhydrous	Neoprene	–20°F to 225°F	Gasoline Keg	Nitrile	–20°F to 212°F	Sodium Hydroxide 20%	EPDM	–35°F to 250°F
Ammonium Nitrate	EPDM	–20°F to 250°F	Gas Natural	Nitrile	–20°F to 212°F	Starch	EPDM	–35°F to 250°F
Ammonia, water	EPDM	–20°F to 250°F	Glue, Animal	Nitrile	–20°F to 212°F	Steam to 250°F	EPDM	–35°F to 250°F
Animal Fats	Nitrile	–20°F to 212°F	Green Liquor	EPDM	–20°F to 212°F	Stoddard, Solvent	Nitrile	–20°F to 80°F
Black Liquor	EPDM	–20°F to 250°F	Hydraulic Oil (Petro)	Nitrile	–20°F to 212°F	Sulphuric Acid 10% 50%	Neoprene	–20°F to 158°F
Blast Furnace Gas	Neoprene	–20°F to 225°F	Hydrogen	Nitrile	–20°F to 212°F	Sulphuric Acid 100%	Viton	10°F to 300°F
Butane	Nitrile	–20°F to 212°F	JF4, JP5	Viton	–20°F to 212°F	Trichloroethylene Dry	Viton	10°F to 300°F
Bunker Oil "C"	Nitrile	–20°F to 212°F	Kerosene	Nitrile	0°F to 212°F	Triethanol Amine	EPDM	–35°F to 250°F
Calcium Chloride	EPDM	–20°F to 250°F	Ketone	EPDM	–35°F to 250°F	Varnish	Viton	10°F to 300°F
Carbon Dioxide	EPDM	–20°F to 250°F	Lime Slurry	EPDM	–35°F to 250°F	Water, Fresh	EPDM	–35°F to 250°F
Carbon Monoxide (Cold)	Neoprene	–20°F to 150°F	Methane	Nitrile	–20°F to 212°F	Water, Salt	EPDM	–35°F to 250°F
Carbon Monoxide (Hot)	Viton	10°F to 300°F	Methyl Ethyl Ketone	EPDM	–35°F to 250°F	Xylene	Viton	10°F to 300°F
Carbon Tetrachloride	Viton	10°F to 300°F	Naptha (Berzin)	Nitrile	–20°F to 212°F			

NOTE: Above elastomer/temperature chart are guidelines only. See Henry Pratt Compatibility Chart for specific applications.

Standard Materials of Construction, Fig. 601/600, 12" & Smaller

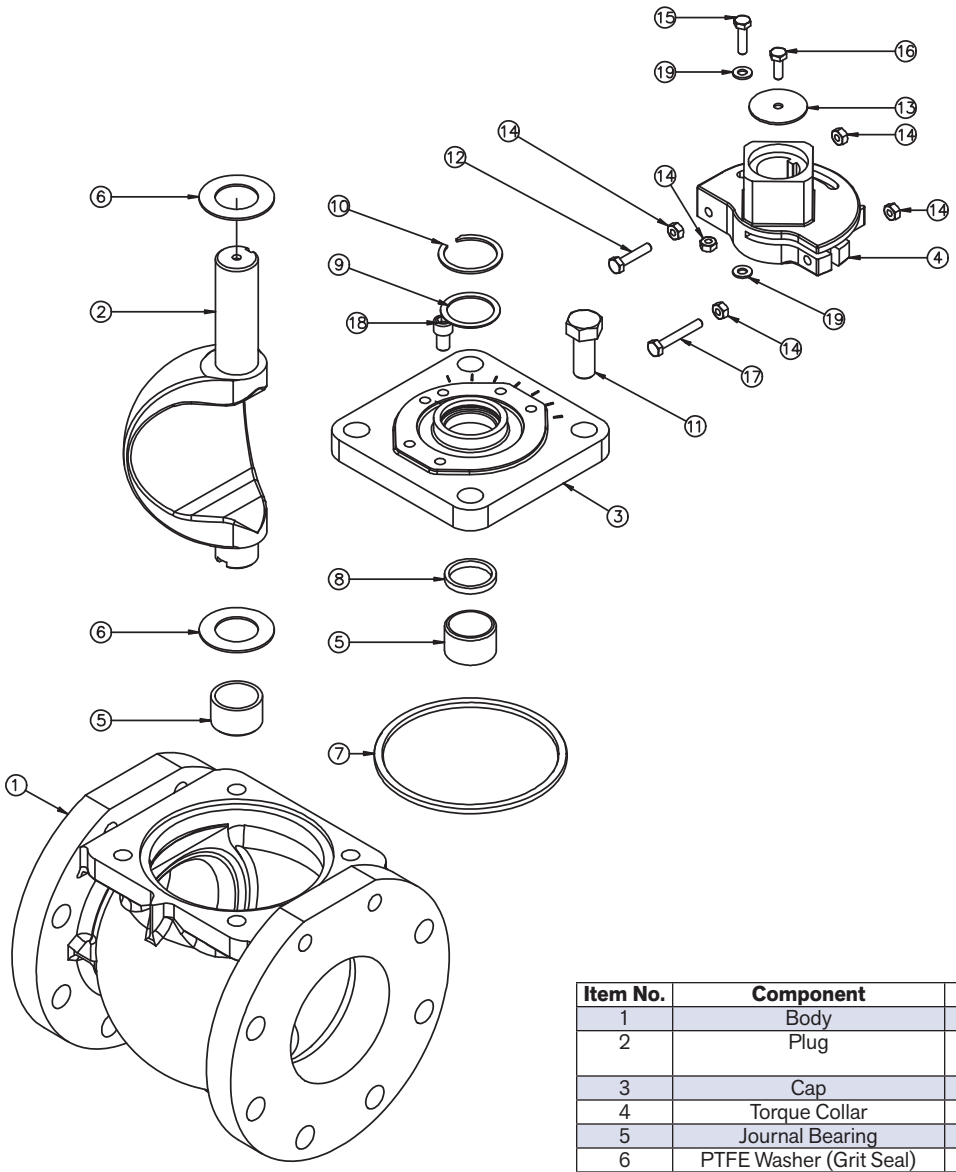

Item No.	Component	Material
1	Body	Cast Iron A126 Class B
2	Plug	Rubber Coated Ductile Iron ASTM A536
3	Cap	Cast Iron A126 Class B
4	Torque Collar	Ductile Iron ASTM A536
5	Journal Bearing	St.Steel – ANSI 316
6	PTFE Washer (Grit Seal)	PTFE
7	O Ring	Elas. as Spec.
8	U Cup Seal	Elas. as Spec.
9	Washer	Brass – ASTM B-138-675
10	Internal Snap Ring	Spring Steel
11	Setscrew	Steel (Zinc Plated)
12*	Closed Stop	Steel (Zinc Plated)
13*	Locking Washer	Steel
14*	Nut	Steel (Zinc Plated)
15*	Open Stop	Steel (Zinc Plated)
16*	Setscrew	Steel (Zinc Plated)
17*	Torque Bolt	Steel (Zinc Plated)
18*	Travel Stop	Steel
19*	Washer	Steel

***NOTE:** Torque Collar Assembly on 8" and Smaller

Standard Materials of Construction, Fig. 601/600, 14" & Larger

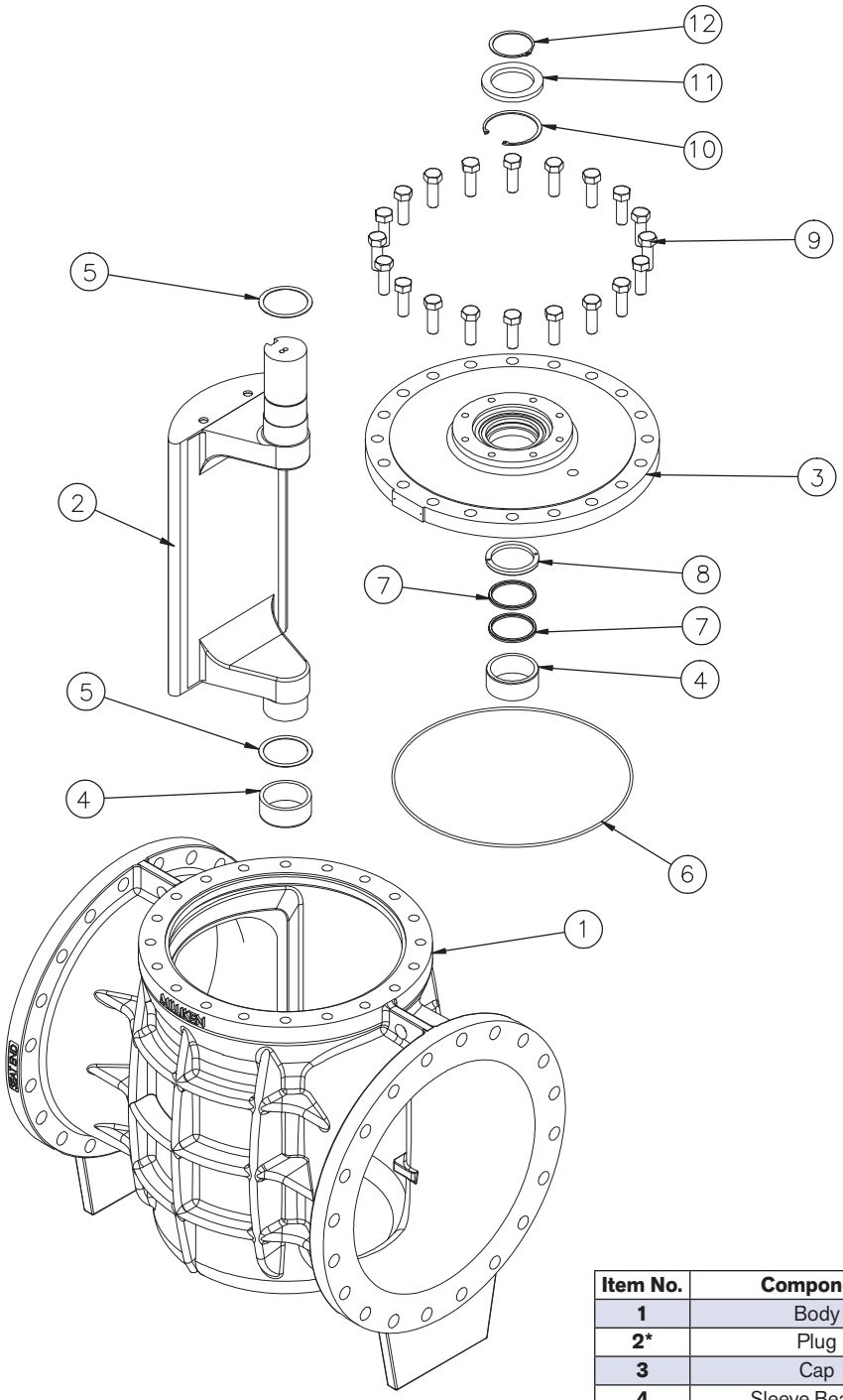

Item No.	Component	Material	Qty.
1	Body	Cast Iron A126 Class B	1
2*	Plug	Rubber Coated See Note 1	1
3	Cap	Cast Iron A126 Class B	1
4	Sleeve Bearing	Stainless Steel/Bronze	2
5	PTFE Washer (Grit Seal)	PTFE	2
6	Cap "O" Ring	Elas. as Spec.	1
7	U Cup Seal	Elas. as Spec.	2
8*	Seal Retaining Ring	See Note 2	1
9	Cap Screw	Steel (Zinc Plated)	A/R
10	Internal Snap Ring	Spring Steel	1
11	Support Collar	Steel	1
12	External Snap Ring	Spring Seal	1

***NOTE 1:** Plugs: Ductile Iron – ASTM A536 on 14" – 20"
Cast Iron – A126 Class B on 24" and larger

***NOTE 2:** Seal Retaining Ring: Brass – ASTM B-138-675 on 14" – 20" Steel on 24" and larger

Fig. 601 Cast Iron / 611 Ductile Iron – Flanged End 2 1/2" – 12", 175 PSI

2½" – 8" VALVES ONLY

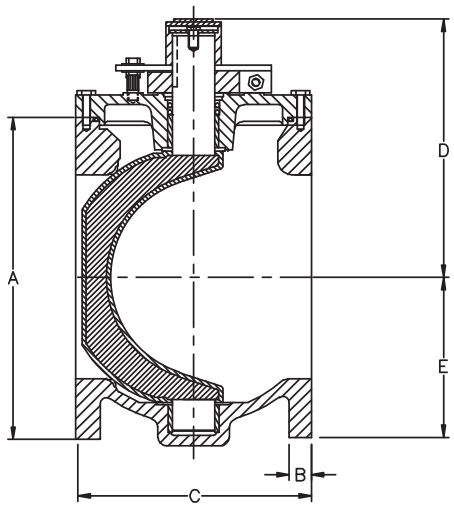

2½" – 12" VALVES

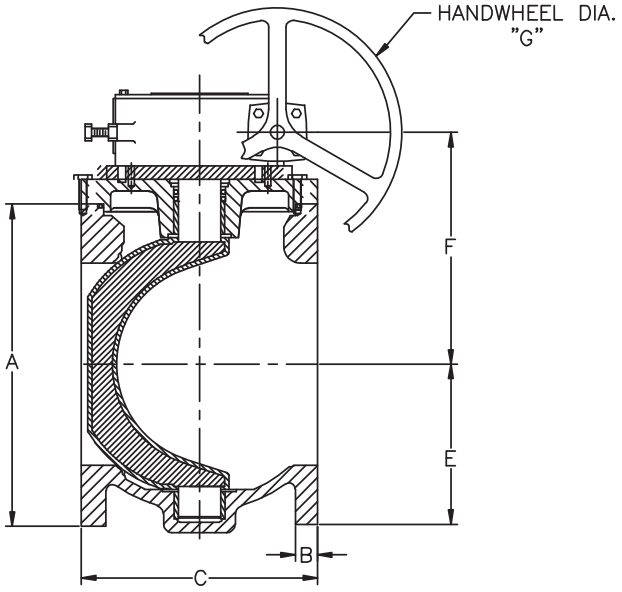

FLANGED END – ANSI 125								
SIZE	**2.50**	**3**	**4**	**5**	**6**	**8**	**10***	**12***
A	7.00	7.50	9.00	10.00	11.00	13.50	16.00	19.00
B	.69	.75	.94	.94	1.00	1.13	1.19	1.25
C	7.50	8.00	9.00	10.00	10.50	11.50	13.00	14.00
D	6.19	6.19	7.25	8.38	8.38	10.69	–	–
E	3.50	3.75	4.50	5.75	5.75	7.63	8.88	10.00
F	5.16	5.16	6.31	7.56	7.56	9.63	11.13	12.81
G	6.00	6.00	6.00	6.00	6.00	12.00	12.00	12.00
WEIGHT (approx.)	30	40	70	105	115	190	345**	440**

*10" & above have gear operators as standard

**Weight includes gear operator

NOTE: Drawings are for information purposes only; please request certified drawings before preparing piping diagrams

Fig. 600 Cast Iron / 610 Ductile Iron – Mechanical Joint 3" – 12", 175 PSI

3" – 8" VALVES ONLY

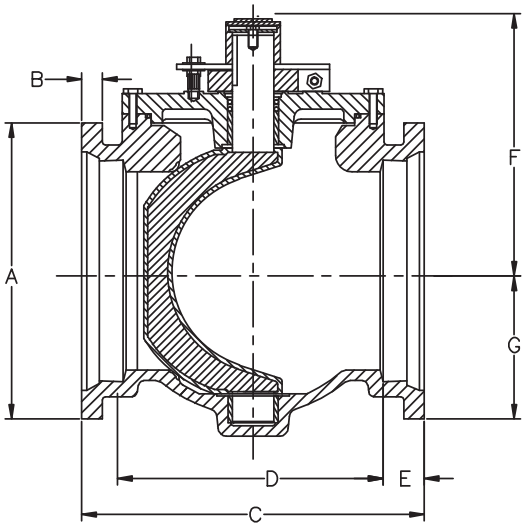

3" – 12" VALVES

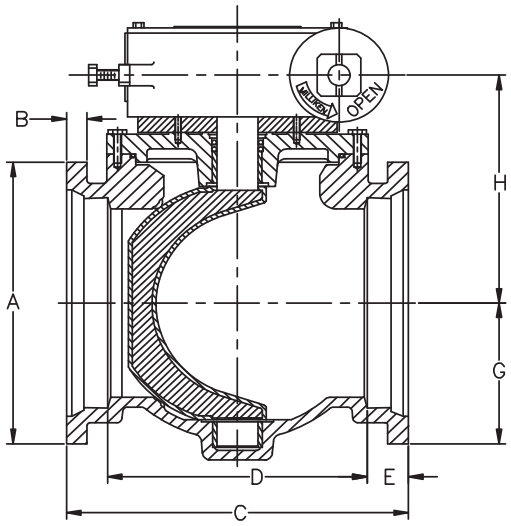

MECHANICAL JOINT END						
SIZE	**3**	**4**	**6**	**8**	**10***	**12***
A	7.69	9.00	11.13	13.38	15.63	17.94
B	.94	1.00	1.06	1.13	1.19	1.25
C	11.50	14.25	15.75	17.38	15.63	20.75
D	6.00	9.25	10.75	12.39	14.39	15.75
E	2.75	2.50	2.50	2.50	2.50	2.50
F	6.19	7.25	8.38	10.69	–	–
G	3.84	4.50	5.56	6.69	7.81	8.97
H	5.16	6.31	7.56	9.63	11.13	12.81
WEIGHT (approx.)	50	80	125	200	360**	480**

*10" & above have gear operators as standard

**Weight includes gear operator

We recommend gears on all Mechanical Joint Valves

NOTE: Drawings are for information purposes only; please request certified drawings before preparing piping diagrams

Fig. 601 Cast Iron / 611 Ductile Iron Flanged End
Fig. 600/610 Ductile Iron Mechanical Joint End
14" & Larger, 150 PSI

14" –20" VALVES

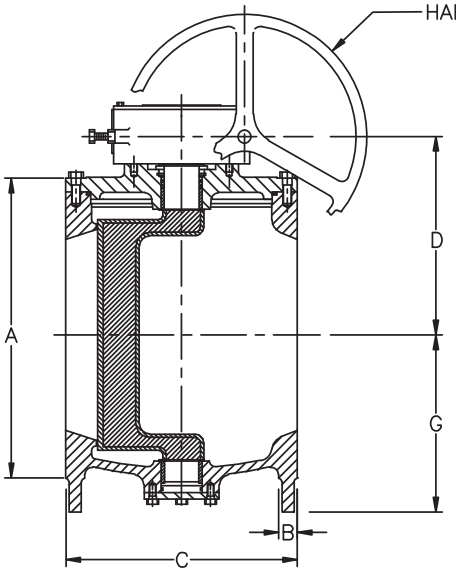

14" –20" VALVES

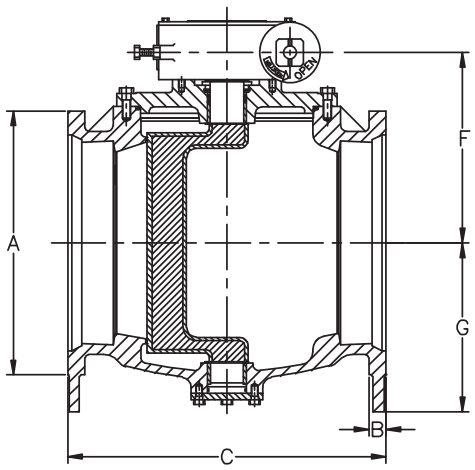

24" VALVES AND LARGER

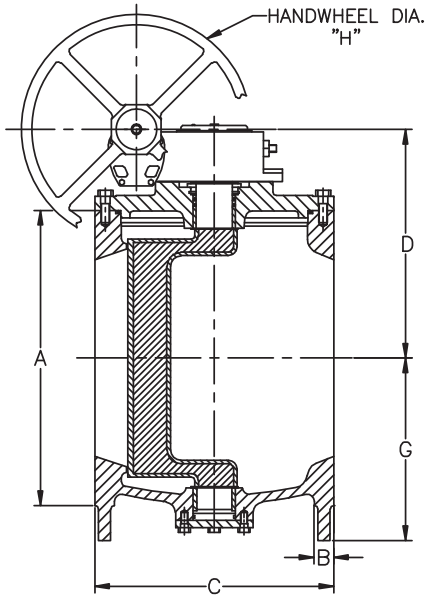

24" VALVES AND LARGER

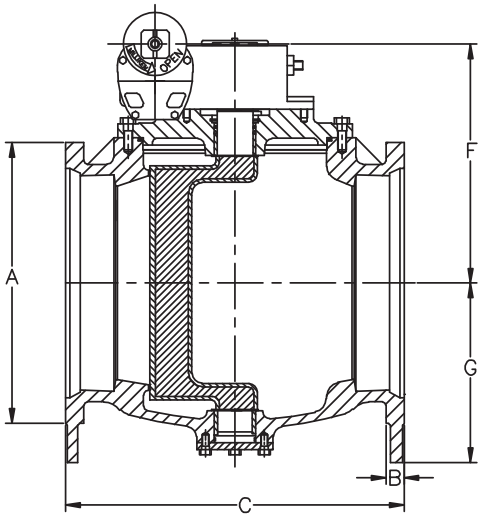

FLANGED END – ANSI 125										
SIZE	**14**	**16**	**18**	**20**	**24**	**30**	**36**	**42**	**48**	**54**
A	21.00	23.50	25.00	27.50	32.00	38.75	46.00	53.00	59.00	66.25
B	1.38	1.44	1.56	1.69	1.88	2.13	2.38	2.63	2.75	3.00
C	17.00	17.75	21.50	23.50	42.00	51.00	60.00	72.00	84.00	96.00
D	14.56	15.81	16.36	17.63	25.13	29.00	33.51	33.88	39.57	50.86
G	13.00	14.00	15.00	16.00	21.62	24.43	29.00	29.00	36.00	36.00
H	18.00	18.00	18.00	18.00	24.00	24.00	24.00	30.33	30.00	30.00
WEIGHT (approx.)	905	1030	1355	1880	3800	5200	6950	10160	13350	15100

Flanged Valves Meet ANSI B16.1

MECHANICAL JOINT END									
SIZE	**14**	**16**	**18**	**20**	**24**	**30**	**36**	**42**	**48**
A	20.13	22.56	24.84	27.06	31.50	39.13	46.00	53.13	60.00
B	1.31	1.38	1.43	1.50	1.62	1.68	2.00	2.00	2.00
C	24.50	27.25	29.25	31.00	42.00	51.00	60.00	72.00	84.00
F	14.56	15.81	16.36	17.63	25.13	29.00	33.51	33.88	39.57
G	13.00	14.00	15.00	16.00	21.62	24.75	29.00	29.00	36.00
WEIGHT (approx.)	905	1030	1355	1880	3800	5200	6950	10160	13350

Mechanical Joint Valves Meet ANSI 21.11 & AWWA C-111

Weight includes gear operator

NOTE: Drawings are for information purposes only; please request certified drawings before preparing piping diagrams.

NOTE: Dimensions on 60" and larger available upon request.

Fig. 602 Class 250 Flanged End
2 1/2" – 12", 400 PSI, 14" – 36", 300 PSI

2½" – 12" VALVES

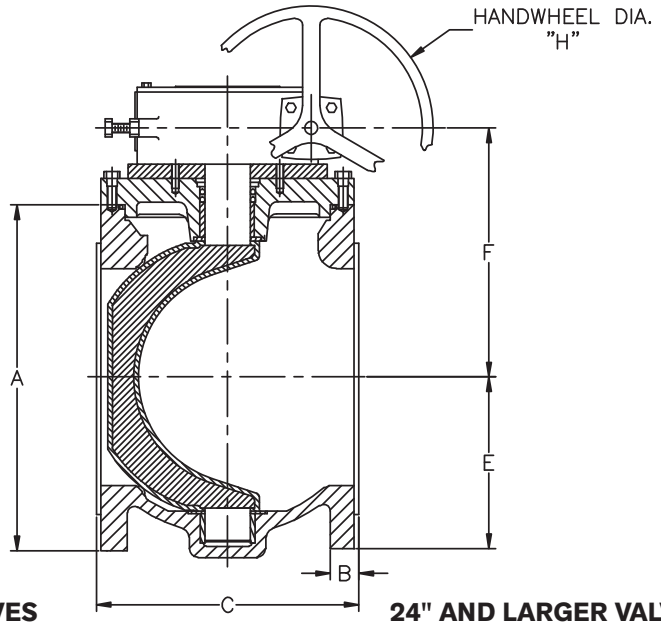

14" – 20" VALVES

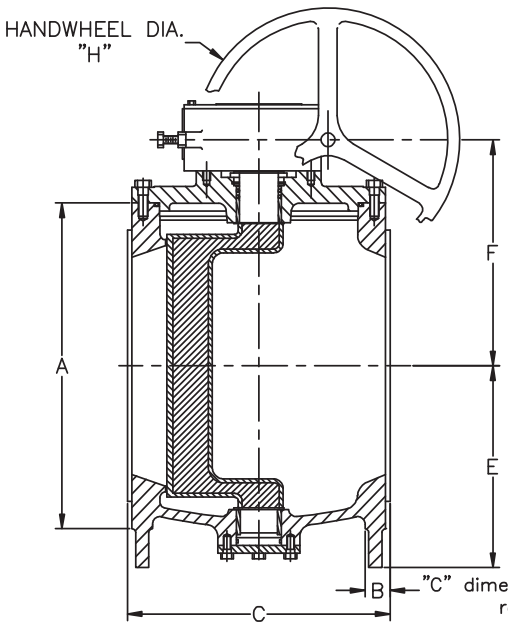

24" AND LARGER VALVES

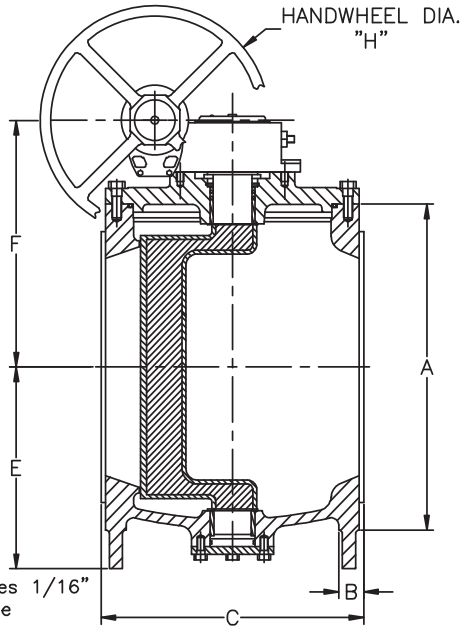

"C" dimen. includes 1/16" raised face

FLANGED END – ANSI 250															
SIZE	**2.50**	**3**	**4**	**5**	**6**	**8**	**10**	**12**	**14**	**16**	**18**	**20**	**24**	**30**	**36**
A	7.50	8.25	10.00	11.00	12.50	15.00	17.50	20.50	23.00	25.50	28.00	30.50	36.00	43.00	50.00
B	1.06	1.13	1.25	1.38	1.44	1.63	1.88	2.00	2.12	2.25	2.38	2.50	2.75	3.00	3.38
C	9.50	11.13	12.00	15.00	15.88	16.50	18.00	19.75	18.50	19.38	23.13	25.00	42.88	51.88	61.00
E	3.50	3.75	4.50	5.75	5.75	17.63	8.88	10.00	13.00	14.00	15.00	16.00	21.62	24.75	29.00
F	5.16	5.16	6.31	7.56	7.56	9.63	11.13	12.81	14.56	15.81	16.36	17.63	22.81	27.59	33.00
H	6.00	6.00	6.00	6.00	6.00	12.00	12.00	12.00	18.00	18.00	18.00	18.00	24.00	24.00	24.00
WEIGHT (approx.)	70	80	120	162	170	275	398	590	980	1125	1830	2060	4160	5700	7670

All above have gear operators as standard
Weight includes gear operator
NOTE: Drawings are for information purposes only; please request certified drawings before preparing piping diagrams
NOTE: Dimensions on 42" and larger available upon request

Fig. 601RL Rubberlined – Flanged End
3" – 12", 175 PSI, 14" & Larger, 150 PSI

3" – 12" VALVES

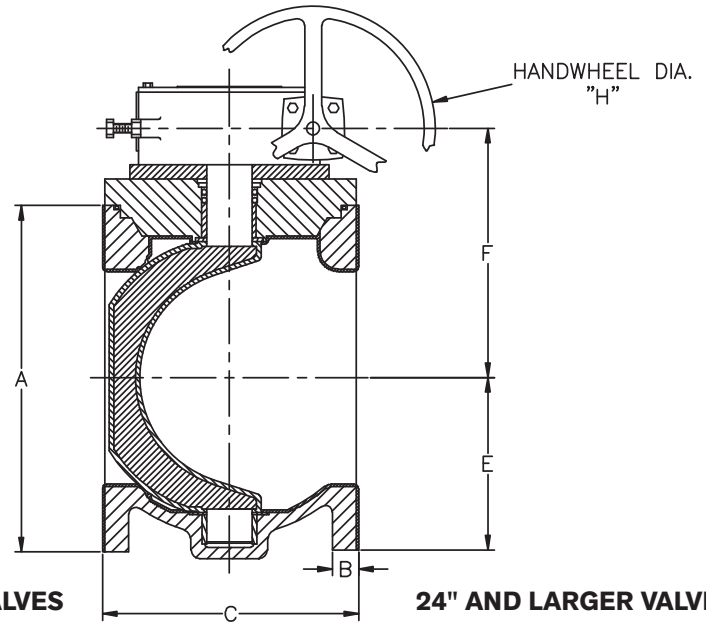

14" – 20" VALVES

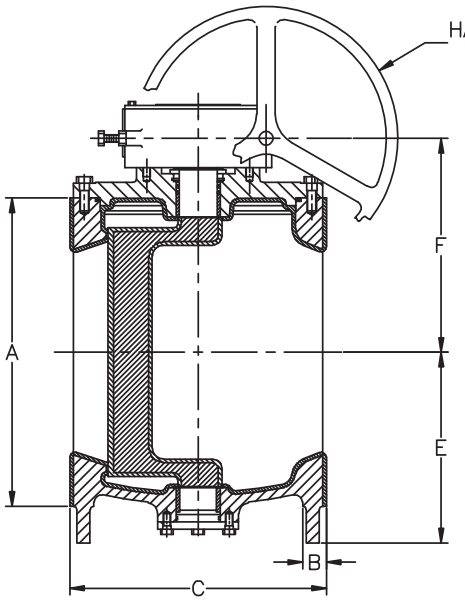

24" AND LARGER VALVES

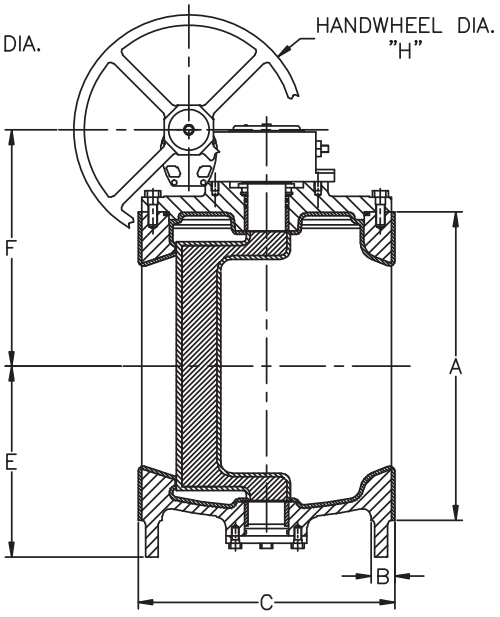

FLANGED END – ANSI 125 RUBBER LINED															
SIZE	**3**	**4**	**5**	**6**	**8**	**10**	**12**	**14**	**16**	**18**	**20**	**24**	**30**	**36**	**42**
A	7.50	9.00	10.00	11.00	13.50	16.00	19.00	21.00	23.25	25.00	27.50	32	38.75	46.00	53.00
B	.88	1.07	1.07	1.13	1.26	1.32	1.38	1.26	2.25	2.38	2.50	2.75	3.00	3.38	3.38
C	8.25	9.25	10.25	10.75	11.75	13.25	14.25	17.25	18.00	21.75	23.75	42.25	51.25	60.25	72.25
E	3.75	4.50	7.75	7.75	7.63	8.88	10.00	13.00	14.00	15.00	16.00	21.63	24.75	29.00	29.00
F	5.16	6.31	7.56	7.56	9.63	11.13	12.81	14.56	15.81	16.36	17.63	25.13	29.00	33.51	33.88
H	6.00	6.00	6.00	6.00	12.00	12.00	12.00	18.00	18.00	18.00	18.00	24.00	24.00	24.00	24.00
WEIGHT (approx.)	70	100	135	145	240	345	440	905	1030	1355	1880	3800	5200	6940	10160

All above have gear operators as standard
Weight includes gear operator
NOTE: Drawings are for information purposes only; please request certified drawings before preparing piping diagrams
NOTE: Dimensions on 48" and larger available upon request

Fig. 606 Grooved End
2 1/2" – 12", 175 PSI, 14" – 20", 150 PSI

2½" – 8" VALVES

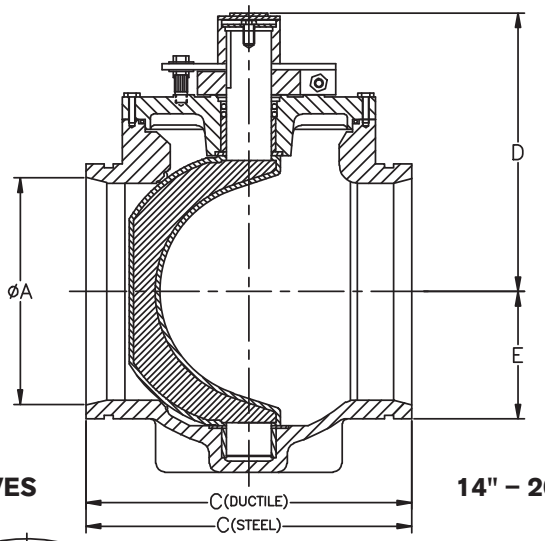

2½" – 12" VALVES

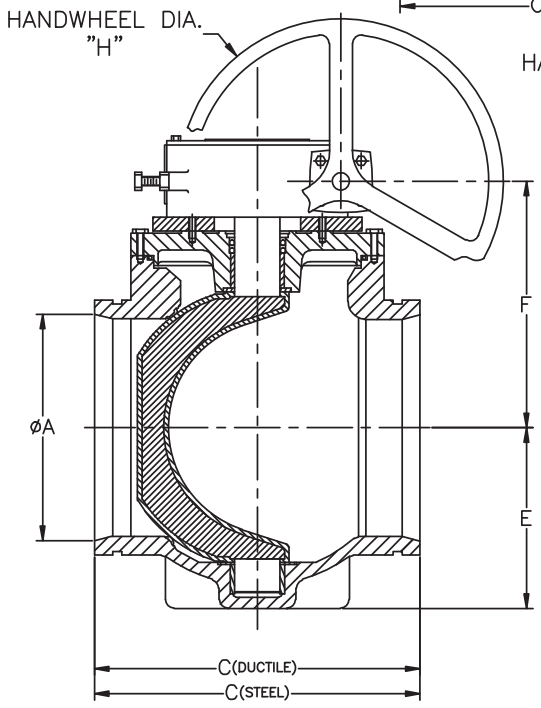

14" – 20" VALVES

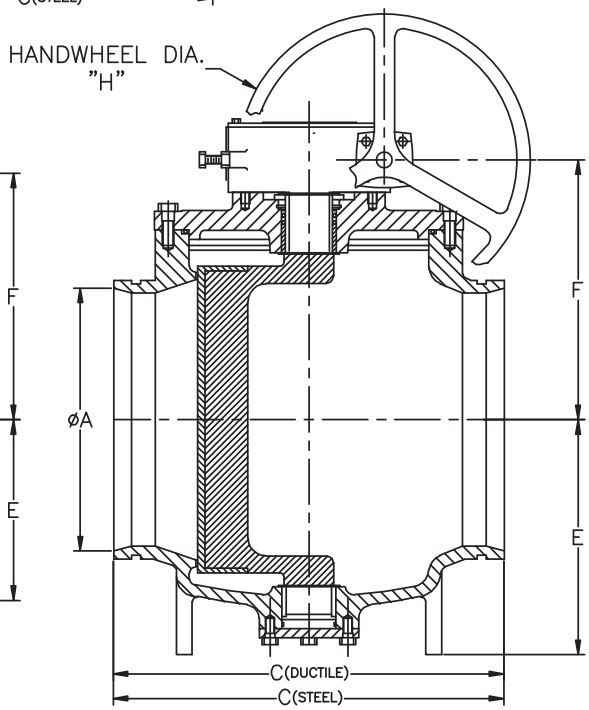

GROOVED END – AWWA 606												
SIZE	2.50	3	4	5	6	8	10*	12*	14*	16*	18*	20*
A	2.50	3.00	4.00	5.00	6.00	8.00	10.00	12.00	14.00	15.25	16.19	18.06
C (Duct.)	N/A	9.06	10.25	N/A	12.50	14.00	16.56	18.00	21.63	N/A	27.50	30.00
C (Steel)	7.13	8.50	10.13	12.38	12.38	13.88	16.44	17.88	21.63	22.50	27.50	30.00
D	6.19	6.19	7.25	8.38	8.38	10.69	–	–	–	–	–	–
E	3.50	3.75	4.50	5.75	5.75	7.63	8.88	10.00	10.00	14.00	15.00	16.00
F	5.16	5.16	6.31	7.56	7.56	9.63	11.13	12.86	13.56	15.81	16.35	17.63
H	6.00	6.00	6.00	6.00	6.00	12.00	12.00	12.00	12.00	18.00	18.00	18.00
WEIGHT (approx.)	20	30	50	70	80	145	325**	420**	RTF	RTF	RTF	RTF

*10" & above have gear operators as standard

**Weight includes gear operator

NOTE: Drawings are for information purposes only; please request certified drawings before preparing piping diagrams

NOTE: Larger sizes are available. Contact Henry Pratt Valve for data.

Adaption

**A range of extended stems & floor mounted stands for remote operation, particularly in buried service, are available.
Chainwheels & locking devices are readily incorporated onto the Ballcentric® Plug Valve.**

Valve with extended stem & 2" nut (Only for 8" and smaller valves)

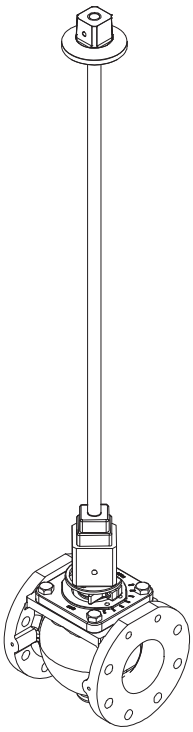

Valve with extended stem, buried gear and 2" nut

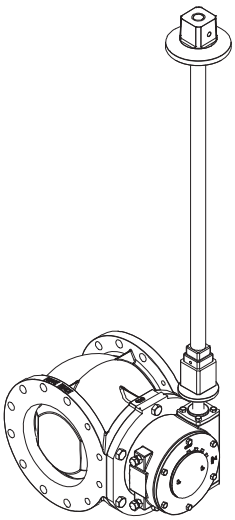

Valve with indicating floorstand

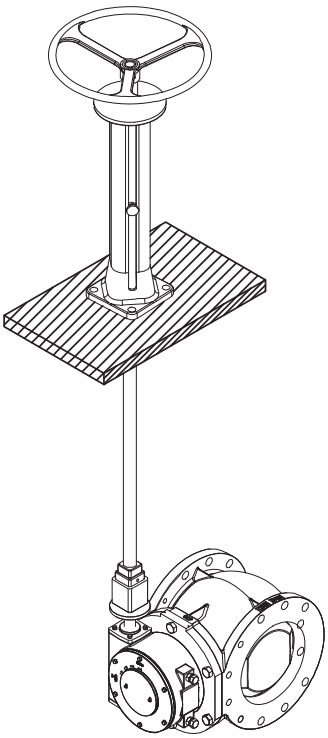

Valve with non-indicating floorstand & motor operator

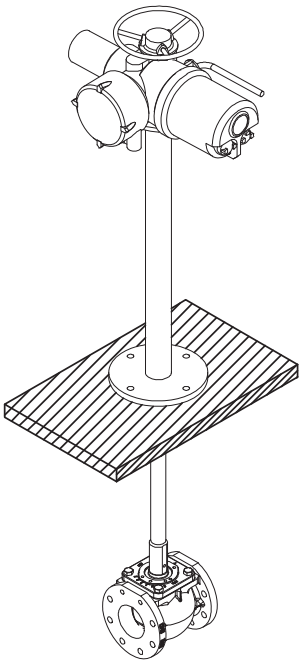

Valve with extended bonnet & motor operator

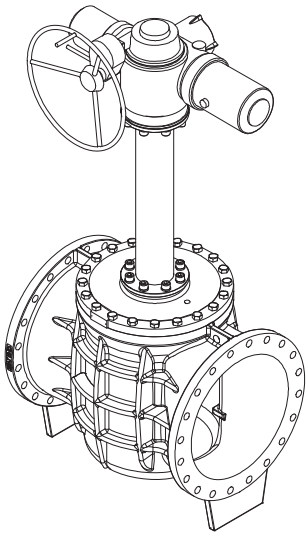

Valve with extended bonnet with gear

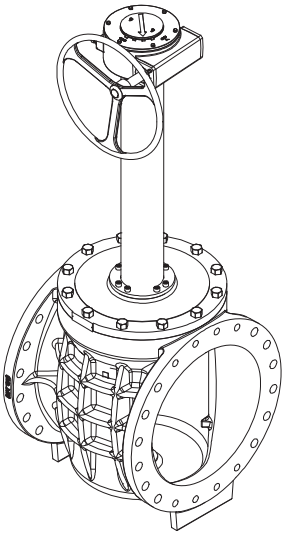

Technical Specification Ballcentric® Series 601/600 Plug Valves

AWWA C517-09 Standards

Valves shall be of the non-lubricated eccentric type with an elastomer covering all seating surfaces. The elastomer shall be suitable for the service intended. Flanged valves shall be manufactured in accordance with **ANSI B16.1 Class 125/150** including facing, drilling and flange thickness. Mechanical joint ends shall be in compliance with **AWWA/ANSI C-111-92**. Grooved ends shall be manufactured to the dimensions of **ANSI/AWWA C606** for ductile or steel pipe as required. Ports shall be round on sizes 2½"-12" and rectangular port design on valves 14" and larger. All valves shall be capable of being "pigged" with a soft pig when required.

Valve bodies shall be of **ASTM A-126 Class B** cast iron in accordance with **AWWA C-517-09 Section 4.3.3.1**. Valves 3" and larger shall be furnished with a welded-in overlay seat of 1/8" thick of not less than 99% nickel in accordance with **AWWA C-517-09, Section 4.3.3.4**. Sprayed, plated or screwed-in seats are not acceptable.

Plugs shall be of **ASTM A-536-Grade 65-45-12** for sizes 20" and smaller, and **ASTM A126 Class B Cast Iron** for sizes 24" and larger in compliance with **AWWA C-517-09 Sections 4.3.3.1 and 4.3.3.2**. The plugs shall be of one piece solid construction with PTFE thrust bearings on the upper and lower bearing journals to reduce torque and prevent dirt and grit from entering the bearing and seal area.

Valves shall be furnished with replaceable sleeve type bearings conforming to **AWWA C-517-09, Section 4.3.3.6**. Bearings shall be of sintered, oil impregnated type 316 stainless steel **ASTM A-743 Grade CF-8M**. Valve shaft seals shall be of the "U" cup type in accordance with **AWWA C-517-09 Section 4.4.7**. Seals shall be self adjusting and repackable without removing the bonnet from the valve.

Wrench operated valves 2½"-8" shall be capable of being converted to worm gear or automated operation without removing the bonnet or plug from the valve. All wrench operated valves shall be equipped with a 2" square nut for use with removeable levers or extended "T" handles.

Worm gear operators, where required, shall be of the heavy duty construction with the ductile iron quadrant supported on the top and bottom by oil impregnated bronze bearings. The worm gear and shaft shall be manufactured of hardened steel and run on high efficiency roller bearings.

Valves shall be designed and manufactured to shut off bubble tight at 175 psi for valves 2½"-12" and 150 psi for valves 14" and larger. Each valve shall be given a hydrostatic and seat test with the test results being certified when required by the customer. Certified copies of Proof-of-Design test reports shall be furnished as outlined in **AWWA C-517-09 Section 5.2.2** when requested.

Plug valves shall be Ballcentric® Plug Valve Series 601/600 as manufactured by Henry Pratt Company of Aurora, Illinois.

Technical Specification Ballcentric® Series 602 ANSI Class 250 Plug Valves

AWWA C517-09 Standards
Valves shall be of the non-lubricated eccentric type with an elastomer covering all seating surfaces. The elastomer shall be suitable for the service intended. Flanged valves shall be manufactured in accordance with **ANSI B16.1 Class 250** including facing, drilling and flange thickness. Ports shall be round on sizes 2½" through 12" to facilitate "pigging" when required. Valves 14" and larger shall be of a rectangular port design.
Valve bodies shall be of **ASTM A-536 Grade 65-45-12** ductile iron in accordance with **AWWA C-517-09 Section 4.3.3.2**. Valves 3" and larger shall be furnished with a welded-in overlay seat of 1/8" thick of not less than 99% nickel in accordance with **AWWA C-517-09 Section 4.3.3.4**. Sprayed, plated or screwed-in seats are not acceptable.

Plugs shall be of **ASTM A-536-Grade 65-45-12** in compliance with **AWWA C-517-09 Section 4.3.3.2**. The plugs shall be of one piece solid construction with PTFE thrust bearings on the upper and lower bearing journals to reduce torque and prevent dirt and grit form entering the bearing and seal area.

Valves shall be furnished with replaceable sleeve type bearings conforming to **AWWA C-517- 09 Section 4.3.3.6**. Bearings shall be of sintered, oil impregnated type 316 stainless steel **ASTM A-743 Grade CF-8M**. Valve shaft seals shall be of the "U" cup type in accordance with **AWWA C-517-09 Section 4.4.7**. Seals shall be self adjusting and repackable without removing the bonnet from the valve.

Worm gear operators shall be of the heavy duty construction with the ductile iron quadrant supported on the top and bottom by oil impregnated bronze bearings. The worm gear and shaft shall be manufactured of hardened steel and run on high efficiency roller bearings. All worm gear operators shall be sized for bi-directional shutoff at the valves design pressure rating.

Valves shall be designed and manufactured to shut off bubble tight at 400 psi for valves 2½"-12" and 300 psi for valves 14"-48" with pressure behind the plug.

Each valve shall be given a hydrostatic and seat test with the test results being certified when required by the customer. Certified copies of Proof-of-Design test reports shall be furnished as outlined in **AWWA C-517-09 Section 5.2.2** when requested.

Plug valves shall be Ballcentric® Plug Valve **Series 602** as manufactured by Henry Pratt Company of Aurora, Illinois.

Technical Specification Ballcentric® Series 601RL Rubberlined Plug Valves

AWWA C517-09 Standards
Valves shall be of the non-lubricated eccentric type with an elastomer covering all seating surfaces. The elastomer shall be suitable for the service intended. Flanged valves shall be manufactured in accordance with **ANSI B16.1 Class 125/150** including facing, drilling and flange thickness. Mechanical joint ends shall be in compliance with **AWWA/ ANSI C-111- 92**. Grooved ends shall be manufactured to the dimensions of **ANSI/AWWA C606** for ductile or steel pipe as required. Ports shall be round on sizes 2½"-12" and rectangular port design on valves 14" and larger. All valves shall be capable of being "pigged" with a soft pig when required.
Valve bodies shall be of **ASTM A-126 Class B** cast iron in accordance with **AWWA C- 517-09 Section 4.3.3.1**. The interior of the valve bodies shall be covered with a suitable elastomer with a minimum thickness of 1/8". The elastomer shall extend through the valve flow way and onto the flanges to ensure a positive seal.

Plugs shall be of **ASTM A-536-Grade 65-45-12** for sizes 20" and smaller, and **ASTM A126 Class B Cast Iron** for sizes 24" and larger in compliance with **AWWA C-517-09 Sections 4.3.3.1 and 4.3.3.2**. The plugs shall be of one piece solid construction with PTFE thrust bearings on the upper and lower bearing journals to reduce torque and prevent dirt and grit from entering the bearing and seal area.

Valves shall be furnished with replaceable sleeve type bearings conforming to **AWWA C-517-09, Section 4.3.3.6.** Bearings shall be of sintered, oil impregnated type 316 stainless steel **ASTM A-743 Grade CF-8M**. Valve shaft seals shall be of the "U" cup type in accordance with **AWWA C-517-09 Section 4.4.7**. Seals shall be self adjusting and repackable without removing the bonnet from the valve.

Worm gear operators shall be of the heavy duty construction with the ductile iron quadrant supported on the top and bottom by oil impregnated bronze bearings. The worm gear and shaft shall be manufactured of hardened steel and run on high efficiency roller bearings. All worm gear operators shall be sized for bi-directional shutoff at the valves design pressure rating.

Valves shall be designed and manufactured to shut off bubble tight at 175 psi for valves 2½"-12" and 150 psi for valves 14" and larger. Each valve shall be given a hydrostatic and seat test with the test results being certified when required by the customer. Certified copies of Proof-of-Design test reports shall be furnished as outlined in **AWWA C-517-09 Section 5.2.2** when requested.

Plug valves shall be Ballcentric® Plug Valve **Series 601RL** as manufactured by **Henry Pratt Company of Aurora, Illinois.**

Technical Specification Ballcentric® Series 601S – Stainless Steel Plug Valves

AWWA C517-09 Standards
Valves shall be of the non-lubricated eccentric type with an elastomer covering all seating surfaces. The elastomer shall be suitable for the service intended. Flanged valves shall be manufactured in accordance with **ANSI B16.1 Class 125** including facing, drilling and flange thickness. Ports shall be round on sizes 2½"-12" and rectangular port design on valves 14" and larger. All valves shall be capable of being "pigged" with a soft pig when required.
Valve bodies shall be of **CF8M (316 stainless steel)**. Valves shall be furnished with 316 stainless steel seat in accordance with **AWWA C-517-09 Section 4.3.3.4**.

Plugs shall be of **CF8M (316 stainless steel)**. The plugs shall be of one piece solid construction with PTFE thrust bearings on the upper and lower bearing journals to reduce torque and prevent dirt and grit from entering the bearing and seal area.

Valves shall be furnished with replaceable sleeve type bearings conforming to **AWWA C-517-09 Section 4.3.3.6**. Bearings shall be of sintered, oil impregnated type 316 stainless steel **ASTM A-743 Grade CF-8M**. Valve shaft seals shall be of the "U" cup type in accordance with **AWWA C-517-09 Section 4.4.7**. Seals shall be self adjusting and repackable without removing the bonnet from the valve.

Wrench operated valves 2½"-8" shall be capable of being converted to worm gear or automated operation without removing the bonnet or plug from the valve. All wrench operated valves shall be equipped with a 2" square nut for use with removable levers or extended "T" handles.

Worm gear operators, where required, shall be of the heavy duty construction with the ductile iron quadrant supported on the top and bottom by oil impregnated bronze bearings. The worm gear and shaft shall be manufactured of hardened steel and run on high efficiency roller bearings. All worm gear operators shall be sized for bi-directional shutoff at the valves design pressure rating.

Valves shall be designed and manufactured to shut off bubble tight at 175 psi for valves 2½"-12" and 150 psi for valves 14" and larger. Each valve shall be given a hydrostatic and seat test with the test results being certified when required by the customer. Certified copies of Proof-of-Design test reports shall be furnished as outlined in **AWWA C-517-09 Section 5.2.2** when requested.

Plug valves shall be Ballcentric® Plug Valve **Series 601S** as manufactured by Henry Pratt Company of Aurora, Illinois.

Technical Specification Ballcentric® Series 611/610 Ductile Iron Plug Valves

AWWA C517-09 Standards
Valves shall be of the non-lubricated eccentric type with an elastomer covering all seating surfaces. The elastomer shall be suitable for the service intended. Flanged valves shall be manufactured in accordance with **ANSI B16.1 Class 125/150** including facing, drilling and flange thickness. Mechanical joint ends shall be in compliance with **AWWA/ANSI C-111-92**. Grooved ends shall be manufactured to the dimensions of **ANSI/AWWA C606** for ductile or steel pipe as required. Ports shall be round on sizes 2½"-12" and rectangular port design on valves 14" and larger. All valves shall be capable of being "pigged" with a soft pig when required.
Valve bodies shall be of **ASTM A-536 Grade 65-45-12** in accordance with **AWWA C-517-09 Section 4.3.3.2.** Valves 3" and larger shall be furnished with a welded-in overlay seat of 1/8" thick of not less than 99% nickel in accordance with **AWWA C-517-09, Section 4.3.3.4**. Sprayed, plated or screwed-in seats are not acceptable.

Plugs shall be of **ASTM A-536-Grade 65-45-12** for all sizes in accordance with **AWWA C-517-09 Section 4.3.3.2**. The plugs shall be of one piece solid construction with PTFE thrust bearings on the upper and lower bearing journals to reduce torque and prevent dirt and grit from entering the bearing and seal area.

Valves shall be furnished with replaceable sleeve type bearings conforming to **AWWA C-517-09, Section 4.3.3.6**. Bearings shall be of sintered, oil impregnated type 316 stainless steel **ASTM A-743 Grade CF-8M**. Valve shaft seals shall be of the "U" cup type in accordance with **AWWA C-517-09 Section 4.4.7**. Seals shall be self adjusting and repackable without removing the bonnet from the valve.

Wrench operated valves 2½"-8" shall be capable of being converted to worm gear or automated operation without removing the bonnet or plug from the valve. All wrench operated valves shall be equipped with a 2" square nut for use with removeable levers or extended "T" handles.

Worm gear operators, where required, shall be of the heavy duty construction with the ductile iron quadrant supported on the top and bottom by oil impregnated bronze bearings. The worm gear and shaft shall be manufactured of hardened steel and run on high efficiency roller bearings. All worm gear operators shall be sized for bi-directional shutoff at the valves design pressure rating.

Valves shall be designed and manufactured to shut off bubble tight at 175 psi for valves 2½"-12" and 150 psi for valves 14" and larger. Each valve shall be given a hydrostatic and seat test with the test results being certified when required by the customer. Certified copies of Proof-of-Design test reports shall be furnished as outlined in **AWWA C-517-09 Section 5.2.2** when requested.

Plug valves shall be Ballcentric® Plug Valve **Series 611/610** as manufactured by Henry Pratt Company of Aurora, Illinois.

Technical Specification Ballcentric® Series 601GL Glass Lined Plug Valves

AWWA C517-09 Standards
Valves shall be of the non-lubricated eccentric type with an elastomer covering all seating surfaces. The elastomer shall be suitable for the service intended. Flanged valves shall be manufactured in accordance with **ANSI B16.1 Class 125/150** including facing, drilling and flange thickness. Mechanical joint ends shall be in compliance with **AWWA/ ANSI C-111-92**. Grooved ends shall be manufactured to the dimensions of **ANSI/AWWA C606** for ductile or steel pipe as required. Ports shall be round on sizes 3"-12" and rectangular port design on valves 14" and larger. All valves shall be capable of being "pigged" with a soft pig when required.
Valve bodies shall be of **ASTM A-126 Class B** cast iron in accordance with A**WWA C-517-09 Section 4.3.3.1**. Interior of valves shall be glass lined at .008-.012 mils thickness, covering the entire interior of valve bodies and stopping at the flange faces.

Plugs shall be of **ASTM A-536-Grade 65-45-12** for sizes 20" and smaller, and **ASTM A126 Class B Cast Iron** for sizes 24" and larger in compliance with **AWWA C-517-09 Sections 4.3.3.1 and 4.3.3.2**. The plugs shall be of one piece solid construction with PTFE thrust bearings on the upper and lower bearing journals to reduce torque and prevent dirt and grit from entering the bearing and seal area.

Valves shall be furnished with replaceable sleeve type bearings conforming to **AWWA C-517-09, Section 4.3.3.6**. Bearings shall be of sintered, oil impregnated type 316 stainless steel **ASTM A-743 Grade CF-8M**. Valve shaft seals shall be of the "U" cup type in accordance with **AWWA C-517-09 Section 4.4.7**. Seals shall be self adjusting and repackable without removing the bonnet from the valve.

Wrench operated valves 2½"-8" shall be capable of being converted to worm gear or automated operation without removing the bonnet or plug from the valve. All wrench operated valves shall be equipped with a 2" square nut for use with removeable levers or extended "T" handles.

Worm gear operators, where required, shall be of the heavy duty construction with the ductile iron quadrant supported on the top and bottom by oil impregnated bronze bearings. The worm gear and shaft shall be manufactured of hardened steel and run on high efficiency roller bearings. All worm gear operators shall be sized for bi-directional shutoff at the valves design pressure rating.

Valves shall be designed and manufactured to shut off bubble tight at 175 psi for valves 2½"-12" and 150 psi for valves 14" and larger. Each valve shall be given a hydrostatic and seat test with the test results being certified when required by the customer. Certified copies of Proof-of-Design test reports shall be furnished as outlined in **AWWA C-517-09 Section 5.2.2** when requested.

Plug valves shall be Ballcentric® Plug Valve Series **601GL/600GL** as manufactured by Henry Pratt Company of Aurora, Illinois.

PRATT PRODUCT GUIDE

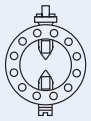

Model
2FII

Monoflange
MKII

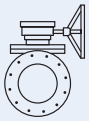

Plug
Valve

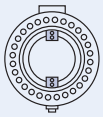

Triton®
XR70

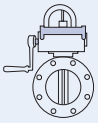

Indicating Butterfly Valve
UL & FM approved

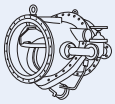

Tilting Disc
Check Valve

Triton®
XL

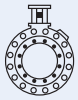

N-Stamp Nuclear
Butterfly Valve

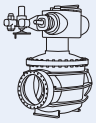

Cone
Valve

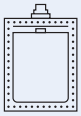

Rectangular

PIVA Post Indicating Valve Assembly
UL & FM approved

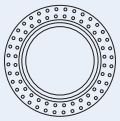

Sleeve
Valve

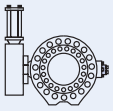

Rubber Seated
Ball Valve

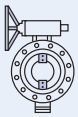

Triton®
HP250

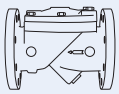

Check
Valve

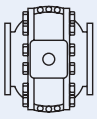

Metal Seated
Ball Valve

Control
Systems

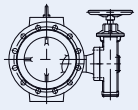

Plunger Valve

PRATT

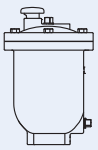

Air Valve

Henry Pratt Company
401 South Highland Avenue
Aurora, Illinois 60506-5563 - US
P: 630-844-4000 F: 630-844-4160
www.henrypratt.com
ISO 9001: 2000 Certified

©2014 Henry Pratt Company | Printed in the U.S.A. | HPPLUG-0414

VALVE SIZE	GEAR SIZE & RATIO	A	B	C	D	E	F	G	H	J	K	L	M	N	P	Q	S	T
2.5	M2 (20:1)	7.5	3.41	3.50	2.5	5.50	7.00	0.75	4	--	–	0.69	2.5	6	4.75	4.75	1.75	2.00
3	M2 (20:1)	8	3.41	3.75	3	6.00	7.50	0.75	4	--	–	0.75	2.5	6	4.75	4.75	1.75	2.00
4	M3 (30:1)	9	4.38	4.50	4	7.50	9	0.75	6	0.63	2	0.94	3	6	9.50	8	2.00	2.56
5	M3 (30:1)	10	5.63	5.75	5	8.50	10	0.88	6	0.75	2	0.94	3	6	9.50	8	2.00	2.56
6	M3 (30:1)	10.50	5.63	5.75	6	9.50	11	0.88	6	0.75	2	1	3	6	9.50	8	2.00	2.56
8	M5 (50:1)	11.50	7.56	7.63	8	11.75	13.50	0.88	6	0.75	2	1.13	6	12	11.25	8	2.25	3.16
10	M8 (80:1)	13	9.25	8.88	10	14.25	16	1	8	0.88	4	1.19	6	12	11.63	10	2.00	4.63
12	M8 (80:1)	14	10.88	10	12	17.00	19	1	8	0.88	4	1.25	6	12	11.63	10	2.00	4.63

△5 △6 REFERENCE ONLY △6

ABOVE GROUND GEAR W/ HANDWHEEL OPTION

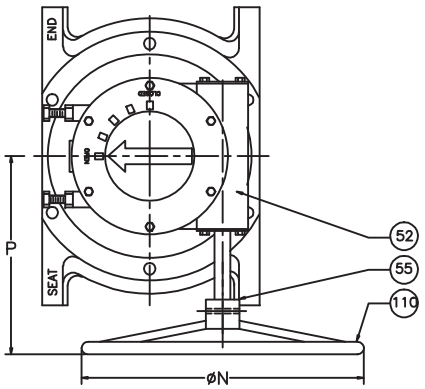

BURIED GEAR W/ 2" NUT OPTION

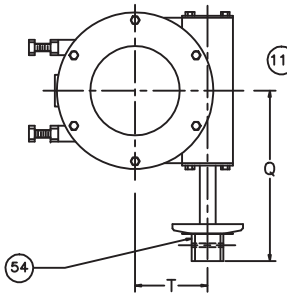

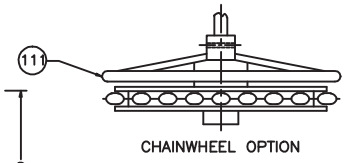

CHAINWHEEL OPTION

SIZE	GEAR	# OF TURNS
2.5"	20:1	5
3"	20:1	5
4"	30:1	7 1/2
5"	30:1	7 1/2
6"	30:1	7 1/2
8"	50:1	12 1/2
10"	80:1	20
12"	80:1	20

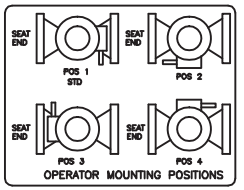

THIS DRAWING IS THE PROPERTY OF
HENRY PRATT COMPANY
AND MUST NOT BE USED IN ANY WAY
PREJUDICIAL TO THEIR INTERESTS

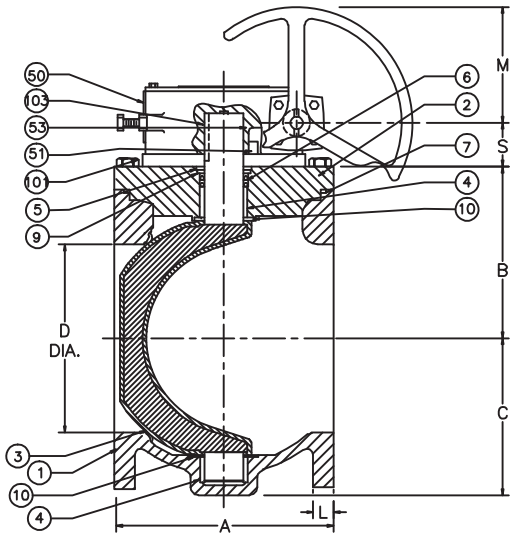

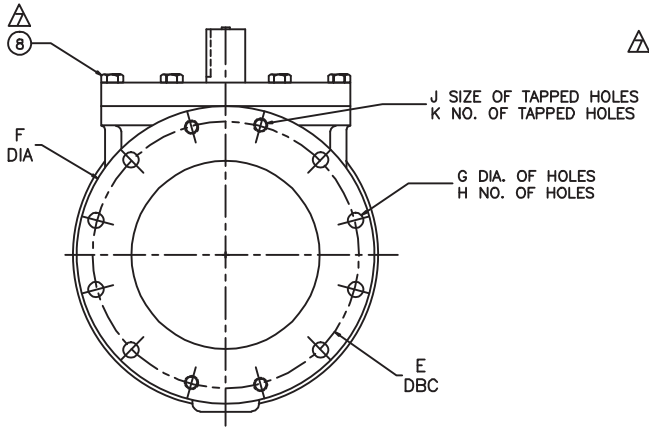

*RISER RING IS ONLY ON 2-1/2" TO 8" VALVE

ITEM	QTY	DESCRIPTION	MATERIAL
111	1	CHAINWHEEL	DUCTILE IRON
110	1	SPRING PIN	STEEL
103	1	KEY	STEEL
*101	1	RISER RING	STEEL
55	1	HANDWHEEL	DUCTILE IRON
54	1	2" NUT	DUCTILE IRON
53	2	SLEEVE BEARING	BRONZE
52	1	WORM GEAR	STEEL
51	1	QUAD GEAR	DUCTILE IRON
△4 50	1	HOUSING	
10	2	GRIT SEAL	PTFE
9	1	SEAL RETAINING RING	BRASS
△7 8	AR	H.H. CAP SCREW	☐STEEL ☐STN. STEEL
7	1	O-RING	ELAS AS SPEC.
6	2	U-CUP SEAL	ELAS AS SPEC.
5	1	SNAP RING	SPRING STEEL
4	2	SLEEVE BEARING	STN. STEEL
3	1	PLUG ELASTOMER AS SPEC.	DUCTILE IRON
2	1	CAP	CAST IRON
1	1	BODY	CAST IRON

PRATT®
HENRY PRATT COMPANY
AURORA, ILL.

BY	DATE	SCALE
CR	10/95	NONE
CHK'D: AJ		DIM.: INCHES

ISSUE NUM.	DATE	REVISIONS	BY
1	12/97	REVISED GEAR DIM. FOR 2.5" & 3" WAS M2 NOW ALECTO 232-07	CR
2	11/98	ITEM 8 WAS BRONZE	CR
3	09/07	ADDED MTRL. TYPE	JC
4	02/10	ITEM 50 MATERIAL CHANGED FROM CAST TO DUCTILE IRON [ECR# 252]	JC
5	09/10	REMOVED DATA FOR 14" [ECR # 384]	TF
6	05/12	CORRECTION IN "B" & "S" DIM. [ECN# 584]	AA
7	01/13	ADDED ITEM 10 AND BOM UPDATE	JC
8	01/13	B.O.M. STANDARDIZATION ITEM 10 NOW 8	AA

TITLE:
2-1/2" TO 12"
PLUG VALVE, FLANGED,
GEAR OPERATED,
w/HANDWHEEL, 2" NUT,
OR CHAINWHEEL OPTION

DWG. NO. HP49110

This page is intentionally left blank

Project name: AMARUQ

Project#: 5000218009

Document #: SPK_0011_ACP

by: LJ

chkd: GP

appvd: CB

ACTIFLO RECIRCULATION LINE

INSTRUMENTS

OIM manual section: 4.3.11.5

This page is intentionally left blank

CS-400-120 : Identification sheet

VWTC PROJECT NUMBER:	5000218009	REV:	1
PROJECT NAME:	AEM AMARUQ	SUBMITTED TO (COMPANY):	AGNICO EAGLE MINES
ENGINEER:	Gabriel Hébert	SUBMITTED TO (RESPONSIBLE)	
PROJECT MANAGER:	Clément B	PROJECT NUM REFERENCE.:	
PHONE NUMBER:		LOT NUMBER:	

SUPPLIER	EQPT CODE	EQPT TAG NO	DIA	DESCRIPTION	INFO 1	INFO 2	INFO 3	APPLIC.	NOTE	REV
HACH	IEPOTB200853	AE2-012	Immersion sensor: 60 x 200 mm (2.4 x 7.9	TURBIDIMETER PROBE - ACP	SOLITAX IMMERSION SENSOR FOR TURBIDITY AND INLINE SC sc PVC WITH WIPER 0.001-4000 NTU, 0.001 mg/L - 50 g/L/MANUFACTURER: HACH/ MODEL: LXV423.99.10100	N/A	N/A	ACTIFLO RECIRCULATION LINE MODIFICATION		rev1
HACH	IEPOTB200853	AE2-022	Immersion sensor: 60 x 200 mm (2.4 x 7.9	TURBIDIMETER PROBE - ACP	SOLITAX IMMERSION SENSOR FOR TURBIDITY AND INLINE SC sc PVC WITH WIPER 0.001-4000 NTU, 0.001 mg/L - 50 g/L/MANUFACTURER: HACH/ MODEL: LXV423.99.10100	N/A	N/A	ACTIFLO RECIRCULATION LINE MODIFICATION		rev1

This page is intentionally left blank

SOLITAX®sc TURBIDITY & SUSPENDED SOLIDS SENSORS

Applications

- Drinking Water
- Wastewater
- Beverage
- Industrial Water
- Power

PROGNOSYS™ READY

Accurate, color-independent suspended solids and turbidity measurements.

Greater Accuracy, Less Maintenance

Hach SOLITAX sc sensors provide accurate, color-independent measurement of turbidity and suspended solids in drinking water, wastewater and industrial process applications. A self-cleaning device prevents biological growth and interference of gas bubbles. This system's reliable performance and full data communication capability help improve process control and reduce treatment costs associated with polymer use, digester volume, and sludge handling.

Excellent Correlation to Laboratory Analysis

SOLITAX sc sensors show an exceptional correlation to laboratory analysis. On-line measurement not only saves time on manual analysis, but also provides critical real-time measurements that can be used to operate the plant more efficiently.

Fully Serviceable Sensors

Conventional turbidity and suspended solids sensors are potted and are discarded when they no longer function. SOLITAX sc sensors are fully serviceable, which often doubles the useful life of the sensor.

Easy One-point Calibration

Factory calibrated in conformity with DIN EN ISO 7027 for long-term calibration stability. Calibration is easy with a simple correction factor procedure.

Multi-channel, Multi-parameter System

Any two SOLITAX sc sensors can be installed on one Hach sc200 Controller. The same controller can also accommodate any combination of parameters. All of Hach's model sc sensors are "plug and play" with no complicated wiring or set-up procedure necessary.

HACH®
Be Right™

Specifications*

	For insertion in pipes		For immersion in open tanks		
Model	INSERTION inline sc	INSERTION highline sc	IMMERSION t-line sc	IMMERSION ts-line sc	IMMERSION hs-line sc
Parameter	Suspended Solids, Turbidity	Hight Range Suspended Solids, Turbidity	Turbidity	Suspended Solids, Turbidity	Hight Range Suspended Solids, Turbidity
Measuring Range Turbidity	0.001 to 4000 NTU	0.001 to 4000 NTU	0.001 to 4000 NTU	0.001 to 4000 NTU	0.001 to 4000 NTU
Measuring Range TSS-Content	0.001 mg/L to 50 g/L	0.001 mg/L to 500 g/L		0.001 mg/L to 50 g/L	0.001 mg/L to 500 g/L
Unit	Turbidity: User selectable—NTU, FNU, or TE/F Suspended Solids: User selectable—g/L, mg/L, ppm, or % solids				
Accuracy	Turbidity up to 1000 NTU; without calibration < 5% of the measured value ±0.01 NTU; with calibration < 1% of the measured value ±0.01 NTU				
Repeatability	Suspended solids content: < 3 %				
	Turbidity: < 1 %				
Response Time	1 s < T90 < 300 s (adjustable)				
Calibration Method	Turbidity: Formazin or STABLCAL Standard (at 800 NTU). Suspended Solids: Sample specific, based on gravimetric TSS analysis with a correction factor procedure.				
Certifications	CE certified to EN 61326-1, EN 61326/A1, EN 61326/A2, EN 61010-1				
Flow	Max. 3 m/s (the presence of air bubbles affects the measurement)				
Operating Temperature Range	0 to 40 °C (32 to 104°F)				
Pressure Limit	Stainless steel: 6 bar or 60 m (87 psi) PVC: 1 bar or 10 m (14.5 psi) Stainless steel: 6 bar or 60 m (87 psi) PVC: 1 bar or 10 m (14.5 psi)				
Material	Optics Carrier and Sleeve: stainless steel 1.4571 or black PVC Wiper Arm: stainless steel 1.4581; Wiper Blade: silicone (standard) Optional: Viton (LZX578); Wiper Shaft: stainless steel 1.4571 Threaded cable fitting: stainless steel 1.4305 or white PVC		Optics Carrier and Sleeve: stainless steel 1.4571 or black PVC Wiper Arm: stainless steel 1.4581; Wiper Blade: silicone (standard) Optional: Viton (LZX578); Wiper Shaft: stainless steel 1.4571 Threaded cable fitting: stainless steel 1.4305 or white PVC	
Weight Sensor	Insertion stainless steel: 2.4 kg (5.29 lb.)		Immersion stainless steel: 1.38 kg (3.0 lb.) Immersion PVC: 0.52 kg (1.2 lb.)		
Cable Length	10 m (optional extension cables available)				
					Subject to change without notice

Principle of Operation

SOLITAX sc ts-line sensor with dual-beam optics and added backscatter detector

- Dual infrared light beams. LED light source transmits light at 45° to sensor face.
- Nephelometric photoreceptors detect light at 90° to the transmitted light beam.
- Backscatter photoreceptor (included on all models except the SOLITAX sc t-line) detects light at 140° to the transmitted light beam to measure suspended solids in heavily loaded sample streams.
- Self-cleaning wiper, optional.
- T-line probes measure turbidity only. TS, HS, inline, and highline sensors measure either turbidity or suspended solids.

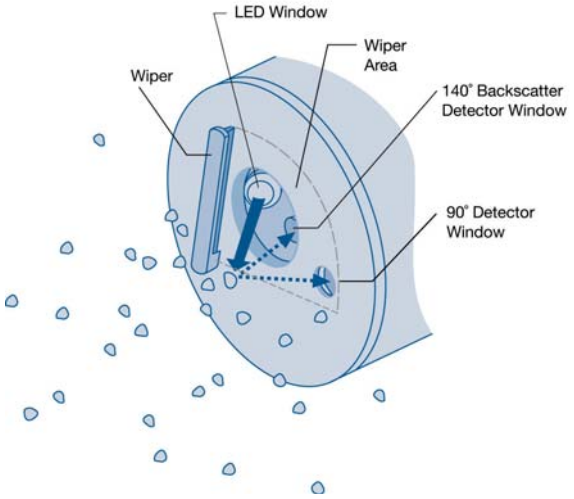

Dimensions

Hach SOLITAX sc sensors can be fixed to the rim of the tank for immersion applications or inserted directly through the sidewall of a pipeline for insertion applications. A variety of installation kits are available.

SOLITAX sc Insertion Probe

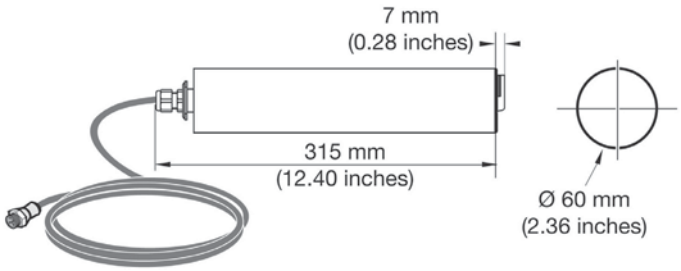

SOLITAX sc Immersion Probe

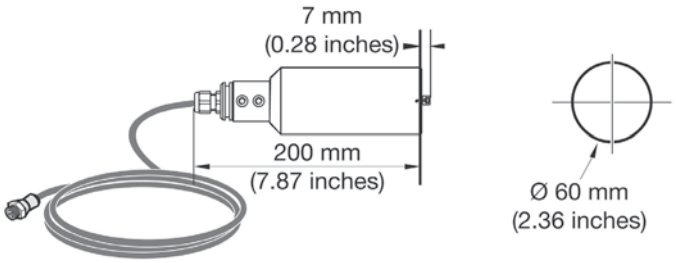

Installation / Mounting

Installation for mounting SOLITAX sc for immersion in open tanks. (Stainless steel pole mount kit, Prod. No. LZY714.99.53120)

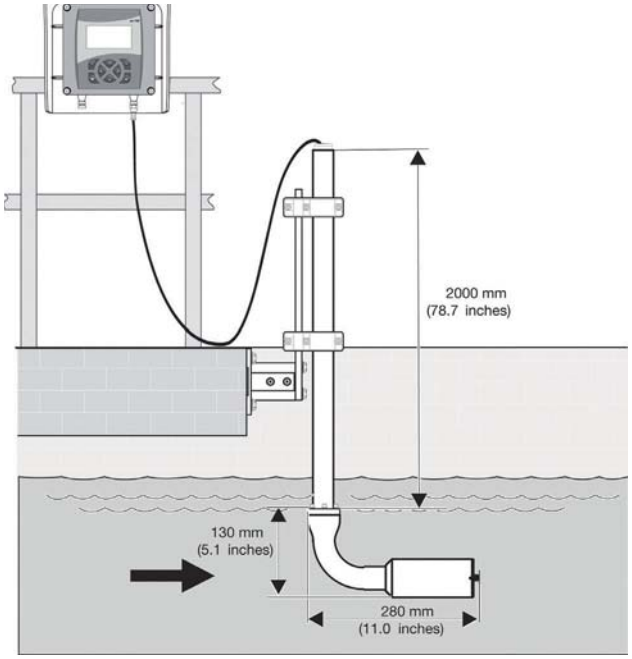

Fixture with ball valve for mounting SOLITAX sc models inline and highline sensors in pipes., minimum pipe size 100 mm (4-in.) (Prod. No. LZX337, max pressure 6 bar; Prod. No. 936, max. pressure 1 bar.

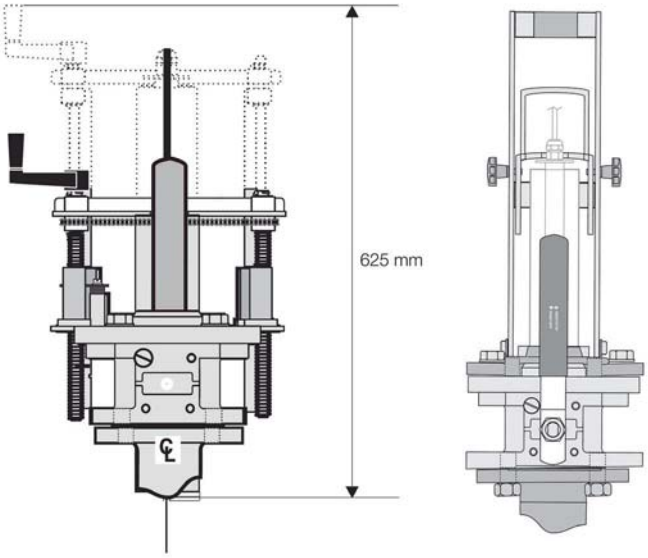

Ordering Information

Common Configurations: SOLITAX sc Turbidity and Suspended Solids Analyzers with sc200 controller and sensors shown

Immersion in Open Tanks Applications

2983400 Turbidity Analyzer, t-line sc, stainless steel with wiper (0.001 to 4000 NTU)

2983500 Turbidity and Suspended Solids Analyzer, ts-line sc, stainless steel with wiper (0.001 to 4000 NTU, 0.001 mg/L to 50 g/L)

2983600 Turbidity and High Range Suspended Solids Analyzer, hs-line sc, stainless steel with wiper (0.001 to 4000 NTU, 0.001 mg/L to 500 g/L)

Insertion in Pipes Applications (includes insertion mounting kit)

2983700 Turbidity and Suspended Solids Analyzer, inline sc, stainless steel with wiper (0.001 to 4000 NTU, 0.001 mg/L to 50 g/L)

2983900 Turbidity and High Range Suspended Solids Analyzer, highline sc, stainless steel with wiper (0.001 to 4000 NTU, 0.001 mg/L to 500 g/L)

NOTE:
1. Power Cords must be ordered separately.
2. Fixed point installation kit or handrail mount kit must be ordered separately for all immersion analyzers.

Individual SOLITAX sc Sensors

Immersion Sensors

LXV423.99.10000 Turbidity, t-line sc, PVC with wiper (0.001 to 4000 NTU)

LXV423.99.12000 Turbidity, t-line sc, PVC without wiper (0.001 to 4000 NTU)

LXV423.99.10100 Turbidity and Suspended Solids, ts-line sc, PVC with wiper (0.001 to 4000 NTU, 0.001 mg/L to 50 g/L)

LXV423.99.12100 Turbidity and Suspended Solids, ts-line sc, PVC without wiper (0.001 to 4000 NTU, 0.001 mg/L to 50 g/L)

LXV423.99.00100 Turbidity and Suspended Solids, ts-line sc, stainless steel with wiper (0.001 to 4000 NTU, 0.001 mg/L to 50 g/L)

LXV423.99.02100 Turbidity and Suspended Solids, ts-line sc, stainless steel without wiper (0.001 to 4000 NTU, 0.001 mg/L to 50 g/L)

LXV423.99.10200 Turbidity and Suspended Solids, hs-line sc, PVC with wiper (0.001 to 4000 NTU, 0.001 mg/L to 500 g/L)

LXV423.99.12200 Turbidity and Suspended Solids, hs-line sc, PVC without wiper (0.001 to 4000 NTU, 0.001 mg/L to 500 g/L)

LXV423.99.00200 Turbidity and Suspended Solids, hs-line sc, stainless steel with wiper (0.001 to 4000 NTU, 0.001 mg/L to 500 g/L)

LXV423.99.02200 Turbidity and Suspended Solids, hs-line sc, stainless steel without wiper (0.001 to 4000 NTU, 0.001 mg/L to 500 g/L)

Insertion Sensors

LXV424.99.00100 Turbidity and Suspended Solids, inline sc, stainless steel with wiper (0.001 to 4000 NTU, 0.001 mg/L to 50 g/L)

LXV424.99.02100 Turbidity and Suspended Solids, inline sc, stainless steel without wiper (0.001 to 4000 NTU, 0.001 mg/L to 50 g/L)

LXV424.99.00200 Turbidity and Suspended Solids, highline sc, stainless steel with wiper (0.001 to 4000 NTU, 0.001 mg/L to 500 g/L)

LXV424.99.02200 Turbidity and Suspended Solids, highline sc, stainless steel without wiper (0.001 to 4000 NTU, 0.001 mg/L to 500 g/L)

Installation Accessories

LZY714.99.53120 Stainless Steel pole mount kit for SOLITAX t-line, ts-line, and hs-line immersion sensors, including 10 cm base and 2 m pole with sensor adapter

5738400 Insertion Mounting Kit for inline and highline insertion sensors (ball valve safety armature and extraction system). Kit includes a 4 inch pre-coped Carbon Steel Flange. Non-coped flanges are available

AHA033NPT Sensor Adapter, straight 1-1/2 FNPT

AHA034NPT Sensor Adapter, elbow 1-1/2 FNPT 90°

MH236B00Z Handrail Mounting Kit (for sensor to be used with either adapter above) includes 1.5-inch diameter by 7.5-ft long CPVC pipe and swivel/pivot/ pipe clamp assembly

LZX337 Stainless steel ball valve safety armature/ extraction fitting for in-line and hi-line probes w/o welding flange, maximum operating pressure 6 bar/87 psi

LZX936 Stainless steel ball valve armature, maximum operation pressure 1 bar/14.5 psi

LZX660 Non-coped stainless steel welding flange for insertion kit

LZX661 Non-coped carbon steel welding flange for insertion kit

HACH COMPANY World Headquarters: Loveland, Colorado USA

United States: 800-227-4224 tel 970-669-2932 fax orders@hach.com
Outside United States: 970-669-3050 tel 970-461-3939 fax int@hach.com
hach.com

LIT2472 Rev 8
C15 Printed in U.S.A.
©Hach Company, 2015. All rights reserved.
In the interest of improving and updating its equipment,
Hach Company reserves the right to alter specifications to equipment at any time.

Be Right™

CS-403-550 : Identification sheet

VWTC PROJECT NUMBER:	5000218009	REV:	1
PROJECT NAME:	AEM AMARUQ	SUBMITTED TO (COMPANY):	AGNICO EAGLE MINES
ENGINEER:	Gabriel Hébert	SUBMITTED TO (RESPONSIBLE)	
PROJECT MANAGER:	Clément B	PROJECT NUM REFERENCE.:	
PHONE NUMBER:		LOT NUMBER:	

SUPPLIER	EQPT CODE	EQPT TAG NO	DIA	DESCRIPTION	INFO 1	INFO 2	INFO 3	APPLIC.	NOTE	REV
HACH	IECNGU340502	AIT2-012	144 mm x 144 mm x 181 mm	TSS TRANSMITTER	MULTIPURPOSE TRANSMITTER /MANUF: HACH/MODEL: SC200 /LXV404.99.00552/120V/ 2 DIGITAL CHANNEL/ HART PROTOCOLE MODULE 9328100	N/A	N/A	ACTIFLO RECIRCUL ATION LINE MODIFICA TION		rev1
HACH	IECNGU340502	AIT2-022	144 mm x 144 mm x 181 mm	TSS TRANSMITTER	MULTIPURPOSE TRANSMITTER /MANUF: HACH/MODEL: SC200 /LXV404.99.00552/120V/ 2 DIGITAL CHANNEL/ HART PROTOCOLE MODULE 9328100	N/A	N/A	ACTIFLO RECIRCUL ATION LINE MODIFICA TION		rev1

This page is intentionally left blank

sc200™ UNIVERSAL CONTROLLER

Applications
- Drinking Water
- Wastewater
- Industrial Water
- Power

One Controller for the Broadest Range of Sensors.

Choose from 30 digital and analog sensor families for up to 17 different parameters.

Maximum Versatility

The sc200 controller allows the use of digital and analog sensors, either alone or in combination, to provide compatibility with Hach's broad range of sensors, eliminating the need for dedicated, parameter-specific controllers.

Ease of Use and Confidence in Results

Large, high-resolution, transreflective display provides optimal viewing resolution in any lighting condition. Guided calibration procedures in 19 languages minimize complexity and reduce operator error. Password-protected SD card reader offers a simple solution for data download and transfer. Visual warning system provides critical alerts.

Wide Variety of Communication Options

Utilize two to five analog outputs to transmit primary and secondary values for each sensor, or integrate Hach sensors and analyzers into MODBUS RS232/RS485, Profibus® DP, and HART networks.

Password protected SD card reader offers a simple solution for data download and transfer, and sc200 and digital sensor configuration file duplication and backup.

HACH®
Be Right™

Controller Comparison

Features	Previous Models sc100™ Controller	Previous Models GLI53 Controller	sc200™ Controller	Benefits
Display	64 x 128 pixels 33 x 66 mm (1.3 x 2.6 in.)	64 x 128 pixels 33 x 66 mm (1.3 x 2.6 in.)	160 x 240 pixels 48 x 68 mm (1.89 x 2.67 in.) Transreflective	• Improved user interface—50% bigger • Easier to read in daylight and sunlight
Data Management	irDA Port/PDA Service Cable	N/A	SD Card Service Cable	• Simplifies data transfer • Standardized accessories/max compatibility
Sensor Inputs	2 Max Direct Digital Analog via External Gateway	2 Max Analog Depending on Parameter	2 Max Digital and/or Analog with Sensor Card	• Simplifies analog sensor connections • Works with analog and digital sensors
Analog Inputs	N/A	N/A	1 Analog Input Signal Analog 4-20mA Card	• Enables non-sc analyzer monitoring • Accepts mA signals from other analyzers for local display • Consolidates analog mA signals to a digital output
4-20 mA Outputs	2 Standard	2 Standard	2 Standard Optional 3 Additional	• Total of five (5) 4-20 mA outputs allows multiple mA outputs per sensor input
Digital Communication	MODBUS RS232/RS485 Profibus DP V1.0	HART	MODBUS RS232/RS485 Profibus DP V1.0 HART 7.2	• Unprecedented combination of sensor breadth and digital communication options

Choose from Hach's Broad Range of Digital and Analog Sensors

Parameter	Sensor	Digital or Analog
Ammonia	AMTAX™ sc, NH4D sc, AISE sc, AN-ISE sc	●
Chlorine	CLF10 sc, CLT10 sc, 9184 sc	●
Chlorine Dioxide	9185 sc	●
Conductivity	GLI 3400 Contacting, GLI 3700 Inductive	△
Dissolved Oxygen	LDO® Model 2, 5740 sc	●
Dissolved Oxygen	5500	△
Flow	U53, F53 Sensors	△
Nitrate	NITRATAX™ sc, NO3D sc, NISE sc, AN-ISE sc	●
Oil in Water	FP360 sc	●
Organics	UVAS sc	●
Ozone	9187 sc	●
pH/ORP	pHD	●
pH/ORP	pHD, pH Combination, LCP	△
Phosphate	PHOSPHAX™ sc	●
Sludge Level	SONATAX™ sc	●
Suspended Solids	SOLITAX™ sc, TSS sc	●
Turbidity	1720E, FT660 sc, SS7 sc, ULTRATURB sc, SOLITAX sc, TSS sc	●
Ultra Pure Conductivity	8310, 8311, 8312, 8315, 8316, 8317 Contacting	△
Ultra Pure pH/ORP	8362	△

● = Digital △ = Analog

Connect up to two of any of the sensors listed above, in any combination, to meet your application needs. The diagrams below demonstrate the potential configurations. Operation of analog sensors requires the controller to be equipped with the appropriate sensor module. Contact Hach Technical Support for help with selecting the appropriate module.

2 Channel Configurations

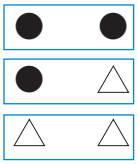

1 Channel Configurations

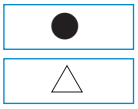

Specifications*

Dimensions (H x W x D)	5.7 in x 5.7 in x 7.1 in (144 mm x 144 mm x 181 mm)
Display	Graphic dot matrix LCD with LED backlighting, transreflective
Display Size	1.9 x 2.7 in. (48 mm x 68 mm)
Display Resolution	240 x 160 pixels
Weight	3.75 lbs. (1.70 kg)
Power Requirements (Voltage)	100 - 240 V AC, 24 V DC
Power Requirements (Hz)	50/60 Hz
Operating Temperature Range	-20 to 60 °C , 0 to 95% RH non-condensing
Analog Outputs	Two (Five with optional expansion module) to isolated current outputs, max 550 Ω , Accuracy: ± 0.1% of FS (20mA) at 25 °C, ± 0.5% of FS over -20 °C to 60 °C range Operational Mode: measurement or calculated value
Analog Output Functional Mode	Linear, Logarithmic, Bi-linear, PID
Security Levels	2 password-protected levels
Mounting Configurations	Wall, pole, and panel mounting
Enclosure Rating	NEMA 4X/IP66
Conduit Openings	1/2 in NPT Conduit
Relay: Operational Mode	Primary or secondary measurement, calculated value (dual channel only) or timer
Relay Functions	Scheduler (Timer), Alarm, Feeder Control, Event Control, Pulse Width Modulation, Frequency Control, and Warning
Relays	Four electromechanical SPDT (Form C) contacts, 1200 W, 5 A
Communication	MODBUS RS232/RS485, PROFIBUS DPV1, or HART 7.2 optional
Memory Backup	Flash memory
Electrical Certifications	EMC CE compliant for conducted and radiated emissions: - CISPR 11 (Class A limits) - EMC Immunity EN 61326-1 (Industrial limits) Safety cETLus safety mark for: - General Locations per ANSI/UL 61010-1 & CAN/CSA C22.2. No. 61010-1 - Hazardous Location Class I, Division 2, Groups A,B,C & D (Zone 2, Group IIC) per FM 3600 / FM 3611 & CSA C22.2 No. 213 M1987 with approved options and appropriately rated Class I, Division 2 or Zone 2 sensors cULus safety mark - General Locations per UL 61010-1 & CAN/CSA C22.2. No. 61010-1

**Subject to change without notice.*

Dimensions

Surface Mounting Dimensions

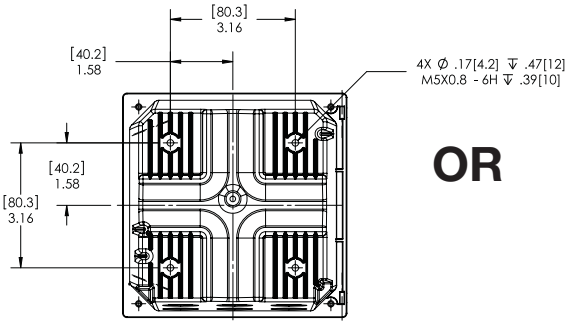

Mounting Dimensions
(Rear View)

OR

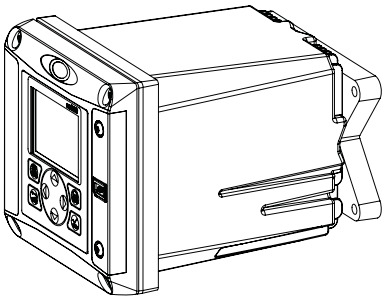

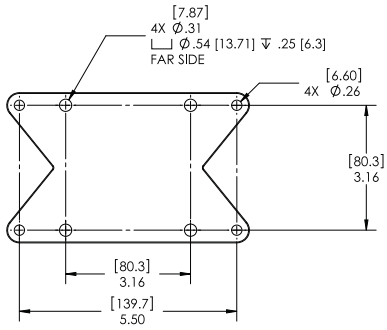

Bracket (supplied) for Surface Mounting
(Not compatible with Weather and Sun Shield
p/n 9220600 when surface mounting.)

Panel Mounting Dimensions

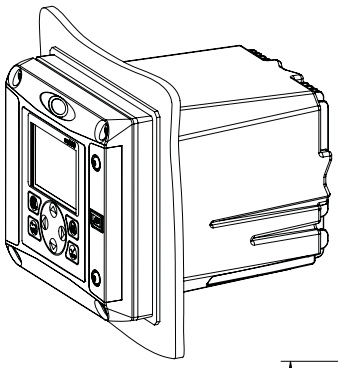

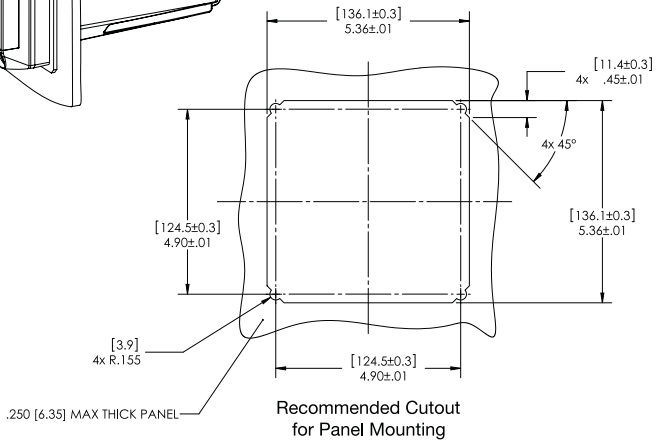

Recommended Cutout
for Panel Mounting

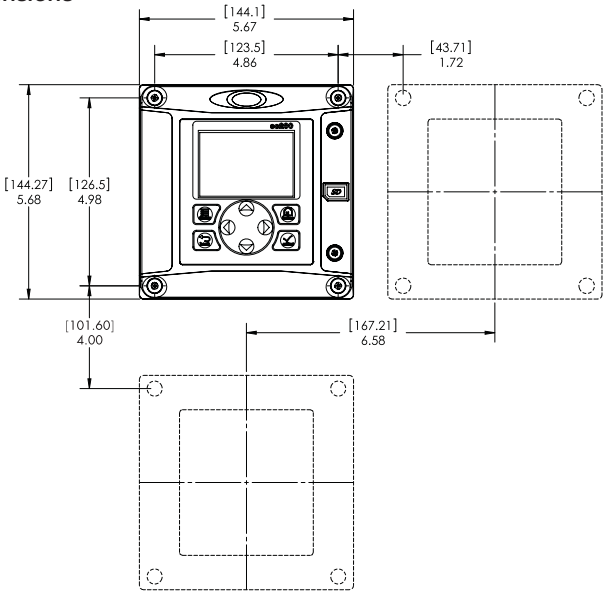

Minimum Spacing Dimensions
for Group Mounting

Top and Bottom Views

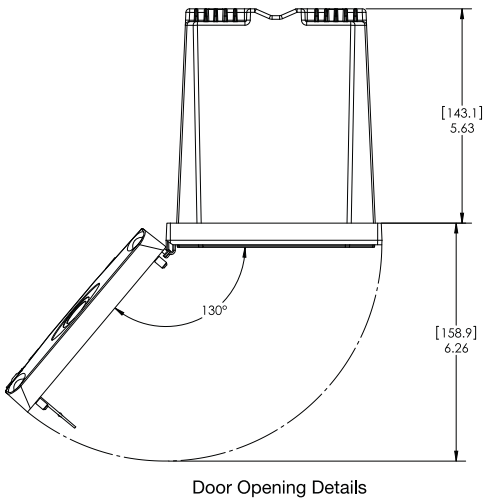

Door Opening Details

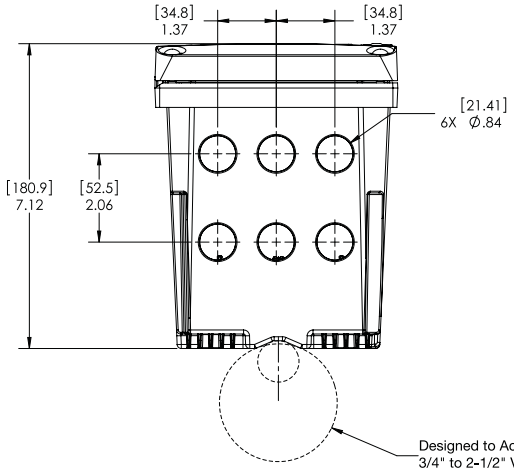

Ordering Information

sc200 for Hach Digital and Analog Sensors

LXV404.99.00552	sc200 controller, 2 channels, digital
LXV404.99.00502	sc200 controller, 1 channel, digital
LXV404.99.00102	sc200 controller, 1 channel, pH/DO
LXV404.99.00202	sc200 controller, 1 channel, Conductivity
LXV404.99.01552	sc200 controller, 2 channels, digital, Modbus RS232/RS485
LXV404.99.00112	sc200 controller, 2 channel, pH/DO

Note: Other Sensor combinations are available. Please contact Hach Technical Support or your Hach representative.

Note: Communication options (MODBUS, Profibus DPV1, and HART) are available. Please contact Hach Technical Support or your Hach representative.

sc200 for Ultrapure Sensors

9500.99.00602	sc200 controller, 1 channel, ultrapure conductivity
9500.99.00702	sc200 controller, 1 channel, ultrapure pH
9500.99.00662	sc200 controller, 2 channel, ultrapure conductivity
9500.99.00772	sc200 controller, 2 channel, ultrapure pH

Sensor and Communication Modules

9012900	Analog pH/ORP and DO module for GLI Sensors
9013000	Analog Conductivity module for GLI Sensors
9012700	Flow module
9012800	4-20 mA Input Module
9525700	Analog pH/ORP Module for Polymetron Sensors
9525800	Analog Conductivity Module for Polymetron Sensors
9013200	Modbus 232/485 Module
9173900	Profibus DP Module
9328100	HART Module
9334600	4-20 mA Output Module (Provides 3 additional mA Outputs)

Accessories

9220600	sc200 Weather and Sun Shield with UV Protection Screen
8809200	sc200 UV Protection Screen
9218200	SD card reader (USB) for connection to PC
9218100	4 GB SD card

HACH COMPANY World Headquarters: Loveland, Colorado USA

United States: 800-227-4224 tel 970-669-2932 fax orders@hach.com
Outside United States: 970-669-3050 tel 970-461-3939 fax int@hach.com
hach.com

LIT2665 Rev 7
K13 Printed in U.S.A.
©Hach Company, 2013. All rights reserved.
In the interest of improving and updating its equipment,
Hach Company reserves the right to alter specifications to equipment at any time.

HACH®
Be Right™

CS-403-603 : Identification sheet

VWTC PROJECT NUMBER:	5000218009	REV:	1
PROJECT NAME:	AEM AMARUQ	SUBMITTED TO (COMPANY):	AGNICO EAGLE MINES
ENGINEER:	Gabriel Hébert	SUBMITTED TO (RESPONSIBLE)	
PROJECT MANAGER:	Clément B	PROJECT NUM REFERENCE.:	
PHONE NUMBER:		LOT NUMBER:	

SUPPLIER	EQPT CODE	EQPT TAG NO	DIA	DESCRIPTION	INFO 1	INFO 2	INFO 3	APPLIC.	NOTE	REV
HACH	ST-403-303	AE2-011	N/A	PH METER PROBE - ACP	pH SENSOR/MANUFACTURER: HACH/MODEL: DPD1R1	N/A	N/A	ACTIFLO RECIRCULATION LINE MODIFICATION		rev1
HACH	ST-403-303	AE2-021	N/A	PH METER PROBE - ACP	pH SENSOR/MANUFACTURER: HACH/MODEL: DPD1R1	N/A	N/A	ACTIFLO RECIRCULATION LINE MODIFICATION		rev1

This page is intentionally left blank

DIFFERENTIAL pH AND ORP SENSORS

Applications

- Drinking Water
- Wastewater
- Industrial Water
- Power

Wide range pH glass
(HF resistant glass also available)

The smart choice for accurate, reliable, and dependable pH/ORP measurement.

Hach Digital pHD sc sensors are available in convertible (PEEK® or Ryton®), insertion, and sanitary body styles. Three electrodes are used in these sensors to increase measurement accuracy and eliminate sensor ground loops.

Differential Electrode Measurement Technique

This field-proven technique uses three electrodes instead of the two normally used in conventional pH sensors. Process and reference electrodes measure the pH differentially with respect to a third ground electrode. The end result is unsurpassed measurement accuracy, reduced reference junction potential, and elimination of sensor ground loops. These sensors provide greater reliability, resulting in less downtime and maintenance.

Patented Technology

The former GLI, now a Hach Company brand, invented the Differential Electrode Technique for pH measurement in 1970. The pHD™ sensor series (U.S. Patent Number 6395158B1, May 28, 2002) takes this field-proven technology to a new level.

Replaceable Salt Bridge/Protector

The unique, replaceable salt bridge holds an extraordinary volume of buffer to extend the working life of the sensor by protecting the reference electrode from harsh process conditions.

Built-in Encapsulated Preamp

Encapsulated construction protects the sensor's built-in preamp from moisture and humidity, ensuring reliable sensor operation. The preamp in the pHD analog sensor produces a strong signal, enabling the sensor to be located up to 1000 m (3280 ft.) from the analyzer.

Durable Body Materials

Both the digital and analog pH and ORP differential sensors feature a durable PEEK® body for chemical compatibility with most process solutions. For less aggressive solutions, Hach offers a Ryton® sensor in a convertible style for pH and ORP measurement. A sensor with a stainless steel body is available for immersion applications.

Versatile Mounting Styles

Sensors are available in four mounting styles—convertible, insertion, immersion, and sanitary.

Differential Sensor Warranty

Hach Company offers an outstanding warranty on its differential sensors. We will replace any differential sensor that fails due to defects in materials or workmanship within one year from the date of shipment, and up to 30 months on a prorated basis for any failure.

HACH®
Be Right™

Specifications*

pH Sensors

Some industrial applications require accurate measurement and control below 2 or above 12 pH. In these special cases, please contact Hach Technical Support for further details.

Measuring Range	-2 to 14 pH
Sensitivity	±0.01 pH
Stability	0.03 pH per 24 hours, non-cumulative
Operating Temperature	Digital Sensor: -5 to 70ºC (23 to 158ºF) Analog Sensor with Digital Gateway: 5 to 105ºC (23 to 221ºF) Immersion Sensor: 0 to 50ºC (32 to 122ºF)
Flow Rate	3 m (10 ft.) per second, maximum
Sensor Pressure/ Temperature Limits	Digital: 6.9 bar at 70ºC (100 psi at 158ºF) Analog: 6.9 bar at 105ºC (100 psi at 221ºF)
Built-in Temperature Element	NTC 300 ohm thermistor for automatic temperature compensation and analyzer temperature readout
Transmission Distance	100 m (328 ft.), maximum 1000 m (3280 ft.), maximum when used with a termination box
Sensor Cable (integral)	4 conductor cable with one shield and polyurethane jacket; rated to 105ºC (221ºF); 10 m (33 ft.) standard length
Wetted Materials	PEEK® or Ryton® (PVDF), salt bridge of matching material with Kynar® junction, glass process electrode, titanium ground electrode, and Viton® O-ring seals (Please contact Hach Technical Support for available wetted O-ring materials.)

ORP (Redox) Sensors

For best ORP measuring results in solutions containing zinc, cyanide, cadmium or nickel, Hach recommends using the pHD sc ORP sensor equipped with an optional gold electrode.

Measuring Range	-1500 to +1500 mV
Sensitivity	±0.5 mV
Stability	2 mV per 24 hours, non-cumulative
Operating Temperature	Digital Sensor: -5 to 70ºC (23 to 158ºF) Analog Sensor with Digital Gateway: -5 to 105ºC (23 to 221ºF) Immersion Sensor: 0 to 50ºC (32 to 122ºF)
Flow Rate	3 m (10 ft.) per second, maximum
Sensor Pressure/ Temperature Limits	Digital: 6.9 bar at 70ºC (100 psi at 158ºF) Analog: 6.9 bar at 105ºC (100 psi at 221ºF)
Built-in Temperature Element	NTC 300 ohm thermistor for analyzer temperature readout only—no automatic temperature compensation necessary for ORP measurement
Transmission Distance	100 m (328 ft.), maximum 1000 m (3280 ft.), maximum when used with a termination box
Sensor Cable (integral)	4 conductor cable with one shield and polyurethane jacket; rated to 105ºC (221ºF); 10 m (33 ft.) standard length
Wetted Materials	PEEK® or Ryton® (PVDF), salt bridge of matching material with Kynar® junction, glass and platinum (or plastic and gold) process electrode, titanium ground electrode, and Viton® O-ring seals

**Subject to change without notice.*

PEEK® is a registered trademark of ICI Americas, Inc.; Ryton® is a registered trademark of Phillips 66 Co.; Kynar® is a registered trademark of Pennwalt Corp.; Viton® is a registered trademark of E.I. DuPont de Nemours + Co.

Dimensions

Convertible Style

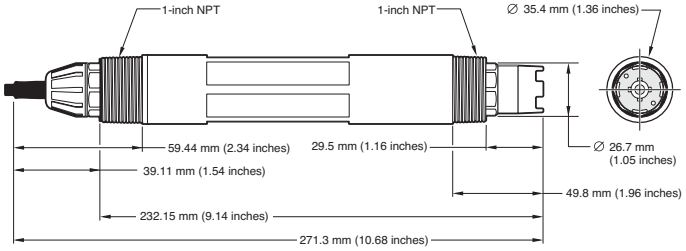

Insertion Style

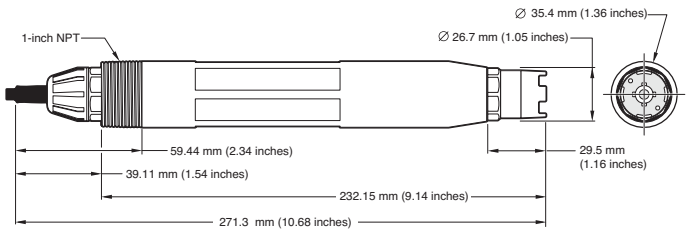

Continued on next page.

Dimensions *continued*

SanitaryStyle

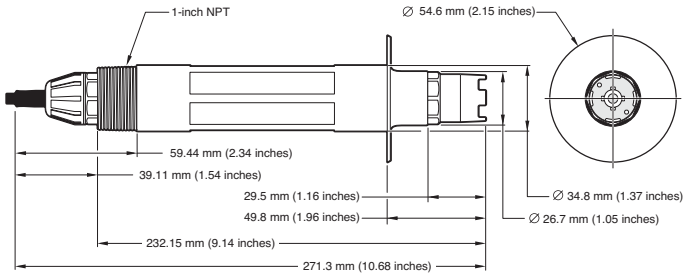

Immersion Style

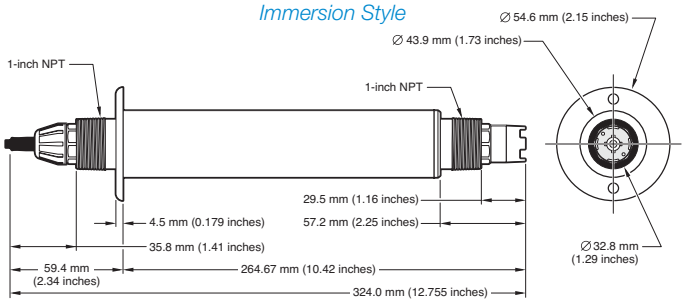

Ordering Information

pHD sc Digital Differential pH/ORP Sensors

All digital sensors include built-in digital electronics and integral 10 m (33 ft.) cable terminated with connector for the Hach sc Digital Controllers.

pH Sensors

Prod. No.	Body Material	Body Style*	Electrode Material	Max Temp
DPD1P1	PEEK[1]	Convertible	Glass, General Purpose	70ºC (158ºF)
DPD1P3	PEEK[1]	Convertible	Glass, HF-resistant	70ºC (158ºF)
DPD2P1	PEEK[1]	Insertion	Glass, General Purpose	70ºC (158ºF)
DPD3P1	PEEK[1]	Sanitary	Glass, General Purpose	70ºC (158ºF)
DPD1R1	Ryton[2]	Convertible	Glass, General Purpose	70ºC (158ºF)
DPD1R3	Ryton[2]	Convertible	Glass, HF-resistant	70ºC (158ºF)
DPS1	Stainless Steel	Immersion	Glass, General Purpose	50ºC (122ºF)

[1]Polyetheretherketone [2]Polyphenelene Sulfide

ORP Sensors

Prod. No.	Body Material	Body Style*	Electrode Material	Max Temp
DRD1P5	PEEK[1]	Convertible	Platinum	70ºC (158ºF)
DRD1P6	PEEK[1]	Convertible	Gold	70ºC (158ºF)
DRD2P5	PEEK[1]	Insertion	Platinum	70ºC (158ºF)
DRD1R5	Ryton[2]	Convertible	Platinum	70ºC (158ºF)
DRD1R6	Ryton[2]	Convertible	Gold	70ºC (158ºF)
DRS5	Stainless Steel	Immersion	Platinum	50ºC (122ºF)

[1]Polyetheretherketone [2]Polyphenelene Sulfide

Digitl Gateway

6120500 Digital Gateway, convert pHD analog sensors to digital output for connecting to sc1000 digital controller

pHD Analog Sensors

All analog sensors include built-in preamplifier and integral 4.5 m (15 ft.) cable terminated with stripped and tinned wires.

pH Sensors

Prod. No.	Body Material	Body Style*	Electrode Material	Max Temp
PD1P1	PEEK[1]	Convertible	Glass, General Purpose	95ºC (203ºF)
PD1P3	PEEK[1]	Convertible	Glass, HF-resistant	95ºC (203ºF)
PD2P1	PEEK[1]	Insertion	Glass, General Purpose	95ºC (203ºF)
PD3P1	PEEK[1]	Sanitary	Glass, General Purpose	95ºC (203ºF)
PD1R1	Ryton[2]	Convertible	Glass, General Purpose	95ºC (203ºF)
PD1R3	Ryton[2]	Convertible	Glass, HF-resistant	95ºC (203ºF)

[1]Polyetheretherketone [2]Polyphenelene Sulfide

ORP Sensors

Prod. No.	Body Material	Body Style*	Electrode Material	Max Temp
RD1P5	PEEK[1]	Convertible	Platinum	95ºC (203ºF)
RD1P6	PEEK[1]	Convertible	Gold	95ºC (203ºF)
RD2P5	PEEK[1]	Insertion	Platinum	95ºC (203ºF)
RD1R5	Ryton[2]	Convertible	Platinum	95ºC (203ºF)
RD1R6	Ryton[2]	Convertible	Gold	95ºC (203ºF)

[1]Polyetheretherketone [2]Polyphenelene Sulfide

**Definitions of body styles:*

- *Convertible – 1-inch NPT threads at both ends, designed for tee-mounting or other flow through mountings, and pipe mounting for immersion*
- *Insertion – no threads on the electrode end, designed for use with insertion valve assembly*
- *Sanitary – 2-inch flange for a tri-clover style fitting*
- *Immersion – used with chain mounting or pipe mounting*

Continued on next page.

Ordering Information *continued*

pHD sc Digital and pHD Analog Sensor Accessories

Cables

Extension cables are used only with digital sensors or digital gateways when connecting to an sc Digital Controller.

6122400 Digital Extension Cable, 1 m (3.2 ft.)
5796000 Digital Extension Cable, 7.7 m (25 ft.)
5796100 Digital Extension Cable, 15 m (50 ft.)
5796200 Digital Extension Cable, 31 m (100 ft.)

Interconnect cables are used only with analog sensors, junction box, and controller.

1W1100 Analog Interconnect Cable, order per foot

Digital Termination Box

Required when the cable between the sensor/gateway and sc Digital Controller is 100 m (328 ft.) to 1000 m (3280 ft.)

5867000 Digital Termination Box

Analog Junction Box

Required when the cable between the analog sensor and controller is greater than standard sensor cable. Includes terminal strip and gasket.

60A2053 Junction Box, Surface-mount, aluminum (includes mounting hardware)
60A9944 Junction Box, Pipe-mount, PVC (for 1/2-inch diameter pipe, includes mounting hardware)
60G2052 Junction Box, Pipe-mount, PVC (for 1-inch diameter pipe, includes mounting hardware)
76A4010-001 Junction Box, NEMA 4X (no mounting hardware included)

Salt Bridges

The double junction salt bridge on the standard cell of all Hach pHD sensors is field-replaceable.

SB-P1SV PEEK Sensor and Salt Bridge Body, Kynar (PVDF) Outer Junction
SB-P2SV PEEK Sensor and Salt Bridge Body, Ceramic Outer Junction
SB-P1SP[1] PEEK Sensor and Salt Bridge Body, Kynar (PVDF) Outer Junction
SB-R1SV RytonSensor and Salt Bridge Body Kynar (PVDF) Outer Junction

[1]*Special perfluoroelastomer O-ring in place of the Viton® O-ring*

pHD Sensor Reagents and Standards

25M1A1025-115 Standard Cell Solution, 500 mL
25M8A1002-101 Gel Powder, for high temperature applications, 2 g

pH Buffers

2283549 pH 7, 500 mL (1 pint)
2283449 pH 4, 500 mL (1 pint)
2283649 pH 10, 500 mL (1 pint)

ORP Reference Solutions (in resealable plastic bottles)

25M2A1001-115 200 mV 500 mL (1 pint)
25M2A1002-115 600 mV 500 mL (1 pint)

Mounting Hardware for pHD sc Differential Sensors

Sanitary Mount

MH018S8SZ 316 SS

Includes 2-inch sanitary tee and heavy-duty clamp. Cap and EPDM compound gasket supplied with sensor; can be ordered separately.

Union Mount

6131300 CPVC
6131400 316 SS

Includes standard 1-1/2 inch tee, union pipe with adapter, sealing hub, and lock ring and Viton® O-ring.

Flow-through Mount

MH334N4NZ CPVC
MH314N4MZ 316 SS

Includes a standard 1-inch tee in respective material.

Insertion Mount

Digital		*Analog*	
5646300	CPVC	**5646400**	CPVC
5646350	316 SS	**5646450**	316 SS

Includes a 1-1/2 inch ball valve, 1-1/2 inch NPT close nipple, sensor adapter with two Viton® O-rings and wiper, extension pipe, pipe adapter, back tube, and lock ring.

Immersion Mount

Standard Hardware

Digital		*Analog*	
6136400	CPVC	**MH434A00B**	CPVC
6136500	316 SS	**MH414A00B**	316 SS

Includes 1-inch by 4 ft. pipe and 1-inch x 1-inch NPT coupling. (Pipe-mount junction box with terminal strip included in analog hardware.)

Handrail Hardware

MH236B00Z CPVC

Includes 1-1/2 inch by 7.5 ft. CPVC pipe, and swivel/pivot/ pipe clamp assembly.

Chain Mount Hardware

2881900 316 ss

Includes stainless steel bail, nuts, and washers. Does not include chain. To be used with stainless steel immersion sensor only.

Ball Float Hardware

6131000 CPVC

Includes 1-1/2 inch by 7.5 ft. CPVC pipe, ball float assembly, and swivel/pivot/ pipe clamp assembly.

HACH COMPANY World Headquarters: Loveland, Colorado USA

United States: 800-227-4224 tel 970-669-2932 fax orders@hach.com
Outside United States: 970-669-3050 tel 970-461-3939 fax int@hach.com
hach.com

LIT2467 Rev 2
A13 Printed in U.S.A.
©Hach Company, 2013. All rights reserved.
In the interest of improving and updating its equipment,
Hach Company reserves the right to alter specifications to equipment at any time.

Be Right™

CS-413-310 : Identification sheet

VWTC PROJECT NUMBER:	5000218009	REV:	1
PROJECT NAME:	AEM AMARUQ	SUBMITTED TO (COMPANY):	AGNICO EAGLE MINES
ENGINEER:	Gabriel Hébert	SUBMITTED TO (RESPONSIBLE)	
PROJECT MANAGER:	Clément B	PROJECT NUM REFERENCE.:	
PHONE NUMBER:		LOT NUMBER:	

SUPPLIER	EQPT CODE	EQPT TAG NO	DIA	DESCRIPTION	INFO 1	INFO 2	INFO 3	APPLIC.	NOTE	REV
TECKNO VALVE	ST-413-359	PI2-011	4.5"	DIAPHRAGM PRESSURE GAUGE	PRESSURE GAUGE C/W ISOLATOR // MANUFACTURER : ASHCROFT // MODEL 45-1009SL-04L-60#-XAJ C/W SEAL 50-101SS-04T-XCG	N/A	N/A	ACTIFLO RECIRCULATION LINE MODIFICATION		rev1
TECKNO VALVE	ST-413-359	PI2-012	4.5"	DIAPHRAGM PRESSURE GAUGE	PRESSURE GAUGE C/W ISOLATOR // MANUFACTURER : ASHCROFT // MODEL 45-1009SL-04L-60#-XAJ C/W SEAL 50-101SS-04T-XCG	N/A	N/A	ACTIFLO RECIRCULATION LINE MODIFICATION		rev1
TECKNO VALVE	ST-413-359	PI2-021	4.5"	DIAPHRAGM PRESSURE GAUGE	PRESSURE GAUGE C/W ISOLATOR // MANUFACTURER : ASHCROFT // MODEL 45-1009SL-04L-60#-XAJ C/W SEAL 50-101SS-04T-XCG	N/A	N/A	ACTIFLO RECIRCULATION LINE MODIFICATION		rev1
TECKNO VALVE	ST-413-359	PI2-022	4.5"	DIAPHRAGM PRESSURE GAUGE	PRESSURE GAUGE C/W ISOLATOR // MANUFACTURER : ASHCROFT // MODEL 45-1009SL-04L-60#-XAJ C/W SEAL 50-101SS-04T-XCG	N/A	N/A	ACTIFLO RECIRCULATION LINE MODIFICATION		rev1

This page is intentionally left blank

ASHCROFT®
Trust the shield.®

Type 1009 4½″ & 6″ Stainless Steel Gauge

PLUS! Performance

- *4½″ and 6″ SS gauges*
- *Dry and liquid-filled versions*
- *Micrometer adjustable pointer*
- *Variety of Bourdon tube materials*
- *ASME Grade 1A, ±1% of span accuracy*
- *New PLUS!™ Performance Option:*
  - *Liquid-filled performance in a dry gauge*
  - *Fights vibration and pulsations with out liquid-fill headaches*
  - *Order as option XLL*

The 4½″ and 6″ Ashcroft® Type 1009 gauges are suitable where ambient corrosion is a major concern. Its attractive stainless steel case and ring provides excellent resistance to chemical, weather and corrosion attack. This 1009 has many optional features that allow a user to develop a basic or special product specification. The 1009 is part of the extensive line of Ashcroft stainless steel pressure gauges.

The gauge is available dry, liquid-filled weatherproof or hermetically sealed and now with ***PLUS!***™ Performance option.

TEMPERATURE LIMITS

	Ambient	Process	Storage
Dry	–20°F/200°F[1] (–29°C/93°C)	–20°F/250°F[1] (–29°C/121°C)	–40°F/250°F (–40°C/121°C)
PLUS!™	–40°F/150°F (–40°C/66°C)	–40°F/200°F (–40°C/93°C)	–40°F/150°F (–40°C/66°C)
LF (glycerin)	20°F/150°F (7°C/66°C)	20°F/150°F (7°C/93°C)	0°F/150°F (–18°C/66°C)
(silicone)	–40°F/150°F (–40°C/66°C)	–40°F/200°F (–40°C/93°C)	–40°F/150°F (–40°C/66°C)
(Halocarbon®)	–40°F/150°F (–40°C/66°C)	–40°F/200°F (–40°C/93°C)	–40°F/150°F (–40°C/66°C)

Note: Other than discoloration of the dial and hardening of the gasketing that may occur as ambient or process temperatures exceeds 150°F, non-liquid-filled gauges with standard glass windows, can withstand continuous operating temperatures up to 250°F (121°C). Liquid-filled gauges can withstand 200°F (93°C) but glycerin fill and acrylic window will tend to yellow. Accuracy at temperatures above or below the reference ambient temperature of 68°F will be affected by approximately .4% per 25°F. Gauges with welded joints will withstand 750°F (450°F (232°C) with silver brazed joints) for short times without rupture, although other parts of the gauge will be destroyed and calibration will be lost. For continuous use and for process or ambient temperatures above 250°F (121°C), a diaphragm seal or capillary or siphon is recommended.

PRODUCT SPECIFICATIONS

Model Number: 1009
Accuracy: 1% full scale (Grade A, ASME B40.100)
Ranges: Vacuum – 30,000 psi
Dial Size: 4½″ and 6″ diameter
Case: Open front
Case Material: 304 SS
Weather Protection: Dry Case: IP54
Liquid filled or hermetically sealed case: IP 65
Ring Type: 304 SS, bayonet
Window: Glass
Dial: Aluminum, white background, black figures and gradua-
tions.
Pointer: Micrometer adjustable
Movement: 400 SS (conventional)
Bourdon Tube and Socket: Bronze/Brass (A)[1]
316L SS/316L SS (S)[2]
Monel®/Monel® (P)[2]
Connection Size: ¼, ½ NPT
Connection Location: Lower and back

PRODUCT OPTIONS

***PLUS!* Performance:** XLL
Fill: L-Glycerin-Standard
XGV-Silicone-Optional
XGX-Halocarbon®-Optional
Weatherproof Hermetic Seal: XLJ
Panel Mount Front Flange: XFF
Panel Mount U-Clamp: XUC
Surface Mount: XBF
Oxygen Clean: X6B
Window
Acrylic: XPD
Shatterproof Glass: XSG

(1) Joints silver brazed
(2) Joints welded

45/60 1009 GAUGE PRODUCT CODING

Typical Code:

45	1009	S	L	04	L	XSG	100#	
SIZE	TYPE NUMBER	SYSTEM (Tube & Socket)	CASE DESIGN	PROCESS CONN. SIZE	CONNECTION LOCATION	VARIATIONS	RANGE	ENGINEERING UNITS[1]
(45) 4½″ (60) 6″	1009	Code Bourdon Tube Socket (A) Phos Brz[1] Brass (S) AISI 316SS[2] AISI 316SS (P) K Monel[2] Monel 400 (1) To 1000 psi (2) To 30,000 psi	Code Description (L) Liquid Filled (glycerin std.)	Code NPT (02) ¼ Male[1] (04) ½ Male[1] (09) 9/16-18 UNF-2B Aminco (standard for high pressure >20,000 psi (1) Max Pressure 20,000 psi	Code Description (L) Lower (B) Back (D) Side Conn. 3 o'clock (E) Side Conn. 9 o'clock (T) Top	(GV) Silicone Case Fill (GX) Halocarbon Case Fill (NH) SS Wired Tag (TS) Throttle Screw[1] (6B) Oxygen Service (PD) Acrylic Window[1] (SG) Safety Glass (LJ) Hermetically Sealed Liquid Fillable (IP65) (EP) Maximum Pointer, Adjustable (SH) Red Set Hand, Stationary (LL) ***PLUS!***™ Performance (FF) Flush Mounting Ring (C4) Individual Calibration Chart (1) Standard with hermetically sealed or liquid filled gauge.	15 30 60 100 160 200 300 400 600 1000 1500 2000 3000 5000 6000 10,000 20,000 30,000	(#) PSI (BR) Bar (KG) Kilograms/CM² (KP) Kilopascal (IMV) Inches of Mercury Vacuum (1) See website for more units of measure

All specifications are subject to change without notice.
All sales subject to standard terms and conditions.
© Ashcroft Inc. 2017 Rev. 08/17

Ashcroft Inc., 250 East Main Street, Stratford, CT 06614 USA
Tel: 203-378-8281 • Fax: 203-385-0408
email: info@ashcroft.com • www.ashcroft.com

ASHCROFT®
Trust the shield.®

Type 1009 4½″ & 6″ Stainless Steel Gauge

DIMENSIONS

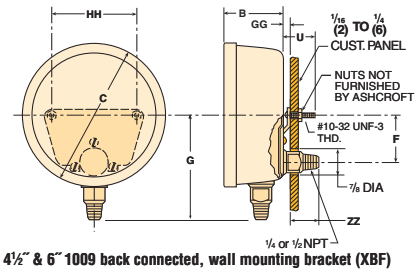

4½″ & 6″ 1009 back connected, wall mounting bracket (XBF)

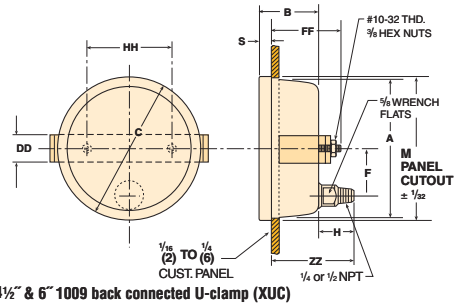

4½″ & 6″ 1009 back connected U-clamp (XUC)

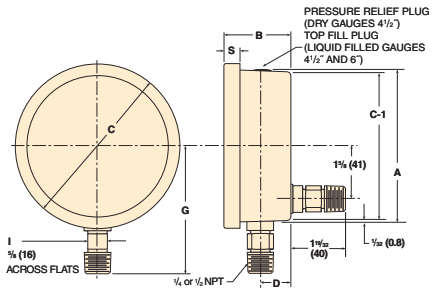

4½″ 1009 lower or lower back connected

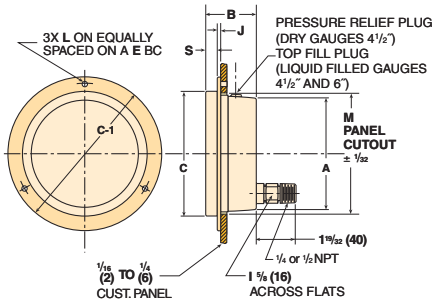

4½″ & 6″ 1009 back connected, front flange (XFF)

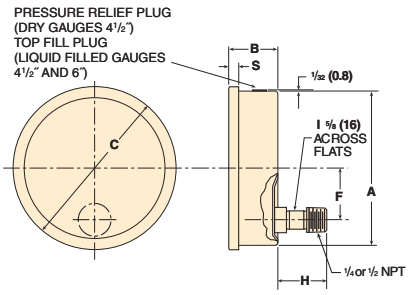

6″ 1009 back connected

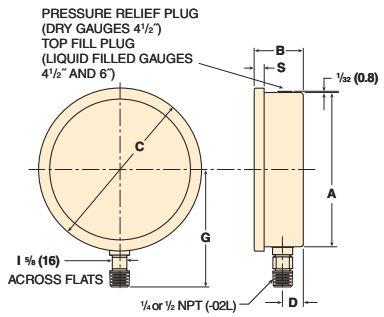

6″ 1009 lower connected

Gauge Size	A	B	C	C-1	D	DD	E	F	FF	G	GG	H	HH	I	J	L	M	S	U	ZZ	Weight Dry	Weight LF
4½ (100)	4 23/32 (120)	2 1/16 (52)	5 3/32 (129)	6 1/4 (159)	15/16 (24)	1 (25)	5 11/16 (144)	1 5/8 (41)	2 5/16 (59)	3 15/16 (100)	3/16 (5)	1 5/8 (41)	3 (76)	5/8 (16)	5/32 (4)	7/32 (6)	4 13/16 (122)	15/32 (12)	1 7/16 (37)	3 3/32 (83)	1.75# .79kg	2.40# 1.1kg
6 (160)	6 5/16 (160)	2 (51)	6 21/32 (169)	7 41/64 (194)	27/32 (22)	1 (25)	7 1/32 (179)	1 5/8 (41)	2 5/8 (67)	4 13/16 (122)	3/16 (5)	1 5/8 (41)	4 1/2 (114)	5/8 (16)	1/16 (2)	1/4 (7)	6 7/16 (163)	13/32 (10)	1 7/16 (37)	3 3/16 (81)	2.25# 1kg	4.12# 1.85k

Note: Dimensions in brackets ( ) are millimeters.

Standard Ranges (Metric equivalents available)

Pressure – psi

Range	Figure interval	Minor Graduation
0/15	1	0.2
0/30	5	0.5
0/60	5	0.5
0/100	10	1
0/160	20	2
0/200	20	2
0/300	50	5
0/400	50	5
0/600	50	10
0/800	100	10
0/1000	100	10
0/1500	200	20
0/2000	200	20
0/3000	500	20
0/5000	500	50
0/6000	500	50
0/10,000	1000	100
0/20,000	2000	250
0/30,000	5000	200

Compound

Range	Figure Interval		Minor Grads	
	in Hg	psi	in Hg	psi
30″ Hg/15 psi	5	3	0.5	0.2
30″ Hg/30 psi	10	5	1	0.5
30″ Hg/60 psi	10	10	1	1
30″ Hg/100 psi	10	10	2	1
30″ Hg/150 psi	10	20	5	2
30″ Hg/200 psi	30	20	5	2
30″ Hg/300 psi	30	50	5	2

Vacuum

Range	Figure Interval	Minor Grads
30/0 in. Hg	5 in	0.2 in
34/0 ft H_2O	5 ft	0.5 ft

All specifications are subject to change without notice.
All sales subject to standard terms and conditions.
© Ashcroft Inc. 2017 Rev. 02/17

Ashcroft Inc., 250 East Main Street, Stratford, CT 06614 USA
Tel: 203-378-8281 • Fax: 203-385-0408
email: info@ashcroft.com • www.ashcroft.com

ASHCROFT®
Trust the shield.®

Type 100 Series Threaded Capsule Diaphragm Seal

TYPE 100 SHOWN

When isolation of the process from an instrument is required, Ashcroft® offers a comprehensive line of diaphragm seals. Seal types include threaded, flanged, in-line threaded, in-line flanged, in-line socket weld, in-line butt weld, saddle and sanitary seals. Also available is a complete offering of isolation or iso-rings and isolation or iso-spools.

APPLICATIONS

- Elevated process temperatures
- Corrosive service
- Isolation of the process for safety
- Suspended solids in the process
- Sanitary connections
- Minimize process dead leg
- Ease of cleaning between batches

FEATURES

- The top housing and diaphragm capsule are interchangeable with all Ashcroft bottom housings.
- A fill/bleed connection is standard, which permits filling the seal and instrument simultaneously after evacuation and allows the fill to flow into the completed unit.
- A Viton O-ring, compatible with all standard fill fluids, and a Teflon back-up ring provide a seal between the diaphragm capsule and the top housing.
- A thin Teflon PTFE gasket between the diaphragm and bottom housing ensures a leak-tight corrosion resistant seal even at high pressure.
- Top housing and pressure instrument are removable.
- Continuous-duty design will prevent loss of process fluid if pressure instrument is removed or fails.

SPECIFICATIONS

Model Number:	Type 100, 101, 102, 103, 104, 105, 106, 107, 108
Process Connection Size:	See Table A (Pg. 2)
Instrument Connection Size:	¼, ½ NPT
Diaphragm Material:	See Table B (Pg. 2)
Bottom Housing Materials:	See Table C (Pg. 2)
Filling Fluid:	Glycerin, Halocarbon, Silicone, Stylthern

OPTIONS	**Code**
316 stainless steel top housing	**YT**
Stainless steel clamp rings and flanged ring – includes 300 stainless steel clamping bolts (1500 psi max)	**SE**
300 series stainless steel clamping bolts (max pres is 1500 psi)	**SB**
Pipe plugs for flushing connections – pipe plugs are available in the same materials as bottom housings per Table C (Pg. 2)	**PU**
5000 psi pressure rating Threaded inlet and metal diaphragm only	**HP**
Welded instrument to diaphragm seal	**DU**
Dual flushing connections (½ NPT) (Limited to 2″ thru 3″ flanged seals	**DB**
Ring joint (Flanged seal only)	**RJ**
Flat face (Flanged seal only)	**FF**
Clean for gaseous oxygen or strong oxidizing agent applications	**6B**

All specifications are subject to change without notice.
All sales subject to standard terms and conditions.
© Ashcroft Inc. 2016 Rev. 01/16

Ashcroft Inc., 250 East Main Street, Stratford, CT 06614 USA
Tel: 203-378-8281 • Fax: 203-385-0408
email: info@ashcroft.com • www.ashcroft.com

ASHCROFT®
Trust the shield.®

Type 100 Series Threaded Capsule Diaphragm Seal

TYPE 100 SERIES THREADED CAPSULE SEAL TYPES

Type 100 –Threaded
¼, ½, ¾, 1 NPT

Type 101 –Threaded
with flushing connection
¼, ½, ¾, 1 NPT

Type 102 – Raised Face Flanged
½˝, ¾˝, 1˝, 1½˝, 2˝, 3˝

Type 103 – Raised Face Flanged
½˝, ¾˝, 1˝, 1½˝, 2˝, 3
with flushing conection

Type 104 – In-line Threaded
¼, ½, ¾, 1 NPT

Type 105 – Saddle
3˝, 4˝ pipe only

Type 106 – In-line Flanged
½˝, ¾˝, 1˝, 1½˝, 2˝, 3˝, 4˝, 6˝, 8˝

Type 107 – In-line Socket Weld
½˝, ¾˝, 1˝, 1½˝, 2˝

Type 108 – In-line Butt Weld
¼˝, ½˝, ¾˝, 1˝, 1½˝, 2˝

Table A – Process Connection/Type Number

	Process Connection Size/Code—Inches											Type Number
	Size	¼	½	¾	1	1½	2	3	4	6	8	
Process Connection	Code	25	50	75	10	15	20	30	40	60	80	
Threaded–female NPT		•	•	•	•	•						100
Threaded–female NPT (with flushing conn.)		•	•	•	•	•						101
Flanged(1)			•	•	•	•	•	•				102
Flanged (with flushing conn.)			•	•	•	•	•	•				103
In-line—threaded NPT		•	•	•	•							104
Saddle								•	AND LARGER			105
In-line—butt weld		•	•	•	•	•	•					108
In-line—flanged(2)			•	•	•	•	•	•	•	•	•	106
In-line—socket weld		•	•	•	•	•	•					107

Pressure Ratings—All 2500 psi except flanged seals are per ASME B 16.5, temperature limit determined by diaphragm, bottom housing and/or filling fluid.

Table B – Diaphragm Material

Material	Code
316L stainless steel	S
304L stainless steel	C
Monel 400	P
Nickel	N
Carpenter 20	D
Tantalum	U
Hastelloy B	G
Hastelloy C 22(3)	J
Hastelloy C 276(3)	H
Halar Coated Monel	R
Gold Plated 304 SS	W

Table C – Housing Materials

Bottom	Code
Steel	B
304L SS	C
316L SS	S
Hastelloy B	G
Hastelloy C 22(3)	J
Hastelloy C 276(3)	H
Carpenter 20	D
Monel “400”	M
Inconel “600”	W
Nickel	N
PVC(4)(9)	V
Tantalum clad SS(5)	SU
Halar coated SS(6)	BH
Teflon flanged steel(7)	T
Kynar(8)(9)	KY
Titanium	TI

Table D – Instrument Connection

Size – NPT	Code
¼	02T
½	04T

Table E – Filling Fluid

Filling	Service	Connection to Instrument	Temperature Range °F	Code
Glycerin	Pressure	Direct Only	0/400	CG
Silicone	Pressure/Vacuum	Direct or Flexible Line	–40/500	CK, DJ
Halocarbon	Pressure/Vacuum in presence of strong oxidizing agent	Direct or Flexible Line	–70/300	CF
Syltherm	Pressure/Vacuum	Direct or Flexible Line	–40/750	HA

Notes:

(1) 150, 300, 600, 900, 1500 & 2500 class flanges.
(2) 1˝ 150 thru 8˝ 300 class flanges only.
(3) Use on applications where NACE standard MR-01-75/ISO 1516 w/Sept. 2005 corrigendums.
(4) Maximum Press./Temp.
Threaded: 200 psi/74°F, 125 psi/125°F, 80 psi/150°F.
Flanged: 75 psi/100°F.
(5) Type 102 only.
(6) Type 102 only – Temp. Limits: –40/300°F.
(7) Only available in 1˝, 1½˝, & 2˝ 150 class, Types 102. Max. Press./Temp. – 270 psi and 150°F. Consult factory for conditions beyond these limits.
(8) Maximum Pressure/Temp.: 200 psi and 180°F.
(9) Type 100: ¼ or ½ NPT only. Larger sizes offered with solvent weld joint. N/A in 101 or 103 design.

Monel is a registered trademark of Huntington Alloys, Inc.
Hastelloy is a registered trademark of Cabot Corp.
Halocarbon is a registered trademark of Halocarbon Products
GYLON 3510 is a registered trademark of Garlock Inc.

HOW TO ORDER:

1. **From Table A...**select TYPE NUMBER based on process connection, process connection size and diaphragm type/construction. (e.g., Threaded/1˝/capsule–code-10-100)
2. **From Table B...**select DIAPHRAGM MATERIAL. (e.g., 316L stainless steel–code S)
3. **From Table C...**select BOTTOM HOUSING MATERIAL. (e.g., 316 stainless steel–code S)
4. **From Table D...**select INSTRUMENT CONNECTION size. (e.g., 1/4 NPT–code 02T)
5. **From Table E...**select FILLING FLUID, if diaphragm seal will be attached to instrument. (e.g., Glycerin–code CG)

Typical code: 10–100SS–02T–CG

All specifications are subject to change without notice.
All sales subject to standard terms and conditions.
© Ashcroft Inc. 2016 Rev. 01/16

Ashcroft Inc., 250 East Main Street, Stratford, CT 06614 USA
Tel: 203-378-8281 • Fax: 203-385-0408
email: info@ashcroft.com • www.ashcroft.com

ASHCROFT®
Trust the shield.®

Type 100 Series Threaded Capsule Diaphragm Seal

DIMENSIONS

Type 100 – Threaded
¼, ½, ¾, 1 NPT

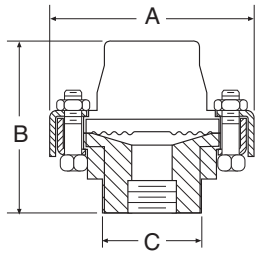

A		B		C	
in	mm	in	mm	in	mm
3¾	(95)	2⅞	(73)	1 13/16	(46)

Type 101 –Threaded
¼, ½, ¾, 1 NPT (with flushing conection)

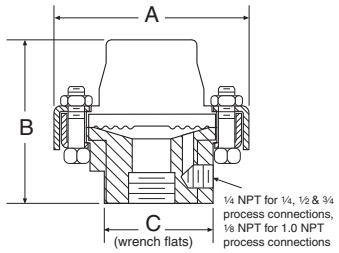

A		B		C	
in	mm	in	mm	in	mm
3¾	(95)	2⅞	(73)	1 13/16	(46)

Type 102 – Flanged
½,″ ¾,″

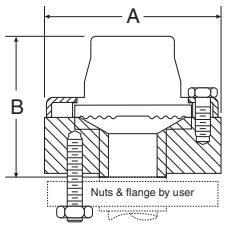

Flange Size	Rating #	A in	A mm	B in	B mm
	150	3½	(89)	2 15/16	(75)
½″	300 or 600	3¾	(95)	3	(76)
	900 or 1500	4¾	(121)	3 3/16	(81)
	150	3⅞	(98)	2 13/16	(71)
¾″	300 or 600	4⅝	(117)	3	(76)
	900 or 1500	5⅛	(130)	3 3/16	(81)

Type 102 – Flanged 1″ (raised face only)
one piece bottom housing, with and without flushing connection

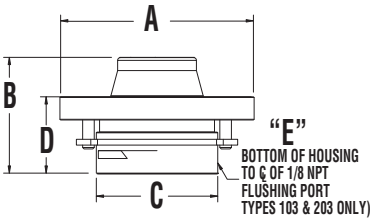

Flange Size	Rating #	A in.	A mm	B in.	B mm	C in.	C mm
1	150 300 or 600	4-1/4 5	(100) (127)	2-9/16	(65)	1-23/32	(69)

Flange Size	Rating #	D in.	D mm	103 & 203 only E in.	E mm
1	150 300 or 600	1-5/8	(41)	3/8	(9)

Type 102 – Flanged 1″ (raised face only)
one piece bottom housing, with and without flushing connection

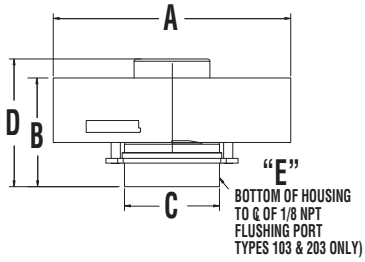

Flange Size	Rating #	A in.	A mm	B in.	B mm	C in.	C mm
1	900 or 1500 2500	5-7/8 6-1/4	(149) (159)	2-7/8	(73)	2-1/4	(57)

Flange Size	Rating #	D in.	D mm	103 & 203 only E in.	E mm
1	900 or 1500 2500	3-3/8	(86)	3/8	(9)

Type 102 – Flanged (raised face only)
1½,″ 2,″ 3″ one piece bottom housing - all materials except PVC, Teflon and Kynar

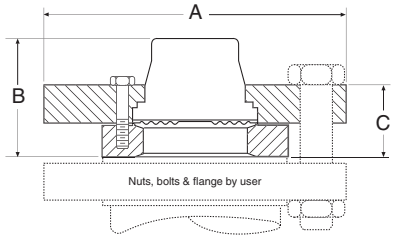

Flange Size	Rating #	A in	A mm	B in	B mm	C in	C mm
	150	5	(127)			1½	(38)
1½″	300 or 600	6¼	(159)	2⅜	(61)	1½	(38)
	900 or 1500	7	(178)			1½	(38)
	150	6	(152)			1⅜	(35)
2″	300 or 600	6½	(165)	1 15/16	(49)	1½	(38)
	900 or 1500	8½	(216)			2⅛	(54)
	150	7½	(191)	2	(51)	1⅝	(41)
3″	300 or 600	8¼	(206)	2 1/16	(52)	1⅞	(47)
	900 or 1500	10½	(267)	2 11/16	(68)	3¼	(82)

Type 102 – Flanged 1″ (raised face only)
two piece bottom housing, 1½,″ 2,″ - PVC, Teflon and Kynar

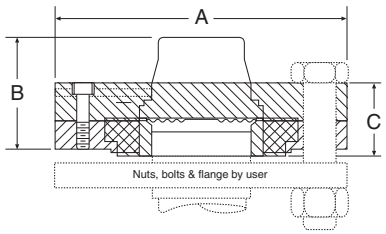

Flange Size	Rating #	A in	A mm	B in	B mm	C in	C mm
1½″	150	5	(127)	2 5/16	(59)	1 13/32	(39)
2″	150	6	(152)	2⅛	(54)	1 9/16	(40)

Type 103 – Flanged
½,″ ¾″ (with flushing conection)

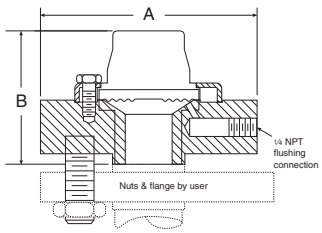

Flange Size	Rating #	A in	A mm	B in	B mm
	150	3½	(89)	2 15/16	(75)
½″	300 or 600	3¾	(95)	3	(76)
	900 or 1500	4¾	(121)	3 3/16	(81)
	150	3⅞	(98)	2 13/16	(71)
¾″	300 or 600	4⅝	(117)	3	(76)

All specifications are subject to change without notice.
All sales subject to standard terms and conditions.
© Ashcroft Inc. 2016 Rev. 01/16

Ashcroft Inc., 250 East Main Street, Stratford, CT 06614 USA
Tel: 203-378-8281 • Fax: 203-385-0408
email: info@ashcroft.com • www.ashcroft.com

Type 100 Series Threaded Capsule Diaphragm Seal

DIMENSIONS

Type 103 – Flanged 1½˝, 2˝, 3˝ (raised face only)
one piece bottom housing with flushing connection

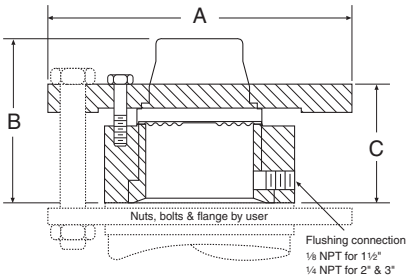

Flange Size	Rating #	A in	A mm	B in	B mm	C in	C mm
1½˝	150	5	(127)	3	(76)	2 1/16	(52)
	300 or 600	6¼	(159)				
	900 or 1500	7	(178)				
2˝	150	6	(152)	3 11/32	(84)	2⅜	(60)
	300 or 600	6½	(165)				
	900 or 1500	8½	(215)				
3˝	150	7½	(191)	3 3/32	(79)	2 7/32	(56)
	300 or 600	8¼	(210)	3 3/16	(81)	2 7/32	(57)
	900	9½	(241)	3 23/32	(94)	2¾	(70)
	1500	10½	(267)				

Type 105 – Saddle
4˝ Pipe only

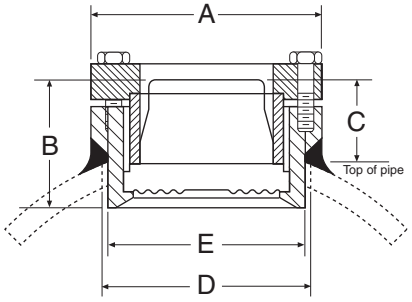

A in	A mm	B in	B mm	C in	C mm	D in	D mm	E in	E mm
3½	(89)	1 15/16	(50)	1 3/16	(31)	3	(76)	2 31/32	(75)

Type 104 – In-Line Threaded
¼, ½, ¾, 1 NPT

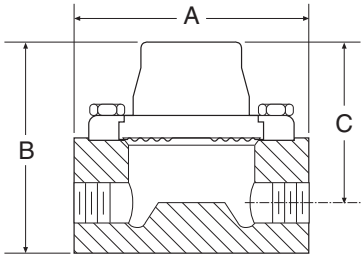

Process Connection	A in	A mm	B in	B mm	C in	C mm
¼ NPT	4	(102)	2 5/8	(67)	2 1/8	(54)
½ NPT			3⅝	(92)	2¾	(70)
¾ NPT			3⅞	(98)	3	(76)
1 NPT			3⅞	(98)	3	(76)

Type 106 – In-Line Flanged
½˝, 1˝, 1½˝, 2˝, 3˝

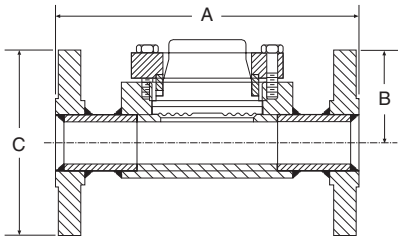

Flange Size	Rating #	A in	A mm	B in	B mm	C in	C mm
½˝	150	7	(178)	2 7/16	(62)	3½	(89)
	300	7	(178)			3⅞	(98)
1˝	150	7	(178)	2 7/16	(62)	4¼	(108)
	300	8	(203)			4⅞	(123)
1½˝	150	8	(203)	2 11/16	(68)	5	(127)
	300	9	(229)			6⅛	(155)
2˝	150	9	(229)	2 15/16	(75)	6	(152)
	300	10	(254)			6½	(165)
3˝	150	11	(279)	3⅝	(92)	7½	(229)
	300	12	(305)			8¼	(254)

Type 105 – Saddle
3˝ Pipe only

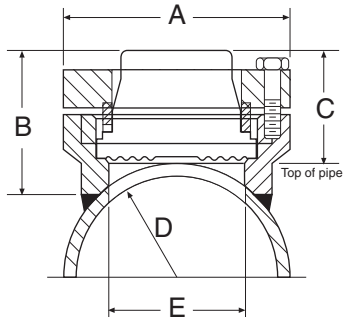

A in	A mm	B in	B mm	C in	C mm	D in	D mm	E in	E mm
3½	(89)	2¼	(57)	1⅞	(48)	1¾	(44)	2⅛	(54)

Type 106 – In-Line Flanged
4˝, 6˝, 8˝

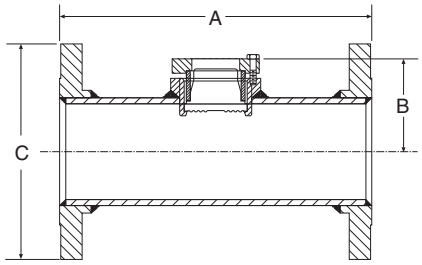

Flange Size	Rating #	A in	A mm	B in	B mm	C in	C mm
4˝	150	13	(330)	3⅜	(86)	9	(229)
	300	14	(356)			10	(254)
6˝	150	16	(406)	4 7/16	(113)	11	(279)
	300	17	(432)			12½	(318)
8˝	150	16	(406)	5 7/16	(138)	13½	(343)

Type 107 – In-Line Welded
¼˝, ½˝, ¾˝, 1˝, 1½˝, 2˝

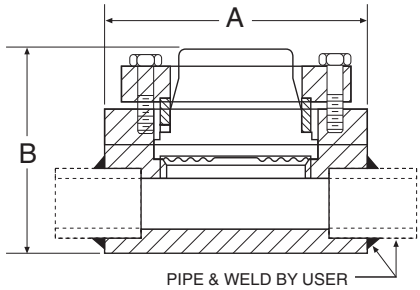

Pipe Size	A in	A mm	B in	B mm
¼˝	4	(102)	2 11/32	(60)
½˝, ¾˝			2 11/32	(60)
1˝			2 15/32	(63)
1½˝			2 23/32	(69)
2˝			2 31/32	(75)

All specifications are subject to change without notice.
All sales subject to standard terms and conditions.
© Ashcroft Inc. 2016 Rev. 01/16

Ashcroft Inc., 250 East Main Street, Stratford, CT 06614 USA
Tel: 203-378-8281 • Fax: 203-385-0408
email: info@ashcroft.com • www.ashcroft.com

4 – DETAILED TECHNICAL DOCUMENTATION

4.3 – SHOP DRAWINGS

4.3.12 – RAW WATER

LEFT BLANK

Project name:	AMARUQ
Project#:	5000218009
Document #:	SPK_0012_RW
by:	BB
chkd:	GP
appvd:	CB

SUBMITTAL PACKAGE

RAW WATER

This page is intentionally left blank

Project name: AMARUQ

Project#: 5000218009

Document #: SPK_0012_RW

by: BB

chkd: GP

appvd: CB

RAW WATER

INSTRUMENTS

OIM manual section: 4.3.12.1

This page is intentionally left blank

CS-404-500 : Identification sheet

VWTC PROJECT NUMBER:	5000218009	REV:	1
PROJECT NAME:	AEM AMARUQ	SUBMITTED TO (COMPANY):	AGNICO EAGLE MINES
ENGINEER:	Gabriel Hébert	SUBMITTED TO (RESPONSIBLE)	
PROJECT MANAGER:	Clément B	PROJECT NUM REFERENCE.:	
PHONE NUMBER:		LOT NUMBER:	

SUPPLIER	EQPT CODE	EQPT TAG NO	DIA	DESCRIPTION	INFO 1	INFO 2	INFO 3	APPLIC.	NOTE	REV
E&H	ST-404-566	FIT1-011	24"	FLOWMETER	Electromagnetic flowmeter// Manuf: E&H // Model : 50W6H-ULGA1RC2BAAW+1// DN600 (24")// Liner: Polyurethane Process Connection: Cl.150, A105, flange ANSI B16.5 Electrodes: 1.4435/316L, bullet nose Calibration: 0.5% Additional Test, certificate: w/o	Housing: Wall Alu, IP67 NEMA4X Cable, Remote Version: 10m/30ft coil + signal cable Cable Entry: Thread NPT 1/2 Power Supply; Display: A 85-260VAC, WEA, 2-line + pushbuttons,	Adjustment; Software Feature: A Factory setup; basic version Output, Input: W 4-20mA SIL HART Marking: 1 Tagging (TAG), see additional spec.	RAW WATER		rev1

This page is intentionally left blank

Level | Pressure | Flow | Temperature | Liquid Analysis | Registration | Systems Components | Services | Solutions

Technical Information

Proline Promag 50W, 53W

Electromagnetic Flow Measuring System
Flow measurement of liquids in water or wastewater applications

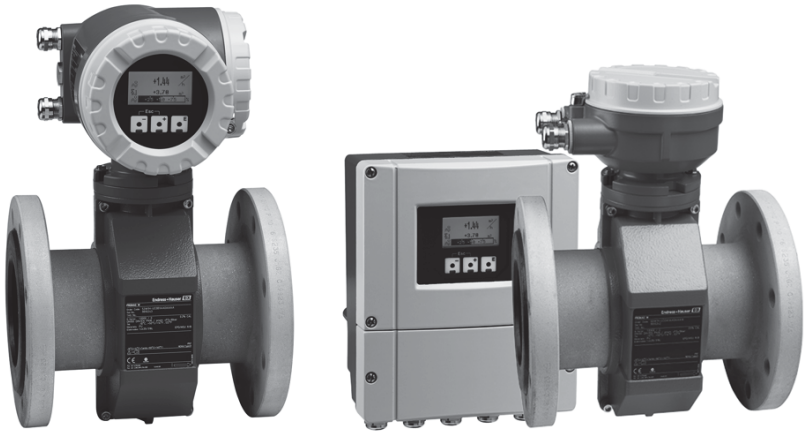

Application

Electromagnetic flowmeter for bidirectional measurement of liquids with a minimum conductivity of ≥ 5 µS/cm:
- Drinking water
- Wastewater
- Sewage sludge

- Flow measurement up to 110000 m³/h (484315 gal/min)
- Fluid temperature up to +80 °C (+176 °F)
- Process pressures up to 40 bar (580 psi)
- Lengths in accordance with DVGW/ISO

Application-specific lining of the measuring pipe from polyurethane or hard rubber with the following drinking water permissions:
- KTW
- WRAS
- NSF
- ACS

Approvals for hazardous area:
- ATEX
- IECEx
- FM
- CSA
- NEPSI

Connection to process control system:
- HART
- PROFIBUS DP/PA
- FOUNDATION Fieldbus
- MODBUS RS485

Your benefits

Promag measuring devices offer you cost-effective flow measurement with a high degree of accuracy for a wide range of process conditions.

The uniform Proline transmitter concept comprises:
- Modular device and operating concept resulting in a higher degree of efficiency
- Software options for batching, electrode cleaning and for measuring pulsating flow
- High degree of reliability and measuring stability
- Uniform operating concept

The tried-and-tested Promag sensors offer:
- No pressure loss
- Not sensitive to vibrations
- Simple installation and commissioning

TI046D/24/en/07.10

Endress+Hauser

People for Process Automation

Table of contents

Function and system design 3
Measuring principle 3
Measuring system 3

Input 4
Measured variable 4
Measuring ranges 4
Operable flow range 4
Input signal 4

Output 4
Output signal 4
Signal on alarm 6
Load 6
Low flow cutoff 6
Galvanic isolation 6
Switching output 6

Power supply 7
Electrical connection, measuring unit 7
Electrical connection, terminal assignment 8
Electrical connection, remote version 9
Supply voltage (power supply) 9
Cable entry 9
Remote version cable specifications 9
Power consumption 10
Power supply failure 10
Potential equalization 11

Performance characteristics 13
Reference operating conditions 13
Maximum measured error 13
Repeatability 13

Operating conditions: Installations 14
Installation instructions 14
Inlet and outlet run 18
Adapters 18
Length of connecting cable 19

Operating conditions: Environment 20
Ambient temperature range 20
Storage temperature 20
Degree of protection 20
Shock and vibration resistance 20
Electromagnetic compatibility (EMC) 20

Operating conditions: Process 21
Medium temperature range 21
Conductivity 21
Medium pressure range (nominal pressure) 21
Pressure tightness 21
Limiting flow 22
Pressure loss 23

Mechanical construction 24
Design, dimensions 24
Weight 37
Measuring tube specifications 39
Material 40
Material load diagram 40
Fitted electrodes 43
Process connections 43
Surface roughness 43

Human interface 43
Display elements 43
Operating elements 43
Language groups 43
Remote operation 43

Certificates and approvals 44
CE mark 44
C-tick mark 44
Pressure measuring device approval 44
Ex approval 44
Other standards and guidelines 44
FOUNDATION Fieldbus certification 44
MODBUS RS485 certification 44
PROFIBUS DP/PA certification 44

Accessories 45

Documentation 45

Registered trademarks 46

Order Codes 47

Function and system design

Measuring principle

Following Faraday's law of magnetic induction, a voltage is induced in a conductor moving through a magnetic field.
In the electromagnetic measuring principle, the flowing medium is the moving conductor.
The voltage induced is proportional to the flow velocity and is supplied to the amplifier by means of two measuring electrodes. The flow volume is calculated by means of the pipe cross-sectional area.
The DC magnetic field is created through a switched direct current of alternating polarity.

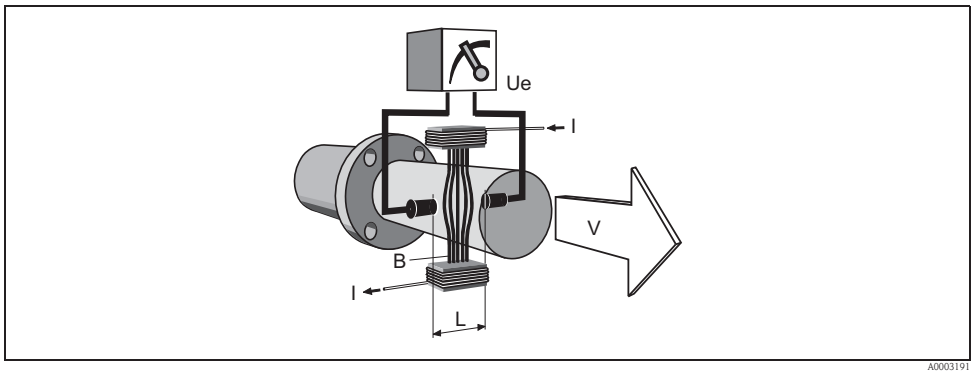

A0003191

$Ue = B \cdot L \cdot v$
$Q = A \cdot v$

Ue	Induced voltage
B	Magnetic induction (magnetic field)
L	Electrode spacing
v	Flow velocity
Q	Volume flow
A	Pipe cross-section
I	Current strength

Measuring system

The measuring system consists of a transmitter and a sensor.
Two versions are available:
- Compact version: Transmitter and sensor form a mechanical unit.
- Remote version: Sensor is mounted separate from the transmitter.

Transmitter:
- Promag 50 (user interface with push buttons for operation, two-line display, illuminated)
- Promag 53 ("Touch Control" without opening the housing, four-line display, unilluminated)

Sensor:
- Promag W (DN 25 to 2000 / 1 to 78")

Input

Measured variable

Flow velocity (proportional to induced voltage)

Measuring ranges

Measuring ranges for liquids
Typically v = 0.01 to 10 m/s (0.03 to 33 ft/s) with the specified accuracy

Operable flow range

Over 1000 : 1

Input signal

Status input (auxiliary input)
- U = 3 to 30 V DC, R_i = 5 kΩ, galvanically isolated
- Configurable for: totalizer(s) reset, measured value suppression, error-message reset

Status input (auxiliary input) with PROFIBUS DP and MODBUS RS485
- U = 3 to 30 V DC, R_i = 3 kΩ, galvanically isolated
- Switching level: 3 to 30 V DC, independent of polarity
- Configurable for: totalizer(s) reset, measured value suppression, error-message reset, batching start/stop (optional), batch totalizer reset (optional)

Current input (only Promag 53)
- active/passive selectable, galvanically isolated, full scale value selectable, resolution: 3 µA, temperature coefficient: typ. 0.005% o.r./°C (o.r. = of reading)
- active: 4 to 20 mA, $R_i \leq 150$ Ω, max. 24 V DC, short-circuit-proof
- passive: 0/4 to 20 mA, $R_i < 150$ Ω, max. 30 V DC

Output

Output signal

Promag 50

Current output
active/passive selectable, galvanically isolated, time constant selectable (0.01 to 100 s), full scale value selectable, temperature coefficient: typ. 0.005% o.r./°C (o.r. = of reading), resolution: 0.5 µA
- active: 0/4 to 20 mA, $R_L < 700$ Ω (HART: $R_L \geq 250$ Ω)
- passive: 4 to 20 mA, operating voltage V_S: 18 to 30 V DC, $R_i \geq 150$ Ω

Pulse/frequency output
passive, open collector, 30 V DC, 250 mA, galvanically isolated
- Frequency output: full scale frequency 2 to 1000 Hz (f_{max} = 1250 Hz), on/off ratio 1:1, pulse width max. 10s
- Pulse output: pulse value and pulse polarity selectable, max. pulse width configurable (0.5 to 2000 ms)

PROFIBUS DP interface
- Transmission technology (Physical Layer): RS485 in accordance with ANSI/TIA/EIA-485-A: 1998, galvanically isolated
- Profil version 3.0
- Data transmission rate: 9,6 kBaud to 12 MBaud
- Automatic data transmission rate recognition
- Function blocks: 1 × analog Input, 1 × totalizer
- Output data: volume flow, totalizer
- Input data: positive zero return (ON/OFF), totalizer control, value for local display
- Cyclic data transmission compatible with previous model Promag 33
- Bus address adjustable via miniature switches or local display (optional) at the measuring device

PROFIBUS PA interface
- Transmission technology (Physical Layer): IEC 61158-2 (MBP), galvanically isolated
- Profil version 3.0
- Current consumption: 11 mA
- Permissible supply voltage: 9 to 32 V
- Bus connection with integrated reverse polarity protection
- Error current FDE (Fault Disconnection Electronic): 0 mA
- Function blocks: 1 × analog input, 2 × totalizer
- Output data: volume flow, totalizer
- Input data: positive zero return (ON/OFF), control totalizer, value for local display
- Cyclic data transmission compatible with previous model Promag 33
- Bus address adjustable via miniature switches or local display (optional) at the measuring device

Promag 53

Current output
active/passive selectable, galvanically isolated, time constant selectable (0.01 to 100 s),
full scale value selectable, temperature coefficient: typ. 0.005% o.r./°C (o.r. = of reading), resolution: 0.5 µA
- active: 0/4 to 20 mA, $R_L < 700\ \Omega$ (HART: $R_L \geq 250\ \Omega$)
- passive: 4 to 20 mA, operating voltage V_S: 18 to 30 V DC, $R_i \geq 150\ \Omega$

Pulse/frequency output
active/passive selectable, galvanically isolated (Ex i version: only passive)
- active: 24 V DC, 25 mA (max. 250 mA during 20 ms), $R_L > 100\ \Omega$
- passive: open collector, 30 V DC, 250 mA
- Frequency output: full scale frequency 2 to 10000 Hz (f_{max} = 12500 Hz), EEx-ia: 2 to 5000 Hz; on/off ratio 1:1, pulse width max. 10 s
- Pulse output: pulse value and pulse polarity selectable, max. pulse width configurable (0.05 to 2000 ms)

PROFIBUS DP interface
- Transmission technology (Physical Layer): RS485 in accordance with ANSI/TIA/EIA-485-A: 1998, galvanically isolated
- Profil version 3.0
- Data transmission rate: 9,6 kBaud to 12 MBaud
- Automatic data transmission rate recognition
- Function blocks: 2 × analog Input, 3 × totalizer
- Output data: volume flow, calculated mass flow, totalizer 1 to 3
- Input data: positive zero return (ON/OFF), totalizer control, value for local display
- Cyclic data transmission compatible with previous model Promag 33
- Bus address adjustable via miniature switches or local display (optional) at the measuring device
- Available output combination → 8

PROFIBUS PA interface
- Transmission technology (Physical Layer): IEC 61158-2 (MBP), galvanically isolated
- Profil version 3.0
- Current consumption: 11 mA
- Permissible supply voltage: 9 to 32 V
- Bus connection with integrated reverse polarity protection
- Error current FDE (Fault Disconnection Electronic): 0 mA
- Function blocks: 2 × analog input, 3 × totalizer
- Output data: volume flow, calculated mass flow, totalizer 1 to 3
- Input data: positive zero return (ON/OFF), totalizer control, value for local display
- Cyclic data transmission compatible with previous model Promag 33
- Bus address adjustable via miniature switches or local display (optional) at the measuring device

MODBUS RS485 interface
- Transmission technology (Physical Layer): RS485 in accordance with ANSI/TIA/EIA-485-A: 1998, galvanically isolated
- MODBUS device type: Slave
- Adress range: 1 to 247
- Bus address adjustable via miniature switches or local display (optional) at the measuring device
- Supported MODBUS function codes: 03, 04, 06, 08, 16, 23
- Broadcast: supported with the function codes 06, 16, 23
- Übertragungsmodus: RTU oder ASCII
- Supported baudrate: 1200, 2400, 4800, 9600, 19200, 38400, 57600, 115200 Baud
- Response time:
  - Direct data access = typically 25 to 50 ms
  - Auto-scan buffer (data range) = typically 3 to 5 ms
- Available output combination → 8

FOUNDATION Fieldbus interface
- FOUNDATION Fieldbus H1
- Transmission technology (Physical Layer): IEC 61158-2 (MBP), galvanically isolated
- ITK version 5.01
- Current consumption: 12 mA
- Error current FDE (Fault Disconnection Electronic): 0 mA
- Bus connection with integrated reverse polarity protection
- Function blocks:
  - 5 × Analog Input (execution time: 18 ms each)
  - 1 × PID (25 ms)
  - 1 × Digital Output (18 ms)
  - 1 × Signal Characterizer (20 ms)
  - 1 × Input Selector (20 ms)
  - 1 × Arithmetic (20 ms)
  - 1 × Integrator (18 ms)
- Output data: volume flow, calculated mass flow, temperature, totalizer 1 to 3
- Input data: positive zero return (ON/OFF), reset totalizer
- Link Master (LM) functionality is supported

Signal on alarm
- Current output → failure response selectable (e.g. in accordance with NAMUR recommendation NE 43)
- Pulse/frequency output → failure response selectable
- Status output (Promag 50) → non-conductive by fault or power supply failure
- Relay output (Promag 53) → de-energized by fault or power supply failure

Load

see "Output signal"

Low flow cutoff

Switch points for low flow cutoff are selectable.

Galvanic isolation

All circuits for inputs, outputs and power supply are galvanically isolated from each other.

Switching output

Status output (Promag 50, Promag 53)
Open collector, max. 30 V DC / 250 mA, galvanically isolated.
Configurable for: error messages, Empty Pipe Detection (EPD), flow direction, limit values.

Relay outputs (Promag 53)
Normally closed (NC or break) or normally open (NO or make) contacts available
(default: relay 1 = NO, relay 2 = NC), max. 30 V / 0,5 A AC ; 60 V / 0,1 A DC, galvanically isolated.
Configurable for: error messages, Empty Pipe Detection (EPD), flow direction, limit values, batching contacts.

Power supply

Electrical connection, measuring unit

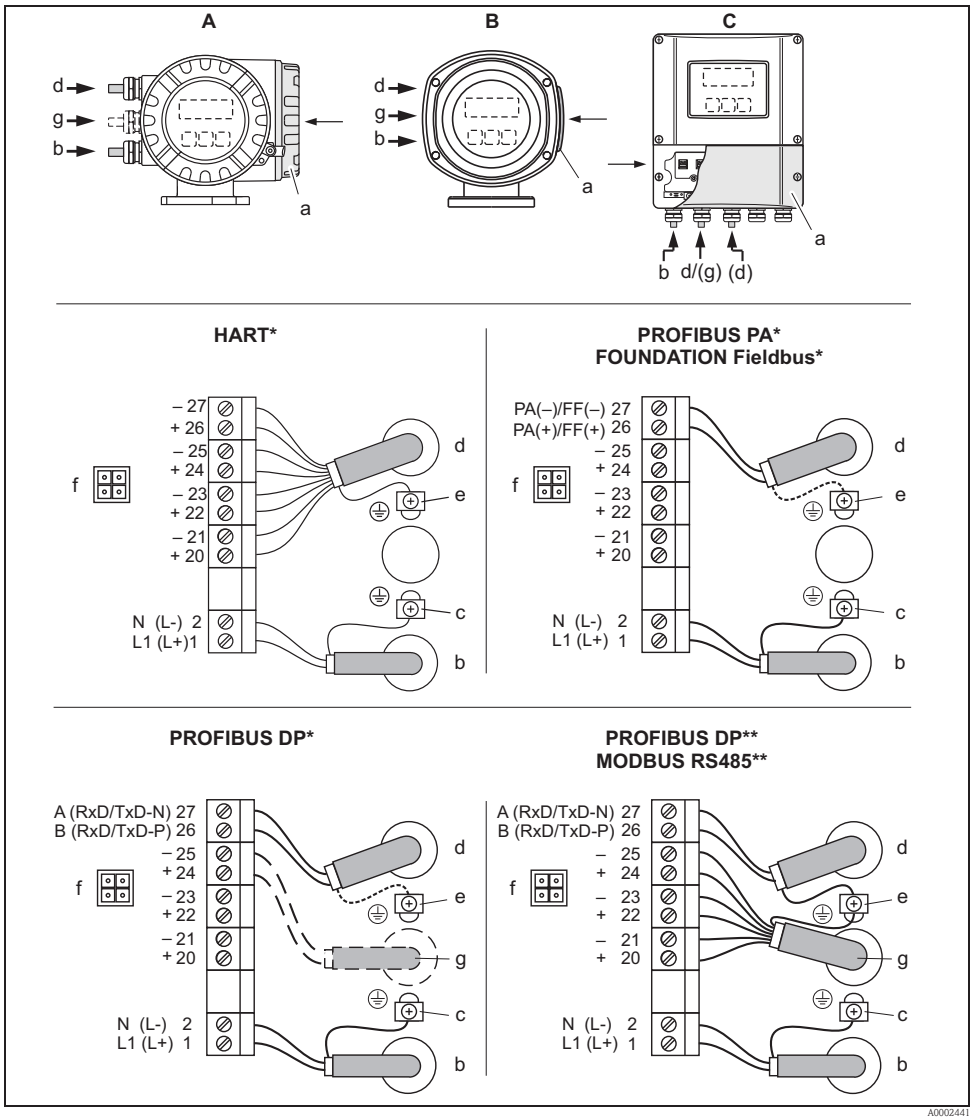

Connecting the transmitter, cable cross-section max. 2.5 mm^2 (14 AWG)

A View A (field housing)
B View B (stainless steel field housing)
C View C (wall-mount housing)

*) fixed communication boards
**) flexible communication boards
a Connection compartment cover
b Cable for power supply: 85 to 260 V AC / 20 to 55 V AC / 16 to 62 V DC
- Terminal No. 1: L1 for AC, L+ for DC
- Terminal No. 2: N for AC, L– for DC

c Ground terminal for protective conductor
d Signal cable: see "Electrical connection, terminal assignment" → 8
Fieldbus cable:
- Terminal No. 26: DP (B) / PA + / FF + / MODBUS RS485 (B) / (PA, FF: with polarity protection)
- Terminal No. 27: DP (A) / PA – / FF – / MODBUS RS485 (A) / (PA, FF: with polarity protection)

e Ground terminal for signal cable shield / Fieldbus cable / RS485 line
f Service adapter for connecting service interface FXA193 (Fieldcheck, FieldCare)
g Signal cable: see "Electrical connection, terminal assignment" → 8
Cable for external termination (only for PROFIBUS DP with fixed assignment communication board):
- Terminal No. 24: +5 V
- Terminal No. 25: DGND

Electrical connection, terminal assignment

Terminal assignment, Promag 50

Order variant	Terminal No. (inputs/outputs)			
	20 (+) / 21 (–)	22 (+) / 23 (–)	24 (+) / 25 (–)	26 (+) / 27 (–)
50***-**********W	–	–	–	Current output HART
50***-**********A	–	–	Frequency output	Current output HART
50***-**********D	Status input	Status output	Frequency output	Current output HART
50***-**********H	–	–	–	PROFIBUS PA
50***-**********J	–	–	+5 V (external termination)	PROFIBUS DP
50***-**********S	–	–	Frequency output, Ex i, passive	Current output, Ex i, passive, HART
50***-**********T	–	–	Frequency output, Ex i, passive	Current output, Ex i, passive, HART

Ground terminal → 7

Terminal assignment, Promag 53

The inputs and outputs on the communication board can be either permanently assigned or variable, depending on the version ordered (see table). Replacements for modules which are defective or which have to be replaced can be ordered as accessories.

Order variant	Terminal No. (inputs/outputs)			
	20 (+) / 21 (–)	22 (+) / 23 (–)	24 (+) / 25 (–)	26 (+) / 27 (–)
Fixed communication boards (fixed assignment)				
53***-**********A	–	–	Frequency output	Current output HART
53***-**********B	Relay output 2	Relay output 1	Frequency output	Current output HART
53***-**********F	–	–	–	PROFIBUS PA, Ex i
53***-**********G	–	–	–	FOUNDATION Fieldbus, Ex i
53***-**********H	–	–	–	PROFIBUS PA
53***-**********J	–	–	–	PROFIBUS DP
53***-**********K	–	–	–	FOUNDATION Fieldbus
53***-**********Q	–	–	Status input	MODBUS RS485
53***-**********S	–	–	Frequency output, Ex i	Current output, Ex i, passive, HART
53***-**********T	–	–	Frequency output, Ex i	Current output, Ex i, passive, HART
Flexible communication boards				
53***-**********C	Relay output 2	Relay output 1	Frequency output	Current output HART
53***-**********D	Status input	Relay output	Frequency output	Current output HART
53***-**********L	Status input	Relay output 2	Relay output 1	Current output HART
53***-**********M	Status input	Frequency output	Frequency output	Current output HART
53***-**********N	Current output	Frequency output	Status input	MODBUS RS485
53***-**********P	Current output	Frequency output	Status input	PROFIBUS DP
53***-**********V	Relay output 2	Relay output 1	Status input	PROFIBUS DP
53***-**********2	Relay output	Current output	Frequency output	Current output HART
53***-**********4	Current input	Relay output	Frequency output	Current output HART
53***-**********7	Relay output 2	Relay output 1	Status input	MODBUS RS485

Ground terminal → 7

Electrical connection, remote version

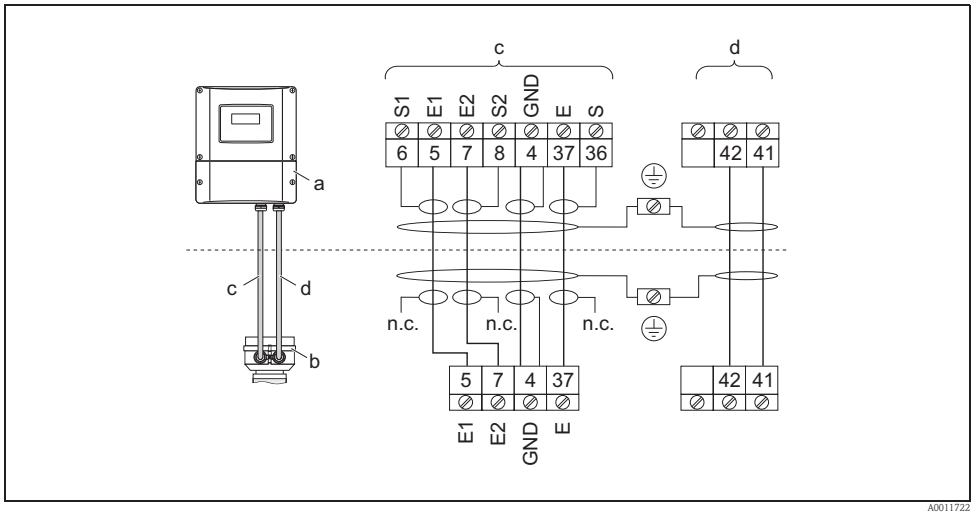

Connecting the remote version

a Wall-mount housing connection compartment
b Sensor connection housing cover
c Signal cable
d Coil current cable
n.c. Not connected, insulated cable shields
Terminal no. and cable colors: 6/5 = brown; 7/8 = white; 4 = green; 36/37 = yellow

Supply voltage (power supply)

- 85 to 260 V AC, 45 to 65 Hz
- 20 to 55 V AC, 45 to 65 Hz
- 16 to 62 V DC

PROFIBUS PA and FOUNDATION Fieldbus
- Non-Ex: 9 to 32 V DC
- Ex i: 9 to 24 V DC
- Ex d: 9 to 32 V DC

Cable entry

Power supply and signal cables (inputs/ outputs):
- Cable entry M20 × 1.5 (8 to 12 mm / 0.31 to 0.47")
- Sensor cable entry for armoured cables M20 × 1.5 (9.5 to 16 mm / 0.37 to 0.63")
- Thread for cable entries, ½" NPT, G ½"

Connecting cable for remote version:
- Cable entry M20 × 1.5 (8 to 12 mm / 0.31 to 0.47")
- Sensor cable entry for armoured cables M20 × 1.5 (9.5 to 16 mm / 0.37 to 0.63")
- Thread for cable entries, ½" NPT, G ½"

Remote version cable specifications

Coil cable
- 2 × 0.75 mm² (18 AWG) PVC cable with common, braided copper shield (∅ ~ 7 mm / 0.28")
- Conductor resistance: ≤ 37 Ω/km (≤ 0.011 Ω/ft)
- Capacitance core/core, shield grounded: ≤ 120 pF/m (≤ 37 pF/ft)
- Operating temperature: –20 to +80 °C (–68 to +176 °F)
- Cable cross-section: max. 2.5 mm² (14 AWG)
- Test voltage for cable insulation: ≤ 1433 AC r.m.s. 50/60 Hz or ≥ 2026 V DC

Signal cable
- 3 × 0.38 mm² (20 AWG) PVC cable with common, braided copper shield (∅ ~ 7 mm / 0.28") and individual shielded cores
- With empty pipe detection (EPD): 4 × 0.38 mm² (20 AWG) PVC cable with common, braided copper shield (∅ ~ 7 mm / 0.28") and individual shielded cores
- Conductor resistance: ≤ 50 Ω/km (≤ 0.015 Ω/ft)
- Capacitance core/shield: ≤ 420 pF/m (≤ 128 pF/ft)
- Operating temperature: –20 to +80 °C (–68 to +176 °F)
- Cable cross-section: max. 2.5 mm² (14 AWG)

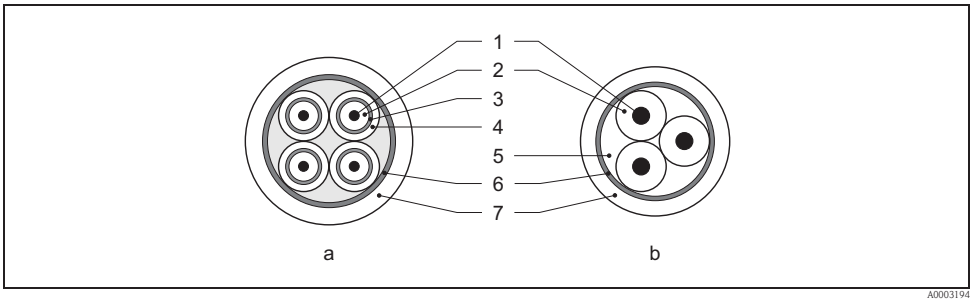

a Signal cable
b Coil current cable

1 Core
2 Core insulation
3 Core shield
4 Core jacket
5 Core reinforcement
6 Cable shield
7 Outer jacket

Operation in zones of severe electrical interference
The measuring device complies with the general safety requirements in accordance with EN 61010 and the EMC requirements of IEC/EN 61326 and NAMUR recommendation NE 21.

Caution!
Grounding is by means of the ground terminals provided for the purpose inside the connection housing. Ensure that the stripped and twisted lengths of cable shield to the ground terminal are as short as possible.

Power consumption

- AC: < 15 VA (incl. sensor)
- DC: < 15 W (incl. sensor)

Switch-on current:
- Max. 3 A (< 5 ms) for 260 V AC
- Max. 13.5 A (< 50 ms) for 24 V DC

Power supply failure

Lasting min. ½ cycle frequency: EEPROM saves measuring system data
- EEPROM or T-DAT (Promag 53 only) retain the measuring system data in the event of a power supply failure
- S-DAT: exchangeable data storage chip which stores the data of the sensor (nominal diameter, serial number, calibration factor, zero point etc.)

Potential equalization

Warning!
The measuring system must be included in the potential equalization.

Perfect measurement is only ensured when the fluid and the sensor have the same electrical potential. This is ensured by the reference electrode integrated in the sensor as standard.

The following should also be taken into consideration for potential equalization:
- Internal grounding concepts in the company
- Operating conditions, such as the material/ grounding of the pipes (see table)

Standard situation

Operating conditions	Potential equalization
When using the measuring device in a: ■ Metal, grounded pipe Potential equalization takes place via the ground terminal of the transmitter. Note! When installing in metal pipes, we recommend you connect the ground terminal of the transmitter housing with the piping.	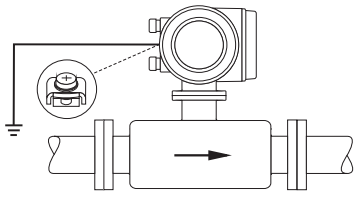 A0011892 Via the ground terminal of the transmitter

Special situations

Operating conditions	Potential equalization
When using the measuring device in a: ■ Metal pipe that is not grounded This connection method also applies in situations where: ■ Customary potential equalization cannot be ensured. ■ Excessively high equalizing currents can be expected. Both sensor flanges are connected to the pipe flange by means of a ground cable (copper wire, at least 6 mm² / 0.0093 in²) and grounded. Connect the transmitter or sensor connection housing, as applicable, to ground potential by means of the ground terminal provided for the purpose. ■ DN ≤ 300 (12"): the ground cable is mounted directly on the conductive flange coating with the flange screws. ■ DN ≥ 350 (14"): the ground cable is mounted directly on the transportation metal support. Note! The ground cable for flange-to-flange connections can be ordered separately as an accessory from Endress+Hauser.	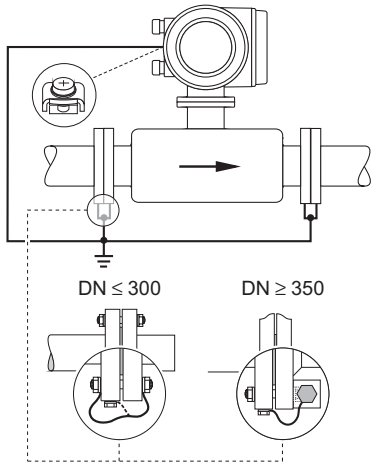 A0011893 Via the ground terminal of the transmitter and the flanges of the pipe
When using the measuring device in a: ■ Plastic pipe ■ Pipe with insulating lining This connection method also applies in situations where: ■ Customary potential equalization cannot be ensured. ■ Excessively high equalizing currents can be expected. Potential equalization takes place using additional ground disks, which are connected to the ground terminal via a ground cable (copper wire, at least 6 mm² / 0.0093 in²). When installing the ground disks, please comply with the enclosed Installation Instructions.	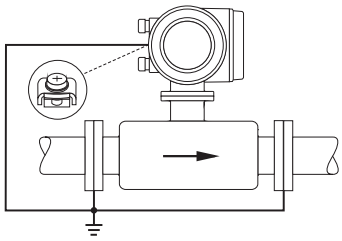 A0011895 Via the ground terminal of the transmitter and the optionally available ground disks

Operating conditions	Potential equalization
When using the measuring device in a: ■ Pipe with a cathodic protection unit The device is installed potential-free in the pipe. Only the two flanges of the pipe are connected with a ground cable (copper wire, at least 6 mm² / 0.0093 in²). Here, the ground cable is mounted directly on the conductive flange coating with flange screws. Note the following when installing: ■ The applicable regulations regarding potential-free installation must be observed. ■ There should be **no** electrically conductive connection between the pipe and the device. ■ The mounting material must withstand the applicable torques.	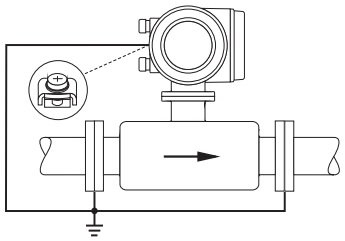 A0011896 Potential equalization and cathodic protection 1 Power supply isolation transformer 2 Electrically isolated

Performance characteristics

Reference operating conditions

As per DIN EN 29104 and VDI/VDE 2641:
- Fluid temperature: +28 °C ± 2 K (+82 °F ± 2 K)
- Ambient temperature: +22 °C ±2 K (+72 °F ± 2 K)
- Warm-up period: 30 minutes

Installation conditions:
- Inlet run > 10 × DN
- Outlet run > 5 × DN
- Sensor and transmitter grounded.
- The sensor is centered in the pipe.

Maximum measured error

Promag 50:
- Current output: also typically ± 5 µA
- Pulse output: ±0.5% o.r. ± 1 mm/s (±0.5% o.r. ± 0.04 in/s)
  optional: ±0.2% o.r. ± 2 mm/s (±0.2% o.r. ± 0.08 in/s) (o.r. = of reading)

Promag 53:
- Current output: also typically ± 5 µA
- Pulse output: ±0.2% o.r. ± 2 mm/s (±0.2% o.r. ± 0.08 in/s) (o.r. = of reading)

Fluctuations in the supply voltage do not have any effect within the specified range.

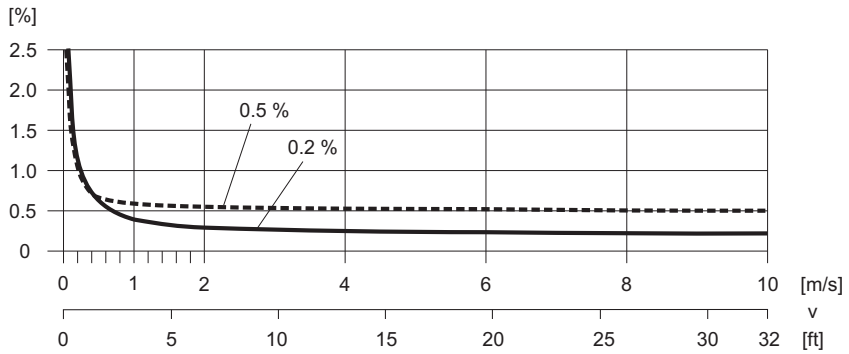

Max. measured error in % of reading

Repeatability

Max. ±0.1% o.r. ± 0.5 mm/s (±0.1% o.r. ± 0.02 in/s) (o.r. = of reading)

Operating conditions: Installations

Installation instructions

Mounting location

Entrained air or gas bubble formation in the measuring tube can result in an increase in measuring errors.
Avoid the following installation locations in the pipe:
- Highest point of a pipeline. Risk of air accumulating!
- Directly upstream from a free pipe outlet in a vertical pipeline.

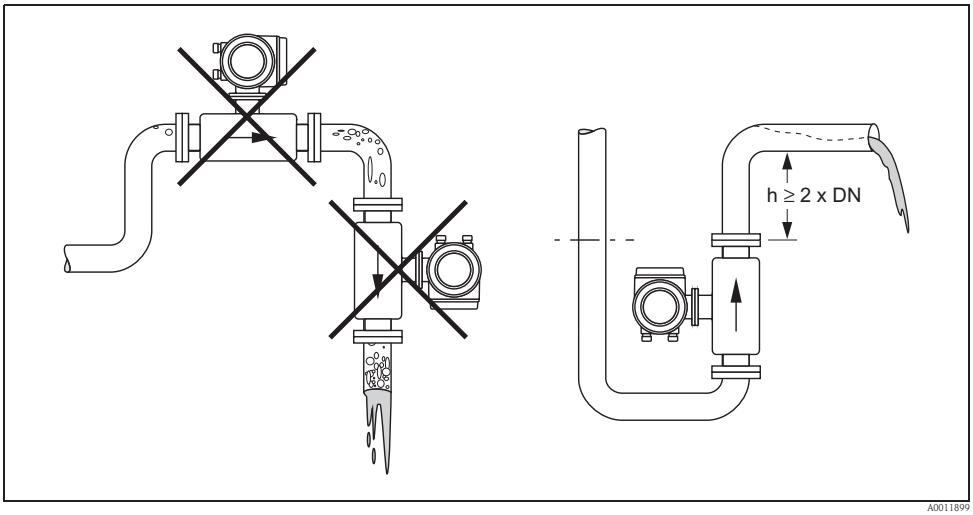

Mounting location

Installation of pumps

Sensors may not be installed on the pump suction side. This precaution is to avoid low pressure and the consequent risk of damage to the lining of the measuring tube. Information on the pressure tightness of the measuring tube lining → 21, Section "Pressure tightness".
Pulsation dampers may be needed when using piston pumps, piston diaphragm pumps or hose pumps. Information on the shock and vibration resistance of the measuring system → 20, Section "Shock and vibration resistance".

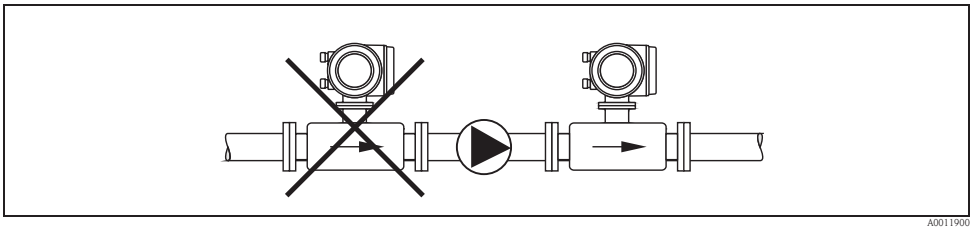

Installation of pumps

Partially filled pipes
Partially filled pipes with gradients necessitate a drain-type configuration.
The empty pipe detection function (EPD) provides additional security in detecting empty or partially filled pipes.

Caution!
Risk of solids accumulating. Do not install the sensor at the lowest point in the drain. It is advisable to install a cleaning valve.

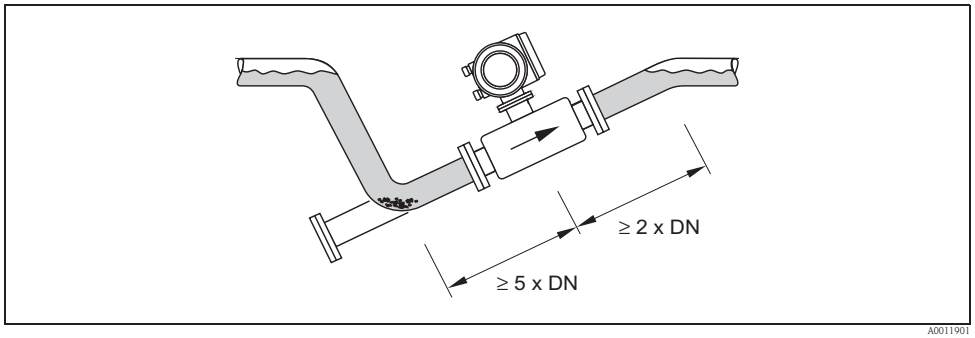

Installation with partially filled pipes

Down pipes
Install a siphon or a vent valve downstream of the sensor in down pipes h ≥ 5 m (16.4 ft). This precaution is to avoid low pressure and the consequent risk of damage to the lining of the measuring tube. This measure also prevents the liquid current stopping in the pipe which could cause air locks. Information on the pressure tightness of the measuring tube lining → 21, Section "Pressure tightness".

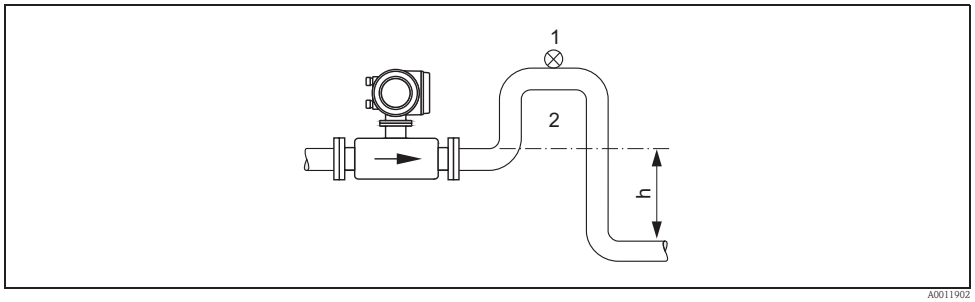

Installation measures for vertical pipes

1 Vent valve
2 Pipe siphon
h Length of the down pipe

Orientation

An optimum orientation helps avoid gas and air accumulations and deposits in the measuring tube. However, the measuring device also offers the additional function of empty pipe detection (EPD) for detecting partially filled measuring tubes or if outgassing fluids or fluctuating operating pressures are present.

Vertical orientation

This is the ideal orientation for self-emptying piping systems and for use in conjunction with empty pipe detection.

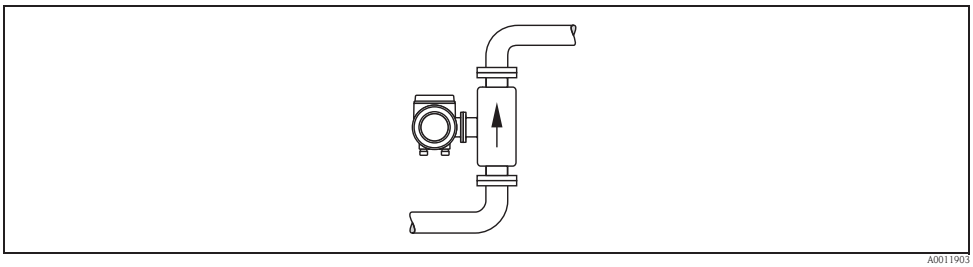

A0011903

Vertical orientation

Horizontal orientation

The measuring electrode axis should be horizontal. This prevents brief insulation of the two measuring electrodes by entrained air bubbles.

Caution!

Empty pipe detection only works correctly with horizontal orientation if the transmitter housing is facing upwards. Otherwise there is no guarantee that empty pipe detection will respond if the measuring tube is only partially filled or empty.

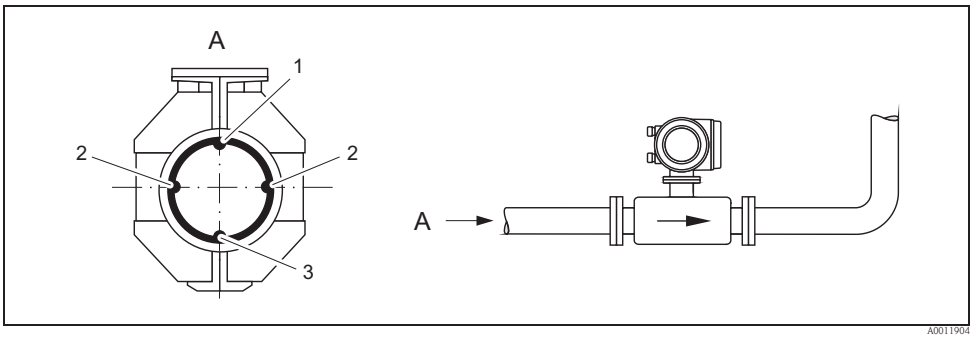

A0011904

Horizontal orientation

1 EPD electrode for empty pipe detection
2 Measuring electrodes for signal detection
3 Reference electrode for potential equalization

Vibrations
Secure the piping and the sensor if vibration is severe.

Caution!
If vibrations are too severe, we recommend the sensor and transmitter be mounted separately. Information on the permitted shock and vibration resistance → 20, Section "Shock and vibration resistance".

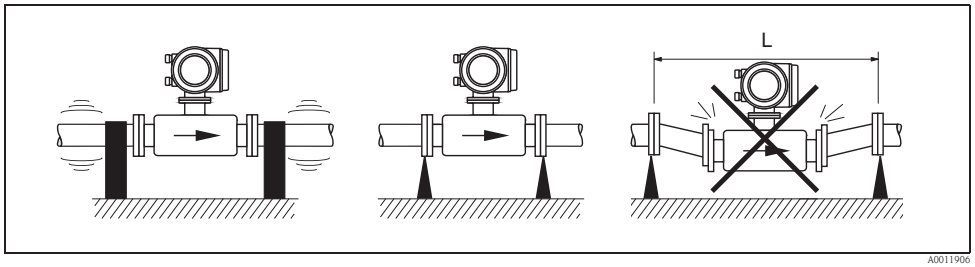

Measures to prevent vibration of the measuring device

L > 10 m (33 ft)

Foundations, supports
If the nominal diameter is DN ≥ 350, mount the transmitter on a foundation of adequate load-bearing strength.

Caution!
Do not allow the casing to take the weight of the sensor. This would buckle the casing and damage the internal magnetic coils.

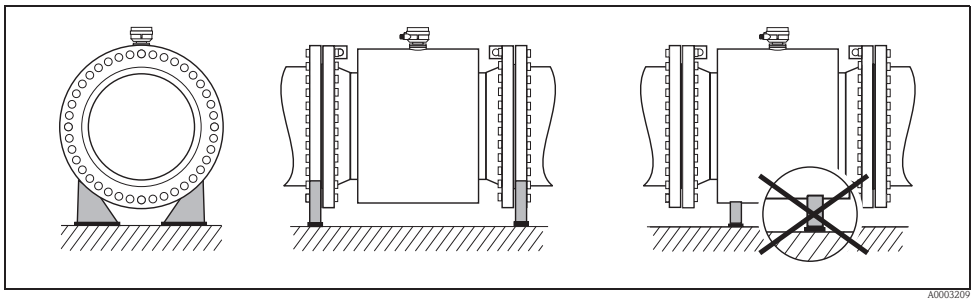

Inlet and outlet run

If possible, install the sensor well clear of assemblies such as valves, T-pieces, elbows etc.

Note the following inlet and outlet runs to comply with measuring accuracy specifications:
- Inlet run: ≥ 5 × DN
- Outlet run: ≥ 2 × DN

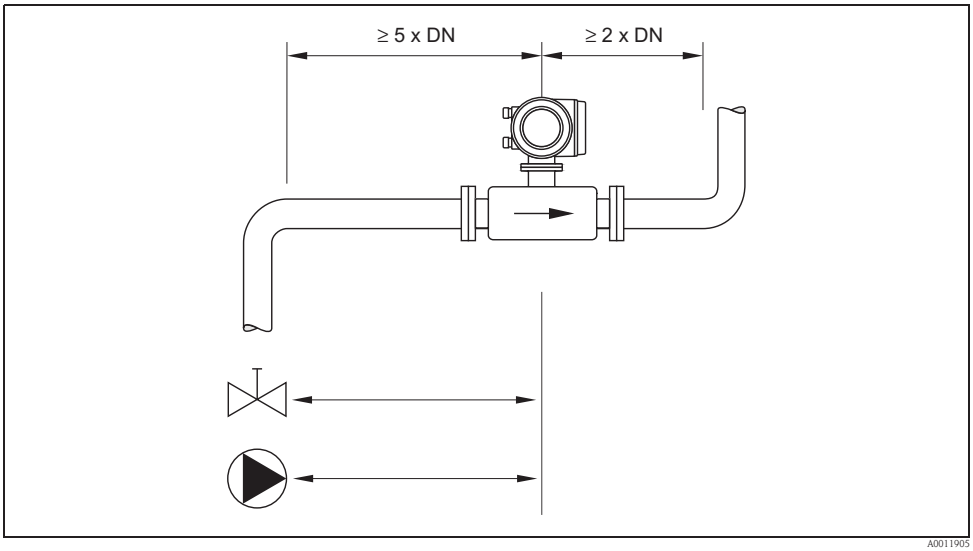

Inlet and outlet run

Adapters

Suitable adapters to DIN EN 545 (double-flange reducers) can be used to install the sensor in larger-diameter pipes. The resultant increase in the rate of flow improves measuring accuracy with very slow-moving fluids. The nomogram shown here can be used to calculate the pressure loss caused by reducers and expanders.

Note!
The nomogram only applies to liquids of viscosity similar to water.

1. Calculate the ratio of the diameters d/D.
2. From the nomogram read off the pressure loss as a function of flow velocity (downstream from the reduction) and the d/D ratio.

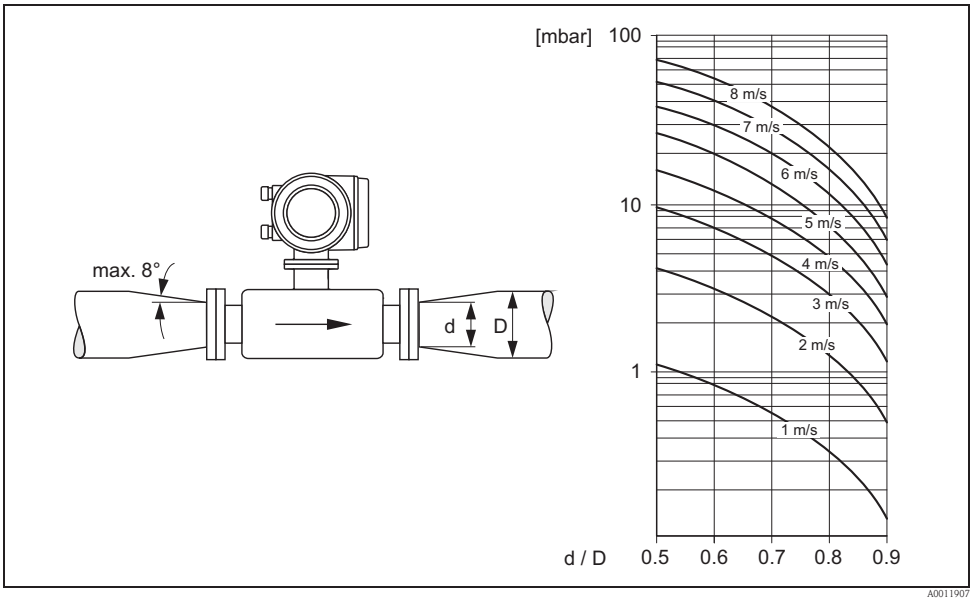

Pressure loss due to adapters

Length of connecting cable

When mounting the remote version, please note the following to achieve correct measuring results:

- Fix cable run or lay in armored conduit. Cable movements can falsify the measuring signal especially in the case of low fluid conductivities.
- Route the cable well clear of electrical machines and switching elements.
- If necessary, ensure potential equalization between sensor and transmitter.
- The permitted cable length L_{max} is determined by the fluid conductivity. A minimum conductivity of 20 µS/cm is required for measuring demineralized water.
- When the empty pipe detection function is switched on (EPD), the maximum connecting cable length is 10 m (33 ft).

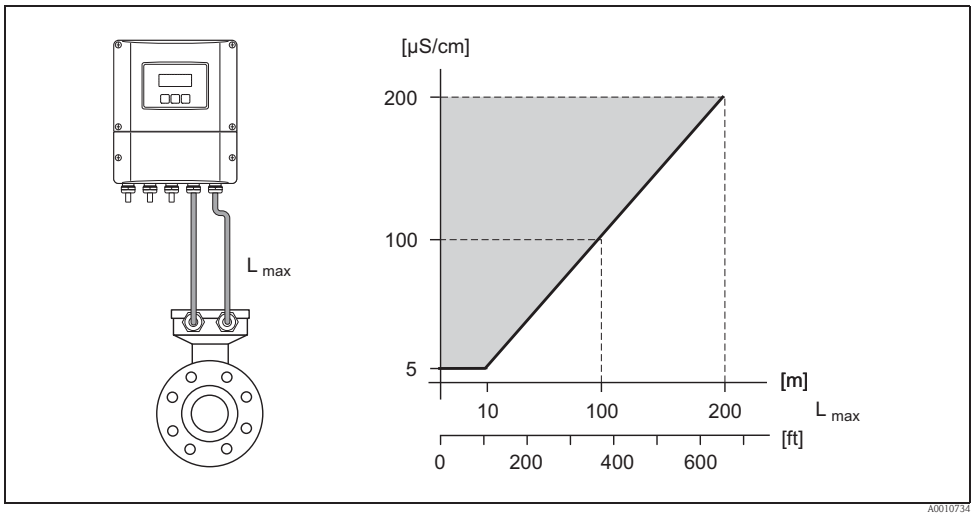

Permitted length of connecting cable for remote version
Area marked in gray = permitted range; L_{max} = length of connecting cable in [m] ([ft]); fluid conductivity in [µS/cm]

Operating conditions: Environment

Ambient temperature range

Transmitter
- Standard: –20 to +60 °C (–4 to +140 °F)
- Optional: –40 to +60 °C (–40 to +140 °F)

Note!
At ambient temperatures below –20 °C (–4 °F)the readability of the display may be impaired.

Sensor
- Flange material carbon steel: –10 to +60 °C (14 to +140 °F)
- Flange material stainless steel: –40 to +60 °C (–40 to +140 °F)

Caution!
The permitted temperature range of the measuring tube lining may not be undershot or overshot
→ 21, Section "Medium temperature range".

Please note the following points:
- Install the device in a shady location. Avoid direct sunlight, particularly in warm climatic regions.
- The transmitter must be mounted separate from the sensor if both the ambient and fluid temperatures are high.

Storage temperature

The storage temperature corresponds to the operating temperature range of the measuring transmitter and the appropriate measuring sensors.

Caution!
- The measuring device must be protected against direct sunlight during storage in order to avoid unacceptably high surface temperatures.
- A storage location must be selected where moisture does not collect in the measuring device. This will help prevent fungus and bacteria infestation which can damage the liner.
- Do not remove the protective plates or caps on the process connections until the device is ready to install.

Degree of protection
- Standard: IP 67 (NEMA 4X) for transmitter and sensor.
- Optional: IP 68 (NEMA 6P) for sensor for remote version.
- For information regarding applications where the device is buried directly in the soil or is installed in a flooded wastewater basin please contact your local Endress+Hauser Sales Center.

Shock and vibration resistance

Acceleration up to 2 g following IEC 600 68-2-6

Electromagnetic compatibility (EMC)
- As per IEC/EN 61326 and NAMUR recommendation NE 21.

Operating conditions: Process

Medium temperature range

The permitted temperature depends on the lining of the measuring tube:
- Polyurethane: –20 to +50 °C (–4 to +122 °F) (DN 25 to 1200 / 1 to 48")
- Hard rubber: ±0 to +80 °C (+32 to +176 °F) (DN 50 to 2000 / 2 to 78")

Conductivity

The minimum conductivity is:
- ≥ 5 µS/cm for fluids generally
- ≥ 20 µS/cm for demineralized water

Note!
In the remote version, the necessary minimum conductivity also depends on the cable length (→ 19, Section "Length of connecting cable").

Medium pressure range (nominal pressure)

- EN 1092-1 (DIN 2501)
  - PN 6 (DN 350 to 2000 / 14 to 78")
  - PN 10 (DN 200 to 2000 / 8 to 78")
  - PN 16 (DN 65 to 2000 / 3 to 78")
  - PN 25 (DN 200 to 1000 / 8 to 40")
  - PN 40 (DN 25 to 150 / 1 to 6")
- ANSI B 16.5
  - Class 150 (DN 1 to 24")
  - Class 300 (DN 1 to 6")
- AWWA
  - Class D (DN 28 to 78")
- JIS B2220
  - 10 K (DN 50 to 300 / 2 to 12")
  - 20 K (DN 25 to 300 / 1 to 12")
- AS 2129
  - Table E (DN 80, 100, 150 to 400, 500, 600 / 3", 4", 6 to 16", 20", 24")
- AS 4087
  - PN 16 (DN 80, 100, 150 to 400, 500, 600 / 3", 4", 6 to 16", 20", 24")

Pressure tightness

Measuring tube lining: Polyurethane

Nominal diameter		Limit values for abs. pressure [mbar] ([psi]) at fluid temperatures:			
		25 °C (77 °F)		50 °C (122 °F)	
[mm]	[inch]	[mbar]	[psi]	[mbar]	[psi]
25 to 1200	1 to 48"	0	0	0	0

Measuring tube lining: Hard rubber

Nominal diameter		Limit values for abs. pressure [mbar] ([psi]) at fluid temperatures:					
		25 °C (77 °F)		50 °C (122 °F)		80 °C (176 °F)	
[mm]	[inch]	[mbar]	[psi]	[mbar]	[psi]	[mbar]	[psi]
50 to 2000	2 to 78"	0	0	0	0	0	0

Limiting flow

The diameter of the pipe and the flow rate determine the nominal diameter of the sensor.
The optimum flow velocity is between 2 to 3 m/s (6.5 to 9.8 ft/s). The velocity of flow (v), moreover, has to be matched to the physical properties of the fluid:

- v < 2 m/s (6.5 ft/s): for abrasive fluids such as potter's clay, lime milk, ore slurry etc.
- v > 2 m/s (6.5 ft/s): for fluids causing build-up such as wastewater sludges etc.

Flow characteristic values (SI units)

Diameter		Recommended flow	Factory settings		
		Min./max. full scale value	Full scale value Current output	Pulse value	Low flow
[mm]	[inch]	(v ~ 0.3 or 10 m/s)	(v ~ 2.5 m/s)	(~ 2 pulses/s)	(v ~ 0.04 m/s)
25	1"	9 to 300 dm³/min	75 dm³/min	0.50 dm³	1 dm³/min
32	–	15 to 500 dm³/min	125 dm³/min	1.00 dm³	2 dm³/min
40	1½"	25 to 700 dm³/min	200 dm³/min	1.50 dm³	3 dm³/min
50	2"	35 to 1100 dm³/min	300 dm³/min	2.50 dm³	5 dm³/min
65	–	60 to 2000 dm³/min	500 dm³/min	5.00 dm³	8 dm³/min
80	3"	90 to 3000 dm³/min	750 dm³/min	5.00 dm³	12 dm³/min
100	4"	145 to 4700 dm³/min	1200 dm³/min	10.00 dm³	20 dm³/min
125	–	220 to 7500 dm³/min	1850 dm³/min	15.00 dm³	30 dm³/min
150	6"	20 to 600 m³/h	150 m³/h	0.025 m³	2.5 m³/h
200	8"	35 to 1100 m³/h	300 m³/h	0.05 m³	5.0 m³/h
250	10"	55 to 1700 m³/h	500 m³/h	0.05 m³	7.5 m³/h
300	12"	80 to 2400 m³/h	750 m³/h	0.10 m³	10 m³/h
350	14"	110 to 3300 m³/h	1000 m³/h	0.10 m³	15 m³/h
375	15"	140 to 4200 m³/h	1200 m³/h	0.15 m³	20 m³/h
400	16"	140 to 4200 m³/h	1200 m³/h	0.15 m³	20 m³/h
450	18"	180 to 5400 m³/h	1500 m³/h	0.25 m³	25 m³/h
500	20"	220 to 6600 m³/h	2000 m³/h	0.25 m³	30 m³/h
600	24"	310 to 9600 m³/h	2500 m³/h	0.30 m³	40 m³/h
700	28"	420 to 13500 m³/h	3500 m³/h	0.50 m³	50 m³/h
–	30"	480 to 15000 m³/h	4000 m³/h	0.50 m³	60 m³/h
800	32"	550 to 18000 m³/h	4500 m³/h	0.75 m³	75 m³/h
900	36"	690 to 22500 m³/h	6000 m³/h	0.75 m³	100 m³/h
1000	40"	850 to 28000 m³/h	7000 m³/h	1.00 m³	125 m³/h
–	42"	950 to 30000 m³/h	8000 m³/h	1.00 m³	125 m³/h
1200	48"	1250 to 40000 m³/h	10000 m³/h	1.50 m³	150 m³/h
–	54"	1550 to 50000 m³/h	13000 m³/h	1.50 m³	200 m³/h
1400	–	1700 to 55000 m³/h	14000 m³/h	2.00 m³	225 m³/h
–	60"	1950 to 60000 m³/h	16000 m³/h	2.00 m³	250 m³/h
1600	–	2200 to 70000 m³/h	18000 m³/h	2.50 m³	300 m³/h
–	66"	2500 to 80000 m³/h	20500 m³/h	2.50 m³	325 m³/h
1800	72"	2800 to 90000 m³/h	23000 m³/h	3.00 m³	350 m³/h
–	78"	3300 to 100000 m³/h	28500 m³/h	3.50 m³	450 m³/h
2000	–	3400 to 110000 m³/h	28500 m³/h	3.50 m³	450 m³/h

Flow characteristic values (US units)					
Diameter		**Recommended flow rate**	**Factory settings**		
[inch]	[mm]	Min./max. full scale value (v ~ 0.3 or 10 m/s)	Full scale value Current output (v ~ 2.5 m/s)	Pulse value (~ 2 pulses/s)	Low flow (v ~ 0.04 m/s)
1"	25	2.5 to 80 gal/min	18 gal/min	0.20 gal	0.25 gal/min
–	32	4 to 130 gal/min	30 gal/min	0.20 gal	0.50 gal/min
1½"	40	7 to 190 gal/min	50 gal/min	0.50 gal	0.75 gal/min
2"	50	10 to 300 gal/min	75 gal/min	0.50 gal	1.25 gal/min
–	65	16 to 500 gal/min	130 gal/min	1 gal	2.0 gal/min
3"	80	24 to 800 gal/min	200 gal/min	2 gal	2.5 gal/min
4"	100	40 to 1250 gal/min	300 gal/min	2 gal	4.0 gal/min
–	125	60 to 1950 gal/min	450 gal/min	5 gal	7.0 gal/min
6"	150	90 to 2650 gal/min	600 gal/min	5 gal	12 gal/min
8"	200	155 to 4850 gal/min	1200 gal/min	10 gal	15 gal/min
10"	250	250 to 7500 gal/min	1500 gal/min	15 gal	30 gal/min
12"	300	350 to 10600 gal/min	2400 gal/min	25 gal	45 gal/min
14"	350	500 to 15000 gal/min	3600 gal/min	30 gal	60 gal/min
15"	375	600 to 19000 gal/min	4800 gal/min	50 gal	60 gal/min
16"	400	600 to 19000 gal/min	4800 gal/min	50 gal	60 gal/min
18"	450	800 to 24000 gal/min	6000 gal/min	50 gal	90 gal/min
20"	500	1000 to 30000 gal/min	7500 gal/min	75 gal	120 gal/min
24"	600	1400 to 44000 gal/min	10500 gal/min	100 gal	180 gal/min
28"	700	1900 to 60000 gal/min	13500 gal/min	125 gal	210 gal/min
30"	–	2150 to 67000 gal/min	16500 gal/min	150 gal	270 gal/min
32"	800	2450 to 80000 gal/min	19500 gal/min	200 gal	300 gal/min
36"	900	3100 to 100000 gal/min	24000 gal/min	225 gal	360 gal/min
40"	1000	3800 to 125000 gal/min	30000 gal/min	250 gal	480 gal/min
42"	–	4200 to 135000 gal/min	33000 gal/min	250 gal	600 gal/min
48"	1200	5500 to 175000 gal/min	42000 gal/min	400 gal	600 gal/min
54"	–	9 to 300 Mgal/min	75 Mgal/min	0.0005 Mgal	1.3 Mgal/min
–	1400	10 to 340 Mgal/min	85 Mgal/min	0.0005 Mgal	1.3 Mgal/min
60"	–	12 to 380 Mgal/min	95 Mgal/min	0.0005 Mgal	1.3 Mgal/min
–	1600	13 to 450 Mgal/min	110 Mgal/min	0.0008 Mgal	1.7 Mgal/min
66"	–	14 to 500 Mgal/min	120 Mgal/min	0.0008 Mgal	2.2 Mgal/min
72"	1800	16 to 570 Mgal/min	140 Mgal/min	0.0008 Mgal	2.6 Mgal/min
78"	–	18 to 650 Mgal/min	175 Mgal/min	0.001 Mgal	3.0 Mgal/min
–	2000	20 to 700 Mgal/min	175 Mgal/min	0.001 Mgal	3.0 Mgal/min

Pressure loss

- No pressure loss if the sensor is installed in a pipe with the same nominal diameter.
- Pressure losses for configurations incorporating adapters according to DIN EN 545 (→ 18, Section "Adapters").

Mechanical construction

Design, dimensions

Transmitter remote version, wall-mount housing (non Ex-zone and II3G/Zone 2)

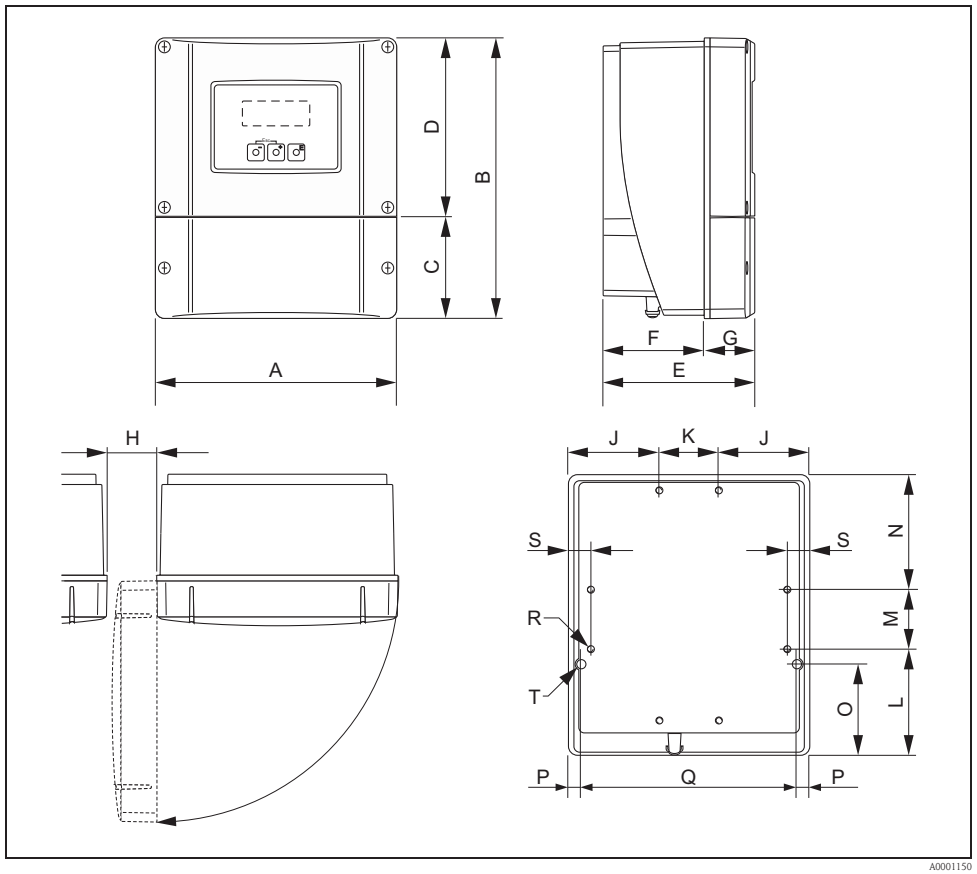

Dimensions (SI units)

A	B	C	D	E	F	G	H	J
215	250	90.5	159.5	135	90	45	> 50	81
K	L	M	N	O	P	Q	R	S
53	95	53	102	81.5	11.5	192	8 × M5	20

All dimensions in [mm]

Dimensions (US units)

A	B	C	D	E	F	G	H	J
8.46	9.84	3.56	6.27	5.31	3.54	1.77	> 1.97	3.18
K	L	M	N	O	P	Q	R	S
2.08	3.74	2.08	4.01	3.20	0.45	7.55	8 × M5	0.79

All dimensions in [inch]

Transmitter remote version, connection housing (II2GD/Zone 1)

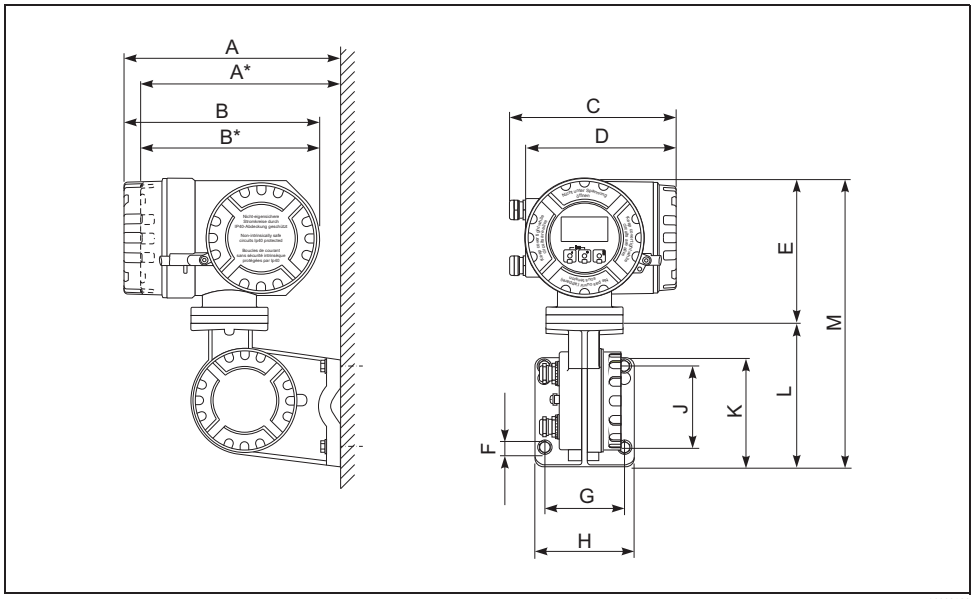

Dimensions (SI units)

A	A*	B	B*	C	D	E	Ø F	G	H	J	K	L	M
265	242	240	217	206	186	178	8.6 (M8)	100	130	100	144	170	355

All dimensions in [mm]

Dimensions (US units)

A	A*	B	B*	C	D	E	Ø F	G	H	J	K	L	M
10.4	9.53	9.45	8.54	8.11	7.32	7.01	0.34 (M8)	3.94	5.12	3.94	5.67	6.69	14.0

All dimensions in [inch]

There is a separate mounting kit for the wall-mounted housing. It can be ordered from Endress+Hauser as an accessory. The following installation variants are possible:
- Panel-mounted installation
- Pipe mounting

Installation in control panel

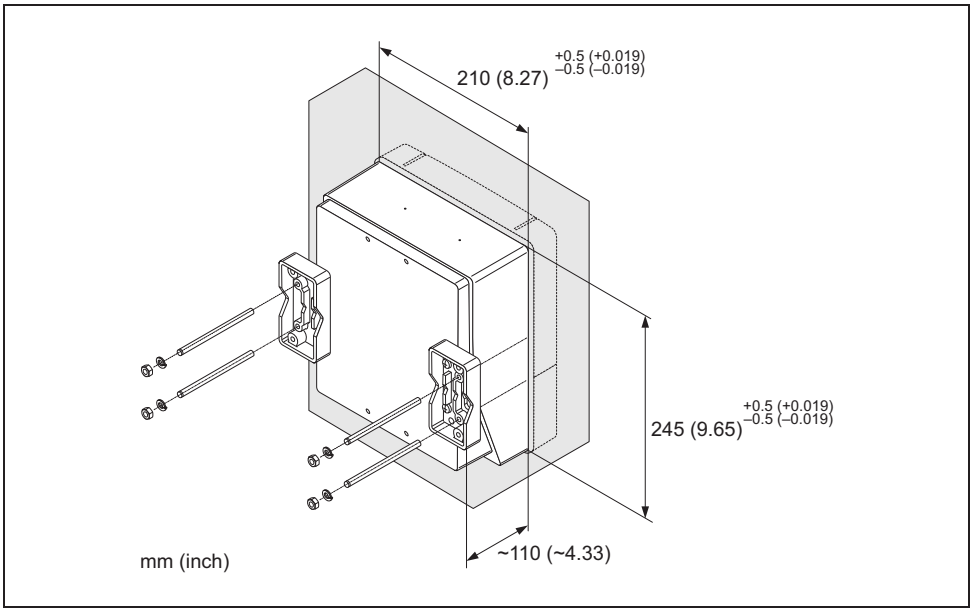

A0001131

Pipe mounting

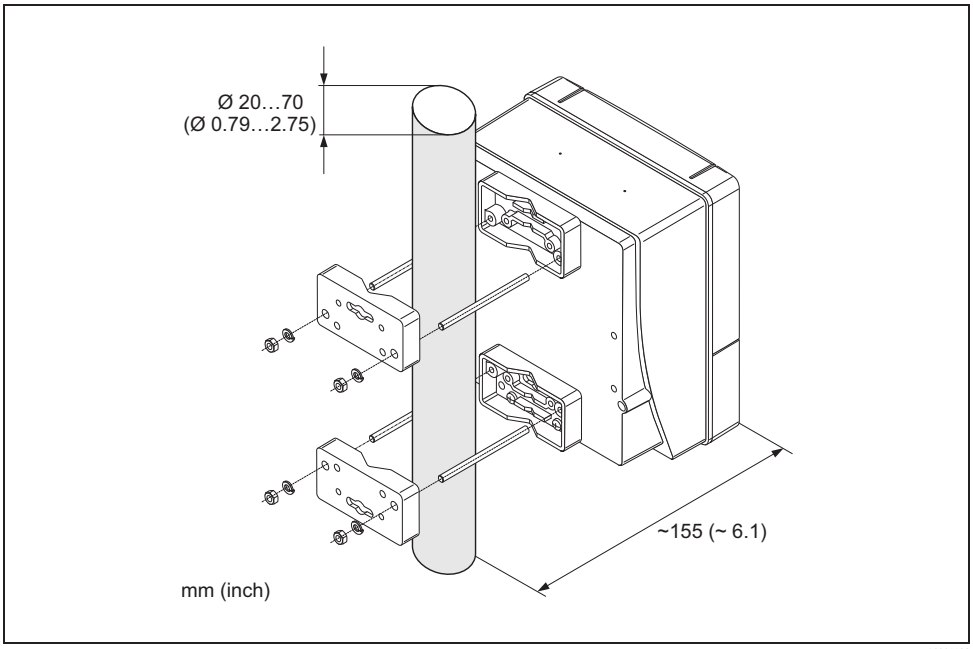

A0001132

Compact version DN ≤ 300 (12")

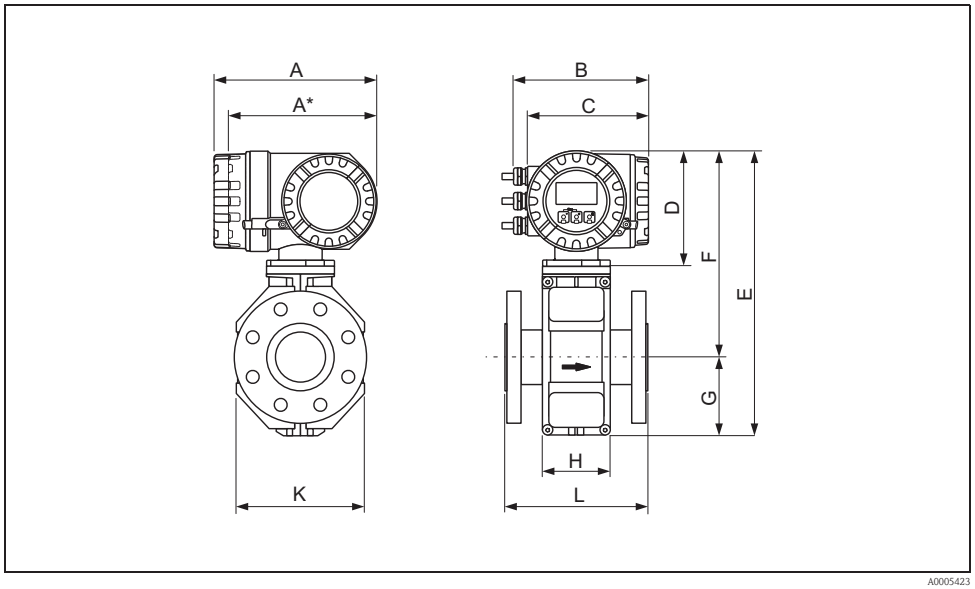

Dimensions (SI units)

DN EN (DIN) / JIS / AS [2]	L [1]	A	A*	B	C	D	E	F	G	H	K
25	200	227	207	187	168	160	341	257	84	94	120
32	200						341	257	84	94	120
40	200						341	257	84	94	120
50	200						341	257	84	94	120
65	200						391	282	109	94	180
80	200						391	282	109	94	180
100	250						391	282	109	94	180
125	250						472	322	150	140	260
150	300						472	322	150	140	260
200	350						527	347	180	156	324
250	450						577	372	205	166	400
300	500						627	397	230	166	460

[1] The length is regardless of the pressure rating selected. Fitting length to DVGW.
[2] For flanges to AS, only the nominal diameters DN 80, 100 and 150 to 300 are available.
All dimensions in [mm]

Dimensions (US units)

DN ANSI	L [1]	A	A*	B	C	D	E	F	G	H	K
1"	7.87						13.4	10.1	3.31	3.70	4.72
1½"	7.87						13.4	10.1	3.31	3.70	4.72
2"	7.87						13.4	10.1	3.31	3.70	4.72
3"	7.87						15.4	11.1	4.29	3.70	7.09
4"	9.84	8.94	8.15	7.36	6.61	6.30	15.4	11.1	4.29	3.70	7.09
6"	11.8						18.6	12.7	5.91	5.51	10.2
8"	13.8						20.8	13.7	7.09	6.14	12.8
10"	17.7						22.7	14.7	8.07	6.14	15.8
12"	19.7						24.7	15.6	9.06	6.54	18.1

[1] The length is regardless of the pressure rating selected. Fitting length to DVGW.
All dimensions in [inch]

Compact version DN ≥ 350 (14")

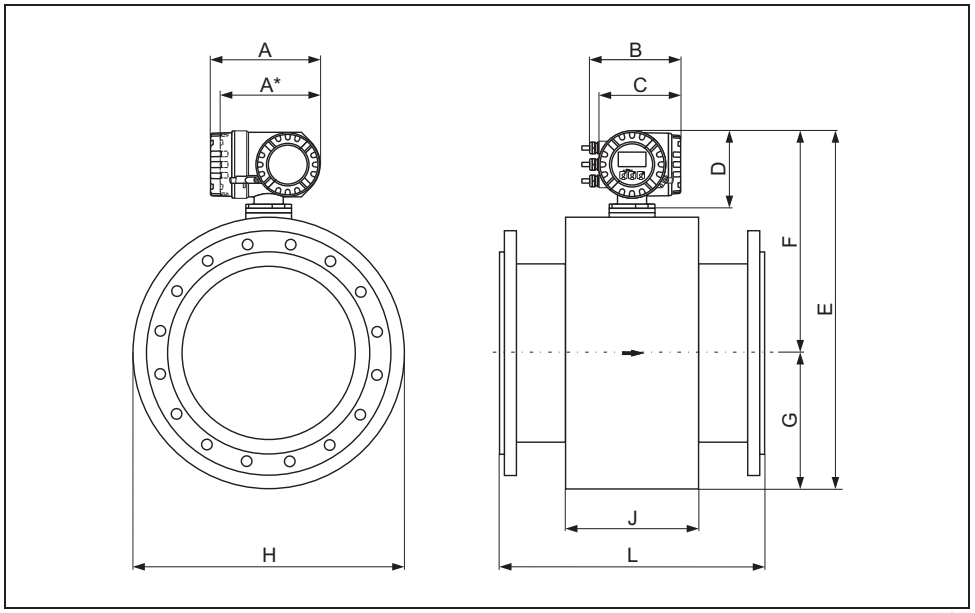

Dimensions (SI units)

DN EN (DIN) / AS [2]	L [1]	A	A*	B	C	D	E	F	G	H	J
350	550	227	207	187	168	160	738.5	456.5	282.0	276	564
375	600						790.5	482.5	308.0	276	616
400	600						790.5	482.5	308.0	276	616
450	650						840.5	507.5	333.0	292	666
500	650						891.5	533.0	358.5	292	717
600	780						995.5	585.0	410.5	402	821
700	910						1198.5	686.5	512.0	589	1024
750	975						1198.5	686.5	512.0	626	1024
800	1040						1241.5	708.5	533.5	647	1067
900	1170						1394.5	784.5	610.0	785	1220
1000	1300						1546.5	860.5	686.0	862	1372
1050	1365						1598.5	886.5	712.0	912	1424
1200	1560						1796.5	985.5	811.0	992	1622
1350	1755						1998.5	1086.5	912.0	1252	1824
1400	1820						2148.5	1161.5	987.0	1252	1974
1500	1950						2196.5	1185.5	1011.0	1392	2022
1600	2080						2286.5	1230.5	1056.0	1482	2112
1650	2145						2360.5	1267.5	1093.0	1482	2186
1800	2340						2550.5	1362.5	1188.0	1632	2376
2000	2600						2650.5	1412.5	1238.0	1732	2476

[1] The length is regardless of the pressure rating selected. Fitting length to DVGW.
[2] For flanges to AS, only DN 350, 400, 500 and 600 are available.
All dimensions in [mm]

Dimensions (US units)

DN ANSI / AWWA [2]	L [1]	A	A*	B	C	D	E	F	G	H	J
14"	21.6	8.94	8.15	7.36	6.61	6.30	29.1	17.9	11.1	10.9	22.2
15"	23.6						31.1	18.9	12.1	10.9	24.2
16"	23.6						31.1	18.9	12.1	10.9	24.2
18"	25.6						33.1	19.9	13.1	11.5	26.2
20"	25.6						35.1	20.9	14.1	11.5	28.2
24"	30.7						39.2	23.0	16.2	15.8	32.3
28"	35.8						47.2	27.0	20.1	23.2	40.3
30"	38.4						47.2	27.0	20.1	24.6	40.3
32"	40.9						48.9	27.9	21.0	25.5	42.0
36"	46.0						54.9	30.9	24.0	30.9	48.0
40"	51.2						60.9	33.9	27.0	33.9	54.0
42"	53.7						62.9	34.9	28.0	35.9	56.0
48"	61.4						71.7	38.8	31.9	39.0	63.8
54"	69.1						78.7	42.8	35.9	42.3	71.8
56"	71.7						84.6	45.7	38.9	49.3	77.7
60"	76.8						86.5	46.7	39.8	54.8	79.6
64"	81.9						90.0	48.4	41.6	58.4	83.2
66"	84.4						92.9	49.9	43.0	58.4	86.0
72"	92.1						100.4	53.6	46.8	64.2	93.5
78"	102.3						104.3	55.6	48.7	68.2	97.5

[1] The length is regardless of the pressure rating selected. Fitting length to DVGW.
[2] Flanges ≤ 24" only to ANSI available, ≥ 28" only to AWWA available.
All dimensions in [inch]

Sensor, remote version DN ≤ 300 (12")

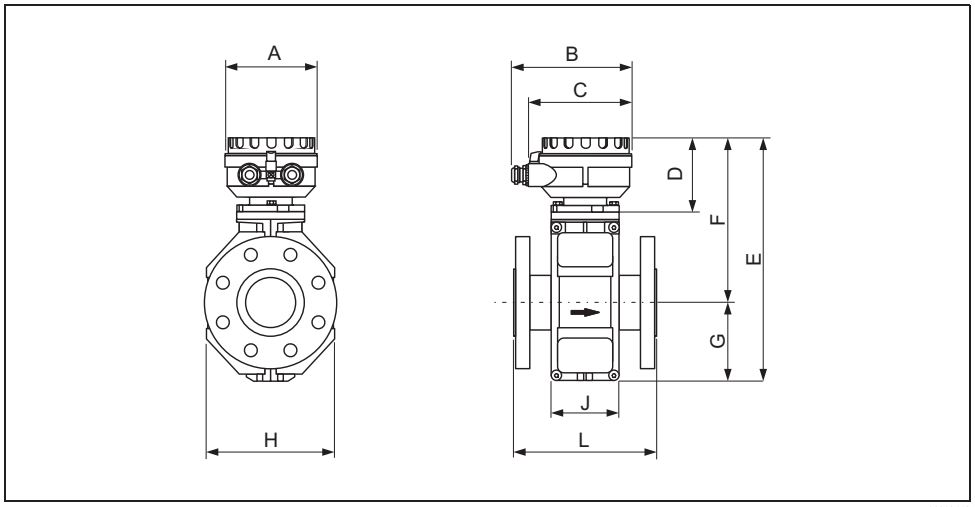

A0012462

Dimensions (SI units)

DN EN (DIN) / JIS / AS [2]	L [1]	A	B	C	D	E	F	G	H	J
25	200	129	163	143	102	286	202	84	120	94
32	200	129	163	143	102	286	202	84	120	94
40	200	129	163	143	102	286	202	84	120	94
50	200	129	163	143	102	286	202	84	120	94
65	200	129	163	143	102	336	227	109	180	94
80	200	129	163	143	102	336	227	109	180	94
100	250	129	163	143	102	336	227	109	180	94
125	250	129	163	143	102	417	267	150	260	140
150	300	129	163	143	102	417	267	150	260	140
200	350	129	163	143	102	472	292	180	324	156
250	450	129	163	143	102	522	317	205	400	166
300	500	129	163	143	102	572	342	230	460	166

[1] The length is regardless of the pressure rating selected. Fitting length to DVGW.
[2] For flanges to AS, only the nominal diameters DN 80, 100 and 150 to 300 are available.
All dimensions in [mm]

Dimensions (US units)

DN ANSI	L [1]	A	B	C	D	E	F	G	H	J
1"	7.87	5.08	6.42	5.63	4.02	11.3	7.95	3.32	4.72	3.70
1½"	7.87	5.08	6.42	5.63	4.02	11.3	7.95	3.32	4.72	3.70
2"	7.87	5.08	6.42	5.63	4.02	11.3	7.95	3.32	4.72	3.70
3"	7.87	5.08	6.42	5.63	4.02	13.2	8.94	4.30	7.10	3.70
4"	9.84	5.08	6.42	5.63	4.02	13.2	8.94	4.30	7.10	3.70
6"	11.8	5.08	6.42	5.63	4.02	16.4	10.5	5.91	10.2	5.51
8"	13.8	5.08	6.42	5.63	4.02	18.6	11.5	7.10	12.8	6.14
10"	17.7	5.08	6.42	5.63	4.02	20.6	12.5	8.08	15.8	6.14
12"	19.7	5.08	6.42	5.63	4.02	22.5	13.5	9.06	18.1	6.54

[1] The length is regardless of the pressure rating selected. Fitting length to DVGW.
All dimensions in [inch]

Sensor, remote version DN ≥ 350 (14")

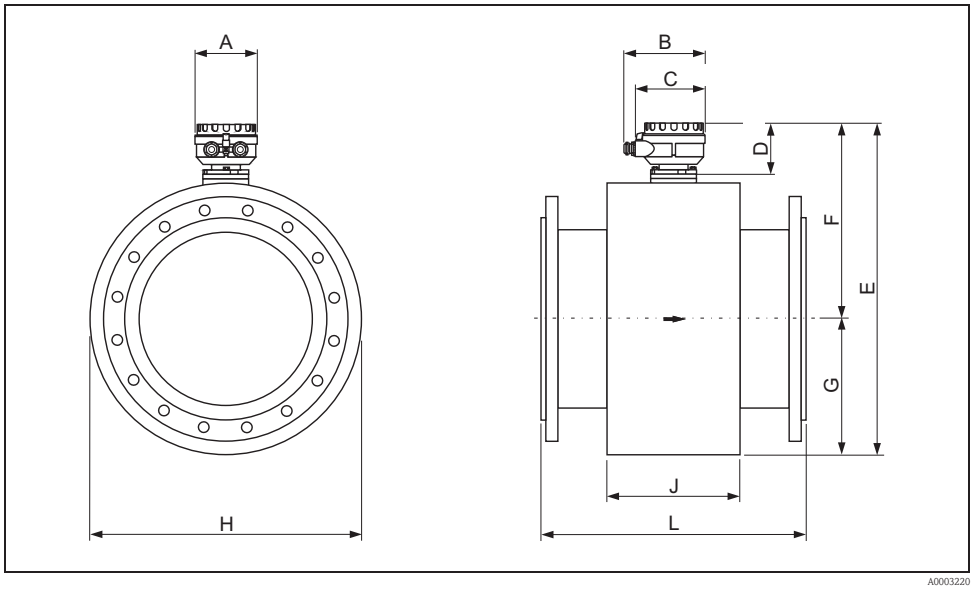

Dimensions (SI units)

DN EN (DIN) / AS [2]	L [1]	A	B	C	D	E	F	G	H	J
350	550	129	163	143	102	683.5	401.5	282.0	564	276
375	600					735.5	427.5	308.0	616	276
400	600					735.5	427.5	308.0	616	276
450	650					785.5	452.5	333.0	666	292
500	650					836.5	478.0	358.5	717	292
600	780					940.5	530.0	410.5	821	402
700	910					1143.5	631.5	512.0	1024	589
750	975					1143.5	631.5	512.0	1024	626
800	1040					1186.5	653.0	533.5	1067	647
900	1170					1339.5	729.5	610.0	1220	785
1000	1300					1491.5	805.5	686.0	1372	862
1050	1365					1543.5	831.5	712.0	1424	912
1200	1560					1741.5	930.5	811.0	1622	992
1350	1755					1943.5	1031.5	912.0	1824	1252
1400	1820					2093.5	1106.5	987.0	1974	1252
1500	1950					2141.5	1130.5	1011.0	2022	1392
1600	2080					2231.5	1175.5	1056.0	2112	1482
1650	2145					2305.5	1212.5	1093.0	2186	1482
1800	2340					2495.5	1307.5	1188.0	2376	1632
2000	2600					2595.5	1357.5	1238.0	2476	1732

[1] The length is regardless of the pressure rating selected. Fitting length to DVGW.
[2] For flanges to AS, only DN 350, 400, 500 and 600 are available.
All dimensions in [mm]

Dimensions (US units)

DN ANSI / AWWA [2]	L [1]	A	B	C	D	E	F	G	H	J
14"	21.6	5.08	6.42	5.63	4.02	29.1	15.8	11.1	22.2	10.9
15"	23.6					31.1	16.8	12.1	24.2	10.9
16"	23.6					31.1	16.8	12.1	24.2	10.9
18"	25.6					33.1	17.8	13.1	26.2	11.5
20"	25.6					35.1	18.8	14.1	28.2	11.5
24"	30.7					39.2	20.9	16.2	32.3	15.8
28"	35.8					45.0	24.9	20.1	40.3	23.2
30"	38.4					45.0	24.9	20.1	40.3	24.6
32"	40.9					46.7	25.7	21.0	42.0	25.5
36"	46.0					52.7	28.7	24.0	48.0	30.9
40"	51.2					58.7	31.7	27.0	54.0	33.9
42"	53.7					60.7	32.7	28.0	56.0	35.9
48"	61.4					68.5	36.6	31.9	63.8	39.0
54"	69.1					76.5	40.6	35.9	71.8	42.3
56"	71.7					82.4	43.6	38.9	77.7	49.3
60"	76.8					84.3	44.5	39.8	79.6	54.8
64"	81.9					87.9	46.3	41.6	83.2	58.4
66"	84.4					90.8	47.7	43.0	86.0	58.4
72"	92.1					98.2	51.5	46.8	93.5	64.2
78"	102.3					102.2	53.4	48.7	97.5	68.2

[1] The length is regardless of the pressure rating selected. Fitting length to DVGW.
[2] Flanges ≤ 24" only to ANSI available, ≥ 28" only to AWWA available.
All dimensions in [inch]

Ground disk for flange connections

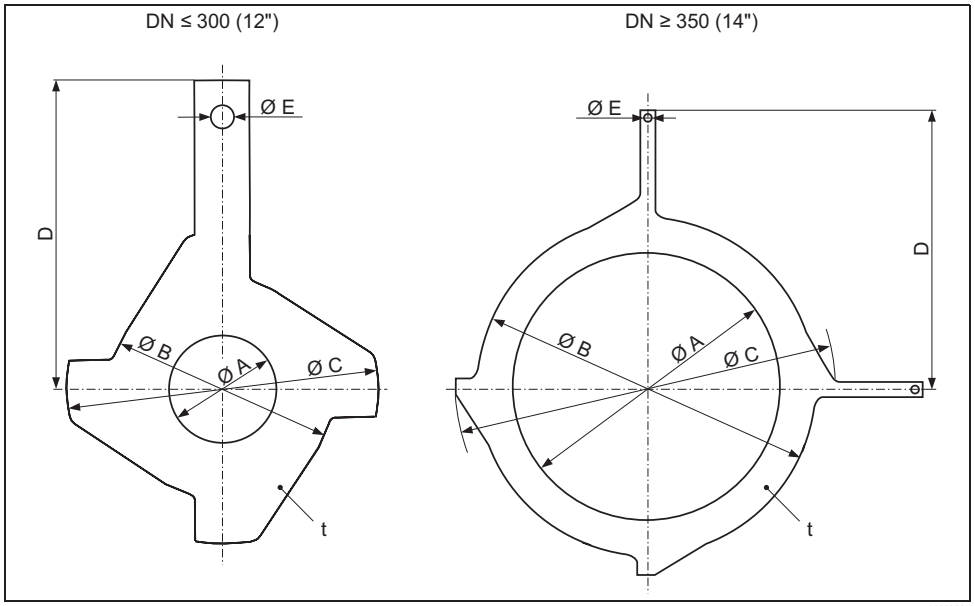

Dimensions (SI units)

DN [1] EN (DIN) / JIS / AS [2]	A	B	C	D	E	t
25	26	62	77.5	87.5	6.5	2
32	35	80	87.5	94.5		
40	41	82	101	103		
50	52	101	115.5	108		
65	68	121	131.5	118		
80	80	131	154.5	135		
100	104	156	186.5	153		
125	130	187	206.5	160		
150	158	217	256	184		
200	206	267	288	205		
250	260	328	359	240		
300 [3]	312	375	413	273		
300 [4]	310	375	404	268		
350 [3]	343	433	479	365	9.0	
375 [3]	393	480	542	395		
400 [3]	393	480	542	395		
450 [3]	439	538	583	417		
500 [3]	493	592	650	460		
600 [3]	593	693	766	522		

[1] Ground disks can be used for all flange standards/pressure ratings that can be delivered, except for DN ≥ 300.
[2] Only DN 32, 40, 65 and 125 are available for flanges according to AS.
[3] PN 10/16
[4] PN 25, JIS 10K/20K
All dimensions in [mm]

Dimensions (US units)

DN [1] ANSI	A	B	C	D	E	t
1"	1.02	2.44	3.05	3.44	0.26	0.08
1½"	1.61	3.23	3.98	4.06		
2"	2.05	3.98	4.55	4.25		
3"	3.15	5.16	6.08	5.31		
4"	4.09	6.14	7.34	6.02		
6"	6.22	8.54	10.08	7.24		
8"	8.11	10.5	11.3	8.07		
10"	10.2	12.9	14.1	9.45		
12"	12.3	14.8	16.3	10.8		
14"	13.5	17.1	18.9	14.4	0.35	
15"	15.45	18.9	21.3	15.6		
16"	15.45	18.9	21.3	15.6		
18"	17.3	21.2	23.0	16.4		
20"	19.4	23.3	25.6	18.1		
24"	23.4	27.3	30.1	20.6		

[1] Ground disks can be used for all flange standards/pressure ratings.
All dimensions in [inch]

Weight

Weight in SI units

Weight data in kg

Nominal diameter		Compact version						Remote version (without cable)						
								Sensor						Transmitter
[mm]	[inch]	EN (DIN) / AS [1]		JIS		ANSI / AWWA		EN (DIN) / AS [1]		JIS		ANSI / AWWA		Wall-mount housing
25	1"	PN 40	7.3	10K	7.3	Class 150	7.3	PN 40	5.3	10K	5.3	Class 150	5.3	6.0
32	–		8.0		7.3		–		6.0		5.3		–	
40	1½"		9.4		8.3		9.4		7.4		6.3		7.4	
50	2"		10.6		9.3		10.6		8.6		7.3		8.6	
65	–	PN 16	12		11.1		–	PN 16	10.0		9.1		–	
80	3"		14		112.5		14.0		12.0		10.5		12.0	
100	4"		16		14.7		16.0		14.0		12.7		14.0	
125	–		21.5		21.0		–		19.5		19.0		–	
150	6"		25.5		24.5		25.5		23.5		22.5		23.5	
200	8"	PN 10	45		41.9		45	PN 10	43		39.9		43	
250	10"		65		69.4		75		63		67.4		73	
300	12"		70		72.3		110		68		70.3		108	
350	14"	PN 6	105				175	PN 6	103				173	
375	15"		120				–		118				–	
400	16"		120				205		118				203	
450	18"		161				255		159				253	
500	20"		156				285		154				283	
600	24"		208				405		206				403	
700	28"		304			Class D	400		302			Class D	398	
–	30"		–				460		–				458	
800	32"		357				550		355				548	
900	36"		485				800		483				798	
1000	40"		589				900		587				898	
–	42"		–				1100		–				1098	
1200	48"		850				1400		848				1398	
–	54"		–				2200		–				2198	
1400	–		1300				–		1298				–	
–	60"		–				2700		–				2698	
1600	–		1700				–		1698				–	
–	66"		–				3700		–				3698	
1800	72"		2200				4100		2198				4098	
–	78"		–				4600		–				4598	
2000	–		2800				–		2798				–	

[1] For flanges to AS, only DN 80, 100, 150 to 400, 500 and 600 are available.

- Transmitter (compact version): 3.4 kg
- Weight data valid for standard pressure ratings and without packaging material.

Weight in US units (only ANSI / AWWA)

Weight data in lbs						
Nominal diameter		Compact version		Remote version (without cable)		
				Sensor		Transmitter
[mm]	[inch]		ANSI /AWWA		ANSI / AWWA	Wall-mount housing
25	1"	Class 150	16.1	Class 150	11.7	13.2
40	1½"		20.7		16.3	
50	2"		23.4		19.0	
80	3"		30.9		26.5	
100	4"		35.3		30.9	
150	6"		56.2		51.8	
200	8"		99.2		94.8	
250	10"		165.4		161.0	
300	12"		242.6		238.1	
350	14"		385.9		381.5	
400	16"		452.0		447.6	
450	18"		562.3		557.9	
500	20"		628.4		624.0	
600	24"		893.0		888.6	
700	28"	Class D	882.0	Class D	877.6	
–	30"		1014.3		1009.9	
800	32"		1212.8		1208.3	
900	36"		1764.0		1759.6	
1000	40"		1984.5		1980.1	
–	42"		2425.5		2421.1	
1200	48"		3087.0		3082.6	
–	54"		4851.0		4846.6	
–	60"		5953.5		5949.1	
–	66"		8158.5		8154.1	
1800	72"		9040.5		9036.1	
–	78"		10143.0		10138.6	

- Transmitter (compact version): 7.5 lbs
- Weight data valid for standard pressure ratings and without packaging material.

Measuring tube specifications

Diameter		Pressure rating						Internal diameter			
		EN (DIN)	AS 2129	AS 4087	ANSI	AWWA	JIS	Hard rubber		Polyurethane	
[mm]	[inch]	[bar]			[lbs]			[mm]	[inch]	[mm]	[inch]
25	1"	PN 40	–	–	Cl. 150	–	20 K	–	–	24	0.94
32	–	PN 40	–	–	–	–	20 K	–	–	32	1.26
40	1½"	PN 40	–	–	Cl. 150	–	20 K	–	–	38	1.50
50	2"	PN 40	Table E	PN 16	Cl. 150	–	10 K	50	1.97	50	1.97
65	–	PN 16	–	–	–	–	10 K	66	2.60	66	2.60
80	3"	PN 16	Table E	PN 16	Cl. 150	–	10 K	79	3.11	79	3.11
100	4"	PN 16	Table E	PN 16	Cl. 150	–	10 K	102	4.02	102	4.02
125	–	PN 16	–	–	–	–	10 K	127	5.00	127	5.00
150	6"	PN 16	Table E	PN 16	Cl. 150	–	10 K	156	6.14	156	6.14
200	8"	PN 10	Table E	PN 16	Cl. 150	–	10 K	204	8.03	204	8.03
250	10"	PN 10	Table E	PN 16	Cl. 150	–	10 K	258	10.2	258	10.2
300	12"	PN 10	Table E	PN 16	Cl. 150	–	10 K	309	12.2	309	12.2
350	14"	PN 6	Table E	PN 16	Cl. 150	–	–	342	13.5	342	13.5
375	15"	–	–	PN 16	–	–	–	392	15.4	–	–
400	16"	PN 6	Table E	PN 16	Cl. 150	–	–	392	15.4	392	15.4
450	18"	PN 6	–	–	Cl. 150	–	–	437	17.2	437	17.2
500	20"	PN 6	Table E	PN 16	Cl. 150	–	–	492	19.4	492	19.4
600	24"	PN 6	Table E	PN 16	Cl. 150	–	–	594	23.4	594	23.4
700	28"	PN 6	–	–	–	Class D	–	692	27.2	692	27.2
–	30"	–	–	–	–	Class D	–	742	29.2	742	29.2
800	32"	PN 6	–	–	–	Class D	–	794	31.3	794	31.3
900	36"	PN 6	–	–	–	Class D	–	891	35.1	891	35.1
1000	40"	PN 6	–	–	–	Class D	–	994	39.1	994	39.1
–	42"	–	–	–	–	Class D	–	1043	41.1	1043	41.1
1200	48"	PN 6	–	–	–	Class D	–	1197	47.1	1197	47.1
–	54"		–	–	–	Class D	–	1339	52.7	–	–
1400	–	PN 6	–	–	–	–	–	1402	55.2	–	–
–	60"	–	–	–	–	Class D	–	1492	58.7	–	–
1600	–	PN 6	–	–	–	–	–	1600	63.0	–	–
–	66"	–	–	–	–	Class D	–	1638	64.5	–	–
1800	72"	PN 6	–	–	–	Class D	–	1786	70.3	–	–
2000	78"	PN 6	–	–	–	Class D	–	1989	78.3	–	–

Material

- Transmitter housing
  - Compact housing: powder-coated die-cast aluminum
  - Wall-mount housing: powder-coated die-cast aluminum
- Sensor housing
  - DN 25 to 300 (1 to 12"): powder-coated die-cast aluminum
  - DN 350 to 2000 (14 to 78"): with protective lacquering
- Measuring tube
  - DN ≤ 300 (12"): stainless steel 1.4301 or 1.4306/304L; (for flanges made of carbon steel with Al/Zn protective coating)
  - DN ≥ 350 (14"): stainless steel 1.4301 or 1.4306/304L; (for flanges made of carbon steel with Al/Zn protective coating)
- Electrodes: 1.4435, Alloy C-22, Tantalum
- Flanges
  - EN 1092-1 (DIN 2501): 1.4571/316L; RSt37-2 (S235JRG2); C22; FE 410W B (DN ≤ 300 (12"): with Al/Zn protective coating; DN ≥ 350 (14") with protective lacquering)
  - ANSI: A105; F316L (DN ≤ 300 (12"): with Al/Zn protective coating; DN ≥ 350 (14") with protective lacquering)
  - AWWA: 1.0425
  - JIS: RSt37-2 (S235JRG2); HII; 1.0425/316L (DN ≤ 300 (12"): with Al/Zn protective coating; DN ≥ 350 (14") with protective lacquering)
  - AS 2129
    - DN 150 to 300, 600 (6 to 12", 24"): A105 or RSt37-2 (S235JRG2)
    - DN 50, 80, 100, 350, 400, 500 (2", 3", 4", 14", 16", 20"): A105 or St44-2 (S275JR)
  - AS 4087: A105 or St44-2 (S275JR)
- Seals: to DIN EN 1514-1
- Ground disks: 1.4435/316L, Alloy C-22, Tantalum

Material load diagram

Caution!
The following diagrams contain material load diagrams (reference curves) for flange materials with regard to the medium temperature. However, the maximum medium temperatures permitted always depend on the lining material of the sensor and/or the sealing material (→ 21).

Flange connection to EN 1092-1 (DIN 2501)
Material: RSt37-2 (S235JRG2) / C22 / Fe 410W B

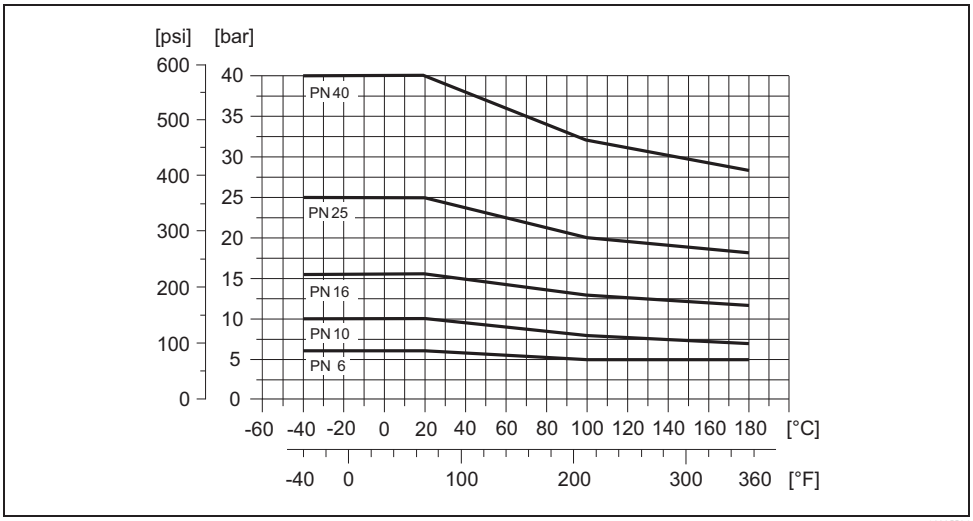

A0005594

Flange connection to EN 1092-1 (DIN 2501)
Material: 316L / 1.4571

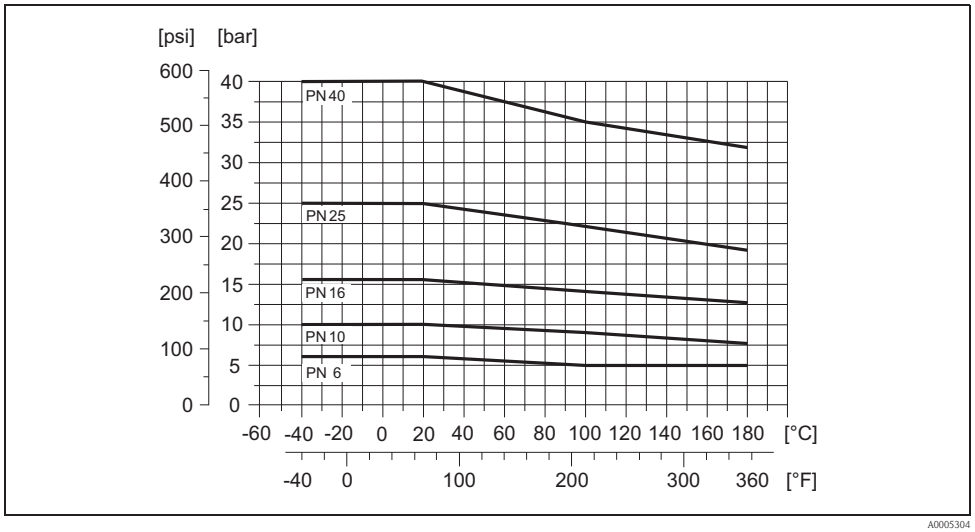

A0005304

Flange connection to ANSI B16.5
Material: A 105

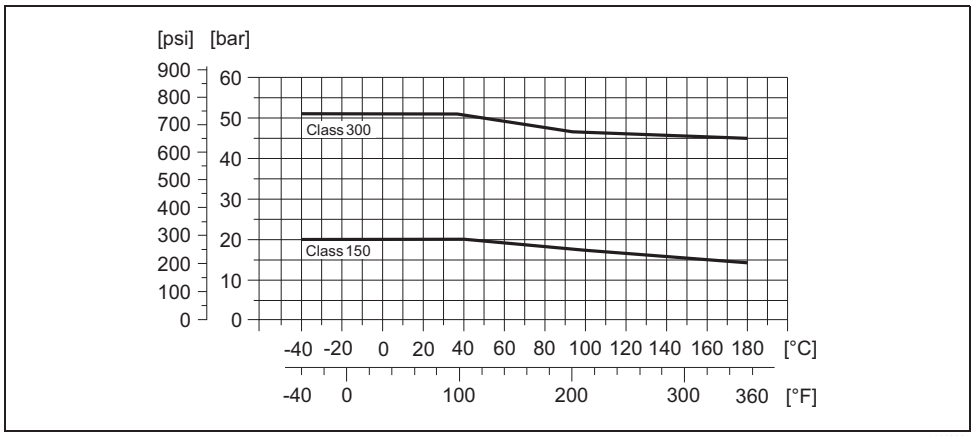

A0003226

Flange connection to ANSI B16.5
Material: F316L

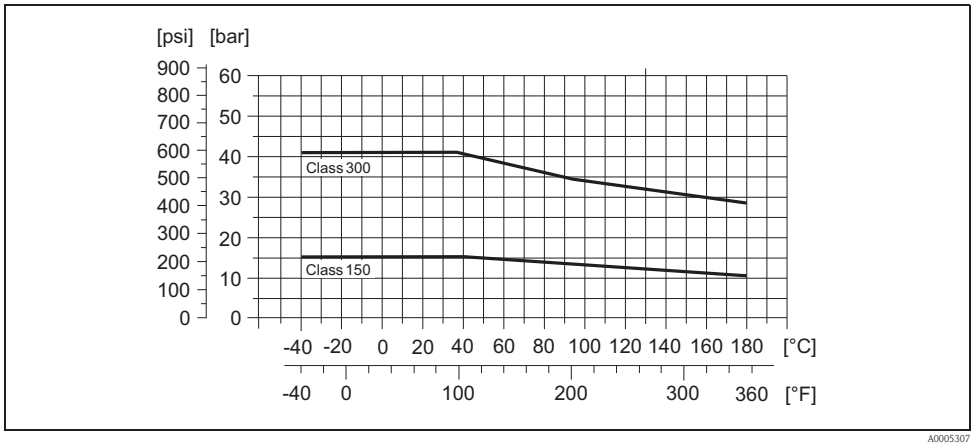

A0005307

Flange connection to AWWA C 207, Class D
Material: 1.0425

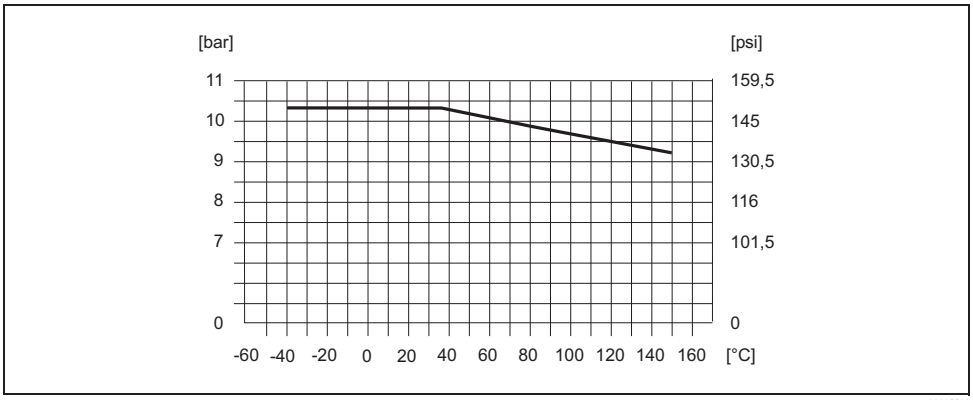

Flange connection to JIS B2220
Material: RSt37-2 (S235JRG2) / HII / 1.0425 / 316L

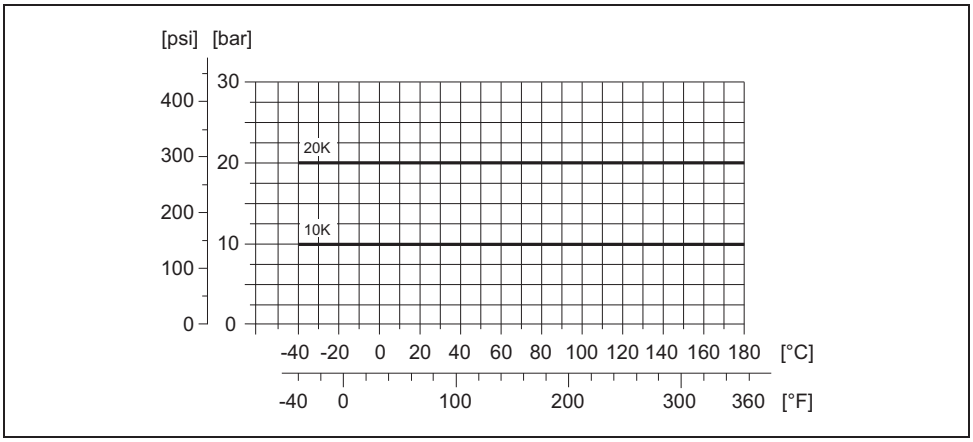

Flange connection to AS 2129 Table E or AS 4087 PN 16
Material: A105 / RSt37-2 (S235JRG2) / St44-2 (S275JR)

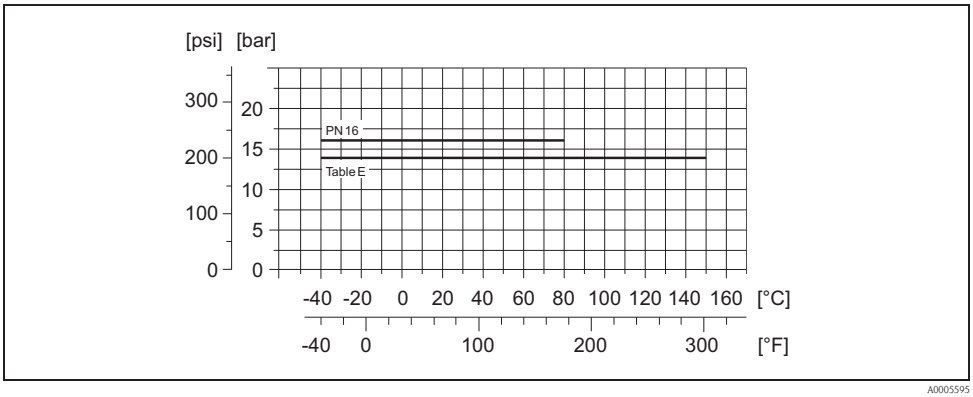

Fitted electrodes

Measuring electrodes, reference electrodes and empty pipe detection electrodes:
- Standard available with 1.4435, Alloy C-22, tantalum
- Optional: exchangeable measuring electrodes made of 1.4435 (DN 350 to 2000 / 14 to 78")

Process connections

Flange connection:
- EN 1092-1 (DIN 2501), DN ≤ 300 (12") form A, DN ≥ 350 (14") form B
  (Dimensions to DIN 2501, DN 65 PN 16 and DN 600 (24") PN 16 exclusively to EN 1092-1)
- ANSI B16.5
- AWWA C 207, Class D
- JIS B2220
- AS 2129 Table E
- AS 4087 PN 16

Surface roughness

- Electrodes
  – 1.4435, Alloy C-22, tantal: ≤ 0.3 to 0.5 µm (≤ 11.8 to 19.7 µin)

(all data refer to parts in contact with medium)

Human interface

Display elements

- Liquid crystal display: backlit, two lines (Promag 50) or four lines (Promag 53) with 16 characters per line
- Custom configurations for presenting different measured-value and status variables
- Totalizer
  – Promag 50: 2 totalizers
  – Promag 53: 3 totalizers

Operating elements

Unified operation concept for both types of transmitter:

Promag 50:
- Local operation via three keys (−, +, E)
- Quick Setup menus for straightforward commissioning

Promag 53:
- Local operation via three keys (−, +, E)
- Application-specific Quick Setup menus for straightforward commissioning

Language groups

Language groups available for operation in different countries:

Promag 50, Promag 53:
- Western Europe and America (WEA):
  English, German, Spanish, Italian, French, Dutch, Portuguese
- Eastern Europe and Scandinavia (EES):
  English, Russian, Polish, Norwegian, Finnish, Swedish, Czech
- South and east Asia (SEA):
  English, Japanese, Indonesian

Promag 53:
- China (CN):
  English, Chinese

You can change the language group via the operating program "FieldCare".

Remote operation

- Promag 50: Remote control via HART, PROFIBUS DP/PA
- Promag 53: Remote control via HART, PROFIBUS DP/PA, MODBUS RS485, FOUNDATION Fieldbus

Certificates and approvals

CE mark

The measuring system is in conformity with the statutory requirements of the EC Directives. Endress+Hauser confirms successful testing of the device by affixing to it the CE mark.

C-tick mark

The measuring system meets the EMC requirements of the "Australian Communications and Media Authority (ACMA)".

Pressure measuring device approval

Measuring devices with a nominal diameter smaller than or equal to DN 25 correspond to Article 3(3) of the EC Directive 97/23/EC (Pressure Equipment Directive) and have been designed and manufactured according to good engineering practice. Where necessary (depending on the medium and process pressure), there are additional optional approvals to Category II/III for larger nominal diameters.

Ex approval

Information about currently available Ex versions (ATEX, IECEx, FM, CSA, NEPSI) can be supplied by your Endress+Hauser Sales Center on request. All explosion protection data are given in a separate documentation which is available upon request.

Other standards and guidelines

- EN 60529
  Degrees of protection by housing (IP code)
- EN 61010
  Protection Measures for Electrical Equipment for Measurement, Control, Regulation and Laboratory Procedures.
- IEC/EN 61326
  “Emission in accordance with requirements for Class A”.
  Electromagnetic compatibility (EMC requirements)
- NAMUR NE 21:
  Electromagnetic compatibility (EMC) of industrial process and laboratory control equipment.
- NAMUR NE 43:
  Standardization of the signal level for the breakdown information of digital transmitters with analog output signal.
- NAMUR NE 53:
  Software of field devices and signal-processing devices with digital electronics.
- ANSI/ISA-S82.01
  Safety Standard for Electrical and Electronic Test, Measuring, Controlling and related Equipment - General Requirements Pollution degree 2, Installation Category II.
- CAN/CSA-C22.2 No. 1010.1-92
  Safety requirements for Electrical Equipment for Measurement and Control and Laboratory Use. Pollution degree 2, Installation Category II

FOUNDATION Fieldbus certification

The flow device has successfully passed all the test procedures carried out and is certified and registered by the Fieldbus Foundation. The device thus meets all the requirements of the following specifications:

- Certified to FOUNDATION Fieldbus Specification
- The device meets all the specifications of the FOUNDATION Fieldbus H1.
- Interoperability Test Kit (ITK), revision status 5.01 (device certification number: on request)
- The device can also be operated with certified devices of other manufacturers
- Physical Layer Conformance Test of the Fieldbus Foundation

MODBUS RS485 certification

The measuring device meets all the requirements of the MODBUS/TCP conformity test and has the “MODBUS/TCP Conformance Test Policy, Version 2.0”. The measuring device has successfully passed all the test procedures carried out and is certified by the “MODBUS/TCP Conformance Test Laboratory” of the University of Michigan.

PROFIBUS DP/PA certification

The flow device has successfully passed all the test procedures carried out and is certified and registered by the PNO (PROFIBUS User Organisation). The device thus meets all the requirements of the following specifications:

- Certified to PROFIBUS PA, profile version 3.0 (device certification number: on request)
- The device can also be operated with certified devices of other manufacturers (interoperability)

Accessories

Various accessories, which can be ordered separately from Endress+Hauser, are available for the transmitter and the sensor. Your Endress+Hauser service organization can provide detailed information on the order codes in question.

Documentation

- Flow Measurement (FA005D/06)
- Operating Instructions Promag Promag 50 (BA046D/06 and BA049D/06)
- Operating Instructions Promag Promag 50 PROFIBUS PA (BA055D/06 and BA056D/06)
- Operating Instructions Promag Promag 53 (BA047D/06 and BA048D/06)
- Operating Instructions Promag Promag 53 FOUNDATION Fieldbus (BA051D/06 and BA052D/06)
- Operating Instructions Promag Promag 53 MODBUS RS485 (BA117D/06 and BA118D/06)
- Operating Instructions Promag Promag 53 PROFIBUS DP/PA (BA053D/06 and BA054D/06)
- Supplementary documentation on Ex-ratings: ATEX, IECEx, FM, CSA, NEPSI

Registered trademarks

HART®
Registered trademark of the HART Communication Foundation, Austin, USA

PROFIBUS®
Registered trademark of the PROFIBUS Nutzerorganisation e.V., Karlsruhe, D

FOUNDATION™ Fieldbus
Registered trademark of the Fieldbus Foundation, Austin, USA

MODBUS®
Registered trademark of the MODBUS Organisation

HistoROM™, S-DAT®, T-DAT™, F-CHIP®, FieldCare®, Fieldcheck®, FieldXpert™, Applicator®
Registered or registration-pending trademarks of Endress+Hauser Flowtec AG, Reinach, CH

Order Codes

NOTE: Endress+Hauser reserves the right to change or modify product, specifications, and ordering information at any time without notice.
Please consult Endress+Hauser or your local representative for the most recent information.

Please note that the Promag 50W/53W is also available with:
- Hard rubber and Polyurethane liners; ACS, KTW/W270 and WRAS B59620 approvals
- PED Cat. II / III material certificates
- ATEX and NEPSI hazardous area approvals
- DIN2501 and JIS B2220 process connections

Consult factory for information.

Promag 50W, 1" to 24"

Promag 50W [ ][ ] - [ ] 010 [ ] 020 [ ] 030 [ ] 040 [ ] 050 [ ] 060 [ ] 070 [ ] 080 [ ] 090 [ ] 100 [ ] 110 [ ] 120

Nominal Diameter
- 25 1"
- 40 1-1/2"
- 50 2"
- 80 3"
- 1H 4"
- 1F 6"
- 2H 8"
- 2F 10"
- 3H 12"
- 3F 14"
- 4H 16"
- 4F 18"
- 5H 20"
- 6H 24"

010 Liner
- D Hard rubber, NSF61 drinking water approval (not available for 1", 1-1/2" or 2" sensors)
- H Hard rubber (not available for 1", 1-1/2" or 2" sensors)
- P Polyurethane, NSF61 drinking water approval
- S Hard rubber HR (not available for 1", 1-1/2" or 2" sensors)
- U Polyurethane
- 9 Special version, to be specified

020 Process connection
- L Class 150 ANSI B16.5 CS steel A105 flanges
- M Class 300 ANSI B16.5 CS steel A105 flanges (not for 8" and larger)
- R Class 150 ANSI B16.5 316L SS flanges
- S Class 300 ANSI B16.5 316L SS flanges (not for 8" and larger)
- 9 Special version, to be specified

030 Electrodes / material
- 0 Measuring, reference and EPD electrodes / 316L SS
- 1 Measuring, reference and EPD electrodes / Alloy C22
- 2 Measuring, reference and EPD electrodes / tantalum
- 7 Measuring electrode, exchangeable / 316L SS (for hard rubber liner only, 14" and larger sensors, no EPD or reference electrodes, for safe areas only)
- G Measuring, reference and EPD electrodes, bullet nose / 316L SS
- H Measuring, reference and EPD electrodes, bullet nose / Alloy C-22
- 9 Special version, to be specified

040 Calibration
- A 3-point calibration, 0.5%
- B 3-point calibration, 0.2%
- D SCS/A2LA 3-point 0.5% calibration (ISO/IEC 17025) with certificate traceable according to ISO 9000 (specify range)
- E SCS/A2LA 3-point 0.2% calibration (ISO/IEC 17025) with certificate traceable according to ISO 9000 (specify range)
- 9 Special version, to be specified

050 Certificates
- 1 Standard, no certificate
- 2 3.1B material certificate for pipe and flanges
- 3 2.3 pressure test certificate (1.5 x PN, 3 minutes) for sensors up to 12" only
- 4 3.1B material and 2.3 pressure test certificate for sensors up to 12" only
- 5 CRN approval
- 8 CRN approval + material certificate + pressure test
- 9 Special version, to be specified

060 Approvals
- A For use in non-hazardous areas
- N FM explosion proof Class I, Div. 1 / CSA Class I, Div. 1 (only for aluminum field housing, compact version, not for 14" and larger sensors)
- R FM non-incendive Class I, Div. 2 / CSA Class I, Div. 2

070 Housing
- A NEMA 4X (IP 67) compact aluminum housing
- C NEMA 4X (IP 67) remote wall-mounted (only for approvals A or R)
- G NEMA 4X (IP 67) remote aluminum field housing for non-hazardous areas
- K NEMA 6P sensor, wall-mounted housing (only for approvals A or R)
- N NEMA 6P sensor, aluminum field housing, non-hazardous
- P NEMA 4X (IP 67) compact aluminum housing, HE (harsh environment), compact and remote sensor sizes up to 12" only *
- S NEMA 4X (IP 67) remote wall-mounted housing, HE (harsh environment), remote sensor sizes 14" to 78" (only for approvals A and R) *
- 1 -40°F (-40°C) ambient temperature, NEMA 4X (IP 67), compact, aluminum field housing (only for approvals A and R)
- 3 -40°F (-40°C) ambient temperature, NEMA 4X (IP 67), compact (only for approvals A and R)
- 5 -40°F (-40°C) ambient temperature, NEMA 4X (IP 67) wall mount housing, for NEMA 6P sensor (only for approvals A and R)
- 9 Special version, to be specified

080 Cable for remote
- 0 Without cable
- 1 15 foot coil and signal cable
- 2 30 foot coil and signal cable
- 5 Coil and signal cable, specify length (maximum 650 ft depending on conductivity of process material)
- 7 Coil and signal cable, flexible conduit, specify length (maximum 650 ft depending on conductivity of process material)
- 9 Special version, to be specified

090 Cable entries
- B 1/2" NPT
- L 1/2" NPT fieldbus connector (only for approval A and R)
- 9 Special version, to be specified

100 Power supply / display
- 7 85 to 260 VAC, without display, remote configuration only (not for wall mount or SS housing)
- 8 20 to 55 VAC / 16 to 62 VDC, without display, remote configuration only (not for wall mount or SS housing)
- A 85 to 260 VAC, with display, push button operation (language: EN, ES, FR, IT, NL, PT, DE)
- B 20 to 55 VAC / 16 to 62 VDC, with display, push button operation (language: EN, ES, FR, IT, NL, PT, DE)
- X Sensor only (without transmitter, only available up to 8")
- 9 Special version, to be specified

110 Software
- A Standard software
- X Sensor only (up to 8" only)
- 9 Special version, to be specified

120 Outputs / Inputs
- A Current HART, SIL, frequency
- D Current HART, SIL, frequency, status output, status input
- H PROFIBUS-PA (approvals A and R only)
- J PROFIBUS-DP (approvals A and R only)
- S Current HART, SIL, frequency; active I.S. (not for approvals A and R)
- T Current HART, SIL, frequency; passive I.S. (not for approvals A and R)
- W Current HART, SIL
- X Sensor only
- 9 Special version, to be specified

* Harsh environment (HE) option is available for process conditions where cool process temperatures in tropical (high humidity) environments or process fluids which undergo large cyclical temperature variations which can cause high amounts of moisture that could condense onto the measurement tube.

Promag 50W, 28” to 78”

Promag 50W | | - | 010 | 020 | 030 | 040 | 050 | 060 | 070 | 080 | 090 | 100 | 110 | 120 |

Nominal Diameter
- 7H 28”
- 7F 30”, AWWA
- 8H 32”
- 9H 36”
- TO 40”
- VO 42”, AWWA
- T2 48”
- V3 54”, AWWA
- V5 60”, AWWA
- V6 66”, AWWA
- T8 72”
- V9 78”, AWWA

010 Liner
- D Hard rubber, NSF61 drinking water approval
- H Hard rubber
- P Polyurethane, NSF61 drinking water approval (not available for 42” up to 78”)
- S Hard rubber HR
- U Polyurethane (not available for 42” up to 78”)
- 9 Special version, to be specified

020 Process connection
- P Class D AWWA carbon steel A105 flanges
- 9 Special version, to be specified

030 Electrodes / material
- 0 Measuring, reference and EPD electrodes / 316L SS
- 1 Measuring, reference and EPD electrodes / Alloy C22
- 2 Measuring, reference and EPD electrodes / tantalum
- 7 Measuring electrode, exchangeable / 316L SS (for hard rubber liner only, 14” and larger sensors, no EPD or reference electrodes, for safe areas only)
- G Measuring, reference and EPD electrodes, bullet nose / 316L SS
- H Measuring, reference and EPD electrodes, bullet nose / Alloy C-22
- 9 Special version, to be specified

040 Calibration
- A 3-point calibration, 0.5%
- B 3-point calibration, 0.2%
- D SCS/A2LA 3-point 0.5% calibration (ISO/IEC 17025) with certificate traceable according to ISO 9000 (specify range)
- E SCS/A2LA 3-point 0.2% calibration (ISO/IEC 17025) with certificate traceable according to ISO 9000 (specify range)
- 9 Special version, to be specified

050 Certificates
- 1 Standard, no certificate
- 2 3.1B material certificate for pipe and flanges
- 9 Special version, to be specified

060 Approvals
- A For use in non-hazardous areas
- R FM non-incendive Class I, Div. 2 / CSA Class I, Div. 2

070 Housing
- A NEMA 4X (IP 67) compact aluminum housing
- C NEMA 4X (IP 67) remote wall-mounted (only for approvals A or R)
- G NEMA 4X (IP 67) remote aluminum field housing for non-hazardous areas
- K NEMA 6P sensor, wall-mounted housing (only for approvals A or R)
- S NEMA 4X (IP 67) remote wall-mounted housing, HE (harsh environment), remote sensor sizes 14” to 78” (only for approvals A and R) *
- 1 –40°F (–40°C) ambient temperature, NEMA 4X (IP 67), compact, aluminum field housing (only for approvals A and R)
- 3 –40°F (–40°C) ambient temperature, NEMA 4X (IP 67), compact (only for approvals A and R)
- 5 –40°F (–40°C) ambient temperature, NEMA 4X (IP 67) wall mount housing, for NEMA 6P sensor (only for approvals A and R)
- 9 Special version, to be specified

080 Cable for remote
- 0 Without cable
- 1 15 foot coil and signal cable
- 2 30 foot coil and signal cable
- 5 Coil and signal cable, specify length (maximum 650 ft depending on conductivity of process material)
- 7 Coil and signal cable, flexible conduit, specify length (maximum 650 ft depending on conductivity of process material)
- 9 Special version, to be specified

090 Cable entries
- B 1/2” NPT
- L 1/2” NPT fieldbus connector (only for approval A and R)
- 9 Special version, to be specified

100 Power supply / display
- 7 85 to 260 VAC, without display, remote configuration only (not for wall mount or SS housing)
- 8 20 to 55 VAC / 16 to 62 VDC, without display, remote configuration only (not for wall mount or SS housing)
- A 85 to 260 VAC, with display, push button operation (language: EN, ES, FR, IT, NL, PT, DE)
- B 20 to 55 VAC / 16 to 62 VDC, with display, push button operation (language: EN, ES, FR, IT, NL, PT, DE)
- X Sensor only (without transmitter, only available up to 8”)
- 9 Special version, to be specified

110 Software
- A Standard software
- 9 Special version, to be specified

120 Outputs / Inputs
- A Current HART, SIL, frequency
- D Current HART, SIL, frequency, status output, status input
- H PROFIBUS-PA (approvals A and R only)
- J PROFIBUS-DP (approvals A and R only)
- S Current HART, SIL, frequency; active I.S. (not for approvals A and R)
- T Current HART, SIL, frequency; passive I.S. (not for approvals A and R)
- W Current HART, SIL
- X Sensor only
- 9 Special version, to be specified

* Harsh environment (HE) option is available for process conditions where cool process temperatures in tropical (high humidity) environments or process fluids which undergo large cyclical temperature variations which can cause high amounts of moisture that could condense onto the measurement tube.

Promag 53W, 1" to 24"

Promag 53W [ ] - [ ] [ ] [ ] [ ] [ ] [ ] [ ] [ ] [ ] [ ] [ ] [ ] [ ]
010 020 030 040 050 060 070 080 090 100 110 120

Nominal Diameter
- 25 1"
- 40 1-1/2"
- 50 2"
- 80 3"
- 1H 4"
- 1F 6"
- 2H 8"
- 2F 10"
- 3H 12"
- 3F 14"
- 4H 16"
- 4F 18"
- 5H 20"
- 6H 24"

010 Liner
- D Hard rubber, NFS61 drinking water approval (not available for 1", 1-1/2" or 2" sensors)
- H Hard rubber (not available for 1", 1-1/2" or 2" sensors)
- P Polyurethane, NSF61 drinking water approval
- S Hard rubber HR (not available for 1", 1-1/2" or 2" sensors)
- U Polyurethane
- 9 Special version, to be specified

020 Process connection
- L Class 150 ANSI B16.5 CS steel A105 flanges
- M Class 300 ANSI B16.5 CS steel A105 flanges (not for 8" and larger)
- R Class 150 ANSI B16.5 316L SS flanges
- S Class 300 ANSI B16.5 316L SS flanges (not for 8" and larger)
- 9 Special version, to be specified

030 Electrodes / material
- 0 Measuring, reference and EPD electrodes / 316L SS
- 1 Measuring, reference and EPD electrodes / Alloy C22
- 2 Measuring, reference and EPD electrodes / tantalum
- 7 Measuring electrode, exchangeable / 316L SS (for hard rubber liner only, 14" and larger sensors, no EPD or reference electrodes, for safe areas only)
- G Measuring, reference and EPD electrodes, bullet nose / 316L SS
- H Measuring, reference and EPD electrodes, bullet nose / Alloy C-22
- 9 Special version, to be specified

040 Calibration
- B 3-point calibration, 0.2%
- E SCS/A2LA 3-point, 0.2% calibration (ISO/IEC 17025) with certificate traceable according to ISO 9000 (specify range)
- 9 Special version, to be specified

050 Certificates
- 1 Standard, no certificate
- 2 3.1B material certificate for pipe and flanges
- 3 2.3 pressure test certificate (1.5 x PN, 3 minutes) for sensors up to 12" only
- 4 3.1B material and 2.3 pressure test certificate for sensors up to 12" only
- 5 CRN approval
- 8 CRN approval + material certificate + pressure test
- 9 Special version, to be specified

060 Approvals
- A For use in non-hazardous areas
- N FM explosion proof Class I, Div. 1 / CSA Class I, Div. 1 (only for aluminum field housing, compact version, not for 14" and larger sensors)
- R FM non-incendive Class I, Div. 2 / CSA Class I, Div. 2

070 Housing
- A NEMA 4X (IP 67) compact aluminum housing
- C NEMA 4X (IP 67) remote wall-mounted (only for approvals A or R)
- G NEMA 4X (IP 67) remote aluminum field housing for non-hazardous areas
- K NEMA 6P sensor, wall-mounted housing (only for approvals A or R)
- N NEMA 6P sensor, aluminum field housing, non-hazardous
- P NEMA 4X (IP 67) compact aluminum housing, HE (harsh environment), compact and remote sensor sizes up to 12" only *
- S NEMA 4X (IP 67) remote wall-mounted housing, HE (harsh environment), remote sensor sizes 14" to 78" (only for approvals A and R) *
- 1 -40°F (-40°C) ambient temperature, NEMA 4X (IP 67), compact, aluminum field housing (only for approvals A and R)
- 3 -40°F (-40°C) ambient temperature, NEMA 4X (IP 67), compact (only for approvals A and R)
- 5 -40°F (-40°C) ambient temperature, NEMA 4X (IP 67) wall mount housing, for NEMA 6P sensor (only for approvals A and R)
- 9 Special version, to be specified

080 Cable for remote
- 0 Without cable
- 1 15 foot coil and signal cable
- 2 30 foot coil and signal cable
- 5 Coil and signal cable, specify length (maximum 650 ft depending on conductivity of process material)
- 7 Coil and signal cable, flexible conduit, specify length (maximum 650 ft depending on conductivity of process material)
- 9 Special version, to be specified

090 Cable entries
- B 1/2" NPT
- L 1/2" NPT Fieldbus connector (only for approval A and R)
- 9 Special version, to be specified

100 Power supply / display
- 7 85 to 260 VAC, without display, remote configuration only (not for wall mount or SS housing)
- 8 20 to 55 VAC / 16 to 62 VDC, without display, remote configuration only (not for wall mount or SS housing)
- A 85 to 260 VAC, with display, push button operation (language: EN, ES, FR, IT, NL, PT, DE)
- B 20 to 55 VAC / 16 to 62 VDC, with display, push button operation (language: EN, ES, FR, IT, NL, PT, DE)
- X Sensor only (without transmitter, only available up to 8")
- 9 Special version, to be specified

110 Software
- A Standard software
- C ECC electrode cleaning circuit (only for approvals A and R)
- 9 Special version, to be specified

120 Outputs / Inputs
Fixed communication boards
- A Current HART, SIL, frequency
- B Current HART, SIL, frequency, 2 relays
- F PROFIBUS-PA, IS
- G Foundation Fieldbus, IS
- H PROFIBUS-PA
- J PROFIBUS-DP
- K Foundation Fieldbus
- Q Modbus RS485, status input
- S Current HART, SIL, frequency; active I.S
- T Current HART, SIL, frequency; passive I.S

Flexible communication boards
- C Current HART, SIL, frequency, 2 relays, flexible module
- D Current HART, SIL, frequency, relay, and status input, flexible module
- L Current HART, SIL, 2 relays and status input/output
- M Current HART, SIL, 2 frequency output, status input
- N Modbus RS 485, current and frequency output, status input
- P PROFIBUS-DP, current and frequency output, status input
- V PROFIBUS-DP, two relay outputs, status input
- 2 Current HART, SIL, relay, current, frequency ouputs
- 4 Current HART, SIL, relay, frequency outputs, current input
- 7 Modbus RS485, two relay outputs, status input
- X Sensor only
- 9 Special version, to be specified

* Harsh environment (HE) option is available for process conditions where cool process temperatures in tropical (high humidity) environments or process fluids which undergo large cyclical temperature variations which can cause high amounts of moisture that could condense onto the measurement tube.

Promag 53W, 28” to 78”

Promag 53W [ ] - 010 [ ] 020 [ ] 030 [ ] 040 [ ] 050 [ ] 060 [ ] 070 [ ] 080 [ ] 090 [ ] 100 [ ] 110 [ ] 120 [ ]

Nominal Diameter
- 7H 28”
- 7F 30”, AWWA
- 8H 32”
- 9H 36”
- TO 40”
- VO 42”, AWWA
- T2 48”
- V3 54”, AWWA
- V5 60”, AWWA
- V6 66”, AWWA
- T8 72”
- V9 78”, AWWA

010 Liner
- D Hard rubber, NSF61 drinking water approval
- H Hard rubber
- P Polyurethane, NSF61 drinking water approval (not available for 42” to 78” sensors)
- S Hard rubber HR
- U Polyurethane (not available for 42” to 78” sensors)
- 9 Special version, to be specified

020 Process connection
- P Class D AWWA carbon steel A105 flanges
- 9 Special version, to be specified

030 Electrodes / material
- 0 Measuring, reference and EPD electrodes / 316L SS
- 1 Measuring, reference and EPD electrodes / Alloy C22
- 2 Measuring, reference and EPD electrodes / tantalum
- 7 Measuring electrode, exchangeable / 316L SS (for hard rubber liner only, 14” and larger sensors, no EPD or reference electrodes, for safe areas only)
- G Measuring, reference and EPD electrodes, bullet nose / 316L SS
- H Measuring, reference and EPD electrodes, bullet nose / Alloy C-22
- 9 Special version, to be specified

040 Calibration
- B 3-point calibration, 0.2%
- E SCS/A2LA 3-point 0.2% calibration (ISO/IEC 17025) with certificate traceable according to ISO 9000 (specify range)
- 9 Special version, to be specified

050 Certificates
- 1 Standard, no certificate
- 2 3.1B material certificate for pipe and flanges
- 9 Special version, to be specified

060 Approvals
- A For use in non-hazardous areas
- R FM non-incendive Class I, Div. 2 / CSA Class I, Div. 2

070 Housing
- A NEMA 4X (IP 67) compact aluminum housing
- C NEMA 4X (IP 67) remote wall-mounted (only for approvals A or R)
- G NEMA 4X (IP 67) remote aluminum field housing for non-hazardous areas
- K NEMA 6P sensor, wall-mounted housing (only for approvals A or R)
- S NEMA 4X (IP 67) remote wall-mounted housing, HE (harsh environment), remote sensor sizes 14” to 78” (only for approvals A and R) *
- 1 -40°F (-40°C) ambient temperature, NEMA 4X (IP 67), compact, aluminum field housing (only for approvals A and R)
- 3 -40°F (-40°C) ambient temperature, NEMA 4X (IP 67), compact (only for approvals A and R)
- 5 -40°F (-40°C) ambient temperature, NEMA 4X (IP 67) wall mount housing, for NEMA 6P sensor (only for approvals A and R)
- 9 Special version, to be specified

* Harsh environment (HE) option is available for process conditions where cool process temperatures in tropical (high humidity) environments or process fluids which undergo large cyclical temperature variations which can cause high amounts of moisture that could condense onto the measurement tube.

080 Cable for remote
- 0 Without cable
- 1 15 foot coil and signal cable
- 2 30 foot coil and signal cable
- 5 Coil and signal cable, specify length (maximum 650 ft depending on conductivity of process material)
- 7 Coil and signal cable, flexible conduit, specify length (maximum 650 ft depending on conductivity of process material)
- 9 Special version, to be specified

090 Cable entries
- B 1/2” NPT
- L 1/2” NPT Fieldbus connector (only for approval A and R)
- 9 Special version, to be specified

100 Power supply / display
- 7 85 to 260 VAC, without display, remote configuration only (not for wall mount or SS housing)
- 8 20 to 55 VAC / 16 to 62 VDC, without display, remote configuration only (not for wall mount or SS housing)
- A 85 to 260 VAC, with display, push button operation (language: EN, ES, FR, IT, NL, PT, DE)
- B 20 to 55 VAC / 16 to 62 VDC, with display, push button operation (language: EN, ES, FR, IT, NL, PT, DE)
- 9 Special version, to be specified

110 Software
- A Standard software
- C ECC electrode cleaning circuit (only for approvals A and R)
- 9 Special version, to be specified

120 Outputs / Inputs
Fixed communication boards
- A Current HART, SIL, frequency
- B Current HART, SIL, frequency, 2 relays
- F PROFIBUS-PA, IS
- G Foundation Fieldbus, IS
- H PROFIBUS-PA
- J PROFIBUS-DP
- K Foundation Fieldbus
- Q Modbus RS485, status input
- S Current HART, SIL, frequency; active I.S
- T Current HART, SIL, frequency; passive I.S

Flexible communication boards
- C Current HART, SIL, frequency, 2 relays, flexible module
- D Current HART, SIL, frequency, relay, and status input, flexible module
- L Current HART, SIL, 2 relays and status input/output
- M Current HART, SIL, 2 frequency output, status input
- N Modbus RS 485, current and frequency output, status input
- P PROFIBUS-DP, current and frequency output, status input
- V PROFIBUS-DP, two relay outputs, status input
- 2 Current HART, SIL, relay, current, frequency outputs
- 4 Current HART, SIL, relay, frequency outputs, current input
- 7 Modbus RS485, two relay outputs, status input
- X Sensor only
- 9 Special version, to be specified

United States	Canada	Mexico	Instruments International
Endress+Hauser, Inc. 2350 Endress Place Greenwood, IN 46143 Tel. 317-535-7138 Sales 888-ENDRESS (888-363-7377) Service 800-642-8737 fax 317-535-8498 inquiry@us.endress.com www.us.endress.com	Endress+Hauser Canada 1075 Sutton Drive Burlington, ON L7L 5Z8 Tel. 905-681-9292 800-668-3199 Fax 905-681-9444 info@ca.endress.com www.ca.endress.com	Endress+Hauser, México, S.A. de C.V. Fernando Montes de Oca 21 Edificio A Piso 3 Fracc. Industrial San Nicolás 54030. Tlalnepantla de Baz Estado de México México Tel: +52 55 5321 2080 Fax +52 55 5321 2099 eh.mexico@mx.endress.com www.mx.endress.com	Endress+Hauser Instruments International AG Kaegenstrasse 2 4153 Reinach Switzerland Tel. +41 61 715 81 00 Fax +41 61 715 25 00 www.endress.com info@ii.endress.com

TI046D/24/en/07.10
© 2010 Endress+Hauser, Inc.

Endress+Hauser

People for Process Automation

4 – DETAILED TECHNICAL DOCUMENTATION

4.3 – SHOP DRAWINGS

4.3.13 – SLUDGE TANKS

LEFT BLANK

Project name:	AMARUQ
Project#:	5000218009
Document #:	SPK_0013_SLG
by:	BB
chkd:	GP
appvd:	CB

SUBMITTAL PACKAGE

SLUDGE TANKS

This page is intentionally left blank

Project name: AMARUQ

Project#: 5000218009

Document #: SPK_0013_SLG

by: BB

chkd: GP

appvd: CB

SLUDGE TANKS

VALVES

OIM manual section: 4.3.13.1

This page is intentionally left blank

CS-301-1110 : Identification sheet

VWTC PROJECT NUMBER:	5000218009	REV:	1
PROJECT NAME:	AEM AMARUQ	SUBMITTED TO (COMPANY):	AGNICO EAGLE MINES
ENGINEER:	Gabriel Hébert	SUBMITTED TO (RESPONSIBLE)	
PROJECT MANAGER:	Clément B	PROJECT NUM REFERENCE.:	
PHONE NUMBER:		LOT NUMBER:	

SUPPLIER	EQPT CODE	EQPT TAG NO	DIA	DESCRIPTION	INFO 1	INFO 2	INFO 3	APPLIC.	NOTE	REV
CFF	VABLSS200267	PI4-011-V001	DIA: 13 mm (1/2")	ISOLATION VALVE	TYPE: TWO PIECE BALL VALVE | 1000 psi W.O.G.//MANUFACTURER : CFF//MODEL : SS-2 (1/2")//CONNECTION TYPE : THREADED | 13 mm (1/2")//BODY : 316 SS// SEAL | SEAT :PTFE | TEFLON// STEM : 316 SS | C/W MANUAL LEVER			SLUDGE TANK		
CFF	VABLSS200267	PI4-011-V002	DIA: 13 mm (1/2")	ISOLATION VALVE	TYPE: TWO PIECE BALL VALVE | 1000 psi W.O.G.//MANUFACTURER : CFF//MODEL : SS-2 (1/2")//CONNECTION TYPE : THREADED | 13 mm (1/2")//BODY : 316 SS// SEAL | SEAT :PTFE | TEFLON// STEM : 316 SS | C/W MANUAL LEVER			SLUDGE TANK		

This page is intentionally left blank

SS·2 BALL

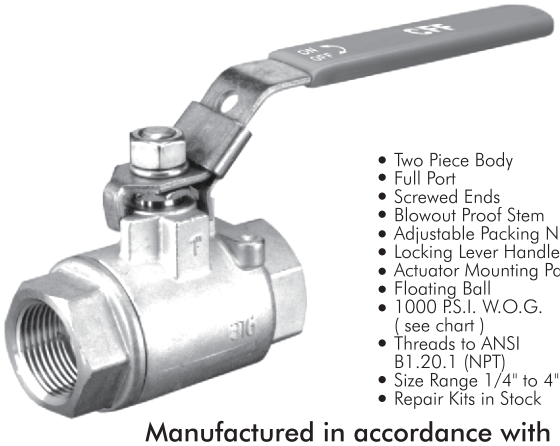

- Two Piece Body
- Full Port
- Screwed Ends
- Blowout Proof Stem
- Adjustable Packing Nut
- Locking Lever Handle
- Actuator Mounting Pad
- Floating Ball
- 1000 P.S.I. W.O.G. (see chart)
- Threads to ANSI B1.20.1 (NPT)
- Size Range 1/4" to 4"
- Repair Kits in Stock

Manufactured in accordance with ISO 9002 quality standards.

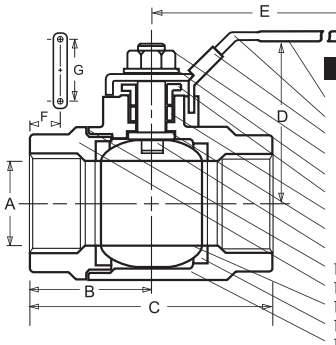

	NAME/MATERIAL
1	Plastic Cover/ Plastic
2	Handle/ Stainless Steel 304
3	Lock Device/ Stainless Steel 304
4	Stem Nut/ Stainless Steel 304
5	Stem Washer/ Stainless Steel 304
6	Gland Nut/ Stainless Steel 304
7	Stem Packing/ Teflon
8	Thrust Washer/ Rein. Teflon 15% GFT
9	Stem/ Stainless Steel 316
10	Joint Gasket/ Teflon
11	Cap/ Stainless Steel 316; CF 8M
12	Ball/ Stainless Steel 316
13	Seat/ Rein. Teflon 15% GFT
14	Body/ Stainless Steel 316; CF 8M

SS · 2 BALL VALVE

DIMENSIONS								
	Nominal Size	(mm/in) A	(mm/in) B	(mm/in) C	(mm/in) D	(mm/in) E	(mm/in) F	(mm/in) G
8	¼	11.6	30	60	45	110	12.7	28.45
		0.457	1.181	2.362	1.772	433.1	0.50	1.120
10	⅜	12.7	30	60	45	110	12.7	28.45
		0.50	1.181	2.362	1.772	433.1	0.50	1.120
15	½	15	32	64	45	130	12.7	28.45
		0.591	1.260	2.520	1.772	5.118	0.50	1.120
20	¾	20	38.5	77	50	130	22.10	34.80
		0.787	1.516	3.032	1.969	5.118	0.87	1.37
25	1	25.4	45	90	65	155	22.10	38.10
		1.00	1.772	3.543	2.559	6.102	0.87	1.37
32	1¼	32	50	100	70	155	23.62	38.10
		1.260	1.967	3.937	2.756	6.102	0.93	1.50
40	1½	38.1	59	118	75	185	23.62	38.10
		1.50	2.323	4.646	2.953	7.283	0.93	1.50
50	2	50.8	68.5	137	85	185	23.62	38.10
		2.00	2.697	5.398	3.346	7.283	0.93	1.50
65	2½	65	82.5	165	136	250	—	70
		2.561	3.248	6.496	5.364	9.843	—	2.756
80	3	80	97.5	195	149	250	—	70
		3.152	3.839	7.677	5.866	9.843	—	2.756

Design and materials are subject to change without notice.

PRESSURE/TEMP. RATING

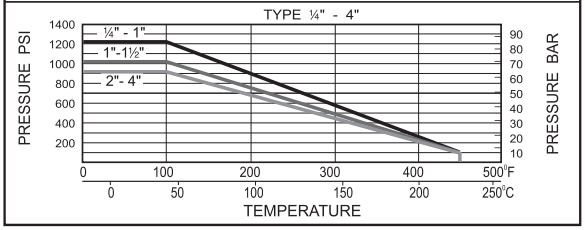

FLOW COEFFICIENT CV										
Size (in.)	¼	⅜	½	¾	1	1¼	1½	2	2½	3
Cv	6	7	10	25	35	46	80	110	310	360
Operating Torques (lbs.)	36	36	43	65	101	158	187	230	430	1380

Visit us on-line at:
www.cffstainless.com

CS-313-200 : Identification sheet

VWTC PROJECT NUMBER:	5000218009	REV:	1
PROJECT NAME:	AEM AMARUQ	SUBMITTED TO (COMPANY):	AGNICO EAGLE MINES
ENGINEER:	Gabriel Hébert	SUBMITTED TO (RESPONSIBLE)	
PROJECT MANAGER:	Clément B	PROJECT NUM REFERENCE.:	
PHONE NUMBER:		LOT NUMBER:	

SUPPLIER	EQPT CODE	EQPT TAG NO	DIA	DESCRIPTION	INFO 1	INFO 2	INFO 3	APPLIC.	NOTE	REV
DM VALVE	ST-313-501	FCV4-011	75 mm (3")	PINCH VALVE	TYPE: PINCH VALVE | 150 PSI//MANUFACTURER : FLOWROX//MODEL : PVE3AK150-601L-SBRT//CONNECTION TYPE : FLANGED | 75 mm (3")//BODY : CAST IRON// SEAL | SEAT :N/A// SLEAVE : SBRT	ACTUATOR TYPE : MANUAL// MANUFACTURER : N/A// MODEL # :N/A//	w/ el. Pneum. Positioner	SLUDGE TANK		

This page is intentionally left blank

FLOWROX
Proven Performance

Valve Solutions

- Heavy Duty Pinch Valves
- General Line Pinch Valves
- Slurry Knife Gate Valves
- Smart Features
- Spares & Services

Valve solutions

For demanding shut-off and control applications

We deliver flow control solutions for the most demanding process conditions. Our story has started over 40 years ago making us the industry benchmark and experts on valve technology. Our robust full bore design enables effortless process flow. We provide services ranging from sizing, materials selection, installation, spare parts and maintenance to optimize the up- and downstreams flow.

1977:
Company Larox is established

1993:
Company Larox Flowsys Oy is established

2000:
Product portfolio expanded to plastic body PVEG valves

2009:
Product portfolio expanded to Slurry Knife Gate Valves

2011 -
Name changed

FLOWROX

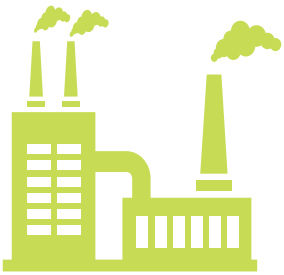

4 DECADES: KNOW-HOW & INDUSTRY EXPERTISE

- Mining, metallurgy & minerals
- Construction
- Energy
- Environment
- Water & wastewater
- Chemical process industry
- Oil & offshore
- Pulp & paper
- Food & pharma

2014:
Flowrox biggest DN1200 knife gate valves delivered for mining application

2016:
Launch of Smart Solutions™

OVER 100 000 products delivered Globally

WE PROVIDE THE OPTIMAL SOLUTION:

Ball valve

Flowrox valve solution

The shown comparison of cost over a period of 5 years on a DN100 pinch valve feeding abrasive slurry. The valve operates 4-6 times/hour. The conventional valve is a stainless ball valve with PTFE seats.

YOUR BENEFITS

- Low Total Cost of Ownership
- Low operating costs
- Improved process performance
- Long service intervals
- Minimized downtime
- Heavy duty design

Flowrox Valve Product Portfolio

Pinch Valves

Heavy duty pinch valves

- Pressure rating up to 100 bar
- Size DN25 - 800
- High cycling applications
- For isolation & control purposes

General line pinch valves

- Pressure rating 10 bar
- Size DN50 - 250
- Low cycling applications
- For isolation duty

Slurry Knife Gate Valves

SKW

- Without flange
- Pressure rating 10 bar
- Size DN50 - 600
- Isolation duties only

SKF

- With flange
- Pressure rating 10 bar
- Size DN80 - 1200
- Isolation duties only

SKH

- Without flange
- Pressure rating 20 bar
- Size DN80 - 600
- Isolation duties only

Smart Solutions™

Enhance your performance with Smart Solutions™

- Smart valve series provide online information about the process, valve operations and condition of the valve.
- Enables advanced reporting and data analytics, making your process more reliable and transparent
- Fast analysis of faults and planning of maintenance

Services

Comprehensive Valve Installation, Maintenance and Spare Services

- Site survey services
- Spare parts and component services
- Installation and maintenance services, repairing services
- Analysis services / commissioning / training

Expansion project: Saving time during start-up with 330 Flowrox valves

Customer:
Trafigura Mining Group, MATSA mine, Spain
Products:
330 PVE enclosed body & PVG shut-off valves
Application: Ore & water treatment & process water supply in copper, zinc and lead mining
Benefits: Increased safety, easy installation & maintenance, process reliability, light-weight products.

Long-term benefits in ownership

The Tranfigura Mining Group ordered 330 Flowrox PVE enclosed body pinch valves and PVG shut-off pinch valves for various demanding flow control and shut-off duties, from ore treatment to water treatment plant and process water supply.

"When the project was engineered, we constantly had in mind that the choice of appropriate instrumentation for each application is fundamental to the process performance. We decided that all control valves and also some of the shut-off valves would be pinch valves, which finally ended up saving us a lot of time in the start-up of the plant," says Ms. **Luisa Montes**, a Project Team Member from MATSA mine.

All installed Flowrox Pinch Valves delivered were an enclosed body type and include an SBRT valve sleeve to meet the requirements of various mediums in different process areas and to achieve the longest sleeve life time.

As the valves are self-cleaning, even if any solids are accumulated in the sleeve wall, it breaks away when the valve is operated. This is due to the flexibility of the sleeve, making the valve lifetime longer than many other competing products on the market.

The Flowrox Pinch Valves were chosen to gain long-term benefits based on low total cost of ownership. The PVE control valves at the plant are actuated by pneumatic double acting actuators with positioners. Also, all of the on/off PVG valves include limit switches for position indication.

"In the future, we are definitely expecting cost savings," Ms. Montes states.

OUR CUSTOMER: TRAFIGURA MINING GROUP

Trafigura Mining is a market leader in copper, lead and zinc concentrates trading. The flagship mine, Aguas Teñidas (MATSA),is located in Andalucia, Spain. In the year 2015 the production of concentrates nearly doubled to 4.4 Mt per year.

Flowrox Valve References

Customer: HUSAB Uranium Mine, Namibia
Products: Pinch valves
Application: Tailings Transfer
Benefits:
- Increased process reliability
- Cost efficiency with remote valve control
- Low total cost of ownership

Customer: Wastewater treatment plant, Warsaw, Poland
Products: DN500 control pinch valves
Application: Flow control of biological sludge
Benefits:
- Gentle handling due to living bacteria in sludge
- Wide and accurate flow control range
- Extended maintenance interval

Customer: LKAB, Sweden
Products: PV and PVE pinch valves
Application: Thickener underflow
Benefits:
- Reliability with abrasive slurry
- Wide and accurate flow control range
- Extended maintenance interval

Heavy Duty Pinch Valves

Flowrox heavy duty pinch valves are “The pinch valves”. They are made to last and are ideal where shut-off and control applications involve abrasive or corrosive slurries, powders or coarse substances.

Made to Last

The operating principle of Flowrox pinch valves is simple. In the open position, the valve is at full bore with no flow restrictions. During closing, two pinch bars squeeze the valve sleeve shut on the centerline. The sleeve is naturally wear resistant and when particles hit the sleeve´s rubber surface, the collision energy is absorbed and released when the rubber bounces back.

Heavy duty pinch valves provide bubble tight shut-off even if solids have built up on the sleeve wall. When compressed, any crystallized particles flake off the sleeve surface. The full bore structure ensures free flow of the medium. The construction and materials of the three main components (sleeve, body and actuator) can be tailored to suit your process conditions.

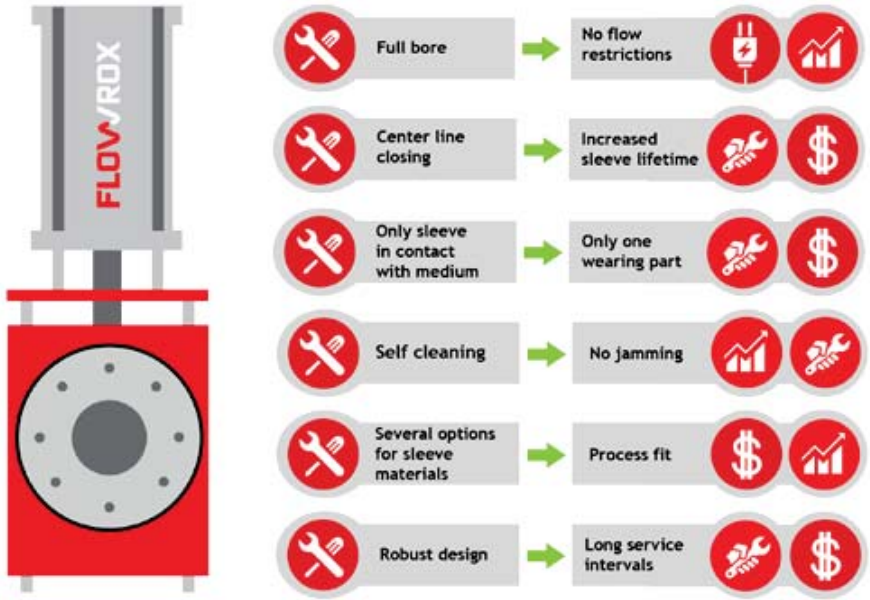

Benefits: This Is How We Flow!

- Long service intervals
- Only one wearing part
- Excellent also for dry powders
- Low maintenance cost

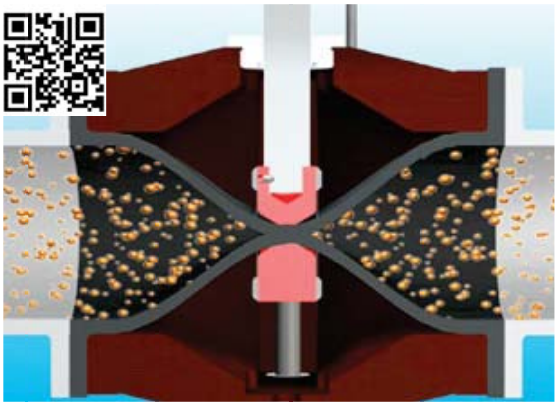

Image: *During closing, two pinch bars squeeze the valve sleeve shut on the centerline. See the Pinch Valve in action by scanning the QR code.*

Valve Model Selection Guide

Type	Size (DN)	Actuator	Pressure class	Flange drilling	Body material	Shape of flange	Opening tags	Auxiliaries	Sleeve material
PV = open PVE = enclosed PVE/S = enclosed / sealed PVS = sealed	25 -1000	M = manual MG = manual with gear A = pneumatic AB = w/ manual override AK = w/ el.pneum. positioner AKU = w/ el.pneum. positioner & pneum. spring AKV = w/ el.pneum. positioner & mech. spring AKF = w/ integrated Festo positioner AN = w/ pneum. postioner AU = w/ pneum. spring AV = with mech. spring E = electric EO = with electrical positioner H = hydraulic HP =hydraulic w/ positioner	1 = 1 bar 6 = 6 bar 10 = 10 bar 16 = 16 bar 25 = 25 bar 40 = 40 bar 64 = 64 bar 100 = 100 bar	1 = – 2 = DIN PN10 3 = DIN PN16 4 = DIN PN25 5 = DIN PN40 6 = ANSI150 7 = ANSI300 8 = BS TABLE D 9A = AS TABLE D 9B = AS TABLE E 9C = JIS 10 9D = JIS 16 9 = OTHER	0 = GRS/Fe 2 = AISI 316 3 = aluminium 4 = other 5 = polyurethane/ polyamide	type 1 type 3 type 4 Determined by Flowrox	L= opening tags	R = readiness for ind. limit switches R1 = AC/DC R2 = DC, PNP R3 = DC, NPN S = magnetic limit switches T = mechan. limit switches Q = quick exhaust valve Z1 = solenoid valve, 24VDC Z2 = solenoid valve, 230V, 50/60 Hz Z3 = solenoid valve, 110V, 50/60 Hz F = Filter regulator + Gauge J1 = Junction box small J2 = Junction box large X = must be specified	SBRT = Styrene butadiene EPDM = Ethylene propylene NR = Natural rubber NBR = Nitrile CSM = Hypalon EPDMB = Green liquor sleeve CR = Chloroprene IIR = Butyl NRF = Foodstuff natural rubber NBRF = Foodstuff nitrile HNBR = Hydrogenated nitrile FPM = Fluorine rubber /M = SensoMate sleeve /PU = PU-coating inside the sleeve /VAC = Sleeve for suction

Example: PVE 150A10-203LR1Z2, SBRT

Control Valves

The Flowrox control valves are designed for demanding control applications in which conventional valves encounter problems with wear due to increased turbulence.

When the controlled flow is abrasive, it is a big advantage to have only one, wear resistant, valve part in contact with the medium. The need for maintenance and spare parts is reduced.

Controllability can be further improved with conical sleeves or smart positioners.

Flowrox control valve sizing is based on international IEC60534 standard (harmonized with ANSI/ISA S75).

Flowrox Control Valve Sizing Program is available to ease your work.

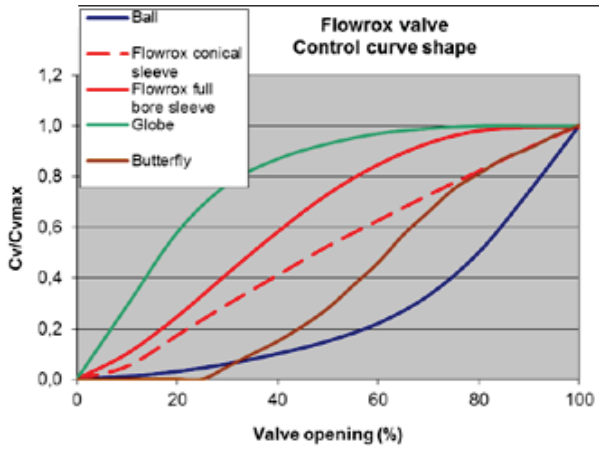

General Line Pinch Valves

PVG and PVEG valves

Flowrox general line pinch valves are robust and cost-effective valves with simple, single-sided closing mechanism. PVG valves have a strong valve body and opening tags in the sleeve as standard. PVEG valves have a corrosion resistant and light-weight plastic body.

They both are ideal for low cycle applications involving abrasion, corrosion and aggressive slurries. Through the reliability and structure, they offer substantial savings based on improved performance, long service lifetime and low total cost of ownership.

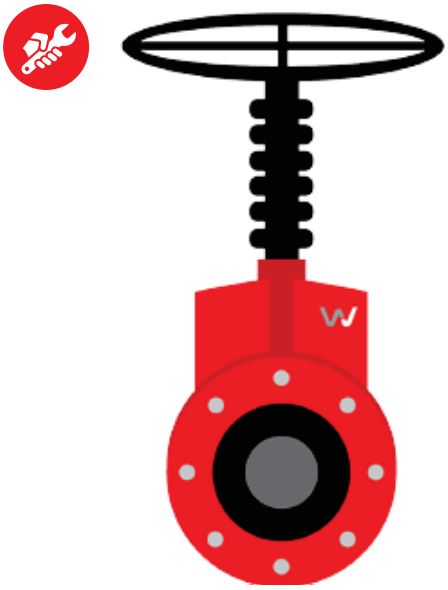

Benefits: This Is How We Flow!

- Long service intervals
- Only one wearing part
- Excellent also for dry powders
- Simple sleeve replacement

Image: *The closing element squeezes the sleeve shut against the lower body half, providing a 100 % tight shut-off. See the PVG in action by scanning the QR code.*

PVG Valve Model Selection Guide

Type	Size (DN)	Actuator	Pressure class	Flange drilling	Body material	Sleeve material	Auxiliaries
PVG = Flowrox Pinch valve	50 - 250	M = manual A = pneumatic E = electric	4 = 4 bar 6 = 6 bar 10 = 10 bar	2 = DIN PN 10 6 = ANSI 150 9 = other	0 = cast iron	SBRT = Styrene butadiene rubber EPDM = Ethylene propylene diene monomer	Z1 = solenoid valve, 24V DC Z2 = solenoid valve, 230V 50/60 Hz Z3 = solenoid valve, 110V DC S = Magnetic limit switches

Example: PVG 50M10, SBRT

PVEG Valve Model Selection Guide

Type	Size (DN)	Actuator	Pressure class	Flange drilling	Body material	Sleeve material	Auxiliaries
PVEG = Flowrox Pinch valve	50 - 150	M = manual A = pneumatic	6 = 6 bar 10 = 10 bar	2 = DIN PN 10 6 = ANSI 150 9 = other	5 = Polyamide	SBRT = Styrene butadiene rubber	Z1 = Solenoid valve, 24V DC Z2 = Solenoid valve, 230V 50/60 Hz
PVEG/C = Flowrox Pinch valve	50 - 150	M = manual A = pneumatic	6 = 6 bar 10 = 10 bar	2 = DIN PN 10 6 = ANSI 150	5 = Polyamide	EPDM = Ethylene propylene diene monomer	Z3 = Solenoid valve, 110V DC S = Magnetic limit switches

Example: PVEG 150M10-25

Image: *PVEG50M manual polyamide body pinch valves in a hydrocyclone at Kara Mine, TMM, Tasmania, Australia.*

Knife Gate Valves

Heavy Duty Slurry Knife Gate Valves isolate flow, even in the most demanding process conditions. The complete valve is built around an ease-of-maintenance concept.

Slurry Knife Gate Valves

The designs of Flowrox Slurry Knife Gate Valves are based on the years of experience Flowrox has gained, providing reliable solutions for abrasive and corrosive process applications.
They feature a load distribution ring that prevents over compression and ensures tight sealing between the ring sleeve and the valve gate. To add to the ease of maintenance, the load distribution ring has been integrated into the ring sleeves of the valve.

The universal tower design of the valve accommodates most actuator types, allowing for actuator interchangeability. The tower also ensures that the top plate, body and actuator are always aligned and that the gate is in the right position.

The valve body itself is a one-piece casting, eliminating the need for sealing between the body halves.

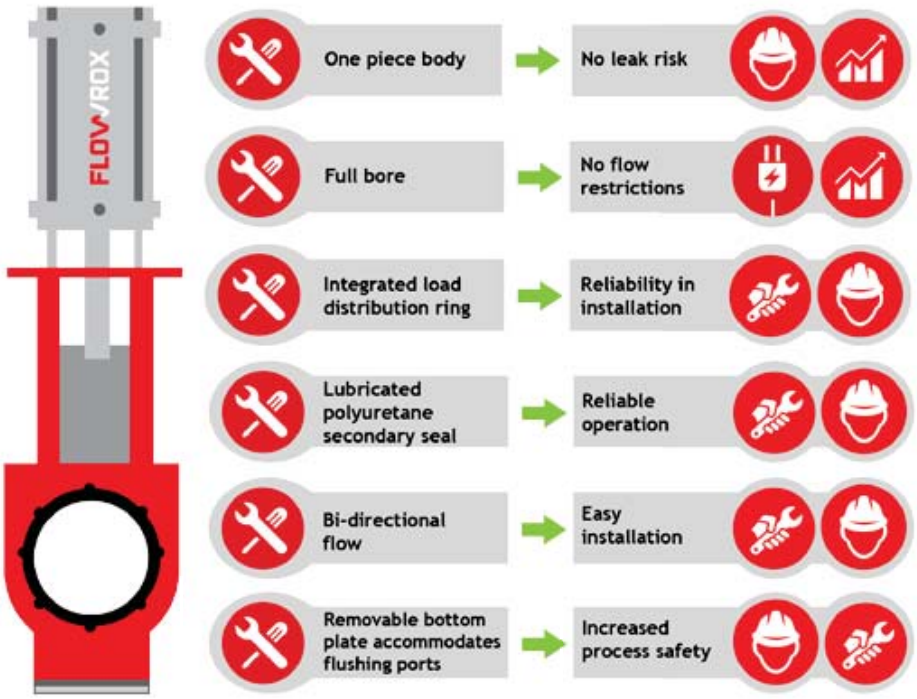

Benefits: This Is How We Flow!

- Small face-to-face dimension
- Easy installation
- Available in large size scale
- Low maintenance cost

Image: *Elastomer ring sleeves on both sides of the gate provide a tight shut off. See the Flowrox knife gate valve in action by scanning the QR code.*

SKW / SKF Valve Model Selection Guide

Type	Size (DN)	Actuator	Pressure class (PN)	Flange drilling	Body material	Gate material	Ring sleeve material	Auxiliaries
SKW SKF	50 - 600	M = manual MG = manual with gearbox A = pneumatic AU = pneumatic with pneumatic spring H = hydraulic E = electric	10 = 10 bar standard	2 = DIN PN10 3 = DIN PN16 4 = DIN PN25 5 = DIN PN40 6 = ANSI150 7 = ANSI300 9 = other	0 = Cast iron/ Welded steel 2 = AISI 316 4 = other	S = stainless steel Other on request COATING: 0 = nothing	NR = natural rubber +75°C max NBR = nitrile +100°C max EPDM = ethylene propylene +120°C max	R = readiness for inductive limits R1 = AC/DC R2 = DC, PNP R3 = DC, NPN Z1 = solenoid valve, 24V DC Z2 = solenoid valve, 230V, 50/60 Hz Z3 = solenoid valve, 110V, 50/60 Hz G = guard

Example:SKW 100M10-20S0-NR-G

SKH Valve Model Selection Guide

Type	Size (DN)	Actuator	Pressure class (PN)	Flange drilling	Body material	Gate material	Ring sleeve material	Auxiliaries
SKH = High pressure slurry knife gate valve	80 - 600	MG = manual with gearbox A = pneumatic AU = pneumatic with pneumatic spring H = hydraulic E = electric	20 = 20 bar standard	2 = DIN PN10 3 = DIN PN16 4 = DIN PN25 5 = DIN PN40 6 = ANSI150 7 = ANSI300 9 = other	0 = Cast iron/ Welded steel 2 = AISI 316 4 = other	S = Stainless steel Other on request COATING: 0 = nothing	NR = natural rubber +75°C max NBR = nitrile +100°C max EPDM = ethylene propylene +120°C max	R = readiness for inductive limits R1 = AC/DC R2 = DC, PNP R3 = DC, NPN Z1 = solenoid valve, 24V DC Z2 = solenoid valve, 230V, 50/60 Hz Z3 = solenoid valve, 110V, 50/60 Hz G = guard

Example:SKH 200E20-30S0-NR

Slurry Knife Gate Design

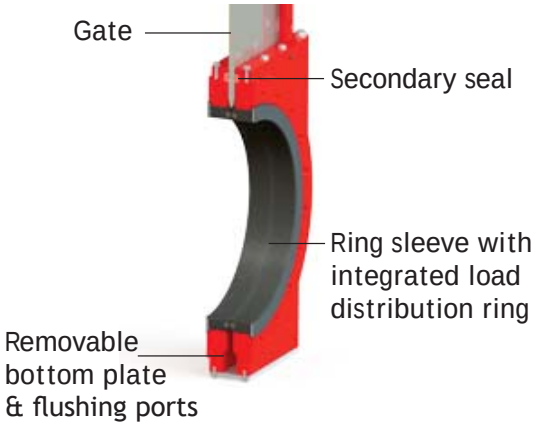

Flowrox Knife Gate Valves are suitable for large-scale project deliveries with a selection of Flowrox pumps and valves.

Smart Features

Enhance your performance with Smart Solutions™. Flowrox Smart features can be included into any old or new delivery. The Smart valves are next generation solutions delivering data and information in order to provide reliable and cost-efficient production. Real time information from site results in optimised production with maximised output and minimised unplanned shutdowns.

Smart Solutions™

Flowrox Smart valves provide you with online information about their condition, process and operations.

Flowrox Smart PVE is based on the reliable PVE valve and is equipped with a new smart positioner for detailed information about valve operations. The SPVE includes a leak sensor and various embedded instruments for additional information.

Optional SensoMate Smart sleeve detects the wearing before actual sleeve failure.

The Flowrox Smart Valve combined with the Malibu™ IIoT user interface enables advanced reporting and data analytics, making your process more reliable and transparent. Malibu™ is accessible on any device with an Internet browser.

Technical Features

- Pre-fail indications
- Real time data in Malibu™
- Pressure measurement at the valve inlet/outlet
- Medium temperature measurement
- Leak sensor
- Connectivity with 3G/4G, WIFI or LAN

From Features to Benefits

- **Online valve performance monitoring**
  - → Detect issues before they become a problem
- **Automatic pre-fail indications**
  - → Savings in maintenance & unexpected shutdown costs
- **Analytics tools**
  - → Help you make the correct decisions fast
- **Advanced reporting tools**
  - → Access to detailed asset performance information
- **Easy accessibility via Internet**
  - → Access where ever you are

The Flowrox smart instrumentation can be retrofitted to automatic pinch valves.

Flowrox Smart Valves:

The SPVE series provides online information about the process performance and condition of the valve.

The Flowrox Smart Valve combined with Malibu™ enables advanced reporting and data analytics, making your process more reliable and transparent.

Spares & Services

Sleeves: The core of our valves

Our technologically advanced Flowrox sleeves guarantee high resistance to wear and corrosion, trouble-free operation and extended lifetime.

Robust Heart of the Pinch Valve

The handmade sleeve has a reinforced construction, making it the pressure-containing part of the valve.

Standard Flowrox PV, PVE and PVG sleeves are equipped with opening tags to ensure full valve opening in all process conditions.

Ring Sleeves for Knife Gate Valves

The ring sleeve is a moulded part with a reinforcement steel ring integrated near the sealing area. The flange of the ring sleeve is reinforced with a load distribution ring to ensure even compression.

Special Sleeve Features

- Conical sleeve for control valves
- Suction sleeve for negative pressure applications
- SensoMate sleeve detecting and signalling critical wear
- Polyurethane lined sleeve with improved protection against wear in abrasive control applications
- Foodgrade rubber for FDA requirements

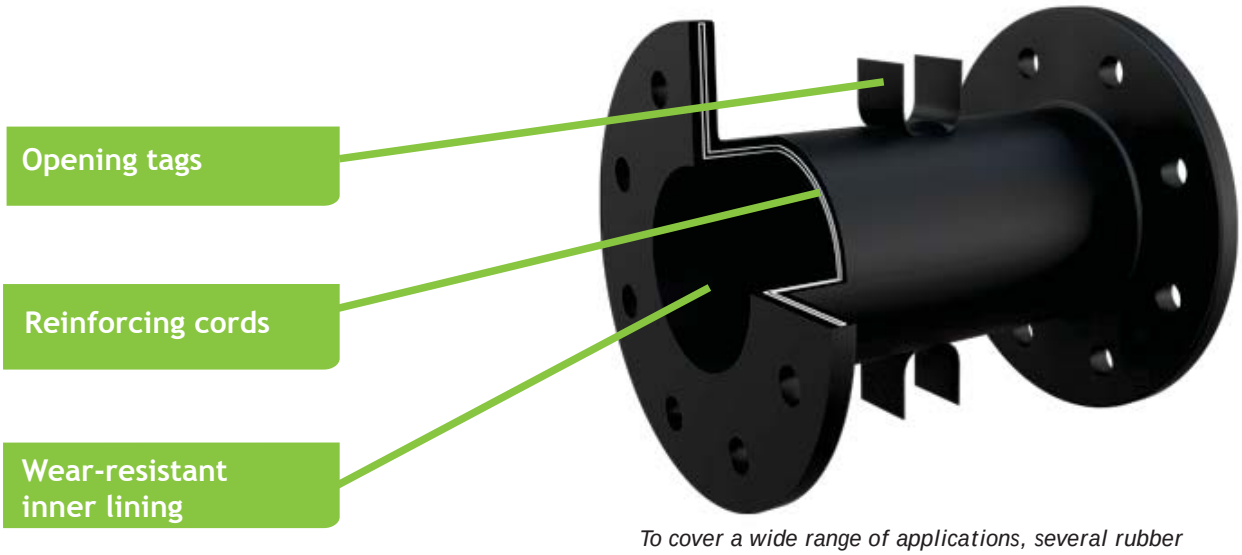

To cover a wide range of applications, several rubber compounds are available.

Flowrox valves are available in various sizes and models for various applications.
Flowrox Services supports you throughout the entire life cycle.

Services

We offer prompt support, spare parts and services in order to maximise your performance.

We manufacture and deliver original spare parts and components for all Flowrox products (valves, hose pumps, PC pumps).

- On-time trouble-free delivery of spares and services
- Cost savings through optimised service cycles and reduced downtime of equipment
- Longer life cycles for equipment

This is how we flow!

Check out the **Flowrox Pinch Valves** in action by scanning this QR code.

Open your gates!

Check out the **Flowrox Knife Gate Valves** in action by scanning this QR code.

Get Smarter!

Check out the **Flowrox Smart Solutions™** by scanning this QR code.

We are recognised as a reliable industrial solutions provider for demanding process conditions. Our 40 years of experience in flow control and elastomer technology are obvious benefits we can offer. Formerly known as Larox Flowsys, our heritage forms the foundation of what we are today; the benchmark for heavy duty valves, pumps and systems. We know that all processes are different, all customers unique and process conditions vary, but we are happy to adapt.

We operate on 6 continents and support our customers through a network of over 200 representatives.

Contact your local Flowrox representative

Flowrox Oy
P.O. Box 338, FI-53101 Lappeenranta
Finland
Tel. +358 201 113 311

www.flowrox.com
info@flowrox.com

04/18 EN

Project name:	AMARUQ
Project#:	5000218009
Document #:	SPK_0013_SLG
by:	BB
chkd:	GP
appvd:	CB

SLUDGE TANKS

INSTRUMENTS

OIM manual section: 4.3.13.2

This page is intentionally left blank

CS-400-140z : Identification sheet

VWTC PROJECT NUMBER:	5000218009	REV:	1
PROJECT NAME:	AEM AMARUQ	SUBMITTED TO (COMPANY):	AGNICO EAGLE MINES
ENGINEER:	Gabriel Hébert	SUBMITTED TO (RESPONSIBLE)	
PROJECT MANAGER:	Clément B	PROJECT NUM REFERENCE.:	
PHONE NUMBER:		LOT NUMBER:	

SUPPLIER	EQPT CODE	EQPT TAG NO	DIA	DESCRIPTION	INFO 1	INFO 2	INFO 3	APPLIC.	NOTE	REV
HACH	ST-400-140zz1	AE4-011	144 mm x 144 mm x 181 mm (contr oller) ? Insert ion	TURBIDIMETER PROBE	SOLITAX INSERTION SENSOR FOR TURBIDITY AND SS t-line sc STAINLESS STEEL WITH WIPER 0.001-4000 NTU, 0.001 mg/L - 50 g/L/MANUFACTURER: HACH/ MODEL: LXV424.99.00100/LZX661/5738 400 C/W CONTROLLER SC200 2 CHANNELS DIGITAL LXV404.99.00552/ 9328100 HART MODULE	N/A	N/A	SLUDGE TANK		rev1

This page is intentionally left blank

SOLITAX® sc Turbidity and Suspended Solids Sensors

Hach SOLITAX sc sensors provide accurate, color-independent measurement of turbidity and suspended solids in drinking water, wastewater, and industrial process applications. A self-cleaning wiper prevents measurement error due to fouling. These sensors demonstrate excellent correlation with laboratory analysis so it's an exceptional tool for process control.

Features and Benefits

Accurate, Color-independent Measurement

Hach's SOLITAX sc Turbidity and Suspended Solids Sensors are immune to shifts in color of activated sludge caused by variations in through-flow volume, climatic fluctuations, or other unexpected events. Unlike conventional systems, that need to be continually calibrated to compensate for color variation, the proven measurement technique used in the SOLITAX sc sensor is the only technology that provides measurement completely independent of color.

Self-cleaning Wiper Prevents Erroneous Values

The SOLITAX sc sensor's self-cleaning wiper prevents erroneous values and maintenance problems by preventing biological growth. Gas bubbles in the sample do not interfere with the measurement.

Excellent Correlation to Laboratory Analysis

Comparisons between laboratory analysis and continuous suspended solids measurement using SOLITAX sc sensors show an exceptional correlation to mixed liquor, settled and thickened sludge. Online measurement not only saves time on manual analysis but also provides critical real time TSS measurements that can be used to operate the plant more efficiently. *(See Correlation Chart on page 2.)*

Fully Serviceable Sensors

Conventional Turbidity and Suspended Solids sensors are potted and are discarded when they no longer function. SOLITAX sc sensors are serviceable so that the useful life of the sensor, in many cases, is doubled.

Easy One-point Calibration

Calibration of SOLITAX sc sensors is easy with a simple correction factor procedure to measure turbidity or suspended solids. Multipoint calibration is available for nonlinear samples.

Versatile Mounting Styles

SOLITAX sc sensors can easily be configured for many applications. Models designed for immersion into a tank are available in PVC plastic or stainless steel. An insertion style sensor for pipes is available in stainless steel. Installation kits for either style sensor are also available.

Multi-channel, Multi-parameter System

Any combination of two SOLITAX sc sensors can be installed using one Hach sc200 Controller. The same controller can also accommodate any combination of parameters, including suspended solids, turbidity, pH/ORP, dissolved oxygen, conductivity, and nitrate. All of Hach's model sc sensors are "plug and play" with no complicated wiring or set-up procedure necessary.

Communications—Multiple alarm/control schemes are available using four relays and two PID control outputs. Communications use analog 4-20 mA and digital MODBUS®/RS485, MODBUS®/RS232 protocols. (Other digital protocols are available. Contact your Hach representative for details.)

Data logger—A built-in data logger collects measurement data, calibration, verification points, and alarm history for up to 6 months. The embedded SD card reader ensures simple download of the logged data.

Correlation of SOLITAX sc *highline* sensor with lab analysis of sludge

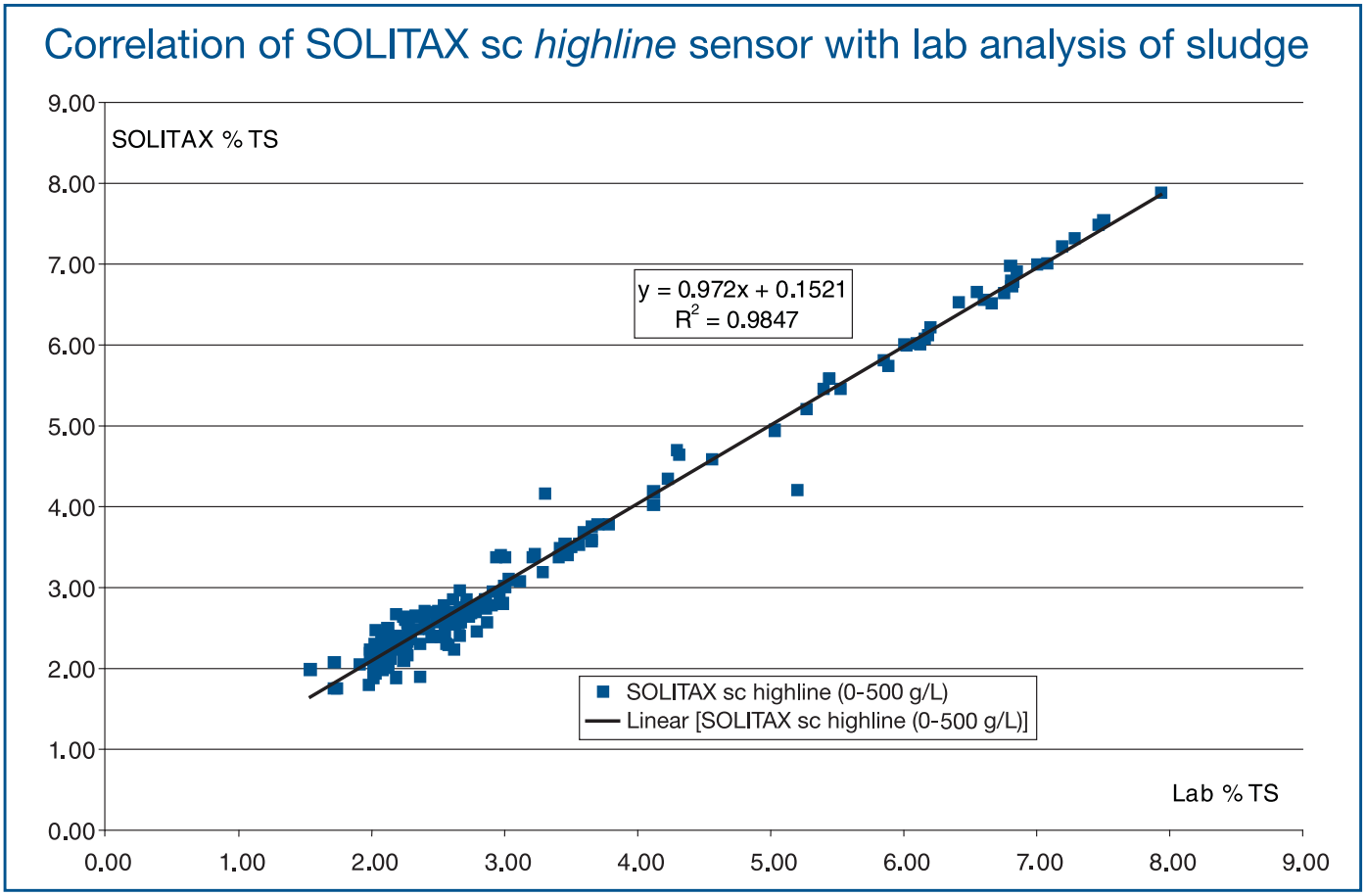

Principal of Operation:
SOLITAX sc ts-line sensor with dual-beam optics and added back-scatter detector

- *Dual infrared light beams. LED light source transmits light at 45° to sensor face.*
- *Nephelometric photoreceptors detect light at 90° to the transmitted light beam.*
- *Backscatter photoreceptor (included on all models except the SOLITAX sc t-line) detects light at 140° to the transmitted light beam to measure suspended solids in heavily loaded sample streams.*
- *Self-cleaning wiper, optional.*
- *T-line probes measure turbidity only.*
- *TS, HS, inline, and highline sensors measure either turbidity or suspended solids. The parameter to be measured is user selectable and can be changed at any time.*

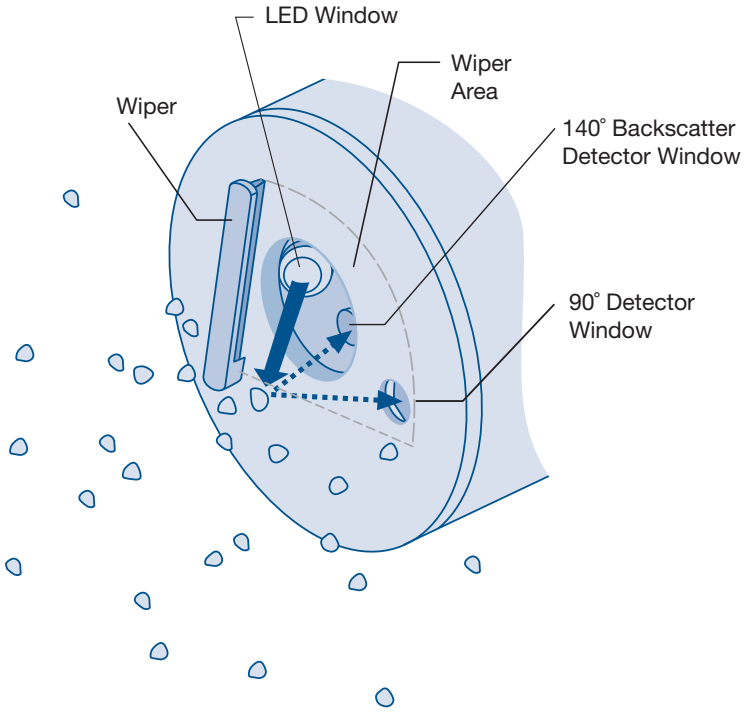

Specifications*

	For insertion in pipes		For immersion in open tanks		
	Model inline sc	*Model highline sc*	*Model t-line sc*	*Model ts-line sc*	*Model hs-line sc*
Parameter					
	Turbidity Suspended Solids	Turbidity Suspended Solids	Turbidity	Turbidity Suspended Solids	Turbidity Suspended Solids
Measuring Range					
Turbidity *Suspended Solids*	0.001 to 4000 NTU 0.001 mg/L to 50 g/L	0.001 to 4000 NTU 0.001 mg/L to 500 g/L	0.001 to 4000 NTU n/a	0.001 to 4000 NTU 0.001 mg/L to 50 g/L	0.001 to 4000 NTU 0.001 mg/L to 500 g/L
Units of Measure					
Turbidity *Suspended Solids*	User selectable—NTU, FNU, or TE/F User selectable—g/L, mg/L, ppm, or % solids				
Accuracy	*Turbidity up to 1000 FNU/NTU*				
Without Calibration *With Calibration*	<5% of the measured value ±0.01 FNU/NTU <1% of the measured value ±0.01 FNU/NTU				
Repeatability	*Defined according to ISO/WD 13530.*				
Turbidity *Suspended Solids*	Less than 1% of reading Less than 3% of reading (depends on the homogeneity of municipal activated sludge)				
Response Time	1 s < T90 < 300 s (adjustable)				
Calibration					
Turbidity *Suspended Solids*	Formazin or StablCal® Standard Based on gravimetric TSS analysis with a correction factor procedure				
Certifications	CE certified to EN 61326-1, EN 61326/A1, EN 61326/A2, EN 61010-1				
Mounting					
	Through sidewall of a pipeline using a ball valve; minimum pipe size 100 mm (4 in.) in carbon or stainless steel		Fixed to the rim of the tank		
Flow Velocity	3 m/s (9.8 ft./s) maximum				
Operating Temperature	>0 to 40°C (>32 to 104°F)				
Sample Temperature	>0 to 40°C (>32 to 104°F)				
Sample Pressure					
	Stainless steel: 6 bar or 60 m (87 psi) PVC: 1 bar or 10 m (14.5 psi)				
Sensor Construction					
Wiper *Sensor body*	Silicon Stainless steel		Silicon Stainless steel or PVC		
Dimensions	*(diameter x length)*				
	Insertion sensor: 60 x 315 mm (2.4 x 12.4 in.); Ball valve from flange: 185 x 625 mm (7.3 x 24.6 in.)		Immersion sensor: 60 x 200 mm (2.4 x 7.9 in.)		
Weight					
	Insertion stainless steel: 2.4 kg (5.3 lb.)		Immersion, stainless steel: 1.38 kg (3.0 lb.) Immersion, PVC: 0.52 kg (1.2 lb.)		
Cable Length					
	10 m (33 ft.) standard. Optional extension cables available in 7.6 m (25 ft.), 15.2 m (50 ft.), 30.5 m (100 ft.). Maximum total length: 100 m (328 ft.).				

**Specifications subject to change without notice.*

Engineering Specifications

1. The suspended solids and/or turbidity sensor shall consist of a digital sensor designed to connect to a universal controller.
2. The suspended solids and/or turbidity sensor shall use dual infrared light beam technique design utilizing an LED light source in the sensor to transmit an infrared/scattered dual beam into the sample stream at an angle of 45 degrees to the sensor face.
3. A photoreceptor located in the sensor face shall detect scattered light (turbidity) at 90 degrees to the transmitted beam.
4. A backscatter photoreceptor (included on all models except the SOLITAX sc t-line), positioned at 140 degrees to the transmitted beam, shall detect light scattered for suspended solids readings.
5. The sensor shall analyze the dual-beam data and provides a color independent measurement.
6. The sensor shall have a self-cleaning wiper to prevent erroneous values and maintenance problems caused by biological activity, scum build-up, and gas bubbles.
7. The self-cleaning wiper shall ensure that measurements are accurate, continuous, and completely color independent.
8. The sensor shall have an operating range of 0.001 mg/L to 50 g/L or 0.001 mg/L to 500 g/L and/or 0.001 to 4000 NTU suspended solids and turbidity depending on the model.
9. The sensor shall be capable of immersion in a tank or insertion into a pipe.
10. The materials of construction shall be PVC or polished stainless steel, depending on the sensor selection.
11. The sensor shall have an operating temperature of >0 to 40°C (32 to 104°F).
12. The initial response time shall be 1 second and user-adjustable up to 300 seconds.
13. The accuracy shall be less than 1% of reading or 0.01 NTU, whichever is greater for turbidity and less than 5% of reading for suspended solids.
14. The suspended solids and turbidity sensor shall be Hach Company Model t-line sc for turbidity measurement or ts-line sc, hs-line sc, inline sc, or highline sc for suspended solids and turbidity measurement.

Dimensions

Hach SOLITAX sc sensors can be fixed to the rim of the tank for immersion applications or inserted directly through the sidewall of a pipeline for insertion applications. The optical unit of the sensor should be installed facing downstream in the direction of the flow to minimize the impact of debris against the measurement system. A variety of installation kits are available.

SOLITAX sc models t-line, ts-line, and hs-line sensors for immersion in open tanks

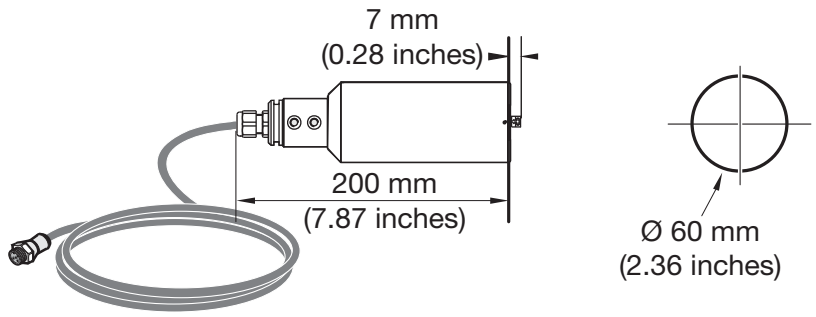

SOLITAX sc models inline and highline sensors for insertion in pipes

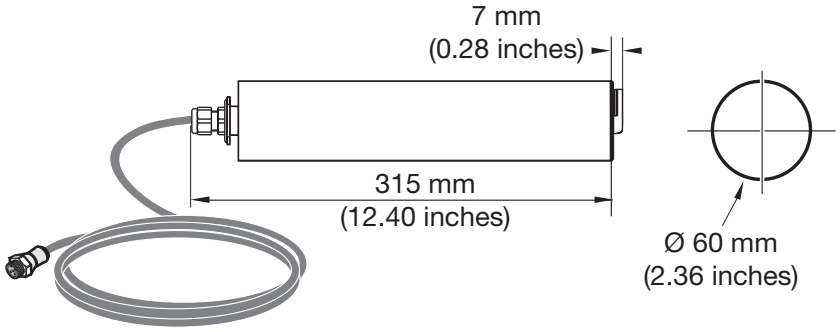

Dimensions *continued*

Installation for mounting SOLITAX sc models t-line, ts-line, and hs-line sensors for immersion in open tanks. (Fixed point Installation Kit, P/N 5734400)

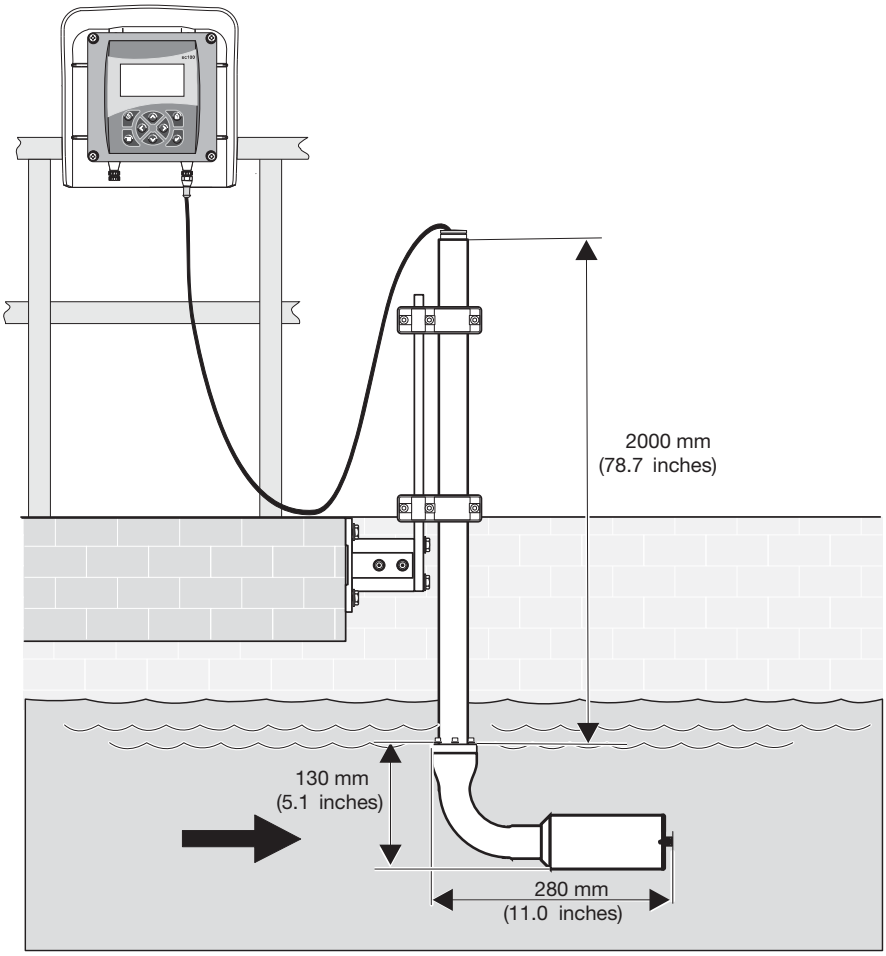

Handrail Mounting Kit includes 1.5-inch diameter by 7.5-ft long CPVC pipe and swivel/pivot/ pipe clamp assembly (P/N MH236B00Z)

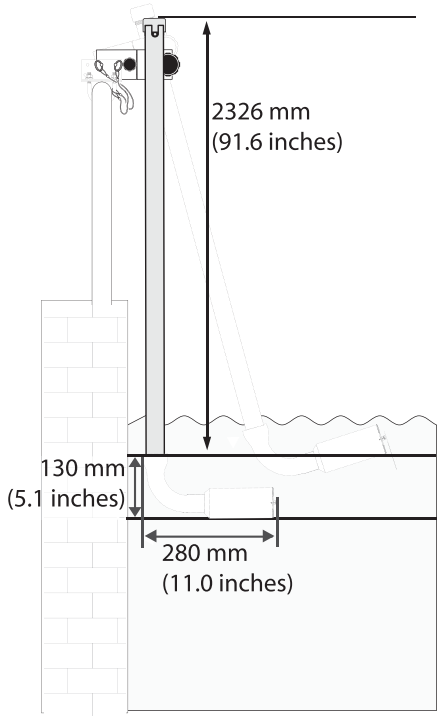

Fixture with ball valve for mounting SOLITAX sc models inline and highline sensors in pipes

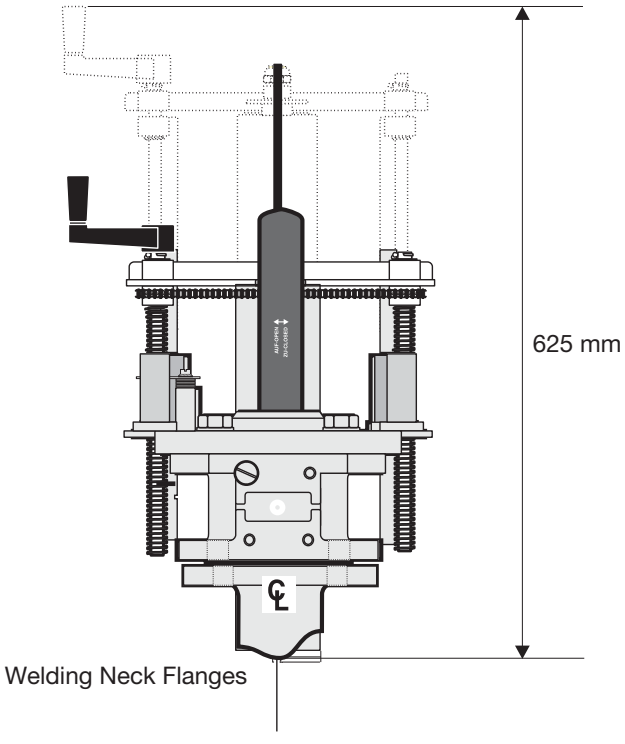

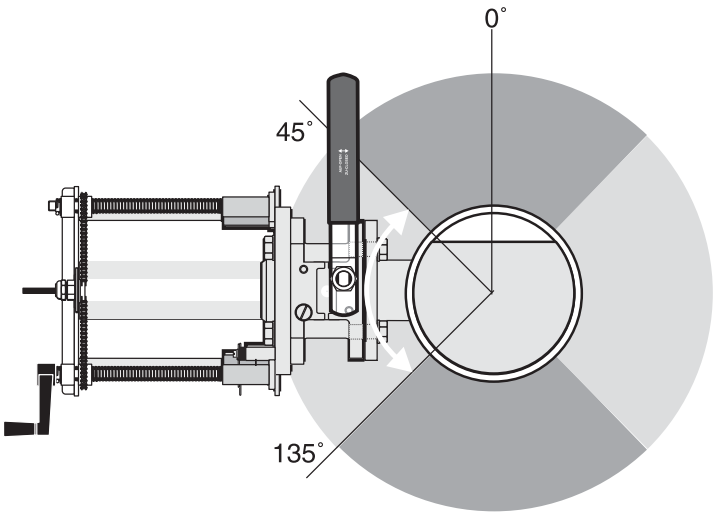

Ordering Information

Sensor Selection

		For insertion in pipes		For immersion in open tanks		
	Range	*inline*	*highline*	*t-line*	*ts-line*	*hs-line*
Wastewater						
Final effluent	0 to 0.1 g/L or 0 to 1000 NTU	●		●	●	
Influent suspended solids	0 to 1.5 g/L	●			●	●
Filtrate/centrate	0 to 2 g/L	●			●	●
Mixed liquor suspended solids	0 to 5 g/L	●			●	
Return activated sludge	0 to 25 g/L	●			●	
Waste activated sludge	0 to 2% or 0 to 20 g/L	●			●	
Primary sludge (settled sludge)	0.5 to 10% or 5 to 100 g/L		●			●
Anaerobic digested sludge	1.5 to 7% or 15 to 70 g/L		●			●
Gravity thickened sludge	2 to 10% or 20 to 100 g/L		●			●
Mechanically thickened sludge	3 to 8% or 30 to 80 g/L		●			●
Drinking Water						
Source water monitoring	0 to 500 NTU	●		●	●	
Influent pressurized raw water	0 to 500 NTU	●			●	●
Clarifier efficiency	0 to 20 NTU	●		●	●	
Filter backwash	0 to 20 NTU	●		●	●	
De-watering	0.5 to 10% or 5 to 100 g/L	●	●			●
Industrial Water						
Make-up water—Power, Pulp & Paper, Petrochemical, Food & Beverage		●		●	●	
Boiler and cooling water—Petrochemical, Pulp & Paper				●	●	
Lime addition—Petrochemical, Mining, Pulp & Paper			●			●
Wastewater (activated sludge process)—Power, Pulp & Paper, Petrochemical, Food & Beverage		●	●	●	●	●
White liquid applications—Pulp & Paper			●			●
Stormwater—Pulp & Paper, Petrochemical		●		●	●	

Ordering Information *continued*

SOLITAX sc Turbidity and Suspended Solids Analyzers

(common controller and sensor configurations)

Immersion in Open Tanks Applications

2983400 Turbidity Analyzer includes sc200 controller and PVC t-line sc sensor (0.001 to 4000 NTU) with wiper

2983500 Turbidity and Suspended Solids Analyzer includes sc200 controller and stainless steel ts-line sc sensor (0.001 to 4000 NTU, 0.001 mg/L to 50 g/L) with wiper

2983600 Turbidity and High Range Suspended Solids Analyzer includes sc200 controller and stainless steel hs-line sc sensor (0.001 to 4000 NTU, 0.001 mg/L to 500 g/L) with wiper

Insertion in Pipes Applications

2983700 Turbidity and Suspended Solids Analyzer includes sc200 controller, stainless steel inline sc sensor (0.001 to 4000 NTU, 0.001 mg/L to 50 g/L) with wiper, and insertion mounting kit

2983900 Turbidity and High Range Suspended Solids Analyzer includes sc200 controller, stainless steel highline sc sensor (0.001 to 4000 NTU, 0.001 mg/L to 500 g/L) with wiper, and insertion mounting kit

Both 2983700 and 2983900 include the insertion mounting kit which includes a 4 inch pre-coped Carbon Steel Flange. Non-coped flanges are available. See below.

NOTE

1. Power cords must be ordered separately.
2. Fixed point installation kit or handrail mount kit must be ordered separately for all immersion analyzers.

Individual SOLITAX sc Sensors

Immersion Sensors

LXV423.99.10000 Turbidity, t-line sc, PVC with wiper (0.001 to 4000 NTU)

LXV423.99.12000 Turbidity, t-line sc, PVC without wiper (0.001 to 4000 NTU)

LXV423.99.10100 Turbidity and Suspended Solids, ts-line sc, PVC with wiper (0.001 to 4000 NTU, 0.001 mg/L to 50 g/L)

LXV423.99.12100 Turbidity and Suspended Solids, ts-line sc, PVC without wiper (0.001 to 4000 NTU, 0.001 mg/L to 50 g/L)

LXV423.99.00100 Turbidity and Suspended Solids, ts-line sc, stainless steel with wiper (0.001 to 4000 NTU, 0.001 mg/L to 50 g/L)

LXV423.99.02100 Turbidity and Suspended Solids, ts-line sc, stainless steel without wiper (0.001 to 4000 NTU, 0.001 mg/L to 50 g/L)

LXV423.99.10200 Turbidity and Suspended Solids, hs-line sc, PVC with wiper (0.001 to 4000 NTU, 0.001 mg/L to 500 g/L)

LXV423.99.12200 Turbidity and Suspended Solids, hs-line sc, PVC without wiper (0.001 to 4000 NTU, 0.001 mg/L to 500 g/L)

LXV423.99.00200 Turbidity and Suspended Solids, hs-line sc, stainless steel with wiper (0.001 to 4000 NTU, 0.001 mg/L to 500 g/L)

LXV423.99.02200 Turbidity and Suspended Solids, hs-line sc, stainless steel without wiper (0.001 to 4000 NTU, 0.001 mg/L to 500 g/L)

Insertion Sensors

LXV424.99.00100 Turbidity and Suspended Solids, inline sc, stainless steel with wiper (0.001 to 4000 NTU, 0.001 mg/L to 50 g/L)

LXV424.99.02100 Turbidity and Suspended Solids, inline sc, stainless steel without wiper (0.001 to 4000 NTU, 0.001 mg/L to 50 g/L)

LXV424.99.00200 Turbidity and Suspended Solids, highline sc, stainless steel with wiper (0.001 to 4000 NTU, 0.001 mg/L to 500 g/L)

LXV424.99.02200 Turbidity and Suspended Solids, highline sc, stainless steel without wiper (0.001 to 4000 NTU, 0.001 mg/L to 500 g/L)

Accessories

5733000 Calibration Kit, includes calibration cylinder, two 500-mL 800 NTU StablCal®, and a sensor bracket

2660549 800 NTU StablCal®, 500-mL (two required per calibration)

LZX050 Wiper Blades, replacement only, pkg. of 5

9220600 Sun Shield for sc200 controller

Cable Accessories

5796000 7.6 m (25 ft.) Extension Cable

5796100 15.2 m (50 ft.) Extension Cable

5796200 30.5 m (100 ft.) Extension Cable

Maximum total length 100 m (328 ft.)

Installation Accessories

5734400 Fixed Point Installation Kit for t-line, ts-line, and hs-line immersion sensors, includes stand and sun shield for controller and pipe for sensor cable

5738400 Insertion Mounting Kit for inline and highline insertion sensors (ball valve and extraction system). Kit includes a 4 inch pre-coped Carbon Steel Flange. Non-coped flanges are available. See below.

AHA033NPT Sensor Adapter, straight 1-1/2 FNPT

AHA034NPT Sensor Adapter, elbow 1-1/2 FNPT, 90°

MH236B00Z Handrail Mounting Kit (for sensor to be used with either adapter above) includes 1.5-inch diameter by 7.5-ft long CPVC pipe and swivel/pivot/ pipe clamp assembly

LZX337 Stainless steel ball valve/extraction fitting for in-line and hi-line probes w/o welding flange

LZX660 Non-coped stainless steel welding flange for insertion kit

LZX661 Non-coped carbon steel welding flange for insertion kit

To complete your turbidity and suspended solids measurement system, choose from these Hach controllers...

Model sc200 Controller

(see Lit. #2665)

The sc200 Universal Controller is the most versatile controller on the market. The new sc200 controller is the only controller that allows the use of digital and analog sensors, either alone or in combination, to provide compatibility with the broadest range of sensors. It replaces the Hach sc100 digital and GLI53 analog controllers with advanced features for easier operator use.

Model sc1000 Controller

(see Lit. #2403)

Get the same great features as the sc200 Controller above—"plug and play", all digital operation and communication—but with the Hach sc1000 Controller, up to eight Hach sensors can be used with one controller in any combination. The sc1000 Controller is also expandable and upgradeable to easily adapt to your needs.

At Hach, it's about learning from our customers and providing the right answers. It's more than ensuring the quality of water—it's about ensuring the quality of life. When it comes to the things that touch our lives...

Keep it pure.

Make it simple.

Be right.

For current price information, technical support, and ordering assistance, contact the Hach office or distributor serving your area.

In the United States, contact:

HACH COMPANY World Headquarters
P.O. Box 389
Loveland, Colorado 80539-0389
U.S.A.
Telephone: 800-227-4224
Fax: 970-669-2932
E-mail: orders@hach.com
www.hach.com

U.S. exporters and customers in Canada, Latin America, sub-Saharan Africa, Asia, and Australia/New Zealand, contact:

HACH COMPANY World Headquarters
P.O. Box 389
Loveland, Colorado 80539-0389
U.S.A.
Telephone: 970-669-3050
Fax: 970-461-3939
E-mail: intl@hach.com
www.hach.com

In Europe, the Middle East, and Mediterranean Africa, contact:

HACH LANGE GmbH
Willstätterstraße 11
D-40549 Düsseldorf
GERMANY
Tel: +49 (0) 211 5288-0
Fax: +49 (0) 211 5288-143
E-mail: info@hach-lange.de
www.hach-lange.com

LIT2472 Rev 5
I12 Printed in U.S.A.
©Hach Company, 2012. All rights reserved.
In the interest of improving and updating its equipment, Hach Company reserves the right to alter specifications to equipment at any time.

HACH®
Be Right™

sc200™ UNIVERSAL CONTROLLER

Applications
- Drinking Water
- Wastewater
- Industrial Water
- Power

One Controller for the Broadest Range of Sensors.

Choose from 30 digital and analog sensor families for up to 17 different parameters.

Maximum Versatility

The sc200 controller allows the use of digital and analog sensors, either alone or in combination, to provide compatibility with Hach's broad range of sensors, eliminating the need for dedicated, parameter-specific controllers.

Ease of Use and Confidence in Results

Large, high-resolution, transreflective display provides optimal viewing resolution in any lighting condition. Guided calibration procedures in 19 languages minimize complexity and reduce operator error. Password-protected SD card reader offers a simple solution for data download and transfer. Visual warning system provides critical alerts.

Wide Variety of Communication Options

Utilize two to five analog outputs to transmit primary and secondary values for each sensor, or integrate Hach sensors and analyzers into MODBUS RS232/RS485, Profibus® DP, and HART networks.

Password protected SD card reader offers a simple solution for data download and transfer, and sc200 and digital sensor configuration file duplication and backup.

HACH®
Be Right™

Controller Comparison

Features	Previous Models sc100™ Controller	Previous Models GLI53 Controller	sc200™ Controller	Benefits
Display	64 x 128 pixels 33 x 66 mm (1.3 x 2.6 in.)	64 x 128 pixels 33 x 66 mm (1.3 x 2.6 in.)	160 x 240 pixels 48 x 68 mm (1.89 x 2.67 in.) Transreflective	• Improved user interface—50% bigger • Easier to read in daylight and sunlight
Data Management	irDA Port/PDA Service Cable	N/A	SD Card Service Cable	• Simplifies data transfer • Standardized accessories/max compatibility
Sensor Inputs	2 Max Direct Digital Analog via External Gateway	2 Max Analog Depending on Parameter	2 Max Digital and/or Analog with Sensor Card	• Simplifies analog sensor connections • Works with analog and digital sensors
Analog Inputs	N/A	N/A	1 Analog Input Signal Analog 4-20mA Card	• Enables non-sc analyzer monitoring • Accepts mA signals from other analyzers for local display • Consolidates analog mA signals to a digital output
4-20 mA Outputs	2 Standard	2 Standard	2 Standard Optional 3 Additional	• Total of five (5) 4-20 mA outputs allows multiple mA outputs per sensor input
Digital Communication	MODBUS RS232/RS485 Profibus DP V1.0	HART	MODBUS RS232/RS485 Profibus DP V1.0 HART 7.2	• Unprecedented combination of sensor breadth and digital communication options

Choose from Hach's Broad Range of Digital and Analog Sensors

Parameter	Sensor	Digital or Analog
Ammonia	AMTAX™ sc, NH4D sc, AISE sc, AN-ISE sc	●
Chlorine	CLF10 sc, CLT10 sc, 9184 sc	●
Chlorine Dioxide	9185 sc	●
Conductivity	GLI 3400 Contacting, GLI 3700 Inductive	△
Dissolved Oxygen	LDO® Model 2, 5740 sc	●
Dissolved Oxygen	5500	△
Flow	U53, F53 Sensors	△
Nitrate	NITRATAX™ sc, NO3D sc, NISE sc, AN-ISE sc	●
Oil in Water	FP360 sc	●
Organics	UVAS sc	●
Ozone	9187 sc	●
pH/ORP	pHD	●
pH/ORP	pHD, pH Combination, LCP	△
Phosphate	PHOSPHAX™ sc	●
Sludge Level	SONATAX™ sc	●
Suspended Solids	SOLITAX™ sc, TSS sc	●
Turbidity	1720E, FT660 sc, SS7 sc, ULTRATURB sc, SOLITAX sc, TSS sc	●
Ultra Pure Conductivity	8310, 8311, 8312, 8315, 8316, 8317 Contacting	△
Ultra Pure pH/ORP	8362	△

● = Digital △ = Analog

Connect up to two of any of the sensors listed above, in any combination, to meet your application needs. The diagrams below demonstrate the potential configurations. Operation of analog sensors requires the controller to be equipped with the appropriate sensor module. Contact Hach Technical Support for help with selecting the appropriate module.

2 Channel Configurations

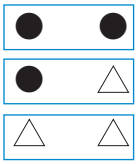

1 Channel Configurations

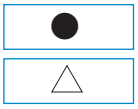

Specifications*

Dimensions (H x W x D)	5.7 in x 5.7 in x 7.1 in (144 mm x 144 mm x 181 mm)
Display	Graphic dot matrix LCD with LED backlighting, transreflective
Display Size	1.9 x 2.7 in. (48 mm x 68 mm)
Display Resolution	240 x 160 pixels
Weight	3.75 lbs. (1.70 kg)
Power Requirements (Voltage)	100 - 240 V AC, 24 V DC
Power Requirements (Hz)	50/60 Hz
Operating Temperature Range	-20 to 60 °C , 0 to 95% RH non-condensing
Analog Outputs	Two (Five with optional expansion module) to isolated current outputs, max 550 Ω , Accuracy: ± 0.1% of FS (20mA) at 25 °C, ± 0.5% of FS over -20 °C to 60 °C range Operational Mode: measurement or calculated value
Analog Output Functional Mode	Linear, Logarithmic, Bi-linear, PID
Security Levels	2 password-protected levels
Mounting Configurations	Wall, pole, and panel mounting
Enclosure Rating	NEMA 4X/IP66
Conduit Openings	1/2 in NPT Conduit
Relay: Operational Mode	Primary or secondary measurement, calculated value (dual channel only) or timer
Relay Functions	Scheduler (Timer), Alarm, Feeder Control, Event Control, Pulse Width Modulation, Frequency Control, and Warning
Relays	Four electromechanical SPDT (Form C) contacts, 1200 W, 5 A
Communication	MODBUS RS232/RS485, PROFIBUS DPV1, or HART 7.2 optional
Memory Backup	Flash memory
Electrical Certifications	EMC CE compliant for conducted and radiated emissions: - CISPR 11 (Class A limits) - EMC Immunity EN 61326-1 (Industrial limits) Safety cETLus safety mark for: - General Locations per ANSI/UL 61010-1 & CAN/CSA C22.2. No. 61010-1 - Hazardous Location Class I, Division 2, Groups A,B,C & D (Zone 2, Group IIC) per FM 3600 / FM 3611 & CSA C22.2 No. 213 M1987 with approved options and appropriately rated Class I, Division 2 or Zone 2 sensors cULus safety mark - General Locations per UL 61010-1 & CAN/CSA C22.2. No. 61010-1

**Subject to change without notice.*

Dimensions

Surface Mounting Dimensions

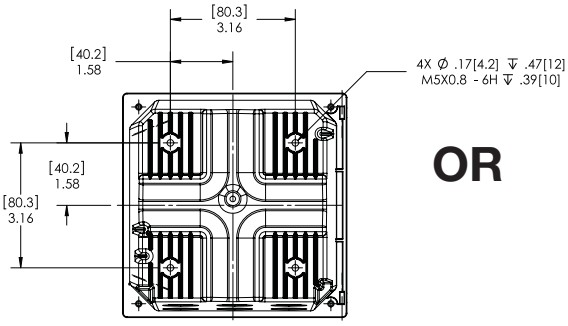

Mounting Dimensions
(Rear View)

OR

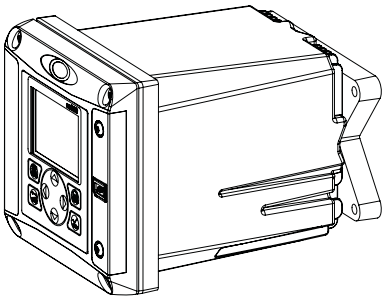

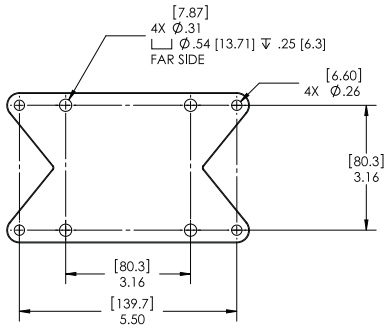

Bracket (supplied) for Surface Mounting
(Not compatible with Weather and Sun Shield
p/n 9220600 when surface mounting.)

Panel Mounting Dimensions

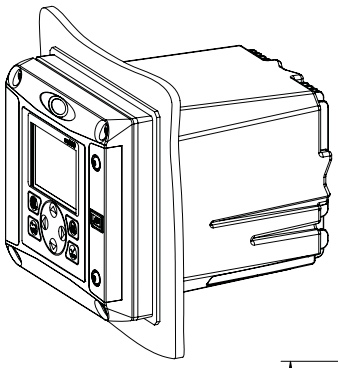

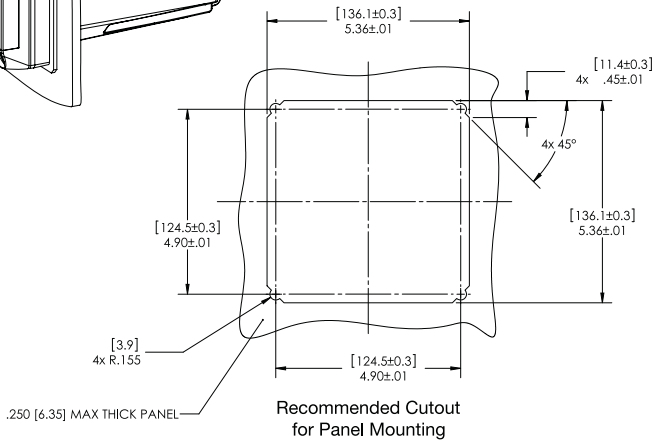

Recommended Cutout
for Panel Mounting

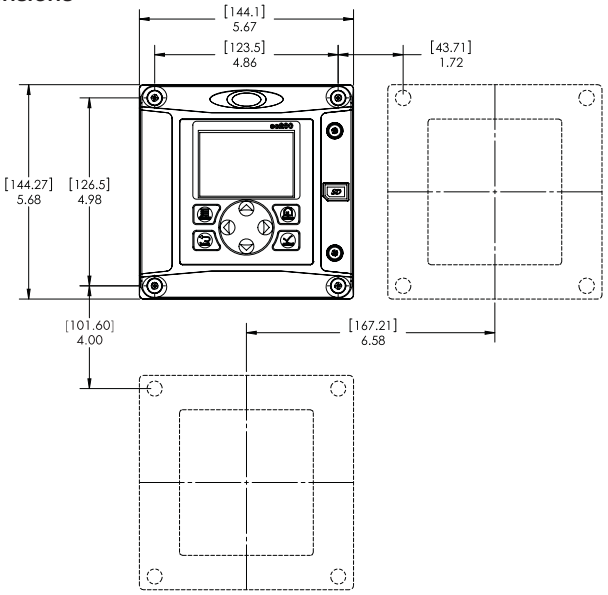

Minimum Spacing Dimensions
for Group Mounting

Top and Bottom Views

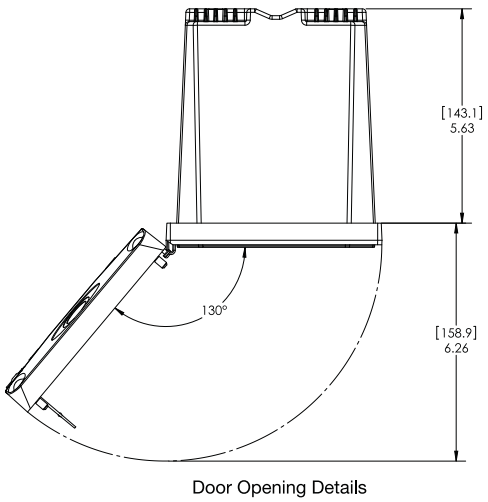

Door Opening Details

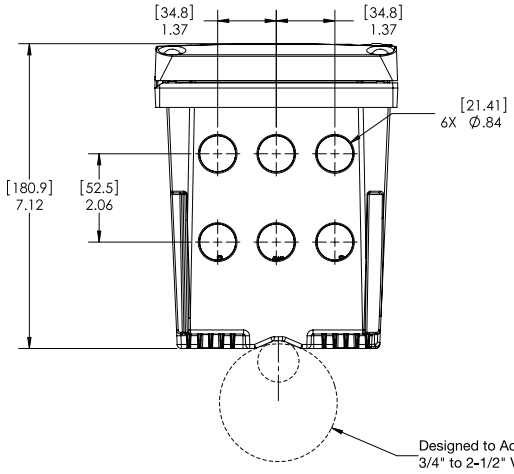

Ordering Information

sc200 for Hach Digital and Analog Sensors

LXV404.99.00552	sc200 controller, 2 channels, digital
LXV404.99.00502	sc200 controller, 1 channel, digital
LXV404.99.00102	sc200 controller, 1 channel, pH/DO
LXV404.99.00202	sc200 controller, 1 channel, Conductivity
LXV404.99.01552	sc200 controller, 2 channels, digital, Modbus RS232/RS485
LXV404.99.00112	sc200 controller, 2 channel, pH/DO

Note: Other Sensor combinations are available. Please contact Hach Technical Support or your Hach representative.

Note: Communication options (MODBUS, Profibus DPV1, and HART) are available. Please contact Hach Technical Support or your Hach representative.

sc200 for Ultrapure Sensors

9500.99.00602	sc200 controller, 1 channel, ultrapure conductivity
9500.99.00702	sc200 controller, 1 channel, ultrapure pH
9500.99.00662	sc200 controller, 2 channel, ultrapure conductivity
9500.99.00772	sc200 controller, 2 channel, ultrapure pH

Sensor and Communication Modules

9012900	Analog pH/ORP and DO module for GLI Sensors
9013000	Analog Conductivity module for GLI Sensors
9012700	Flow module
9012800	4-20 mA Input Module
9525700	Analog pH/ORP Module for Polymetron Sensors
9525800	Analog Conductivity Module for Polymetron Sensors
9013200	Modbus 232/485 Module
9173900	Profibus DP Module
9328100	HART Module
9334600	4-20 mA Output Module (Provides 3 additional mA Outputs)

Accessories

9220600	sc200 Weather and Sun Shield with UV Protection Screen
8809200	sc200 UV Protection Screen
9218200	SD card reader (USB) for connection to PC
9218100	4 GB SD card

HACH COMPANY World Headquarters: Loveland, Colorado USA

United States: 800-227-4224 tel 970-669-2932 fax orders@hach.com
Outside United States: 970-669-3050 tel 970-461-3939 fax int@hach.com
hach.com

LIT2665 Rev 7
K13 Printed in U.S.A.
©Hach Company, 2013. All rights reserved.
In the interest of improving and updating its equipment,
Hach Company reserves the right to alter specifications to equipment at any time.

HACH®
Be Right™

INSTALLATION

DOC053.98.03414.Jul04 - Änderungen vorbehalten
Subject to change without notice

>>Rohrleitungseinbau SOLITAX
>>Piping Installation

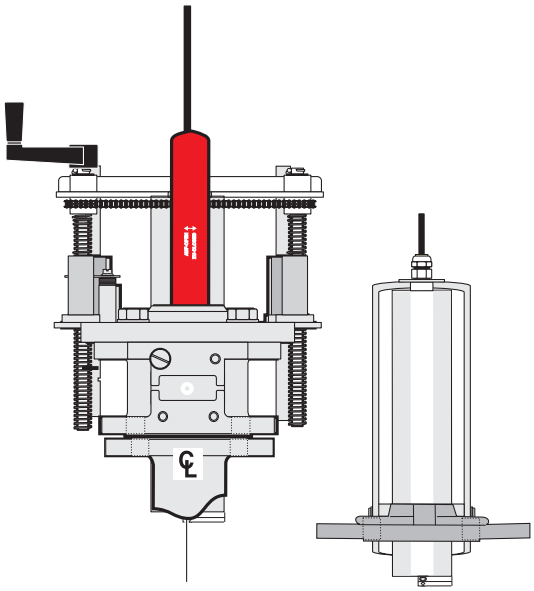

LANGE
FOR WATER QUALITY

Rohrleitungseinbau SOLITAX
Piping Installation

LZX660

1	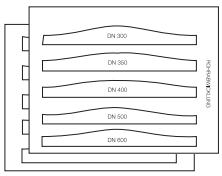	**Vorlage Rohrabwicklung** **Cross sectional profile for pipe**
2	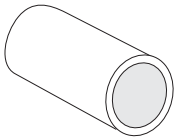	**Verlängerungsstück (Edelstahl1.4571)** **Extension**
3	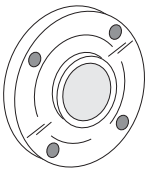	**Vorschweißflansch (Edelstahl1.4571)** **Welding Neck Flanges (High Grade Steel)** **DN65/PN16 DIN 2633**

LZX661

1	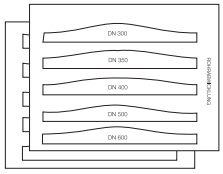	**Vorlage Rohrabwicklung** **Cross sectional profile for pipe**
2	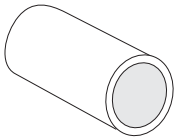	**Verlängerungsstück** **Extension**
3	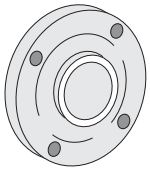	**Vorschweißflansch (C-Stahl)** **Welding Neck Flanges (C-steel))** **DN65/PN16 DIN 2633**

>>INSTALLATION

Rohrleitungseinbau SOLITAX
Piping Installation

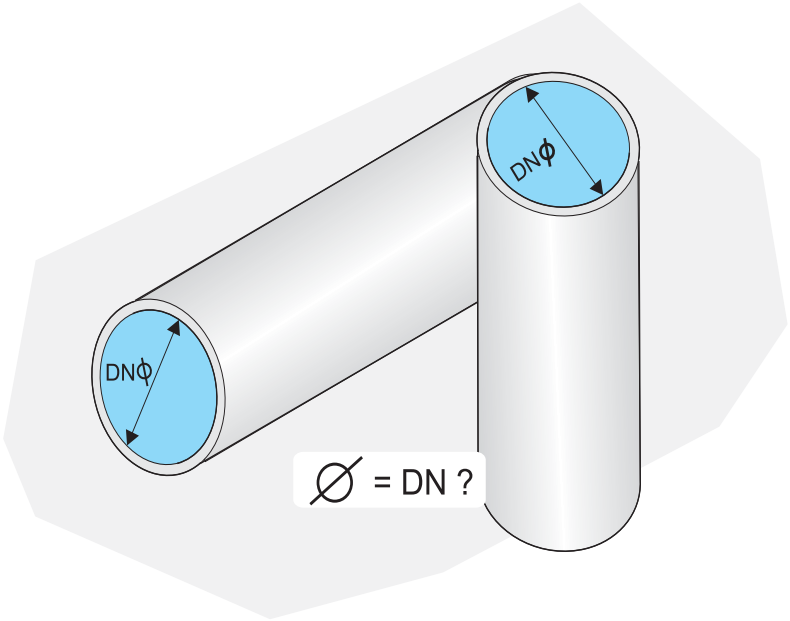

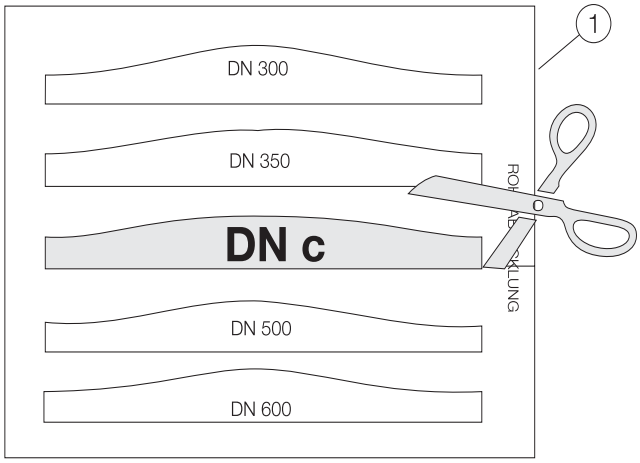

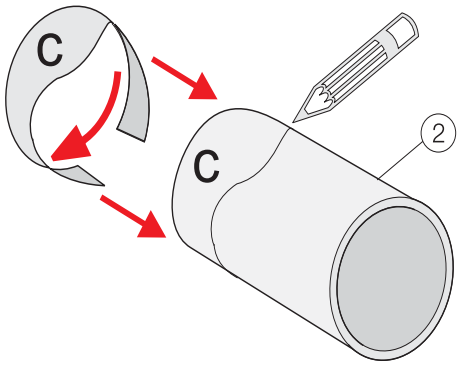

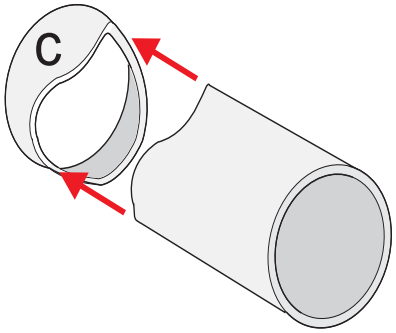

>>INSTALLATION

Rohrleitungseinbau SOLITAX
Piping Installation

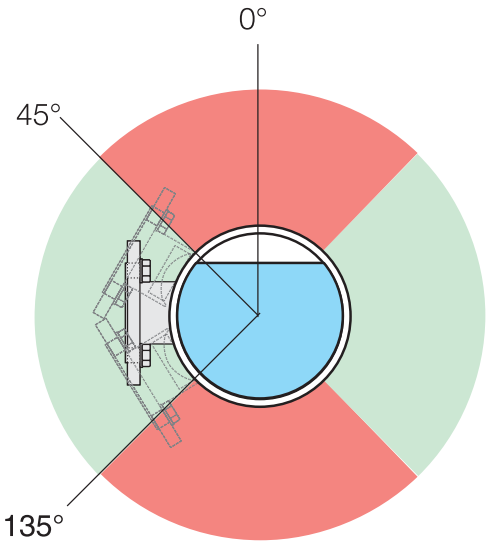

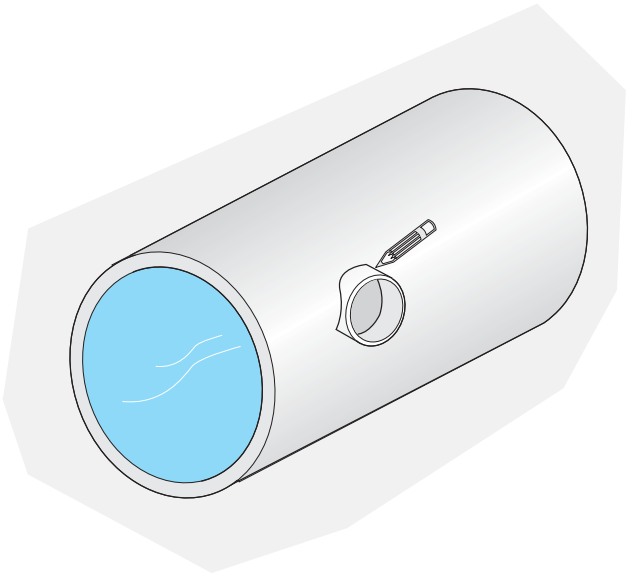

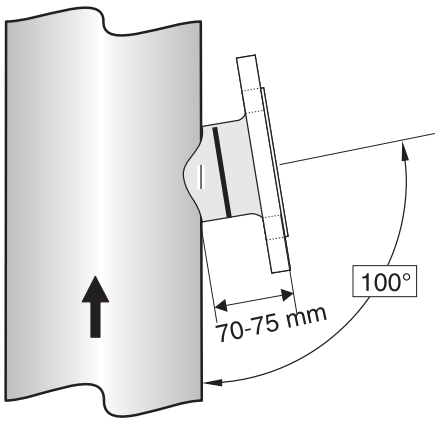

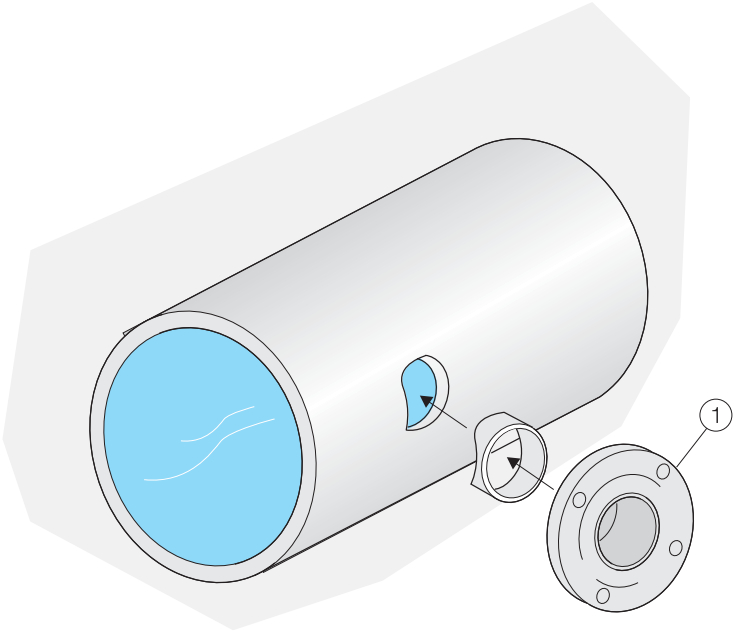

>>INSTALLATION

Rohrleitungseinbau SOLITAX
Piping Installation

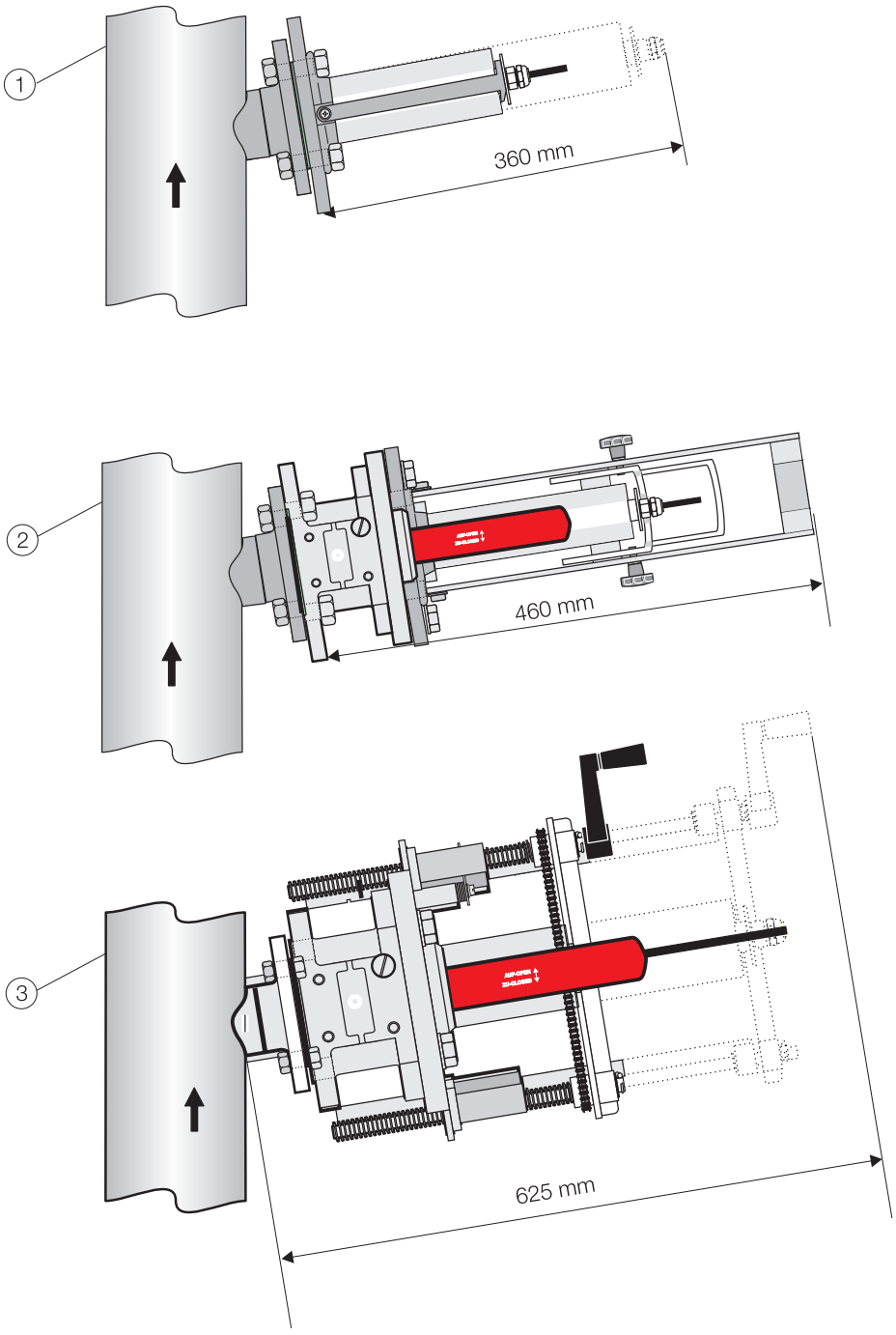

1 LZX461 Einbauarmatur, drucklos, Inline armature, pressure-free
2 LZX936 Einbauarmatur, drucklos mit Kugelhahn, Inline armature, pressure-free with ball valve
3 LZX337 Sicherheitseinbauarmatur (max. 5 bar) safety inline armature

>>INSTALLATION

Rohrleitungseinbau SOLITAX
Piping Installation

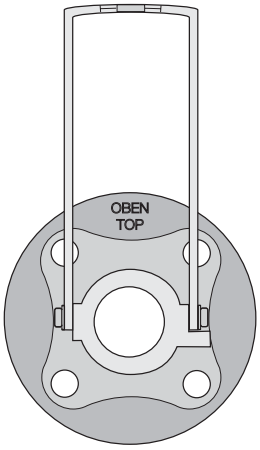

Edelstahl 1.4581
High Grade Steel

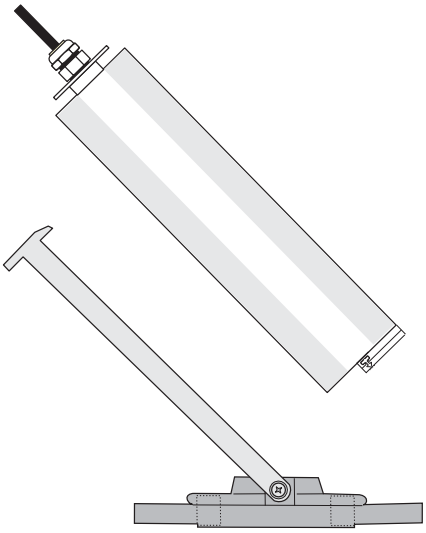

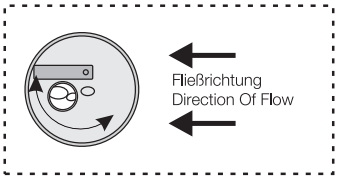

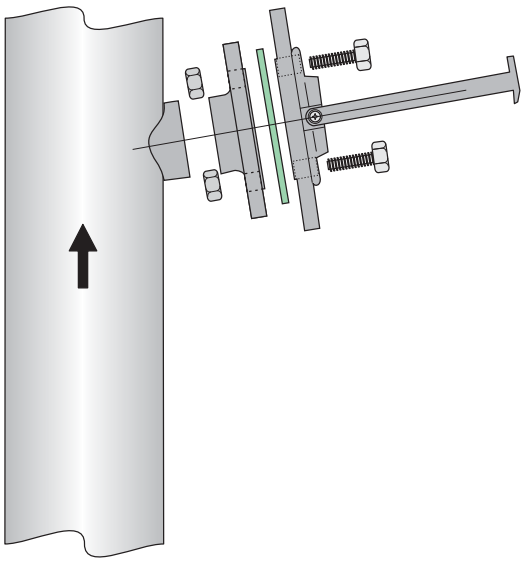

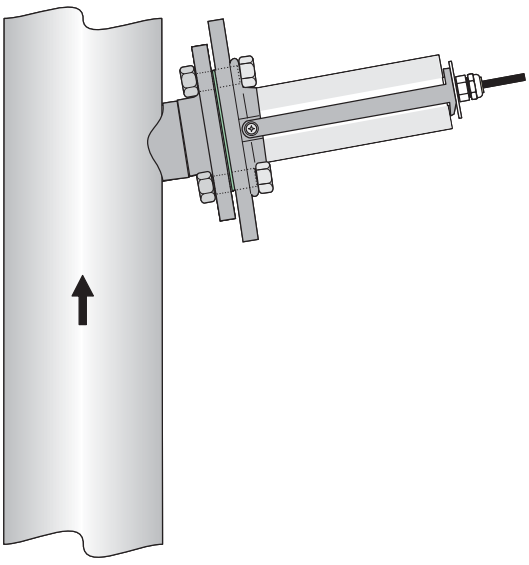

>>INSTALLATION

Rohrleitungseinbau SOLITAX
Piping Installation

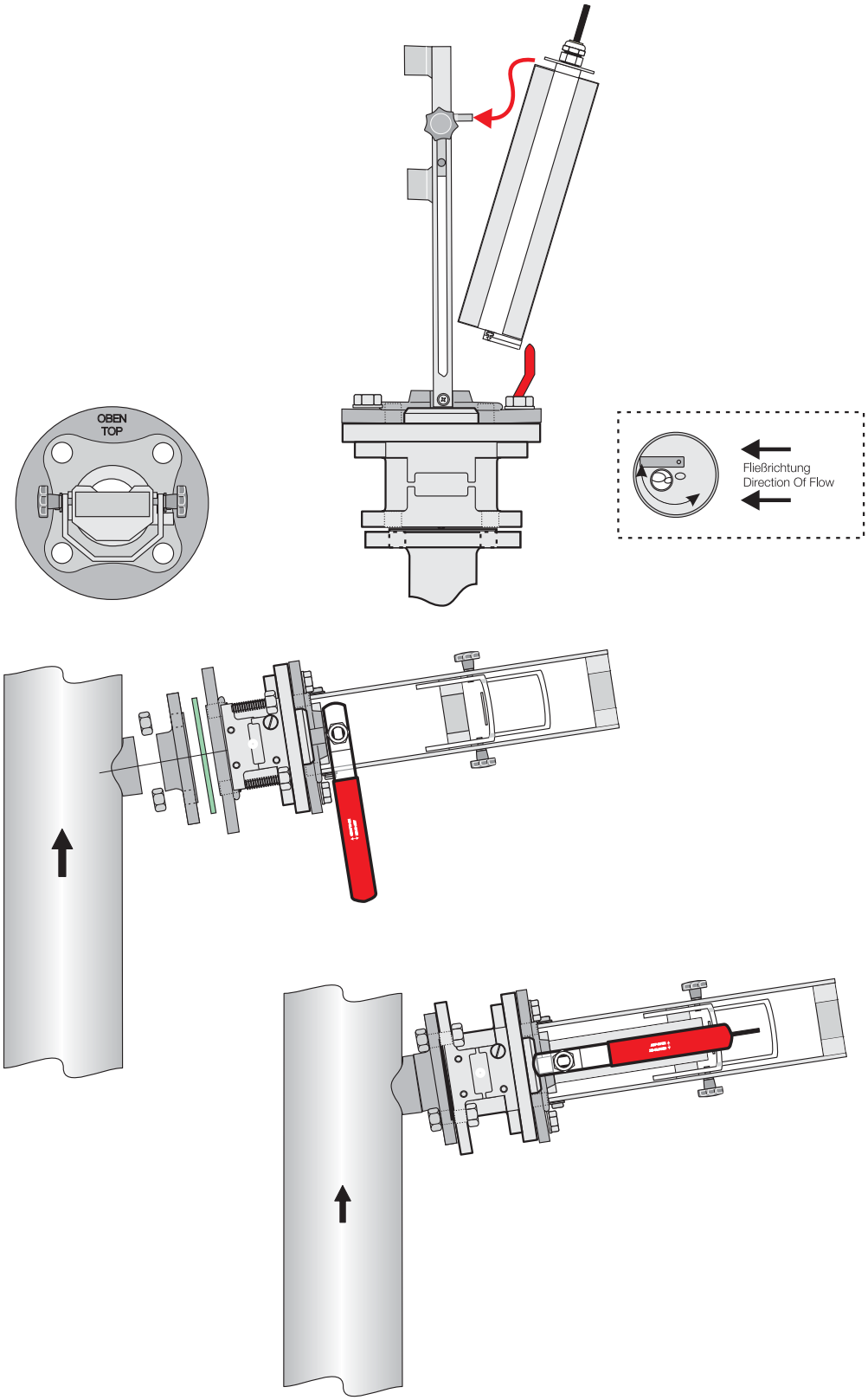

Rohrleitungseinbau SOLITAX
Piping Installation

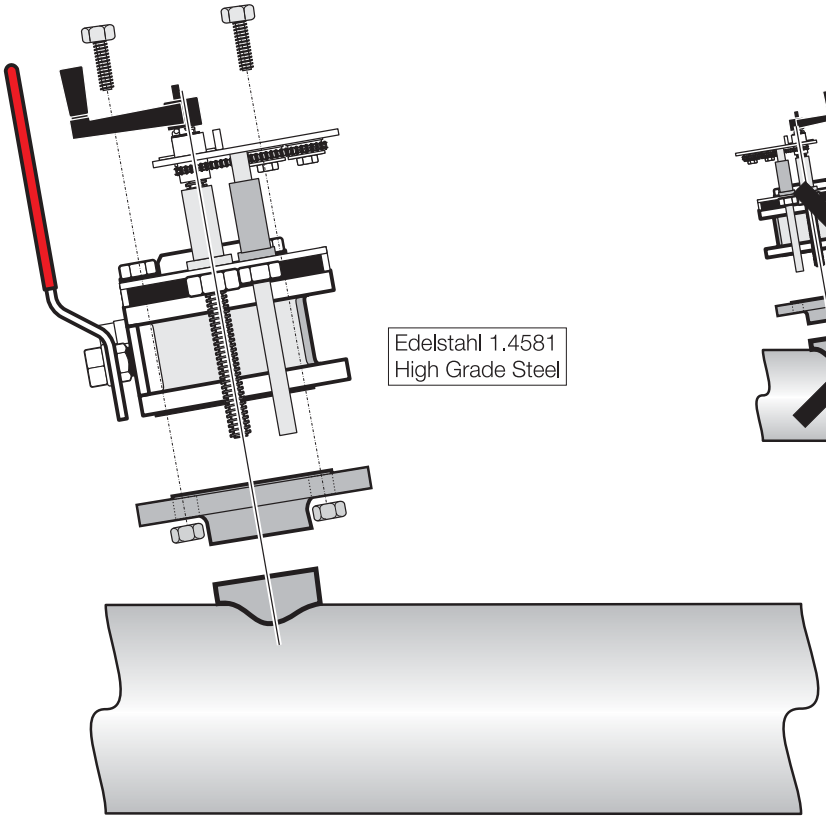

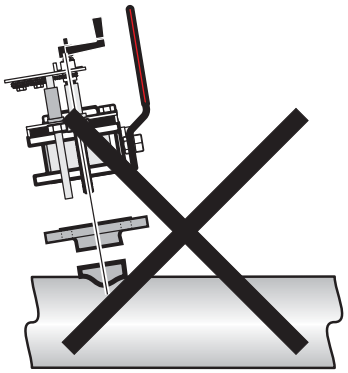

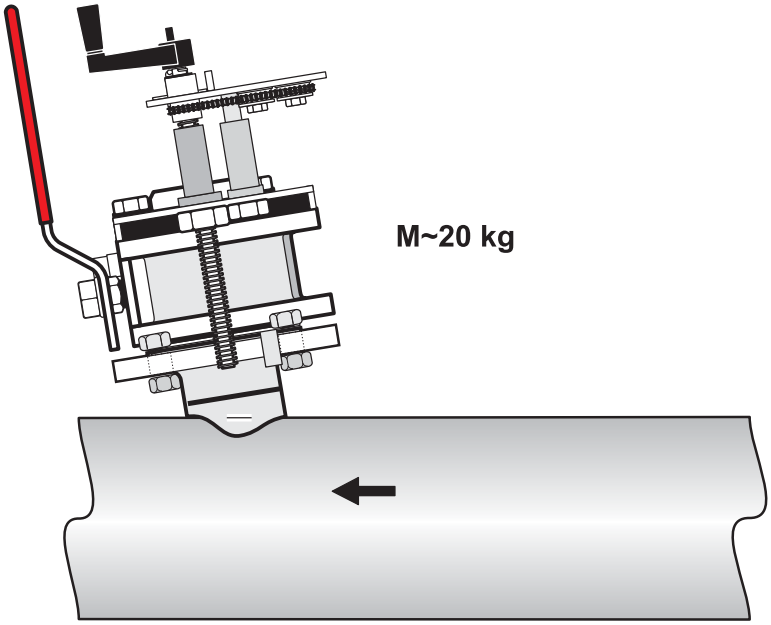

Rohrleitungseinbau SOLITAX
Piping Installation

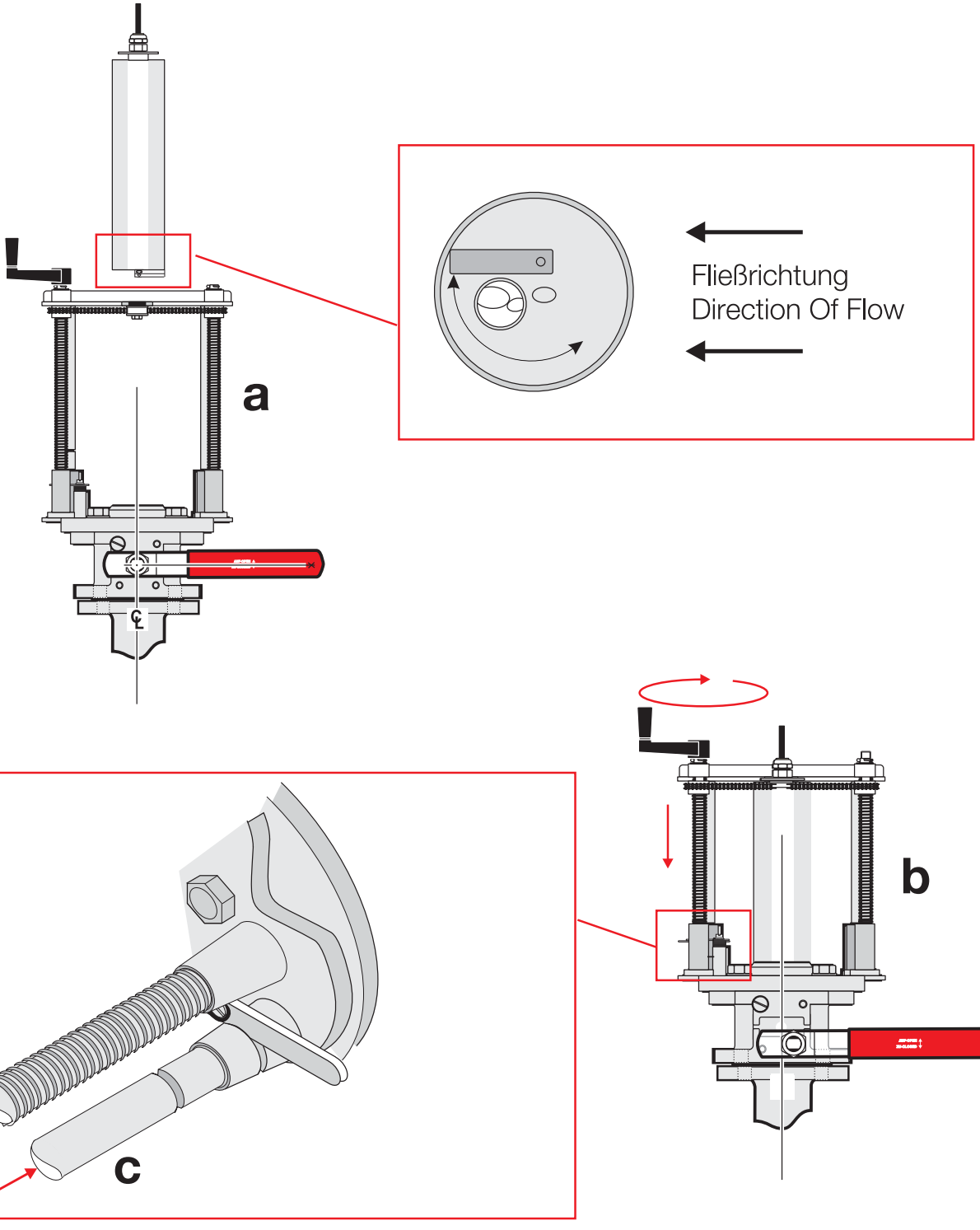

Rohrleitungseinbau SOLITAX
Piping Installation

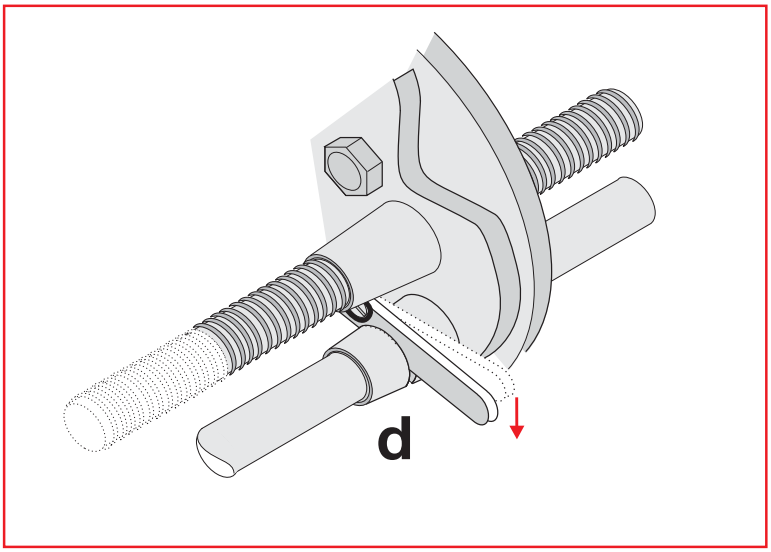

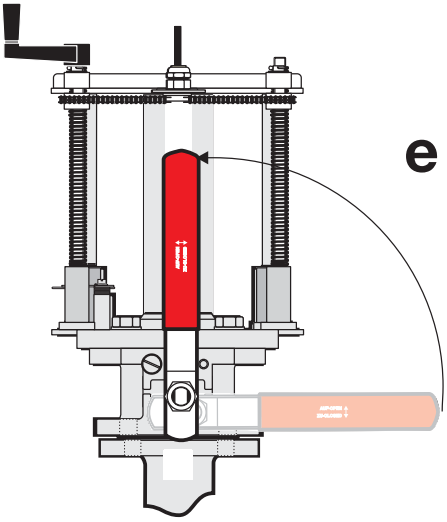

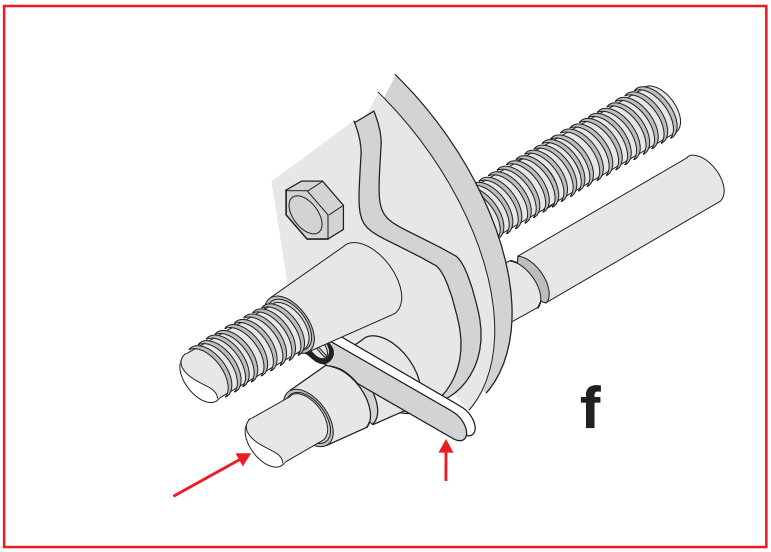

Rohrleitungseinbau SOLITAX
Piping Installation

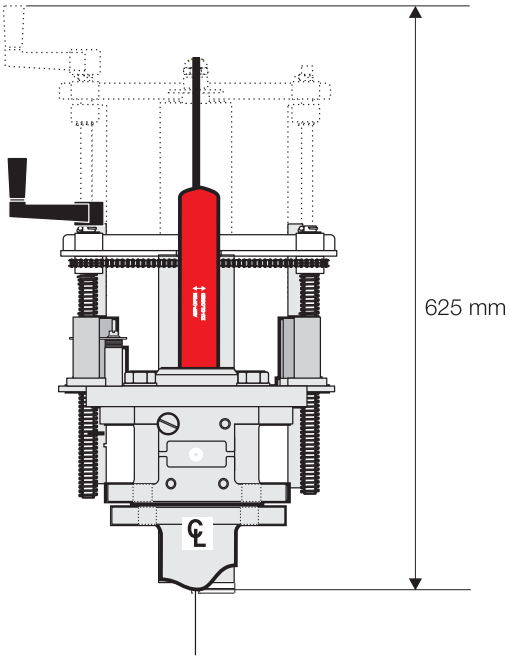

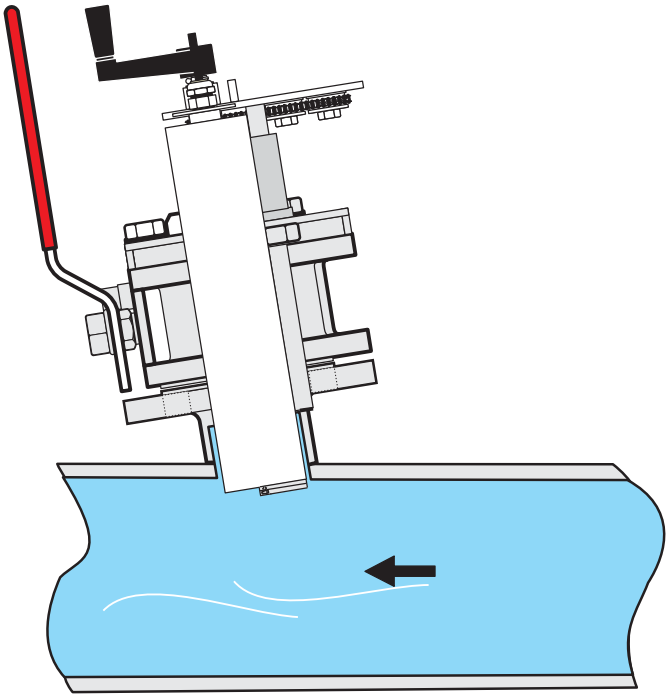

Teile-Liste / Part List

Deutsch	Englisch	Material (DIN / EN - Standard)	Anzahl / Quantity	Bestellnr. / Order Number
Sicherheitseinbauarmatur (Edelstahl), Safety inline armature (highgrade steel)			**1**	**LZX 337**
Einbauarmatur vollständig (Edelstahl)	Inline armatur full scale (highgarde steel)	EN Werkstoff 1.4571 (X6CrNiMoTi17-12-2)		
Gehäuse	Housing	Edelstahl, high-grade steel 1.4401		
Kugel	Ball	Edelstahl, high-grade steel 1.4401		
Dichtung	Gasket	PTFE, Teflon		
O-Ringe	O-Ring	Perbunan (Viton)		
Flachdichtung	Flat gasket	PN 16 / 40 65 DIN 3535		
Seckskantschraube	Hex screw	ISO 4017 M 16 x 45 -A4	4	
Einbauarmatur (highgrade steel) drucklos, Inline armature (highgrade steel) pressureless			**1**	**LZX 461**
Sondenhalter vollständig (Edelstahl)	Probe holder full scale (highgrade steel)	EN Werkstoff 1.4571 (X6CrNiMoTi17-12-2)	1	
Flachdichtung	Flat gasket	PN 16 / 40 65 DIN 3535	1	
Seckskantschraube	Hex screw	ISO 4017 M 16 x 50 -A4	4	
Sechskantmutter	Hex nut	ISO 4032 M 16 -A4	4	
Einbauarmatur (Edelstahl) drucklos mit Kugelhahn, Inline armature (highgrade steel) pressure-less with ball valve			**1**	**LZX 936**
Sondenhalter	Sensor holder	RVS304-AISI304 = 2VA		
Gehäuse	Housing	Edelstahl, high-grade steel 1.4401		
Kugel	Ball	Edelstahl, high-grade steel 1.4401		
Dichtung	Gasket	PTFE		
O-Ringe	O-ring	Perbunan (Viton)		
Flachdichtung	Flat gasket	PN 16 / 40 65 DIN 3535	1	
Flachkopfschraube mit Kreuzschlitz	Flathead screw w. cross slot	ISO 7045 - M 5 x 12 - A4 - 70 - Z	2	
Seckskantschraube	Hex screw	ISO 4017 M 16 x 50 -A4	4	
Sechskantmutter	Hex nut	ISO 4032 M 16 -A4	4	

Rohrleitungseinbau SOLITAX
Piping Installation

Vorschweißflansch (Edelstahl), Welding Neck Flanges (highgrade steel)			**1**	**LZX 660**
Vorschweißflansch (Edelstahl)	Welding Neck Flanges (highgrade steel)	DIN 2633 DN 65 / 76,1 EN Werkstoff 1.4571 (X6CrNiMoTi17-12-2)		
Anschweißrohr	Welding pipe	NW 65/76.1 PN 16 1.4571 - DIN 2633		
Vorschweißflansch (C-Stahl), Welding Neck Flanges (C-steel)			**1**	**LZX 661**
Vorschweißflansch	Welding Neck Flanges (C-steel)	DN 65 / 76,1 C 22.8 (C-Stahl)		
Anschweißrohr	Welding pipe	NW 65/76.1 PN 16 C22.8 103F - DIN 2633		

DOC053.98.03414.Jul04

LANGE
FOR WATER QUALITY

DR. BRUNO LANGE GMBH & CO. KG
Willstätterstraße 11
D-40549 Düsseldorf
Tel. +49 (0)211-5288-0
Fax +49 (0)211-5288-143
info@hach-lange.de
www.hach-lange.de

HACH LANGE LTD
Lennox Road
Basingstoke
Hampshire, RG22 4AP
Tel. +44 (0) 1256 333 403
Fax +44 (0) 1256 330 724
info@hach-lange.co.uk
www.hach-lange.com

LZX337
LZX660
LZX661
LZY630.00.10000
LZY630.00.11000
LZY630.00.12000

DOC273.99.90204/6A

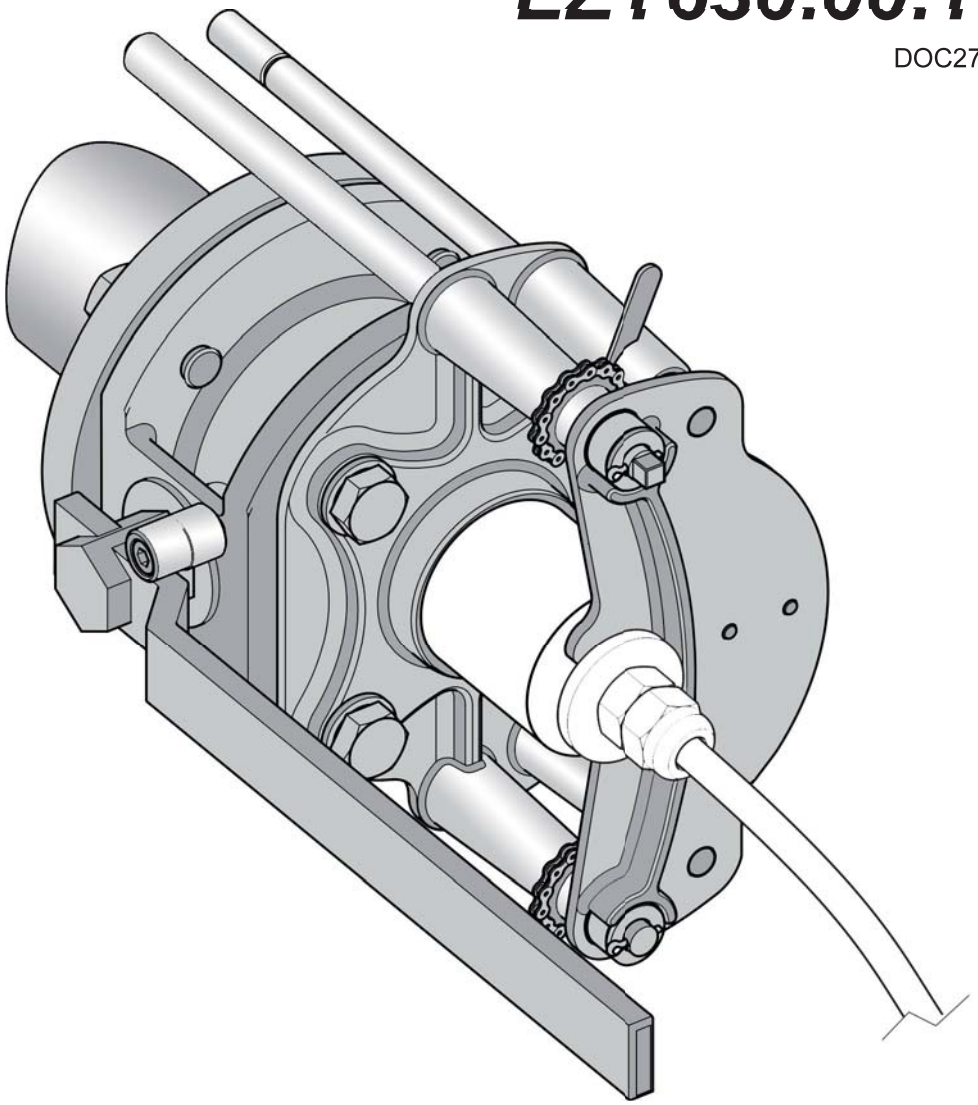

BG Преди инсталацията/монтажа на продукта, прочетете внимателно всички инструкции за инсталация и ги спазвайте по време на инсталирането. Инсталацията трябва да се извършва от квалифициран специалист в съответствие с местните разпоредби за безопасност. Погрижете се избраното място на инсталацията да гарантира безопасна инсталация и експлоатация. Продуктът е предназначен единствено за придържане/прикрепване на измервателните сензори/продукти на HACH/HACH LANGE. Всяко друго приложение може да носи риск за потребителя. Работите по поддръжката и ремонта трябва да се извършват изключително от оторизирания отдел за обслужване на клиенти. Могат да се използват само оригинални резервни части и препоръчани от производителя принадлежности. Всякакви изменения по продукта водят до анулиране на всички отговорности от страна на производителя. Неспазването на инструкциите за употреба или използването на продукта за цели, различни от тези, за които е предназначен, може да доведе до сериозно нараняване на потребителя и/или повреда на оборудването. Работата по заваряване, трябва да бъде извършвана само от квалифицирани заварчици съгласно DIN/EN 287 или от сертифицирани фирми по EN 3834-2.

CS Při instalaci/montáži produktu si pečlivě přečtěte všechny pokyny k instalaci a v průběhu instalace tyto pokyny dodržujte. Instalaci musí provádět kvalifikovaný odborník v souladu s místními bezpečnostními předpisy. Pečlivě vyberte umístění pro instalaci, které zajistí bezpečnou instalaci a provoz. Produkt je určen pouze k upevnění/přichycení měřicích snímačů/produktů HACH/HACH LANGE. Jakékoli jiné použití může znamenat riziko pro uživatele. Údržbu a opravy smí provádět výhradně autorizované oddělení zákaznických služeb. Je dovoleno používat pouze originální náhradní díly a příslušenství doporučené výrobcem. Jakékoli změny provedené na produktu způsobí neplatnost veškerých záruk. Nedodržení těchto pokynů nebo používání produktu pro jiný účel než pro který je určen může způsobit uživateli vážné zranění anebo poškodit zařízení. Potřebné svářečské práce musí být provedeny kvalifikovaným svářečem výhradně podle DIN/EN 287 nebo dodavatelem v souladu s EN 3834-2.

DA Før du installerer/monterer produktet, skal du læse alle installationsinstruktionerne grundigt og følge dem under installeringen. Installationen skal udføres af en kvalificeret ekspert i overensstemmelse med alle lokale sikkerhedsbestemmelser. Vælg sikker og betjeningsvenligt placering til installationen. Produktet er kun beregnet til at holde/fastgøre HACH/HACH LANGE-målesensorer/-produkter. Enhver anden form for brug kan medføre skadesrisiko for brugeren. Vedligeholdelse og reparation bør kun udføres af en autoriseret kundeserviceafdeling. Der må kun anvendes originale reservedele og tilbehør, der er anbefalet af producenten. Alle ændringer af produktet ophæver garantien. Hvis du ikke følger disse instruktioner eller bruger produktet til et andet formål, end det er beregnet til, kan der forekomme alvorlige personskader og/eller skader på udstyret. Svejsearbejde må kun udføres af DIN/EN 287 kvalificerede svejsere, eller EN 3834-2 certificerede firmaer.

DE Die Montageanleitung ist vor der Installation/Montage des Produktes sorgfältig und vollständig zu lesen und zu befolgen. Die Installation muss von einer Fachkraft (qualifiziertes Personal) unter Einhaltung aller lokal gültigen Sicherheitsvorschriften erfolgen. Der Montageort ist so zu wählen, dass eine sichere Installation und der sichere Betrieb gewährleistet ist. Die Verwendung des Produktes ist ausschließlich zum Halten/Befestigen von HACH/HACH LANGE Messsonden/Produkten vorgesehen. Jede andere Benutzung ist mit Risiken für den Benutzer verbunden. Wartungs- und Reparaturarbeiten sollten nur vom autorisierten Kundendienst durchgeführt werden. Es dürfen nur vom Hersteller empfohlene Originalersatz- und Zubehörteile verwendet werden. Änderungen am Produkt haben den Verlust jeglicher Haftungsansprüche zur Folge. Nichtbeachtung dieser Anweisungen oder eine andere Verwendung des Produktes kann schwerwiegende Verletzungen der Anwender oder Beschädigung am Gerät zur Folge haben. Die notwendigen Schweißarbeiten dürfen ausschließlich von entsprechend DIN/EN 287 qualifizierten Schweißern durchgeführt werden, oder von Fachfirmen entsprechend EN 3834-2.

EL Πριν από την εγκατάσταση/τοποθέτηση του προϊόντος, διαβάστε προσεκτικά και ακολουθήστε όλες τις οδηγίες εγκατάστασης κατά την εγκατάσταση. Η εγκατάσταση πρέπει να πραγματοποιηθεί από κατάλληλα εκπαιδευμένο τεχνικό και σύμφωνα με όλους τους τοπικούς κανονισμούς ασφάλειας. Επιλέξτε μια θέση τοποθέτησης που θα διασφαλίσει την ασφαλή εγκατάσταση και λειτουργία. Το προϊόν προορίζεται αποκλειστικά για τη στήριξη/σύνδεση των αισθητήρων μέτρησης/προϊόντων HACH/HACH LANGE. Οποιαδήποτε άλλη χρήση ενδέχεται να ενέχει κινδύνους για τον χρήστη. Οι εργασίες συντήρησης και επισκευής θα πρέπει να εκτελούνται αποκλειστικά από το εξουσιοδοτημένο τμήμα εξυπηρέτησης πελατών. Επιτρέπεται η χρήση μόνον των γνήσιων ανταλλακτικών και των αξεσουάρ που συνιστά ο κατασκευαστής. Οποιεσδήποτε αλλαγές στο προϊόν ακυρώνουν την ευθύνη της εταιρείας. Σε περίπτωση που δεν τηρηθούν αυτές τις οδηγίες ή χρησιμοποιηθεί το προϊόν για διαφορετικό σκοπό από αυτόν που προορίζεται, ενδέχεται να προκληθεί σοβαρός τραυματισμός στον χειριστή και/ή βλάβη στον εξοπλισμό. Οι απαιτούμενες εργασίες συγκόλλησης θα πρέπει να διεξαχθούν από εξειδικευμένο προσωπικό σύμφωνα με DIN / EN287 ή από κατασκευαστικές εταιρείες σύμφωνα με DIN 3834-2.

EN Before installing/mounting the product, read all the installation instructions carefully and follow the instructions during installation. Installation must be carried out by a qualified expert in accordance with all local safety regulations. Take care to choose an installation location that will ensure safe installation and operation. The product is intended solely for holding/attaching HACH/HACH LANGE measuring sensors/products. Any other use may involve risks for the user. Maintenance and repair work should be carried out exclusively by the authorized customer service department. Only original replacement and accessory parts recommended by the manufacturer may be used. Any changes made to the product will nullify all liability. Failure to follow these instructions or use of the product for a purpose other than that for which it was intended may result in serious injury to the user and/or damage to the equipment. The required welding work must be performed exclusively in accordance with DIN / EN 287 qualified welders, or from contractors in accordance with EN 3834-2.

ES Antes de instalar o fijar el producto, lea con atención todas las instrucciones de instalación y sígalas durante el montaje. La instalación debe llevarla a cabo un experto cualificado, de acuerdo con las normas de seguridad locales. Elija una ubicación para la instalación que garantice que ésta y el funcionamiento del producto sean seguros. El producto sólo está diseñado para sujetar o fijar sensores o productos de medición de HACH/HACH LANGE. Cualquier otro uso puede conllevar riesgos para el usuario. El trabajo de mantenimiento y reparación sólo debe llevarse a cabo por el departamento de atención al cliente autorizado. Sólo deben utilizarse las piezas de repuesto recomendadas por el fabricante. Cualquier cambio que se realice en el producto anulará toda responsabilidad. Si no se siguen estas instrucciones o si se utiliza el producto para un uso distinto del uso para el que fue diseñado, el usuario puede sufrir heridas graves y/o se puede dañar el equipo. Los trabajos de soldadura requeridos deben ser realizados exclusivamente por soldadores cualificados según DIN / EN 287, o por contratistas de acuerdo a EN 3834-2.

FI Ennen kuin asennat/kiinnität tuotteen, lue kaikki asennusohjeet huolellisesti ja noudata niitä. Tuotteen saa asentaa vain valtuutettu henkilö, ja asennuksessa on noudatettava kaikkia paikallisia turvallisuusmääräyksiä. Asenna tuote sellaiseen paikkaan, johon asentaminen on turvallista ja jossa tuote toimii oikein. Tuote on tarkoitettu ainoastaan HACH/HACH LANGE -mittausanturien/-tuotteiden ripustamiseen/kiinnittämiseen. Muunlainen käyttö voi aiheuttaa vaaratilanteita käyttäjälle. Huolto- ja korjaustyöt saa tehdä vain valtuutettu asiakaspalveluosasto. Tuotteessa saa käyttää vain valmistajan suosittelemia alkuperäisiä varaja lisäosia. Tuotteeseen tehdyt muutokset mitätöivät kaikki vastuut. Jos näitä ohjeita ei noudateta tai jos tuotetta käytetään johonkin muuhun kuin sen varsinaiseen käyttötarkoitukseen, käyttäjälle voi aiheutua vakavia vammoja ja/tai laite voi vaurioitua. Vain DIN / EN 287 mukaan hyväksytyt hitsaajat tai EN 3834-2 mukaiset urakoitsijat saavat tehdä vaaditut hitsaustyöt.

FR Avant l'installation/le montage du produit, lisez attentivement toutes les instructions d'installation et suivez-les au cours de l'installation. L'installation doit être réalisée par un expert qualifié conformément à toutes les réglementations de sécurité locales. Veillez à choisir un emplacement permettant d'assurer une installation et un fonctionnement en toute sécurité. Ce produit est uniquement destiné à maintenir/fixer des capteurs/équipements de mesure HACH LANGE. Toute autre utilisation entraînerait un risque pour l'utilisateur. Seul le service clientèle agréé est autorisé à effectuer les travaux de maintenance et de réparation. Seuls les pièces de rechange et les accessoires d'origine recommandés par le fabricant doivent être utilisés. La modification du produit annule toute responsabilité. Le non-respect de ces instructions ou l'utilisation de ce produit à des fins autres que celles auxquelles il est destiné risqueraient de gravement blesser l'utilisateur et/ou d'endommager le matériel. Le travail de soudure requis doit être réalisé exclusivement par des soudeurs qualifiés en conformité avec DIN / EN 287, ou par prestataires conformément à EN 3834-2.

HR Prije instalacije/postavljanja uređaja, pažljivo pročitajte sve upute za montažu i pratite ih tijekom postupka instalacije. Instalaciju mora provesti kvalificirani stručnjak u skladu s lokalnim sigurnosnim propisima. Brižljivo odaberite mjesto instalacije na kojem će se postavljanje uređaja i njegovo korištenje odvijati u sigurnim uvjetima. Uređaj je namijenjen isključivo za držanje/pričvršćivanje HACH/HACH LANGE mjernih senzora/uređaja. Upotreba uređaja u druge svrhe može predstavljati rizik za korisnika. Održavanje i popravke smije provoditi isključivo ovlašteni servisni odjel. Mogu se upotrebljavati samo originalni rezervni i dodatni dijelovi koje je preporučio proizvođač. Bilo kakve izmjene izvršene na uređaju poništit će njegovu pouzdanost. Nepoštivanje ovih uputa ili upotreba uređaja za svrhe za koje nije namijenjen mogu dovesti do ozbiljnih ozljeda osoba koje se njime koriste i/ili štete na opremi. Potreban posao za zavarivanje mora biti izveden prema DIN / EN 287 od strane kvalificiranih varioca ili izvođača radova prema EN 3834-2.

HU A termék üzembe helyezése/rögzítése előtt tekintse át a vonatkozó utasításokat, és tartsa is be azokat. Az üzembe helyezést kizárólag szakember végezheti, a hatályos biztonsági előírásoknak megfelelően. A telepítéshez biztonságos üzemet szavatoló helyet válasszon. A termék kizárólag HACH/HACH LANGE mérőberendezések és készülékek rögzítésére szolgál. Az ettől eltérő bármilyen használat kockázattal jár. A karbantartást és egyéb javításokat kizárólag az arra feljogosított ügyfélszolgálati részleg végezheti el. Csak a gyártó által ajánlott cserealkatrészek használhatóak. A terméken végzett bármilyen módosítás a felelősség kizárását vonja maga után. Az utasítások be nem tartása, a termék megadott felhasználási területtől eltérő célra való alkalmazása a kezelő súlyos sérülését és/vagy a berendezés károsodását okozhatja. A szükséges hegesztési munkákat csak DIN/EN 287 bizonyítvánnyal rendelkező hegesztő szakember, vagy EN 3834-2 minősítéssel rendelkező szakcég végezheti.

IT Prima di installare/montare il prodotto, leggere le istruzioni sull'installazione e attenersi scrupolosamente ad esse durante l'installazione. L'installazione deve essere eseguita da personale qualificato in base alle norme di sicurezza locali. Scegliere con cura il punto di installazione per un'installazione corretta e un funzionamento sicuro. Il prodotto è adatto esclusivamente per il sostegno/collegamento di prodotti/sensori di misura HACH/HACH LANGE. Qualsiasi altro utilizzo può provocare lesioni all'utente. La manutenzione e gli interventi di riparazione devono essere eseguiti esclusivamente dal reparto assistenza clienti. Il produttore consiglia di sostituire gli accessori solo con ricambi originali. Qualsiasi modifica apportata al prodotto prevede l'esclusione da qualsiasi responsabilità. La mancata osservanza della procedura di installazione o l'utilizzo inappropriato del prodotto possono provocare serie lesioni all'utente e/o danni all'apparecchiatura. Il lavoro di saldatura richiesto deve essere effettuato esclusivamente in accordo alla direttiva DIN / EN 287 da saldatori qualificati o da costruttori in accordo a EN 3834-2.

JA 製品を取り付ける前にすべての設置手順をよく読み、手順に従って設置してください。 設置は地域の安全基準に従い、資格のある担当者が行ってください。 設置場所は、安全に取り付けて操作できる場所を選んでください。 本製品は、HACH/HACH LANGE 測定センサー/製品の保持および接続専用です。 その他の用途には、ユーザーの責任において使用してください。 メンテナンスおよび修理は、認定されたカスタマー・サービス部門のみが実施できます。 交換部品および付属品には、メーカー推奨の純正品のみを使用してください。 製品を改変した場合、保証は無効になります。 手順に従わなかった場合、または製品を用途外に使用した場合は、重傷を負ったり、装置が破損することがあります。 ウェルディングはDIN/EN287に基づいて認定された作業者あるいはEN3834-2に基づく受託業者が実施する。

KO 본 제품을 설치하거나 장착하기 전에 모든 설치 지침을 충분히 검토하고 설치 시 반드시 해당 지침을 따르십시오. 설치는 숙련된 기술자가 지역의 모든 관련 안전 규정을 준수하여 수행해야 합니다. 설치 및 작동 시 안전한 장소를 신중하게 고르십시오. 본 제품은 HACH/HACH LANGE 측정 센서 또는 측정 제품을 지지하거나 연결하는 용도로만 사용됩니다. 그 외 다른 용도로 사용 시 작업자가 위험할 수 있습니다. 유지 관리 및 보수 작업은 공인된 고객 서비스 부서에서 전적으로 담당해야 합니다. 제조사가 승인한 교체용 부품 및 주변 장치만 사용 가능합니다. 제품 변경으로 인한 책임은 지지 않습니다. 이러한 지침에 어긋나거나 원래 제품의 용도와 다른 목적으로 사용할 경우 작업자에게 심각한 부상이 일어나거나 장비가 손상될 수 있습니다. 용접 작업이 필요한 경우에는 반드시 DIN/EN 287 자격을 가진 용접공이나 EN3834-2에 상응한 사람에 의해서 반드시 수행되어져야 합니다.

NL Lees vóór montage van het product alle montage-instructies grondig door en volg de instructies tijdens de montage op. Montage dient te worden uitgevoerd door een gekwalificeerde persoon en in overeenstemming met alle plaatselijke veiligheidsvoorschriften. Kies een montagelocatie die een veilige montage en werking garandeert. Het product is uitsluitend bedoeld voor opname/bevestiging van meetsensoren/-producten van HACH/HACH LANGE. Elk ander gebruik kan gevaren voor de gebruiker met zich meebrengen. Onderhoud en reparatie mogen uitsluitend worden uitgevoerd door de geautoriseerde afdeling klantenservice. Er mogen alleen originele, door de fabrikant aanbevolen reservedelen en accessoires worden gebruikt. Bij elke aanpassing van het product vervalt de aansprakelijkheid. Als u deze instructies niet opvolgt of als u het product voor een ander doel gebruikt dan waarvoor het is bedoeld, kan dit leiden tot ernstig letsel van de gebruiker en/of beschadiging van de apparatuur. Het benodigde laswerk mag uitsluitend uitgevoerd worden door DIN/EN287 gekwalificeerde lassers, of door EN3834-2 gecertificeerde installateurs.

PL Przed zainstalowaniem/zamontowaniem produktu, uważnie przeczytać wszystkie instrukcje i postępować zgodnie z ich zaleceniami podczas instalacji. Instalacja powinna zostać wykonana przez specjalistę o odpowiednich kwalifikacjach, zgodnie ze wszystkimi obowiązującymi lokalnie przepisami bezpieczeństwa. Wybrać takie miejsce instalacji, które zapewni bezpieczeństwo podczas instalacji i użytkowania. Produkt jest przeznaczony wyłącznie do zamocowania/zawieszenia czujników/mierników firmy HACH/HACH LANGE. Jakiekolwiek inne zastosowanie niesie ze sobą ryzyko dla użytkownika. Konserwacje i naprawy powinny być przeprowadzane wyłącznie przez upoważniony personel działu serwisowego klienta. Wolno używać tylko oryginalnych części zamiennych i części wyposażenia zalecanych przez producenta. Jakiekolwiek modyfikacje w budowie i działaniu produktu oznaczają wygaśnięcie

gwarancji i wykluczają wszelką odpowiedzialność producenta. Nieprzestrzeganie tych instrukcji lub używanie produktu do celów innych niż wynika z opisu jego przeznaczenia, może być przyczyną poważnych wypadków z udziałem użytkownika i/lub uszkodzenia sprzętu. Wymagane prace spawalnicze muszą być wykonane zgodnie z normą DIN / EN 287 przez wykfalifikowany personel lub przez firmy pośredniczące zgodnie z EN3834-2.

PT Antes de instalar/montar o produto, leia atentamente as instruções de instalação e siga-as durante a instalação. A instalação deve ser efectuada por um profissional qualificado em conformidade com todas as regulamentações locais de segurança. Escolha cuidadosamente o local de instalação de modo a assegurar uma operação e instalação com segurança. Este produto foi concebido apenas para segurar/fixar sensores/produtos para medições da HACH/HACH LANGE. Qualquer outro tipo de utilização pode implicar riscos para o utilizador. O trabalho de manutenção e reparação deve ser efectuado única e exclusivamente pelo departamento de assistência ao cliente devidamente autorizado. Apenas podem ser utilizados acessórios e peças de substituição originais recomendados pelo fabricante. Qualquer alteração feita ao produto anula qualquer responsabilidade da nossa parte. O não cumprimento das instruções ou a utilização do produto para outros fins que não aqueles para que o produto foi concebido pode resultar em ferimentos graves e/ou danos no equipamento. O trabalho de soldadura exigido deverá ser executado exclusivamente por soldadores qualificados de acordo com a norma DIN /EN 287, ou por empreiteiros em conformidade com a norma EN 3834-2.

RO Înainte de instalarea/montarea produsului, citiți cu atenție toate instrucțiunile de instalare și urmați instrucțiunile în timpul instalării. Instalarea trebuie realizată de un expert calificat în conformitate cu toate reglementările locale pentru siguranță. Aveți grijă să alegeți o locație de instalare care să asigure instalarea și funcționarea în siguranță. Produsul este destinat exclusiv pentru menținerea/atașarea senzorilor/produselor de măsurare HACH/HACH LANGE. Utilizarea în alte scopuri poate implica riscuri pentru utilizator. Întreținerea și lucrările de reparație trebuie realizate exclusiv de departamentul de service autorizat pentru clienți. Pot fi utilizate numai piesele de schimb și accesoriile originale recomandate de producător. Orice modificare adusă produsului va duce la anularea oricărei răspunderi. Nerespectarea acestor instrucțiuni sau utilizarea produsului în alte scopuri decât în cele destinate pot duce la accidente grave pentru utilizator și/sau defectarea echipamentului. Lucrările de sudură necesare trebuie să fie efectuate exclusiv de sudori calificați în conformitate cu DIN / EN 287 , sau de contractori în conformitate cu EN 3834-2.

RU Перед установкой/монтажом изделия необходимо внимательно прочитать инструкции по установке и строго следовать им во время выполнения работ. Установка должна быть выполнена квалифицированным специалистом с соблюдением действующих правил по технике безопасности. Выбирая место для установки, необходимо учитывать требования по безопасности при монтаже и эксплуатации изделий. Данное изделие предназначено только для крепления измерительных датчиков/приборов компании HACH/HACH LANGE. Любое другое применение может представлять опасность для пользователя. Работы по ремонту и техобслуживанию должны выполняться исключительно специалистами уполномоченной сервисной организации. С изделием могут использоваться только запчасти и принадлежности, рекомендуемые изготовителем. Любые изменения, внесенные в конструкцию изделия, приведут к отмене гарантии поставщика. Несоблюдение требований инструкций или использование изделия не по назначению могут стать причиной серьезных травм для людей и/или повреждения оборудования. Необходимые сварочные работы должны проводиться только сварщиками, квалифицированными в соответствии с DIN / EN 287, или подрядчиками в соответствии с DIN 3834-2.

SK Pred inštaláciou/upevnením produktu si pozorne prečítajte všetky pokyny k inštalácii a počas inštalácie ich dodržujte. Inštaláciu musí vykonať kvalifikovaný expert v súlade so všetkými miestnymi bezpečnostnými nariadeniami. Uistite sa, že si vyberiete miesto inštalácie, ktoré zaručí bezpečnú inštaláciu a prevádzku. Produkt je určený výlučne pre uchytenie/upevnenie meracích snímačov/produktov HACH/HACH LANGE. Akékoľvek iné použitie môže zahŕňať riziká pre používateľa. Údržbu a opravy by malo vykonávať výlučne autorizované oddelenie služieb pre zákazníkov. Môžu sa použiť len originálne náhradné diely a príslušenstvo, ktoré odporúča výrobca. Akékoľvek zmeny vykonané na produkte spôsobia neplatnosť všetkej zodpovednosti. Nedodržanie týchto pokynov alebo používanie produktu na iný než určený účel môže spôsobiť vážne zranenie používateľa alebo poškodenie zariadenia. Požadované zváračské práce musia byť vykonané výhradene v súlade s DIN/EN 287 kvalifikovanými zváračmi, alebo dodávateľmi v súlade s EN 3834-2.

SL Pred namestitvijo/postavitvijo izdelka natančno preberite vsa navodila za namestitev in jih med nameščanjem upoštevajte. Namestitev mora izvesti usposobljen strokovnjak v skladu z vsemi lokalnimi varnostnimi predpisi. Za namestitev izberite mesto, ki zagotavlja varno namestitev in uporabo. Izdelek je namenjen izključno za namestitev/pritrditev merilnih senzorjev/izdelkov HACH/HACH LANGE. Vsakršna drugačna uporaba lahko predstavlja nevarnost za uporabnika. Vzdrževanje in popravilo lahko izvaja izključno osebje pooblaščenega servisnega oddelka. Uporabljate lahko samo originalne nadomestne dele in dodatno opremo, ki jih priporoča proizvajalec. Spremembe izdelka razveljavijo vsakršno odgovornost. Če teh navodil ne upoštevate ali izdelek uporabljate v neprimeren namen, lahko pride do hudih poškodb uporabnika in/ali poškodovanja opreme. Zahtevana dela varenja lahko izvajajo izključno usposobljeni varilci v skladu z DIN/EN 287 ali izvajalci v skladu z EN 3834-2.

SR Pre instalacije/montaže uređaja pažljivo pročitajte sva uputstva za montažu i pratite ih tokom postupka montaže. Instalaciju mora provesti kvalifikovani stručnjak u skladu sa lokalnim propisima o bezbednosti. Brižljivo odaberite mesto instalacije na kom će se montaža uređaja i korišćenje odvijati u bezbednim uslovima. Uređaj je namenjen isključivo za držanje/pričvršćivanje HACH/HACH LANGE mernih senzora/uređaja. Upotreba uređaja u druge svrhe može da predstavlja rizik po korisnika. Održavanje i opravke sme da provodi isključivo ovlašćeni serviser. Kod zamene i opravaka smeju da se koriste samo originalni rezervni i dodatni delovi koje je preporučio proizvođač. Bilo kakve izmene izvršene na uređaju poništiće njegovu pouzdanost. Nepridržavanje uputstava ili upotreba uređaja u svrhe za koje nije namenjen mogu dovesti do ozbiljnih povreda ljudi koji ga koriste i/ili štete na opremi. Neophodni radovi zavarivanja treba da budu izvršeni od strane zavarivača u skladu sa DIN / EN 287 ili od ugovorenog izvođača radova u skladu sa EN 3834-2.

SV Läs alla installationsanvisningar noggrant innan du installerar/monterar produkten och följ anvisningarna under installationen. Installationen måste utföras av en kvalificerad expert i enlighet med alla lokala säkerhetsföreskrifter. Se till att välja en installationsplats som garanterar säker installation och drift. Produkten är endast ämnad för att hålla/fästa mätsensorer/-produkter från HACH/HACH LANGE. Annan användning kan medföra risker för användaren. Underhålls- och reparationsarbeten ska uteslutande utföras av den auktoriserade kundserviceavdelningen. Endast originalreservdelar och -tillbehör som rekommenderas av tillverkaren ska användas. Om någon ändring görs på produkten upphävs tillverkarens ansvar. Det kan det medföra allvarliga skador för användaren eller skador på utrustningen om du inte följer anvisningarna eller om du använder produkten i installationer den inte är avsedd för. Svetsarbeten skall uteslutande utföras av svetsare kvalificerade enligt DIN/EN 287, eller av entreprenör enligt EN3834-2.

TR Ürünün montajını yapmadan önce, tüm montaj talimatlarını dikkatlice okuyun ve kurulum sırasında talimatları mutlaka takip edin. Montaj, kalifiye bir uzman tarafından tüm yerel güvenlik düzenlemelerine uygun şekilde yapılmalıdır. Ürünü, montaj ve kullanımın güvenli olacağı bir yere monte edin. Ürün sadece HACH/HACH LANGE ölçüm sensörlerini/ ürünlerini, tutmak/takmak için tasarlanmıştır. Başka amaçlarla kullanılması, kullanıcı için tehlikeler doğurabilir. Bakım ve onarım sadece yetkili müşteri hizmetleridepartmanı tarafından gerçekleştirilmelidir. Sadece üretici tarafından önerilen orijinal yedek parça ve aksesuarlar kullanılmalıdır. Ürüne yapılan her türlü değişiklik, tüm sorumluluğu ortadan kaldırır. Bu talimatlara uyulmaması veya ürünün üretim amacından başka bir amaçla kullanılması sonucunda kullanıcı ciddi şekilde yaralanabilir ve/veya ürün zarar görebilir. Gerekli kaynak işi yalnızca kalifiye kaynakçılar tarafından DIN / EN 287'ye göre yapılmalıdır, veya müteahhitler tarafından EN 3834-2'ye göre yapılmalıdır.

ZH 在安装/固定产品之前，请仔细阅读所有安装说明，并在安装过程中遵守这些说明。 必须由合格的专家完成安装，并遵守当地的所有安全法规。仔细选择安装地点，确保安全地安装和操作。 本产品只能用于固定/连接 HACH/HACH LANGE 测量传感器/产品。 用于其他用途可能会给用户带来危险。 维护和修理工作应由经授权的客户服务部门完成。 只能使用正宗替换件和制造商推荐的附件。 对本产品进行任何更改均可能导致所有担保失效。不遵守这些说明，或者将本产品用于其它用途，可能会对用户造成严重伤害和/或设备损坏。所需的焊接工作必须要根据DIN/EN 287，由合格的焊接工人单独执行，或者根据EN 3834-2由承包人执行。

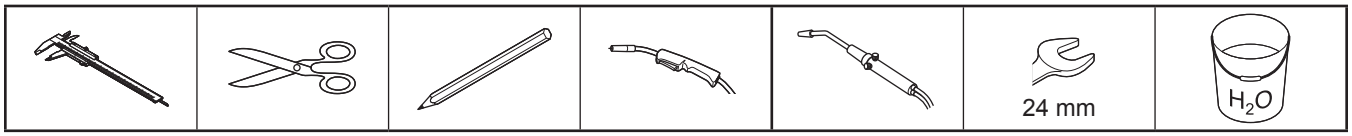

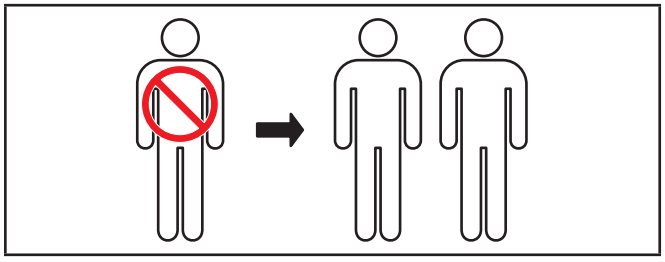

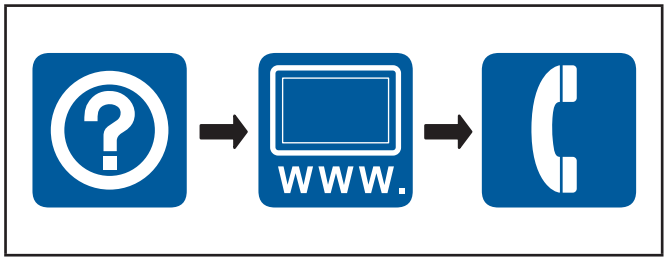

LZX337	SOLITAX inline sc SOLITAX highline sc	**A1**		**A2**	LZY441	**A3**	M16x45mm A4 ISO4017	**A4**	LZY462	**A5**	DOC273.99.03911	**A6**	LZV678	
		1x		1x		4x		1x		1x		1x		

LZX660	SS 316Ti/ 1.4571 DN65/PN16 DIN 2633	**B1**	DN65	**B2**	DOC273.99.03911	**B3**	DN65	
		1x		1x		1x		

LZX661	C-steel / 1.0037 DN65/PN16 DIN 2633	**B1**	DN65	**B2**	DOC273.99.03911	**B3**	DN65	
		1x		1x		1x		

LZY630.00.12000	TSS inline sc	**A1**		**A2**	LZY441	**A3**	M16x45mm A4 ISO4017	**A4**	LZY462	**A5**	DOC273.99.03911	**A6**	LZV678	
		1x		1x		4x		1x		1x		1x		

TSS
inline sc

LZY630.00.10000

LZY630.00.12000		**A1**		**A2**	LZY441	**A3**	M16x45mm A4 ISO4017	**A4**	LZY462	**A5**	DOC273.99.03911	**A6**	LZV678	
		1x		1x		4x		1x		1x		1x	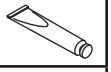	
LZX660	SS 316Ti/ 1.4571 DN65/PN16 DIN 2633	**B1**	DN65	**B2**	DOC273.99.03911	**B3**	DN65							
		1x		1x		1x								

TSS
inline sc

LZY630.00.11000

LZY630.00.12000		**A1**		**A2**	LZY441	**A3**	M16x45mm A4 ISO4017	**A4**	LZY462	**A5**	DOC273.99.03911	**A6**	LZV678	
		1x		1x		4x		1x		1x		1x		
LZX661	C-steel / 1.0037 DN65/PN16 DIN 2633	**B1**	DN65	**B2**	DOC273.99.03911	**B3**	DN65							
		1x		1x		1x								

1

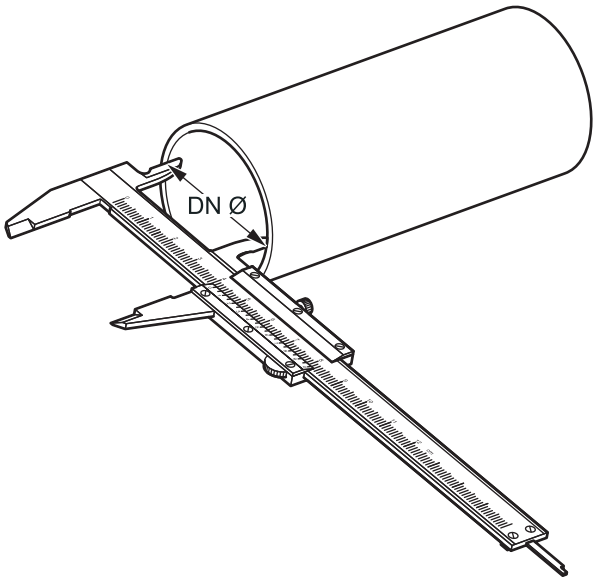

2

A5

DN Ø =

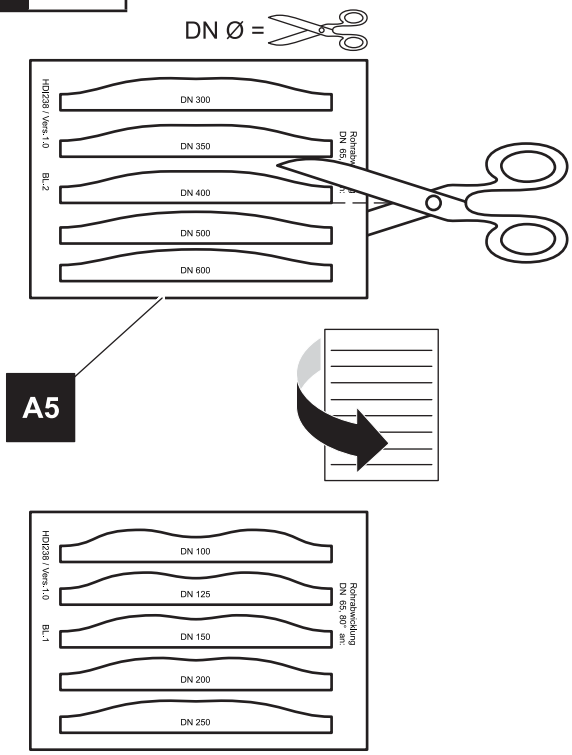

3

B3

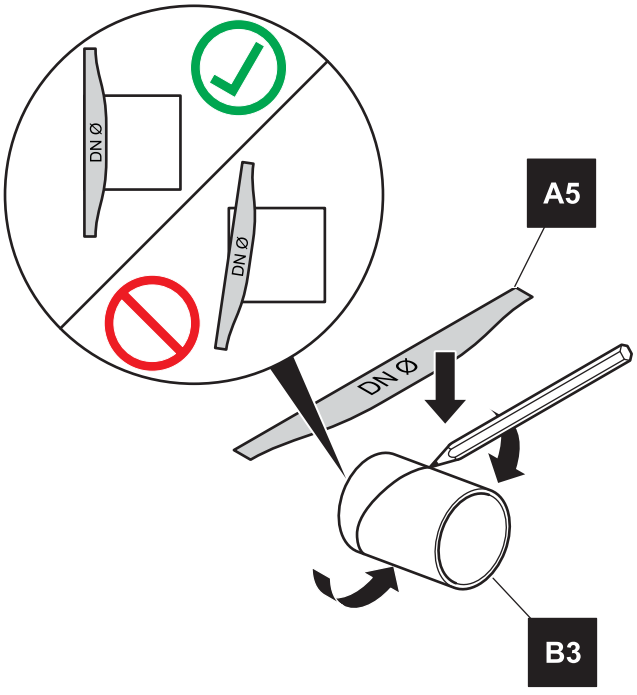

4

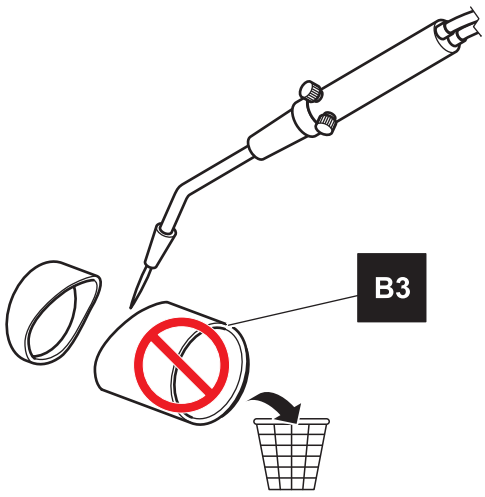

5

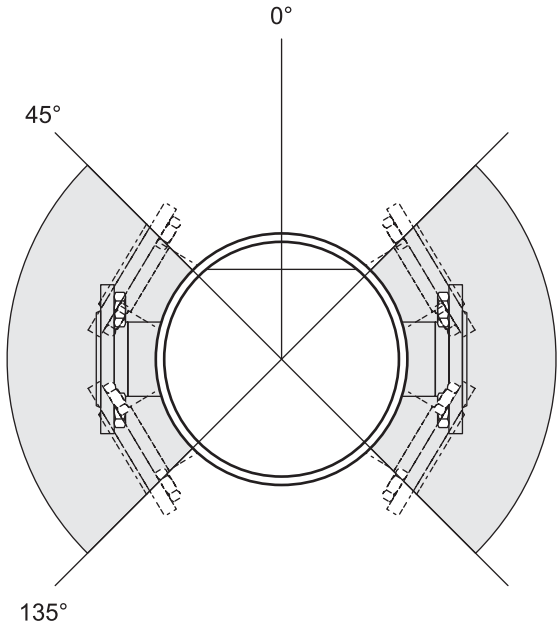

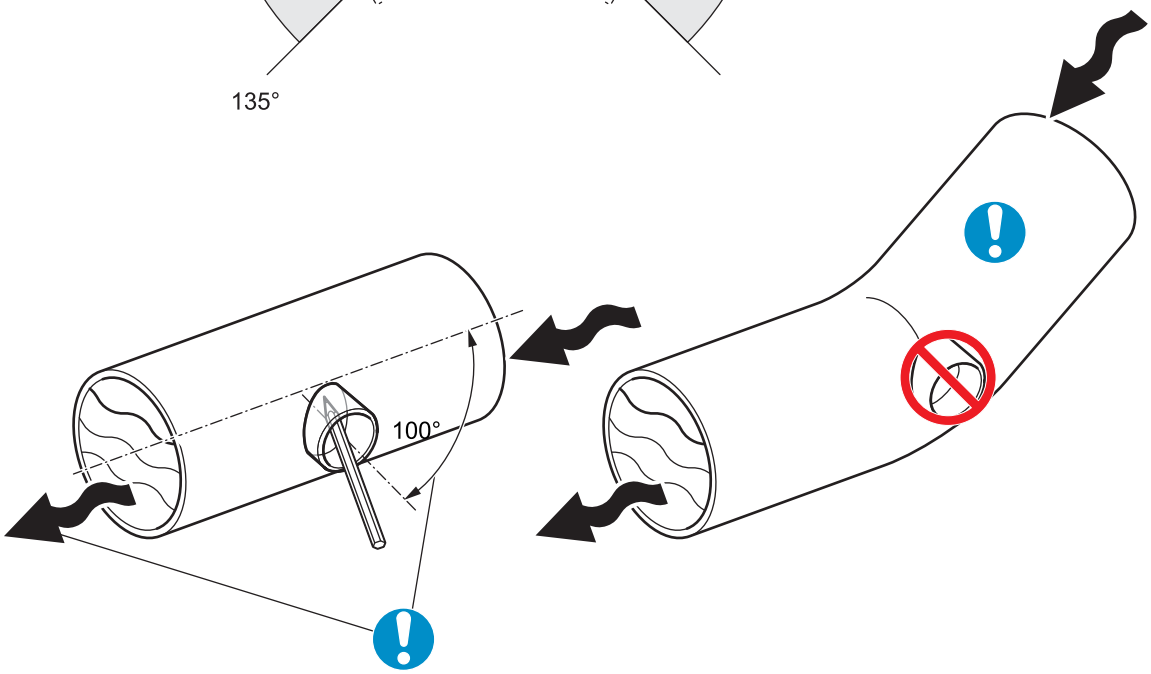

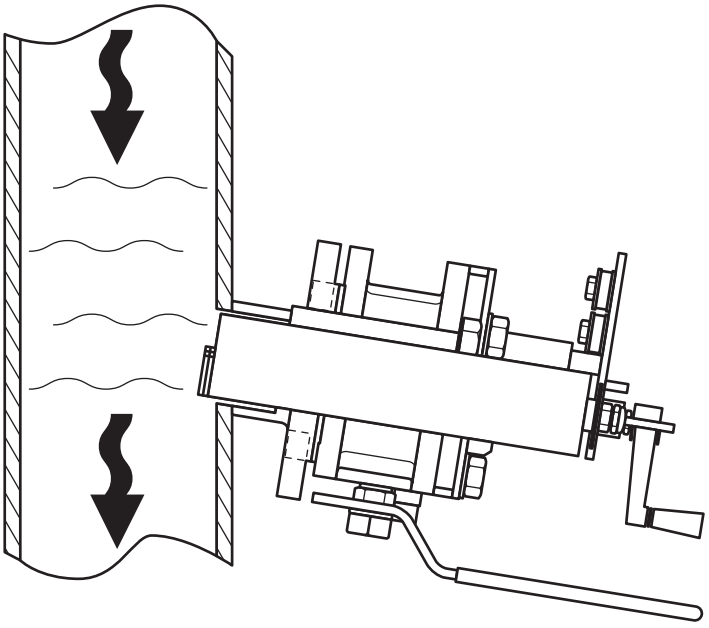

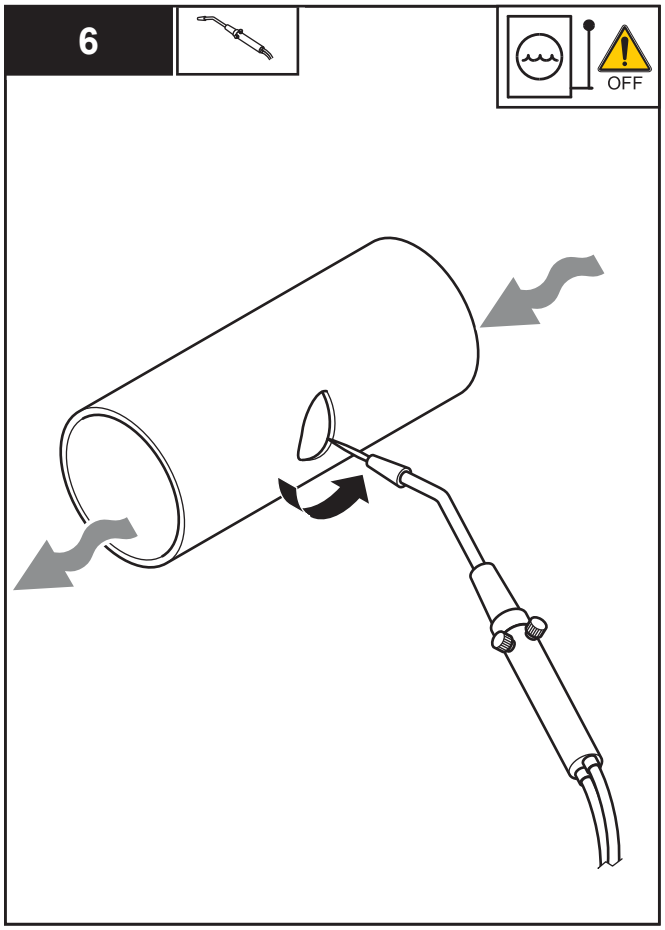
6
OFF

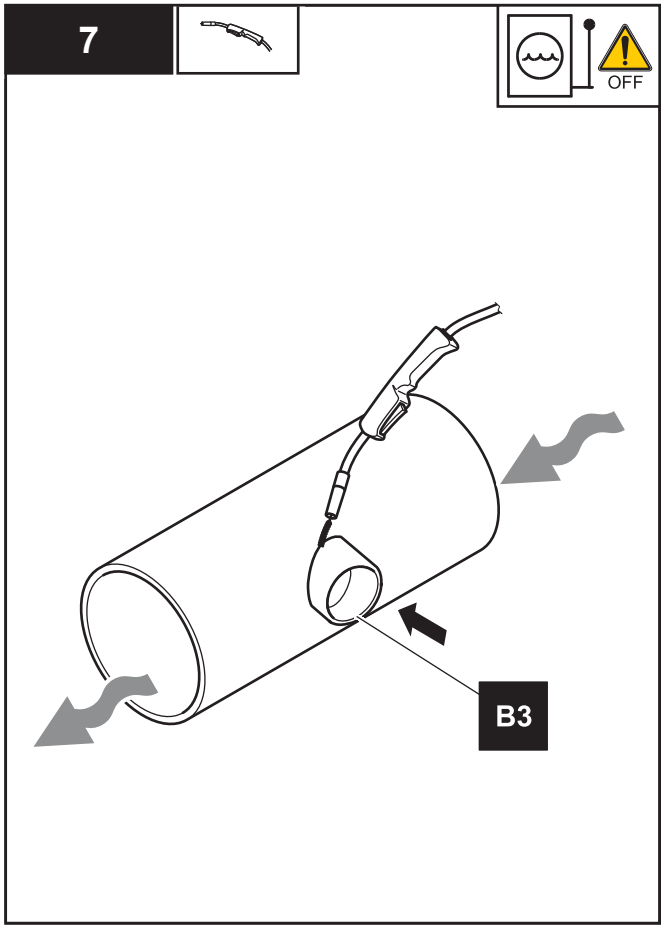
7
OFF
B3

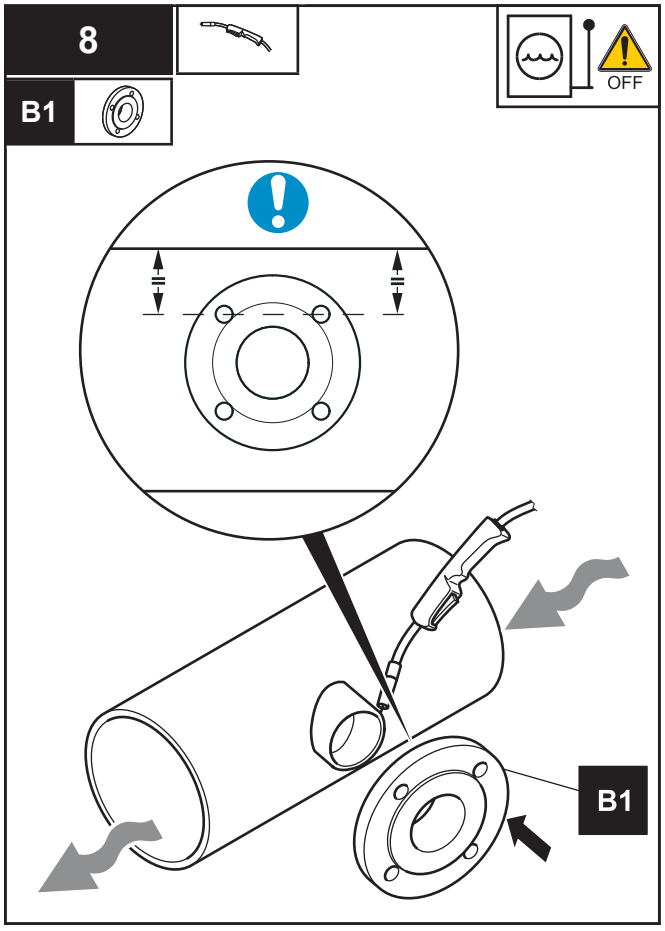
8
B1
OFF
B1

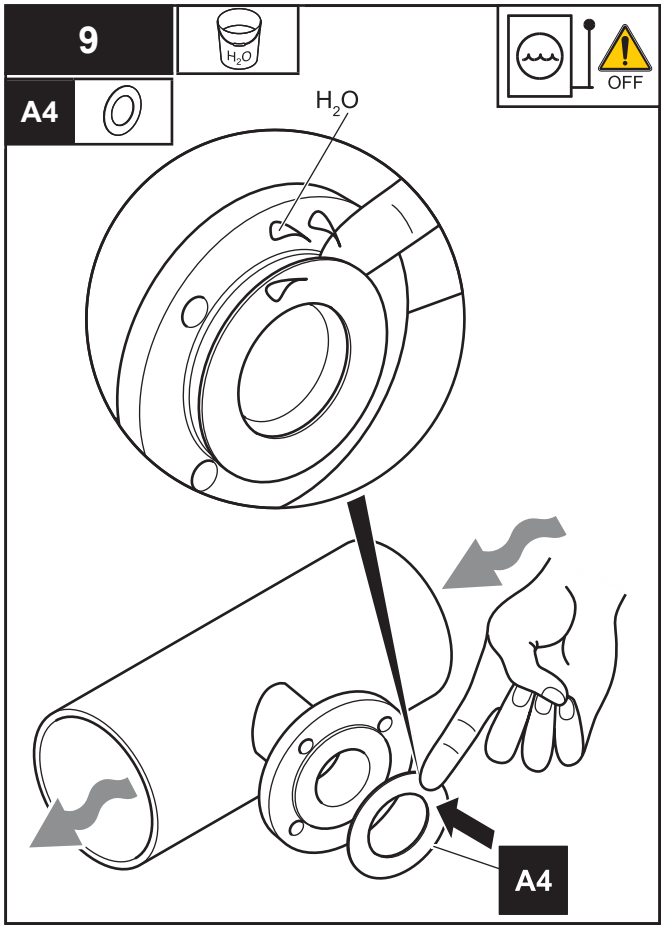
9
A4
H_2O
OFF
A4

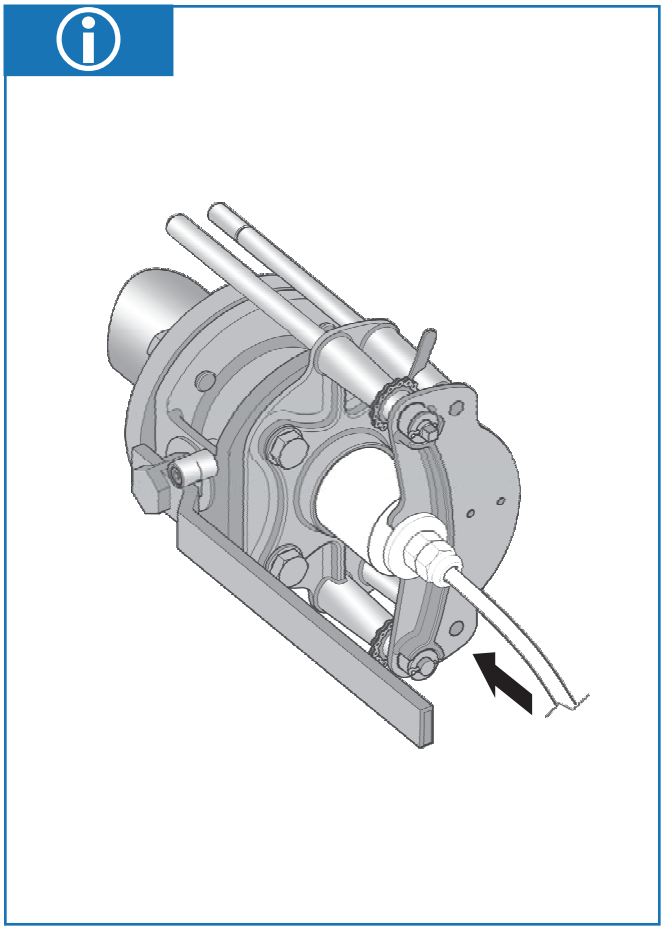

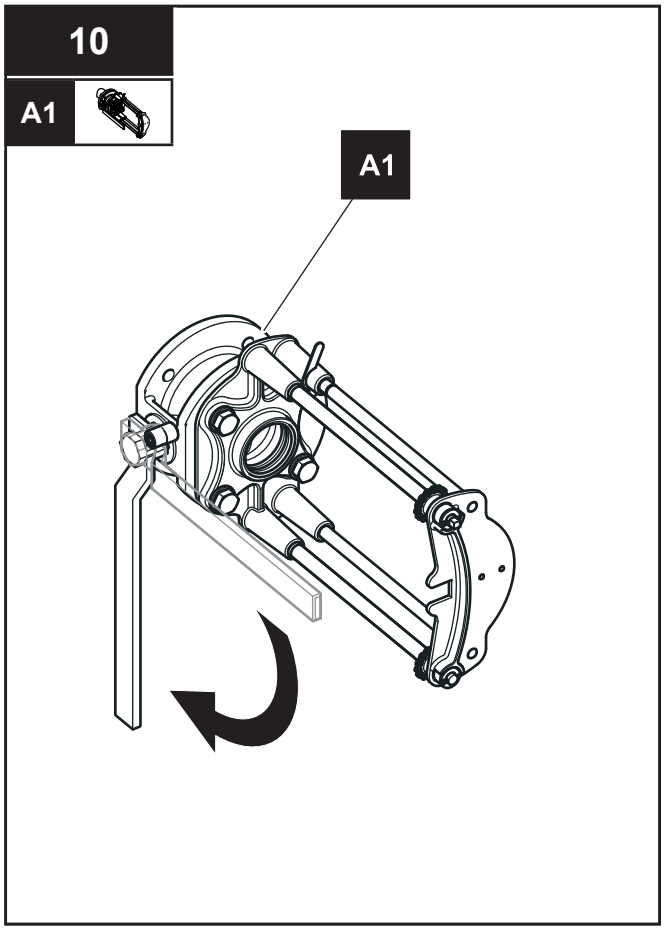
10
A1
A1

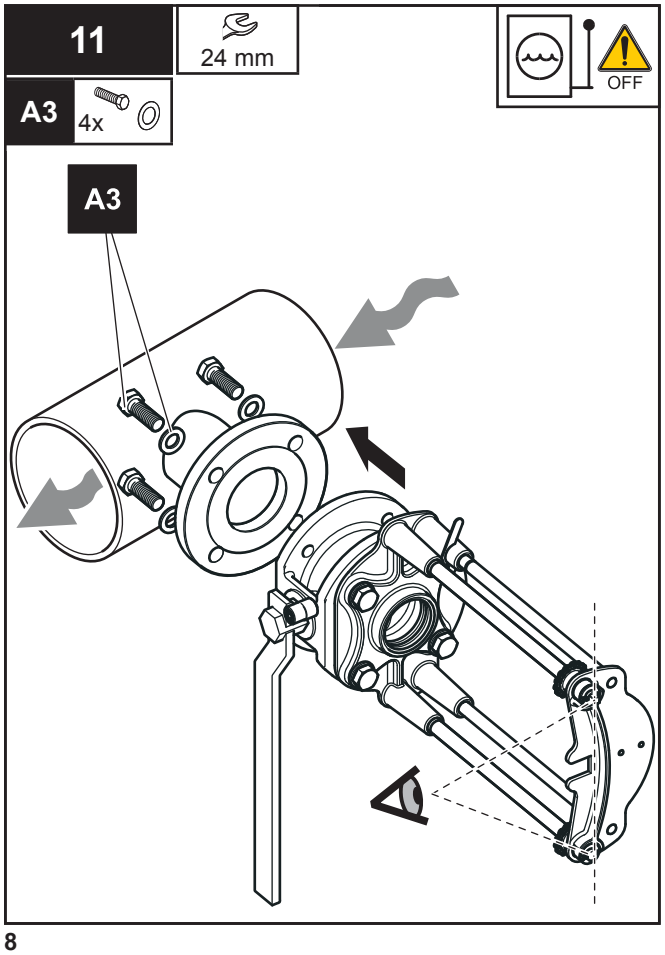
11
24 mm
OFF
A3
4x
A3

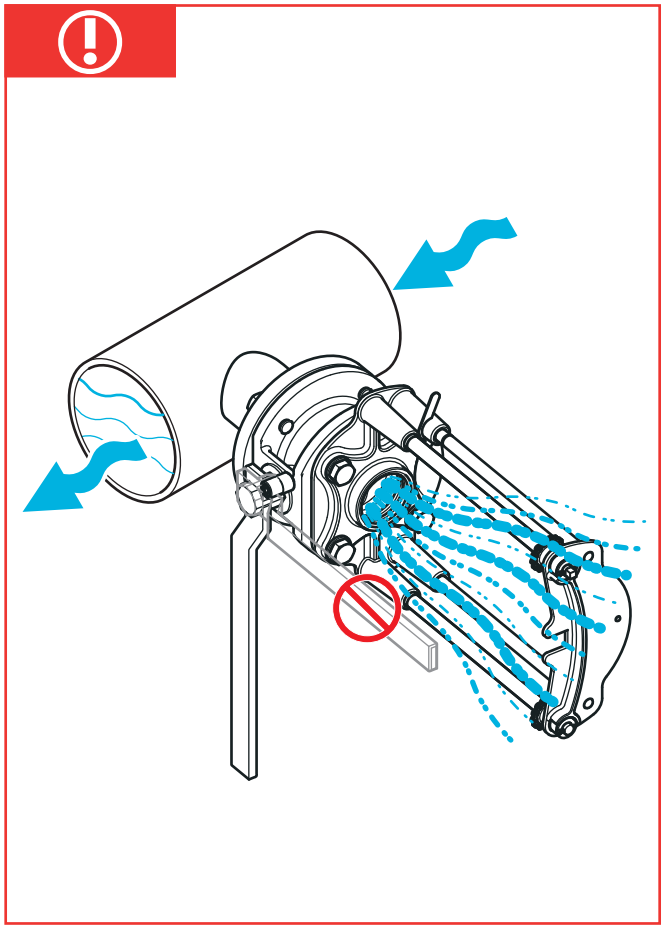

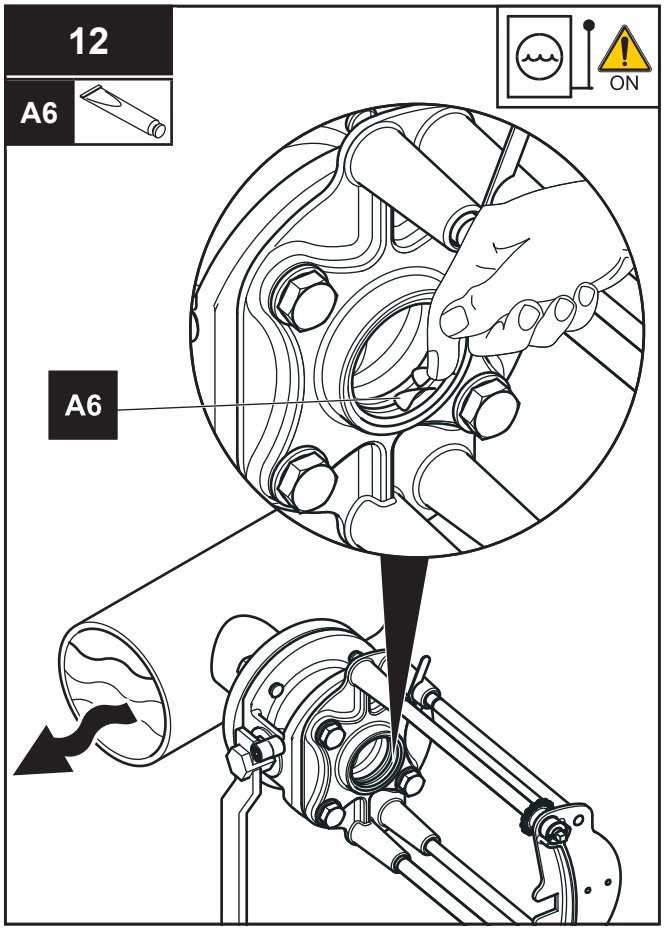
12
A6
ON
A6

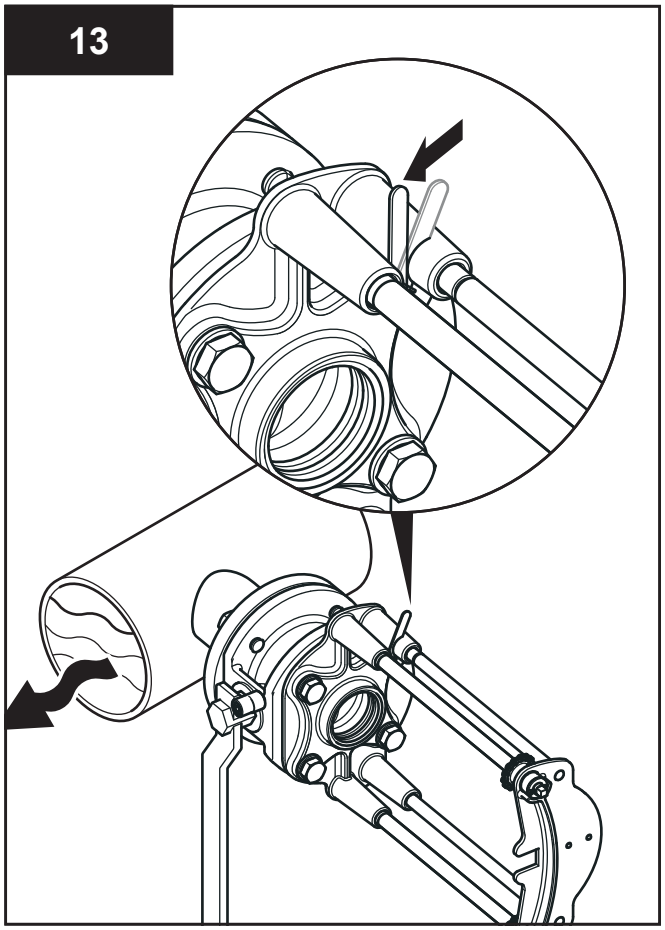
13

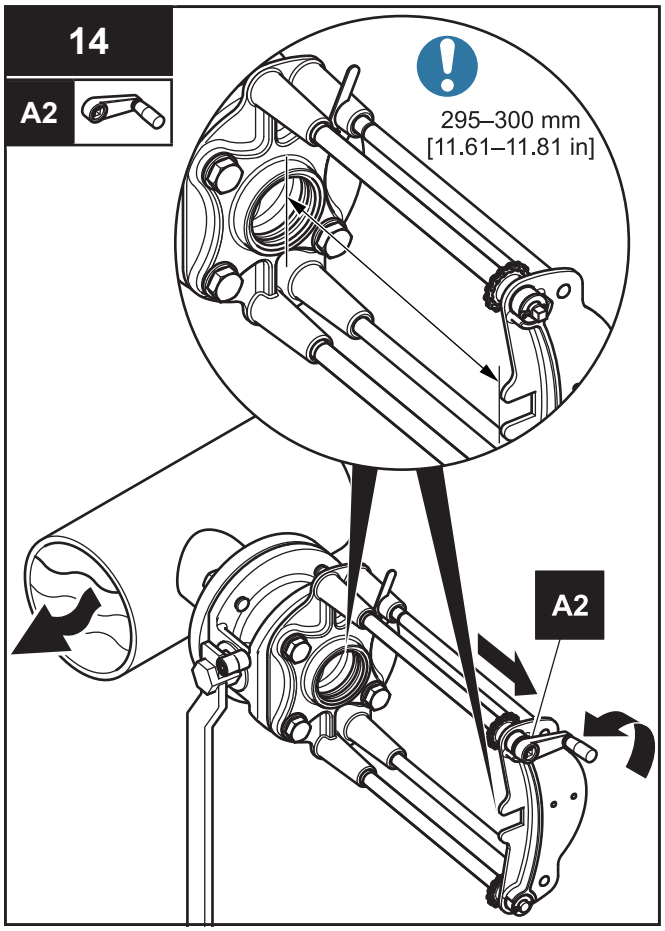
14
A2
295–300 mm
[11.61–11.81 in]
A2

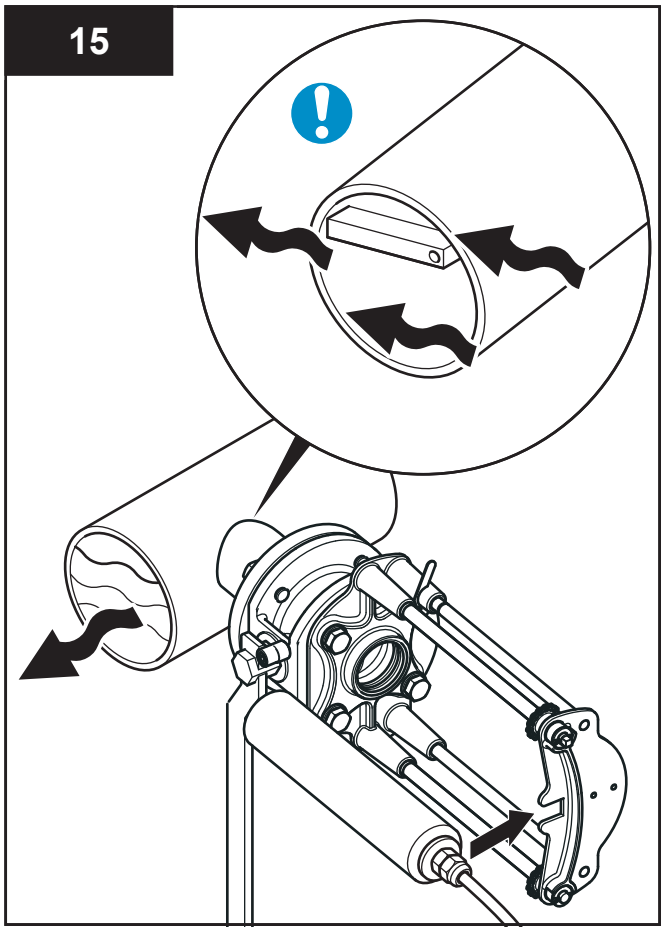
15

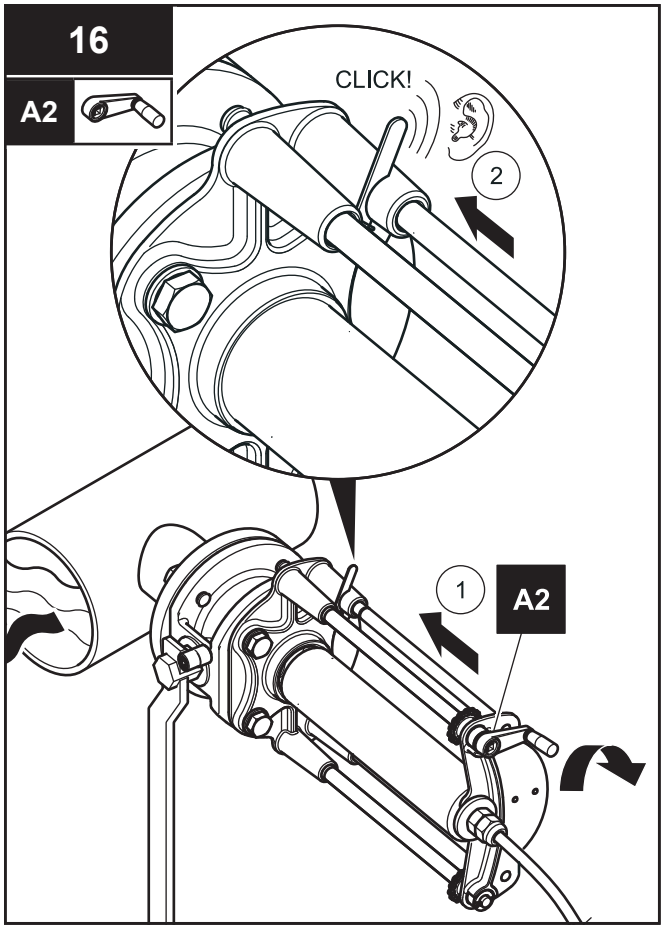
16
A2
CLICK!
2
1
A2

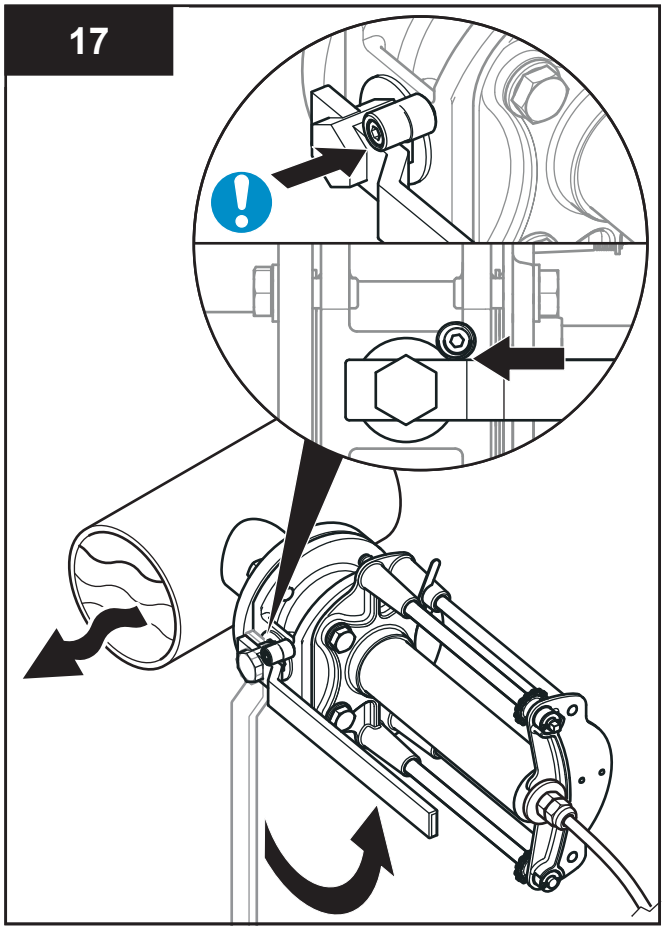
17

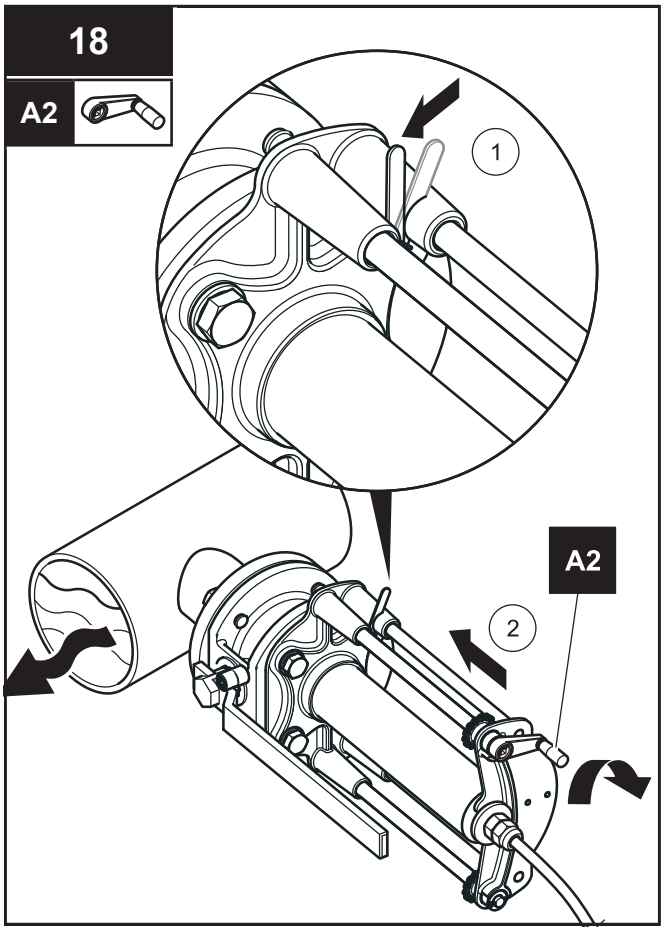
18
A2
1
A2
2

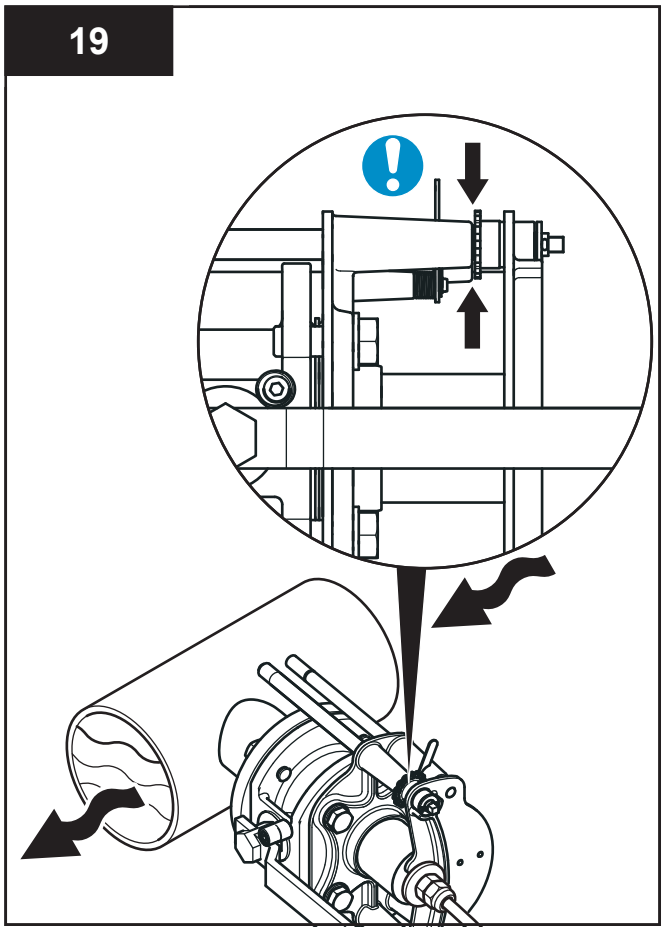
19

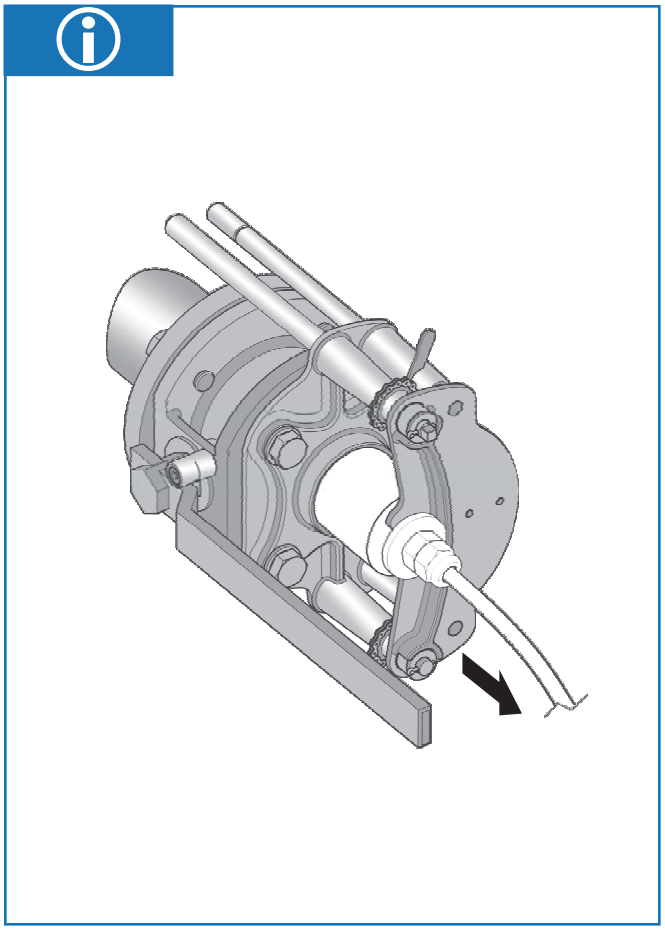

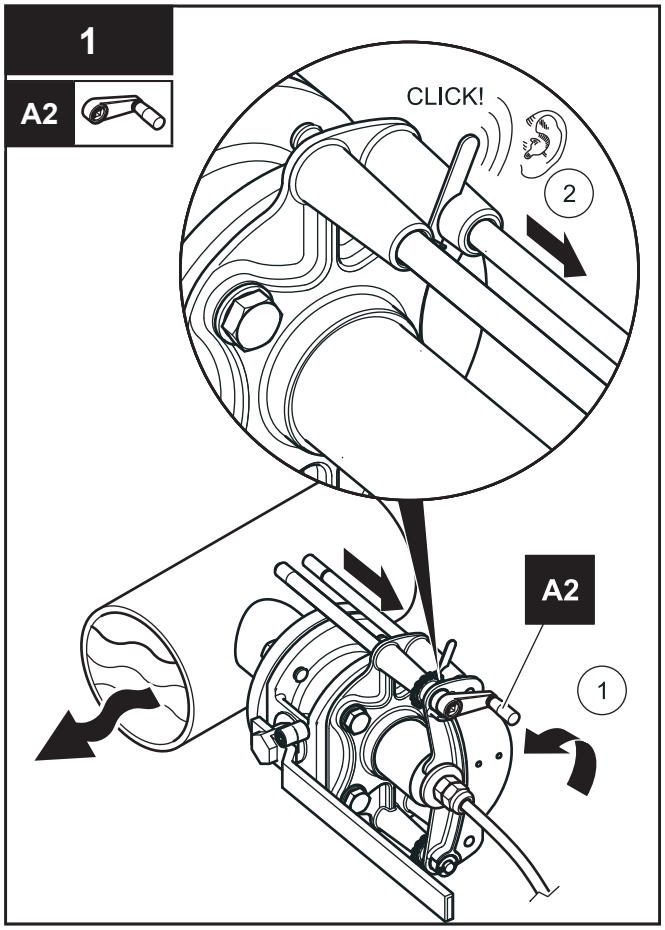
1
A2
CLICK!
2
A2
1

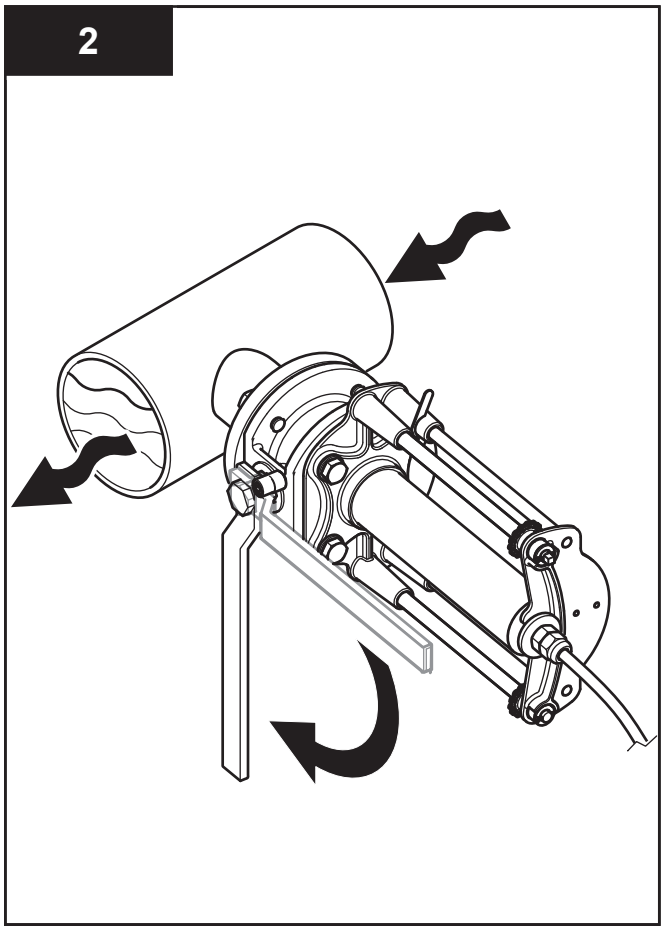
2

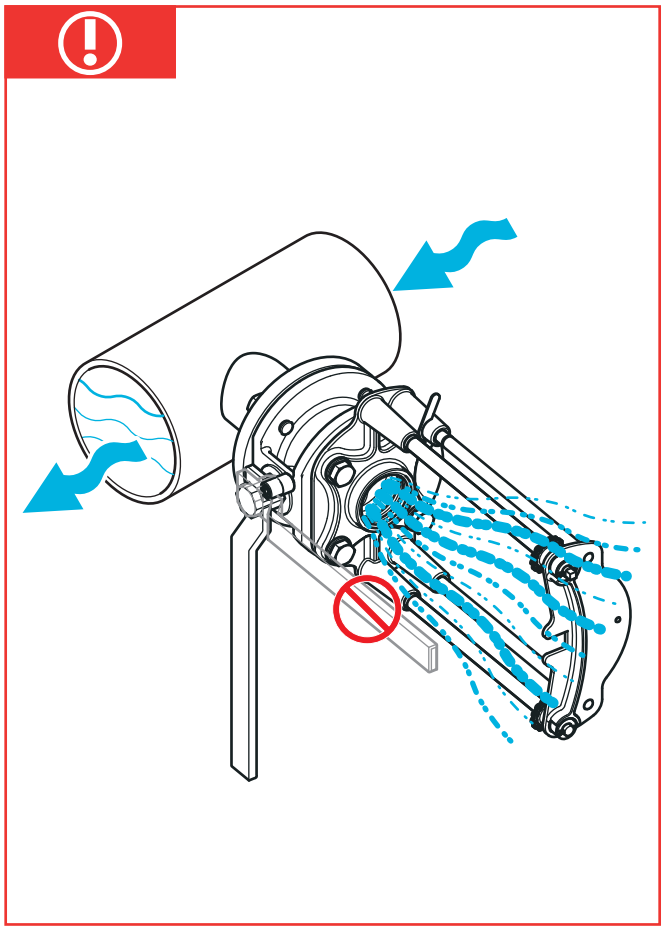

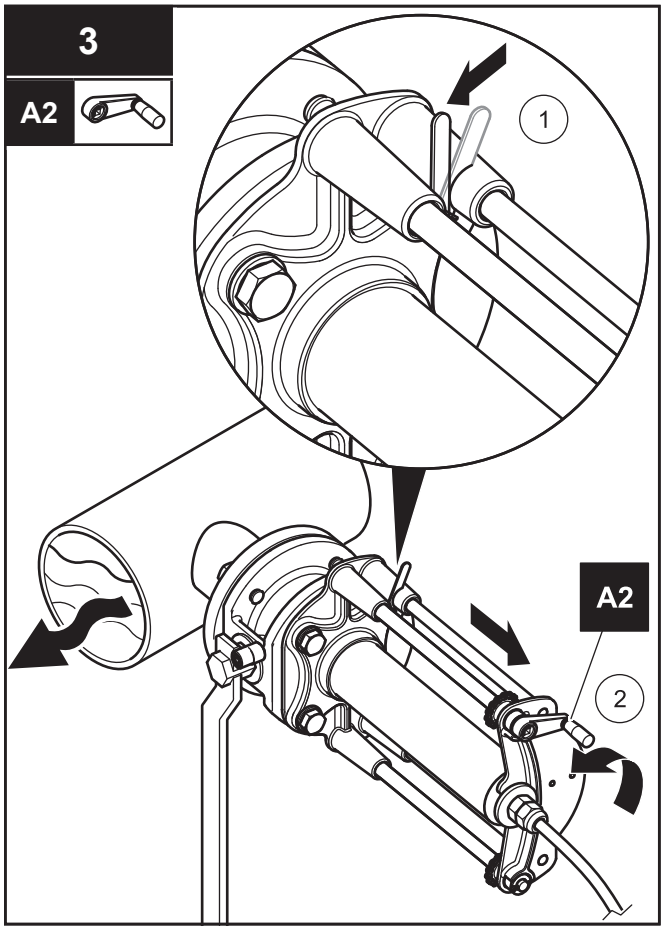
3
A2
1
A2
2

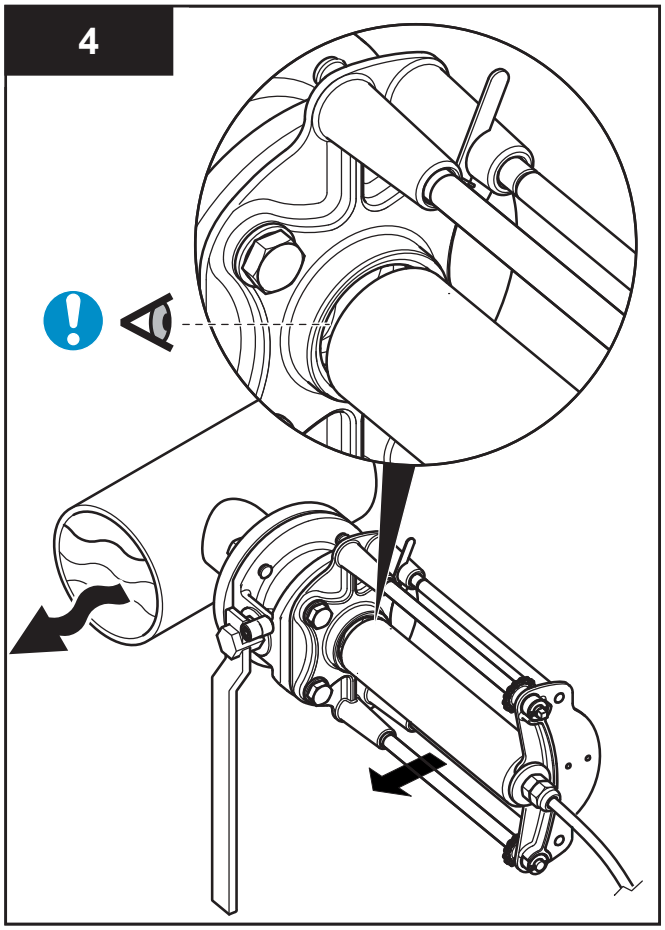
4

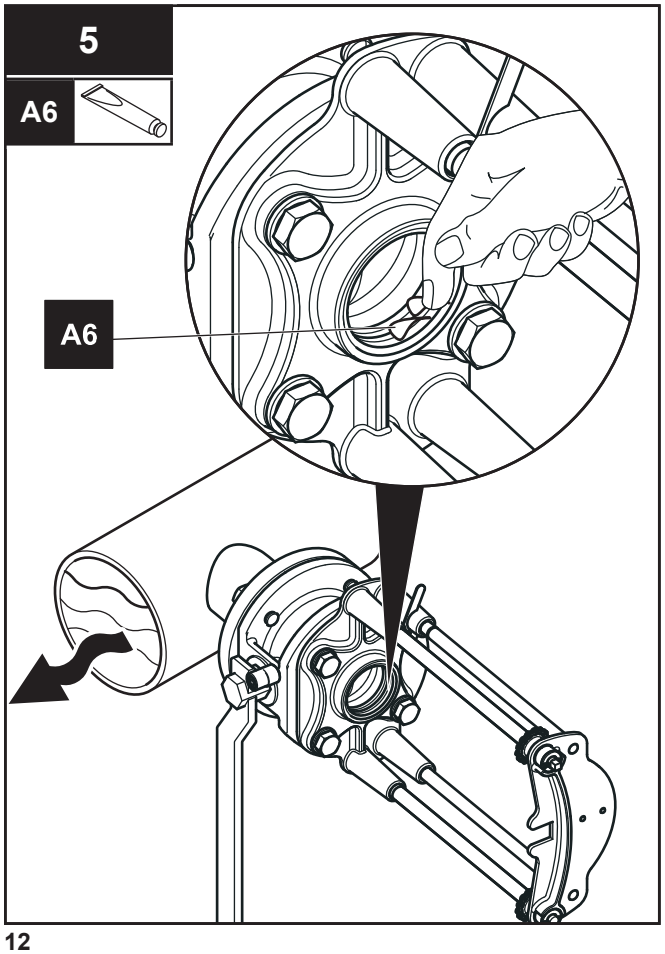
5
A6
A6

HACH Company
World Headquarters
P.O. Box 389
Loveland, Colorado
80539-0389 U.S.A.
Tel (800) 227-HACH
(800) -227-4224
(U.S.A. only)
Fax (970) 669-2932
orders@hach.com
www.hach.com

Repair Service in the United States:
HACH Company
Ames Service
100 Dayton Avenue
Ames, Iowa 50010
Tel (800) 227-4224
(U.S.A. only)
Fax (515) 232-3835

Repair Service in Canada:
Hach Sales & Service
Canada Ltd.
1313 Border Street, Unit 34
Winnipeg, Manitoba
R3H 0X4
Tel (800) 665-7635
(Canada only)
Tel (204) 632-5598
Fax (204) 694-5134
canada@hach.com

Repair Service in Latin America, the Caribbean, the Far East, Indian Subcontinent, Africa, Europe, or the Middle East:
Hach Company World Headquarters,
P.O. Box 389
Loveland, Colorado,
80539-0389 U.S.A.
Tel +001 (970) 669-3050
Fax +001 (970) 669-2932
intl@hach.com

HACH LANGE GMBH
Willstätterstraße 11
D-40549 Düsseldorf
Tel. +49 (0)2 11 52 88-320
Fax +49 (0)2 11 52 88-210
info@hach-lange.de
www.hach-lange.de

HACH LANGE LTD
Pacific Way
Salford
GB-Manchester, M50 1DL
Tel. +44 (0)161 872 14 87
Fax +44 (0)161 848 73 24
info@hach-lange.co.uk
www.hach-lange.co.uk

HACH LANGE LTD
Unit 1, Chestnut Road
Western Industrial Estate
IRL-Dublin 12
Tel. +353(0)1 46 02 5 22
Fax +353(0)1 4 50 93 37
info@hach-lange.ie
www.hach-lange.ie

HACH LANGE GMBH
Hütteldorferstr. 299/Top 6
A-1140 Wien
Tel. +43 (0)1 9 12 16 92
Fax +43 (0)1 9 12 16 92-99
info@hach-lange.at
www.hach-lange.at

HACH LANGE GMBH
Rorschacherstrasse 30 a
CH-9424 Rheineck
Tel. +41 (0)848 55 66 99
Fax +41 (0)71 886 91 66
info@hach-lange.ch
www.hach-lange.ch

HACH LANGE FRANCE S.A.S.
8, mail Barthélémy Thimonnier
Lognes
F-77437 Marne-La-Vallée
cedex 2
Tél. +33 (0)8 20 20 14 14
Fax +33 (0)1 69 67 34 99
info@hach-lange.fr
www.hach-lange.fr

HACH LANGE NV/SA
Motstraat 54
B-2800 Mechelen
Tél. +32 (0)15 42 35 00
Fax +32 (0)15 41 61 20
info@hach-lange.be
www.hach-lange.be

DR. LANGE NEDERLAND B.V.
Laan van Westroijen 2a
NL-4003 AZ Tiel
Tel. +31(0)344 63 11 30
Fax +31(0)344 63 11 50
info@hach-lange.nl
www.hach-lange.nl

HACH LANGE APS
Åkandevej 21
DK-2700 Brønshøj
Tel. +45 36 77 29 11
Fax +45 36 77 49 11
info@hach-lange.dk
www.hach-lange.dk

HACH LANGE AB
Vinthundsvägen 159A
SE-128 62 Sköndal
Tel. +46 (0)8 7 98 05 00
Fax +46 (0)8 7 98 05 30
info@hach-lange.se
www.hach-lange.se

HACH LANGE S.R.L.
Via Rossini, 1/A
I-20020 Lainate (MI)
Tel. +39 02 93 575 400
Fax +39 02 93 575 401
info@hach-lange.it
www.hach-lange.it

HACH LANGE S.L.U.
Edificio Seminario
C/Larrauri, 1C- 2ª Pl.
E-48160 Derio/Vizcaya
Tel. +34 94 657 33 88
Fax +34 94 657 33 97
info@hach-lange.es
www.hach-lange.es

HACH LANGE LDA
Av. do Forte nº8
Fracção M
P-2790-072 Carnaxide
Tel. +351 214 253 420
Fax +351 214 253 429
info@hach-lange.pt
www.hach-lange.pt

HACH LANGE SP.ZO.O.
ul. Krakowska 119
PL-50-428 Wrocław
Tel. +48 801 022 442
Zamówienia: +48 717 177 707
Doradztwo: +48 717 177 777
Fax +48 717 177 778
info@hach-lange.pl
www.hach-lange.pl

HACH LANGE S.R.O.
Zastrčená 1278/8
CZ-141 00 Praha 4 - Chodov
Tel. +420 272 12 45 45
Fax +420 272 12 45 46
info@hach-lange.cz
www.hach-lange.cz

HACH LANGE S.R.O.
Roľnícka 21
SK-831 07 Bratislava – Vajnory
Tel. +421 (0)2 4820 9091
Fax +421 (0)2 4820 9093
info@hach-lange.sk
www.hach-lange.sk

HACH LANGE KFT.
Vöröskereszt utca. 8-10.
H-1222 Budapest XXII. ker.
Tel. +36 (06)1 225 7783
Fax +36 (06)1 225 7784
info@hach-lange.hu
www.hach-lange.hu

HACH LANGE S.R.L.
Str. Căminului nr. 3
et. 1, ap. 1, Sector 2
RO-021741 Bucureşti
Tel. +40 (0) 21 205 30 03
Fax +40 (0) 21 205 30 17
info@hach-lange.ro
www.hach-lange.ro

HACH LANGE
8, Kr. Sarafov str.
BG-1164 Sofia
Tel. +359 (0)2 963 44 54
Fax +359 (0)2 866 15 26
info@hach-lange.bg
www.hach-lange.bg

HACH LANGE SU ANALİZ SİSTEMLERİ LTD.ŞTİ.
Ilkbahar mah. Galip Erdem
Cad. 616 Sok. No:9
TR-Oran-Çankaya/ANKARA
Tel. +90312 490 83 00
Fax +90312 491 99 03
bilgi@hach-lange.com.tr
www.hach-lange.com.tr

HACH LANGE D.O.O.
Fajfarjeva 15
SI-1230 Domžale
Tel. +386 (0)59 051 000
Fax +386 (0)59 051 010
info@hach-lange.si
www.hach-lange.si

HACH LANGE E.Π.E.
Αυλίδος 27
GR-115 27 Αθήνα
Τηλ. +30 210 7777038
Fax +30 210 7777976
info@hach-lange.gr
www.hach-lange.gr

HACH LANGE D.O.O.
Ivana Severa bb
HR-42 000 Varaždin
Tel. +385 (0) 42 305 086
Fax +385 (0) 42 305 087
info@hach-lange.hr
www.hach-lange.hr

HACH LANGE MAROC SARLAU
Villa 14 – Rue 2 Casa Plaisance
Quartier Racine Extension
MA-Casablanca 20000
Tél. +212 (0)522 97 95 75
Fax +212 (0)522 36 89 34
info-maroc@hach-lange.com
www.hach-lange.ma

HACH LANGE OOO
Finlyandsky prospekt, 4A
B. Zentrum “Petrovsky fort”, R.803
RU-194044, Sankt-Petersburg
Tel. +7 (812) 458 56 00
Fax. +7 (812) 458 56 00
info.russia@hach-lange.com
www.hach-lange.com

© HACH Company/HACH LANGE GmbH, 2012. All rights reserved. Printed in Germany.

Edition 08/2012 6A sk

LZX936
LZX660
LZX661

DOC273.99.90413/4

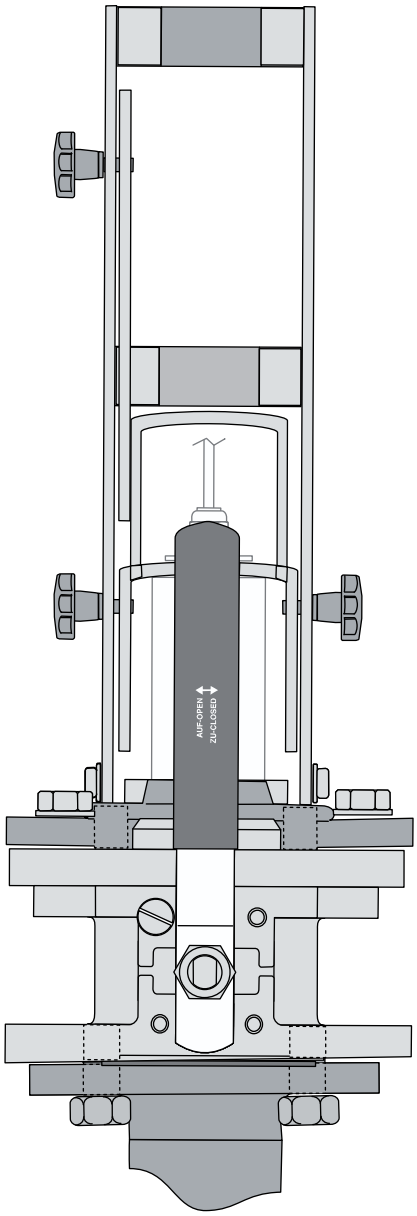

BG Преди инсталацията/монтажа на продукта, прочетете внимателно всички инструкции за инсталация и ги спазвайте по време на инсталирането. Инсталацията трябва да се извършва от квалифициран специалист в съответствие с местните разпоредби за безопасност. Погрижете се избраното място на инсталацията да гарантира безопасна инсталация и експлоатация. Продуктът е предназначен единствено за придържане/прикрепване на измервателните сензори/продукти на HACH/HACH LANGE. Всяко друго приложение може да носи риск за потребителя. Работите по поддръжката и ремонта трябва да се извършват изключително от оторизирания отдел за обслужване на клиенти. Могат да се използват само оригинални резервни части и препоръчани от производителя принадлежности. Всякакви изменения по продукта водят до анулиране на всички отговорности от страна на производителя. Неспазването на инструкциите за употреба или използването на продукта за цели, различни от тези, за които е предназначен, може да доведе до сериозно нараняване на потребителя и/или повреда на оборудването. Работата по заваряване, трябва да бъде извършвана само от квалифицирани заварчици съгласно DIN/EN 287 или от сертифицирани фирми по EN 3834-2.

CS Při instalaci/montáži produktu si pečlivě přečtěte všechny pokyny k instalaci a v průběhu instalace tyto pokyny dodržujte. Instalaci musí provádět kvalifikovaný odborník v souladu s místními bezpečnostními předpisy. Pečlivě vyberte umístění pro instalaci, které zajistí bezpečnou instalaci a provoz. Produkt je určen pouze k upevnění/přichycení měřicích snímačů/produktů HACH/HACH LANGE. Jakékoli jiné použití může znamenat riziko pro uživatele. Údržbu a opravy smí provádět výhradně autorizované oddělení zákaznických služeb. Je dovoleno používat pouze originální náhradní díly a příslušenství doporučené výrobcem. Jakékoli změny provedené na produktu způsobí neplatnost veškerých záruk. Nedodržení těchto pokynů nebo používání produktu pro jiný účel než pro který je určen může způsobit uživateli vážné zranění anebo poškodit zařízení. Potřebné svářečské práce musí být provedeny kvalifikovaným svářečem výhradně podle DIN/EN 287 nebo dodavatelem v souladu s EN 3834-2.

DA Før du installerer/monterer produktet, skal du læse alle installationsinstruktionerne grundigt og følge dem under installeringen. Installationen skal udføres af en kvalificeret ekspert i overensstemmelse med alle lokale sikkerhedsbestemmelser. Vælg sikker og betjeningsvenligt placering til installationen. Produktet er kun beregnet til at holde/fastgøre HACH/HACH LANGE-målesensorer/-produkter. Enhver anden form for brug kan medføre skadesrisiko for brugeren. Vedligeholdelse og reparation bør kun udføres af en autoriseret kundeserviceafdeling. Der må kun anvendes originale reservedele og tilbehør, der er anbefalet af producenten. Alle ændringer af produktet ophæver garantien. Hvis du ikke følger disse instruktioner eller bruger produktet til et andet formål, end det er beregnet til, kan der forekomme alvorlige personskader og/eller skader på udstyret. Svejsearbejde må kun udføres af DIN/EN 287 kvalificerede svejsere, eller EN 3834-2 certificerede firmaer.

DE Die Montageanleitung ist vor der Installation/Montage des Produktes sorgfältig und vollständig zu lesen und zu befolgen. Die Installation muss von einer Fachkraft (qualifiziertes Personal) unter Einhaltung aller lokal gültigen Sicherheitsvorschriften erfolgen. Der Montageort ist so zu wählen, dass eine sichere Installation und der sichere Betrieb gewährleistet ist. Die Verwendung des Produktes ist ausschließlich zum Halten/Befestigen von HACH/HACH LANGE Messsonden/Produkten vorgesehen. Jede andere Benutzung ist mit Risiken für den Benutzer verbunden. Wartungs- und Reparaturarbeiten sollten nur vom autorisierten Kundendienst durchgeführt werden. Es dürfen nur vom Hersteller empfohlene Originalersatz- und Zubehörteile verwendet werden. Änderungen am Produkt haben den Verlust jeglicher Haftungsansprüche zur Folge. Nichtbeachtung dieser Anweisungen oder eine andere Verwendung des Produktes kann schwerwiegende Verletzungen der Anwender oder Beschädigung am Gerät zur Folge haben. Die notwendigen Schweißarbeiten dürfen ausschließlich von entsprechend DIN/EN 287 qualifizierten Schweißern durchgeführt werden, oder von Fachfirmen entsprechend EN 3834-2.

EL Πριν από την εγκατάσταση/τοποθέτηση του προϊόντος, διαβάστε προσεκτικά και ακολουθήστε όλες τις οδηγίες εγκατάστασης κατά την εγκατάσταση. Η εγκατάσταση πρέπει να πραγματοποιηθεί από κατάλληλα εκπαιδευμένο τεχνικό και σύμφωνα με όλους τους τοπικούς κανονισμούς ασφάλειας. Επιλέξτε μια θέση τοποθέτησης που θα διασφαλίσει την ασφαλή εγκατάσταση και λειτουργία. Το προϊόν προορίζεται αποκλειστικά για τη στήριξη/σύνδεση των αισθητήρων μέτρησης/προϊόντων HACH/HACH LANGE. Οποιαδήποτε άλλη χρήση ενδέχεται να ενέχει κινδύνους για τον χρήστη. Οι εργασίες συντήρησης και επισκευής θα πρέπει να εκτελούνται αποκλειστικά από το εξουσιοδοτημένο τμήμα εξυπηρέτησης πελατών. Επιτρέπεται η χρήση μόνον των γνήσιων ανταλλακτικών και των αξεσουάρ που συνιστά ο κατασκευαστής. Οποιεσδήποτε αλλαγές στο προϊόν ακυρώνουν την ευθύνη της εταιρείας. Σε περίπτωση που δεν τηρηθούν αυτές τις οδηγίες ή χρησιμοποιηθεί το προϊόν για διαφορετικό σκοπό από αυτόν που προορίζεται, ενδέχεται να προκληθεί σοβαρός τραυματισμός στον χειριστή και/ή βλάβη στον εξοπλισμό. Οι απαιτούμενες εργασίες συγκόλλησης θα πρέπει να διεξαχθούν από εξειδικευμένο προσωπικό σύμφωνα με DIN / EN287 ή από κατασκευαστικές εταιρείες σύμφωνα με DIN 3834-2.

EN Before installing/mounting the product, read all the installation instructions carefully and follow the instructions during installation. Installation must be carried out by a qualified expert in accordance with all local safety regulations. Take care to choose an installation location that will ensure safe installation and operation. The product is intended solely for holding/attaching HACH/HACH LANGE measuring sensors/products. Any other use may involve risks for the user. Maintenance and repair work should be carried out exclusively by the authorized customer service department. Only original replacement and accessory parts recommended by the manufacturer may be used. Any changes made to the product will nullify all liability. Failure to follow these instructions or use of the product for a purpose other than that for which it was intended may result in serious injury to the user and/or damage to the equipment. The required welding work must be performed exclusively in accordance with DIN / EN 287 qualified welders, or from contractors in accordance with EN 3834-2.

ES Antes de instalar o fijar el producto, lea con atención todas las instrucciones de instalación y sígalas durante el montaje. La instalación debe llevarla a cabo un experto cualificado, de acuerdo con las normas de seguridad locales. Elija una ubicación para la instalación que garantice que ésta y el funcionamiento del producto sean seguros. El producto sólo está diseñado para sujetar o fijar sensores o productos de medición de HACH/HACH LANGE. Cualquier otro uso puede conllevar riesgos para el usuario. El trabajo de mantenimiento y reparación sólo debe llevarse a cabo por el departamento de atención al cliente autorizado. Sólo deben utilizarse las piezas de repuesto recomendadas por el fabricante. Cualquier cambio que se realice en el producto anulará toda responsabilidad. Si no se siguen estas instrucciones o si se utiliza el producto para un uso distinto del uso para el que fue diseñado, el usuario puede sufrir heridas graves y/o se puede dañar el equipo. Los trabajos de soldadura requeridos deben ser realizados exclusivamente por soldadores cualificados según DIN / EN 287, o por contratistas de acuerdo a EN 3834-2.

FI Ennen kuin asennat/kiinnität tuotteen, lue kaikki asennusohjeet huolellisesti ja noudata niitä. Tuotteen saa asentaa vain valtuutettu henkilö, ja asennuksessa on noudatettava kaikkia paikallisia turvallisuusmääräyksiä. Asenna tuote sellaiseen paikkaan, johon asentaminen on turvallista ja jossa tuote toimii oikein. Tuote on tarkoitettu ainoastaan HACH/HACH LANGE -mittausanturien/-tuotteiden ripustamiseen/kiinnittämiseen. Muunlainen käyttö voi aiheuttaa vaaratilanteita käyttäjälle. Huolto- ja korjaustyöt saa tehdä vain valtuutettu asiakaspalveluosasto. Tuotteessa saa käyttää vain valmistajan suosittelemia alkuperäisiä varaja lisäosia. Tuotteeseen tehdyt muutokset mitätöivät kaikki vastuut. Jos näitä ohjeita ei noudateta tai jos tuotetta käytetään johonkin muuhun kuin sen varsinaiseen käyttötarkoitukseen, käyttäjälle voi aiheutua vakavia vammoja ja/tai laite voi vaurioitua. Vain DIN / EN 287 mukaan hyväksytyt hitsaajat tai EN 3834-2 mukaiset urakoitsijat saavat tehdä vaaditut hitsaustyöt.

FR Avant l'installation/le montage du produit, lisez attentivement toutes les instructions d'installation et suivez-les au cours de l'installation. L'installation doit être réalisée par un expert qualifié conformément à toutes les réglementations de sécurité locales. Veillez à choisir un emplacement permettant d'assurer une installation et un fonctionnement en toute sécurité. Ce produit est uniquement destiné à maintenir/fixer des capteurs/équipements de mesure HACH LANGE. Toute autre utilisation entraînerait un risque pour l'utilisateur. Seul le service clientèle agréé est autorisé à effectuer les travaux de maintenance et de réparation. Seuls les pièces de rechange et les accessoires d'origine recommandés par le fabricant doivent être utilisés. La modification du produit annule toute responsabilité. Le non-respect de ces instructions ou l'utilisation de ce produit à des fins autres que celles auxquelles il est destiné risqueraient de gravement blesser l'utilisateur et/ou d'endommager le matériel. Le travail de soudure requis doit être réalisé exclusivement par des soudeurs qualifiés en conformité avec DIN / EN 287, ou par prestataires conformément à EN 3834-2.

HR Prije instalacije/postavljanja uređaja, pažljivo pročitajte sve upute za montažu i pratite ih tijekom postupka instalacije. Instalaciju mora provesti kvalificirani stručnjak u skladu s lokalnim sigurnosnim propisima. Brižljivo odaberite mjesto instalacije na kojem će se postavljanje uređaja i njegovo korištenje odvijati u sigurnim uvjetima. Uređaj je namijenjen isključivo za držanje/pričvršćivanje HACH/HACH LANGE mjernih senzora/uređaja. Upotreba uređaja u druge svrhe može predstavljati rizik za korisnika. Održavanje i popravke smije provoditi isključivo ovlašteni servisni odjel. Mogu se upotrebljavati samo originalni rezervni i dodatni dijelovi koje je preporučio proizvođač. Bilo kakve izmjene izvršene na uređaju poništit će njegovu pouzdanost. Nepoštivanje ovih uputa ili upotreba uređaja za svrhe za koje nije namijenjen mogu dovesti do ozbiljnih ozljeda osoba koje se njime koriste i/ili štete na opremi. Potreban posao za zavarivanje mora biti izveden prema DIN / EN 287 od strane kvalificiranih varioca ili izvođača radova prema EN 3834-2.

HU A termék üzembe helyezése/rögzítése előtt tekintse át a vonatkozó utasításokat, és tartsa is be azokat. Az üzembe helyezést kizárólag szakember végezheti, a hatályos biztonsági előírásoknak megfelelően. A telepítéshez biztonságos üzemet szavatoló helyet válasszon. A termék kizárólag HACH/HACH LANGE mérőberendezések és készülékek rögzítésére szolgál. Az ettől eltérő bármilyen használat kockázattal jár. A karbantartást és egyéb javításokat kizárólag az arra feljogosított ügyfélszolgálati részleg végezheti el. Csak a gyártó által ajánlott cserealkatrészek használhatóak. A terméken végzett bármilyen módosítás a felelősség kizárását vonja maga után. Az utasítások be nem tartása, a termék megadott felhasználási területtől eltérő célra való alkalmazása a kezelő súlyos sérülését és/vagy a berendezés károsodását okozhatja. A szükséges hegesztési munkákat csak DIN/EN 287 bizonyítvánnyal rendelkező hegesztő szakember, vagy EN 3834-2 minősítéssel rendelkező szakcég végezheti.

IT Prima di installare/montare il prodotto, leggere le istruzioni sull'installazione e attenersi scrupolosamente ad esse durante l'installazione. L'installazione deve essere eseguita da personale qualificato in base alle norme di sicurezza locali. Scegliere con cura il punto di installazione per un'installazione corretta e un funzionamento sicuro. Il prodotto è adatto esclusivamente per il sostegno/collegamento di prodotti/sensori di misura HACH/HACH LANGE. Qualsiasi altro utilizzo può provocare lesioni all'utente. La manutenzione e gli interventi di riparazione devono essere eseguiti esclusivamente dal reparto assistenza clienti. Il produttore consiglia di sostituire gli accessori solo con ricambi originali. Qualsiasi modifica apportata al prodotto prevede l'esclusione da qualsiasi responsabilità. La mancata osservanza della procedura di installazione o l'utilizzo inappropriato del prodotto possono provocare serie lesioni all'utente e/o danni all'apparecchiatura. Il lavoro di saldatura richiesto deve essere effettuato esclusivamente in accordo alla direttiva DIN / EN 287 da saldatori qualificati o da costruttori in accordo a EN 3834-2.

JA 製品を取り付ける前にすべての設置手順をよく読み、手順に従って設置してください。 設置は地域の安全基準に従い、資格のある担当者が行ってください。 設置場所は、安全に取り付けて操作できる場所を選んでください。 本製品は、HACH/HACH LANGE 測定センサー/製品の保持および接続専用です。 その他の用途には、ユーザーの責任において使用してください。 メンテナンスおよび修理は、認定されたカスタマー・サービス部門のみが実施できます。 交換部品および付属品には、メーカー推奨の純正品のみを使用してください。 製品を改変した場合、保証は無効になります。 手順に従わなかった場合、または製品を用途外に使用した場合は、重傷を負ったり、装置が破損することがあります。 ウェルディングはDIN/EN287に基づいて認定された作業者あるいはEN3834-2に基づく受託業者が実施する。

KO 본 제품을 설치하거나 장착하기 전에 모든 설치 지침을 충분히 검토하고 설치 시 반드시 해당 지침을 따르십시오. 설치는 숙련된 기술자가 지역의 모든 관련 안전 규정을 준수하여 수행해야 합니다. 설치 및 작동 시 안전한 장소를 신중하게 고르십시오. 본 제품은 HACH/HACH LANGE 측정 센서 또는 측정 제품을 지지하거나 연결하는 용도로만 사용됩니다. 그 외 다른 용도로 사용 시 작업자가 위험할 수 있습니다. 유지 관리 및 보수 작업은 공인된 고객 서비스 부서에서 전적으로 담당해야 합니다. 제조사가 승인한 교체용 부품 및 주변 장치만 사용 가능합니다. 제품 변경으로 인한 책임은 지지 않습니다. 이러한 지침에 어긋나거나 원래 제품의 용도와 다른 목적으로 사용할 경우 작업자에게 심각한 부상이 일어나거나 장비가 손상될 수 있습니다. 용접 작업이 필요한 경우에는 반드시 DIN/EN 287 자격을 가진 용접공이나 EN3834-2에 상응한 사람에 의해서 반드시 수행되어져야 합니다.

NL Lees vóór montage van het product alle montage-instructies grondig door en volg de instructies tijdens de montage op. Montage dient te worden uitgevoerd door een gekwalificeerde persoon en in overeenstemming met alle plaatselijke veiligheidsvoorschriften. Kies een montagelocatie die een veilige montage en werking garandeert. Het product is uitsluitend bedoeld voor opname/bevestiging van meetsensoren/-producten van HACH/HACH LANGE. Elk ander gebruik kan gevaren voor de gebruiker met zich meebrengen. Onderhoud en reparatie mogen uitsluitend worden uitgevoerd door de geautoriseerde afdeling klantenservice. Er mogen alleen originele, door de fabrikant aanbevolen reservedelen en accessoires worden gebruikt. Bij elke aanpassing van het product vervalt de aansprakelijkheid. Als u deze instructies niet opvolgt of als u het product voor een ander doel gebruikt dan waarvoor het is bedoeld, kan dit leiden tot ernstig letsel van de gebruiker en/of beschadiging van de apparatuur. Het benodigde laswerk mag uitsluitend uitgevoerd worden door DIN/EN287 gekwalificeerde lassers, of door EN3834-2 gecertificeerde installateurs.

PL Przed zainstalowaniem/zamontowaniem produktu, uważnie przeczytać wszystkie instrukcje i postępować zgodnie z ich zaleceniami podczas instalacji. Instalacja powinna zostać wykonana przez specjalistę o odpowiednich kwalifikacjach, zgodnie ze wszystkimi obowiązującymi lokalnie przepisami bezpieczeństwa. Wybrać takie miejsce instalacji, które zapewni bezpieczeństwo podczas instalacji i użytkowania. Produkt jest przeznaczony wyłącznie do zamocowania/zawieszenia czujników/mierników firmy HACH/HACH LANGE. Jakiekolwiek inne zastosowanie niesie ze sobą ryzyko dla użytkownika. Konserwacje i naprawy powinny być przeprowadzane wyłącznie przez upoważniony personel działu serwisowego klienta. Wolno używać tylko oryginalnych części zamiennych i części wyposażenia zalecanych przez producenta. Jakiekolwiek modyfikacje w budowie i działaniu produktu oznaczają wygaśnięcie

gwarancji i wykluczają wszelką odpowiedzialność producenta. Nieprzestrzeganie tych instrukcji lub używanie produktu do celów innych niż wynika z opisu jego przeznaczenia, może być przyczyną poważnych wypadków z udziałem użytkownika i/lub uszkodzenia sprzętu. Wymagane prace spawalnicze muszą być wykonane zgodnie z normą DIN / EN 287 przez wykfalifikowany personel lub przez firmy pośredniczące zgodnie z EN3834-2.

PT Antes de instalar/montar o produto, leia atentamente as instruções de instalação e siga-as durante a instalação. A instalação deve ser efectuada por um profissional qualificado em conformidade com todas as regulamentações locais de segurança. Escolha cuidadosamente o local de instalação de modo a assegurar uma operação e instalação com segurança. Este produto foi concebido apenas para segurar/fixar sensores/produtos para medições da HACH/HACH LANGE. Qualquer outro tipo de utilização pode implicar riscos para o utilizador. O trabalho de manutenção e reparação deve ser efectuado única e exclusivamente pelo departamento de assistência ao cliente devidamente autorizado. Apenas podem ser utilizados acessórios e peças de substituição originais recomendados pelo fabricante. Qualquer alteração feita ao produto anula qualquer responsabilidade da nossa parte. O não cumprimento das instruções ou a utilização do produto para outros fins que não aqueles para que o produto foi concebido pode resultar em ferimentos graves e/ou danos no equipamento. O trabalho de soldadura exigido deverá ser executado exclusivamente por soldadores qualificados de acordo com a norma DIN /EN 287, ou por empreiteiros em conformidade com a norma EN 3834-2.

RO Înainte de instalarea/montarea produsului, citiţi cu atenţie toate instrucţiunile de instalare şi urmaţi instrucţiunile în timpul instalării. Instalarea trebuie realizată de un expert calificat în conformitate cu toate reglementările locale pentru siguranţă. Aveţi grijă să alegeţi o locaţie de instalare care să asigure instalarea şi funcţionarea în siguranţă. Produsul este destinat exclusiv pentru menţinerea/ataşarea senzorilor/produselor de măsurare HACH/HACH LANGE. Utilizarea în alte scopuri poate implica riscuri pentru utilizator. Întreţinerea şi lucrările de reparaţie trebuie realizate exclusiv de departamentul de service autorizat pentru clienţi. Pot fi utilizate numai piesele de schimb şi accesoriile originale recomandate de producător. Orice modificare adusă produsului va duce la anularea oricărei răspunderi. Nerespectarea acestor instrucţiuni sau utilizarea produsului în alte scopuri decât în cele destinate pot duce la accidente grave pentru utilizator şi/sau defectarea echipamentului. Lucrările de sudură necesare trebuie să fie efectuate exclusiv de sudori calificaţi în conformitate cu DIN / EN 287 , sau de contractori în conformitate cu EN 3834-2.

RU Перед установкой/монтажом изделия необходимо внимательно прочитать инструкции по установке и строго следовать им во время выполнения работ. Установка должна быть выполнена квалифицированным специалистом с соблюдением действующих правил по технике безопасности. Выбирая место для установки, необходимо учитывать требования по безопасности при монтаже и эксплуатации изделий. Данное изделие предназначено только для крепления измерительных датчиков/приборов компании HACH/HACH LANGE. Любое другое применение может представлять опасность для пользователя. Работы по ремонту и техобслуживанию должны выполняться исключительно специалистами уполномоченной сервисной организации. С изделием могут использоваться только запчасти и принадлежности, рекомендуемые изготовителем. Любые изменения, внесенные в конструкцию изделия, приведут к отмене гарантии поставщика. Несоблюдение требований инструкций или использование изделия не по назначению могут стать причиной серьезных травм для людей и/или повреждения оборудования. Необходимые сварочные работы должны проводиться только сварщиками, квалифицированными в соответствии с DIN / EN 287, или подрядчиками в соответствии с DIN 3834-2.

SK Pred inštaláciou/upevnením produktu si pozorne prečítajte všetky pokyny k inštalácii a počas inštalácie ich dodržujte. Inštaláciu musí vykonať kvalifikovaný expert v súlade so všetkými miestnymi bezpečnostnými nariadeniami. Uistite sa, že si vyberiete miesto inštalácie, ktoré zaručí bezpečnú inštaláciu a prevádzku. Produkt je určený výlučne pre uchytenie/upevnenie meracích snímačov/produktov HACH/HACH LANGE. Akékoľvek iné použitie môže zahŕňať riziká pre používateľa. Údržbu a opravy by malo vykonávať výlučne autorizované oddelenie služieb pre zákazníkov. Môžu sa použiť len originálne náhradné diely a príslušenstvo, ktoré odporúča výrobca. Akékoľvek zmeny vykonané na produkte spôsobia neplatnosť všetkej zodpovednosti. Nedodržanie týchto pokynov alebo používanie produktu na iný než určený účel môže spôsobiť vážne zranenie používateľa alebo poškodenie zariadenia. Požadované zváračské práce musia byť vykonané výhradene v súlade s DIN/EN 287 kvalifikovanými zváračmi, alebo dodávateľmi v súlade s EN 3834-2.

SL Pred namestitvijo/postavitvijo izdelka natančno preberite vsa navodila za namestitev in jih med nameščanjem upoštevajte. Namestitev mora izvesti usposobljen strokovnjak v skladu z vsemi lokalnimi varnostnimi predpisi. Za namestitev izberite mesto, ki zagotavlja varno namestitev in uporabo. Izdelek je namenjen izključno za namestitev/pritrditev merilnih senzorjev/izdelkov HACH/HACH LANGE. Vsakršna drugačna uporaba lahko predstavlja nevarnost za uporabnika. Vzdrževanje in popravilo lahko izvaja izključno osebje pooblaščenega servisnega oddelka. Uporabljate lahko samo originalne nadomestne dele in dodatno opremo, ki jih priporoča proizvajalec. Spremembe izdelka razveljavijo vsakršno odgovornost. Če teh navodil ne upoštevate ali izdelek uporabljate v neprimeren namen, lahko pride do hudih poškodb uporabnika in/ali poškodovanja opreme. Zahtevana dela varenja lahko izvajajo izključno usposobljeni varilci v skladu z DIN/EN 287 ali izvajalci v skladu z EN 3834-2.

SR Pre instalacije/montaže uređaja pažljivo pročitajte sva uputstva za montažu i pratite ih tokom postupka montaže. Instalaciju mora provesti kvalifikovani stručnjak u skladu sa lokalnim propisima o bezbednosti. Brižljivo odaberite mesto instalacije na kom će se montaža uređaja i korišćenje odvijati u bezbednim uslovima. Uređaj je namenjen isključivo za držanje/pričvršćivanje HACH/HACH LANGE mernih senzora/uređaja. Upotreba uređaja u druge svrhe može da predstavlja rizik po korisnika. Održavanje i opravke sme da provodi isključivo ovlašćeni serviser. Kod zamene i opravaka smeju da se koriste samo originalni rezervni i dodatni delovi koje je preporučio proizvođač. Bilo kakve izmene izvršene na uređaju poništiće njegovu pouzdanost. Nepridržavanje uputstava ili upotreba uređaja u svrhe za koje nije namenjen mogu dovesti do ozbiljnih povreda ljudi koji ga koriste i/ili štete na opremi. Neophodni radovi zavarivanja treba da budu izvršeni od strane zavarivača u skladu sa DIN / EN 287 ili od ugovorenog izvođača radova u skladu sa EN 3834-2.

SV Läs alla installationsanvisningar noggrant innan du installerar/monterar produkten och följ anvisningarna under installationen. Installationen måste utföras av en kvalificerad expert i enlighet med alla lokala säkerhetsföreskrifter. Se till att välja en installationsplats som garanterar säker installation och drift. Produkten är endast ämnad för att hålla/fästa mätsensorer/-produkter från HACH/HACH LANGE. Annan användning kan medföra risker för användaren. Underhålls- och reparationsarbeten ska uteslutande utföras av den auktoriserade kundserviceavdelningen. Endast originalreservdelar och -tillbehör som rekommenderas av tillverkaren ska användas. Om någon ändring görs på produkten upphävs tillverkarens ansvar. Det kan det medföra allvarliga skador för användaren eller skador på utrustningen om du inte följer anvisningarna eller om du använder produkten i installationer den inte är avsedd för. Svetsarbeten skall uteslutande utföras av svetsare kvalificerade enligt DIN/EN 287, eller av entreprenör enligt EN3834-2.

TR Ürünün montajını yapmadan önce, tüm montaj talimatlarını dikkatlice okuyun ve kurulum sırasında talimatları mutlaka takip edin. Montaj, kalifiye bir uzman tarafından tüm yerel güvenlik düzenlemelerine uygun şekilde yapılmalıdır. Ürünü, montaj ve kullanımın güvenli olacağı bir yere monte edin. Ürün sadece HACH/HACH LANGE ölçüm sensörlerini/ ürünlerini, tutmak/takmak için tasarlanmıştır. Başka amaçlarla kullanılması, kullanıcı için tehlikeler doğurabilir. Bakım ve onarım sadece yetkili müşteri hizmetleridepartmanı tarafından gerçekleştirilmelidir. Sadece üretici tarafından önerilen orijinal yedek parça ve aksesuarlar kullanılmalıdır. Ürüne yapılan her türlü değişiklik, tüm sorumluluğu ortadan kaldırır. Bu talimatlara uyulmaması veya ürünün üretim amacından başka bir amaçla kullanılması sonucunda kullanıcı ciddi şekilde yaralanabilir ve/veya ürün zarar görebilir. Gerekli kaynak işi yalnızca kalifiye kaynakçılar tarafından DIN / EN 287'ye göre yapılmalıdır, veya müteahhitler tarafından EN 3834-2'ye göre yapılmalıdır.

ZH 在安装/固定产品之前，请仔细阅读所有安装说明，并在安装过程中遵守这些说明。 必须由合格的专家完成安装，并遵守当地的所有安全法规。仔细选择安装地点，确保安全地安装和操作。 本产品只能用于固定/连接 HACH/HACH LANGE 测量传感器/产品。 用于其他用途可能会给用户带来危险。 维护和修理工作应由经授权的客户服务部门完成。 只能使用正宗替换件和制造商推荐的附件。 对本产品进行任何更改均可能导致所有担保失效。不遵守这些说明，或者将本产品用于其它用途，可能会对用户造成严重伤害和/或设备损坏。所需的焊接工作必须要根据DIN/EN 287，由合格的焊接工人单独执行，或者根据EN 3834-2由承包人执行。

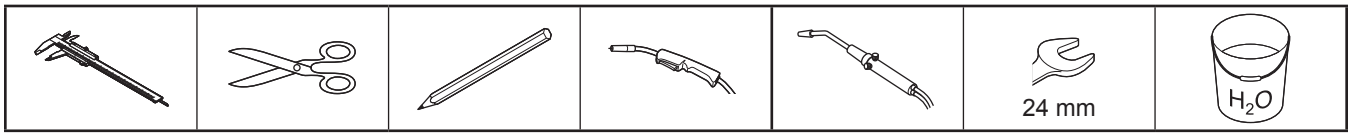

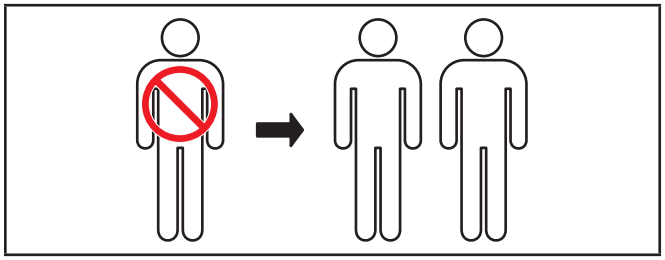

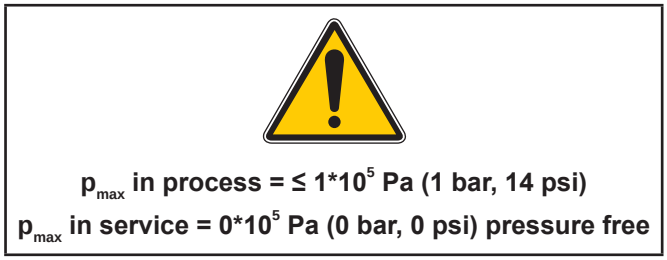

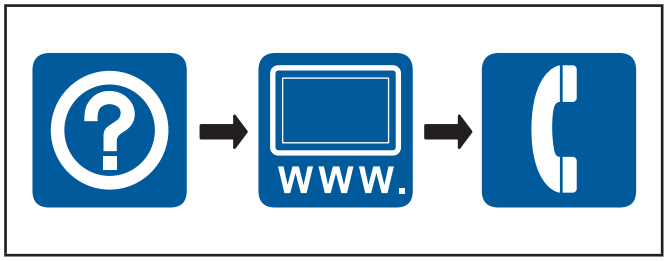

LZX936	SOLITAX inline sc SOLITAX highline sc	**A1**		**A2**	M16x45mm A4 ISO4017	**A3**	LZY462	**A4**	DOC273.99.03911	**A5**	LZV678
		1x	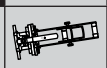	4x		1x		1x		1x	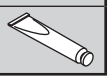
		A6a		**A6b**	M8x20mm A4 LZY962						
		1x	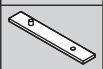	1x							

LZX660	SS 316Ti/ 1.4571 DN65/PN16 EN 1092	**B1**	DN65	**B2**	DOC273.99.03911	**B3**	DN65	
		1x		1x		1x		

LZX661	C-steel / 1.0037 DN65/PN16 EN 1092	**B1**	DN65	**B2**	DOC273.99.03911	**B3**	DN65	
		1x		1x		1x		

1 LZX660 / LZX661

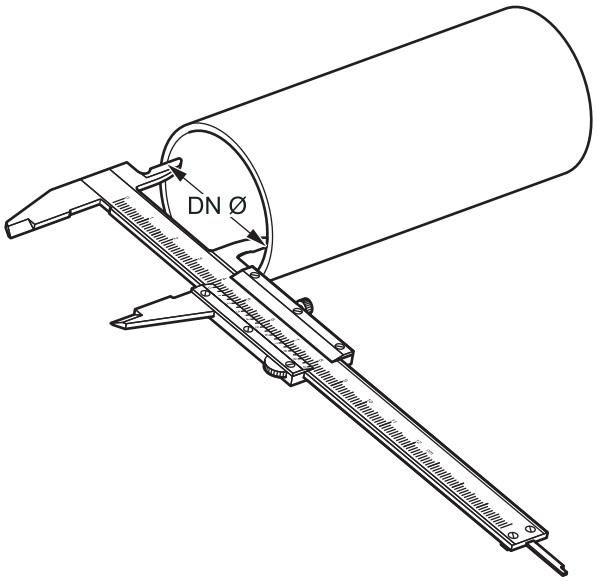

2

A4

DN Ø =

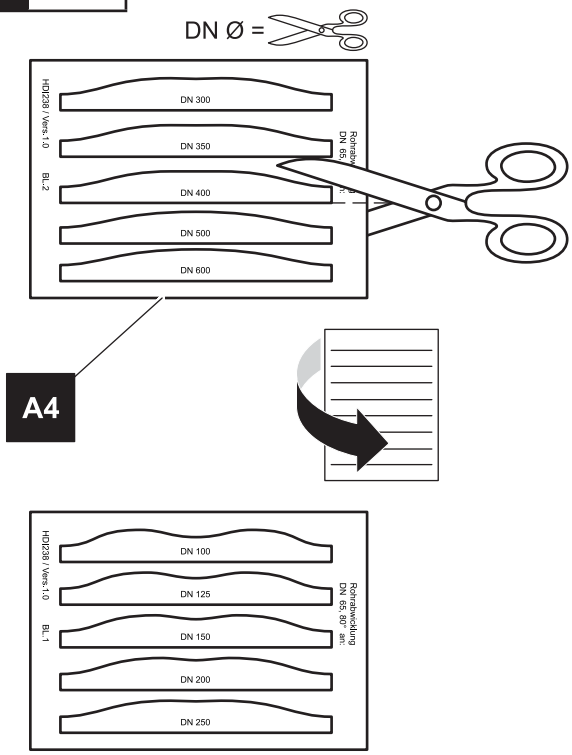

3

B3

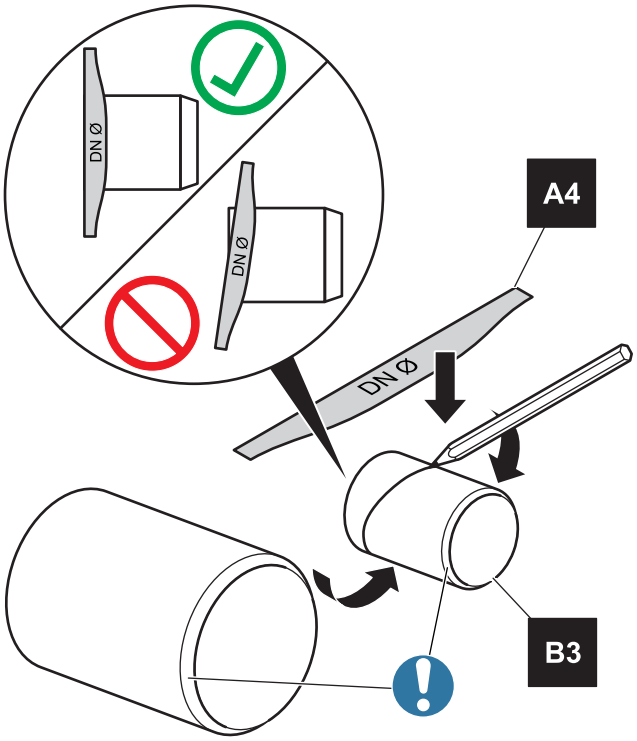

4

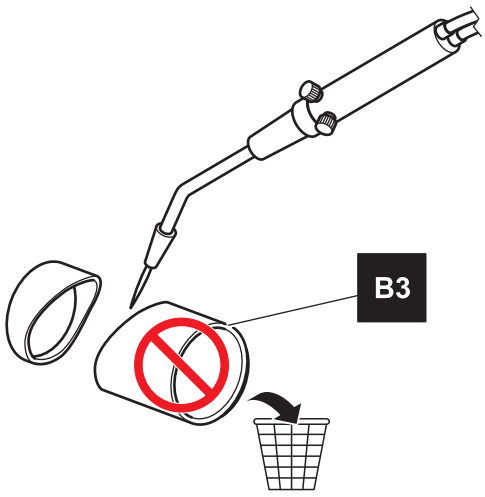

5

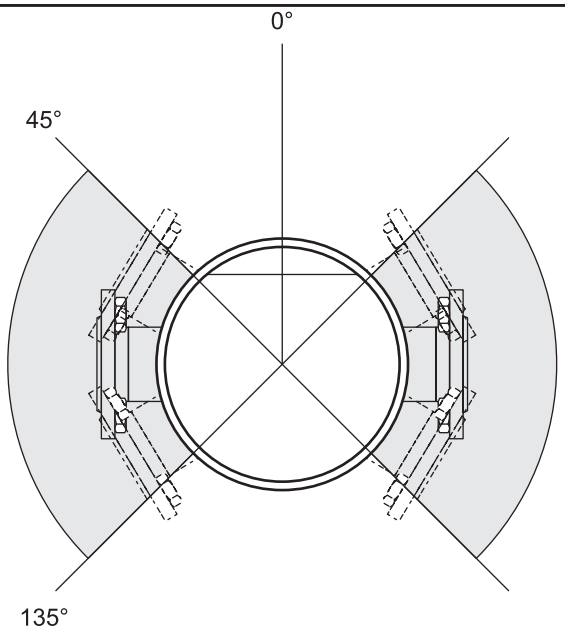

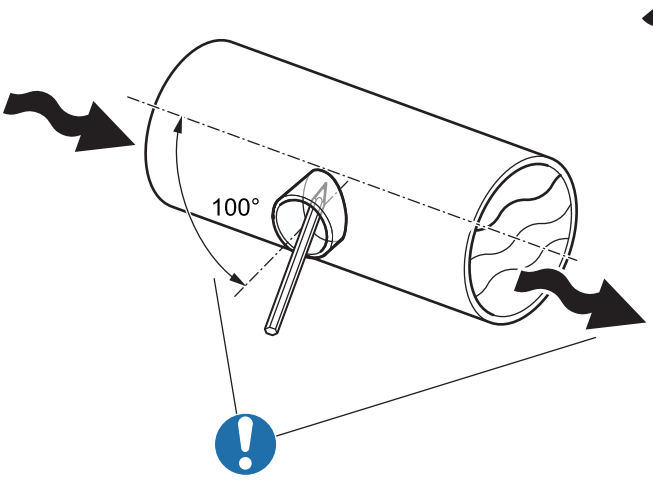

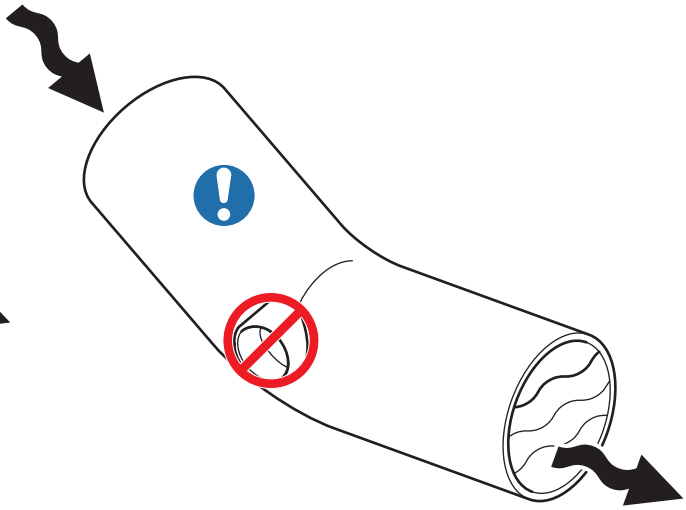

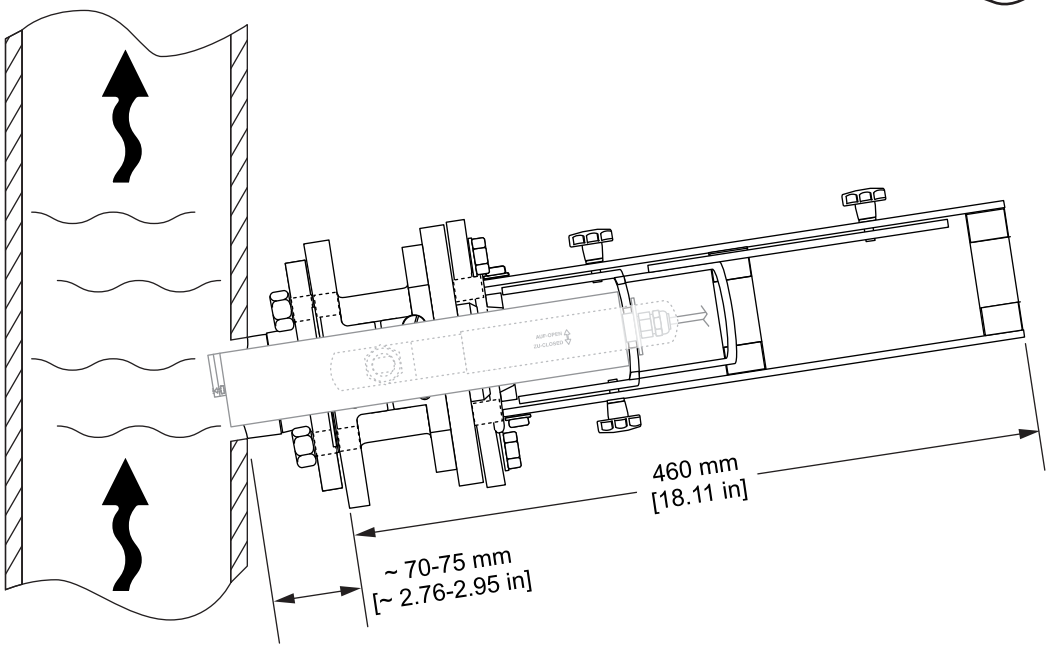

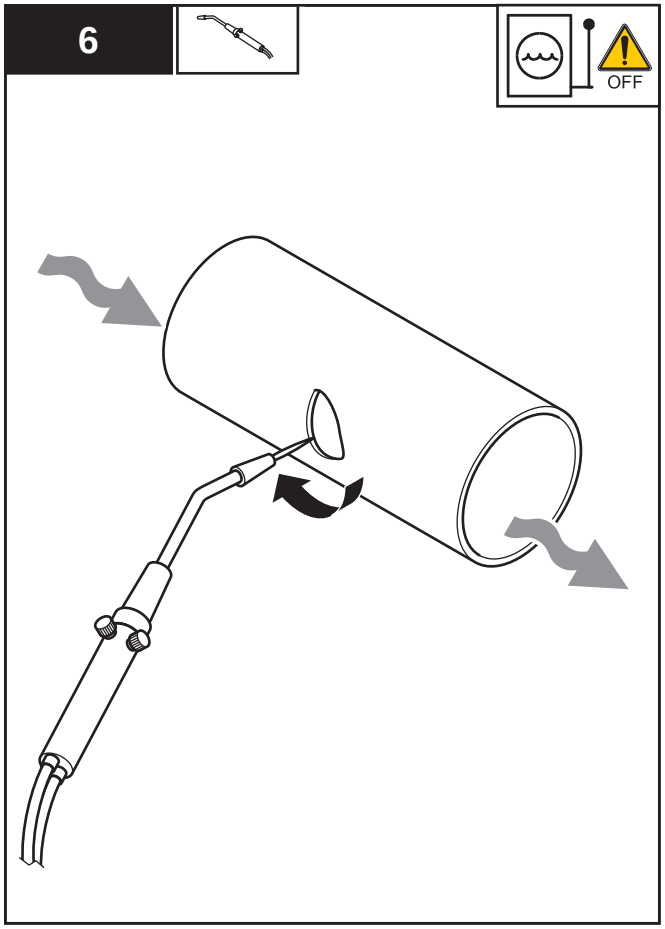
6
OFF

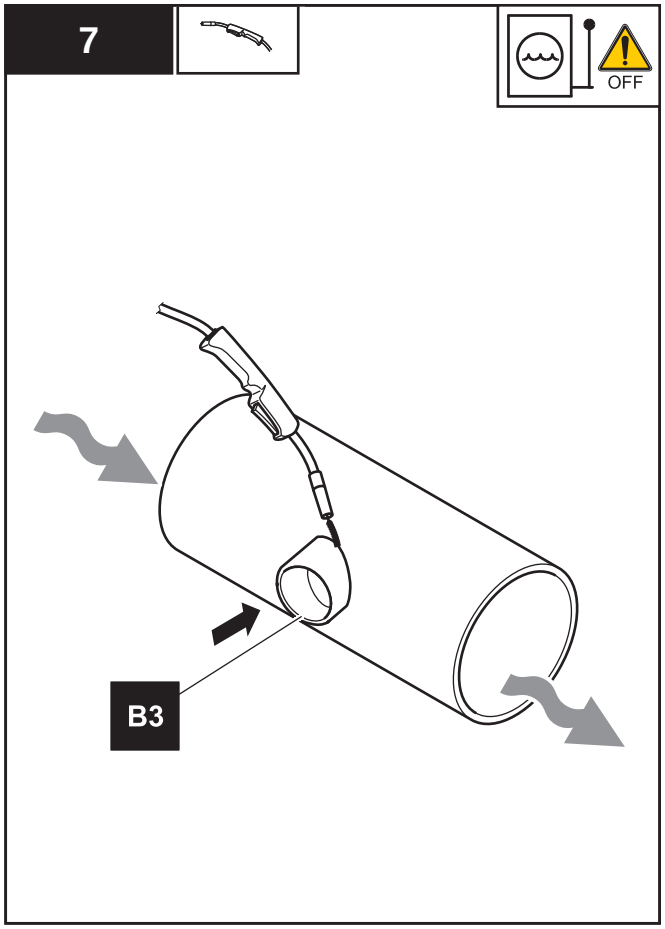
7
OFF
B3

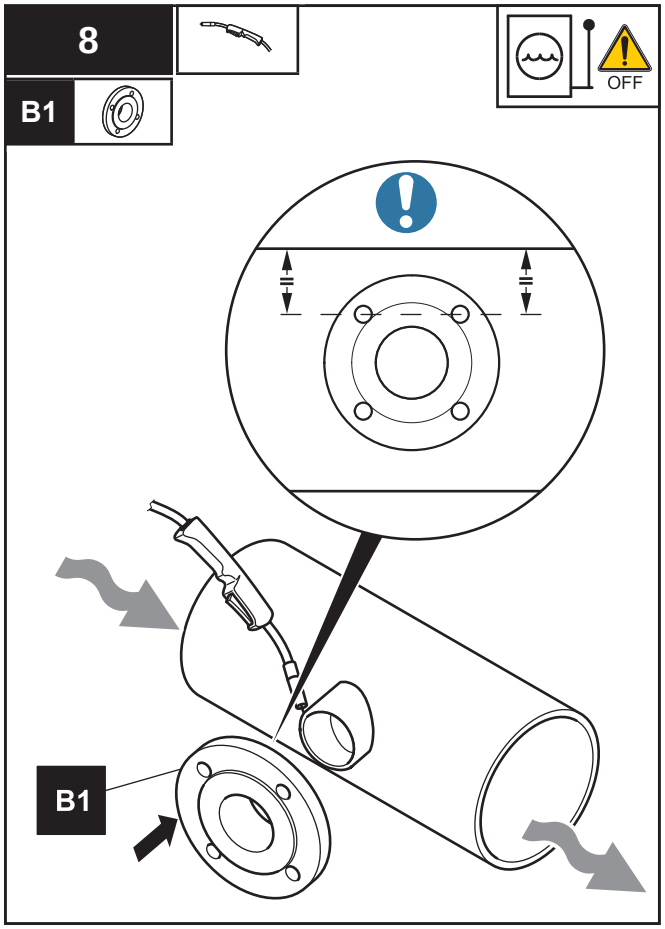
8
B1
OFF
B1

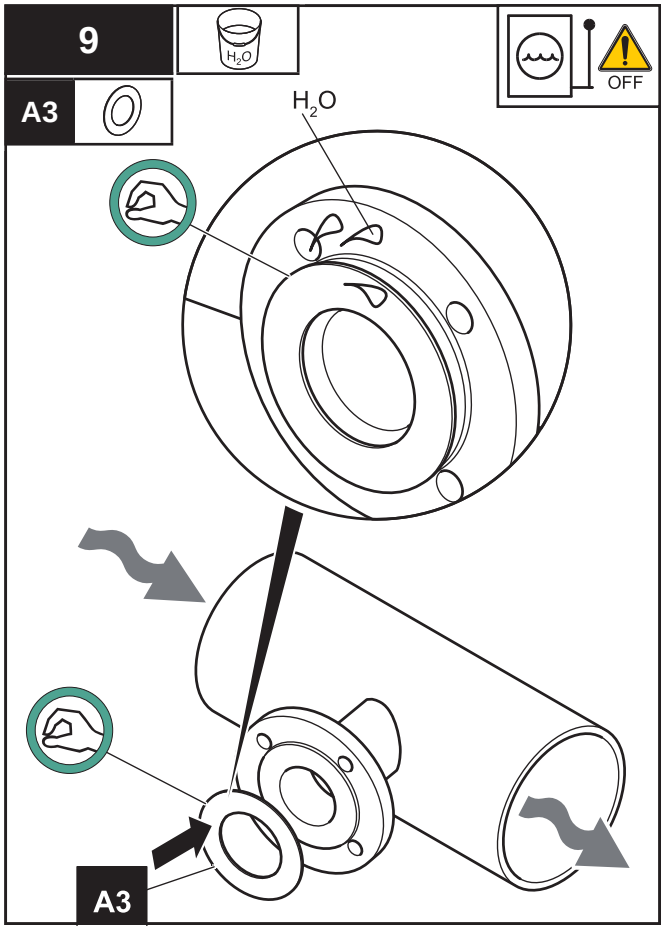
9
A3
OFF
H_2O
A3

10

LZX936

A1

A6a

A6b

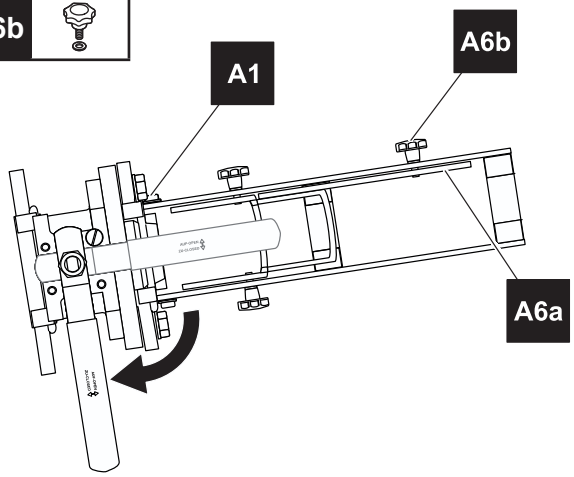

11

24 mm

A1

A2 4x

B1

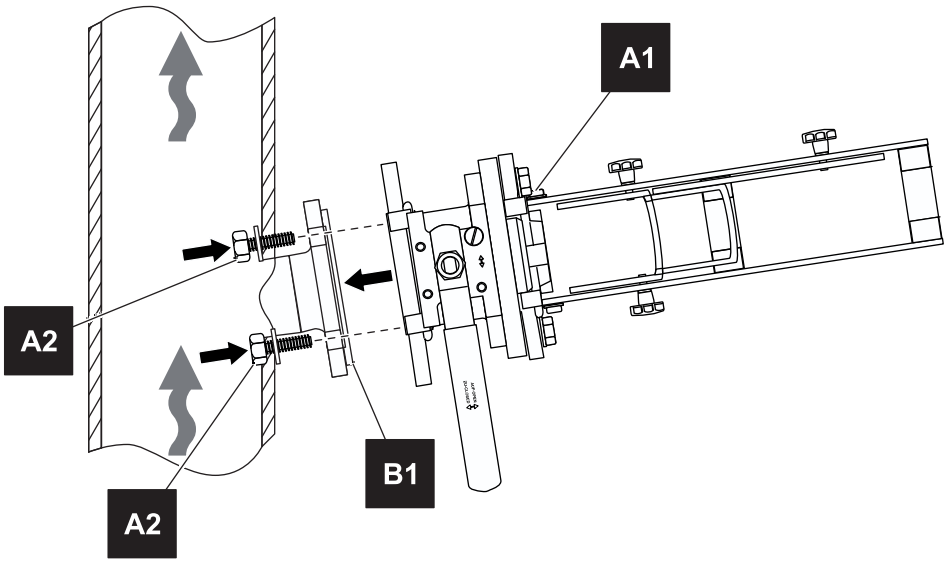

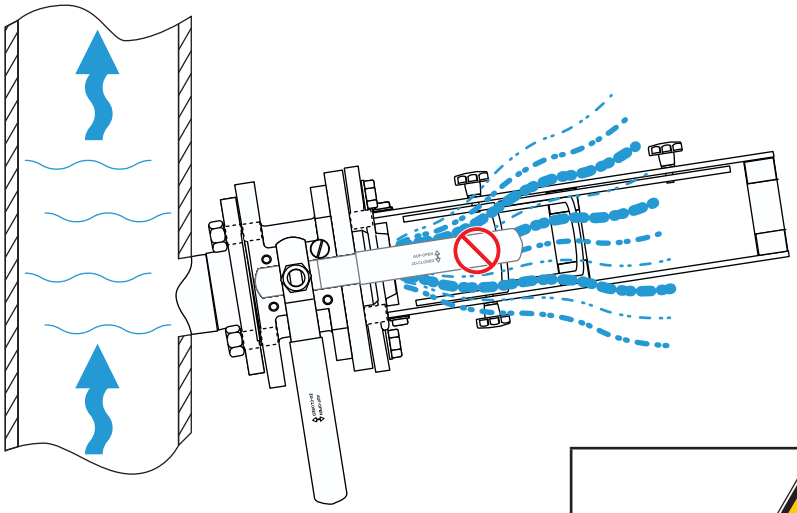

p_{max} in process =
≤ $1*10^5$ Pa (1 bar, 14 psi)

12

A5

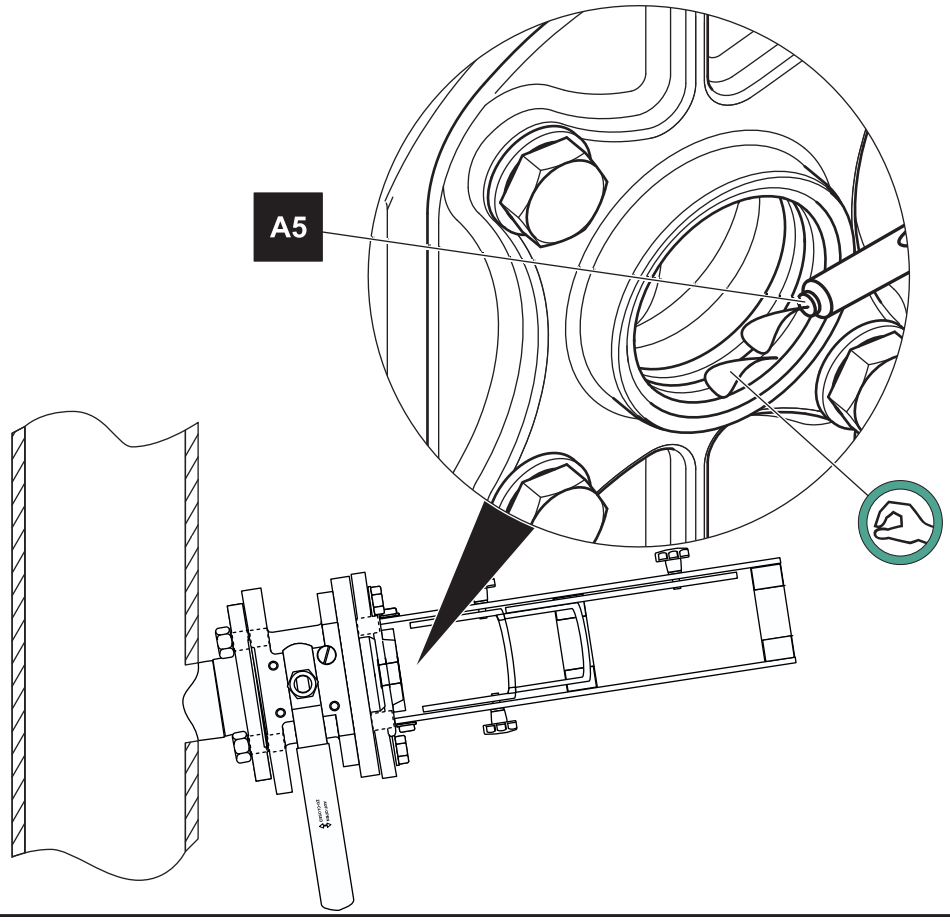

13

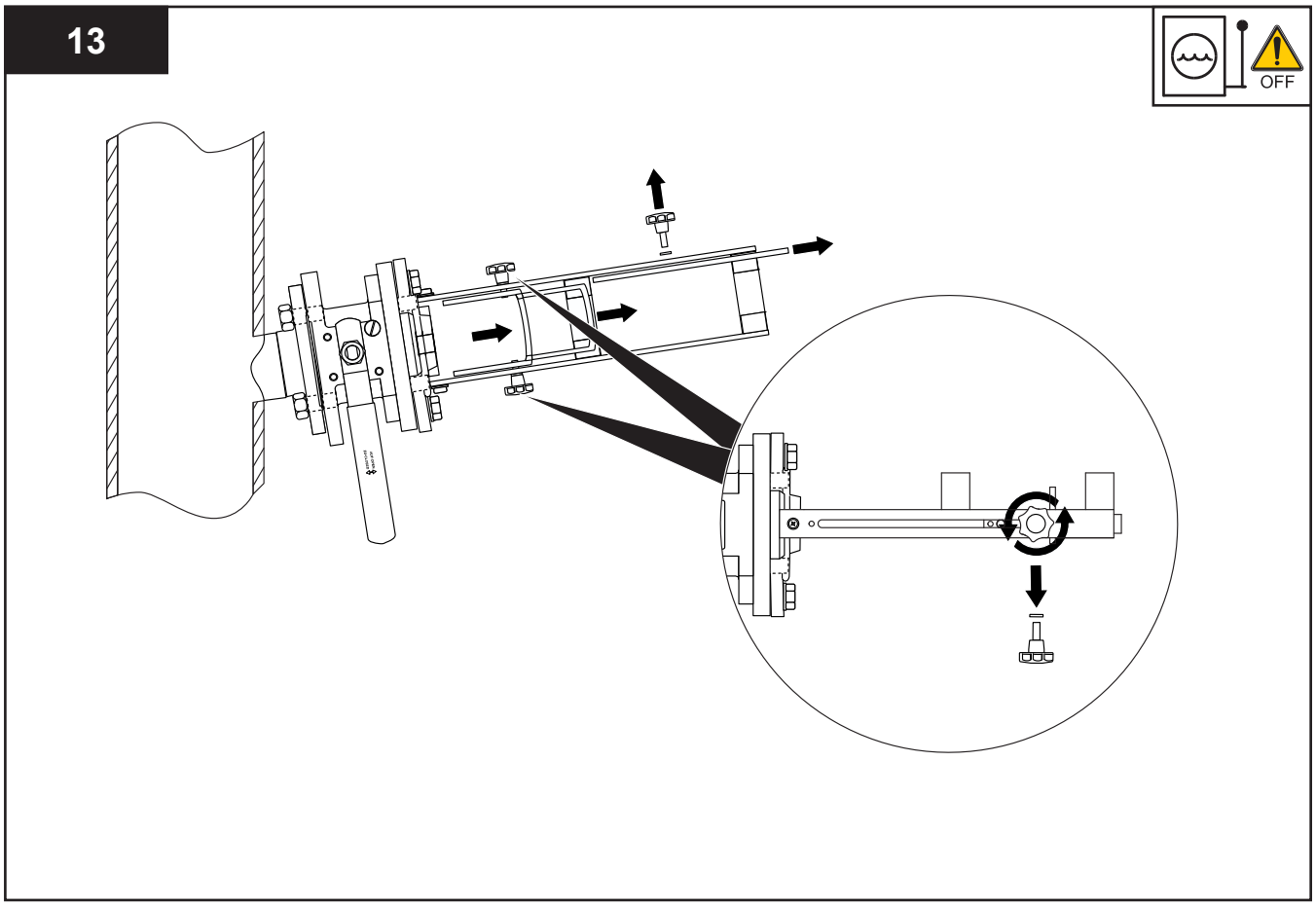

14

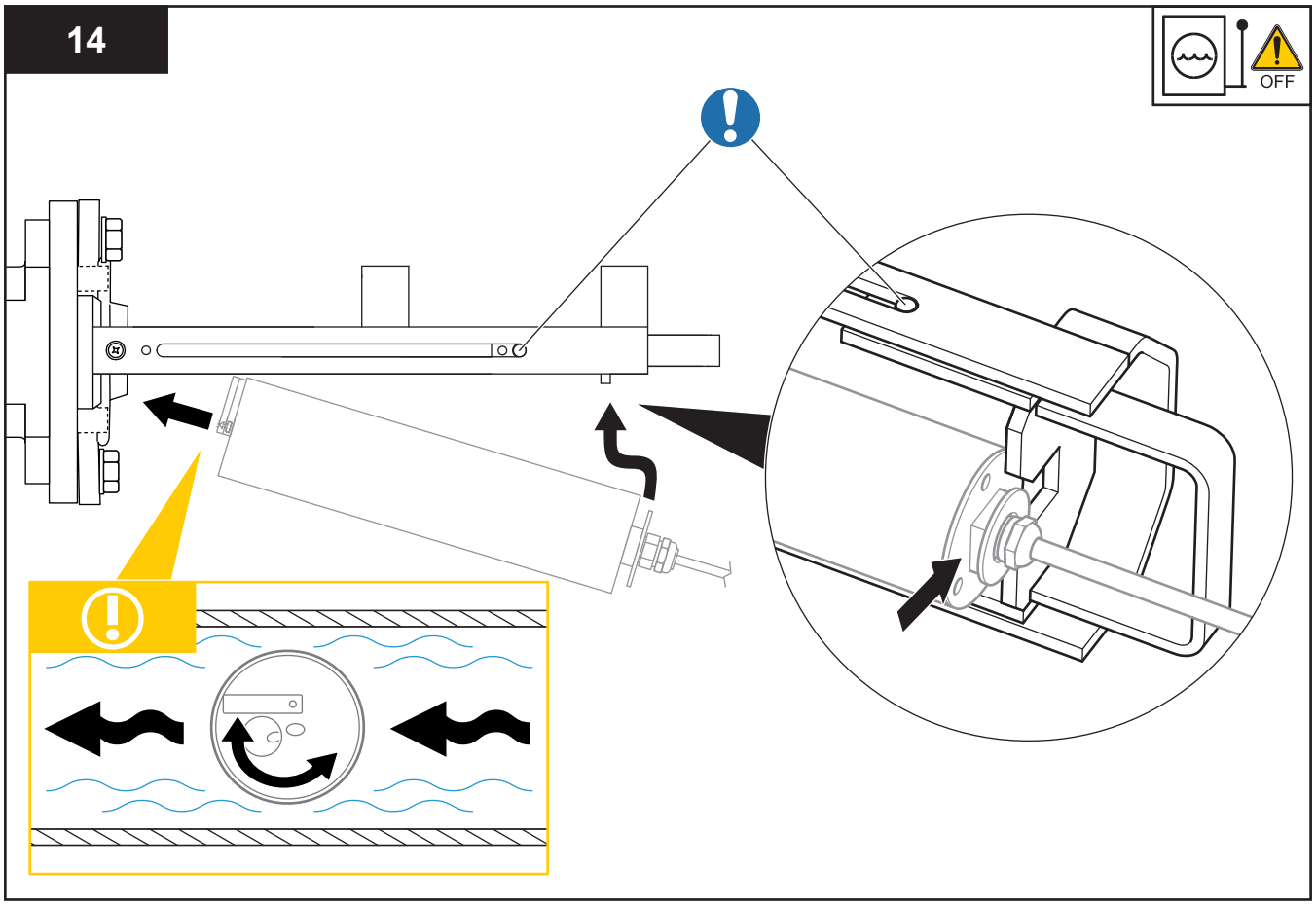

15

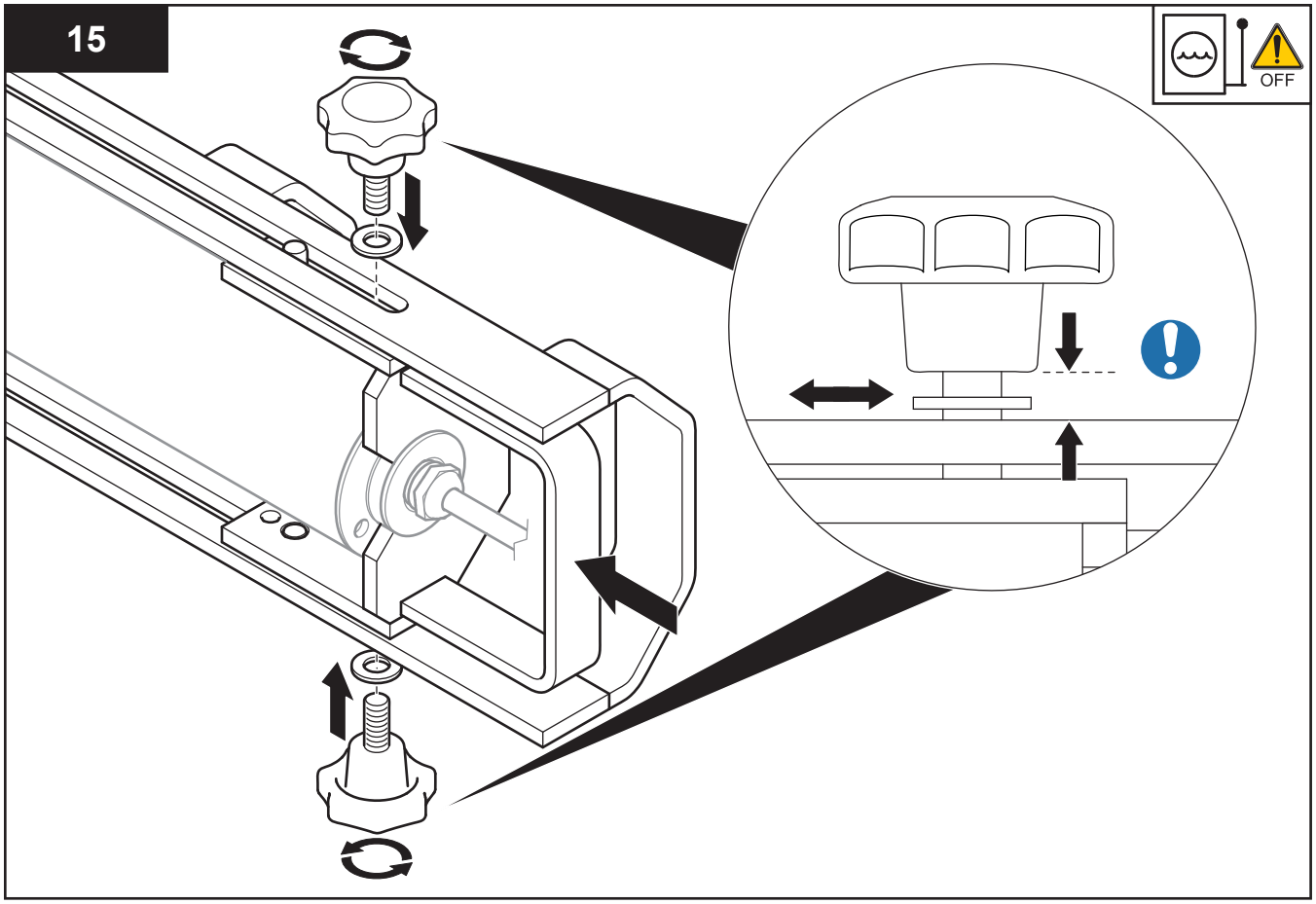

16

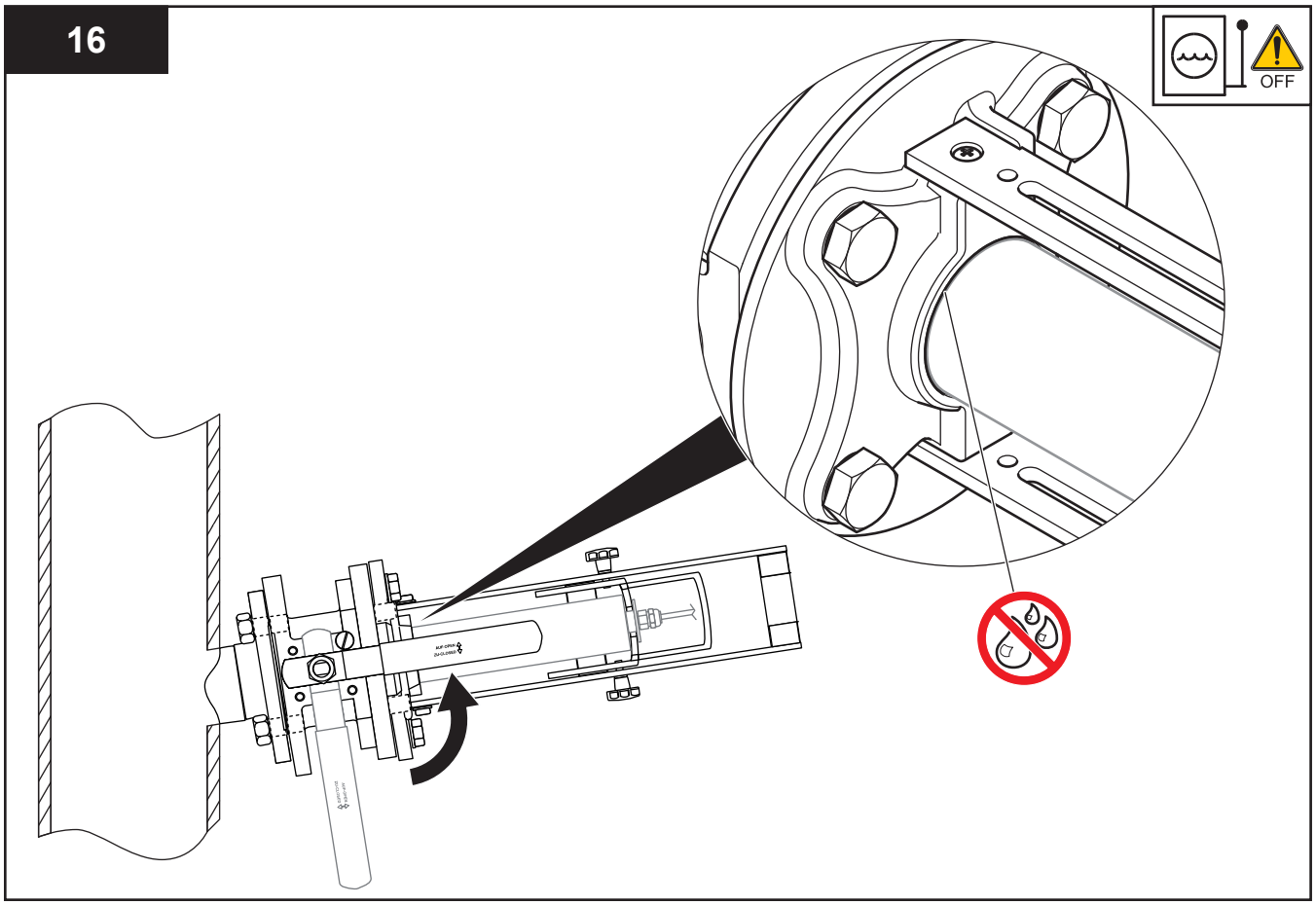

17

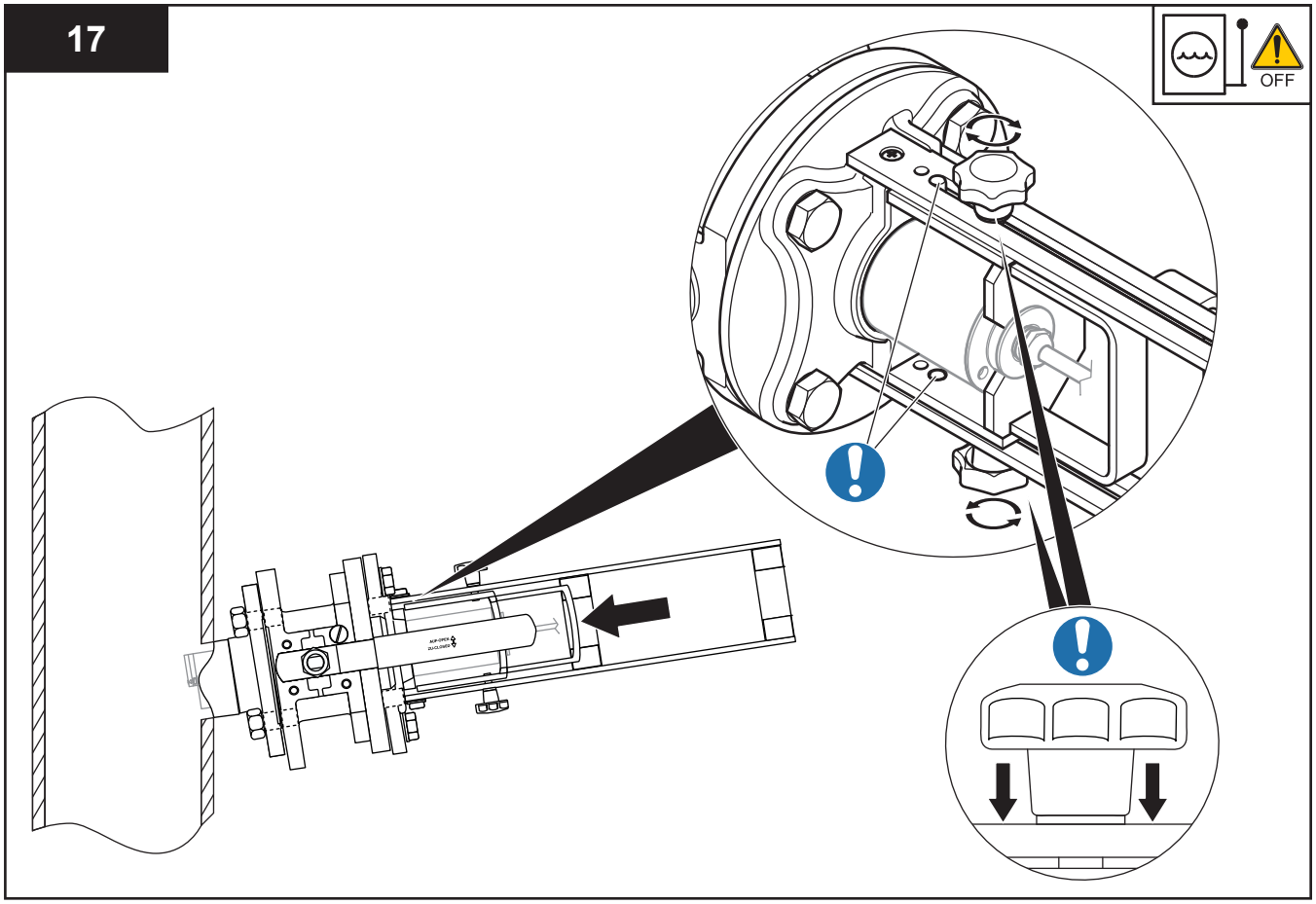

18

A6a

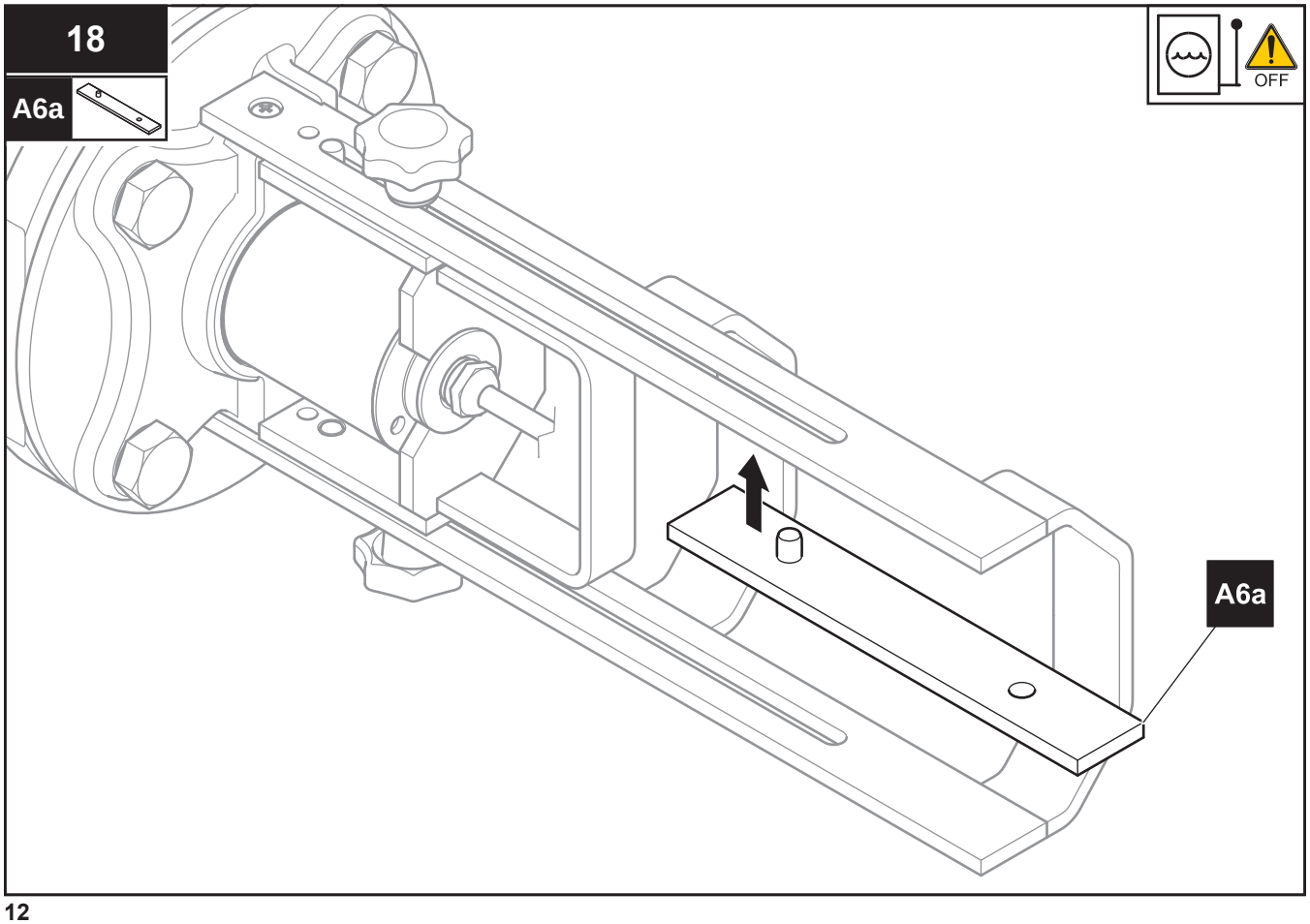

19

A6a

A6b

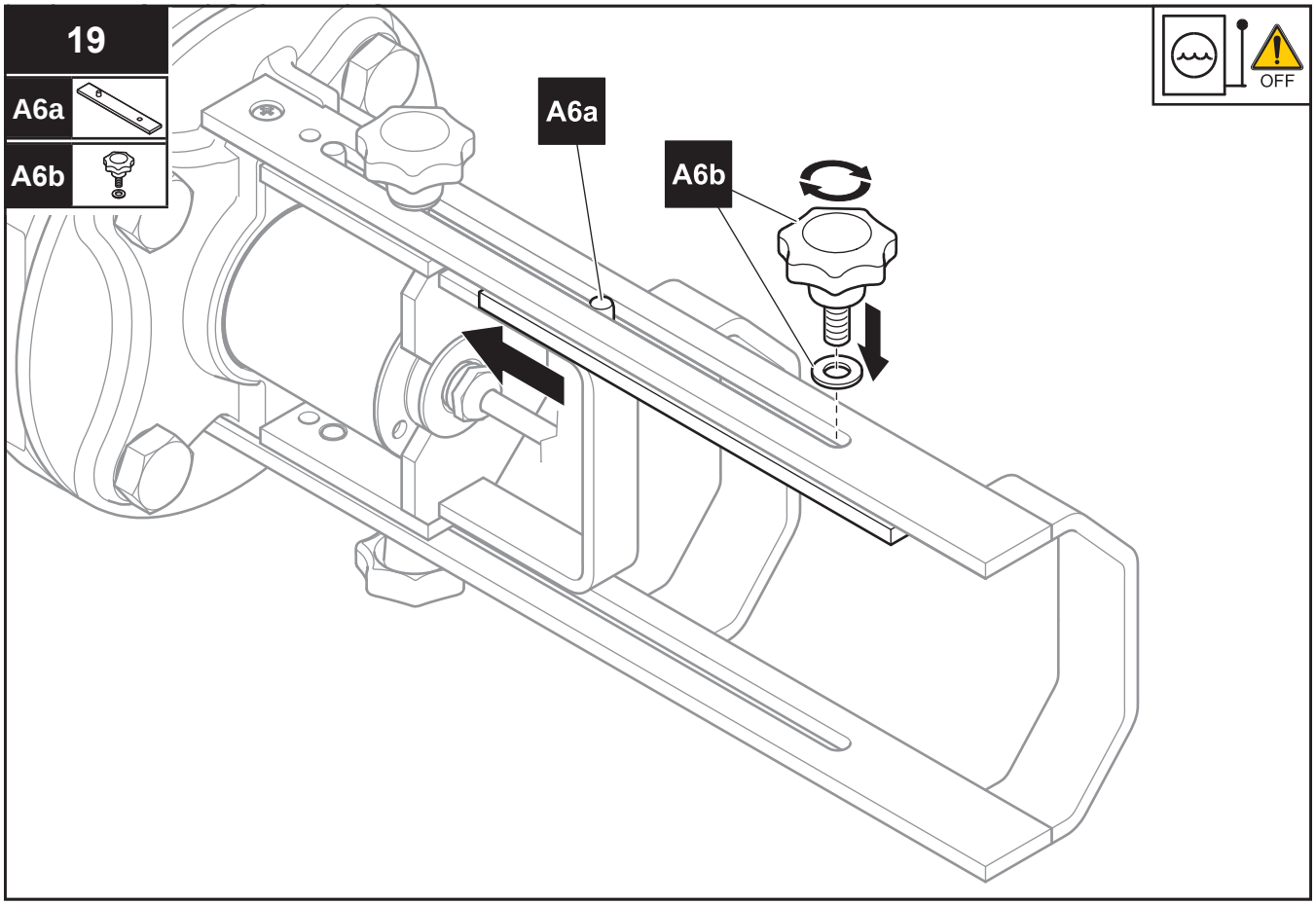

20

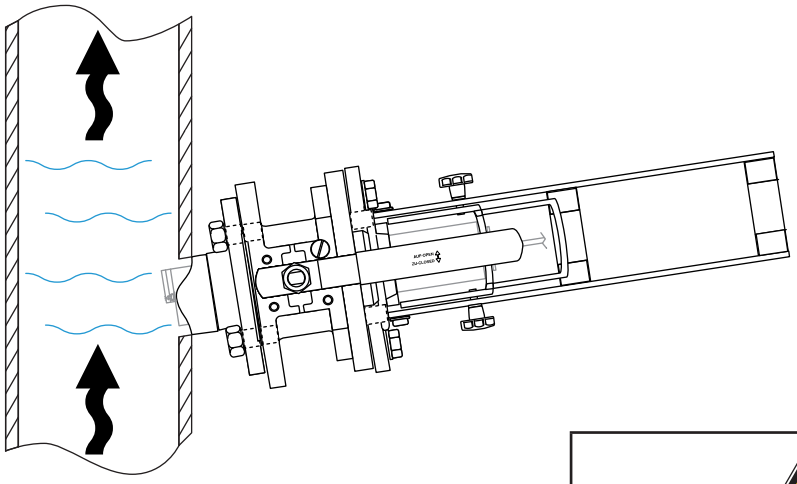

p_{max} in process =
≤ $1*10^5$ Pa (1 bar, 14 psi)

p_{max} in service =
$0*10^5$ Pa (0 bar, 0 psi) pressure free

In Service

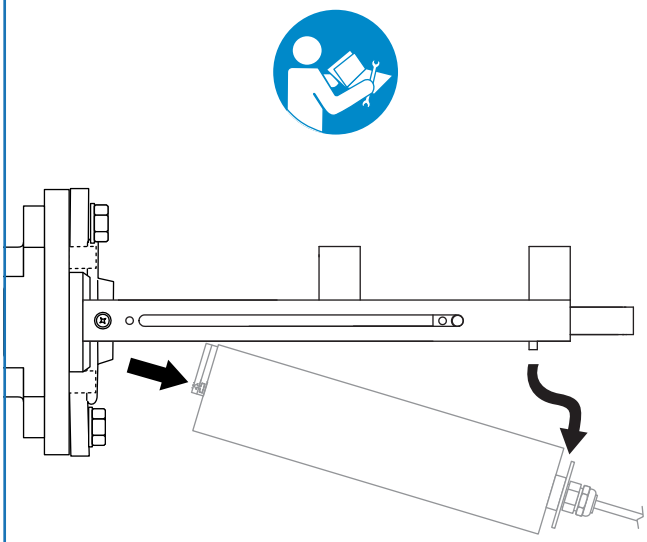

1

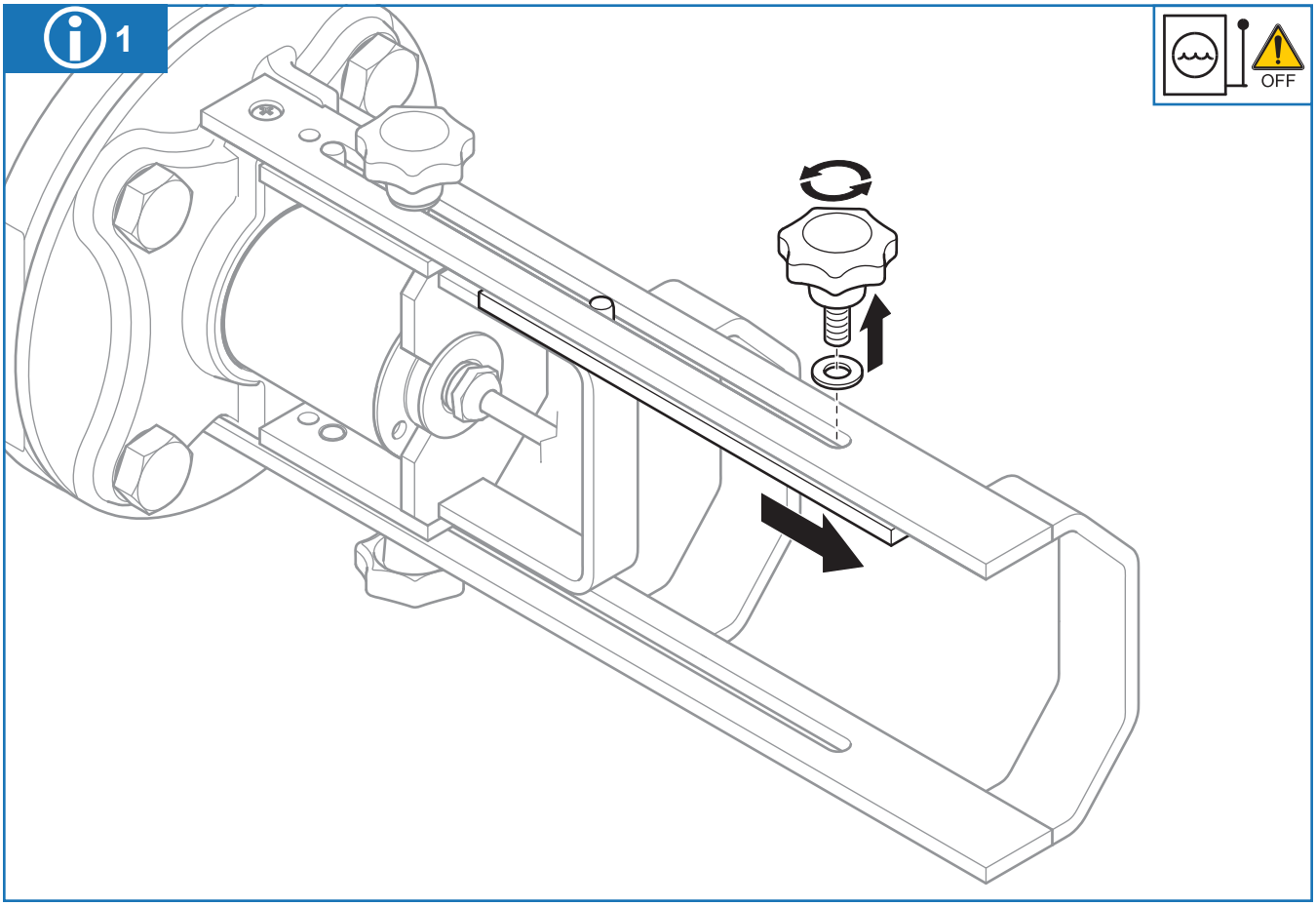

2

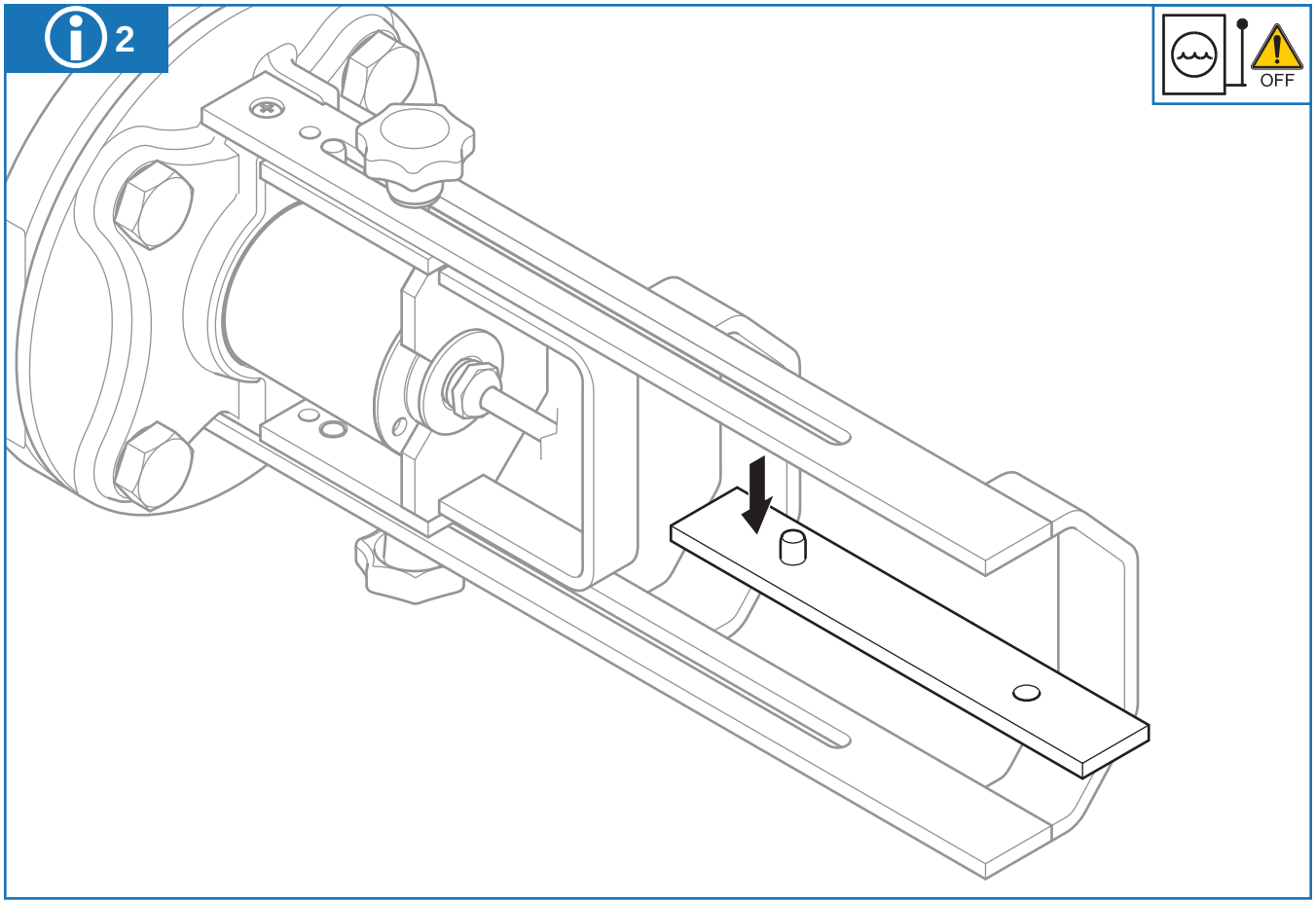

3

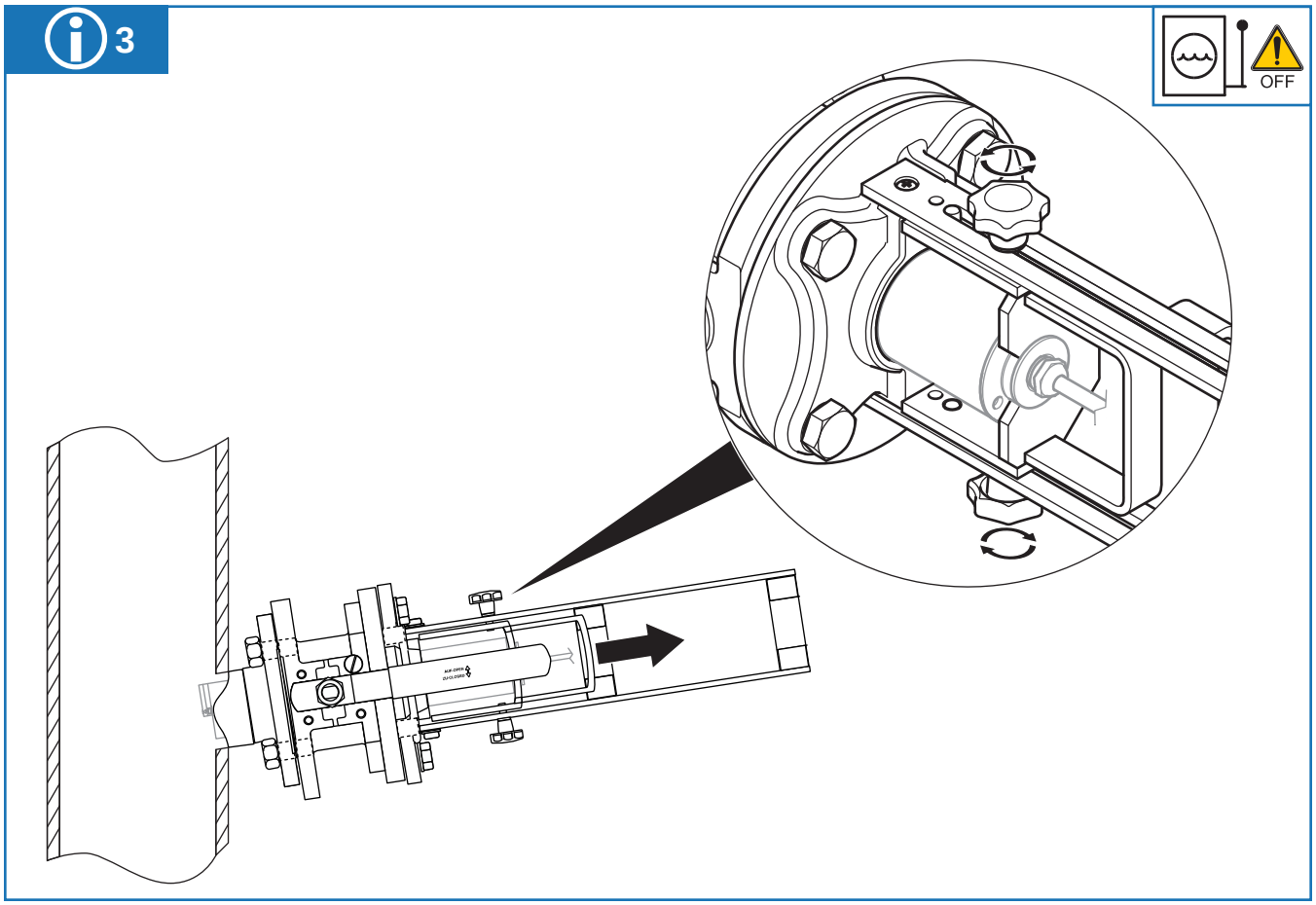

4

OFF

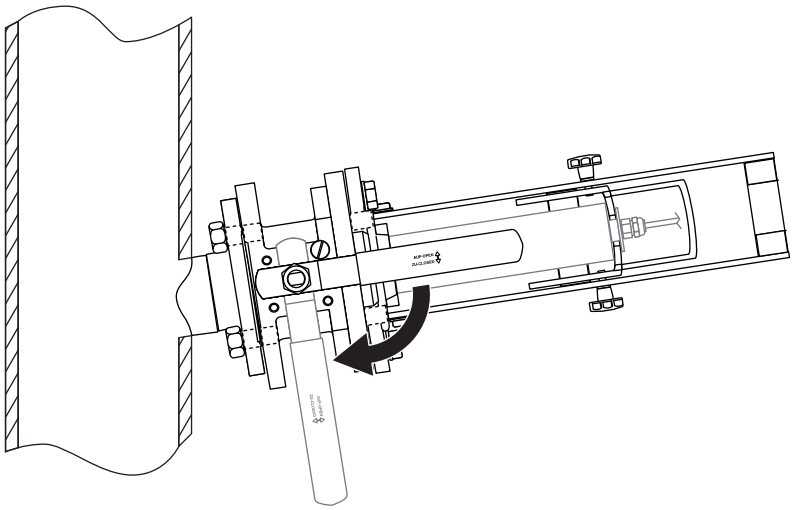

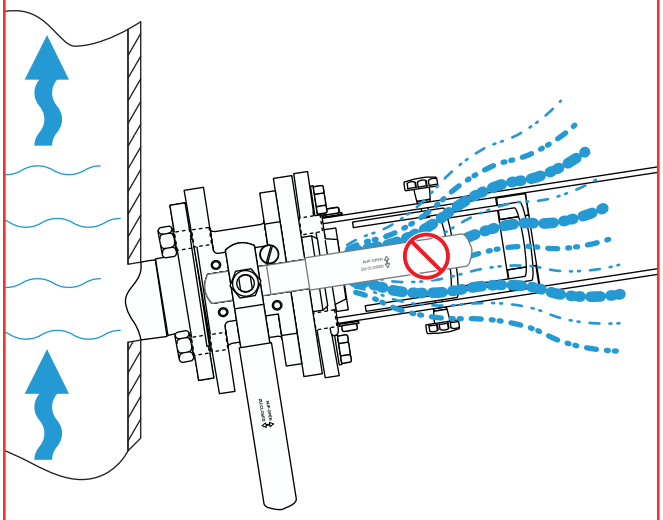

p_{max} in process =
≤ $1*10^5$ Pa (1 bar, 14 psi)

5

OFF

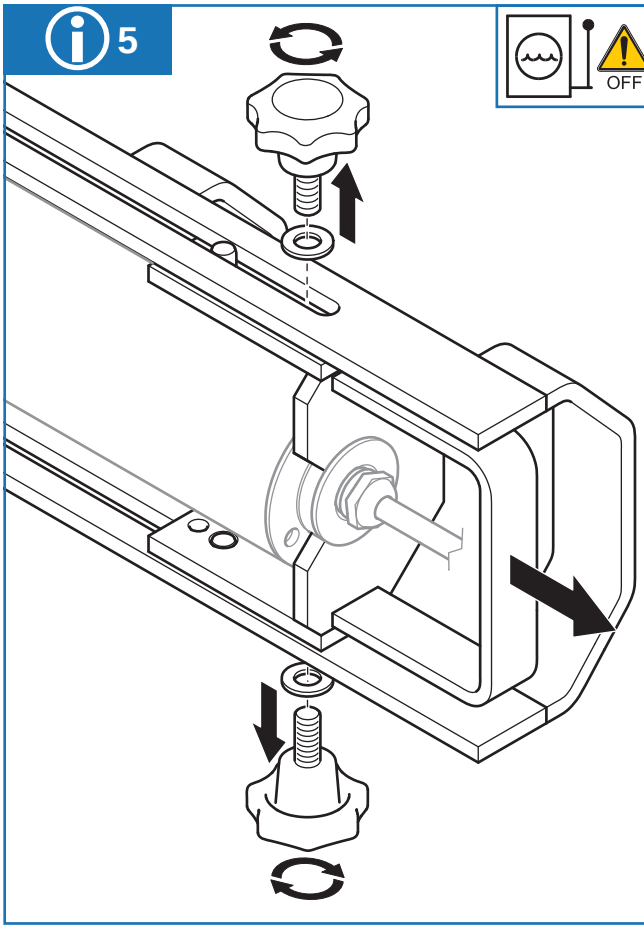

6

OFF

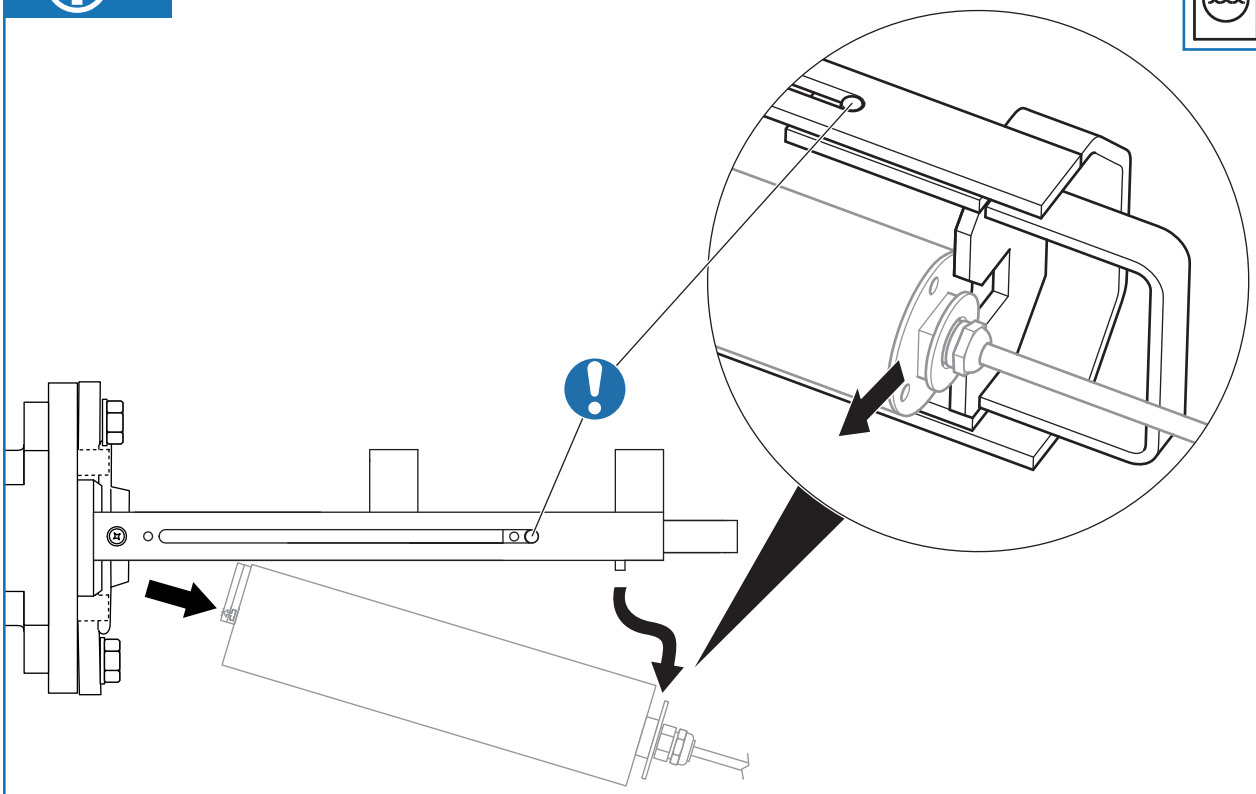

7

OFF

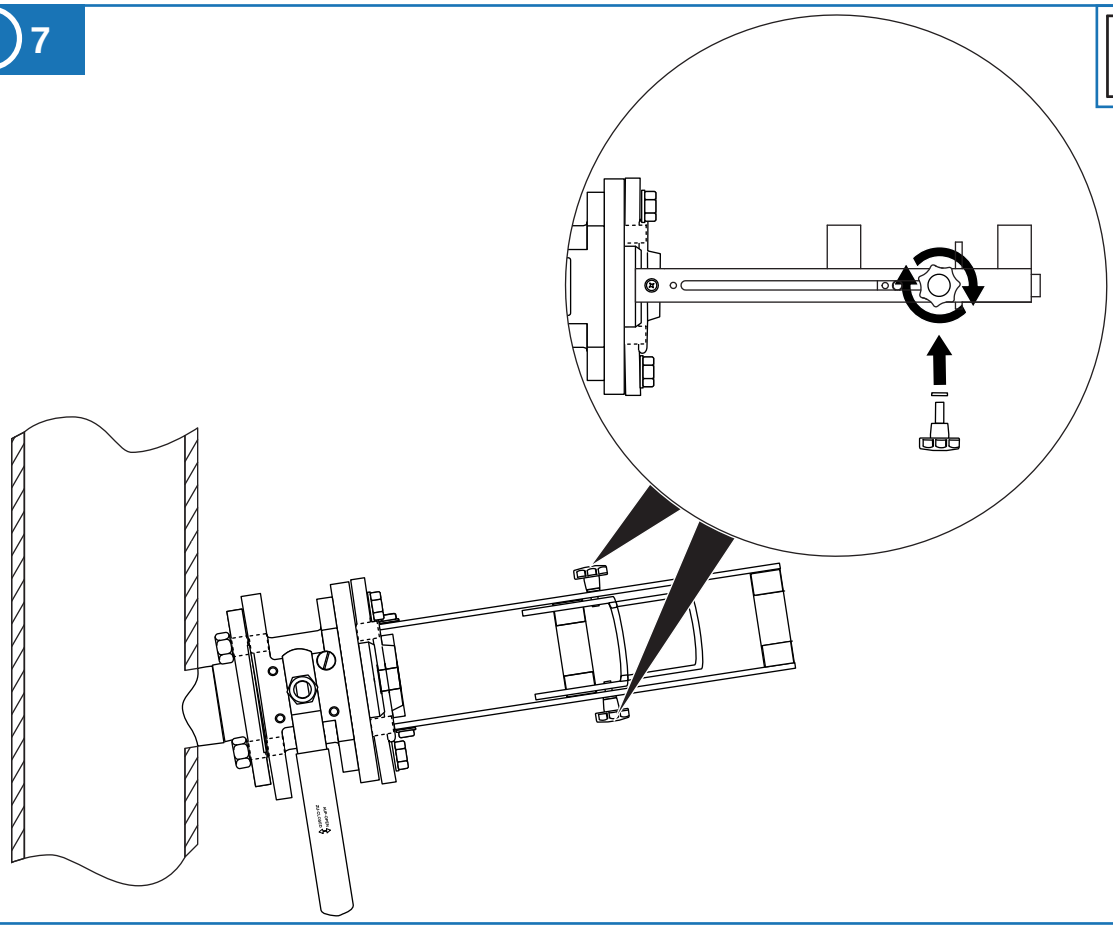

HACH Company
World Headquarters
P.O. Box 389
Loveland, Colorado
80539-0389 U.S.A.
Tel (800) 227-HACH
(800) -227-4224
(U.S.A. only)
Fax (970) 669-2932
orders@hach.com
www.hach.com

Repair Service in the United States:
HACH Company
Ames Service
100 Dayton Avenue
Ames, Iowa 50010
Tel (800) 227-4224
(U.S.A. only)
Fax (515) 232-3835

Repair Service in Canada:
Hach Sales & Service
Canada Ltd.
1313 Border Street, Unit 34
Winnipeg, Manitoba
R3H 0X4
Tel (800) 665-7635
(Canada only)
Tel (204) 632-5598
Fax (204) 694-5134
canada@hach.com

Repair Service in Latin America, the Caribbean, the Far East, Indian Subcontinent, Africa, Europe, or the Middle East:
Hach Company World Headquarters,
P.O. Box 389
Loveland, Colorado,
80539-0389 U.S.A.
Tel +001 (970) 669-3050
Fax +001 (970) 669-2932
intl@hach.com

HACH LANGE GMBH
Willstätterstraße 11
D-40549 Düsseldorf
Tel. +49 (0)2 11 52 88-320
Fax +49 (0)2 11 52 88-210
info@hach-lange.de
www.hach-lange.de

HACH LANGE LTD
Pacific Way
Salford
GB-Manchester, M50 1DL
Tel. +44 (0)161 872 14 87
Fax +44 (0)161 848 73 24
info@hach-lange.co.uk
www.hach-lange.co.uk

HACH LANGE LTD
Unit 1, Chestnut Road
Western Industrial Estate
IRL-Dublin 12
Tel. +353(0)1 46 02 5 22
Fax +353(0)1 4 50 93 37
info@hach-lange.ie
www.hach-lange.ie

HACH LANGE GMBH
Hütteldorferstr. 299/Top 6
A-1140 Wien
Tel. +43 (0)1 9 12 16 92
Fax +43 (0)1 9 12 16 92-99
info@hach-lange.at
www.hach-lange.at

HACH LANGE GMBH
Rorschacherstrasse 30 a
CH-9424 Rheineck
Tel. +41 (0)848 55 66 99
Fax +41 (0)71 886 91 66
info@hach-lange.ch
www.hach-lange.ch

HACH LANGE FRANCE S.A.S.
8, mail Barthélémy Thimonnier
Lognes
F-77437 Marne-La-Vallée
cedex 2
Tél. +33 (0)8 20 20 14 14
Fax +33 (0)1 69 67 34 99
info@hach-lange.fr
www.hach-lange.fr

HACH LANGE SA
Motstraat 54
B-2800 Mechelen
Tél. +32 (0)15 42 35 00
Fax +32 (0)15 41 61 20
info@hach-lange.be
www.hach-lange.be

DR. LANGE NEDERLAND B.V.
Laan van Westroijen 2a
NL-4003 AZ Tiel
Tel. +31(0)344 63 11 30
Fax +31(0)344 63 11 50
info@hach-lange.nl
www.hach-lange.nl

HACH LANGE APS
Åkandevej 21
DK-2700 Brønshøj
Tel. +45 36 77 29 11
Fax +45 36 77 49 11
info@hach-lange.dk
www.hach-lange.dk

HACH LANGE AB
Vinthundsvägen 159A
SE-128 62 Sköndal
Tel. +46 (0)8 7 98 05 00
Fax +46 (0)8 7 98 05 30
info@hach-lange.se
www.hach-lange.se

HACH LANGE S.R.L.
Via Rossini, 1/A
I-20020 Lainate (MI)
Tel. +39 02 93 575 400
Fax +39 02 93 575 401
info@hach-lange.it
www.hach-lange.it

HACH LANGE SPAIN S.L.U.
Edificio Seminario
C/Larrauri, 1C- 2ª Pl.
E-48160 Derio/Bizkaia
Tel. +34 94 657 33 88
Fax +34 94 657 33 97
info@hach-lange.es
www.hach-lange.es

HACH LANGE LDA
Av. do Forte nº8
Fracção M
P-2790-072 Carnaxide
Tel. +351 214 253 420
Fax +351 214 253 429
info@hach-lange.pt
www.hach-lange.pt

HACH LANGE SP.ZO.O.
ul. Krakowska 119
PL-50-428 Wrocław
Tel. +48 71 717 77 77
Fax +48 71 717 77 78
info@hach-lange.pl
www.hach-lange.pl

HACH LANGE S.R.O.
Zastrčená 1278/8
CZ-141 00 Praha 4 - Chodov
Tel. +420 272 12 45 45
Fax +420 272 12 45 46
info@hach-lange.cz
www.hach-lange.cz

HACH LANGE S.R.O.
Roľnícka 21
SK-831 07 Bratislava –
Vajnory
Tel. +421 (0)2 4820 9091
Fax +421 (0)2 4820 9093
info@hach-lange.sk
www.hach-lange.sk

HACH LANGE KFT.
Vöröskereszt utca. 8-10.
H-1222 Budapest XXII. ker.
Tel. +36 (06)1 225 7783
Fax +36 (06)1 225 7784
info@hach-lange.hu
www.hach-lange.hu

HACH LANGE S.R.L.
Str. Căminului nr. 3
et. 1, ap. 1, Sector 2
RO-021741 Bucureşti
Tel. +40 (0) 21 205 30 03
Fax +40 (0) 21 205 30 17
info@hach-lange.ro
www.hach-lange.ro

HACH LANGE
8, Kr. Sarafov str.
BG-1164 Sofia
Tel. +359 (0)2 963 44 54
Fax +359 (0)2 866 15 26
info@hach-lange.bg
www.hach-lange.bg

HACH LANGE SU ANALİZ SİSTEMLERİ LTD.ŞTİ.
Ilkbahar mah. Galip Erdem Cad.
616 Sok. No:9
TR-Oran-Çankaya/ANKARA
Tel. +90312 490 83 00
Fax +90312 491 99 03
bilgi@hach-lange.com.tr
www.hach-lange.com.tr

HACH LANGE D.O.O.
Fajfarjeva 15
SI-1230 Domžale
Tel. +386 (0)59 051 000
Fax +386 (0)59 051 010
info@hach-lange.si
www.hach-lange.si

HACH LANGE Ε.Π.Ε.
Ηρακλείτου 3
GR-15235 Χαλάνδρι
Τηλ. +30 210 7777038
Fax +30 210 7777976
info@hach-lange.gr
www.hach-lange.gr

HACH LANGE D.O.O.
Ivana Severa bb
42 000 Varaždin
Tel. +385 (0) 42 305 086
Fax +385 (0) 42 305 087
info@hach-lange.hr
www.hach-lange.hr

HACH LANGE MAROC SARLAU
Villa 14 – Rue 2 Casa Plaisance
Quartier Racine Extension
MA-Casablanca 20000
Tél. +212 (0)522 97 95 75
Fax +212 (0)522 36 89 34
info-maroc@hach-lange.com
www.hach-lange.ma

ООО «ХАХ ЛАНГЕ»
Бизнес-центр
«Петровский форт»
194044, Санкт-Петербург,
Финляндский пр., д. 4А,
оф. 803
Тел. +7 (812) 458 56 00
Факс. +7 (812) 458 56 00
info.russia@hach-lange.com
ru.hach-lange.com

© HACH Company/HACH LANGE GmbH, 2015. All rights reserved. Printed in Germany.

Edition 04//2015 4 sk

CS-404-500 : Identification sheet

VWTC PROJECT NUMBER:	5000218009	REV:	1
PROJECT NAME:	AEM AMARUQ	SUBMITTED TO (COMPANY):	AGNICO EAGLE MINES
ENGINEER:	Gabriel Hébert	SUBMITTED TO (RESPONSIBLE)	
PROJECT MANAGER:	Clément B	PROJECT NUM REFERENCE.:	
PHONE NUMBER:		LOT NUMBER:	

SUPPLIER	EQPT CODE	EQPT TAG NO	DIA	DESCRIPTION	INFO 1	INFO 2	INFO 3	APPLIC.	NOTE	REV
E&H	ST-404-564	FIT4-011	3"	FLOWMETER	Electromagnetic flowmeter// Manuf: E&H // Model : 50W80-ULGA1RC2BAAW+1// DN80 (3")// Liner: Polyurethane Process Connection: Cl.150, A105, flange ANSI B16.5 Electrodes: 1.4435/316L, bullet nose Calibration: 0.5% Additional Test, certificate: w/o	Approval: FM NI Cl. I Div. 2 / CSA Cl. I Div. 2 Housing: Wall Alu, IP67 NEMA4X Cable, Remote Version: 10m/30ft coil + signal cable Cable Entry: Thread NPT 1/2 Power Supply; Display:	WEA= language DE+EN+FR+IT+ES+PT+NL Adjustment; Software Feature: A Factory setup; basic version Output, Input: W 4-20mA SIL HART	SLUDGE TANK		rev1

This page is intentionally left blank

Level | Pressure | Flow | Temperature | Liquid Analysis | Registration | Systems Components | Services | Solutions

Technical Information

Proline Promag 50W, 53W

Electromagnetic Flow Measuring System
Flow measurement of liquids in water or wastewater applications

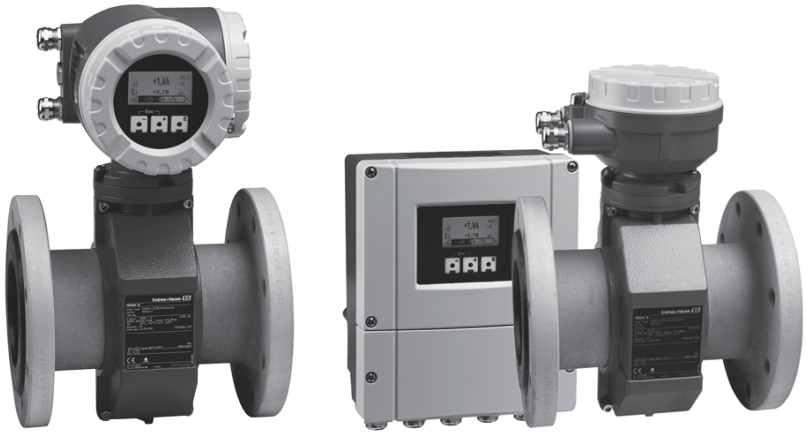

Application

Electromagnetic flowmeter for bidirectional measurement of liquids with a minimum conductivity of ≥ 5 µS/cm:
- Drinking water
- Wastewater
- Sewage sludge

- Flow measurement up to 110000 m³/h (484315 gal/min)
- Fluid temperature up to +80 °C (+176 °F)
- Process pressures up to 40 bar (580 psi)
- Lengths in accordance with DVGW/ISO

Application-specific lining of the measuring pipe from polyurethane or hard rubber with the following drinking water permissions:
- KTW
- WRAS
- NSF
- ACS

Approvals for hazardous area:
- ATEX
- IECEx
- FM
- CSA
- NEPSI

Connection to process control system:
- HART
- PROFIBUS DP/PA
- FOUNDATION Fieldbus
- MODBUS RS485

Your benefits

Promag measuring devices offer you cost-effective flow measurement with a high degree of accuracy for a wide range of process conditions.

The uniform Proline transmitter concept comprises:
- Modular device and operating concept resulting in a higher degree of efficiency
- Software options for batching, electrode cleaning and for measuring pulsating flow
- High degree of reliability and measuring stability
- Uniform operating concept

The tried-and-tested Promag sensors offer:
- No pressure loss
- Not sensitive to vibrations
- Simple installation and commissioning

TI046D/24/en/07.10

Endress+Hauser

People for Process Automation

Table of contents

Function and system design 3
Measuring principle 3
Measuring system 3

Input 4
Measured variable 4
Measuring ranges 4
Operable flow range 4
Input signal 4

Output 4
Output signal 4
Signal on alarm 6
Load 6
Low flow cutoff 6
Galvanic isolation 6
Switching output 6

Power supply 7
Electrical connection, measuring unit 7
Electrical connection, terminal assignment 8
Electrical connection, remote version 9
Supply voltage (power supply) 9
Cable entry 9
Remote version cable specifications 9
Power consumption 10
Power supply failure 10
Potential equalization 11

Performance characteristics 13
Reference operating conditions 13
Maximum measured error 13
Repeatability 13

Operating conditions: Installations 14
Installation instructions 14
Inlet and outlet run 18
Adapters 18
Length of connecting cable 19

Operating conditions: Environment 20
Ambient temperature range 20
Storage temperature 20
Degree of protection 20
Shock and vibration resistance 20
Electromagnetic compatibility (EMC) 20

Operating conditions: Process 21
Medium temperature range 21
Conductivity 21
Medium pressure range (nominal pressure) 21
Pressure tightness 21
Limiting flow 22
Pressure loss 23

Mechanical construction 24
Design, dimensions 24
Weight 37
Measuring tube specifications 39
Material 40
Material load diagram 40
Fitted electrodes 43
Process connections 43
Surface roughness 43

Human interface 43
Display elements 43
Operating elements 43
Language groups 43
Remote operation 43

Certificates and approvals 44
CE mark 44
C-tick mark 44
Pressure measuring device approval 44
Ex approval 44
Other standards and guidelines 44
FOUNDATION Fieldbus certification 44
MODBUS RS485 certification 44
PROFIBUS DP/PA certification 44

Accessories 45

Documentation 45

Registered trademarks 46

Order Codes 47

Function and system design

Measuring principle

Following Faraday's law of magnetic induction, a voltage is induced in a conductor moving through a magnetic field.
In the electromagnetic measuring principle, the flowing medium is the moving conductor.
The voltage induced is proportional to the flow velocity and is supplied to the amplifier by means of two measuring electrodes. The flow volume is calculated by means of the pipe cross-sectional area.
The DC magnetic field is created through a switched direct current of alternating polarity.

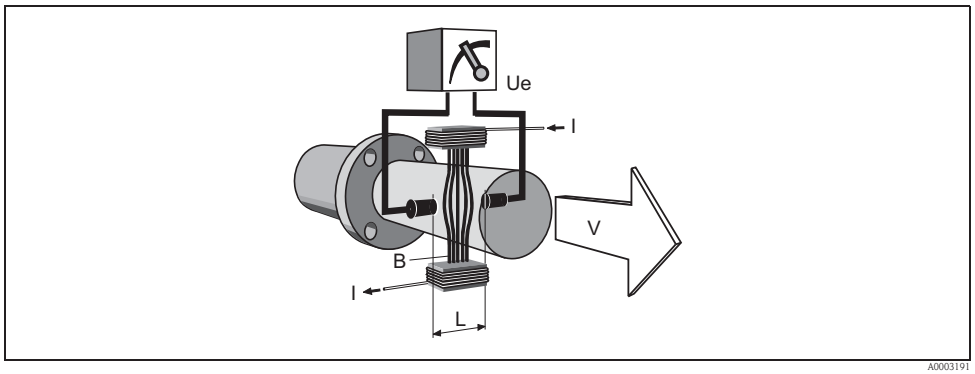

A0003191

$Ue = B \cdot L \cdot v$
$Q = A \cdot v$

Ue	Induced voltage
B	Magnetic induction (magnetic field)
L	Electrode spacing
v	Flow velocity
Q	Volume flow
A	Pipe cross-section
I	Current strength

Measuring system

The measuring system consists of a transmitter and a sensor.
Two versions are available:
- Compact version: Transmitter and sensor form a mechanical unit.
- Remote version: Sensor is mounted separate from the transmitter.

Transmitter:
- Promag 50 (user interface with push buttons for operation, two-line display, illuminated)
- Promag 53 ("Touch Control" without opening the housing, four-line display, unilluminated)

Sensor:
- Promag W (DN 25 to 2000 / 1 to 78")

Input

Measured variable

Flow velocity (proportional to induced voltage)

Measuring ranges

Measuring ranges for liquids
Typically v = 0.01 to 10 m/s (0.03 to 33 ft/s) with the specified accuracy

Operable flow range

Over 1000 : 1

Input signal

Status input (auxiliary input)
- U = 3 to 30 V DC, R_i = 5 kΩ, galvanically isolated
- Configurable for: totalizer(s) reset, measured value suppression, error-message reset

Status input (auxiliary input) with PROFIBUS DP and MODBUS RS485
- U = 3 to 30 V DC, R_i = 3 kΩ, galvanically isolated
- Switching level: 3 to 30 V DC, independent of polarity
- Configurable for: totalizer(s) reset, measured value suppression, error-message reset, batching start/stop (optional), batch totalizer reset (optional)

Current input (only Promag 53)
- active/passive selectable, galvanically isolated, full scale value selectable, resolution: 3 µA, temperature coefficient: typ. 0.005% o.r./°C (o.r. = of reading)
- active: 4 to 20 mA, $R_i \leq 150$ Ω, max. 24 V DC, short-circuit-proof
- passive: 0/4 to 20 mA, $R_i < 150$ Ω, max. 30 V DC

Output

Output signal

Promag 50

Current output
active/passive selectable, galvanically isolated, time constant selectable (0.01 to 100 s), full scale value selectable, temperature coefficient: typ. 0.005% o.r./°C (o.r. = of reading), resolution: 0.5 µA
- active: 0/4 to 20 mA, $R_L < 700$ Ω (HART: $R_L \geq 250$ Ω)
- passive: 4 to 20 mA, operating voltage V_S: 18 to 30 V DC, $R_i \geq 150$ Ω

Pulse/frequency output
passive, open collector, 30 V DC, 250 mA, galvanically isolated
- Frequency output: full scale frequency 2 to 1000 Hz (f_{max} = 1250 Hz), on/off ratio 1:1, pulse width max. 10s
- Pulse output: pulse value and pulse polarity selectable, max. pulse width configurable (0.5 to 2000 ms)

PROFIBUS DP interface
- Transmission technology (Physical Layer): RS485 in accordance with ANSI/TIA/EIA-485-A: 1998, galvanically isolated
- Profil version 3.0
- Data transmission rate: 9,6 kBaud to 12 MBaud
- Automatic data transmission rate recognition
- Function blocks: 1 × analog Input, 1 × totalizer
- Output data: volume flow, totalizer
- Input data: positive zero return (ON/OFF), totalizer control, value for local display
- Cyclic data transmission compatible with previous model Promag 33
- Bus address adjustable via miniature switches or local display (optional) at the measuring device

PROFIBUS PA interface
- Transmission technology (Physical Layer): IEC 61158-2 (MBP), galvanically isolated
- Profil version 3.0
- Current consumption: 11 mA
- Permissible supply voltage: 9 to 32 V
- Bus connection with integrated reverse polarity protection
- Error current FDE (Fault Disconnection Electronic): 0 mA
- Function blocks: 1 × analog input, 2 × totalizer
- Output data: volume flow, totalizer
- Input data: positive zero return (ON/OFF), control totalizer, value for local display
- Cyclic data transmission compatible with previous model Promag 33
- Bus address adjustable via miniature switches or local display (optional) at the measuring device

Promag 53

Current output
active/passive selectable, galvanically isolated, time constant selectable (0.01 to 100 s),
full scale value selectable, temperature coefficient: typ. 0.005% o.r./°C (o.r. = of reading), resolution: 0.5 µA
- active: 0/4 to 20 mA, $R_L < 700\ \Omega$ (HART: $R_L \geq 250\ \Omega$)
- passive: 4 to 20 mA, operating voltage V_S: 18 to 30 V DC, $R_i \geq 150\ \Omega$

Pulse/frequency output
active/passive selectable, galvanically isolated (Ex i version: only passive)
- active: 24 V DC, 25 mA (max. 250 mA during 20 ms), $R_L > 100\ \Omega$
- passive: open collector, 30 V DC, 250 mA
- Frequency output: full scale frequency 2 to 10000 Hz (f_{max} = 12500 Hz), EEx-ia: 2 to 5000 Hz; on/off ratio 1:1, pulse width max. 10 s
- Pulse output: pulse value and pulse polarity selectable, max. pulse width configurable (0.05 to 2000 ms)

PROFIBUS DP interface
- Transmission technology (Physical Layer): RS485 in accordance with ANSI/TIA/EIA-485-A: 1998, galvanically isolated
- Profil version 3.0
- Data transmission rate: 9,6 kBaud to 12 MBaud
- Automatic data transmission rate recognition
- Function blocks: 2 × analog Input, 3 × totalizer
- Output data: volume flow, calculated mass flow, totalizer 1 to 3
- Input data: positive zero return (ON/OFF), totalizer control, value for local display
- Cyclic data transmission compatible with previous model Promag 33
- Bus address adjustable via miniature switches or local display (optional) at the measuring device
- Available output combination → 8

PROFIBUS PA interface
- Transmission technology (Physical Layer): IEC 61158-2 (MBP), galvanically isolated
- Profil version 3.0
- Current consumption: 11 mA
- Permissible supply voltage: 9 to 32 V
- Bus connection with integrated reverse polarity protection
- Error current FDE (Fault Disconnection Electronic): 0 mA
- Function blocks: 2 × analog input, 3 × totalizer
- Output data: volume flow, calculated mass flow, totalizer 1 to 3
- Input data: positive zero return (ON/OFF), totalizer control, value for local display
- Cyclic data transmission compatible with previous model Promag 33
- Bus address adjustable via miniature switches or local display (optional) at the measuring device

MODBUS RS485 interface
- Transmission technology (Physical Layer): RS485 in accordance with ANSI/TIA/EIA-485-A: 1998, galvanically isolated
- MODBUS device type: Slave
- Adress range: 1 to 247
- Bus address adjustable via miniature switches or local display (optional) at the measuring device
- Supported MODBUS function codes: 03, 04, 06, 08, 16, 23
- Broadcast: supported with the function codes 06, 16, 23
- Übertragungsmodus: RTU oder ASCII
- Supported baudrate: 1200, 2400, 4800, 9600, 19200, 38400, 57600, 115200 Baud
- Response time:
  - Direct data access = typically 25 to 50 ms
  - Auto-scan buffer (data range) = typically 3 to 5 ms
- Available output combination → 8

FOUNDATION Fieldbus interface
- FOUNDATION Fieldbus H1
- Transmission technology (Physical Layer): IEC 61158-2 (MBP), galvanically isolated
- ITK version 5.01
- Current consumption: 12 mA
- Error current FDE (Fault Disconnection Electronic): 0 mA
- Bus connection with integrated reverse polarity protection
- Function blocks:
  - 5 × Analog Input (execution time: 18 ms each)
  - 1 × PID (25 ms)
  - 1 × Digital Output (18 ms)
  - 1 × Signal Characterizer (20 ms)
  - 1 × Input Selector (20 ms)
  - 1 × Arithmetic (20 ms)
  - 1 × Integrator (18 ms)
- Output data: volume flow, calculated mass flow, temperature, totalizer 1 to 3
- Input data: positive zero return (ON/OFF), reset totalizer
- Link Master (LM) functionality is supported

Signal on alarm
- Current output → failure response selectable (e.g. in accordance with NAMUR recommendation NE 43)
- Pulse/frequency output → failure response selectable
- Status output (Promag 50) → non-conductive by fault or power supply failure
- Relay output (Promag 53) → de-energized by fault or power supply failure

Load

see "Output signal"

Low flow cutoff

Switch points for low flow cutoff are selectable.

Galvanic isolation

All circuits for inputs, outputs and power supply are galvanically isolated from each other.

Switching output

Status output (Promag 50, Promag 53)
Open collector, max. 30 V DC / 250 mA, galvanically isolated.
Configurable for: error messages, Empty Pipe Detection (EPD), flow direction, limit values.

Relay outputs (Promag 53)
Normally closed (NC or break) or normally open (NO or make) contacts available
(default: relay 1 = NO, relay 2 = NC), max. 30 V / 0,5 A AC ; 60 V / 0,1 A DC, galvanically isolated.
Configurable for: error messages, Empty Pipe Detection (EPD), flow direction, limit values, batching contacts.

Power supply

Electrical connection, measuring unit

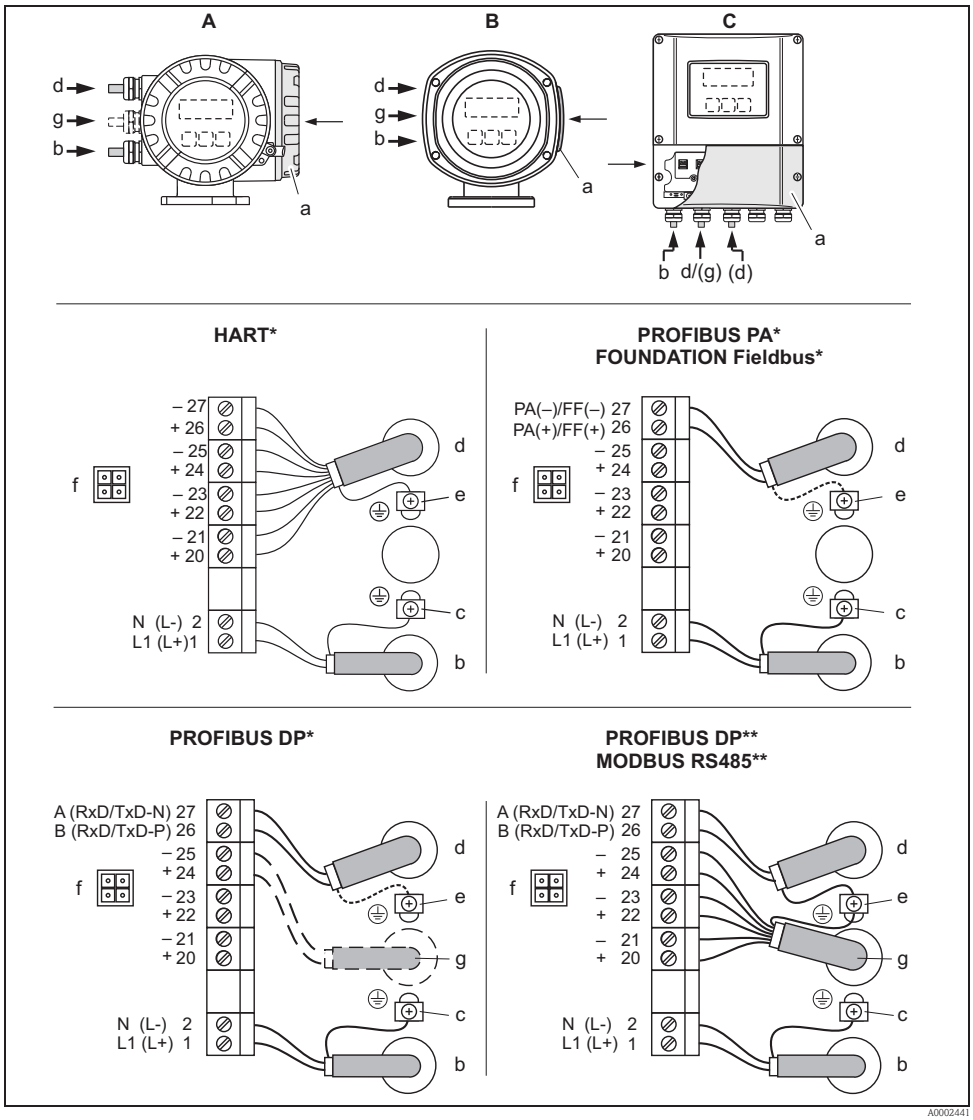

Connecting the transmitter, cable cross-section max. 2.5 mm^2 (14 AWG)

A View A (field housing)
B View B (stainless steel field housing)
C View C (wall-mount housing)

*) fixed communication boards
**) flexible communication boards
a Connection compartment cover
b Cable for power supply: 85 to 260 V AC / 20 to 55 V AC / 16 to 62 V DC
- Terminal No. 1: L1 for AC, L+ for DC
- Terminal No. 2: N for AC, L– for DC

c Ground terminal for protective conductor
d Signal cable: see "Electrical connection, terminal assignment" → 8
Fieldbus cable:
- Terminal No. 26: DP (B) / PA + / FF + / MODBUS RS485 (B) / (PA, FF: with polarity protection)
- Terminal No. 27: DP (A) / PA – / FF – / MODBUS RS485 (A) / (PA, FF: with polarity protection)

e Ground terminal for signal cable shield / Fieldbus cable / RS485 line
f Service adapter for connecting service interface FXA193 (Fieldcheck, FieldCare)
g Signal cable: see "Electrical connection, terminal assignment" → 8
Cable for external termination (only for PROFIBUS DP with fixed assignment communication board):
- Terminal No. 24: +5 V
- Terminal No. 25: DGND

Electrical connection, terminal assignment

Terminal assignment, Promag 50

Order variant	Terminal No. (inputs/outputs)			
	20 (+) / 21 (–)	22 (+) / 23 (–)	24 (+) / 25 (–)	26 (+) / 27 (–)
50***-**********W	–	–	–	Current output HART
50***-**********A	–	–	Frequency output	Current output HART
50***-**********D	Status input	Status output	Frequency output	Current output HART
50***-**********H	–	–	–	PROFIBUS PA
50***-**********J	–	–	+5 V (external termination)	PROFIBUS DP
50***-**********S	–	–	Frequency output, Ex i, passive	Current output, Ex i, passive, HART
50***-**********T	–	–	Frequency output, Ex i, passive	Current output, Ex i, passive, HART

Ground terminal → 7

Terminal assignment, Promag 53

The inputs and outputs on the communication board can be either permanently assigned or variable, depending on the version ordered (see table). Replacements for modules which are defective or which have to be replaced can be ordered as accessories.

Order variant	Terminal No. (inputs/outputs)			
	20 (+) / 21 (–)	22 (+) / 23 (–)	24 (+) / 25 (–)	26 (+) / 27 (–)
Fixed communication boards (fixed assignment)				
53***-**********A	–	–	Frequency output	Current output HART
53***-**********B	Relay output 2	Relay output 1	Frequency output	Current output HART
53***-**********F	–	–	–	PROFIBUS PA, Ex i
53***-**********G	–	–	–	FOUNDATION Fieldbus, Ex i
53***-**********H	–	–	–	PROFIBUS PA
53***-**********J	–	–	–	PROFIBUS DP
53***-**********K	–	–	–	FOUNDATION Fieldbus
53***-**********Q	–	–	Status input	MODBUS RS485
53***-**********S	–	–	Frequency output, Ex i	Current output, Ex i, passive, HART
53***-**********T	–	–	Frequency output, Ex i	Current output, Ex i, passive, HART
Flexible communication boards				
53***-**********C	Relay output 2	Relay output 1	Frequency output	Current output HART
53***-**********D	Status input	Relay output	Frequency output	Current output HART
53***-**********L	Status input	Relay output 2	Relay output 1	Current output HART
53***-**********M	Status input	Frequency output	Frequency output	Current output HART
53***-**********N	Current output	Frequency output	Status input	MODBUS RS485
53***-**********P	Current output	Frequency output	Status input	PROFIBUS DP
53***-**********V	Relay output 2	Relay output 1	Status input	PROFIBUS DP
53***-**********2	Relay output	Current output	Frequency output	Current output HART
53***-**********4	Current input	Relay output	Frequency output	Current output HART
53***-**********7	Relay output 2	Relay output 1	Status input	MODBUS RS485

Ground terminal → 7

Electrical connection, remote version

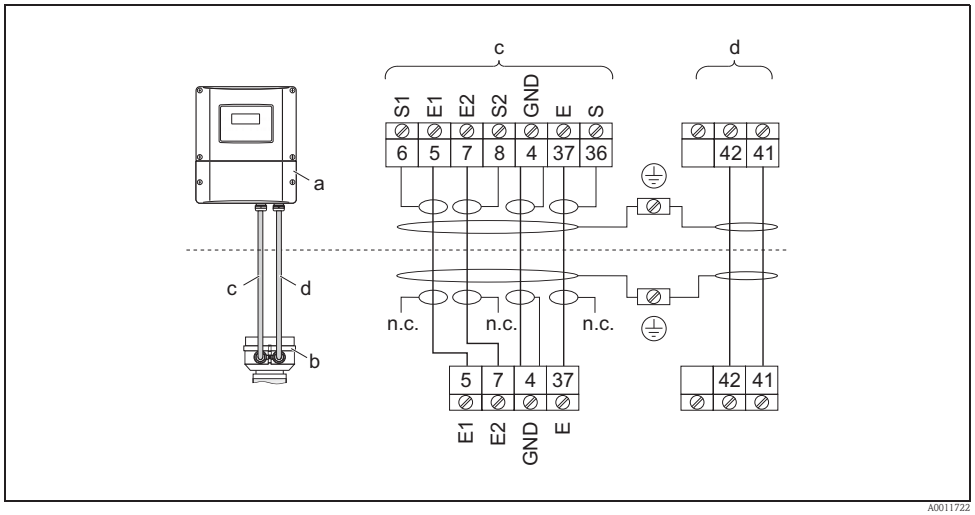

Connecting the remote version

a Wall-mount housing connection compartment
b Sensor connection housing cover
c Signal cable
d Coil current cable
n.c. Not connected, insulated cable shields
Terminal no. and cable colors: 6/5 = brown; 7/8 = white; 4 = green; 36/37 = yellow

Supply voltage (power supply)

- 85 to 260 V AC, 45 to 65 Hz
- 20 to 55 V AC, 45 to 65 Hz
- 16 to 62 V DC

PROFIBUS PA and FOUNDATION Fieldbus
- Non-Ex: 9 to 32 V DC
- Ex i: 9 to 24 V DC
- Ex d: 9 to 32 V DC

Cable entry

Power supply and signal cables (inputs/ outputs):
- Cable entry M20 × 1.5 (8 to 12 mm / 0.31 to 0.47")
- Sensor cable entry for armoured cables M20 × 1.5 (9.5 to 16 mm / 0.37 to 0.63")
- Thread for cable entries, ½" NPT, G ½"

Connecting cable for remote version:
- Cable entry M20 × 1.5 (8 to 12 mm / 0.31 to 0.47")
- Sensor cable entry for armoured cables M20 × 1.5 (9.5 to 16 mm / 0.37 to 0.63")
- Thread for cable entries, ½" NPT, G ½"

Remote version cable specifications

Coil cable
- 2 × 0.75 mm² (18 AWG) PVC cable with common, braided copper shield (∅ ~ 7 mm / 0.28")
- Conductor resistance: ≤ 37 Ω/km (≤ 0.011 Ω/ft)
- Capacitance core/core, shield grounded: ≤ 120 pF/m (≤ 37 pF/ft)
- Operating temperature: –20 to +80 °C (–68 to +176 °F)
- Cable cross-section: max. 2.5 mm² (14 AWG)
- Test voltage for cable insulation: ≤ 1433 AC r.m.s. 50/60 Hz or ≥ 2026 V DC

Signal cable
- 3 × 0.38 mm² (20 AWG) PVC cable with common, braided copper shield (∅ ~ 7 mm / 0.28") and individual shielded cores
- With empty pipe detection (EPD): 4 × 0.38 mm² (20 AWG) PVC cable with common, braided copper shield (∅ ~ 7 mm / 0.28") and individual shielded cores
- Conductor resistance: ≤ 50 Ω/km (≤ 0.015 Ω/ft)
- Capacitance core/shield: ≤ 420 pF/m (≤ 128 pF/ft)
- Operating temperature: –20 to +80 °C (–68 to +176 °F)
- Cable cross-section: max. 2.5 mm² (14 AWG)

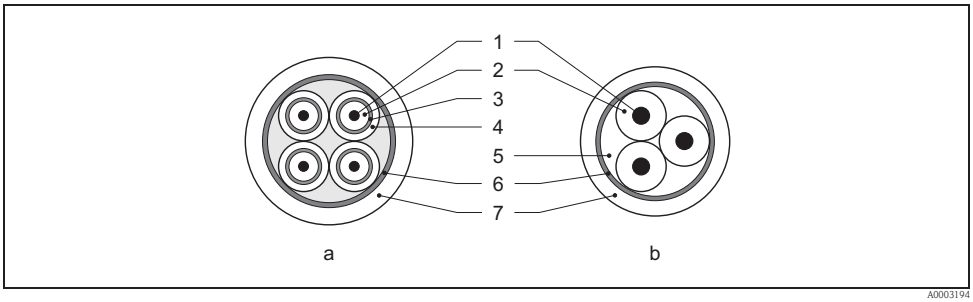

a Signal cable
b Coil current cable

1 Core
2 Core insulation
3 Core shield
4 Core jacket
5 Core reinforcement
6 Cable shield
7 Outer jacket

Operation in zones of severe electrical interference
The measuring device complies with the general safety requirements in accordance with EN 61010 and the EMC requirements of IEC/EN 61326 and NAMUR recommendation NE 21.

Caution!
Grounding is by means of the ground terminals provided for the purpose inside the connection housing. Ensure that the stripped and twisted lengths of cable shield to the ground terminal are as short as possible.

Power consumption

- AC: < 15 VA (incl. sensor)
- DC: < 15 W (incl. sensor)

Switch-on current:
- Max. 3 A (< 5 ms) for 260 V AC
- Max. 13.5 A (< 50 ms) for 24 V DC

Power supply failure

Lasting min. ½ cycle frequency: EEPROM saves measuring system data
- EEPROM or T-DAT (Promag 53 only) retain the measuring system data in the event of a power supply failure
- S-DAT: exchangeable data storage chip which stores the data of the sensor (nominal diameter, serial number, calibration factor, zero point etc.)

Potential equalization

Warning!
The measuring system must be included in the potential equalization.

Perfect measurement is only ensured when the fluid and the sensor have the same electrical potential. This is ensured by the reference electrode integrated in the sensor as standard.

The following should also be taken into consideration for potential equalization:
- Internal grounding concepts in the company
- Operating conditions, such as the material/ grounding of the pipes (see table)

Standard situation

Operating conditions	Potential equalization
When using the measuring device in a: ■ Metal, grounded pipe Potential equalization takes place via the ground terminal of the transmitter. Note! When installing in metal pipes, we recommend you connect the ground terminal of the transmitter housing with the piping.	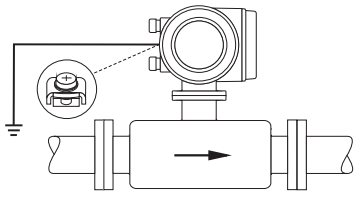 A0011892 Via the ground terminal of the transmitter

Special situations

Operating conditions	Potential equalization
When using the measuring device in a: ■ Metal pipe that is not grounded This connection method also applies in situations where: ■ Customary potential equalization cannot be ensured. ■ Excessively high equalizing currents can be expected. Both sensor flanges are connected to the pipe flange by means of a ground cable (copper wire, at least 6 mm² / 0.0093 in²) and grounded. Connect the transmitter or sensor connection housing, as applicable, to ground potential by means of the ground terminal provided for the purpose. ■ DN ≤ 300 (12"): the ground cable is mounted directly on the conductive flange coating with the flange screws. ■ DN ≥ 350 (14"): the ground cable is mounted directly on the transportation metal support. Note! The ground cable for flange-to-flange connections can be ordered separately as an accessory from Endress+Hauser.	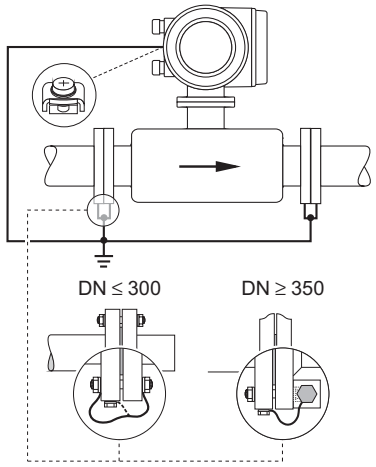 A0011893 Via the ground terminal of the transmitter and the flanges of the pipe
When using the measuring device in a: ■ Plastic pipe ■ Pipe with insulating lining This connection method also applies in situations where: ■ Customary potential equalization cannot be ensured. ■ Excessively high equalizing currents can be expected. Potential equalization takes place using additional ground disks, which are connected to the ground terminal via a ground cable (copper wire, at least 6 mm² / 0.0093 in²). When installing the ground disks, please comply with the enclosed Installation Instructions.	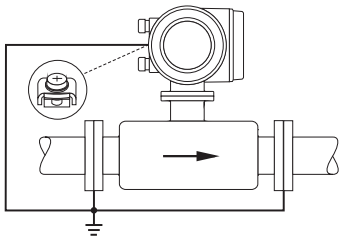 A0011895 Via the ground terminal of the transmitter and the optionally available ground disks

Operating conditions	Potential equalization
When using the measuring device in a: ■ Pipe with a cathodic protection unit The device is installed potential-free in the pipe. Only the two flanges of the pipe are connected with a ground cable (copper wire, at least 6 mm² / 0.0093 in²). Here, the ground cable is mounted directly on the conductive flange coating with flange screws. Note the following when installing: ■ The applicable regulations regarding potential-free installation must be observed. ■ There should be **no** electrically conductive connection between the pipe and the device. ■ The mounting material must withstand the applicable torques.	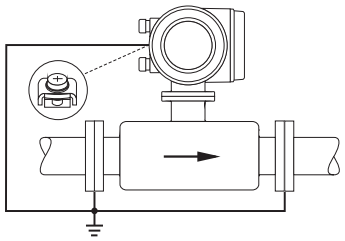 A0011896 Potential equalization and cathodic protection 1 Power supply isolation transformer 2 Electrically isolated

Performance characteristics

Reference operating conditions

As per DIN EN 29104 and VDI/VDE 2641:
- Fluid temperature: +28 °C ± 2 K (+82 °F ± 2 K)
- Ambient temperature: +22 °C ±2 K (+72 °F ± 2 K)
- Warm-up period: 30 minutes

Installation conditions:
- Inlet run > 10 × DN
- Outlet run > 5 × DN
- Sensor and transmitter grounded.
- The sensor is centered in the pipe.

Maximum measured error

Promag 50:
- Current output: also typically ± 5 µA
- Pulse output: ±0.5% o.r. ± 1 mm/s (±0.5% o.r. ± 0.04 in/s)
  optional: ±0.2% o.r. ± 2 mm/s (±0.2% o.r. ± 0.08 in/s) (o.r. = of reading)

Promag 53:
- Current output: also typically ± 5 µA
- Pulse output: ±0.2% o.r. ± 2 mm/s (±0.2% o.r. ± 0.08 in/s) (o.r. = of reading)

Fluctuations in the supply voltage do not have any effect within the specified range.

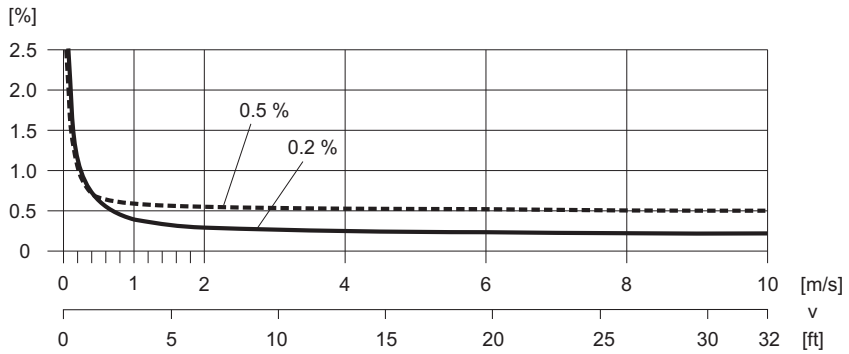

Max. measured error in % of reading

Repeatability

Max. ±0.1% o.r. ± 0.5 mm/s (±0.1% o.r. ± 0.02 in/s) (o.r. = of reading)

Operating conditions: Installations

Installation instructions

Mounting location

Entrained air or gas bubble formation in the measuring tube can result in an increase in measuring errors.
Avoid the following installation locations in the pipe:
- Highest point of a pipeline. Risk of air accumulating!
- Directly upstream from a free pipe outlet in a vertical pipeline.

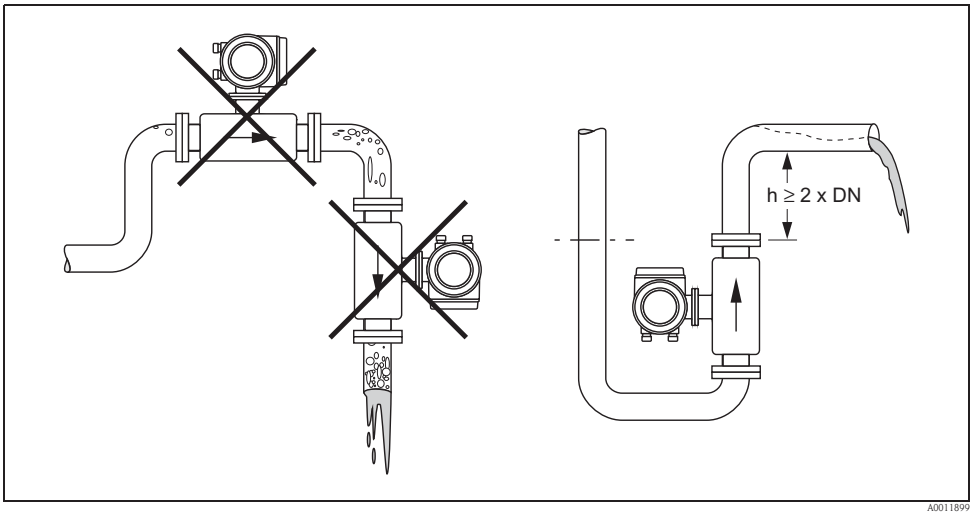

Mounting location

Installation of pumps

Sensors may not be installed on the pump suction side. This precaution is to avoid low pressure and the consequent risk of damage to the lining of the measuring tube. Information on the pressure tightness of the measuring tube lining → 21, Section "Pressure tightness".
Pulsation dampers may be needed when using piston pumps, piston diaphragm pumps or hose pumps. Information on the shock and vibration resistance of the measuring system → 20, Section "Shock and vibration resistance".

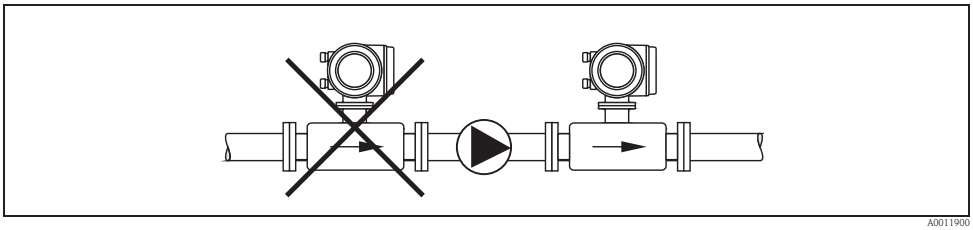

Installation of pumps

Partially filled pipes
Partially filled pipes with gradients necessitate a drain-type configuration.
The empty pipe detection function (EPD) provides additional security in detecting empty or partially filled pipes.

Caution!
Risk of solids accumulating. Do not install the sensor at the lowest point in the drain. It is advisable to install a cleaning valve.

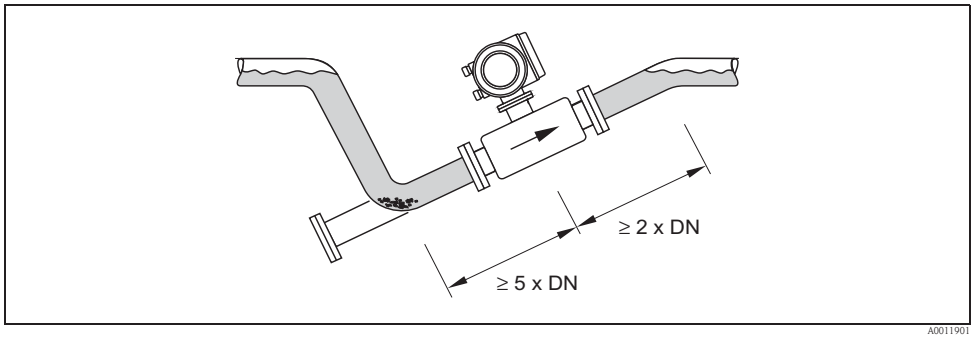

Installation with partially filled pipes

Down pipes
Install a siphon or a vent valve downstream of the sensor in down pipes h ≥ 5 m (16.4 ft). This precaution is to avoid low pressure and the consequent risk of damage to the lining of the measuring tube. This measure also prevents the liquid current stopping in the pipe which could cause air locks. Information on the pressure tightness of the measuring tube lining → 21, Section "Pressure tightness".

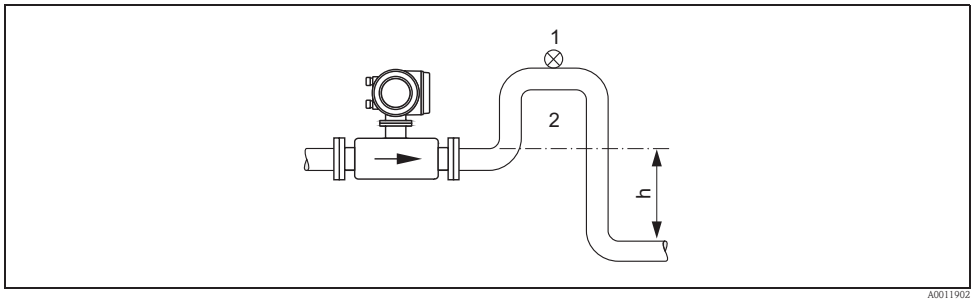

Installation measures for vertical pipes

1 Vent valve
2 Pipe siphon
h Length of the down pipe

Orientation

An optimum orientation helps avoid gas and air accumulations and deposits in the measuring tube. However, the measuring device also offers the additional function of empty pipe detection (EPD) for detecting partially filled measuring tubes or if outgassing fluids or fluctuating operating pressures are present.

Vertical orientation

This is the ideal orientation for self-emptying piping systems and for use in conjunction with empty pipe detection.

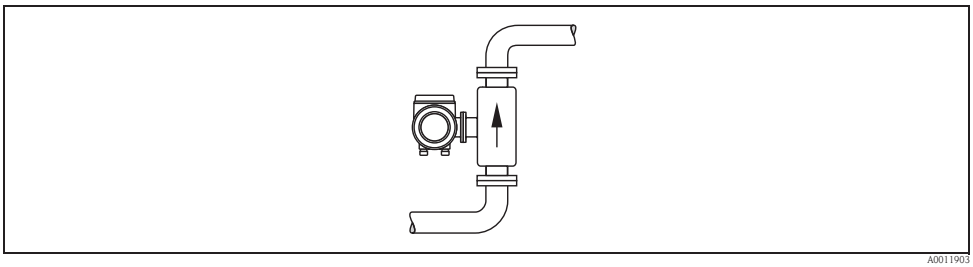

A0011903

Vertical orientation

Horizontal orientation

The measuring electrode axis should be horizontal. This prevents brief insulation of the two measuring electrodes by entrained air bubbles.

Caution!

Empty pipe detection only works correctly with horizontal orientation if the transmitter housing is facing upwards. Otherwise there is no guarantee that empty pipe detection will respond if the measuring tube is only partially filled or empty.

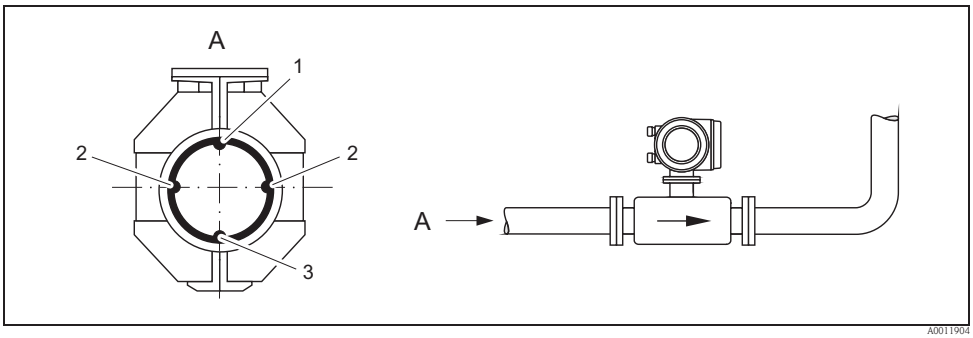

A0011904

Horizontal orientation

1 EPD electrode for empty pipe detection
2 Measuring electrodes for signal detection
3 Reference electrode for potential equalization

Vibrations
Secure the piping and the sensor if vibration is severe.

Caution!
If vibrations are too severe, we recommend the sensor and transmitter be mounted separately. Information on the permitted shock and vibration resistance → 20, Section "Shock and vibration resistance".

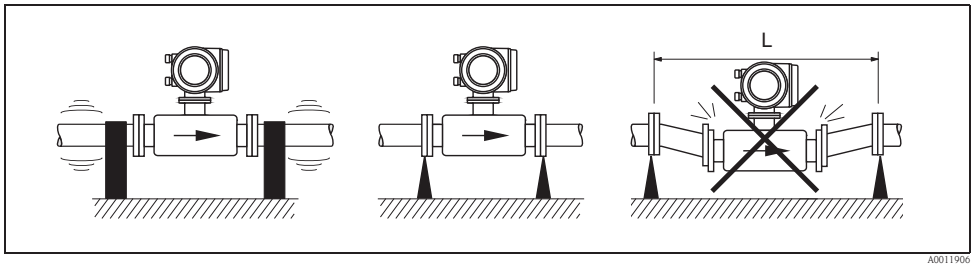

Measures to prevent vibration of the measuring device

L > 10 m (33 ft)

Foundations, supports
If the nominal diameter is DN ≥ 350, mount the transmitter on a foundation of adequate load-bearing strength.

Caution!
Do not allow the casing to take the weight of the sensor. This would buckle the casing and damage the internal magnetic coils.

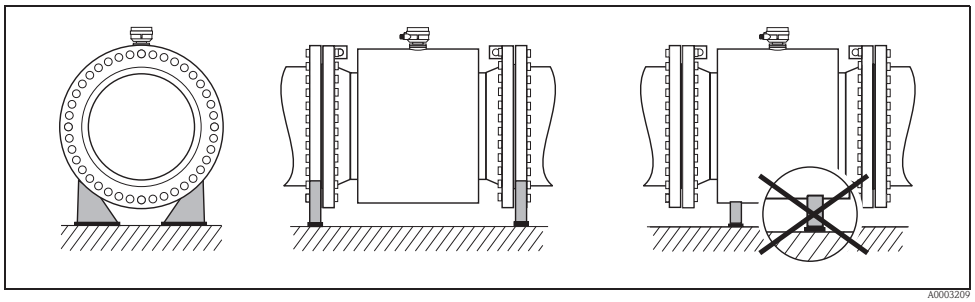

Inlet and outlet run

If possible, install the sensor well clear of assemblies such as valves, T-pieces, elbows etc.

Note the following inlet and outlet runs to comply with measuring accuracy specifications:
- Inlet run: ≥ 5 × DN
- Outlet run: ≥ 2 × DN

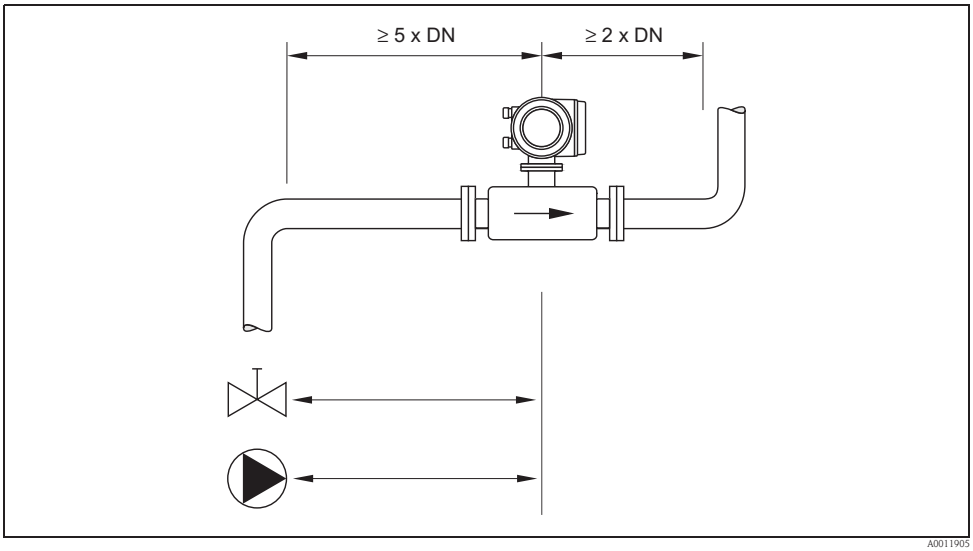

Inlet and outlet run

Adapters

Suitable adapters to DIN EN 545 (double-flange reducers) can be used to install the sensor in larger-diameter pipes. The resultant increase in the rate of flow improves measuring accuracy with very slow-moving fluids. The nomogram shown here can be used to calculate the pressure loss caused by reducers and expanders.

Note!
The nomogram only applies to liquids of viscosity similar to water.

1. Calculate the ratio of the diameters d/D.
2. From the nomogram read off the pressure loss as a function of flow velocity (downstream from the reduction) and the d/D ratio.

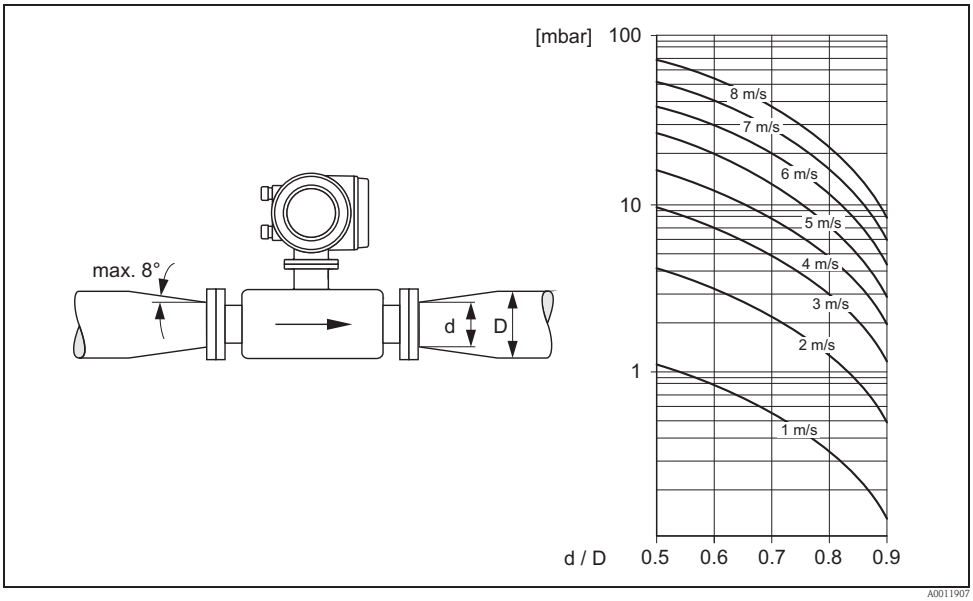

Pressure loss due to adapters

Length of connecting cable

When mounting the remote version, please note the following to achieve correct measuring results:

- Fix cable run or lay in armored conduit. Cable movements can falsify the measuring signal especially in the case of low fluid conductivities.
- Route the cable well clear of electrical machines and switching elements.
- If necessary, ensure potential equalization between sensor and transmitter.
- The permitted cable length L_{max} is determined by the fluid conductivity. A minimum conductivity of 20 µS/cm is required for measuring demineralized water.
- When the empty pipe detection function is switched on (EPD), the maximum connecting cable length is 10 m (33 ft).

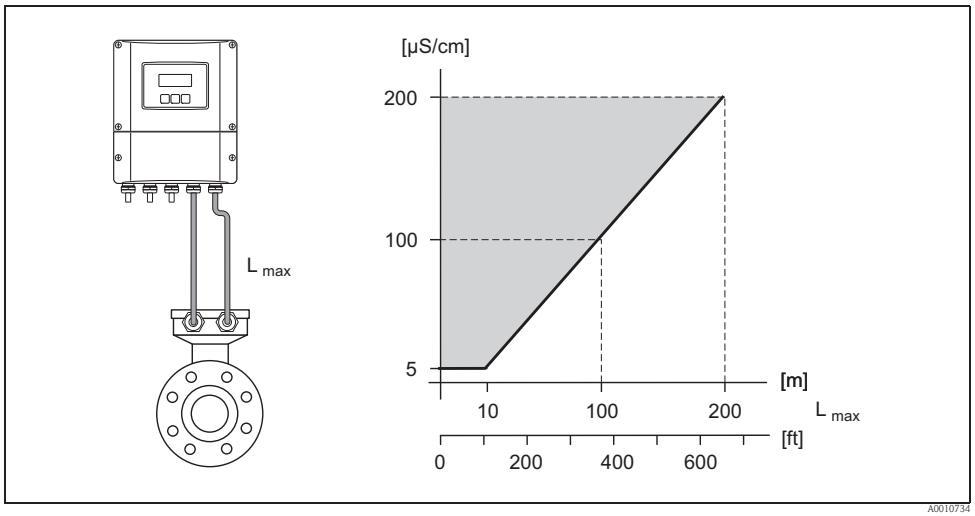

Permitted length of connecting cable for remote version
Area marked in gray = permitted range; L_{max} = length of connecting cable in [m] ([ft]); fluid conductivity in [µS/cm]

Operating conditions: Environment

Ambient temperature range

Transmitter
- Standard: –20 to +60 °C (–4 to +140 °F)
- Optional: –40 to +60 °C (–40 to +140 °F)

Note!
At ambient temperatures below –20 °C (–4 °F)the readability of the display may be impaired.

Sensor
- Flange material carbon steel: –10 to +60 °C (14 to +140 °F)
- Flange material stainless steel: –40 to +60 °C (–40 to +140 °F)

Caution!
The permitted temperature range of the measuring tube lining may not be undershot or overshot
→ 21, Section "Medium temperature range".

Please note the following points:
- Install the device in a shady location. Avoid direct sunlight, particularly in warm climatic regions.
- The transmitter must be mounted separate from the sensor if both the ambient and fluid temperatures are high.

Storage temperature

The storage temperature corresponds to the operating temperature range of the measuring transmitter and the appropriate measuring sensors.

Caution!
- The measuring device must be protected against direct sunlight during storage in order to avoid unacceptably high surface temperatures.
- A storage location must be selected where moisture does not collect in the measuring device. This will help prevent fungus and bacteria infestation which can damage the liner.
- Do not remove the protective plates or caps on the process connections until the device is ready to install.

Degree of protection
- Standard: IP 67 (NEMA 4X) for transmitter and sensor.
- Optional: IP 68 (NEMA 6P) for sensor for remote version.
- For information regarding applications where the device is buried directly in the soil or is installed in a flooded wastewater basin please contact your local Endress+Hauser Sales Center.

Shock and vibration resistance

Acceleration up to 2 g following IEC 600 68-2-6

Electromagnetic compatibility (EMC)
- As per IEC/EN 61326 and NAMUR recommendation NE 21.

Operating conditions: Process

Medium temperature range

The permitted temperature depends on the lining of the measuring tube:
- Polyurethane: –20 to +50 °C (–4 to +122 °F) (DN 25 to 1200 / 1 to 48")
- Hard rubber: ±0 to +80 °C (+32 to +176 °F) (DN 50 to 2000 / 2 to 78")

Conductivity

The minimum conductivity is:
- ≥ 5 µS/cm for fluids generally
- ≥ 20 µS/cm for demineralized water

Note!
In the remote version, the necessary minimum conductivity also depends on the cable length (→ 19, Section "Length of connecting cable").

Medium pressure range (nominal pressure)

- EN 1092-1 (DIN 2501)
  - PN 6 (DN 350 to 2000 / 14 to 78")
  - PN 10 (DN 200 to 2000 / 8 to 78")
  - PN 16 (DN 65 to 2000 / 3 to 78")
  - PN 25 (DN 200 to 1000 / 8 to 40")
  - PN 40 (DN 25 to 150 / 1 to 6")
- ANSI B 16.5
  - Class 150 (DN 1 to 24")
  - Class 300 (DN 1 to 6")
- AWWA
  - Class D (DN 28 to 78")
- JIS B2220
  - 10 K (DN 50 to 300 / 2 to 12")
  - 20 K (DN 25 to 300 / 1 to 12")
- AS 2129
  - Table E (DN 80, 100, 150 to 400, 500, 600 / 3", 4", 6 to 16", 20", 24")
- AS 4087
  - PN 16 (DN 80, 100, 150 to 400, 500, 600 / 3", 4", 6 to 16", 20", 24")

Pressure tightness

Measuring tube lining: Polyurethane

Nominal diameter		Limit values for abs. pressure [mbar] ([psi]) at fluid temperatures:			
		25 °C (77 °F)		50 °C (122 °F)	
[mm]	[inch]	[mbar]	[psi]	[mbar]	[psi]
25 to 1200	1 to 48"	0	0	0	0

Measuring tube lining: Hard rubber

Nominal diameter		Limit values for abs. pressure [mbar] ([psi]) at fluid temperatures:					
		25 °C (77 °F)		50 °C (122 °F)		80 °C (176 °F)	
[mm]	[inch]	[mbar]	[psi]	[mbar]	[psi]	[mbar]	[psi]
50 to 2000	2 to 78"	0	0	0	0	0	0

Limiting flow

The diameter of the pipe and the flow rate determine the nominal diameter of the sensor.
The optimum flow velocity is between 2 to 3 m/s (6.5 to 9.8 ft/s). The velocity of flow (v), moreover, has to be matched to the physical properties of the fluid:

- v < 2 m/s (6.5 ft/s): for abrasive fluids such as potter's clay, lime milk, ore slurry etc.
- v > 2 m/s (6.5 ft/s): for fluids causing build-up such as wastewater sludges etc.

Flow characteristic values (SI units)

Diameter		Recommended flow	Factory settings		
		Min./max. full scale value	Full scale value Current output	Pulse value	Low flow
[mm]	[inch]	(v ~ 0.3 or 10 m/s)	(v ~ 2.5 m/s)	(~ 2 pulses/s)	(v ~ 0.04 m/s)
25	1"	9 to 300 dm³/min	75 dm³/min	0.50 dm³	1 dm³/min
32	–	15 to 500 dm³/min	125 dm³/min	1.00 dm³	2 dm³/min
40	1½"	25 to 700 dm³/min	200 dm³/min	1.50 dm³	3 dm³/min
50	2"	35 to 1100 dm³/min	300 dm³/min	2.50 dm³	5 dm³/min
65	–	60 to 2000 dm³/min	500 dm³/min	5.00 dm³	8 dm³/min
80	3"	90 to 3000 dm³/min	750 dm³/min	5.00 dm³	12 dm³/min
100	4"	145 to 4700 dm³/min	1200 dm³/min	10.00 dm³	20 dm³/min
125	–	220 to 7500 dm³/min	1850 dm³/min	15.00 dm³	30 dm³/min
150	6"	20 to 600 m³/h	150 m³/h	0.025 m³	2.5 m³/h
200	8"	35 to 1100 m³/h	300 m³/h	0.05 m³	5.0 m³/h
250	10"	55 to 1700 m³/h	500 m³/h	0.05 m³	7.5 m³/h
300	12"	80 to 2400 m³/h	750 m³/h	0.10 m³	10 m³/h
350	14"	110 to 3300 m³/h	1000 m³/h	0.10 m³	15 m³/h
375	15"	140 to 4200 m³/h	1200 m³/h	0.15 m³	20 m³/h
400	16"	140 to 4200 m³/h	1200 m³/h	0.15 m³	20 m³/h
450	18"	180 to 5400 m³/h	1500 m³/h	0.25 m³	25 m³/h
500	20"	220 to 6600 m³/h	2000 m³/h	0.25 m³	30 m³/h
600	24"	310 to 9600 m³/h	2500 m³/h	0.30 m³	40 m³/h
700	28"	420 to 13500 m³/h	3500 m³/h	0.50 m³	50 m³/h
–	30"	480 to 15000 m³/h	4000 m³/h	0.50 m³	60 m³/h
800	32"	550 to 18000 m³/h	4500 m³/h	0.75 m³	75 m³/h
900	36"	690 to 22500 m³/h	6000 m³/h	0.75 m³	100 m³/h
1000	40"	850 to 28000 m³/h	7000 m³/h	1.00 m³	125 m³/h
–	42"	950 to 30000 m³/h	8000 m³/h	1.00 m³	125 m³/h
1200	48"	1250 to 40000 m³/h	10000 m³/h	1.50 m³	150 m³/h
–	54"	1550 to 50000 m³/h	13000 m³/h	1.50 m³	200 m³/h
1400	–	1700 to 55000 m³/h	14000 m³/h	2.00 m³	225 m³/h
–	60"	1950 to 60000 m³/h	16000 m³/h	2.00 m³	250 m³/h
1600	–	2200 to 70000 m³/h	18000 m³/h	2.50 m³	300 m³/h
–	66"	2500 to 80000 m³/h	20500 m³/h	2.50 m³	325 m³/h
1800	72"	2800 to 90000 m³/h	23000 m³/h	3.00 m³	350 m³/h
–	78"	3300 to 100000 m³/h	28500 m³/h	3.50 m³	450 m³/h
2000	–	3400 to 110000 m³/h	28500 m³/h	3.50 m³	450 m³/h

Flow characteristic values (US units)					
Diameter		**Recommended flow rate**	**Factory settings**		
[inch]	[mm]	Min./max. full scale value (v ~ 0.3 or 10 m/s)	Full scale value Current output (v ~ 2.5 m/s)	Pulse value (~ 2 pulses/s)	Low flow (v ~ 0.04 m/s)
1"	25	2.5 to 80 gal/min	18 gal/min	0.20 gal	0.25 gal/min
–	32	4 to 130 gal/min	30 gal/min	0.20 gal	0.50 gal/min
1½"	40	7 to 190 gal/min	50 gal/min	0.50 gal	0.75 gal/min
2"	50	10 to 300 gal/min	75 gal/min	0.50 gal	1.25 gal/min
–	65	16 to 500 gal/min	130 gal/min	1 gal	2.0 gal/min
3"	80	24 to 800 gal/min	200 gal/min	2 gal	2.5 gal/min
4"	100	40 to 1250 gal/min	300 gal/min	2 gal	4.0 gal/min
–	125	60 to 1950 gal/min	450 gal/min	5 gal	7.0 gal/min
6"	150	90 to 2650 gal/min	600 gal/min	5 gal	12 gal/min
8"	200	155 to 4850 gal/min	1200 gal/min	10 gal	15 gal/min
10"	250	250 to 7500 gal/min	1500 gal/min	15 gal	30 gal/min
12"	300	350 to 10600 gal/min	2400 gal/min	25 gal	45 gal/min
14"	350	500 to 15000 gal/min	3600 gal/min	30 gal	60 gal/min
15"	375	600 to 19000 gal/min	4800 gal/min	50 gal	60 gal/min
16"	400	600 to 19000 gal/min	4800 gal/min	50 gal	60 gal/min
18"	450	800 to 24000 gal/min	6000 gal/min	50 gal	90 gal/min
20"	500	1000 to 30000 gal/min	7500 gal/min	75 gal	120 gal/min
24"	600	1400 to 44000 gal/min	10500 gal/min	100 gal	180 gal/min
28"	700	1900 to 60000 gal/min	13500 gal/min	125 gal	210 gal/min
30"	–	2150 to 67000 gal/min	16500 gal/min	150 gal	270 gal/min
32"	800	2450 to 80000 gal/min	19500 gal/min	200 gal	300 gal/min
36"	900	3100 to 100000 gal/min	24000 gal/min	225 gal	360 gal/min
40"	1000	3800 to 125000 gal/min	30000 gal/min	250 gal	480 gal/min
42"	–	4200 to 135000 gal/min	33000 gal/min	250 gal	600 gal/min
48"	1200	5500 to 175000 gal/min	42000 gal/min	400 gal	600 gal/min
54"	–	9 to 300 Mgal/min	75 Mgal/min	0.0005 Mgal	1.3 Mgal/min
–	1400	10 to 340 Mgal/min	85 Mgal/min	0.0005 Mgal	1.3 Mgal/min
60"	–	12 to 380 Mgal/min	95 Mgal/min	0.0005 Mgal	1.3 Mgal/min
–	1600	13 to 450 Mgal/min	110 Mgal/min	0.0008 Mgal	1.7 Mgal/min
66"	–	14 to 500 Mgal/min	120 Mgal/min	0.0008 Mgal	2.2 Mgal/min
72"	1800	16 to 570 Mgal/min	140 Mgal/min	0.0008 Mgal	2.6 Mgal/min
78"	–	18 to 650 Mgal/min	175 Mgal/min	0.001 Mgal	3.0 Mgal/min
–	2000	20 to 700 Mgal/min	175 Mgal/min	0.001 Mgal	3.0 Mgal/min

Pressure loss

- No pressure loss if the sensor is installed in a pipe with the same nominal diameter.
- Pressure losses for configurations incorporating adapters according to DIN EN 545 (→ 18, Section "Adapters").

Mechanical construction

Design, dimensions

Transmitter remote version, wall-mount housing (non Ex-zone and II3G/Zone 2)

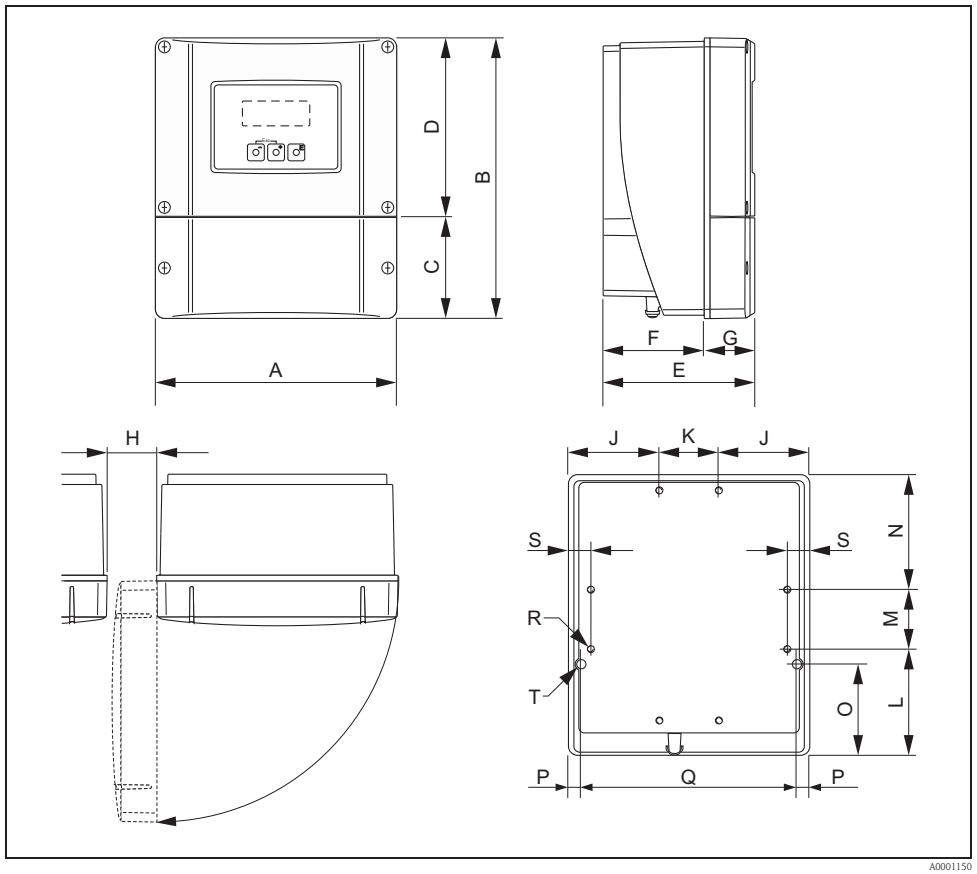

Dimensions (SI units)

A	B	C	D	E	F	G	H	J
215	250	90.5	159.5	135	90	45	> 50	81
K	L	M	N	O	P	Q	R	S
53	95	53	102	81.5	11.5	192	8 × M5	20

All dimensions in [mm]

Dimensions (US units)

A	B	C	D	E	F	G	H	J
8.46	9.84	3.56	6.27	5.31	3.54	1.77	> 1.97	3.18
K	L	M	N	O	P	Q	R	S
2.08	3.74	2.08	4.01	3.20	0.45	7.55	8 × M5	0.79

All dimensions in [inch]

Transmitter remote version, connection housing (II2GD/Zone 1)

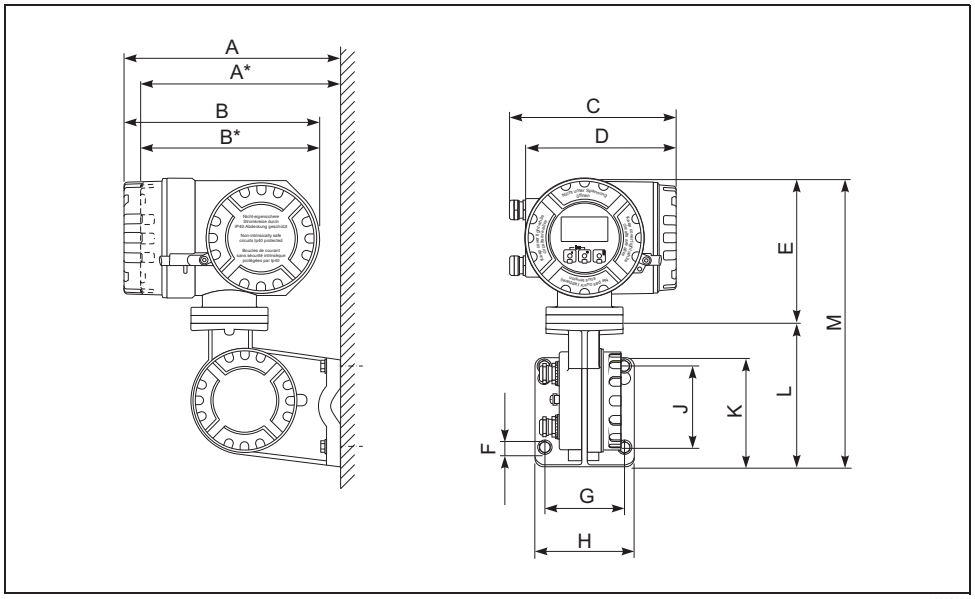

Dimensions (SI units)

A	A*	B	B*	C	D	E	Ø F	G	H	J	K	L	M
265	242	240	217	206	186	178	8.6 (M8)	100	130	100	144	170	355

All dimensions in [mm]

Dimensions (US units)

A	A*	B	B*	C	D	E	Ø F	G	H	J	K	L	M
10.4	9.53	9.45	8.54	8.11	7.32	7.01	0.34 (M8)	3.94	5.12	3.94	5.67	6.69	14.0

All dimensions in [inch]

There is a separate mounting kit for the wall-mounted housing. It can be ordered from Endress+Hauser as an accessory. The following installation variants are possible:
- Panel-mounted installation
- Pipe mounting

Installation in control panel

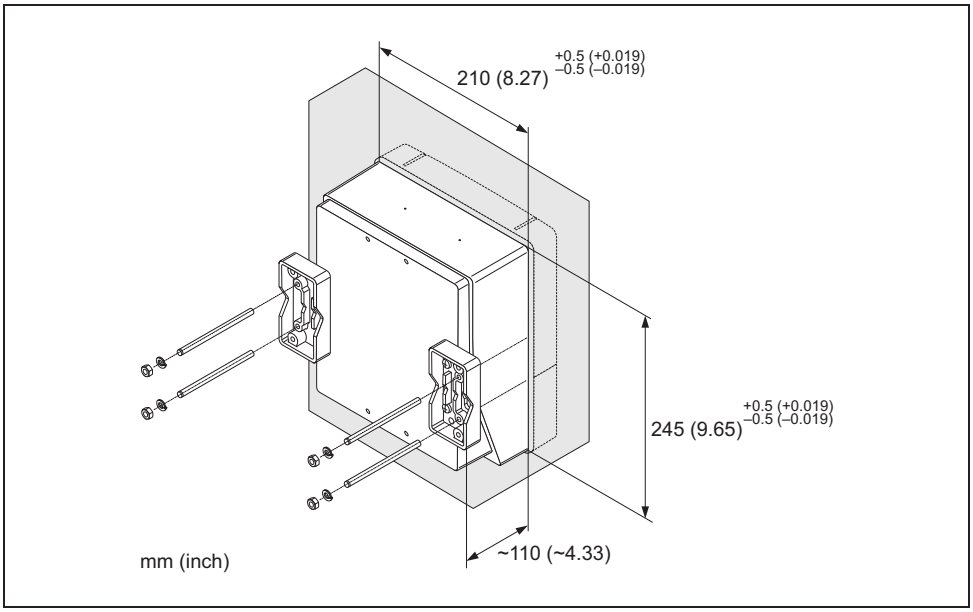

A0001131

Pipe mounting

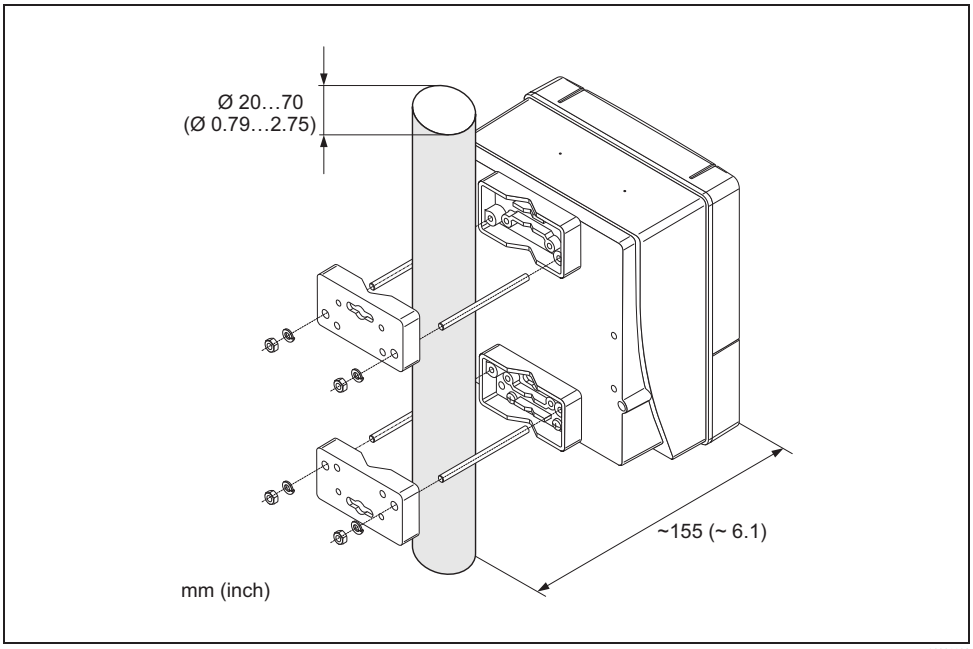

A0001132

Compact version DN ≤ 300 (12")

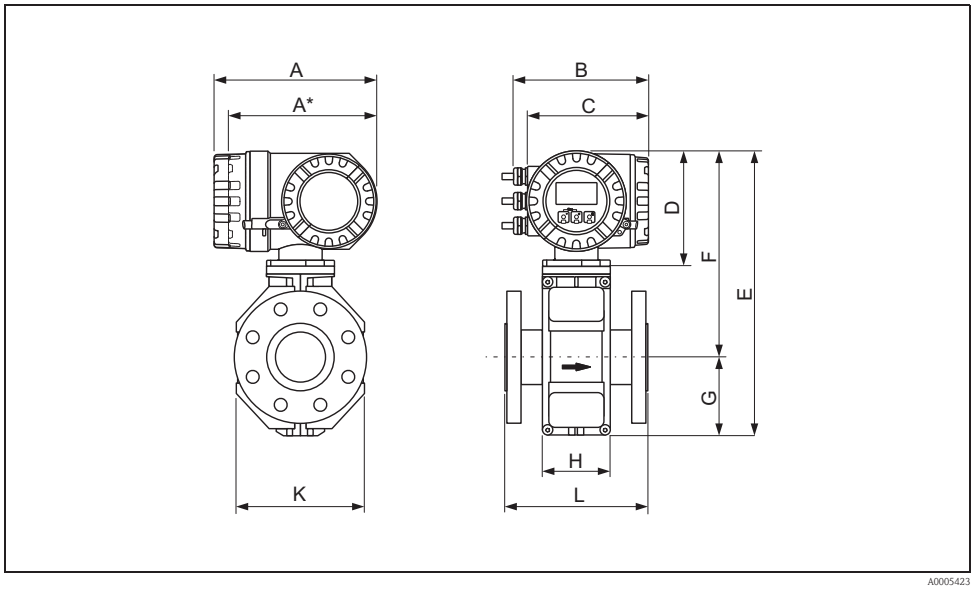

Dimensions (SI units)

DN EN (DIN) / JIS / AS [2]	L [1]	A	A*	B	C	D	E	F	G	H	K
25	200	227	207	187	168	160	341	257	84	94	120
32	200						341	257	84	94	120
40	200						341	257	84	94	120
50	200						341	257	84	94	120
65	200						391	282	109	94	180
80	200						391	282	109	94	180
100	250						391	282	109	94	180
125	250						472	322	150	140	260
150	300						472	322	150	140	260
200	350						527	347	180	156	324
250	450						577	372	205	166	400
300	500						627	397	230	166	460

[1] The length is regardless of the pressure rating selected. Fitting length to DVGW.
[2] For flanges to AS, only the nominal diameters DN 80, 100 and 150 to 300 are available.
All dimensions in [mm]

Dimensions (US units)

DN ANSI	L [1]	A	A*	B	C	D	E	F	G	H	K
1"	7.87						13.4	10.1	3.31	3.70	4.72
1½"	7.87						13.4	10.1	3.31	3.70	4.72
2"	7.87						13.4	10.1	3.31	3.70	4.72
3"	7.87						15.4	11.1	4.29	3.70	7.09
4"	9.84	8.94	8.15	7.36	6.61	6.30	15.4	11.1	4.29	3.70	7.09
6"	11.8						18.6	12.7	5.91	5.51	10.2
8"	13.8						20.8	13.7	7.09	6.14	12.8
10"	17.7						22.7	14.7	8.07	6.14	15.8
12"	19.7						24.7	15.6	9.06	6.54	18.1

[1] The length is regardless of the pressure rating selected. Fitting length to DVGW.
All dimensions in [inch]

Compact version DN ≥ 350 (14")

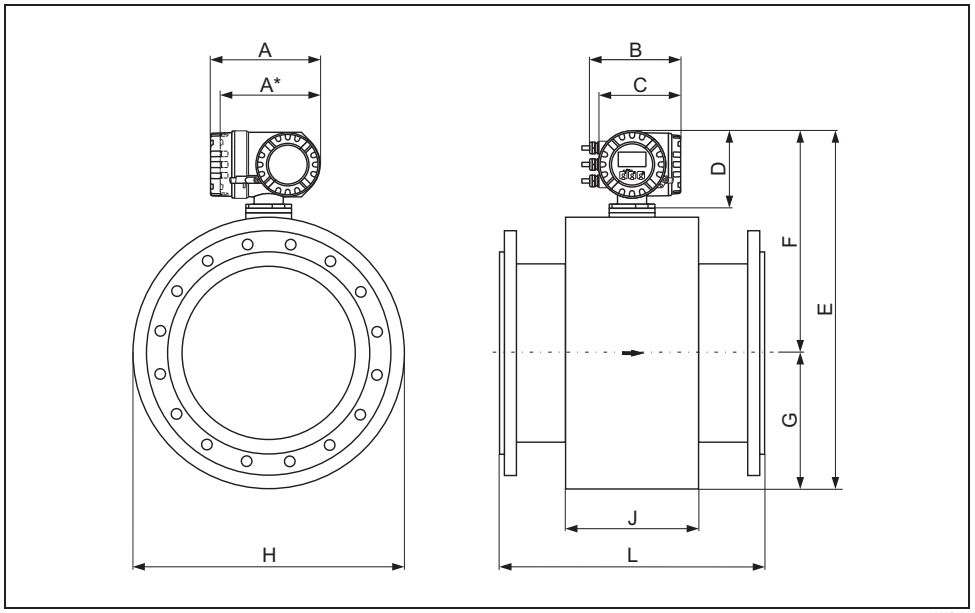

Dimensions (SI units)

DN EN (DIN) / AS [2]	L [1]	A	A*	B	C	D	E	F	G	H	J
350	550	227	207	187	168	160	738.5	456.5	282.0	276	564
375	600						790.5	482.5	308.0	276	616
400	600						790.5	482.5	308.0	276	616
450	650						840.5	507.5	333.0	292	666
500	650						891.5	533.0	358.5	292	717
600	780						995.5	585.0	410.5	402	821
700	910						1198.5	686.5	512.0	589	1024
750	975						1198.5	686.5	512.0	626	1024
800	1040						1241.5	708.5	533.5	647	1067
900	1170						1394.5	784.5	610.0	785	1220
1000	1300						1546.5	860.5	686.0	862	1372
1050	1365						1598.5	886.5	712.0	912	1424
1200	1560						1796.5	985.5	811.0	992	1622
1350	1755						1998.5	1086.5	912.0	1252	1824
1400	1820						2148.5	1161.5	987.0	1252	1974
1500	1950						2196.5	1185.5	1011.0	1392	2022
1600	2080						2286.5	1230.5	1056.0	1482	2112
1650	2145						2360.5	1267.5	1093.0	1482	2186
1800	2340						2550.5	1362.5	1188.0	1632	2376
2000	2600						2650.5	1412.5	1238.0	1732	2476

[1] The length is regardless of the pressure rating selected. Fitting length to DVGW.
[2] For flanges to AS, only DN 350, 400, 500 and 600 are available.
All dimensions in [mm]

Dimensions (US units)

DN ANSI / AWWA [2]	L [1]	A	A*	B	C	D	E	F	G	H	J
14"	21.6	8.94	8.15	7.36	6.61	6.30	29.1	17.9	11.1	10.9	22.2
15"	23.6						31.1	18.9	12.1	10.9	24.2
16"	23.6						31.1	18.9	12.1	10.9	24.2
18"	25.6						33.1	19.9	13.1	11.5	26.2
20"	25.6						35.1	20.9	14.1	11.5	28.2
24"	30.7						39.2	23.0	16.2	15.8	32.3
28"	35.8						47.2	27.0	20.1	23.2	40.3
30"	38.4						47.2	27.0	20.1	24.6	40.3
32"	40.9						48.9	27.9	21.0	25.5	42.0
36"	46.0						54.9	30.9	24.0	30.9	48.0
40"	51.2						60.9	33.9	27.0	33.9	54.0
42"	53.7						62.9	34.9	28.0	35.9	56.0
48"	61.4						71.7	38.8	31.9	39.0	63.8
54"	69.1						78.7	42.8	35.9	42.3	71.8
56"	71.7						84.6	45.7	38.9	49.3	77.7
60"	76.8						86.5	46.7	39.8	54.8	79.6
64"	81.9						90.0	48.4	41.6	58.4	83.2
66"	84.4						92.9	49.9	43.0	58.4	86.0
72"	92.1						100.4	53.6	46.8	64.2	93.5
78"	102.3						104.3	55.6	48.7	68.2	97.5

[1] The length is regardless of the pressure rating selected. Fitting length to DVGW.
[2] Flanges ≤ 24" only to ANSI available, ≥ 28" only to AWWA available.
All dimensions in [inch]

Sensor, remote version DN ≤ 300 (12")

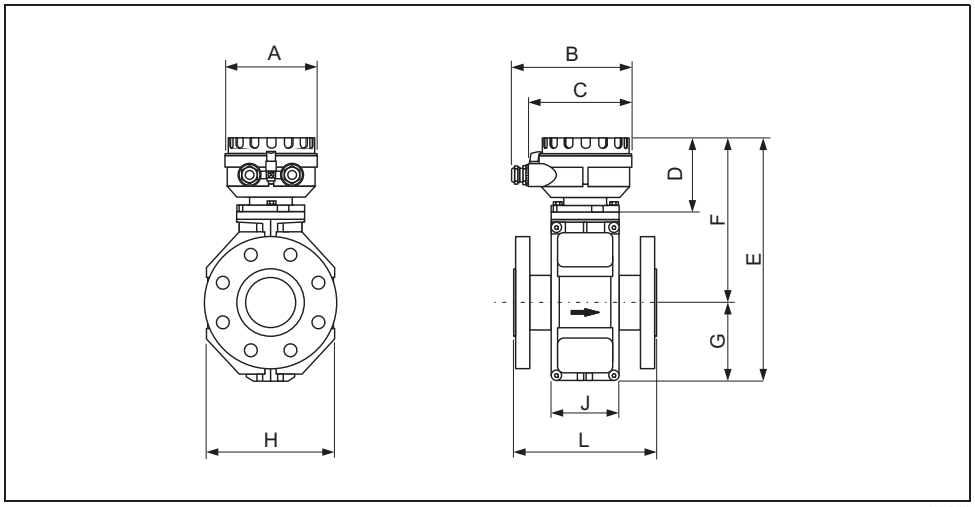

A0012462

Dimensions (SI units)

DN EN (DIN) / JIS / AS [2]	L [1]	A	B	C	D	E	F	G	H	J
25	200	129	163	143	102	286	202	84	120	94
32	200	129	163	143	102	286	202	84	120	94
40	200	129	163	143	102	286	202	84	120	94
50	200	129	163	143	102	286	202	84	120	94
65	200	129	163	143	102	336	227	109	180	94
80	200	129	163	143	102	336	227	109	180	94
100	250	129	163	143	102	336	227	109	180	94
125	250	129	163	143	102	417	267	150	260	140
150	300	129	163	143	102	417	267	150	260	140
200	350	129	163	143	102	472	292	180	324	156
250	450	129	163	143	102	522	317	205	400	166
300	500	129	163	143	102	572	342	230	460	166

[1] The length is regardless of the pressure rating selected. Fitting length to DVGW.
[2] For flanges to AS, only the nominal diameters DN 80, 100 and 150 to 300 are available.
All dimensions in [mm]

Dimensions (US units)

DN ANSI	L [1]	A	B	C	D	E	F	G	H	J
1"	7.87	5.08	6.42	5.63	4.02	11.3	7.95	3.32	4.72	3.70
1½"	7.87	5.08	6.42	5.63	4.02	11.3	7.95	3.32	4.72	3.70
2"	7.87	5.08	6.42	5.63	4.02	11.3	7.95	3.32	4.72	3.70
3"	7.87	5.08	6.42	5.63	4.02	13.2	8.94	4.30	7.10	3.70
4"	9.84	5.08	6.42	5.63	4.02	13.2	8.94	4.30	7.10	3.70
6"	11.8	5.08	6.42	5.63	4.02	16.4	10.5	5.91	10.2	5.51
8"	13.8	5.08	6.42	5.63	4.02	18.6	11.5	7.10	12.8	6.14
10"	17.7	5.08	6.42	5.63	4.02	20.6	12.5	8.08	15.8	6.14
12"	19.7	5.08	6.42	5.63	4.02	22.5	13.5	9.06	18.1	6.54

[1] The length is regardless of the pressure rating selected. Fitting length to DVGW.
All dimensions in [inch]

Sensor, remote version DN ≥ 350 (14")

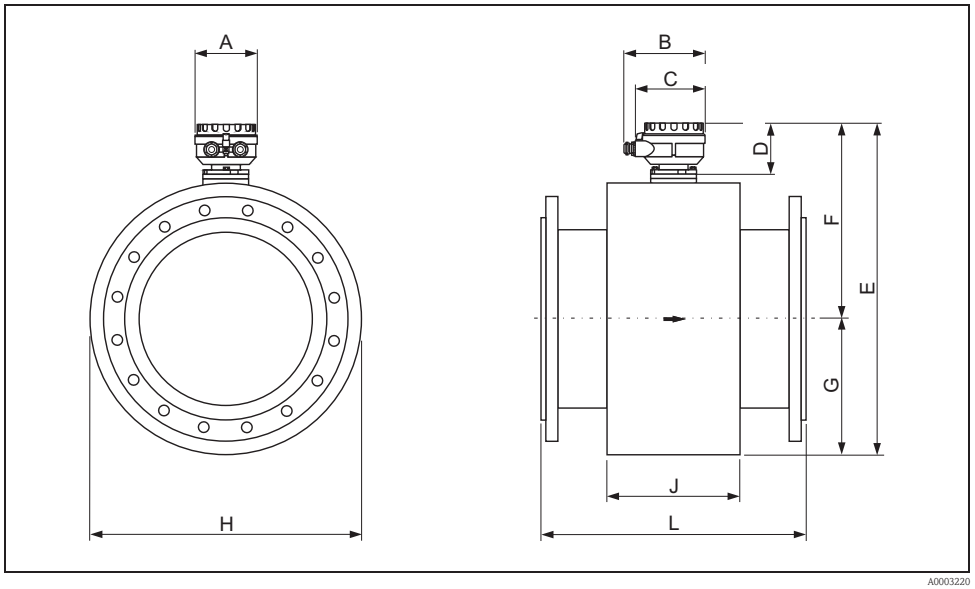

Dimensions (SI units)

DN EN (DIN) / AS [2]	L [1]	A	B	C	D	E	F	G	H	J
350	550	129	163	143	102	683.5	401.5	282.0	564	276
375	600					735.5	427.5	308.0	616	276
400	600					735.5	427.5	308.0	616	276
450	650					785.5	452.5	333.0	666	292
500	650					836.5	478.0	358.5	717	292
600	780					940.5	530.0	410.5	821	402
700	910					1143.5	631.5	512.0	1024	589
750	975					1143.5	631.5	512.0	1024	626
800	1040					1186.5	653.0	533.5	1067	647
900	1170					1339.5	729.5	610.0	1220	785
1000	1300					1491.5	805.5	686.0	1372	862
1050	1365					1543.5	831.5	712.0	1424	912
1200	1560					1741.5	930.5	811.0	1622	992
1350	1755					1943.5	1031.5	912.0	1824	1252
1400	1820					2093.5	1106.5	987.0	1974	1252
1500	1950					2141.5	1130.5	1011.0	2022	1392
1600	2080					2231.5	1175.5	1056.0	2112	1482
1650	2145					2305.5	1212.5	1093.0	2186	1482
1800	2340					2495.5	1307.5	1188.0	2376	1632
2000	2600					2595.5	1357.5	1238.0	2476	1732

[1] The length is regardless of the pressure rating selected. Fitting length to DVGW.
[2] For flanges to AS, only DN 350, 400, 500 and 600 are available.
All dimensions in [mm]

Dimensions (US units)

DN ANSI / AWWA [2]	L [1]	A	B	C	D	E	F	G	H	J
14"	21.6	5.08	6.42	5.63	4.02	29.1	15.8	11.1	22.2	10.9
15"	23.6					31.1	16.8	12.1	24.2	10.9
16"	23.6					31.1	16.8	12.1	24.2	10.9
18"	25.6					33.1	17.8	13.1	26.2	11.5
20"	25.6					35.1	18.8	14.1	28.2	11.5
24"	30.7					39.2	20.9	16.2	32.3	15.8
28"	35.8					45.0	24.9	20.1	40.3	23.2
30"	38.4					45.0	24.9	20.1	40.3	24.6
32"	40.9					46.7	25.7	21.0	42.0	25.5
36"	46.0					52.7	28.7	24.0	48.0	30.9
40"	51.2					58.7	31.7	27.0	54.0	33.9
42"	53.7					60.7	32.7	28.0	56.0	35.9
48"	61.4					68.5	36.6	31.9	63.8	39.0
54"	69.1					76.5	40.6	35.9	71.8	42.3
56"	71.7					82.4	43.6	38.9	77.7	49.3
60"	76.8					84.3	44.5	39.8	79.6	54.8
64"	81.9					87.9	46.3	41.6	83.2	58.4
66"	84.4					90.8	47.7	43.0	86.0	58.4
72"	92.1					98.2	51.5	46.8	93.5	64.2
78"	102.3					102.2	53.4	48.7	97.5	68.2

[1] The length is regardless of the pressure rating selected. Fitting length to DVGW.
[2] Flanges ≤ 24" only to ANSI available, ≥ 28" only to AWWA available.
All dimensions in [inch]

Ground disk for flange connections

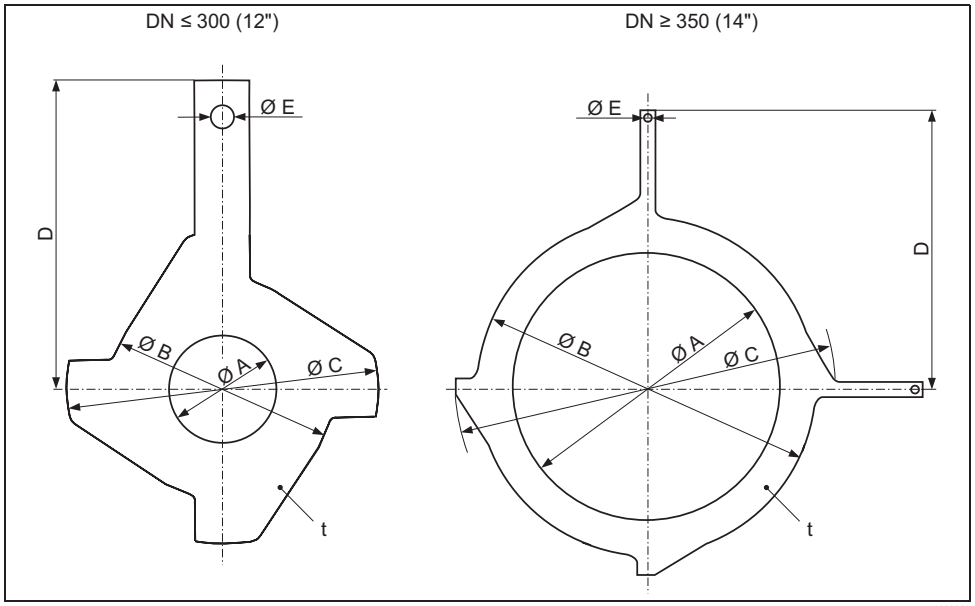

Dimensions (SI units)

DN [1] EN (DIN) / JIS / AS [2]	A	B	C	D	E	t
25	26	62	77.5	87.5	6.5	2
32	35	80	87.5	94.5		
40	41	82	101	103		
50	52	101	115.5	108		
65	68	121	131.5	118		
80	80	131	154.5	135		
100	104	156	186.5	153		
125	130	187	206.5	160		
150	158	217	256	184		
200	206	267	288	205		
250	260	328	359	240		
300 [3]	312	375	413	273		
300 [4]	310	375	404	268		
350 [3]	343	433	479	365	9.0	
375 [3]	393	480	542	395		
400 [3]	393	480	542	395		
450 [3]	439	538	583	417		
500 [3]	493	592	650	460		
600 [3]	593	693	766	522		

[1] Ground disks can be used for all flange standards/pressure ratings that can be delivered, except for DN ≥ 300.
[2] Only DN 32, 40, 65 and 125 are available for flanges according to AS.
[3] PN 10/16
[4] PN 25, JIS 10K/20K
All dimensions in [mm]

Dimensions (US units)

DN [1] ANSI	A	B	C	D	E	t
1"	1.02	2.44	3.05	3.44	0.26	0.08
1½"	1.61	3.23	3.98	4.06		
2"	2.05	3.98	4.55	4.25		
3"	3.15	5.16	6.08	5.31		
4"	4.09	6.14	7.34	6.02		
6"	6.22	8.54	10.08	7.24		
8"	8.11	10.5	11.3	8.07		
10"	10.2	12.9	14.1	9.45		
12"	12.3	14.8	16.3	10.8		
14"	13.5	17.1	18.9	14.4	0.35	
15"	15.45	18.9	21.3	15.6		
16"	15.45	18.9	21.3	15.6		
18"	17.3	21.2	23.0	16.4		
20"	19.4	23.3	25.6	18.1		
24"	23.4	27.3	30.1	20.6		

[1] Ground disks can be used for all flange standards/pressure ratings.
All dimensions in [inch]

Weight

Weight in SI units

Weight data in kg

Nominal diameter		Compact version						Remote version (without cable)						
								Sensor						Transmitter
[mm]	[inch]	EN (DIN) / AS [1]		JIS		ANSI / AWWA		EN (DIN) / AS [1]		JIS		ANSI / AWWA		Wall-mount housing
25	1"	PN 40	7.3	10K	7.3	Class 150	7.3	PN 40	5.3	10K	5.3	Class 150	5.3	6.0
32	–		8.0		7.3		–		6.0		5.3		–	
40	1½"		9.4		8.3		9.4		7.4		6.3		7.4	
50	2"		10.6		9.3		10.6		8.6		7.3		8.6	
65	–	PN 16	12		11.1		–	PN 16	10.0		9.1		–	
80	3"		14		112.5		14.0		12.0		10.5		12.0	
100	4"		16		14.7		16.0		14.0		12.7		14.0	
125	–		21.5		21.0		–		19.5		19.0		–	
150	6"		25.5		24.5		25.5		23.5		22.5		23.5	
200	8"	PN 10	45		41.9		45	PN 10	43		39.9		43	
250	10"		65		69.4		75		63		67.4		73	
300	12"		70		72.3		110		68		70.3		108	
350	14"	PN 6	105				175	PN 6	103				173	
375	15"		120				–		118				–	
400	16"		120				205		118				203	
450	18"		161				255		159				253	
500	20"		156				285		154				283	
600	24"		208				405		206				403	
700	28"		304			Class D	400		302			Class D	398	
–	30"		–				460		–				458	
800	32"		357				550		355				548	
900	36"		485				800		483				798	
1000	40"		589				900		587				898	
–	42"		–				1100		–				1098	
1200	48"		850				1400		848				1398	
–	54"		–				2200		–				2198	
1400	–		1300				–		1298				–	
–	60"		–				2700		–				2698	
1600	–		1700				–		1698				–	
–	66"		–				3700		–				3698	
1800	72"		2200				4100		2198				4098	
–	78"		–				4600		–				4598	
2000	–		2800				–		2798				–	

[1] For flanges to AS, only DN 80, 100, 150 to 400, 500 and 600 are available.

- Transmitter (compact version): 3.4 kg
- Weight data valid for standard pressure ratings and without packaging material.

Weight in US units (only ANSI / AWWA)

Weight data in lbs						
Nominal diameter		Compact version		Remote version (without cable)		
				Sensor		Transmitter
[mm]	[inch]		ANSI /AWWA		ANSI / AWWA	Wall-mount housing
25	1"	Class 150	16.1	Class 150	11.7	13.2
40	1½"		20.7		16.3	
50	2"		23.4		19.0	
80	3"		30.9		26.5	
100	4"		35.3		30.9	
150	6"		56.2		51.8	
200	8"		99.2		94.8	
250	10"		165.4		161.0	
300	12"		242.6		238.1	
350	14"		385.9		381.5	
400	16"		452.0		447.6	
450	18"		562.3		557.9	
500	20"		628.4		624.0	
600	24"		893.0		888.6	
700	28"	Class D	882.0	Class D	877.6	
–	30"		1014.3		1009.9	
800	32"		1212.8		1208.3	
900	36"		1764.0		1759.6	
1000	40"		1984.5		1980.1	
–	42"		2425.5		2421.1	
1200	48"		3087.0		3082.6	
–	54"		4851.0		4846.6	
–	60"		5953.5		5949.1	
–	66"		8158.5		8154.1	
1800	72"		9040.5		9036.1	
–	78"		10143.0		10138.6	

- Transmitter (compact version): 7.5 lbs
- Weight data valid for standard pressure ratings and without packaging material.

Measuring tube specifications

Diameter		Pressure rating						Internal diameter			
		EN (DIN)	AS 2129	AS 4087	ANSI	AWWA	JIS	Hard rubber		Polyurethane	
[mm]	[inch]	[bar]			[lbs]			[mm]	[inch]	[mm]	[inch]
25	1"	PN 40	–	–	Cl. 150	–	20 K	–	–	24	0.94
32	–	PN 40	–	–	–	–	20 K	–	–	32	1.26
40	1½"	PN 40	–	–	Cl. 150	–	20 K	–	–	38	1.50
50	2"	PN 40	Table E	PN 16	Cl. 150	–	10 K	50	1.97	50	1.97
65	–	PN 16	–	–	–	–	10 K	66	2.60	66	2.60
80	3"	PN 16	Table E	PN 16	Cl. 150	–	10 K	79	3.11	79	3.11
100	4"	PN 16	Table E	PN 16	Cl. 150	–	10 K	102	4.02	102	4.02
125	–	PN 16	–	–	–	–	10 K	127	5.00	127	5.00
150	6"	PN 16	Table E	PN 16	Cl. 150	–	10 K	156	6.14	156	6.14
200	8"	PN 10	Table E	PN 16	Cl. 150	–	10 K	204	8.03	204	8.03
250	10"	PN 10	Table E	PN 16	Cl. 150	–	10 K	258	10.2	258	10.2
300	12"	PN 10	Table E	PN 16	Cl. 150	–	10 K	309	12.2	309	12.2
350	14"	PN 6	Table E	PN 16	Cl. 150	–	–	342	13.5	342	13.5
375	15"	–	–	PN 16	–	–	–	392	15.4	–	–
400	16"	PN 6	Table E	PN 16	Cl. 150	–	–	392	15.4	392	15.4
450	18"	PN 6	–	–	Cl. 150	–	–	437	17.2	437	17.2
500	20"	PN 6	Table E	PN 16	Cl. 150	–	–	492	19.4	492	19.4
600	24"	PN 6	Table E	PN 16	Cl. 150	–	–	594	23.4	594	23.4
700	28"	PN 6	–	–	–	Class D	–	692	27.2	692	27.2
–	30"	–	–	–	–	Class D	–	742	29.2	742	29.2
800	32"	PN 6	–	–	–	Class D	–	794	31.3	794	31.3
900	36"	PN 6	–	–	–	Class D	–	891	35.1	891	35.1
1000	40"	PN 6	–	–	–	Class D	–	994	39.1	994	39.1
–	42"	–	–	–	–	Class D	–	1043	41.1	1043	41.1
1200	48"	PN 6	–	–	–	Class D	–	1197	47.1	1197	47.1
–	54"		–	–	–	Class D	–	1339	52.7	–	–
1400	–	PN 6	–	–	–	–	–	1402	55.2	–	–
–	60"	–	–	–	–	Class D	–	1492	58.7	–	–
1600	–	PN 6	–	–	–	–	–	1600	63.0	–	–
–	66"	–	–	–	–	Class D	–	1638	64.5	–	–
1800	72"	PN 6	–	–	–	Class D	–	1786	70.3	–	–
2000	78"	PN 6	–	–	–	Class D	–	1989	78.3	–	–

Material

- Transmitter housing
  - Compact housing: powder-coated die-cast aluminum
  - Wall-mount housing: powder-coated die-cast aluminum
- Sensor housing
  - DN 25 to 300 (1 to 12"): powder-coated die-cast aluminum
  - DN 350 to 2000 (14 to 78"): with protective lacquering
- Measuring tube
  - DN ≤ 300 (12"): stainless steel 1.4301 or 1.4306/304L; (for flanges made of carbon steel with Al/Zn protective coating)
  - DN ≥ 350 (14"): stainless steel 1.4301 or 1.4306/304L; (for flanges made of carbon steel with Al/Zn protective coating)
- Electrodes: 1.4435, Alloy C-22, Tantalum
- Flanges
  - EN 1092-1 (DIN 2501): 1.4571/316L; RSt37-2 (S235JRG2); C22; FE 410W B (DN ≤ 300 (12"): with Al/Zn protective coating; DN ≥ 350 (14") with protective lacquering)
  - ANSI: A105; F316L (DN ≤ 300 (12"): with Al/Zn protective coating; DN ≥ 350 (14") with protective lacquering)
  - AWWA: 1.0425
  - JIS: RSt37-2 (S235JRG2); HII; 1.0425/316L (DN ≤ 300 (12"): with Al/Zn protective coating; DN ≥ 350 (14") with protective lacquering)
  - AS 2129
    - DN 150 to 300, 600 (6 to 12", 24"): A105 or RSt37-2 (S235JRG2)
    - DN 50, 80, 100, 350, 400, 500 (2", 3", 4", 14", 16", 20"): A105 or St44-2 (S275JR)
  - AS 4087: A105 or St44-2 (S275JR)
- Seals: to DIN EN 1514-1
- Ground disks: 1.4435/316L, Alloy C-22, Tantalum

Material load diagram

Caution!
The following diagrams contain material load diagrams (reference curves) for flange materials with regard to the medium temperature. However, the maximum medium temperatures permitted always depend on the lining material of the sensor and/or the sealing material (→ 21).

Flange connection to EN 1092-1 (DIN 2501)
Material: RSt37-2 (S235JRG2) / C22 / Fe 410W B

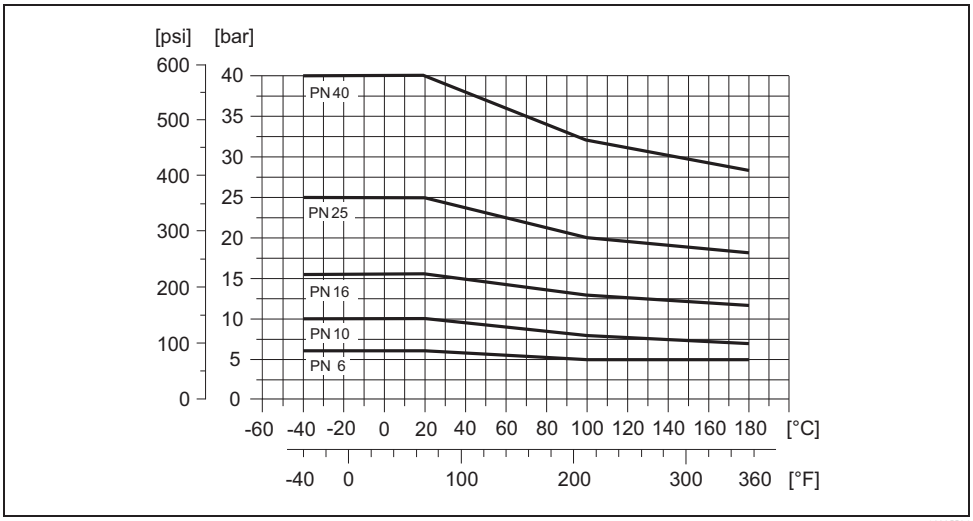

A0005594

Flange connection to EN 1092-1 (DIN 2501)
Material: 316L / 1.4571

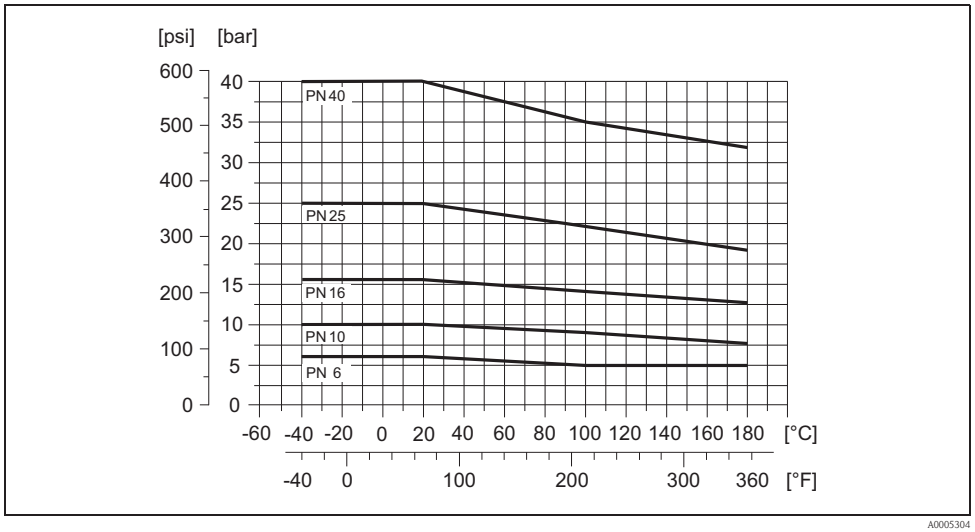

A0005304

Flange connection to ANSI B16.5
Material: A 105

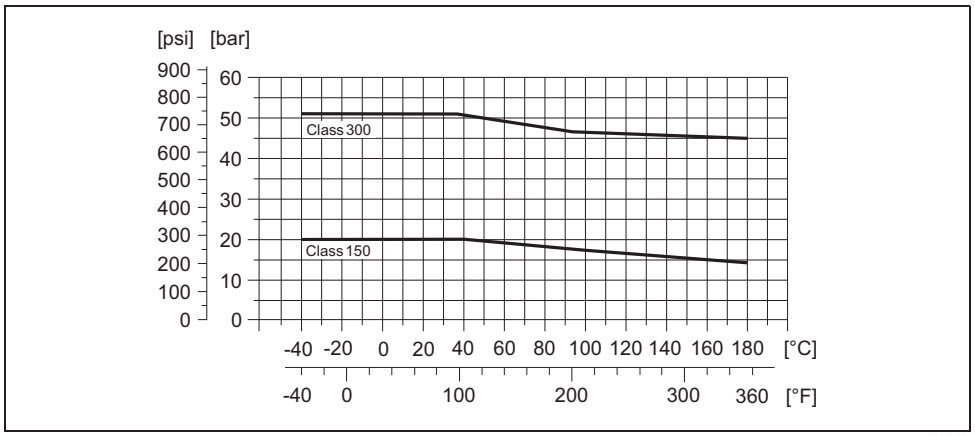

A0003226

Flange connection to ANSI B16.5
Material: F316L

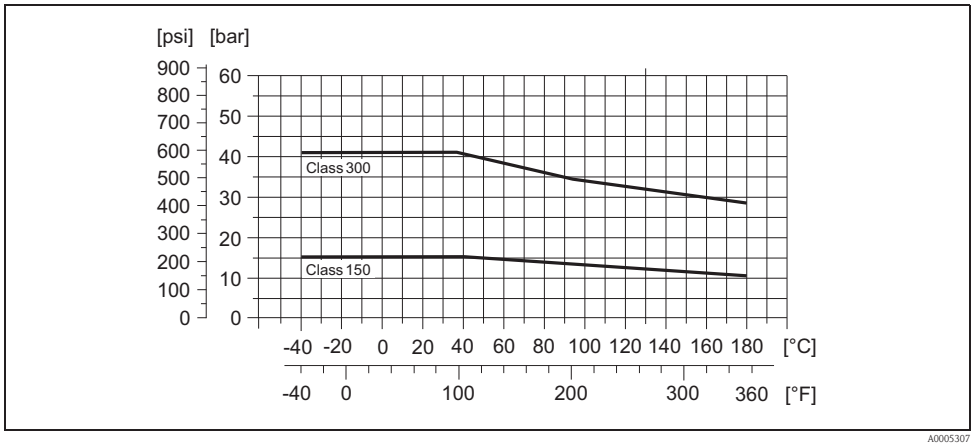

A0005307

Flange connection to AWWA C 207, Class D
Material: 1.0425

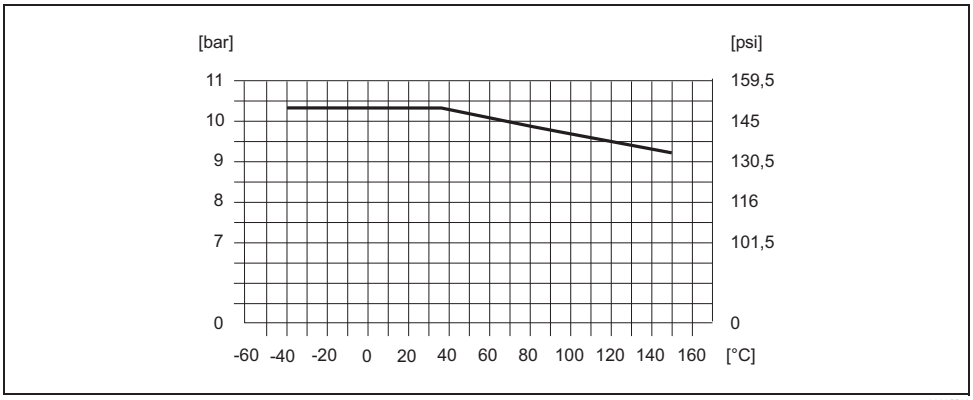

Flange connection to JIS B2220
Material: RSt37-2 (S235JRG2) / HII / 1.0425 / 316L

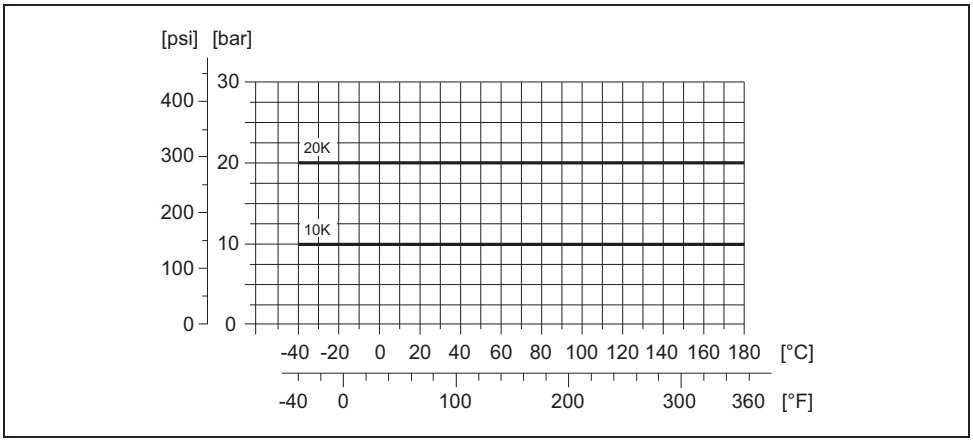

Flange connection to AS 2129 Table E or AS 4087 PN 16
Material: A105 / RSt37-2 (S235JRG2) / St44-2 (S275JR)

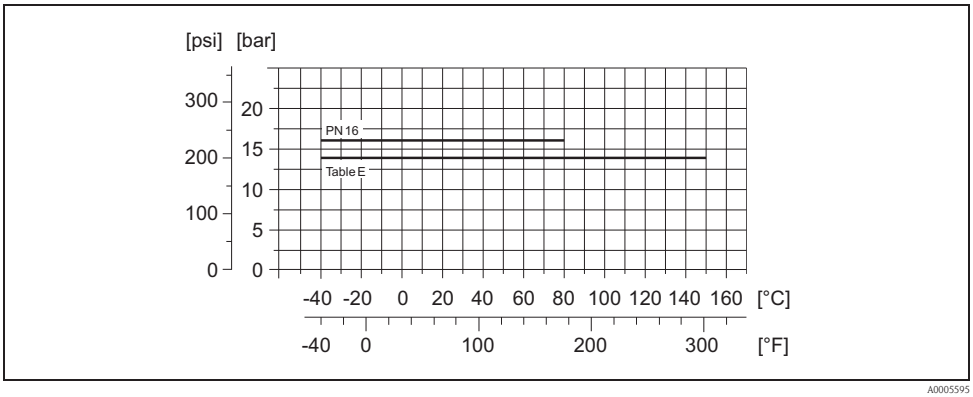

Fitted electrodes

Measuring electrodes, reference electrodes and empty pipe detection electrodes:
- Standard available with 1.4435, Alloy C-22, tantalum
- Optional: exchangeable measuring electrodes made of 1.4435 (DN 350 to 2000 / 14 to 78")

Process connections

Flange connection:
- EN 1092-1 (DIN 2501), DN ≤ 300 (12") form A, DN ≥ 350 (14") form B
  (Dimensions to DIN 2501, DN 65 PN 16 and DN 600 (24") PN 16 exclusively to EN 1092-1)
- ANSI B16.5
- AWWA C 207, Class D
- JIS B2220
- AS 2129 Table E
- AS 4087 PN 16

Surface roughness

- Electrodes
  – 1.4435, Alloy C-22, tantal: ≤ 0.3 to 0.5 µm (≤ 11.8 to 19.7 µin)

(all data refer to parts in contact with medium)

Human interface

Display elements

- Liquid crystal display: backlit, two lines (Promag 50) or four lines (Promag 53) with 16 characters per line
- Custom configurations for presenting different measured-value and status variables
- Totalizer
  – Promag 50: 2 totalizers
  – Promag 53: 3 totalizers

Operating elements

Unified operation concept for both types of transmitter:

Promag 50:
- Local operation via three keys (−, +, E)
- Quick Setup menus for straightforward commissioning

Promag 53:
- Local operation via three keys (−, +, E)
- Application-specific Quick Setup menus for straightforward commissioning

Language groups

Language groups available for operation in different countries:

Promag 50, Promag 53:
- Western Europe and America (WEA):
  English, German, Spanish, Italian, French, Dutch, Portuguese
- Eastern Europe and Scandinavia (EES):
  English, Russian, Polish, Norwegian, Finnish, Swedish, Czech
- South and east Asia (SEA):
  English, Japanese, Indonesian

Promag 53:
- China (CN):
  English, Chinese

You can change the language group via the operating program "FieldCare".

Remote operation

- Promag 50: Remote control via HART, PROFIBUS DP/PA
- Promag 53: Remote control via HART, PROFIBUS DP/PA, MODBUS RS485, FOUNDATION Fieldbus

Certificates and approvals

CE mark

The measuring system is in conformity with the statutory requirements of the EC Directives. Endress+Hauser confirms successful testing of the device by affixing to it the CE mark.

C-tick mark

The measuring system meets the EMC requirements of the "Australian Communications and Media Authority (ACMA)".

Pressure measuring device approval

Measuring devices with a nominal diameter smaller than or equal to DN 25 correspond to Article 3(3) of the EC Directive 97/23/EC (Pressure Equipment Directive) and have been designed and manufactured according to good engineering practice. Where necessary (depending on the medium and process pressure), there are additional optional approvals to Category II/III for larger nominal diameters.

Ex approval

Information about currently available Ex versions (ATEX, IECEx, FM, CSA, NEPSI) can be supplied by your Endress+Hauser Sales Center on request. All explosion protection data are given in a separate documentation which is available upon request.

Other standards and guidelines

- EN 60529
  Degrees of protection by housing (IP code)
- EN 61010
  Protection Measures for Electrical Equipment for Measurement, Control, Regulation and Laboratory Procedures.
- IEC/EN 61326
  “Emission in accordance with requirements for Class A”.
  Electromagnetic compatibility (EMC requirements)
- NAMUR NE 21:
  Electromagnetic compatibility (EMC) of industrial process and laboratory control equipment.
- NAMUR NE 43:
  Standardization of the signal level for the breakdown information of digital transmitters with analog output signal.
- NAMUR NE 53:
  Software of field devices and signal-processing devices with digital electronics.
- ANSI/ISA-S82.01
  Safety Standard for Electrical and Electronic Test, Measuring, Controlling and related Equipment - General Requirements Pollution degree 2, Installation Category II.
- CAN/CSA-C22.2 No. 1010.1-92
  Safety requirements for Electrical Equipment for Measurement and Control and Laboratory Use. Pollution degree 2, Installation Category II

FOUNDATION Fieldbus certification

The flow device has successfully passed all the test procedures carried out and is certified and registered by the Fieldbus Foundation. The device thus meets all the requirements of the following specifications:

- Certified to FOUNDATION Fieldbus Specification
- The device meets all the specifications of the FOUNDATION Fieldbus H1.
- Interoperability Test Kit (ITK), revision status 5.01 (device certification number: on request)
- The device can also be operated with certified devices of other manufacturers
- Physical Layer Conformance Test of the Fieldbus Foundation

MODBUS RS485 certification

The measuring device meets all the requirements of the MODBUS/TCP conformity test and has the “MODBUS/TCP Conformance Test Policy, Version 2.0”. The measuring device has successfully passed all the test procedures carried out and is certified by the “MODBUS/TCP Conformance Test Laboratory” of the University of Michigan.

PROFIBUS DP/PA certification

The flow device has successfully passed all the test procedures carried out and is certified and registered by the PNO (PROFIBUS User Organisation). The device thus meets all the requirements of the following specifications:

- Certified to PROFIBUS PA, profile version 3.0 (device certification number: on request)
- The device can also be operated with certified devices of other manufacturers (interoperability)

Accessories

Various accessories, which can be ordered separately from Endress+Hauser, are available for the transmitter and the sensor. Your Endress+Hauser service organization can provide detailed information on the order codes in question.

Documentation

- Flow Measurement (FA005D/06)
- Operating Instructions Promag Promag 50 (BA046D/06 and BA049D/06)
- Operating Instructions Promag Promag 50 PROFIBUS PA (BA055D/06 and BA056D/06)
- Operating Instructions Promag Promag 53 (BA047D/06 and BA048D/06)
- Operating Instructions Promag Promag 53 FOUNDATION Fieldbus (BA051D/06 and BA052D/06)
- Operating Instructions Promag Promag 53 MODBUS RS485 (BA117D/06 and BA118D/06)
- Operating Instructions Promag Promag 53 PROFIBUS DP/PA (BA053D/06 and BA054D/06)
- Supplementary documentation on Ex-ratings: ATEX, IECEx, FM, CSA, NEPSI

Registered trademarks

HART®
Registered trademark of the HART Communication Foundation, Austin, USA

PROFIBUS®
Registered trademark of the PROFIBUS Nutzerorganisation e.V., Karlsruhe, D

FOUNDATION™ Fieldbus
Registered trademark of the Fieldbus Foundation, Austin, USA

MODBUS®
Registered trademark of the MODBUS Organisation

HistoROM™, S-DAT®, T-DAT™, F-CHIP®, FieldCare®, Fieldcheck®, FieldXpert™, Applicator®
Registered or registration-pending trademarks of Endress+Hauser Flowtec AG, Reinach, CH

Order Codes

NOTE: Endress+Hauser reserves the right to change or modify product, specifications, and ordering information at any time without notice.
Please consult Endress+Hauser or your local representative for the most recent information.

Please note that the Promag 50W/53W is also available with:
- Hard rubber and Polyurethane liners; ACS, KTW/W270 and WRAS B59620 approvals
- PED Cat. II / III material certificates
- ATEX and NEPSI hazardous area approvals
- DIN2501 and JIS B2220 process connections

Consult factory for information.

Promag 50W, 1" to 24"

Promag 50W [ ][ ] - [ ] 010 [ ] 020 [ ] 030 [ ] 040 [ ] 050 [ ] 060 [ ] 070 [ ] 080 [ ] 090 [ ] 100 [ ] 110 [ ] 120

Nominal Diameter
- 25 1"
- 40 1-1/2"
- 50 2"
- 80 3"
- 1H 4"
- 1F 6"
- 2H 8"
- 2F 10"
- 3H 12"
- 3F 14"
- 4H 16"
- 4F 18"
- 5H 20"
- 6H 24"

010 Liner
- D Hard rubber, NSF61 drinking water approval (not available for 1", 1-1/2" or 2" sensors)
- H Hard rubber (not available for 1", 1-1/2" or 2" sensors)
- P Polyurethane, NSF61 drinking water approval
- S Hard rubber HR (not available for 1", 1-1/2" or 2" sensors)
- U Polyurethane
- 9 Special version, to be specified

020 Process connection
- L Class 150 ANSI B16.5 CS steel A105 flanges
- M Class 300 ANSI B16.5 CS steel A105 flanges (not for 8" and larger)
- R Class 150 ANSI B16.5 316L SS flanges
- S Class 300 ANSI B16.5 316L SS flanges (not for 8" and larger)
- 9 Special version, to be specified

030 Electrodes / material
- 0 Measuring, reference and EPD electrodes / 316L SS
- 1 Measuring, reference and EPD electrodes / Alloy C22
- 2 Measuring, reference and EPD electrodes / tantalum
- 7 Measuring electrode, exchangeable / 316L SS (for hard rubber liner only, 14" and larger sensors, no EPD or reference electrodes, for safe areas only)
- G Measuring, reference and EPD electrodes, bullet nose / 316L SS
- H Measuring, reference and EPD electrodes, bullet nose / Alloy C-22
- 9 Special version, to be specified

040 Calibration
- A 3-point calibration, 0.5%
- B 3-point calibration, 0.2%
- D SCS/A2LA 3-point 0.5% calibration (ISO/IEC 17025) with certificate traceable according to ISO 9000 (specify range)
- E SCS/A2LA 3-point 0.2% calibration (ISO/IEC 17025) with certificate traceable according to ISO 9000 (specify range)
- 9 Special version, to be specified

050 Certificates
- 1 Standard, no certificate
- 2 3.1B material certificate for pipe and flanges
- 3 2.3 pressure test certificate (1.5 x PN, 3 minutes) for sensors up to 12" only
- 4 3.1B material and 2.3 pressure test certificate for sensors up to 12" only
- 5 CRN approval
- 8 CRN approval + material certificate + pressure test
- 9 Special version, to be specified

060 Approvals
- A For use in non-hazardous areas
- N FM explosion proof Class I, Div. 1 / CSA Class I, Div. 1 (only for aluminum field housing, compact version, not for 14" and larger sensors)
- R FM non-incendive Class I, Div. 2 / CSA Class I, Div. 2

070 Housing
- A NEMA 4X (IP 67) compact aluminum housing
- C NEMA 4X (IP 67) remote wall-mounted (only for approvals A or R)
- G NEMA 4X (IP 67) remote aluminum field housing for non-hazardous areas
- K NEMA 6P sensor, wall-mounted housing (only for approvals A or R)
- N NEMA 6P sensor, aluminum field housing, non-hazardous
- P NEMA 4X (IP 67) compact aluminum housing, HE (harsh environment), compact and remote sensor sizes up to 12" only *
- S NEMA 4X (IP 67) remote wall-mounted housing, HE (harsh environment), remote sensor sizes 14" to 78" (only for approvals A and R) *
- 1 -40°F (-40°C) ambient temperature, NEMA 4X (IP 67), compact, aluminum field housing (only for approvals A and R)
- 3 -40°F (-40°C) ambient temperature, NEMA 4X (IP 67), compact (only for approvals A and R)
- 5 -40°F (-40°C) ambient temperature, NEMA 4X (IP 67) wall mount housing, for NEMA 6P sensor (only for approvals A and R)
- 9 Special version, to be specified

080 Cable for remote
- 0 Without cable
- 1 15 foot coil and signal cable
- 2 30 foot coil and signal cable
- 5 Coil and signal cable, specify length (maximum 650 ft depending on conductivity of process material)
- 7 Coil and signal cable, flexible conduit, specify length (maximum 650 ft depending on conductivity of process material)
- 9 Special version, to be specified

090 Cable entries
- B 1/2" NPT
- L 1/2" NPT fieldbus connector (only for approval A and R)
- 9 Special version, to be specified

100 Power supply / display
- 7 85 to 260 VAC, without display, remote configuration only (not for wall mount or SS housing)
- 8 20 to 55 VAC / 16 to 62 VDC, without display, remote configuration only (not for wall mount or SS housing)
- A 85 to 260 VAC, with display, push button operation (language: EN, ES, FR, IT, NL, PT, DE)
- B 20 to 55 VAC / 16 to 62 VDC, with display, push button operation (language: EN, ES, FR, IT, NL, PT, DE)
- X Sensor only (without transmitter, only available up to 8")
- 9 Special version, to be specified

110 Software
- A Standard software
- X Sensor only (up to 8" only)
- 9 Special version, to be specified

120 Outputs / Inputs
- A Current HART, SIL, frequency
- D Current HART, SIL, frequency, status output, status input
- H PROFIBUS-PA (approvals A and R only)
- J PROFIBUS-DP (approvals A and R only)
- S Current HART, SIL, frequency; active I.S. (not for approvals A and R)
- T Current HART, SIL, frequency; passive I.S. (not for approvals A and R)
- W Current HART, SIL
- X Sensor only
- 9 Special version, to be specified

* Harsh environment (HE) option is available for process conditions where cool process temperatures in tropical (high humidity) environments or process fluids which undergo large cyclical temperature variations which can cause high amounts of moisture that could condense onto the measurement tube.

Promag 50W, 28” to 78”

Promag 50W | | - | 010 | 020 | 030 | 040 | 050 | 060 | 070 | 080 | 090 | 100 | 110 | 120 |

Nominal Diameter
- 7H 28”
- 7F 30”, AWWA
- 8H 32”
- 9H 36”
- TO 40”
- VO 42”, AWWA
- T2 48”
- V3 54”, AWWA
- V5 60”, AWWA
- V6 66”, AWWA
- T8 72”
- V9 78”, AWWA

010 Liner
- D Hard rubber, NSF61 drinking water approval
- H Hard rubber
- P Polyurethane, NSF61 drinking water approval (not available for 42” up to 78”)
- S Hard rubber HR
- U Polyurethane (not available for 42” up to 78”)
- 9 Special version, to be specified

020 Process connection
- P Class D AWWA carbon steel A105 flanges
- 9 Special version, to be specified

030 Electrodes / material
- 0 Measuring, reference and EPD electrodes / 316L SS
- 1 Measuring, reference and EPD electrodes / Alloy C22
- 2 Measuring, reference and EPD electrodes / tantalum
- 7 Measuring electrode, exchangeable / 316L SS (for hard rubber liner only, 14” and larger sensors, no EPD or reference electrodes, for safe areas only)
- G Measuring, reference and EPD electrodes, bullet nose / 316L SS
- H Measuring, reference and EPD electrodes, bullet nose / Alloy C-22
- 9 Special version, to be specified

040 Calibration
- A 3-point calibration, 0.5%
- B 3-point calibration, 0.2%
- D SCS/A2LA 3-point 0.5% calibration (ISO/IEC 17025) with certificate traceable according to ISO 9000 (specify range)
- E SCS/A2LA 3-point 0.2% calibration (ISO/IEC 17025) with certificate traceable according to ISO 9000 (specify range)
- 9 Special version, to be specified

050 Certificates
- 1 Standard, no certificate
- 2 3.1B material certificate for pipe and flanges
- 9 Special version, to be specified

060 Approvals
- A For use in non-hazardous areas
- R FM non-incendive Class I, Div. 2 / CSA Class I, Div. 2

070 Housing
- A NEMA 4X (IP 67) compact aluminum housing
- C NEMA 4X (IP 67) remote wall-mounted (only for approvals A or R)
- G NEMA 4X (IP 67) remote aluminum field housing for non-hazardous areas
- K NEMA 6P sensor, wall-mounted housing (only for approvals A or R)
- S NEMA 4X (IP 67) remote wall-mounted housing, HE (harsh environment), remote sensor sizes 14” to 78” (only for approvals A and R) *
- 1 –40°F (–40°C) ambient temperature, NEMA 4X (IP 67), compact, aluminum field housing (only for approvals A and R)
- 3 –40°F (–40°C) ambient temperature, NEMA 4X (IP 67), compact (only for approvals A and R)
- 5 –40°F (–40°C) ambient temperature, NEMA 4X (IP 67) wall mount housing, for NEMA 6P sensor (only for approvals A and R)
- 9 Special version, to be specified

080 Cable for remote
- 0 Without cable
- 1 15 foot coil and signal cable
- 2 30 foot coil and signal cable
- 5 Coil and signal cable, specify length (maximum 650 ft depending on conductivity of process material)
- 7 Coil and signal cable, flexible conduit, specify length (maximum 650 ft depending on conductivity of process material)
- 9 Special version, to be specified

090 Cable entries
- B 1/2” NPT
- L 1/2” NPT fieldbus connector (only for approval A and R)
- 9 Special version, to be specified

100 Power supply / display
- 7 85 to 260 VAC, without display, remote configuration only (not for wall mount or SS housing)
- 8 20 to 55 VAC / 16 to 62 VDC, without display, remote configuration only (not for wall mount or SS housing)
- A 85 to 260 VAC, with display, push button operation (language: EN, ES, FR, IT, NL, PT, DE)
- B 20 to 55 VAC / 16 to 62 VDC, with display, push button operation (language: EN, ES, FR, IT, NL, PT, DE)
- X Sensor only (without transmitter, only available up to 8”)
- 9 Special version, to be specified

110 Software
- A Standard software
- 9 Special version, to be specified

120 Outputs / Inputs
- A Current HART, SIL, frequency
- D Current HART, SIL, frequency, status output, status input
- H PROFIBUS-PA (approvals A and R only)
- J PROFIBUS-DP (approvals A and R only)
- S Current HART, SIL, frequency; active I.S. (not for approvals A and R)
- T Current HART, SIL, frequency; passive I.S. (not for approvals A and R)
- W Current HART, SIL
- X Sensor only
- 9 Special version, to be specified

* Harsh environment (HE) option is available for process conditions where cool process temperatures in tropical (high humidity) environments or process fluids which undergo large cyclical temperature variations which can cause high amounts of moisture that could condense onto the measurement tube.

Promag 53W, 1" to 24"

Promag 53W [ ] - [ ] [ ] [ ] [ ] [ ] [ ] [ ] [ ] [ ] [ ] [ ] [ ] [ ]
010 020 030 040 050 060 070 080 090 100 110 120

Nominal Diameter
- 25 1"
- 40 1-1/2"
- 50 2"
- 80 3"
- 1H 4"
- 1F 6"
- 2H 8"
- 2F 10"
- 3H 12"
- 3F 14"
- 4H 16"
- 4F 18"
- 5H 20"
- 6H 24"

010 Liner
- D Hard rubber, NFS61 drinking water approval (not available for 1", 1-1/2" or 2" sensors)
- H Hard rubber (not available for 1", 1-1/2" or 2" sensors)
- P Polyurethane, NSF61 drinking water approval
- S Hard rubber HR (not available for 1", 1-1/2" or 2" sensors)
- U Polyurethane
- 9 Special version, to be specified

020 Process connection
- L Class 150 ANSI B16.5 CS steel A105 flanges
- M Class 300 ANSI B16.5 CS steel A105 flanges (not for 8" and larger)
- R Class 150 ANSI B16.5 316L SS flanges
- S Class 300 ANSI B16.5 316L SS flanges (not for 8" and larger)
- 9 Special version, to be specified

030 Electrodes / material
- 0 Measuring, reference and EPD electrodes / 316L SS
- 1 Measuring, reference and EPD electrodes / Alloy C22
- 2 Measuring, reference and EPD electrodes / tantalum
- 7 Measuring electrode, exchangeable / 316L SS (for hard rubber liner only, 14" and larger sensors, no EPD or reference electrodes, for safe areas only)
- G Measuring, reference and EPD electrodes, bullet nose / 316L SS
- H Measuring, reference and EPD electrodes, bullet nose / Alloy C-22
- 9 Special version, to be specified

040 Calibration
- B 3-point calibration, 0.2%
- E SCS/A2LA 3-point, 0.2% calibration (ISO/IEC 17025) with certificate traceable according to ISO 9000 (specify range)
- 9 Special version, to be specified

050 Certificates
- 1 Standard, no certificate
- 2 3.1B material certificate for pipe and flanges
- 3 2.3 pressure test certificate (1.5 x PN, 3 minutes) for sensors up to 12" only
- 4 3.1B material and 2.3 pressure test certificate for sensors up to 12" only
- 5 CRN approval
- 8 CRN approval + material certificate + pressure test
- 9 Special version, to be specified

060 Approvals
- A For use in non-hazardous areas
- N FM explosion proof Class I, Div. 1 / CSA Class I, Div. 1 (only for aluminum field housing, compact version, not for 14" and larger sensors)
- R FM non-incendive Class I, Div. 2 / CSA Class I, Div. 2

070 Housing
- A NEMA 4X (IP 67) compact aluminum housing
- C NEMA 4X (IP 67) remote wall-mounted (only for approvals A or R)
- G NEMA 4X (IP 67) remote aluminum field housing for non-hazardous areas
- K NEMA 6P sensor, wall-mounted housing (only for approvals A or R)
- N NEMA 6P sensor, aluminum field housing, non-hazardous
- P NEMA 4X (IP 67) compact aluminum housing, HE (harsh environment), compact and remote sensor sizes up to 12" only *
- S NEMA 4X (IP 67) remote wall-mounted housing, HE (harsh environment), remote sensor sizes 14" to 78" (only for approvals A and R) *
- 1 -40°F (-40°C) ambient temperature, NEMA 4X (IP 67), compact, aluminum field housing (only for approvals A and R)
- 3 -40°F (-40°C) ambient temperature, NEMA 4X (IP 67), compact (only for approvals A and R)
- 5 -40°F (-40°C) ambient temperature, NEMA 4X (IP 67) wall mount housing, for NEMA 6P sensor (only for approvals A and R)
- 9 Special version, to be specified

080 Cable for remote
- 0 Without cable
- 1 15 foot coil and signal cable
- 2 30 foot coil and signal cable
- 5 Coil and signal cable, specify length (maximum 650 ft depending on conductivity of process material)
- 7 Coil and signal cable, flexible conduit, specify length (maximum 650 ft depending on conductivity of process material)
- 9 Special version, to be specified

090 Cable entries
- B 1/2" NPT
- L 1/2" NPT Fieldbus connector (only for approval A and R)
- 9 Special version, to be specified

100 Power supply / display
- 7 85 to 260 VAC, without display, remote configuration only (not for wall mount or SS housing)
- 8 20 to 55 VAC / 16 to 62 VDC, without display, remote configuration only (not for wall mount or SS housing)
- A 85 to 260 VAC, with display, push button operation (language: EN, ES, FR, IT, NL, PT, DE)
- B 20 to 55 VAC / 16 to 62 VDC, with display, push button operation (language: EN, ES, FR, IT, NL, PT, DE)
- X Sensor only (without transmitter, only available up to 8")
- 9 Special version, to be specified

110 Software
- A Standard software
- C ECC electrode cleaning circuit (only for approvals A and R)
- 9 Special version, to be specified

120 Outputs / Inputs
Fixed communication boards
- A Current HART, SIL, frequency
- B Current HART, SIL, frequency, 2 relays
- F PROFIBUS-PA, IS
- G Foundation Fieldbus, IS
- H PROFIBUS-PA
- J PROFIBUS-DP
- K Foundation Fieldbus
- Q Modbus RS485, status input
- S Current HART, SIL, frequency; active I.S
- T Current HART, SIL, frequency; passive I.S

Flexible communication boards
- C Current HART, SIL, frequency, 2 relays, flexible module
- D Current HART, SIL, frequency, relay, and status input, flexible module
- L Current HART, SIL, 2 relays and status input/output
- M Current HART, SIL, 2 frequency output, status input
- N Modbus RS 485, current and frequency output, status input
- P PROFIBUS-DP, current and frequency output, status input
- V PROFIBUS-DP, two relay outputs, status input
- 2 Current HART, SIL, relay, current, frequency ouputs
- 4 Current HART, SIL, relay, frequency outputs, current input
- 7 Modbus RS485, two relay outputs, status input
- X Sensor only
- 9 Special version, to be specified

* Harsh environment (HE) option is available for process conditions where cool process temperatures in tropical (high humidity) environments or process fluids which undergo large cyclical temperature variations which can cause high amounts of moisture that could condense onto the measurement tube.

Promag 53W, 28” to 78”

Promag 53W [ ] - 010 [ ] 020 [ ] 030 [ ] 040 [ ] 050 [ ] 060 [ ] 070 [ ] 080 [ ] 090 [ ] 100 [ ] 110 [ ] 120 [ ]

Nominal Diameter
- 7H 28”
- 7F 30”, AWWA
- 8H 32”
- 9H 36”
- TO 40”
- VO 42”, AWWA
- T2 48”
- V3 54”, AWWA
- V5 60”, AWWA
- V6 66”, AWWA
- T8 72”
- V9 78”, AWWA

010 Liner
- D Hard rubber, NSF61 drinking water approval
- H Hard rubber
- P Polyurethane, NSF61 drinking water approval (not available for 42” to 78” sensors)
- S Hard rubber HR
- U Polyurethane (not available for 42” to 78” sensors)
- 9 Special version, to be specified

020 Process connection
- P Class D AWWA carbon steel A105 flanges
- 9 Special version, to be specified

030 Electrodes / material
- 0 Measuring, reference and EPD electrodes / 316L SS
- 1 Measuring, reference and EPD electrodes / Alloy C22
- 2 Measuring, reference and EPD electrodes / tantalum
- 7 Measuring electrode, exchangeable / 316L SS (for hard rubber liner only, 14” and larger sensors, no EPD or reference electrodes, for safe areas only)
- G Measuring, reference and EPD electrodes, bullet nose / 316L SS
- H Measuring, reference and EPD electrodes, bullet nose / Alloy C-22
- 9 Special version, to be specified

040 Calibration
- B 3-point calibration, 0.2%
- E SCS/A2LA 3-point 0.2% calibration (ISO/IEC 17025) with certificate traceable according to ISO 9000 (specify range)
- 9 Special version, to be specified

050 Certificates
- 1 Standard, no certificate
- 2 3.1B material certificate for pipe and flanges
- 9 Special version, to be specified

060 Approvals
- A For use in non-hazardous areas
- R FM non-incendive Class I, Div. 2 / CSA Class I, Div. 2

070 Housing
- A NEMA 4X (IP 67) compact aluminum housing
- C NEMA 4X (IP 67) remote wall-mounted (only for approvals A or R)
- G NEMA 4X (IP 67) remote aluminum field housing for non-hazardous areas
- K NEMA 6P sensor, wall-mounted housing (only for approvals A or R)
- S NEMA 4X (IP 67) remote wall-mounted housing, HE (harsh environment), remote sensor sizes 14” to 78” (only for approvals A and R) *
- 1 -40°F (-40°C) ambient temperature, NEMA 4X (IP 67), compact, aluminum field housing (only for approvals A and R)
- 3 -40°F (-40°C) ambient temperature, NEMA 4X (IP 67), compact (only for approvals A and R)
- 5 -40°F (-40°C) ambient temperature, NEMA 4X (IP 67) wall mount housing, for NEMA 6P sensor (only for approvals A and R)
- 9 Special version, to be specified

* Harsh environment (HE) option is available for process conditions where cool process temperatures in tropical (high humidity) environments or process fluids which undergo large cyclical temperature variations which can cause high amounts of moisture that could condense onto the measurement tube.

080 Cable for remote
- 0 Without cable
- 1 15 foot coil and signal cable
- 2 30 foot coil and signal cable
- 5 Coil and signal cable, specify length (maximum 650 ft depending on conductivity of process material)
- 7 Coil and signal cable, flexible conduit, specify length (maximum 650 ft depending on conductivity of process material)
- 9 Special version, to be specified

090 Cable entries
- B 1/2” NPT
- L 1/2” NPT Fieldbus connector (only for approval A and R)
- 9 Special version, to be specified

100 Power supply / display
- 7 85 to 260 VAC, without display, remote configuration only (not for wall mount or SS housing)
- 8 20 to 55 VAC / 16 to 62 VDC, without display, remote configuration only (not for wall mount or SS housing)
- A 85 to 260 VAC, with display, push button operation (language: EN, ES, FR, IT, NL, PT, DE)
- B 20 to 55 VAC / 16 to 62 VDC, with display, push button operation (language: EN, ES, FR, IT, NL, PT, DE)
- 9 Special version, to be specified

110 Software
- A Standard software
- C ECC electrode cleaning circuit (only for approvals A and R)
- 9 Special version, to be specified

120 Outputs / Inputs
Fixed communication boards
- A Current HART, SIL, frequency
- B Current HART, SIL, frequency, 2 relays
- F PROFIBUS-PA, IS
- G Foundation Fieldbus, IS
- H PROFIBUS-PA
- J PROFIBUS-DP
- K Foundation Fieldbus
- Q Modbus RS485, status input
- S Current HART, SIL, frequency; active I.S
- T Current HART, SIL, frequency; passive I.S

Flexible communication boards
- C Current HART, SIL, frequency, 2 relays, flexible module
- D Current HART, SIL, frequency, relay, and status input, flexible module
- L Current HART, SIL, 2 relays and status input/output
- M Current HART, SIL, 2 frequency output, status input
- N Modbus RS 485, current and frequency output, status input
- P PROFIBUS-DP, current and frequency output, status input
- V PROFIBUS-DP, two relay outputs, status input
- 2 Current HART, SIL, relay, current, frequency outputs
- 4 Current HART, SIL, relay, frequency outputs, current input
- 7 Modbus RS485, two relay outputs, status input
- X Sensor only
- 9 Special version, to be specified

United States	Canada	Mexico	Instruments International
Endress+Hauser, Inc. 2350 Endress Place Greenwood, IN 46143 Tel. 317-535-7138 Sales 888-ENDRESS (888-363-7377) Service 800-642-8737 fax 317-535-8498 inquiry@us.endress.com www.us.endress.com	Endress+Hauser Canada 1075 Sutton Drive Burlington, ON L7L 5Z8 Tel. 905-681-9292 800-668-3199 Fax 905-681-9444 info@ca.endress.com www.ca.endress.com	Endress+Hauser, México, S.A. de C.V. Fernando Montes de Oca 21 Edificio A Piso 3 Fracc. Industrial San Nicolás 54030. Tlalnepantla de Baz Estado de México México Tel: +52 55 5321 2080 Fax +52 55 5321 2099 eh.mexico@mx.endress.com www.mx.endress.com	Endress+Hauser Instruments International AG Kaegenstrasse 2 4153 Reinach Switzerland Tel. +41 61 715 81 00 Fax +41 61 715 25 00 www.endress.com info@ii.endress.com

TI046D/24/en/07.10
© 2010 Endress+Hauser, Inc.

Endress+Hauser

People for Process Automation

CS-413-310 : Identification sheet

VWTC PROJECT NUMBER:	5000218009	REV:	1
PROJECT NAME:	AEM AMARUQ	SUBMITTED TO (COMPANY):	AGNICO EAGLE MINES
ENGINEER:	Gabriel Hébert	SUBMITTED TO (RESPONSIBLE)	
PROJECT MANAGER:	Clément B	PROJECT NUM REFERENCE.:	
PHONE NUMBER:		LOT NUMBER:	

SUPPLIER	EQPT CODE	EQPT TAG NO	DIA	DESCRIPTION	INFO 1	INFO 2	INFO 3	APPLIC.	NOTE	REV
TECKNO VALVE	ST-413-359	PI4-011	4.5"	DIAPHRAGM PRESSURE GAUGE	PRESSURE GAUGE C/W ISOLATOR // MANUFACTURER : ASHCROFT // MODEL 45-1009SL-04L-60#-XAJ C/W SEAL 50-101SS-04T-XCG	N/A	N/A	SLUDGE TANK		rev1

This page is intentionally left blank

ASHCROFT®
Trust the shield.®

Type 1009 4½″ & 6″ Stainless Steel Gauge

PLUS! Performance

- *4½″ and 6″ SS gauges*
- *Dry and liquid-filled versions*
- *Micrometer adjustable pointer*
- *Variety of Bourdon tube materials*
- *ASME Grade 1A, ±1% of span accuracy*
- *New PLUS!™ Performance Option:*
  - *Liquid-filled performance in a dry gauge*
  - *Fights vibration and pulsations with out liquid-fill headaches*
  - *Order as option XLL*

The 4½″ and 6″ Ashcroft® Type 1009 gauges are suitable where ambient corrosion is a major concern. Its attractive stainless steel case and ring provides excellent resistance to chemical, weather and corrosion attack. This 1009 has many optional features that allow a user to develop a basic or special product specification. The 1009 is part of the extensive line of Ashcroft stainless steel pressure gauges.

The gauge is available dry, liquid-filled weatherproof or hermetically sealed and now with ***PLUS!***™ Performance option.

TEMPERATURE LIMITS

	Ambient	Process	Storage
Dry	–20°F/200°F[1] (–29°C/93°C)	–20°F/250°F[1] (–29°C/121°C)	–40°F/250°F (–40°C/121°C)
PLUS!™	–40°F/150°F (–40°C/66°C)	–40°F/200°F (–40°C/93°C)	–40°F/150°F (–40°C/66°C)
LF (glycerin)	20°F/150°F (7°C/66°C)	20°F/150°F (7°C/93°C)	0°F/150°F (–18°C/66°C)
(silicone)	–40°F/150°F (–40°C/66°C)	–40°F/200°F (–40°C/93°C)	–40°F/150°F (–40°C/66°C)
(Halocarbon®)	–40°F/150°F (–40°C/66°C)	–40°F/200°F (–40°C/93°C)	–40°F/150°F (–40°C/66°C)

Note: Other than discoloration of the dial and hardening of the gasketing that may occur as ambient or process temperatures exceeds 150°F, non-liquid-filled gauges with standard glass windows, can withstand continuous operating temperatures up to 250°F (121°C). Liquid-filled gauges can withstand 200°F (93°C) but glycerin fill and acrylic window will tend to yellow. Accuracy at temperatures above or below the reference ambient temperature of 68°F will be affected by approximately .4% per 25°F. Gauges with welded joints will withstand 750°F (450°F (232°C) with silver brazed joints) for short times without rupture, although other parts of the gauge will be destroyed and calibration will be lost. For continuous use and for process or ambient temperatures above 250°F (121°C), a diaphragm seal or capillary or siphon is recommended.

PRODUCT SPECIFICATIONS

Model Number: 1009
Accuracy: 1% full scale (Grade A, ASME B40.100)
Ranges: Vacuum – 30,000 psi
Dial Size: 4½″ and 6″ diameter
Case: Open front
Case Material: 304 SS
Weather Protection: Dry Case: IP54
Liquid filled or hermetically sealed case: IP 65
Ring Type: 304 SS, bayonet
Window: Glass
Dial: Aluminum, white background, black figures and gradua-
tions.
Pointer: Micrometer adjustable
Movement: 400 SS (conventional)
Bourdon Tube and Socket: Bronze/Brass (A)[1]
316L SS/316L SS (S)[2]
Monel®/Monel® (P)[2]
Connection Size: ¼, ½ NPT
Connection Location: Lower and back

PRODUCT OPTIONS

***PLUS!* Performance:** XLL
Fill: L-Glycerin-Standard
XGV-Silicone-Optional
XGX-Halocarbon®-Optional
Weatherproof Hermetic Seal: XLJ
Panel Mount Front Flange: XFF
Panel Mount U-Clamp: XUC
Surface Mount: XBF
Oxygen Clean: X6B
Window
Acrylic: XPD
Shatterproof Glass: XSG

(1) Joints silver brazed
(2) Joints welded

45/60 1009 GAUGE PRODUCT CODING

Typical Code:

45	1009	S	L	04	L	XSG	100#	
SIZE	TYPE NUMBER	SYSTEM (Tube & Socket)	CASE DESIGN	PROCESS CONN. SIZE	CONNECTION LOCATION	VARIATIONS	RANGE	ENGINEERING UNITS[1]
(45) 4½″ (60) 6″	1009	Code Bourdon Tube Socket (A) Phos Brz[1] Brass (S) AISI 316SS[2] AISI 316SS (P) K Monel[2] Monel 400 (1) To 1000 psi (2) To 30,000 psi	Code Description (L) Liquid Filled (glycerin std.)	Code NPT (02) ¼ Male[1] (04) ½ Male[1] (09) 9/16-18 UNF-2B Aminco (standard for high pressure >20,000 psi (1) Max Pressure 20,000 psi	Code Description (L) Lower (B) Back (D) Side Conn. 3 o'clock (E) Side Conn. 9 o'clock (T) Top	(GV) Silicone Case Fill (GX) Halocarbon Case Fill (NH) SS Wired Tag (TS) Throttle Screw[1] (6B) Oxygen Service (PD) Acrylic Window[1] (SG) Safety Glass (LJ) Hermetically Sealed Liquid Fillable (IP65) (EP) Maximum Pointer, Adjustable (SH) Red Set Hand, Stationary (LL) ***PLUS!***™ Performance (FF) Flush Mounting Ring (C4) Individual Calibration Chart (1) Standard with hermetically sealed or liquid filled gauge.	15 30 60 100 160 200 300 400 600 1000 1500 2000 3000 5000 6000 10,000 20,000 30,000	(#) PSI (BR) Bar (KG) Kilograms/CM² (KP) Kilopascal (IMV) Inches of Mercury Vacuum (1) See website for more units of measure

All specifications are subject to change without notice.
All sales subject to standard terms and conditions.
© Ashcroft Inc. 2017 Rev. 08/17

Ashcroft Inc., 250 East Main Street, Stratford, CT 06614 USA
Tel: 203-378-8281 • Fax: 203-385-0408
email: info@ashcroft.com • www.ashcroft.com

ASHCROFT®
Trust the shield.®

Type 1009 4½″ & 6″ Stainless Steel Gauge

DIMENSIONS

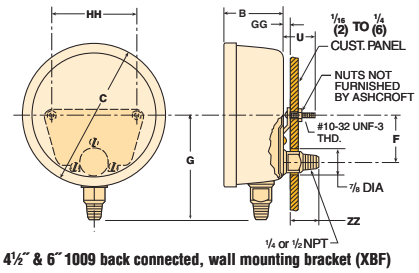

4½″ & 6″ 1009 back connected, wall mounting bracket (XBF)

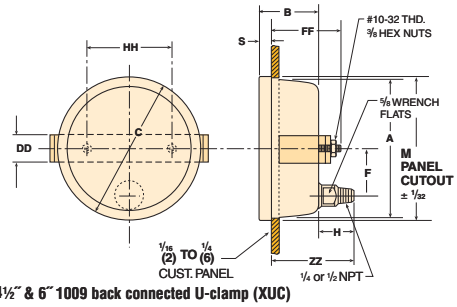

4½″ & 6″ 1009 back connected U-clamp (XUC)

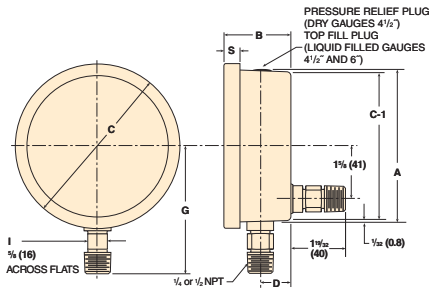

4½″ 1009 lower or lower back connected

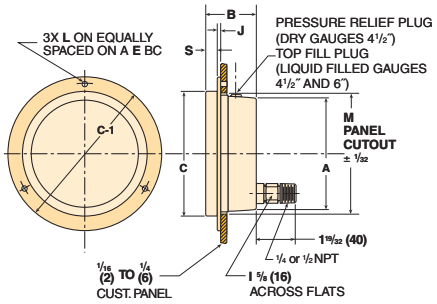

4½″ & 6″ 1009 back connected, front flange (XFF)

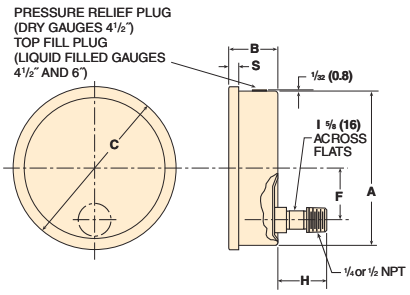

6″ 1009 back connected

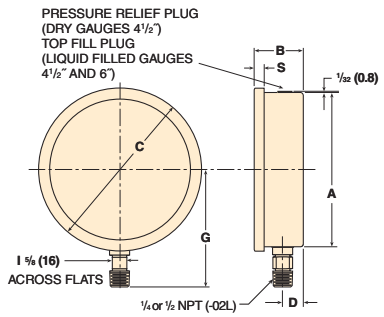

6″ 1009 lower connected

Gauge Size	A	B	C	C-1	D	DD	E	F	FF	G	GG	H	HH	I	J	L	M	S	U	ZZ	Weight Dry	Weight LF
4½ (100)	4 23/32 (120)	2 1/16 (52)	5 3/32 (129)	6 1/4 (159)	15/16 (24)	1 (25)	5 11/16 (144)	1 5/8 (41)	2 5/16 (59)	3 15/16 (100)	3/16 (5)	1 5/8 (41)	3 (76)	5/8 (16)	5/32 (4)	7/32 (6)	4 13/16 (122)	15/32 (12)	1 7/16 (37)	3 3/32 (83)	1.75# .79kg	2.40# 1.1kg
6 (160)	6 5/16 (160)	2 (51)	6 21/32 (169)	7 41/64 (194)	27/32 (22)	1 (25)	7 1/32 (179)	1 5/8 (41)	2 5/8 (67)	4 13/16 (122)	3/16 (5)	1 5/8 (41)	4 1/2 (114)	5/8 (16)	1/16 (2)	1/4 (7)	6 7/16 (163)	13/32 (10)	1 7/16 (37)	3 3/16 (81)	2.25# 1kg	4.12# 1.85k

Note: Dimensions in brackets ( ) are millimeters.

Standard Ranges (Metric equivalents available)

Pressure – psi

Range	Figure interval	Minor Graduation
0/15	1	0.2
0/30	5	0.5
0/60	5	0.5
0/100	10	1
0/160	20	2
0/200	20	2
0/300	50	5
0/400	50	5
0/600	50	10
0/800	100	10
0/1000	100	10
0/1500	200	20
0/2000	200	20
0/3000	500	20
0/5000	500	50
0/6000	500	50
0/10,000	1000	100
0/20,000	2000	250
0/30,000	5000	200

Compound

Range	Figure Interval		Minor Grads	
	in Hg	psi	in Hg	psi
30″ Hg/15 psi	5	3	0.5	0.2
30″ Hg/30 psi	10	5	1	0.5
30″ Hg/60 psi	10	10	1	1
30″ Hg/100 psi	10	10	2	1
30″ Hg/150 psi	10	20	5	2
30″ Hg/200 psi	30	20	5	2
30″ Hg/300 psi	30	50	5	2

Vacuum

Range	Figure Interval	Minor Grads
30/0 in. Hg	5 in	0.2 in
34/0 ft H_2O	5 ft	0.5 ft

All specifications are subject to change without notice.
All sales subject to standard terms and conditions.
© Ashcroft Inc. 2017 Rev. 02/17

Ashcroft Inc., 250 East Main Street, Stratford, CT 06614 USA
Tel: 203-378-8281 • Fax: 203-385-0408
email: info@ashcroft.com • www.ashcroft.com

ASHCROFT®
Trust the shield.®

Type 100 Series Threaded Capsule Diaphragm Seal

TYPE 100 SHOWN

When isolation of the process from an instrument is required, Ashcroft® offers a comprehensive line of diaphragm seals. Seal types include threaded, flanged, in-line threaded, in-line flanged, in-line socket weld, in-line butt weld, saddle and sanitary seals. Also available is a complete offering of isolation or iso-rings and isolation or iso-spools.

APPLICATIONS

- Elevated process temperatures
- Corrosive service
- Isolation of the process for safety
- Suspended solids in the process
- Sanitary connections
- Minimize process dead leg
- Ease of cleaning between batches

FEATURES

- The top housing and diaphragm capsule are interchangeable with all Ashcroft bottom housings.
- A fill/bleed connection is standard, which permits filling the seal and instrument simultaneously after evacuation and allows the fill to flow into the completed unit.
- A Viton O-ring, compatible with all standard fill fluids, and a Teflon back-up ring provide a seal between the diaphragm capsule and the top housing.
- A thin Teflon PTFE gasket between the diaphragm and bottom housing ensures a leak-tight corrosion resistant seal even at high pressure.
- Top housing and pressure instrument are removable.
- Continuous-duty design will prevent loss of process fluid if pressure instrument is removed or fails.

SPECIFICATIONS

Model Number:	Type 100, 101, 102, 103, 104, 105, 106, 107, 108
Process Connection Size:	See Table A (Pg. 2)
Instrument Connection Size:	¼, ½ NPT
Diaphragm Material:	See Table B (Pg. 2)
Bottom Housing Materials:	See Table C (Pg. 2)
Filling Fluid:	Glycerin, Halocarbon, Silicone, Stylthern

OPTIONS	**Code**
316 stainless steel top housing	**YT**
Stainless steel clamp rings and flanged ring – includes 300 stainless steel clamping bolts (1500 psi max)	**SE**
300 series stainless steel clamping bolts (max pres is 1500 psi)	**SB**
Pipe plugs for flushing connections – pipe plugs are available in the same materials as bottom housings per Table C (Pg. 2)	**PU**
5000 psi pressure rating Threaded inlet and metal diaphragm only	**HP**
Welded instrument to diaphragm seal	**DU**
Dual flushing connections (½ NPT) (Limited to 2″ thru 3″ flanged seals	**DB**
Ring joint (Flanged seal only)	**RJ**
Flat face (Flanged seal only)	**FF**
Clean for gaseous oxygen or strong oxidizing agent applications	**6B**

All specifications are subject to change without notice.
All sales subject to standard terms and conditions.
© Ashcroft Inc. 2016 Rev. 01/16

Ashcroft Inc., 250 East Main Street, Stratford, CT 06614 USA
Tel: 203-378-8281 • Fax: 203-385-0408
email: info@ashcroft.com • www.ashcroft.com

ASHCROFT®
Trust the shield.®

Type 100 Series Threaded Capsule Diaphragm Seal

TYPE 100 SERIES THREADED CAPSULE SEAL TYPES

Type 100 –Threaded
¼, ½, ¾, 1 NPT

Type 101 –Threaded
with flushing connection
¼, ½, ¾, 1 NPT

Type 102 – Raised Face Flanged
½˝, ¾˝, 1˝, 1½˝, 2˝, 3˝

Type 103 – Raised Face Flanged
½˝, ¾˝, 1˝, 1½˝, 2˝, 3
with flushing conection

Type 104 – In-line Threaded
¼, ½, ¾, 1 NPT

Type 105 – Saddle
3˝, 4˝ pipe only

Type 106 – In-line Flanged
½˝, ¾˝, 1˝, 1½˝, 2˝, 3˝, 4˝, 6˝, 8˝

Type 107 – In-line Socket Weld
½˝, ¾˝, 1˝, 1½˝, 2˝

Type 108 – In-line Butt Weld
¼˝, ½˝, ¾˝, 1˝, 1½˝, 2˝

Table A – Process Connection/Type Number

	Process Connection Size/Code—Inches											Type Number
	Size	¼	½	¾	1	1½	2	3	4	6	8	
Process Connection	Code	25	50	75	10	15	20	30	40	60	80	
Threaded–female NPT		•	•	•	•	•						100
Threaded–female NPT (with flushing conn.)		•	•	•	•	•						101
Flanged(1)			•	•	•	•	•	•				102
Flanged (with flushing conn.)			•	•	•	•	•	•				103
In-line—threaded NPT		•	•	•	•							104
Saddle								•	AND LARGER			105
In-line—butt weld		•	•	•	•	•	•					108
In-line—flanged(2)			•	•	•	•	•	•	•	•	•	106
In-line—socket weld		•	•	•	•	•	•					107

Pressure Ratings—All 2500 psi except flanged seals are per ASME B 16.5, temperature limit determined by diaphragm, bottom housing and/or filling fluid.

Table B – Diaphragm Material

Material	Code
316L stainless steel	S
304L stainless steel	C
Monel 400	P
Nickel	N
Carpenter 20	D
Tantalum	U
Hastelloy B	G
Hastelloy C 22(3)	J
Hastelloy C 276(3)	H
Halar Coated Monel	R
Gold Plated 304 SS	W

Table C – Housing Materials

Bottom	Code
Steel	B
304L SS	C
316L SS	S
Hastelloy B	G
Hastelloy C 22(3)	J
Hastelloy C 276(3)	H
Carpenter 20	D
Monel “400”	M
Inconel “600”	W
Nickel	N
PVC(4)(9)	V
Tantalum clad SS(5)	SU
Halar coated SS(6)	BH
Teflon flanged steel(7)	T
Kynar(8)(9)	KY
Titanium	TI

Table D – Instrument Connection

Size – NPT	Code
¼	02T
½	04T

Table E – Filling Fluid

Filling	Service	Connection to Instrument	Temperature Range °F	Code
Glycerin	Pressure	Direct Only	0/400	CG
Silicone	Pressure/Vacuum	Direct or Flexible Line	–40/500	CK, DJ
Halocarbon	Pressure/Vacuum in presence of strong oxidizing agent	Direct or Flexible Line	–70/300	CF
Syltherm	Pressure/Vacuum	Direct or Flexible Line	–40/750	HA

Notes:

(1) 150, 300, 600, 900, 1500 & 2500 class flanges.
(2) 1˝ 150 thru 8˝ 300 class flanges only.
(3) Use on applications where NACE standard MR-01-75/ISO 1516 w/Sept. 2005 corrigendums.
(4) Maximum Press./Temp.
Threaded: 200 psi/74°F, 125 psi/125°F, 80 psi/150°F.
Flanged: 75 psi/100°F.
(5) Type 102 only.
(6) Type 102 only – Temp. Limits: –40/300°F.
(7) Only available in 1˝, 1½˝, & 2˝ 150 class, Types 102. Max. Press./Temp. – 270 psi and 150°F. Consult factory for conditions beyond these limits.
(8) Maximum Pressure/Temp.: 200 psi and 180°F.
(9) Type 100: ¼ or ½ NPT only. Larger sizes offered with solvent weld joint. N/A in 101 or 103 design.

Monel is a registered trademark of Huntington Alloys, Inc.
Hastelloy is a registered trademark of Cabot Corp.
Halocarbon is a registered trademark of Halocarbon Products
GYLON 3510 is a registered trademark of Garlock Inc.

HOW TO ORDER:

1. **From Table A...**select TYPE NUMBER based on process connection, process connection size and diaphragm type/construction. (e.g., Threaded/1˝/capsule–code-10-100)
2. **From Table B...**select DIAPHRAGM MATERIAL. (e.g., 316L stainless steel–code S)
3. **From Table C...**select BOTTOM HOUSING MATERIAL. (e.g., 316 stainless steel–code S)
4. **From Table D...**select INSTRUMENT CONNECTION size. (e.g., 1/4 NPT–code 02T)
5. **From Table E...**select FILLING FLUID, if diaphragm seal will be attached to instrument. (e.g., Glycerin–code CG)

Typical code: 10–100SS–02T–CG

All specifications are subject to change without notice.
All sales subject to standard terms and conditions.
© Ashcroft Inc. 2016 Rev. 01/16

Ashcroft Inc., 250 East Main Street, Stratford, CT 06614 USA
Tel: 203-378-8281 • Fax: 203-385-0408
email: info@ashcroft.com • www.ashcroft.com

ASHCROFT®
Trust the shield.®

Type 100 Series Threaded Capsule Diaphragm Seal

DIMENSIONS

Type 100 – Threaded
¼, ½, ¾, 1 NPT

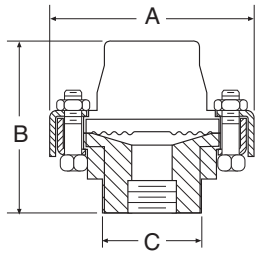

A		B		C	
in	mm	in	mm	in	mm
3¾	(95)	2⅞	(73)	1 13/16	(46)

Type 101 –Threaded
¼, ½, ¾, 1 NPT (with flushing conection)

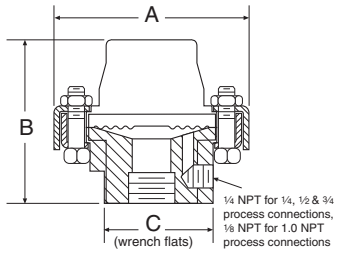

A		B		C	
in	mm	in	mm	in	mm
3¾	(95)	2⅞	(73)	1 13/16	(46)

Type 102 – Flanged
½,″ ¾,″

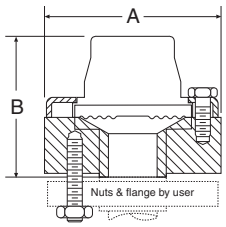

Flange Size	Rating #	A in	A mm	B in	B mm
	150	3½	(89)	2 15/16	(75)
½″	300 or 600	3¾	(95)	3	(76)
	900 or 1500	4¾	(121)	3 3/16	(81)
	150	3⅞	(98)	2 13/16	(71)
¾″	300 or 600	4⅝	(117)	3	(76)
	900 or 1500	5⅛	(130)	3 3/16	(81)

Type 102 – Flanged 1″ (raised face only)
one piece bottom housing, with and without flushing connection

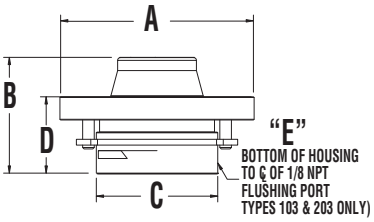

Flange Size	Rating #	A in.	A mm	B in.	B mm	C in.	C mm
1	150 300 or 600	4-1/4 5	(100) (127)	2-9/16	(65)	1-23/32	(69)

Flange Size	Rating #	D in.	D mm	103 & 203 only E in.	E mm
1	150 300 or 600	1-5/8	(41)	3/8	(9)

Type 102 – Flanged 1″ (raised face only)
one piece bottom housing, with and without flushing connection

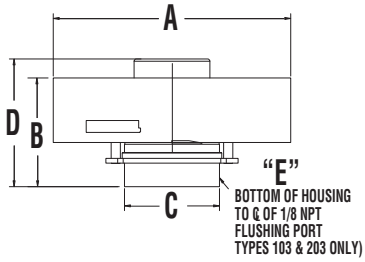

Flange Size	Rating #	A in.	A mm	B in.	B mm	C in.	C mm
1	900 or 1500 2500	5-7/8 6-1/4	(149) (159)	2-7/8	(73)	2-1/4	(57)

Flange Size	Rating #	D in.	D mm	103 & 203 only E in.	E mm
1	900 or 1500 2500	3-3/8	(86)	3/8	(9)

Type 102 – Flanged (raised face only)
1½,″ 2,″ 3″ one piece bottom housing - all materials except PVC, Teflon and Kynar

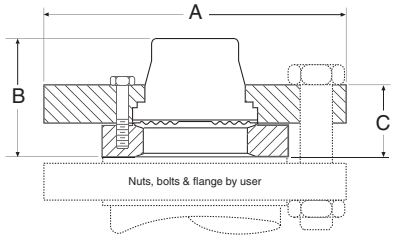

Flange Size	Rating #	A in	A mm	B in	B mm	C in	C mm
	150	5	(127)			1½	(38)
1½″	300 or 600	6¼	(159)	2⅜	(61)	1½	(38)
	900 or 1500	7	(178)			1½	(38)
	150	6	(152)			1⅜	(35)
2″	300 or 600	6½	(165)	1 15/16	(49)	1½	(38)
	900 or 1500	8½	(216)			2⅛	(54)
	150	7½	(191)	2	(51)	1⅝	(41)
3″	300 or 600	8¼	(206)	2 1/16	(52)	1⅞	(47)
	900 or 1500	10½	(267)	2 11/16	(68)	3¼	(82)

Type 102 – Flanged 1″ (raised face only)
two piece bottom housing, 1½,″ 2,″ - PVC, Teflon and Kynar

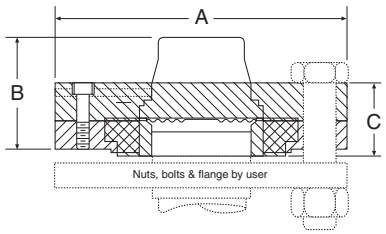

Flange Size	Rating #	A in	A mm	B in	B mm	C in	C mm
1½″	150	5	(127)	2 5/16	(59)	1 13/32	(39)
2″	150	6	(152)	2⅛	(54)	1 9/16	(40)

Type 103 – Flanged
½,″ ¾″ (with flushing conection)

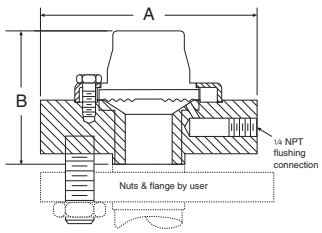

Flange Size	Rating #	A in	A mm	B in	B mm
	150	3½	(89)	2 15/16	(75)
½″	300 or 600	3¾	(95)	3	(76)
	900 or 1500	4¾	(121)	3 3/16	(81)
	150	3⅞	(98)	2 13/16	(71)
¾″	300 or 600	4⅝	(117)	3	(76)

All specifications are subject to change without notice.
All sales subject to standard terms and conditions.
© Ashcroft Inc. 2016 Rev. 01/16

Ashcroft Inc., 250 East Main Street, Stratford, CT 06614 USA
Tel: 203-378-8281 • Fax: 203-385-0408
email: info@ashcroft.com • www.ashcroft.com

Type 100 Series Threaded Capsule Diaphragm Seal

DIMENSIONS

Type 103 – Flanged 1½˝, 2˝, 3˝ (raised face only)
one piece bottom housing with flushing connection

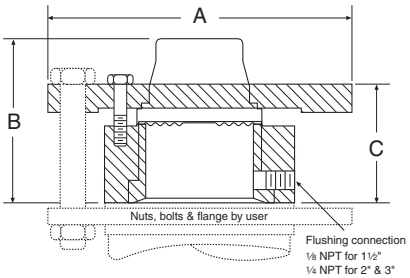

Flange Size	Rating #	A in	A mm	B in	B mm	C in	C mm
1½˝	150	5	(127)	3	(76)	2 1/16	(52)
	300 or 600	6¼	(159)				
	900 or 1500	7	(178)				
2˝	150	6	(152)	3 11/32	(84)	2⅜	(60)
	300 or 600	6½	(165)				
	900 or 1500	8½	(215)				
3˝	150	7½	(191)	3 3/32	(79)	2 7/32	(56)
	300 or 600	8¼	(210)	3 3/16	(81)	2 7/32	(57)
	900	9½	(241)	3 23/32	(94)	2¾	(70)
	1500	10½	(267)				

Type 105 – Saddle
4˝ Pipe only

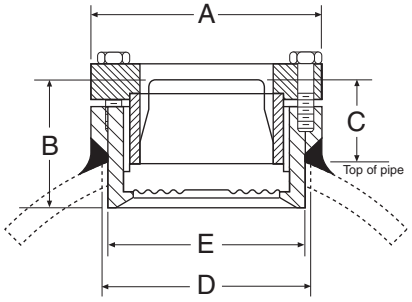

A in	A mm	B in	B mm	C in	C mm	D in	D mm	E in	E mm
3½	(89)	1 15/16	(50)	1 3/16	(31)	3	(76)	2 31/32	(75)

Type 104 – In-Line Threaded
¼, ½, ¾, 1 NPT

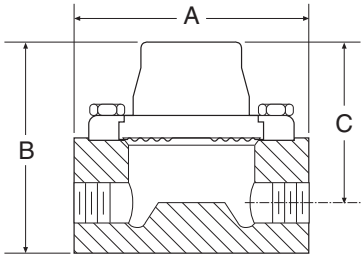

Process Connection	A in	A mm	B in	B mm	C in	C mm
¼ NPT	4	(102)	2 5/8	(67)	2 1/8	(54)
½ NPT			3⅝	(92)	2¾	(70)
¾ NPT			3⅞	(98)	3	(76)
1 NPT			3⅞	(98)	3	(76)

Type 106 – In-Line Flanged
½˝, 1˝, 1½˝, 2˝, 3˝

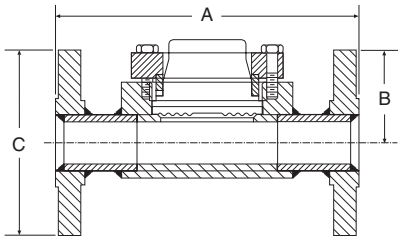

Flange Size	Rating #	A in	A mm	B in	B mm	C in	C mm
½˝	150	7	(178)	2 7/16	(62)	3½	(89)
	300	7	(178)			3⅞	(98)
1˝	150	7	(178)	2 7/16	(62)	4¼	(108)
	300	8	(203)			4⅞	(123)
1½˝	150	8	(203)	2 11/16	(68)	5	(127)
	300	9	(229)			6⅛	(155)
2˝	150	9	(229)	2 15/16	(75)	6	(152)
	300	10	(254)			6½	(165)
3˝	150	11	(279)	3⅝	(92)	7½	(229)
	300	12	(305)			8¼	(254)

Type 105 – Saddle
3˝ Pipe only

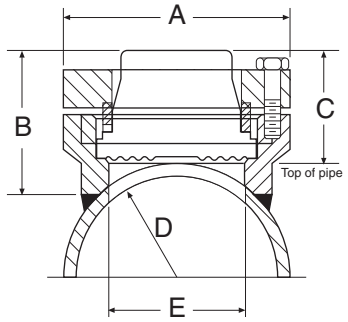

A in	A mm	B in	B mm	C in	C mm	D in	D mm	E in	E mm
3½	(89)	2¼	(57)	1⅞	(48)	1¾	(44)	2⅛	(54)

Type 106 – In-Line Flanged
4˝, 6˝, 8˝

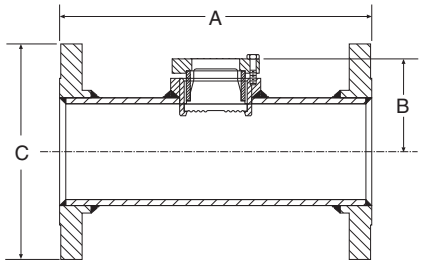

Flange Size	Rating #	A in	A mm	B in	B mm	C in	C mm
4˝	150	13	(330)	3⅜	(86)	9	(229)
	300	14	(356)			10	(254)
6˝	150	16	(406)	4 7/16	(113)	11	(279)
	300	17	(432)			12½	(318)
8˝	150	16	(406)	5 7/16	(138)	13½	(343)

Type 107 – In-Line Welded
¼˝, ½˝, ¾˝, 1˝, 1½˝, 2˝

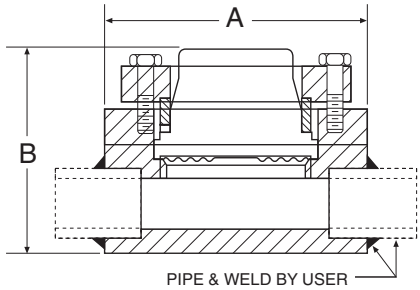

Pipe Size	A in	A mm	B in	B mm
¼˝	4	(102)	2 11/32	(60)
½˝, ¾˝			2 11/32	(60)
1˝			2 15/32	(63)
1½˝			2 23/32	(69)
2˝			2 31/32	(75)

All specifications are subject to change without notice.
All sales subject to standard terms and conditions.
© Ashcroft Inc. 2016 Rev. 01/16

Ashcroft Inc., 250 East Main Street, Stratford, CT 06614 USA
Tel: 203-378-8281 • Fax: 203-385-0408
email: info@ashcroft.com • www.ashcroft.com

CS-451-100 : Identification sheet

VWTC PROJECT NUMBER:	5000218009	REV:	1
PROJECT NAME:	AEM AMARUQ	SUBMITTED TO (COMPANY):	AGNICO EAGLE MINES
ENGINEER:	Gabriel Hébert	SUBMITTED TO (RESPONSIBLE)	
PROJECT MANAGER:	Clément B	PROJECT NUM REFERENCE.:	
PHONE NUMBER:		LOT NUMBER:	

SUPPLIER	EQPT CODE	EQPT TAG NO	DIA	DESCRIPTION	INFO 1	INFO 2	INFO 3	APPLIC.	NOTE	REV
FLYGT	IESWLE201155	LSHH4-011	N/A	HIGH HIGH LEVEL SWITCH	LEVEL SWITCH/MANUFACTURER:FLYGT// MODEL: ENM-10 (6m)	N/A	N/A	SLUDGE TANK		rev1

This page is intentionally left blank

Technical
specification

ENM-10 Level regulator

FLYGT
a xylem brand

Table of Contents

PRODUCT DESCRIPTION....2
Product description....2

CHEMICAL RESISTANCE LIST....6
Chemical resistance list....6

PRODUCT RANGE....8
Product range....8

PRODUCT DESCRIPTION

Product description

The simplest possible method for level control! A mechanical switch in a plastic casing, freely suspended at the desired height from its own cable. When the liquid level reaches the regulator, the casing will tilt and the mechanical switch will close or break the circuit, thereby starting or stopping a pump or actuating an alarm device. No wear, no maintenance! In sewage pumping stations, for ground water and drainage pumping – in fact, for most level control applications – the ENM-10 is the ideal solution.

The regulator casing is made of polypropylene and the cable is sheathed with a special PVC or Nitrile/PVC rubber compound. The plastic components are welded and screwed together. Adhesive is never used. Impurities and deposits will not adhere to the smooth casing.

This level regulator is available in different versions, depending upon the medium in which it is to be used. As standard, the regulator can be obtained with 6, 13, 20, 30 or 50 metres (20, 42, 65, 100 or 167 feet) of cable for liquids with specific density between 0.95 and 1.10 g/cm3; for other specific densities and for the Ex-version, the regulator is only available with 20 metres (65 ft) of cable. The regulator can withstand up to 60°C (140°F).

Technical data

Liquid temperature:	min. 0°C (32°F) max. 60°C (140°F)
Liquid density:	min. 0.65 g/cm^3 max. 1.5 g/cm^3
Degree of protection:	IP68, 20 m (65 ft)
Interrupting capacity of micro switch:	AC, resistive load, 250V 10A AC, inductive load, 250V 3A cos ϕ = 0.5 DC, 30V 5A
With gold plated micro switch:	same as above, except: DC, 24V 10mA

Note that local regulations may limit the voltage.

Materials

Body:	Body:
Bending relief:	EPDM rubber
Cable:	special compound PVC or NBR/PVC nitrile/PVC rubber

Dimensions

Table 1

For density g/cm^3	Regulator length mm (in.)	Diameter mm (in.)
0.65–0.80	194 (7 10/16)	100 (4)
0.80–0.95	177 (7)	100 (4)
0.95–1.10	162 (6 3/8)	100 (4)
1.05–1.20	142 (5 9/16)	100 (4)
1.20–1.30	133 (5 1/4)	100 (4)

For density g/cm^3	Regulator length mm (in.)	Diameter mm (in.)
1.30–1.40	130 (5 2/16)	100 (4)
1.40–1.50	126 (5)	100 (4)

Weight: approx. 2 kg (4.5 lb) for a standard density regulator with 20 m cable.

Approvals: CE, CSA, SEMKO, NEMKO, DEMKO

LVD approval according to EN61058

CSA approval: Cert no. 1330172

Cl.I Zone 0, Gr. IIC;

CL.I Div.1 Gr A, B, C&D;

Cl.II Gr. E, F&G;

Cl.III when installed to the certified Intrinsically Safe relay, Ex ia, rated for the locations per submitter controll drawing and installation manual.

Intrincically safe circuits are required for the automatic control system. - Use a EX-safety barrier (e.g. Prod. no. 84 01 07).

0080

Figure 1

Wiring alternative

To conform to local regulations, the level regulators are normally connected through a transformer to a low-tension control circuit.

Two regulators are used; one for starting and one for stopping. A third regulator can be connected if an alarm is required at a given level.

Identical regulators can be used for all functions.

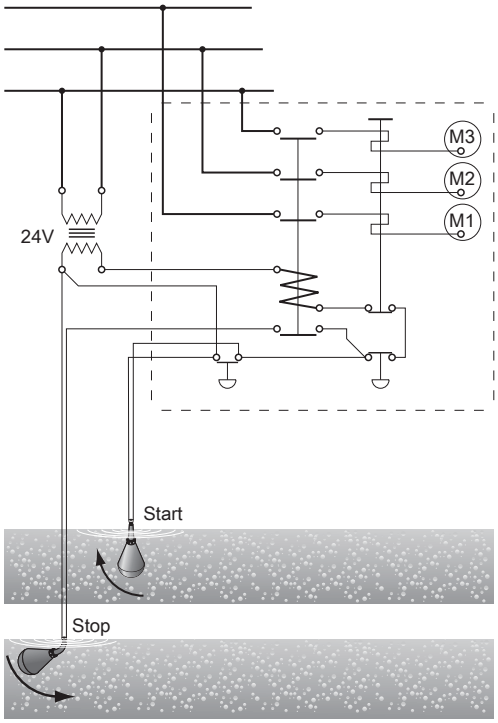

Connect the gray and black leads.

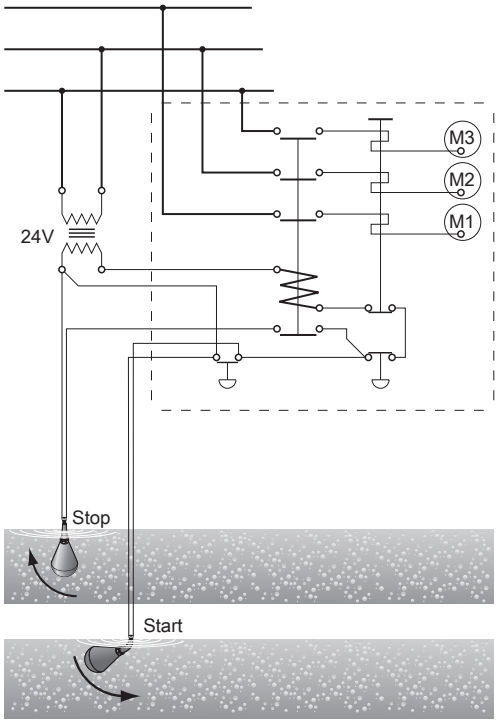

Connect the gray and brown leads.

Insulate the brown lead.
Figure 2: Connected for emptying

Insulate the black lead.
Figure 3: Connected for emptying

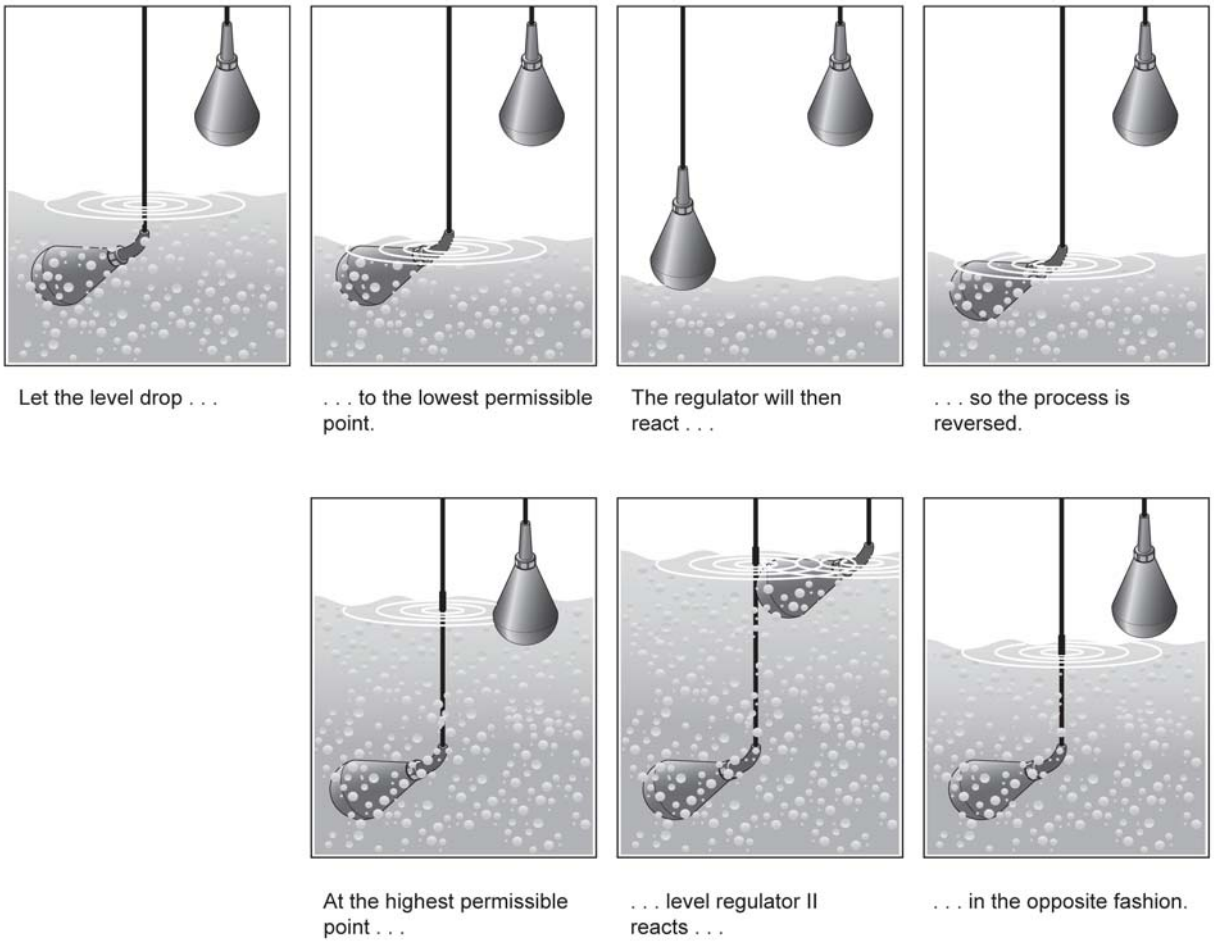

Figure 4

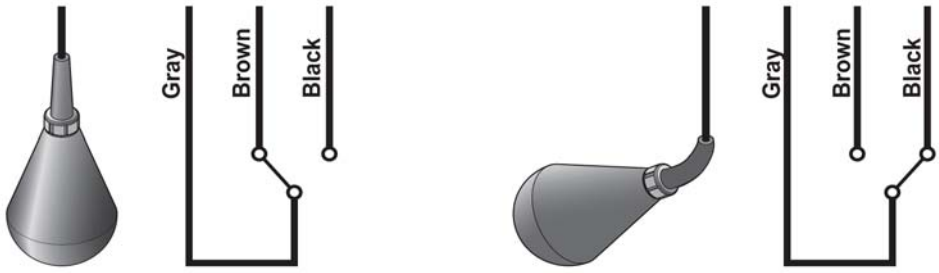

Figure 5: Colour code

Maintenance and repair

ENM-10 is very durable and practically maintenance free. You only have to check on it occasionally, to ensure its continual operation.

- It is recommended to occasionally clean ENM-10, and especially when fat/grease covers the plastic surface.
- At the same time, make an occular inspection of the regulator to make sure neither cable, protective sleeve or plastic casing show any signs of damage.

- A damaged ENM-10 cannot be repaired in any way, due to the hermetic encapsulation. If the unit is found to be damaged, replace it with a new one.
- For Ex-installations, also make absolutely sure that the Ex-barrier (e.g. Prod. no. 84 01 07) is operating correctly - The LED changes when the switch is toggled.

The manufacturers reserve the right to alter performance specification or design without notice.

CHEMICAL RESISTANCE LIST

Chemical resistance list

The liquid in which level regulation is practiced most frequently is, of course, water. Of the millions of regulators in use all over the world today, it is estimated that nine out of ten work in water.

However, with a float body of polypropylene, a cable of PVC or NBR/PVC nitrile/PVC rubber and a bending relief of EPDM rubber, the ENM-10 is virtually insensitive to many aggressive liquids.

The table shows how resistant the ENM-10 equipped with either PVC or NBR/PVC nitrile/PVC rubber cable, is to different chemicals at two different temperatures.

The classification is broken down into the following categories:

0 = No effect, 1 = Minor to moderate and 2 = Severe effect. The sign – means that information is not available.

Keep in mind also that the density of the liquid determines the bouyancy of the regulator. The ENM-10 is made for seven different densities. See *Product description* (page 2).

Always observe local regulations:

Take particular note of:

- risk of fire/explosion
- hygiene requirements

Acids	PVC cable		NBR/PVC nitrile/PVC rubber cable	
	20°C (68°F)	60°C (140°F)	20°C (68°F)	60°C (140°F)
Acetic Acid 50%	1	2	0	0
Acetic Acid 75%	2	2	0	0
Benzoic Acid	2	2	0	0
Boric Acid 5%	0	—	0	0
Butyric Acid	2	2	2	2
Chromic Acid 10%	0	2	2	2
Citric Acid	0	1	0	0
Hydrobromic Acid 5%	1	2	0	0
Hydrochloric Acid 10%	0	1	0	1
Hydrochloric Acid 37%	1	2	0	2
Hydrocyanic Acid 10%	0	0	1	2
Hydrofluoric Acid 5%	0	2	0	1
Hypochloric Acid	1	2	2	2
Maleic Acid	2	2	2	2
Nitric Acid 5%	1	1	1	1
Nitric Acid 65%	2	2	2	2
Oleic Acid	1	2	2	2
Oxalic Acid 50%	1	1	1	2
Phosphoric Acid 25%	0	0	1	2
Phosphoric Acid 85%	0	0	1	2
Sulphuric Acid 10%	1	2	1	2
Sulphuric Acid 78%	2	2	2	2
Tannic Acid	0	0	0	0
Tartaric Acid	1	1	1	1
Bases				
Ammonium Hydroxide	0	—	0	0
Calcium Hydroxide	0	0	0	0
Potassium Hydroxide	1	2	0	0
Sodium Hydroxide	1	2	0	0

Salts	PVC cable		NBR/PVC nitrile/PVC rubber cable	
	20°C (68°F)	60°C (140°F)	20°C (68°F)	60°C (140°F)
Aluminium Chloride	0	0	0	0
Calcium Sulphate	0	0	0	0
Calcium Chloride	0	0	0	0
Calcium Nitrate	0	0	0	0
Copper Chloride	0	0	0	0
Copper Sulphate	0	0	0	0
Ferric Chloride	0	0	0	0
Ferrous Sulphate	0	0	0	0
Magnesium Chloride	0	0	0	0
Potassium Sulphate	0	0	0	0
Potassium Nitrate	0	0	0	0
Potassium Carbonate	1	1	1	1
Potassium Bicarbonate	0	0	0	0
Sodium Sulphate	0	0	0	0
Sodium Chloride	0	0	0	0
Sodium Nitrate	0	0	0	0
Sodium Bicarbonate	0	0	0	0
Sodium Carbonate	0	0	0	0
Tin Chloride	1	1	1	1
Zinc Sulphate	0	0	0	0
Zinc Chloride	0	0	0	0
Oils				
Castor Oil	1	1	1	1
Cocoanut Oil	0	—	0	2
Corn Oil	2	2	2	2
Diesel Oil	2	2	2	2
Linseed Oil	2	2	2	2
Mineral Oils	2	2	2	2
Olive Oil	1	1	1	1
Silicone Oils	0	0	0	0

Solvents and miscellaneous	PVC cable		NBR/PVC nitrile/PVC rubber cable	
	20°C (68°F)	60°C (140°F)	20°C (68°F)	60°C (140°F)
Aceton	2	2	2	2
Aniline	2	2	1	2
Benzene	2	2	2	2
Butyl Alcohol	2	2	0	1
Carbon Tetrachloride	2	2	2	2
Chlorobenzene	2	2	2	2
Chloroform	2	2	2	2
Ethyl Alcohol	2	2	0	1
Ethyl Ether	2	2	2	2
Ethyl Acetate	2	2	2	2
Ethylene Dichloride	2	2	2	2
Ethylene Chloride	2	2	2	2
Formaldehyde 37%	1	2	0	0
Gasoline	2	2	2	2
Kerosene	2	2	2	2
Methyl Alcohol	2	2	0	0
Methyl Ethyl Ketone	2	2	2	2
Methylene Chloride	2	2	2	2
Nitrobenzene	2	2	2	2
Phenol	2	2	2	2
Toluene	2	2	2	2
Trichlorethylene	2	2	2	2
Turpentine	2	2	2	2
Xylene	2	2	2	2
Gases				
Carbon Dioxide	0	0	0	0
Carbon Monoxide	0	0	0	0
Chlorine (wet)	2	2	2	2
Hydrogen Sulphide	0	0	1	1
Sulphur Dioxide (wet)	1	1	2	2

0 = No effect, 1 = Minor to moderate, 2 = Severe effect. – = No information available.

Figure 6

PRODUCT RANGE

Product range

Part no.	For density [g/cm³]	Color of level switch	Type of cable	Cable length [m]	Approvals	For market	Notes
5828800	0,65-0,80	Blue	1	20	CE		
5828801	0,80-0,95	Blue	1	20	CE		
5828802	0,95-1,10	Blue	1	6	CE		
5828803	0,95-1,10	Blue	1	13	CE		
5828804	0,95-1,10	Blue	1	20	CE		
5828805	1,05-1,20	Blue	1	20	CE		
5828806	1,2-1,3	Blue	1	20	CE		
5828807	1,3-1,4	Blue	1	20	CE		
5828808	1,4-1,5	Blue	1	20	CE		
5828809	0,65-0,80	Grey	5	20	CSA/CE	Canada	
5828810	0,80-0,95	Grey	5	20	CSA/CE	Canada	
5828811	0,95-1,10	Grey	5	6	CSA/CE	Canada	
5828812	0,95-1,10	Grey	5	13	CSA/CE	Canada	
5828813	0,95-1,10	Grey	5	20	CSA/CE	Canada	
5828814	1,05-1,20	Grey	5	20	CSA/CE	Canada	
5828815	1,2-1,3	Grey	5	20	CSA/CE	Canada	
5828816	1,3-1,4	Grey	5	20	CSA/CE	Canada	
5828817	1,4-1,5	Grey	5	20	CSA/CE	Canada	
5828818	0,65-0,80	Grey	1	20	CSA/CE	Canada	
5828819	0,80-0,95	Grey	1	20	CSA/CE	Canada	
5828820	0,95-1,10	Grey	1	6	CSA/CE	Canada	
5828821	0,95-1,10	Grey	1	13	CSA/CE	Canada	
5828822	0,95-1,10	Grey	1	20	CSA/CE	Canada	
5828823	1,05-1,20	Grey	1	20	CSA/CE	Canada	
5828824	1,2-1,3	Grey	1	20	CSA/CE	Canada	
5828825	1,3-1,4	Grey	1	20	CSA/CE	Canada	
5828826	1,4-1,5	Grey	1	20	CSA/CE	Canada	
5828827	0,65-0,80	Blue	2	20	CE	USA	
5828828	0,80-0,95	Blue	2	20	CE	USA	
5828829	0,95-1,10	Blue	2	6	CE	USA	
5828830	0,95-1,10	Blue	2	13	CE	USA	
5828831	0,95-1,10	Blue	2	20	CE	USA	
5828832	1,05-1,20	Blue	2	20	CE	USA	
5828833	1,2-1,3	Blue	2	20	CE	USA	
5828834	1,3-1,4	Blue	2	20	CE	USA	
5828835	1,4-1,5	Blue	2	20	CE	USA	
5828836	0,95-1,10	Grey	5	30	CSA/CE	Canada	
5828837	0,95-1,10	Grey	5	50	CSA/CE	Canada	
5828838	0,95-1,10	Grey	5	100	CSA/CE	Canada	
5828839	0,95-1,10	Grey	5	150	CSA/CE	Canada	
5828851	0,95-1,10	Red	3	65	CE		
5828852	0,95-1,10	Red	3	6	CE		
5828853	0,95-1,10	Red	3	13	CE		
5828854	0,95-1,10	Red	3	20	CE		
5828855	0,95-1,10	Red	3	6	CSA/CE	Canada	
5828856	0,95-1,10	Red	3	13	CSA/CE	Canada	
5828857	0,95-1,10	Red	3	20	CSA/CE	Canada	

Cont. →

Figure 7

5828858	0,95-1,10	Red	4	6	CE	USA	
5828859	0,95-1,10	Red	4	13	CE	USA	
5828860	0,95-1,10	Red	4	20	CE	USA	
5828870	0,65-0,80	Blue	5	20	CE		
5828871	0,80-0,95	Blue	5	20	CE		
5828872	0,95-1,10	Blue	5	6	CE		
5828873	0,95-1,10	Blue	5	13	CE		
5828874	0,95-1,10	Blue	5	20	CE		
5828875	1,05-1,20	Blue	5	20	CE		
5828876	1,2-1,3	Blue	5	20	CE		
5828877	1,3-1,4	Blue	5	20	CE		
5828878	1,4-1,5	Blue	5	20	CE		
5828879	0,95-1,10	Blue	1	65	CE		
5828880	0,95-1,10	Blue	1	30	CE		
5828881	0,95-1,10	Blue	1	50	CE		
5828882	0,95-1,10	Grey	1	30	CSA/CE	Canada	
5828883	0,95-1,10	Grey	1	50	CSA/CE	Canada	
5828884	0,95-1,10	Blue	2	30	CE	USA	
5828885	0,95-1,10	Blue	2	50	CE	USA	
5828886	0,95-1,10	Red	3	30	CE		
5828887	0,95-1,10	Red	3	50	CE		
5828890	0,95-1,10	Blue	5	30	CE		
5828891	0,95-1,10	Blue	5	50	CE		
5828892	0,95-1,10	Red	3	6	CE	Japan	
5828893	0,95-1,10	Red	3	13	CE	Japan	
5828894	0,95-1,10	Red	3	20	CE	Japan	
5828895	0,95-1,10	Blue	1	6	CE	Japan	
5828896	0,95-1,10	Blue	1	13	CE	Japan	
5828897	0,95-1,10	Blue	1	20	CE	Japan	
5828898	0,95-1,10	Blue	1	50	CE	Japan	
5947919	0,95-1,10	Blue	5	20	CE		Designed for low current and slow movements
5947920	0,95-1,10	Grey	5	20	CSA/CE		Designed for low current and slow movements

Type of cable:

1. Blue PVC jacket with color coding of wires: Grey/Brown/Black
2. Blue PVC jacket with color coding of wires: Red/White/Black
3. Red PVC jacket with color coding of wires: Grey/Brown/Black
4. Red PVC jacket with color coding of wires: Red/White/Black
5. BLACK NBR/PVC jacket with color coding of wires: Grey/Brown/Black (NBR=Nitrile rubber)

Xylem |ˈzīləm|

1) The tissue in plants that brings water upward from the roots
2) A leading global water technology company

We're 12,000 people unified in a common purpose: creating innovative solutions to meet our world's water needs. Developing new technologies that will improve the way water is used, conserved, and re-used in the future is central to our work. We move, treat, analyze, and return water to the environment, and we help people use water efficiently, in their homes, buildings, factories and farms. In more than 150 countries, we have strong, long-standing relationships with customers who know us for our powerful combination of leading product brands and applications expertise, backed by a legacy of innovation.

For more information on how Xylem can help you, go to xyleminc.com

xylem
Let's Solve Water

Xylem Water Solutions AB
Gesällvägen 33
174 87 Sundbyberg
Sweden
Tel. +46-8-475 60 00
Fax +46-8-475 69 00
http://tpi.xyleminc.com

Visit our Web site for the latest version of this document and more information

The original instruction is in English. All non-English instructions are translations of the original instruction.

© 2011 Xylem Inc

891480_11.1_en.GB_2012-01_TS_ENM-10

This page is intentionally left blank

CS-451-500 : Identification sheet

VWTC PROJECT NUMBER:	5000218009	REV:	1
PROJECT NAME:	AEM AMARUQ	SUBMITTED TO (COMPANY):	AGNICO EAGLE MINES
ENGINEER:	Gabriel Hébert	SUBMITTED TO (RESPONSIBLE)	
PROJECT MANAGER:	Clément B	PROJECT NUM REFERENCE.:	
PHONE NUMBER:		LOT NUMBER:	

SUPPLIER	EQPT CODE	EQPT TAG NO	DIA	DESCRIPTION	INFO 1	INFO 2	INFO 3	APPLIC.	NOTE	REV
E&H	ST-451-507	LSLL4-012		LOW LOW LEVEL SWITCH	LEVEL SWITCH // Manuf : E&H // model : FTL51-UGN2CBAE5A Point level/density, vibronic. Extension tube. Approval: U CSA C/US General Purpose Process Conn.: GN2 Thread ANSI NPT1, 316L	Probe Length; Type: CB 6 Inch; 316L, Ra<3.2um/126uin Electronics; Output: A FEL50A; PROFIBUS PA Housing; Cable Entry: E5 F13 NEMA Type 4X/6P Encl. / F17		SLUDGE TANK		rev1

This page is intentionally left blank

Technical Information

Liquiphant M
FTL50, FTL51, FTL50H, FTL51H

Vibronic

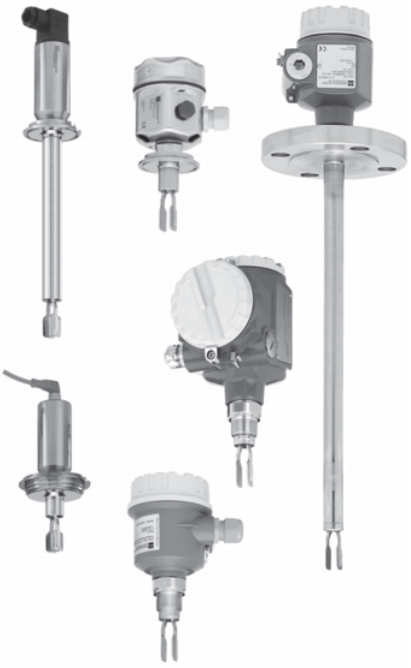

Point level switch for all kinds of liquids

Application

- Process temperatures from −50 °C to 150 °C (-58 to 302 °F)
- Pressures up to 100 bar (1450 psi)
- Viscosities up to 10,000 mm^2/s (cSt)
- For liquids with densities ≥ 0.5 g/cm^3 (SGU)

FTL50: Compact design
FTL51: Extension pipe up to 3 m (9.8 ft) and up to 6 m (20 ft) on request
FTL50H, FTL51H: Certified for the food and pharmaceutical industries

Ideal substitute for float switches, as reliable function not affected by flow, turbulence, bubbles, foam, vibration, solids content or buildup.

Your benefits

- Recommended for safety systems requiring functional safety to SIL2/SIL3 as per IEC 61508/IEC 61511-1
- Design in accordance with ASME B31.3
- Recommended for use in sterile applications in the life science industry (design in accordance with ASME BPE)
- No adjustment: quick, low-cost startup
- No mechanically moving parts: no maintenance, no wear, long operating life
- Functional safety: Monitoring of tuning fork for damage
- Compact stainless steel housing (optional): the IP69K protection rating guarantees that the unit remains impermeable, even in the event of intensive cleaning or flooding for several hours.

Endress+Hauser
People for Process Automation

Table of contents

Application 4
Point level detection 4

Function and system design 4
Measuring principle 4
Modularity 4
Electronic versions 5
Electronics for continuous density measurement 5
Galvanic isolation 5
Design 5

Input 5
Measured variable 5
Measuring range (detection range) 5
Density 5

Electronic insert FEL51 (AC 2-wire) 6
Power supply 6
Electrical connection 6
Output signal 6
Signal on alarm 6
Connectable load 6

Electronics FEL51 (AC, in compact housing) 8
Power supply 8
Electrical connection 8
Output signal 8
Signal on alarm 8
Connectable load 8

Electronic insert FEL52 (DC PNP) 10
Power supply 10
Electrical connection 10
Output signal 10
Signal on alarm 10
Connectable load 10

Electronics FEL52 (DC PNP, in compact housing) . . 11
Power supply 11
Electrical connection 11
Output signal 11
Signal on alarm 12
Connectable load 12

Electronic insert FEL54 (AC/DC with relay output). 13
Power supply 13
Electrical connection 13
Output signal 13
Signal on alarm 13
Connectable load 13

Electronic insert FEL55 (8/16 mA) 14
Power supply 14
Electrical connection 14
Output signal 14
Signal on alarm 14
Connectable load 14

Electronic insert FEL56 (NAMUR L-H edge) 15
Power supply 15
Electrical connection 15
Output signal 15
Signal on alarm 15
Connectable load 15

Electronic insert FEL58 (NAMUR H-L edge) 16
Power supply 16
Electrical connection 16
Output signal 16
Signal on alarm 16
Connectable load 16

Electronics FEL58 (NAMUR H-L edge, in compact housing) 17
Power supply 17
Electrical connection 17
Output signal 17
Signal on alarm 17
Connectable load 17

Electronic insert FEL57 (PFM) 18
Power supply 18
Electrical connection 18
Output signal 19
Signal on alarm 19
Connectable load 19

Electronic insert FEL50A (PROFIBUS PA) 20
Power supply 20
Electrical connection 20
Output signal 21
Signal on alarm 21

Electronic insert FEL50D (density) 22
Power supply 22
Electrical connection 22
Signal on alarm 22
Adjustment 22
Operating principle 23
Light signals 23

Connection and function 24
Connecting cables 24
Safety mode 24
Switching time 24
Switch-on behavior 24

Performance characteristics 24
Reference operating conditions 24
Maximum measured error 24
Repeatability 24
Hysteresis 24

Influence of medium temperature 24
Influence of medium density 24
Influence of medium pressure 24

Operating conditions 25
Installation 25
Examples of mounting 25
Orientation 27

Environment 27
Ambient temperature range 27
Storage temperature 27
Installation height as per IEC61010-1 Ed.3 27
Climate class 27
Degree of protection 28
Vibration resistance 28
Electromagnetic compatibility 28

Medium conditions 29
Medium temperature 29
Thermal shock 29
Medium pressure pe 29
Test pressure 29
State of aggregation 29
Density 29
Viscosity 29
Solids content 29
Lateral loading capacity 29

Mechanical construction 30
Design 30
Dimensions 31
Weights 36
Materials and surfaces 36
Process connections 37

Human interface 38
Electronic inserts 38
Compact housing 39
Operating concept 41

Certificates and approvals 41
CE mark 41
C-tick mark 41
General approvals 41
CRN approval 42
Process seal according to ANSI/ISA 12.27.01 42
Other certificates 42
Manufacturer declarations 42
Use in hazardous zones 42
ASME B 31.3 43
Pressure equipment directive 43

Ordering information 43
Liquiphant M FTL50, FTL51 product structure 43
Liquiphant M FTL50H, FTL51H product structure 47

Accessories 50
Weld-in adapter 50
Weather protection cover 52
Lap joint flange 52
Lap joint flanges 53
Sliding sleeves for unpressurized operation 53
High pressure sliding sleeves 54
Cover with sight glass 55
Cover with sight glass 55
Circular connector 55

Documentation 56
Operating Instructions 56
Technical Information 57
Functional safety (SIL) 57
Safety Instructions (ATEX) 58
Safety Instructions (NEPSI) 58
Control Drawings 58
System information 58

Application

Point level detection

Maximum or minimum detection in tanks or pipes containing all kinds of liquids, including use in hazardous areas, food and pharmaceuticals.

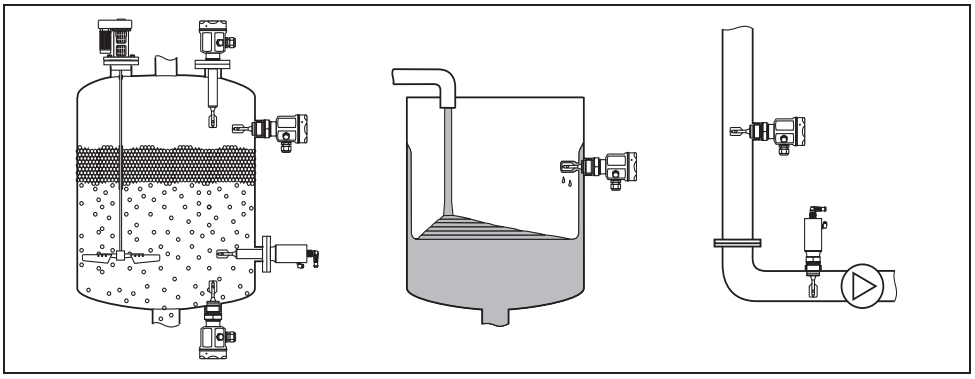

L00-FTL5xxxx-11-05-xx-xx-000

Function and system design

Measuring principle

The sensor's fork vibrates at its intrinsic frequency. This frequency is reduced when covered with liquid. This change in frequency causes the point level switch to switch.

Modularity

Point level switch
Liquiphant M FTL with electronic versions
FEL51, FEL52, FEL54

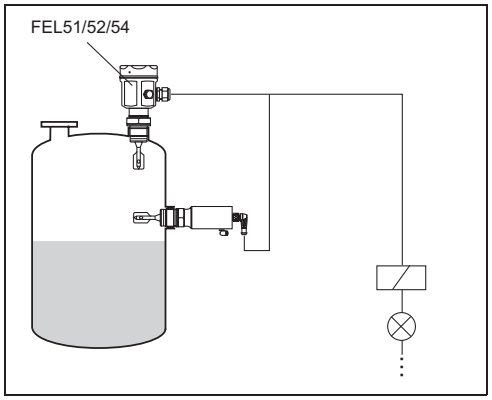

L00-FTL5xxxx-15-05-xx-xx-000

Point level switch
Liquiphant M FTL with electronic versions
FEL55, FEL56, FEL57, FEL58
for connecting to a separate switching unit
or an isolating amplifier FEL50A
for connecting to a PROFIBUS PA segment

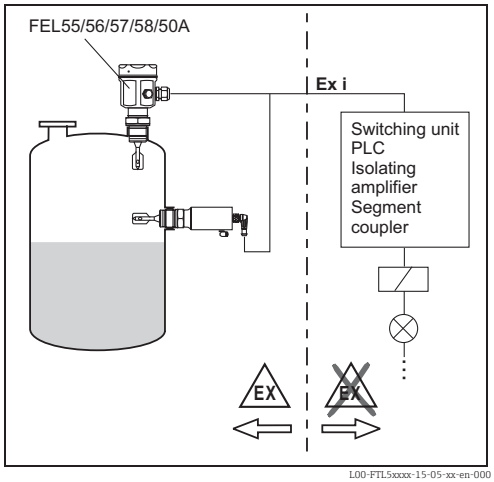

L00-FTL5xxxx-15-05-xx-en-000

Electronic versions	FEL51: Two-wire AC version; Switches the load directly into the power supply circuit via an electronic switch. FEL52: Three-wire DC version; Switches the load via the transistor (PNP) and separate connection e.g. in conjunction with programmable logic controllers (PLCs), DI modules as per EN 61131-2. FEL54: Universal current version with relay output; Switches the loads via 2 floating change-over contacts. FEL55: Signal transmission 16/8 mA on two-wire cabling e.g. in conjunction with programmable logic controllers (PLCs), AI modules 4 to 20 mA as per EN 61131-2. FEL56: For separate switching unit; signal transmission L-H edge 0.6 to 1.0 / 2.2 to 2.8 mA to EN 50227 (NAMUR) on two-wire cabling. FEL58: For separate switching unit; signal transmission H-L edge 2.2 to 3.5 / 0.6 to 1.0 mA to EN 50227 (NAMUR) on two-wire cabling. Checking of connecting cabling and other devices by pressing a key on the electronic insert. FEL57: For separate switching unit; PFM signal transmission; Current pulses superposed on the power supply along the two-wire cabling. Proof test from the switching unit without changing levels. FEL50A: For connecting to PROFIBUS PA; Cyclic and acyclic data exchange acc. to PROFIBUS-PA Profile 3.0 Discrete Input
Electronics for continuous density measurement	FEL50D: For connecting to Density Computer FML621
Galvanic isolation	FEL51, FEL52, FEL50A: between sensor and power supply FEL54: between sensor and power supply and load FEL55, FEL56, FEL57, FEL58, FEL50D: see connected switching unit
Design	FTL50: Compact FTL51: With extension pipe FTL50H: Compact, with polished tuning fork and hygienic process connections FTL51H: With extension pipe, polished tuning fork and hygienic process connections

Input

Measured variable	Level (limit value)
Measuring range (detection range)	FTL50: dependent on mounting point FTL51: dependent on mounting point and the extension pipe ordered. Standard extension pipe up to 3 m (9.8 ft) and up to 6 m (20 ft) on request.
Density	Setting on the electronic insert > 0.5 g/cm³ (SGU) or > 0.7 g/cm³ (SGU) (others on request)

Electronic insert FEL51 (AC 2-wire)

Power supply

Supply voltage: AC 19 to 253 V
Power consumption: < 0.83 W
Residual current consumption: < 3.8 mA
Short-circuit protection
Overvoltage protection FEL51: overvoltage category III

Electrical connection

Two-wire AC connection

Switches the load directly into the power supply circuit via an electronic switch.

Always connect in series with a load!

Check the following:
- The residual current in blocked state (up to 3.8 mA)
- That for low voltage
  - the voltage drop across the load is such that the minimum terminal voltage at the electronic insert (19 V) when blocked is not undershot.
  - the voltage drop across the electronics when switched through is observed (up to 12 V)
- That a relay cannot de-energize with holding power below 3.8 mA.
  If this is the case, a resistor should be connected parallel to the relay. An RC module is available under the part number: 71107226
- When selecting the relay, pay attention to the holding power / rated power (see "Connectable load")

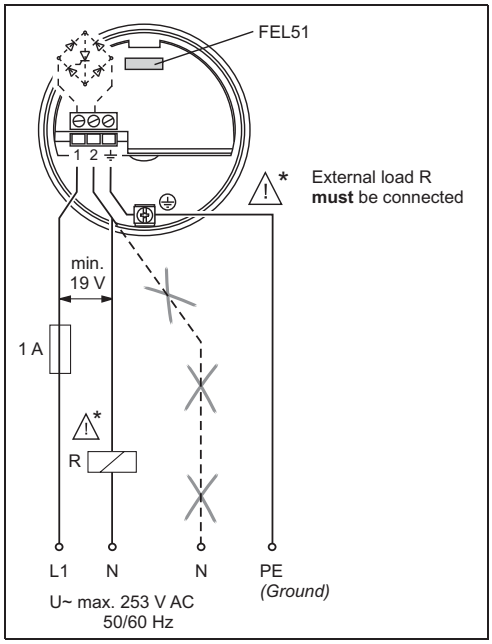

L00-FTL5xxxx-04-05-xx-en-007

Output signal

I_L = load current (switched through)

< 3.8 mA = residual current (blocked)

☼ = lit

● = unlit

L00-FTL2xxxx-07-05-xx-xx-000

Safety mode	Level	Output signal	LEDs green	LEDs red
Max.		1 —I_L→ 2	☼	●
		1 --< 3.8 mA--> 2	☼	☼
Min.		1 —I_L→ 2	☼	●
		1 --< 3.8 mA--> 2	☼	☼

L00-FTL5xxxx-04-05-xx-xx-001

Signal on alarm

Output signal on power failure or in the event of damaged sensor: < 3.8 mA

Connectable load

- Voltage drop via FEL51 ≤ 12 V
- Residual current if electrical switch is blocked: ≤ 3.8 mA
- Load switched directly into the power supply circuit via the thyristor.
  Transient (40 ms) ≤ 1.5 A, ≤ 375 VA at 253 V or ≤ 36 VA at 24 V (not short-circuit-proof)

The load is switched via an electronic switch directly in the power circuit.
Always connect in series with a load!
Not suitable for connection to low-voltage PLC inputs!

Selection guide for relays

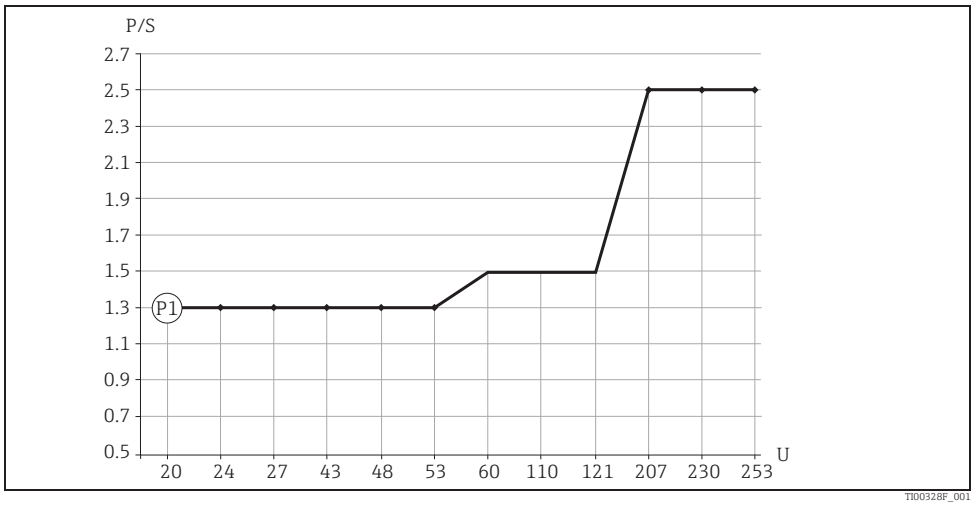

Minimum nominal power of load
P/S nominal power in [W] / [VA]
U operating voltage in [V]

Position	Operating voltage	Nominal power	
		min.	max.
P1 AC operation	24 V 110 V 230 V	> 1.3 VA > 1.5 VA > 2.5 VA	< 6 VA < 27.5 VA < 57.5 VA

Relays with less nominal power can be operated via an RC module connected in parallel (optional).

Electronics FEL51 (AC, in compact housing)

Power supply

Supply voltage: AC 19 to 253 V
Power consumption: < 0.83 W
Residual current consumption: < 3.8 mA
Short-circuit protection
Overvoltage protection FEL51: overvoltage category III

Electrical connection

Two-wire AC connection

Switches the load directly into the power supply circuit via an electronic switch.

Always connect in series with a load!

Check the following:
- The residual current in blocked state (up to 3.8 mA)
- That for low voltage
  - the voltage drop across the load is such that the minimum terminal voltage at the electronic insert (19 V) when blocked is not undershot.
  - the voltage drop across the electronics when switched through is observed (up to 12 V)

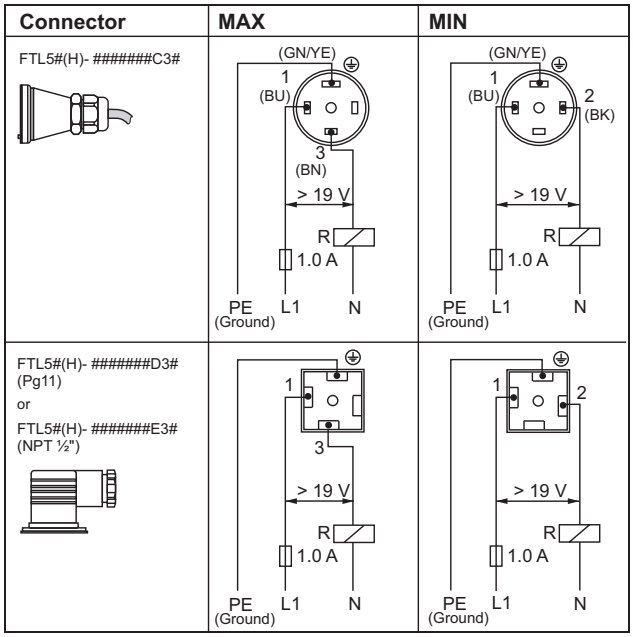

- That a relay cannot de-energize with holding power below 3.8 mA.
  If this is the case, a resistor should be connected parallel to the relay (e.g. RC module: part number 71107226).

Output signal

I_L = load current (switched through)

< 3.8 mA = residual current (blocked)

= lit

= unlit

L00-FTL2xxxx-07-05-xx-xx-000

Safety mode	Level	Output signal	LEDs green	LEDs red
Max.		1 —I_L→ 3	☼	●
		1 - - < 3.8 mA - - → 3	☼	☼
Min.		1 —I_L→ 2	☼	●
		1 - - < 3.8 mA - - → 2	☼	☼

L00-FTL5xxxx-04-05-xx-xx-001a

Signal on alarm

Output signal on power failure or in the event of damaged sensor: < 3.8 mA

Connectable load

- Voltage drop via FEL51 ≤ 12 V
- Residual current if electrical switch is blocked: ≤ 3.8 mA
- Load switched directly into the power supply circuit via the thyristor.
  Transient (40 ms) ≤ 1.5 A, ≤ 375 VA at 253 V or ≤ 36 VA at 24 V (not short-circuit-proof)

The load is switched via an electronic switch directly in the power circuit.
Always connect in series with a load!
Not suitable for connection to low-voltage PLC inputs!

Selection guide for relays

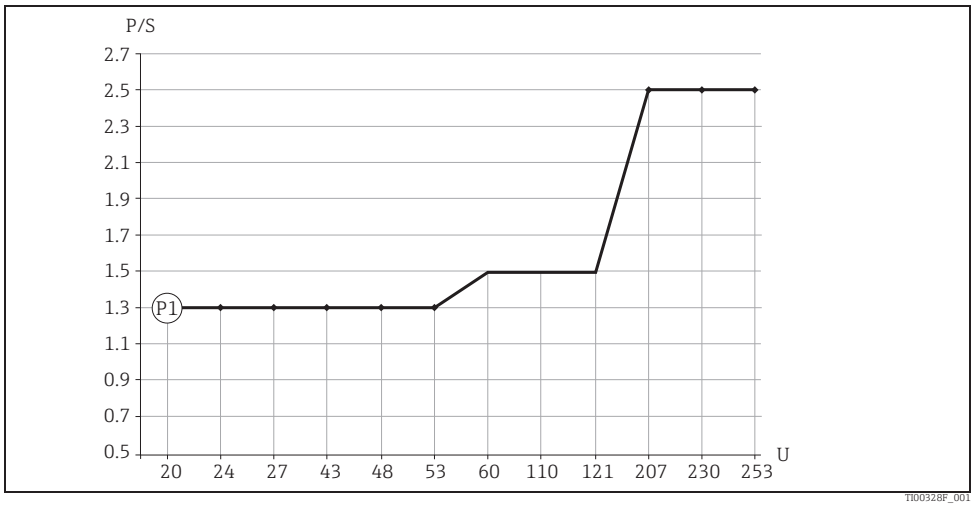

Minimum nominal power of load
P/S nominal power in [W] / [VA]
U operating voltage in [V]

Position	Operating voltage	Nominal power	
		min.	max.
P1	24 V	> 1.3 VA	< 6 VA
AC operation	110 V	> 1.5 VA	< 27.5 VA
	230 V	> 2.5 VA	< 57.5 VA

Relays with less nominal power can be operated via an RC module connected in parallel (optional).

Electronic insert FEL52 (DC PNP)

Power supply

Supply voltage: DC 10 to 55 V
Ripple: ≤ 1.7 V, 0 to 400 Hz
Current consumption: ≤ 15 mA
Power consumption: ≤ 0.83 W
Reverse polarity protection
Overvoltage protection FEL52: overvoltage category III

Electrical connection

Three-wire DC connection

Switches the load via the transistor (PNP) and separate connection.
Preferably used with programmable logic controllers (PLC),
DI modules as per EN 61131-2.
Positive signal at switching output of the electronics (PNP); Output blocked on reaching point level.

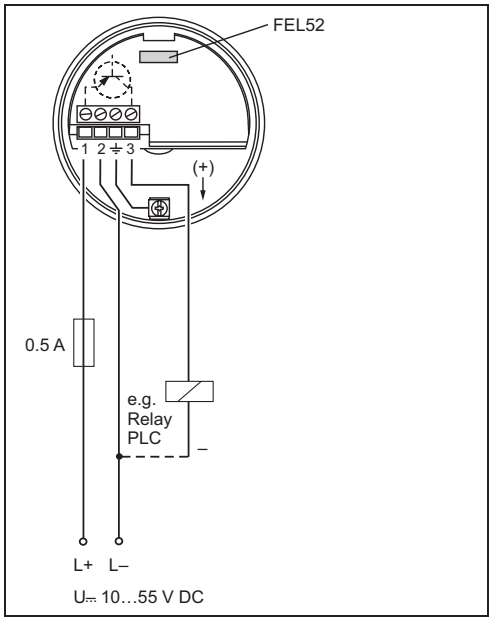

L00-FTL5xxxx-04-05-xx-en-001

Output signal

I_L = load current (switched through)

< 100 µA = residual current (blocked)

☼ = lit

● = unlit

L00-FTL2xxxx-07-05-xx-xx-000

Safety mode	Level	Output signal	LEDs green	LEDs red
Max.		L+ 1 → I_L → + 3	☼	●
		1 - - - < 100 µA - - - 3	☼	☼
Min.		L+ 1 → I_L → + 3	☼	●
		1 - - - < 100 µA - - - 3	☼	☼

L00-FTL5xxxx-04-05-xx-xx-004

Signal on alarm

Output signal on power failure or in the event of damaged sensor: < 100 µA

Connectable load

- Load switched via the transistor and separate PNP connection, ≤ DC 55 V
- Load current ≤ 350 mA (pulsed overload and short-circuit protection)
- Residual current < 100 µA (with transistor blocked).
- Capacitance load ≤ 0.5 µF at 55 V, ≤ 1.0 µF at 24 V
- Residual voltage < 3 V (with transistor switched through);

Electronics FEL52 (DC PNP, in compact housing)

Power supply

Supply voltage: DC 10 to 55 V
Ripple: ≤ 1.7 V, 0 to 400 Hz
Current consumption: ≤ 15 mA
Power consumption: ≤ 0.83 W
Reverse polarity protection
Overvoltage protection FEL52: overvoltage category III

Electrical connection

Three-wire DC connection

Preferably used with programmable logic controllers (PLC), DI module as per EN 61131-2. Positive signal at switching output of the electronics (PNP); Output blocked on reaching point level.

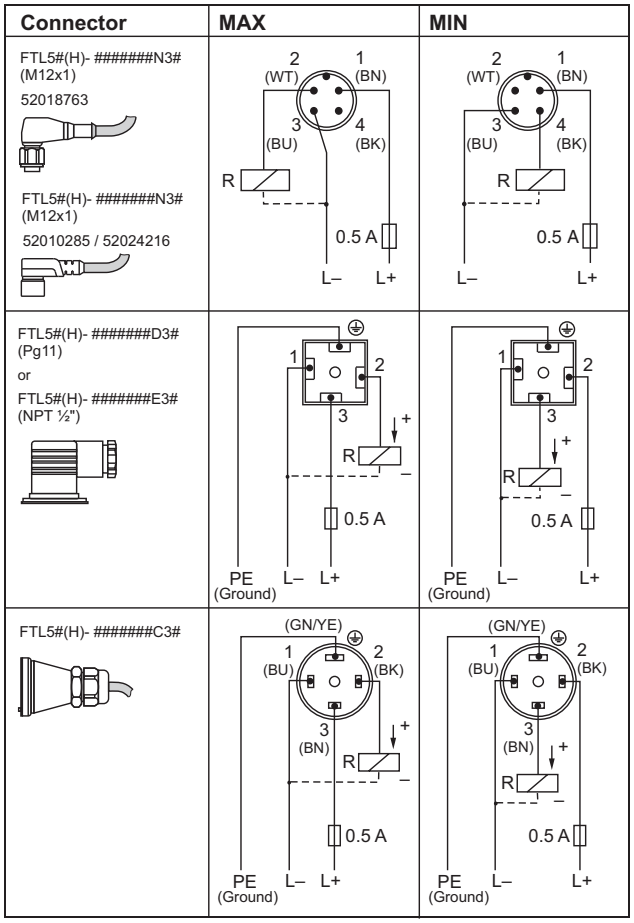

L00-FTL5xxxx-04-05-xx-en-010

Output signal

With valve connector or cable tail

I_L = load current (switched through)

< 100 µA = residual current (blocked)

☼ = lit

● = unlit

L00-FTL2xxxx-07-05-xx-xx-000

Safety mode	Level	Output signal	LEDs green	LEDs red
Max.		L+ 3 → I_L → + 2	☼	●
		L+ 3 - - < 100 µA → + 2	☼	☼
Min.		L+ 2 → I_L → + 3	☼	●
		L+ 2 - - < 100 µA → + 3	☼	☼

L00-FTL5xxxx-04-05-xx-xx-004a

With M12x1 connector 52010285 / 52024216 (without LEDs)

L00-FTL5xxxx-16-05-xx-xx-002

I_L = load current (switched through)

< 100 µA = residual current (blocked)

☼ = lit

● = unlit

L00-FTL2xxxx-07-05-xx-xx-000

Safety mode	Level	Output signal	LEDs
Max.		L+ 1 → I_L → 2 –	
		L+ 1 → < 100 µA → 2 –	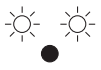
Min.		L+ 1 → I_L → 4 –	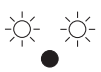
		L+ 1 → < 100 µA → 4 –	

L00-FTL5xxxx-04-05-xx-xx-010

With M12x1 connector 52018763 (with LEDs)

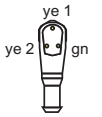

L00-FTL5xxxx-16-05-xx-xx-001

I_L = load current (switched through)

< 100 µA = residual current (blocked)

☼ = lit

● = unlit

L00-FTL2xxxx-07-05-xx-xx-000

Safety mode	Level	Output signal	LEDs
Max.		L+ 1 → I_L → 2 –	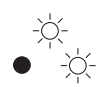
	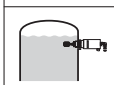	L+ 1 → < 100 µA → 2 –	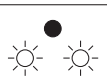
Min.	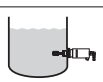	L+ 1 → I_L → 4 –	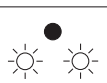
	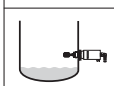	L+ 1 → < 100 µA → 4 –	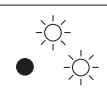

L00-FTL5xxxx-04-05-xx-xx-011

Signal on alarm

Output signal on power failure or in the event of damaged sensor: < 100 µA

Connectable load

- Load switched via the transistor and separate PNP connection, ≤ DC 55 V
- Load current ≤ 350 mA (pulsed overload and short-circuit protection)
- Residual current < 100 µA (with transistor blocked).
- Capacitance load ≤ 0.5 µF at 55 V, ≤ 1.0 µF at 24 V
- Residual voltage < 3 V (with transistor switched through);

Electronic insert FEL54 (AC/DC with relay output)

Power supply

Supply voltage: AC 19 to 253 V, 50/60 Hz or DC 19 to 55 V
Power consumption: ≤ 1.3 W
Reverse polarity protection
Overvoltage protection FEL54: overvoltage category III

Electrical connection

Universal current connection with relay output

Power supply:
Please note the different voltage ranges for AC and DC.

Output:
When connecting an instrument with high inductance, provide a spark arrester to protect the relay contact.
A fine-wire fuse (depending on the load connected) protects the relay contact on short-circuiting.
Both relay contacts switch simultaneously.

* When jumpered, the relay output works with NPN logic.

** See "Connectable load"

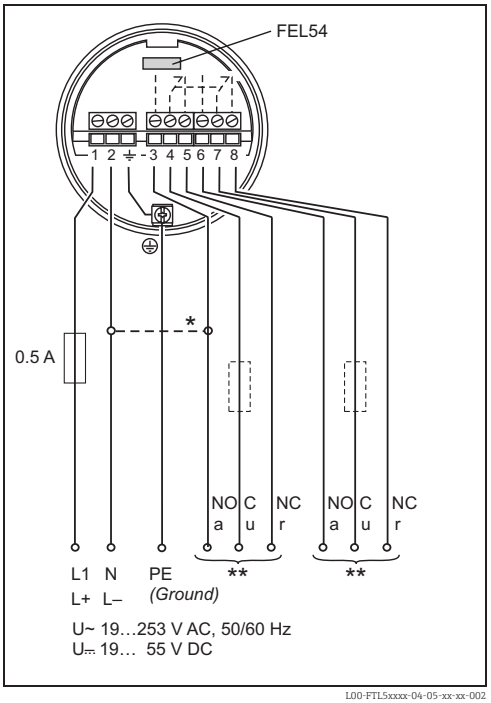

L00-FTL5xxxx-04-05-xx-xx-002

Output signal

= relay energized
= relay de-energized
= lit
= unlit

L00-FTL2xxxx-07-05-xx-xx-001

Safety mode	Level	Output signal	LEDs green	LEDs red
Max.			☼	●
			☼	☼
Min.			☼	●
		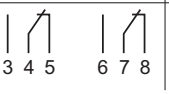	☼	☼

L00-FTL5xxxx-04-05-xx-xx-005

Signal on alarm

Output signal on power failure or in the event of damaged sensor: relay de-energized

Connectable load

- Loads switched via 2 floating change-over contacts (DPDT).
- I~ ≤ 6 A (Ex de 4 A), U~ ≤ AC 253 V; P~ ≤ 1500 VA, cos φ = 1, P~ ≤ 750 VA, cos φ > 0.7
- I⎓ ≤ 6 A (Ex de 4 A) to DC 30 V , I⎓ ≤ 0.2 A to 125 V
- When connecting a low-voltage circuit with double insulation according to IEC 1010, the following applies: the sum of the voltages of the relay output and power supply is ≤ 300 V
- The electronic insert FEL52 DC-PNP is preferred for low DC load currents (e.g. when connecting to a PLC)
- Relay contact material: silver/nickel AgNi 90/10

Electronic insert FEL55 (8/16 mA)

Power supply

Supply voltage: DC 11 to 36 V
Power consumption: < 600 mW
Reverse polarity protection
Overvoltage protection FEL55: overvoltage category III

Electrical connection

Two-wire connection for separate switching unit

For separate switching unit.
Signal transmission 16/8 mA on two-wire cabling.
For connection to programmable logic controllers (PLCs) for example,
AI module 4 to 20 mA to EN 61131-2.
Output signal jump from high to low current on point level.

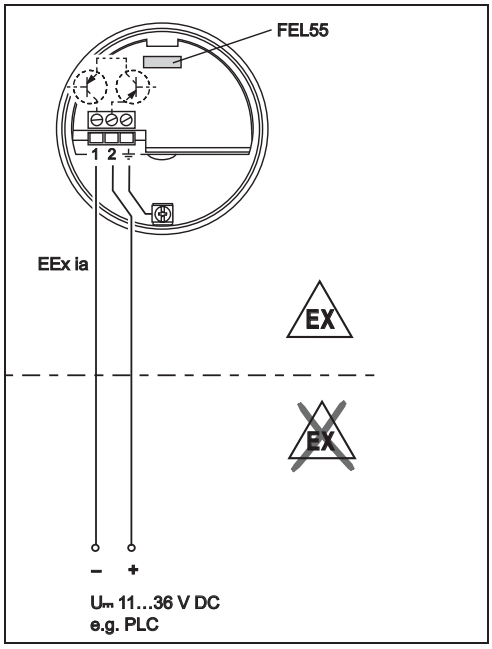

L00-FTL5xxxx-04-05-xx-en-000

Output signal

~ 16 mA = 16 mA ± 5 %

~ 8 mA = 8 mA ± 6 %

☼ = lit

● = unlit

L00-FTL2xxxx-07-05-xx-xx-000

Safety mode	Level	Output signal	LEDs green	LEDs red
Max.	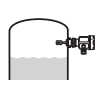	+ 2 ~16 mA 1	☼	●
	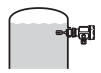	+ 2 ~8 mA 1	☼	☼
Min.	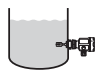	+ 2 ~16 mA 1	☼	●
		+ 2 ~8 mA 1	☼	☼

L00-FTL5xxxx-04-05-xx-xx-006

Signal on alarm

Output signal on power failure or in the event of damaged sensor: < 3.6 mA

Connectable load

- R = (U - 11 V) : 16.8 mA
- U = connection voltage: DC 11 to 36 V

Example: PLC with 250 Ω with 2-wire version

250 Ω = (U – 11V) / 16.8 mA
4.2 [Ω /A] = U – 11 V
U = 15.2 V

Electronic insert FEL56 (NAMUR L-H edge)

Power supply

Power consumption: < 6 mW at I < 1 mA; < 38 mW at I = 2.8 mA
Connection data interface: IEC 60947-5-6

Electrical connection

Two-wire connection for separate switching unit

For connecting to isolating amplifiers acc. to NAMUR (IEC 60947-5-6), e.g. FTL325N, FTL375N from Endress+Hauser.
Output signal jump from low to high current on point level.

(L–H edge)

Connecting to multiplexer:
Set clock time to min. 2 s.

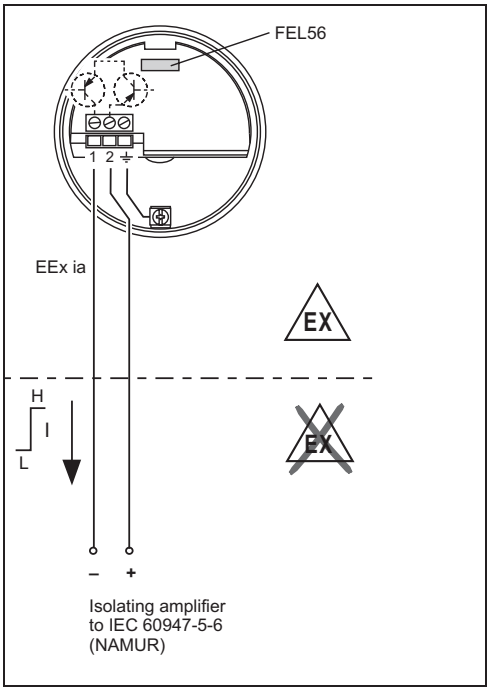

L00-FTL5xxxx-04-05-xx-en-004

Output signal

= lit
= flashes
= unlit

L00-FTL5xxxx-07-05-xx-xx-002

Safety mode	Level	Output signal	LEDs green	LEDs red
Max.		+ 2 → 1 : 0.6 … 1.0 mA	☼	●
		+ 2 → 1 : 2.2 … 2.8 mA	☼	☼
Min.		+ 2 → 1 : 0.6 … 1.0 mA	☼	●
		+ 2 → 1 : 2.2 … 2.8 mA	☼	☼

L00-FTL5xxxx-04-05-xx-xx-003

Signal on alarm

Output signal in the event of damaged sensor: > 2.2 mA

Connectable load

- See Technical Data of the isolating amplifier connected according to IEC 60947–5–6 (NAMUR)

Electronic insert FEL58 (NAMUR H-L edge)

Power supply

Power consumption: < 6 mW at I < 1 mA; < 38 mW at I = 3.5 mA
Connection data interface: IEC 60947-5-6

Electrical connection

Two-wire connection for separate switching unit

For connecting to isolating amplifiers as per NAMUR (IEC 60947-5-6), e.g. FTL325N, FTL375N from Endress+Hauser.
Output signal jump from high to low current on point level.

(H–L edge)

Additional function:
Test key on the electronic insert.
Pressing the key breaks the connection to the isolating amplifier.

Note!
In Ex–d applications, the additional function can only be used if the housing is not exposed to an explosive atmosphere.

Connecting to multiplexer:
Set clock time to min. 2 s.

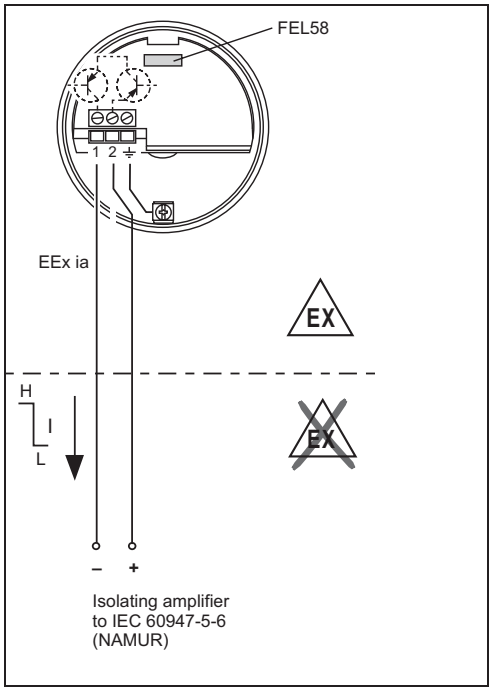

L00-FTL5xxxx-04-05-xx-en-002

Output signal

= lit
= flashes
= unlit

L00-FTL5xxxx-07-05-xx-xx-002

Safety mode	Level	Output signal	LEDs green	LEDs yellow
Max.		+ 2 → 1 : 2.2 … 3.5 mA	☼	☼
		+ 2 → 1 : 0.6 … 1.0 mA	☼	●
Min.		+ 2 → 1 : 2.2 … 3.5 mA	☼	☼
		+ 2 → 1 : 0.6 … 1.0 mA	☼	●

L00-FTL5xxxx-04-05-xx-xx-007

Signal on alarm

Output signal in the event of damaged sensor: < 1.0 mA

Connectable load

- See Technical Data of the isolating amplifier connected according to IEC 60947–5–6 (NAMUR)
- Connection also to isolating amplifiers which have special safety circuits (I > 3.0 mA)

Electronics FEL58 (NAMUR H-L edge, in compact housing)

Power supply

Power consumption: < 6 mW at I < 1 mA; < 38 mW at I = 3.5 mA
Connection data interface: IEC 60947-5-6

Electrical connection

Two-wire connection for separate switching unit

For connecting to isolating amplifiers acc. to NAMUR (IEC 60947-5-6), e.g. FTL325N, FTL375N from Endress+Hauser. Output signal jump from high to low current on point level.

(H–L edge)

Additional function:
If the test magnet is held against the marking on the nameplate, the output signal is inverted.

Connecting to multiplexer:
Set clock time to min. 3 s.

The NAMUR interface has a defined power consumption rate. Thus, it is not possible to use the M12 connector with an integrated LED (52018763).

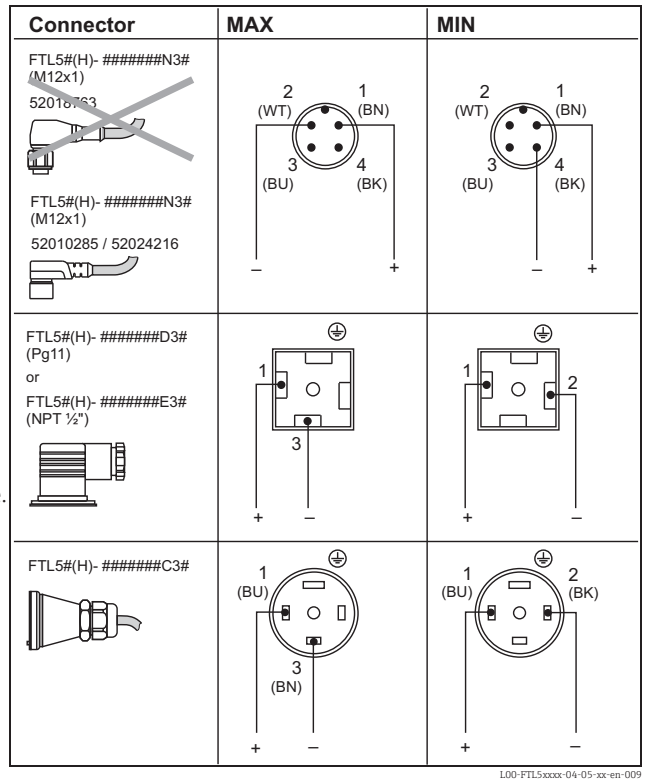

L00-FTL5xxxx-04-05-xx-en-009

Output signal

= lit

= flashes

= unlit

L00-FTL5xxxx-07-05-xx-xx-002

Safety mode	Level	Output signal	LEDs green	LEDs yellow
Max.		+ 1 → 2.2… 3.5 mA → – 3	☼	☼
		+ 1 → 0.6… 1.0 mA → – 3	☼	●
Min.		+ 1 → 2.2… 3.5 mA → – 2	☼	☼
		+ 1 → 0.6… 1.0 mA → – 2	☼	●

L00-FTL5xxxx-04-05-xx-xx-007a

Signal on alarm

Output signal in the event of damaged sensor: < 1.0 mA

Connectable load

- See Technical Data of the isolating amplifier connected according to IEC 60947–5–6 (NAMUR)
- Connection also to isolating amplifiers which have special safety circuits (I > 3.0 mA)

Electronic insert FEL57 (PFM)

Power supply

Supply voltage: DC 9.5 to 12.5 V
Current consumption: 10 to 13 mA
Power consumption: < 150 mW
Reverse polarity protection

Electrical connection

Two-wire connection for separate switching unit

For connecting to Endress+Hauser switching units Nivotester FTL320, FTL325P, FTL370, FTL372, FTL375P (also with proof test).

Output signal jump of the PFM signal from high to low frequency when sensor is covered. Switching between minimum/maximum safety in the Nivotester.

Additional function “proof test”:
After interruption of the power supply, a test cycle is activated which checks the sensor and electronics without any change in level.
Approved for overfill protection acc. to WHG (German Water Resources Act).
The following can be switched at the electronic insert:

- **Standard (STD):**
  Corrosion of the fork unlikely; simulation approx. 8 s
  tuning fork exposed – covered – exposed.
  For proof testing, the Nivotester tests the sensor's level notification function.
- **Extended (EXT)**:
  Corrosion of the fork possible;
  Simulation approx. 41 s: tuning fork exposed – covered – corroded – exposed.
  For proof testing, the Nivotester tests the sensor's level notification function and fault notification (alarm) function.

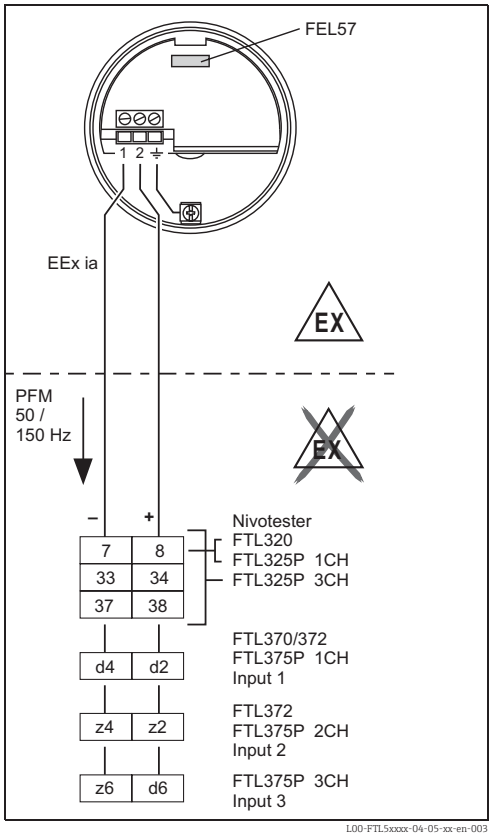

The check is activated and monitored at the switching unit.

The twin-core connecting cable (instrument cable) with a cable resistance of ≤ 25 Ω per core is connected to the screw terminals (conductor cross-sections 0.5 to 2.5 mm / 0.02 to 0.1 in) in the connection compartment. Protective circuits against reverse polarity, HF influences and overvoltage peaks are installed.
Maximum cable length up to 1000 m (3281 ft).

A shielded connecting cable is recommended in the event of strong electromagnetic interference. Here the shielding must be connected to the sensor and the power supply.

Switching behavior of the connected device:

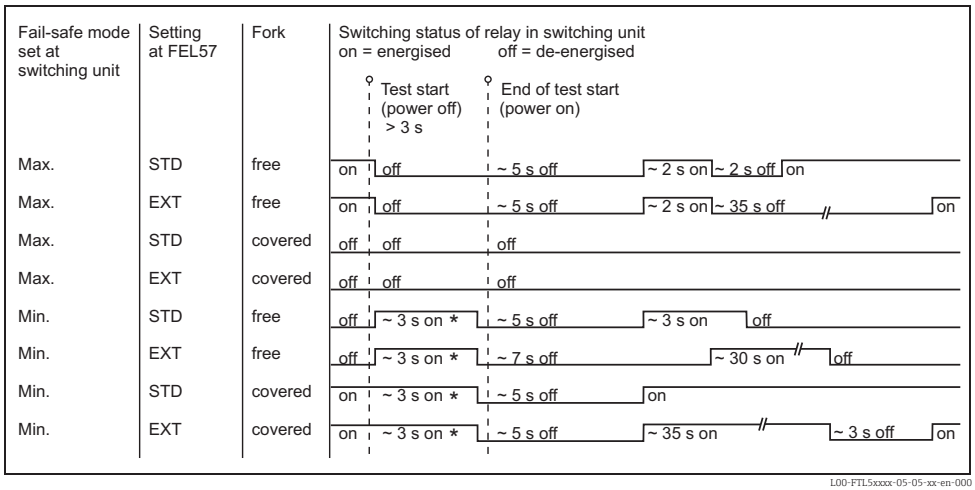

* De-energized on power supply failure

Please note this switching response and function of the plant especially when replacing a Liquiphant incorporating electronic insert EL17Z or FEL37 with a Liquiphant M incorporating electronic insert FEL57.

Output signal

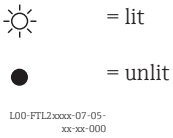

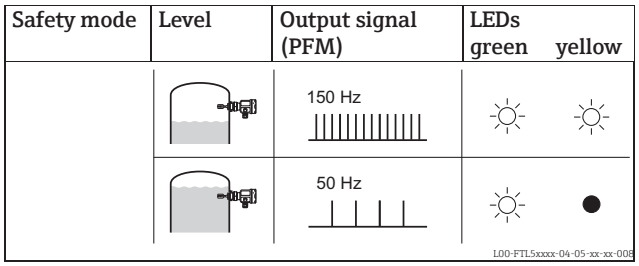

Signal on alarm

Output signal on power failure or in the event of damaged sensor: 0 Hz

Connectable load

- Floating relay contacts in the connected switching unit Nivotester FTL320, FTL325P, FTL370, FTL372, FTL375P
- For contact load, see the Technical Data of the switching unit.

Electronic insert FEL50A (PROFIBUS PA)

Power supply

Bus voltage: DC 9 to 32 V
Bus current:
- 12.5 mA +/– 1.0 mA (software version: 01.03.00, hardware version: 02.00)
- 10.5 mA +/– 1.0 mA (software version: 01.03.00, hardware version: 01.00)

Electrical connection

Two-wire connection for power supply and data transfer

For connecting to PROFIBUS PA

Additional functions:

– Digital communication enables the representation, reading and editing of the following parameters: Fork frequency, switch-on frequency, switch-off frequency, switch-on time and switch-off time, status, measured value, density switch.

– Matrix locking possible
– Switch to WHG mode possible (WHG approval)
– For a detailed description, see BA198F

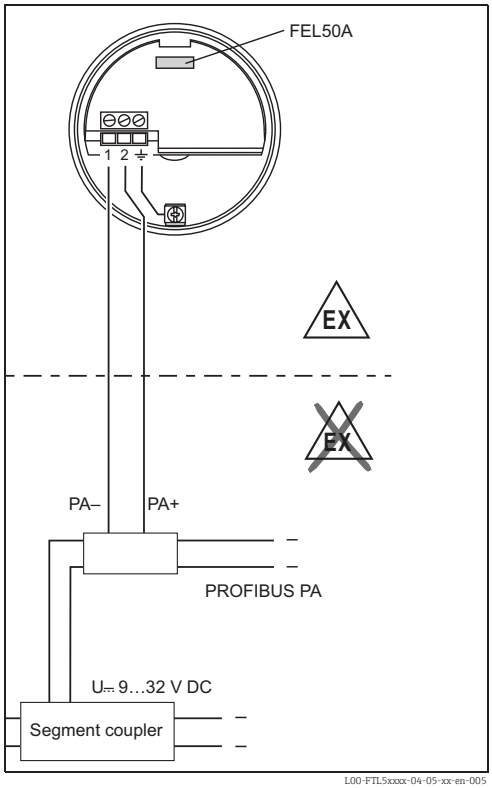

L00-FTL5xxxx-04-05-xx-en-005

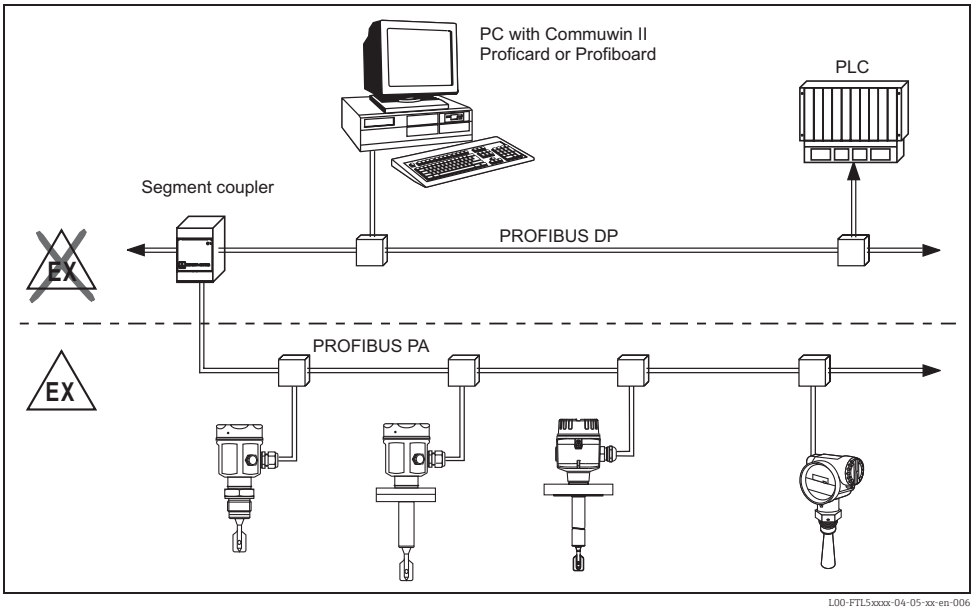

L00-FTL5xxxx-04-05-xx-en-006

Output signal

☼ = lit

● = unlit

L00-FTL2xxxx-07-05-xx-xx-000

Setting	Level	LEDs green	LEDs yellow	FEL50A
not inverted		☼	●	OUT_D = 0 PA bus signal
		☼	☼	OUT_D = 1 PA bus signal
inverted		☼	☼	OUT_D = 0 PA bus signal
		☼	●	OUT_D = 1 PA bus signal

L00-FTL5xxxx-04-05-xx-xx-005

Signal on alarm

- Failure information can be opened using the following interfaces:
  Yellow LED flashing, status code, diagnostic code; see BA00198F

Electronic insert FEL50D (density)

Power supply

Frequency range: 300 to 1500 Hz
Signal level: 4 mA
Pulse height: 16 mA
Pulse width: 20 µS

Electrical connection

Two-wire connection at Density Computer FML621
For connecting to the density and concentration computer
FML621.

The output signal is based on pulse technology. With the aid of this signal, the fork frequency is constantly
forwarded to the switching unit.

Caution!
Operation with other switching units, such as FTL325P, is not permitted.
This electronic insert cannot be installed in devices that were originally used as a point level switch.

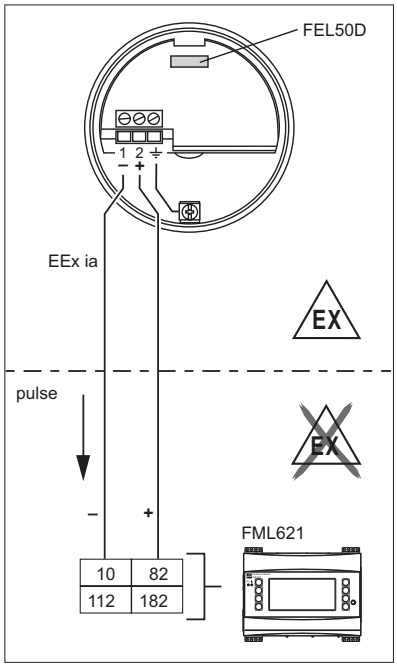

TI420Fen004

Signal on alarm

Output signal on power failure or in the event of damaged sensor: 0 Hz

Adjustment

In the Liquiphant M modular system, the option of an adjustment is also provided in addition to the electronics (see feature 60: "Accessories").

There are three types of adjustment:

Standard adjustment (see ordering information for additional option, basic version A)
- Here, two fork parameters are determined to describe the sensor characteristics, indicated in the adjustment report and provided with the product.
  These parameters must be transmitted to the Density Computer FML621.

Special adjustment (see ordering information for additional option, special adjustment, density H_2O (K) or special adjustment, density H_2O with 3.1 certificate (L))
- Here, three fork parameters are determined to describe the sensor characteristics, indicated in the adjustment report and provided with the product.
  These parameters must be transmitted to the Density Computer FML621.
  Greater accuracy is achieved with this type of adjustment (see also "Performance characteristics").

Field Adjustment
- During field adjustment, a density value actually determined by the customer is entered and the system is automatically adjusted to this value (wet adjustment).

Note!
More information on Liquiphant M Density is available in Technical Information TI00420F. This can be downloaded from www.endress.com => Download.

Operating principle

Measuring the density of a liquid medium in pipes and tanks. Also suitable for use in hazardous areas, and preferably for applications in the chemical and food industry.

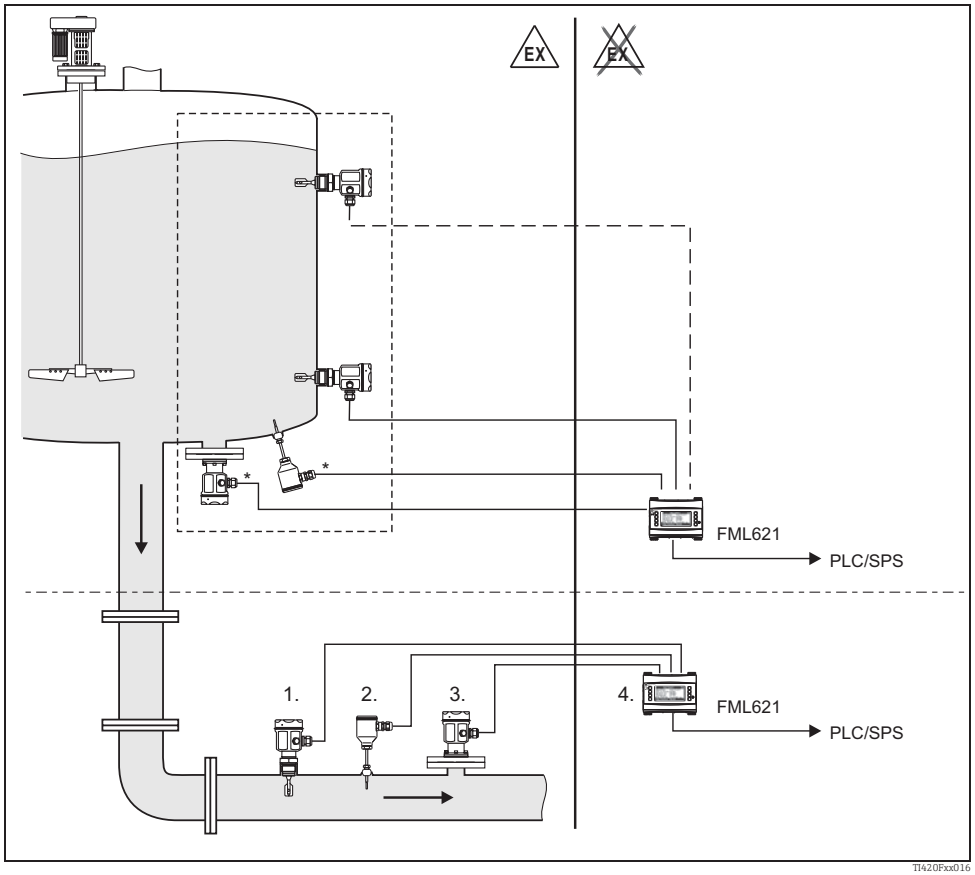

** Pressure and temperature information required depending on the application.*
1. Liquiphant M sensor with electronic insert FEL50D (pulse output);
2. Temperature sensor (e.g. 4 to 20 mA output);
3. Pressure transmitter (4 to 20 mA output);
4. Liquiphant density and concentration computer FML621 with display and operating unit

Light signals

LED	Symbol	Information
Yellow		Measurement valid
		Unstable process situation
		Maintenance required
Green		Power on
		Power off
Red		No fault
		Maintenance required
		Device failure

Connection and function

Connecting cables

- Electronic inserts: cross-section ≤ 2.5 mm² (14 AWG); strand in ferrule as per DIN 46228
- Protective ground in housing: cross-section ≤ 2.5 mm² (14 AWG)
- External equipotential bonding connection on housing: cross-section ≤ 4 mm² (12 AWG)

Safety mode

Minimum/maximum residual current safety selectable on electronic insert.
(with FEL57 on Nivotester only)

MAX = maximum safety:
The output switches to the power fail response when the fork is covered
For use with overfill protection for example

MIN = minimum safety:
The output switches to the power fail response when the fork is exposed
For use with dry running protection for example

Switching time

When fork is covered: approx. 0.5 s
When fork is exposed: approx. 1.0 s
Additionally configurable for PROFIBUS PA:
0.5-60 s

Other switching times available on request.

Switch-on behavior

When switching on the power supply, the output assumes the alarm signal.
After ≤ 3 s it assumes the correct switching mode (exception: FEL57)

Performance characteristics

Reference operating conditions

Ambient temperature: 23 °C (73 °F)

Medium temperature: 23 °C (73 °F)

Medium density (water): 1 g/cm³ (SGU)

Medium viscosity: 1 mm²/s (cSt)

Medium pressure p_e: 0 bar (0 psi)

Sensor mounting: vertical from above

Density switch: to > 0.7 g/cm³ (SGU)

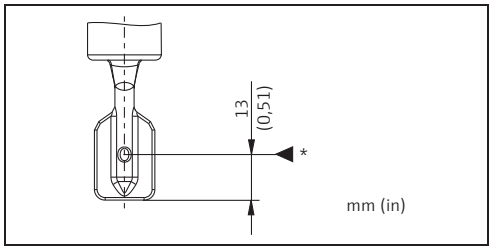

** Switch point under reference operating conditions*

Maximum measured error

Under reference operating conditions: max. +/−1 mm (0.04 in)

Repeatability

0.1 mm (0.004 in)

Hysteresis

approx. 2 mm (0.08 in)

Influence of medium temperature

max. +1.8 to −2.8 mm (−50 to +150 °C / -58 to 302 °F)

Influence of medium density

max. +4.8 to −3.5 mm ((0.5 to 1.5 g/cm³ (SGU))
max. +0.19 to -0.14 in

Influence of medium pressure

max. 0 to −2.5 mm (−1 to 64 bar (-14.5 to 928 psi))
max. 0 to -0.1 in

Operating conditions

Installation

Installation instructions

Switch points ΔH on the sensor depend on the mounting position, with reference to water,

Density 1 g/cm³ (SGU), 23 °C (73 °F), p_e 0 bar (0 psi).

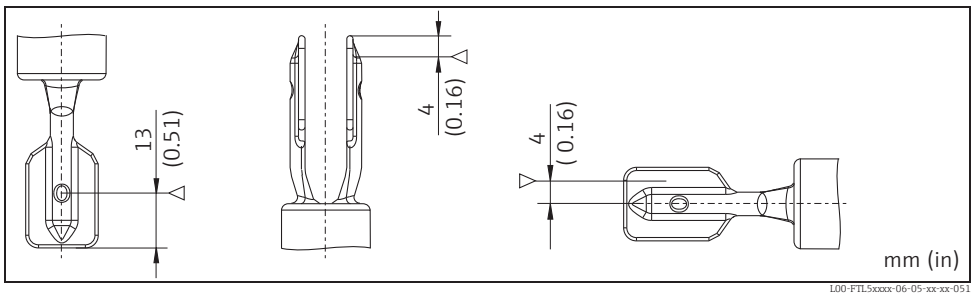

Mounting from above *Mounting from below* *Mounting from the side*

Note!
The switch points of the Liquiphant **M** are at other positions to those of the previous version Liquiphant **II**.

Examples of mounting

Examples of mounting with regard to the viscosity ν of the liquid and the tendency to form buildup

Optimum mounting, without problem even with high viscosity:

Position the fork so that the narrow edge of the tines is vertical to ensure that the liquid can run off easily.

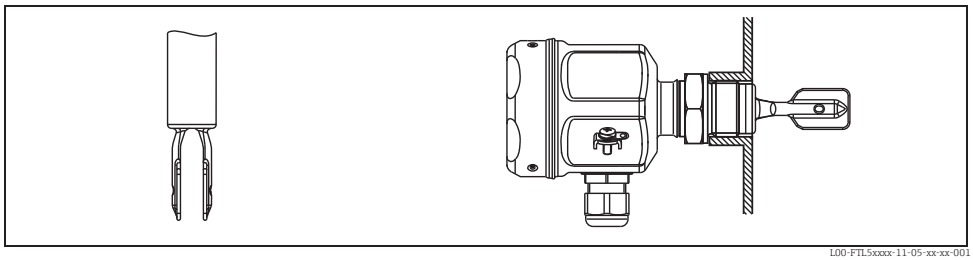

Vertical from above *Flush-mounted from the side*

With buildup on the tank walls:

* Ensure that there is sufficient distance between the buildup expected on the tank wall and the fork.

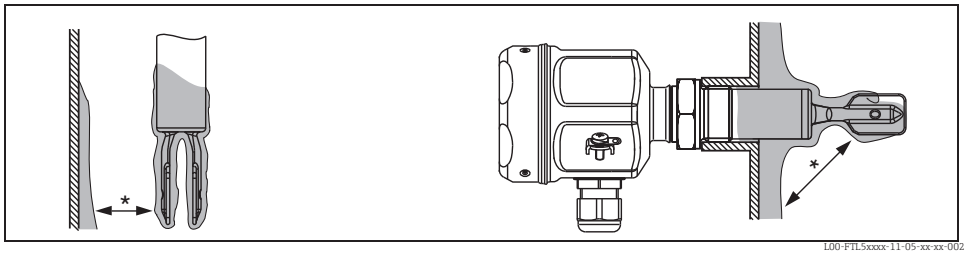

Vertical from above *Protruding into the tank from the side*

Mounting positions in the case of low viscosity up to 2000 mm²/s (cSt):

* Deburr the nozzle surfaces

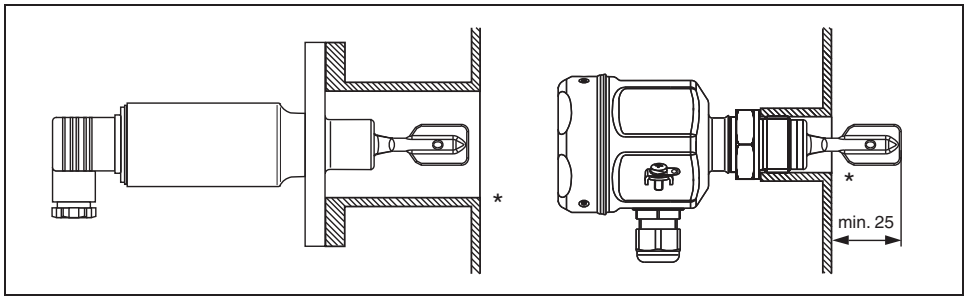

L00-FTL5xxxx-11-05-xx-en-003

Mounting in piping from 2"

Flow velocities up to 5 m/s for viscosity of 1 mm²/s (cSt) and density 1 g/cm³ (SGU).
(Check the function for other medium conditions.)

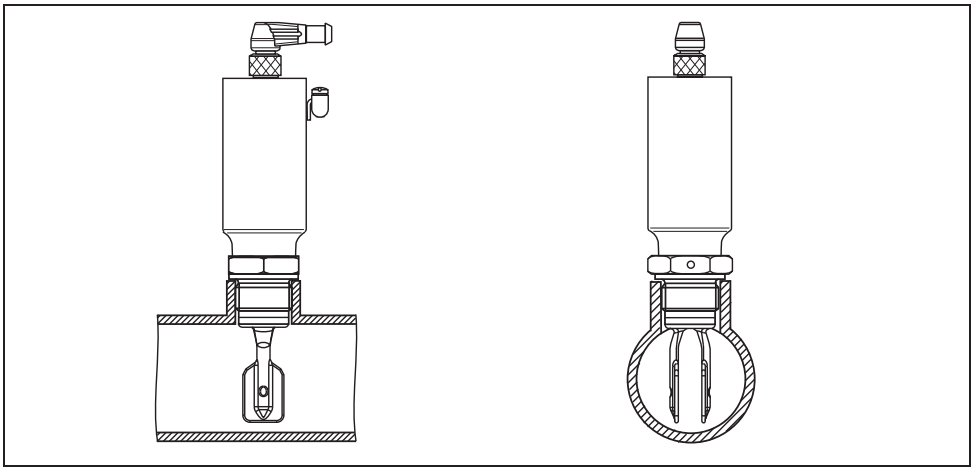

L00-FTL5xxxx-11-05-xx-xx-004

Dynamic load

Support the Liquiphant M FTL51(H) in the event of a severe dynamic load.

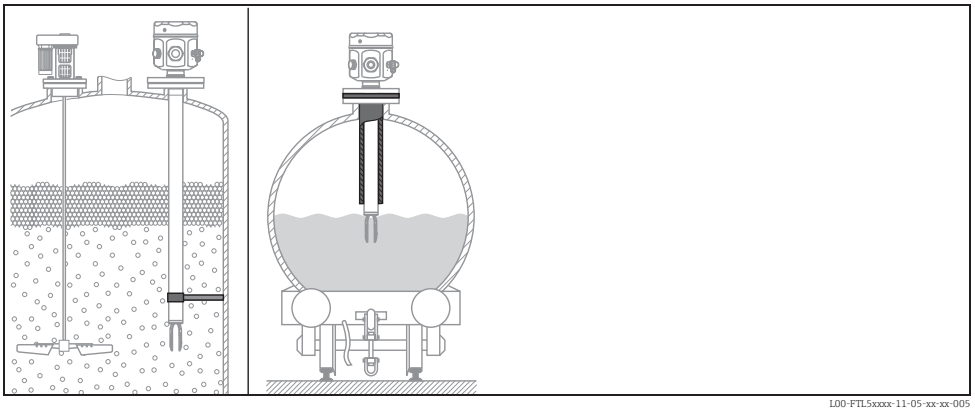

L00-FTL5xxxx-11-05-xx-xx-005

Ensure adequate space outside the tank for mounting, connection and configuration.

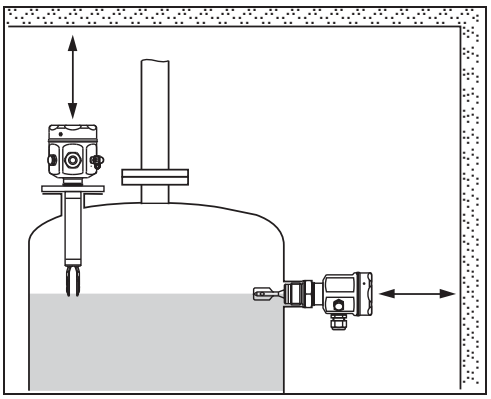

Orientation

- FTL50(H) and FTL51(H) with short pipe up to approx. 500 mm (19.7 in): any position
- FTL51(H) with long pipe: vertical

Environment

Ambient temperature range

Permitted ambient temperature T_a at the housing depending on the medium temperature T_p in the tank:

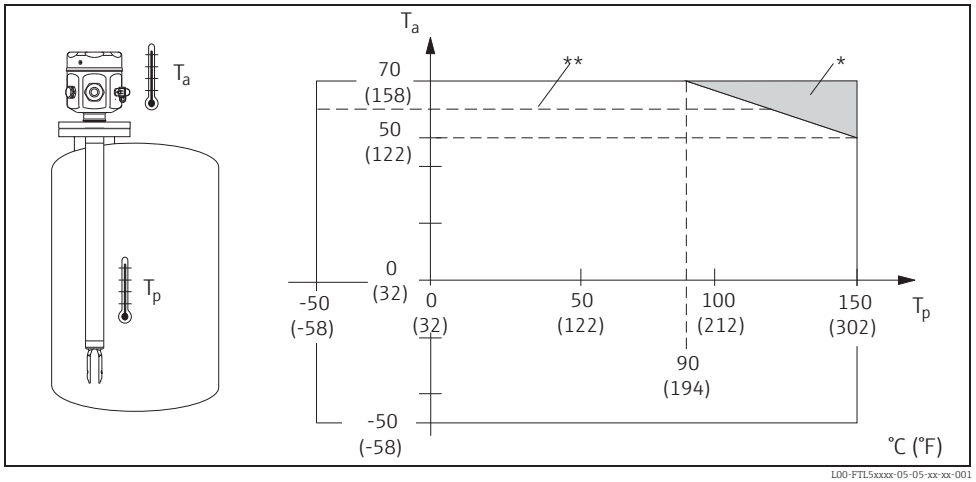

* Additional temperature range for devices with a temperature spacer or pressure-tight feedthrough.
** Maximum ambient temperature with FEL50D/FEL50A in hazardous areas.

Storage temperature

−50 to +80 °C (-58 to 176 °F)

Installation height as per IEC61010-1 Ed.3

Up to 2000 m (6600 ft) above sea level.

Can be extended up to 3000 m (9800 ft) above sea level if overvoltage protection is used, for example HAW562 or HAW569.

Climate class

Climate protection to IEC 68, Part 2-38, Fig. 2a

Degree of protection

Types of housing	IP65	IP66*	IP67*	IP68*	IP69k	NEMA type**
Compact housing with valve connector Pg11/NPT ½	X	–	–	–	–	–
Compact housing with 5 m (16 ft) cable tail	–	X	–	X	–	–
Compact housing with M12x1 connector (52010285) 316L (metal)	–	X	–	X	–	–
Compact housing with elbowed connector (52024216) / L= 5 m (16 ft), without integrated LEDs	–	X	–	X	X	–
Compact housing with elbowed connector (52018763) / L= 5 m (16 ft), with integrated LEDs	–	X	–	X	X	–
Polyester housing F16	–	X	X	–	–	4X
Stainless steel housing F15	–	X	X	–	–	4X
Aluminum housing F17	–	X	X	–	–	4X
Aluminum housing F13****	–	X	–	X***	–	4X/6P
Stainless steel housing F27	–	X	–	X	–	4X/6P
Aluminum housing T13 with separate connection compartment (Ex d)	–	X	–	X***	–	4X/6P

* As per EN60529
** As per NEMA 250
*** only with M20 cable entry or G1/2 thread
**** F13 housing only in conjunction with XP or Ex d approval

Vibration resistance

As per IEC 68, parts 2-6 (10 to 55 Hz, 0.15 mm (0.01 in), 100 cycles)
In the event of increased vibrations, the following additional option is recommended: feature "060" version "P" 100 bar (1450 psi) process pressure.

Electromagnetic compatibility

Interference emission to EN 61326, Electrical Equipment Class B
Interference immunity to EN 61326; Annex A (Industrial) and NAMUR Recommendation NE 21 (EMC)

Medium conditions

Medium temperature

−50 to +150 °C (-58 to 302 °F); for exceptions, see "Process connections"

Thermal shock

≤ 120 °C/s (248 °F/s)

Medium pressure p_e

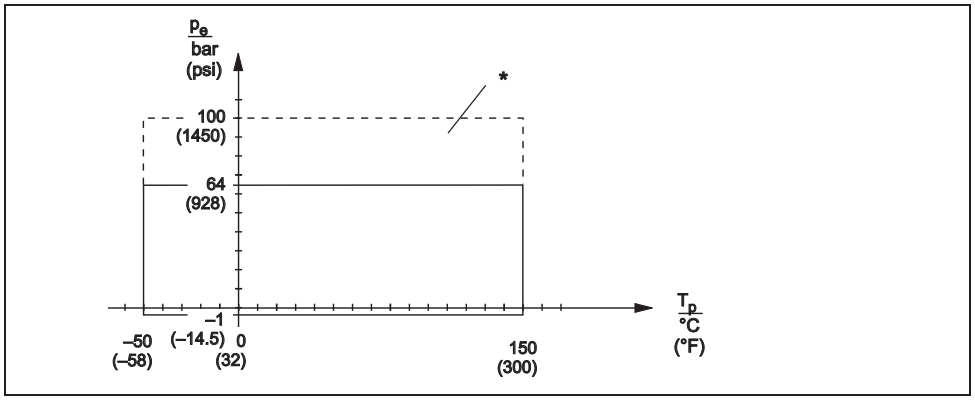

L00-FTL5xxxx-05-05-xx-xx-003

* Permitted pressure rating when the "100 bar (1450 psi)" option is selected (see "Product structure FTL51", feature 060, from → 43).
See "Process connections" → 33 for exceptions.
Canadian CRN approval: Additional details on maximum pressure values are available in the download area of the product page at "www.endress.com".

Please refer to the standards listed for the permitted pressure values of the flanges at higher temperatures:

- pR EN 1092-1: 2005
  With regard to their stability-temperature property, the materials 1.4435 and 1.4404 are identical and are grouped together in EN 1092-1 Tab. 18 under 13E0. The chemical composition of the two materials can be identical.
- ASME B 16.5 - 2013 Tab. 2-2.2 F316
- ASME B 16.5 - 2013 Tab. 2-3.8 N10276
- JIS B 2220

The lowest value from the derating curves of the device and selected flange applies in each case.

Test pressure

p_e = 64 bar (928 psi):
- ≤ 100 bar (1450 psi) or 1.5 times the medium pressure p_e
- Sensor burst pressure at 200 bar (2900 psi)

p_e = 100 bar (1450 psi):
- ≤ 150 bar (2175 psi) or 1.5 times the medium pressure p_e)
- Sensor burst pressure at 400 bar (5800 psi)

Note!
The device function is restricted during pressure testing.

State of aggregation

Liquid

Density

0.7 g/cm³ (SGU) = delivery status

0.5 g/cm³* (SGU) can be adjusted via switches

* Density settings for the compact housing on request

Viscosity

≤ 10,000 mm²/s (cSt)

Solids content

≤ ø5 mm (0.2 in)

Lateral loading capacity

≤ 75 Nm

Mechanical construction

Design

Summary of all electrical and mechanical versions

Housing

L00-FTL5xxxx-03-05-xx-xx-019

Compact
Pipe housing (316L)

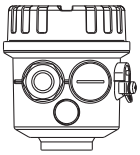
L00-FTL5xxxx-03-05-xx-xx-001

F16
Polyester (PBT)

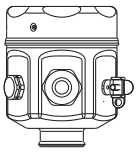
L00-FTL5xxxx-03-05-xx-xx-002

F15
Stainless steel (316L)

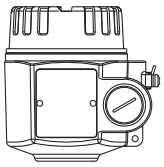
L00-FTL5xxxx-03-05-xx-xx-031

F17
Aluminum
Housing coated

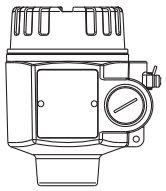
L00-FTL5xxxx-03-05-xx-xx-033

F27
Stainless steel (316L)
F13
Aluminum
(also for Ex d/XP), housing coated

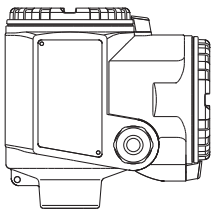
L00-FTL5xxxx-03-05-xx-xx-004

T13
Aluminum with separate connection compartment (also Ex de and Ex d), housing coated

Plug-in electronic inserts to mount in the housing

L00-FTL5xxxx-03-05-xx-xx-000

FEL51*:	Two-wire AC connection
FEL52*:	Three-wire DC connection PNP
FEL54:	Universal current connection, 2 relay outputs
FEL55:	Output 16/8 mA for separate switching unit
FEL56:	Output 0.6 to 1.0 / 2.2 to 2.8 mA for separate switching unit (NAMUR)
FEL58*:	Output 2.2 to 3.5 / 0.6 to 1.0 mA for separate switching unit (NAMUR)
FEL57:	Output 150/50 Hz, PFM, for separate switching unit (Nivotester)
FEL50A:	Digital communication PROFIBUS PA
FEL50D:	Pulse output for Density Computer FML621

* Electronics also available as compact housing. The electronics cannot be exchanged!

*Bushing*s (optional)

Temperature spacer and pressure-tight feedthrough

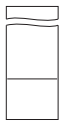
L00-FTL5xxxx-03-05-xx-xx-005

Process connections

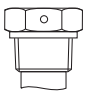
L00-FTL5xxxx-03-05-xx-xx-006

G ¾, DIN ISO 228/I
R ¾, EN10226
NPT ¾, ASME B 1.20.1
(AF 32)

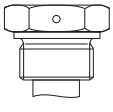
L00-FTL5xxxx-03-05-xx-xx-007

G 1, DIN ISO 228/I
R 1, EN10226
NPT 1, ASME B 1.20.1
(AF 41)

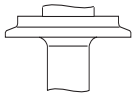
L00-FTL5xxxx-03-05-xx-xx-008

Diverse
hygienic and
aseptic
connections

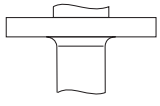
L00-FTL5xxxx-03-05-xx-xx-009

Flanges as per DIN,
ASME,
JIS
from DN 25 / 1"

Sensors

Compact, with extension pipe up to 3 m (up to 6 m on request) or special "length L II" (see → 33ff.)	Compact	Length L II	Length L
	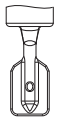	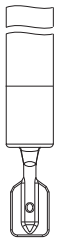	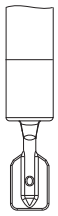
p_e = bar/psi	64/928	64/928 100/1450	64/928 100/1450

L00-FTL5xxxx-03-05-xx-xx-018

Dimensions

Dimensions in mm (in)!

Housing FTL50(H), FTL51(H) with sensor FTL50(H)

Compact housing, primarily for hygiene applications

c

1. 5 m cable
2. M12 connector
3. Pg11/NPT ½ connector

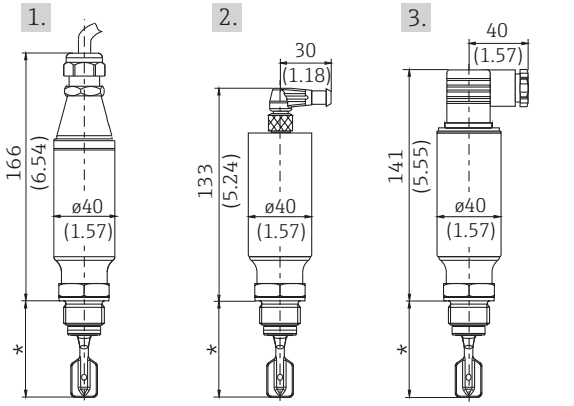

L00-FTL5xxxx-06-05-xx-xx-085

Polyester housing F16

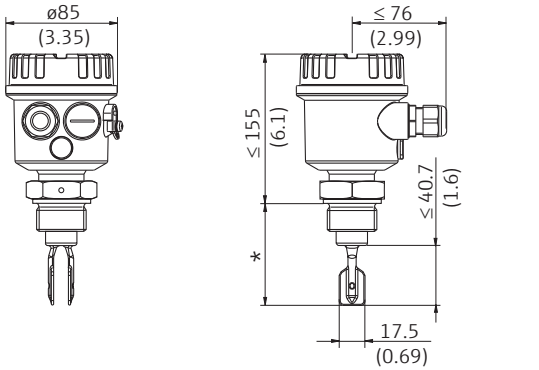

L00-FTL5xxxx-06-05-xx-xx-086

F15 stainless steel housing primarily for hygiene applications

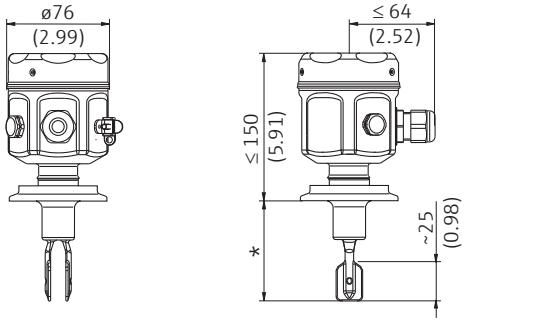

L00-FTL5xxxx-06-05-xx-xx-087

Aluminum housing F17

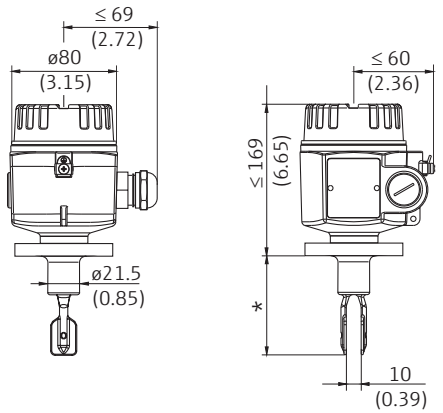

L00-FTL5xxxx-06-05-xx-xx-088

Stainless steel housing (316L) F27
Aluminum housing F13

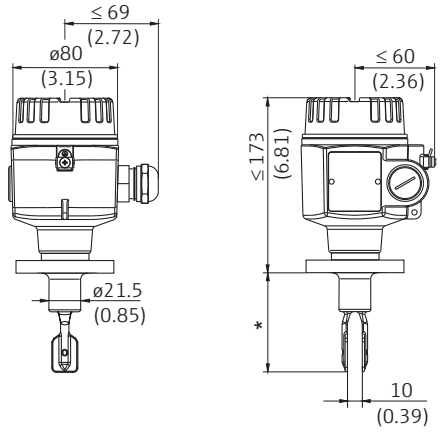

L00-FTL5xxxx-06-05-xx-xx-089

Aluminum housing T13
with separate connection compartment

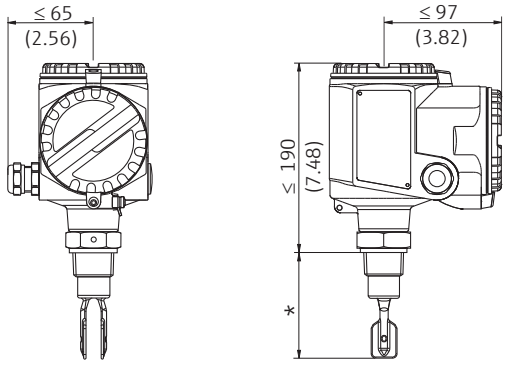

L00-FTL5xxxx-06-05-xx-xx-090

* See "Process connections"

Note!
The switch points of the Liquiphant **M** are at other positions to those of the previous version Liquiphant **II**.

Bushings: temperature spacer, pressure-tight feedthrough

Temperature spacer
Provides sealed insulation for the vessel and normal ambient temperatures for the housing.

Pressure-tight feedthrough
Protects the housing from pressures up to 100 bar (1450 psi) if the sensor is damaged. Provides sealed insulation for the vessel and normal ambient temperatures for the housing.

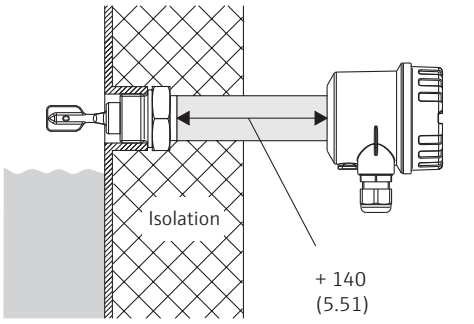

L00-FTL5xxxx-06-05-xx-xx-091

Process connections for FTL50(H) and FTL51(H)

Process connection		Dimensions	Accessories	Pressure Temperature
G ¾ DIN ISO 228/l with defined thread start; Flat seal to DIN 7603: supplied	GQ2 GQ6	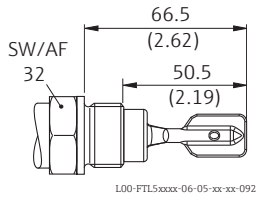 L00-FTL5xxxx-06-05-xx-xx-092		≤ 100 bar / only FTL51 (≤ 1450 psi) ≤ 150 °C (302 °F)
G ¾ DIN ISO 228/l with defined thread start for flush-mounted installation in weld-in adapter	GQ2 GQ6	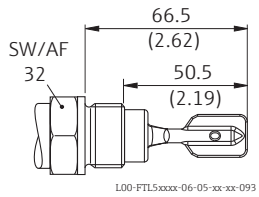 L00-FTL5xxxx-06-05-xx-xx-093	**Weld-in adapter** (with defined thread start) with silicone O-ring only FTL50, FTL50H See "Accessories" In conformity with FDA*	≤ 25 bar (363 psi) ≤ 150 °C (302 °F) ≤ 40 bar (580 psi) ≤ 100 °C (212 °F)
G 1 DIN ISO 228/l Flat seal to DIN 7603: supplied	GR2 GR6	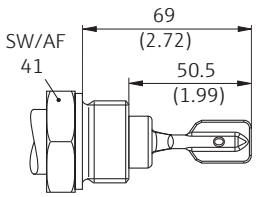 L00-FTL5xxxx-06-05-xx-xx-094		≤ 100 bar / only FTL51 (1450 psi) ≤ 150 °C (302 °F)
G 1 DIN ISO 228/l with defined thread start With seal surface for flush-mounted installation in weld-in adapter	GW2	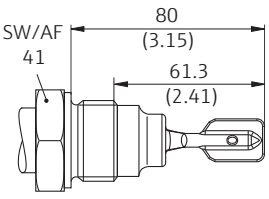 L00-FTL5xxxx-06-05-xx-xx-095	**Weld-in adapter** (with defined thread start) with silicone O-ring See "Accessories" In conformity with FDA*	≤ 25 bar (363 psi) ≤ 150 °C (302 °F) ≤ 40 bar (580 psi) ≤ 100 °C (212 °F)
NPT ¾ ASME B 1.20.1 or **R ¾** DIN/EN 10226	GM2 GM6 GE2 GE6	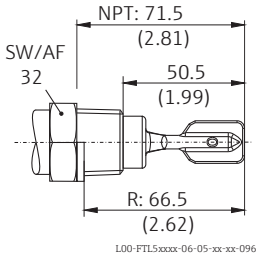 L00-FTL5xxxx-06-05-xx-xx-096		≤ 100 bar / only FTL51 (1450 psi) ≤ 150 °C (302 °F)

Process connection		Dimensions	Accessories	Pressure Temperature
NPT1 ASME B 1.20.1 or **R 1** DIN/EN 10226	GN2 GN6 GF2 GF6	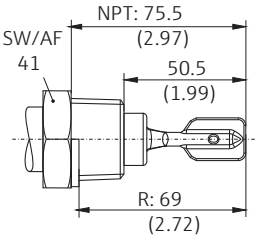		≤ 100 bar / only FTL51 (1450 psi) ≤ 150 °C (302 °F)
* FDA-compliant material in accordance with 21 CFR Part 177.2600 (silicone)				
Flanges ASME B 16.5 EN 1092-1 (DIN 2527 B) JIS B2220	A## B## C## F## N## K##	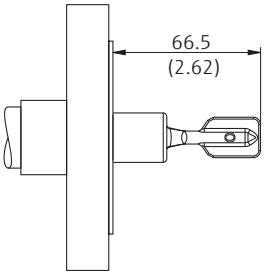	Seal depending on design installed on site	See nominal pressure of flange, however ≤ 100 bar (1450 psi) (only FTL51) ≤ 150 °C (302 °F)
	For higher chemical-resistance, AlloyC22-plated flanges are available. The flange carrier material is made of 316L and is welded with a 2 to 3 mm (0.08 to 0.12 in) thick AlloyC22 disk.			
Tri-Clamp ISO 2852 DN25-38 (1 to 1 ½") DIN 32676 DN25-40 ø D = 50.5 mm (1.99 in) ISO 2852 DN40-51 (2") DIN 32676 DN50 ø D = 64.0 mm (2.52 in)	TC2 TE2	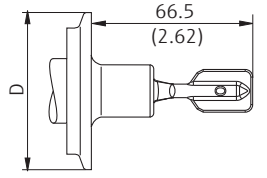	Clamping ring and front seal installed on site**	≤ 25 bar (363 psi) ≤ 150 °C (302 °F)
	Mounting with NA connector only in conjunction with T13, F13 and compact housing. Other housings on request.			
Threaded pipe joint DN 32 DN 40 DN 50 DIN 11851 with thread adapter nut	MA2 MC2 ME2	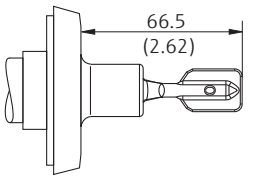	Sealing ring with collar, installed on site**	DN 32, DN 40: ≤ 40 bar (580 psi) up to 100 °C (212 °F) ≤ 25 bar (363 psi) up to 140 °C (284 °F) DN 50: ≤ 25 bar (363 psi) ≤ 140 °C (284 °F)
Flush-mounted for weld-in adapter Factory standard Endress+Hauser with silicone seal and thread adapter nut: supplied	EE2	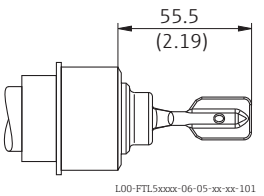	**Weld-in adapter** (fork can be positioned) See "Accessories" In conformity with FDA*	≤ 40 bar (580 psi) ≤ 100 °C (212 °F) ≤ 25 bar (363 psi) ≤ 150 °C (302 °F)
Aseptic DN 50 DIN 11864-1 Form A for pipe DIN 11850 with thread adapter nut	HE2	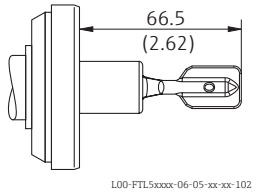	sealing ring installed on site**	≤ 25 bar (363 psi) ≤ 140 °C (284 °F)

Process connection		Dimensions	Accessories	Pressure Temperature
DRD With clamped flange	PE2	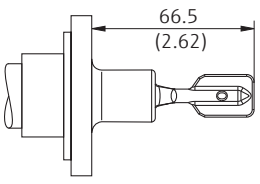 L00-FTL5xxxx-06-05-xx-xx-103	Welding flange with PTFE flat seal (fork can be positioned) See "Accessories" (or installed on site)** In conformity with FDA*	≤ 40 bar (580 psi) ≤ 100 °C (212 °F) ≤ 25 bar (363 psi) ≤ 150 °C (302 °F)
* FDA-compliant material in accordance with 21 CFR Part 177/2600 (silicone), 21 CFR Part 177.1550 (PTFE) ** The maximum temperature and the maximum pressure are dependent on the clamping ring used and the seal used. The lowest value applies in each case.				
SMS 2" (DN 51) with thread adapter nut	UE2	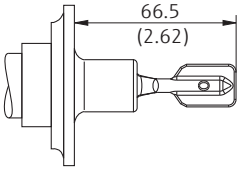 L00-FTL5xxxx-06-05-xx-xx-104	sealing ring installed on site**	≤ 25 bar (363 psi) ≤ 140 °C (284 °F)
Varivent for piping ≥ DN 65 ≥ O.D. 3" ≥ I.P.S. 3"	WE2	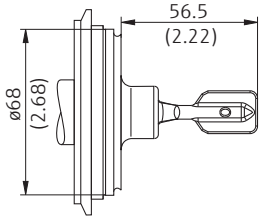 L00-FTL5xxxx-06-05-xx-xx-105	Clamping ring and O-ring seal, installed on site**	However, see specification as per Tuchenhagen VARIVENT-Inline housing: ≤ 25 bar (363 psi) ≤ 150 °C (302 °F)
Ingold fitting DN 25 Fitting length 46 mm (2.52 in) Thread adapter nut G 1 ¼ with O-ring seal, EPDM (FDA-compliant, USP Class VI*)	TT2	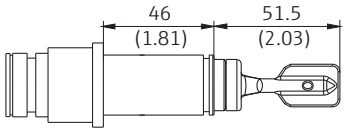 L00-FTL5xxxx-06-05-xx-xx-106		≤ 16 bar (232 psi) ≤ 150 °C (302 °F)
* FDA-compliant material in accordance with 21 CFR Part 177/2600 (EPDM) ** The maximum temperature and the maximum pressure are dependent on the clamping ring used and the seal used. The lowest value applies in each case.				

Sensor length L for FTL51 and FTL51H, depending on process connection

Thread: G ¾, G 1	Thread: NPT ¾, NPT1, R ¾, R 1	Flanges and flange-like process connections
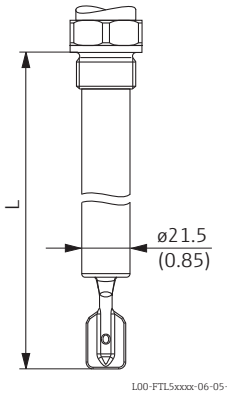	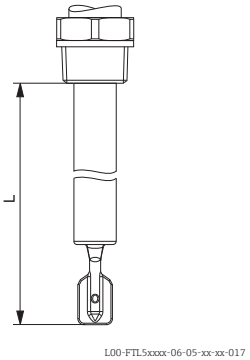	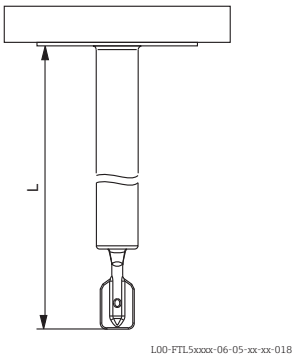
From seal surface of thread adapter	From lower edge of thread	

Customized length L:
- 148 mm to 3000 mm (6 to 115in); special version (TSP) on request up to 6000 mm (235 in)
- Length tolerances L: < 1 m (–5 mm), 1 to 3 m (–10 mm) / < 3.3 ft (-0.2 in), 3.3 to 9.8 ft (-0.39 in)

Note!
The switch points of the Liquiphant M are at other positions to those of the previous version Liquiphant **II**.
Special length "L II":
With vertical mounting from above the same switch point as for the Liquiphant II
FTL360, FTL365, FDL30, FDL35

"L II" depends on process connection:

L = 115 mm (4.53 in) for flanges and flange-like process connections
L = 99 mm (3.9 in) for threads NPT and R (BSPT)
L = 118 mm (4.65 in) for threads G1 (BSP 1)
L = 115 mm (4.53 in) for threads G ¾ (BSP ¾)
L = 104 mm (4.09 in) for flush-mounted 1" (Endress+Hauser)

Weights

See "Ordering information" → 43ff

Materials and surfaces

Material specifications as per AISI and DIN-EN.

Parts in contact with process

- Process connection and extension pipe:
  - FTL5x → 316L (1.4404 or 1.4435) optional 2.4602 (AlloyC22)
  - FTL5xH → 316L (1.4435)
- Tuning fork: 316L (1.4435) optional 2.4602 (AlloyC22)
- Flanges: 316L (1.4404)
- Flange plating: AlloyC22
- Flat seal for process connection G ¾ or G 1: elastomer fiber, asbestos-free

Surface roughness

Choice of mechanically polished surface roughness (version → probe length → type):

- Ra < 1.5 µm (59.1 µin), with EHEDG approval
- Ra < 0.3 µm (11.8 µin), 3-A and EHEDG approval and CoC-ASME-BPE

Note!
The surface is electropolished if the additional option "B"
(CoC - ASME BPE) is selected in addition to surface roughness quality Ra < 0.3 µm (11.8 µin). The

surface roughness is then: Ra < 0.38 µm (15.0 µin).
With this combination, the wetted parts are made of 316L (1.4435) in accordance with BN2 (delta-ferrite content < 1 %).

Parts with no process contact

- Tuning fork/housing seal: EPDM
- Temperature spacer: 316 L (1.4435)
- Pressure-tight feedthrough: 316L (1.4435)
- Ground terminal on housing (external): 316L (1.4404)
- Cable glands
  - Housing F13, F15, F16, F17: polyamide (PA)
    With B or C approval (→ 📄 43 ordering information): nickel-plated brass
  - Housing F27: polyamide PA, with approval "B" or "C" 316L (1.4435)
  - Housing T13: nickel-plated brass
- Polyester housing F16: PBT-FR with PBT-FR cover or with PA12 transparent cover
  - Cover seal: EPDM
  - Nameplate glued: polyester film (PET)
  - Pressure compensation filter: PBT-GF20
- Stainless steel housing F15: 316L (1.4404)
  - Cover seal: silicone
  - Safety claw: 304 (1.4301)
  - Pressure compensation filter: PBT-GF20, PA
- Aluminum housing F17/F13: EN-AC-AlSi10Mg, plastic-coated
  - Nameplate: aluminum, anodized
  - Cover seal: EPDM
  - Safety claw: nickel-plated brass
  - Pressure compensation filter: silicone
- Stainless steel housing F27: 316L
  - Nameplate: 316L (1.4404)
  - Cover seal: FVMQ (optional: EPDM seal available as spare part)
  - Safety claw: 316L (1.4435)
- Aluminum housing T13: EN-AC-AlSi10Mg, plastic-coated,
  - Nameplate: aluminum, anodized
  - Cover seal: EPDM
  - Safety claw: nickel-plated brass
- Compact housing (valve connector or M12 connector): 316L (1.4435)

Process connections

- Parallel thread G ¾, G 1 to DIN ISO 228/I with flat seal to DIN 7603
- Tapered thread R ¾, R 1 to EN10226
- Tapered thread ¾ -14 NPT, 1 - 11½ NPT as per ASME B 1.20.1
- Flush-mounted installation with weld-in adapter to factory standard Endress+Hauser (G ¾, G 1)
- Flush-mounted installation with weld-in adapter to factory standard Endress+Hauser (1"), sensor can be positioned
- Tri-Clamp 1½", 2" to ISO 2852
- Threaded pipe joint DN 32, 40, 50 to DIN 11851
- Aseptic connection DN 50 to DIN 11864-1
  Form A for pipe DIN 11850
- SMS connection 2" (DN 51)
- DRD flange
- Varivent® DN 50 (50/40) to factory standard Tuchenhagen
- Flanges: as per EN/DIN 1092-1 from DN 25, as per ASME B 16.5 from 1", as per JIS B2220 (RF)
- Ingold DN25 fitting length 46 mm (1.81 in) with thread adapter nut G1 ¼

Further details at Ordering information → 📄 43.

Human interface

Electronic inserts

With FEL51, FEL52, FEL54, FEL55:

- 2 switches for safety mode and density change
- green LED to indicate operational status
- red LED to indicate the switching status, flashes in the event of corrosion damage on sensor or if the electronics are defective

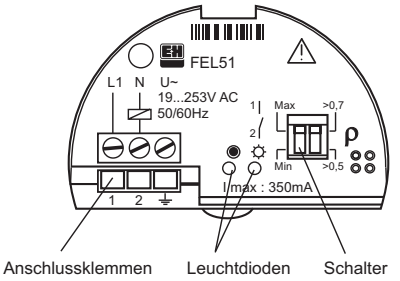

L00-FTL5xxxx-03-05-xx-en-001

With FEL56:

- 2 switches for safety mode and density change
- green LED flashes to indicate operational status
- red LED to indicate the switching status, flashes in the event of corrosion damage on sensor or if the electronics are defective

With FEL57:

- 2 switches for density change and Testing
- green LED to indicate operational status
- yellow LED to indicate the covered status, flashes in the event of corrosion damage on sensor or if the electronics are defective

L00-FTL5xxxx-03-05-xx-xx-013

With FEL58:

- 2 switches for safety mode and density change
- green LED
  - flashes quickly to indicate operational status,
  - flashes slowly in the event of corrosion damage to the sensor of if the electronics are defective
- yellow LED to indicate the switching status, Test key – breaks the cable connection

With FEL50A:

- 8 switches for configuring the device address
- green LED to indicate operational status, pulsing to indicate communication;
- yellow LED to indicate the switching status, flashes in the event of corrosion damage on sensor or if the electronics are defective

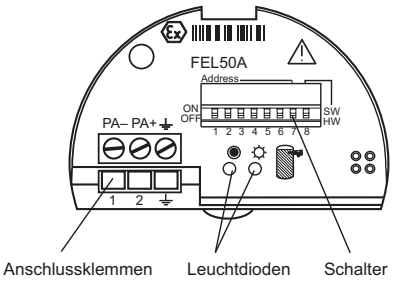

L00-FTL5xxxx-03-05-xx-en-002

With FEL50D:

- yellow LED: to indicate the validation of the measurement
- green LED: to indicate the operational status
- red LED: to indicate faults

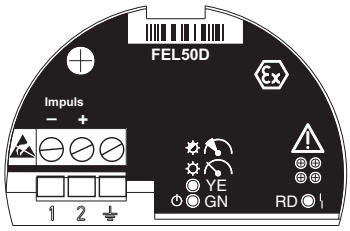

TI328Fxx004

Compact housing

Function test with test magnet

Versions AC, DC-PNP and NAMUR:

During the test, the current state of the electronic switch is reversed.

Hold the test magnet against the marking on the nameplate: The switching status is changed.

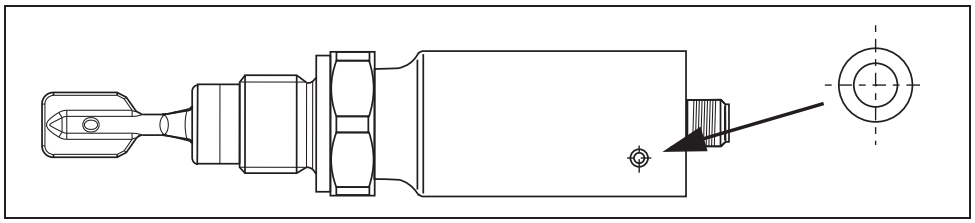

L00-FTL5xxxx-19-05-xx-xx-001

Light signals

Versions AC and DC-PNP with valve connector or cable tail

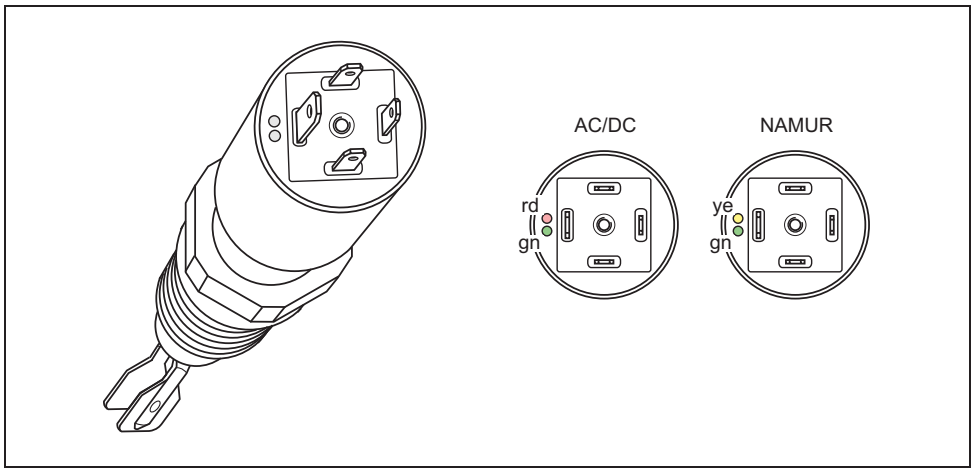

L00-FTL5xxxx-07-05-xx-xx-005

Green light (gn) lights up (AC/DC):

Liquiphant M is connected to the power supply and is operational.

Green light (gn) flashing (NAMUR):

Liquiphant M is connected to the power supply and is operational.

Red light (rd) lights up (AC/DC):

MAX application mode (overfill protection): sensor is immersed in liquid.
MIN application mode (dry running protection): sensor is not immersed in liquid.

Yellow light (ye) lights up (NAMUR):

MAX application mode (overfill protection): sensor is not immersed in liquid.
MIN application mode (dry running protection): sensor is immersed in liquid.

Red light (rd) flashing (AC/DC):

Liquiphant M has detected a fault.

Version NAMUR and DC-PNP with M12x1 round connector 316L

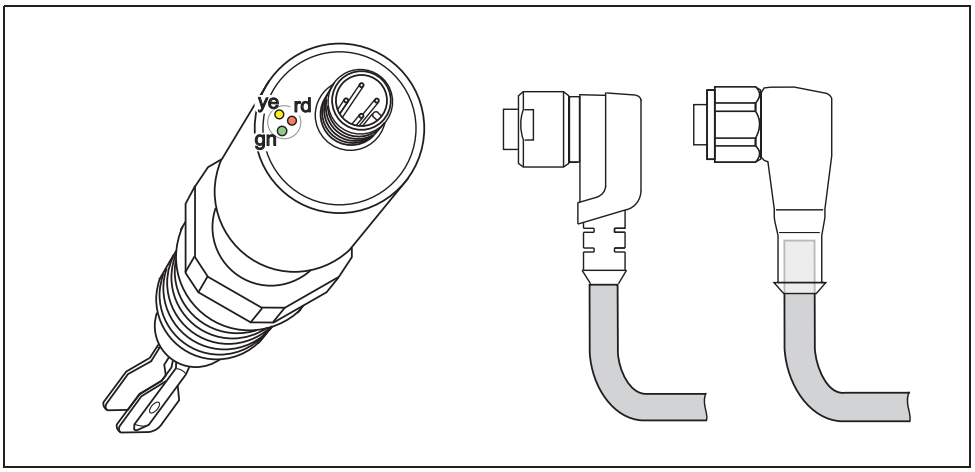

L00-FTL5xxxx-07-05-xx-xx-003

Green light (gn) lights up (DC-PNP):

Liquiphant M is connected to the power supply and is operational.

Green light (gn) flashing with 1 Hz (NAMUR):

Liquiphant M is connected to the power supply and is operational.

Yellow light (ye) lights up (DC-PNP):

Sensor is immersed in liquid.

Yellow light (ye) lights up (NAMUR):

MAX application mode (overfill protection): sensor is not immersed in liquid.
MIN application mode (dry running protection): sensor is immersed in liquid.

Red light (rd) flashing (DC-PNP):

Liquiphant M has detected a fault.

Green light (gn) flashing with 0.3 Hz (NAMUR):

Liquiphant M has detected a fault.

Version DC-PNP with M12x1 round connector 316L

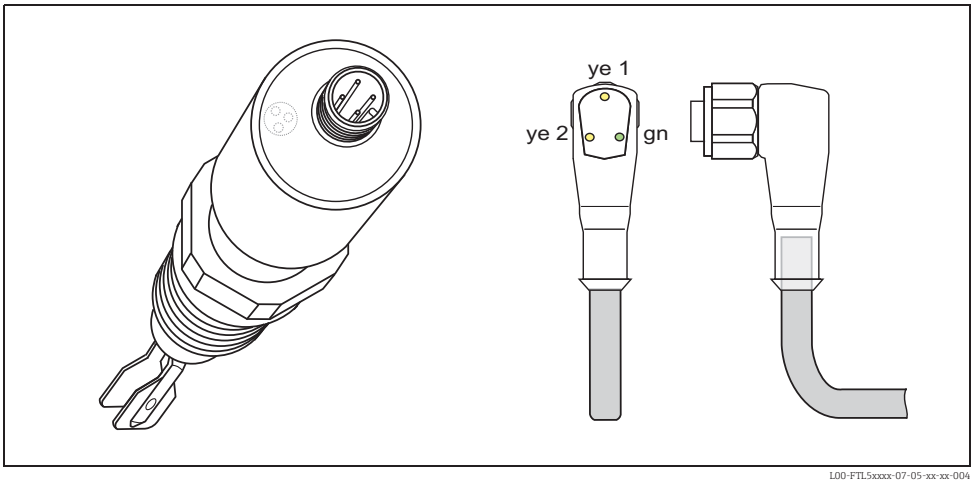

L00-FTL5xxxx-07-05-xx-xx-004

Green light (gn) lights up:

Liquiphant M is connected to the power supply and is operational.

Yellow light (ye 1) lights up:

MAX application mode (overfill protection): sensor is not immersed in liquid.
MIN application mode (dry running protection): sensor is not immersed in liquid.

Yellow light (ye 2) lights up:

MAX application mode (overfill protection): sensor is immersed in liquid.
MIN application mode (dry running protection): sensor is immersed in liquid.

Green light (gn) lights up, both yellow lights (ye 1+2) do not light up:

Liquiphant M has detected a fault.

Operating concept

Onsite configuration

Certificates and approvals

CE mark

The measuring system meets the legal requirements of the applicable EC Directives. These are listed in the corresponding EC Declaration of Conformity along with the standards applied.
Endress+Hauser confirms successful testing of the device by affixing to it the CE mark.

C-tick mark

The measuring system complies with the EMC requirements of the "Australian Communications and Media Authority (ACMA)".

General approvals

The following approvals are available for Liquiphant M FTL50H, FTL51H:

- EHEDG: certification (from TNO, The Netherlands), Report No. V99.394:
- 3A: 3A certificate (USA), Authorization no. 459: 74-06 Sensors and Sensor Fittings and Connections
- Certificate of Compliance as per ASME BPE-2012. (Order code: additional option = B)

Process connections	Order code	EHEDG + 3A		ASME BPE + CoC	
				Ra (µm)	
				< 0.38	< 1.5
Thread ISO228 G3/4, 316L, installation Thread ISO228 G1, 316L, installation Accessories: weld-in adapter	GQ2 GW2	X	X	–	X
Tri-Clamp ISO2852 DN25-38 (1 to 1-1/2"), 316L Tri-Clamp ISO2852 DN40-51 (2"), 316L	TC2 TE2	X	X	X	X
DIN11851 DN32 PN25 slotted nut, 316L DIN11851 DN40 PN25 slotted nut, 316L DIN11851 DN50 PN25 slotted nut, 316L	MA2 MC2 ME2	X	X	X	X
Flush-mounted, 316L, installation Accessories, weld-in adapter	EE2	X	X	X	X
DIN11864-1 A DN50 pipe DIN11850, Slotted nut, 316L	HE2	X	X	X	X
DRD 65mm, 316L	PE2	X	–	–	X
SMS 2" PN25, 316L	UE2	X	X	X	X
Varivent N pipe DN65-162 PN10, 316L	WE2	X	X	X	X
Ingold fitting 25x46mm, 316L	TT2	–	–	X	–

Warning!
To avoid risk of contamination, install according to the "Hygienic Equipment Design Criteria (HDC)" as stated in the Subgroup Design Principles of the EHEDG, Doc. 8, July 1993.
The flow of liquid during cleaning is important and should be in compliance with the HDC.

Note!
- For CIP (Clean in Place) and SIP (Sterilize in Place) processes the pressure and temperature specifications of the process connections must be observed.
- Suitable fittings and seals must be used to ensure hygiene-compliant design according to 3A, EHEDG, ASME BPE etc.
- Surfaces with ASME-BPE option: Ra < 0.38 µm (< 15 µin) electropolished and passivated or Ra < 1.5 µm (59 µin) mechanically polished.

CRN approval

Versions with a CRN approval (Canadian Registration Number) are marked with a "*" in ordering information feature 20 "process connection" (s. Seite 43 ff.). CRN-approved devices are assigned the registration number 0F10525.5C on the nameplate.

Process seal according to ANSI/ISA 12.27.01

Practice in North America for the installation of process seals
Endress+Hauser devices are designed as either single seal or dual seal devices with an alarm in accordance with ANSI/ISA 12.27.01. This means that the user does need to install for an external secondary process seal in the thermowell which is required in ANSI/NFPA 70 (NEC) and CSA 22.1 (CEC). These devices comply with installation practice in North America and enable very safe, low-cost installation in pressurized applications with hazardous media.
Further information is provided in the Safety Instructions (XA) for the specific device → 58 ff.

Product	Type	Max. process pressure	Marking	Listing
Liquiphant M	FTL50-S/T##... FTL50-P/Q/R##...	64 bar (928 psi)	Single Seal	CSA/FM
	FTL51-S/T##... FTL51-P/Q/R##...	64/100 bar (928/1450 psi)	Single Seal	CSA/FM
	FTL50H-S/T##... FTL50H-P/Q/R##...	64 bar (928 psi)	Single Seal	CSA/FM
	FTL51H-S/T##... FTL51H-P/Q/R##...	64 bar (928 psi)	Single Seal	CSA/FM

Other certificates

- Material certificate as per EN 10204/3.1 for all wetted parts NACE MR0175/MR0103, AD2000
- Leak detection system in conjunction with WHG approval
  Approval number: Z–65.40–446 (see also "Ordering information" s. Seite 43 ff.)
- TSE Certificate of Suitability
  The following applies to wetted device components:
  – They do not contain any materials derived from animals.
  – No additives or operating materials derived from animals are used in production or processing.

Note!
Wetted device components are listed in the "Mechanical construction" (→ 30 ff.) and "Ordering information" (→ 43 ff.) sections.

Manufacturer declarations

The following documents are optionally available to order with the device:

- FDA conformity
- TSE-free: Materials not derived from animals
- Regulation (EC) no. 2023/2006 (GMP)
- Regulation (EC) No. 1935/2004 materials in contact with food

The applicable European guidelines and standards can be found in the relevant EU Declarations of Conformity.

Regulation (EC) no. 10/2011: The regulation on plastic materials does not apply to the Liquiphant FTL5x, as the wetted materials are made exclusively of stainless steel.
The silicone seals supplied comply with BFR recommendation XV (commodities based on silicones from the Federal Institute for Risk Assessment - BFR), and the EPDM seals provided comply with BFR recommendation XXI (commodities based on natural and synthetic rubber).

Use in hazardous zones

Pay particular attention to the information provided in the documentation: Safety Instructions, Control Drawings etc. → 58

ASME B 31.3

Design and materials in accordance with ASME B31.3 The welding seals are through-penetration welded and comply with ASME Boiler and Pressure Vessel Code Section IX and EN ISO 15614-1.

Pressure equipment directive

The pressure equipment directive 97/23/EC does not apply to the Liquiphant FTL5x, as it does not have a pressurized housing in accordance with Article 1, Paragraph 2.1.4 of the directive.

Ordering information

Note!
Versions that are mutually exclusive are not indicated in this list.

Liquiphant M FTL50, FTL51 product structure

Design		*Basic weight*
FTL50	Compact	0.6 kg
FTL51	With extension pipe	0.6 kg

10	Approval:
A	Non-hazardous area
B	ATEX II 3G Ex nC IIC T6, WHG, ATEX II 3D Ex tc IIIC T85°C, NEPSI II 3G Ex nC IIC T6
C	ATEX II 3G Ex nA IIC T6, WHG, ATEX II 3D Ex tc IIIC T85°C, NEPSI II 3G Ex nA IIC T6
D	Non-hazardous area, WHG
E	ATEX II 1/2G Ex de IIC T6, WHG
F	ATEX II 1/2GD Ex ia IIC T6, WHG/IECEx
G	ATEX II 1/2GD Ex ia IIC T6/IECEx Zone0/1
H	ATEX II 1G Ex ia IIC T6
I	ATEX II 1/2G Ex de IIC T6/IECEx Zone0/1
J	ATEX II 1G Ex ia IIC T6, WHG
K	ATEX II 1/2G Ex d IIC T6/IECEx Zone0/1
L	ATEX II 1/2G Ex d IIC T6, WHG
M	NEPSI Ex ia IIC T6
N	NEPSI Ex d IIC T6
P	FM IS Cl.I,II,III Div.1 Gr.A-G, Zone 0,1,2,20,21,22
Q	FM XP Cl.I,II,III Div.1 Gr.B-G, Gr.A-G if E5 housing selected, Zone 1,2
R	FM NI Cl.I Div.2 Gr.A-D, Zone 0,1,2,20,21,22
S	CSA C/US IS Cl I,II,III Div.1 Gr.A-G, Zone 0,1,2
T	CSA C/US XP Cl I,II,III Div.1 Gr.A-G, Zone 1,2
U	CSA C/US General Purpose
V	TIIS Ex ia IIC T3
W	TIIS Ex d IIB T3
7	TIIS Ex d IIC T3
8	TIIS Ex d IIC T6
1	INMETRO Ex ia IIC T6 Ga/Gb
2	INMETRO Ex d IIC T6 Ga/Gb
3	INMETRO Ex de IIC T6 Ga/Gb
Y	Special version, TSP-No. to be spec.

20		Process connection:			*Additional weight*
	Note! For 100 bar (1450 psi) process pressure, select the appropriate option under "Additional option"				
	GQ2	G ¾	316L	Thread ISO 228	
		Installation > accessories: weld-in adapter			
	GQ6	G ¾	AlloyC22	Thread ISO 228	
	GR2	G 1	316L	Thread ISO 228	0.2 kg
	GR6	G 1	AlloyC22	Thread ISO 228	0.2 kg
	GW2*	G 1	316L	Thread ISO 228	0.2 kg
		Installation > accessories: weld-in adapter			
	GM2*	NPT ¾	316L	Thread ASME	
	GM6	NPT ¾	AlloyC22	Thread ASME	
	GN2*	NPT1	316L	Thread ASME	0.2 kg
	GN6	NPT1	AlloyC22	Thread ASME	0.2 kg
	GE2	R ¾	316L	Thread EN10226	
	GE6	R ¾	AlloyC22	Thread EN10226	
	GF2	R 1	316L	Thread EN10226	0.2 kg

20	Process connection:							*Additional weight*
	GF6	R 1			AlloyC22		Thread EN10226	0.2 kg
	BA2	DN32	PN6 A		316L		Flange EN 1092-1 (DIN 2527 B)	1.2 kg
	BB2	DN32	PN25/40 A		316L		Flange EN 1092-1 (DIN 2527 B)	2.0 kg
	BC2	DN40	PN6 A		316L		Flange EN 1092-1 (DIN 2527 B)	1.4 kg
	BD2	DN40	PN25/40 A		316L		Flange EN 1092-1 (DIN 2527 B)	2.4 kg
	BE2	DN50	PN6 A		316L		Flange EN 1092-1 (DIN 2527 B)	1.6 kg
	BG2	DN50	PN25/40 A		316L		Flange EN 1092-1 (DIN 2527 B)	3.2 kg
	BH2	DN65	PN6 A		316L		Flange EN 1092-1 (DIN 2527 B)	2.4 kg
	BJ2	DN50	PN100 A		316L	(FTL51)	Flange EN 1092-1 (DIN 2527 B)	
	BK2	DN65	PN25/40 A		316L		Flange EN 1092-1 (DIN 2527 B)	4.3 kg
	BM2	DN80	PN10/16 A		316L		Flange EN 1092-1 (DIN 2527 B)	4.8 kg
	BN2	DN80	PN25/40 A		316L		Flange EN 1092-1 (DIN 2527 B)	5.9 kg
	BQ2	DN100	PN10/16 A		316L		Flange EN 1092-1 (DIN 2527 B)	5.6 kg
	BR2	DN100	PN25/40 A		316L		Flange EN 1092-1 (DIN 2527 B)	7.5 kg
	B12	DN80	PN100 A		316L	(FTL51)	Flange EN 1092-1 (DIN 2527 B)	
	B82	DN25	PN25/40 A		316L		Flange EN 1092-1 (DIN 2527 B)	1.4 kg
	CA2	DN32	PN6 B1		316L		Flange EN 1092-1 (DIN 2527 C)	1.1 kg
	CA6	DN32	PN6 B1		AlloyC22 >316L		Flange EN 1092-1 (DIN 2527)	1.1 kg
	CE2	DN50	PN6 B1		316L		Flange EN 1092-1 (DIN 2527 C)	1.5 kg
	CE6	DN50	PN6 B1		AlloyC22 >316L		Flange EN 1092-1 (DIN 2527)	1.5 kg
	CG2	DN50	PN25/40 B1		316L		Flange EN 1092-1 (DIN 2527 C)	2.9 kg
	CG6	DN50	PN25/40 B1		AlloyC22 >316L		Flange EN 1092-1 (DIN 2527)	2.9 kg
	CJ2	DN50	PN100 B2		316L	(FTL51)	Flange EN 1092-1 (DIN 2527)	
	CN2	DN80	PN25/40 B1		316L		Flange EN 1092-1 (DIN 2527 C)	5.2 kg
	CN6	DN80	PN25/40 B1		AlloyC22 >316L		Flange EN 1092-1 (DIN 2527)	5.2 kg
	CQ2	DN100	PN10/16 B1		316L		Flange EN 1092-1 (DIN 2527 C)	5.3 kg
	CQ6	DN100	PN10/16 B1		AlloyC22 >316L		Flange EN 1092-1 (DIN 2527)	5.3 kg
	C12	DN80	PN100 B2		316L	(FTL51)	Flange EN 1092-1 (DIN 2527)	
	C82	DN25	PN25/40 B1		316L		Flange EN 1092-1 (DIN 2527 C)	1.3 kg
	C86	DN25	PN25/40 B1		AlloyC22 >316L		Flange EN 1092-1 (DIN 2527)	1.3 kg
	DG2	DN50	PN40 B1		316L		Flange EN 1092-1 (DIN 2526 D)	
	DN2	DN80	PN40 B1		316L		Flange EN 1092-1 (DIN 2526 D)	
	D82	DN25	PN40 B1		316L		Flange EN 1092-1 (DIN 2526 D)	
	EG2	DN50	PN25/40 E		316L		Flange EN 1092-1	2.6 kg
	FG2	DN50	PN40 C		316L		Flange EN 1092-1 (DIN 2512 F)	2.6 kg
	NG2	DN50	PN40 D		316L		Flange EN 1092-1 (DIN 2512 N)	2.9 kg
	AA2*	1¼"	150 lbs	RF	316/316L		Flange ASME B16.5	1.2 kg
	AB2*	1¼"	300 lbs	RF	316/316L	(FTL51)	Flange ASME B16.5	2.0 kg
	AC2*	1½"	150 lbs	RF	316/316L		Flange ASME B16.5	1.5 kg
	AD2*	1½"	300 lbs	RF	316/316L	(FTL51)	Flange ASME B16.5	2.7 kg

20	Process connection:						Additional weight
	AE2*	2"	150 lbs	RF	316/316L	Flange ASME B16.5	2.4 kg
	AE6	2"	150 lbs	RF	AlloyC22 >316/316L	Flange ASME B16.5	2.4 kg
	AF2*	2"	300 lbs	RF	316/316L	Flange ASME B16.5	3.2 kg
	AG2*	2"	600 lbs	RF	316/316L (FTL51)	Flange ASME B16.5	4.2 kg
	AJ2*	2½"	300 lbs	RF	316/316L (FTL51)	Flange ASME B16.5	4.8 kg
	AL2*	3"	150 lbs	RF	316/316L	Flange ASME B16.5	4.9 kg
	AM2*	3"	300 lbs	RF	316/316L (FTL51)	Flange ASME B16.5	6.8 kg
	AM6	3"	300 lbs	RF	AlloyC22 >316/316L	Flange ASME B16.5	6.8 kg
	AN2*	3"	600 lbs	RF	316/316L (FTL51)	Flange ASME B16.5	
	AP2*	4"	150 lbs	RF	316/316L	Flange ASME B16.5	7.0 kg
	AQ2*	4"	300 lbs	RF	316/316L (FTL51)	Flange ASME B16.5	11.5 kg
	AQ6	4"	300 lbs	RF	AlloyC22 >316/316L	Flange ASME B16.5	11.5 kg
	AR2*	4"	600 lbs	RF	316/316L (FTL51)	Flange ASME B16.5	17.3 kg
	A82*	1"	150 lbs	RF	316/316L	Flange ASME B16.5	1.0 kg
	KA2	10 K 25 A		RF	316L	Flange JIS B2220	
	KC2	10 K 40 A		RF	316L	Flange JIS B2220	
	KE2	10 K 50 A		RF	316L	Flange JIS B2220	1.7 kg
	KE6	10 K 50 A		RF	AlloyC22 >316L	Flange JIS B2220	1.7 kg
	KL2	10 K 80 A		RF	316L	Flange JIS B2220	
	KP2	10 K 100 A		RF	316L	Flange JIS B2220	
	TC2*	DN25-38 (1 to 1½")			316L	ISO 2852 Tri-Clamp	
	TE2*	DN40-51 (2")			316L	ISO 2852 Tri-Clamp	0.1 kg
	YY9	Special version					
		* With CRN approval.					

30	Probe length; Type:				
	FTL50				
	AA	Compact;		Ra <3.2 µm/126 µin	
	IA	Compact;		Temperature spacer	0.6 kg
	QA	Compact;		Pressure-tight feedthrough	0.7 kg
	FTL51				
	BB	..... mm;	316L**	Ra <3.2 µm/126 µin	
	BE	..... mm;	Alloy**	Ra <3.2 µm/126 µin	
	CB	..... inch;	316L**	Ra <3.2 µm/126 µin	
	CE	..... inch;	Alloy**	Ra <3.2 µm/126 µin	2.3 kg/100 in
	DB	Length: type II*;	316L	Ra <3.2 µm/126 µin	0.1 kg
	DE	Length: type II*;	Alloy	Ra <3.2 µm/126 µin	0.1 kg
	JB	..... mm;	316L**	+ Temperature spacer	0.9 kg/m +0.6 kg
	JE	..... mm;	Alloy**	+ Temperature spacer	0.9 kg/m +0.6 kg
	KB	..... inch;	316L**	+ Temperature spacer	2.3 kg/100 in +0.6 kg
	KE	..... inch;	Alloy**	+ Temperature spacer	2.3 kg/100 in +0.6 kg
	LB	Length: type II*;	316L	+ Temperature spacer	0.1 kg +0.6 kg
	LE	Length: type II*;	Alloy	+ Temperature spacer	0.1 kg +0.6 kg
	RB	..... mm;	316L**	+ Pressure-tight feedthrough	0.9 kg/m +0.7 kg
	RE	..... mm;	Alloy**	+ Pressure-tight feedthrough	0.9 kg/m +0.7 kg
	SB	..... inch;	316L**	+ Pressure-tight feedthrough	2.3 kg/100 in +0.7 kg
	SE	..... inch;	Alloy**	+ Pressure-tight feedthrough	2.3 kg/100 in +0.7 kg
	TB	Length: type II*;	316L	+ Pressure-tight feedthrough	0.1 kg +0.7 kg
	TE	Length: type II*;	Alloy	+ Pressure-tight feedthrough	0.1 kg +0.7 kg
	YY	Special version			
		*) Replacing devices: when vertically mounting a Liquiphant **M** FTL51 with length II, the switch point is at the same height as for a Liquiphant **II** FTL360, FTL365, FDL30, FDL35. See also Seite 36 "L II" depends on process connection.			
		**) Order 3001 to 6000 mm (116 to 235 in) via yy			

40	Electronics; output:		
A	FEL50A	PROFIBUS PA	
D	FEL50D	Density/concentration without WHG approval (Germany)	
1	FEL51*	2-wire,	AC 19 to 253 V
2	FEL52*	3-wire PNP,	DC 10 to 55 V
4	FEL54	Relay DPDT,	AC 19 to 253 V, DC 19 to 55 V
5	FEL55	8/16 mA,	DC 11 to 36 V
6	FEL56	NAMUR (L-H signal)	
7	FEL57	2-wire PFM	
8	FEL58*	NAMUR + test keys (H-L signal)	
9	Special version		
	*) Also available in compact housing		

50	Housing; cable entry:				
C3	Compact 316L	IP66/68;	Cable 5 m		
D3	Compact 316L	IP65;	Plug Pg11	ISO4400	
E1	F27 316L	NEMA 4X/6P;	Thread NPT ¾		
E3	Compact 316L Hygiene	NEMA4X;	Plug NPT ½	ISO4400	
N3	Compact 316L Hygiene	IP66/68;	M12 connector		
E4	F16 Polyester	NEMA4X;	Thread NPT ½		
E5	F13 Alu F17 Alu	NEMA4X/6P; NEMA4X	Thread NPT ¾		0.5 kg
E6	F15 316L hygiene	NEMA4X;	Thread NPT ½		0.1 kg
E7	T13 Alu	NEMA4X/6P;	Thread NPT ¾		0.9 kg
	Separate connection compartment				
F1	F27 316L	IP66/68	Thread G1/2		
F4	F16 Polyester	IP66/67;	Thread G ½		
F5	F13 Alu F17 Alu	IP66/68; IP66/67;	Thread G ½		0.5 kg
F6	F15 316L Hygiene	IP66/67;	Thread G ½		0.1 kg
F7	T13 Alu	coated IP66/68; thread G ½			0.9 kg
	Separate connection compartment				
G1	F27 316L	IP66/68;	M20 threaded joint		
	Ex d > M20 thread				
G4	F16 Polyester	IP66/67;	M20 threaded joint		
G5	F13 Alu F17 Alu	IP66/68; IP66/67;	M20 threaded joint		0.5 kg
			Ex d > thread M20		
G6	F15 316L Hygiene	IP66/67;	M20 threaded joint		0.1 kg
G7	T13 Alu	coated IP66/68;	M20 threaded joint		0.9 kg
	Separate connection compartment		Ex d > thread M20		
N4	F16 Polyester	IP66/67;	M12 connector		
N5	F13 Alu F17 Alu	IP66/68; IP66/67;	M12 connector		
N6	F15 316L hygiene	IP66/67;	M12 connector		
Y9	Special version				

60	Additional option		
A	Basic version		
B	PWIS-free, PWIS = paint-wetting impairment substances, max 2000 mm (78.7 in)		
C	EN 10204 - 3.1 material (316L wetted) inspection certificate		
D	EN10204-3.1 AD2000 material, wetted, apart from cast parts, inspection certificate		
K	Special adjustment, density H20		
L	Special adjustment, density H20, EN10204-3.1, material (wetted), inspection certificate		
N	EN 10204 - 3.1 material, NACE MR0175 (316L wetted) Inspection certificate		
P	100 bar (1450 psi) process pressure	(FTL51)	
R	100 bar (1450 psi) process pressure, EN 10204 - 3.1 material, NACE MR0175 (316L wetted) Inspection certificate	(FTL51)	
S	GL/ABS marine approval for FTL51: ≤ 1600 mm (63 in)		
Y	Special version		

580		Test, certificate:
	KD	Helium leak test, internal procedure, inspection certificate
	KE	Pressure test, internal procedure, inspection certificate
	KG	PMI test (XRF), internal procedure, wetted metal parts, EN10204-3.1 inspection certificate
	KP	Dye penetration test AD2000-HP5-3(PT), wetted/pressurized metal parts, inspection certificate
	KQ	Dye penetration test ISO23277-1 (PT), wetted/pressurized metal parts, inspection certificate
	KR	Dye penetration test ASME VIII-1 (PT), wetted/pressurized metal parts, inspection certificate
	KS	Welding documentation, wetted/pressurized seams
	KV	Declaration of Conformity ASME B31.3
	K9	Special version, TSP-No. to be spec.

FTL5x -	Complete product designation

Note!
The basic weight includes the compact sensor, thread adapter G ¾, electronic insert, polyester housing

Liquiphant M FTL50H, FTL51H product structure

Design		*Basic weight*
FTL50H	Compact	0.7 kg
FTL51H	With extension pipe	0.7 kg

10	Approval:
	A Non-hazardous area
	B ATEX II 3G Ex nC IIC T6, WHG, ATEX II 3D Ex tc IIIC T85°C, NEPSI II 3G Ex nC IIC T6
	C ATEX II 3G Ex nA IIC T6, WHG, ATEX II 3D Ex tc IIIC T85°C, NEPSI II 3G Ex nA IIC T6
	D Non-hazardous area, WHG
	E ATEX II 1/2G Ex de IIC T6, WHG
	F ATEX II 1/2GD Ex ia IIC T6, WHG/IECEx
	G ATEX II 1/2GD Ex ia IIC T6/IECEx Zone0/1
	H ATEX II 1G Ex ia IIC T6
	I ATEX II 1/2G Ex de IIC T6/IECEx Zone0/1
	J ATEX II 1G Ex ia IIC T6, WHG
	K ATEX II 1/2G Ex d IIC T6/IECEx Zone0/1
	L ATEX II 1/2G Ex d IIC T6, WHG
	M NEPSI Ex ia IIC T6
	N NEPSI Ex d IIC T6
	P FM IS Cl.I,II,III Div.1 Gr.A-G, Zone 0,1,2,20,21,22
	Q FM XP Cl.I,II,III Div.1 Gr.B-G, Gr.A-G if E5 housing selected, Zone 1,2
	R FM NI Cl.I Div.2 Gr.A-D, Zone 0,1,2,20,21,22
	S CSA C/US IS Cl I,II,III Div.1 Gr.A-G, Zone 0,1,2
	T CSA C/US XP Cl I,II,III Div.1 Gr.A-G, Zone 1,2
	U CSA C/US General Purpose
	V TIIS Ex ia IIC T3
	W TIIS Ex d IIB T3
	7 TIIS Ex d IIC T3
	8 TIIS Ex d IIC T6
	1 INMETRO Ex ia IIC T6 Ga/Gb
	2 INMETRO Ex d IIC T6 Ga/Gb
	3 INMETRO Ex de IIC T6 Ga/Gb
	Y Special version, TSP-No. to be spec.

20		Process connection:					*Additional weight*
	GQ2	G ¾		316L	(FTL50H)	Thread ISO 228	
		Installation > accessories: weld-in adapter					
	GW2*	G 1		316L		Thread ISO 228	0.2 kg
		Installation > accessories: weld-in adapter					
	BA2	DN32	PN6 A	316L		Flange EN 1092-1 (DIN 2527 B)	1.2 kg
	BB2	DN32	PN25/40 A	316L		Flange EN 1092-1 (DIN 2527 B)	2.0 kg
	BC2	DN40	PN6 A	316L		Flange EN 1092-1 (DIN 2527 B)	1.4 kg
	BD2	DN40	PN25/40 A	316L		Flange EN 1092-1 (DIN 2527 B)	2.4 kg
	BE2	DN50	PN6 A	316L		Flange EN 1092-1 (DIN 2527 B)	1.6 kg

20	Process connection:					*Additional weight*
	BG2	DN50	PN25/40 A	316L	Flange EN 1092-1 (DIN 2527 B)	3.2 kg
	BH2	DN65	PN6 A	316L	Flange EN 1092-1 (DIN 2527 B)	2.4 kg
	BK2	DN65	PN25/40 A	316L	Flange EN 1092-1 (DIN 2527 B)	4.3 kg
	BM2	DN80	PN10/16 A	316L	Flange EN 1092-1 (DIN 2527 B)	4.8 kg
	BN2	DN80	PN25/40 A	316L	Flange EN 1092-1 (DIN 2527 B)	5.9 kg
	BQ2	DN100	PN10/16 A	316L	Flange EN 1092-1 (DIN 2527 B)	5.6 kg
	BR2	DN100	PN25/40 A	316L	Flange EN 1092-1 (DIN 2527 B)	7.5 kg
	B82	DN25	PN25/40 A	316L	Flange EN 1092-1 (DIN 2527 B)	1.4 kg
	CG2	DN50	PN25/40 B1	316L	Flange EN 1092-1 (DIN 2527 C)	3.2 kg
	CN2	DN80	PN25/40 B1	316L	Flange EN 1092-1 (DIN 2527 C)	5.9 kg
	CQ2	DN100	PN10/16 B1	316L	Flange EN 1092-1 (DIN 2527 C)	5.6 kg
	EE2	1" flush-mounted (52001047)		316L		0.3 kg
		Installation > accessories: weld-in adapter				
	HE2	DN50	Pipe DIN 11850 slotted nut	316L	DIN 11864-1 A	0.3 kg
	AA2*	1¼"	150 lbs RF	316/316L	Flange ASME B16.5	1.2 kg
	AC2*	1½"	150 lbs RF	316/316L	Flange ASME B16.5	1.5 kg
	AE2*	2"	150 lbs RF	316/316L	Flange ASME B16.5	2.4 kg
	AF2*	2"	300 lbs RF	316/316L	Flange ASME B16.5	3.2 kg
	AJ2*	2½"	300 lbs RF	316/316L (FTL51H)	Flange ASME B16.5	4.8 kg
	AL2*	3"	150 lbs RF	316/316L	Flange ASME B16.5	4.9 kg
	AM2	3"	300 lbs RF	316/316L (FTL51H)	Flange ASME B16.5	6.8 kg
	AP2*	4"	150 lbs RF	316/316L	Flange ASME B16.5	7.0 kg
	AQ2*	4"	300 lbs RF	316/316L (FTL51H)	Flange ASME B16.5	11.5 kg
	A82*	1"	150 lbs RF	316/316L	Flange ASME B16.5	1.0 kg
	KA2	10 K 25	RF	316L	Flange JIS B2220	
	KC2	10 K 40	RF	316L	Flange JIS B2220	
	KE2	10 K 50	RF	316L	Flange JIS B2220	1.7 kg
	KL2	10 K 80	RF	316L	Flange JIS B2220	
	KP2	10 K 100	RF	316L	Flange JIS B2220	
	MA2	DN32	PN25	316L	DIN 11851	0.1 kg
	MC2	DN40	PN25	316L	DIN 11851	0.2 kg
	ME2	DN50	PN25	316L	DIN 11851	0.3 kg
	PE2	DRD	65 mm	316L		0.3 kg
	TC2*	DN25-38 (1 to 1½")		316L	ISO 2852 Tri-Clamp	
	TE2*	DN40-51 (2")		316L	ISO 2852 Tri-Clamp	0.1 kg
	TT2	Ingold fitting 25x46mm		316L		
	UE2	SMS 2"	PN25	316L		0.2 kg
	WE2*	DN65-162 PN10		316L	Varivent N pipe	0.5 kg
	YY9	Special version				
		* CRN approval				

30	Probe length; Type:			
	FTL50H			
	AC	Compact;	Ra <1.5 µm/59 µin	
	AD	Compact;	Ra <0.3 µm/12 µin	
	AF	Compact;	Ra<0.76 µm/30 µin	
	IC	Compact;	Ra <1.5 µm/59 µin + temperature spacer	0.6 kg
	ID	Compact;	Ra <0.3 µm/12 µin / A3 + temperature spacer	0.6 kg
	QC	Compact;	Ra <1.5 µm/59 µin + pressure-tight feedthrough	0.7 kg
	QD	Compact;	Ra <0.3 µm/12 µin / A3 + pressure-tight feedthrough	0.7 kg
	FTL51H			
	BC	..... mm;	Ra <1.5 µm/59 µin	0.9 kg/m
	BD	..... mm;	Ra <0.3 µm/12 µin / A3	0.9 kg/m
	BF	.....mm;	Ra<0.76 µm/30 µin	0.9 kg/m
	CC	..... inch;	Ra <1.5 µm/59 µin	2.3 kg/100 in
	CD	..... inch;	Ra <0.3 µm/12 µin / A3	2.3 kg/100 in
	cf	.....inch;	Ra<0.76 µm/30 µin	2.3 kg/100 in

30	Probe length; Type:			
	DC	Length: type II*;	Ra <1.5 µm/59 µin	0.1 kg
	DD	Length: type II*;	Ra <0.3 µm/12 µin / A3	0.1 kg
	JC	..... mm;	Ra <1.5 µm/59 µin + Temperature spacer	0.9 kg/m +0.6 kg
	JD	..... mm;	Ra <0.3 µm/12 µin + Temperature spacer	0.9 kg/m +0.6 kg
	KC	..... inch;	Ra <1.5 µm/59 µin + Temperature spacer	2.3 kg/100 in +0.6 kg
	KD	..... inch;	Ra <0.3 µm/12 µin + Temperature spacer	2.3 kg/100 in +0.6 kg
	LC	Length: type II*;	Ra <1.5 µm/59 µin + Temperature spacer	0.1 kg +0.6 kg
	LD	Length: type II*;	Ra <0.3 µm/12 µin + Temperature spacer,	0.1 kg +0.6 kg
	RC	..... mm;	Ra <1.5 µm/59 µin + Pressure-tight feedthrough	0.9 kg/m +0.7 kg
	RD	..... mm;	Ra <0.3 µm/12 µin + Pressure-tight feedthrough	0.9 kg/m +0.7 kg
	SC	..... inch;	Ra <1.5 µm/59 µin + Pressure-tight feedthrough	2.3 kg/100 in +0.7 kg
	SD	..... inch;	Ra <0.3 µm/12 µin + Pressure-tight feedthrough	2.3 kg/100 in +0.7 kg
	TC	Length: type II*;	Ra <1.5 µm/59 µin + Pressure-tight feed through,	0.1 kg +0.7 kg
	TD	Length: type II*;	Ra <0.3 µm/12 µin + Pressure-tight feed through,	0.1 kg +0.7 kg
	YY	Special version		

*) Replacing devices: when vertically mounting a Liquiphant **M** FTL51H with length II, the switch point is at the same height as for a Liquiphant **II** FTL360, FTL365, FDL30, FDL35.
See also Seite 36 "L II" depends on process connection.

40	Electronics; output:		
	A	FEL50A	PROFIBUS PA
	D	FEL50D	Density/concentration without WHG approval (Germany)
	1	FEL51*	2-wire, AC 19 to 253 V
	2	FEL52*	3-wire PNP, DC 10 to 55 V
	4	FEL54	Relay DPDT, AC 19 to 253 V, DC 19 to 55 V
	5	FEL55	8/16 mA, DC 11 to 36 V
	6	FEL56	NAMUR (L-H signal)
	7	FEL57	2-wire PFM
	8	FEL58*	NAMUR + test keys (H-L signal)
	9	Special version	

*) Also available in compact housing

50	Housing; cable entry:					
	C3	Compact 316L	IP66/68;	Cable 5 m		
	D3	Compact 316L	IP65;	Plug Pg11	ISO4400	
	E3	Compact 316L Hygiene	NEMA4X;	Plug NPT ½	ISO4400	
	N3	Compact 316L Hygiene	IP66/68;	M12 connector		
	E4	F16 Polyester	NEMA4X;	Thread NPT ½		
	E5	F13 Alu F17 Alu	NEMA4X/6P; NEMA4X	Thread NPT ¾		0.5 kg
	E6	F15 316L Hygiene	NEMA4X;	Thread NPT ½		0.1 kg
	E7	T13 Alu	NEMA4X/6P;	Thread NPT ¾		0.9 kg
		Separate connection compartment				
	F4	F16 Polyester	IP66/67;	Thread G ½		
	F5	F13 Alu F17 Alu	IP66/68; IP66/67;	Thread G ½		0.5 kg
	F6	F15 316L hygiene	IP66/67;	Thread G ½		0.1 kg
	F7	T13 Alu	coated IP66/68; thread G ½			0.9 kg
		Separate connection compartment Ex d > M20 thread				
	G4	F16 Polyester	IP66/67;	M20 threaded joint		
	G5	F13 Alu F17 Alu	IP66/68; IP66/67;	M20 threaded joint Ex d > thread M20		0.5 kg
	G6	F15 316L Hygiene	IP66/67;	M20 threaded joint		0.1 kg
	G7	T13 Alu	coated IP66/68;	M20 threaded joint		0.9 kg

50						**Housing; cable entry:**		
						Separate connection compartment		Ex d > thread M20
					N4	F16 Polyester	IP66/67;	M12 connector
					N5	F13 Alu F17 Alu	IP66/68; IP66/67;	M12 connector
					N6	F15 316L hygiene	IP66/67;	M12 connector
					Y9	Special version		

60							**Additional option**	
						A	Basic version	
						B	CoC-ASME BPE, EN10204-3.1 material (316L wetted) Inspection certificate	
						C	EN 10204 - 3.1 material (316L wetted), Inspection certificate	
						D	EN10204-3.1 AD2000 material, wetted, apart from cast parts, inspection certificate	
						K	Special adjustment, density H2O	
						L	Special adjustment, density H2O, EN10204-3.1 (316L wetted) inspection certificate	
						S	GL/ABS marine approval for FTL51H: ≤ 1600 mm (63 in)	
						Y	Special version	
FTL5#H -							Complete product designation	

Note!
Basic weight = compact sensor, thread adapter G ¾, electronic insert, stainless steel housing

Accessories

Note!
- All dimensions in mm (in)!
- For additional information on weld-in adapters, refer to TI00426F.
- The tolerance of the thread start between the weld-in adapter and sensor is ± 15°.

Weld-in adapter **Overview**

	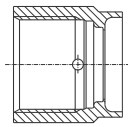 a0008246	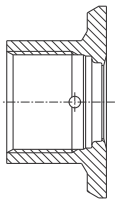 a0008251	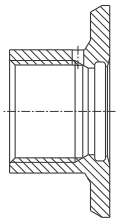 a0008256	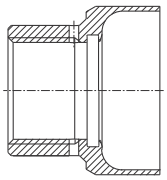 a0011924	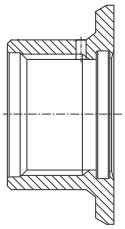 a0008248	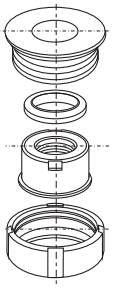 a0008253
	G¾, d=29 (1.14) without flange	**G¾, d=50 (1.97) with flange**	**G¾, d=55 (2.17) with flange**	**G1, d=53 (2.09) without flange**	**G1, d=60 (2.36) with flange**	**G1 can be positioned**
Material roughness µm (µin)	316L 1.5 (59.1)	316L 0.8 (31.5)	316L 0.8 (31.5)	316L 0.8 (31.5)	316L 0.8 (31.5)	316L 0.8 (31.5)
Without inspection certificate EN10204-3.1 material	71258357	71258355	52001052[3)]	71258358	52001051[1), 3)]	52001221[2), 3)]
With inspection certificate EN10204-3.1 material	52028295[3)]	52018765[3)]	52011897[3)]	71093129[1), 3)]	52011896[1), 3)]	52011898[2), 3)]
Seal (replacement part: set of 5)	Silicone O-ring 52021717	Silicone O-ring 52021717	Silicone O-ring 52014473	Silicone O-ring 52014472	Silicone O-ring 52014472	Silicone profile gasket 52014424)
Weld-in dummy	–	–	71168889	71166879	71166879	71181945

		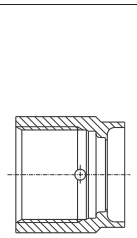 a0008246	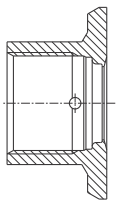 a0008251	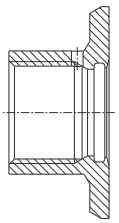 a0008256	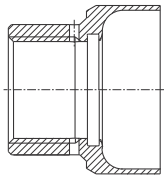 a0011924	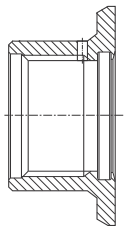 a0008248	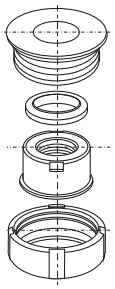 a0008253
		G¾, d=29 (1.14) without flange	**G¾, d=50 (1.97) with flange**	**G¾, d=55 (2.17) with flange**	**G1, d=53 (2.09) without flange**	**G1, d=60 (2.36) with flange**	**G1 can be positioned**
Liquiphant M	Feature	**Version**					
FTL50	020			GQ2			
FTL5x					GW2	GW2	GW2
FTL50H				GQ2			
FTL5xH					GW2	GW2	GW2

1) This weld-in adapter replaces the weld-in adapter with the order number 917969-1000.

2) This weld-in adapter replaces the weld-in adapter with the order number 215159-0000.

3) A seal is included in the delivery.

		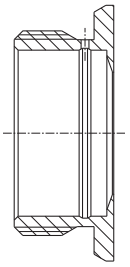 a0008252	a0008254
		RD52	**DRD DN50 65 (2.56) (welding flange)**
Material roughness µm (µin), process side		316L 0.8 (31.5)	316L/304 0.8 (31.5)
Without inspection certificate EN10204-3.1 material		52001047 [1), 2)]	52002041[2)]/ 916743-0000
With inspection certificate EN10204-3.1 material		52006909 [1), 2)]	52011899[2)]/ –
Seal (replacement part: set of 5)		Silicone profile gasket 52014424	PTFE flat seal 52024228
Weld-in dummy		M40167	–
Device	Feature	**Version**	
Liquiphant M			
FTL5xH	020	EE2	PE2

1) This weld-in adapter replaces the weld-in adapter with the order number 942329-0001.

2) A seal is included in the delivery.

Note!
All the weld-in adapters available are described in document TI00426F.
www.endress.com --> Download -->Advanced--> Documentation code --> TI00426F.

Weather protection cover

For F16 housing

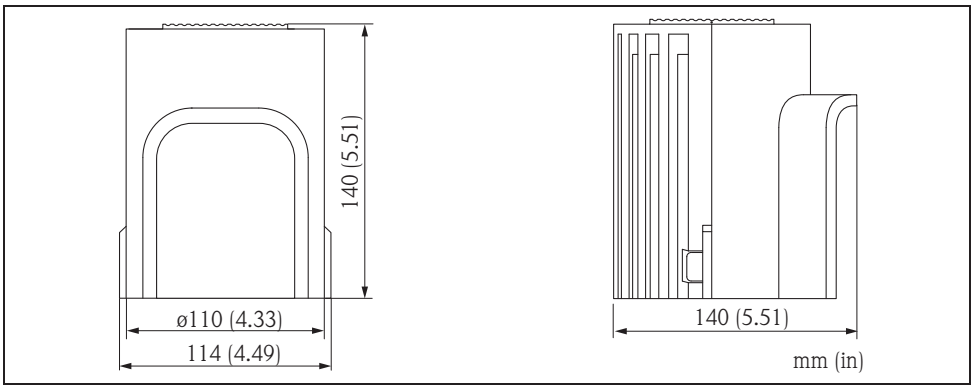

Material	Order No.	Weight
PBT, gray	71127760	240 g (8.46 oz)

For F13, F17 and F27 housing

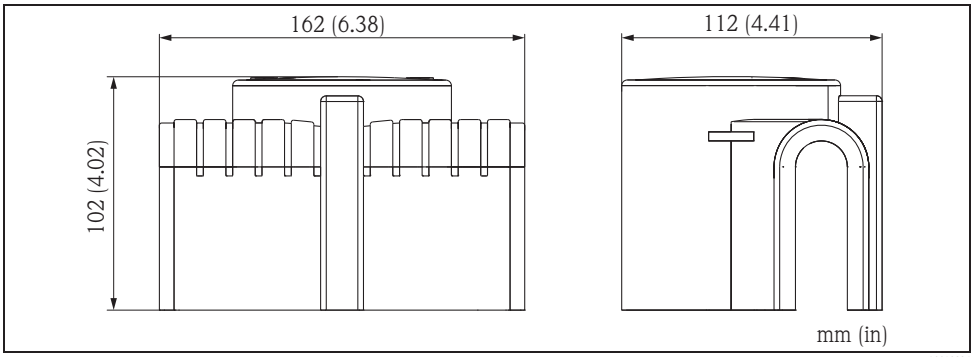

Material	Order No.	Weight
PA6, gray	71040497	300 g (10.58 oz)

Lap joint flange

Order number: 918158-0000
With G 1 thread for mounting
a Liquiphant FTL50, FTL51
with process connection GR2

Pressure up to 40 bar (580 psi)

Material: corrosion-resistant steel
1.4301 (AISI 304)

Weight: 0.54 kg (1.19 lbs)

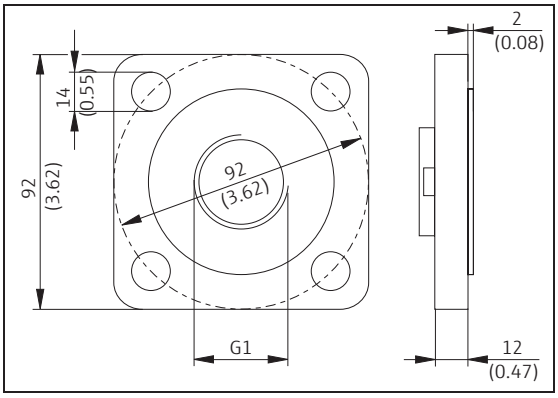

Lap joint flanges

With G 1 thread for mounting
a Liquiphant FTL50, FTL51
with process connection GR2

Material: corrosion-resistant steel
1.4571 (AISI 316Ti)

- Order number: 918143-0000
  Flange DN50 PN40, EN 1092-1
  Weight: 3.11 kg (6.86 lbs)
- Order number: 918144-0000
  Flange ASME 2", 150 psi, RF
  Weight: 2.38 kg (5.25 lbs)

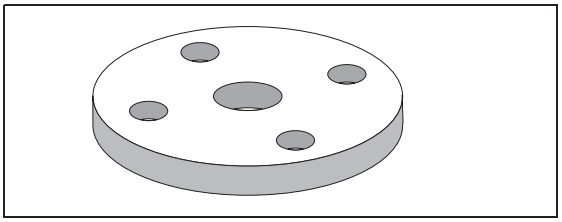

L00-FTL5xxxx-03-05-xx-xx-015

Sliding sleeves for unpressurized operation

Switch point infinitely variable for
Liquiphant M FTL51

Material: corrosion-resistant steel
1.4435 (AISI 316 L)

Weight for G 1, NPT 1: 0.21 kg (0.46 lbs)
Weight for G 1½, NPT 1½: 0.54 kg (1.19 lbs)

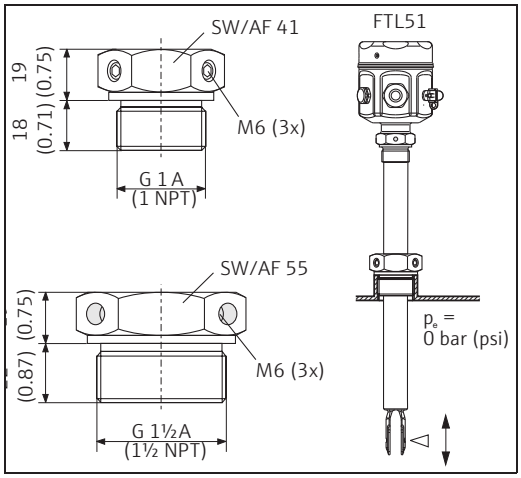

L00-FTL5xxxx-06-05-xx-xx-109

Thread	Standard	Material	Order number	Approval
G 1	DIN ISO 228/I	1.4435 (AISI 316 L)	52003978	
G 1	DIN ISO 228/I	1.4435 (AISI 316 L)	52011888	With inspection certificate EN 10204 - 3.1 material
NPT1	ASME B 1.20.1	1.4435 (AISI 316 L)	52003979	
NPT1	ASME B 1.20.1	1.4435 (AISI 316 L)	52011889	With inspection certificate EN 10204 - 3.1 material
G 1½	DIN ISO 228/I	1.4435 (AISI 316 L)	52003980	
G 1½	DIN ISO 228/I	1.4435 (AISI 316 L)	52011890	With inspection certificate EN 10204 - 3.1 material
NPT1½	ASME B 1.20.1	1.4435 (AISI 316 L)	52003981	
NPT1½	ASME B 1.20.1	1.4435 (AISI 316 L)	52011891	With inspection certificate EN 10204 - 3.1 material

High pressure sliding sleeves

For continuous adjustment of the switch point of a Liquiphant M FTL51.
Also for use in hazardous areas. For further information → 📄 58ff. (ATEX, NEPSI).

Material: corrosion-resistant steel 1.4435 (AISI 316L) or AlloyC22

Weight for G 1, NPT 1: 1.13 kg (2.49 lbs)
Weight for G 1½, NPT 1½: 1.32 kg (2.91 lbs)

Seal package made of graphite

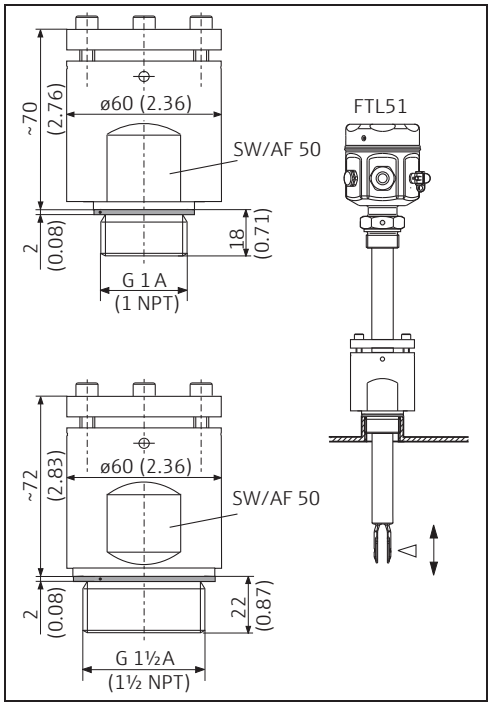

L00-FTL5xxxx-06-05-xx-xx-110

Thread	Standard	Material	Order number	Approval
G 1	DIN ISO 228/1	1.4435 (AISI 316 L)	52003663	
G 1	DIN ISO 228/1	1.4435 (AISI 316 L)	52011880	With inspection certificate EN 10204 - 3.1 material
G 1	DIN ISO 228/1	AlloyC22	71118691	With inspection certificate EN 10204 - 3.1 material
NPT1	ASME B 1.20.1	1.4435 (AISI 316 L)	52003667	
NPT1	ASME B 1.20.1	1.4435 (AISI 316 L)	52011881	With inspection certificate EN 10204 - 3.1 material
NPT1	ASME B 1.20.1	AlloyC22	71118694	With inspection certificate EN 10204 - 3.1 material
G 1½	DIN ISO 228/1	1.4435 (AISI 316 L)	52003665	
G 1½	DIN ISO 228/1	1.4435 (AISI 316 L)	52011882	With inspection certificate EN 10204 - 3.1 material
G 1½	DIN ISO 228/1	AlloyC22	71118693	With inspection certificate EN 10204 - 3.1 material
NPT1½	ASME B 1.20.1	1.4435 (AISI 316 L)	52003669	
NPT1½	ASME B 1.20.1	1.4435 (AISI 316 L)	52011883	With inspection certificate EN 10204 - 3.1 material
NPT1½	ASME B 1.20.1	AlloyC22	71118695	With inspection certificate EN 10204 - 3.1 material

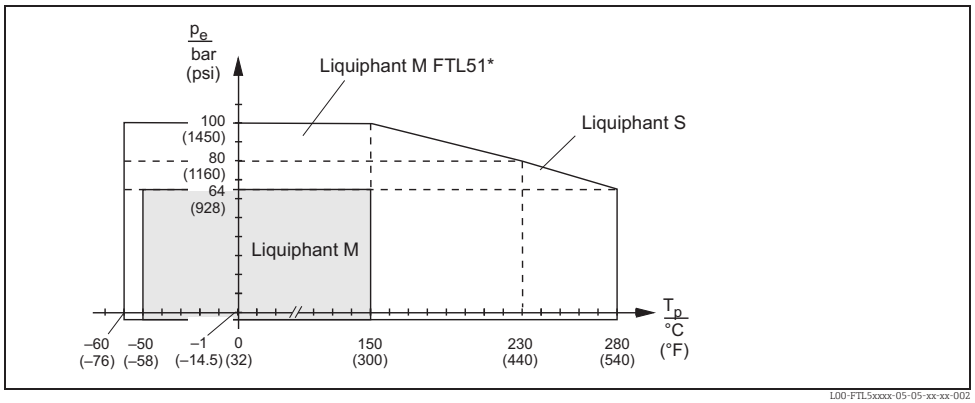

L00-FTL5xxxx-05-05-xx-xx-002

** FTL51 with high-pressure sliding sleeve (100 bar (1450 psi)). See "Additional option" Seite 43 ff. option "P" or "R".1*

Cover with sight glass

Order number: 943461-0001
for polyester housing F16

Material: PA 12

Weight: 0.04 kg (0.09 lbs)

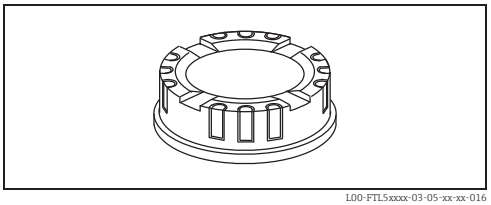

L00-FTL5xxxx-03-05-xx-xx-016

Cover with sight glass

For stainless steel housing F15

Material: AISI 316L

Weight: 0.16 kg (0.35 lbs)

- Order number: 52027002
  With glass sight glass
- Order number: 52028207
  With PC sight glass
  (Not for CSA, General Purpose)

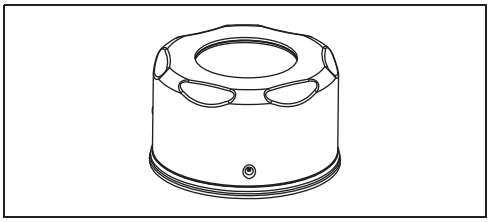

L00-FTL5xxxx-03-05-xx-xx-017

Circular connector

Order number: 52010285

4x0.34 M12 socket

Cable: PVC (gray) 5 m (16 ft)

Body: PUR (blue)

Thread adapter nut: Cu Sn/Ni

Degree of protection: IP67

Temperature range: –25 to +70 °C (-13 to +158 °F)

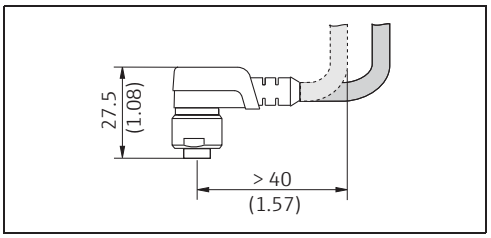

L00-FTL5xxxx-06-05-xx-xx-111

Order number: 52024216

4x0.34 M12 socket

Cable: PVC (orange) 5 m (16 ft)

Body: PVC (orange)

Thread adapter nut: 316L

Degree of protection: IP69K (fully locked)

Temperature range: –25 to +70 °C (-13 to +158 °F)

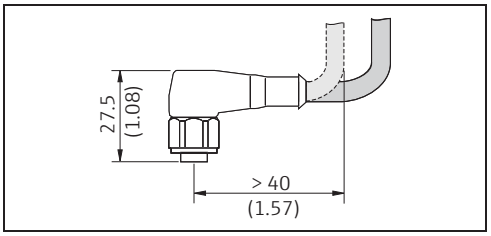

L00-FTL5xxxx-06-05-xx-xx-112

Order number: 52018763

4x0.34 M12 socket with integrated LEDs

Cable: PVC (orange) 5 m (16 ft)

Body: PVC (transparent)

Thread adapter nut: 316L

Degree of protection: IP69K (fully locked)

Temperature range: –25 to +70 °C (-13 to +158 °F)

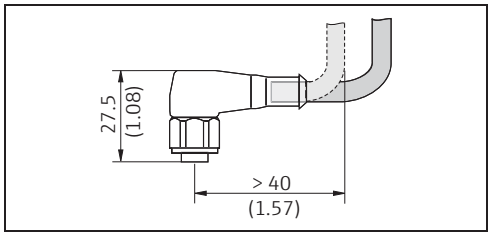

L00-FTL5xxxx-06-05-xx-xx-113

Documentation

Note!
You can find supplementary documentation on the product pages at www.endress.com

Operating Instructions

Electronic insert FEL50A for Liquiphant M, PROFIBUS PA
BA00141F

Liquiphant M Density, Density Computer FML621
BA00335F

Liquiphant M FTL50, FTL51
KA00143F

Liquiphant M FTL50(H), FTL51(H)
KA00144F

Liquiphant M FTL51C
KA00162F

Liquiphant M FTL50-####### # 7 #, FTL51-####### # 7 #
KA00163F

Liquiphant M FTL50H-######## 7 #, FTL51H-######## 7 #
KA00164F

Liquiphant M FTL51C-######## 7 ##
KA00165F

Liquiphant M FTL5#-# ### ## # #3 #, FTL5#H-# ### ## # #3 #
KA00220F

Electronic insert FEL50D for Liquiphant M Density FTL50, FTL51
KA00284F

Electronic insert FEL50D for Liquiphant M Density FTL50H, FTL51H
KA00285F

Electronic insert: FEL50D for Liquiphant M Density FTL51C
KA00286F

Liquiphant M Sliding Sleeve for FTL51, G 1, NPT 1
KA00151F

Liquiphant M Sliding Sleeve for FTL51, G 1½, NPT 1½
KA00152F

Liquiphant M High-pressure Sliding Sleeve for FTL51, G 1, NPT 1
KA00153F

Liquiphant M High-pressure Sliding Sleeve for FTL51, G 1½, NPT 1½
KA00154F

Technical Information	General instructions for electromagnetic compatibility (Test procedure, installation recommendation) TI00241F
	Liquiphant M FTL51C, wetted parts with highly corrosion-resistant ECTFE, PFA or enamel coating TI00347F
	Isolating amplifier FTL325P, 1 or 3-channel switching units for top-hat rail mounting for Liquiphant M with electronic insert FEL57 TI00350F
	Isolating amplifier FTL325N, 1 or 3-channel switching units for top-hat rail mounting for Liquiphant M with electronic insert FEL56, FEL58 TI00353F
	Liquiphant S FTL70/71, for medium temperatures up to 280 °C (536 °F) TI00354F
	Isolating amplifier FTL375P, 1 to 3-channel switching units for top-hat rail mounting for Liquiphant M with electronic insert FEL57 TI00360F
	Liquiphant M Density, Density Calculator FML621 TI00420F
	Weld-in adapter, TI00426F
Functional safety (SIL)	Liquiphant M with electronic insert FEL51 (MAX) SD00164F
	Liquiphant M with electronic insert FEL51 (MIN) SD00185F
	Liquiphant M with electronic insert FEL52 (MAX) SD00163F
	Liquiphant M with electronic insert FEL52 (MIN) SD00186F
	Liquiphant M with electronic insert FEL54 (MAX) SD00162F
	Liquiphant M with electronic insert FEL54 (MIN) SD00187F
	Liquiphant M with electronic insert FEL55 (MAX) SD00167F
	Liquiphant M with electronic insert FEL55 (MIN) SD00279F
	Liquiphant M with electronic insert FEL57 + Nivotester FTL325P (MAX) SD00111F
	Liquiphant M with electronic insert FEL57 + Nivotester FTL325P (MIN) SD00231F
	Liquiphant M with electronic insert FEL57+ Nivotester FTL375P (MAX) SD00113F
	Liquiphant M with electronic insert FEL56 + Nivotester FTL325N (MAX) SD00168F
	Liquiphant M with electronic insert FEL56 + Nivotester FTL325N (MIN) SD00188F
	Liquiphant M with electronic insert FEL58 + Nivotester FTL325N (MAX) SD00161F
	Liquiphant M with electronic insert FEL58 + Nivotester FTL325N (MIN) SD00170F

Safety Instructions (ATEX)	CE ⟨Ex⟩ II 1/2 G, Ex d IIC/B (KEMA 99 ATEX 1157) XA00031F/00/a3 CE ⟨Ex⟩ II 1/2 G, Ex ia/ib IIC/B (KEMA 99 ATEX 0523) XA00063F/00/a3 CE ⟨Ex⟩ II 1 G, Ex ia IIC/B (KEMA 99 ATEX 5172 X) XA00064F/00/a3 CE ⟨Ex⟩ II 1/2 G, Ex de IIC/B (KEMA 00 ATEX 2035) XA00108F/00/a3 CE ⟨Ex⟩ II 3 G, Ex nA/nC II (EG 01 007-a) XA00182F/00/a3
Safety Instructions (NEPSI)	Ex d IIC/IIB T3-T6 , Ex d IIC T2-T6 (NEPSI GYJ06424) XA00401F/00/B2 Ex ia IIC T2-T6, Ex ia IIB T3-T6 (NEPSI GYJ05556, NEPSI GYJ06464), XC00009F/00/b2 Ex nA II T3-T6, Ex nC/nL IIC T3-T6 (NEPSI GYJ04360, NEPSI GYJ071414) XC00010F/00/b2
Control Drawings	Liquiphant M (IS and NI) Current output PFM, NAMUR Entity installation Class I, Div. 1, 2, Groups A, B, C, D Class I, Zone 0 Class II, Div. 1, 2, Groups E, F, G Class III ZD00041F Liquiphant M, Liquiphant S (cCSAus / IS) Class I, Div. 1, Groups A, B, C, D Ex ia IIC T6 Class II, Div. 1, Groups E, F, G Class III ZD00042F Liquiphant M (NI), FTL50(H), FTL51(H), FTL51C, FTL70, FTL71 Class I, Div. 2, Groups A, B, C, D Class II, Div. 2, Groups F, G Class III ZD00043F Liquiphant M, Liquiphant S (cCSAus / XP) Class I, Groups A, B, C, D Class II, Groups E, F, G Class III ZD00240F Liquiphant M (IS and NI) PROFIBUS PA, FOUNDATION Fieldbus Class I, Zone 0, IIC Class I, Division 1, 2, Groups A, B, C, D Class II, Division 1, 2, Groups E, F, G Class III ZD00244F
System information	Liquiphant M SI00040F

www.addresses.endress.com

Endress+Hauser

People for Process Automation

4 – DETAILED TECHNICAL DOCUMENTATION

4.4 – COMMISSIONING REPORT

LEFT BLANK

DOCUMENT PROVIDED AFTER PROCESS STARTUP

LEFT BLANK

4 – DETAILED TECHNICAL DOCUMENTATION

4.5 – LIST OF SUPPLIERS

LEFT BLANK

LIST OF SUPPLIERS

SUPPLIER	ADDRESS	LOCATION	TELEPHONE
ACIER LOUBIER	2425 EDOUARD-MICHELIN	TERREBONNE	877-477-4042
ALBERT DAVIDSON INDUSTRIES LTD	4721, RUE LOUIS-B-MAYER	LAVAL	450-682-9023
ANDRITZ SEPARATION INC.	1010 COMMERCIAL BLVD. S	ARLINGTON	817-419-1706
APY ELECTRIQUE INC.	1220 RUE VERVILLE	REPENTIGNY	450-585-4000
CAMFAB	1191 RUE NOBEL	STE-JULIE	450-649-6571
CFF (QUEBEC) INC, ACIER INOXYDABLE	4900, Chemin Bois-Franc	ST-LAURENT	514-337-7700
CHEMLINE PLASTICS LTD	55 GUARDSMAN ROAD	THORNILL	905-889-7890
CONTROLES RL	894 RUE BERLIER	LAVAL	450-967-1703
CONVAL QUEBEC .	9485, TRANS CANADA HWY.	MONTREAL	1-905-828-9900
D.M. VALVE ET CONTROLES INC.	3540 BLVD. POIRIER	ST-LAURENT	514-332-4260
DOUGLAS BARWICK INC.	599 CURE BOIVIN	BOISBRIAND	450-435-3643
DRYTEC TRANS-CANADA	250 HENRY-BESSEMER	TERREBONNE	450-965-0200
ENDRESS & HAUSER CANADA - ST-LAURENT	6800, COTE DE LIESSE	ST-LAURENT	514-733-0254
ENVIREQUIP	710 COTTON MILL ROAD	CORNWALL	613-703-7930
FAFARD INC., ACIER INOXYDABLE	21 DE MONTGOLFIER	BOUCHERVILLE	450-641-4349
FIBERGRATE (SAME AS STONCOR GROUP)	95, SUNRAY STREET	WHITBY	905-430-3333
FLSMIDTH KREBS	5505 W GILLETTE RD	TUCSON	520-744-8200
GRUNDFOS CANADA INC - USD	2941 BRIGHTON ROAD	OAKVILLE	913-227-3567
HACH SALES & SERVICES CANADA	3020 GORE ROAD	LONDON	800-665-7635
HAPMAN	6002 E. KILGORE RD	KALAMAZZO	269-343-1675
JOHNSTON INDUSTRIAL PLASTICS	1916, 32E AVE	LACHINE	514-636-5055
KOFLO CORPORATION	309 CARY POINT DRIVE	CARY	847-516-3700
LUMEN INC.	117, BOUL. HYMUS	POINTE-CLAIRE	514-630-9401
MARC ARBIC INC., LES ENTREPRISES	1283 BERNIER	ST-BRUNO-DE-MONTARVILLE	450-461-1101
MCLANAHAN CORPORATION	200 WALL STREET	HOLLIDAYSBURG	814-695-9807
MCMASTER-CARR SUPPLY CO.	200, AURORA INDUSTRIAL PKWY	AURORA	330-995-5855
ONYX VALVE CO	835 INDUSTRIAL HWY	CINNAMINSON	856-829-2888
PRIMARY FLUID SYSTEMS INC.	1050 COOKE BLVD	BURLINGTON	1-800-776-6580
PULSAFEEDER, NY (EPO)	2883 BRIGHTON HENRIETTA	ROCHERTER	585-292-8000
ROGER, PRODUITS D'ACIER	1350, GRANDE-ALLÉE	TERREBONNE	450-471-2000
SCHNEIDER ELECTRIC CANADA	825 RUE BANCROFT	POINTE-CLAIRE	514-697-4790
SCHUTTE & KOERTING	2510 METROPOLITAN DRIVE	TREVOSE	215-639-0900
SEEPEX INC.	511 SPEEDWAY DRIVE	ENON	937-864-7150
SULZER PUMPS CANADA INC	1401 MEYERSIDE DRIVE	MISSISSAUGA	905-670-4677
WAM USA, INC.	75 BOULDERBROOK CIRCLE	LAWRENCEVILLE	770-339-6767
WESTBURNE	3555, RUE SARTELON	MONTREAL	514-337-5331

LEFT BLANK

5 – ELECTRICITY AND CONTROL

5.1 – FUNCTIONAL DESCRIPTION

LEFT BLANK

FUNCTIONAL DESCRIPTION

AGNICO EAGLE MINES Ltd - AMARUQ
Water Treatment Plant

5000218009_FD_0001

REV. 2

Date : 09/08/2018

Drafted by : Fabrice Vinci, Eng.
Reviewed by: Guillaume Perin, P.eng. M.Sc

TABLE OF CONTENTS

1 INTRODUCTION 4

1.1 PROJECT DEFINITION 4
1.2 PROCESS SUMMARY 4
1.3 REFERENCE DOCUMENTS 6
1.4 ABBREVIATIONS 7
1.5 UNITS 7
1.6 CONTROL DEVICES 8
1.7 OVERALL PLANT CONTROL 18

2 FUNCTIONAL DESCRIPTION OF SYSTEMS 19

2.1 METAL PRECIPITATION REACTOR 19
2.1.1 Description 19
2.1.2 Controls 19
2.1.3 Fault response 19
2.1.4 Interlocks 19
2.2 ACTIFLO® 20
2.3 MULTIFLO 20
2.4 SLUDGE TRANSFER AND DEWATERING 20
2.4.1 Sludge from ACTIFLO's to sludge double storage tank 20
2.4.1.1 Description 20
2.4.1.2 Control 20
2.4.1.3 Fault response 21
2.4.1.4 Interlocks 21
2.4.2 Sludge from sludge double storage tank to centrifuge 21
2.4.2.1 Description 21
2.4.2.2 Fault response 21
2.4.2.3 Interlocks 22
2.5 CLARIFIED WATER LIFTING PUMPS 22
2.6 SERVICE WATER PUMPS 22
2.7 CHEMICAL DOSING SYSTEMS 22
2.7.1 Caustic soda (NaOH) preparation and dosing system 22
2.7.1.1 Description 22
2.7.1.2 Calculation 23
2.7.1.3 Fault reponse 24
2.7.1.4 Interlocks 24
2.7.2 Coagulant preparation system 24
2.7.2.1 Preparation system sequence 24
2.7.2.2 Pumps, mixers and motors 25
2.7.2.3 Valve 27
2.7.2.4 Level transmitters/switches 27
2.7.3 Coagulant dosing 29
2.7.3.1 Description 29
2.7.3.2 Calculation 29
2.7.3.3 Fault response 30
2.7.4 Anionic polymer preparation system 30
2.7.5 Anionic polymer dosing system 30
2.7.5.1 Description 30

2.7.5.2 Calculation 31
2.7.5.3 Fault response 32
2.7.6 Sulfuric acid dosing system 32
2.7.6.1 Description 32
2.7.6.2 Calculation 32
2.7.6.3 Fault response 33
2.7.6.4 Interlocks 33
2.7.7 Cationic polymer make-up system 33
2.7.7.1 Description 33
2.7.7.2 Controls 34
2.7.8 Cationic polymer dosing system 37
2.7.8.1 Description. 37
2.7.8.2 Fault response 38
2.7.8.3 Interlocks 38
2.7.9 Potassium permanganate ($KMnO_4$) preparation system 38
2.7.9.1 Description 38
2.7.9.2 Controls 38
2.7.10 Potassium permanganate ($KMnO_4$) dosing system 41
2.7.10.1 Description 41
2.7.10.2 Calculation 42
2.7.10.3 Fault response 42
2.7.10.4 Interlocks 43
3 SEQUENCES FOR SUMMER AND WINTER CONFIGURATIONS 43
3.1 DESCRIPTION 43
3.2 SUMMER CONFIGURATION 43
3.3 WINTER CONFIGURATION 43
4 APPENDIX A – ALARMS, PARAMETERS AND SET POINTS (TO BE COMPLETED) 45

1 INTRODUCTION

1.1 Project definition

Veolia Water Technologies Canada (VWT) was contracted by Agnico Eagle Mines (AEM) to supply the equipment for the water treatment plant for Arsenic and TSS at the Amaruq Mine in Nunavut.

VWT is responsible for the engineering and supply of the equipment and the control system detailed in Veolia Proposal #TIH128505.

This functional description shall be read in conjunction with the related documents as listed in Section 1.3.

1.2 Process summary

AEM is currently developing the Amaruq Mine in Nunavut Canada as an open pit mine. With this new mine development AEM currently has a requirement to treat for TSS and Arsenic (As) concentration which is also expected to rise up. Therefore, an As and TSS treatment system is required before discharging the surface water to the environment.

The proposed treatment system includes:

- **A new metal precipitation reactor**. The purpose of this step is to precipitate the arsenic. The influent is sent to the Arsenic Removal Reactor. In this reactor, the influent water is mixed with ferric sulfate (Fe2(SO4)3). The ferric sulfate forms a floc of ferric hydroxide (Fe(OH)3) which acts both as a bridge to tie colloidal particles together and as an active surface which forms surface complexes with many metals, such as arsenic. The ferric sulfate also lowers the pH in the vicinity of 7.0 where the surface complexation is optimal for arsenate. In summer operation (ACTIFLO mode), some sludge from the sludge splitter box that collects the sludge from the ACTIFLO's is recycled to the metal precipitation reactor. This sludge recirculation makes it possible to increase the efficiency of the reactor and thereby reduce its size and especially prevent from having to use two units during the operation in ACTIFLO mode (high flow rate).
- **Two ACTIFLO's** (reused from the Meadowbank site). The water from the Metal Precipitation Reactor flows to the existing ACTIFLO's. The ACTIFLO is designed to remove suspended solids from the raw water. Sand-ballasted settling is a high-rate coagulation/flocculation/sedimentation process that utilizes microsand as a seed for floc formation. The microsand provides a surface area that enhances flocculation and acts as a ballast or weight. The resulting floc settles very fast, allowing for compact clarifier designs with high overflow rates and short detention times. The use of microsand also permits the unit to perform well under dramatically changing flow rates without impacting final effluent quality. The water flows to the first basin, the coagulation chamber where the reaction is optimized. The coagulated water then overflows to a second tank section called the injection tank. There, the microsand and flocculant aid polymer are added. The microsand provides a large contact area for floc attachment and acts as a ballast, thereby accelerating the settling of the flocs. The flocculant aid polymer binds the destabilized suspended solids to the microsand particles by forming polymer bridges. From the injection tank, the water

underflows to a third tank section called the maturation tank. In this section, the microsand and sludge flocs agglomerate and grow into high-density flocs known as microsand ballasted flocs. From the maturation zone, the water overflows to the settling section of the tank. In the settling zone, the microsand ballasted flocs settle quickly to the bottom of the unit. In the settling zone, the efficiency of settling is further increased by the use of the lamella tubes. The clarified water exits the system via a series of collection troughs or weirs. The clarified water is monitored for turbidity and is discharged by gravity to the clarified pump station. The sand-sludge mixture settles to the bottom of the clarifier. Scrapers force the sludge collected at the bottom of the clarifier into a centre cone from which it is continuously withdrawn and pumped to hydrocyclones where the sludge and microsand are separated by centrifugal force. After separation, the higher density microsand is discharged from the bottom of the hydrocyclone and reinjected into the process for reuse. The lighter density sludge is discharged from the top of the hydrocyclone and directed to the sludge management facilities. Also, to maintain a good extraction of sludge and good sand recirculation, the recirculation pumps on both existing ACTIFLO® units have been upgraded. The two 34 m^3/h each pumps installed on each ACTIFLO® from the Meadowbank project have been replaced by two new 70 m^3/h extraction pumps. This means that the recirculation line and hydrocyclones also had to be replaced.

- **A new sludge dewatering system.** The dewatering step aims to reduce sludge volume and produce a solid cake. In summer operation, the sludge from the two Actiflo's is sent to a sludge splitter box (existing tank reused). The sludge overflow of the splitter box flows back to the Metal Precipitation Reactor. The recycled sludge increases the reagent efficiency and promotes solid growth. It also helps to optimise the contact time between ferric hydroxide and arsenic to improve adsorption (this physical process is taking about an hour). It also thickens the sludge, so no thickener equipment is required before the dewatering stage. The remaining sludge is pumped to a storage double tank which is used as a feed tank to the centrifuges. In winter operation, the sludge from the Actiflo's (used as Multiflo's) is pumped directly to the storage double tank without going through the sludge splitter box and without being recirculated to the metal precipitation reactor. Then, both for summer and winter operation, the sludge from the storage double tank tank is pumped into two centrifuges capable of producing a cake of about 20±5 % dryness. The sludge dryness is dependent on the dewatering method, TSS content in the influent, flow rate and nature of the solid particles. In addition to the solids included in raw water, the sludge will contain adsorbed arsenic as well as ferric hydroxides from the coagulant addition. The lower the hydroxide fraction, the greater the dry solid content is achieved in the cake. The final cake dryness must be defined by carrying laboratory tests. The centrifuges are fed continuously with constant solid content slurry. A cationic polymer is injected in the feed pipe to increase the cake dryness. The separation between liquid and solid is achieved using centrifugal forces 500 to 3000 times the force of gravity. The thickened sludge produced by each centrifuge is carried away to a container for disposal through a screw conveyor. Centrate from the centrifuges and from the screw conveyors flows by gravity to sump pump pits. Centrate contains cationic polymer and can be recycled back upstream of the water treatment plant, in the metal precipitation reactor.
- **A new potassium permanganate ($KMnO_4$) preparation and dosing system**. $KMnO_4$ is used to oxidize the arsenic trivalent to produce arsenic pentavalent that is much easier to precipitate and separate from water. The selected oxidant to oxide As is Hydrex 9571. It is delivered dry in bags of 25 kg. The solution

preparation is be made using a new manual make-up system. The dosage is performed using a new dosing skid equipped with mechanical diaphragm metering pumps. The $KMnO_4$ dosing point is located upstream from the precipitation reactor.

- **A coagulant dosing system.** The selected coagulant is Hydrex 6266, a ferric sulfate coagulant. It will be received in bulk bags. The existing coagulant preparation system from the Meadowbank site is reused. For summer operation, the dosage is performed using a new dosing skid equipped with mechanical diaphragm metering pumps. For winter operation, the existing dosing system with progressive cavity pumps from the Meadowbank site is reused. The coagulant dosing point is located in the metal precipitation reactor.
- **A sulphuric acid dosing system.** Sulphuric acid is used for ferric sulfate preparation (coagulant). Sulphuric acid is a commodity and will be received in bulk containers of 1 m3 at 93 % concentration. The product can be used as is and the dosage will be performed using a new dosing skid equipped with mechanical diaphragm metering pumps. The sulphuric acid dosing point is located in the maturation tank of the coagulant preparation system.
- **A caustic soda (NaOH) preparation and dosing system.** The coagulant consumes alkalinity from the water. In the event that the water doesn't contain enough alkalinity, an alkali source, such as sodium hydroxide, will need to be added. The sodium hydroxide will be received dry in 25 kg bags. The existing preparation and dosing systems from the Meadowbank site are reused. The NaOH dosing point is located upstream from the precipitation reactor.
- **An anionic polymer preparation and dosing system.** The use of a flocculation agent is essential for a metal removal process. Polymer enables the attachment of the floc onto the microsand and as such is required in order to obtain good process performance. The polymer will be Hydrex 6105 or equivalent. It is a solid anionic polymer used to enhance flocculation and will be received in 25 kg bags. The existing Hydra-Pol automatic preparation system from the Meadowbank site is reused to prepare a 0.25 % solution. The automatic polymer preparation/dilution system is an automatically controlled batching unit capable of preparing polymers. For winter operation, the anionic polymer dosing system from the Meadowbank site is reused. For summer operation, a new dosing system with 3 dosing skids is used. The existing polymer preparation from the Meadowbank site is also reused for summer operation. The anionic polymer liquid solution injection points are located in the injection and maturation tanks of the two ACTIFLO's.
- **A cationic polymer preparation and dosing system.** Cationic polymer is required for the sludge dewatering step. A new Hydra-Pol automatic preparation system is used to prepare a 0.3-0.5 % solution. The water used for the polymer preparation needs to be filtered water with temperature between 10- 20 °C. The automatic polymer preparation/dilution system is an automatically controlled batching unit capable of preparing polymers. A new dosing system with 3 dosing skids is used. The cationic polymer liquid solution injection points are located upstream from the two centrifuges.

1.3 Reference documents

- P&IDs #5000218009_PI001 SHEETS 1 TO 19
- AEM Amaruq project - ACTIFLO® functional description

- AEM Amaruq project - MULTIFLO functional description

1.4 Abbreviations

AEM: Agnico Eagle Mines
DosT: Dosing time
HMI: Human/Machine Interface
H-O-A: Hand-Off-Auto
LCP: Local Control Panel
MPR: Metal Precipitation Reactor
ORP: Oxydation Reduction Potential
PLC: Programmable Logic Controller
SP: Set Point
TSS: Total suspended solids
VFD: Variable Frequency Drive
WTP: Water Treatment Plant

1.5 Units

The following lists the parameters referred to in this document and the units they are measured in unless otherwise specified.

- Concentration (in general): mg/L
- Dimensions : m
- Dosing rate: mL/L
- Flow rate (chemical dosing): L/h
- Flow rate (main process): m^3/h
- Level in the tanks: % or m
- pH: -
- Pressure: kPa
- Density: kg/m^3
- Temperature: °C
- Total suspended solids: mg/L
- Turbidity: NTU
- Volume: m3
- Weight : kg

1.6 Control devices

Table 1.6 : control devices for the project

P&ID TAG	DESCRIPTION	CONTROLLED (Yes/No)	COMMENTS
METAL PRECIPITATION			
M1-011	MPR 1st compartment mixer	Y	
M1-012	MPR 2nd compartment mixer	Y	
M1-013	MPR 3rd compartment mixer	Y	
AIT1-013	Influent raw water turbidity meter	Y	
FIT1-011	Influent raw water flow meter	Y	
FV1-012	MPR inlet flow control valve	Y	
AIT1-014	MPR inlet pH meter	Y	
LSHH1-011	MPR very high level switch	Y	
AIT1-011	MPR ORP sensor	Y	
AIT1-012	MPR outlet pH meter	Y	
TT15-001	MPR outlet temperature sensor	Y	
ACTIFLO 1			
FIT2-011	ACTIFLO 1 inlet water flow meter	Y	
FCV2-011	ACTIFLO 1 inlet flow control valve	Y	
M2-011	ACTIFLO 1 Coagulation tank mixer	Y	
M2-012	ACTIFLO 1 Injection tank mixer	Y	
M2-013	ACTIFLO 1 Maturation tank mixer	Y	
LSHH2-011	ACTIFLO 1 very high level switch	Y	
S2-011	ACTIFLO 1 Scraper driver	Y	
WT2-011	ACTIFLO 1 Scraper driver torque transmitter	Y	
P2-011	ACTIFLO 1 Summer recirculation pump 1	Y	
P2-012	ACTIFLO 1 Summer recirculation pump 2	Y	

P2-014	MULTIFLO extraction pump	Y	
P2-013	Clarified water pump	Y	
AIT2-011	ACTIFLO 1 outlet pH meter	Y	
AIT2-012	ACTIFLO 1 outlet turbidity meter	Y	
C2-011	ACTIFLO 1 hydrocyclone 1	N	
C2-012	ACTIFLO 1 hydrocyclone 2	N	
PI2-011	ACTIFLO 1 hydrocyclone 1 inlet pressure indicator	N	
PI2-012	ACTIFLO 1 hydrocyclone 2 inlet pressure indicator	N	
ACTIFLO 2			
FIT2-021	ACTIFLO 2 inlet water flow meter	Y	
FCV2-021	ACTIFLO 2 flow control valve	Y	
M2-021	ACTIFLO 2 Coagulation tank mixer	Y	
M2-022	ACTIFLO 2 Injection tank mixer	Y	
M2-023	ACTIFLO 2 Maturation tank mixer	Y	
LSH2-021	ACTIFLO 2 very high level switch	Y	
S2-021	ACTIFLO 2 Scraper driver	Y	
WT2-021	ACTIFLO 2 Scraper driver torque transmitter	Y	
P2-021	ACTIFLO 2Summer recirculation pump 1	Y	
P2-022	ACTIFLO 2 Summer recirculation pump 2	Y	
P2-023	MULTIFLO extraction pump	Y	
AIT2-021	ACTIFLO 2 outlet pH meter	Y	
AIT2-022	ACTIFLO 2 outlet turbidity meter	Y	
C2-021	ACTIFLO 2 hydrocyclone 1	N	
C2-022	ACTIFLO 2 hydrocyclone 2	N	
PI2-021	ACTIFLO 2 hydrocyclone 1 inlet pressure indicator	N	
PI2-022	ACTIFLO 2 hydrocyclone 2 inlet pressure indicator	N	
SLUDGE DEWATERING			

T4-011	Sludge splitter box	N	
LSHH4-011	Sludge splitter box very high level switch	Y	
LSLL4-012	Sludge splitter box very low level switch	Y	
P4-011	Splitter box sludge extraction pump 1	Y	
P4-021	Splitter box sludge extraction pump 2	Y	
PI4-011	Splitter box recirculation pressure indicator	N	
AIT4-011	Splitter box recirculation turbidity meter	Y	
FIT4-011	Splitter box outlet flow meter	Y	
FCV4-011	Splitter box outlet flow control valve	Y	
T5-011/012	Storage double tank	N	
LIT5-013	Storage double tank level transmitter 1	Y	
LSL5-012	Storage double tank very low level switch 1	Y	
LSHH5-011	Storage double tank very high level switch 1	Y	
M5-011	Storage double tank mixer 1	Y	
M5-012	Storage double tank mixer 2	Y	
LIT5-023	Storage double tank level transmitter 2	Y	
LSL5-022	Storage double tank very low level switch 2	Y	
LSHH5-021	Storage double tank very high level switch 2	Y	
P5-011	Centrifuge feeding pump 1	Y	
TSE5-011	Centrifuge feeding pump 1 high temperature switch	Y	
PI5-011	Centrifuge feeding pump 1 pressure indicator	N	
PSL5-011	Centrifuge feeding pump 1 low pressure switch	Y	
FIT5-011	Centrifuge feeding pump 1 flow transmitter	Y	

P5-012	Centrifuge feeding pump 2	Y	
TSE5-012	Centrifuge feeding pump 2 high temperature switch	Y	
PI5-012	Centrifuge feeding pump 2 pressure indicator	N	
PSL5-012	Centrifuge feeding pump 2 low pressure switch	Y	
FIT5-012	Centrifuge feeding pump 2 flow transmitter	Y	
CF6-011	Centrifuge 1	Y	
CF6-021	Centrifuge 2	Y	
CV6-011	Thickened sludge conveyor 1	Y	
CV6-021	Thickened sludge conveyor 2	Y	
S6-011	Centrate sump pump pit 1	N	
P6-011	Centrate sump pump 1	Y	
LSLL6-011	Centrate sump pump pit 1 very low level switch	Y	
LSHH6-012	Centrate sump pump pit 1 very high level switch	Y	
S6-021	Centrate sump pump pit 2	N	
P6-021	Centrate sump pump 2	Y	
LSLL6-021	Centrate sump pump pit 2 very low level switch	Y	
LSHH6-022	Centrate sump pump pit 2 very high level switch	Y	
CAUSTIC SODA PREPARATION AND DOSING SYSTEM			
T9-541	Caustic soda preparation tank	N	

M9-541	Caustic soda mixer	Y	
T9-542	Caustic soda dosing tank	N	
P9-541	Caustic soda metering pump 1	Y	
TSE9-541	Caustic soda metering pump 1 high temperature switch	Y	
P9-542	Caustic soda metering pump 2	Y	
TSE9-542	Caustic soda metering pump 2 high temperature switch	Y	
P9-543	Caustic soda metering pump 3	Y	
TSE9-543	Caustic soda metering pump 3 high temperature switch	Y	
COAGULANT PREPARATION AND DOSING SYSTEM			
V9-518	Coagulant preparation water valve	Y	
FI9-511	Coagulant service water flow indicator	N	
MO9-511	Coagulant preparation trolley	N	
MO9-512	Coagulant preparation hoist	N	
B9-513	Coagulant blower	Y	
LSL9-513	Coagulant preparation low level switch	Y	
DF9-511	Coagulant dry feeder	Y	
T9-511	Coagulant maturation tank	N	
M9-511	Coagulant preparation mixer	Y	
LIT9-511	Coagulant maturation tank level transmitter	Y	

P9-515	Coagulant transfer pump	Y	
TSE9-515	Coagulant transfer pump high temperature switch	Y	
T9-512	Coagulant dosing tank	N	
LIT9-512	Coagulant dosing tank level transmitter	Y	
P9-514	Coagulant metering pump 4	Y	Summer operation
P9-516	Coagulant metering pump 5	Y	Summer operation
P9-511	Coagulant metering pump 1	Y	Winter operation
TSE9-511	Coagulant metering pump 1 high temperature switch	Y	
P9-512	Coagulant metering pump 2	Y	Winter operation
TSE9-512	Coagulant metering pump 2 high temperature switch	Y	
P9-513	Coagulant metering pump 3	Y	Winter operation
TSE9-513	Coagulant metering pump 3 high temperature switch	Y	
SULFURIC ACID DOSING SYSTEM			
T9-531	Sulfuric acid storage tank	N	
LSL9-531	Sulfuric acid storage low level switch	Y	
P9-531	Sulfuric acid metering pump 1	Y	
P9-532	Sulfuric acid metering pump 2	Y	
ANIONIC POLYMER PREPARATION AND DOSING SYSTEM			
MO9-521	Anionic polymer vacuum conveyor	N	

DF9-521	Anionic polymer dry feeder	Y	
PSL9-522	Anionic polymer service water low pressure switch	Y	
PSL9-521	Anionic polymer instrument air low pressure switch	Y	
BWEPMT1	Anionic polymer maturation tank	Y	
M9-521	Anionic polymer mixer	N	
PT9-521	Anionic polymer maturation tank level transmitter	Y	
BWDPMT2	Anionic polymer storage tank	Y	
PT9-522	Anionic polymer storage tank level transmitter	Y	
P9-521	Anionic polymer metering pump 1	Y	Winter operation
TSE9-521	Anionic polymer metering pump 1 high temperature switch	Y	
P9-522	Anionic polymer metering pump 2	Y	Winter operation
TSE9-522	Anionic polymer metering pump 2 high temperature switch	Y	
P9-523	Anionic polymer metering pump 3	Y	Winter operation
TSE9-523	Anionic polymer metering pump 3 high temperature switch	Y	
P9-524	Anionic polymer metering pump 4	Y	Summer operation
TSE9-524	Anionic polymer metering pump 4 high temperature switch	Y	
P9-525	Anionic polymer metering pump 5	Y	Summer operation
TSE9-525	Anionic polymer metering pump 5 high temperature switch	Y	

P9-526	Anionic polymer metering pump 6	Y	Summer operation
TSE9-526	Anionic polymer metering pump 6 high temperature switch	Y	
V9-521	Anionic polymer water transport valve 1	Y	
V9-522	Anionic polymer water transport valve 2	Y	
SV15-011	Anionic polymer water transport valve 3	Y	
SV15-021	Anionic polymer water transport valve 4	Y	
POTASSIUM PERMANGANATE PREPARATION AND DOSING SYSTEM			
VCM9-591	Potassium permanganate pneumatic conveyor	Y	
FMM9-591	Potassium permanganate feeder hopper agitator	Y	
FSM9-591	Potassium permanganate feeder screw	Y	
ZS9-591	Potassium permanganate vacuum conveyor switch	Y	
LSL9-591	Potassium permanganate low level switch	Y	
PSL15-041	Potassium permanganate service water low pressure switch	Y	
T9-591	Potassium permanganate maturation tank	N	
M9-591	Potassium permanganate mixer	N	
LT9-591	Potassium permanganate maturation tank level transmitter	Y	
T9-591-V002	Potassium permanganate transfer valve	Y	
T9-592	Potassium permanganate storage tank	N	
LT9-592	Potassium permanganate storage tank level transmitter	Y	

SV15-041	Potassium permanganate preparation 4-way solenoid valve	Y	
SV15-042	Potassium permanganate preparation service water solenoid valve	Y	
P9-591	Potassium permanganate metering pump 1	Y	
P9-592	Potassium permanganate metering pump 2	Y	
CATIONIC POLYMER PREPARATION AND DOSING SYSTEM			
HST9-621	Cationic polymer hoist	N	
TR9-621	Cationic polymer trolley	N	
LSL9-621	Cationic polymer low level switch	Y	
FMM9-621	Cationic polymer feeder hopper agitator	Y	
FSM9-621	Cationic polymer feeder screw	Y	
PSL18-031	Cationic polymer service water low pressure switch	Y	
T9-621	Cationic polymer maturation tank	N	
M9-621	Cationic polymer mixer	N	
LT9-621	Cationic polymer maturation tank level transmitter	Y	
T9-621-V002	Cationic polymer transfer valve	Y	
T9-622	Cationic polymer storage tank	N	
LT9-622	Cationic polymer storage tank level transmitter	Y	
SV18-031	Cationic polymer preparation 4-way solenoid valve	Y	
SV18-032	Cationic polymer preparation service water solenoid valve	Y	

P9-621	Cationic polymer metering pump 1	Y	
TSE9-621	Cationic polymer metering pump 1 high temperature switch	Y	
P9-622	Cationic polymer metering pump 2	Y	
TSE9-622	Cationic polymer metering pump 2 high temperature switch	Y	
P9-623	Cationic polymer metering pump 3	Y	
TSE9-623	Cationic polymer metering pump 3 high temperature switch	Y	

1.7 Overall plant control

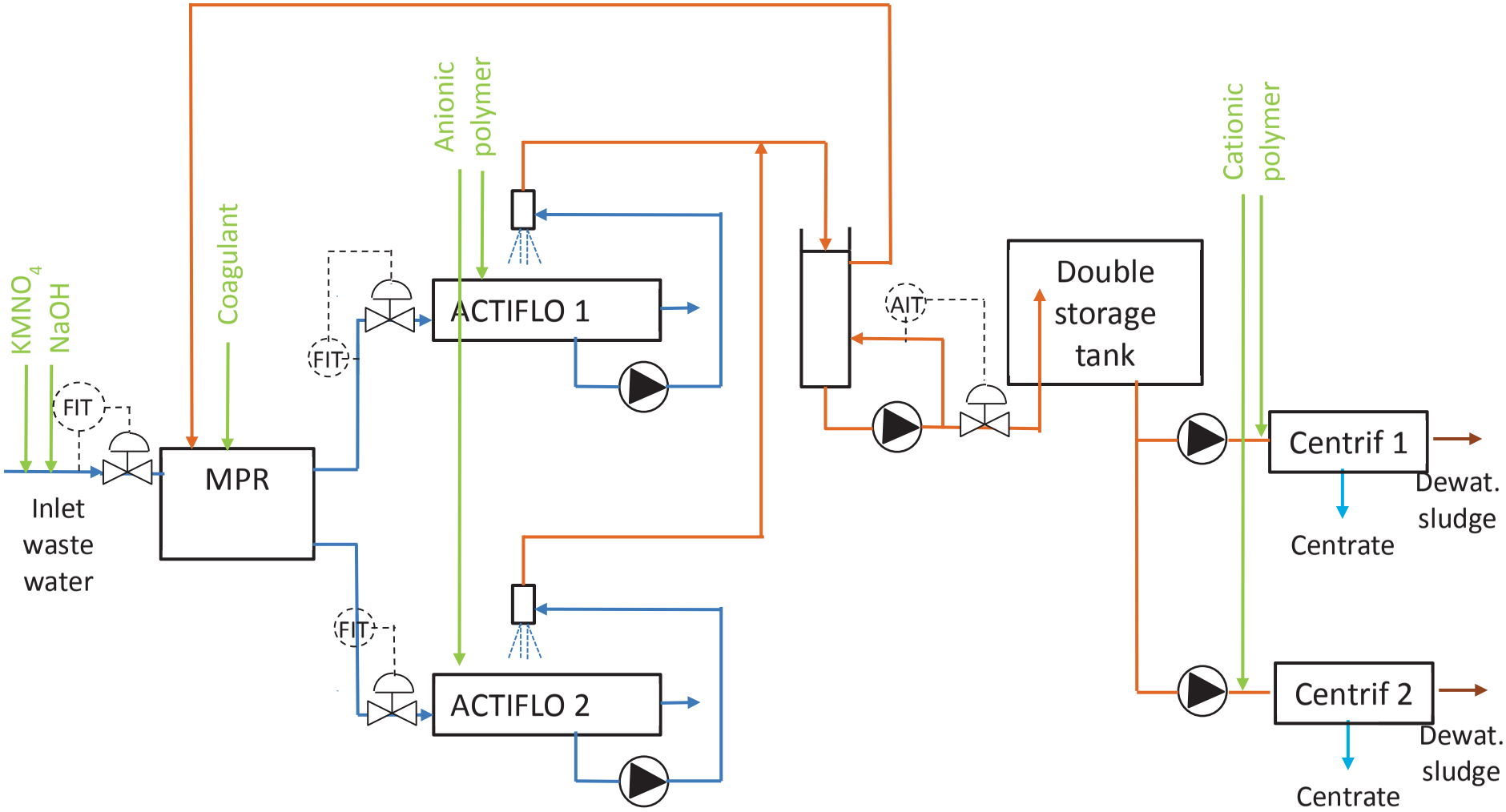

2 FUNCTIONAL DESCRIPTION OF SYSTEMS

2.1 Metal precipitation reactor

2.1.1 Description

The purpose of this step is to precipitate the arsenic by using ferric sulfate coagulant. Coagulant is injected directly in the reactor.

Potassium permanganate ($KMnO_4$) is used to oxidize the arsenic trivalent to produce arsenic pentavalent that is much easier to precipitate and separate from water. $KMnO_4$ is injected upstream of the MPR. The operator will follow the ORP measurement in the MRP and adjust the $KMnO_4$ dosage concentration as required.

As the coagulant consumes alkalinity from the water, it may be necessary to add sodium hydroxide as an alkali source. NaOH is injected upstream of the MPR, proportionally to the raw water influent flow rate. The operator will select a NaOH dosage concentration set point based on the alkalinity of the water. A correction, based on the pH measurement in the MPR, is applied to the required NaOH injection flowrate.
The pH is measured at two locations in the MPR (inlet ant outlet compartments) by two distinct sensors.

The influent raw water flow rate is used:

- for the injection of chemicals proportionally to the raw water flow rate
- to control the opening of the MPR inlet flow control valve

2.1.2 Controls

FIC1-011 control loop will act on the opening of the MPR inlet flow control valve to adjust the influent flow rate to its set point (adjustable by the operator).

2.1.3 Fault response

The following are the faults that require control actions:

- MPR very high pH
- Failure of one of the MPR mixers
- Failure of two or three MPR mixers

MPR very high pH
An operator alarm is activated. Alarm auto-reset if pH goes back under the very high alarm set point.

Failure of one of the MPR mixers
An operator alarm is activated.

Failure of two or three MPR mixers
An operator alarm is activated and the Actiflo/Multiflo normal shutdown sequence is activated and the MPR inlet flow control valve is closed.

2.1.4 Interlocks

The MPR inlet flow control valve is interlocked with the MPR very high level. If the very high level switch is activated, control valve is closed.

2.2 ACTIFLO®

When the raw water inlet flow rate is below the capacity of one Actiflo® ACP-700R, the operator will keep only one Actiflo® in operation.
When the raw water inlet flow rate is above the capacity of one Actiflo® ACP-700R, the operator will have the two Actiflo's in operation.

Based on the inlet raw water TSS (measured by AIT1-013), the operator will choose to start one or two microsand recirculation pumps per ACTIFLO.

Refer to ACTIFLO® standard functional description for details.

2.3 MULTIFLO

Refer to MULTIFLO standard functional description.

2.4 Sludge transfer and dewatering

2.4.1 Sludge from ACTIFLO's to sludge double storage tank

2.4.1.1 Description

In summer operation, the sludge from the hydrocyclones of the Actiflo's flows by gravity to the sludge splitter box. From the sludge splitter box, the sludge is then pumped to a sludge double storage tank. The flow rate to the sludge storage tank is controlled through a control valve and a turbidity control loop. The overflow of sludge in the splitter box flows by gravity back to the MPR.
A recirculation loop on the sludge splitter box prevents sludge from settling. The sludge recirculation loop is equipped with a turbidity meter.

In winter operation, the sludge from the Actiflo's (used as Multiflo's) is pumped directly to the storage double tank without going through the sludge splitter box and without being recirculated to the metal precipitation reactor.

2.4.1.2 Control

AIC4-011 turbidity control loop will act on the opening of the splitter box outlet flow control valve to adjust the sludge flow rate being recirculated back to the MPR.
A turbidity set point will be entered by the operator. If the measured turbidity is below the set point, the control loop will close FCV4-011. This will increase the sludge recirculation to the MPR and increase the turbidity.
On the contrary, if the measured turbidity is above the set point, the control loop will open FCV4-011. This will decrease the sludge recirculation to the MPR and increase the sludge flow rate going to the sludge double storage tank.

There are two splitter box sludge extraction pumps. Based on the inlet raw water TSS (measured by AIT1-013), the operator will choose to start one or two microsand recirculation pumps for each ACTIFLO. If only one microsand recirculation pump of each ACTIFLO is in operation, the operator will start only one splitter box sludge extraction pump. If the two recirculation pumps of each ACTIFLO are in operation, the operator will start both splitter box sludge extraction pumps.

2.4.1.3 Fault response

When a splitter box sludge extraction pump fails, the other pump takes over the failing pump automatically and an alarm is activated. If the second pump fails too, a critical alarm is activated and the Actiflo's upstream are stopped on an emergency shutdown sequence and the MPR inlet flow control valve is closed.

2.4.1.4 Interlocks

The splitter box sludge extraction pumps are interlocked with the very low level of the sludge splitter box. If the very low level switch is activated, the pumps are stopped ~~and an emergency stop is triggered on the ACTIFLO's.~~

When the very high level switch of the sludge splitter box is activated, the Actiflo's upstream are stopped on an emergency shutdown sequence and the MPR inlet flow control valve is closed.

2.4.2 Sludge from sludge double storage tank to centrifuge

2.4.2.1 Description

Mixers located in the sludge double storage tank prevent sludge from settling. They are in operation as long as the liquid level in the tank is sufficient.
The sludge double storage tank has two compartments that are used in parallel. Each compartment of the tank is equipped with a level transmitter.
The sludge from the storage double tank is pumped into two centrifuges. Each centrifuge has its dedicated progressive cavity feed pump equipped with a VFD.

The sludge dewatering system is composed of two centrifuges in parallel.
The operator will choose manually on the HMI of the centrifuge PLC to operate one or two centrifuges depending on the incoming flow rate to the sludge double storage tank ($Q_{in,sludge\ storage}$) as described below:

- $Q_{in,sludge\ storage} \leq Q_{design,centrifuge}$: one centrifuge in operation ; when the flow rate to the sludge double storage tank is in the range of a single centrifuge capacity, the operator will operate with one centrifuge
- $Q_{in,sludge\ storage} > Q_{design,centrifuge}$: two centrifuges in operation ; when the flow rate to the sludge double storage tank is in the range of two centrifuge capacities, the operator will operate with both centrifuges.

In summer operation, the flow rate to the sludge double storage tank is read directly from the flow meter downstream from the sludge splitter box. In winter operation, the operator will be able to estimate the sludge incoming flow rate through the volume change over a certain period in the sludge double storage tank and after having withdrawn the outlet flow rate (capacity of the number of centrifuges in operation.

2.4.2.2 Fault response

When one mixer of the sludge double storage tank fails, an alarm is displayed on the operator HMI and the sludge transfer and dewatering system keeps running in a degraded operation mode.

When the two mixers of the sludge double storage tank fail, an alarm is displayed on the operator HMI and the WTP shutdown sequence is activated.

When a high level is reached in one of the compartments of the sludge double storage tank (high level of LIT5-013 or LIT5-023), an alarm is displayed on the operator HMI.

2.4.2.3 Interlocks

When the level in one compartment of the sludge double storage tank is below the very low level (LSLL switch activated), the associated mixer is stopped and an alarm is displayed on the operator HMI.

When both levels in the two compartments of the sludge double storage tank are below the very low level (LSLL switches activated), the centrifuge feed pumps are stopped and an alarm is displayed on the operator HMI.

When the level in one compartment of the sludge double storage tank is above the very high level (LSHH switch activated), the WTP emergency shutdown sequence is activated.and an alarm is displayed on the operator HMI.

2.5 Clarified water lifting pumps

Functional description by AEM.

2.6 Service water pumps

Functional description by AEM.

2.7 Chemical dosing systems

2.7.1 Caustic soda (NaOH) preparation and dosing system

2.7.1.1 Description

The existing caustic soda preparation and dosing system from Meadowbank is reused. It's composed of :

- A preparation tank with a mixer
- A dosing tank
- Three progressive cavity metering pumps. The capacity of each pump covers 100% of the process needs. One pump is in operation and the remaining pumps are in backup. The operator must change the positions of some manual valves and locally put the pump in auto to use backup

Dry caustic soda and service water are injected by the operator in the preparation tank. The mixer operates for a configurable time if the HMI button is switched to Auto.
When the caustic soda solution is homogenized, the operator transfers the solution to the dosing tank by operating manual isolation valves.

Caustic soda is proportionally dosed to the total raw water flow with a volume compensated integral control loop. A correction is applied to the required NaOH injection flowrate (feedback control loop), based on the pH measurement by AIT1-014 (or AIT1-012, as selected by the operator) in the MPR. AIC1-014 (or AIC1-012) will control the pH value by modulating the speed of caustic soda dosing pumps P9-541 / P9-542 / P9-543.

The dosing point is located upstream from the MPR.

2.7.1.2 Calculation

Equation 1 (mode 1): Calculation of caustic soda flow based on a dosage concentration in mg/L

$$QC_{NAOH} = RC_{NAOH1} * Q_{FEED} / (DENS_{NAOH} * CS_{NAOH} * 10)$$

Where:
QC_{NAOH} = required dosing flowrate of the caustic soda solution (L/h)
RC_{NAOH1} = target dosage concentration of caustic soda in the process (mg/L)
Q_{FEED}= inlet raw water flow rate (m^3/h) measured by the influent raw water flow meter
$DENS_{NAOH}$= Density of the dosed caustic soda solution in kg/L
CS_{NAOH}= Caustic soda concentration in the stock solution in %

Equation 2 (mode 2): Calculation of NAOH flow rate based on a dosage concentration in µL/L

$$QC_{NAOH} = (RC_{NAOH2}) * (Q_{FEED})/1000$$

Where:
QC_{NAOH} = required dosing flowrate of the caustic soda (L/h)
RC_{NAOH2} = target dosage concentration of caustic soda in the process (µL/L)
Q_{FEED}= inlet raw water flow rate (m^3/h) measured by the influent raw water flow meter

Equation 3: Caustic soda pump speed

The formula below gives the reference speed for metering pumps, in percentage. Calibration of pumps must be done in order to get a linear reference speed curve, on the basis of the pump's capacity

$$(PS_{NAOH}) = 20 + (60 \times ((QC_{NAOH}) - (QC_{20\text{-}NAOH})) / ((QC_{80\text{-}NAOH}) - (QC_{20\text{-}NAOH})))$$

Where:
PS_{NAOH} = Dosing pump speed (%)
QC_{NAOH} = required flowrate of the caustic soda solution as calculated above (L/h)
$QC_{20\text{-}NAOH}$ = Measured caustic soda dosing flowrate at 20% of the pump's calibration curve (L/h) (Entered by the operator on the interface).
$QC_{80\text{-}NAOH}$ = Measured caustic soda dosing flowrate at 80% of the pump's calibration curve (L/h) (Entered by the operator on the interface)

The following parameters shall be available on the operator interface of the caustic soda dosing system:

(RC_{NAOH1}) target dosage concentration of caustic soda in the process (mg/L)
(RC_{NAOH2}) target dosage concentration of caustic soda in the process (µL/L)
($DENS_{NAOH}$) Density of the dosed caustic soda solution in kg/L

($\mathbf{CS}_{NAOH}$) concentration of the caustic soda solution in the stock solution in %
($\mathbf{QC}_{20\text{- }NAOH}$) Caustic soda flow rate at 20% dosing pump speed (L/h)
($\mathbf{QC}_{80\text{- }NAOH}$) Caustic soda flow rate at 80% dosing pump speed (L/h)

The operator will adjust $\mathbf{RC}_{NaOH}$ depending on the alkalinity of the raw water

2.7.1.3 Fault reponse

When the caustic soda preparation mixer faults:

- The mixer is stopped
- An operator alarm is displayed on the operator interface of the main PLC.

Each progressive cavity metering pump is in fault if:

- its high temperature switch is triggered
- its VFD overloads and trips out

When the pump faults:

- An alarm is displayed on the operator interface of the main PLC and the pump is stopped.
- If necessary, the operator can start the back-up metering pump after having operated the proper isolation valves of the dosing skid. The operator will switch the back-up metering pump to automatic mode in replacement of the pump that is in fault.

2.7.1.4 Interlocks

N/A

2.7.2 Coagulant preparation system

The existing coagulant preparation system from Meadowbank is reused. It consists of two tanks of 1000L. The first one prepares the batch and when done, transfers to the second tank for dosing

2.7.2.1 Preparation system sequence

Step #	Step Name	Actions Transition conditions	Preparation Water Valve	Coagulant dry feeder	Preparation mixer	Preparation transfer Pump	H2SO4 dosing
0	Waiting Time	Preparation system ready Waiting for preparation request	C	S	S	S	S

		Low level maturation tank AND No low solid level, dry feeder alarm, mixer alarm, transfer pump alarm or level-meter alarm.					
1	Water filling	Open preparation water valve	O	S	S	S	S
		Level set point for mixer start and H2SO4 dosing reached					
2	Feeding and mixing	Start preparation mixer Start coagulant dry feeder	O	R	R	S	R
		Elapsed feeding time OR full level maturation tank					
3	Water completion	Stop dry feeder Stop H2SO4 dosing	O	S	R	S	S
		Full level maturation tank					
4	Maturation	Close preparation water valve Start of maturation period	C	S	R	S	S
		Elapsed time (Maturation time)					
5	Coagulant transfer waiting time	Stop preparation mixer Solution ready	C	S	S	S	S
		Empty level dosing tank					
6	Coagulant transfer	Start transfer pump	C	S	S	R	S
		Empty level maturation tank					
7	End of transfer	Stop transfer pump	C	S	S	S	S
		- Go to step 0 at end of normal sequence and reset timers - Go to step 8 at end of sequence by a fault					
8	Sequence stopped on a fault	Wait for fault reset	C	S	S	S	S
		- Go to step 1					

Legend

Motor
S : Stop
R : Running

Valve
C : Closed
O : Open

Parameter	Unit
Preparation water volume	L
Delay before starting feeder and mixer	Sec
Maturation tank empty level	mm
Dosing tank empty level	mm
Feeding time	Min
Maturation time	Min

2.7.2.2 Pumps, mixers and motors

Coagulant preparation mixer
Tag: M9-511

Automatic mode

Mixer operates:

- If sequencer is on step 2, 3 or 4
- If E-stop is not activated

Coagulant mixer fault alarm

When the coagulant preparation mixer faults:

- The mixer is stopped
- An operator alarm is displayed on the operator interface of the main PLC
- The preparation sequence is stopped (refer to step 8)

Coagulant transfer pump

Tag: P9-515

Automatic mode
Pump operates:

- If sequencer is on step 6;
- If E-stop is not activated;
- If full level from dosing tank is not activated;
- If empty level from maturation tank is not activated;

Transfer pump fault alarm

The progressive cavity transfer pump is in fault if:

- its high temperature switch is triggered
- its motor faults

When the pump faults:

- An alarm is displayed on the operator interface and the pump is stopped.
- The preparation sequence is stopped (refer to step 8)

Coagulant blower
Tag: B9-513

Automatic mode
The blower operates for a configurable time when the unload bag button is activated

Coagulant blower fault alarm
When the blower faults, an alarm is displayed on the operator interface and the blower is stopped.

Coagulant dry feeder
Tag: DF9-511

Automatic mode
The dry feeder operates:

- If sequencer is on step 2
- If E-stop is not activated.

Dry feeder fault alarm
When the dry feeder faults:

- An alarm is displayed on the operator interface of the main PLC and the feeder is stopped.
- The preparation sequence is stopped (refer to step 8)

2.7.2.3 Valve

Coagulant solenoid preparation water valve
Tag: V9-518

Automatic mode
The valve is open:

- If sequencer is on step 1 to 3
- If E-stop is not activated.

The valve doesn't have status contact. The open fault is activated after a request to open and without change in the water level after a defined time.

Preparation water valve open fault
When the valve fails to open:

- The valve is deactivated
- An alarm is displayed on the operator interface
- The preparation sequence is stopped (refer to step 8)

2.7.2.4 Level transmitters/switches

Maturation tank level transmitter
Tag: LIT9-511

Out of range level transmitter
When the level transmitter is out of range:

- An alarm is displayed on the operator interface
- The preparation sequence is stopped (refer to step 8)

Very low level
When the very low level is reached:

- An alarm is displayed on the operator interface
- The transfer pump is stopped

Low level
When the low level is reached, an alarm is displayed on the operator interface

High level alarm
When the high level is reached, an alarm is displayed on the operator interface

Very high level alarm
When the very high level is reached:

- An alarm is displayed on the operator interface

- The coagulant preparation water valve is closed and the H_2SO_4 dosing is stopped.

Dosing tank level transmitter

Tag: LIT9-512

Out of range level transmitter

When the level transmitter is out of range:
- An alarm is displayed on the operator interface
- The transfer is stopped

Very low level

When the very low level is reached:
- The coagulant dosing pumps are stopped
- An alarm is displayed on the operator interface
- The Actiflo® units stop according to auto stop sequence

Low level

When the low level is reached:
- An alarm is displayed on the operator interface

High level

When the high level is reached:
- An alarm is displayed on the operator interface

Very high level alarm

When the very high level is reached:
- An alarm is displayed on the operator interface
- The transfer pump is stopped

Low solid coagulant level
Tag: LSL9-513

Low level

When the low level is reached:
- An alarm is displayed on the operator interface
- The dry feeder is stopped
- The preparation sequence is stopped (refer to step 8)

2.7.3 Coagulant dosing

2.7.3.1 Description

Coagulant is proportionally dosed to the total raw water flow rate.

For winter dosing, the existing coagulant dosing system from Meadowbank is reused. It's composed of 3 progressive cavity metering pumps (P9-511, P9-512, P9-513). The capacity of each pump covers XX% of the process needs. XX pumps are in operation and the remaining pump is in backup. The operator must change the positions of some manual valves and locally put the pump in auto to use backup.

For summer dosing, a new dosing system is used. It's composed of 2 metering pumps (P9-514, P9-516). The capacity of each pump covers 100% of the process needs. One pump is in operation and the remaining pump is in backup. The operator must change the positions of some manual valves and locally put the pump in auto to use backup.

The dosing point is located in the MPR.

2.7.3.2 Calculation

Equation 1 (mode 1): Calculation of coagulant flow based on a dosage concentration in mg/L

$$QC_{COAG} = RC_{COAG1} * Q_{FEED} / (DENS_{COAG} * CS_{COAG} * 10)$$

Where:
QC_{COAG} = required dosing flowrate of the coagulant solution (L/h)
RC_{COAG1} = target dosage concentration of coagulant in the process (mg/L)
Q_{FEED}= inlet raw water flow rate (m^3/h) measured by the influent raw water flow meter
$DENS_{COAG}$= Density of the dosed coagulant solution in kg/L
CS_{COAG}= Coagulant concentration in the stock solution in %

Equation 2 (mode 2): Calculation of COAG flow rate based on a dosage concentration in µL/L

$$QC_{COAG} = (RC_{COAG2}) * (Q_{FEED})/1000$$

Where:
QC_{COAG} = required dosing flowrate of the coagulant (L/h)
RC_{COAG2} = target dosage concentration of coagulant in the process (µL/L)
Q_{FEED}= inlet raw water flow rate (m^3/h) measured by the influent raw water flow meter

Equation 3: Coagulant pump speed

The formula below gives the reference speed for metering pumps, in percentage. Calibration of pumps must be done in order to get a linear reference speed curve, on the basis of the pump's capacity

$$(PS_{COAG}) = 20 + (60 \times ((QC_{COAG}) - (QC_{20\text{-}COAG})) / ((QC_{80\text{-}COAG}) - (QC_{20\text{-}COAG})))$$

Where:
PS_{COAG} = Dosing pump speed (%)
QC_{COAG} = required flowrate of the coagulant solution as calculated above (L/h)
$QC_{20\text{-}COAG}$ = Measured coagulant dosing flowrate at 20% of the pump's calibration curve (L/h) (Entered by the operator on the interface).
$QC_{80\text{-}COAG}$ = Measured coagulant dosing flowrate at 80% of the pump's calibration curve (L/h) (Entered by the operator on the interface)

The following parameters shall be available on the operator interface of the coagulant dosing system:

(**RC_{COAG1}**) target dosage concentration of coagulant in the process (mg/L)
(**RC_{COAG2}**) target dosage concentration of coagulant in the process (µL/L)
(**$DENS_{COAG}$**) Density of the dosed coagulant solution in kg/L
(**CS_{COAG}**) concentration of the coagulant solution in the stock solution in %
(**$QC_{20\text{-}COAG}$**) Coagulant flow rate at 20% dosing pump speed (L/h)
(**$QC_{80\text{-}COAG}$**) Coagulant flow rate at 80% dosing pump speed (L/h)

2.7.3.3 Fault response

Dosing pumps are stopped if the coagulant dosing tank level is very low (low low of LIT9-512)

Each metering pump is in fault if:

- its VFD overloads and trips out
- its high temperature switch is triggered (only for progressive cavity pumps)

When a pump faults:

- An alarm is displayed on the operator interface and the pump is stopped.
- If necessary, the operator can start the back-up metering pump after having operated the proper isolation valves of the dosing skid. The operator will switch the back-up metering pump to automatic mode in replacement of the pump that is in fault.

2.7.4 Anionic polymer preparation system

The existing TOMAL automatic polymer preparation system is reused (Tag JB9-521).

The automatic preparation system is independent from the main PLC. It is controlled by a relay panel of which a few signals are transferred to the PLC:

- Polymer preparation system feeder or mixer overload. An alarm is displayed on the operator interface.
- Low level of the polymer storage tank. An alarm is displayed on the operator interface and both Actiflo® units are stopped according to the normal shutdown sequence of the Actiflo.
- Polymer preparation system low service water pressure. An alarm is displayed on the operator interface.
- Polymer preparation system low powder level. An alarm is displayed on the operator interface.

2.7.5 Anionic polymer dosing system

2.7.5.1 Description

Anionic polymer is proportionally dosed to the total raw water flow rate.

For winter dosing, the existing anionic polymer dosing system from Meadowbank is reused. It's composed of 3 progressive cavity metering pumps (P9-521, P9-522, P9-523). Pump P9-521 is designed to operate for MULTIFLO1 and P9-523 for MULTIFLO 2. Pump P9-522 is the backup. Operator must change the positions of some manual valves and locally put the pump in auto to use backup.

The anionic polymer winter dosing system is equipped with water transport valves that help the polymer reach the Mulftiflo units. Solenoid valve V9-521 is related to the winter dosage in Multiflo 1 and solenoid valve V9-522 to the winter dosage in Multiflo 2. V9-521 is open when P9-521 is operating (or P9-522 if it's used in backup instead of P9-521). V9-522 is open when P9-523 is operating (or P9-522 if it's used in backup instead of P9-523).

For summer dosing, a new dosing system is used. It's composed of 3 progressive cavity metering pumps (P9-524, P9-525, P9-526). Pump P9-524 is designed to operate for Actiflo® 1 and P9-526 for Actiflo® 2. Pump P9-525 is the backup. Operator must change the positions of some manual valves and locally put the pump in auto to use backup

The anionic polymer summer dosing system is equipped with water transport valves that help the polymer reach the Actiflo units. Solenoid valve SV15-011 is related to the summer dosage in Actiflo 1 and solenoid valve SV15-021 to the summer dosage in Actiflo 2. SV15-011 is open when P9-524 is operating (or P9-525 if it's used in backup instead of P9-524). SV15-021 is open when P9-526 is operating (or P9-525 if it's used in backup instead of P9-526).

The anionic polymer dosing points are located in the injection tanks of the Actiflo's/Multiflo's.

2.7.5.2 Calculation

Equation 1 (mode 1): Calculation of anionic polymer flow based on a dosage concentration in mg/L

$$QC_{ANPOL} = RC_{ANPOL1} * Q_{FEED} / (DENS_{ANPOL} * CS_{ANPOL} * 10)$$

Where:
QC_{ANPOL} = required dosing flowrate of the anionic polymer solution (L/h)
RC_{ANPOL1} = target dosage concentration of anionic polymer in the process (mg/L)
Q_{FEED}= inlet raw water flow rate (m^3/h) measured by the influent raw water flow meter
$DENS_{ANPOL}$= Density of the dosed anionic polymer solution in kg/L
CS_{ANPOL}= Anionic polymer concentration in the stock solution in %

Equation 2 (mode 2): Calculation of ANPOL flow rate based on a dosage concentration in µL/L

$$QC_{ANPOL} = (RC_{ANPOL2}) * (Q_{FEED})/1000$$

Where:
QC_{ANPOL} = required dosing flowrate of the anionic polymer (L/h)
RC_{ANPOL2} = target dosage concentration of anionic polymer in the process (µL/L)
Q_{FEED}= inlet raw water flow rate (m^3/h) measured by the influent raw water flow meter

Equation 3: Anionic polymer pump speed

The formula below gives the reference speed for metering pumps, in percentage. Calibration of pumps must be done in order to get a linear reference speed curve, on the basis of the pump's capacity

$$(PS_{ANPOL}) = 20 + (60 \times ((QC_{ANPOL}) - (QC_{20\text{-}ANPOL})) / ((QC_{80\text{-}ANPOL}) - (QC_{20\text{-}ANPOL})))$$

Where:
PS_{ANPOL} = Dosing pump speed (%)
QC_{ANPOL} = required flowrate of the anionic polymer solution as calculated above (L/h)

$QC_{20\text{- ANPOL}}$ = Measured anionic polymer dosing flowrate at 20% of the pump's calibration curve (L/h) (Entered by the operator on the interface).
$QC_{80\text{-ANPOL}}$ = Measured anionic polymer dosing flowrate at 80% of the pump's calibration curve (L/h) (Entered by the operator on the interface)

The following parameters shall be available on the operator interface of the anionic polymer dosing system:
(**RC_{ANPOL1}**) target dosage concentration of anionic polymer in the process (mg/L)
(**RC_{ANPOL2}**) target dosage concentration of anionic polymer in the process (µL/L)
(**$DENS_{ANPOL}$**) Density of the dosed anionic polymer solution in kg/L
(**CS_{ANPOL}**) concentration of the anionic polymer solution in the stock solution in %
(**$QC_{20\text{- ANPOL}}$**) Anionic polymer flow rate at 20% dosing pump speed (L/h)
(**$QC_{80\text{- ANPOL}}$**) Anionic polymer flow rate at 80% dosing pump speed (L/h)

2.7.5.3 Fault response

Dosing pumps are stopped if the anionic polymer dosing tank level is very low (very low level of PT9-522)

Each metering pump is in fault if:

- its VFD overloads and trips out
- its high temperature switch is triggered

When a pump faults:

- An alarm is displayed on the operator interface and the pump is stopped.
- If necessary, the operator can start the back-up metering pump after having operated the proper isolation valves of the dosing skid. The operator will switch the back-up metering pump to automatic mode in replacement of the pump that is in fault.

2.7.6 Sulfuric acid dosing system

2.7.6.1 Description

Sulfuric acid (H2SO4) is proportionally dosed to the quantity of coagulant solution produced.
The sulfuric acid dosing system is composed of two metering pumps. The capacity of each pump covers 100% of the process needs. One pump is in duty and the other is in backup.
The dosing point is located in the maturation tank of the coagulant preparation system.

2.7.6.2 Calculation

Equation 1: Calculation of sulfuric acid flow based on a dosage concentration in µL/L

$$QC_{H2SO4} = Q_{COAG,WATER} * RC_{H2SO4} / 1000$$

Where:
QC_{H2SO4} = required dosing flowrate of the sulfuric acid (L/h)
RC_{H2SO4} = target dosage concentration of sulfuric acid in the coagulant solution (µL/L)
$Q_{COAG,WATER}$= flow rate of service water when filling the coagulant maturation tank (m^3/h) calculated with Equation 2

Equation 2 calculation of the flow rate of service water when filling the coagulant maturation tank

$$Q_{COAG,WATER} = \Delta V_{mat,tank} / \Delta t_{mat,tank}$$

with:

$\Delta V_{mat,tank}$ (m^3), volume variation in the coagulant maturation tank for a water feeding duration of $\Delta t_{mat,tank}$ (h)

and $\Delta V_{mat,tank} = S_{mat,\ tank} * \Delta h_{mat,tank}$

with:

$S_{mat,\ tank}$ (m^2): coagulant maturation tank surface (m^2)

$\Delta h_{mat,tank}$ (m): level variation in the coagulant maturation tank for a water feeding duration of $\Delta t_{mat,tank}$ (h), as measured by level transmitter LIT9-511

Equation 3: Sulfuric acid pump speed

The formula below gives the reference speed for metering pumps, in percentage. Calibration of pumps must be done in order to get a linear reference speed curve, on the basis of the pump's capacity

$$(PS_{H2SO4}) = 20 + (60 \times ((QC_{H2SO4}) - (QC_{20\text{-}H2SO4})) / ((QC_{80\text{-}H2SO4}) - (QC_{20\text{-}H2SO4})))$$

Where:

PS_{H2SO4} = Dosing pump speed (%)

QC_{H2SO4} = required flowrate of the sulfuric acid solution as calculated above (L/h)

$QC_{20\text{-}H2SO4}$ = Measured sulfuric acid dosing flowrate at 20% of the pump's calibration curve (L/h) (Entered by the operator on the interface).

$QC_{80\text{-}H2SO4}$ = Measured sulfuric acid dosing flowrate at 80% of the pump's calibration curve (L/h) (Entered by the operator on the interface)

The following parameters shall be available on the operator interface of the sulfuric acid dosing system:

(RC_{H2SO4}) target dosage concentration of sulfuric acid in the process (µL/L)

($QC_{20\text{-}H2SO4}$) Sulfuric acid flow rate at 20% dosing pump speed (L/h)

($QC_{80\text{-}H2SO4}$) Sulfuric acid flow rate at 80% dosing pump speed (L/h)

2.7.6.3 Fault response

When the operating pump faults, an alarm is displayed on the operator interface.
The operator must change the positions of some manual valves and locally put the pump in auto to use backup.

2.7.6.4 Interlocks

When the chemical storage is equipped with a low level switch or a level transmitter, dosing pumps are automatically disabled from starting when the low level switch or the low level signal of the chemical storage transmitter is triggered.

2.7.7 Cationic polymer make-up system

2.7.7.1 Description

The Hydra-Pol® 3500 preparation system is an automatic machine for batch preparation of Polymer solutions. A screw doses dry Polymer powder into a cone, and then service water wets it in a water whirl. The mixture is discharged into a maturation tank where an agitator agitates the solution during a period of 40 -90 minutes. After this period the solution is transferred into a storage tank.

2.7.7.2 Controls

General

The polymer preparation is controlled by the preparation and transfer sequence outlined in the "Automatic start sequence" below. If equipment involved in the sequence faults during the sequence, an alarm is displayed on the operator interface and the operator must fix the problem and then manually start the sequence again. If this occurs the sequence will restart where it was interrupted unless otherwise indicated.

Calculations

Powder polymer is injected into a preparation/maturation tank using a dosing apparatus. The apparatus operating time is calculated based on its capacity and the desired concentration.

The operating dosing time is calculated with the following formula:

$$Ts = \frac{CONC \times ((LEVstop - LEV) \times Surf)}{Cap} \times 60$$

Ts:	Dosing apparatus operating time (sec.)
CONC:	Polymer concentration adjustable on operator interface (g/l)
LEV:	Preparation/maturation tank measured level (m)
LEVstop:	Preparation/maturation stop level set point (m)
Surf:	Preparation/maturation tank surface (m^2)
Cap:	Dosing apparatus capacity adjustable on operator interface (kg/min)

Note: This formula may also be used to perform a manual preparation in case of automatic system failure. To ensure dosing accuracy, the capacity must be validated by the operator

Automatic Conditions

Conditions for automatic start sequence

The automatic start sequence will be activated when the automatic starting condition is true (Level set point for sequence start-up is reached in the preparation/maturation tank) and the following conditions are met:

1. If remote run request bit is activated;

2. Polymer preparation system components are in Auto start mode.

Automatic start sequence

The automatic preparation system shall follow a given sequence to ensure a consistent Polymer solution. The preparation sequence is described in the following table:

Step #	Step name	Actions Transition conditions	Polymer mixer	Dosing screw	Service water valve	Powder supply valve	Transfer valve
0	Stand-by	Equipment shut off	S	S	C	C	C
		- Level set point for sequence start-up is reached in the preparation/maturation tank -Transfer valve is closed for 30 seconds					
1	Filling	-Remove completed preparation confirmation -Open preparation water valve	S	S	O	C	C
		Level above impeller					
2	Start mixing	Start preparation mixer	R	S	O	C	C
		- Mixer running confirmation - 10 second delay has elapsed					
3	Dosing	-Powder supply valve opened (if DosT not reached) -Start dosing apparatus (if DosT not reached)	R	R	O	O	C
		Dosing time elapsed (DosT) (retentive dosing timer) or High level in preparation/maturation tank					
4	Stop dosing	-Stop powder supply screw -Close powder supply valve	R	S	O	C	C
		Filling stop level					
5	Maturation	Close preparation water valve Start of maturation period	R	S	C	C	C
		Time elapsed 30–180 adjustable minutes (Retentive maturation delay)					
6	End	-Completed preparation confirmation	R	S	C	C	C
		Go to Step 0 at end of normal sequence and reset timers -Go to Step 7 at end of sequence by a fault					
7	**Sequence stopped on a fault**	- Wait for fault reset	S	S	C	C	C
		-Go to Step 1					

Legend

Motor	***Valve***
S: Stop	*C: Closed*
R: Running	*O: Open*

Table 2.7-1: Polymer Preparation Sequence

Note: if there is a power outage before the completed preparation confirmation is active, repeat at Step 1 when the power returns.

Transfer from preparation/maturation tank to storage tank

When the storage tank level reaches the transfer set point, and the completed preparation confirmation is active, the transfer valve opens until the preparation/maturation tank level set point for the start of the next sequence is

reached.

Note: if there is a power outage when the transfer is underway, the operator will manually resume the transfer where it was interrupted when power comes back.

Fault response

The faults associated with the Polymer makeup sequence are:

- Polymer feeder fault
- Low level of solid Polymer
- Low pressure of service water
- Transfer and water valve open/close fault
- Level transmitter fault
- High and Low level in storage tank
- Agitator M9-621 fault

Polymer feeder fault
Tag: FMM9-621/FSM9-621
The feeder and blending tool stop, Polymer preparation system fails and the sequence is stopped until the problem is fixed.

Transfer and water valve open/close fault
Tag: T9-621-V002/SV18-031/SV18-032
Polymer preparation system fails and the sequence is stopped until the problem is fixed.
Note: the valve fail positions are “Normally Closed”.

Low level of solid Polymer
Tag: LSL9-621
Polymer preparation system fails and the sequence is stopped until the problem is fixed.

Low pressure of service water
Tag: PSL18-031
Polymer preparation system fails and the sequence is stopped until the problem is fixed.

LIT Fault
Tag: LT9-621 / LT9-622
Transfer from maturation tank is prohibited, Polymer preparation system fails and the sequence is stopped until the problem is fixed.
An intervention from the operator is necessary to solve the problem and to complete the transfer manually.

Agitator fault
Tag: M9-621
Agitator stops, Polymer preparation system fails and the sequence is stopped until the problem is fixed.

Low level storage tank
Tag: LT9-622
The Polymer dosing pumps are stopped, Polymer preparation system fails and the sequence is stopped until the problem is fixed.

High level storage tank

Tag: LT9-622
Transfer from maturation tank is prohibited, Polymer preparation system fails and the sequence is stopped until the problem is fixed.

If the fault occurs while the system is in the automatic start sequence, the operator needs to solve the problem and reset the fault. The system will then automatically resume at step 1.

If the fault occurs while the system is out of the automatic start sequence, the operator needs to solve the problem and reset the fault. The operator will manually set the system in the required step.

2.7.8 Cationic polymer dosing system

2.7.8.1 Description.

Cationic polymer is proportionally dosed to the inlet flow rate of each centrifuge.
The cationic polymer dosing system is composed of three progressive cavity metering pumps (P9-621, P9-622, P9-623). P9-621 is dedicated to the dosage in centrifuge 1 and P9-623 in centrifuge. P9-622 is used in backup.

Calculations related to the cationic polymer dosing are detailed below:

Equation 1 (mode 1): Calculation of cationic polymer flow rate to centrifuge1 based on a dosage concentration in mg/L

$$QC_{CATPOL1} = RC_{CATPOL1} * Q_{CENTRIF1} / (DENS_{CATPOL} * CS_{CATPOL} * 10)$$

Where:
$QC_{CATPOL1}$ = required dosing flowrate of the cationic polymer solution in centrifuge1 (L/h)
$RC_{CATPOL1}$ = target dosage concentration of cationic polymer in the process (mg/L)
$Q_{CENTRIF1}$ = inlet flow rate to centrifuge1as measured by FIT5-011 (m^3/h)
$DENS_{CATPOL}$= Density of the dosed cationic polymer solution in kg/L
CS_{CATPOL}= Cationic polymer concentration in the stock solution in %

Note: calculation for centrifuge2 is similar. $QC_{CATPOL1}$ is replaced by $QC_{CATPOL2}$, required dosing flowrate of the cationic polymer solution in centrifuge2 (L/h). $Q_{CENTRIF1}$ is replaced by $Q_{CENTRIF2}$ measured by FIT5-021.

Equation 2 (mode 2): Calculation of cationic polymer flow rate to centrifuge1 based on a dosage concentration in µL/L

$$QC_{CATPOL1} = (RC_{CATPOL2}) * (Q_{CENTRIF1})/1000$$

Where:
$QC_{CATPOL1}$ = required dosing flowrate of the cationic polymer solution in centrifuge1 (L/h)
$RC_{CATPOL2}$ = target dosage concentration of cationic polymer in the process (µL/L)
$Q_{CENTRIF1}$ = inlet flow rate to centrifuge1as measured by FIT5-011 (m^3/h)

Note: calculation for centrifuge2 is similar. $QC_{CATPOL1}$ is replaced by $QC_{CATPOL2}$, required dosing flowrate of the cationic polymer solution in centrifuge2 (L/h). $Q_{CENTRIF1}$ is replaced by $Q_{CENTRIF2}$ measured by FIT5-021.

Equation 3: cationic polymer dosing pump speed

$$(PS_{CATPOL}) = 20 + (60 \times ((QC_{CATPOL}) - (QC_{20\text{-}CATPOL})) / ((QC_{80\text{-}CATPOL}) - (QC_{20\text{-}CATPOL})))$$

Where:
PS_{CATPOL} = Dosing pump speed (%)

QC_{CATPOL} = required flowrate of the cationic polymer solution as calculated above (L/h)
$QC_{20\text{-}CATPOL}$ = Measured cationic polymer dosing flowrate at 20% of the pump's calibration curve (L/h) (Entered by the operator on the interface).
$QC_{80\text{-}CATPOL}$ = Measured cationic polymer dosing flowrate at 80% of the pump's calibration curve (L/h) (Entered by the operator on the interface)

The following parameters shall be available on the operator interface of the cationic polymer dosing system:
(**$RC_{CATPOL1}$**) target dosage concentration of cationic polymer in the process in mg/L
(**$RC_{CATPOL2}$**) target dosage concentration of cationic polymer in the process in µL/L
(**$DENS_{CATPOL}$**) Density of the dosed cationic polymer solution in kg/L
(**CS_{CATPOL}**) Cationic polymer concentration in the stock solution in %
(**$QC_{20\text{-}CATPOL}$**) Cationic polymer flow rate at 20% dosing pump speed (L/h)
(**$QC_{80\text{-}CATPOL}$**) Cationic polymer flow rate at 80% dosing pump speed (L/h)

2.7.8.2 Fault response

Each progressive cavity metering pump is in fault if:

- Its high temperature switch is triggered
- Its VFD overloads and trips out

When the pump faults:

- An alarm is activated and the pump is stopped.
- The alarm stays active until the problem has been resolved and the alarm has been reset by the operator.
- If necessary, the operator can start the back-up metering pump after having operated the proper isolation valves of the dosing skid. The operator will switch the back-up metering pump to automatic mode in replacement of the pump that is in fault.

2.7.8.3 Interlocks

Cationic polymer dosing pumps are automatically disabled from starting when a very low level is reached in the cationic polymer storage tank.

2.7.9 Potassium permanganate ($KMnO_4$) preparation system

2.7.9.1 Description

The preparation system is an automatic machine for batch preparation of $KMnO_4$ solutions. A screw doses dry $KMnO_4$ powder into a cone, and then service water wets it in a water whirl. The mixture is discharged into a maturation tank where an agitator agitates the solution during a period of 1-30 minutes adjustable, necessary to dilute and homogenize $KMnO_4$ powder in the water. After this period the solution is transferred into a storage tank.

2.7.9.2 Controls

General

The $KMnO_4$ preparation is controlled by the preparation and transfer sequence outlined in the "Automatic start sequence" below. If equipment involved in the sequence faults during the sequence, an alarm is displayed on the operator interface and the operator must fix the problem and then manually start the sequence again. If this occurs the sequence will restart where it was interrupted unless otherwise indicated.

Calculations

Powder $KMnO_4$ is injected into a preparation/maturation tank using a dosing apparatus. The apparatus operating time is calculated based on its capacity and the desired concentration.

The operating dosing time is calculated with the following formula:

$$Ts = \frac{CONC \times ((LEVstop - LEV) \times Surf)}{Cap} \times 60$$

Ts:	Dosing apparatus operating time (sec.)
CONC:	$KMnO_4$ concentration adjustable on operator interface (g/l)
LEV:	Preparation/maturation tank measured level (m)
LEVstop:	Preparation/maturation stop level set point (m)
Surf:	Preparation/maturation tank surface (m^2)
Cap:	Dosing apparatus capacity adjustable on operator interface (kg/min)

Note: This formula may also be used to perform a manual preparation in case of automatic system failure. To ensure dosing accuracy, the capacity must be validated by the operator

Automatic Conditions

Conditions for automatic start sequence

The automatic start sequence will be activated when the automatic starting condition is true (Level set point for sequence start-up is reached in the preparation/maturation tank) and the following conditions are met:

3. If remote run request bit is activated;

4. $KMnO_4$ preparation system components are in Auto start mode.

Automatic start sequence

The automatic preparation system shall follow a given sequence to ensure a consistent $KMnO_4$ solution. The preparation sequence is described in the following table:

Step #	Step name	Actions Transition conditions	$KMnO_4$ mixer	Dosing screw	Service water valve	Powder supply valve
0	Stand-by	Equipment shut off	S	S	C	C
		- Level set point for sequence start-up is reached in the preparation/maturation tank -Transfer valve is closed for 30 seconds				
1	Filling	-Remove completed preparation confirmation -Open preparation water valve	S	S	O	C

		Level above impeller					
2	Start mixing	Start preparation mixer	R	S	O	C	C
		- Mixer running confirmation - 10 second delay has elapsed					
3	Dosing	-Powder supply valve opened (if DosT not reached) -Start dosing apparatus (if DosT not reached)	R	R	O	O	C
		Dosing time elapsed (DosT) (retentive dosing timer) or High level in preparation/maturation tank					
4	Stop dosing	-Stop powder supply screw -Close powder supply valve	R	S	O	C	C
		Filling stop level					
5	Maturation	Close preparation water valve Start of maturation period	R	S	C	C	C
		Time elapsed 1–30 minutes adjustable (Retentive maturation delay)					
6	End	-Completed preparation confirmation	R	S	C	C	C
		Go to Step 0 at end of normal sequence and reset timers -Go to Step 7 at end of sequence by a fault					
7	**Sequence stopped on a fault**	- Wait for fault reset	S	S	C	C	C
		-Go to Step 1					

Legend

Motor	***Valve***
S: Stop	*C: Closed*
R: Running	*O: Open*

Table 2.7-2: $KMnO_4$ Preparation Sequence

Note: if there is a power outage before the completed preparation confirmation is active, repeat at Step 1 when the power returns.

Transfer from preparation/maturation tank to storage tank

When the storage tank level reaches the transfer set point, and the completed preparation confirmation is active, the transfer valve opens until the preparation/maturation tank level set point for the start of the next sequence is reached.

Note: if there is a power outage when the transfer is underway, the operator will manually resume the transfer where it was interrupted when power comes back.

Fault response

The faults associated with the $KMnO_4$ makeup sequence are:

- $KMnO_4$ feeder fault
- Low level of solid $KMnO_4$
- Low pressure of service water
- Transfer and water valve open/close fault
- Level transmitter fault
- High and Low level in storage tank

- Agitator M9-591 fault

$KMnO_4$ feeder fault
Tag: FMM9-591/FSM9-591
The feeder and blending tool stop, $KMnO_4$ preparation system fails and the sequence is stopped until the problem is fixed.

Transfer and water valve open/close fault
Tag: T9-591-V002/SV15-041/SV15-042
$KMnO_4$ preparation system fails and the sequence is stopped until the problem is fixed.
Note: the valve fail positions are “Normally Closed”.

Low level of solid $KMnO_4$
Tag: LSL9-591
$KMnO_4$ preparation system fails and the sequence is stopped until the problem is fixed.

Low pressure of service water
Tag: PSL15-041
$KMnO_4$ preparation system fails and the sequence is stopped until the problem is fixed.

LIT Fault
Tag: LT9-591 / LT9-592
Transfer from maturation tank is prohibited, $KMnO_4$ preparation system fails and the sequence is stopped until the problem is fixed.
An intervention from the operator is necessary to solve the problem and to complete the transfer manually.

Agitator fault
Tag: M9-591
Agitator stops, $KMnO_4$ preparation system fails and the sequence is stopped until the problem is fixed.

Low level storage tank
Tag: LT9-592
The $KMnO_4$ dosing pumps are stopped, $KMnO_4$ preparation system fails and the sequence is stopped until the problem is fixed.

High level storage tank
Tag: LT9-592
Transfer from maturation tank is prohibited, $KMnO_4$ preparation system fails and the sequence is stopped until the problem is fixed.

If the fault occurs while the system is in the automatic start sequence, the operator needs to solve the problem and reset the fault. The system will then automatically resume at step 1.

If the fault occurs while the system is out of the automatic start sequence, the operator needs to solve the problem and reset the fault. The operator will manually set the system in the required step.

2.7.10 Potassium permanganate ($KMnO_4$) dosing system

2.7.10.1 Description

Potassium permanganate (KMNO4) is proportionally dosed to the total raw water flow rate.
The potassium permanganate dosing system is composed of two metering pumps. The capacity of each pump

covers 100% of the process needs. One pump is in duty and the other is in backup.
The dosing point is located upstream from the MPR.

2.7.10.2 Calculation

Equation 1 (mode 1): Calculation of potassium permanganate flow based on a dosage concentration in mg/L

$$QC_{KMNO4} = RC_{KMNO41} * Q_{FEED} / (DENS_{KMNO4} * CS_{KMNO4} * 10)$$

Where:
QC_{KMNO4} = required dosing flowrate of the potassium permanganate solution (L/h)
RC_{KMNO41} = target dosage concentration of potassium permanganate in the process (mg/L)
Q_{FEED}= inlet raw water flow rate (m^3/h) measured by the influent raw water flow meter
$DENS_{KMNO4}$= Density of the dosed potassium permanganate solution in kg/L
CS_{KMNO4}= Potassium permanganate concentration in the stock solution in %

Equation 2 (mode 2): Calculation of KMnO4 flow rate based on a dosage concentration in µL/L

$$QC_{KMNO4} = (RC_{KMNO42}) * (Q_{FEED})/1000$$

Where:
QC_{KMNO4} = required dosing flowrate of the potassium permanganate (L/h)
RC_{KMNO42} = target dosage concentration of potassium permanganate in the process (µL/L)
Q_{FEED}= inlet raw water flow rate (m^3/h) measured by the influent raw water flow meter

Equation 3: Potassium permanganate pump speed

The formula below gives the reference speed for metering pumps, in percentage. Calibration of pumps must be done in order to get a linear reference speed curve, on the basis of the pump's capacity

$$(PS_{KMNO4}) = 20 + (60 \times ((QC_{KMNO4}) - (QC_{20\text{-}KMNO4})) / ((QC_{80\text{-}KMNO4}) - (QC_{20\text{-}KMNO4})))$$

Where:
PS_{KMNO4} = Dosing pump speed (%)
QC_{KMNO4} = required flowrate of the potassium permanganate solution as calculated above (L/h)
$QC_{20\text{-}KMNO4}$ = Measured potassium permanganate dosing flowrate at 20% of the pump's calibration curve (L/h) (Entered by the operator on the interface).
$QC_{80\text{-}KMNO4}$ = Measured potassium permanganate dosing flowrate at 80% of the pump's calibration curve (L/h) (Entered by the operator on the interface)

The following parameters shall be available on the operator interface of the potassium permanganate dosing system:
(RC_{KMNO41}) target dosage concentration of potassium permanganate in the process (mg/L)
(RC_{KMNO42}) target dosage concentration of potassium permanganate in the process (µL/L)
($DENS_{KMNO4}$) Density of the dosed potassium permanganate solution in kg/L
(CS_{KMNO4}) Potassium permanganate concentration in the stock solution in %
($QC_{20\text{-}KMNO4}$) Potassium permanganate flow rate at 20% dosing pump speed (L/h)
($QC_{80\text{-}KMNO4}$) Potassium permanganate flow rate at 80% dosing pump speed (L/h)

2.7.10.3 Fault response

When the operating pump faults, an alarm is displayed on the operator interface.
The operator must change the positions of some manual valves and locally put the pump in auto to use backup.

2.7.10.4 Interlocks

When the chemical storage is equipped with a low level switch or a level transmitter, dosing pumps are automatically disabled from starting when the low level switch or the low level signal of the chemical storage transmitter is triggered.

3 SEQUENCES FOR SUMMER AND WINTER CONFIGURATIONS

3.1 Description

As summer and winter flowrates to be treated differ significantly, two distinct operating configurations are required. Start-up and shut-down sequences for summer and winter configurations are described below.

3.2 Summer configuration

The start-up sequence for the summer configuration is the following:

- Each Multiflo is switched to the Actiflo mode which means :
  - The Multiflo extraction pump is stopped
  - The operator closes the manual isolation valves of the Multiflo sludge extraction pump
  - The operator opens the manual isolation valves of the Actiflo microsand recirculation pumps
  - The start-up sequence of the ACTIFLO is activated (refer to the AEM Amaruq project - ACTIFLO® functional description)
- The sludge splitter box extraction pump is switched to Auto and it will start once the level in the splitter box rises above the very low level switch
- AIC4-011 turbidity control loop is activated
- Coagulant winter dosing pumps (P9-511, P9-512 and P9-513) are stopped and coagulant summer dosing pumps (P9-514 and P9-516) are started
- Anionic polymer winter dosing pumps (P9-521, P9-522 and P9-523) are stopped and anionic polymer summer dosing pumps (P9-524, P9-525 and P9-526) are started

3.3 Winter configuration

The start-up sequence for the winter configuration is the following:

- Each Actiflo is switched to the Multiflo mode which means :
  - The Actiflo microsand recirculation pumps are stopped
  - The operator closes the manual isolation valves of the Actiflo microsand recirculation pumps
  - The operator opens the manual isolation valves of the Multiflo sludge extraction pump
  - The start-up sequence of the MULTIFO is activated (refer to the MULTIFLO functional description)
- AIC4-011 turbidity control loop will be de-activated
- Until the sludge splitter box is drained by the operator, its extraction pump is kept running. This maintains

a sludge recirculation loop in the splitter box in order to prevent the settling of the sludge and the risk of plugging.

- Coagulant summer dosing pumps (P9-514 and P9-516) are stopped and coagulant winter dosing pumps (P9-511, P9-512 and P9-513) are started
- Anionic polymer summer dosing pumps (P9-524, P9-525 and P9-526) are stopped and anionic polymer winter dosing pumps (P9-521, P9-522 and P9-523) are started

4 APPENDIX A – ALARMS, PARAMETERS AND SET POINTS (TO BE COMPLETED)

LEFT BLANK

AGNICO EAGLE MINES Ltd - AMARUQ

Actiflo® – ACP

PROCESS CONTROL DESCRIPTION

VEOLIA WATER TECHNOLOGIES CANADA
www.veoliawatertechnologies.com

REVISION STATUS

Issue	Date	Created	Reviewed	Approved	Description of Changes
1	2018/07/18	FV	GP	CB	First Issue
2	2018/08/09	FV	GP	CB	Changes in interlocks section and emergency shutdown

TABLE OF CONTENTS

INTRODUCTION 5

1.1 Reference Documents 5

1.2 Process Overview 5

1.3 List of Abbreviations 6

1.4 List of Units 6

ACTIFLO® CONTROL DESCRIPTION 7

1.5 Equipment and Instrument 7

1.6 Operating Modes Overview 7

1.7 Permissive 8

1.8 Options 8

1.9 Semi-Auto Train Response To Equipment Conditions 9

1.9.1 Equipment Removed From Auto PLC Response 9

1.9.2 Equipment Failure PLC Response 9

1.10 Recirculation Pumps Logic 10

1.10.1 Duty/Assist Orientation 10

1.11 Sequences Of Functions 10

1.11.1 Start-up Sequence 10

1.11.2 Shutdown Sequence 11

1.12 Alarm/Failure Conditions and PLC Responses 12

1.12.1 Alarm Priorities 12

1.13 Safety 13

1.13.1 Emergency Stop 13

1.13.2 Control Power Failure PLC Response 13

1.14 Calculated Parameters 13

1.14.1 Flow Pace Control 14

1.15 Interlocks 14

1.15.1 Actiflo® High Level Switch 14
1.15.2 Scraper Torque 15
1.15.3 Maturation Mixer 15
1.15.4 Scraper 15
SYSTEM AND COMMUNICATION 16
1.16 Hardwire Signals 16

Table 1: Summary of Control Modes 8

INTRODUCTION

1.1 REFERENCE DOCUMENTS

Document Number	Name
5000218009_PI_0001_GEN_VWT	PI001 _Process and Instrumentation diagram
5000218009_FD_0001_GEN_rev1	Project overall functional description

1.2 PROCESS OVERVIEW

Actiflo units are based on the ballasted flocculation process. The key feature of this process is that very fine sand (85 µm or 130 µm size), termed “microsand” is added to the raw water following coagulant addition. A polymer is also added that binds the microsand to the floc, creating a ballasted floc with greatly increased effective density. The ballasted flocculation process is capable of being shut down when treatment capacity is not needed and then rapidly restarted when needed.

Ballasted flocculation works with most types of waters but is most advantageous with raw waters that either experience high turbidity raw water conditions (up to 2 500 NTU) and/or rapidly changing raw water turbidity conditions. It is also suitable for low turbidity, highly colored raw waters.

It consists of a coagulation basin, an injection basin, a maturation basin, and a lamella tube clarifier. Coagulant is added at the inlet and subsequent formation of microfloc takes place in the coagulant basin prior to addition of microsand and polymer in the injection basin. The water then flows into the maturation tank where bridging between the microsand and the destabilized suspended solids occurs.

The ballasted flocs settle in the clarifier portion of the system where they are collected by a rake mechanism. Typically 3% to 6% of the unit’s design raw water flow is continuously withdrawn from the clarifier and pumped to a hydrocyclone system which separates the microsand from the sludge. The recovered microsand (typically 20% of the recycled flow) is reused in the process. A small quantity of the microsand is not recovered by the hydrocyclones and is discharged with the sludge. Thus the lost microsand needs to be made up by periodically adding it to the process (typically 1 to 3 mg/L). After sand separation, sludge are partially wasted and recycled with the sludge withdrawn from the clarifier. Approximately 1% to 2,4% of flow becomes waste or residuals stream.

1.3 List of Abbreviations

The following abbreviations are used in the text of this document.

- HMI: Human/Machine Interface
- H-O-A: Hand-Off-Auto
- PLC: Programmable Logic Controller
- LCP: Local Control Panel
- VFD: Variable Frequency Drive
- VWT: Veolia Water Technologies Canada

1.4 List of Units

The following lists the parameters referred to in this document and the units they are measured in unless otherwise specified.

- Concentration (in general): mg/L
- Dosing rate: mL/L
- Flow rate (main process): m^3/h
- Flow rate (chemical dosing): LPH
- Level in the tanks: %
- pH: -
- Pressure: PSIg
- Temperature: °C
- Turbidity: mg/L or NTU

ACTIFLO® CONTROL DESCRIPTION

1.5 EQUIPMENT AND INSTRUMENT

Refer to the overall functional description of the project for tags and descriptions of the controlled equipment of each ACTIFLO.

1.6 OPERATING MODES OVERVIEW

There are two primary modes for each ACTIFLO®: Manual and Semi-Automatic. The Manual mode is designed for operation of individual equipment. The Semi-Auto mode is designed for operation of the ACTIFLO® system as a whole.

Local mode

In local Mode, the operator can operate individual equipment.

Equipment can be started manually at the LCP using the Hand position of the H-O-A.

HMI manual mode

The operator can operate individual equipment through HMI control if the Local switch on that equipment is in the Auto position. Manual operation from the HMI provides the same equipment protection and alarming as Semi-Auto.

Semi-Auto

Semi-Auto mode allows the operator to initiate the ACTIFLO® system start-up and shutdown sequences from HMI or remotely.

NOTE: Train equipment cannot be controlled manually while in Semi-Auto operation.

The coagulation mixer or injection mixer, maturation mixer, scraper, and at least one sand pump H-O-As must be in Auto to enable Semi-Automatic control of all respective equipment at the HMI and at the LCP. All startup sequences are described below. Each ACTIFLO® train and its associated equipment are controlled as an independent system by the PLC.

The table below presents the control modes summary.

Table 1: Summary of Control Modes

	Manual		Semi-Auto
	Local	**HMI Manual**	
Control Functions	N/A	N/A	Allowed (PLC)
Initiation of Semi-Automatic functions	N/A	N/A	Operator or Remote Start-up Initiation Required
HMI Operation of Individual Equipment	N/A	Allowed (virtual HOA on HMI)	Not Allowed
Local Operation of Individual Equipment	Allowed By HOA on LCP	N/A	Not Allowed

1.7 PERMISSIVE

Permissive to allow initiation of the Semi-Automatic start sequence are:

- H-O-A selector switches for mixers, scraper and at least one sand pump, are in Auto at the HMI and at the LCP.
- Mixers (whichever is in Auto at HMI and LCP), scraper, and the above mentioned sand pump do not have existing equipment alarms.
- Aforementioned equipment alarms must be manually reset.

1.8 OPTIONS

Idle option

When the idle option is enabled, the Actiflo keeps the inlet valve open all the time.

Mixing option

When the mixing option is enabled, a unit in Semi-Auto mode left idle will start some mixer to move the sand into the tank to avoid the sedimentation.

1.9 SEMI-AUTO TRAIN RESPONSE TO EQUIPMENT CONDITIONS

1.9.1 Equipment Removed From Auto PLC Response

If the mixers and the scraper are removed from Auto at the LCP while the PLC is running in Semi-Automatic control of the ACTIFLO® system, the PLC will initiate a Shutdown Sequence as described in section 1.11.2.

Since the scraper will not be operational, the Shutdown Sequence will consist of the sand recirculation pumps running for the durations indicated in section 1.11.2.

If the lead sand pump is removed from Auto at the LCP, the PLC will sequentially initiate operation of the next available pump. If all sand pumps are removed from Auto or no additional pumps are available, the PLC will initiate an emergency shutdown of all equipment.

NOTE: No alarm will be generated if an ACTIFLO® system shutdown is initiated due to a piece of equipment being removed from Auto by the operator.

1.9.2 Equipment Failure PLC Response

If the coagulation mixer fails during Semi-Automatic control of the ACTIFLO® system, the system will continue to run.

Should the injection mixer or the maturation mixer fail at any time during Semi-Automatic control of the ACTIFLO® system, the PLC will issue an equipment alarm and will initiate a Shutdown Sequence as described in section 1.11.2.

Should the scraper fail at any time during operation or start-up, the PLC will issue an equipment alarm and will initiate a Shutdown Sequence as described in section 1.11.2. Since the scraper will not be operational, the Shutdown Sequence will consist of the sand recirculation pumps running for the durations indicated in section 1.11.2.

Should lead sand pump fail, the PLC will issue an equipment alarm and sequentially initiate operation of the next available pump. If all sand pumps fail or no additional pumps are available, the PLC will initiate an emergency shutdown of all equipment.

NOTE: An AVAILABLE sand pump is defined as one that is placed in Auto at the LCP and does not have any existing un-reset alarm conditions.

1.10 RECIRCULATION PUMPS LOGIC

1.10.1 Duty/Assist Orientation

When two recirculation lines are provided they can be set with priority. The two sand pumps operate in a Duty / Assist orientation. If all sand pumps are in "auto" but not running, the pump set as priority (duty) will start when the start condition will be met. If the influent quality deteriorates, as indicated by an increase in raw water turbidity, the operator can use the second recirculation line by starting the second pump from the HMI.

The sand pumps priority (duty or assist) is changed manually by the operator anytime or is changed automatically when the plant stops.

1.11 SEQUENCES OF FUNCTIONS

1.11.1 Start-up Sequence

If all permissive conditions are present and no respective equipment alarms exist, the HMI will display **"Train Ready"**. The Start-up Sequence can now be initiated via the HMI or remotely.

NOTE: To prevent damage to the equipment, the Train must have water in the tanks above the mixer impeller elevations prior to Start-up (to be checked by the operator).

To start the train when "Train Ready" is displayed on the HMI, the operator presses the "Train Start" pushbutton. A starting system displays "Train Starting" at the HMI. The start-up sequence automatically cycles through the steps listed below.

1. System Start-up Initiated:
    a. **Start the Duty Sand Pump**

If a failure occurs, the duty pump will be locked out in the PLC and the next available pump will be assigned as the lead pump. The PLC will then attempt to continue operation. This cycle will occur until a sand pump starts or all sand pumps have been locked out. If all sand pumps are locked out, the PLC will immediately abort the start-up.

2. Delay 30 seconds (adjustable):
    a. **Start the Scraper**

If a Scraper failure occurs initiate a Shutdown Sequence.

3. Delay 10 seconds (adjustable):
    a. **Start the mixers**. These mixers start are respectively staggered by 5 seconds.

If a maturation Mixer failure occurs initiate a Shutdown Sequence.

4. Delay 10 seconds (adjustable):
    a. Start the Chemical Feed Pumps
    b. Open Raw water Valve. Open Water Polymer Carrier Solenoid valve
    c. HMI will display **"Train Started"**

If any Duty Chemical Feed Pump is not available while in operation, the Stand-by pump shall be initiated. The duty pump will not be locked out so when the pump is placed back into Semi-Auto, it will resume operation. Duty chemical feed pump alternation is manual and available only at the HMI.

The Operator can terminate the start-up at any point in the sequence by pressing the "Train Stop" pushbutton. If any pertinent equipment fails during the start-up sequence, the PLC will initiate a train shutdown. The operator can correct the failure, and then resume the start-up sequence from the current shutdown sequence step by pressing the "Train Start" pushbutton.

1.11.2 Shutdown Sequence

Normal shutdown sequence
When in Semi-Automatic mode, the operator may implement the Shutdown Sequence at any time from the HMI or remotely. During shutdown, the HMI will display "Train Stopping".

The shutdown sequence automatically cycles through the steps listed below.

1. System Shutdown Initiated:
    a. Close the Influent Valve, Shutdown the Chemical Feed Pumps, Shutdown the mixers. Stop Water Polymer Carrier Solenoid valve.

2. Delay an (Operator Adjustable) (10-30 minutes):
    a. Shutdown the Scraper
    b. Start the Standby Sand Pump

3. Delay 5 minutes:
    a. Shutdown the Duty Sand Pump and Shutdown the standby Sand Pump

NOTE: This delay allows purging of sand and sludge contained in the settling tank and piping and re-deposits it back into the Maturation tank.

The operator can initiate the Train start-up sequence from the current shutdown sequence step by pressing the "Train Start" pushbutton without stopping the equipment already started.

Emergency shutdown sequence

The emergency shutdown sequence automatically cycles through the steps listed below.

1. System shutdown initiated:
   - **a.** Close the influent valve, shutdown the chemical feed pumps, shutdown the mixers, shutdown the scraper, shutdown the microsand recirculation pumps, close the water polymer carrier solenoid valves.

1.12 ALARM/FAILURE CONDITIONS AND PLC RESPONSES

1.12.1 Alarm Priorities

Alarms are grouped in to 3 priority levels for various attention requirements:

Emergency alarms:

1. Needs immediate operator attention.
2. The ACTIFLO® unit will initiate the emergency shutdown sequence.

Fatal alarms:

1. Needs immediate operator attention.
2. The ACTIFLO® unit will initiate the stop sequence.

Warning alarms:

1. Does not need immediate operator attention.

If the ACTIFLO® unit was stopped by an Emergency alarm or Fatal alarm, it will not restart automatically. The operator must remove alarm condition and reset the alarm. Then press the start button on the operator interface will restart the unit if all automatic start sequence conditions are satisfied. In case of remote control, the system will wait for rising edge of the remote start signal.

1.13 SAFETY

1.13.1 Emergency Stop

Emergency stop actions

When an emergency stop button is activated on an equipment, an alarm is triggered. The fault associated with this alarm will latch.

During emergency stop, many stopping actions are initiated on the equipment. These actions are presented in sections describing the relevant equipment.

Recovery after emergency stop

When all emergency stop buttons are back into normal position, the fault associated with an alarm is maintained until the operator presses the reset button.

1.13.2 Control Power Failure PLC Response

Should control power fail at any time during Semi-Automatic control of the ACTIFLO® system, the PLC will issue an alarm and will initiate a Shutdown Sequence as described in this document. Systems with an Uninterruptable Power Supply (UPS) will see the alarm as the condition occurs. Systems without an UPS will see the alarm upon restoration of power. There is a ten (10) second delay upon restoring power, and then the train will enter the Shutdown Sequence as described in this document. If the restored power does not include the actual motor controls, a run status will not be received by the PLC and equipment (pumps and scraper) will shut down immediately without a re-inventory of the sand to the maturation tank. If the unit is configured to resume via the HMI, it will automatically resume to the last known state. Otherwise the unit will remain in Stop.

1.14 CALCULATED PARAMETERS

The following sections explain the main calculations made in the control of the ACTIFLO® system.

The PLC calculates the chemical feed rates and controls the chemical metering pumps using the following procedure. The chemical feed rate is based on:

1. The influent raw water flow rate
2. The chemical dose
3. The physical properties of the chemicals
4. The capacity and settings of the metering pump

The influent raw water flow rate is obtained through the raw water flow meter, which sends a signal to the PLC.

The influent raw water turbidity rate is obtained through the raw water turbidimeter and the raw water pH is obtained through the raw water pH meter.

The chemical dose, physical properties and metering pump capacity are input by the user/operator at the HMI.

The basic equation for the chemical feed rate is:

$$\text{Chemical feed rate} = \frac{\text{influent flow rate} \times \text{chemical dose}}{\text{stock chemical concentration}}$$

This equation is the general form for all chemical feed rates that use flow pacing control, including coagulant and polymer.

1.14.1 Flow Pace Control

The way the PLC uses these calculations to determine the chemical metering pump output is:

1. The chemical feed rate equations are programmed into the PLC.
2. The user/operator inputs the chemical dose, physical properties, and maximum chemical metering pump capacity at the HMI on the ACTIFLO® control panel. The PLC calculates the specific chemical feed rate based on the user/operator inputs and the influent (raw water) flow to the train.
3. The calculated feed rate is then converted by the PLC into a percent speed, based on the maximum capacity of the metering pumps. This signal is then sent to the metering pump.

1.15 INTERLOCKS

1.15.1 Actiflo® High Level Switch

A float over the settling tank is used as a High Level switch. When the switch is activated, stop the corresponding Actiflo® unit according to the automatic stop sequence.

1.15.2 Scraper Torque

The torque detector/alarm is independent from the PLC. So it is enabled (will stop the scraper) through a hardwired interlock to the scraper starter in the corresponding Actiflo® control panel.

1.15.2.1 High High Scraper Torque

A high torque alarm is activated when the torque is higher than the adjustable set point for more than the adjustable delay. Those adjustable variables are set on the microcontroller installed in the panel.

When the alarm is activated, the scraper is stopped and then the Actiflo® is stopped according to the automatic stop sequence.

1.15.3 Maturation Mixer

The maturation mixer cannot run if the scraper is not running.

1.15.4 Scraper

The Scraper is interlocked with the microsand pumps; at least one microsand pump has to be running for the scraper to run.

SYSTEM AND COMMUNICATION

The ACTIFLO® control panel PLC is capable of providing the following global statuses over the main plant PLC network: Global “Ready,” and Global “Fail.”

A Global “Ready” status indicates the system is ready to accept a Global “Start/Stop” command from the main plant PLC.

When the ACTIFLO® system receives a Global “Start” command, the Start-Up Sequence is initiated as described in section 1.11.1 above; this holds true for both Start-Up under normal conditions as well as for Start Up after a power failure.

When the ACTIFLO® system receives a Global “Stop” command under normal conditions, the Shutdown Sequence is initiated as described in section 1.11.2 above.

1.16 HARDWIRE SIGNALS

The following electrical signals are used to communicate some information about the Actiflo trains:

Name	Type	Description	True
Start/Stop	DI	To Start/Stop the unit Remotely	Start the unit
Water Demand	DI	To require the production of water by the Actiflo	Start a production Sequence
Status - In Service	DO	Actiflo In Service Step	
Status - Alarm Active	DO	Warning or Fatal Alarm Active	

AGNICO EAGLE MINES Ltd - AMARUQ

Multiflo

PROCESS CONTROL DESCRIPTION

VEOLIA WATER TECHNOLOGIES CANADA
www.veoliawatertechnologies.com

REVISION STATUS

Issue	Date	Created	Reviewed	Approved	Description of Changes
1	2018/07/18	FV	GP	CB	First Issue
2	2018/08/09	FV	GP	CB	Changes in interlocks section and emergency shutdown

TABLE OF CONTENTS

INTRODUCTION 5

1.1 Reference Documents 5

1.2 Process Overview 5

1.3 List of Abbreviations 5

1.4 List of Units 5

MULTIFLO CONTROL DESCRIPTION 7

1.5 Equipment and Instrument 7

1.6 Operating Modes Overview 7

1.7 Permissive 8

1.8 Semi-Auto Train Response To Equipment Conditions 9

1.8.1 Equipment Removed From Auto PLC Response 9

1.8.2 Equipment Failure PLC Response 9

1.9 Extraction Pump Logic 9

1.10 Sequences Of Functions 10

1.10.1 Start-up Sequence 10

1.10.2 Shutdown Sequence 11

1.11 Alarm/Failure Conditions and PLC Responses 11

1.11.1 Alarm Priorities 11

1.12 Safety 12

1.12.1 Emergency Stop 12

1.12.2 Control Power Failure PLC Response 12

1.13 Calculated Parameters 13

1.13.1 Flow Pace Control 13

1.14 Interlocks 14

1.14.1 Multiflo High Level Switch 14

1.14.2 Scraper Torque 14

1.14.3 Maturation Mixer 14
1.14.4 Scraper 14
SYSTEM AND COMMUNICATION 16
1.15 Hardwire Signals 16

Table 1: Summary of Control Modes 8

INTRODUCTION

1.1 REFERENCE DOCUMENTS

Document Number	Name
5000218009_PI_0001_GEN_VWT	PI001 _Process and Instrumentation diagram
5000218009_FD_0001_GEN	Project overall functional description

1.2 PROCESS OVERVIEW

To be completed

1.3 LIST OF ABBREVIATIONS

The following abbreviations are used in the text of this document.

- HMI: Human/Machine Interface
- H-O-A: Hand-Off-Auto
- PLC: Programmable Logic Controller
- LCP: Local Control Panel
- VFD: Variable Frequency Drive
- VWT: Veolia Water Technologies Canada

1.4 LIST OF UNITS

The following lists the parameters referred to in this document and the units they are measured in unless otherwise specified.

- Concentration (in general): mg/L
- Dosing rate: mL/L
- Flow rate (main process): m^3/h
- Flow rate (chemical dosing): LPH
- Level in the tanks: %
- pH: -
- Pressure: PSIg
- Temperature: °C

- Turbidity: mg/L or NTU

MULTIFLO CONTROL DESCRIPTION

1.5 EQUIPMENT AND INSTRUMENT

Refer to the overall functional description of the project for tags and descriptions of the controlled equipment of each MULTIFLO.

1.6 OPERATING MODES OVERVIEW

There are two primary modes for each MULTIFLO: Manual and Semi-Automatic. The Manual mode is designed for operation of individual equipment. The Semi-Auto mode is designed for operation of the MULTIFLO system as a whole.

Local mode

In local Mode, the operator can operate individual equipment.

Equipment can be started manually at the LCP using the Hand position of the H-O-A.

HMI manual mode

The operator can operate individual equipment through HMI control if the Local switch on that equipment is in the Auto position. Manual operation from the HMI provides the same equipment protection and alarming as Semi-Auto.

Semi-Auto

Semi-Auto mode allows the operator to initiate the MULTIFLO system start-up and shutdown sequences from HMI or remotely.

NOTE: Train equipment cannot be controlled manually while in Semi-Auto operation.

The coagulation mixer or injection mixer, maturation mixer, scraper and the extraction pump H-O-As must be in Auto to enable Semi-Automatic control of all respective equipment at the HMI and at the LCP. All startup sequences are described below. Each MULTIFLO train and its associated equipment are controlled as an independent system by the PLC.

The table below presents the control modes summary.

Table 1: Summary of Control Modes

	Manual		Semi-Auto
	Local	**HMI Manual**	
Control Functions	N/A	N/A	Allowed (PLC)
Initiation of Semi-Automatic functions	N/A	N/A	Operator or Remote Start-up Initiation Required
HMI Operation of Individual Equipment	N/A	Allowed (virtual HOA on HMI)	Not Allowed
Local Operation of Individual Equipment	Allowed By HOA on LCP	N/A	Not Allowed

1.7 PERMISSIVE

Permissive to allow initiation of the Semi-Automatic start sequence are:

- H-O-A selector switches for mixers, scraper and the extraction pump, are in Auto at the HMI and at the LCP.
- Mixers (whichever is in Auto at HMI and LCP), scraper, and the extraction pump do not have existing equipment alarms.
- Aforementioned equipment alarms must be manually reset.

1.8 SEMI-AUTO TRAIN RESPONSE TO EQUIPMENT CONDITIONS

1.8.1 Equipment Removed From Auto PLC Response

If the mixers and the scraper are removed from Auto at the LCP while the PLC is running in Semi-Automatic control of the MULTIFLO system, the PLC will initiate a Shutdown Sequence as described in section 1.10.2.

If the Multiflo extraction pump is removed from Auto, the PLC will initiate an emergency shutdown of all equipment.

NOTE: No alarm will be generated if a MULTIFLO system shutdown is initiated due to a piece of equipment being removed from Auto by the operator.

1.8.2 Equipment Failure PLC Response

If the coagulation mixer fails during Semi-Automatic control of the MULTIFLO system, the system will continue to run.

Should the injection mixer or the maturation mixer fail at any time during Semi-Automatic control of the MULTIFLO system, the PLC will issue an equipment alarm and will initiate a Shutdown Sequence as described in section 1.10.2.

Should the scraper fail at any time during operation or start-up, the PLC will issue an equipment alarm and will initiate a Shutdown Sequence as described in section 1.10.2.

Should the Multiflo extraction pump fail, the PLC will initiate an emergency shutdown of all equipment.

1.9 EXTRACTION PUMP LOGIC

The Multiflo extraction pump will operate in batches. The operator will be able to adjust the running time and the lag time between the batches on the HMI.

1.10 SEQUENCES OF FUNCTIONS

1.10.1 Start-up Sequence

If all permissive conditions are present and no respective equipment alarms exist, the HMI will display **"Train Ready"**. The Start-up Sequence can now be initiated via the HMI or remotely.

NOTE: To prevent damage to the equipment, the Train must have water in the tanks above the mixer impeller elevations prior to Start-up (to be checked by the operator).

To start the train when "Train Ready" is displayed on the HMI, the operator presses the "Train Start" pushbutton. A starting system displays "Train Starting" at the HMI. The start-up sequence automatically cycles through the steps listed below.

1. System Start-up Initiated:
    a. **Start the extraction pump**

If the pump fails to start, the PLC will immediately abort the start-up.

2. Delay 30 seconds (adjustable):
    a. **Start the Scraper**

If a Scraper failure occurs initiate a Shutdown Sequence.

3. Delay 10 seconds (adjustable):
    a. **Start the mixers**. These mixers start are respectively staggered by 5 seconds.

If a maturation Mixer failure occurs initiate a Shutdown Sequence.

4. Delay 10 seconds (adjustable):
    a. Start the Chemical Feed Pumps
    b. Open Raw water Valve.
    c. HMI will display **"Train Started"**

If any Duty Chemical Feed Pump is not available while in operation, the Stand-by pump shall be initiated. The duty pump will not be locked out so when the pump is placed back into Semi-Auto, it will resume operation. Duty chemical feed pump alternation is manual and available only at the HMI.

The Operator can terminate the start-up at any point in the sequence by pressing the "Train Stop" pushbutton. If any pertinent equipment fails during the start-up sequence, the PLC will

initiate a train shutdown. The operator can correct the failure, and then resume the start-up sequence from the current shutdown sequence step by pressing the “Train Start” pushbutton.

1.10.2 Shutdown Sequence

Normal shutdown sequence
When in Semi-Automatic mode, the operator may implement the Shutdown Sequence at any time from the HMI or remotely. During shutdown, the HMI will display “Train Stopping”.

The shutdown sequence automatically cycles through the steps listed below.

1. System Shutdown Initiated:
   - **a.** Close the Influent Valve, Shutdown the Chemical Feed Pumps, Shutdown the mixers.

2. Delay an (Operator Adjustable) (10-30 minutes):
   - **a.** Shutdown the Scraper
   - **b.** Shutdown the extraction pump

The operator can initiate the Train start-up sequence from the current shutdown sequence step by pressing the “Train Start” pushbutton without stopping the equipment already started.

Emergency shutdown sequence
The emergency shutdown sequence automatically cycles through the steps listed below.

1. System Shutdown Initiated:
   - **a.** Close the influent valve, shutdown the chemical feed pumps, shutdown the mixers, shutdown the scraper, shutdown the microsand recirculation pumps, close the water polymer carrier solenoid valves.

1.11 Alarm/Failure Conditions and PLC Responses

1.11.1 Alarm Priorities

Alarms are grouped in to 3 priority levels for various attention requirements:

Emergency alarms:

1. Needs immediate operator attention.
2. The MULTIFLO unit will initiate the emergency shutdown sequence.

Fatal alarms:

1. Needs immediate operator attention.
2. The MULTIFLO unit will initiate the stop sequence.

Warning alarms:

1. Does not need immediate operator attention.

If the MULTIFLO unit was stopped by an Emergency alarm or Fatal alarm, it will not restart automatically. The operator must remove alarm condition and reset the alarm. Then press the start button on the operator interface will restart the unit if all automatic start sequence conditions are satisfied. In case of remote control, the system will wait for rising edge of the remote start signal.

1.12 SAFETY

1.12.1 Emergency Stop

Emergency stop actions

When an emergency stop button is activated on an equipment, an alarm is triggered. The fault associated with this alarm will latch.

During emergency stop, many stopping actions are initiated on the equipment. These actions are presented in sections describing the relevant equipment.

Recovery after emergency stop

When all emergency stop buttons are back into normal position, the fault associated with an alarm is maintained until the operator presses the reset button.

1.12.2 Control Power Failure PLC Response

Should control power fail at any time during Semi-Automatic control of the MULTIFLO system, the PLC will issue an alarm and will initiate a Shutdown Sequence as described in this document. Systems with an Uninterruptable Power Supply (UPS) will see the alarm as the condition occurs. Systems without an UPS will see the alarm upon restoration of power. There

is a ten (10) second delay upon restoring power, and then the train will enter the Shutdown Sequence as described in this document. If the restored power does not include the actual motor controls, a run status will not be received by the PLC and equipment (pumps and scraper) will shut down immediately. If the unit is configured to resume via the HMI, it will automatically resume to the last known state. Otherwise the unit will remain in Stop.

1.13 CALCULATED PARAMETERS

The following sections explain the main calculations made in the control of the MULTIFLO system.

The PLC calculates the chemical feed rates and controls the chemical metering pumps using the following procedure. The chemical feed rate is based on:

1. The influent raw water flow rate
2. The chemical dose
3. The physical properties of the chemicals
4. The capacity and settings of the metering pump

The influent raw water flow rate is obtained through the raw water flow meter, which sends a signal to the PLC.

The influent raw water turbidity rate is obtained through the raw water turbidimeter and the raw water pH is obtained through the raw water pH meter.

The chemical dose, physical properties and metering pump capacity are input by the user/operator at the HMI.

The basic equation for the chemical feed rate is:

$$\text{Chemical feed rate} = \frac{\text{influent flow rate} \times \text{chemical dose}}{\text{stock chemical concentration}}$$

This equation is the general form for all chemical feed rates that use flow pacing control, including coagulant and polymer.

1.13.1 Flow Pace Control

The way the PLC uses these calculations to determine the chemical metering pump output is:

1. The chemical feed rate equations are programmed into the PLC.

2. The user/operator inputs the chemical dose, physical properties, and maximum chemical metering pump capacity at the HMI on the MULTIFLO control panel. The PLC calculates the specific chemical feed rate based on the user/operator inputs and the influent (raw water) flow to the train.
3. The calculated feed rate is then converted by the PLC into a percent speed, based on the maximum capacity of the metering pumps. This signal is then sent to the metering pump.

1.14 INTERLOCKS

1.14.1 Multiflo High Level Switch

A float over the settling tank is used as a High Level switch. When the switch is activated, stop the corresponding Multiflo unit according to the automatic stop sequence.

1.14.2 Scraper Torque

The torque detector/alarm is independent from the PLC. So it is enabled (will stop the scraper) through a hardwired interlock to the scraper starter in the corresponding Multiflo control panel.

1.14.2.1 High High Scraper Torque

A high torque alarm is activated when the torque is higher than the adjustable set point for more than the adjustable delay. Those adjustable variables are set on the microcontroller installed in the panel.

When the alarm is activated, the scraper is stopped and then the Multiflo is stopped according to the automatic stop sequence.

1.14.3 Maturation Mixer

The maturation mixer cannot run if the scraper is not running.

1.14.4 Scraper

The scraper is interlocked with the multiflo extraction pump; the pump has to be running for the scraper to run.

SYSTEM AND COMMUNICATION

The MULTIFLO control panel PLC is capable of providing the following global statuses over the main plant PLC network: Global “Ready,” and Global “Fail.”

A Global “Ready” status indicates the system is ready to accept a Global “Start/Stop” command from the main plant PLC.

When the MULTIFLO system receives a Global “Start” command, the Start-Up Sequence is initiated as described in section 1.10.1 above; this holds true for both Start-Up under normal conditions as well as for Start Up after a power failure.

When the MULTIFLO system receives a Global “Stop” command under normal conditions, the Shutdown Sequence is initiated as described in section 1.10.2 above.

1.15 HARDWIRE SIGNALS

The following electrical signals are used to communicate some information about the Multiflo trains:

Name	Type	Description	True
Start/Stop	DI	To Start/Stop the unit Remotely	Start the unit
Water Demand	DI	To require the production of water by the Multiflo	Start a production Sequence
Status - In Service	DO	Multiflo In Service Step	
Status - Alarm Active	DO	Warning or Fatal Alarm Active	

5 – ELECTRICITY AND CONTROL

5.2 – WIRING DIAGRAMS

LEFT BLANK

MAIN CONTROL PANEL
PLC-001 CONTROL PANEL
PROJECT - 5000218009

DRAFT

REV	DESCRIPTION	DATE	REVD	CHKD	APVD	ECN
1	FOR APPROVAL	2018-06-20	A.L.	A.L.	G.M.	–

CONFIDENTIALITY AND INTELLECTUAL PROPERTY NOTICE
ALL INFORMATION CONTAINED IN THIS DOCUMENT IS THE SOLE PROPERTY OF VEOLIA WATER TECHNOLOGIES CANADA INC. AND IS PROTECTED BY ALL APPLICABLE LAWS, INCLUDING BUT NOT LIMITED TO COPYRIGHT AND OTHER INTELLECTUAL PROPERTY LAWS. THE DESIGN CONCEPTS AND INFORMATION CONTAINED HEREIN ARE PROPRIETARY TO V.W.T AND ARE SUBMITTED IN CONFIDENCE. THEY ARE NOT TRANSFERABLE. THEY MUST BE USED ONLY FOR THE PURPOSE FOR WHICH THE DOCUMENT IS EXPRESSLY SUBMITTED AND NO IMPLICIT LICENCE IS GRANTED OTHERWISE BY THE SUBMISSION OF THIS DOCUMENT. THEY ARE CONFIDENTIAL AND PRIVILEGED INFORMATION OF V.W.T. AND THEY MUST NOT BE DISCLOSED, REPRODUCED, LOANED, REMITTED OR USED IN ANY OTHER MANNER WITHOUT THE EXPRESS WRITTEN CONSENT OF V.W.T. V.W.T. ASSUMES NO RESPONSIBILITY OR LIABILITY FOR THE USE OF THIS DOCUMENT OR THE DESIGN CONCEPTS AND INFORMATION CONTAINED HEREIN FOR ANOTHER PROJECT, OR IN A MANNER THAT DOES NOT RELATE TO THE FITNESS OR PURPOSE OF THIS DOCUMENT. IN NO EVENT SHALL THIS DOCUMENT OR THE DESIGN CONCEPTS AND INFORMATION CONTAINED HEREIN BE USED IN A MANNER DETRIMENTAL TO THE INTEREST OF V.W.T. ALL COPYRIGHT, PATENT AND OTHER INTELLECTUAL PROPERTY RIGHTS ARE RESERVED. ACCEPTANCE OF THE DELIVERY OF THIS DOCUMENT CONSTITUTES AGREEMENT TO THESE TERMS AND CONDITIONS.

		DATE
DESIGNER	–	–
CHECKER	–	–
ENGINEER	–	–

SCALE: None

TITLE: MAIN CONTROL PANEL PLC-001
TITLE PAGE
–

CLIENT: AEM AMARUQ
HUDSON BAY, NUNAVUT

VEOLIA
VEOLIA WATER TECHNOLOGIES CANADA INC. 4105 Sartelon, Saint-Laurent, Qc, Canada. Tel: (514) 334-7230

PROJECT DRAWING	INTERNAL	SHEET	REV
5000218009 – ELD-0001-AU-VWT	E00	01 OF 07	1

STD: "B" 11x17 | REF: CONTROLES RL – 184172 | BAR = 1" AT PLOT SCALE

Jun 20, 2018 13:57:31 – P:\CLIENTS\Veolia Waters – John Meunier\184172_5000218009 AEM Amaruq\Ingenierie\Dessins\PLC-001 CONTROL PANEL\5000218009-ELD-0001-AU-VWT-E00-01-1.dwg – a.lessard

DRAWING INDEX

DESCRIPTION	DRAWING NUMBER
MAIN CONTROL PANEL PLC-001	
TITLE PAGE	5000116065-ELD-0001-AU-VWT-E00-01
DRAWING LIST & LEGEND	5000116065-ELD-0001-AU-VWT-E00-02
OUTSIDE PANEL LAYOUT	5000116065-ELD-0001-AU-VWT-E00-03
INSIDE PANEL LAYOUT	5000116065-ELD-0001-AU-VWT-E00-04
BILL OF MATERIALS	5000116065-ELD-0001-AU-VWT-E00-05
TERMINAL DETAILS 1/2	5000116065-ELD-0001-AU-VWT-E00-06
TERMINAL DETAILS 2/2	5000116065-ELD-0001-AU-VWT-E00-07
SCHEMATIC DIAGRAM POWER DISTRIBUTION 120VAC	5000116065-ELD-0001-AU-VWT-E04-01
SCHEMATIC DIAGRAM POWER DISTRIBUTION 120VAC	5000116065-ELD-0001-AU-VWT-E04-02
SCHEMATIC DIAGRAM DISTRIBUTION 24VDC	5000116065-ELD-0001-AU-VWT-E04-03
SCHEMATIC DIAGRAM DISTRIBUTION 24VDC	5000116065-ELD-0001-AU-VWT-E04-04
PROGRAMMABLE CONTROLLER / NETWORK	5000116065-ELD-0001-AU-VWT-E04-05
ELECTRICAL SCHEMATIC DIAGRAM [RACK 01 SLOT 04]	5000116065-ELD-0001-AU-VWT-E04-06
ELECTRICAL SCHEMATIC DIAGRAM [RACK 01 SLOT 05]	5000116065-ELD-0001-AU-VWT-E04-07
ELECTRICAL SCHEMATIC DIAGRAM [RACK 01 SLOT 06]	5000116065-ELD-0001-AU-VWT-E04-08
ELECTRICAL SCHEMATIC DIAGRAM [RACK 01 SLOT 07]	5000116065-ELD-0001-AU-VWT-E04-09
ELECTRICAL SCHEMATIC DIAGRAM [RACK 01 SLOT 08]	5000116065-ELD-0001-AU-VWT-E04-10
ELECTRICAL SCHEMATIC DIAGRAM [RACK 01 SLOT 09]	5000116065-ELD-0001-AU-VWT-E04-11
ELECTRICAL SCHEMATIC DIAGRAM [RACK 01 SLOT 10]	5000116065-ELD-0001-AU-VWT-E04-12
ELECTRICAL SCHEMATIC DIAGRAM [RACK 01 SLOT 11]	5000116065-ELD-0001-AU-VWT-E04-13
ELECTRICAL SCHEMATIC DIAGRAM [RACK 02 SLOT 00]	5000116065-ELD-0001-AU-VWT-E04-14
ELECTRICAL SCHEMATIC DIAGRAM [RACK 02 SLOT 01]	5000116065-ELD-0001-AU-VWT-E04-15
ELECTRICAL SCHEMATIC DIAGRAM [RACK 02 SLOT 02]	5000116065-ELD-0001-AU-VWT-E04-16
ELECTRICAL SCHEMATIC DIAGRAM [RACK 02 SLOT 03]	5000116065-ELD-0001-AU-VWT-E04-17
ELECTRICAL SCHEMATIC DIAGRAM [RACK 02 SLOT 04]	5000116065-ELD-0001-AU-VWT-E04-18
ELECTRICAL SCHEMATIC DIAGRAM [RACK 02 SLOT 05]	5000116065-ELD-0001-AU-VWT-E04-19
ELECTRICAL SCHEMATIC DIAGRAM [RACK 02 SLOT 06]	5000116065-ELD-0001-AU-VWT-E04-20
ELECTRICAL SCHEMATIC DIAGRAM [RACK 02 SLOT 07]	5000116065-ELD-0001-AU-VWT-E04-21
ELECTRICAL SCHEMATIC DIAGRAM [RACK 02 SLOT 08]	5000116065-ELD-0001-AU-VWT-E04-22
ELECTRICAL SCHEMATIC DIAGRAM [RACK 02 SLOT 09]	5000116065-ELD-0001-AU-VWT-E04-23
ELECTRICAL SCHEMATIC DIAGRAM [RACK 02 SLOT 10]	5000116065-ELD-0001-AU-VWT-E04-24
ELECTRICAL SCHEMATIC DIAGRAM [RACK 02 SLOT 11]	5000116065-ELD-0001-AU-VWT-E04-25

COLORS AND WIRINGS GAGES

120VCA POWER	BLACK	14AWG
120VCA CONTROL	RED	14AWG
NEUTRAL	WHITE	14AWG
DRY CONTACT	YELLOW	14AWG
24VCC	BLUE[+], BLUE/WHITE[-]	16AWG[0 À 9A] 14AWG[10A & +]
GROUND	GREEN	14AWG
ISOLATED GROUND	GREEN/YELLOW	14AWG
ANALOG I/O TWISTED PAIRS	BLACK[+], WHITE[-]	18AWG
DIGITAL I/O 120VAC	RED	16AWG
DIGITAL I/O 24VCC	BLUE	16AWG
LOW VOLTAGE [12, 24, 48VCC]	BLUE	16AWG[0 À 9A] 14AWG[10A & +]
CONTROL CIRCUIT 5 TO 60VDC	BLUE[+], BLUE/WHITE[-], VERT(GND)	16AWG[0 À 9A] 14AWG[10A & +]

INSTRUMENT TAG CLIENT

*65-FIT-*693-00-01

- SEQUENTIAL
- AGNICO PID NUMBER
- AREA
- MNEMONIC
- PROJECT

* IN THE ELECTRIC DRAWING, 65 & 693 ARE NOT INDICATED

SUPPLY WIRING IDENTIFICATION

XX XX XX

- LINE NUMBER
- PAGE NUMBER
- PANEL NUMBER [IF MORE THAN ONE PANEL]
  01 – PANEL #1
  02 – PANEL #2, ...

LEGEND LIST

- PSL — LOW PRESSURE SWITCH
- PSH — HIGH PRESSURE SWITCH
- LSL — LOW LEVEL SWITCH
- LSH — HIGH LEVEL SWITCH
- LSNO — LIMIT SWITCH NO
- LSNC — LIMIT SWITCH NC
- FSL — LOW FLOW SWITCH
- FSH — HIGH FLOW SWITCH
- TSL — LOW TEMPERATURE SWITCH
- TSH — HIGH TEMPERATURE SWITCH
- OFF DELAY TIMER (NO)
- OFF DELAY TIMER (NC)
- ON DELAY TIMER (NC)
- ON DELAY TIMER (NO)
- NO — CONTACT NO
- NC — CONTACT NC
- GND — GROUND
- GND — ISOLATED GROUND
- TERMINAL OF PANEL
- TERMINAL OF OTHER PANEL
- HS — MAINTAINED TWO POSITIONS SELECTOR
- HS — MAINTENED THREE POSITIONS SELECTOR
- HS — THREE POSITIONS SELECTOR, BOTH RETURN
- HS — THREE POSITIONS SELECTOR, LEFT RETURN
- HS — THREE POSITIONS SELECTOR, RIGHT RETURN
- PBNO — PUSHBUTTON N.O.
- PBNC — PUSHBUTTON N.C.
- ES — EMEGENCY STOP PUSH BUTTON
- POT — POTENTIOMETER
- FU — FUSE
- CB — CIRCUIT BREAKER
- IL — PUSH-TO-TEST LIGHT
- IL — LIGHT
- CMR — CURRENT MONITORING RELAY
- AC / A/C — AIR CONDITIONER UNIT
- M — CONTACTOR COIL
- TR — TIMER RELAY COIL
- CR — CONTROL RELAY COIL
- MCR — MASTER CONTROL RELAY COIL
- CR — CONTROL RELAY COIL WITH SURGE SURPRESSOR
- FV — SOLENOID
- R — RESISTANCE
- HN — HORN
- F — FAN / VENTILATOR / BLOWER
- CT — CURRENT TRANSFORMER
- PC — 120VCA DUPLEX OUTLET
- AM — AMPEREMETER
- VM — VOLTMETER
- DISC — FUSED DISCONNECT SWITCH
- FU — 3PH FUSE HOLDER
- DISC — DISCONNECT SWITCH
- OL — MANUAL STARTER WITH THERMAL & MAGNETIC PROTECTION
- OL — MANUAL STARTER WITH MAGNETIC PROTECTION
- M — CONTACTOR
- OL — OVERLOAD
- TR (H1, H2, X1, X2) — TRANSFORMER
- TR (H1, H2, X1, X2, X3, X4) — MULTI-TAPS TRANSFORMER

NOTE

- INTERNAL WIRING
- VEOLIA WIRING
- CUSTOMER WIRING

REV	DESCRIPTION	DATE	DRAWN	CHKD	APVD	ECN
1	FOR APPROVAL	2018-06-20	A.L.	A.L.	G.M.	–

CONFIDENTIALITY AND INTELLECTUAL PROPERTY NOTICE
ALL INFORMATION CONTAINED IN THIS DOCUMENT IS THE SOLE PROPERTY OF VEOLIA WATER TECHNOLOGIES CANADA INC. AND IS PROTECTED BY ALL APPLICABLE LAWS, INCLUDING BUT NOT LIMITED TO COPYRIGHT AND OTHER INTELLECTUAL PROPERTY LAWS. THE DESIGN CONCEPTS AND INFORMATION CONTAINED HEREIN ARE PROPRIETARY TO V.W.T AND ARE SUBMITTED IN CONFIDENCE. THEY ARE NOT TRANSFERABLE. THEY MUST BE USED ONLY FOR THE PURPOSE FOR WHICH THE DOCUMENT IS EXPRESSLY SUBMITTED AND NO IMPLICIT LICENCE IS GRANTED OTHERWISE BY THE SUBMISSION OF THIS DOCUMENT. THEY ARE CONFIDENTIAL AND PRIVILEGED INFORMATION OF V.W.T. AND THEY MUST NOT BE DISCLOSED, REPRODUCED, LOANED, REMITTED OR USED IN ANY OTHER MANNER WITHOUT THE EXPRESS WRITTEN CONSENT OF V.W.T. V.W.T. ASSUMES NO RESPONSIBILITY OR LIABILITY FOR THE USE OF THIS DOCUMENT OR THE DESIGN CONCEPTS AND INFORMATION CONTAINED HEREIN FOR ANOTHER PROJECT, OR IN A MANNER THAT DOES NOT RELATE TO THE FITNESS OR PURPOSE OF THIS DOCUMENT. IN NO EVENT SHALL THIS DOCUMENT OR THE DESIGN CONCEPTS AND INFORMATION CONTAINED HEREIN BE USED IN A MANNER DETRIMENTAL TO THE INTEREST OF V.W.T. ALL COPYRIGHT, PATENT AND OTHER INTELLECTUAL PROPERTY RIGHTS ARE RESERVED. ACCEPTANCE OF THE DELIVERY OF THIS DOCUMENT CONSTITUTES AGREEMENT TO THESE TERMS AND CONDITIONS.

DESIGNER	–	DATE –
CHECKER	–	DATE –
ENGINEER	–	DATE –
SCALE:	None	

TITLE: MAIN CONTROL PANEL PLC-001
DRAWING LIST & LEGEND
–

CLIENT: AEM AMARUQ
HUDSON BAY, NUNAVUT

VEOLIA
VEOLIA WATER TECHNOLOGIES CANADA INC. 4105 Sartelon, Saint-Laurent, Qc, Canada, Tel: (514) 334-7230

PROJECT DRAWING	INTERNAL	SHEET	REV
5000218009 – ELD-0001-AU-VWT	E00	02 OF 07	1

STD: "B" 11x17 | REF: CONTROLES RL – 184172 | BAR = 1" AT PLOT SCALE

Jun. 20, 2018 - 13:57:34 - P:\CLIENTS\Veolia Waters - John Meunier\184172_5000218009 AEM Amaruq\Ingenierie\Dessins\PLC-001 CONTROL PANEL\5000218009-ELD-0001-AU-VWT-E00-02-1.dwg - a.lessard

NOTE:

1- SEE DIAGRAM 5000218009-ELD-0001-AU-VWT-E00-05 FOR THE REFERENCES TO THE BILL OF MATERIAL.

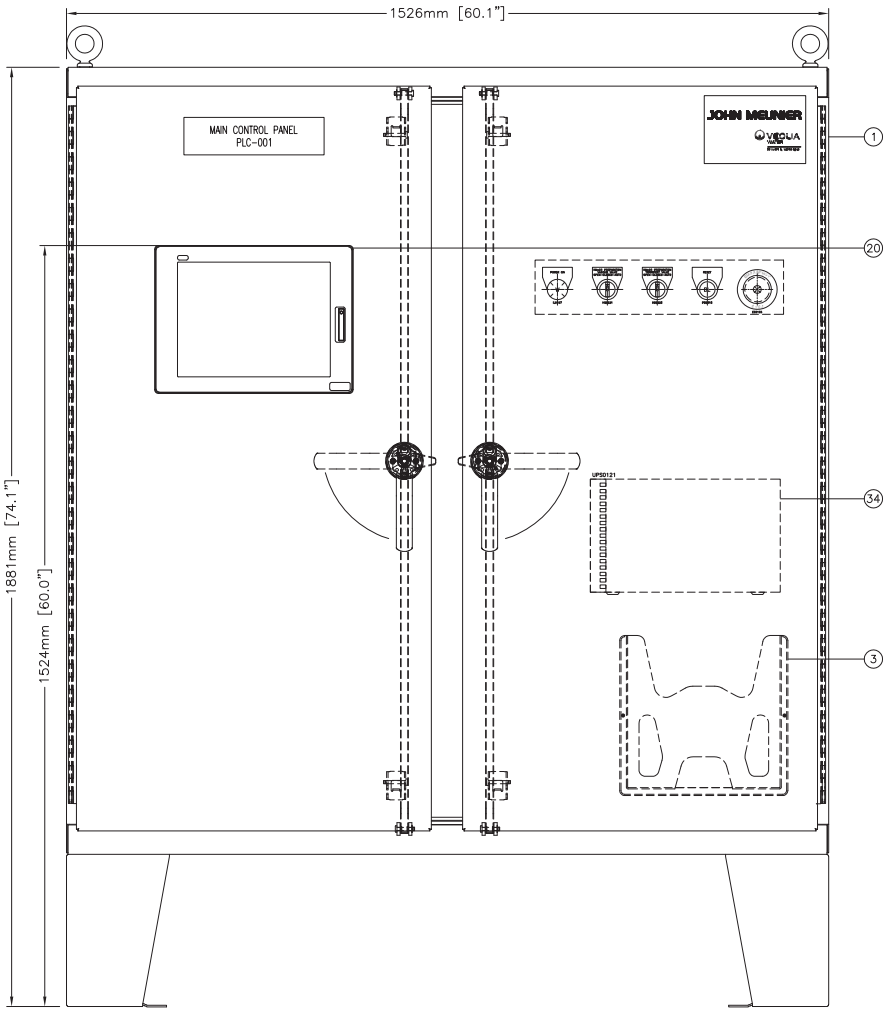

EXTERNAL LAYOUT

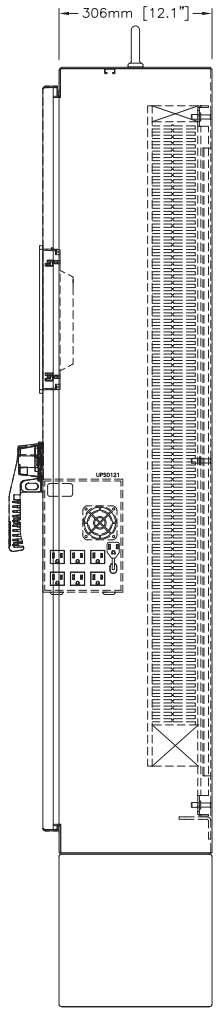

SIDE LAYOUT

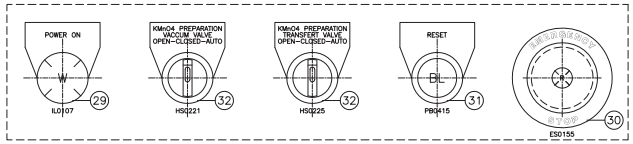

DOOR DETAILS

REV	DESCRIPTION	DATE	REVD	CHKD	APVD	ECN
1	FOR APPROVAL	2018-06-20	A.L.	A.L.	G.M.	–

CONFIDENTIALITY AND INTELLECTUAL PROPERTY NOTICE
ALL INFORMATION CONTAINED IN THIS DOCUMENT IS THE SOLE PROPERTY OF VEOLIA WATER TECHNOLOGIES CANADA INC. AND IS PROTECTED BY ALL APPLICABLE LAWS, INCLUDING BUT NOT LIMITED TO COPYRIGHT AND OTHER INTELLECTUAL PROPERTY LAWS. THE DESIGN CONCEPTS AND INFORMATION CONTAINED HEREIN ARE PROPRIETARY TO V.W.T AND ARE SUBMITTED IN CONFIDENCE. THEY ARE NOT TRANSFERABLE. THEY MUST BE USED ONLY FOR THE PURPOSE FOR WHICH THE DOCUMENT IS EXPRESSLY SUBMITTED AND NO IMPLICIT LICENCE IS GRANTED OTHERWISE BY THE SUBMISSION OF THIS DOCUMENT. THEY ARE CONFIDENTIAL AND PRIVILEGED INFORMATION OF V.W.T. AND THEY MUST NOT BE DISCLOSED, REPRODUCED, LOANED, REMITTED OR USED IN ANY OTHER MANNER WITHOUT THE EXPRESS WRITTEN CONSENT OF V.W.T. V.W.T. ASSUMES NO RESPONSIBILITY OR LIABILITY FOR THE USE OF THIS DOCUMENT OR THE DESIGN CONCEPTS AND INFORMATION CONTAINED HEREIN FOR ANOTHER PROJECT, OR IN A MANNER THAT DOES NOT RELATE TO THE FITNESS OR PURPOSE OF THIS DOCUMENT. IN NO EVENT SHALL THIS DOCUMENT OR THE DESIGN CONCEPTS AND INFORMATION CONTAINED HEREIN BE USED IN A MANNER DETRIMENTAL TO THE INTEREST OF V.W.T. ALL COPYRIGHT, PATENT AND OTHER INTELLECTUAL PROPERTY RIGHTS ARE RESERVED. ACCEPTANCE OF THE DELIVERY OF THIS DOCUMENT CONSTITUTES AGREEMENT TO THESE TERMS AND CONDITIONS.

DESIGNER –	DATE –	TITLE: MAIN CONTROL PANEL PLC-001 OUTSIDE PANEL LAYOUT –
CHECKER –	DATE –	CLIENT: AEM AMARUQ HUDSON BAY, NUNAVUT
ENGINEER –	DATE –	VEOLIA — VEOLIA WATER TECHNOLOGIES CANADA INC., 4105 Sartelon, Saint-Laurent, Qc, Canada, Tel: (514) 334-7230
SCALE: None		PROJECT DRAWING: 5000218009 – ELD-0001-AU-VWT; INTERNAL: E00; SHEET: 03 OF 07; REV: 1

BAR = 1" AT PLOT SCALE

REF: CONTROLES RL – 184172

STD: "B" 11x17

Jun 20, 2018 13:57:39 – P:\CLIENTS\Veolia Waters – John Meunier\184172_5000218009 AEM Amaruq\Ingenierie\Dessins\PLC-001 CONTROL PANEL\5000218009-ELD-0001-AU-VWT-E00-03-1.dwg – a.lessard

NOTE:

1- SEE DIAGRAM 5000218009-ELD-0001-AU-VWT-E00-05 FOR THE REFERENCES TO THE BILL OF MATERIAL.

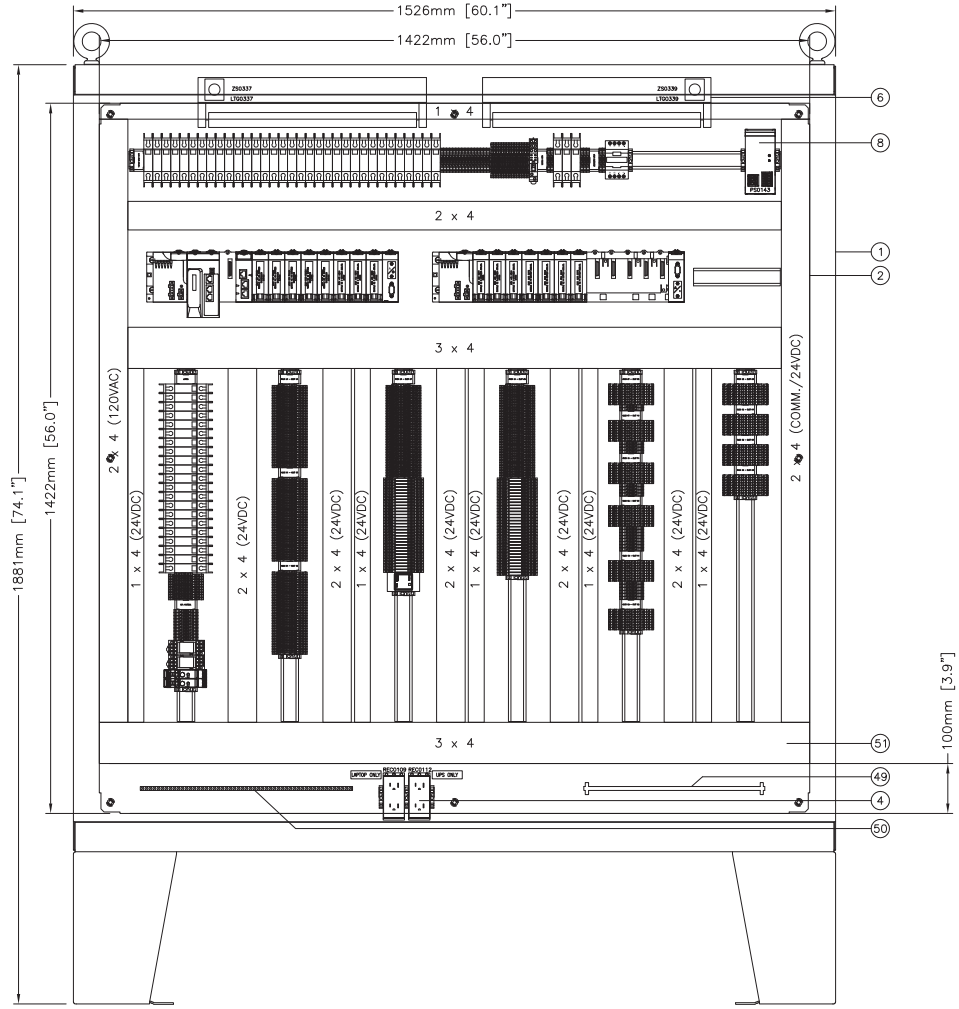

INTERNAL LAYOUT

REV	DESCRIPTION	DATE	REVD	CHKD	APVD	ECN
1	FOR APPROVAL	2018-06-20	A.L.	A.L.	G.M.	–

CONFIDENTIALITY AND INTELLECTUAL PROPERTY NOTICE
ALL INFORMATION CONTAINED IN THIS DOCUMENT IS THE SOLE PROPERTY OF VEOLIA WATER TECHNOLOGIES CANADA INC. AND IS PROTECTED BY ALL APPLICABLE LAWS, INCLUDING BUT NOT LIMITED TO COPYRIGHT AND OTHER INTELLECTUAL PROPERTY LAWS. THE DESIGN CONCEPTS AND INFORMATION CONTAINED HEREIN ARE PROPRIETARY TO V.W.T AND ARE SUBMITTED IN CONFIDENCE. THEY ARE NOT TRANSFERABLE. THEY MUST BE USED ONLY FOR THE PURPOSE FOR WHICH THE DOCUMENT IS EXPRESSLY SUBMITTED AND NO IMPLICIT LICENCE IS GRANTED OTHERWISE BY THE SUBMISSION OF THIS DOCUMENT. THEY ARE CONFIDENTIAL AND PRIVILEGED INFORMATION OF V.W.T. AND THEY MUST NOT BE DISCLOSED, REPRODUCED, LOANED, REMITTED OR USED IN ANY OTHER MANNER WITHOUT THE EXPRESS WRITTEN CONSENT OF V.W.T. V.W.T. ASSUMES NO RESPONSIBILITY OR LIABILITY FOR THE USE OF THIS DOCUMENT OR THE DESIGN CONCEPTS AND INFORMATION CONTAINED HEREIN FOR ANOTHER PROJECT, OR IN A MANNER THAT DOES NOT RELATE TO THE FITNESS OR PURPOSE OF THIS DOCUMENT. IN NO EVENT SHALL THIS DOCUMENT OR THE DESIGN CONCEPTS AND INFORMATION CONTAINED HEREIN BE USED IN A MANNER DETRIMENTAL TO THE INTEREST OF V.W.T. ALL COPYRIGHT, PATENT AND OTHER INTELLECTUAL PROPERTY RIGHTS ARE RESERVED. ACCEPTANCE OF THE DELIVERY OF THIS DOCUMENT CONSTITUTES AGREEMENT TO THESE TERMS AND CONDITIONS.

DESIGNER	DATE
–	–
CHECKER	DATE
–	–
ENGINEER	DATE
–	–
SCALE: None	

TITLE: MAIN CONTROL PANEL PLC-001
INSIDE PANEL LAYOUT
–

CLIENT: AEM AMARUQ
HUDSON BAY, NUNAVUT

VEOLIA
VEOLIA WATER TECHNOLOGIES CANADA INC, 4105 Sartelon, Saint-Laurent, Qc, Canada, Tel: (514) 334-7230

PROJECT	DRAWING	INTERNAL	SHEET	REV
5000218009 –	ELD-0001-AU-VWT	E00	04 OF 07	1

STD: "B" 11x17 | REF: CONTROLES RL – 184172 | BAR = 1" AT PLOT SCALE

Jun 20, 2018 14:09:38 – P:\CLIENTS\Veolia Waters – John Meunier\184172_5000218009 AEM Amaruq\Ingenierie\Dessins\PLC-001 CONTROL PANEL\5000218009-ELD-0001-AU-VWT-E00-04-1_E.dwg – a.lessard

BILL OF MATERIALS [BOM]

#	QTY.	DESCRIPTION	MANUFACTURER	CATALOGUE N.	REMARK
1	1	NEMA 4 PANEL, TWO DOORS, DOOR 3-POINTS LATCH DIM 1881mm[H] x 1526mm[W] x 306mm[D]	HOFFMAN	A62H6012LP3PT	–
2	1	INNER PANEL, DIM 1422mm[H] x 1422mm[W]	HOFFMAN	A60P60	–
3	1	DATA POCKET	HOFFMAN	ADP2	–
4	2	DUPLEX POWER OUTLET, 120VAC, MAX. 15A	WEIDMULLER	6720005430	–
5	A.S.R.	PLEXIGLAS PROTECTION	CONTROLES RL	–	–
6	2	FIXTURE LED, 24VDC	HOFFMAN	LED24V15	–
	2	DOOR INTERRUPTER	HOFFMAN	ALFSWD	–
7	1	ETHERNET SWITCH, 24VDC, 10 PORTS	SCHNEIDER	TCSESM103F23G0	–
8	1	POWER SUPPLY 120VAC / 24VDC, 10A	PHOENIX CONTACT	2866323	–
9	–	–	–	–	–
10	1	RACK EXTENDER MODULE (CABLE, 2 LINE TERMINATORS & MODULE)	SCHNEIDER	BMX XBE 2005	–
11	2	12-SLOT CHASSIS, MODICON M340	SCHNEIDER	BMX XBP 1200	–
12	1	ETHERNET COMM. MODULE	SCHNEIDER	BME NOC 0301	–
13	2	POWER SUPPLY M340, 100-240VAC	SCHNEIDER	BMX CPS 3500	–
14	1	M580 PROCESSOR, ETHERNET PORT MODBUS/TCP	SCHNEIDER	BME P58 2040	–
15	3/3	32 NON-ISOLATED DIGITAL INPUTS CARD, 24VDC C/W PIGTAIL CABLE	SCHNEIDER	BMX DDI 3202K BMX FCW 303	–
16	2/2	32 NON-ISOLATED DIGITAL OUTPUTS CARD, 24VDC C/W PIGTAIL CABLE	SCHNEIDER	BMX DDO 3202K BMX FCW 303	–
17	6/6	8-ISOLATED ANALOG INPUTS CARD, 24VDC C/W PIGTAIL CABLE	SCHNEIDER	BMX AMI 0800 BMX FTW 308S	–
18	4/4	8-ISOLATED ANALOG OUTPUTS CARD, 24VDC C/W PIGTAIL CABLE	SCHNEIDER	BMX AMO 0802 BMX FTW 301S	–
19	–	–	–	–	–
20	1/1	OPERATOR INTERFACE, 24VDC C/W BASE	SCHNEIDER	HMIDT732/HMIG3U	–
21	64	CONTROL RELAY SLIM 24VDC, SPDT	PHOENIX CONTACT	2966171	–
22	–	–	–	–	–
23	1	CONTROL RELAY, COIL AT 24VDC, DPDT, CONTACT RATING 15A	ALLEN BRADLEY	700-HB32Z24	–
	1	SOCKET, 11-BLADE, OPEN SCREW TERMINAL, PANEL OR DIN RAIL MOUNT	ALLEN BRADLEY	700-HN154	–
24	1	CONTROL RELAY SLIM 120VAC, SPDT C/W BASE	OMRON	G2R-1-SN-AC120 (S) P2RF-05-E	–
25	2	TIMER RELAY, COIL AT 24...48VDC/24...240VAC, SPDT, ON DELAY FUNCTION	ALLEN BRADLEY	700-FEA3TU23	–
26	1	E-STOP CONTROL RELAY, 120VAC, 4N.O.	ALLEN BRADLEY	700-CF400D	–
	1	CONTACT BLOCK 4N.O., FRONT MOUNTING	ALLEN BRADLEY	100-FA40	–
27	2	CONTROL RELAY, 24VDC, 4PDT	OMRON	MY4DC24	–
	2	RELAY BASE FOR MY4	OMRON	PYF14A-E	–
28	–	–	–	–	–
29	1	PILOT LIGHT OPERATOR, WHITE, 12 ... 130VAC/VDC, 30.5mm	ALLEN BRADLEY	800T-QH2W	–
30	1	ILLUMINATED E-STOP RED PUSH-BUTTON, 1N.O./1N.C., 12 ... 130VAC/VDC, 30.5mm	ALLEN BRADLEY	800T-FXQH2RA	–
31	1	MOMENTARY PUSH BUTTON, NON-ILLUMINATED, FLUSH, COLOR BLUE, 2N.O., 30.5mm	ALLEN BRADLEY	800T-A7D1	–
	1	CONTACT BLOCK 1N.O.	ALLEN BRADLEY	800T-XD1	–
32	1	3-POSITIONS MAINTAINED SELECTOR, 30.5mm	ALLEN BRADLEY	800T-J2KC1B	–
33	–	–	–	–	–

BILL OF MATERIALS [BOM]

#	QTY.	DESCRIPTION	MANUFACTURER	CATALOGUE N.	REMARK
34	1	UPS 120VAC, 1000VA	POWERWARE	PW9130L1000T-XL	–
35	–	–	–	–	–
36	47	"BRANCH PROOF" BREAKER, 2A, 1 POLE, 120VAC/24VDC	SCHNEIDER	60103	–
37	3	"BRANCH PROOF" BREAKER, 3A, 1 POLE, 120VAC/24VDC	SCHNEIDER	60104	–
38	2	"BRANCH PROOF" BREAKER, 4A, 1 POLE, 120VAC/24VDC	SCHNEIDER	60105	–
39	1	"BRANCH PROOF" BREAKER, 30A, 1 POLE, 120VAC/24VDC	SCHNEIDER	60115	–
40	1	"BRANCH PROOF" BREAKER, 6A, 1 POLE, 120VAC/24VDC	SCHNEIDER	60107	–
41	2	"BRANCH PROOF" BREAKER, 10A, 1 POLE, 120VAC/24VDC	SCHNEIDER	60110	–
42	1	"BRANCH PROOF" BREAKER, 15A, 1 POLE, 120VAC/24VDC	SCHNEIDER	60112	–
43	20	IDENTIFICATION TERMINAL UBE/D	PHOENIX CONTACT	0800307	–
44	58/10	SIMPLE TERMINAL BLOCK, UT 4 EN C/W END PLATE	PHOENIX CONTACT	3044102/3047028	–
45	194/7	DOUBLE TERMINAL BLOCK, UTTB 2,5 C/W END PLATE	PHOENIX CONTACT	3044636/3047293	–
46	80/10	TRIPLE TERMINAL BLOCK, UT 2.5-3L C/W END PLATE	PHOENIX CONTACT	3214259/3214314	–
47	A.S.R.	END BARRIER, E/NS 35 N	PHOENIX CONTACT	0800886	–
48	–	–	–	–	–
49	1	ISOLATED GROUND BAR	WEIDMULLER	–	–
50	1	NON-ISOLATED GROUND BAR	ILSCO	N-174	–
51	A.S.R.	WIRING DUCT [1 x 4, 2 x 4, 3 x 4]	PANDUIT	–	–

NOTES:

1. COMPONENTS NUMBERS MAY CHANGE ACCORDING TO THE REAL MOTORS FLA.
2. PANEL CERTIFIED CSA.

REV	DESCRIPTION	DATE	REVD	CHKD	APVD	ECN
1	FOR APPROVAL	2018-06-20	A.L.	A.L.	G.M.	–

CONFIDENTIALITY AND INTELLECTUAL PROPERTY NOTICE
ALL INFORMATION CONTAINED IN THIS DOCUMENT IS THE SOLE PROPERTY OF VEOLIA WATER TECHNOLOGIES CANADA INC. AND IS PROTECTED BY ALL APPLICABLE LAWS, INCLUDING BUT NOT LIMITED TO COPYRIGHT AND OTHER INTELLECTUAL PROPERTY LAWS. THE DESIGN CONCEPTS AND INFORMATION CONTAINED HEREIN ARE PROPRIETARY TO V.W.T AND ARE SUBMITTED IN CONFIDENCE. THEY ARE NOT TRANSFERABLE. THEY MUST BE USED ONLY FOR THE PURPOSE FOR WHICH THE DOCUMENT IS EXPRESSLY SUBMITTED AND NO IMPLICIT LICENCE IS GRANTED OTHERWISE BY THE SUBMISSION OF THIS DOCUMENT. THEY ARE CONFIDENTIAL AND PRIVILEGED INFORMATION OF V.W.T. AND THEY MUST NOT BE DISCLOSED, REPRODUCED, LOANED, REMITTED OR USED IN ANY OTHER MANNER WITHOUT THE EXPRESS WRITTEN CONSENT OF V.W.T. V.W.T. ASSUMES NO RESPONSIBILITY OR LIABILITY FOR THE USE OF THIS DOCUMENT OR THE DESIGN CONCEPTS AND INFORMATION CONTAINED HEREIN FOR ANOTHER PROJECT, OR IN A MANNER THAT DOES NOT RELATE TO THE FITNESS OR PURPOSE OF THIS DOCUMENT. IN NO EVENT SHALL THIS DOCUMENT OR THE DESIGN CONCEPTS AND INFORMATION CONTAINED HEREIN BE USED IN A MANNER DETRIMENTAL TO THE INTEREST OF V.W.T. ALL COPYRIGHT, PATENT AND OTHER INTELLECTUAL PROPERTY RIGHTS ARE RESERVED. ACCEPTANCE OF THE DELIVERY OF THIS DOCUMENT CONSTITUTES AGREEMENT TO THESE TERMS AND CONDITIONS.

DESIGNER	–	DATE –
CHECKER	–	DATE –
ENGINEER	–	DATE –
SCALE:	None	

TITLE: MAIN CONTROL PANEL PLC-001
BILL OF MATERIALS
–

CLIENT: AEM AMARUQ
HUDSON BAY, NUNAVUT

VEOLIA
VEOLIA WATER TECHNOLOGIES CANADA INC., 4105 Sartelon, Saint-Laurent, Qc, Canada, Tel: (514) 334-7230

PROJECT DRAWING	INTERNAL	SHEET	REV
5000218009 – ELD-0001-AU-VWT	E00	05 OF 07	1

BAR = 1" AT PLOT SCALE
REF: CONTROLES RL – 184172
STD: "B" 11x17

Jun. 20, 2018 13:57:49 – P:\CLIENTS\Veolia Waters – John Meunier\184172_5000218009 AEM Amaruq\Ingenierie\Dessins\PLC-001 CONTROL PANEL\5000218009-ELD-0001-AU-VWT-E00-05-1.dwg – a.lessard

NOTE:

1- SEE DIAGRAM 5000218009-ELD-0001-AU-VWT-E00-05 FOR THE REFERENCES TO THE BILL OF MATERIAL.

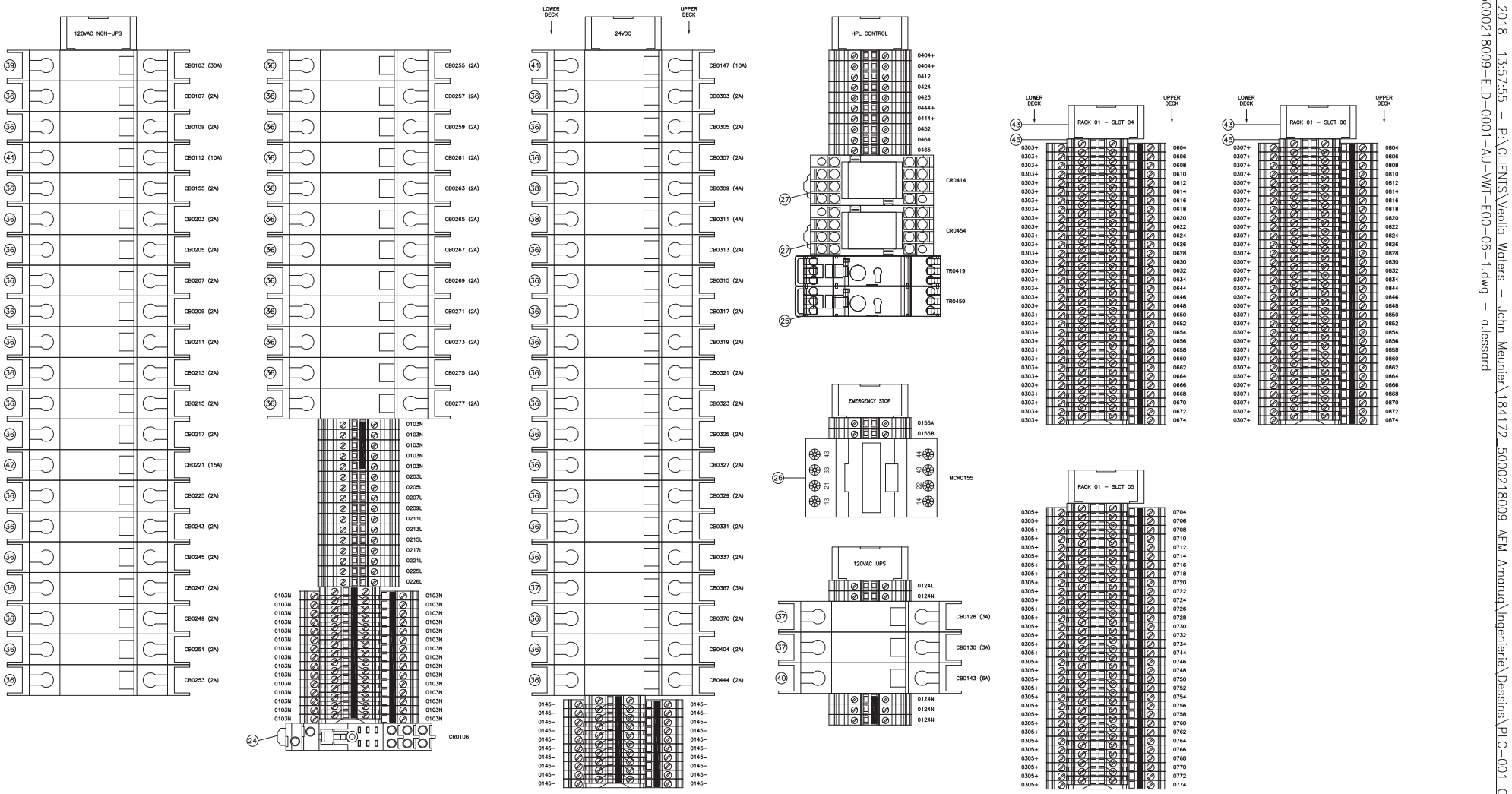

CONFIDENTIALITY AND INTELLECTUAL PROPERTY NOTICE
ALL INFORMATION CONTAINED IN THIS DOCUMENT IS THE SOLE PROPERTY OF VEOLIA WATER TECHNOLOGIES CANADA INC. AND IS PROTECTED BY ALL APPLICABLE LAWS, INCLUDING BUT NOT LIMITED TO COPYRIGHT AND OTHER INTELLECTUAL PROPERTY LAWS. THE DESIGN CONCEPTS AND INFORMATION CONTAINED HEREIN ARE PROPRIETARY TO V.W.T AND ARE SUBMITTED IN CONFIDENCE. THEY ARE NOT TRANSFERABLE. THEY MUST BE USED ONLY FOR THE PURPOSE FOR WHICH THE DOCUMENT IS EXPRESSLY SUBMITTED AND NO IMPLICIT LICENCE IS GRANTED OTHERWISE BY THE SUBMISSION OF THIS DOCUMENT. THEY ARE CONFIDENTIAL AND PRIVILEGED INFORMATION OF V.W.T. AND THEY MUST NOT BE DISCLOSED, REPRODUCED, LOANED, REMITTED OR USED IN ANY OTHER MANNER WITHOUT THE EXPRESS WRITTEN CONSENT OF V.W.T. V.W.T. ASSUMES NO RESPONSIBILITY OR LIABILITY FOR THE USE OF THIS DOCUMENT OR THE DESIGN CONCEPTS AND INFORMATION CONTAINED HEREIN FOR ANOTHER PROJECT, OR IN A MANNER THAT DOES NOT RELATE TO THE FITNESS OR PURPOSE OF THIS DOCUMENT. IN NO EVENT SHALL THIS DOCUMENT OR THE DESIGN CONCEPTS AND INFORMATION CONTAINED HEREIN BE USED IN A MANNER DETRIMENTAL TO THE INTEREST OF V.W.T. ALL COPYRIGHT, PATENT AND OTHER INTELLECTUAL PROPERTY RIGHTS ARE RESERVED. ACCEPTANCE OF THE DELIVERY OF THIS DOCUMENT CONSTITUTES AGREEMENT TO THESE TERMS AND CONDITIONS.

REV	DESCRIPTION	DATE	REVD	CHKD	APVD	ECN
1	FOR APPROVAL	2018-06-20	A.L.	A.L.	G.M.	–

DESIGNER	DATE
–	–
CHECKER	DATE
–	–
ENGINEER	DATE
–	–
SCALE:	None

TITLE: MAIN CONTROL PANEL PLC-001
TERMINAL DETAILS 1/2
–

CLIENT: AEM AMARUQ
HUDSON BAY, NUNAVUT

VEOLIA
VEOLIA WATER TECHNOLOGIES CANADA INC. 4105 Sartelon, Saint-Laurent, Qc, Canada, Tel: (514) 334-7230

PROJECT DRAWING	INTERNAL	SHEET	REV
5000218009 – ELD-0001-AU-VWT	E00	06 OF 07	1

STD: "B" 11x17 | REF: CONTROLES RL – 184172 | BAR = 1" AT PLOT SCALE

Jun 20, 2018 13:57:55 – P:\CLIENTS\Veolia Waters – John Meunier\184172_5000218009 AEM Amaruq\Ingenierie\Dessins\PLC-001 CONTROL PANEL\5000218009-ELD-0001-AU-VWT-E00-06-1.dwg – a.lessard

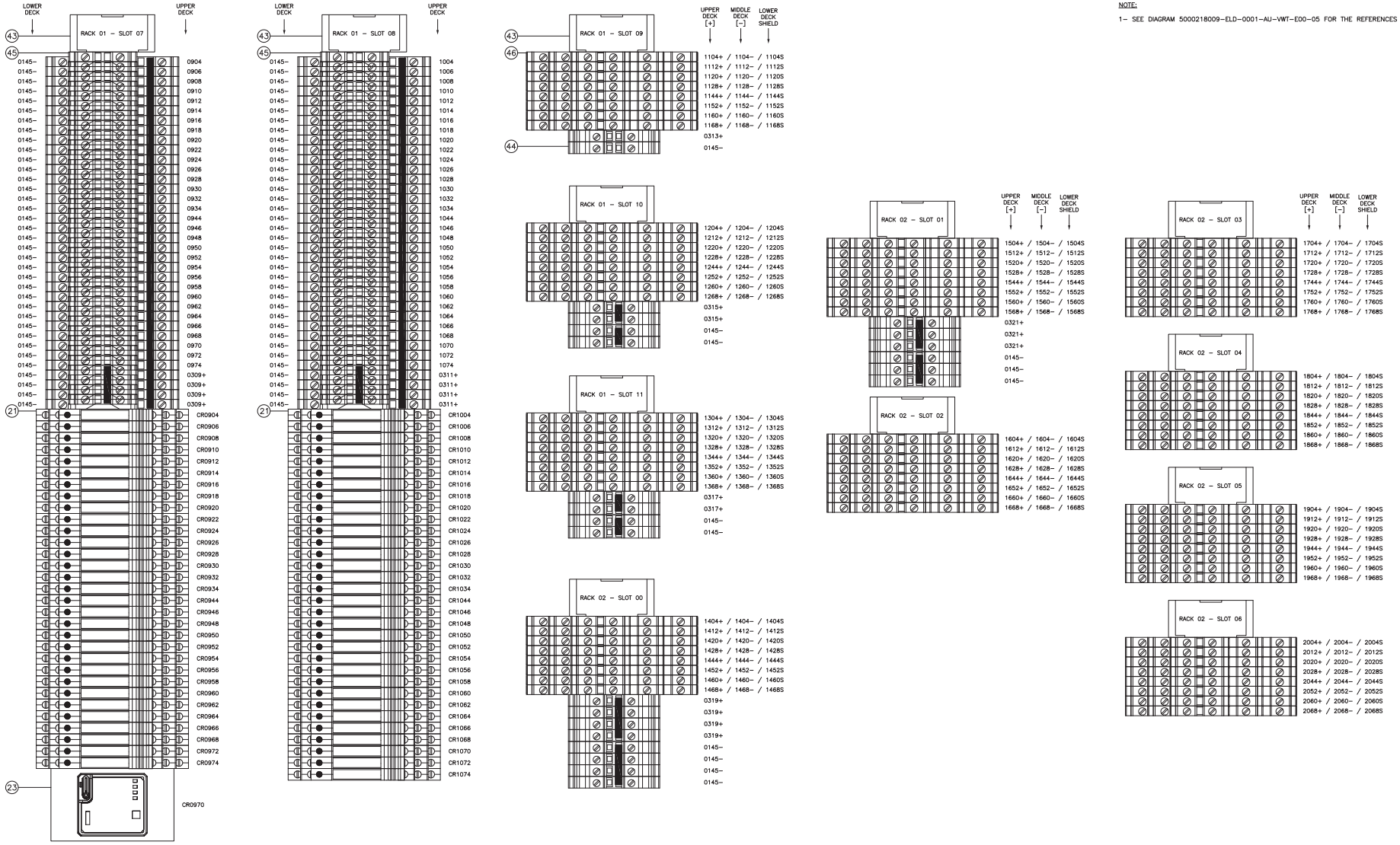

NOTE:

1– SEE DIAGRAM 5000218009–ELD–0001–AU–VWT–E00–05 FOR THE REFERENCES TO THE BILL OF MATERIAL.

REV	DESCRIPTION	DATE	REVD	CHKD	APVD	ECN
1	FOR APPROVAL	2018–06–20	A.L.	A.L.	G.M.	–

CONFIDENTIALITY AND INTELLECTUAL PROPERTY NOTICE

ALL INFORMATION CONTAINED IN THIS DOCUMENT IS THE SOLE PROPERTY OF VEOLIA WATER TECHNOLOGIES CANADA INC. AND IS PROTECTED BY ALL APPLICABLE LAWS, INCLUDING BUT NOT LIMITED TO COPYRIGHT AND OTHER INTELLECTUAL PROPERTY LAWS. THE DESIGN CONCEPTS AND INFORMATION CONTAINED HEREIN ARE PROPRIETARY TO V.W.T AND ARE SUBMITTED IN CONFIDENCE. THEY ARE NOT TRANSFERABLE. THEY MUST BE USED ONLY FOR THE PURPOSE FOR WHICH THE DOCUMENT IS EXPRESSLY SUBMITTED AND NO IMPLICIT LICENCE IS GRANTED OTHERWISE BY THE SUBMISSION OF THIS DOCUMENT. THEY ARE CONFIDENTIAL AND PRIVILEGED INFORMATION OF V.W.T. AND THEY MUST NOT BE DISCLOSED, REPRODUCED, LOANED, REMITTED OR USED IN ANY OTHER MANNER WITHOUT THE EXPRESS WRITTEN CONSENT OF V.W.T. V.W.T. ASSUMES NO RESPONSIBILITY OR LIABILITY FOR THE USE OF THIS DOCUMENT OR THE DESIGN CONCEPTS AND INFORMATION CONTAINED HEREIN FOR ANOTHER PROJECT, OR IN A MANNER THAT DOES NOT RELATE TO THE FITNESS OR PURPOSE OF THIS DOCUMENT. IN NO EVENT SHALL THIS DOCUMENT OR THE DESIGN CONCEPTS AND INFORMATION CONTAINED HEREIN BE USED IN A MANNER DETRIMENTAL TO THE INTEREST OF V.W.T. ALL COPYRIGHT, PATENT AND OTHER INTELLECTUAL PROPERTY RIGHTS ARE RESERVED. ACCEPTANCE OF THE DELIVERY OF THIS DOCUMENT CONSTITUTES AGREEMENT TO THESE TERMS AND CONDITIONS.

		DATE
DESIGNER	–	–
CHECKER	–	–
ENGINEER	–	–
SCALE:	None	

TITLE: MAIN CONTROL PANEL PLC–001
TERMINAL DETAILS 2/2
–

CLIENT: AEM AMARUQ
HUDSON BAY, NUNAVUT

VEOLIA

VEOLIA WATER TECHNOLOGIES CANADA INC., 4105 Sartelon, Saint-Laurent, Qc, Canada, Tel: (514) 334-7230

PROJECT DRAWING	INTERNAL	SHEET	REV
5000218009 – ELD–0001–AU–VWT	E00	07 OF 07	1

STD: "B" 11x17 | REF: CONTROLES RL – 184172 | BAR = 1" AT PLOT SCALE

Jun. 20, 2018 13:58:00 – P:\CLIENTS\Veolia Waters – John Meunier\184172_5000218009 AEM Amaruq\Ingenierie\Dessins\PLC-001 CONTROL PANEL\5000218009-ELD-0001-AU-VWT-E00-07-1.dwg – a.lessard

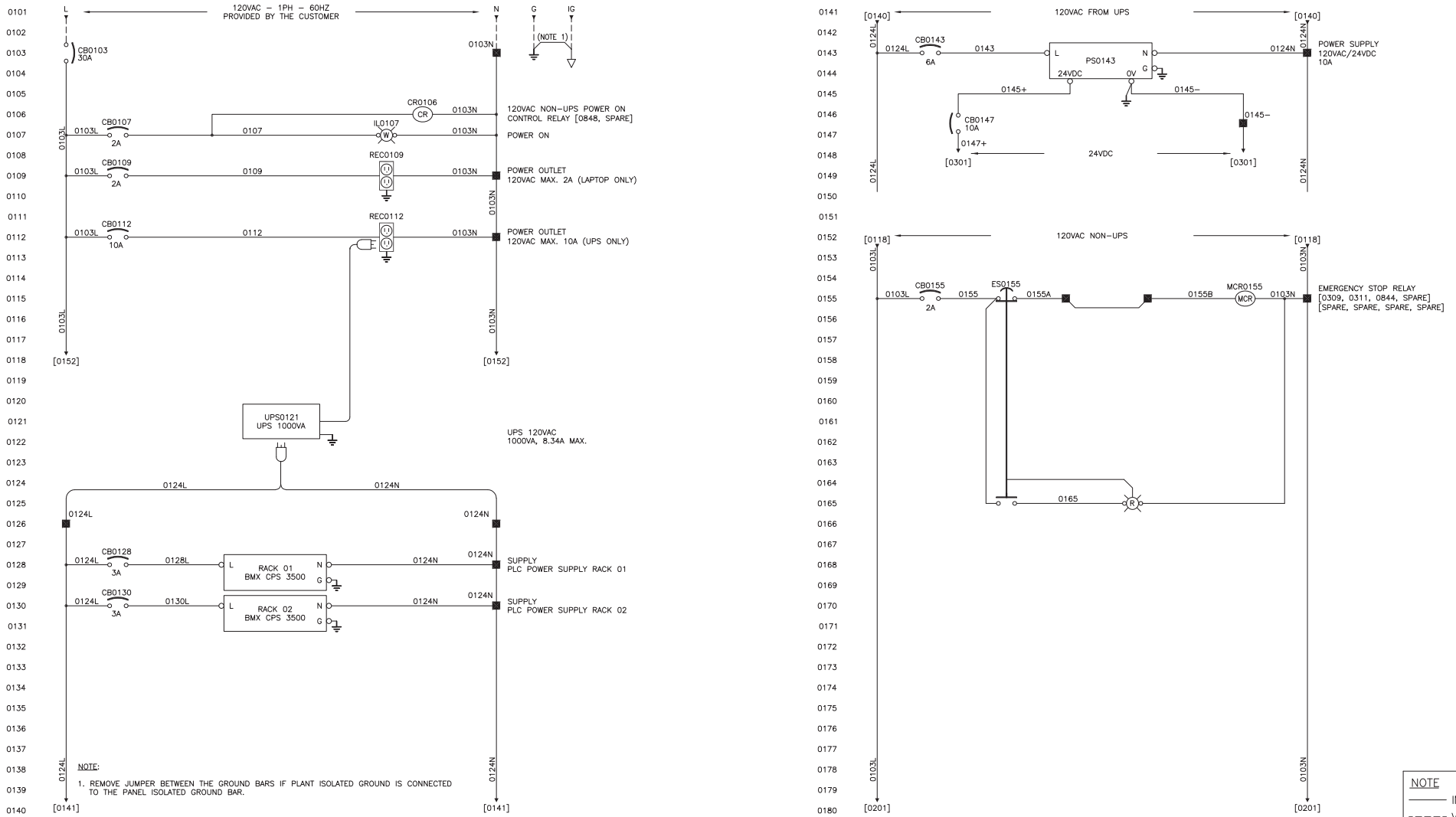

NOTE
INTERNAL WIRING
VEOLIA WIRING
CUSTOMER WIRING

REV	DESCRIPTION	DATE	REVD	CHKD	APVD	ECN
1	FOR APPROVAL	2018-06-20	A.L.	A.L.	G.M.	–

CONFIDENTIALITY AND INTELLECTUAL PROPERTY NOTICE
ALL INFORMATION CONTAINED IN THIS DOCUMENT IS THE SOLE PROPERTY OF VEOLIA WATER TECHNOLOGIES CANADA INC. AND IS PROTECTED BY ALL APPLICABLE LAWS, INCLUDING BUT NOT LIMITED TO COPYRIGHT AND OTHER INTELLECTUAL PROPERTY LAWS. THE DESIGN CONCEPTS AND INFORMATION CONTAINED HEREIN ARE PROPRIETARY TO V.W.T AND ARE SUBMITTED IN CONFIDENCE. THEY ARE NOT TRANSFERABLE. THEY MUST BE USED ONLY FOR THE PURPOSE FOR WHICH THE DOCUMENT IS EXPRESSLY SUBMITTED AND NO IMPLICIT LICENCE IS GRANTED OTHERWISE BY THE SUBMISSION OF THIS DOCUMENT. THEY ARE CONFIDENTIAL AND PRIVILEGED INFORMATION OF V.W.T. AND THEY MUST NOT BE DISCLOSED, REPRODUCED, LOANED, REMITTED OR USED IN ANY OTHER MANNER WITHOUT THE EXPRESS WRITTEN CONSENT OF V.W.T. V.W.T. ASSUMES NO RESPONSIBILITY OR LIABILITY FOR THE USE OF THIS DOCUMENT OR THE DESIGN CONCEPTS AND INFORMATION CONTAINED HEREIN FOR ANOTHER PROJECT, OR IN A MANNER THAT DOES NOT RELATE TO THE FITNESS OR PURPOSE OF THIS DOCUMENT. IN NO EVENT SHALL THIS DOCUMENT OR THE DESIGN CONCEPTS AND INFORMATION CONTAINED HEREIN BE USED IN A MANNER DETRIMENTAL TO THE INTEREST OF V.W.T. ALL COPYRIGHT, PATENT AND OTHER INTELLECTUAL PROPERTY RIGHTS ARE RESERVED. ACCEPTANCE OF THE DELIVERY OF THIS DOCUMENT CONSTITUTES AGREEMENT TO THESE TERMS AND CONDITIONS.

DESIGNER	–	–
CHECKER	–	–
ENGINEER	–	–
SCALE:	None	

TITLE: MAIN CONTROL PANEL PLC-001
SCHEMATIC DIAGRAM POWER DISTRIBUTION 120VAC
–

CLIENT: AEM AMARUQ
HUDSON BAY, NUNAVUT

VEOLIA
VEOLIA WATER TECHNOLOGIES CANADA INC. 4105 Sartelon, Saint-Laurent, Qc, Canada, Tel: (514) 334-7230

PROJECT DRAWING	INTERNAL	SHEET	REV
5000218009 – ELD-0001-AU-VWT	E04	01 OF 25	1

STD: "B" 11x17
REF: CONTROLES RL – 184172
BAR = 1" AT PLOT SCALE

Jun 20, 2018 13:58:05 – P:\CLIENTS\Veolia Waters – John Meunier\184172_5000218009 AEM Amaruq\Ingenierie\Dessins\PLC-001 CONTROL PANEL\5000218009-ELD-0001-AU-VWT-E04-01-1.dwg – a.lessard

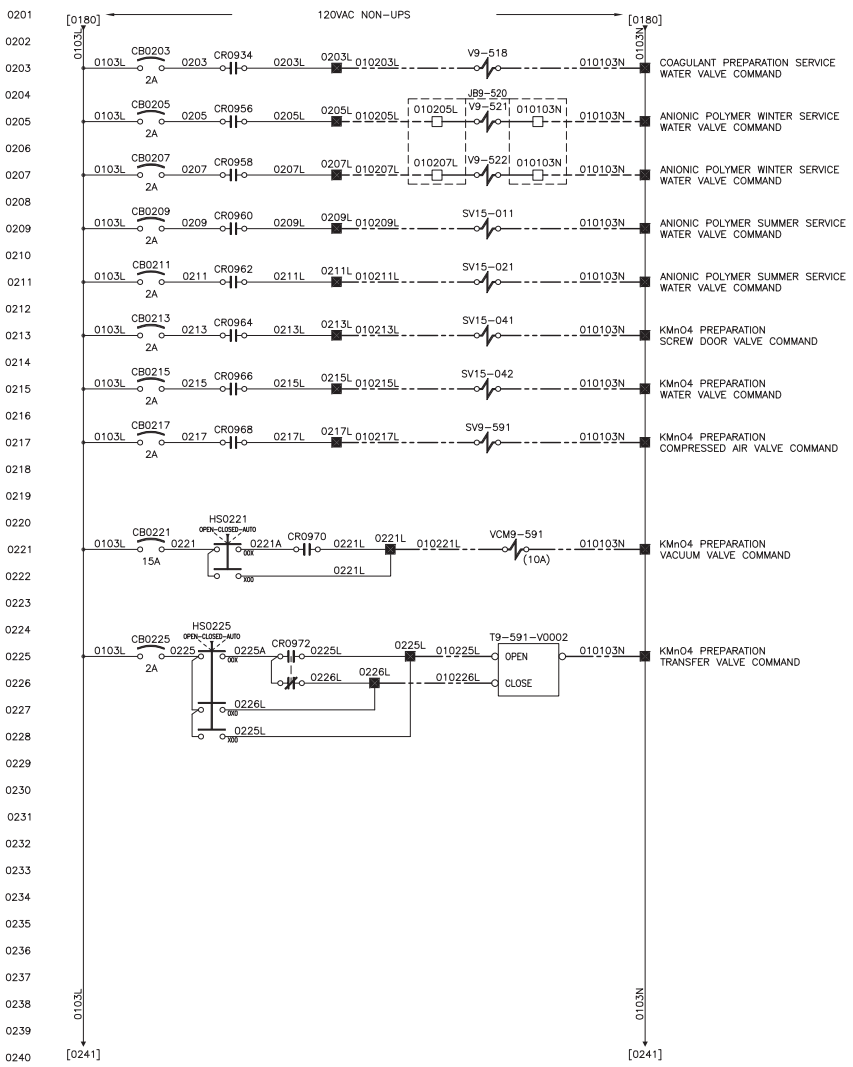

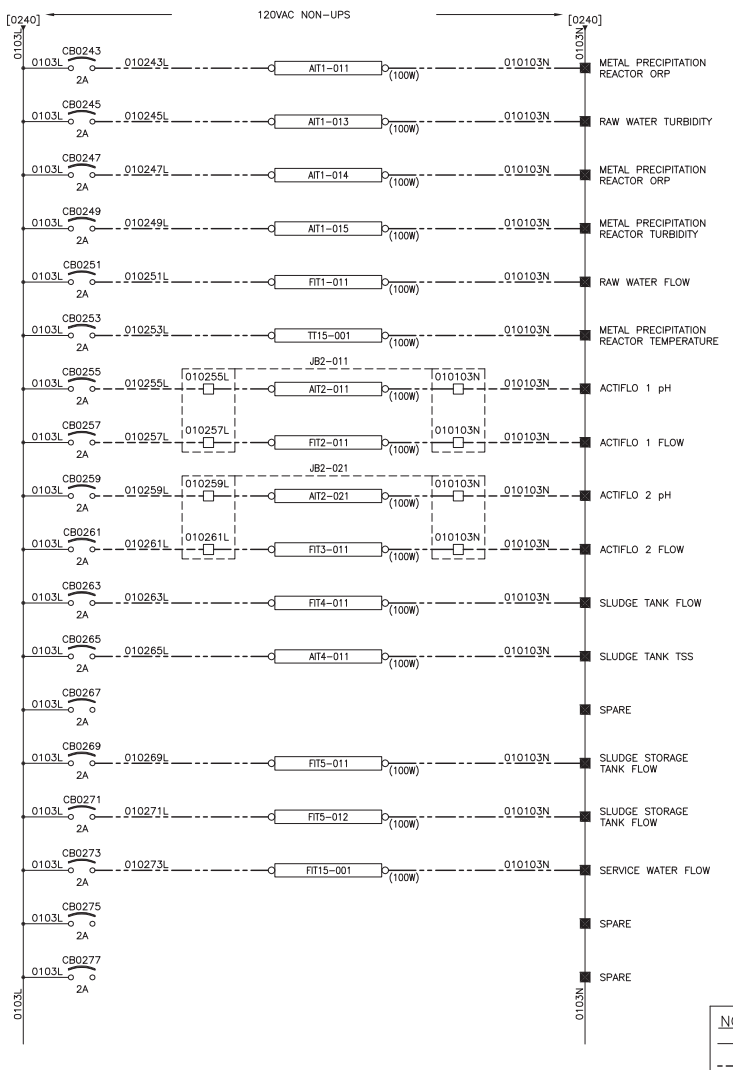

NOTE
——— INTERNAL WIRING
- - - - - VEOLIA WIRING
—·—·— CUSTOMER WIRING

REV	DESCRIPTION	DATE	REVD	CHKD	APVD	ECN
1	FOR APPROVAL	2018-06-20	A.L.	A.L.	G.M.	–

CONFIDENTIALITY AND INTELLECTUAL PROPERTY NOTICE
ALL INFORMATION CONTAINED IN THIS DOCUMENT IS THE SOLE PROPERTY OF VEOLIA WATER TECHNOLOGIES CANADA INC. AND IS PROTECTED BY ALL APPLICABLE LAWS, INCLUDING BUT NOT LIMITED TO COPYRIGHT AND OTHER INTELLECTUAL PROPERTY LAWS. THE DESIGN CONCEPTS AND INFORMATION CONTAINED HEREIN ARE PROPRIETARY TO V.W.T AND ARE SUBMITTED IN CONFIDENCE. THEY ARE NOT TRANSFERABLE. THEY MUST BE USED ONLY FOR THE PURPOSE FOR WHICH THE DOCUMENT IS EXPRESSLY SUBMITTED AND NO IMPLICIT LICENCE IS GRANTED OTHERWISE BY THE SUBMISSION OF THIS DOCUMENT. THEY ARE CONFIDENTIAL AND PRIVILEGED INFORMATION OF V.W.T. AND THEY MUST NOT BE DISCLOSED, REPRODUCED, LOANED, REMITTED OR USED IN ANY OTHER MANNER WITHOUT THE EXPRESS WRITTEN CONSENT OF V.W.T. V.W.T. ASSUMES NO RESPONSIBILITY OR LIABILITY FOR THE USE OF THIS DOCUMENT OR THE DESIGN CONCEPTS AND INFORMATION CONTAINED HEREIN FOR ANOTHER PROJECT, OR IN A MANNER THAT DOES NOT RELATE TO THE FITNESS OR PURPOSE OF THIS DOCUMENT. IN NO EVENT SHALL THIS DOCUMENT OR THE DESIGN CONCEPTS AND INFORMATION CONTAINED HEREIN BE USED IN A MANNER DETRIMENTAL TO THE INTEREST OF V.W.T. ALL COPYRIGHT, PATENT AND OTHER INTELLECTUAL PROPERTY RIGHTS ARE RESERVED. ACCEPTANCE OF THE DELIVERY OF THIS DOCUMENT CONSTITUTES AGREEMENT TO THESE TERMS AND CONDITIONS.

DESIGNER	–	DATE –
CHECKER	–	DATE –
ENGINEER	–	DATE –
SCALE:	None	

TITLE
MAIN CONTROL PANEL PLC-001
SCHEMATIC DIAGRAM POWER DISTRIBUTION 120VAC
–

CLIENT
AEM AMARUQ
HUDSON BAY, NUNAVUT

VEOLIA
VEOLIA WATER TECHNOLOGIES CANADA INC. 4105 Sartelon, Saint-Laurent, Qc, Canada, Tél: (514) 334-7230

PROJECT DRAWING	INTERNAL	SHEET	REV
5000218009 – ELD-0001-AU-VWT	E04	02 OF 25	1

STD: "B" 11x17 | REF: CONTROLES RL – 184172 | BAR = 1" AT PLOT SCALE

Jun 20, 2018 13:58:10 – P:\CLIENTS\Veolia Waters – John Meunier\184172_5000218009 AEM Amaruq\Ingenierie\Dessins\PLC-001 CONTROL PANEL\5000218009-ELD-0001-AU-VWT-E04-02-1.dwg – a.lessard

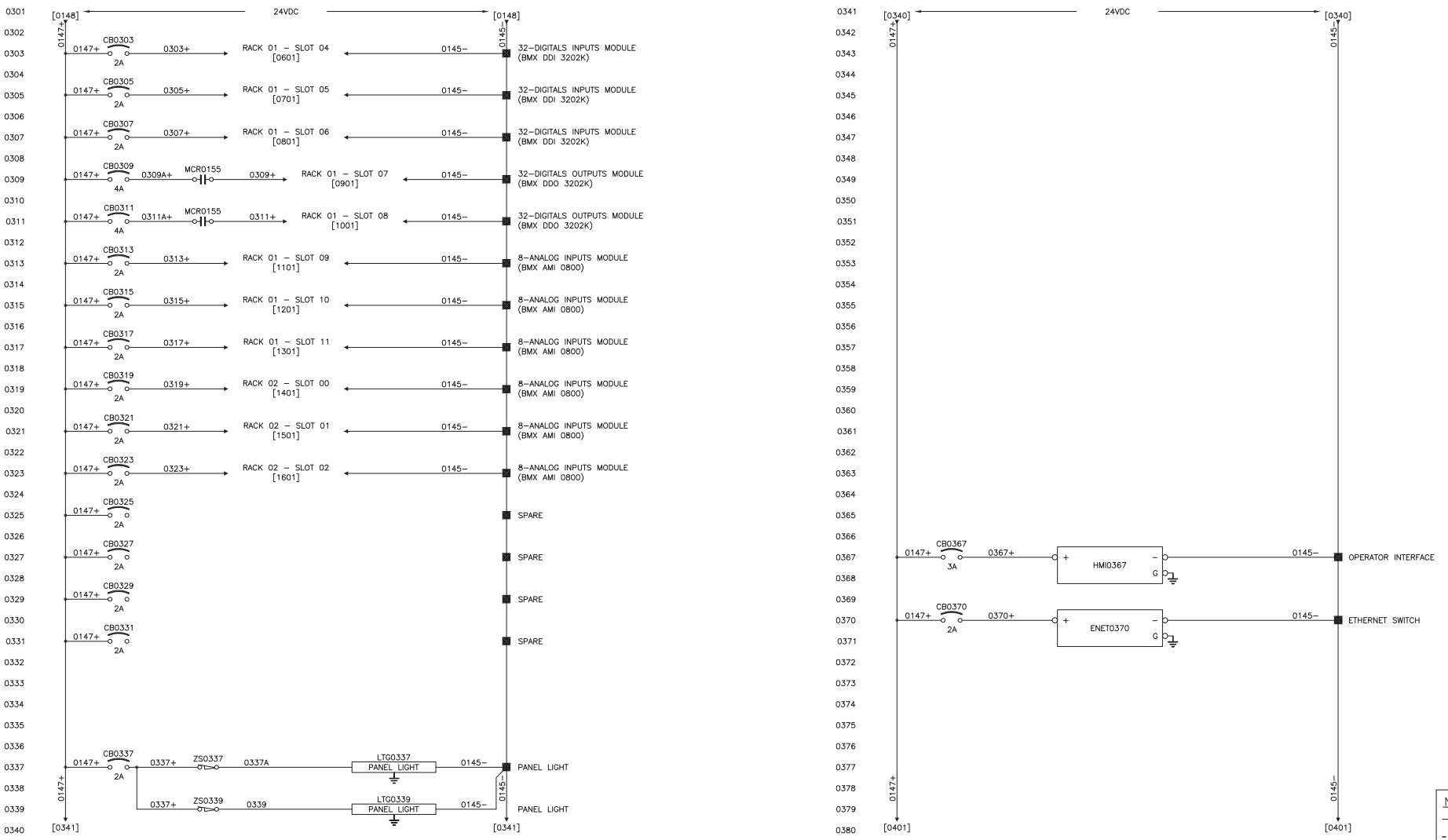

NOTE
INTERNAL WIRING
VEOLIA WIRING
CUSTOMER WIRING

REV	DESCRIPTION	DATE	REVD	CHKD	APVD	ECN
1	FOR APPROVAL	2018–06–20	A.L.	A.L.	G.M.	–

CONFIDENTIALITY AND INTELLECTUAL PROPERTY NOTICE
ALL INFORMATION CONTAINED IN THIS DOCUMENT IS THE SOLE PROPERTY OF VEOLIA WATER TECHNOLOGIES CANADA INC. AND IS PROTECTED BY ALL APPLICABLE LAWS, INCLUDING BUT NOT LIMITED TO COPYRIGHT AND OTHER INTELLECTUAL PROPERTY LAWS. THE DESIGN CONCEPTS AND INFORMATION CONTAINED HEREIN ARE PROPRIETARY TO V.W.T AND ARE SUBMITTED IN CONFIDENCE. THEY ARE NOT TRANSFERABLE. THEY MUST BE USED ONLY FOR THE PURPOSE FOR WHICH THE DOCUMENT IS EXPRESSLY SUBMITTED AND NO IMPLICIT LICENCE IS GRANTED OTHERWISE BY THE SUBMISSION OF THIS DOCUMENT. THEY ARE CONFIDENTIAL AND PRIVILEGED INFORMATION OF V.W.T. AND THEY MUST NOT BE DISCLOSED, REPRODUCED, LOANED, REMITTED OR USED IN ANY OTHER MANNER WITHOUT THE EXPRESS WRITTEN CONSENT OF V.W.T. V.W.T. ASSUMES NO RESPONSIBILITY OR LIABILITY FOR THE USE OF THIS DOCUMENT OR THE DESIGN CONCEPTS AND INFORMATION CONTAINED HEREIN FOR ANOTHER PROJECT, OR IN A MANNER THAT DOES NOT RELATE TO THE FITNESS OR PURPOSE OF THIS DOCUMENT. IN NO EVENT SHALL THIS DOCUMENT OR THE DESIGN CONCEPTS AND INFORMATION CONTAINED HEREIN BE USED IN A MANNER DETRIMENTAL TO THE INTEREST OF V.W.T. ALL COPYRIGHT, PATENT AND OTHER INTELLECTUAL PROPERTY RIGHTS ARE RESERVED. ACCEPTANCE OF THE DELIVERY OF THIS DOCUMENT CONSTITUTES AGREEMENT TO THESE TERMS AND CONDITIONS.

DESIGNER	–	DATE –
CHECKER	–	DATE –
ENGINEER	–	DATE –
SCALE:	None	

TITLE: MAIN CONTROL PANEL PLC–001
SCHEMATIC DIAGRAM DISTRIBUTION 24VDC
–

CLIENT: AEM AMARUQ
HUDSON BAY, NUNAVUT

VEOLIA
VEOLIA WATER TECHNOLOGIES CANADA INC. 4105 Sartelon, Saint-Laurent, Qc, Canada, Tel: (514) 334-7230

PROJECT DRAWING	INTERNAL	SHEET	REV
5000218009 – ELD–0001–AU–VWT	E04	03 OF 25	1

STD: "B" 11x17 | REF: CONTROLES RL – 184172 | BAR = 1" AT PLOT SCALE

Jun 20, 2018 13:58:15 – P:\CLIENTS\Veolia Waters – John Meunier\184172_5000218009 AEM Amaruq\Ingenierie\Dessins\PLC–001 CONTROL PANEL\5000218009–ELD–0001–AU–VWT–E04–03–1.dwg – a.lessard

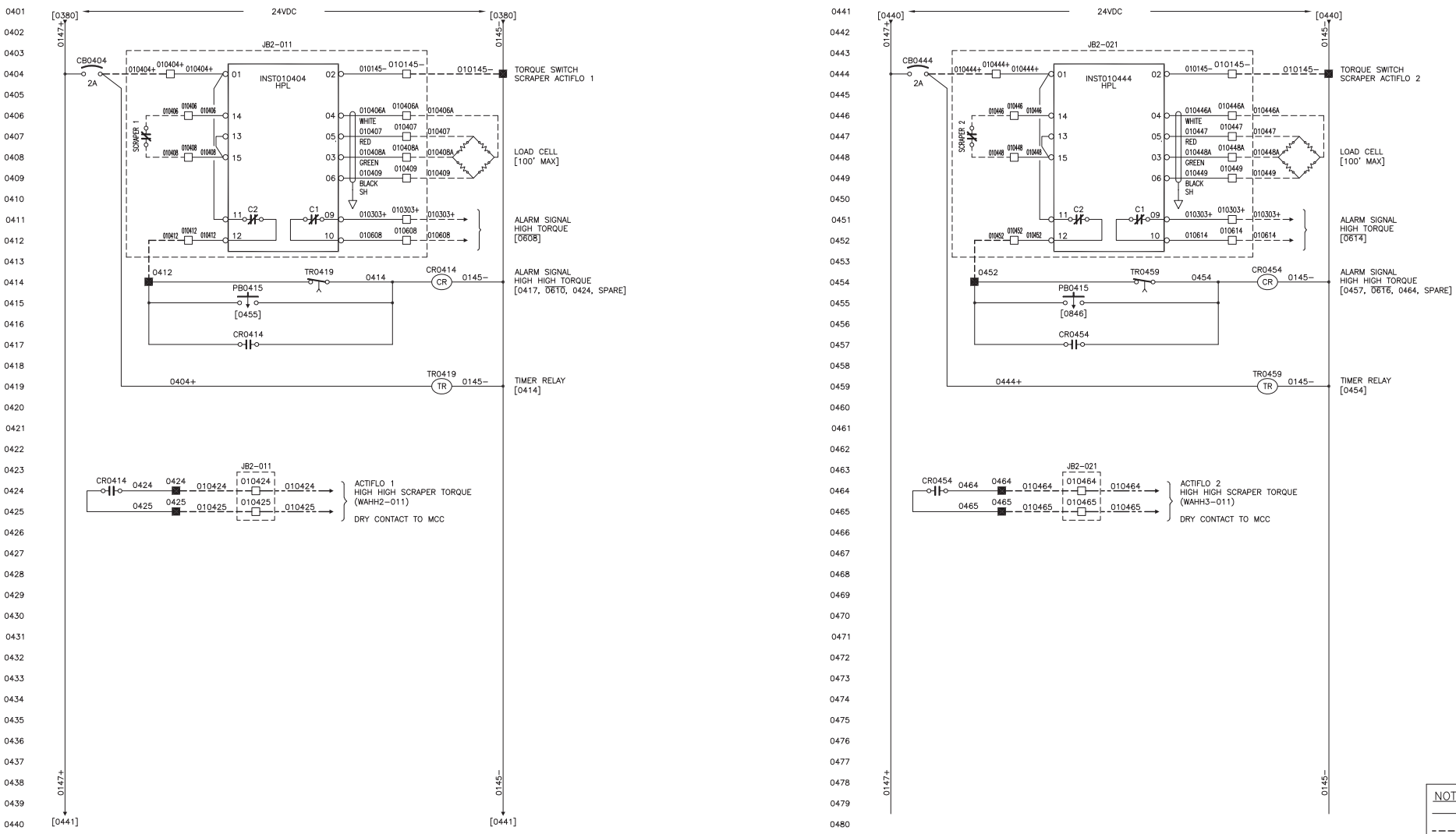

NOTE

——— INTERNAL WIRING

- - - - - VEOLIA WIRING

—·—·— CUSTOMER WIRING

REV	DESCRIPTION	DATE	REVD	CHKD	APVD	ECN
1	FOR APPROVAL	2018-06-20	A.L.	A.L.	G.M.	–

CONFIDENTIALITY AND INTELLECTUAL PROPERTY NOTICE

ALL INFORMATION CONTAINED IN THIS DOCUMENT IS THE SOLE PROPERTY OF VEOLIA WATER TECHNOLOGIES CANADA INC. AND IS PROTECTED BY ALL APPLICABLE LAWS, INCLUDING BUT NOT LIMITED TO COPYRIGHT AND OTHER INTELLECTUAL PROPERTY LAWS. THE DESIGN CONCEPTS AND INFORMATION CONTAINED HEREIN ARE PROPRIETARY TO V.W.T AND ARE SUBMITTED IN CONFIDENCE. THEY ARE NOT TRANSFERABLE. THEY MUST BE USED ONLY FOR THE PURPOSE FOR WHICH THE DOCUMENT IS EXPRESSLY SUBMITTED AND NO IMPLICIT LICENCE IS GRANTED OTHERWISE BY THE SUBMISSION OF THIS DOCUMENT. THEY ARE CONFIDENTIAL AND PRIVILEGED INFORMATION OF V.W.T. AND THEY MUST NOT BE DISCLOSED, REPRODUCED, LOANED, REMITTED OR USED IN ANY OTHER MANNER WITHOUT THE EXPRESS WRITTEN CONSENT OF V.W.T. V.W.T. ASSUMES NO RESPONSIBILITY OR LIABILITY FOR THE USE OF THIS DOCUMENT OR THE DESIGN CONCEPTS AND INFORMATION CONTAINED HEREIN FOR ANOTHER PROJECT, OR IN A MANNER THAT DOES NOT RELATE TO THE FITNESS OR PURPOSE OF THIS DOCUMENT. IN NO EVENT SHALL THIS DOCUMENT OR THE DESIGN CONCEPTS AND INFORMATION CONTAINED HEREIN BE USED IN A MANNER DETRIMENTAL TO THE INTEREST OF V.W.T. ALL COPYRIGHT, PATENT AND OTHER INTELLECTUAL PROPERTY RIGHTS ARE RESERVED. ACCEPTANCE OF THE DELIVERY OF THIS DOCUMENT CONSTITUTES AGREEMENT TO THESE TERMS AND CONDITIONS.

DESIGNER	–	DATE –
CHECKER	–	DATE –
ENGINEER	–	DATE –
SCALE:	None	

TITLE: MAIN CONTROL PANEL PLC-001
SCHEMATIC DIAGRAM DISTRIBUTION 24VDC
–

CLIENT: AEM AMARUQ
HUDSON BAY, NUNAVUT

VEOLIA
VEOLIA WATER TECHNOLOGIES CANADA INC. 4105 Sartelon, Saint-Laurent, Qc, Canada, Tel: (514) 334-7230

PROJECT DRAWING	INTERNAL	SHEET	REV
5000218009 – ELD-0001-AU-VWT	E04	04 OF 25	1

STD: "B" 11x17 | REF: CONTROLES RL – 184172 | BAR = 1" AT PLOT SCALE

Jun 20, 2018 13:58:20 – P:\CLIENTS\Veolia Waters – John Meunier\184172_5000218009 AEM Amaruq\Ingenierie\Dessins\PLC-001 CONTROL PANEL\5000218009-ELD-0001-AU-VWT-E04-04-1.dwg – a.lessard

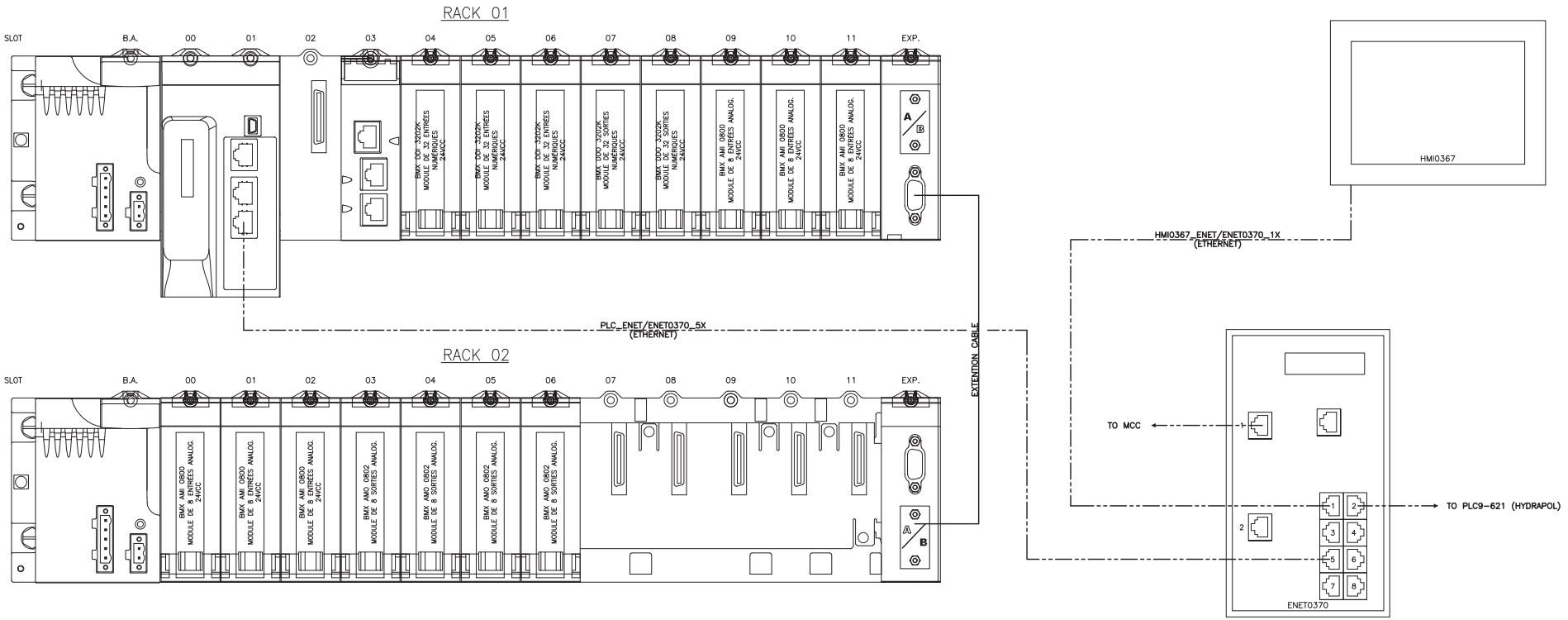

RACK 01

SLOT 04, SEE DRAWING 5000218009-ELD-0001-AU-VWT-E04-06
SLOT 05, SEE DRAWING 5000218009-ELD-0001-AU-VWT-E04-07
SLOT 06, SEE DRAWING 5000218009-ELD-0001-AU-VWT-E04-08
SLOT 07, SEE DRAWING 5000218009-ELD-0001-AU-VWT-E04-09
SLOT 08, SEE DRAWING 5000218009-ELD-0001-AU-VWT-E04-10
SLOT 09, SEE DRAWING 5000218009-ELD-0001-AU-VWT-E04-11
SLOT 10, SEE DRAWING 5000218009-ELD-0001-AU-VWT-E04-12
SLOT 11, SEE DRAWING 5000218009-ELD-0001-AU-VWT-E04-13

RACK 02

SLOT 00, SEE DRAWING 5000218009-ELD-0001-AU-VWT-E04-14
SLOT 01, SEE DRAWING 5000218009-ELD-0001-AU-VWT-E04-15
SLOT 02, SEE DRAWING 5000218009-ELD-0001-AU-VWT-E04-16
SLOT 03, SEE DRAWING 5000218009-ELD-0001-AU-VWT-E04-17
SLOT 04, SEE DRAWING 5000218009-ELD-0001-AU-VWT-E04-18
SLOT 05, SEE DRAWING 5000218009-ELD-0001-AU-VWT-E04-19
SLOT 06, SEE DRAWING 5000218009-ELD-0001-AU-VWT-E04-20
SLOT 07, SEE DRAWING 5000218009-ELD-0001-AU-VWT-E04-21
SLOT 08, SEE DRAWING 5000218009-ELD-0001-AU-VWT-E04-22
SLOT 09, SEE DRAWING 5000218009-ELD-0001-AU-VWT-E04-23
SLOT 10, SEE DRAWING 5000218009-ELD-0001-AU-VWT-E04-24
SLOT 11, SEE DRAWING 5000218009-ELD-0001-AU-VWT-E04-25

NOTE
——— INTERNAL WIRING
- - - - - VEOLIA WIRING
—·—·— CUSTOMER WIRING

REV	DESCRIPTION	DATE	REVD	CHKD	APVD	ECN
1	FOR APPROVAL	2018-06-20	A.L.	A.L.	G.M.	–

CONFIDENTIALITY AND INTELLECTUAL PROPERTY NOTICE
ALL INFORMATION CONTAINED IN THIS DOCUMENT IS THE SOLE PROPERTY OF VEOLIA WATER TECHNOLOGIES CANADA INC. AND IS PROTECTED BY ALL APPLICABLE LAWS, INCLUDING BUT NOT LIMITED TO COPYRIGHT AND OTHER INTELLECTUAL PROPERTY LAWS. THE DESIGN CONCEPTS AND INFORMATION CONTAINED HEREIN ARE PROPRIETARY TO V.W.T AND ARE SUBMITTED IN CONFIDENCE. THEY ARE NOT TRANSFERABLE. THEY MUST BE USED ONLY FOR THE PURPOSE FOR WHICH THE DOCUMENT IS EXPRESSLY SUBMITTED AND NO IMPLICIT LICENCE IS GRANTED OTHERWISE BY THE SUBMISSION OF THIS DOCUMENT. THEY ARE CONFIDENTIAL AND PRIVILEGED INFORMATION OF V.W.T. AND THEY MUST NOT BE DISCLOSED, REPRODUCED, LOANED, REMITTED OR USED IN ANY OTHER MANNER WITHOUT THE EXPRESS WRITTEN CONSENT OF V.W.T. V.W.T. ASSUMES NO RESPONSIBILITY OR LIABILITY FOR THE USE OF THIS DOCUMENT OR THE DESIGN CONCEPTS AND INFORMATION CONTAINED HEREIN FOR ANOTHER PROJECT, OR IN A MANNER THAT DOES NOT RELATE TO THE FITNESS OR PURPOSE OF THIS DOCUMENT. IN NO EVENT SHALL THIS DOCUMENT OR THE DESIGN CONCEPTS AND INFORMATION CONTAINED HEREIN BE USED IN A MANNER DETRIMENTAL TO THE INTEREST OF V.W.T. ALL COPYRIGHT, PATENT AND OTHER INTELLECTUAL PROPERTY RIGHTS ARE RESERVED. ACCEPTANCE OF THE DELIVERY OF THIS DOCUMENT CONSTITUTES AGREEMENT TO THESE TERMS AND CONDITIONS.

DESIGNER	–	DATE –
CHECKER	–	DATE –
ENGINEER	–	DATE –
SCALE:	None	

TITLE: MAIN CONTROL PANEL PLC-001
PROGRAMMABLE CONTROLLER / NETWORK
–

CLIENT: AEM AMARUQ
HUDSON BAY, NUNAVUT

VEOLIA
VEOLIA WATER TECHNOLOGIES CANADA INC. 4105 Sartelon, Saint-Laurent, Qc, Canada, Tel: (514) 334-7230

PROJECT DRAWING	INTERNAL	SHEET	REV
5000218009 – ELD-0001-AU-VWT	E04	05 OF 25	1

Jun 20, 2018 13:58:25 – P:\CLIENTS\Veolia Waters – John Meunier\184172_5000218009 AEM Amaruq\Ingenierie\Dessins\PLC-001 CONTROL PANEL\5000218009-ELD-0001-AU-VWT-E04-05-1.dwg – a.lessard
REF: CONTROLES RL – 184172
BAR = 1" AT PLOT SCALE
STD: "B" 11x17

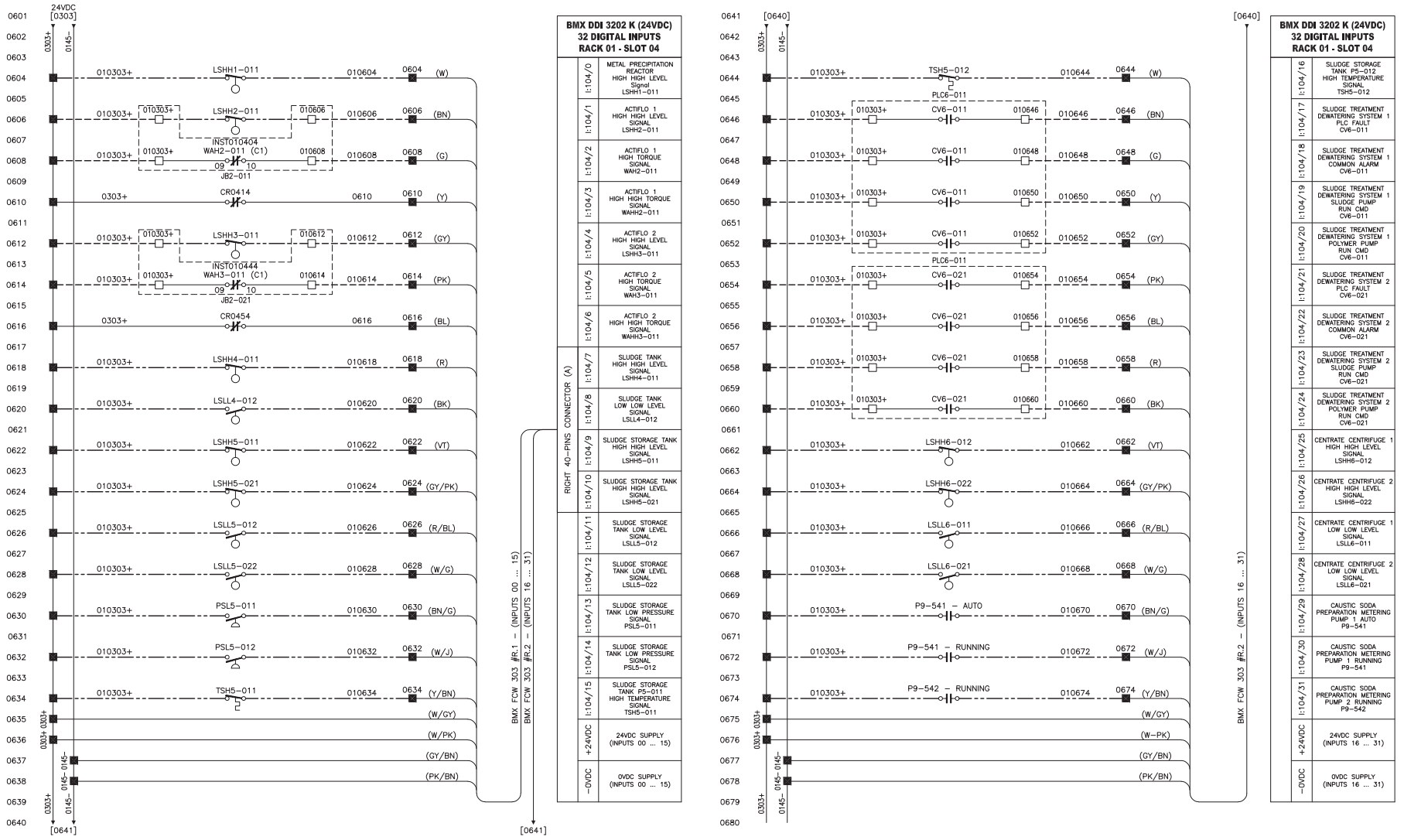

BMX DDI 3202 K (24VDC) 32 DIGITAL INPUTS RACK 01 - SLOT 04		
RIGHT 40-PINS CONNECTOR (A)	I:104/0	METAL PRECIPITATION REACTOR HIGH HIGH LEVEL Signal LSHH1-011
	I:104/1	ACTIFLO 1 HIGH HIGH LEVEL SIGNAL LSHH2-011
	I:104/2	ACTIFLO 1 HIGH TORQUE SIGNAL WAH2-011
	I:104/3	ACTIFLO 1 HIGH HIGH TORQUE SIGNAL WAHH2-011
	I:104/4	ACTIFLO 2 HIGH HIGH LEVEL SIGNAL LSHH3-011
	I:104/5	ACTIFLO 2 HIGH TORQUE SIGNAL WAH3-011
	I:104/6	ACTIFLO 2 HIGH HIGH TORQUE SIGNAL WAHH3-011
	I:104/7	SLUDGE TANK HIGH HIGH LEVEL SIGNAL LSHH4-011
	I:104/8	SLUDGE TANK LOW LOW LEVEL SIGNAL LSLL4-012
	I:104/9	SLUDGE STORAGE TANK HIGH HIGH LEVEL SIGNAL LSHH5-011
	I:104/10	SLUDGE STORAGE TANK HIGH HIGH LEVEL SIGNAL LSHH5-021
	I:104/11	SLUDGE STORAGE TANK LOW LEVEL SIGNAL LSLL5-012
	I:104/12	SLUDGE STORAGE TANK LOW LEVEL SIGNAL LSLL5-022
	I:104/13	SLUDGE STORAGE TANK LOW PRESSURE SIGNAL PSL5-011
	I:104/14	SLUDGE STORAGE TANK LOW PRESSURE SIGNAL PSL5-012
	I:104/15	SLUDGE STORAGE TANK P5-011 HIGH TEMPERATURE SIGNAL TSH5-011
	+24VDC	24VDC SUPPLY (INPUTS 00 ... 15)
	-0VDC	0VDC SUPPLY (INPUTS 00 ... 15)

BMX DDI 3202 K (24VDC) 32 DIGITAL INPUTS RACK 01 - SLOT 04		
	I:104/16	SLUDGE STORAGE TANK P5-012 HIGH TEMPERATURE SIGNAL TSH5-012
	I:104/17	SLUDGE TREATMENT DEWATERING SYSTEM 1 PLC FAULT CV6-011
	I:104/18	SLUDGE TREATMENT DEWATERING SYSTEM 1 COMMON ALARM CV6-011
	I:104/19	SLUDGE TREATMENT DEWATERING SYSTEM 1 SLUDGE PUMP RUN CMD CV6-011
	I:104/20	SLUDGE TREATMENT DEWATERING SYSTEM 1 POLYMER PUMP RUN CMD CV6-011
	I:104/21	SLUDGE TREATMENT DEWATERING SYSTEM 2 PLC FAULT CV6-021
	I:104/22	SLUDGE TREATMENT DEWATERING SYSTEM 2 COMMON ALARM CV6-021
	I:104/23	SLUDGE TREATMENT DEWATERING SYSTEM 2 SLUDGE PUMP RUN CMD CV6-021
	I:104/24	SLUDGE TREATMENT DEWATERING SYSTEM 2 POLYMER PUMP RUN CMD CV6-021
	I:104/25	CENTRATE CENTRIFUGE 1 HIGH HIGH LEVEL SIGNAL LSHH6-012
	I:104/26	CENTRATE CENTRIFUGE 2 HIGH HIGH LEVEL SIGNAL LSHH6-022
	I:104/27	CENTRATE CENTRIFUGE 1 LOW LOW LEVEL SIGNAL LSLL6-011
	I:104/28	CENTRATE CENTRIFUGE 2 LOW LOW LEVEL SIGNAL LSLL6-021
	I:104/29	CAUSTIC SODA PREPARATION METERING PUMP 1 AUTO P9-541
	I:104/30	CAUSTIC SODA PREPARATION METERING PUMP 1 RUNNING P9-541
	I:104/31	CAUSTIC SODA PREPARATION METERING PUMP 2 RUNNING P9-542
	+24VDC	24VDC SUPPLY (INPUTS 16 ... 31)
	-0VDC	0VDC SUPPLY (INPUTS 16 ... 31)

NOTE
——— INTERNAL WIRING
- - - - - VEOLIA WIRING
—·— CUSTOMER WIRING

REV	DESCRIPTION	DATE	REVD	CHKD	APVD	ECN
1	FOR APPROVAL	2018-06-20	A.L.	A.L.	G.M.	–

CONFIDENTIALITY AND INTELLECTUAL PROPERTY NOTICE
ALL INFORMATION CONTAINED IN THIS DOCUMENT IS THE SOLE PROPERTY OF VEOLIA WATER TECHNOLOGIES CANADA INC. AND IS PROTECTED BY ALL APPLICABLE LAWS, INCLUDING BUT NOT LIMITED TO COPYRIGHT AND OTHER INTELLECTUAL PROPERTY LAWS. THE DESIGN CONCEPTS AND INFORMATION CONTAINED HEREIN ARE PROPRIETARY TO V.W.T AND ARE SUBMITTED IN CONFIDENCE. THEY ARE NOT TRANSFERABLE. THEY MUST BE USED ONLY FOR THE PURPOSE FOR WHICH THE DOCUMENT IS EXPRESSLY SUBMITTED AND NO IMPLICIT LICENCE IS GRANTED OTHERWISE BY THE SUBMISSION OF THIS DOCUMENT. THEY ARE CONFIDENTIAL AND PRIVILEGED INFORMATION OF V.W.T. AND THEY MUST NOT BE DISCLOSED, REPRODUCED, LOANED, REMITTED OR USED IN ANY OTHER MANNER WITHOUT THE EXPRESS WRITTEN CONSENT OF V.W.T. V.W.T. ASSUMES NO RESPONSIBILITY OR LIABILITY FOR THE USE OF THIS DOCUMENT OR THE DESIGN CONCEPTS AND INFORMATION CONTAINED HEREIN FOR ANOTHER PROJECT, OR IN A MANNER THAT DOES NOT RELATE TO THE FITNESS OR PURPOSE OF THIS DOCUMENT. IN NO EVENT SHALL THIS DOCUMENT OR THE DESIGN CONCEPTS AND INFORMATION CONTAINED HEREIN BE USED IN A MANNER DETRIMENTAL TO THE INTEREST OF V.W.T. ALL COPYRIGHT, PATENT AND OTHER INTELLECTUAL PROPERTY RIGHTS ARE RESERVED. ACCEPTANCE OF THE DELIVERY OF THIS DOCUMENT CONSTITUTES AGREEMENT TO THESE TERMS AND CONDITIONS.

DESIGNER	–	DATE –
CHECKER	–	DATE –
ENGINEER	–	DATE –
SCALE:	None	

TITLE: MAIN CONTROL PANEL PLC-001
ELECTRICAL SCHEMATIC DIAGRAM [RACK 01 SLOT 04]
–

CLIENT: AEM AMARUQ
HUDSON BAY, NUNAVUT

VEOLIA
VEOLIA WATER TECHNOLOGIES CANADA INC. 4105 Sartelon, Saint-Laurent, Qc, Canada, Tel: (514) 334-7230

PROJECT DRAWING	INTERNAL	SHEET	REV
5000218009 – ELD-0001-AU-VWT	E04	06 OF 25	1

STD: "B" 11x17 | REF: CONTROLES RL – 184172 | BAR = 1" AT PLOT SCALE

Jun. 20, 2018 13:58:30 – P:\CLIENTS\Veolia Waters – John Meunier\184172_5000218009 AEM Amaruq\Ingenierie\Dessins\PLC-001 CONTROL PANEL\5000218009-ELD-0001-AU-VWT-E04-06-1.dwg – a.lessard

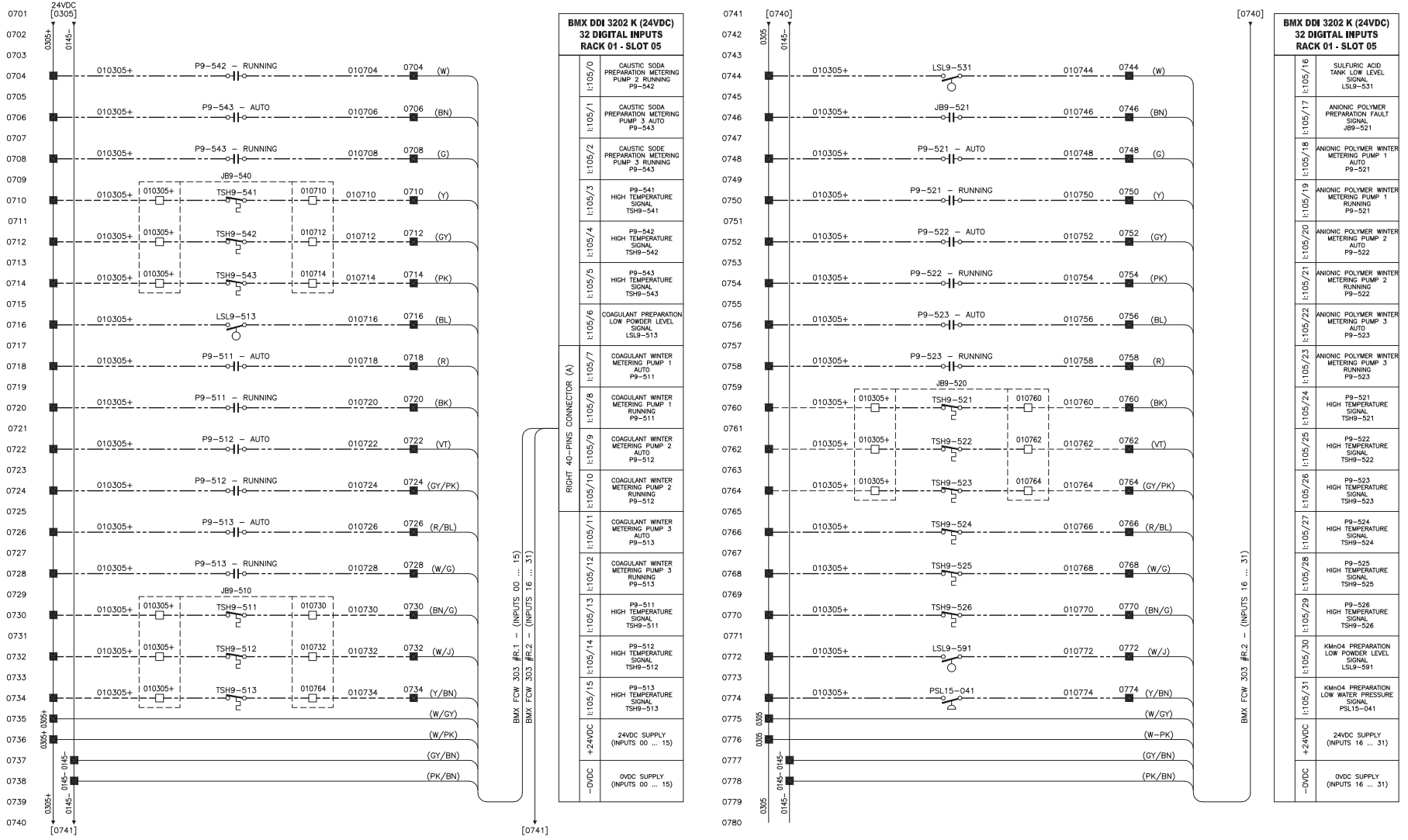

BMX DDI 3202 K (24VDC) 32 DIGITAL INPUTS RACK 01 - SLOT 05	
I:105/0	CAUSTIC SODA PREPARATION METERING PUMP 2 RUNNING P9-542
I:105/1	CAUSTIC SODA PREPARATION METERING PUMP 3 AUTO P9-543
I:105/2	CAUSTIC SODE PREPARATION METERING PUMP 3 RUNNING P9-543
I:105/3	P9-541 HIGH TEMPERATURE SIGNAL TSH9-541
I:105/4	P9-542 HIGH TEMPERATURE SIGNAL TSH9-542
I:105/5	P9-543 HIGH TEMPERATURE SIGNAL TSH9-543
I:105/6	COAGULANT PREPARATION LOW POWDER LEVEL SIGNAL LSL9-513
RIGHT 40-PINS CONNECTOR (A) I:105/7	COAGULANT WINTER METERING PUMP 1 AUTO P9-511
I:105/8	COAGULANT WINTER METERING PUMP 1 RUNNING P9-511
I:105/9	COAGULANT WINTER METERING PUMP 2 AUTO P9-512
I:105/10	COAGULANT WINTER METERING PUMP 2 RUNNING P9-512
I:105/11	COAGULANT WINTER METERING PUMP 3 AUTO P9-513
I:105/12	COAGULANT WINTER METERING PUMP 3 RUNNING P9-513
I:105/13	P9-511 HIGH TEMPERATURE SIGNAL TSH9-511
I:105/14	P9-512 HIGH TEMPERATURE SIGNAL TSH9-512
I:105/15	P9-513 HIGH TEMPERATURE SIGNAL TSH9-513
+24VDC	24VDC SUPPLY (INPUTS 00 ... 15)
–0VDC	0VDC SUPPLY (INPUTS 00 ... 15)

BMX DDI 3202 K (24VDC) 32 DIGITAL INPUTS RACK 01 - SLOT 05	
I:105/16	SULFURIC ACID TANK LOW LEVEL SIGNAL LSL9-531
I:105/17	ANIONIC POLYMER PREPARATION FAULT SIGNAL JB9-521
I:105/18	ANIONIC POLYMER WINTER METERING PUMP 1 AUTO P9-521
I:105/19	ANIONIC POLYMER WINTER METERING PUMP 1 RUNNING P9-521
I:105/20	ANIONIC POLYMER WINTER METERING PUMP 2 AUTO P9-522
I:105/21	ANIONIC POLYMER WINTER METERING PUMP 2 RUNNING P9-522
I:105/22	ANIONIC POLYMER WINTER METERING PUMP 3 AUTO P9-523
I:105/23	ANIONIC POLYMER WINTER METERING PUMP 3 RUNNING P9-523
I:105/24	P9-521 HIGH TEMPERATURE SIGNAL TSH9-521
I:105/25	P9-522 HIGH TEMPERATURE SIGNAL TSH9-522
I:105/26	P9-523 HIGH TEMPERATURE SIGNAL TSH9-523
I:105/27	P9-524 HIGH TEMPERATURE SIGNAL TSH9-524
I:105/28	P9-525 HIGH TEMPERATURE SIGNAL TSH9-525
I:105/29	P9-526 HIGH TEMPERATURE SIGNAL TSH9-526
I:105/30	KMn04 PREPARATION LOW POWDER LEVEL SIGNAL LSL9-591
I:105/31	KMn04 PREPARATION LOW WATER PRESSURE SIGNAL PSL15-041
+24VDC	24VDC SUPPLY (INPUTS 16 ... 31)
–0VDC	0VDC SUPPLY (INPUTS 16 ... 31)

NOTE
——— INTERNAL WIRING
– – – – VEOLIA WIRING
———— CUSTOMER WIRING

REV	DESCRIPTION	DATE	REVD	CHKD	APVD	ECN
1	FOR APPROVAL	2018-06-20	A.L.	A.L.	G.M.	–

CONFIDENTIALITY AND INTELLECTUAL PROPERTY NOTICE
ALL INFORMATION CONTAINED IN THIS DOCUMENT IS THE SOLE PROPERTY OF VEOLIA WATER TECHNOLOGIES CANADA INC. AND IS PROTECTED BY ALL APPLICABLE LAWS, INCLUDING BUT NOT LIMITED TO COPYRIGHT AND OTHER INTELLECTUAL PROPERTY LAWS. THE DESIGN CONCEPTS AND INFORMATION CONTAINED HEREIN ARE PROPRIETARY TO V.W.T AND ARE SUBMITTED IN CONFIDENCE. THEY ARE NOT TRANSFERABLE. THEY MUST BE USED ONLY FOR THE PURPOSE FOR WHICH THE DOCUMENT IS EXPRESSLY SUBMITTED AND NO IMPLICIT LICENCE IS GRANTED OTHERWISE BY THE SUBMISSION OF THIS DOCUMENT. THEY ARE CONFIDENTIAL AND PRIVILEGED INFORMATION OF V.W.T. AND THEY MUST NOT BE DISCLOSED, REPRODUCED, LOANED, REMITTED OR USED IN ANY OTHER MANNER WITHOUT THE EXPRESS WRITTEN CONSENT OF V.W.T. V.W.T. ASSUMES NO RESPONSIBILITY OR LIABILITY FOR THE USE OF THIS DOCUMENT OR THE DESIGN CONCEPTS AND INFORMATION CONTAINED HEREIN FOR ANOTHER PROJECT, OR IN A MANNER THAT DOES NOT RELATE TO THE FITNESS OR PURPOSE OF THIS DOCUMENT. IN NO EVENT SHALL THIS DOCUMENT OR THE DESIGN CONCEPTS AND INFORMATION CONTAINED HEREIN BE USED IN A MANNER DETRIMENTAL TO THE INTEREST OF V.W.T. ALL COPYRIGHT, PATENT AND OTHER INTELLECTUAL PROPERTY RIGHTS ARE RESERVED. ACCEPTANCE OF THE DELIVERY OF THIS DOCUMENT CONSTITUTES AGREEMENT TO THESE TERMS AND CONDITIONS.

DESIGNER	–	DATE –
CHECKER	–	DATE –
ENGINEER	–	DATE –
SCALE:	None	

TITLE: MAIN CONTROL PANEL PLC-001
ELECTRICAL SCHEMATIC DIAGRAM [RACK 01 SLOT 05]
–

CLIENT: AEM AMARUQ
HUDSON BAY, NUNAVUT

VEOLIA
VEOLIA WATER TECHNOLOGIES CANADA INC. 4105 Sartelon, Saint-Laurent, Qc, Canada, Tel: (514) 334-7230

PROJECT / DRAWING	INTERNAL	SHEET	REV
5000218009 – ELD-0001-AU-VWT	E04	07 OF 25	1

STD: "B" 11x17 | REF: CONTROLES RL – 184172 | BAR = 1" AT PLOT SCALE

Jun. 20, 2018 13:58:35 – P:\CLIENTS\Veolia Waters – John Meunier\184172_5000218009 AEM Amaruq\Ingenierie\Dessins\PLC-001 CONTROL PANEL\5000218009-ELD-0001-AU-VWT-E04-07-1.dwg – a.lessard

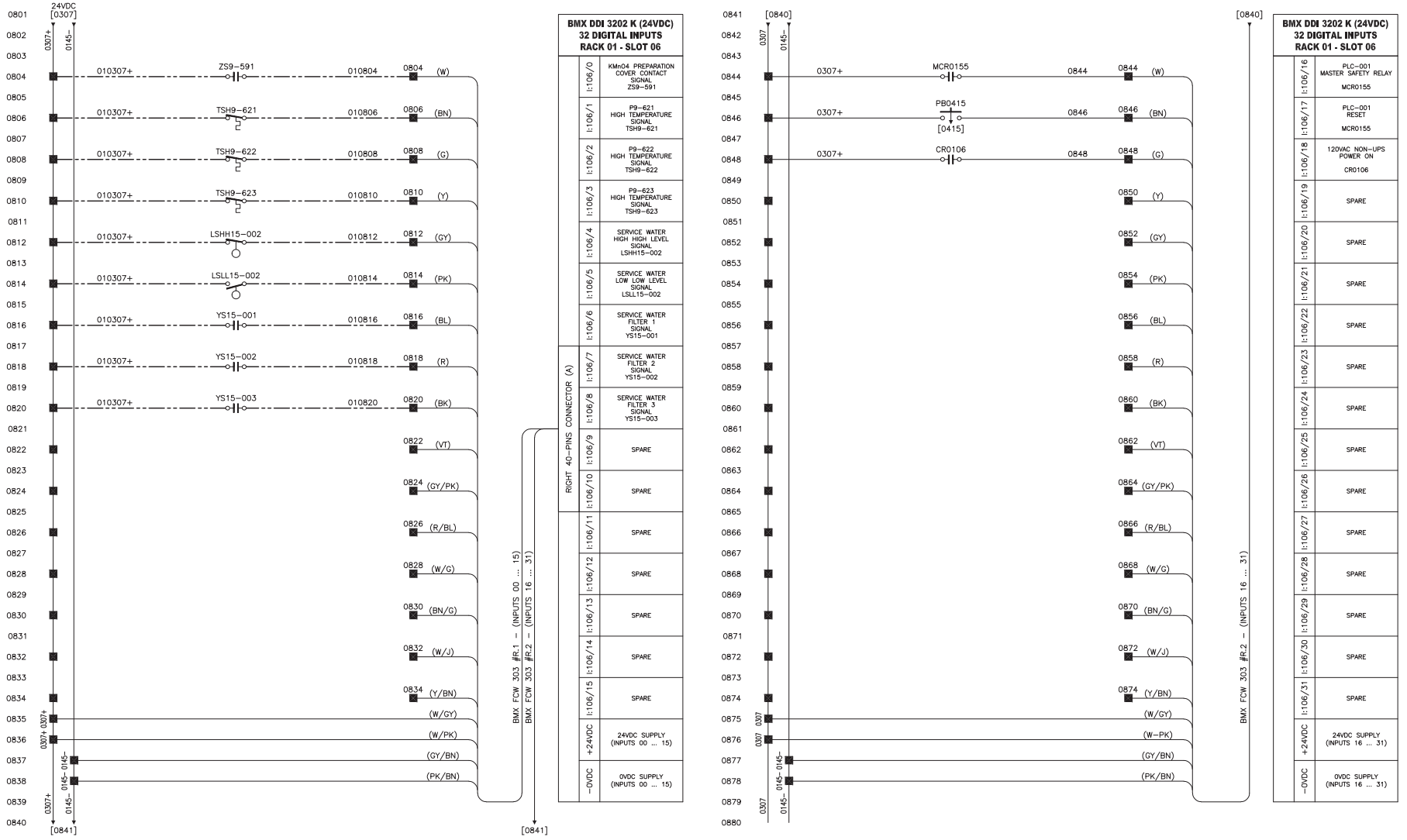

REV	DESCRIPTION	DATE	REVD	CHKD	APVD	ECN
1	FOR APPROVAL	2018-06-20	A.L.	A.L.	G.M.	–

CONFIDENTIALITY AND INTELLECTUAL PROPERTY NOTICE
ALL INFORMATION CONTAINED IN THIS DOCUMENT IS THE SOLE PROPERTY OF VEOLIA WATER TECHNOLOGIES CANADA INC. AND IS PROTECTED BY ALL APPLICABLE LAWS, INCLUDING BUT NOT LIMITED TO COPYRIGHT AND OTHER INTELLECTUAL PROPERTY LAWS. THE DESIGN CONCEPTS AND INFORMATION CONTAINED HEREIN ARE PROPRIETARY TO V.W.T AND ARE SUBMITTED IN CONFIDENCE. THEY ARE NOT TRANSFERABLE. THEY MUST BE USED ONLY FOR THE PURPOSE FOR WHICH THE DOCUMENT IS EXPRESSLY SUBMITTED AND NO IMPLICIT LICENCE IS GRANTED OTHERWISE BY THE SUBMISSION OF THIS DOCUMENT. THEY ARE CONFIDENTIAL AND PRIVILEGED INFORMATION OF V.W.T. AND THEY MUST NOT BE DISCLOSED, REPRODUCED, LOANED, REMITTED OR USED IN ANY OTHER MANNER WITHOUT THE EXPRESS WRITTEN CONSENT OF V.W.T. V.W.T. ASSUMES NO RESPONSIBILITY OR LIABILITY FOR THE USE OF THIS DOCUMENT OR THE DESIGN CONCEPTS AND INFORMATION CONTAINED HEREIN FOR ANOTHER PROJECT, OR IN A MANNER THAT DOES NOT RELATE TO THE FITNESS OR PURPOSE OF THIS DOCUMENT. IN NO EVENT SHALL THIS DOCUMENT OR THE DESIGN CONCEPTS AND INFORMATION CONTAINED HEREIN BE USED IN A MANNER DETRIMENTAL TO THE INTEREST OF V.W.T. ALL COPYRIGHT, PATENT AND OTHER INTELLECTUAL PROPERTY RIGHTS ARE RESERVED. ACCEPTANCE OF THE DELIVERY OF THIS DOCUMENT CONSTITUTES AGREEMENT TO THESE TERMS AND CONDITIONS.

DESIGNER	–	DATE –
CHECKER	–	DATE –
ENGINEER	–	DATE –
SCALE:	None	

TITLE: MAIN CONTROL PANEL PLC-001
ELECTRICAL SCHEMATIC DIAGRAM [RACK 01 SLOT 06]
–

CLIENT: AEM AMARUQ
HUDSON BAY, NUNAVUT

VEOLIA
VEOLIA WATER TECHNOLOGIES CANADA INC. 4105 Sartelon, Saint-Laurent, Qc, Canada, Tel: (514) 334-7230

PROJECT DRAWING	INTERNAL	SHEET	REV
5000218009 – ELD-0001-AU-VWT	E04	08 OF 25	1

STD: "B" 11x17 | REF: CONTROLES RL – 184172 | BAR = 1" AT PLOT SCALE

Jun 20, 2018 13:58:40 – P:\CLIENTS\Veolia Waters – John Meunier\184172_5000218009 AEM Amaruq\Ingenierie\Dessins\PLC-001 CONTROL PANEL\5000218009-ELD-0001-AU-VWT-E04-08-1.dwg – a.lessard

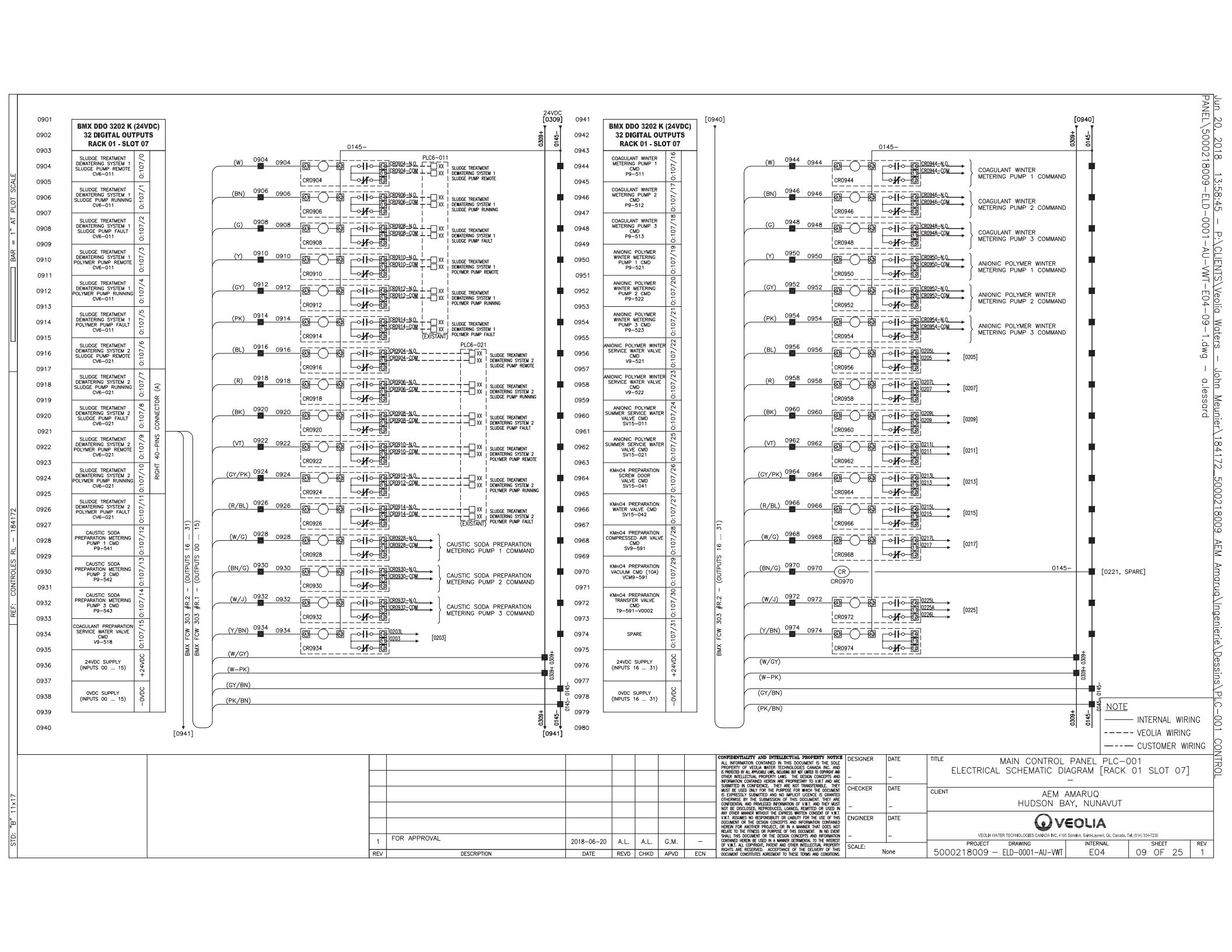

STD: "B" 11x17 | REF: CONTROLES RL - 184172 | BAR = 1" AT PLOT SCALE

Jun. 20, 2018 13:58:45 - P:\CLIENTS\Veolia Waters - John Meunier\184172_5000218009 AEM Amaruq\Ingenierie\Dessins\PLC-001 CONTROL PANEL\5000218009-ELD-0001-AU-VWT-E04-09-1.dwg - a.lessard

REV	DESCRIPTION	DATE	REVD	CHKD	APVD	ECN
1	FOR APPROVAL	2018-06-20	A.L.	A.L.	G.M.	–

CONFIDENTIALITY AND INTELLECTUAL PROPERTY NOTICE
ALL INFORMATION CONTAINED IN THIS DOCUMENT IS THE SOLE PROPERTY OF VEOLIA WATER TECHNOLOGIES CANADA INC. AND IS PROTECTED BY ALL APPLICABLE LAWS, INCLUDING BUT NOT LIMITED TO COPYRIGHT AND OTHER INTELLECTUAL PROPERTY LAWS. THE DESIGN CONCEPTS AND INFORMATION CONTAINED HEREIN ARE PROPRIETARY TO V.W.T AND ARE SUBMITTED IN CONFIDENCE. THEY ARE NOT TRANSFERABLE. THEY MUST BE USED ONLY FOR THE PURPOSE FOR WHICH THE DOCUMENT IS EXPRESSLY SUBMITTED AND NO IMPLICIT LICENCE IS GRANTED OTHERWISE BY THE SUBMISSION OF THIS DOCUMENT. THEY ARE CONFIDENTIAL AND PRIVILEGED INFORMATION OF V.W.T. AND THEY MUST NOT BE DISCLOSED, REPRODUCED, LOANED, REMITTED OR USED IN ANY OTHER MANNER WITHOUT THE EXPRESS WRITTEN CONSENT OF V.W.T. V.W.T. ASSUMES NO RESPONSIBILITY OR LIABILITY FOR THE USE OF THIS DOCUMENT OR THE DESIGN CONCEPTS AND INFORMATION CONTAINED HEREIN FOR ANOTHER PROJECT, OR IN A MANNER THAT DOES NOT RELATE TO THE FITNESS OR PURPOSE OF THIS DOCUMENT. IN NO EVENT SHALL THIS DOCUMENT OR THE DESIGN CONCEPTS AND INFORMATION CONTAINED HEREIN BE USED IN A MANNER DETRIMENTAL TO THE INTEREST OF V.W.T. ALL COPYRIGHT, PATENT AND OTHER INTELLECTUAL PROPERTY RIGHTS ARE RESERVED. ACCEPTANCE OF THE DELIVERY OF THIS DOCUMENT CONSTITUTES AGREEMENT TO THESE TERMS AND CONDITIONS.

		DATE
DESIGNER	–	–
CHECKER	–	–
ENGINEER	–	–
SCALE:	None	

TITLE: MAIN CONTROL PANEL PLC-001
ELECTRICAL SCHEMATIC DIAGRAM [RACK 01 SLOT 07]
–

CLIENT: AEM AMARUQ
HUDSON BAY, NUNAVUT

VEOLIA
VEOLIA WATER TECHNOLOGIES CANADA INC. 4105 Sartelon, Saint-Laurent, Qc, Canada, Tel: (514) 334-7230

PROJECT DRAWING	INTERNAL	SHEET	REV
5000218009 – ELD-0001-AU-VWT	E04	09 OF 25	1

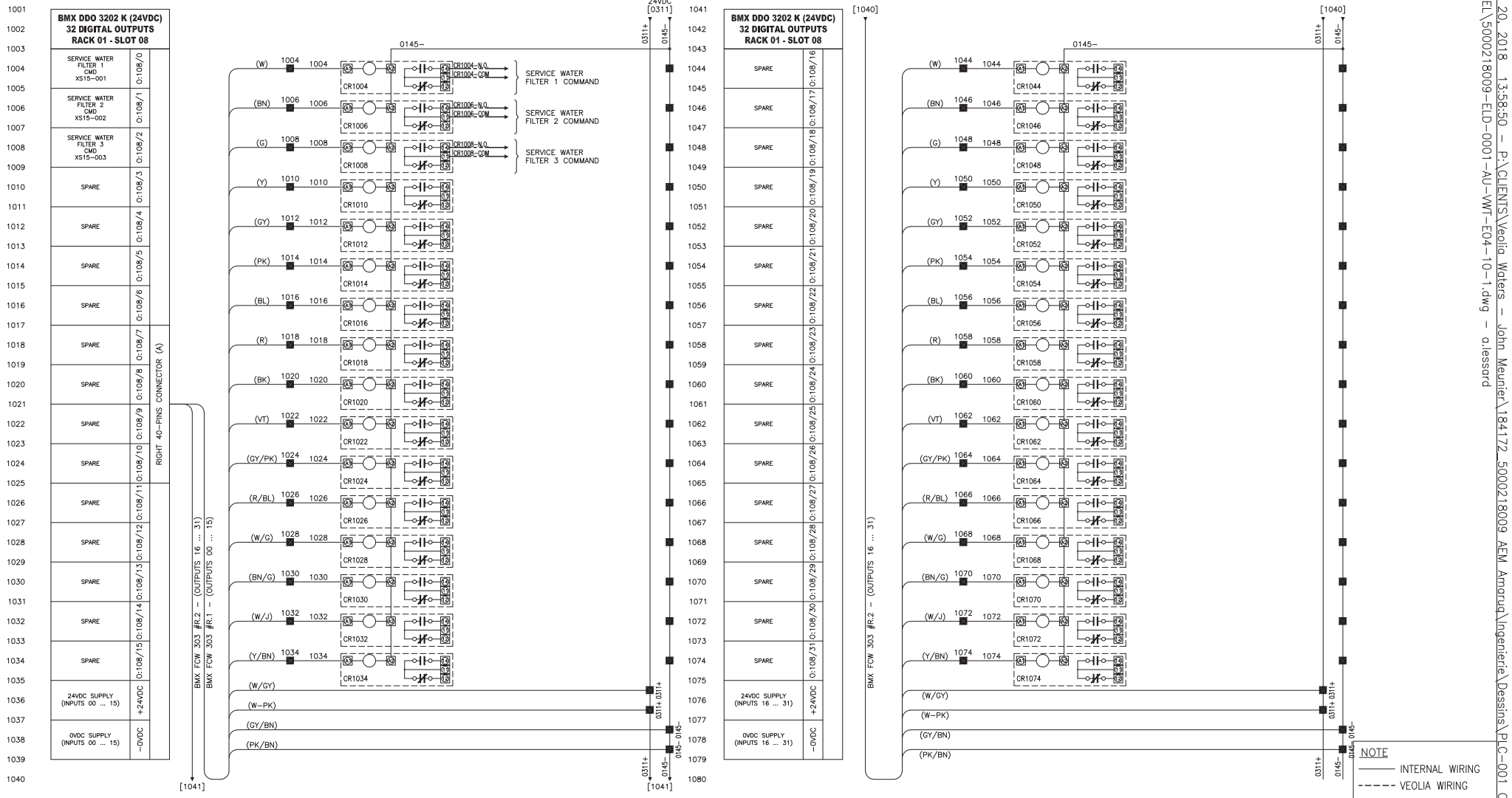

NOTE
- INTERNAL WIRING
- VEOLIA WIRING
- CUSTOMER WIRING

REV	DESCRIPTION	DATE	REVD	CHKD	APVD	ECN
1	FOR APPROVAL	2018-06-20	A.L.	A.L.	G.M.	–

CONFIDENTIALITY AND INTELLECTUAL PROPERTY NOTICE
ALL INFORMATION CONTAINED IN THIS DOCUMENT IS THE SOLE PROPERTY OF VEOLIA WATER TECHNOLOGIES CANADA INC. AND IS PROTECTED BY ALL APPLICABLE LAWS, INCLUDING BUT NOT LIMITED TO COPYRIGHT AND OTHER INTELLECTUAL PROPERTY LAWS. THE DESIGN CONCEPTS AND INFORMATION CONTAINED HEREIN ARE PROPRIETARY TO V.W.T AND ARE SUBMITTED IN CONFIDENCE. THEY ARE NOT TRANSFERABLE. THEY MUST BE USED ONLY FOR THE PURPOSE FOR WHICH THE DOCUMENT IS EXPRESSLY SUBMITTED AND NO IMPLICIT LICENCE IS GRANTED OTHERWISE BY THE SUBMISSION OF THIS DOCUMENT. THEY ARE CONFIDENTIAL AND PRIVILEGED INFORMATION OF V.W.T. AND THEY MUST NOT BE DISCLOSED, REPRODUCED, LOANED, REMITTED OR USED IN ANY OTHER MANNER WITHOUT THE EXPRESS WRITTEN CONSENT OF V.W.T. V.W.T. ASSUMES NO RESPONSIBILITY OR LIABILITY FOR THE USE OF THIS DOCUMENT OR THE DESIGN CONCEPTS AND INFORMATION CONTAINED HEREIN FOR ANOTHER PROJECT, OR IN A MANNER THAT DOES NOT RELATE TO THE FITNESS OR PURPOSE OF THIS DOCUMENT. IN NO EVENT SHALL THIS DOCUMENT OR THE DESIGN CONCEPTS AND INFORMATION CONTAINED HEREIN BE USED IN A MANNER DETRIMENTAL TO THE INTEREST OF V.W.T. ALL COPYRIGHT, PATENT AND OTHER INTELLECTUAL PROPERTY RIGHTS ARE RESERVED. ACCEPTANCE OF THE DELIVERY OF THIS DOCUMENT CONSTITUTES AGREEMENT TO THESE TERMS AND CONDITIONS.

		DATE
DESIGNER	–	–
CHECKER	–	–
ENGINEER	–	–
SCALE:	None	

TITLE: MAIN CONTROL PANEL PLC-001
ELECTRICAL SCHEMATIC DIAGRAM [RACK 01 SLOT 08]
–

CLIENT: AEM AMARUQ
HUDSON BAY, NUNAVUT

VEOLIA
VEOLIA WATER TECHNOLOGIES CANADA INC. 4105 Sartelon, Saint-Laurent, Qc, Canada, Tel: (514) 334-7230

PROJECT DRAWING	INTERNAL	SHEET	REV
5000218009 – ELD-0001-AU-VWT	E04	10 OF 25	1

STD: "B" 11x17 | REF: CONTROLES RL – 184172 | BAR = 1" AT PLOT SCALE

Jun. 20, 2018 13:58:50 – P:\CLIENTS\Veolia Waters – John Meunier\184172_5000218009 AEM Amaruq\Ingenierie\Dessins\PLC-001 CONTROL PANEL\5000218009-ELD-0001-AU-VWT-E04-10-1.dwg – a.lessard

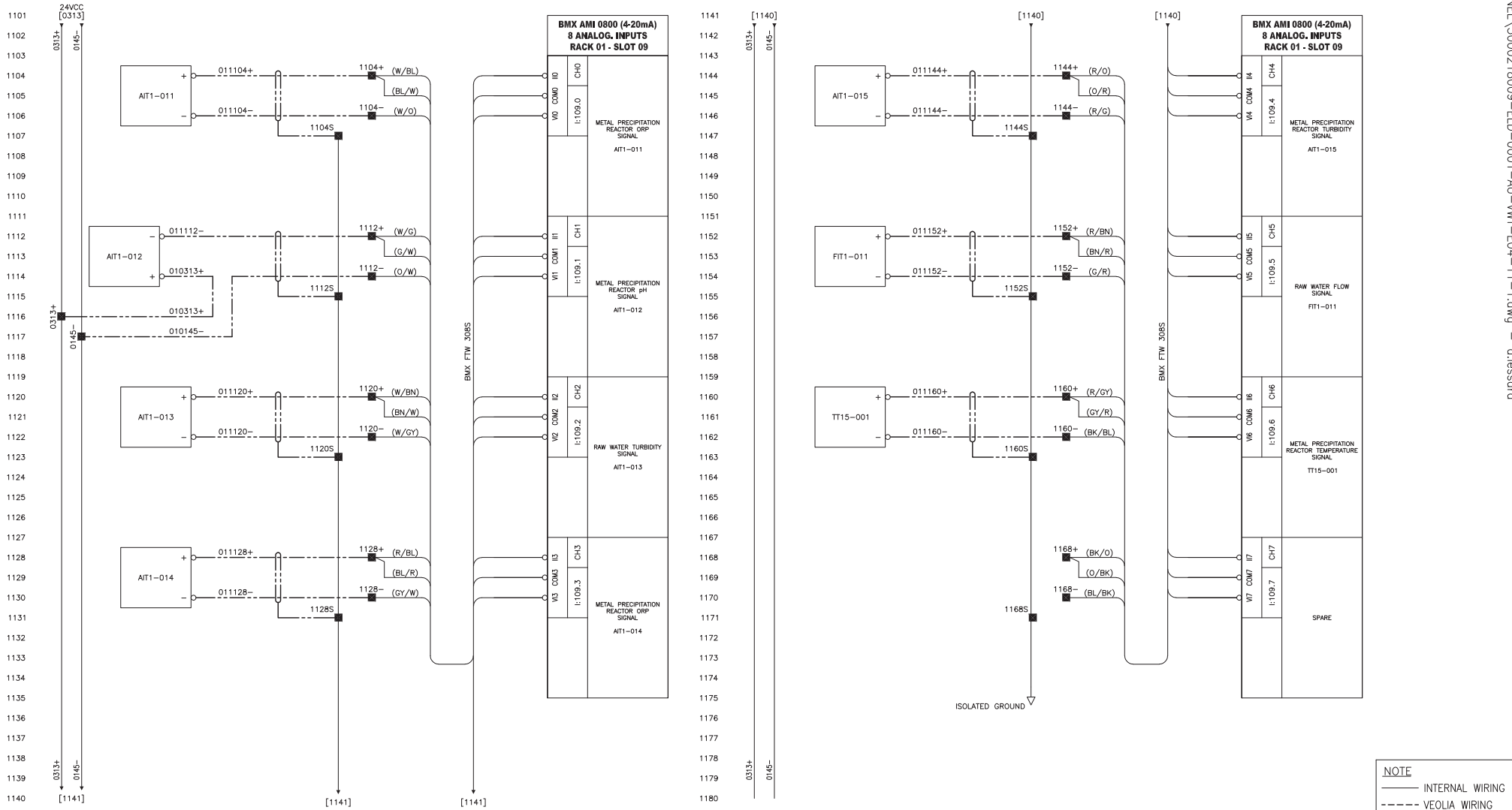

NOTE
——— INTERNAL WIRING
- - - - - VEOLIA WIRING
—·—·— CUSTOMER WIRING

REV	DESCRIPTION	DATE	REVD	CHKD	APVD	ECN
1	FOR APPROVAL	2018-06-20	A.L.	A.L.	G.M.	–

CONFIDENTIALITY AND INTELLECTUAL PROPERTY NOTICE
ALL INFORMATION CONTAINED IN THIS DOCUMENT IS THE SOLE PROPERTY OF VEOLIA WATER TECHNOLOGIES CANADA INC. AND IS PROTECTED BY ALL APPLICABLE LAWS, INCLUDING BUT NOT LIMITED TO COPYRIGHT AND OTHER INTELLECTUAL PROPERTY LAWS. THE DESIGN CONCEPTS AND INFORMATION CONTAINED HEREIN ARE PROPRIETARY TO V.W.T AND ARE SUBMITTED IN CONFIDENCE. THEY ARE NOT TRANSFERABLE. THEY MUST BE USED ONLY FOR THE PURPOSE FOR WHICH THE DOCUMENT IS EXPRESSLY SUBMITTED AND NO IMPLICIT LICENCE IS GRANTED OTHERWISE BY THE SUBMISSION OF THIS DOCUMENT. THEY ARE CONFIDENTIAL AND PRIVILEGED INFORMATION OF V.W.T. AND THEY MUST NOT BE DISCLOSED, REPRODUCED, LOANED, REMITTED OR USED IN ANY OTHER MANNER WITHOUT THE EXPRESS WRITTEN CONSENT OF V.W.T. V.W.T. ASSUMES NO RESPONSIBILITY OR LIABILITY FOR THE USE OF THIS DOCUMENT OR THE DESIGN CONCEPTS AND INFORMATION CONTAINED HEREIN FOR ANOTHER PROJECT, OR IN A MANNER THAT DOES NOT RELATE TO THE FITNESS OR PURPOSE OF THIS DOCUMENT. IN NO EVENT SHALL THIS DOCUMENT OR THE DESIGN CONCEPTS AND INFORMATION CONTAINED HEREIN BE USED IN A MANNER DETRIMENTAL TO THE INTEREST OF V.W.T. ALL COPYRIGHT, PATENT AND OTHER INTELLECTUAL PROPERTY RIGHTS ARE RESERVED. ACCEPTANCE OF THE DELIVERY OF THIS DOCUMENT CONSTITUTES AGREEMENT TO THESE TERMS AND CONDITIONS.

DESIGNER	–	DATE –
CHECKER	–	DATE –
ENGINEER	–	DATE –
SCALE:	None	

TITLE: MAIN CONTROL PANEL PLC-001
ELECTRICAL SCHEMATIC DIAGRAM [RACK 01 SLOT 09]
–

CLIENT: AEM AMARUQ
HUDSON BAY, NUNAVUT

VEOLIA
VEOLIA WATER TECHNOLOGIES CANADA INC. 4105 Sartelon, Saint-Laurent, Qc, Canada, Tel: (514) 334-7230

PROJECT DRAWING	INTERNAL	SHEET	REV
5000218009 – ELD-0001-AU-VWT	E04	11 OF 25	1

STD: "B" 11x17 | REF: CONTROLES RL – 184172 | BAR = 1" AT PLOT SCALE

Jun 20, 2018 13:58:55 – P:\CLIENTS\Veolia Waters – John Meunier\184172_5000218009 AEM Amaruq\Ingenierie\Dessins\PLC-001 CONTROL PANEL\5000218009-ELD-0001-AU-VWT-E04-11-1.dwg – a.lessard

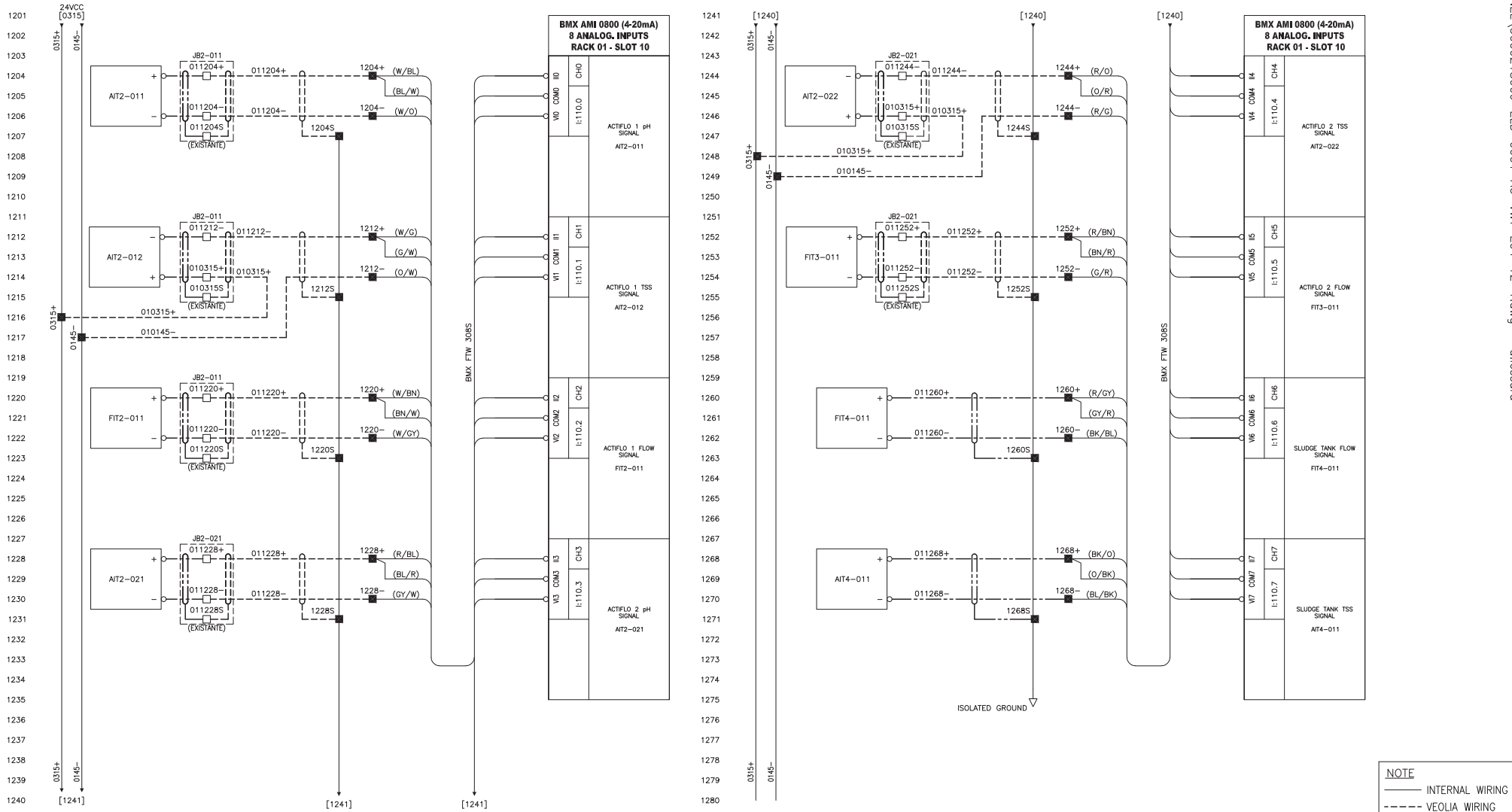

NOTE
——— INTERNAL WIRING
- - - - - VEOLIA WIRING
———— CUSTOMER WIRING

REV	DESCRIPTION	DATE	REVD	CHKD	APVD	ECN
1	FOR APPROVAL	2018-06-20	A.L.	A.L.	G.M.	–

CONFIDENTIALITY AND INTELLECTUAL PROPERTY NOTICE
ALL INFORMATION CONTAINED IN THIS DOCUMENT IS THE SOLE PROPERTY OF VEOLIA WATER TECHNOLOGIES CANADA INC. AND IS PROTECTED BY ALL APPLICABLE LAWS, INCLUDING BUT NOT LIMITED TO COPYRIGHT AND OTHER INTELLECTUAL PROPERTY LAWS. THE DESIGN CONCEPTS AND INFORMATION CONTAINED HEREIN ARE PROPRIETARY TO V.W.T AND ARE SUBMITTED IN CONFIDENCE. THEY ARE NOT TRANSFERABLE. THEY MUST BE USED ONLY FOR THE PURPOSE FOR WHICH THE DOCUMENT IS EXPRESSLY SUBMITTED AND NO IMPLICIT LICENCE IS GRANTED OTHERWISE BY THE SUBMISSION OF THIS DOCUMENT. THEY ARE CONFIDENTIAL AND PRIVILEGED INFORMATION OF V.W.T. AND THEY MUST NOT BE DISCLOSED, REPRODUCED, LOANED, REMITTED OR USED IN ANY OTHER MANNER WITHOUT THE EXPRESS WRITTEN CONSENT OF V.W.T. V.W.T. ASSUMES NO RESPONSIBILITY OR LIABILITY FOR THE USE OF THIS DOCUMENT OR THE DESIGN CONCEPTS AND INFORMATION CONTAINED HEREIN FOR ANOTHER PROJECT, OR IN A MANNER THAT DOES NOT RELATE TO THE FITNESS OR PURPOSE OF THIS DOCUMENT. IN NO EVENT SHALL THIS DOCUMENT OR THE DESIGN CONCEPTS AND INFORMATION CONTAINED HEREIN BE USED IN A MANNER DETRIMENTAL TO THE INTEREST OF V.W.T. ALL COPYRIGHT, PATENT AND OTHER INTELLECTUAL PROPERTY RIGHTS ARE RESERVED. ACCEPTANCE OF THE DELIVERY OF THIS DOCUMENT CONSTITUTES AGREEMENT TO THESE TERMS AND CONDITIONS.

DESIGNER	–	DATE –
CHECKER	–	DATE –
ENGINEER	–	DATE –
SCALE:	None	

TITLE: MAIN CONTROL PANEL PLC-001
ELECTRICAL SCHEMATIC DIAGRAM [RACK 01 SLOT 10]
–

CLIENT: AEM AMARUQ
HUDSON BAY, NUNAVUT

VEOLIA
VEOLIA WATER TECHNOLOGIES CANADA INC. 4105 Sartelon, Saint-Laurent, Qc, Canada, Tel: (514) 334-7230

PROJECT DRAWING	INTERNAL	SHEET	REV
5000218009 – ELD-0001-AU-VWT	E04	12 OF 25	1

STD: "B" 11x17 | REF: CONTROLES RL – 184172 | BAR = 1" AT PLOT SCALE

Jun. 20, 2018 - 13:59:00 - P:\CLIENTS\Veolia Waters - John Meunier\184172_5000218009 AEM Amaruq\Ingenierie\Dessins\PLC-001 CONTROL PANEL\5000218009-ELD-0001-AU-VWT-E04-12-1.dwg - a.lessard

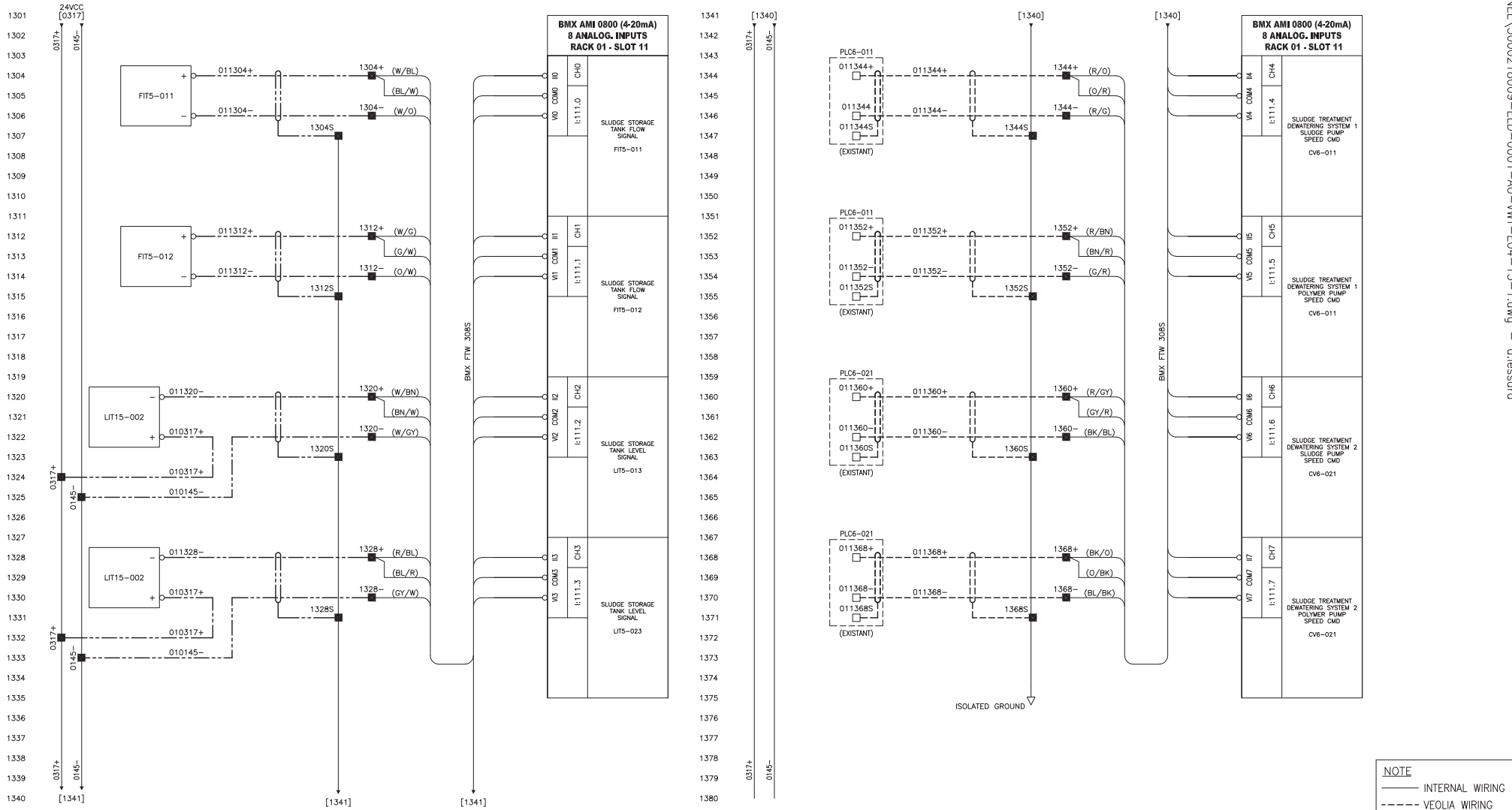

NOTE
——— INTERNAL WIRING
– – – – VEOLIA WIRING
–·–·– CUSTOMER WIRING

REV	DESCRIPTION	DATE	REVD	CHKD	APVD	ECN
1	FOR APPROVAL	2018–06–20	A.L.	A.L.	G.M.	–

CONFIDENTIALITY AND INTELLECTUAL PROPERTY NOTICE
ALL INFORMATION CONTAINED IN THIS DOCUMENT IS THE SOLE PROPERTY OF VEOLIA WATER TECHNOLOGIES CANADA INC. AND IS PROTECTED BY ALL APPLICABLE LAWS, INCLUDING BUT NOT LIMITED TO COPYRIGHT AND OTHER INTELLECTUAL PROPERTY LAWS. THE DESIGN CONCEPTS AND INFORMATION CONTAINED HEREIN ARE PROPRIETARY TO V.W.T AND ARE SUBMITTED IN CONFIDENCE. THEY ARE NOT TRANSFERABLE. THEY MUST BE USED ONLY FOR THE PURPOSE FOR WHICH THE DOCUMENT IS EXPRESSLY SUBMITTED AND NO IMPLICIT LICENCE IS GRANTED OTHERWISE BY THE SUBMISSION OF THIS DOCUMENT. THEY ARE CONFIDENTIAL AND PRIVILEGED INFORMATION OF V.W.T. AND THEY MUST NOT BE DISCLOSED, REPRODUCED, LOANED, REMITTED OR USED IN ANY OTHER MANNER WITHOUT THE EXPRESS WRITTEN CONSENT OF V.W.T. V.W.T. ASSUMES NO RESPONSIBILITY OR LIABILITY FOR THE USE OF THIS DOCUMENT OR THE DESIGN CONCEPTS AND INFORMATION CONTAINED HEREIN FOR ANOTHER PROJECT, OR IN A MANNER THAT DOES NOT RELATE TO THE FITNESS OR PURPOSE OF THIS DOCUMENT. IN NO EVENT SHALL THIS DOCUMENT OR THE DESIGN CONCEPTS AND INFORMATION CONTAINED HEREIN BE USED IN A MANNER DETRIMENTAL TO THE INTEREST OF V.W.T. ALL COPYRIGHT, PATENT AND OTHER INTELLECTUAL PROPERTY RIGHTS ARE RESERVED. ACCEPTANCE OF THE DELIVERY OF THIS DOCUMENT CONSTITUTES AGREEMENT TO THESE TERMS AND CONDITIONS.

DESIGNER	–	DATE –
CHECKER	–	DATE –
ENGINEER	–	DATE –
SCALE:	None	

TITLE: MAIN CONTROL PANEL PLC–001
ELECTRICAL SCHEMATIC DIAGRAM [RACK 01 SLOT 11]
–

CLIENT: AEM AMARUQ
HUDSON BAY, NUNAVUT

VEOLIA
VEOLIA WATER TECHNOLOGIES CANADA INC. 4105 Sartelon, Saint-Laurent, Qc, Canada, Tel: (514) 334-7230

PROJECT DRAWING	INTERNAL	SHEET	REV
5000218009 – ELD–0001–AU–VWT	E04	13 OF 25	1

STD: "B" 11x17 | REF: CONTROLES RL – 184172 | BAR = 1" AT PLOT SCALE

Jun. 20, 2018 13:59:05 – P:\CLIENTS\Veolia Waters – John Meunier\184172_5000218009 AEM Amaruq\Ingenierie\Dessins\PLC–001 CONTROL PANEL\5000218009–ELD–0001–AU–VWT–E04–13–1.dwg – a.lessard

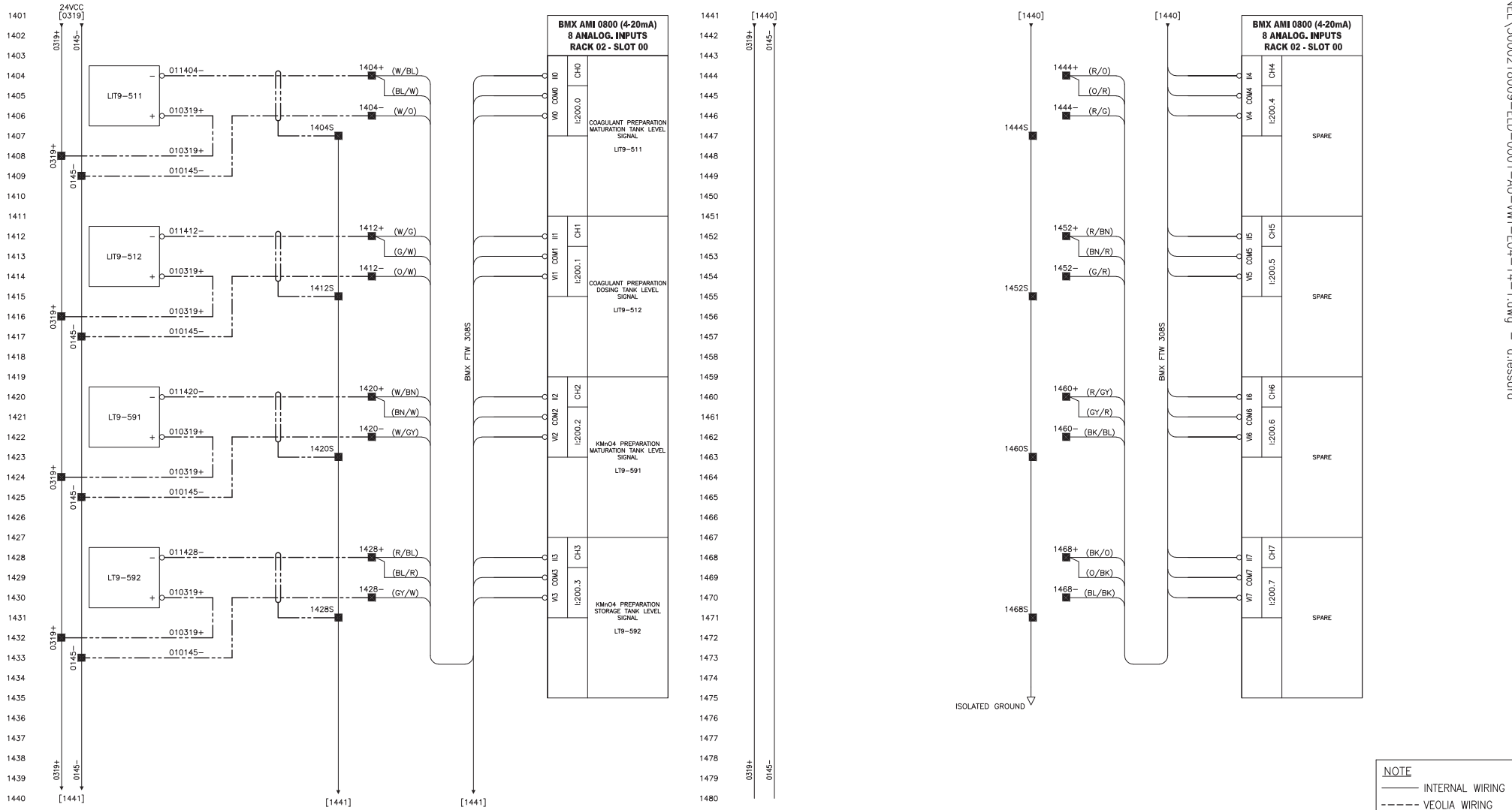

NOTE
——— INTERNAL WIRING
- - - - - VEOLIA WIRING
—·—·— CUSTOMER WIRING

REV	DESCRIPTION	DATE	REVD	CHKD	APVD	ECN
1	FOR APPROVAL	2018-06-20	A.L.	A.L.	G.M.	–

CONFIDENTIALITY AND INTELLECTUAL PROPERTY NOTICE
ALL INFORMATION CONTAINED IN THIS DOCUMENT IS THE SOLE PROPERTY OF VEOLIA WATER TECHNOLOGIES CANADA INC. AND IS PROTECTED BY ALL APPLICABLE LAWS, INCLUDING BUT NOT LIMITED TO COPYRIGHT AND OTHER INTELLECTUAL PROPERTY LAWS. THE DESIGN CONCEPTS AND INFORMATION CONTAINED HEREIN ARE PROPRIETARY TO V.W.T AND ARE SUBMITTED IN CONFIDENCE. THEY ARE NOT TRANSFERABLE. THEY MUST BE USED ONLY FOR THE PURPOSE FOR WHICH THE DOCUMENT IS EXPRESSLY SUBMITTED AND NO IMPLICIT LICENCE IS GRANTED OTHERWISE BY THE SUBMISSION OF THIS DOCUMENT. THEY ARE CONFIDENTIAL AND PRIVILEGED INFORMATION OF V.W.T. AND THEY MUST NOT BE DISCLOSED, REPRODUCED, LOANED, REMITTED OR USED IN ANY OTHER MANNER WITHOUT THE EXPRESS WRITTEN CONSENT OF V.W.T. V.W.T. ASSUMES NO RESPONSIBILITY OR LIABILITY FOR THE USE OF THIS DOCUMENT OR THE DESIGN CONCEPTS AND INFORMATION CONTAINED HEREIN FOR ANOTHER PROJECT, OR IN A MANNER THAT DOES NOT RELATE TO THE FITNESS OR PURPOSE OF THIS DOCUMENT. IN NO EVENT SHALL THIS DOCUMENT OR THE DESIGN CONCEPTS AND INFORMATION CONTAINED HEREIN BE USED IN A MANNER DETRIMENTAL TO THE INTEREST OF V.W.T. ALL COPYRIGHT, PATENT AND OTHER INTELLECTUAL PROPERTY RIGHTS ARE RESERVED. ACCEPTANCE OF THE DELIVERY OF THIS DOCUMENT CONSTITUTES AGREEMENT TO THESE TERMS AND CONDITIONS.

DESIGNER	–	DATE –
CHECKER	–	DATE –
ENGINEER	–	DATE –
SCALE:	None	

TITLE: MAIN CONTROL PANEL PLC-001
ELECTRICAL SCHEMATIC DIAGRAM [RACK 02 SLOT 00]
–

CLIENT: AEM AMARUQ
HUDSON BAY, NUNAVUT

VEOLIA
VEOLIA WATER TECHNOLOGIES CANADA INC. 4105 Sartelon, Saint-Laurent, Qc, Canada, Tel: (514) 334-7230

PROJECT DRAWING	INTERNAL	SHEET	REV
5000218009 – ELD-0001-AU-VWT	E04	14 OF 25	1

STD: "B" 11x17 | REF: CONTROLES RL – 184172 | BAR = 1" AT PLOT SCALE

Jun 20, 2018 13:59:10 – P:\CLIENTS\Veolia Waters – John Meunier\184172_5000218009 AEM Amaruq\Ingenierie\Dessins\PLC-001 CONTROL PANEL\5000218009-ELD-0001-AU-VWT-E04-14-1.dwg – a.lessard

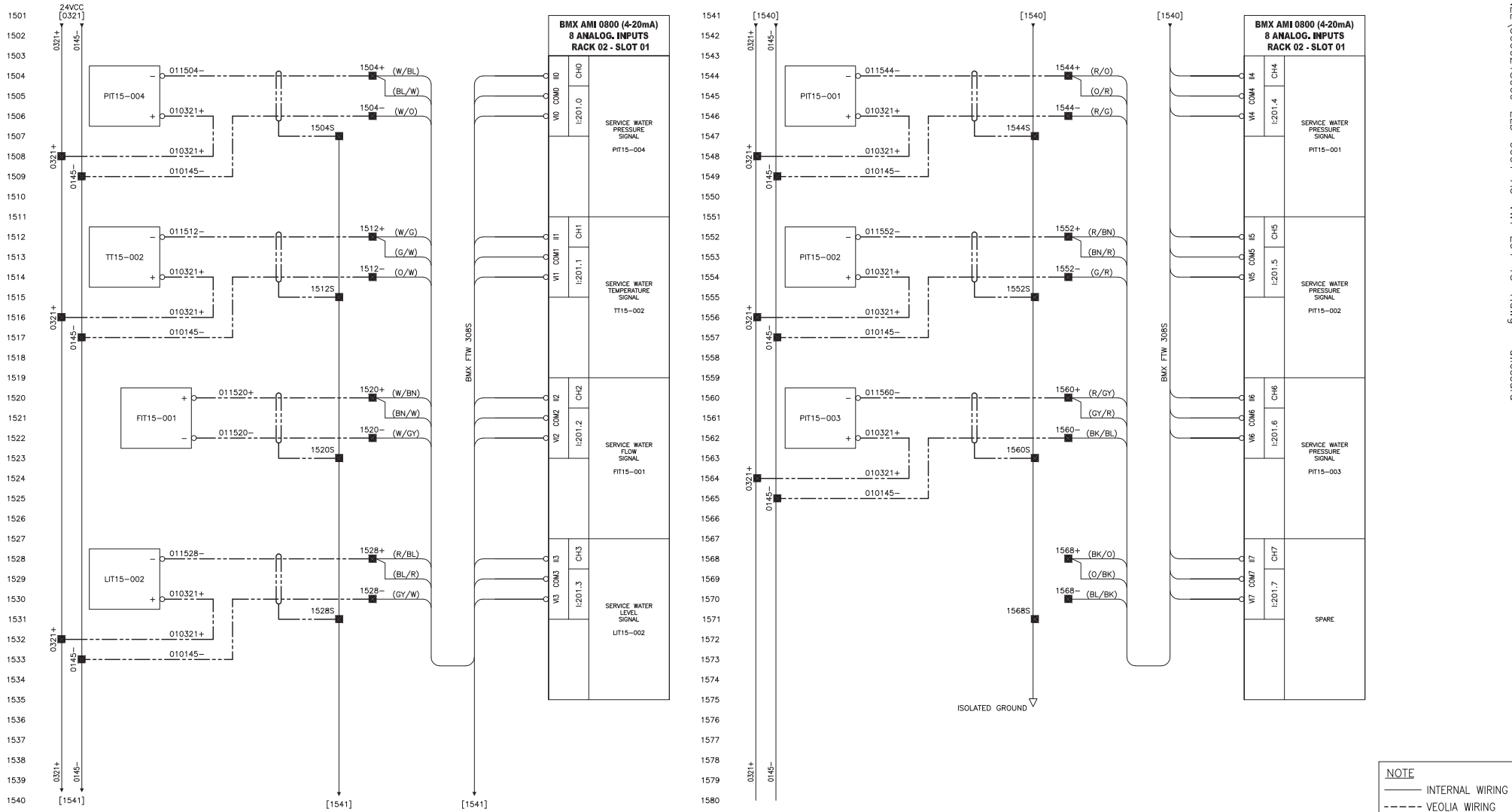

NOTE
——— INTERNAL WIRING
- - - - - VEOLIA WIRING
—·—·— CUSTOMER WIRING

REV	DESCRIPTION	DATE	REVD	CHKD	APVD	ECN
1	FOR APPROVAL	2018-06-20	A.L.	A.L.	G.M.	–

CONFIDENTIALITY AND INTELLECTUAL PROPERTY NOTICE
ALL INFORMATION CONTAINED IN THIS DOCUMENT IS THE SOLE PROPERTY OF VEOLIA WATER TECHNOLOGIES CANADA INC. AND IS PROTECTED BY ALL APPLICABLE LAWS, INCLUDING BUT NOT LIMITED TO COPYRIGHT AND OTHER INTELLECTUAL PROPERTY LAWS. THE DESIGN CONCEPTS AND INFORMATION CONTAINED HEREIN ARE PROPRIETARY TO V.W.T AND ARE SUBMITTED IN CONFIDENCE. THEY ARE NOT TRANSFERABLE. THEY MUST BE USED ONLY FOR THE PURPOSE FOR WHICH THE DOCUMENT IS EXPRESSLY SUBMITTED AND NO IMPLICIT LICENCE IS GRANTED OTHERWISE BY THE SUBMISSION OF THIS DOCUMENT. THEY ARE CONFIDENTIAL AND PRIVILEGED INFORMATION OF V.W.T. AND THEY MUST NOT BE DISCLOSED, REPRODUCED, LOANED, REMITTED OR USED IN ANY OTHER MANNER WITHOUT THE EXPRESS WRITTEN CONSENT OF V.W.T. V.W.T. ASSUMES NO RESPONSIBILITY OR LIABILITY FOR THE USE OF THIS DOCUMENT OR THE DESIGN CONCEPTS AND INFORMATION CONTAINED HEREIN FOR ANOTHER PROJECT, OR IN A MANNER THAT DOES NOT RELATE TO THE FITNESS OR PURPOSE OF THIS DOCUMENT. IN NO EVENT SHALL THIS DOCUMENT OR THE DESIGN CONCEPTS AND INFORMATION CONTAINED HEREIN BE USED IN A MANNER DETRIMENTAL TO THE INTEREST OF V.W.T. ALL COPYRIGHT, PATENT AND OTHER INTELLECTUAL PROPERTY RIGHTS ARE RESERVED. ACCEPTANCE OF THE DELIVERY OF THIS DOCUMENT CONSTITUTES AGREEMENT TO THESE TERMS AND CONDITIONS.

DESIGNER	–	–
CHECKER	–	–
ENGINEER	–	–
SCALE:	None	

TITLE: MAIN CONTROL PANEL PLC-001
ELECTRICAL SCHEMATIC DIAGRAM [RACK 02 SLOT 01]
–

CLIENT: AEM AMARUQ
HUDSON BAY, NUNAVUT

VEOLIA
VEOLIA WATER TECHNOLOGIES CANADA INC. 4105 Sartelon, Saint-Laurent, Qc, Canada, Tel: (514) 334-7230

PROJECT DRAWING	INTERNAL	SHEET	REV
5000218009 – ELD-0001-AU-VWT	E04	15 OF 25	1

STD: "B" 11x17 | REF: CONTROLES RL – 184172 | BAR = 1" AT PLOT SCALE

Jun. 20, 2018 13:59:15 – P:\CLIENTS\Veolia Waters – John Meunier\184172_5000218009 AEM Amaruq\Ingenierie\Dessins\PLC-001 CONTROL PANEL\5000218009-ELD-0001-AU-VWT-E04-15-1.dwg – a.lessard

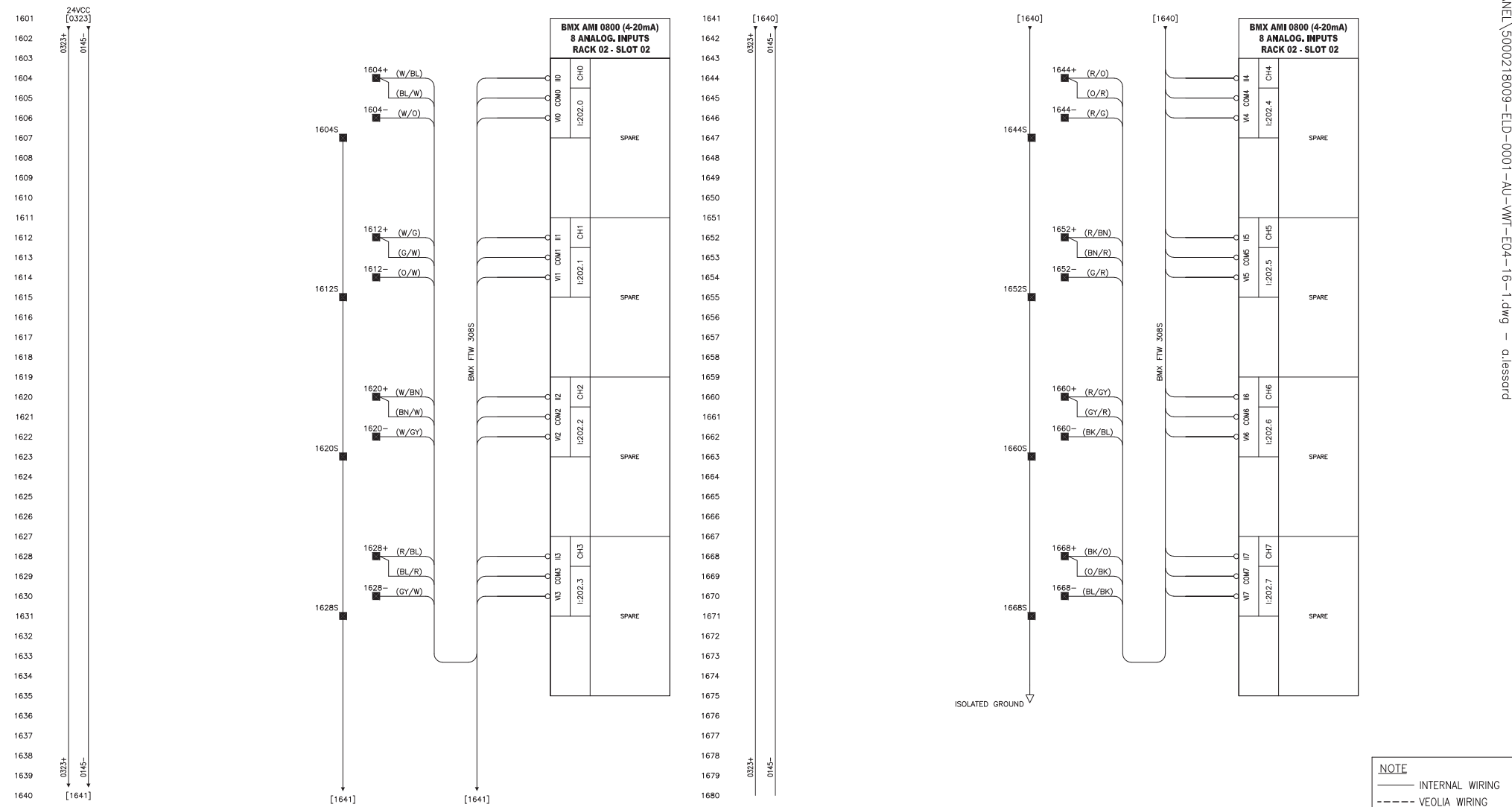

REV	DESCRIPTION	DATE	REVD	CHKD	APVD	ECN
1	FOR APPROVAL	2018-06-20	A.L.	A.L.	G.M.	–

CONFIDENTIALITY AND INTELLECTUAL PROPERTY NOTICE
ALL INFORMATION CONTAINED IN THIS DOCUMENT IS THE SOLE PROPERTY OF VEOLIA WATER TECHNOLOGIES CANADA INC. AND IS PROTECTED BY ALL APPLICABLE LAWS, INCLUDING BUT NOT LIMITED TO COPYRIGHT AND OTHER INTELLECTUAL PROPERTY LAWS. THE DESIGN CONCEPTS AND INFORMATION CONTAINED HEREIN ARE PROPRIETARY TO V.W.T AND ARE SUBMITTED IN CONFIDENCE. THEY ARE NOT TRANSFERABLE. THEY MUST BE USED ONLY FOR THE PURPOSE FOR WHICH THE DOCUMENT IS EXPRESSLY SUBMITTED AND NO IMPLICIT LICENCE IS GRANTED OTHERWISE BY THE SUBMISSION OF THIS DOCUMENT. THEY ARE CONFIDENTIAL AND PRIVILEGED INFORMATION OF V.W.T. AND THEY MUST NOT BE DISCLOSED, REPRODUCED, LOANED, REMITTED OR USED IN ANY OTHER MANNER WITHOUT THE EXPRESS WRITTEN CONSENT OF V.W.T. V.W.T. ASSUMES NO RESPONSIBILITY OR LIABILITY FOR THE USE OF THIS DOCUMENT OR THE DESIGN CONCEPTS AND INFORMATION CONTAINED HEREIN FOR ANOTHER PROJECT, OR IN A MANNER THAT DOES NOT RELATE TO THE FITNESS OR PURPOSE OF THIS DOCUMENT. IN NO EVENT SHALL THIS DOCUMENT OR THE DESIGN CONCEPTS AND INFORMATION CONTAINED HEREIN BE USED IN A MANNER DETRIMENTAL TO THE INTEREST OF V.W.T. ALL COPYRIGHT, PATENT AND OTHER INTELLECTUAL PROPERTY RIGHTS ARE RESERVED. ACCEPTANCE OF THE DELIVERY OF THIS DOCUMENT CONSTITUTES AGREEMENT TO THESE TERMS AND CONDITIONS.

DESIGNER	–	DATE –
CHECKER	–	DATE –
ENGINEER	–	DATE –
SCALE:	None	

TITLE: MAIN CONTROL PANEL PLC-001
ELECTRICAL SCHEMATIC DIAGRAM [RACK 02 SLOT 02]
–

CLIENT: AEM AMARUQ
HUDSON BAY, NUNAVUT

VEOLIA
VEOLIA WATER TECHNOLOGIES CANADA INC. 4105 Sartelon, Saint-Laurent, Qc, Canada, Tel: (514) 334-7230

PROJECT DRAWING	INTERNAL	SHEET	REV
5000218009 – ELD-0001-AU-VWT	E04	16 OF 25	1

STD: "B" 11x17 | REF: CONTROLES RL – 184172 | BAR = 1" AT PLOT SCALE

Jun 20, 2018 13:59:19 – P:\CLIENTS\Veolia Waters – John Meunier\184172_5000218009 AEM Amaruq\Ingenierie\Dessins\PLC-001 CONTROL PANEL\5000218009-ELD-0001-AU-VWT-E04-16-1.dwg – a.lessard

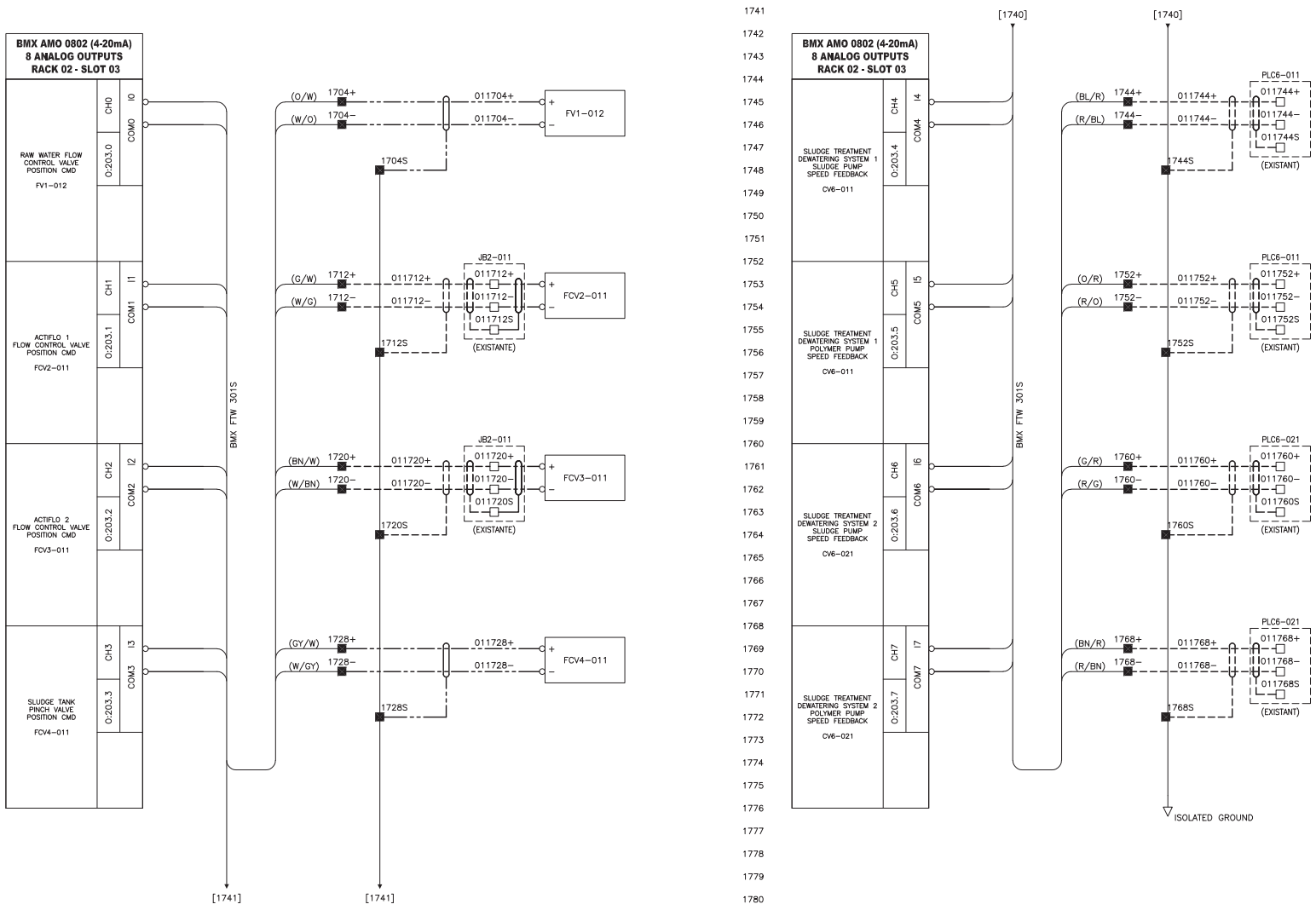

NOTE
- INTERNAL WIRING
- VEOLIA WIRING
- CUSTOMER WIRING

REV	DESCRIPTION	DATE	REVD	CHKD	APVD	ECN
1	FOR APPROVAL	2018-06-20	A.L.	A.L.	G.M.	–

CONFIDENTIALITY AND INTELLECTUAL PROPERTY NOTICE
ALL INFORMATION CONTAINED IN THIS DOCUMENT IS THE SOLE PROPERTY OF VEOLIA WATER TECHNOLOGIES CANADA INC. AND IS PROTECTED BY ALL APPLICABLE LAWS, INCLUDING BUT NOT LIMITED TO COPYRIGHT AND OTHER INTELLECTUAL PROPERTY LAWS. THE DESIGN CONCEPTS AND INFORMATION CONTAINED HEREIN ARE PROPRIETARY TO V.W.T AND ARE SUBMITTED IN CONFIDENCE. THEY ARE NOT TRANSFERABLE. THEY MUST BE USED ONLY FOR THE PURPOSE FOR WHICH THE DOCUMENT IS EXPRESSLY SUBMITTED AND NO IMPLICIT LICENCE IS GRANTED OTHERWISE BY THE SUBMISSION OF THIS DOCUMENT. THEY ARE CONFIDENTIAL AND PRIVILEGED INFORMATION OF V.W.T. AND THEY MUST NOT BE DISCLOSED, REPRODUCED, LOANED, REMITTED OR USED IN ANY OTHER MANNER WITHOUT THE EXPRESS WRITTEN CONSENT OF V.W.T. V.W.T. ASSUMES NO RESPONSIBILITY OR LIABILITY FOR THE USE OF THIS DOCUMENT OR THE DESIGN CONCEPTS AND INFORMATION CONTAINED HEREIN FOR ANOTHER PROJECT, OR IN A MANNER THAT DOES NOT RELATE TO THE FITNESS OR PURPOSE OF THIS DOCUMENT. IN NO EVENT SHALL THIS DOCUMENT OR THE DESIGN CONCEPTS AND INFORMATION CONTAINED HEREIN BE USED IN A MANNER DETRIMENTAL TO THE INTEREST OF V.W.T. ALL COPYRIGHT, PATENT AND OTHER INTELLECTUAL PROPERTY RIGHTS ARE RESERVED. ACCEPTANCE OF THE DELIVERY OF THIS DOCUMENT CONSTITUTES AGREEMENT TO THESE TERMS AND CONDITIONS.

DESIGNER	–	DATE –
CHECKER	–	DATE –
ENGINEER	–	DATE –
SCALE:	None	

TITLE: MAIN CONTROL PANEL PLC-001
ELECTRICAL SCHEMATIC DIAGRAM [RACK 02 SLOT 03]
–

CLIENT: AEM AMARUQ
HUDSON BAY, NUNAVUT

VEOLIA
VEOLIA WATER TECHNOLOGIES CANADA INC. 4105 Sartelon, Saint-Laurent, Qc, Canada, Tel: (514) 334-7230

PROJECT DRAWING	INTERNAL	SHEET	REV
5000218009 – ELD-0001-AU-VWT	E04	17 OF 25	1

STD: "B" 11x17 | REF: CONTROLES RL – 184172 | BAR = 1" AT PLOT SCALE

Jun. 20, 2018 - 13:59:24 - P:\CLIENTS\Veolia Waters - John Meunier\184172_5000218009 AEM Amaruq\Ingenierie\Dessins\PLC-001 CONTROL PANEL\5000218009-ELD-0001-AU-VWT-E04-17-1.dwg - a.lessard

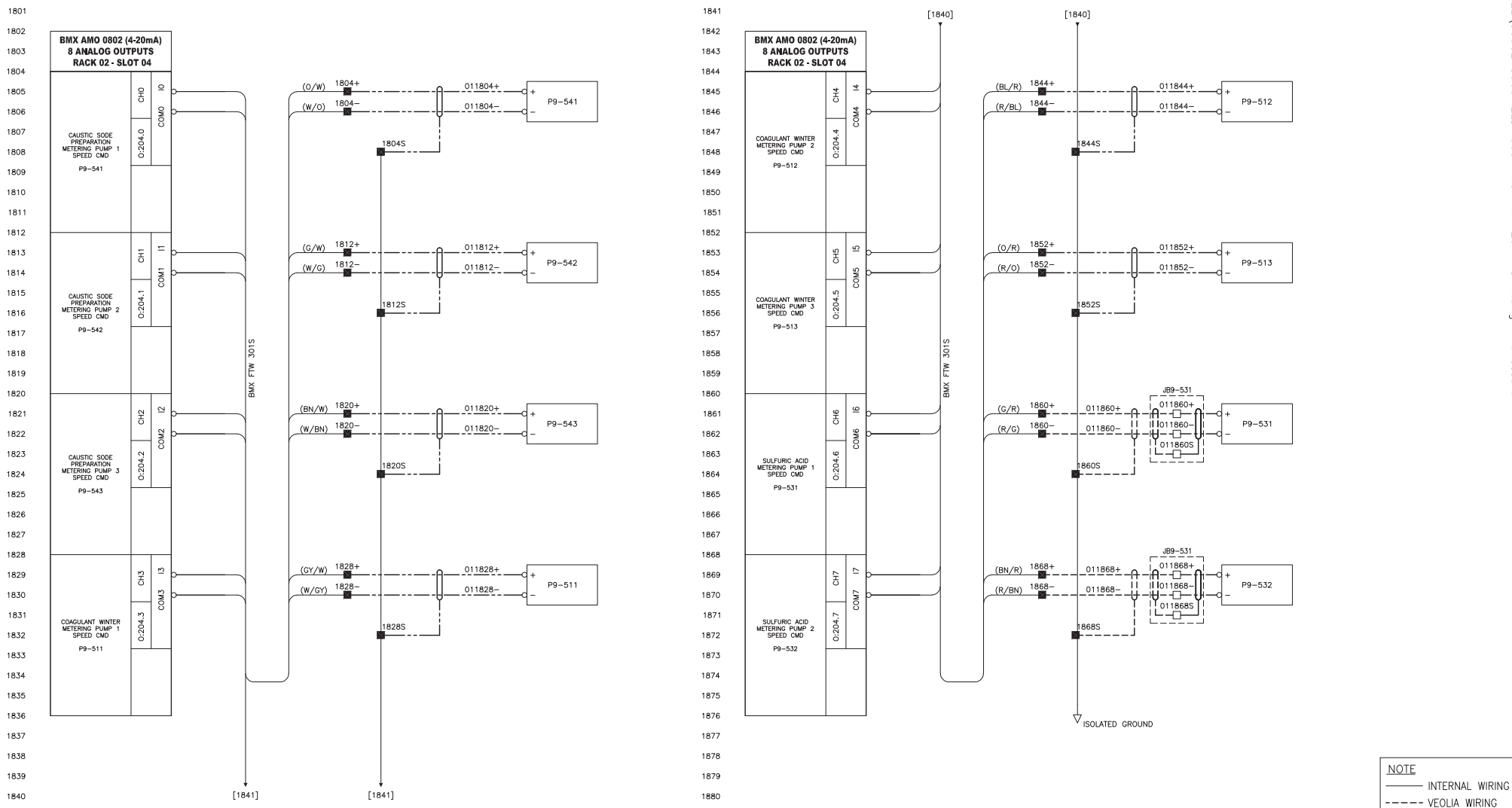

REV	DESCRIPTION	DATE	REVD	CHKD	APVD	ECN
1	FOR APPROVAL	2018-06-20	A.L.	A.L.	G.M.	–

CONFIDENTIALITY AND INTELLECTUAL PROPERTY NOTICE
ALL INFORMATION CONTAINED IN THIS DOCUMENT IS THE SOLE PROPERTY OF VEOLIA WATER TECHNOLOGIES CANADA INC. AND IS PROTECTED BY ALL APPLICABLE LAWS, INCLUDING BUT NOT LIMITED TO COPYRIGHT AND OTHER INTELLECTUAL PROPERTY LAWS. THE DESIGN CONCEPTS AND INFORMATION CONTAINED HEREIN ARE PROPRIETARY TO V.W.T AND ARE SUBMITTED IN CONFIDENCE. THEY ARE NOT TRANSFERABLE. THEY MUST BE USED ONLY FOR THE PURPOSE FOR WHICH THE DOCUMENT IS EXPRESSLY SUBMITTED AND NO IMPLICIT LICENCE IS GRANTED OTHERWISE BY THE SUBMISSION OF THIS DOCUMENT. THEY ARE CONFIDENTIAL AND PRIVILEGED INFORMATION OF V.W.T. AND THEY MUST NOT BE DISCLOSED, REPRODUCED, LOANED, REMITTED OR USED IN ANY OTHER MANNER WITHOUT THE EXPRESS WRITTEN CONSENT OF V.W.T. V.W.T. ASSUMES NO RESPONSIBILITY OR LIABILITY FOR THE USE OF THIS DOCUMENT OR THE DESIGN CONCEPTS AND INFORMATION CONTAINED HEREIN FOR ANOTHER PROJECT, OR IN A MANNER THAT DOES NOT RELATE TO THE FITNESS OR PURPOSE OF THIS DOCUMENT. IN NO EVENT SHALL THIS DOCUMENT OR THE DESIGN CONCEPTS AND INFORMATION CONTAINED HEREIN BE USED IN A MANNER DETRIMENTAL TO THE INTEREST OF V.W.T. ALL COPYRIGHT, PATENT AND OTHER INTELLECTUAL PROPERTY RIGHTS ARE RESERVED. ACCEPTANCE OF THE DELIVERY OF THIS DOCUMENT CONSTITUTES AGREEMENT TO THESE TERMS AND CONDITIONS.

DESIGNER	–	DATE –
CHECKER	–	DATE –
ENGINEER	–	DATE –
SCALE:	None	

TITLE: MAIN CONTROL PANEL PLC-001
ELECTRICAL SCHEMATIC DIAGRAM [RACK 02 SLOT 04]
–

CLIENT: AEM AMARUQ
HUDSON BAY, NUNAVUT

VEOLIA
VEOLIA WATER TECHNOLOGIES CANADA INC. 4105 Sartelon, Saint-Laurent, Qc, Canada, Tel: (514) 334-7230

PROJECT DRAWING	INTERNAL	SHEET	REV
5000218009 – ELD-0001-AU-VWT	E04	18 OF 25	1

STD: "B" 11x17 | REF: CONTROLES RL – 184172 | BAR = 1" AT PLOT SCALE

Jun 20, 2018 13:59:29 – P:\CLIENTS\Veolia Waters – John Meunier\184172_5000218009 AEM Amaruq\Ingenierie\Dessins\PLC-001 CONTROL PANEL\5000218009-ELD-0001-AU-VWT-E04-18-1.dwg – a.lessard

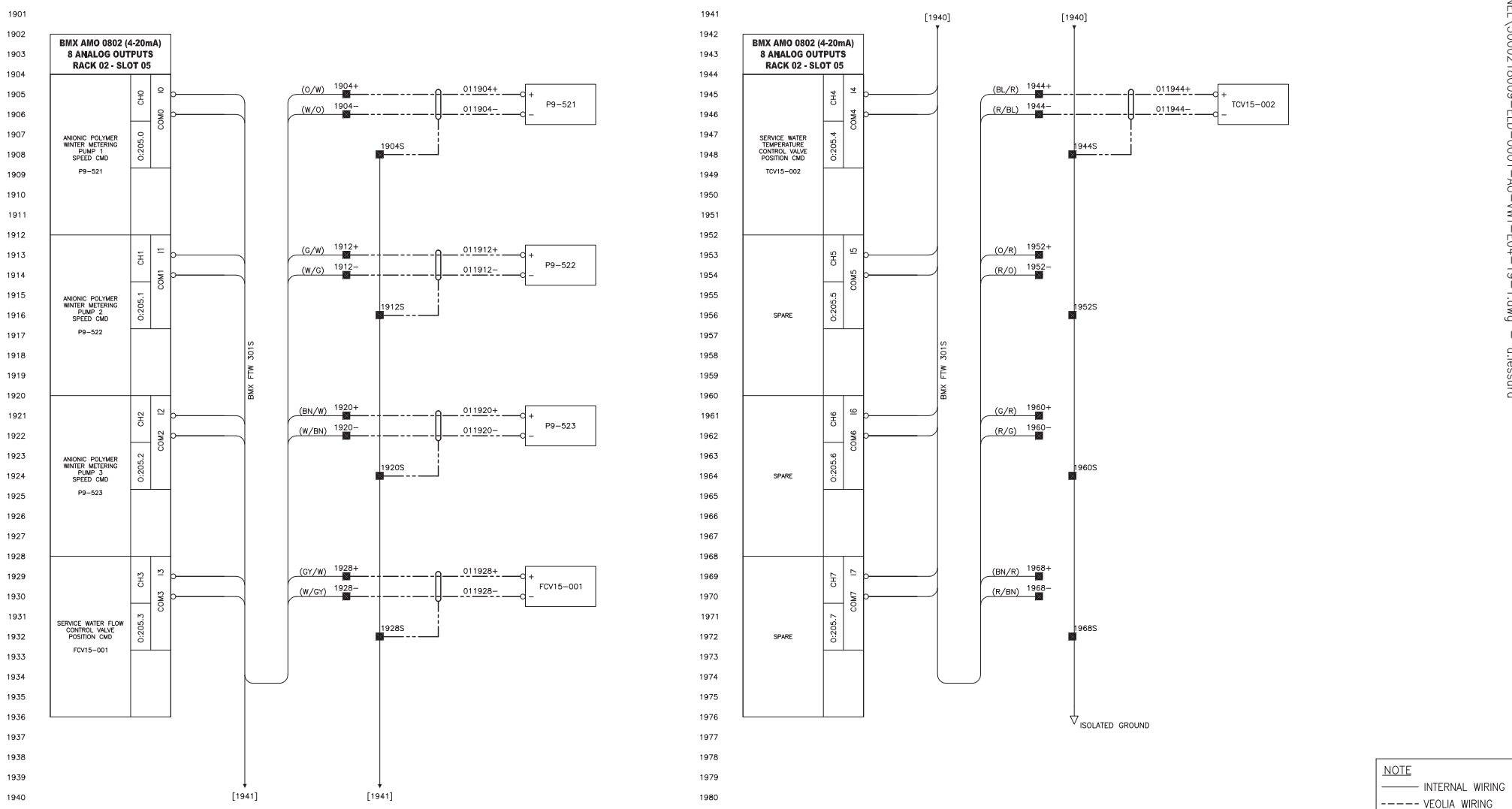

REV	DESCRIPTION	DATE	REVD	CHKD	APVD	ECN
1	FOR APPROVAL	2018-06-20	A.L.	A.L.	G.M.	–

CONFIDENTIALITY AND INTELLECTUAL PROPERTY NOTICE
ALL INFORMATION CONTAINED IN THIS DOCUMENT IS THE SOLE PROPERTY OF VEOLIA WATER TECHNOLOGIES CANADA INC. AND IS PROTECTED BY ALL APPLICABLE LAWS, INCLUDING BUT NOT LIMITED TO COPYRIGHT AND OTHER INTELLECTUAL PROPERTY LAWS. THE DESIGN CONCEPTS AND INFORMATION CONTAINED HEREIN ARE PROPRIETARY TO V.W.T AND ARE SUBMITTED IN CONFIDENCE. THEY ARE NOT TRANSFERABLE. THEY MUST BE USED ONLY FOR THE PURPOSE FOR WHICH THE DOCUMENT IS EXPRESSLY SUBMITTED AND NO IMPLICIT LICENCE IS GRANTED OTHERWISE BY THE SUBMISSION OF THIS DOCUMENT. THEY ARE CONFIDENTIAL AND PRIVILEGED INFORMATION OF V.W.T. AND THEY MUST NOT BE DISCLOSED, REPRODUCED, LOANED, REMITTED OR USED IN ANY OTHER MANNER WITHOUT THE EXPRESS WRITTEN CONSENT OF V.W.T. V.W.T. ASSUMES NO RESPONSIBILITY OR LIABILITY FOR THE USE OF THIS DOCUMENT OR THE DESIGN CONCEPTS AND INFORMATION CONTAINED HEREIN FOR ANOTHER PROJECT, OR IN A MANNER THAT DOES NOT RELATE TO THE FITNESS OR PURPOSE OF THIS DOCUMENT. IN NO EVENT SHALL THIS DOCUMENT OR THE DESIGN CONCEPTS AND INFORMATION CONTAINED HEREIN BE USED IN A MANNER DETRIMENTAL TO THE INTEREST OF V.W.T. ALL COPYRIGHT, PATENT AND OTHER INTELLECTUAL PROPERTY RIGHTS ARE RESERVED. ACCEPTANCE OF THE DELIVERY OF THIS DOCUMENT CONSTITUTES AGREEMENT TO THESE TERMS AND CONDITIONS.

DESIGNER	–	DATE –
CHECKER	–	DATE –
ENGINEER	–	DATE –
SCALE:	None	

TITLE: MAIN CONTROL PANEL PLC-001
ELECTRICAL SCHEMATIC DIAGRAM [RACK 02 SLOT 05]
–

CLIENT: AEM AMARUQ
HUDSON BAY, NUNAVUT

VEOLIA
VEOLIA WATER TECHNOLOGIES CANADA INC. 4105 Sartelon, Saint-Laurent, Qc, Canada, Tel: (514) 334-7230

PROJECT DRAWING	INTERNAL	SHEET	REV
5000218009 – ELD-0001-AU-VWT	E04	19 OF 25	1

STD: "B" 11x17 | REF: CONTROLES RL – 184172 | BAR = 1" AT PLOT SCALE

Jun. 20, 2018 - 13:59:34 - P:\CLIENTS\Veolia Waters - John Meunier\184172_5000218009 AEM Amaruq\Ingenierie\Dessins\PLC-001 CONTROL PANEL\5000218009-ELD-0001-AU-VWT-E04-19-1.dwg - a.lessard

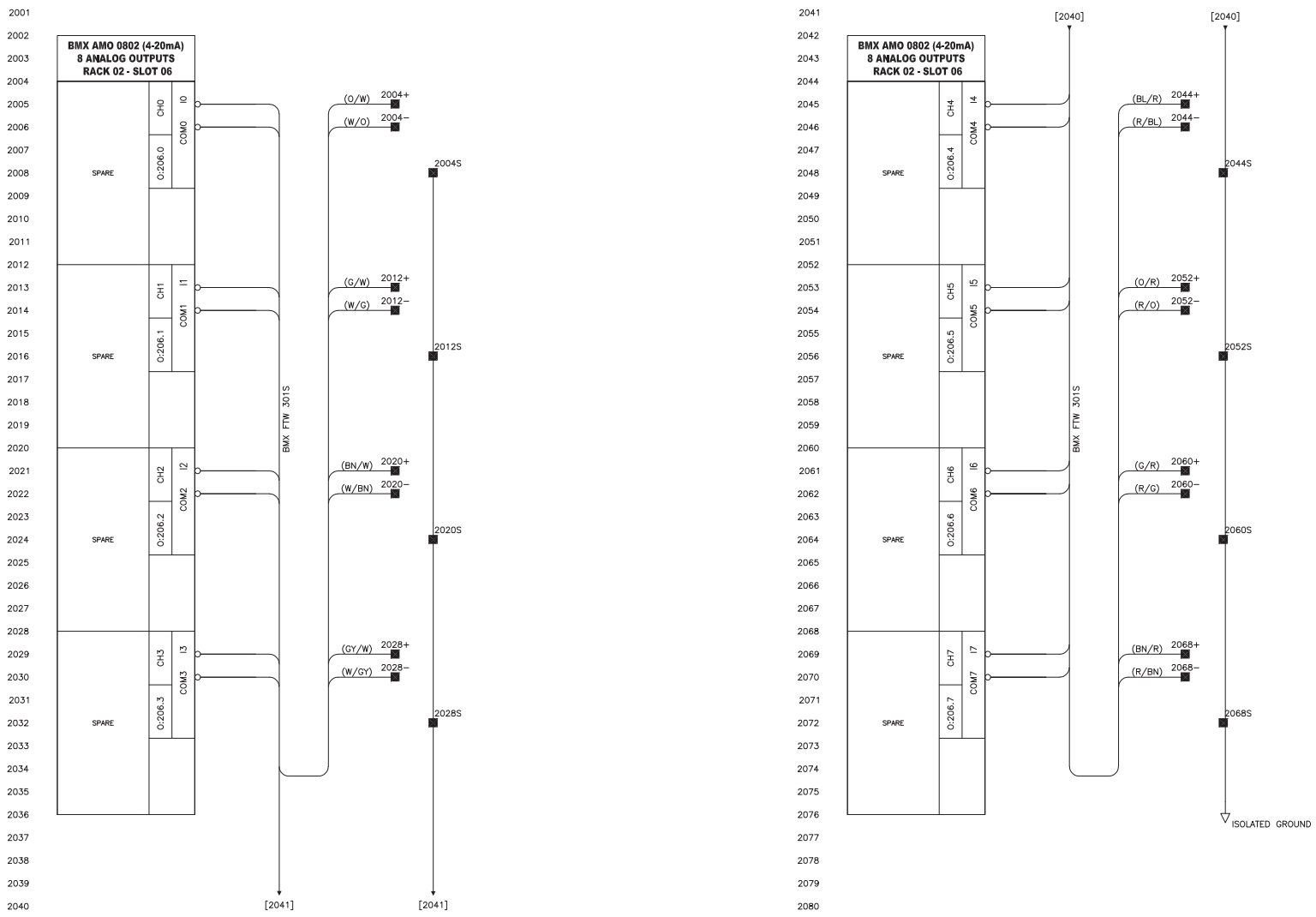

NOTE
——— INTERNAL WIRING
- - - - - VEOLIA WIRING
—·—·— CUSTOMER WIRING

REV	DESCRIPTION	DATE	REVD	CHKD	APVD	ECN
1	FOR APPROVAL	2018-06-20	A.L.	A.L.	G.M.	–

CONFIDENTIALITY AND INTELLECTUAL PROPERTY NOTICE
ALL INFORMATION CONTAINED IN THIS DOCUMENT IS THE SOLE PROPERTY OF VEOLIA WATER TECHNOLOGIES CANADA INC. AND IS PROTECTED BY ALL APPLICABLE LAWS, INCLUDING BUT NOT LIMITED TO COPYRIGHT AND OTHER INTELLECTUAL PROPERTY LAWS. THE DESIGN CONCEPTS AND INFORMATION CONTAINED HEREIN ARE PROPRIETARY TO V.W.T AND ARE SUBMITTED IN CONFIDENCE. THEY ARE NOT TRANSFERABLE. THEY MUST BE USED ONLY FOR THE PURPOSE FOR WHICH THE DOCUMENT IS EXPRESSLY SUBMITTED AND NO IMPLICIT LICENCE IS GRANTED OTHERWISE BY THE SUBMISSION OF THIS DOCUMENT. THEY ARE CONFIDENTIAL AND PRIVILEGED INFORMATION OF V.W.T. AND THEY MUST NOT BE DISCLOSED, REPRODUCED, LOANED, REMITTED OR USED IN ANY OTHER MANNER WITHOUT THE EXPRESS WRITTEN CONSENT OF V.W.T. V.W.T. ASSUMES NO RESPONSIBILITY OR LIABILITY FOR THE USE OF THIS DOCUMENT OR THE DESIGN CONCEPTS AND INFORMATION CONTAINED HEREIN FOR ANOTHER PROJECT, OR IN A MANNER THAT DOES NOT RELATE TO THE FITNESS OR PURPOSE OF THIS DOCUMENT. IN NO EVENT SHALL THIS DOCUMENT OR THE DESIGN CONCEPTS AND INFORMATION CONTAINED HEREIN BE USED IN A MANNER DETRIMENTAL TO THE INTEREST OF V.W.T. ALL COPYRIGHT, PATENT AND OTHER INTELLECTUAL PROPERTY RIGHTS ARE RESERVED. ACCEPTANCE OF THE DELIVERY OF THIS DOCUMENT CONSTITUTES AGREEMENT TO THESE TERMS AND CONDITIONS.

DESIGNER	–	DATE –
CHECKER	–	DATE –
ENGINEER	–	DATE –
SCALE:	None	

TITLE: MAIN CONTROL PANEL PLC-001
ELECTRICAL SCHEMATIC DIAGRAM [RACK 02 SLOT 06]
–

CLIENT: AEM AMARUQ
HUDSON BAY, NUNAVUT

VEOLIA
VEOLIA WATER TECHNOLOGIES CANADA INC. 4105 Sartelon, Saint-Laurent, Qc, Canada, Tel: (514) 334-7230

PROJECT DRAWING	INTERNAL	SHEET	REV
5000218009 – ELD-0001-AU-VWT	E04	20 OF 25	1

STD: "B" 11x17 | REF: CONTROLES RL – 184172 | BAR = 1" AT PLOT SCALE

Jun 20, 2018 13:59:39 – P:\CLIENTS\Veolia Waters – John Meunier\184172_5000218009 AEM Amaruq\Ingenierie\Dessins\PLC-001 CONTROL PANEL\5000218009-ELD-0001-AU-VWT-E04-20-1.dwg – a.lessard

RESERVED SPACE FOR RACK 02 SLOT 07

NOTE
——— INTERNAL WIRING
- - - - - VEOLIA WIRING
—·—·— CUSTOMER WIRING

REV	DESCRIPTION	DATE	REVD	CHKD	APVD	ECN
1	FOR APPROVAL	2018-06-20	A.L.	A.L.	G.M.	–

CONFIDENTIALITY AND INTELLECTUAL PROPERTY NOTICE
ALL INFORMATION CONTAINED IN THIS DOCUMENT IS THE SOLE PROPERTY OF VEOLIA WATER TECHNOLOGIES CANADA INC. AND IS PROTECTED BY ALL APPLICABLE LAWS, INCLUDING BUT NOT LIMITED TO COPYRIGHT AND OTHER INTELLECTUAL PROPERTY LAWS. THE DESIGN CONCEPTS AND INFORMATION CONTAINED HEREIN ARE PROPRIETARY TO V.W.T AND ARE SUBMITTED IN CONFIDENCE. THEY ARE NOT TRANSFERABLE. THEY MUST BE USED ONLY FOR THE PURPOSE FOR WHICH THE DOCUMENT IS EXPRESSLY SUBMITTED AND NO IMPLICIT LICENCE IS GRANTED OTHERWISE BY THE SUBMISSION OF THIS DOCUMENT. THEY ARE CONFIDENTIAL AND PRIVILEGED INFORMATION OF V.W.T. AND THEY MUST NOT BE DISCLOSED, REPRODUCED, LOANED, REMITTED OR USED IN ANY OTHER MANNER WITHOUT THE EXPRESS WRITTEN CONSENT OF V.W.T. V.W.T. ASSUMES NO RESPONSIBILITY OR LIABILITY FOR THE USE OF THIS DOCUMENT OR THE DESIGN CONCEPTS AND INFORMATION CONTAINED HEREIN FOR ANOTHER PROJECT, OR IN A MANNER THAT DOES NOT RELATE TO THE FITNESS OR PURPOSE OF THIS DOCUMENT. IN NO EVENT SHALL THIS DOCUMENT OR THE DESIGN CONCEPTS AND INFORMATION CONTAINED HEREIN BE USED IN A MANNER DETRIMENTAL TO THE INTEREST OF V.W.T. ALL COPYRIGHT, PATENT AND OTHER INTELLECTUAL PROPERTY RIGHTS ARE RESERVED. ACCEPTANCE OF THE DELIVERY OF THIS DOCUMENT CONSTITUTES AGREEMENT TO THESE TERMS AND CONDITIONS.

DESIGNER	–	DATE –
CHECKER	–	DATE –
ENGINEER	–	DATE –
SCALE:	None	

TITLE: MAIN CONTROL PANEL PLC-001
ELECTRICAL SCHEMATIC DIAGRAM [RACK 02 SLOT 07]
–

CLIENT: AEM AMARUQ
HUDSON BAY, NUNAVUT

VEOLIA
VEOLIA WATER TECHNOLOGIES CANADA INC. 4105 Sartelon, Saint-Laurent, Qc, Canada, Tel: (514) 334-7230

PROJECT DRAWING	INTERNAL	SHEET	REV
5000218009 – ELD-0001-AU-VWT	E04	21 OF 25	1

STD: "B" 11x17 | REF: CONTROLES RL – 184172 | BAR = 1" AT PLOT SCALE

Jun 20, 2018 13:59:44 – P:\CLIENTS\Veolia Waters – John Meunier\184172_5000218009 AEM Amaruq\Ingenierie\Dessins\PLC-001 CONTROL PANEL\5000218009-ELD-0001-AU-VWT-E04-21-1.dwg – a.lessard

Jun 20, 2018 13:59:49 – P:\CLIENTS\Veolia Waters – John Meunier\184172_5000218009 AEM Amaruq\Ingenierie\Dessins\PLC-001 CONTROL PANEL\5000218009-ELD-0001-AU-VWT-E04-22-1.dwg – a.lessard

STD: "B" 11x17 | REF: CONTROLES RL – 184172 | BAR = 1" AT PLOT SCALE

RESERVED SPACE FOR RACK 02 SLOT 08

NOTE
——— INTERNAL WIRING
- - - - - VEOLIA WIRING
—·—·— CUSTOMER WIRING

REV	DESCRIPTION	DATE	REVD	CHKD	APVD	ECN
1	FOR APPROVAL	2018-06-20	A.L.	A.L.	G.M.	–

CONFIDENTIALITY AND INTELLECTUAL PROPERTY NOTICE
ALL INFORMATION CONTAINED IN THIS DOCUMENT IS THE SOLE PROPERTY OF VEOLIA WATER TECHNOLOGIES CANADA INC. AND IS PROTECTED BY ALL APPLICABLE LAWS, INCLUDING BUT NOT LIMITED TO COPYRIGHT AND OTHER INTELLECTUAL PROPERTY LAWS. THE DESIGN CONCEPTS AND INFORMATION CONTAINED HEREIN ARE PROPRIETARY TO V.W.T AND ARE SUBMITTED IN CONFIDENCE. THEY ARE NOT TRANSFERABLE. THEY MUST BE USED ONLY FOR THE PURPOSE FOR WHICH THE DOCUMENT IS EXPRESSLY SUBMITTED AND NO IMPLICIT LICENCE IS GRANTED OTHERWISE BY THE SUBMISSION OF THIS DOCUMENT. THEY ARE CONFIDENTIAL AND PRIVILEGED INFORMATION OF V.W.T. AND THEY MUST NOT BE DISCLOSED, REPRODUCED, LOANED, REMITTED OR USED IN ANY OTHER MANNER WITHOUT THE EXPRESS WRITTEN CONSENT OF V.W.T. V.W.T. ASSUMES NO RESPONSIBILITY OR LIABILITY FOR THE USE OF THIS DOCUMENT OR THE DESIGN CONCEPTS AND INFORMATION CONTAINED HEREIN FOR ANOTHER PROJECT, OR IN A MANNER THAT DOES NOT RELATE TO THE FITNESS OR PURPOSE OF THIS DOCUMENT. IN NO EVENT SHALL THIS DOCUMENT OR THE DESIGN CONCEPTS AND INFORMATION CONTAINED HEREIN BE USED IN A MANNER DETRIMENTAL TO THE INTEREST OF V.W.T. ALL COPYRIGHT, PATENT AND OTHER INTELLECTUAL PROPERTY RIGHTS ARE RESERVED. ACCEPTANCE OF THE DELIVERY OF THIS DOCUMENT CONSTITUTES AGREEMENT TO THESE TERMS AND CONDITIONS.

DESIGNER	–	DATE –
CHECKER	–	DATE –
ENGINEER	–	DATE –
SCALE:	None	

TITLE: MAIN CONTROL PANEL PLC-001
ELECTRICAL SCHEMATIC DIAGRAM [RACK 02 SLOT 08]
–

CLIENT: AEM AMARUQ
HUDSON BAY, NUNAVUT

VEOLIA
VEOLIA WATER TECHNOLOGIES CANADA INC., 4105 Sartelon, Saint-Laurent, Qc, Canada, Tel: (514) 334-7230

PROJECT DRAWING	INTERNAL	SHEET	REV
5000218009 – ELD-0001-AU-VWT	E04	22 OF 25	1

RESERVED SPACE FOR RACK 02 SLOT 09

NOTE
——— INTERNAL WIRING
- - - - - VEOLIA WIRING
—·—·— CUSTOMER WIRING

REV	DESCRIPTION	DATE	REVD	CHKD	APVD	ECN
1	FOR APPROVAL	2018-06-20	A.L.	A.L.	G.M.	–

CONFIDENTIALITY AND INTELLECTUAL PROPERTY NOTICE
ALL INFORMATION CONTAINED IN THIS DOCUMENT IS THE SOLE PROPERTY OF VEOLIA WATER TECHNOLOGIES CANADA INC. AND IS PROTECTED BY ALL APPLICABLE LAWS, INCLUDING BUT NOT LIMITED TO COPYRIGHT AND OTHER INTELLECTUAL PROPERTY LAWS. THE DESIGN CONCEPTS AND INFORMATION CONTAINED HEREIN ARE PROPRIETARY TO V.W.T AND ARE SUBMITTED IN CONFIDENCE. THEY ARE NOT TRANSFERABLE. THEY MUST BE USED ONLY FOR THE PURPOSE FOR WHICH THE DOCUMENT IS EXPRESSLY SUBMITTED AND NO IMPLICIT LICENCE IS GRANTED OTHERWISE BY THE SUBMISSION OF THIS DOCUMENT. THEY ARE CONFIDENTIAL AND PRIVILEGED INFORMATION OF V.W.T. AND THEY MUST NOT BE DISCLOSED, REPRODUCED, LOANED, REMITTED OR USED IN ANY OTHER MANNER WITHOUT THE EXPRESS WRITTEN CONSENT OF V.W.T. V.W.T. ASSUMES NO RESPONSIBILITY OR LIABILITY FOR THE USE OF THIS DOCUMENT OR THE DESIGN CONCEPTS AND INFORMATION CONTAINED HEREIN FOR ANOTHER PROJECT, OR IN A MANNER THAT DOES NOT RELATE TO THE FITNESS OR PURPOSE OF THIS DOCUMENT. IN NO EVENT SHALL THIS DOCUMENT OR THE DESIGN CONCEPTS AND INFORMATION CONTAINED HEREIN BE USED IN A MANNER DETRIMENTAL TO THE INTEREST OF V.W.T. ALL COPYRIGHT, PATENT AND OTHER INTELLECTUAL PROPERTY RIGHTS ARE RESERVED. ACCEPTANCE OF THE DELIVERY OF THIS DOCUMENT CONSTITUTES AGREEMENT TO THESE TERMS AND CONDITIONS.

DESIGNER	–	DATE –
CHECKER	–	DATE –
ENGINEER	–	DATE –
SCALE:	None	

TITLE: MAIN CONTROL PANEL PLC-001
ELECTRICAL SCHEMATIC DIAGRAM [RACK 02 SLOT 09]
–

CLIENT: AEM AMARUQ
HUDSON BAY, NUNAVUT

VEOLIA
VEOLIA WATER TECHNOLOGIES CANADA INC. 4105 Sartelon, Saint-Laurent, Qc, Canada, Tel: (514) 334-7230

PROJECT DRAWING	INTERNAL	SHEET	REV
5000218009 – ELD-0001-AU-VWT	E04	23 OF 25	1

STD: "B" 11x17 | REF: CONTROLES RL – 184172 | BAR = 1" AT PLOT SCALE

Jun 20, 2018 13:59:54 – P:\CLIENTS\Veolia Waters – John Meunier\184172_5000218009 AEM Amaruq\Ingenierie\Dessins\PLC-001 CONTROL PANEL\5000218009-ELD-0001-AU-VWT-E04-23-1.dwg – a.lessard

RESERVED SPACE FOR RACK 02 SLOT 10

NOTE
——— INTERNAL WIRING
- - - - - VEOLIA WIRING
—·—·— CUSTOMER WIRING

REV	DESCRIPTION	DATE	REVD	CHKD	APVD	ECN
1	FOR APPROVAL	2018-06-20	A.L.	A.L.	G.M.	–

CONFIDENTIALITY AND INTELLECTUAL PROPERTY NOTICE
ALL INFORMATION CONTAINED IN THIS DOCUMENT IS THE SOLE PROPERTY OF VEOLIA WATER TECHNOLOGIES CANADA INC. AND IS PROTECTED BY ALL APPLICABLE LAWS, INCLUDING BUT NOT LIMITED TO COPYRIGHT AND OTHER INTELLECTUAL PROPERTY LAWS. THE DESIGN CONCEPTS AND INFORMATION CONTAINED HEREIN ARE PROPRIETARY TO V.W.T AND ARE SUBMITTED IN CONFIDENCE. THEY ARE NOT TRANSFERABLE. THEY MUST BE USED ONLY FOR THE PURPOSE FOR WHICH THE DOCUMENT IS EXPRESSLY SUBMITTED AND NO IMPLICIT LICENCE IS GRANTED OTHERWISE BY THE SUBMISSION OF THIS DOCUMENT. THEY ARE CONFIDENTIAL AND PRIVILEGED INFORMATION OF V.W.T. AND THEY MUST NOT BE DISCLOSED, REPRODUCED, LOANED, REMITTED OR USED IN ANY OTHER MANNER WITHOUT THE EXPRESS WRITTEN CONSENT OF V.W.T. V.W.T. ASSUMES NO RESPONSIBILITY OR LIABILITY FOR THE USE OF THIS DOCUMENT OR THE DESIGN CONCEPTS AND INFORMATION CONTAINED HEREIN FOR ANOTHER PROJECT, OR IN A MANNER THAT DOES NOT RELATE TO THE FITNESS OR PURPOSE OF THIS DOCUMENT. IN NO EVENT SHALL THIS DOCUMENT OR THE DESIGN CONCEPTS AND INFORMATION CONTAINED HEREIN BE USED IN A MANNER DETRIMENTAL TO THE INTEREST OF V.W.T. ALL COPYRIGHT, PATENT AND OTHER INTELLECTUAL PROPERTY RIGHTS ARE RESERVED. ACCEPTANCE OF THE DELIVERY OF THIS DOCUMENT CONSTITUTES AGREEMENT TO THESE TERMS AND CONDITIONS.

DESIGNER	–	DATE –
CHECKER	–	DATE –
ENGINEER	–	DATE –
SCALE:	None	

TITLE: MAIN CONTROL PANEL PLC-001
ELECTRICAL SCHEMATIC DIAGRAM [RACK 02 SLOT 10]
–

CLIENT: AEM AMARUQ
HUDSON BAY, NUNAVUT

VEOLIA
VEOLIA WATER TECHNOLOGIES CANADA INC. 4105 Sartelon, Saint-Laurent, Qc, Canada, Tel: (514) 334-7230

PROJECT DRAWING	INTERNAL	SHEET	REV
5000218009 – ELD-0001-AU-VWT	E04	24 OF 25	1

STD: "B" 11x17 | REF: CONTROLES RL – 184172 | BAR = 1" AT PLOT SCALE

Jun 20, 2018 13:59:59 – P:\CLIENTS\Veolia Waters – John Meunier\184172_5000218009 AEM Amaruq\Ingenierie\Dessins\PLC-001 CONTROL PANEL\5000218009-ELD-0001-AU-VWT-E04-24-1.dwg – a.lessard

RESERVED SPACE FOR RACK 02 SLOT 11

NOTE
INTERNAL WIRING
VEOLIA WIRING
CUSTOMER WIRING

REV	DESCRIPTION	DATE	REVD	CHKD	APVD	ECN
1	FOR APPROVAL	2018-06-20	A.L.	A.L.	G.M.	–

CONFIDENTIALITY AND INTELLECTUAL PROPERTY NOTICE
ALL INFORMATION CONTAINED IN THIS DOCUMENT IS THE SOLE PROPERTY OF VEOLIA WATER TECHNOLOGIES CANADA INC. AND IS PROTECTED BY ALL APPLICABLE LAWS, INCLUDING BUT NOT LIMITED TO COPYRIGHT AND OTHER INTELLECTUAL PROPERTY LAWS. THE DESIGN CONCEPTS AND INFORMATION CONTAINED HEREIN ARE PROPRIETARY TO V.W.T AND ARE SUBMITTED IN CONFIDENCE. THEY ARE NOT TRANSFERABLE. THEY MUST BE USED ONLY FOR THE PURPOSE FOR WHICH THE DOCUMENT IS EXPRESSLY SUBMITTED AND NO IMPLICIT LICENCE IS GRANTED OTHERWISE BY THE SUBMISSION OF THIS DOCUMENT. THEY ARE CONFIDENTIAL AND PRIVILEGED INFORMATION OF V.W.T. AND THEY MUST NOT BE DISCLOSED, REPRODUCED, LOANED, REMITTED OR USED IN ANY OTHER MANNER WITHOUT THE EXPRESS WRITTEN CONSENT OF V.W.T. V.W.T. ASSUMES NO RESPONSIBILITY OR LIABILITY FOR THE USE OF THIS DOCUMENT OR THE DESIGN CONCEPTS AND INFORMATION CONTAINED HEREIN FOR ANOTHER PROJECT, OR IN A MANNER THAT DOES NOT RELATE TO THE FITNESS OR PURPOSE OF THIS DOCUMENT. IN NO EVENT SHALL THIS DOCUMENT OR THE DESIGN CONCEPTS AND INFORMATION CONTAINED HEREIN BE USED IN A MANNER DETRIMENTAL TO THE INTEREST OF V.W.T. ALL COPYRIGHT, PATENT AND OTHER INTELLECTUAL PROPERTY RIGHTS ARE RESERVED. ACCEPTANCE OF THE DELIVERY OF THIS DOCUMENT CONSTITUTES AGREEMENT TO THESE TERMS AND CONDITIONS.

	DATE
DESIGNER	–
CHECKER	–
ENGINEER	–

SCALE: None

TITLE: MAIN CONTROL PANEL PLC-001
ELECTRICAL SCHEMATIC DIAGRAM [RACK 02 SLOT 11]
–

CLIENT: AEM AMARUQ
HUDSON BAY, NUNAVUT

VEOLIA WATER TECHNOLOGIES CANADA INC. 4105 Sartelon, Saint-Laurent, Qc, Canada, Tel: (514) 334-7230

PROJECT DRAWING	INTERNAL	SHEET	REV
5000218009 – ELD-0001-AU-VWT	E04	25 OF 25	1

STD: "B" 11x17 | REF: CONTROLES RL – 184172 | BAR = 1" AT PLOT SCALE

Jun 20, 2018 14:00:04 – P:\CLIENTS\Veolia Waters – John Meunier\184172_5000218009 AEM Amaruq\Ingenierie\Dessins\PLC-001 CONTROL PANEL\5000218009-ELD-0001-AU-VWT-E04-25-1.dwg – a.lessard

Jun 20, 2018 14:00:13 - P:\CLIENTS\Veolia Waters - John Meunier\184172_5000218009 AEM Amaruq\Ingenierie\Dessins\PLC-001 CONTROL PANEL\JUNCTION BOX\5000218009-ELD-0002-AU-VWT-E00-01-1_E.dwg - o.lessard

STD: "B" 11x17 | REF: CONTROLES RL - 184172 | BAR = 1" AT PLOT SCALE

JB9-521 SEEPEX JUNCTION BOX

PROJECT - 5000218009

DRAFT

REV	DESCRIPTION	DATE	REVD	CHKD	APVD	ECN
1	FOR APPROVAL	2018-06-20	A.L.	A.L.	G.M.	-

CONFIDENTIALITY AND INTELLECTUAL PROPERTY NOTICE
ALL INFORMATION CONTAINED IN THIS DOCUMENT IS THE SOLE PROPERTY OF VEOLIA WATER TECHNOLOGIES CANADA INC. AND IS PROTECTED BY ALL APPLICABLE LAWS, INCLUDING BUT NOT LIMITED TO COPYRIGHT AND OTHER INTELLECTUAL PROPERTY LAWS. THE DESIGN CONCEPTS AND INFORMATION CONTAINED HEREIN ARE PROPRIETARY TO V.W.T AND ARE SUBMITTED IN CONFIDENCE. THEY ARE NOT TRANSFERABLE. THEY MUST BE USED ONLY FOR THE PURPOSE FOR WHICH THE DOCUMENT IS EXPRESSLY SUBMITTED AND NO IMPLICIT LICENCE IS GRANTED OTHERWISE BY THE SUBMISSION OF THIS DOCUMENT. THEY ARE CONFIDENTIAL AND PRIVILEGED INFORMATION OF V.W.T. AND THEY MUST NOT BE DISCLOSED, REPRODUCED, LOANED, REMITTED OR USED IN ANY OTHER MANNER WITHOUT THE EXPRESS WRITTEN CONSENT OF V.W.T. V.W.T. ASSUMES NO RESPONSIBILITY OR LIABILITY FOR THE USE OF THIS DOCUMENT OR THE DESIGN CONCEPTS AND INFORMATION CONTAINED HEREIN FOR ANOTHER PROJECT, OR IN A MANNER THAT DOES NOT RELATE TO THE FITNESS OR PURPOSE OF THIS DOCUMENT. IN NO EVENT SHALL THIS DOCUMENT OR THE DESIGN CONCEPTS AND INFORMATION CONTAINED HEREIN BE USED IN A MANNER DETRIMENTAL TO THE INTEREST OF V.W.T. ALL COPYRIGHT, PATENT AND OTHER INTELLECTUAL PROPERTY RIGHTS ARE RESERVED. ACCEPTANCE OF THE DELIVERY OF THIS DOCUMENT CONSTITUTES AGREEMENT TO THESE TERMS AND CONDITIONS.

DESIGNER	–	DATE –
CHECKER	–	DATE –
ENGINEER	–	DATE –
SCALE:	None	

TITLE: JB9-521 SEEPEX JUNCTION BOX
TITLE PAGE
–

CLIENT: AEM AMARUQ
HUDSON BAY, NUNAVUT

VEOLIA
VEOLIA WATER TECHNOLOGIES CANADA INC. 4105 Sartelon, Saint-Laurent, Qc, Canada, Tel: (514) 334-7230

PROJECT DRAWING	INTERNAL	SHEET	REV
5000218009 – ELD-0002-AU-VWT	E00	01 OF 05	1

DRAWING INDEX

DESCRIPTION	DRAWING NUMBER
JB9–521 SEEPEX JUNCTION BOX	
TITLE PAGE	5000218009–ELD–0002–AU–VWT–E00–01
DRAWING LIST & LEGEND	5000218009–ELD–0002–AU–VWT–E00–02
ENCLOSURE LAYOUT	5000218009–ELD–0002–AU–VWT–E00–03
INSIDE PANEL LAYOUT & BILL OF MATERIAL	5000218009–ELD–0002–AU–VWT–E00–04
TERMINAL DETAILS	5000218009–ELD–0002–AU–VWT–E00–05
SCHEMATIC DIAGRAM [POWER DISTRIBUTION] 120VAC/24VDC	5000218009–ELD–0002–AU–VWT–E04–01

COLORS AND WIRINGS GAGES

120VCA POWER	BLACK	14AWG
120VCA CONTROL	RED	14AWG
NEUTRAL	WHITE	14AWG
DRY CONTACT	YELLOW	14AWG
24VCC	BLUE[+], BLUE/WHITE[–]	16AWG[0 À 9A] 14AWG[10A & +]
GROUND	GREEN	14AWG
ISOLATED GROUND	GREEN/YELLOW	14AWG
ANALOG I/O TWISTED PAIRS	BLACK[+], WHITE[–]	18AWG
DIGITAL I/O 120VAC	RED	16AWG
DIGITAL I/O 24VCC	BLUE	16AWG
LOW VOLTAGE [12, 24, 48VCC]	BLUE	16AWG[0 À 9A] 14AWG[10A & +]
CONTROL CIRCUIT 5 TO 60VDC	BLUE[+], BLUE/WHITE[–], VERT[GND]	16AWG[0 À 9A] 14AWG[10A & +]

COLORS AND WIRING GAGES

SUPPLY 600VAC (L1)	RED	12AWG
SUPPLY 600VAC (L2)	BLACK	12AWG
SUPPLY 600VAC (L3)	BLUE	12AWG
SUPPLY 120VAC (L)	BLACK	12AWG (22A)/14AWG (15A)
SUPPLY 120VAC (N)	WHITE	12AWG (22A)/14AWG (15A)
CONTROL 120VAC (L)	RED	14AWG (15A)/16AWG (9A)
CONTROL 120VAC (N)	WHITE	14AWG (15A)/16AWG (9A)
DRY CONTACT	YELLOW	12AWG (22A)/14AWG (15A)
24VDC	BLUE	14AWG (15A)/16AWG (9A)
0VDC	VIOLET	14AWG (15A)/16AWG (9A)
ANALOG I/O TWISTED PAIRS	BLACK(+), WHITE(–)	18AWG
DIGITAL I/O 120VAC	RED	16AWG
DIGITAL I/O 24VDC	BLUE	16AWG
LOW VOLTAGE (5 TO 60VDC)	BLUE(+), BLUE/WHITE(–)	14AWG (15A)/16AWG (9A)
GROUND	GREEN	14AWG
ISOLATED GROUND	GREEN/YELLOW	14AWG

WIRING IDENTIFICATION

XX XX XX XX

- POWER INDICATION (+/–/L/N/G)
- LINE NUMBER
- PAGE NUMBER
- (FIELD WIRING ONLY) 01 – PANEL #1, 02 – PANEL #2, ...

LEGEND

- PSL — LOW PRESSURE SWITCH
- PSH — HIGH PRESSURE SWITCH
- LSL — LOW LEVEL SWITCH
- LSH — HIGH LEVEL SWITCH
- LSNO — LIMIT SWITCH NO
- LSNC — LIMIT SWITCH NC
- FSL — LOW FLOW SWITCH
- FSH — HIGH FLOW SWITCH
- TSL — LOW TEMPERATURE SWITCH
- TSH — HIGH TEMPERATURE SWITCH
- OFF DELAY TIMER [NO]
- OFF DELAY TIMER [NC]
- ON DELAY TIMER [NC]
- ON DELAY TIMER [NO]
- NO — CONTACT NO
- NC — CONTACT NC
- GND — GROUND
- GND — ISOLATED GROUND
- TERMINAL OF PANEL
- TERMINAL OF OTHER PANEL
- DISCONNECT TERMINAL OF PANEL

- HS — MAINTAINED TWO POSITIONS SELECTOR
- HS — MAINTAINED THREE POSITIONS SELECTOR
- HS — THREE POSITIONS SELECTOR, BOTH RETURN
- HS — THREE POSITIONS SELECTOR, LEFT RETURN
- HS — THREE POSITIONS SELECTOR, RIGHT RETURN
- PBNO — PUSHBUTTON NO
- PBNC — PUSHBUTTON NC
- ES — EMERGENCY STOP PUSH BUTTON
- E.S. — PULL–CORD E–STOP
- POT — POTENTIOMETER
- FU — FUSE
- CB — CIRCUIT BREAKER
- IL — PUSH–TO–TEST LIGHT
- IL — LIGHT
- CMR — CURRENT MONITORING RELAY
- AC A/C — AIR CONDITIONER UNIT

- M — CONTACTOR COIL
- TR — TIMER RELAY COIL
- CR — CONTROL RELAY COIL
- MCR — MASTER CONTROL RELAY COIL
- CR — CONTROL RELAY COIL WITH SURGE SURPRESSOR
- FV — SOLENOID
- R — RESISTANCE
- HN — HORN
- F — FAN / VENTILATOR / BLOWER
- CT — CURRENT TRANSFORMER
- PC — 120VAC DUPLEX OUTLET
- AM — AMPEREMETER
- VM — VOLTMETER

- DISC — FUSED DISCONNECT SWITCH
- FU — 3PH FUSE HOLDER
- DISC — DISCONNECT SWITCH
- OL — MANUAL STARTER WITH THERMAL & MAGNETIC PROTECTION
- OL — MANUAL STARTER WITH MAGNETIC PROTECTION
- M — CONTACTOR
- OL — OVERLOAD
- MOLDED CASE CIRCUIT BREAKER

- TR (H1, H2, X1, X2) — TRANSFORMER
- TR (H1, H2, X1, X2, X3, X4) — MULTI–TAPS TRANSFORMER

REV	DESCRIPTION	DATE	REVD	CHKD	APVD	ECN
1	FOR APPROVAL	2018–06–20	A.L.	A.L.	G.M.	–

CONFIDENTIALITY AND INTELLECTUAL PROPERTY NOTICE
ALL INFORMATION CONTAINED IN THIS DOCUMENT IS THE SOLE PROPERTY OF VEOLIA WATER TECHNOLOGIES CANADA INC. AND IS PROTECTED BY ALL APPLICABLE LAWS, INCLUDING BUT NOT LIMITED TO COPYRIGHT AND OTHER INTELLECTUAL PROPERTY LAWS. THE DESIGN CONCEPTS AND INFORMATION CONTAINED HEREIN ARE PROPRIETARY TO V.W.T AND ARE SUBMITTED IN CONFIDENCE. THEY ARE NOT TRANSFERABLE. THEY MUST BE USED ONLY FOR THE PURPOSE FOR WHICH THE DOCUMENT IS EXPRESSLY SUBMITTED AND NO IMPLICIT LICENCE IS GRANTED OTHERWISE BY THE SUBMISSION OF THIS DOCUMENT. THEY ARE CONFIDENTIAL AND PRIVILEGED INFORMATION OF V.W.T. AND THEY MUST NOT BE DISCLOSED, REPRODUCED, LOANED, REMITTED OR USED IN ANY OTHER MANNER WITHOUT THE EXPRESS WRITTEN CONSENT OF V.W.T. V.W.T. ASSUMES NO RESPONSIBILITY OR LIABILITY FOR THE USE OF THIS DOCUMENT OR THE DESIGN CONCEPTS AND INFORMATION CONTAINED HEREIN FOR ANOTHER PROJECT, OR IN A MANNER THAT DOES NOT RELATE TO THE FITNESS OR PURPOSE OF THIS DOCUMENT. IN NO EVENT SHALL THIS DOCUMENT OR THE DESIGN CONCEPTS AND INFORMATION CONTAINED HEREIN BE USED IN A MANNER DETRIMENTAL TO THE INTEREST OF V.W.T. ALL COPYRIGHT, PATENT AND OTHER INTELLECTUAL PROPERTY RIGHTS ARE RESERVED. ACCEPTANCE OF THE DELIVERY OF THIS DOCUMENT CONSTITUTES AGREEMENT TO THESE TERMS AND CONDITIONS.

		DATE
DESIGNER	–	–
CHECKER	–	–
ENGINEER	–	–
SCALE:	None	

TITLE: JB9–521 SEEPEX JUNCTION BOX
DRAWING LIST & LEGEND
–

CLIENT: AEM AMARUQ
HUDSON BAY, NUNAVUT

VEOLIA
VEOLIA WATER TECHNOLOGIES CANADA INC. 4105 Sartelon, Saint-Laurent, Qc, Canada, Tel: (514) 334-7230

PROJECT DRAWING	INTERNAL	SHEET	REV
5000218009 – ELD–0002–AU–VWT	E00	02 OF 05	1

STD: "B" 11x17 | REF: CONTROLES RL – 184172 | BAR = 1" AT PLOT SCALE

Jun. 20, 2018 14:00:15 – P:\CLIENTS\Veolia Waters – John Meunier\184172_5000218009 AEM Amaruq\Ingenierie\Dessins\PLC-001 CONTROL PANEL\JUNCTION BOX\5000218009–ELD–0002–AU–VWT–E00–02–1_E.dwg – a.lessard

Jun 20, 2018 14:00:21 – P:\CLIENTS\Veolia Waters – John Meunier\184172_5000218009 AEM Amaruq\Ingenierie\Dessins\PLC-001 CONTROL PANEL\JUNCTION BOX\5000218009-ELD-0002-AU-VWT-E00-03-1_E.dwg – o.lessard

STD: "B" 11x17 | REF: CONTROLES RL – 184172 | BAR = 1" AT PLOT SCALE

NOTES:

1– SEE DRAWING 5000218009–ELD–0002–AU–VWT–E00–04 FOR THE REFERENCES TO THE BILL OF MATERIAL.

2– CSA APPROVAL.

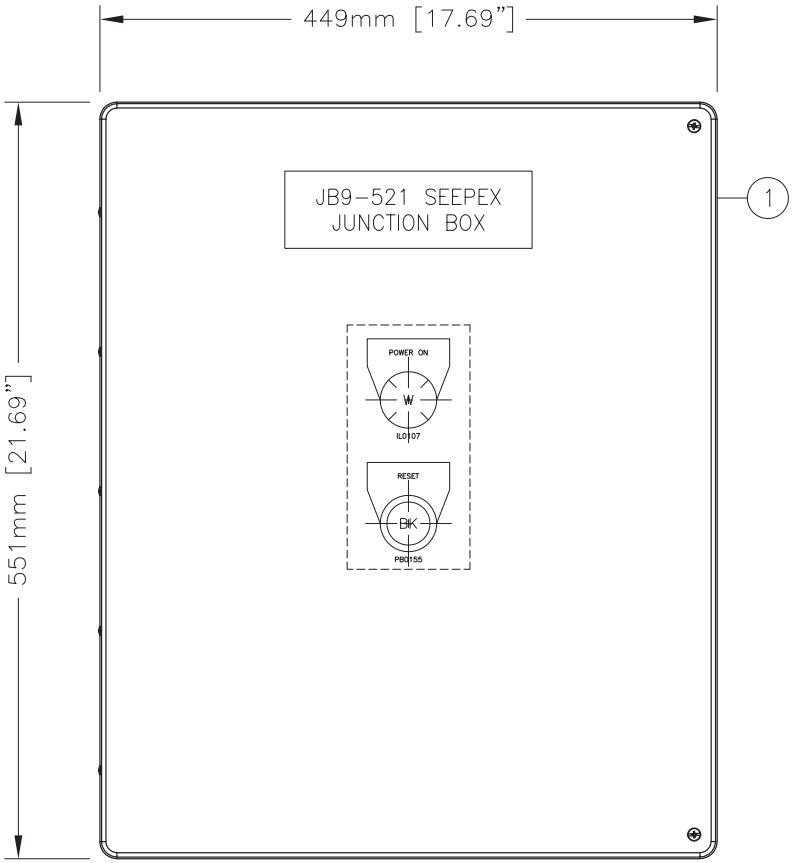

EXTERNAL LAYOUT

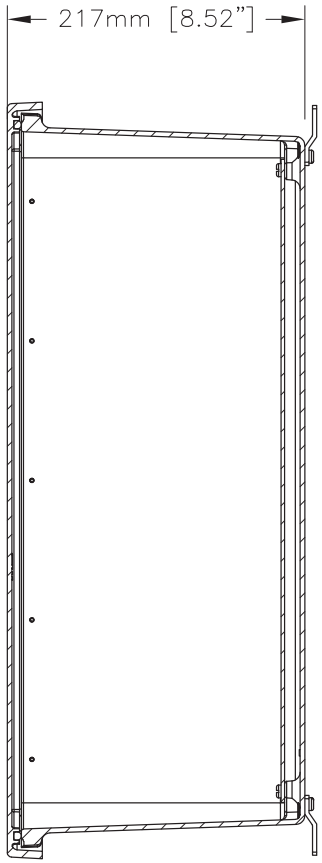

SIDE LAYOUT

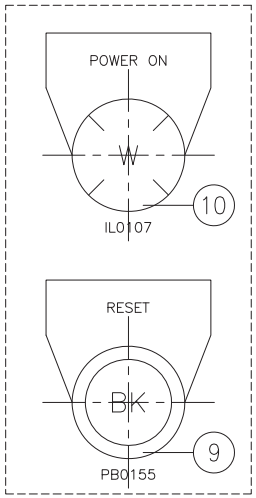

DOOR DETAILS

REV	DESCRIPTION	DATE	REVD	CHKD	APVD	ECN
1	FOR APPROVAL	2018–06–20	A.L.	A.L.	G.M.	–

CONFIDENTIALITY AND INTELLECTUAL PROPERTY NOTICE
ALL INFORMATION CONTAINED IN THIS DOCUMENT IS THE SOLE PROPERTY OF VEOLIA WATER TECHNOLOGIES CANADA INC. AND IS PROTECTED BY ALL APPLICABLE LAWS, INCLUDING BUT NOT LIMITED TO COPYRIGHT AND OTHER INTELLECTUAL PROPERTY LAWS. THE DESIGN CONCEPTS AND INFORMATION CONTAINED HEREIN ARE PROPRIETARY TO V.W.T AND ARE SUBMITTED IN CONFIDENCE. THEY ARE NOT TRANSFERABLE. THEY MUST BE USED ONLY FOR THE PURPOSE FOR WHICH THE DOCUMENT IS EXPRESSLY SUBMITTED AND NO IMPLICIT LICENCE IS GRANTED OTHERWISE BY THE SUBMISSION OF THIS DOCUMENT. THEY ARE CONFIDENTIAL AND PRIVILEGED INFORMATION OF V.W.T. AND THEY MUST NOT BE DISCLOSED, REPRODUCED, LOANED, REMITTED OR USED IN ANY OTHER MANNER WITHOUT THE EXPRESS WRITTEN CONSENT OF V.W.T. V.W.T. ASSUMES NO RESPONSIBILITY OR LIABILITY FOR THE USE OF THIS DOCUMENT OR THE DESIGN CONCEPTS AND INFORMATION CONTAINED HEREIN FOR ANOTHER PROJECT, OR IN A MANNER THAT DOES NOT RELATE TO THE FITNESS OR PURPOSE OF THIS DOCUMENT. IN NO EVENT SHALL THIS DOCUMENT OR THE DESIGN CONCEPTS AND INFORMATION CONTAINED HEREIN BE USED IN A MANNER DETRIMENTAL TO THE INTEREST OF V.W.T. ALL COPYRIGHT, PATENT AND OTHER INTELLECTUAL PROPERTY RIGHTS ARE RESERVED. ACCEPTANCE OF THE DELIVERY OF THIS DOCUMENT CONSTITUTES AGREEMENT TO THESE TERMS AND CONDITIONS.

DESIGNER	–	DATE –
CHECKER	–	DATE –
ENGINEER	–	DATE –
SCALE:	None	

TITLE: JB9–521 SEEPEX JUNCTION BOX ENCLOSURE LAYOUT –

CLIENT: AEM AMARUQ HUDSON BAY, NUNAVUT

VEOLIA WATER TECHNOLOGIES CANADA INC., 4105 Sartelon, Saint-Laurent, Qc, Canada, Tel: (514) 334-7230

PROJECT DRAWING	INTERNAL	SHEET	REV
5000218009 – ELD–0002–AU–VWT	E00	03 OF 05	1

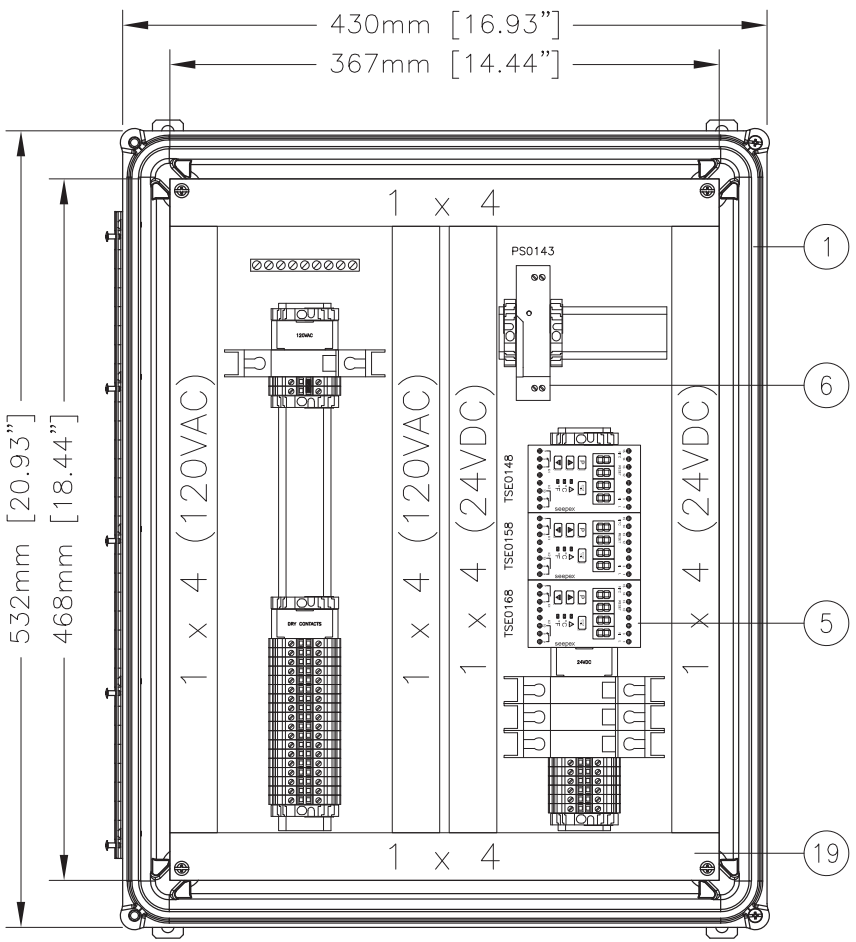

INTERNAL LAYOUT

BILL OF MATERIALS [BOM]

#	QTY.	DESCRIPTION	MANUFACTURER	CATALOGUE N.	REMARK
①	1	PANEL NEMA 4X, WALLMOUNT, ONE DOOR DIM 551mm[H] x 449mm[W] x 217mm[D]	HAMMOND	PJ20168H	–
②	1	INNER PANEL, DIM 468mm[H] x 367mm[W]	HAMMOND	P2068	–
③	–	–	–	–	–
④	–	–	–	–	–
⑤	3	DRY-RUNNING PROTECTION DEVICE, 24VDC	SEEPEX	SGRTSE 24VDCB	–
⑥	1	POWER SUPPLY 120VAC/24VDC, 1.25A	PHOENIX CONTACT	2902991	–
⑦	1	"BRANCH PROOF" BREAKER, 1A, 1 POLE, 120VAC/24VDC	SCHNEIDER	60100	–
⑧	3	"BRANCH PROOF" BREAKER, 0.5A, 1 POLE, 120VAC/24VDC	SCHNEIDER	60101	–
⑨	1	NON-ILLUMINATED PUSH BUTTON, BLACK, MOMENTARY ACTION, 1N.O., 30.5mm	ALLEN BRADLEY	800H-R2D1	–
	1	CONTACT BLOCK, 2N.O.	ALLEN BRADLEY	800T-XA2	–
⑩	1	PILOT LIGHT OPERATOR, WHITE, LED TYPE, 12 ... 130VAC/VDC, 30.5mm	ALLEN BRADLEY	800H-QRH2W	–
⑪	–	–	–	–	–
⑫	3	IDENTIFICATION TERMINAL UBE/D	PHOENIX CONTACT	0800307	–
⑬	26/3	SIMPLE TERMINAL BLOCK, UT 4 EN C/W END PLATE	PHOENIX CONTACT	3044102/3047028	–
⑭	A.S.R.	END BARRIER, E/NS 35 N	PHOENIX CONTACT	0800886	–
⑮	–	–	–	–	–
⑯	–	–	–	–	–
⑰	A.S.R.	MOUNTING RAIL, TS35	WEIDMULLER	0383400000	–
⑱	1	NON-ISOLATED GROUND BAR	ILSCO	N174AS	–
⑲	A.S.R.	DUCT WIRING [1 x 4]	PANDUIT	–	–
⑳	–	–	–	–	–

REV	DESCRIPTION	DATE	REVD	CHKD	APVD	ECN
1	FOR APPROVAL	2018-06-20	A.L.	A.L.	G.M.	–

CONFIDENTIALITY AND INTELLECTUAL PROPERTY NOTICE
ALL INFORMATION CONTAINED IN THIS DOCUMENT IS THE SOLE PROPERTY OF VEOLIA WATER TECHNOLOGIES CANADA INC. AND IS PROTECTED BY ALL APPLICABLE LAWS, INCLUDING BUT NOT LIMITED TO COPYRIGHT AND OTHER INTELLECTUAL PROPERTY LAWS. THE DESIGN CONCEPTS AND INFORMATION CONTAINED HEREIN ARE PROPRIETARY TO V.W.T AND ARE SUBMITTED IN CONFIDENCE. THEY ARE NOT TRANSFERABLE. THEY MUST BE USED ONLY FOR THE PURPOSE FOR WHICH THE DOCUMENT IS EXPRESSLY SUBMITTED AND NO IMPLICIT LICENCE IS GRANTED OTHERWISE BY THE SUBMISSION OF THIS DOCUMENT. THEY ARE CONFIDENTIAL AND PRIVILEGED INFORMATION OF V.W.T. AND THEY MUST NOT BE DISCLOSED, REPRODUCED, LOANED, REMITTED OR USED IN ANY OTHER MANNER WITHOUT THE EXPRESS WRITTEN CONSENT OF V.W.T. V.W.T. ASSUMES NO RESPONSIBILITY OR LIABILITY FOR THE USE OF THIS DOCUMENT OR THE DESIGN CONCEPTS AND INFORMATION CONTAINED HEREIN FOR ANOTHER PROJECT, OR IN A MANNER THAT DOES NOT RELATE TO THE FITNESS OR PURPOSE OF THIS DOCUMENT. IN NO EVENT SHALL THIS DOCUMENT OR THE DESIGN CONCEPTS AND INFORMATION CONTAINED HEREIN BE USED IN A MANNER DETRIMENTAL TO THE INTEREST OF V.W.T. ALL COPYRIGHT, PATENT AND OTHER INTELLECTUAL PROPERTY RIGHTS ARE RESERVED. ACCEPTANCE OF THE DELIVERY OF THIS DOCUMENT CONSTITUTES AGREEMENT TO THESE TERMS AND CONDITIONS.

DESIGNER	–	DATE –
CHECKER	–	DATE –
ENGINEER	–	DATE –
SCALE:	None	

TITLE: JB9-521 SEEPEX JUNCTION BOX
INSIDE PANEL LAYOUT & BILL OF MATERIAL
–

CLIENT: AEM AMARUQ
HUDSON BAY, NUNAVUT

VEOLIA
VEOLIA WATER TECHNOLOGIES CANADA INC. 4105 Sartelon, Saint-Laurent, Qc, Canada, Tel: (514) 334-7230

PROJECT DRAWING	INTERNAL	SHEET	REV
5000218009 – ELD-0002-AU-VWT	E00	04 OF 05	1

STD: "B" 11x17 | REF: CONTROLES RL – 184172 | BAR = 1" AT PLOT SCALE

Jun. 20, 2018 - 14:00:26 – P:\CLIENTS\Veolia Waters – John Meunier\184172_5000218009 AEM Amaruq\Ingenierie\Dessins\PLC-001 CONTROL PANEL\JUNCTION BOX\5000218009-ELD-0002-AU-VWT-E00-04-1_E.dwg – o.lessard

NOTES:

1- SEE DRAWING 5000218009-ELD-0002-AU-VWT-E00-04 FOR THE REFERENCES TO THE BILL OF MATERIAL.

2- CSA APPROVAL.

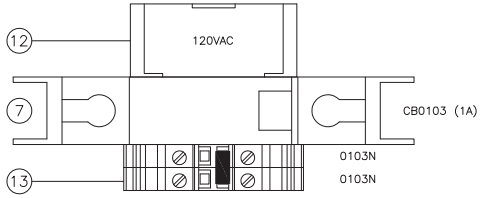

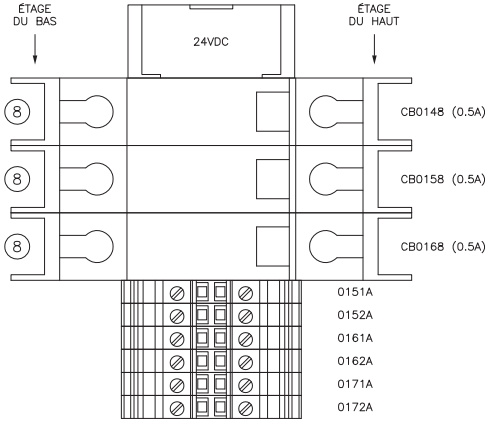

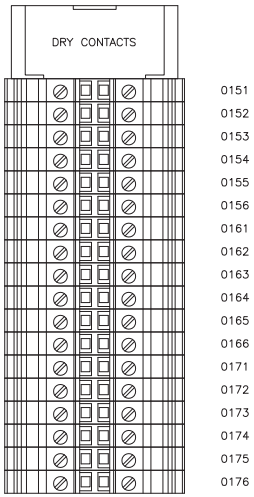

REV	DESCRIPTION	DATE	REVD	CHKD	APVD	ECN
1	FOR APPROVAL	2018-06-20	A.L.	A.L.	G.M.	–

CONFIDENTIALITY AND INTELLECTUAL PROPERTY NOTICE

ALL INFORMATION CONTAINED IN THIS DOCUMENT IS THE SOLE PROPERTY OF VEOLIA WATER TECHNOLOGIES CANADA INC. AND IS PROTECTED BY ALL APPLICABLE LAWS, INCLUDING BUT NOT LIMITED TO COPYRIGHT AND OTHER INTELLECTUAL PROPERTY LAWS. THE DESIGN CONCEPTS AND INFORMATION CONTAINED HEREIN ARE PROPRIETARY TO V.W.T AND ARE SUBMITTED IN CONFIDENCE. THEY ARE NOT TRANSFERABLE. THEY MUST BE USED ONLY FOR THE PURPOSE FOR WHICH THE DOCUMENT IS EXPRESSLY SUBMITTED AND NO IMPLICIT LICENCE IS GRANTED OTHERWISE BY THE SUBMISSION OF THIS DOCUMENT. THEY ARE CONFIDENTIAL AND PRIVILEGED INFORMATION OF V.W.T. AND THEY MUST NOT BE DISCLOSED, REPRODUCED, LOANED, REMITTED OR USED IN ANY OTHER MANNER WITHOUT THE EXPRESS WRITTEN CONSENT OF V.W.T. V.W.T. ASSUMES NO RESPONSIBILITY OR LIABILITY FOR THE USE OF THIS DOCUMENT OR THE DESIGN CONCEPTS AND INFORMATION CONTAINED HEREIN FOR ANOTHER PROJECT, OR IN A MANNER THAT DOES NOT RELATE TO THE FITNESS OR PURPOSE OF THIS DOCUMENT. IN NO EVENT SHALL THIS DOCUMENT OR THE DESIGN CONCEPTS AND INFORMATION CONTAINED HEREIN BE USED IN A MANNER DETRIMENTAL TO THE INTEREST OF V.W.T. ALL COPYRIGHT, PATENT AND OTHER INTELLECTUAL PROPERTY RIGHTS ARE RESERVED. ACCEPTANCE OF THE DELIVERY OF THIS DOCUMENT CONSTITUTES AGREEMENT TO THESE TERMS AND CONDITIONS.

		DATE
DESIGNER	–	–
CHECKER	–	–
ENGINEER	–	–
SCALE:	None	

TITLE: JB9-521 SEEPEX JUNCTION BOX
TERMINAL DETAILS
–

CLIENT: AEM AMARUQ
HUDSON BAY, NUNAVUT

VEOLIA

VEOLIA WATER TECHNOLOGIES CANADA INC. 4105 Sartelon, Saint-Laurent, Qc, Canada, Tel: (514) 334-7230

PROJECT DRAWING	INTERNAL	SHEET	REV
5000218009 – ELD-0002-AU-VWT	E00	05 OF 05	1

STD: "B" 11x17 | REF: CONTROLES RL – 184172 | BAR = 1" AT PLOT SCALE

Jun 20, 2018 14:00:30 – P:\CLIENTS\Veolia Waters – John Meunier\184172_5000218009 AEM Amaruq\Ingenierie\Dessins\PLC-001 CONTROL PANEL\JUNCTION BOX\5000218009-ELD-0002-AU-VWT-E00-05-1_E.dwg – o.lessard

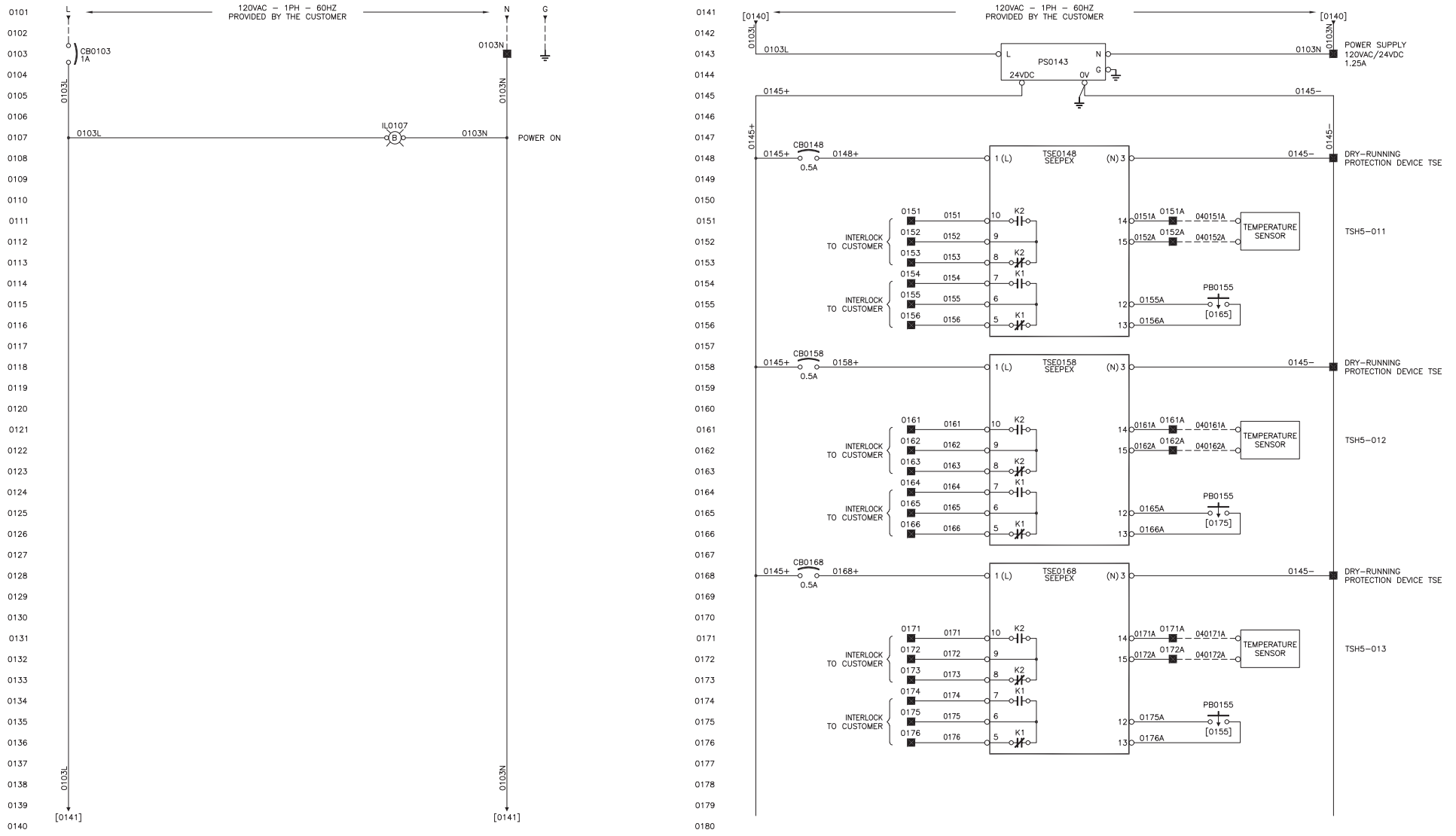

REV	DESCRIPTION	DATE	REVD	CHKD	APVD	ECN
1	FOR APPROVAL	2018–06–20	A.L.	A.L.	G.M.	–

CONFIDENTIALITY AND INTELLECTUAL PROPERTY NOTICE
ALL INFORMATION CONTAINED IN THIS DOCUMENT IS THE SOLE PROPERTY OF VEOLIA WATER TECHNOLOGIES CANADA INC. AND IS PROTECTED BY ALL APPLICABLE LAWS, INCLUDING BUT NOT LIMITED TO COPYRIGHT AND OTHER INTELLECTUAL PROPERTY LAWS. THE DESIGN CONCEPTS AND INFORMATION CONTAINED HEREIN ARE PROPRIETARY TO V.W.T AND ARE SUBMITTED IN CONFIDENCE. THEY ARE NOT TRANSFERABLE. THEY MUST BE USED ONLY FOR THE PURPOSE FOR WHICH THE DOCUMENT IS EXPRESSLY SUBMITTED AND NO IMPLICIT LICENCE IS GRANTED OTHERWISE BY THE SUBMISSION OF THIS DOCUMENT. THEY ARE CONFIDENTIAL AND PRIVILEGED INFORMATION OF V.W.T. AND THEY MUST NOT BE DISCLOSED, REPRODUCED, LOANED, REMITTED OR USED IN ANY OTHER MANNER WITHOUT THE EXPRESS WRITTEN CONSENT OF V.W.T. V.W.T. ASSUMES NO RESPONSIBILITY OR LIABILITY FOR THE USE OF THIS DOCUMENT OR THE DESIGN CONCEPTS AND INFORMATION CONTAINED HEREIN FOR ANOTHER PROJECT, OR IN A MANNER THAT DOES NOT RELATE TO THE FITNESS OR PURPOSE OF THIS DOCUMENT. IN NO EVENT SHALL THIS DOCUMENT OR THE DESIGN CONCEPTS AND INFORMATION CONTAINED HEREIN BE USED IN A MANNER DETRIMENTAL TO THE INTEREST OF V.W.T. ALL COPYRIGHT, PATENT AND OTHER INTELLECTUAL PROPERTY RIGHTS ARE RESERVED. ACCEPTANCE OF THE DELIVERY OF THIS DOCUMENT CONSTITUTES AGREEMENT TO THESE TERMS AND CONDITIONS.

		DATE
DESIGNER	–	–
CHECKER	–	–
ENGINEER	–	–
SCALE:	None	

TITLE: JB9–521 SEEPEX JUNCTION BOX
SCHEMATIC DIAGRAM [POWER DISTRIBUTION] 120VAC/24VDC
–

CLIENT: AEM AMARUQ
HUDSON BAY, NUNAVUT

VEOLIA
VEOLIA WATER TECHNOLOGIES CANADA INC., 4105 Sartelon, Saint-Laurent, Qc, Canada, Tel: (514) 334-7230

PROJECT DRAWING	INTERNAL	SHEET	REV
5000218009 – ELD–0002–AU–VWT	E04	01 OF 01	1

STD: "B" 11x17 | REF: CONTROLES RL – 184172 | BAR = 1" AT PLOT SCALE

Jun. 20, 2018 - 14:00:37 - P:\CLIENTS\Veolia Waters - John Meunier\184172_5000218009 AEM Amaruq\Ingenierie\Dessins\PLC-001 CONTROL PANEL\JUNCTION BOX\5000218009-ELD-0002-AU-VWT-E04-01-1_E.dwg - d.lessard

Jun 20, 2018 14:00:40 - P:\CLIENTS\Veolia Waters - John Meunier\184172_5000218009 AEM Amaruq\Ingenierie\Dessins\PLC-001 CONTROL PANEL\JUNCTION BOX\5000218009-ELD-0003-AU-VWT-E00-01-1_E.dwg - o.lessard

STD: "B" 11x17 | REF: CONTROLES RL - 184172 | BAR = 1" AT PLOT SCALE

JB9-524 SEEPEX JUNCTION BOX

PROJECT - 5000218009

DRAFT

REV	DESCRIPTION	DATE	REVD	CHKD	APVD	ECN
1	FOR APPROVAL	2018-06-20	A.L.	A.L.	G.M.	-

CONFIDENTIALITY AND INTELLECTUAL PROPERTY NOTICE
ALL INFORMATION CONTAINED IN THIS DOCUMENT IS THE SOLE PROPERTY OF VEOLIA WATER TECHNOLOGIES CANADA INC. AND IS PROTECTED BY ALL APPLICABLE LAWS, INCLUDING BUT NOT LIMITED TO COPYRIGHT AND OTHER INTELLECTUAL PROPERTY LAWS. THE DESIGN CONCEPTS AND INFORMATION CONTAINED HEREIN ARE PROPRIETARY TO V.W.T AND ARE SUBMITTED IN CONFIDENCE. THEY ARE NOT TRANSFERABLE. THEY MUST BE USED ONLY FOR THE PURPOSE FOR WHICH THE DOCUMENT IS EXPRESSLY SUBMITTED AND NO IMPLICIT LICENCE IS GRANTED OTHERWISE BY THE SUBMISSION OF THIS DOCUMENT. THEY ARE CONFIDENTIAL AND PRIVILEGED INFORMATION OF V.W.T. AND THEY MUST NOT BE DISCLOSED, REPRODUCED, LOANED, REMITTED OR USED IN ANY OTHER MANNER WITHOUT THE EXPRESS WRITTEN CONSENT OF V.W.T. V.W.T. ASSUMES NO RESPONSIBILITY OR LIABILITY FOR THE USE OF THIS DOCUMENT OR THE DESIGN CONCEPTS AND INFORMATION CONTAINED HEREIN FOR ANOTHER PROJECT, OR IN A MANNER THAT DOES NOT RELATE TO THE FITNESS OR PURPOSE OF THIS DOCUMENT. IN NO EVENT SHALL THIS DOCUMENT OR THE DESIGN CONCEPTS AND INFORMATION CONTAINED HEREIN BE USED IN A MANNER DETRIMENTAL TO THE INTEREST OF V.W.T. ALL COPYRIGHT, PATENT AND OTHER INTELLECTUAL PROPERTY RIGHTS ARE RESERVED. ACCEPTANCE OF THE DELIVERY OF THIS DOCUMENT CONSTITUTES AGREEMENT TO THESE TERMS AND CONDITIONS.

DESIGNER	–	DATE –
CHECKER	–	DATE –
ENGINEER	–	DATE –
SCALE:	None	

TITLE: JB9-524 SEEPEX JUNCTION BOX
TITLE PAGE
–

CLIENT: AEM AMARUQ
HUDSON BAY, NUNAVUT

VEOLIA
VEOLIA WATER TECHNOLOGIES CANADA INC. 4105 Sartelon, Saint-Laurent, Qc, Canada, Tel: (514) 334-7230

PROJECT DRAWING	INTERNAL	SHEET	REV
5000218009 – ELD-0003-AU-VWT	E00	01 OF 05	1

DRAWING INDEX

DESCRIPTION	DRAWING NUMBER
JB9–524 SEEPEX JUNCTION BOX	
TITLE PAGE	5000218009–ELD–0003–AU–VWT–E00–01
DRAWING LIST & LEGEND	5000218009–ELD–0003–AU–VWT–E00–02
ENCLOSURE LAYOUT	5000218009–ELD–0003–AU–VWT–E00–03
INSIDE PANEL LAYOUT & BILL OF MATERIAL	5000218009–ELD–0003–AU–VWT–E00–04
TERMINAL DETAILS	5000218009–ELD–0003–AU–VWT–E00–05
SCHEMATIC DIAGRAM [POWER DISTRIBUTION] 120VAC/24VDC	5000218009–ELD–0003–AU–VWT–E04–01

COLORS AND WIRINGS GAGES

120VCA POWER	BLACK	14AWG
120VCA CONTROL	RED	14AWG
NEUTRAL	WHITE	14AWG
DRY CONTACT	YELLOW	14AWG
24VCC	BLUE[+], BLUE/WHITE[–]	16AWG[0 À 9A] 14AWG[10A & +]
GROUND	GREEN	14AWG
ISOLATED GROUND	GREEN/YELLOW	14AWG
ANALOG I/O TWISTED PAIRS	BLACK[+], WHITE[–]	18AWG
DIGITAL I/O 120VAC	RED	16AWG
DIGITAL I/O 24VCC	BLUE	16AWG
LOW VOLTAGE [12, 24, 48VCC]	BLUE	16AWG[0 À 9A] 14AWG[10A & +]
CONTROL CIRCUIT 5 TO 60VDC	BLUE[+], BLUE/WHITE[–], VERT[GND]	16AWG[0 À 9A] 14AWG[10A & +]

COLORS AND WIRING GAGES

SUPPLY 600VAC (L1)	RED	12AWG
SUPPLY 600VAC (L2)	BLACK	12AWG
SUPPLY 600VAC (L3)	BLUE	12AWG
SUPPLY 120VAC (L)	BLACK	12AWG (22A)/14AWG (15A)
SUPPLY 120VAC (N)	WHITE	12AWG (22A)/14AWG (15A)
CONTROL 120VAC (L)	RED	14AWG (15A)/16AWG (9A)
CONTROL 120VAC (N)	WHITE	14AWG (15A)/16AWG (9A)
DRY CONTACT	YELLOW	12AWG (22A)/14AWG (15A)
24VDC	BLUE	14AWG (15A)/16AWG (9A)
0VDC	VIOLET	14AWG (15A)/16AWG (9A)
ANALOG I/O TWISTED PAIRS	BLACK(+), WHITE(–)	18AWG
DIGITAL I/O 120VAC	RED	16AWG
DIGITAL I/O 24VDC	BLUE	16AWG
LOW VOLTAGE (5 TO 60VDC)	BLUE(+), BLUE/WHITE(–)	14AWG (15A)/16AWG (9A)
GROUND	GREEN	14AWG
ISOLATED GROUND	GREEN/YELLOW	14AWG

WIRING IDENTIFICATION

XX XX XX XX

- POWER INDICATION (+/–/L/N/G)
- LINE NUMBER
- PAGE NUMBER
- (FIELD WIRING ONLY) 01 – PANEL #1, 02 – PANEL #2, ...

LEGEND

- PSL — LOW PRESSURE SWITCH
- PSH — HIGH PRESSURE SWITCH
- LSL — LOW LEVEL SWITCH
- LSH — HIGH LEVEL SWITCH
- LSNO — LIMIT SWITCH NO
- LSNC — LIMIT SWITCH NC
- FSL — LOW FLOW SWITCH
- FSH — HIGH FLOW SWITCH
- TSL — LOW TEMPERATURE SWITCH
- TSH — HIGH TEMPERATURE SWITCH
- OFF DELAY TIMER [NO]
- OFF DELAY TIMER [NC]
- ON DELAY TIMER [NC]
- ON DELAY TIMER [NO]
- NO — CONTACT NO
- NC — CONTACT NC
- GND — GROUND
- GND — ISOLATED GROUND
- TERMINAL OF PANEL
- TERMINAL OF OTHER PANEL
- DISCONNECT TERMINAL OF PANEL

- HS — MAINTAINED TWO POSITIONS SELECTOR
- HS — MAINTAINED THREE POSITIONS SELECTOR
- HS — THREE POSITIONS SELECTOR, BOTH RETURN
- HS — THREE POSITIONS SELECTOR, LEFT RETURN
- HS — THREE POSITIONS SELECTOR, RIGHT RETURN
- PBNO — PUSHBUTTON NO
- PBNC — PUSHBUTTON NC
- ES — EMERGENCY STOP PUSH BUTTON
- E.S — PULL–CORD E–STOP
- POT — POTENTIOMETER
- FU — FUSE
- CB — CIRCUIT BREAKER
- IL — PUSH–TO–TEST LIGHT
- IL — LIGHT
- CMR — CURRENT MONITORING RELAY
- AC / A/C — AIR CONDITIONER UNIT

- M — CONTACTOR COIL
- TR — TIMER RELAY COIL
- CR — CONTROL RELAY COIL
- MCR — MASTER CONTROL RELAY COIL
- CR — CONTROL RELAY COIL WITH SURGE SURPRESSOR
- FV — SOLENOID
- R — RESISTANCE
- HN — HORN
- F — FAN / VENTILATOR / BLOWER
- CT — CURRENT TRANSFORMER
- PC — 120VAC DUPLEX OUTLET
- AM — AMPEREMETER
- VM — VOLTMETER

- DISC — FUSED DISCONNECT SWITCH
- FU — 3PH FUSE HOLDER
- DISC — DISCONNECT SWITCH
- OL — MANUAL STARTER WITH THERMAL & MAGNETIC PROTECTION
- OL — MANUAL STARTER WITH MAGNETIC PROTECTION
- M — CONTACTOR
- OL — OVERLOAD
- MOLDED CASE CIRCUIT BREAKER

- TR (H1, H2, X1, X2) — TRANSFORMER
- TR (H1, H2, X1, X2, X3, X4) — MULTI–TAPS TRANSFORMER

REV	DESCRIPTION	DATE	REVD	CHKD	APVD	ECN
1	FOR APPROVAL	2018–06–20	A.L.	A.L.	G.M.	–

CONFIDENTIALITY AND INTELLECTUAL PROPERTY NOTICE
ALL INFORMATION CONTAINED IN THIS DOCUMENT IS THE SOLE PROPERTY OF VEOLIA WATER TECHNOLOGIES CANADA INC. AND IS PROTECTED BY ALL APPLICABLE LAWS, INCLUDING BUT NOT LIMITED TO COPYRIGHT AND OTHER INTELLECTUAL PROPERTY LAWS. THE DESIGN CONCEPTS AND INFORMATION CONTAINED HEREIN ARE PROPRIETARY TO V.W.T AND ARE SUBMITTED IN CONFIDENCE. THEY ARE NOT TRANSFERABLE. THEY MUST BE USED ONLY FOR THE PURPOSE FOR WHICH THE DOCUMENT IS EXPRESSLY SUBMITTED AND NO IMPLICIT LICENCE IS GRANTED OTHERWISE BY THE SUBMISSION OF THIS DOCUMENT. THEY ARE CONFIDENTIAL AND PRIVILEGED INFORMATION OF V.W.T. AND THEY MUST NOT BE DISCLOSED, REPRODUCED, LOANED, REMITTED OR USED IN ANY OTHER MANNER WITHOUT THE EXPRESS WRITTEN CONSENT OF V.W.T. V.W.T. ASSUMES NO RESPONSIBILITY OR LIABILITY FOR THE USE OF THIS DOCUMENT OR THE DESIGN CONCEPTS AND INFORMATION CONTAINED HEREIN FOR ANOTHER PROJECT, OR IN A MANNER THAT DOES NOT RELATE TO THE FITNESS OR PURPOSE OF THIS DOCUMENT. IN NO EVENT SHALL THIS DOCUMENT OR THE DESIGN CONCEPTS AND INFORMATION CONTAINED HEREIN BE USED IN A MANNER DETRIMENTAL TO THE INTEREST OF V.W.T. ALL COPYRIGHT, PATENT AND OTHER INTELLECTUAL PROPERTY RIGHTS ARE RESERVED. ACCEPTANCE OF THE DELIVERY OF THIS DOCUMENT CONSTITUTES AGREEMENT TO THESE TERMS AND CONDITIONS.

DESIGNER	–	DATE –
CHECKER	–	DATE –
ENGINEER	–	DATE –
SCALE:	None	

TITLE: JB9–524 SEEPEX JUNCTION BOX
DRAWING LIST & LEGEND
–

CLIENT: AEM AMARUQ
HUDSON BAY, NUNAVUT

VEOLIA
VEOLIA WATER TECHNOLOGIES CANADA INC. 4105 Sartelon, Saint-Laurent, Qc, Canada, Tel: (514) 334-7230

PROJECT DRAWING	INTERNAL	SHEET	REV
5000218009 – ELD–0003–AU–VWT	E00	02 OF 05	1

STD: "B" 11x17 | REF: CONTROLES RL – 184172 | BAR = 1" AT PLOT SCALE

Jun. 20, 2018 14:00:45 – P:\CLIENTS\Veolia Waters – John Meunier\184172_5000218009 AEM Amaruq\Ingenierie\Dessins\PLC-001 CONTROL PANEL\JUNCTION BOX\5000218009–ELD–0003–AU–VWT–E00–02–1_E.dwg – a.lessard

NOTES:

1- SEE DRAWING 5000218009-ELD-0003-AU-VWT-E00-04 FOR THE REFERENCES TO THE BILL OF MATERIAL.

2- CSA APPROVAL.

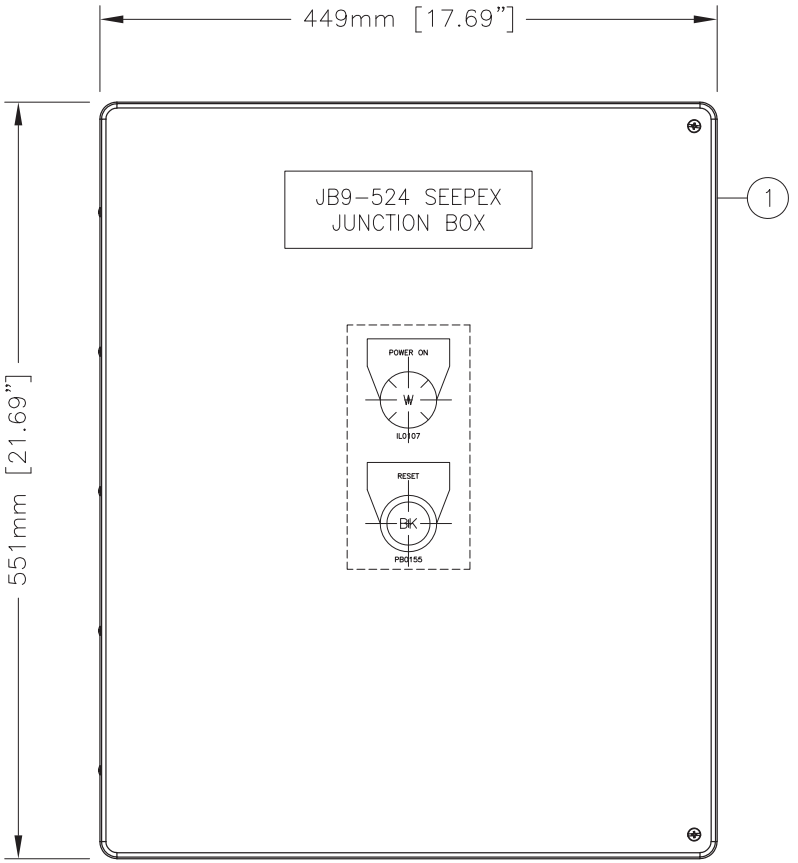

EXTERNAL LAYOUT

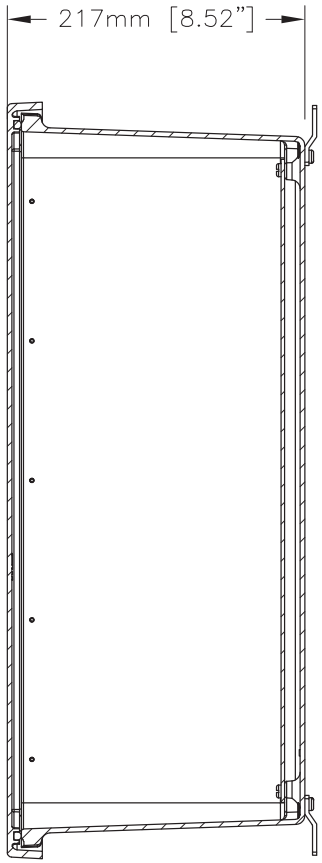

SIDE LAYOUT

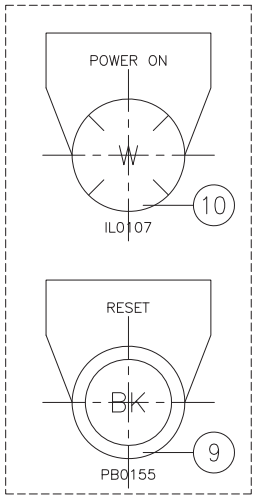

DOOR DETAILS

REV	DESCRIPTION	DATE	REVD	CHKD	APVD	ECN
1	FOR APPROVAL	2018-06-20	A.L.	A.L.	G.M.	–

CONFIDENTIALITY AND INTELLECTUAL PROPERTY NOTICE
ALL INFORMATION CONTAINED IN THIS DOCUMENT IS THE SOLE PROPERTY OF VEOLIA WATER TECHNOLOGIES CANADA INC. AND IS PROTECTED BY ALL APPLICABLE LAWS, INCLUDING BUT NOT LIMITED TO COPYRIGHT AND OTHER INTELLECTUAL PROPERTY LAWS. THE DESIGN CONCEPTS AND INFORMATION CONTAINED HEREIN ARE PROPRIETARY TO V.W.T AND ARE SUBMITTED IN CONFIDENCE. THEY ARE NOT TRANSFERABLE. THEY MUST BE USED ONLY FOR THE PURPOSE FOR WHICH THE DOCUMENT IS EXPRESSLY SUBMITTED AND NO IMPLICIT LICENCE IS GRANTED OTHERWISE BY THE SUBMISSION OF THIS DOCUMENT. THEY ARE CONFIDENTIAL AND PRIVILEGED INFORMATION OF V.W.T. AND THEY MUST NOT BE DISCLOSED, REPRODUCED, LOANED, REMITTED OR USED IN ANY OTHER MANNER WITHOUT THE EXPRESS WRITTEN CONSENT OF V.W.T. V.W.T. ASSUMES NO RESPONSIBILITY OR LIABILITY FOR THE USE OF THIS DOCUMENT OR THE DESIGN CONCEPTS AND INFORMATION CONTAINED HEREIN FOR ANOTHER PROJECT, OR IN A MANNER THAT DOES NOT RELATE TO THE FITNESS OR PURPOSE OF THIS DOCUMENT. IN NO EVENT SHALL THIS DOCUMENT OR THE DESIGN CONCEPTS AND INFORMATION CONTAINED HEREIN BE USED IN A MANNER DETRIMENTAL TO THE INTEREST OF V.W.T. ALL COPYRIGHT, PATENT AND OTHER INTELLECTUAL PROPERTY RIGHTS ARE RESERVED. ACCEPTANCE OF THE DELIVERY OF THIS DOCUMENT CONSTITUTES AGREEMENT TO THESE TERMS AND CONDITIONS.

DESIGNER	DATE
–	–
CHECKER	DATE
–	–
ENGINEER	DATE
–	–
SCALE:	None

TITLE: JB9-524 SEEPEX JUNCTION BOX ENCLOSURE LAYOUT
–

CLIENT: AEM AMARUQ
HUDSON BAY, NUNAVUT

VEOLIA
VEOLIA WATER TECHNOLOGIES CANADA INC., 4105 Sartelon, Saint-Laurent, Qc, Canada, Tel: (514) 334-7230

PROJECT DRAWING	INTERNAL	SHEET	REV
5000218009 – ELD-0003-AU-VWT	E00	03 OF 05	1

STD: "B" 11x17 | REF: CONTROLES RL – 184172 | BAR = 1" AT PLOT SCALE

Jun 20, 2018 14:00:50 – P:\CLIENTS\Veolia Waters – John Meunier\184172_5000218009 AEM Amaruq\Ingenierie\Dessins\PLC-001 CONTROL PANEL\JUNCTION BOX\5000218009-ELD-0003-AU-VWT-E00-03-1_E.dwg – a.lessard

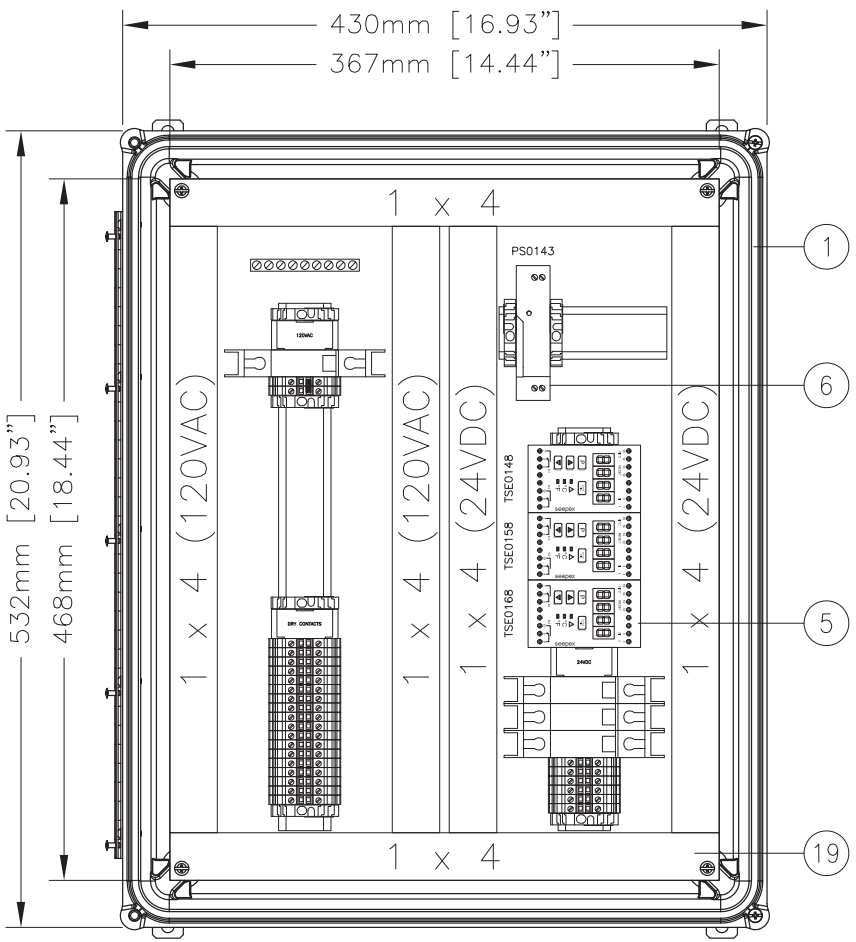

INTERNAL LAYOUT

BILL OF MATERIALS [BOM]

#	QTY.	DESCRIPTION	MANUFACTURER	CATALOGUE N.	REMARK
①	1	PANEL NEMA 4X, WALLMOUNT, ONE DOOR5000218009– DIM 551mm[H] x 449mm[W] x 217mm[D]	HAMMOND	PJ20168H	–
②	1	INNER PANEL, DIM 468mm[H] x 367mm[W]	HAMMOND	P2068	–
③	–	–	–	–	–
④	–	–	–	–	–
⑤	3	DRY–RUNNING PROTECTION DEVICE, 24VDC	SEEPEX	SGRTSE 24VDCB	–
⑥	1	POWER SUPPLY 120VAC/24VDC, 1.25A	PHOENIX CONTACT	2902991	–
⑦	1	"BRANCH PROOF" BREAKER, 1A, 1 POLE, 120VAC/24VDC	SCHNEIDER	60100	–
⑧	3	"BRANCH PROOF" BREAKER, 0.5A, 1 POLE, 120VAC/24VDC	SCHNEIDER	60101	–
⑨	1	NON–ILLUMINATED PUSH BUTTON, BLACK, MOMENTARY ACTION, 1N.O., 30.5mm	ALLEN BRADLEY	800H–R2D1	–
	1	CONTACT BLOCK, 2N.O.	ALLEN BRADLEY	800T–XA2	–
⑩	1	PILOT LIGHT OPERATOR, WHITE, LED TYPE, 12 ... 130VAC/VDC, 30.5mm	ALLEN BRADLEY	800H–QRH2W	–
⑪	–	–	–	–	–
⑫	3	IDENTIFICATION TERMINAL UBE/D	PHOENIX CONTACT	0800307	–
⑬	26/3	SIMPLE TERMINAL BLOCK, UT 4 EN C/W END PLATE	PHOENIX CONTACT	3044102/3047028	–
⑭	A.S.R.	END BARRIER, E/NS 35 N	PHOENIX CONTACT	0800886	–
⑮	–	–	–	–	–
⑯	–	–	–	–	–
⑰	A.S.R.	MOUNTING RAIL, TS35	WEIDMULLER	0383400000	–
⑱	1	NON–ISOLATED GROUND BAR	ILSCO	N174AS	–
⑲	A.S.R.	DUCT WIRING [1 x 4]	PANDUIT	–	–
⑳	–	–	–	–	–

REV	DESCRIPTION	DATE	REVD	CHKD	APVD	ECN
1	FOR APPROVAL	2018–06–20	A.L.	A.L.	G.M.	–

CONFIDENTIALITY AND INTELLECTUAL PROPERTY NOTICE
ALL INFORMATION CONTAINED IN THIS DOCUMENT IS THE SOLE PROPERTY OF VEOLIA WATER TECHNOLOGIES CANADA INC. AND IS PROTECTED BY ALL APPLICABLE LAWS, INCLUDING BUT NOT LIMITED TO COPYRIGHT AND OTHER INTELLECTUAL PROPERTY LAWS. THE DESIGN CONCEPTS AND INFORMATION CONTAINED HEREIN ARE PROPRIETARY TO V.W.T AND ARE SUBMITTED IN CONFIDENCE. THEY ARE NOT TRANSFERABLE. THEY MUST BE USED ONLY FOR THE PURPOSE FOR WHICH THE DOCUMENT IS EXPRESSLY SUBMITTED AND NO IMPLICIT LICENCE IS GRANTED OTHERWISE BY THE SUBMISSION OF THIS DOCUMENT. THEY ARE CONFIDENTIAL AND PRIVILEGED INFORMATION OF V.W.T. AND THEY MUST NOT BE DISCLOSED, REPRODUCED, LOANED, REMITTED OR USED IN ANY OTHER MANNER WITHOUT THE EXPRESS WRITTEN CONSENT OF V.W.T. V.W.T. ASSUMES NO RESPONSIBILITY OR LIABILITY FOR THE USE OF THIS DOCUMENT OR THE DESIGN CONCEPTS AND INFORMATION CONTAINED HEREIN FOR ANOTHER PROJECT, OR IN A MANNER THAT DOES NOT RELATE TO THE FITNESS OR PURPOSE OF THIS DOCUMENT. IN NO EVENT SHALL THIS DOCUMENT OR THE DESIGN CONCEPTS AND INFORMATION CONTAINED HEREIN BE USED IN A MANNER DETRIMENTAL TO THE INTEREST OF V.W.T. ALL COPYRIGHT, PATENT AND OTHER INTELLECTUAL PROPERTY RIGHTS ARE RESERVED. ACCEPTANCE OF THE DELIVERY OF THIS DOCUMENT CONSTITUTES AGREEMENT TO THESE TERMS AND CONDITIONS.

DESIGNER	–	DATE –
CHECKER	–	DATE –
ENGINEER	–	DATE –
SCALE:	None	

TITLE: JB9–524 SEEPEX JUNCTION BOX
INSIDE PANEL LAYOUT & BILL OF MATERIAL
–

CLIENT: AEM AMARUQ
HUDSON BAY, NUNAVUT

VEOLIA
VEOLIA WATER TECHNOLOGIES CANADA INC. 4105 Sartelon, Saint-Laurent, Qc, Canada, Tel: (514) 334-7230

PROJECT DRAWING	INTERNAL	SHEET	REV
5000218009 – ELD–0003–AU–VWT	E00	04 OF 05	1

STD: "B" 11x17 | REF: CONTROLES RL – 184172 | BAR = 1" AT PLOT SCALE

Jun 20, 2018 14:00:55 – P:\CLIENTS\Veolia Waters – John Meunier\184172_5000218009 AEM Amaruq\Ingenierie\Dessins\PLC–001 CONTROL PANEL\JUNCTION BOX\5000218009–ELD–0003–AU–VWT–E00–04–1_E.dwg – o.lessard

NOTES:

1- SEE DRAWING 5000218009-ELD-0003-AU-VWT-E00-04 FOR THE REFERENCES TO THE BILL OF MATERIAL.

2- CSA APPROVAL.

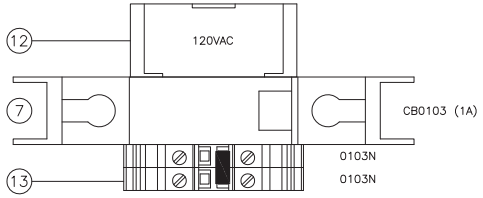

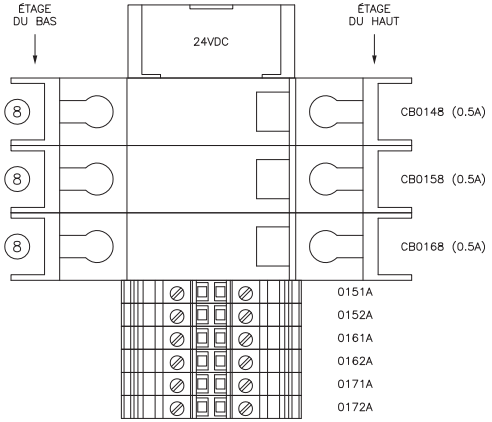

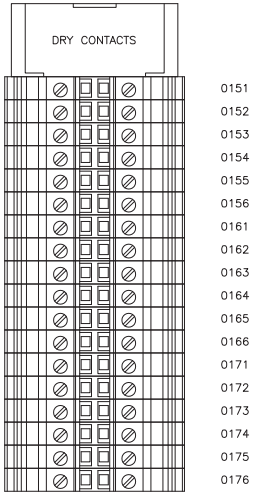

REV	DESCRIPTION	DATE	REVD	CHKD	APVD	ECN
1	FOR APPROVAL	2018-06-20	A.L.	A.L.	G.M.	–

CONFIDENTIALITY AND INTELLECTUAL PROPERTY NOTICE

ALL INFORMATION CONTAINED IN THIS DOCUMENT IS THE SOLE PROPERTY OF VEOLIA WATER TECHNOLOGIES CANADA INC. AND IS PROTECTED BY ALL APPLICABLE LAWS, INCLUDING BUT NOT LIMITED TO COPYRIGHT AND OTHER INTELLECTUAL PROPERTY LAWS. THE DESIGN CONCEPTS AND INFORMATION CONTAINED HEREIN ARE PROPRIETARY TO V.W.T AND ARE SUBMITTED IN CONFIDENCE. THEY ARE NOT TRANSFERABLE. THEY MUST BE USED ONLY FOR THE PURPOSE FOR WHICH THE DOCUMENT IS EXPRESSLY SUBMITTED AND NO IMPLICIT LICENCE IS GRANTED OTHERWISE BY THE SUBMISSION OF THIS DOCUMENT. THEY ARE CONFIDENTIAL AND PRIVILEGED INFORMATION OF V.W.T. AND THEY MUST NOT BE DISCLOSED, REPRODUCED, LOANED, REMITTED OR USED IN ANY OTHER MANNER WITHOUT THE EXPRESS WRITTEN CONSENT OF V.W.T. V.W.T. ASSUMES NO RESPONSIBILITY OR LIABILITY FOR THE USE OF THIS DOCUMENT OR THE DESIGN CONCEPTS AND INFORMATION CONTAINED HEREIN FOR ANOTHER PROJECT, OR IN A MANNER THAT DOES NOT RELATE TO THE FITNESS OR PURPOSE OF THIS DOCUMENT. IN NO EVENT SHALL THIS DOCUMENT OR THE DESIGN CONCEPTS AND INFORMATION CONTAINED HEREIN BE USED IN A MANNER DETRIMENTAL TO THE INTEREST OF V.W.T. ALL COPYRIGHT, PATENT AND OTHER INTELLECTUAL PROPERTY RIGHTS ARE RESERVED. ACCEPTANCE OF THE DELIVERY OF THIS DOCUMENT CONSTITUTES AGREEMENT TO THESE TERMS AND CONDITIONS.

		DATE
DESIGNER	–	–
CHECKER	–	–
ENGINEER	–	–
SCALE:	None	

TITLE: JB9-524 SEEPEX JUNCTION BOX
TERMINAL DETAILS
–

CLIENT: AEM AMARUQ
HUDSON BAY, NUNAVUT

VEOLIA

VEOLIA WATER TECHNOLOGIES CANADA INC. 4105 Sartelon, Saint-Laurent, Qc, Canada, Tel: (514) 334-7230

PROJECT DRAWING	INTERNAL	SHEET	REV
5000218009 – ELD-0003-AU-VWT	E00	05 OF 05	1

STD: "B" 11x17 | REF: CONTROLES RL – 184172 | BAR = 1" AT PLOT SCALE

Jun 20, 2018 14:01:00 – P:\CLIENTS\Veolia Waters – John Meunier\184172_5000218009 AEM Amaruq\Ingenierie\Dessins\PLC-001 CONTROL PANEL\JUNCTION BOX\5000218009-ELD-0003-AU-VWT-E00-05-1_E.dwg – a.lessard

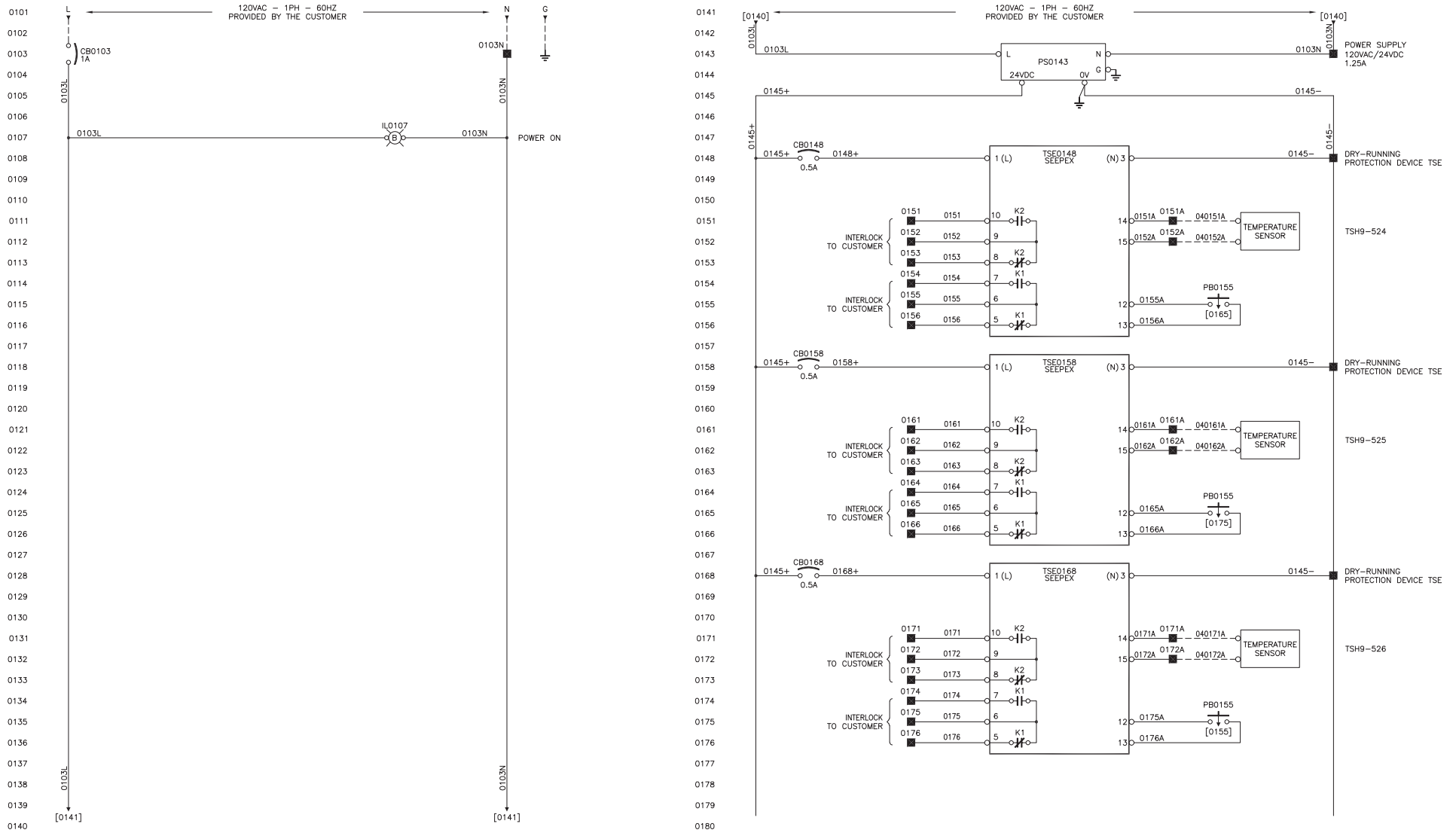

REV	DESCRIPTION	DATE	REVD	CHKD	APVD	ECN
1	FOR APPROVAL	2018–06–20	A.L.	A.L.	G.M.	–

CONFIDENTIALITY AND INTELLECTUAL PROPERTY NOTICE
ALL INFORMATION CONTAINED IN THIS DOCUMENT IS THE SOLE PROPERTY OF VEOLIA WATER TECHNOLOGIES CANADA INC. AND IS PROTECTED BY ALL APPLICABLE LAWS, INCLUDING BUT NOT LIMITED TO COPYRIGHT AND OTHER INTELLECTUAL PROPERTY LAWS. THE DESIGN CONCEPTS AND INFORMATION CONTAINED HEREIN ARE PROPRIETARY TO V.W.T AND ARE SUBMITTED IN CONFIDENCE. THEY ARE NOT TRANSFERABLE. THEY MUST BE USED ONLY FOR THE PURPOSE FOR WHICH THE DOCUMENT IS EXPRESSLY SUBMITTED AND NO IMPLICIT LICENCE IS GRANTED OTHERWISE BY THE SUBMISSION OF THIS DOCUMENT. THEY ARE CONFIDENTIAL AND PRIVILEGED INFORMATION OF V.W.T. AND THEY MUST NOT BE DISCLOSED, REPRODUCED, LOANED, REMITTED OR USED IN ANY OTHER MANNER WITHOUT THE EXPRESS WRITTEN CONSENT OF V.W.T. V.W.T. ASSUMES NO RESPONSIBILITY OR LIABILITY FOR THE USE OF THIS DOCUMENT OR THE DESIGN CONCEPTS AND INFORMATION CONTAINED HEREIN FOR ANOTHER PROJECT, OR IN A MANNER THAT DOES NOT RELATE TO THE FITNESS OR PURPOSE OF THIS DOCUMENT. IN NO EVENT SHALL THIS DOCUMENT OR THE DESIGN CONCEPTS AND INFORMATION CONTAINED HEREIN BE USED IN A MANNER DETRIMENTAL TO THE INTEREST OF V.W.T. ALL COPYRIGHT, PATENT AND OTHER INTELLECTUAL PROPERTY RIGHTS ARE RESERVED. ACCEPTANCE OF THE DELIVERY OF THIS DOCUMENT CONSTITUTES AGREEMENT TO THESE TERMS AND CONDITIONS.

		DATE
DESIGNER	–	–
CHECKER	–	–
ENGINEER	–	–
SCALE:	None	

TITLE: JB9–524 SEEPEX JUNCTION BOX
SCHEMATIC DIAGRAM [POWER DISTRIBUTION] 120VAC/24VDC
–

CLIENT: AEM AMARUQ
HUDSON BAY, NUNAVUT

VEOLIA
VEOLIA WATER TECHNOLOGIES CANADA INC., 4105 Sartelon, Saint-Laurent, Qc, Canada, Tel: (514) 334-7230

PROJECT DRAWING	INTERNAL	SHEET	REV
5000218009 – ELD–0003–AU–VWT	E04	01 OF 01	1

STD: "B" 11x17 | REF: CONTROLES RL – 184172 | BAR = 1" AT PLOT SCALE

Jun. 20, 2018 – 14:01:05 – P:\CLIENTS\Veolia Waters – John Meunier\184172_5000218009 AEM Amaruq\Ingenierie\Dessins\PLC–001 CONTROL PANEL\JUNCTION BOX\5000218009–ELD–0003–AU–VWT–E04–01–1_E.dwg – a.lessard

Jun. 20, 2018 - 14:01:10 - P:\CLIENTS\Veolia Waters - John Meunier\184172_5000218009_AEM Amaruq\Ingenierie\Dessins\PLC-001 CONTROL PANEL\JUNCTION BOX\5000218009-ELD-0004-AU-VWT-E00-01-1_E.dwg - o.lessard

STD: "B" 11x17 | REF: CONTROLES RL - 184172 | BAR = 1" AT PLOT SCALE

JB9-620 SEEPEX JUNCTION BOX

PROJECT - 5000218009

DRAFT

REV	DESCRIPTION	DATE	REVD	CHKD	APVD	ECN
1	FOR APPROVAL	2018-06-20	A.L.	A.L.	G.M.	–

CONFIDENTIALITY AND INTELLECTUAL PROPERTY NOTICE
ALL INFORMATION CONTAINED IN THIS DOCUMENT IS THE SOLE PROPERTY OF VEOLIA WATER TECHNOLOGIES CANADA INC. AND IS PROTECTED BY ALL APPLICABLE LAWS, INCLUDING BUT NOT LIMITED TO COPYRIGHT AND OTHER INTELLECTUAL PROPERTY LAWS. THE DESIGN CONCEPTS AND INFORMATION CONTAINED HEREIN ARE PROPRIETARY TO V.W.T AND ARE SUBMITTED IN CONFIDENCE. THEY ARE NOT TRANSFERABLE. THEY MUST BE USED ONLY FOR THE PURPOSE FOR WHICH THE DOCUMENT IS EXPRESSLY SUBMITTED AND NO IMPLICIT LICENCE IS GRANTED OTHERWISE BY THE SUBMISSION OF THIS DOCUMENT. THEY ARE CONFIDENTIAL AND PRIVILEGED INFORMATION OF V.W.T. AND THEY MUST NOT BE DISCLOSED, REPRODUCED, LOANED, REMITTED OR USED IN ANY OTHER MANNER WITHOUT THE EXPRESS WRITTEN CONSENT OF V.W.T. V.W.T. ASSUMES NO RESPONSIBILITY OR LIABILITY FOR THE USE OF THIS DOCUMENT OR THE DESIGN CONCEPTS AND INFORMATION CONTAINED HEREIN FOR ANOTHER PROJECT, OR IN A MANNER THAT DOES NOT RELATE TO THE FITNESS OR PURPOSE OF THIS DOCUMENT. IN NO EVENT SHALL THIS DOCUMENT OR THE DESIGN CONCEPTS AND INFORMATION CONTAINED HEREIN BE USED IN A MANNER DETRIMENTAL TO THE INTEREST OF V.W.T. ALL COPYRIGHT, PATENT AND OTHER INTELLECTUAL PROPERTY RIGHTS ARE RESERVED. ACCEPTANCE OF THE DELIVERY OF THIS DOCUMENT CONSTITUTES AGREEMENT TO THESE TERMS AND CONDITIONS.

		DATE
DESIGNER	–	–
CHECKER	–	–
ENGINEER	–	–
SCALE:	None	

TITLE: JB9-620 SEEPEX JUNCTION BOX
TITLE PAGE
–

CLIENT: AEM AMARUQ
HUDSON BAY, NUNAVUT

VEOLIA WATER TECHNOLOGIES CANADA INC. 4105 Sartelon, Saint-Laurent, Qc, Canada, Tel: (514) 334-7230

PROJECT DRAWING	INTERNAL	SHEET	REV
5000218009 – ELD-0004-AU-VWT	E00	01 OF 05	1

DRAWING INDEX

DESCRIPTION	DRAWING NUMBER
JB9-620 SEEPEX JUNCTION BOX	
TITLE PAGE	5000218009-ELD-0004-AU-VWT-E00-01
DRAWING LIST & LEGEND	5000218009-ELD-0004-AU-VWT-E00-02
ENCLOSURE LAYOUT	5000218009-ELD-0004-AU-VWT-E00-03
INSIDE PANEL LAYOUT & BILL OF MATERIAL	5000218009-ELD-0004-AU-VWT-E00-04
TERMINAL DETAILS	5000218009-ELD-0004-AU-VWT-E00-05
SCHEMATIC DIAGRAM [POWER DISTRIBUTION] 120VAC/24VDC	5000218009-ELD-0004-AU-VWT-E04-01

COLORS AND WIRINGS GAGES

120VCA POWER	BLACK	14AWG
120VCA CONTROL	RED	14AWG
NEUTRAL	WHITE	14AWG
DRY CONTACT	YELLOW	14AWG
24VCC	BLUE[+], BLUE/WHITE[-]	16AWG[0 À 9A] 14AWG[10A & +]
GROUND	GREEN	14AWG
ISOLATED GROUND	GREEN/YELLOW	14AWG
ANALOG I/O TWISTED PAIRS	BLACK[+], WHITE[-]	18AWG
DIGITAL I/O 120VAC	RED	16AWG
DIGITAL I/O 24VCC	BLUE	16AWG
LOW VOLTAGE [12, 24, 48VCC]	BLUE	16AWG[0 À 9A] 14AWG[10A & +]
CONTROL CIRCUIT 5 TO 60VDC	BLUE[+], BLUE/WHITE[-], VERT[GND]	16AWG[0 À 9A] 14AWG[10A & +]

COLORS AND WIRING GAGES

SUPPLY 600VAC (L1)	RED	12AWG
SUPPLY 600VAC (L2)	BLACK	12AWG
SUPPLY 600VAC (L3)	BLUE	12AWG
SUPPLY 120VAC (L)	BLACK	12AWG (22A)/14AWG (15A)
SUPPLY 120VAC (N)	WHITE	12AWG (22A)/14AWG (15A)
CONTROL 120VAC (L)	RED	14AWG (15A)/16AWG (9A)
CONTROL 120VAC (N)	WHITE	14AWG (15A)/16AWG (9A)
DRY CONTACT	YELLOW	12AWG (22A)/14AWG (15A)
24VDC	BLUE	14AWG (15A)/16AWG (9A)
0VDC	VIOLET	14AWG (15A)/16AWG (9A)
ANALOG I/O TWISTED PAIRS	BLACK(+), WHITE(-)	18AWG
DIGITAL I/O 120VAC	RED	16AWG
DIGITAL I/O 24VDC	BLUE	16AWG
LOW VOLTAGE (5 TO 60VDC)	BLUE(+), BLUE/WHITE(-)	14AWG (15A)/16AWG (9A)
GROUND	GREEN	14AWG
ISOLATED GROUND	GREEN/YELLOW	14AWG

WIRING IDENTIFICATION

XX XX XX XX

- POWER INDICATION (+/-/L/N/G)
- LINE NUMBER
- PAGE NUMBER
- (FIELD WIRING ONLY) 01 – PANEL #1, 02 – PANEL #2, ...

LEGEND

- PSL — LOW PRESSURE SWITCH
- PSH — HIGH PRESSURE SWITCH
- LSL — LOW LEVEL SWITCH
- LSH — HIGH LEVEL SWITCH
- LSNO — LIMIT SWITCH NO
- LSNC — LIMIT SWITCH NC
- FSL — LOW FLOW SWITCH
- FSH — HIGH FLOW SWITCH
- TSL — LOW TEMPERATURE SWITCH
- TSH — HIGH TEMPERATURE SWITCH
- OFF DELAY TIMER [NO]
- OFF DELAY TIMER [NC]
- ON DELAY TIMER [NC]
- ON DELAY TIMER [NO]
- NO — CONTACT NO
- NC — CONTACT NC
- GND — GROUND
- GND — ISOLATED GROUND
- TERMINAL OF PANEL
- TERMINAL OF OTHER PANEL
- DISCONNECT TERMINAL OF PANEL

- HS — MAINTAINED TWO POSITIONS SELECTOR
- HS — MAINTAINED THREE POSITIONS SELECTOR
- HS — THREE POSITIONS SELECTOR, BOTH RETURN
- HS — THREE POSITIONS SELECTOR, LEFT RETURN
- HS — THREE POSITIONS SELECTOR, RIGHT RETURN
- PBNO — PUSHBUTTON NO
- PBNC — PUSHBUTTON NC
- ES — EMERGENCY STOP PUSH BUTTON
- E.S. — PULL-CORD E-STOP
- POT — POTENTIOMETER
- FU — FUSE
- CB — CIRCUIT BREAKER
- IL — PUSH-TO-TEST LIGHT
- IL — LIGHT
- CMR — CURRENT MONITORING RELAY
- AC A/C — AIR CONDITIONER UNIT

- M — CONTACTOR COIL
- TR — TIMER RELAY COIL
- CR — CONTROL RELAY COIL
- MCR — MASTER CONTROL RELAY COIL
- CR — CONTROL RELAY COIL WITH SURGE SURPRESSOR
- FV — SOLENOID
- R — RESISTANCE
- HN — HORN
- F — FAN / VENTILATOR / BLOWER
- CT — CURRENT TRANSFORMER
- PC — 120VAC DUPLEX OUTLET
- AM — AMPEREMETER
- VM — VOLTMETER

- DISC — FUSED DISCONNECT SWITCH
- FU — 3PH FUSE HOLDER
- DISC — DISCONNECT SWITCH
- OL — MANUAL STARTER WITH THERMAL & MAGNETIC PROTECTION
- OL — MANUAL STARTER WITH MAGNETIC PROTECTION
- M — CONTACTOR
- OL — OVERLOAD
- MOLDED CASE CIRCUIT BREAKER

- TR (H1, H2, X1, X2) — TRANSFORMER
- TR (H1, H2, X1, X2, X3, X4) — MULTI-TAPS TRANSFORMER

REV	DESCRIPTION	DATE	REVD	CHKD	APVD	ECN
1	FOR APPROVAL	2018-06-20	A.L.	A.L.	G.M.	–

CONFIDENTIALITY AND INTELLECTUAL PROPERTY NOTICE
ALL INFORMATION CONTAINED IN THIS DOCUMENT IS THE SOLE PROPERTY OF VEOLIA WATER TECHNOLOGIES CANADA INC. AND IS PROTECTED BY ALL APPLICABLE LAWS, INCLUDING BUT NOT LIMITED TO COPYRIGHT AND OTHER INTELLECTUAL PROPERTY LAWS. THE DESIGN CONCEPTS AND INFORMATION CONTAINED HEREIN ARE PROPRIETARY TO V.W.T AND ARE SUBMITTED IN CONFIDENCE. THEY ARE NOT TRANSFERABLE. THEY MUST BE USED ONLY FOR THE PURPOSE FOR WHICH THE DOCUMENT IS EXPRESSLY SUBMITTED AND NO IMPLICIT LICENCE IS GRANTED OTHERWISE BY THE SUBMISSION OF THIS DOCUMENT. THEY ARE CONFIDENTIAL AND PRIVILEGED INFORMATION OF V.W.T. AND THEY MUST NOT BE DISCLOSED, REPRODUCED, LOANED, REMITTED OR USED IN ANY OTHER MANNER WITHOUT THE EXPRESS WRITTEN CONSENT OF V.W.T. V.W.T. ASSUMES NO RESPONSIBILITY OR LIABILITY FOR THE USE OF THIS DOCUMENT OR THE DESIGN CONCEPTS AND INFORMATION CONTAINED HEREIN FOR ANOTHER PROJECT, OR IN A MANNER THAT DOES NOT RELATE TO THE FITNESS OR PURPOSE OF THIS DOCUMENT. IN NO EVENT SHALL THIS DOCUMENT OR THE DESIGN CONCEPTS AND INFORMATION CONTAINED HEREIN BE USED IN A MANNER DETRIMENTAL TO THE INTEREST OF V.W.T. ALL COPYRIGHT, PATENT AND OTHER INTELLECTUAL PROPERTY RIGHTS ARE RESERVED. ACCEPTANCE OF THE DELIVERY OF THIS DOCUMENT CONSTITUTES AGREEMENT TO THESE TERMS AND CONDITIONS.

DESIGNER	–	DATE –
CHECKER	–	DATE –
ENGINEER	–	DATE –
SCALE:	None	

TITLE: JB9-620 SEEPEX JUNCTION BOX
DRAWING LIST & LEGEND
–

CLIENT: AEM AMARUQ
HUDSON BAY, NUNAVUT

VEOLIA
VEOLIA WATER TECHNOLOGIES CANADA INC. 4105 Sartelon, Saint-Laurent, Qc, Canada, Tel: (514) 334-7230

PROJECT DRAWING	INTERNAL	SHEET	REV
5000218009 – ELD-0004-AU-VWT	E00	02 OF 05	1

STD: "B" 11x17 | REF: CONTROLES RL – 184172 | BAR = 1" AT PLOT SCALE

Jun. 20, 2018 14:01:15 – P:\CLIENTS\Veolia Waters – John Meunier\184172_5000218009 AEM Amaruq\Ingenierie\Dessins\PLC-001 CONTROL PANEL\JUNCTION BOX\5000218009-ELD-0004-AU-VWT-E00-02-1_E.dwg – a.lessard

NOTES:

1- SEE DRAWING 5000218009-ELD-0004-AU-VWT-E00-04 FOR THE REFERENCES TO THE BILL OF MATERIAL.

2- CSA APPROVAL.

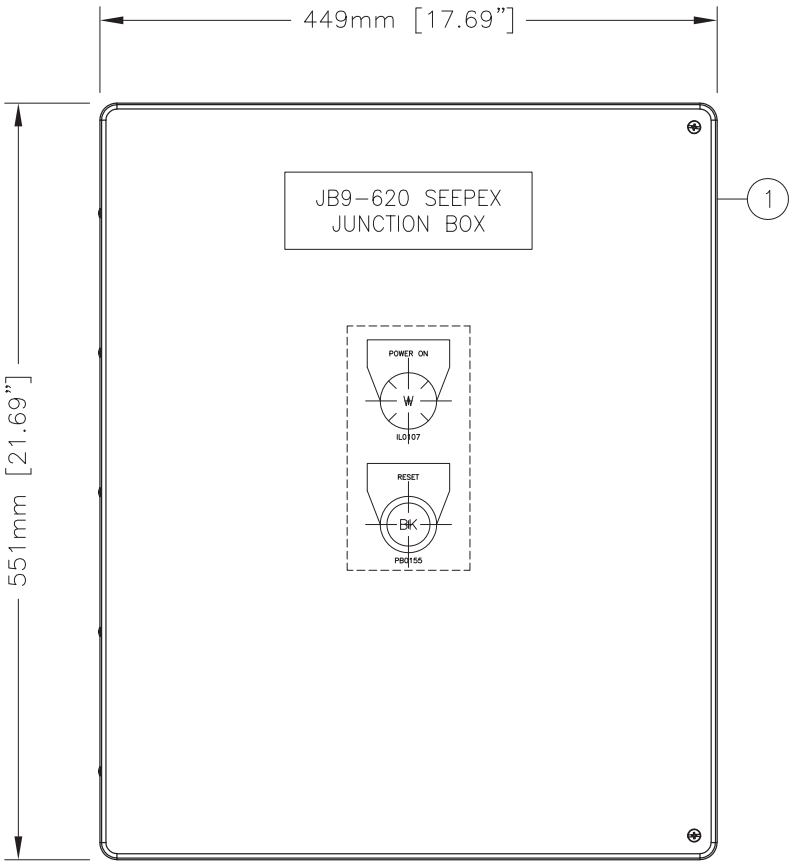

EXTERNAL LAYOUT

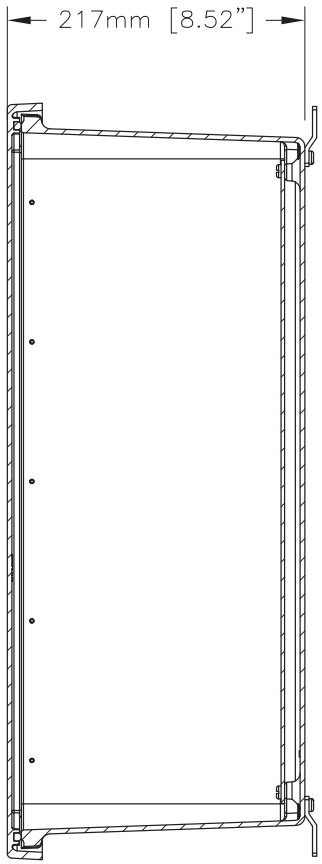

SIDE LAYOUT

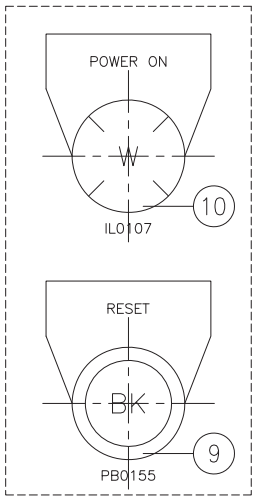

DOOR DETAILS

REV	DESCRIPTION	DATE	REVD	CHKD	APVD	ECN
1	FOR APPROVAL	2018-06-20	A.L.	A.L.	G.M.	–

CONFIDENTIALITY AND INTELLECTUAL PROPERTY NOTICE
ALL INFORMATION CONTAINED IN THIS DOCUMENT IS THE SOLE PROPERTY OF VEOLIA WATER TECHNOLOGIES CANADA INC. AND IS PROTECTED BY ALL APPLICABLE LAWS, INCLUDING BUT NOT LIMITED TO COPYRIGHT AND OTHER INTELLECTUAL PROPERTY LAWS. THE DESIGN CONCEPTS AND INFORMATION CONTAINED HEREIN ARE PROPRIETARY TO V.W.T AND ARE SUBMITTED IN CONFIDENCE. THEY ARE NOT TRANSFERABLE. THEY MUST BE USED ONLY FOR THE PURPOSE FOR WHICH THE DOCUMENT IS EXPRESSLY SUBMITTED AND NO IMPLICIT LICENCE IS GRANTED OTHERWISE BY THE SUBMISSION OF THIS DOCUMENT. THEY ARE CONFIDENTIAL AND PRIVILEGED INFORMATION OF V.W.T. AND THEY MUST NOT BE DISCLOSED, REPRODUCED, LOANED, REMITTED OR USED IN ANY OTHER MANNER WITHOUT THE EXPRESS WRITTEN CONSENT OF V.W.T. V.W.T. ASSUMES NO RESPONSIBILITY OR LIABILITY FOR THE USE OF THIS DOCUMENT OR THE DESIGN CONCEPTS AND INFORMATION CONTAINED HEREIN FOR ANOTHER PROJECT, OR IN A MANNER THAT DOES NOT RELATE TO THE FITNESS OR PURPOSE OF THIS DOCUMENT. IN NO EVENT SHALL THIS DOCUMENT OR THE DESIGN CONCEPTS AND INFORMATION CONTAINED HEREIN BE USED IN A MANNER DETRIMENTAL TO THE INTEREST OF V.W.T. ALL COPYRIGHT, PATENT AND OTHER INTELLECTUAL PROPERTY RIGHTS ARE RESERVED. ACCEPTANCE OF THE DELIVERY OF THIS DOCUMENT CONSTITUTES AGREEMENT TO THESE TERMS AND CONDITIONS.

DESIGNER	–	DATE –
CHECKER	–	DATE –
ENGINEER	–	DATE –
SCALE:	None	

TITLE: JB9-620 SEEPEX JUNCTION BOX ENCLOSURE LAYOUT –

CLIENT: AEM AMARUQ HUDSON BAY, NUNAVUT

VEOLIA WATER TECHNOLOGIES CANADA INC., 4105 Sartelon, Saint-Laurent, Qc, Canada, Tel: (514) 334-7230

PROJECT DRAWING	INTERNAL	SHEET	REV
5000218009 – ELD-0004-AU-VWT	E00	03 OF 05	1

STD: "B" 11x17 | REF: CONTROLES RL – 184172 | BAR = 1" AT PLOT SCALE

Jun 20, 2018 14:01:20 – P:\CLIENTS\Veolia Waters – John Meunier\184172_5000218009 AEM Amaruq\Ingenierie\Dessins\PLC-001 CONTROL PANEL\JUNCTION BOX\5000218009-ELD-0004-AU-VWT-E00-03-1_E.dwg – o.lessard

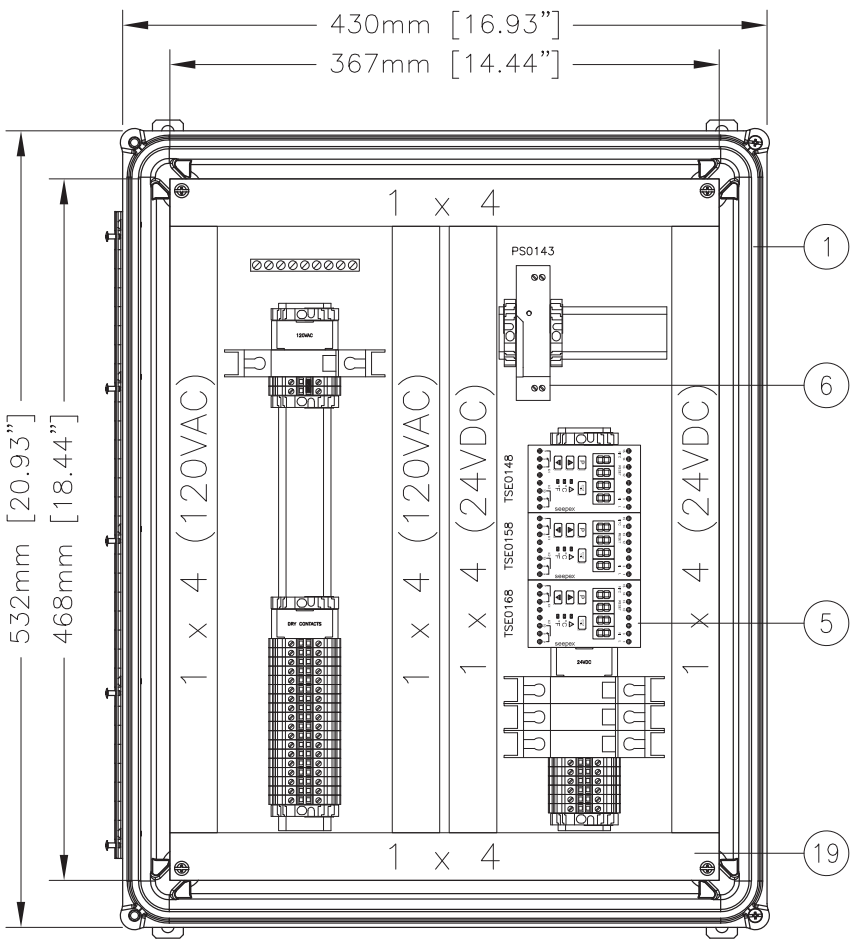

INTERNAL LAYOUT

BILL OF MATERIALS [BOM]

#	QTY.	DESCRIPTION	MANUFACTURER	CATALOGUE N.	REMARK
1	1	PANEL NEMA 4X, WALLMOUNT, ONE DOOR5000218009– DIM 551mm[H] x 449mm[W] x 217mm[D]	HAMMOND	PJ20168H	–
2	1	INNER PANEL, DIM 468mm[H] x 367mm[W]	HAMMOND	P2068	–
3	–	–	–	–	–
4	–	–	–	–	–
5	3	DRY–RUNNING PROTECTION DEVICE, 24VDC	SEEPEX	SGRTSE 24VDCB	–
6	1	POWER SUPPLY 120VAC/24VDC, 1.25A	PHOENIX CONTACT	2902991	–
7	1	"BRANCH PROOF" BREAKER, 1A, 1 POLE, 120VAC/24VDC	SCHNEIDER	60100	–
8	3	"BRANCH PROOF" BREAKER, 0.5A, 1 POLE, 120VAC/24VDC	SCHNEIDER	60101	–
9	1	NON–ILLUMINATED PUSH BUTTON, BLACK, MOMENTARY ACTION, 1N.O., 30.5mm	ALLEN BRADLEY	800H–R2D1	–
	1	CONTACT BLOCK, 2N.O.	ALLEN BRADLEY	800T–XA2	–
10	1	PILOT LIGHT OPERATOR, WHITE, LED TYPE, 12 ... 130VAC/VDC, 30.5mm	ALLEN BRADLEY	800H–QRH2W	–
11	–	–	–	–	–
12	3	IDENTIFICATION TERMINAL UBE/D	PHOENIX CONTACT	0800307	–
13	26/3	SIMPLE TERMINAL BLOCK, UT 4 EN C/W END PLATE	PHOENIX CONTACT	3044102/3047028	–
14	A.S.R.	END BARRIER, E/NS 35 N	PHOENIX CONTACT	0800886	–
15	–	–	–	–	–
16	–	–	–	–	–
17	A.S.R.	MOUNTING RAIL, TS35	WEIDMULLER	0383400000	–
18	1	NON–ISOLATED GROUND BAR	ILSCO	N174AS	–
19	A.S.R.	DUCT WIRING [1 x 4]	PANDUIT	–	–
20	–	–	–	–	–

REV	DESCRIPTION	DATE	REVD	CHKD	APVD	ECN
1	FOR APPROVAL	2018–06–20	A.L.	A.L.	G.M.	–

CONFIDENTIALITY AND INTELLECTUAL PROPERTY NOTICE
ALL INFORMATION CONTAINED IN THIS DOCUMENT IS THE SOLE PROPERTY OF VEOLIA WATER TECHNOLOGIES CANADA INC. AND IS PROTECTED BY ALL APPLICABLE LAWS, INCLUDING BUT NOT LIMITED TO COPYRIGHT AND OTHER INTELLECTUAL PROPERTY LAWS. THE DESIGN CONCEPTS AND INFORMATION CONTAINED HEREIN ARE PROPRIETARY TO V.W.T AND ARE SUBMITTED IN CONFIDENCE. THEY ARE NOT TRANSFERABLE. THEY MUST BE USED ONLY FOR THE PURPOSE FOR WHICH THE DOCUMENT IS EXPRESSLY SUBMITTED AND NO IMPLICIT LICENCE IS GRANTED OTHERWISE BY THE SUBMISSION OF THIS DOCUMENT. THEY ARE CONFIDENTIAL AND PRIVILEGED INFORMATION OF V.W.T. AND THEY MUST NOT BE DISCLOSED, REPRODUCED, LOANED, REMITTED OR USED IN ANY OTHER MANNER WITHOUT THE EXPRESS WRITTEN CONSENT OF V.W.T. V.W.T. ASSUMES NO RESPONSIBILITY OR LIABILITY FOR THE USE OF THIS DOCUMENT OR THE DESIGN CONCEPTS AND INFORMATION CONTAINED HEREIN FOR ANOTHER PROJECT, OR IN A MANNER THAT DOES NOT RELATE TO THE FITNESS OR PURPOSE OF THIS DOCUMENT. IN NO EVENT SHALL THIS DOCUMENT OR THE DESIGN CONCEPTS AND INFORMATION CONTAINED HEREIN BE USED IN A MANNER DETRIMENTAL TO THE INTEREST OF V.W.T. ALL COPYRIGHT, PATENT AND OTHER INTELLECTUAL PROPERTY RIGHTS ARE RESERVED. ACCEPTANCE OF THE DELIVERY OF THIS DOCUMENT CONSTITUTES AGREEMENT TO THESE TERMS AND CONDITIONS.

DESIGNER	–	DATE –
CHECKER	–	DATE –
ENGINEER	–	DATE –
SCALE:	None	

TITLE: JB9–620 SEEPEX JUNCTION BOX
INSIDE PANEL LAYOUT & BILL OF MATERIAL
–

CLIENT: AEM AMARUQ
HUDSON BAY, NUNAVUT

VEOLIA
VEOLIA WATER TECHNOLOGIES CANADA INC. 4105 Sartelon, Saint-Laurent, Qc, Canada, Tel: (514) 334-7230

PROJECT DRAWING	INTERNAL	SHEET	REV
5000218009 – ELD–0004–AU–VWT	E00	04 OF 05	1

STD: "B" 11x17 | REF: CONTROLES RL – 184172 | BAR = 1" AT PLOT SCALE

Jun. 20, 2018 - 14:01:25 – P:\CLIENTS\Veolia Waters – John Meunier\184172_5000218009 AEM Amaruq\Ingenierie\Dessins\PLC-001 CONTROL PANEL\JUNCTION BOX\5000218009-ELD-0004-AU-VWT-E00-04-1_E.dwg – d.lessard

NOTES:

1- SEE DRAWING 5000218009-ELD-0004-AU-VWT-E00-04 FOR THE REFERENCES TO THE BILL OF MATERIAL.

2- CSA APPROVAL.

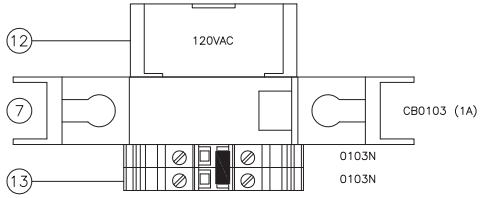

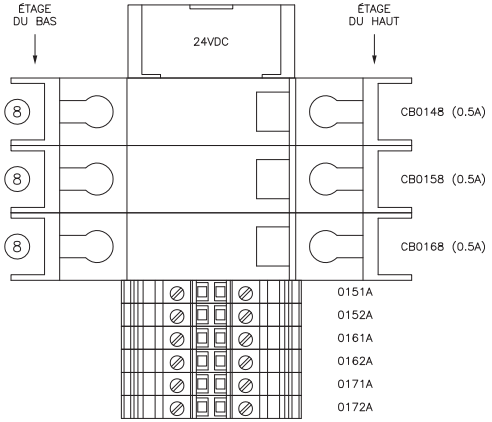

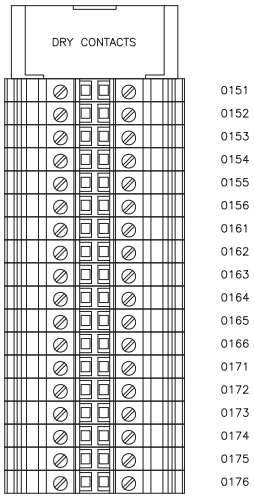

REV	DESCRIPTION	DATE	REVD	CHKD	APVD	ECN
1	FOR APPROVAL	2018-06-20	A.L.	A.L.	G.M.	–

CONFIDENTIALITY AND INTELLECTUAL PROPERTY NOTICE

ALL INFORMATION CONTAINED IN THIS DOCUMENT IS THE SOLE PROPERTY OF VEOLIA WATER TECHNOLOGIES CANADA INC. AND IS PROTECTED BY ALL APPLICABLE LAWS, INCLUDING BUT NOT LIMITED TO COPYRIGHT AND OTHER INTELLECTUAL PROPERTY LAWS. THE DESIGN CONCEPTS AND INFORMATION CONTAINED HEREIN ARE PROPRIETARY TO V.W.T AND ARE SUBMITTED IN CONFIDENCE. THEY ARE NOT TRANSFERABLE. THEY MUST BE USED ONLY FOR THE PURPOSE FOR WHICH THE DOCUMENT IS EXPRESSLY SUBMITTED AND NO IMPLICIT LICENCE IS GRANTED OTHERWISE BY THE SUBMISSION OF THIS DOCUMENT. THEY ARE CONFIDENTIAL AND PRIVILEGED INFORMATION OF V.W.T. AND THEY MUST NOT BE DISCLOSED, REPRODUCED, LOANED, REMITTED OR USED IN ANY OTHER MANNER WITHOUT THE EXPRESS WRITTEN CONSENT OF V.W.T. V.W.T. ASSUMES NO RESPONSIBILITY OR LIABILITY FOR THE USE OF THIS DOCUMENT OR THE DESIGN CONCEPTS AND INFORMATION CONTAINED HEREIN FOR ANOTHER PROJECT, OR IN A MANNER THAT DOES NOT RELATE TO THE FITNESS OR PURPOSE OF THIS DOCUMENT. IN NO EVENT SHALL THIS DOCUMENT OR THE DESIGN CONCEPTS AND INFORMATION CONTAINED HEREIN BE USED IN A MANNER DETRIMENTAL TO THE INTEREST OF V.W.T. ALL COPYRIGHT, PATENT AND OTHER INTELLECTUAL PROPERTY RIGHTS ARE RESERVED. ACCEPTANCE OF THE DELIVERY OF THIS DOCUMENT CONSTITUTES AGREEMENT TO THESE TERMS AND CONDITIONS.

		DATE
DESIGNER	–	–
CHECKER	–	–
ENGINEER	–	–
SCALE:	None	

TITLE: JB9-620 SEEPEX JUNCTION BOX
TERMINAL DETAILS
–

CLIENT: AEM AMARUQ
HUDSON BAY, NUNAVUT

VEOLIA

VEOLIA WATER TECHNOLOGIES CANADA INC., 4105 Sartelon, Saint-Laurent, Qc, Canada, Tel: (514) 334-7230

PROJECT DRAWING	INTERNAL	SHEET	REV
5000218009 – ELD-0004-AU-VWT	E00	05 OF 05	1

STD: "B" 11x17 | REF: CONTROLES RL – 184172 | BAR = 1" AT PLOT SCALE

Jun 20, 2018 14:01:30 – P:\CLIENTS\Veolia Waters – John Meunier\184172_5000218009 AEM Amaruq\Ingenierie\Dessins\PLC-001 CONTROL PANEL\JUNCTION BOX\5000218009-ELD-0004-AU-VWT-E00-05-1_E.dwg – a.lessard

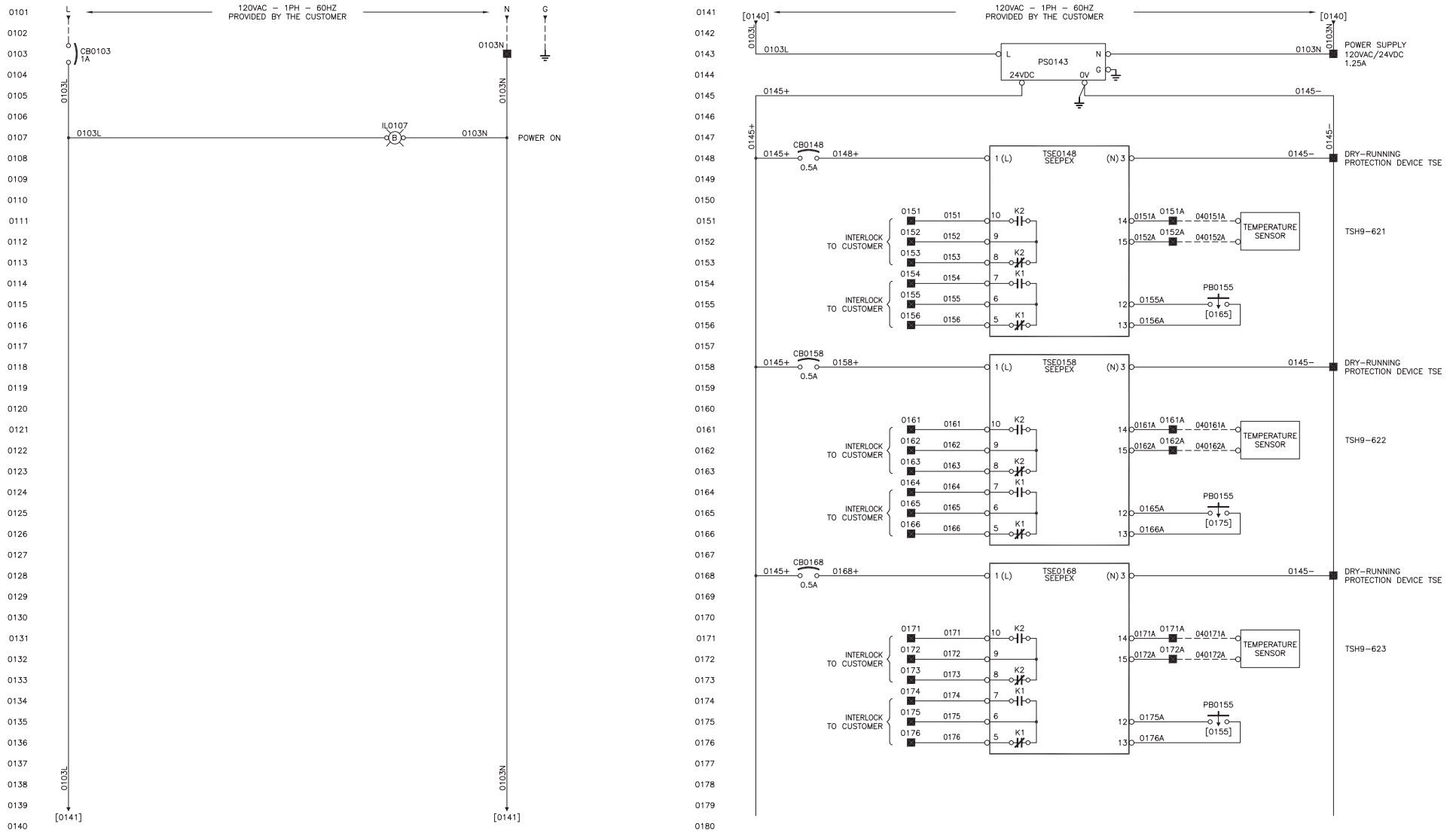

REV	DESCRIPTION	DATE	REVD	CHKD	APVD	ECN
1	FOR APPROVAL	2018–06–20	A.L.	A.L.	G.M.	–

CONFIDENTIALITY AND INTELLECTUAL PROPERTY NOTICE
ALL INFORMATION CONTAINED IN THIS DOCUMENT IS THE SOLE PROPERTY OF VEOLIA WATER TECHNOLOGIES CANADA INC. AND IS PROTECTED BY ALL APPLICABLE LAWS, INCLUDING BUT NOT LIMITED TO COPYRIGHT AND OTHER INTELLECTUAL PROPERTY LAWS. THE DESIGN CONCEPTS AND INFORMATION CONTAINED HEREIN ARE PROPRIETARY TO V.W.T AND ARE SUBMITTED IN CONFIDENCE. THEY ARE NOT TRANSFERABLE. THEY MUST BE USED ONLY FOR THE PURPOSE FOR WHICH THE DOCUMENT IS EXPRESSLY SUBMITTED AND NO IMPLICIT LICENCE IS GRANTED OTHERWISE BY THE SUBMISSION OF THIS DOCUMENT. THEY ARE CONFIDENTIAL AND PRIVILEGED INFORMATION OF V.W.T. AND THEY MUST NOT BE DISCLOSED, REPRODUCED, LOANED, REMITTED OR USED IN ANY OTHER MANNER WITHOUT THE EXPRESS WRITTEN CONSENT OF V.W.T. V.W.T. ASSUMES NO RESPONSIBILITY OR LIABILITY FOR THE USE OF THIS DOCUMENT OR THE DESIGN CONCEPTS AND INFORMATION CONTAINED HEREIN FOR ANOTHER PROJECT, OR IN A MANNER THAT DOES NOT RELATE TO THE FITNESS OR PURPOSE OF THIS DOCUMENT. IN NO EVENT SHALL THIS DOCUMENT OR THE DESIGN CONCEPTS AND INFORMATION CONTAINED HEREIN BE USED IN A MANNER DETRIMENTAL TO THE INTEREST OF V.W.T. ALL COPYRIGHT, PATENT AND OTHER INTELLECTUAL PROPERTY RIGHTS ARE RESERVED. ACCEPTANCE OF THE DELIVERY OF THIS DOCUMENT CONSTITUTES AGREEMENT TO THESE TERMS AND CONDITIONS.

DESIGNER	–	DATE –
CHECKER	–	DATE –
ENGINEER	–	DATE –
SCALE:	None	

TITLE: JB9–620 SEEPEX JUNCTION BOX
SCHEMATIC DIAGRAM [POWER DISTRIBUTION] 120VAC/24VDC
–

CLIENT: AEM AMARUQ
HUDSON BAY, NUNAVUT

VEOLIA
VEOLIA WATER TECHNOLOGIES CANADA INC., 4105 Sartelon, Saint-Laurent, Qc, Canada, Tel: (514) 334-7230

PROJECT DRAWING	INTERNAL	SHEET	REV
5000218009 – ELD–0004–AU–VWT	E04	01 OF 01	1

STD: "B" 11x17 | REF: CONTROLES RL – 184172 | BAR = 1" AT PLOT SCALE

Jun. 20, 2018 – 14:01:34 – P:\CLIENTS\Veolia Waters – John Meunier\184172_5000218009 AEM Amaruq\Ingenierie\Dessins\PLC–001 CONTROL PANEL\JUNCTION BOX\5000218009–ELD–0004–AU–VWT–E04–01–1_E.dwg – d.lessard

Jun 20, 2018 14:01:39 - P:\CLIENTS\Veolia Waters - John Meunier\184172_5000218009 AEM Amaruq\Ingenierie\Dessins\PLC-001 CONTROL PANEL\JUNCTION BOX\5000218009-ELD-0005-AU-VWT-E00-01-1_E.dwg - o.lessard

STD: "B" 11x17 | REF: CONTROLES RL - 184172 | BAR = 1" AT PLOT SCALE

JB9-531 JUNCTION BOX

PROJECT - 5000218009

DRAFT

REV	DESCRIPTION	DATE	REVD	CHKD	APVD	ECN
1	FOR APPROVAL	2018-06-20	A.L.	A.L.	G.M.	–

CONFIDENTIALITY AND INTELLECTUAL PROPERTY NOTICE
ALL INFORMATION CONTAINED IN THIS DOCUMENT IS THE SOLE PROPERTY OF VEOLIA WATER TECHNOLOGIES CANADA INC. AND IS PROTECTED BY ALL APPLICABLE LAWS, INCLUDING BUT NOT LIMITED TO COPYRIGHT AND OTHER INTELLECTUAL PROPERTY LAWS. THE DESIGN CONCEPTS AND INFORMATION CONTAINED HEREIN ARE PROPRIETARY TO V.W.T AND ARE SUBMITTED IN CONFIDENCE. THEY ARE NOT TRANSFERABLE. THEY MUST BE USED ONLY FOR THE PURPOSE FOR WHICH THE DOCUMENT IS EXPRESSLY SUBMITTED AND NO IMPLICIT LICENCE IS GRANTED OTHERWISE BY THE SUBMISSION OF THIS DOCUMENT. THEY ARE CONFIDENTIAL AND PRIVILEGED INFORMATION OF V.W.T. AND THEY MUST NOT BE DISCLOSED, REPRODUCED, LOANED, REMITTED OR USED IN ANY OTHER MANNER WITHOUT THE EXPRESS WRITTEN CONSENT OF V.W.T. V.W.T. ASSUMES NO RESPONSIBILITY OR LIABILITY FOR THE USE OF THIS DOCUMENT OR THE DESIGN CONCEPTS AND INFORMATION CONTAINED HEREIN FOR ANOTHER PROJECT, OR IN A MANNER THAT DOES NOT RELATE TO THE FITNESS OR PURPOSE OF THIS DOCUMENT. IN NO EVENT SHALL THIS DOCUMENT OR THE DESIGN CONCEPTS AND INFORMATION CONTAINED HEREIN BE USED IN A MANNER DETRIMENTAL TO THE INTEREST OF V.W.T. ALL COPYRIGHT, PATENT AND OTHER INTELLECTUAL PROPERTY RIGHTS ARE RESERVED. ACCEPTANCE OF THE DELIVERY OF THIS DOCUMENT CONSTITUTES AGREEMENT TO THESE TERMS AND CONDITIONS.

		DATE
DESIGNER	–	–
CHECKER	–	–
ENGINEER	–	–
SCALE:	None	

TITLE: JB9-531 JUNCTION BOX
TITLE PAGE
–

CLIENT: AEM AMARUQ
HUDSON BAY, NUNAVUT

VEOLIA
VEOLIA WATER TECHNOLOGIES CANADA INC., 4105 Sartelon, Saint-Laurent, Qc, Canada, Tel: (514) 334-7230

PROJECT DRAWING	INTERNAL	SHEET	REV
5000218009 – ELD-0005-AU-VWT	E00	01 OF 05	1

DRAWING INDEX

DESCRIPTION	DRAWING NUMBER
JB9-531 JUNCTION BOX	
TITLE PAGE	5000218009-ELD-0005-AU-VWT-E00-01
DRAWING LIST & LEGEND	5000218009-ELD-0005-AU-VWT-E00-02
ENCLOSURE LAYOUT	5000218009-ELD-0005-AU-VWT-E00-03
INSIDE PANEL LAYOUT & BILL OF MATERIAL	5000218009-ELD-0005-AU-VWT-E00-04
TERMINAL DETAILS	5000218009-ELD-0005-AU-VWT-E00-05

COLORS AND WIRINGS GAGES

120VCA POWER	BLACK	14AWG
120VCA CONTROL	RED	14AWG
NEUTRAL	WHITE	14AWG
DRY CONTACT	YELLOW	14AWG
24VCC	BLUE[+], BLUE/WHITE[-]	16AWG[0 À 9A] 14AWG[10A & +]
GROUND	GREEN	14AWG
ISOLATED GROUND	GREEN/YELLOW	14AWG
ANALOG I/O TWISTED PAIRS	BLACK[+], WHITE[-]	18AWG
DIGITAL I/O 120VAC	RED	16AWG
DIGITAL I/O 24VCC	BLUE	16AWG
LOW VOLTAGE [12, 24, 48VCC]	BLUE	16AWG[0 À 9A] 14AWG[10A & +]
CONTROL CIRCUIT 5 TO 60VDC	BLUE[+], BLUE/WHITE[-], VERT[GND]	16AWG[0 À 9A] 14AWG[10A & +]

COLORS AND WIRING GAGES

SUPPLY 600VAC (L1)	RED	12AWG
SUPPLY 600VAC (L2)	BLACK	12AWG
SUPPLY 600VAC (L3)	BLUE	12AWG
SUPPLY 120VAC (L)	BLACK	12AWG (22A)/14AWG (15A)
SUPPLY 120VAC (N)	WHITE	12AWG (22A)/14AWG (15A)
CONTROL 120VAC (L)	RED	14AWG (15A)/16AWG (9A)
CONTROL 120VAC (N)	WHITE	14AWG (15A)/16AWG (9A)
DRY CONTACT	YELLOW	12AWG (22A)/14AWG (15A)
24VDC	BLUE	14AWG (15A)/16AWG (9A)
0VDC	VIOLET	14AWG (15A)/16AWG (9A)
ANALOG I/O TWISTED PAIRS	BLACK(+), WHITE(-)	18AWG
DIGITAL I/O 120VAC	RED	16AWG
DIGITAL I/O 24VDC	BLUE	16AWG
LOW VOLTAGE (5 TO 60VDC)	BLUE(+), BLUE/WHITE(-)	14AWG (15A)/16AWG (9A)
GROUND	GREEN	14AWG
ISOLATED GROUND	GREEN/YELLOW	14AWG

WIRING IDENTIFICATION

XX XX XX XX

- POWER INDICATION (+/-/L/N/G)
- LINE NUMBER
- PAGE NUMBER
- (FIELD WIRING ONLY) 01 – PANEL #1, 02 – PANEL #2, ...

LEGEND

- PSL — LOW PRESSURE SWITCH
- PSH — HIGH PRESSURE SWITCH
- LSL — LOW LEVEL SWITCH
- LSH — HIGH LEVEL SWITCH
- LSNO — LIMIT SWITCH NO
- LSNC — LIMIT SWITCH NC
- FSL — LOW FLOW SWITCH
- FSH — HIGH FLOW SWITCH
- TSL — LOW TEMPERATURE SWITCH
- TSH — HIGH TEMPERATURE SWITCH
- OFF DELAY TIMER [NO]
- OFF DELAY TIMER [NC]
- ON DELAY TIMER [NC]
- ON DELAY TIMER [NO]
- NO — CONTACT NO
- NC — CONTACT NC
- GND — GROUND
- GND — ISOLATED GROUND
- TERMINAL OF PANEL
- TERMINAL OF OTHER PANEL
- DISCONNECT TERMINAL OF PANEL

- HS — MAINTAINED TWO POSITIONS SELECTOR
- HS — MAINTAINED THREE POSITIONS SELECTOR
- HS — THREE POSITIONS SELECTOR, BOTH RETURN
- HS — THREE POSITIONS SELECTOR, LEFT RETURN
- HS — THREE POSITIONS SELECTOR, RIGHT RETURN
- PBNO — PUSHBUTTON NO
- PBNC — PUSHBUTTON NC
- ES — EMERGENCY STOP PUSH BUTTON
- E.S — PULL-CORD E-STOP
- POT — POTENTIOMETER
- FU — FUSE
- CB — CIRCUIT BREAKER
- IL — PUSH-TO-TEST LIGHT
- IL — LIGHT
- CMR — CURRENT MONITORING RELAY
- AC A/C — AIR CONDITIONER UNIT

- M — CONTACTOR COIL
- TR — TIMER RELAY COIL
- CR — CONTROL RELAY COIL
- MCR — MASTER CONTROL RELAY COIL
- CR — CONTROL RELAY COIL WITH SURGE SURPRESSOR
- FV — SOLENOID
- R — RESISTANCE
- HN — HORN
- F — FAN / VENTILATOR / BLOWER
- CT — CURRENT TRANSFORMER
- PC — 120VAC DUPLEX OUTLET
- AM — AMPEREMETER
- VM — VOLTMETER

- DISC — FUSED DISCONNECT SWITCH
- FU — 3PH FUSE HOLDER
- DISC — DISCONNECT SWITCH
- OL — MANUAL STARTER WITH THERMAL & MAGNETIC PROTECTION
- OL — MANUAL STARTER WITH MAGNETIC PROTECTION
- M — CONTACTOR
- OL — OVERLOAD
- MOLDED CASE CIRCUIT BREAKER

- TR (H1, H2, X1, X2) — TRANSFORMER
- TR (H1, H2, X1, X2, X3, X4) — MULTI-TAPS TRANSFORMER

REV	DESCRIPTION	DATE	REVD	CHKD	APVD	ECN
1	FOR APPROVAL	2018-06-20	A.L.	A.L.	G.M.	–

CONFIDENTIALITY AND INTELLECTUAL PROPERTY NOTICE
ALL INFORMATION CONTAINED IN THIS DOCUMENT IS THE SOLE PROPERTY OF VEOLIA WATER TECHNOLOGIES CANADA INC. AND IS PROTECTED BY ALL APPLICABLE LAWS, INCLUDING BUT NOT LIMITED TO COPYRIGHT AND OTHER INTELLECTUAL PROPERTY LAWS. THE DESIGN CONCEPTS AND INFORMATION CONTAINED HEREIN ARE PROPRIETARY TO V.W.T AND ARE SUBMITTED IN CONFIDENCE. THEY ARE NOT TRANSFERABLE. THEY MUST BE USED ONLY FOR THE PURPOSE FOR WHICH THE DOCUMENT IS EXPRESSLY SUBMITTED AND NO IMPLICIT LICENCE IS GRANTED OTHERWISE BY THE SUBMISSION OF THIS DOCUMENT. THEY ARE CONFIDENTIAL AND PRIVILEGED INFORMATION OF V.W.T. AND THEY MUST NOT BE DISCLOSED, REPRODUCED, LOANED, REMITTED OR USED IN ANY OTHER MANNER WITHOUT THE EXPRESS WRITTEN CONSENT OF V.W.T. V.W.T. ASSUMES NO RESPONSIBILITY OR LIABILITY FOR THE USE OF THIS DOCUMENT OR THE DESIGN CONCEPTS AND INFORMATION CONTAINED HEREIN FOR ANOTHER PROJECT, OR IN A MANNER THAT DOES NOT RELATE TO THE FITNESS OR PURPOSE OF THIS DOCUMENT. IN NO EVENT SHALL THIS DOCUMENT OR THE DESIGN CONCEPTS AND INFORMATION CONTAINED HEREIN BE USED IN A MANNER DETRIMENTAL TO THE INTEREST OF V.W.T. ALL COPYRIGHT, PATENT AND OTHER INTELLECTUAL PROPERTY RIGHTS ARE RESERVED. ACCEPTANCE OF THE DELIVERY OF THIS DOCUMENT CONSTITUTES AGREEMENT TO THESE TERMS AND CONDITIONS.

DESIGNER	–	DATE –
CHECKER	–	DATE –
ENGINEER	–	DATE –
SCALE:	None	

TITLE: JB9-531 JUNCTION BOX
DRAWING LIST & LEGEND
–

CLIENT: AEM AMARUQ
HUDSON BAY, NUNAVUT

VEOLIA
VEOLIA WATER TECHNOLOGIES CANADA INC. 4105 Sartelon, Saint-Laurent, Qc, Canada, Tel: (514) 334-7230

PROJECT DRAWING	INTERNAL	SHEET	REV
5000218009 – ELD-0005-AU-VWT	E00	02 OF 05	1

STD: "B" 11x17 | REF: CONTROLES RL – 184172 | BAR = 1" AT PLOT SCALE

Jun. 20, 2018 14:01:44 – P:\CLIENTS\Veolia Waters – John Meunier\184172_5000218009 AEM Amaruq\Ingenierie\Dessins\PLC-001 CONTROL PANEL\JUNCTION BOX\5000218009-ELD-0005-AU-VWT-E00-02-1_E.dwg – a.lessard

NOTES:

1- SEE DRAWING 5000218009-ELD-0005-AU-VWT-E00-04 FOR THE REFERENCES TO THE BILL OF MATERIAL.

2- CSA APPROVAL.

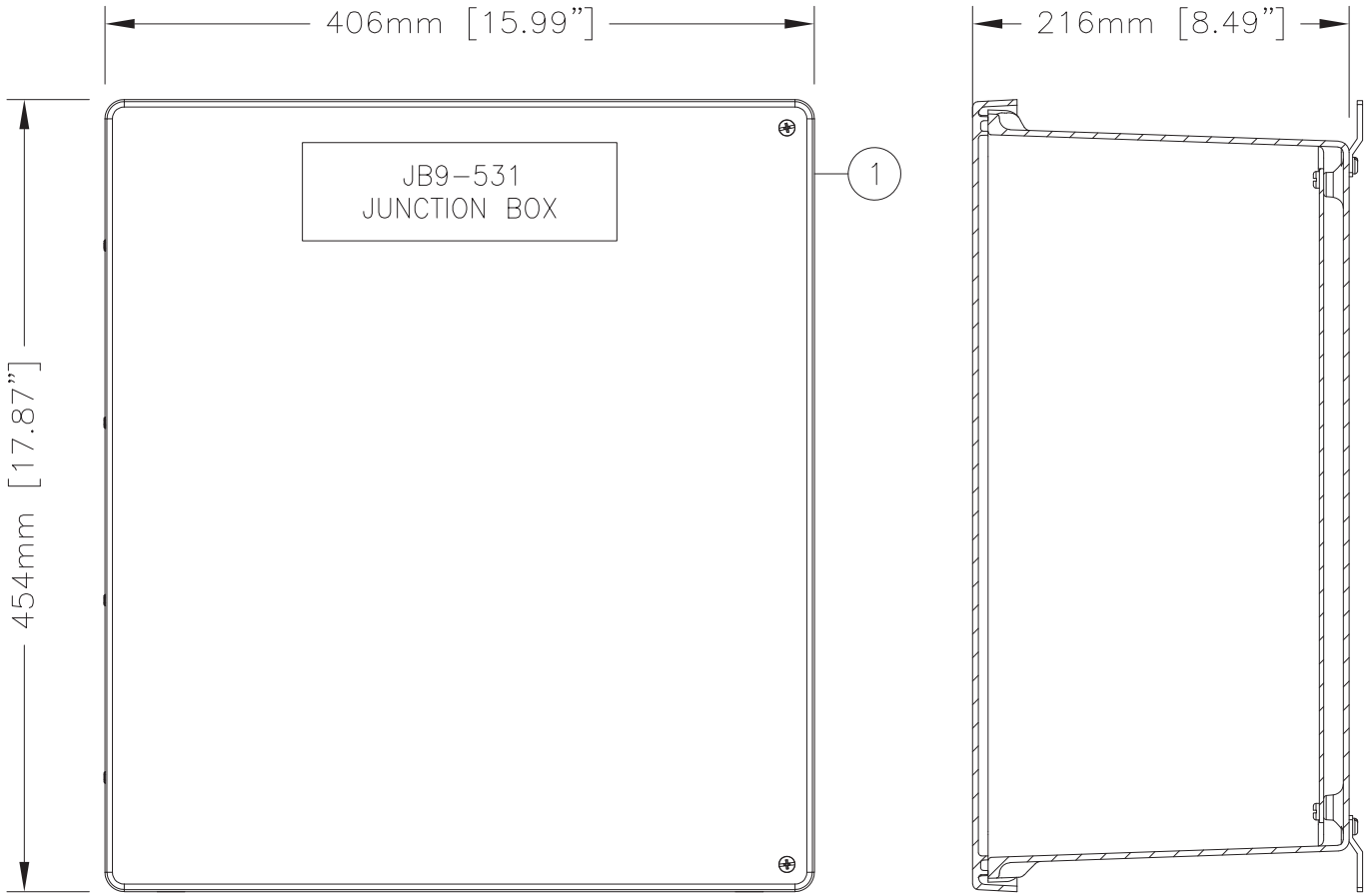

EXTERNAL LAYOUT

SIDE LAYOUT

REV	DESCRIPTION	DATE	REVD	CHKD	APVD	ECN
1	FOR APPROVAL	2018-06-20	A.L.	A.L.	G.M.	–

CONFIDENTIALITY AND INTELLECTUAL PROPERTY NOTICE
ALL INFORMATION CONTAINED IN THIS DOCUMENT IS THE SOLE PROPERTY OF VEOLIA WATER TECHNOLOGIES CANADA INC. AND IS PROTECTED BY ALL APPLICABLE LAWS, INCLUDING BUT NOT LIMITED TO COPYRIGHT AND OTHER INTELLECTUAL PROPERTY LAWS. THE DESIGN CONCEPTS AND INFORMATION CONTAINED HEREIN ARE PROPRIETARY TO V.W.T AND ARE SUBMITTED IN CONFIDENCE. THEY ARE NOT TRANSFERABLE. THEY MUST BE USED ONLY FOR THE PURPOSE FOR WHICH THE DOCUMENT IS EXPRESSLY SUBMITTED AND NO IMPLICIT LICENCE IS GRANTED OTHERWISE BY THE SUBMISSION OF THIS DOCUMENT. THEY ARE CONFIDENTIAL AND PRIVILEGED INFORMATION OF V.W.T. AND THEY MUST NOT BE DISCLOSED, REPRODUCED, LOANED, REMITTED OR USED IN ANY OTHER MANNER WITHOUT THE EXPRESS WRITTEN CONSENT OF V.W.T. V.W.T. ASSUMES NO RESPONSIBILITY OR LIABILITY FOR THE USE OF THIS DOCUMENT OR THE DESIGN CONCEPTS AND INFORMATION CONTAINED HEREIN FOR ANOTHER PROJECT, OR IN A MANNER THAT DOES NOT RELATE TO THE FITNESS OR PURPOSE OF THIS DOCUMENT. IN NO EVENT SHALL THIS DOCUMENT OR THE DESIGN CONCEPTS AND INFORMATION CONTAINED HEREIN BE USED IN A MANNER DETRIMENTAL TO THE INTEREST OF V.W.T. ALL COPYRIGHT, PATENT AND OTHER INTELLECTUAL PROPERTY RIGHTS ARE RESERVED. ACCEPTANCE OF THE DELIVERY OF THIS DOCUMENT CONSTITUTES AGREEMENT TO THESE TERMS AND CONDITIONS.

		DATE
DESIGNER	–	–
CHECKER	–	–
ENGINEER	–	–
SCALE:	None	

TITLE: JB9-531 JUNCTION BOX ENCLOSURE LAYOUT –

CLIENT: AEM AMARUQ HUDSON BAY, NUNAVUT

VEOLIA

VEOLIA WATER TECHNOLOGIES CANADA INC. 4105 Sartelon, Saint-Laurent, Qc, Canada, Tel: (514) 334-7230

PROJECT DRAWING	INTERNAL	SHEET	REV
5000218009 – ELD-0005-AU-VWT	E00	03 OF 05	1

STD: "B" 11x17 | REF: CONTROLES RL – 184172 | BAR = 1" AT PLOT SCALE

Jun 20, 2018 14:01:49 – P:\CLIENTS\Veolia Waters – John Meunier\184172_5000218009 AEM Amaruq\Ingenierie\Dessins\PLC-001 CONTROL PANEL\JUNCTION BOX\5000218009-ELD-0005-AU-VWT-E00-03-1_E.dwg – o.lessard

Jun. 20, 2018 - 14:01:54 - P:\CLIENTS\Veolia Waters - John Meunier\184172_5000218009 AEM Amaruq\Ingenierie\Dessins\PLC-001 CONTROL PANEL\JUNCTION BOX\5000218009-ELD-0005-AU-VWT-E00-04-1_E.dwg - a.lessard

BAR = 1" AT PLOT SCALE
REF: CONTROLES RL - 184172
STD: "B" 11x17

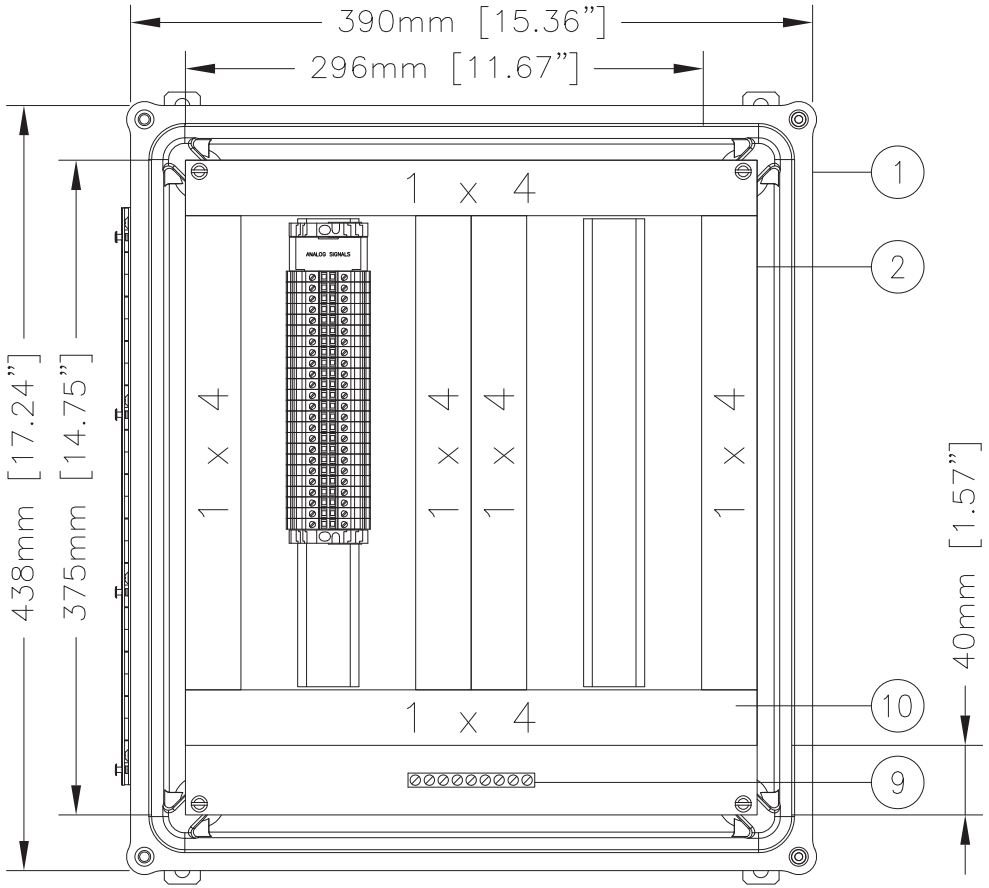

INTERNAL LAYOUT

BILL OF MATERIALS [BOM]

#	QTY.	DESCRIPTION	MANUFACTURER	CATALOGUE N.	REMARK
1	1	PANEL NEMA 4X, WALLMOUNT, ONE DOOR DIM 454mm[H] x 406mm[W] x 216mm[D]	HAMMOND	PJ16148H	–
2	1	INNER PANEL, DIM 375mm[H] x 327mm[W]	HAMMOND	14R1513	–
3	–	–	–	–	–
4	1	IDENTIFICATION TERMINAL UBE/D	PHOENIX CONTACT	0800307	–
5	24/1	SIMPLE TERMINAL BLOCK, UT 4 EN C/W END PLATE	PHOENIX CONTACT	3044102/3047028	–
6	A.S.R.	END BARRIER, E/NS 35 N	PHOENIX CONTACT	0800886	–
7	–	–	–	–	–
8	A.S.R.	MOUNTING RAIL, TS35	WEIDMULLER	0383400000	–
9	1	NON-ISOLATED GROUND BAR	ILSCO	N174AS	–
10	A.S.R.	DUCT WIRING [1 x 4]	PANDUIT	–	–

REV	DESCRIPTION	DATE	REVD	CHKD	APVD	ECN
1	FOR APPROVAL	2018-06-20	A.L.	A.L.	G.M.	–

CONFIDENTIALITY AND INTELLECTUAL PROPERTY NOTICE
ALL INFORMATION CONTAINED IN THIS DOCUMENT IS THE SOLE PROPERTY OF VEOLIA WATER TECHNOLOGIES CANADA INC. AND IS PROTECTED BY ALL APPLICABLE LAWS, INCLUDING BUT NOT LIMITED TO COPYRIGHT AND OTHER INTELLECTUAL PROPERTY LAWS. THE DESIGN CONCEPTS AND INFORMATION CONTAINED HEREIN ARE PROPRIETARY TO V.W.T AND ARE SUBMITTED IN CONFIDENCE. THEY ARE NOT TRANSFERABLE. THEY MUST BE USED ONLY FOR THE PURPOSE FOR WHICH THE DOCUMENT IS EXPRESSLY SUBMITTED AND NO IMPLICIT LICENCE IS GRANTED OTHERWISE BY THE SUBMISSION OF THIS DOCUMENT. THEY ARE CONFIDENTIAL AND PRIVILEGED INFORMATION OF V.W.T. AND THEY MUST NOT BE DISCLOSED, REPRODUCED, LOANED, REMITTED OR USED IN ANY OTHER MANNER WITHOUT THE EXPRESS WRITTEN CONSENT OF V.W.T. V.W.T. ASSUMES NO RESPONSIBILITY OR LIABILITY FOR THE USE OF THIS DOCUMENT OR THE DESIGN CONCEPTS AND INFORMATION CONTAINED HEREIN FOR ANOTHER PROJECT, OR IN A MANNER THAT DOES NOT RELATE TO THE FITNESS OR PURPOSE OF THIS DOCUMENT. IN NO EVENT SHALL THIS DOCUMENT OR THE DESIGN CONCEPTS AND INFORMATION CONTAINED HEREIN BE USED IN A MANNER DETRIMENTAL TO THE INTEREST OF V.W.T. ALL COPYRIGHT, PATENT AND OTHER INTELLECTUAL PROPERTY RIGHTS ARE RESERVED. ACCEPTANCE OF THE DELIVERY OF THIS DOCUMENT CONSTITUTES AGREEMENT TO THESE TERMS AND CONDITIONS.

DESIGNER	–	DATE –
CHECKER	–	DATE –
ENGINEER	–	DATE –
SCALE:	None	

TITLE: JB9-531 JUNCTION BOX
INSIDE PANEL LAYOUT & BILL OF MATERIAL
–

CLIENT: AEM AMARUQ
HUDSON BAY, NUNAVUT

VEOLIA
VEOLIA WATER TECHNOLOGIES CANADA INC., 4105 Sartelon, Saint-Laurent, Qc, Canada, Tel: (514) 334-7230

PROJECT DRAWING	INTERNAL	SHEET	REV
5000218009 – ELD-0005-AU-VWT	E00	04 OF 05	1

Jun 20, 2018 14:02:01 – P:\CLIENTS\Veolia Waters – John Meunier\184172_5000218009 AEM Amaruq\Ingenierie\Dessins\PLC-001 CONTROL PANEL\JUNCTION BOX\5000218009-ELD-0005-AU-VWT-E00-05-1_E.dwg – o.lessard

NOTES:

1– SEE DRAWING 5000218009–ELD–0005–AU–VWT–E00–04 FOR THE REFERENCES TO THE BILL OF MATERIAL.

2– CSA APPROVAL.

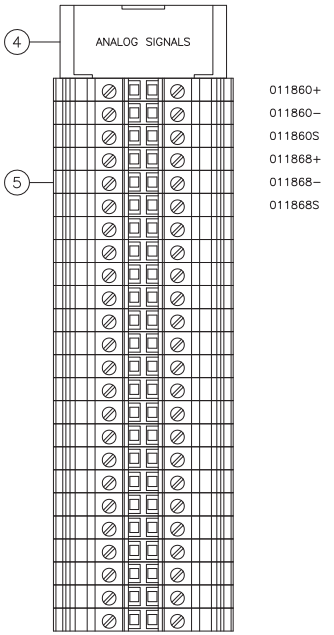

STD: "B" 11x17 | REF: CONTROLES RL – 184172 | BAR = 1" AT PLOT SCALE

REV	DESCRIPTION	DATE	REVD	CHKD	APVD	ECN
1	FOR APPROVAL	2018–06–20	A.L.	A.L.	G.M.	–

CONFIDENTIALITY AND INTELLECTUAL PROPERTY NOTICE
ALL INFORMATION CONTAINED IN THIS DOCUMENT IS THE SOLE PROPERTY OF VEOLIA WATER TECHNOLOGIES CANADA INC. AND IS PROTECTED BY ALL APPLICABLE LAWS, INCLUDING BUT NOT LIMITED TO COPYRIGHT AND OTHER INTELLECTUAL PROPERTY LAWS. THE DESIGN CONCEPTS AND INFORMATION CONTAINED HEREIN ARE PROPRIETARY TO V.W.T AND ARE SUBMITTED IN CONFIDENCE. THEY ARE NOT TRANSFERABLE. THEY MUST BE USED ONLY FOR THE PURPOSE FOR WHICH THE DOCUMENT IS EXPRESSLY SUBMITTED AND NO IMPLICIT LICENCE IS GRANTED OTHERWISE BY THE SUBMISSION OF THIS DOCUMENT. THEY ARE CONFIDENTIAL AND PRIVILEGED INFORMATION OF V.W.T. AND THEY MUST NOT BE DISCLOSED, REPRODUCED, LOANED, REMITTED OR USED IN ANY OTHER MANNER WITHOUT THE EXPRESS WRITTEN CONSENT OF V.W.T. V.W.T. ASSUMES NO RESPONSIBILITY OR LIABILITY FOR THE USE OF THIS DOCUMENT OR THE DESIGN CONCEPTS AND INFORMATION CONTAINED HEREIN FOR ANOTHER PROJECT, OR IN A MANNER THAT DOES NOT RELATE TO THE FITNESS OR PURPOSE OF THIS DOCUMENT. IN NO EVENT SHALL THIS DOCUMENT OR THE DESIGN CONCEPTS AND INFORMATION CONTAINED HEREIN BE USED IN A MANNER DETRIMENTAL TO THE INTEREST OF V.W.T. ALL COPYRIGHT, PATENT AND OTHER INTELLECTUAL PROPERTY RIGHTS ARE RESERVED. ACCEPTANCE OF THE DELIVERY OF THIS DOCUMENT CONSTITUTES AGREEMENT TO THESE TERMS AND CONDITIONS.

		DATE
DESIGNER	–	–
CHECKER	–	–
ENGINEER	–	–
SCALE:	None	

TITLE: JB9–531 JUNCTION BOX
TERMINAL DETAILS
–

CLIENT: AEM AMARUQ
HUDSON BAY, NUNAVUT

VEOLIA
VEOLIA WATER TECHNOLOGIES CANADA INC., 4105 Sartelon, Saint-Laurent, Qc, Canada, Tel: (514) 334-7230

PROJECT DRAWING	INTERNAL	SHEET	REV
5000218009 – ELD–0005–AU–VWT	E00	05 OF 05	1

LEFT BLANK

Jun 11, 2018 12:32:33 - P:\CLIENTS\Veolia Waters - John Meunier\184172_5000218009 AEM Amaruq\Ingenierie\Dessins\PCL9-621 (HYDRAPOL CATIONIC)\5000218009-ELD-0002-AU-VWT-E00-01-1_E.dwg - a.lessard

STD: "B" 11x17 | REF: CONTROLES RL - 184172 | BAR = 1" AT PLOT SCALE

HYDRAPOL CATIONIC
PLC9-621 CONTROL PANEL
PROJECT - 5000218009

DRAFT

REV	DESCRIPTION	DATE	REVD	CHKD	APVD	ECN
1	FOR INFORMATION	2018-06-11	A.L.	A.L.	G.M.	–

CONFIDENTIALITY AND INTELLECTUAL PROPERTY NOTICE
ALL INFORMATION CONTAINED IN THIS DOCUMENT IS THE SOLE PROPERTY OF VEOLIA WATER TECHNOLOGIES CANADA INC. AND IS PROTECTED BY ALL APPLICABLE LAWS, INCLUDING BUT NOT LIMITED TO COPYRIGHT AND OTHER INTELLECTUAL PROPERTY LAWS. THE DESIGN CONCEPTS AND INFORMATION CONTAINED HEREIN ARE PROPRIETARY TO V.W.T AND ARE SUBMITTED IN CONFIDENCE. THEY ARE NOT TRANSFERABLE. THEY MUST BE USED ONLY FOR THE PURPOSE FOR WHICH THE DOCUMENT IS EXPRESSLY SUBMITTED AND NO IMPLICIT LICENCE IS GRANTED OTHERWISE BY THE SUBMISSION OF THIS DOCUMENT. THEY ARE CONFIDENTIAL AND PRIVILEGED INFORMATION OF V.W.T. AND THEY MUST NOT BE DISCLOSED, REPRODUCED, LOANED, REMITTED OR USED IN ANY OTHER MANNER WITHOUT THE EXPRESS WRITTEN CONSENT OF V.W.T. V.W.T. ASSUMES NO RESPONSIBILITY OR LIABILITY FOR THE USE OF THIS DOCUMENT OR THE DESIGN CONCEPTS AND INFORMATION CONTAINED HEREIN FOR ANOTHER PROJECT, OR IN A MANNER THAT DOES NOT RELATE TO THE FITNESS OR PURPOSE OF THIS DOCUMENT. IN NO EVENT SHALL THIS DOCUMENT OR THE DESIGN CONCEPTS AND INFORMATION CONTAINED HEREIN BE USED IN A MANNER DETRIMENTAL TO THE INTEREST OF V.W.T. ALL COPYRIGHT, PATENT AND OTHER INTELLECTUAL PROPERTY RIGHTS ARE RESERVED. ACCEPTANCE OF THE DELIVERY OF THIS DOCUMENT CONSTITUTES AGREEMENT TO THESE TERMS AND CONDITIONS.

		DATE
DESIGNER	–	–
CHECKER	–	–
ENGINEER	–	–
SCALE:	None	

TITLE: HYDRAPOL CATIONIC – PLC9-621 CONTROL PANEL
TITLE PAGE
–

CLIENT: AEM AMARUQ
HUDSON BAY, NUNAVUT

VEOLIA
VEOLIA WATER TECHNOLOGIES CANADA INC. 4105 Sartelon, Saint-Laurent, Qc, Canada. Tel: (514) 334-7230

PROJECT DRAWING	INTERNAL	SHEET	REV
5000218009 – ELD-0002-AU-VWT	E00	01 OF 06	1

DRAWING INDEX

DESCRIPTION	DRAWING NUMBER
HYDRAPOL CATIONIC – PLC9–621 CONTROL PANEL	
TITLE PAGE	5000218009–ELD–0002–AU–VWT–E00–01
DRAWING LIST & LEGEND	5000218009–ELD–0002–AU–VWT–E00–02
OUTSIDE PANEL LAYOUT	5000218009–ELD–0002–AU–VWT–E00–03
INSIDE PANEL LAYOUT	5000218009–ELD–0002–AU–VWT–E00–04
BILL OF MATERIALS	5000218009–ELD–0002–AU–VWT–E00–05
TERMINAL DETAILS	5000218009–ELD–0002–AU–VWT–E00–06
SCHEMATIC DIAGRAM [POWER DISTRIBUTION] 600VAC/480VAC	5000218009–ELD–0002–AU–VWT–E04–01
SPARE SCHEMATIC DIAGRAM	5000218009–ELD–0002–AU–VWT–E04–02
SCHEMATIC DIAGRAM [POWER DISTRIBUTION] 120VAC/24VDC	5000218009–ELD–0002–AU–VWT–E04–03
SCHEMATIC DIAGRAM DISTRIBUTION 24VDC	5000218009–ELD–0002–AU–VWT–E04–04
SCHEMATIC DIAGRAM DISTRIBUTION 24VDC	5000218009–ELD–0002–AU–VWT–E04–05
PROGRAMMABLE CONTROLLER / NETWORK	5000218009–ELD–0002–AU–VWT–E04–06
ELECTRICAL SCHEMATIC DIAGRAM [RACK 00 SLOT 01]	5000218009–ELD–0002–AU–VWT–E04–07
ELECTRICAL SCHEMATIC DIAGRAM [RACK 00 SLOT 02]	5000218009–ELD–0002–AU–VWT–E04–08
ELECTRICAL SCHEMATIC DIAGRAM [RACK 00 SLOT 03]	5000218009–ELD–0002–AU–VWT–E04–09

COLORS AND WIRINGS GAGES

120VCA POWER	BLACK	14AWG
120VCA CONTROL	RED	14AWG
NEUTRAL	WHITE	14AWG
DRY CONTACT	YELLOW	14AWG
24VCC	BLUE[+], BLUE/WHITE[–]	16AWG[0 À 9A] 14AWG[10A & +]
GROUND	GREEN	14AWG
ISOLATED GROUND	GREEN/YELLOW	14AWG
ANALOG I/O TWISTED PAIRS	BLACK[+], WHITE[–]	18AWG
DIGITAL I/O 120VAC	RED	16AWG
DIGITAL I/O 24VCC	BLUE	16AWG
LOW VOLTAGE [12, 24, 48VCC]	BLUE	16AWG[0 À 9A] 14AWG[10A & +]
CONTROL CIRCUIT 5 TO 60VDC	BLUE[+], BLUE/WHITE[–], VERT[GND]	16AWG[0 À 9A] 14AWG[10A & +]

INSTRUMENT TAG CLIENT

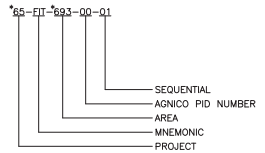

* IN THE ELECTRIC DRAWING, 65 & 693 ARE NOT INDICATED

SUPPLY WIRING IDENTIFICATION

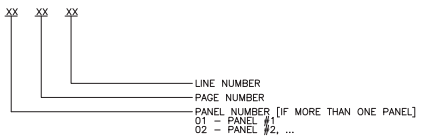

LEGEND LIST

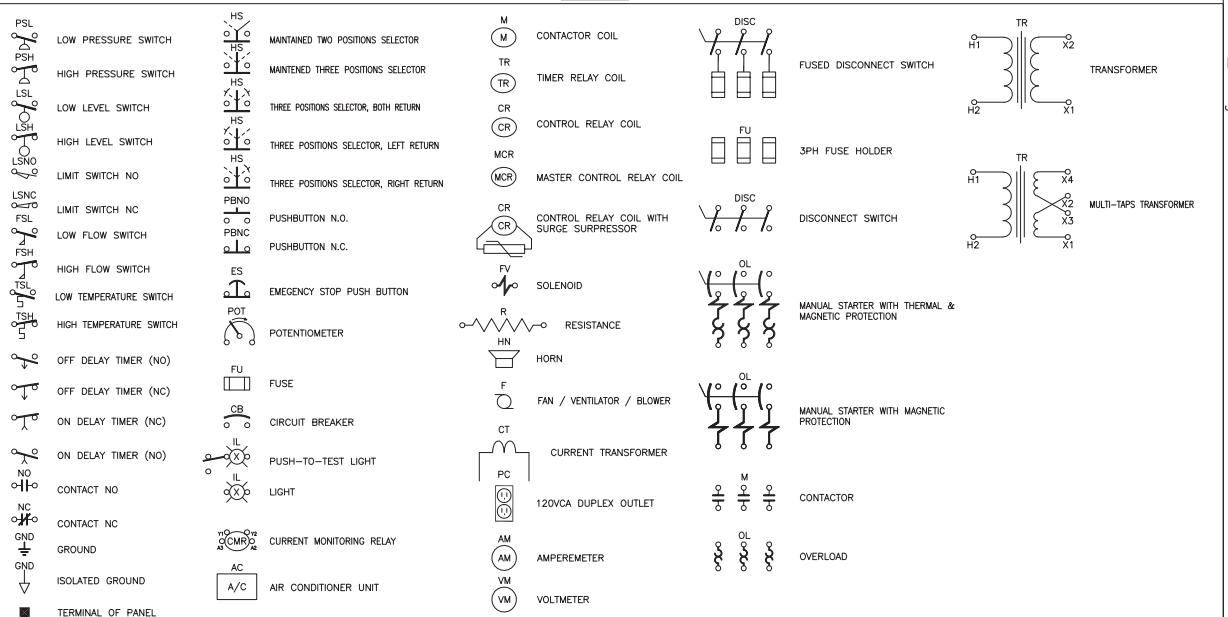

NOTE

——— INTERNAL WIRING

– – – – VEOLIA WIRING

– – – – CUSTOMER WIRING

REV	DESCRIPTION	DATE	REVD	CHKD	APVD	ECN
1	FOR INFORMATION	2018–06–11	A.L.	A.L.	G.M.	–

CONFIDENTIALITY AND INTELLECTUAL PROPERTY NOTICE
ALL INFORMATION CONTAINED IN THIS DOCUMENT IS THE SOLE PROPERTY OF VEOLIA WATER TECHNOLOGIES CANADA INC. AND IS PROTECTED BY ALL APPLICABLE LAWS, INCLUDING BUT NOT LIMITED TO COPYRIGHT AND OTHER INTELLECTUAL PROPERTY LAWS. THE DESIGN CONCEPTS AND INFORMATION CONTAINED HEREIN ARE PROPRIETARY TO V.W.T AND ARE SUBMITTED IN CONFIDENCE. THEY ARE NOT TRANSFERABLE. THEY MUST BE USED ONLY FOR THE PURPOSE FOR WHICH THE DOCUMENT IS EXPRESSLY SUBMITTED AND NO IMPLICIT LICENCE IS GRANTED OTHERWISE BY THE SUBMISSION OF THIS DOCUMENT. THEY ARE CONFIDENTIAL AND PRIVILEGED INFORMATION OF V.W.T. AND THEY MUST NOT BE DISCLOSED, REPRODUCED, LOANED, REMITTED OR USED IN ANY OTHER MANNER WITHOUT THE EXPRESS WRITTEN CONSENT OF V.W.T. V.W.T. ASSUMES NO RESPONSIBILITY OR LIABILITY FOR THE USE OF THIS DOCUMENT OR THE DESIGN CONCEPTS AND INFORMATION CONTAINED HEREIN FOR ANOTHER PROJECT, OR IN A MANNER THAT DOES NOT RELATE TO THE FITNESS OR PURPOSE OF THIS DOCUMENT. IN NO EVENT SHALL THIS DOCUMENT OR THE DESIGN CONCEPTS AND INFORMATION CONTAINED HEREIN BE USED IN A MANNER DETRIMENTAL TO THE INTEREST OF V.W.T. ALL COPYRIGHT, PATENT AND OTHER INTELLECTUAL PROPERTY RIGHTS ARE RESERVED. ACCEPTANCE OF THE DELIVERY OF THIS DOCUMENT CONSTITUTES AGREEMENT TO THESE TERMS AND CONDITIONS.

DESIGNER	DATE
–	–
CHECKER	DATE
–	–
ENGINEER	DATE
–	–
SCALE:	None

TITLE: HYDRAPOL CATIONIC – PLC9–621 CONTROL PANEL
DRAWING LIST & LEGEND
–

CLIENT: AEM AMARUQ
HUDSON BAY, NUNAVUT

VEOLIA
VEOLIA WATER TECHNOLOGIES CANADA INC. 4105 Sartelon, Saint-Laurent, Qc, Canada, Tel: (514) 334-7230

PROJECT DRAWING	INTERNAL	SHEET	REV
5000218009 – ELD–0002–AU–VWT	E00	02 OF 06	1

STD: "B" 11x17 | REF: CONTROLES RL – 184172 | BAR = 1" AT PLOT SCALE

Jun. 11, 2018 12:32:38 – P:\CLIENTS\Veolia Waters – John Meunier\184172_5000218009 AEM Amaruq\Ingenierie\Dessins\PCL9–621 (HYDRAPOL CATIONIC)\5000218009–ELD–0002–AU–VWT–E00–02–1_E.dwg – o.lessard

STD: "B" 11x17 | REF: CONTROLES RL – 184172 | BAR = 1" AT PLOT SCALE

Jun 11, 2018 12:32:43 – P:\CLIENTS\Veolia Waters – John Meunier\184172_5000218009 AEM Amaruq\Ingenierie\Dessins\PCL9-621 (HYDRAPOL CATIONIC)\5000218009-ELD-0002-AU-VWT-E00-03-1_E.dwg – o.lessard

NOTE:

1– SEE DIAGRAM 5000218009–ELD–0002–AU–VWT–E00–05 FOR THE REFERENCES TO THE BILL OF MATERIAL.

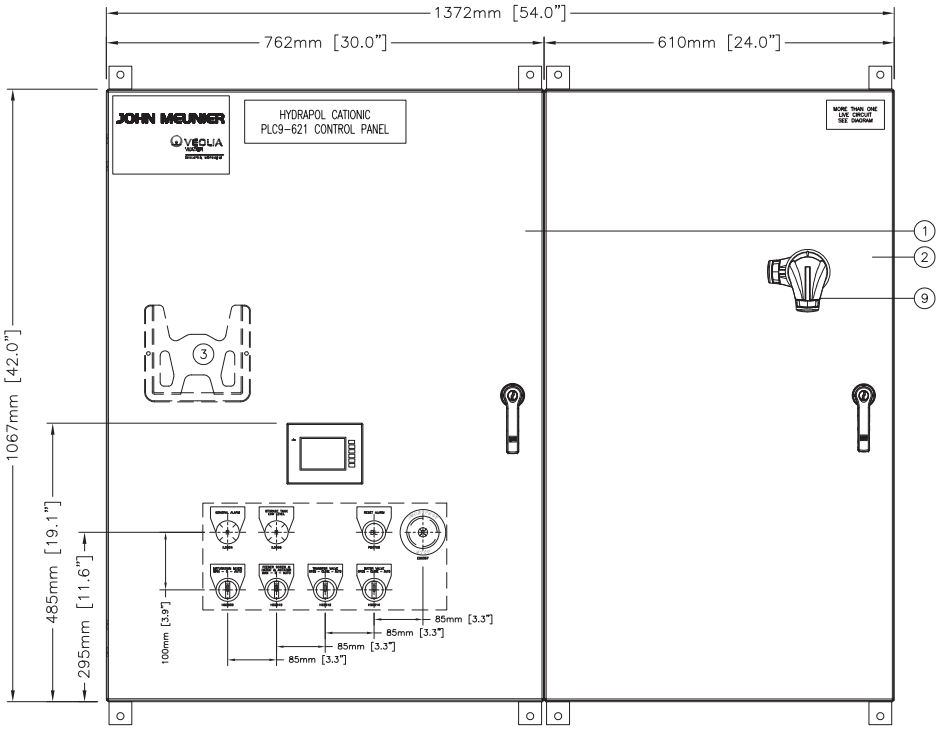

EXTERNAL LAYOUT

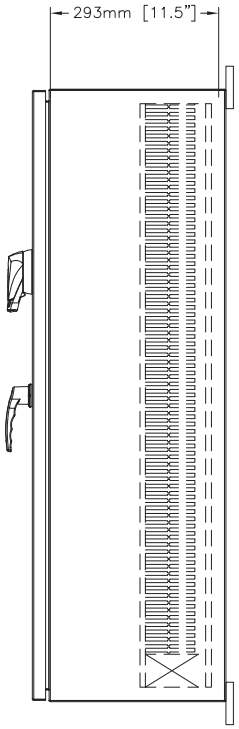

SIDE LAYOUT

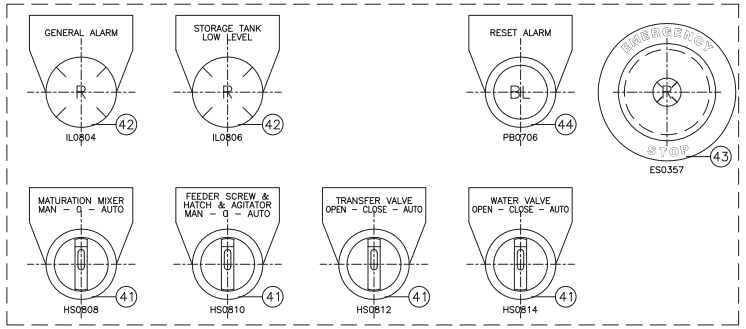

DOOR DETAILS

REV	DESCRIPTION	DATE	REVD	CHKD	APVD	ECN
1	FOR INFORMATION	2018–06–11	A.L.	A.L.	G.M.	–

CONFIDENTIALITY AND INTELLECTUAL PROPERTY NOTICE
ALL INFORMATION CONTAINED IN THIS DOCUMENT IS THE SOLE PROPERTY OF VEOLIA WATER TECHNOLOGIES CANADA INC. AND IS PROTECTED BY ALL APPLICABLE LAWS, INCLUDING BUT NOT LIMITED TO COPYRIGHT AND OTHER INTELLECTUAL PROPERTY LAWS. THE DESIGN CONCEPTS AND INFORMATION CONTAINED HEREIN ARE PROPRIETARY TO V.W.T AND ARE SUBMITTED IN CONFIDENCE. THEY ARE NOT TRANSFERABLE. THEY MUST BE USED ONLY FOR THE PURPOSE FOR WHICH THE DOCUMENT IS EXPRESSLY SUBMITTED AND NO IMPLICIT LICENCE IS GRANTED OTHERWISE BY THE SUBMISSION OF THIS DOCUMENT. THEY ARE CONFIDENTIAL AND PRIVILEGED INFORMATION OF V.W.T. AND THEY MUST NOT BE DISCLOSED, REPRODUCED, LOANED, REMITTED OR USED IN ANY OTHER MANNER WITHOUT THE EXPRESS WRITTEN CONSENT OF V.W.T. V.W.T. ASSUMES NO RESPONSIBILITY OR LIABILITY FOR THE USE OF THIS DOCUMENT OR THE DESIGN CONCEPTS AND INFORMATION CONTAINED HEREIN FOR ANOTHER PROJECT, OR IN A MANNER THAT DOES NOT RELATE TO THE FITNESS OR PURPOSE OF THIS DOCUMENT. IN NO EVENT SHALL THIS DOCUMENT OR THE DESIGN CONCEPTS AND INFORMATION CONTAINED HEREIN BE USED IN A MANNER DETRIMENTAL TO THE INTEREST OF V.W.T. ALL COPYRIGHT, PATENT AND OTHER INTELLECTUAL PROPERTY RIGHTS ARE RESERVED. ACCEPTANCE OF THE DELIVERY OF THIS DOCUMENT CONSTITUTES AGREEMENT TO THESE TERMS AND CONDITIONS.

		DATE
DESIGNER	–	–
CHECKER	–	–
ENGINEER	–	–
SCALE:	None	

TITLE: HYDRAPOL CATIONIC – PLC9–621 CONTROL PANEL
OUTSIDE PANEL LAYOUT
–

CLIENT: AEM AMARUQ
HUDSON BAY, NUNAVUT

VEOLIA
VEOLIA WATER TECHNOLOGIES CANADA INC. 4105 Sartelon, Saint-Laurent, Qc, Canada, Tel: (514) 334-7230

PROJECT DRAWING	INTERNAL	SHEET	REV
5000218009 – ELD–0002–AU–VWT	E00	03 OF 06	1

NOTE:

1- SEE DIAGRAM 5000218009-ELD-0002-AU-VWT-E00-05 FOR THE REFERENCES TO THE BILL OF MATERIAL.
2- SEE DIAGRAM 5000218009-ELD-0002-AU-VWT-E04-06 FOR PLC DETAILS.

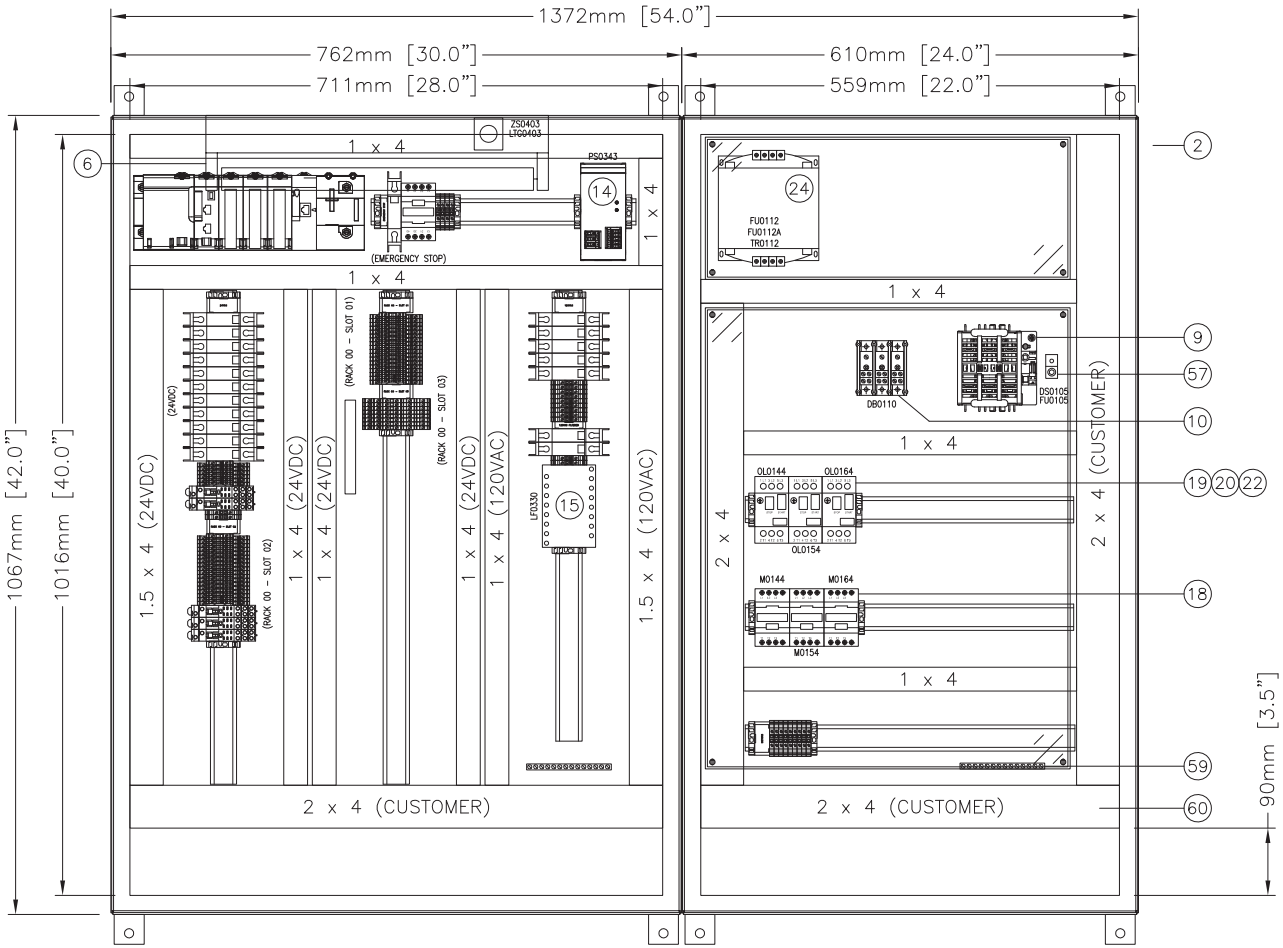

INSIDE LAYOUT

REV	DESCRIPTION	DATE	REVD	CHKD	APVD	ECN
1	FOR INFORMATION	2018-06-11	A.L.	A.L.	G.M.	–

CONFIDENTIALITY AND INTELLECTUAL PROPERTY NOTICE
ALL INFORMATION CONTAINED IN THIS DOCUMENT IS THE SOLE PROPERTY OF VEOLIA WATER TECHNOLOGIES CANADA INC. AND IS PROTECTED BY ALL APPLICABLE LAWS, INCLUDING BUT NOT LIMITED TO COPYRIGHT AND OTHER INTELLECTUAL PROPERTY LAWS. THE DESIGN CONCEPTS AND INFORMATION CONTAINED HEREIN ARE PROPRIETARY TO V.W.T AND ARE SUBMITTED IN CONFIDENCE. THEY ARE NOT TRANSFERABLE. THEY MUST BE USED ONLY FOR THE PURPOSE FOR WHICH THE DOCUMENT IS EXPRESSLY SUBMITTED AND NO IMPLICIT LICENCE IS GRANTED OTHERWISE BY THE SUBMISSION OF THIS DOCUMENT. THEY ARE CONFIDENTIAL AND PRIVILEGED INFORMATION OF V.W.T. AND THEY MUST NOT BE DISCLOSED, REPRODUCED, LOANED, REMITTED OR USED IN ANY OTHER MANNER WITHOUT THE EXPRESS WRITTEN CONSENT OF V.W.T. V.W.T. ASSUMES NO RESPONSIBILITY OR LIABILITY FOR THE USE OF THIS DOCUMENT OR THE DESIGN CONCEPTS AND INFORMATION CONTAINED HEREIN FOR ANOTHER PROJECT, OR IN A MANNER THAT DOES NOT RELATE TO THE FITNESS OR PURPOSE OF THIS DOCUMENT. IN NO EVENT SHALL THIS DOCUMENT OR THE DESIGN CONCEPTS AND INFORMATION CONTAINED HEREIN BE USED IN A MANNER DETRIMENTAL TO THE INTEREST OF V.W.T. ALL COPYRIGHT, PATENT AND OTHER INTELLECTUAL PROPERTY RIGHTS ARE RESERVED. ACCEPTANCE OF THE DELIVERY OF THIS DOCUMENT CONSTITUTES AGREEMENT TO THESE TERMS AND CONDITIONS.

		DATE
DESIGNER	–	–
CHECKER	–	–
ENGINEER	–	–
SCALE:	None	

TITLE: HYDRAPOL CATIONIC – PLC9-621 CONTROL PANEL
INSIDE PANEL LAYOUT
–

CLIENT: AEM AMARUQ
HUDSON BAY, NUNAVUT

VEOLIA
VEOLIA WATER TECHNOLOGIES CANADA INC. 4105 Sartelon, Saint-Laurent, Qc, Canada, Tel: (514) 334-7230

PROJECT DRAWING	INTERNAL	SHEET	REV
5000218009 – ELD-0002-AU-VWT	E00	04 OF 06	1

STD: "B" 11x17 | REF: CONTROLES RL – 184172 | BAR = 1" AT PLOT SCALE

Jun 11, 2018 12:32:48 – P:\CLIENTS\Veolia Waters – John Meunier\184172_5000218009 AEM Amaruq\Ingenierie\Dessins\PCL9-621 (HYDRAPOL CATIONIC)\5000218009-ELD-0002-AU-VWT-E00-04-1_E.dwg – a.lessard

BILL OF MATERIALS [BOM]

#	QTY.	DESCRIPTION	MANUFACTURER	CATALOGUE N.	REMARK
1	1	NEMA 4 WALL MOUNT PANEL, ONE DOOR, DIM 1067mm[H] x 762mm[W] x 293mm[D]	EUROBEX	5412ES423012	–
2	1	NEMA 4 WALL MOUNT PANEL, ONE DOOR, DIM 1067mm[H] x 610mm[W] x 293mm[D]	EUROBEX	5412ES422412	–
3	1	DATA POCKET	EUROBEX	880PP	–
4	A.S.R.	PLEXIGLAS PROTECTION	CONTROLES RL	–	–
5	1	WALLMOUNT KIT	EUROBEX	885ESMF1	–
6	1	FIXTURE LED, 24VDC	HOFFMAN	LED24V15	–
	1	DOOR INTERRUPTER	HOFFMAN	AFLSWD	–
7	–	–	–	–	–
8	–	–	–	–	–
9	1	MAIN FUSED DISCONNECT SWITCH, 30A, 600VAC, FUSE TYPE J	SCHNEIDER	GS1DU3	–
	1	OPERATING HANDLES	SCHNEIDER	GS2AH420	–
	1	OPERATING SHAFT	SCHNEIDER	GS2AE81	–
	3	FUSE 15A, TYPE J, TIME DELAY	FERRAZ	AJT–15	–
10	1/3	DISTRIBUTION BLOCK, 3 POLES, (1 IN (2/0 ... 14), 4 OUT (4 ... 14)) C/W PROTECTION COVER, 135A	FERRAZ	MDPB63133/MDPBC6263	–
11	–	–	–	–	–
12	–	–	–	–	–
13	–	–	–	–	–
14	1	POWER SUPPLY 120VAC / 24VDC, 10A	PHOENIX CONTACT	2866323	–
15	1	LINE FILTER 120VAC, 5A	CUTLER HAMMER	AGPH12005	–
16	–	–	–	–	–
17	–	–	–	–	–
18	3	FULL VOLTAGE NO–REVERSING CONTACTOR, 3PH, 600VCA, 9A 1N.O., COIL 24VDC	SCHNEIDER	LC1D09BD	–
19	–	–	–	–	–
20	3	MANUAL STARTER, 600VCA, 3PH, 0.63A @ 1A	SCHNEIDER	GV2ME05	–
21	–	–	–	–	–
22	3	CONTACT BLOCK 2N.O., FRONT MOUNTING	SCHNEIDER	GVAE20	–
23	–	–	–	–	–
24	1	TRANSFORMER 1500VA, 600/120VAC	HAMMOND	SP1500ACP	–
	1	HOLDING KIT FOR FUSE HOLDER	HAMMOND	SPFBAK1	–
	1	FUSE HOLDER 3 POLES MIDGET	HAMMOND	L60030M3SQDIN	–
	1	PROTECTION COVER	HAMMOND	SPFG1	–
	2/1	FUSE 7A & 15A	FERRAZ	ATQR–7 / ATMR–15	–
25	–	–	–	–	–
26	1	ETHERNET COMM. MODULE	SCHNEIDER	BMX NOE 0100	–
27	1	6–SLOT CHASSIS, MODICON M340	SCHNEIDER	BMX XBP 0600	–
28	1	POWER SUPPLY M340, 100–240VAC	SCHNEIDER	BMX CPS 2000	–
29	1	M340 PROCESSOR, ETHERNET PORT MODBUS/TCP	SCHNEIDER	BMX P34 2020	–
30	1/1	32 NON–ISOLATED DIGITAL INPUTS CARD, 24VDC C/W CABLE (3m)	SCHNEIDER	BMXDDI3202K BMXFCW303	–
31	1/1	32 NON–ISOLATED DIGITAL OUTPUTS CARD, 24VDC C/W CABLE (3m)	SCHNEIDER	BMXDDO3202K BMXFCW303	–
32	1/1	8–ISOLATED ANALOG INPUTS CARD, 24VDC C/W CABLE (3m)	SCHNEIDER	BMXAMI0800 BMXFTW308S	–
33	–	–	–	–	–
34	–	–	–	–	–
35	1	OPERATOR INTERFACE, 24VDC	SCHNEIDER	HMISTU655	–
36	–	–	–	–	–
37	5	CONTROL RELAY SLIM 24VDC, SPDT	OMRON	G2R–1–SN–DC24 (S) P2RF–05–E	–
38	1	E–STOP CONTROL RELAY, 24VDC, 5N.O.	SCHNEIDER	CAD50BD	–
39	–	–	–	–	–
40	–	–	–	–	–
41	4	3–POSITIONS MAINTAINED SELECTOR, 12 ... 130VAC/VDC, 30.5mm	ALLEN BRADLEY	800T–J2B	–
42	2	PILOT LIGHT OPERATOR, RED, 12 ... 130VAC/VDC, 30.5mm	ALLEN BRADLEY	800T–QH2R	–

BILL OF MATERIALS [BOM]

#	QTY.	DESCRIPTION	MANUFACTURER	CATALOGUE N.	REMARK
43	1	ILLUMINATED E–STOP RED PUSH–BUTTON, 2N.O./2N.C., 12 ... 130VAC/VDC, 30.5mm	ALLEN BRADLEY	800T–FXTQH2RG1	–
44	1	MOMENTARY PUSH BUTTON, NON–ILLUMINATED, FLUSH, COLOR BLUE, 1N.O., 30.5mm	ALLEN BRADLEY	800T–A7D1	–
45	–	–	–	–	–
46	14	"BRANCH PROOF" BREAKER, 2A, 1 POLE, 120VAC/24VDC	SCHNEIDER	60103	–
47	1	"BRANCH PROOF" BREAKER, 3A, 1 POLE, 120VAC/24VDC	SCHNEIDER	60104	–
48	1	"BRANCH PROOF" BREAKER, 4A, 1 POLE, 120VAC/24VDC	SCHNEIDER	60105	–
49	1	"BRANCH PROOF" BREAKER, 5A, 1 POLE, 120VAC/24VDC	SCHNEIDER	60106	–
50	1	"BRANCH PROOF" BREAKER, 6A, 1 POLE, 120VAC/24VDC	SCHNEIDER	60107	–
51	1	"BRANCH PROOF" BREAKER, 10A, 1 POLE, 120VAC/24VDC	SCHNEIDER	60110	–
52	8/8	IDENTIFICATION TERMINAL UBE/D	PHOENIX CONTACT	0800307	–
53	26/5	SIMPLE TERMINAL BLOCK, UT 4 EN C/W END PLATE	PHOENIX CONTACT	3044102/3047028	–
54	42/3	DOUBLE TERMINAL BLOCK, UTTB 2,5 C/W END PLATE	PHOENIX CONTACT	3044636/3047293	–
55	8/1	TRIPLE TERMINAL BLOCK, UT 2.5–3L C/W END PLATE	PHOENIX CONTACT	3214259/3214314	–
56	A.S.R.	END BARRIER, E/NS 35 N	PHOENIX CONTACT	0800886	–
57	1	LUG	BURNDY	–	–
58	1	ISOLATED GROUND BAR	WEIDMULLER	–	–
59	2	NON–ISOLATED GROUND BAR	ILSCO	N–174	–
60	A.S.R.	WIRING DUCT [1 x 4, 1.5 x 4, 2 x 4]	PANDUIT	–	–

NOTES:

1. COMPONENTS NUMBERS MAY CHANGE ACCORDING TO THE REAL MOTORS FLA.
2. PANEL CERTIFIED CSA.

TRIPLE TERMINAL BLOCK, DLD 2.5 C/W END PLATE

REV	DESCRIPTION	DATE	REVD	CHKD	APVD	ECN
1	FOR INFORMATION	2018–06–11	A.L.	A.L.	G.M.	–

CONFIDENTIALITY AND INTELLECTUAL PROPERTY NOTICE
ALL INFORMATION CONTAINED IN THIS DOCUMENT IS THE SOLE PROPERTY OF VEOLIA WATER TECHNOLOGIES CANADA INC. AND IS PROTECTED BY ALL APPLICABLE LAWS, INCLUDING BUT NOT LIMITED TO COPYRIGHT AND OTHER INTELLECTUAL PROPERTY LAWS. THE DESIGN CONCEPTS AND INFORMATION CONTAINED HEREIN ARE PROPRIETARY TO V.W.T AND ARE SUBMITTED IN CONFIDENCE. THEY ARE NOT TRANSFERABLE. THEY MUST BE USED ONLY FOR THE PURPOSE FOR WHICH THE DOCUMENT IS EXPRESSLY SUBMITTED AND NO IMPLICIT LICENCE IS GRANTED OTHERWISE BY THE SUBMISSION OF THIS DOCUMENT. THEY ARE CONFIDENTIAL AND PRIVILEGED INFORMATION OF V.W.T. AND THEY MUST NOT BE DISCLOSED, REPRODUCED, LOANED, REMITTED OR USED IN ANY OTHER MANNER WITHOUT THE EXPRESS WRITTEN CONSENT OF V.W.T. V.W.T. ASSUMES NO RESPONSIBILITY OR LIABILITY FOR THE USE OF THIS DOCUMENT OR THE DESIGN CONCEPTS AND INFORMATION CONTAINED HEREIN FOR ANOTHER PROJECT, OR IN A MANNER THAT DOES NOT RELATE TO THE FITNESS OR PURPOSE OF THIS DOCUMENT. IN NO EVENT SHALL THIS DOCUMENT OR THE DESIGN CONCEPTS AND INFORMATION CONTAINED HEREIN BE USED IN A MANNER DETRIMENTAL TO THE INTEREST OF V.W.T. ALL COPYRIGHT, PATENT AND OTHER INTELLECTUAL PROPERTY RIGHTS ARE RESERVED. ACCEPTANCE OF THE DELIVERY OF THIS DOCUMENT CONSTITUTES AGREEMENT TO THESE TERMS AND CONDITIONS.

		DATE
DESIGNER	–	–
CHECKER	–	–
ENGINEER	–	–
SCALE:	None	

TITLE: HYDRAPOL CATIONIC – PLC9–621 CONTROL PANEL
BILL OF MATERIALS
–

CLIENT: AEM AMARUQ
HUDSON BAY, NUNAVUT

VEOLIA
VEOLIA WATER TECHNOLOGIES CANADA INC. 4105 Sartelon, Saint-Laurent, Qc, Canada. Tel: (514) 334-7230

PROJECT DRAWING	INTERNAL	SHEET	REV
5000218009 – ELD–0002–AU–VWT	E00	05 OF 06	1

STD: "B" 11x17 | REF: CONTROLES RL – 184172 | BAR = 1" AT PLOT SCALE

Jun. 11, 2018 12:32:53 – P:\CLIENTS\Veolia Waters – John Meunier\184172_5000218009 AEM Amaruq\Ingenierie\Dessins\PCL9–621 (HYDRAPOL CATIONIC)\5000218009–ELD–0002–AU–VWT–E00–05–1_E.dwg – a.lessard

NOTE:

1- SEE DIAGRAM 5000218009-ELD-0002-AU-VWT-E00-05 FOR THE REFERENCES TO THE BILL OF MATERIAL.

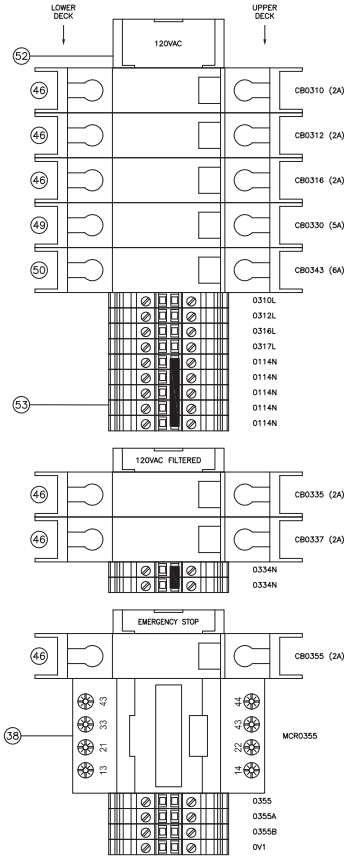

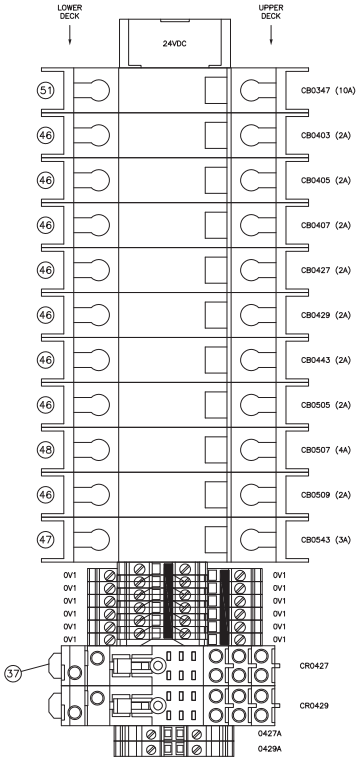

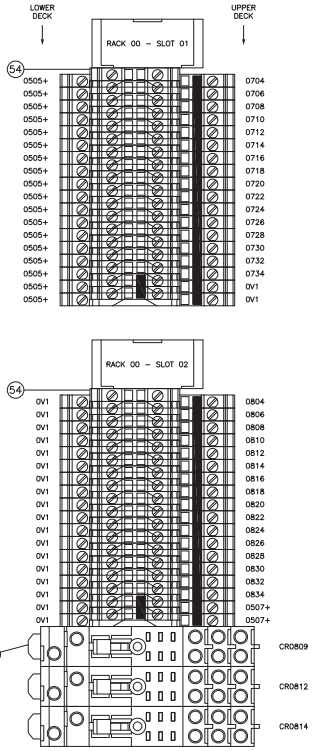

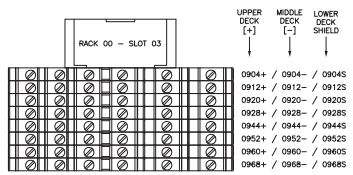

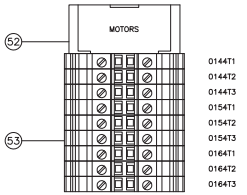

REV	DESCRIPTION	DATE	REVD	CHKD	APVD	ECN
1	FOR INFORMATION	2018-06-11	A.L.	A.L.	G.M.	–

CONFIDENTIALITY AND INTELLECTUAL PROPERTY NOTICE

ALL INFORMATION CONTAINED IN THIS DOCUMENT IS THE SOLE PROPERTY OF VEOLIA WATER TECHNOLOGIES CANADA INC. AND IS PROTECTED BY ALL APPLICABLE LAWS, INCLUDING BUT NOT LIMITED TO COPYRIGHT AND OTHER INTELLECTUAL PROPERTY LAWS. THE DESIGN CONCEPTS AND INFORMATION CONTAINED HEREIN ARE PROPRIETARY TO V.W.T AND ARE SUBMITTED IN CONFIDENCE. THEY ARE NOT TRANSFERABLE. THEY MUST BE USED ONLY FOR THE PURPOSE FOR WHICH THE DOCUMENT IS EXPRESSLY SUBMITTED AND NO IMPLICIT LICENCE IS GRANTED OTHERWISE BY THE SUBMISSION OF THIS DOCUMENT. THEY ARE CONFIDENTIAL AND PRIVILEGED INFORMATION OF V.W.T. AND THEY MUST NOT BE DISCLOSED, REPRODUCED, LOANED, REMITTED OR USED IN ANY OTHER MANNER WITHOUT THE EXPRESS WRITTEN CONSENT OF V.W.T. V.W.T. ASSUMES NO RESPONSIBILITY OR LIABILITY FOR THE USE OF THIS DOCUMENT OR THE DESIGN CONCEPTS AND INFORMATION CONTAINED HEREIN FOR ANOTHER PROJECT, OR IN A MANNER THAT DOES NOT RELATE TO THE FITNESS OR PURPOSE OF THIS DOCUMENT. IN NO EVENT SHALL THIS DOCUMENT OR THE DESIGN CONCEPTS AND INFORMATION CONTAINED HEREIN BE USED IN A MANNER DETRIMENTAL TO THE INTEREST OF V.W.T. ALL COPYRIGHT, PATENT AND OTHER INTELLECTUAL PROPERTY RIGHTS ARE RESERVED. ACCEPTANCE OF THE DELIVERY OF THIS DOCUMENT CONSTITUTES AGREEMENT TO THESE TERMS AND CONDITIONS.

DESIGNER	–	DATE –
CHECKER	–	DATE –
ENGINEER	–	DATE –
SCALE:	None	

TITLE: HYDRAPOL CATIONIC – PLC9-621 CONTROL PANEL TERMINAL DETAILS
–

CLIENT: AEM AMARUQ
HUDSON BAY, NUNAVUT

VEOLIA
VEOLIA WATER TECHNOLOGIES CANADA INC. 4105 Sartelon, Saint-Laurent, Qc, Canada, Tel: (514) 334-7230

PROJECT / DRAWING	INTERNAL	SHEET	REV
5000218009 – ELD-0002-AU-VWT	E00	06 OF 06	1

STD: "B" 11x17 | REF: CONTROLES RL – 184172 | BAR = 1" AT PLOT SCALE

Jun. 11, 2018 - 12:32:58 - P:\CLIENTS\Veolia Waters - John Meunier\184172_5000218009 AEM Amaruq\Ingenierie\Dessins\PCL9-621 (HYDRAPOL CATIONIC)\5000218009-ELD-0002-AU-VWT-E00-06-1_E.dwg - a.lessard

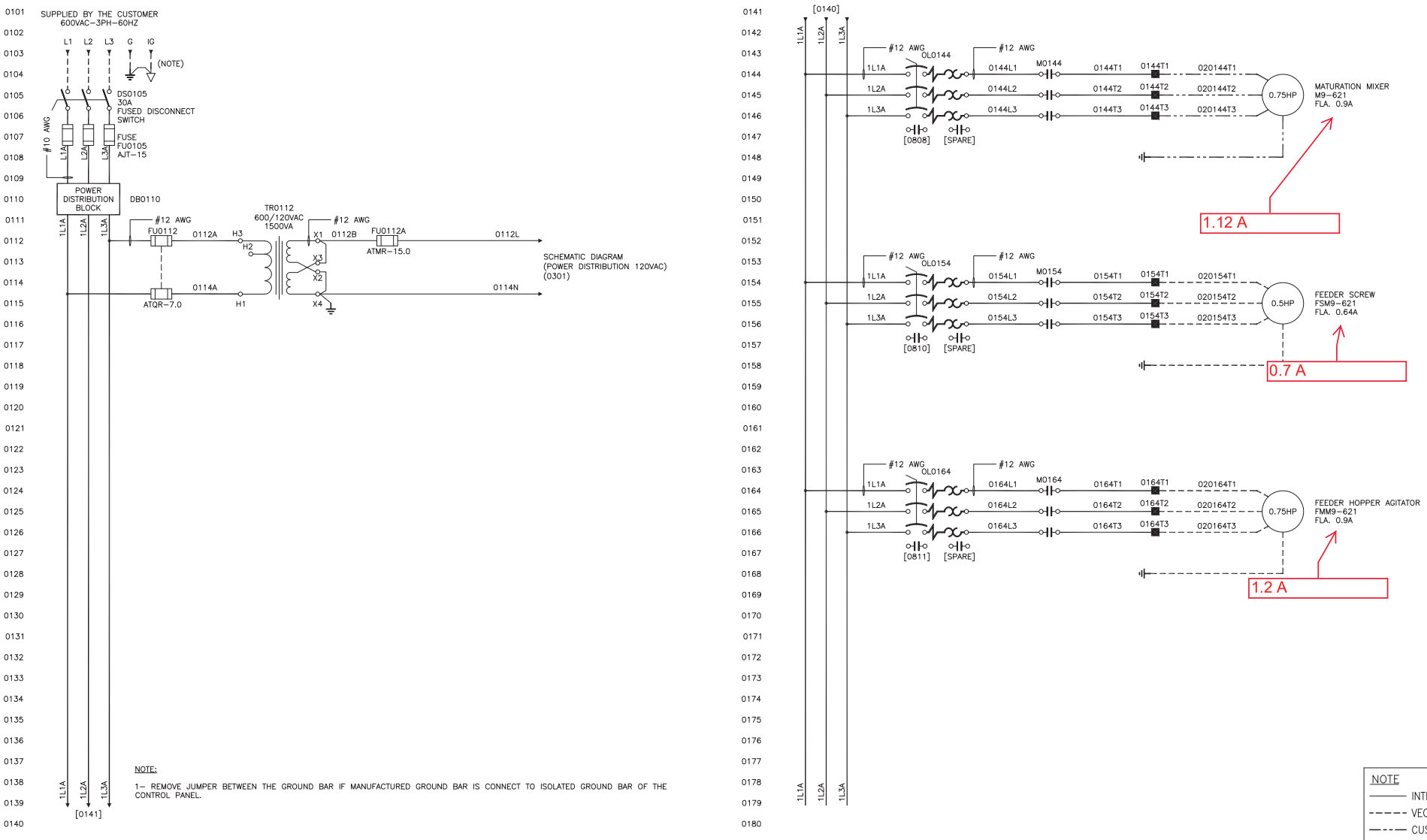

REV	DESCRIPTION	DATE	REVD	CHKD	APVD	ECN
1	FOR INFORMATION	2018–06–11	A.L.	A.L.	G.M.	–

CONFIDENTIALITY AND INTELLECTUAL PROPERTY NOTICE
ALL INFORMATION CONTAINED IN THIS DOCUMENT IS THE SOLE PROPERTY OF VEOLIA WATER TECHNOLOGIES CANADA INC. AND IS PROTECTED BY ALL APPLICABLE LAWS, INCLUDING BUT NOT LIMITED TO COPYRIGHT AND OTHER INTELLECTUAL PROPERTY LAWS. THE DESIGN CONCEPTS AND INFORMATION CONTAINED HEREIN ARE PROPRIETARY TO V.W.T AND ARE SUBMITTED IN CONFIDENCE. THEY ARE NOT TRANSFERABLE. THEY MUST BE USED ONLY FOR THE PURPOSE FOR WHICH THE DOCUMENT IS EXPRESSLY SUBMITTED AND NO IMPLICIT LICENCE IS GRANTED OTHERWISE BY THE SUBMISSION OF THIS DOCUMENT. THEY ARE CONFIDENTIAL AND PRIVILEGED INFORMATION OF V.W.T. AND THEY MUST NOT BE DISCLOSED, REPRODUCED, LOANED, REMITTED OR USED IN ANY OTHER MANNER WITHOUT THE EXPRESS WRITTEN CONSENT OF V.W.T. V.W.T. ASSUMES NO RESPONSIBILITY OR LIABILITY FOR THE USE OF THIS DOCUMENT OR THE DESIGN CONCEPTS AND INFORMATION CONTAINED HEREIN FOR ANOTHER PROJECT, OR IN A MANNER THAT DOES NOT RELATE TO THE FITNESS OR PURPOSE OF THIS DOCUMENT. IN NO EVENT SHALL THIS DOCUMENT OR THE DESIGN CONCEPTS AND INFORMATION CONTAINED HEREIN BE USED IN A MANNER DETRIMENTAL TO THE INTEREST OF V.W.T. ALL COPYRIGHT, PATENT AND OTHER INTELLECTUAL PROPERTY RIGHTS ARE RESERVED. ACCEPTANCE OF THE DELIVERY OF THIS DOCUMENT CONSTITUTES AGREEMENT TO THESE TERMS AND CONDITIONS.

DESIGNER	–	DATE –
CHECKER	–	DATE –
ENGINEER	–	DATE –
SCALE:	None	

TITLE: HYDRAPOL CATIONIC – PLC9–621 CONTROL PANEL
SCHEMATIC DIAGRAM [POWER DISTRIBUTION] 600VAC/480VAC
–

CLIENT: AEM AMARUQ
HUDSON BAY, NUNAVUT

VEOLIA
VEOLIA WATER TECHNOLOGIES CANADA INC., 4105 Sartelon, Saint-Laurent, Qc, Canada, Tel: (514) 334-7230

PROJECT DRAWING	INTERNAL	SHEET	REV
5000218009 – ELD–0002–AU–VWT	E04	01 OF 09	1

STD: "B" 11x17 | REF: CONTROLES RL – 184172 | BAR = 1" AT PLOT SCALE

Jun. 11, 2018 - 12:33:02 - P:\CLIENTS\Veolia Waters - John Meunier\184172_5000218009 AEM Amaruq\Ingenierie\Dessins\PCL9-621 (HYDRAPOL CATIONIC)\5000218009-ELD-0002-AU-VWT-E04-01-1_E.dwg - a.lessard

Jun 11, 2018 12:33:07 - P:\CLIENTS\Veolia Waters - John Meunier\184172_5000218009 AEM Amaruq\Ingenierie\Dessins\PCL9-621 (HYDRAPOL CATIONIC)\5000218009-ELD-0002-AU-VWT-E04-02-1_E.dwg - o.lessard

STD: "B" 11x17 | REF: CONTROLES RL - 184172 | BAR = 1" AT PLOT SCALE

0201 0202 0203 0204 0205 0206 0207 0208 0209 0210 0211 0212 0213 0214 0215 0216 0217 0218 0219 0220 0221 0222 0223 0224 0225 0226 0227 0228 0229 0230 0231 0232 0233 0234 0235 0236 0237 0238 0239 0240

0241 0242 0243 0244 0245 0246 0247 0248 0249 0250 0251 0252 0253 0254 0255 0256 0257 0258 0259 0260 0261 0262 0263 0264 0265 0266 0267 0268 0269 0270 0271 0272 0273 0274 0275 0276 0277 0278 0279 0280

NOTE
——— INTERNAL WIRING
- - - - - VEOLIA WIRING
—·—·— CUSTOMER WIRING

REV	DESCRIPTION	DATE	REVD	CHKD	APVD	ECN
1	FOR INFORMATION	2018-06-11	A.L.	A.L.	G.M.	–

CONFIDENTIALITY AND INTELLECTUAL PROPERTY NOTICE
ALL INFORMATION CONTAINED IN THIS DOCUMENT IS THE SOLE PROPERTY OF VEOLIA WATER TECHNOLOGIES CANADA INC. AND IS PROTECTED BY ALL APPLICABLE LAWS, INCLUDING BUT NOT LIMITED TO COPYRIGHT AND OTHER INTELLECTUAL PROPERTY LAWS. THE DESIGN CONCEPTS AND INFORMATION CONTAINED HEREIN ARE PROPRIETARY TO V.W.T AND ARE SUBMITTED IN CONFIDENCE. THEY ARE NOT TRANSFERABLE. THEY MUST BE USED ONLY FOR THE PURPOSE FOR WHICH THE DOCUMENT IS EXPRESSLY SUBMITTED AND NO IMPLICIT LICENCE IS GRANTED OTHERWISE BY THE SUBMISSION OF THIS DOCUMENT. THEY ARE CONFIDENTIAL AND PRIVILEGED INFORMATION OF V.W.T. AND THEY MUST NOT BE DISCLOSED, REPRODUCED, LOANED, REMITTED OR USED IN ANY OTHER MANNER WITHOUT THE EXPRESS WRITTEN CONSENT OF V.W.T. V.W.T. ASSUMES NO RESPONSIBILITY OR LIABILITY FOR THE USE OF THIS DOCUMENT OR THE DESIGN CONCEPTS AND INFORMATION CONTAINED HEREIN FOR ANOTHER PROJECT, OR IN A MANNER THAT DOES NOT RELATE TO THE FITNESS OR PURPOSE OF THIS DOCUMENT. IN NO EVENT SHALL THIS DOCUMENT OR THE DESIGN CONCEPTS AND INFORMATION CONTAINED HEREIN BE USED IN A MANNER DETRIMENTAL TO THE INTEREST OF V.W.T. ALL COPYRIGHT, PATENT AND OTHER INTELLECTUAL PROPERTY RIGHTS ARE RESERVED. ACCEPTANCE OF THE DELIVERY OF THIS DOCUMENT CONSTITUTES AGREEMENT TO THESE TERMS AND CONDITIONS.

		DATE
DESIGNER	–	–
CHECKER	–	–
ENGINEER	–	–
SCALE:	None	

TITLE: HYDRAPOL CATIONIC – PLC9-621 CONTROL PANEL SPARE SCHEMATIC DIAGRAM
–

CLIENT: AEM AMARUQ
HUDSON BAY, NUNAVUT

VEOLIA
VEOLIA WATER TECHNOLOGIES CANADA INC. 4105 Sartelon, Saint-Laurent, Qc, Canada, Tel: (514) 334-7230

PROJECT DRAWING	INTERNAL	SHEET	REV
5000218009 – ELD-0002-AU-VWT	E04	02 OF 09	1

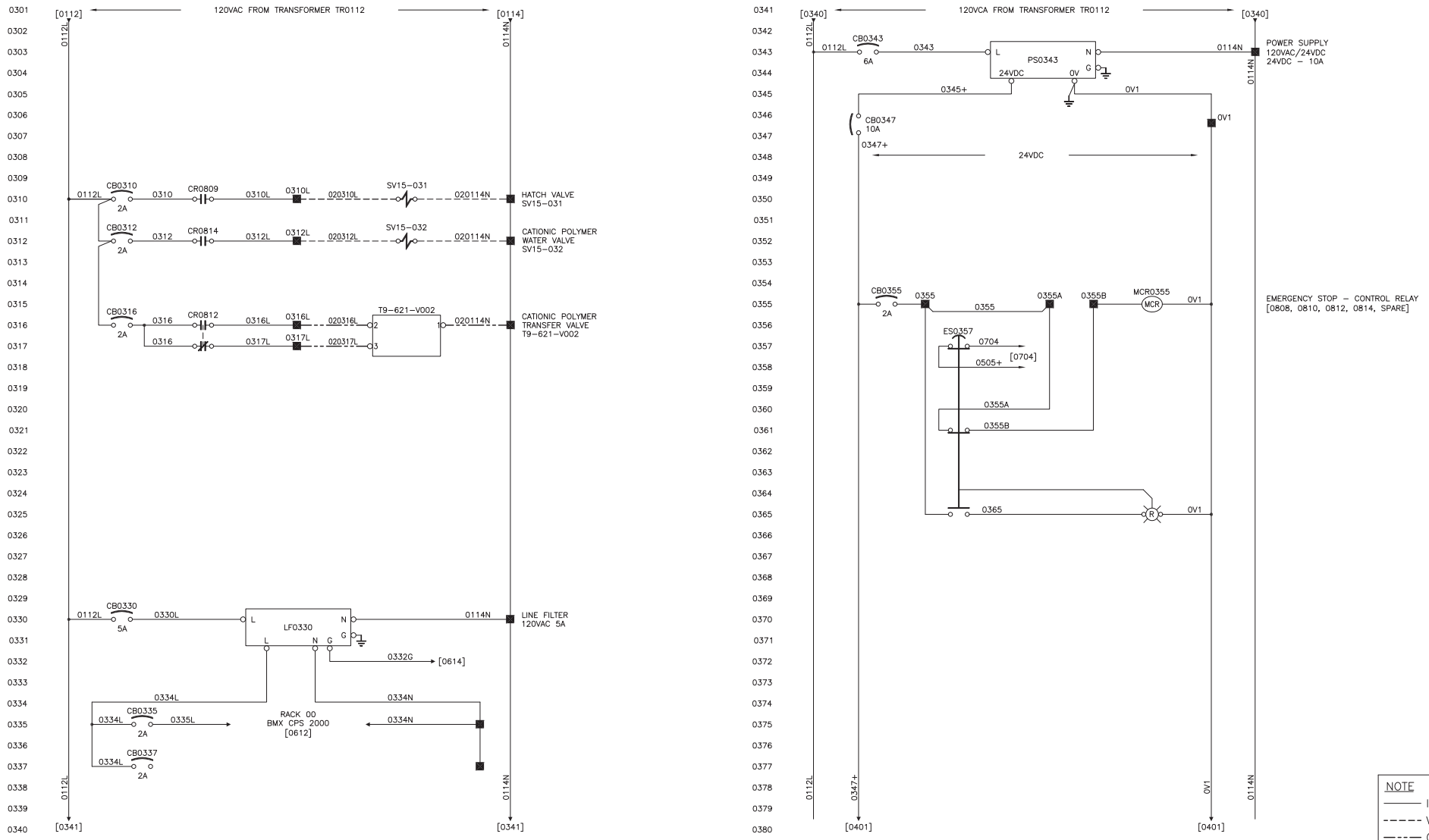

REV	DESCRIPTION	DATE	REVD	CHKD	APVD	ECN
1	FOR INFORMATION	2018-06-11	A.L.	A.L.	G.M.	-

CONFIDENTIALITY AND INTELLECTUAL PROPERTY NOTICE
ALL INFORMATION CONTAINED IN THIS DOCUMENT IS THE SOLE PROPERTY OF VEOLIA WATER TECHNOLOGIES CANADA INC. AND IS PROTECTED BY ALL APPLICABLE LAWS, INCLUDING BUT NOT LIMITED TO COPYRIGHT AND OTHER INTELLECTUAL PROPERTY LAWS. THE DESIGN CONCEPTS AND INFORMATION CONTAINED HEREIN ARE PROPRIETARY TO V.W.T AND ARE SUBMITTED IN CONFIDENCE. THEY ARE NOT TRANSFERABLE. THEY MUST BE USED ONLY FOR THE PURPOSE FOR WHICH THE DOCUMENT IS EXPRESSLY SUBMITTED AND NO IMPLICIT LICENCE IS GRANTED OTHERWISE BY THE SUBMISSION OF THIS DOCUMENT. THEY ARE CONFIDENTIAL AND PRIVILEGED INFORMATION OF V.W.T. AND THEY MUST NOT BE DISCLOSED, REPRODUCED, LOANED, REMITTED OR USED IN ANY OTHER MANNER WITHOUT THE EXPRESS WRITTEN CONSENT OF V.W.T. V.W.T. ASSUMES NO RESPONSIBILITY OR LIABILITY FOR THE USE OF THIS DOCUMENT OR THE DESIGN CONCEPTS AND INFORMATION CONTAINED HEREIN FOR ANOTHER PROJECT, OR IN A MANNER THAT DOES NOT RELATE TO THE FITNESS OR PURPOSE OF THIS DOCUMENTS. IN NO EVENT SHALL THIS DOCUMENT OR THE DESIGN CONCEPTS AND INFORMATION CONTAINED HEREIN BE USED IN A MANNER DETRIMENTAL TO THE INTEREST OF V.W.T. ALL COPYRIGHT, PATENT AND OTHER INTELLECTUAL PROPERTY RIGHTS ARE RESERVED. ACCEPTANCE OF THE DELIVERY OF THIS DOCUMENT CONSTITUTES AGREEMENT TO THESE TERMS AND CONDITIONS.

DESIGNER	-	DATE -
CHECKER	-	DATE -
ENGINEER	-	DATE -
SCALE:	None	

TITLE: HYDRAPOL CATIONIC - PLC9-621 CONTROL PANEL
SCHEMATIC DIAGRAM [POWER DISTRIBUTION] 120VAC/24VDC
-

CLIENT: AEM AMARUQ
HUDSON BAY, NUNAVUT

VEOLIA
VEOLIA WATER TECHNOLOGIES CANADA INC. 4105 Sartelon, Saint-Laurent, Qc, Canada, Tel: (514) 334-7230

PROJECT DRAWING	INTERNAL	SHEET	REV
5000218009 - ELD-0002-AU-VWT	E04	03 OF 09	1

STD: "B" 11x17 | REF: CONTROLES RL - 184172 | BAR = 1" AT PLOT SCALE

Jun. 11, 2018 - 12:33:12 - P:\CLIENTS\Veolia Waters - John Meunier\184172_5000218009 AEM Amaruq\Ingenierie\Dessins\PCL9-621 (HYDRAPOL CATIONIC)\5000218009-ELD-0002-AU-VWT-E04-03-1_E.dwg - a.lessard

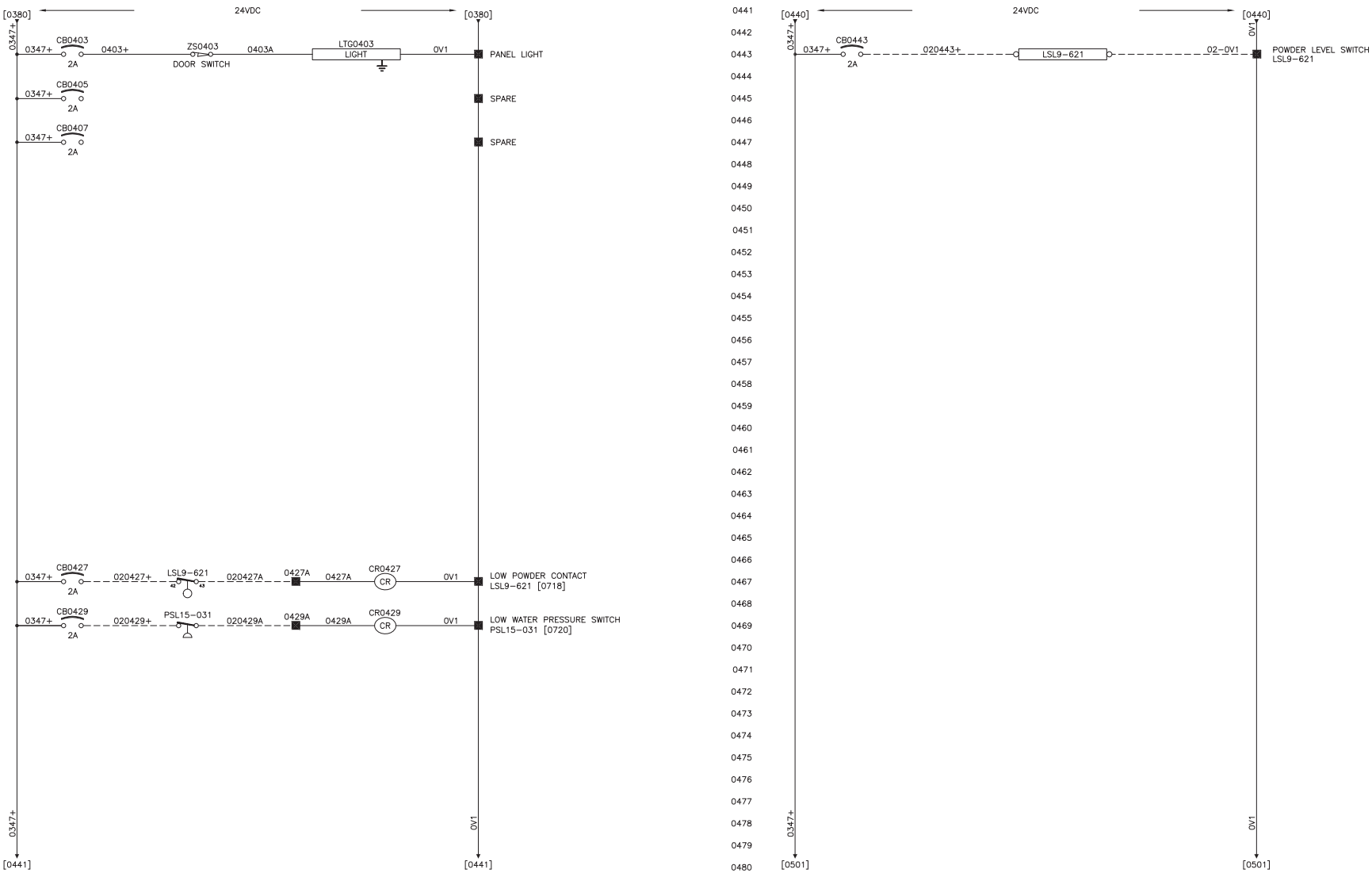

NOTE

——— INTERNAL WIRING

- - - - - VEOLIA WIRING

—·—·— CUSTOMER WIRING

REV	DESCRIPTION	DATE	REVD	CHKD	APVD	ECN
1	FOR INFORMATION	2018-06-11	A.L.	A.L.	G.M.	–

CONFIDENTIALITY AND INTELLECTUAL PROPERTY NOTICE

ALL INFORMATION CONTAINED IN THIS DOCUMENT IS THE SOLE PROPERTY OF VEOLIA WATER TECHNOLOGIES CANADA INC. AND IS PROTECTED BY ALL APPLICABLE LAWS, INCLUDING BUT NOT LIMITED TO COPYRIGHT AND OTHER INTELLECTUAL PROPERTY LAWS. THE DESIGN CONCEPTS AND INFORMATION CONTAINED HEREIN ARE PROPRIETARY TO V.W.T AND ARE SUBMITTED IN CONFIDENCE. THEY ARE NOT TRANSFERABLE. THEY MUST BE USED ONLY FOR THE PURPOSE FOR WHICH THE DOCUMENT IS EXPRESSLY SUBMITTED AND NO IMPLICIT LICENCE IS GRANTED OTHERWISE BY THE SUBMISSION OF THIS DOCUMENT. THEY ARE CONFIDENTIAL AND PRIVILEGED INFORMATION OF V.W.T. AND THEY MUST NOT BE DISCLOSED, REPRODUCED, LOANED, REMITTED OR USED IN ANY OTHER MANNER WITHOUT THE EXPRESS WRITTEN CONSENT OF V.W.T. V.W.T. ASSUMES NO RESPONSIBILITY OR LIABILITY FOR THE USE OF THIS DOCUMENT OR THE DESIGN CONCEPTS AND INFORMATION CONTAINED HEREIN FOR ANOTHER PROJECT, OR IN A MANNER THAT DOES NOT RELATE TO THE FITNESS OR PURPOSE OF THIS DOCUMENT. IN NO EVENT SHALL THIS DOCUMENT OR THE DESIGN CONCEPTS AND INFORMATION CONTAINED HEREIN BE USED IN A MANNER DETRIMENTAL TO THE INTEREST OF V.W.T. ALL COPYRIGHT, PATENT AND OTHER INTELLECTUAL PROPERTY RIGHTS ARE RESERVED. ACCEPTANCE OF THE DELIVERY OF THIS DOCUMENT CONSTITUTES AGREEMENT TO THESE TERMS AND CONDITIONS.

	DATE
DESIGNER	–
CHECKER	–
ENGINEER	–

SCALE: None

TITLE: HYDRAPOL CATIONIC – PLC9-621 CONTROL PANEL SCHEMATIC DIAGRAM DISTRIBUTION 24VDC

–

CLIENT: AEM AMARUQ
HUDSON BAY, NUNAVUT

VEOLIA

VEOLIA WATER TECHNOLOGIES CANADA INC., 4105 Sartelon, Saint-Laurent, Qc, Canada, Tel: (514) 334-7230

PROJECT DRAWING	INTERNAL	SHEET	REV
5000218009 – ELD-0002-AU-VWT	E04	04 OF 09	1

STD: "B" 11x17 | REF: CONTROLES RL – 184172 | BAR = 1" AT PLOT SCALE

Jun. 11, 2018 12:33:17 – P:\CLIENTS\Veolia Waters – John Meunier\184172_5000218009 AEM Amaruq\Ingenierie\Dessins\PCL9-621 (HYDRAPOL CATIONIC)\5000218009-ELD-0002-AU-VWT-E04-04-1_E.dwg – a.lessard

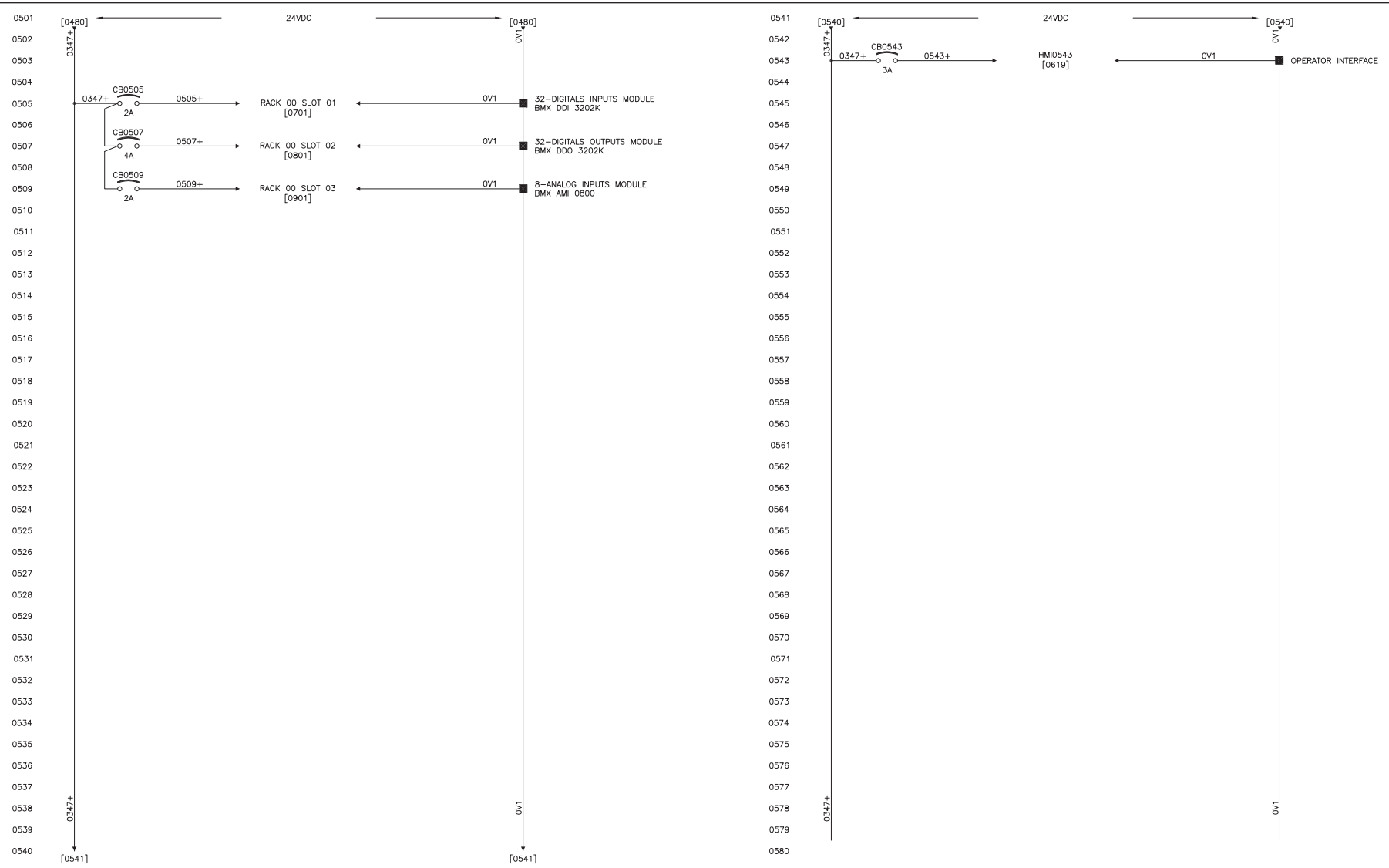

NOTE
INTERNAL WIRING
VEOLIA WIRING
CUSTOMER WIRING

REV	DESCRIPTION	DATE	REVD	CHKD	APVD	ECN
1	FOR INFORMATION	2018-06-11	A.L.	A.L.	G.M.	–

CONFIDENTIALITY AND INTELLECTUAL PROPERTY NOTICE
ALL INFORMATION CONTAINED IN THIS DOCUMENT IS THE SOLE PROPERTY OF VEOLIA WATER TECHNOLOGIES CANADA INC. AND IS PROTECTED BY ALL APPLICABLE LAWS, INCLUDING BUT NOT LIMITED TO COPYRIGHT AND OTHER INTELLECTUAL PROPERTY LAWS. THE DESIGN CONCEPTS AND INFORMATION CONTAINED HEREIN ARE PROPRIETARY TO V.W.T AND ARE SUBMITTED IN CONFIDENCE. THEY ARE NOT TRANSFERABLE. THEY MUST BE USED ONLY FOR THE PURPOSE FOR WHICH THE DOCUMENT IS EXPRESSLY SUBMITTED AND NO IMPLICIT LICENCE IS GRANTED OTHERWISE BY THE SUBMISSION OF THIS DOCUMENT. THEY ARE CONFIDENTIAL AND PRIVILEGED INFORMATION OF V.W.T. AND THEY MUST NOT BE DISCLOSED, REPRODUCED, LOANED, REMITTED OR USED IN ANY OTHER MANNER WITHOUT THE EXPRESS WRITTEN CONSENT OF V.W.T. V.W.T. ASSUMES NO RESPONSIBILITY OR LIABILITY FOR THE USE OF THIS DOCUMENT OR THE DESIGN CONCEPTS AND INFORMATION CONTAINED HEREIN FOR ANOTHER PROJECT, OR IN A MANNER THAT DOES NOT RELATE TO THE FITNESS OR PURPOSE OF THIS DOCUMENT. IN NO EVENT SHALL THIS DOCUMENT OR THE DESIGN CONCEPTS AND INFORMATION CONTAINED HEREIN BE USED IN A MANNER DETRIMENTAL TO THE INTEREST OF V.W.T. ALL COPYRIGHT, PATENT AND OTHER INTELLECTUAL PROPERTY RIGHTS ARE RESERVED. ACCEPTANCE OF THE DELIVERY OF THIS DOCUMENT CONSTITUTES AGREEMENT TO THESE TERMS AND CONDITIONS.

DESIGNER	–	DATE –
CHECKER	–	DATE –
ENGINEER	–	DATE –
SCALE:	None	

TITLE: HYDRAPOL CATIONIC – PLC9-621 CONTROL PANEL SCHEMATIC DIAGRAM DISTRIBUTION 24VDC – –

CLIENT: AEM AMARUQ HUDSON BAY, NUNAVUT

VEOLIA WATER TECHNOLOGIES CANADA INC. 4105 Sartelon, Saint-Laurent, Qc, Canada, Tel: (514) 334-7230

PROJECT DRAWING	INTERNAL	SHEET	REV
5000218009 – ELD-0002-AU-VWT	E04	05 OF 09	1

STD: "B" 11x17 | REF: CONTROLES RL – 184172 | BAR = 1" AT PLOT SCALE

Jun 11, 2018 12:33:22 – P:\CLIENTS\Veolia Waters – John Meunier\184172_5000218009 AEM Amaruq\Ingenierie\Dessins\PCL9-621 (HYDRAPOL CATIONIC)\5000218009-ELD-0002-AU-VWT-E04-05-1_E.dwg – a.lessard

Jun. 11, 2018 12:33:27 - P:\CLIENTS\Veolia Waters - John Meunier\184172_5000218009 AEM Amaruq\Ingenierie\Dessins\PCL9-621 (HYDRAPOL CATIONIC)\5000218009-ELD-0002-AU-VWT-E04-06-1_E.dwg - a.lessard

STD: "B" 11x17 | REF: CONTROLES RL - 184172 | BAR = 1" AT PLOT SCALE

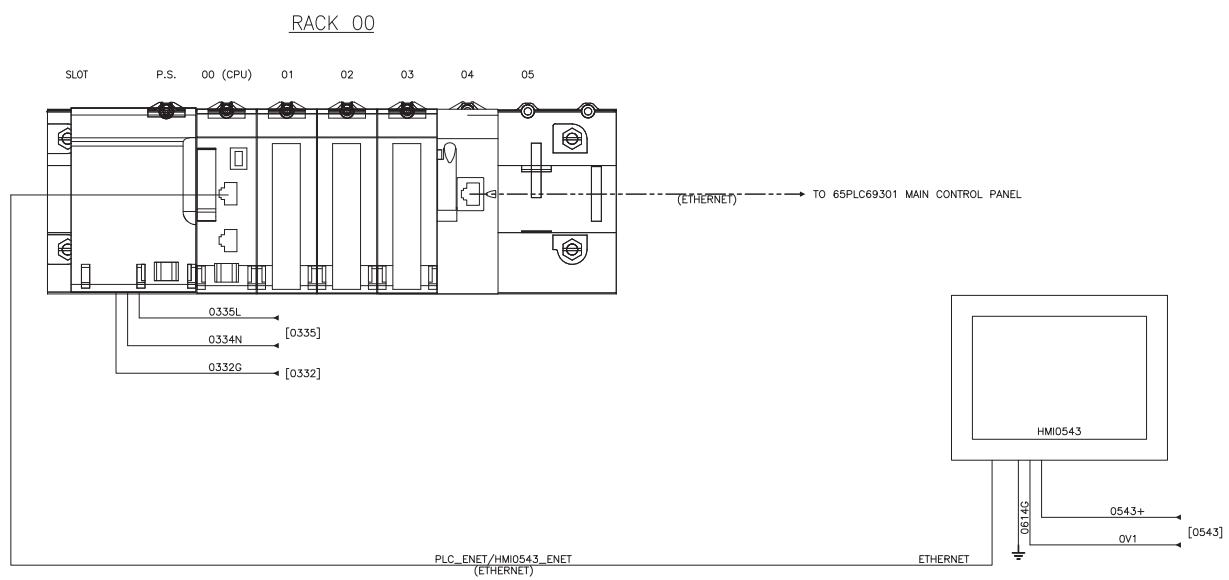

RACK 00

SLOT 01, SEE CONNECTING DETAIL DRAWING 5000216065-ELD-0002-AU-VWT-E04-07
SLOT 02, SEE CONNECTING DETAIL DRAWING 5000216065-ELD-0002-AU-VWT-E04-08
SLOT 03, SEE CONNECTING DETAIL DRAWING 5000216065-ELD-0002-AU-VWT-E04-09

NOTE
——— INTERNAL WIRING
- - - - - VEOLIA WIRING
—·—·— CUSTOMER WIRING

REV	DESCRIPTION	DATE	REVD	CHKD	APVD	ECN
1	FOR INFORMATION	2018-06-11	A.L.	A.L.	G.M.	–

CONFIDENTIALITY AND INTELLECTUAL PROPERTY NOTICE
ALL INFORMATION CONTAINED IN THIS DOCUMENT IS THE SOLE PROPERTY OF VEOLIA WATER TECHNOLOGIES CANADA INC. AND IS PROTECTED BY ALL APPLICABLE LAWS, INCLUDING BUT NOT LIMITED TO COPYRIGHT AND OTHER INTELLECTUAL PROPERTY LAWS. THE DESIGN CONCEPTS AND INFORMATION CONTAINED HEREIN ARE PROPRIETARY TO V.W.T AND ARE SUBMITTED IN CONFIDENCE. THEY ARE NOT TRANSFERABLE. THEY MUST BE USED ONLY FOR THE PURPOSE FOR WHICH THE DOCUMENT IS EXPRESSLY SUBMITTED AND NO IMPLICIT LICENCE IS GRANTED OTHERWISE BY THE SUBMISSION OF THIS DOCUMENT. THEY ARE CONFIDENTIAL AND PRIVILEGED INFORMATION OF V.W.T. AND THEY MUST NOT BE DISCLOSED, REPRODUCED, LOANED, REMITTED OR USED IN ANY OTHER MANNER WITHOUT THE EXPRESS WRITTEN CONSENT OF V.W.T. V.W.T. ASSUMES NO RESPONSIBILITY OR LIABILITY FOR THE USE OF THIS DOCUMENT OR THE DESIGN CONCEPTS AND INFORMATION CONTAINED HEREIN FOR ANOTHER PROJECT, OR IN A MANNER THAT DOES NOT RELATE TO THE FITNESS OR PURPOSE OF THIS DOCUMENT. IN NO EVENT SHALL THIS DOCUMENT OR THE DESIGN CONCEPTS AND INFORMATION CONTAINED HEREIN BE USED IN A MANNER DETRIMENTAL TO THE INTEREST OF V.W.T. ALL COPYRIGHT, PATENT AND OTHER INTELLECTUAL PROPERTY RIGHTS ARE RESERVED. ACCEPTANCE OF THE DELIVERY OF THIS DOCUMENT CONSTITUTES AGREEMENT TO THESE TERMS AND CONDITIONS.

	DATE
DESIGNER	–
CHECKER	–
ENGINEER	–
SCALE:	None

TITLE: HYDRAPOL CATIONIC – PLC9-621 CONTROL PANEL
PROGRAMMABLE CONTROLLER / NETWORK
–

CLIENT: AEM AMARUQ
HUDSON BAY, NUNAVUT

VEOLIA WATER TECHNOLOGIES CANADA INC., 4105 Sartelon, Saint-Laurent, Qc, Canada, Tel: (514) 334-7230

PROJECT DRAWING	INTERNAL	SHEET	REV
5000216065 – ELD-0002-AU-VWT	E04	06 OF 09	1

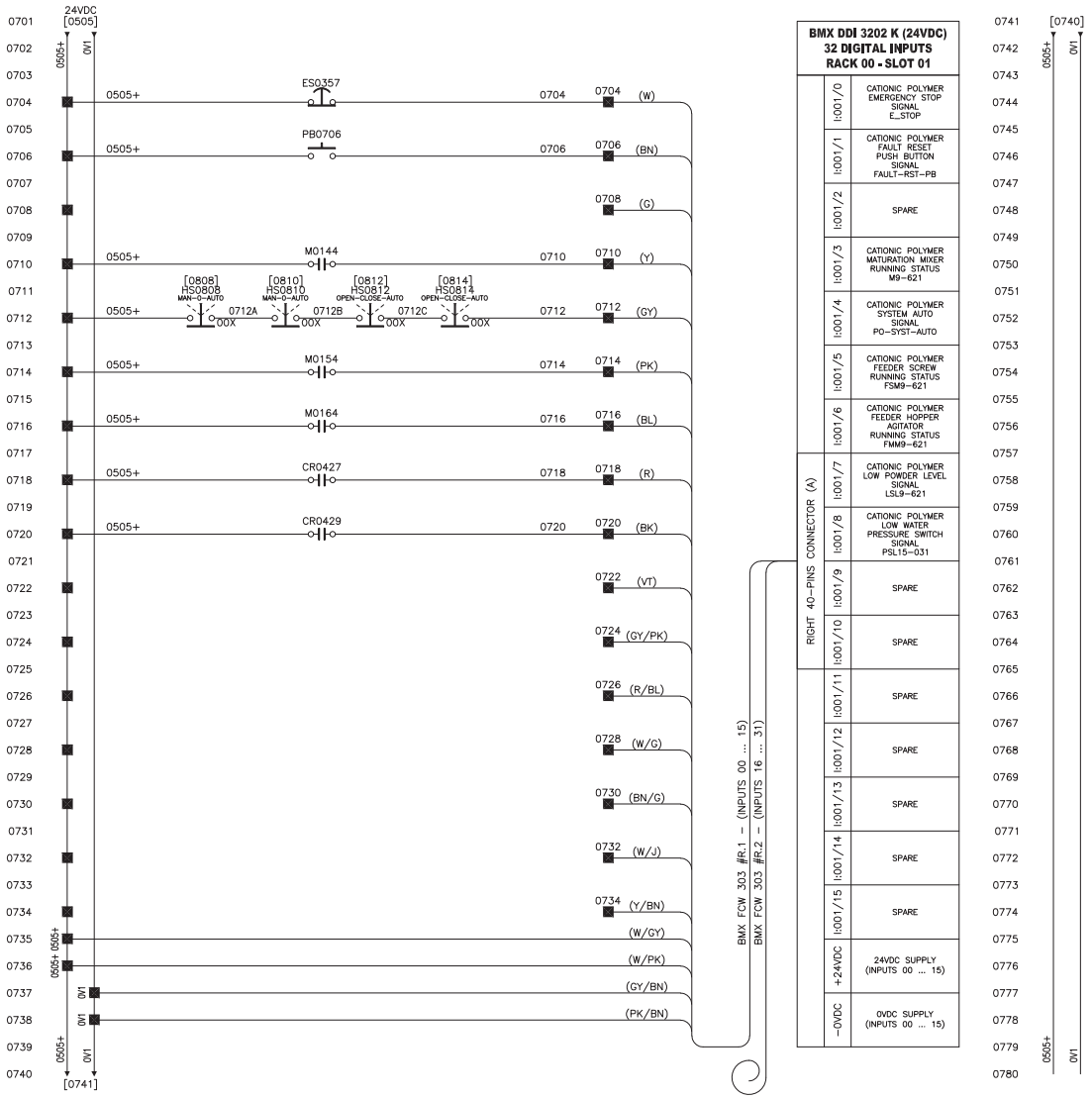

BMX DDI 3202 K (24VDC)
32 DIGITAL INPUTS
RACK 00 - SLOT 01

RIGHT 40–PINS CONNECTOR (A)	I:001/0	CATIONIC POLYMER EMERGENCY STOP SIGNAL E_STOP
	I:001/1	CATIONIC POLYMER FAULT RESET PUSH BUTTON SIGNAL FAULT–RST–PB
	I:001/2	SPARE
	I:001/3	CATIONIC POLYMER MATURATION MIXER RUNNING STATUS M9–621
	I:001/4	CATIONIC POLYMER SYSTEM AUTO SIGNAL PO–SYST–AUTO
	I:001/5	CATIONIC POLYMER FEEDER SCREW RUNNING STATUS FSM9–621
	I:001/6	CATIONIC POLYMER FEEDER HOPPER AGITATOR RUNNING STATUS FMM9–621
	I:001/7	CATIONIC POLYMER LOW POWDER LEVEL SIGNAL LSL9–621
	I:001/8	CATIONIC POLYMER LOW WATER PRESSURE SWITCH SIGNAL PSL15–031
	I:001/9	SPARE
	I:001/10	SPARE
	I:001/11	SPARE
	I:001/12	SPARE
	I:001/13	SPARE
	I:001/14	SPARE
	I:001/15	SPARE
	+24VDC	24VDC SUPPLY (INPUTS 00 ... 15)
	–0VDC	0VDC SUPPLY (INPUTS 00 ... 15)

BMX DDI 3202 K (24VDC)
32 DIGITAL INPUTS
RACK 00 - SLOT 01

	I:001/16	SPARE
	I:001/17	SPARE
	I:001/18	SPARE
	I:001/19	SPARE
	I:001/20	SPARE
	I:001/21	SPARE
	I:001/22	SPARE
	I:001/23	SPARE
	I:001/24	SPARE
	I:001/25	SPARE
	I:001/26	SPARE
	I:001/27	SPARE
	I:001/28	SPARE
	I:001/29	SPARE
	I:001/30	SPARE
	I:001/31	SPARE
	+24VDC	24VDC SUPPLY (INPUTS 16 ... 31)
	–0VDC	0VDC SUPPLY (INPUTS 16 ... 31)

REV	DESCRIPTION	DATE	REVD	CHKD	APVD	ECN
1	FOR INFORMATION	2018–06–11	A.L.	A.L.	G.M.	–

CONFIDENTIALITY AND INTELLECTUAL PROPERTY NOTICE
ALL INFORMATION CONTAINED IN THIS DOCUMENT IS THE SOLE PROPERTY OF VEOLIA WATER TECHNOLOGIES CANADA INC. AND IS PROTECTED BY ALL APPLICABLE LAWS, INCLUDING BUT NOT LIMITED TO COPYRIGHT AND OTHER INTELLECTUAL PROPERTY LAWS. THE DESIGN CONCEPTS AND INFORMATION CONTAINED HEREIN ARE PROPRIETARY TO V.W.T AND ARE SUBMITTED IN CONFIDENCE. THEY ARE NOT TRANSFERABLE. THEY MUST BE USED ONLY FOR THE PURPOSE FOR WHICH THE DOCUMENT IS EXPRESSLY SUBMITTED AND NO IMPLICIT LICENCE IS GRANTED OTHERWISE BY THE SUBMISSION OF THIS DOCUMENT. THEY ARE CONFIDENTIAL AND PRIVILEGED INFORMATION OF V.W.T. AND THEY MUST NOT BE DISCLOSED, REPRODUCED, LOANED, REMITTED OR USED IN ANY OTHER MANNER WITHOUT THE EXPRESS WRITTEN CONSENT OF V.W.T. V.W.T. ASSUMES NO RESPONSIBILITY OR LIABILITY FOR THE USE OF THIS DOCUMENT OR THE DESIGN CONCEPTS AND INFORMATION CONTAINED HEREIN FOR ANOTHER PROJECT, OR IN A MANNER THAT DOES NOT RELATE TO THE FITNESS OR PURPOSE OF THIS DOCUMENT. IN NO EVENT SHALL THIS DOCUMENT OR THE DESIGN CONCEPTS AND INFORMATION CONTAINED HEREIN BE USED IN A MANNER DETRIMENTAL TO THE INTEREST OF V.W.T. ALL COPYRIGHT, PATENT AND OTHER INTELLECTUAL PROPERTY RIGHTS ARE RESERVED. ACCEPTANCE OF THE DELIVERY OF THIS DOCUMENT CONSTITUTES AGREEMENT TO THESE TERMS AND CONDITIONS.

DESIGNER	–	DATE –
CHECKER	–	DATE –
ENGINEER	–	DATE –
SCALE:	None	

TITLE: HYDRAPOL CATIONIC – PLC9–621 CONTROL PANEL
ELECTRICAL SCHEMATIC DIAGRAM [RACK 00 SLOT 01]
–

CLIENT: AEM AMARUQ
HUDSON BAY, NUNAVUT

VEOLIA
VEOLIA WATER TECHNOLOGIES CANADA INC. 4105 Sartelon, Saint-Laurent, Qc, Canada. Tel: (514) 334-7230

PROJECT DRAWING	INTERNAL	SHEET	REV
5000218009 – ELD–0002–AU–VWT	E04	07 OF 09	1

STD: "B" 11x17 | REF: CONTROLES RL – 184172 | BAR = 1" AT PLOT SCALE

Jun. 11, 2018 12:33:32 – P:\CLIENTS\Veolia Waters – John Meunier\184172_5000218009 AEM Amaruq\Ingenierie\Dessins\PCL9–621 (HYDRAPOL CATIONIC)\5000218009–ELD–0002–AU–VWT–E04–07–1_E.dwg – a.lessard

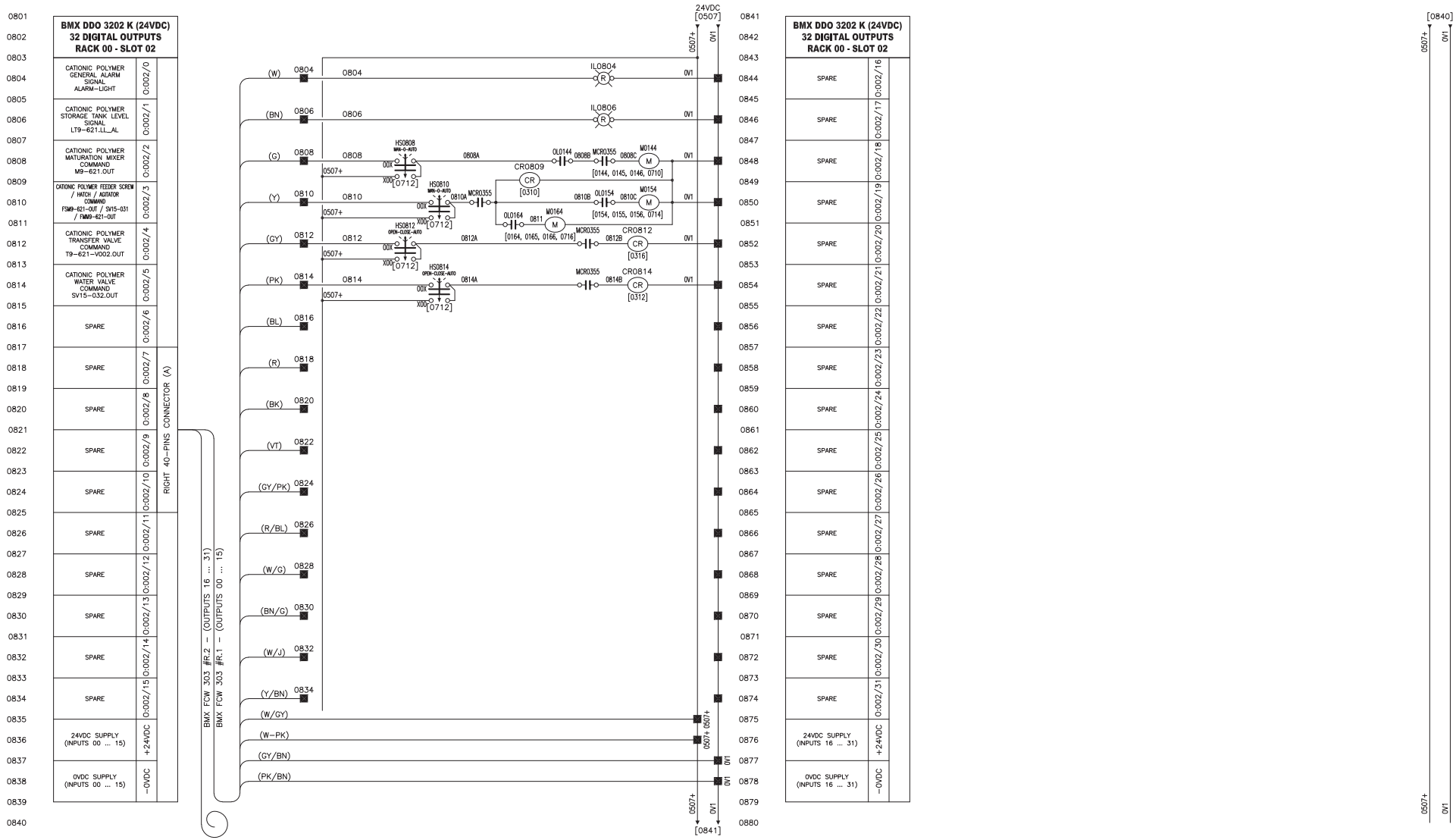

CONFIDENTIALITY AND INTELLECTUAL PROPERTY NOTICE
ALL INFORMATION CONTAINED IN THIS DOCUMENT IS THE SOLE PROPERTY OF VEOLIA WATER TECHNOLOGIES CANADA INC. AND IS PROTECTED BY ALL APPLICABLE LAWS, INCLUDING BUT NOT LIMITED TO COPYRIGHT AND OTHER INTELLECTUAL PROPERTY LAWS. THE DESIGN CONCEPTS AND INFORMATION CONTAINED HEREIN ARE PROPRIETARY TO V.W.T AND ARE SUBMITTED IN CONFIDENCE. THEY ARE NOT TRANSFERABLE. THEY MUST BE USED ONLY FOR THE PURPOSE FOR WHICH THE DOCUMENT IS EXPRESSLY SUBMITTED AND NO IMPLICIT LICENCE IS GRANTED OTHERWISE BY THE SUBMISSION OF THIS DOCUMENT. THEY ARE CONFIDENTIAL AND PRIVILEGED INFORMATION OF V.W.T. AND THEY MUST NOT BE DISCLOSED, REPRODUCED, LOANED, REMITTED OR USED IN ANY OTHER MANNER WITHOUT THE EXPRESS WRITTEN CONSENT OF V.W.T. V.W.T. ASSUMES NO RESPONSIBILITY OR LIABILITY FOR THE USE OF THIS DOCUMENT OR THE DESIGN CONCEPTS AND INFORMATION CONTAINED HEREIN FOR ANOTHER PROJECT, OR IN A MANNER THAT DOES NOT RELATE TO THE FITNESS OR PURPOSE OF THIS DOCUMENT. IN NO EVENT SHALL THIS DOCUMENT OR THE DESIGN CONCEPTS AND INFORMATION CONTAINED HEREIN BE USED IN A MANNER DETRIMENTAL TO THE INTEREST OF V.W.T. ALL COPYRIGHT, PATENT AND OTHER INTELLECTUAL PROPERTY RIGHTS ARE RESERVED. ACCEPTANCE OF THE DELIVERY OF THIS DOCUMENT CONSTITUTES AGREEMENT TO THESE TERMS AND CONDITIONS.

REV	DESCRIPTION	DATE	REVD	CHKD	APVD	ECN
1	FOR INFORMATION	2018-06-11	A.L.	A.L.	G.M.	–

DESIGNER	–	DATE –
CHECKER	–	DATE –
ENGINEER	–	DATE –
SCALE:	None	

TITLE: HYDRAPOL CATIONIC – PLC9-621 CONTROL PANEL
ELECTRICAL SCHEMATIC DIAGRAM [RACK 00 SLOT 02]
–

CLIENT: AEM AMARUQ
HUDSON BAY, NUNAVUT

VEOLIA
VEOLIA WATER TECHNOLOGIES CANADA INC. 4105 Sartelon, Saint-Laurent, Qc, Canada, Tel: (514) 334-7230

PROJECT DRAWING	INTERNAL	SHEET	REV
5000218009 – ELD-0002-AU-VWT	E04	08 OF 09	1

STD: "B" 11x17 | REF: CONTROLES RL – 184172 | BAR = 1" AT PLOT SCALE

Jun 11, 2018 12:33:37 – P:\CLIENTS\Veolia Waters – John Meunier\184172_5000218009 AEM Amaruq\Ingenierie\Dessins\PCL9-621 (HYDRAPOL CATIONIC)\5000218009-ELD-0002-AU-VWT-E04-08-1_E.dwg – a.lessard

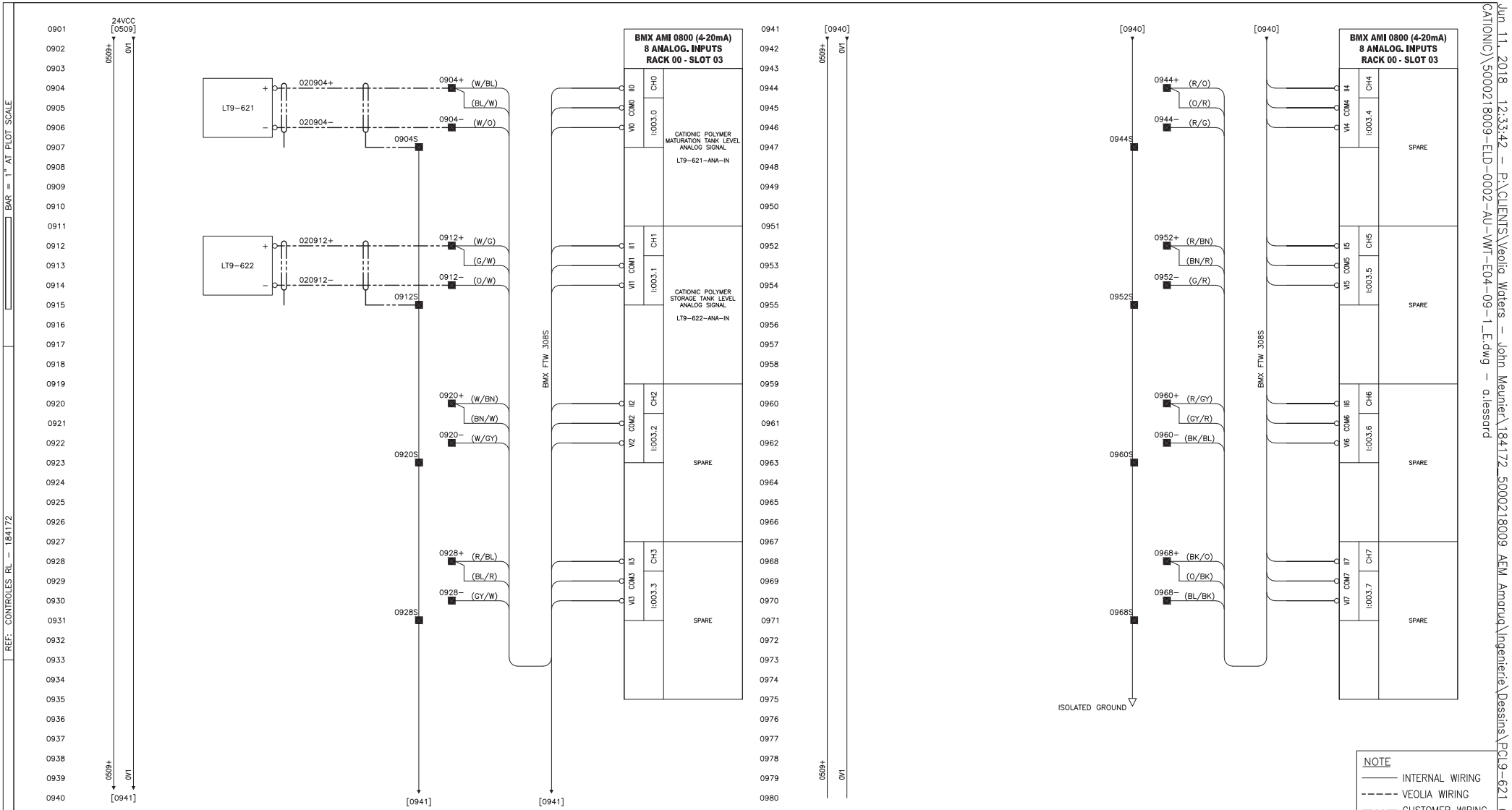

NOTE
——— INTERNAL WIRING
- - - - - VEOLIA WIRING
—·—·— CUSTOMER WIRING

REV	DESCRIPTION	DATE	REVD	CHKD	APVD	ECN
1	FOR INFORMATION	2018-06-11	A.L.	A.L.	G.M.	–

CONFIDENTIALITY AND INTELLECTUAL PROPERTY NOTICE
ALL INFORMATION CONTAINED IN THIS DOCUMENT IS THE SOLE PROPERTY OF VEOLIA WATER TECHNOLOGIES CANADA INC. AND IS PROTECTED BY ALL APPLICABLE LAWS, INCLUDING BUT NOT LIMITED TO COPYRIGHT AND OTHER INTELLECTUAL PROPERTY LAWS. THE DESIGN CONCEPTS AND INFORMATION CONTAINED HEREIN ARE PROPRIETARY TO V.W.T AND ARE SUBMITTED IN CONFIDENCE. THEY ARE NOT TRANSFERABLE. THEY MUST BE USED ONLY FOR THE PURPOSE FOR WHICH THE DOCUMENT IS EXPRESSLY SUBMITTED AND NO IMPLICIT LICENCE IS GRANTED OTHERWISE BY THE SUBMISSION OF THIS DOCUMENT. THEY ARE CONFIDENTIAL AND PRIVILEGED INFORMATION OF V.W.T. AND THEY MUST NOT BE DISCLOSED, REPRODUCED, LOANED, REMITTED OR USED IN ANY OTHER MANNER WITHOUT THE EXPRESS WRITTEN CONSENT OF V.W.T. V.W.T. ASSUMES NO RESPONSIBILITY OR LIABILITY FOR THE USE OF THIS DOCUMENT OR THE DESIGN CONCEPTS AND INFORMATION CONTAINED HEREIN FOR ANOTHER PROJECT, OR IN A MANNER THAT DOES NOT RELATE TO THE FITNESS OR PURPOSE OF THIS DOCUMENT. IN NO EVENT SHALL THIS DOCUMENT OR THE DESIGN CONCEPTS AND INFORMATION CONTAINED HEREIN BE USED IN A MANNER DETRIMENTAL TO THE INTEREST OF V.W.T. ALL COPYRIGHT, PATENT AND OTHER INTELLECTUAL PROPERTY RIGHTS ARE RESERVED. ACCEPTANCE OF THE DELIVERY OF THIS DOCUMENT CONSTITUTES AGREEMENT TO THESE TERMS AND CONDITIONS.

DESIGNER	DATE –
CHECKER	DATE –
ENGINEER	DATE –
SCALE:	None

TITLE: HYDRAPOL CATIONIC – PLC9-621 CONTROL PANEL ELECTRICAL SCHEMATIC DIAGRAM [RACK 00 SLOT 03]
–

CLIENT: AEM AMARUQ
HUDSON BAY, NUNAVUT

VEOLIA
VEOLIA WATER TECHNOLOGIES CANADA INC. 4105 Sartelon, Saint-Laurent, Qc, Canada, Tel: (514) 334-7230

PROJECT DRAWING	INTERNAL	SHEET	REV
5000218009 – ELD-0002-AU-VWT	E04	09 OF 09	1

STD: "B" 11x17 | REF: CONTROLES RL – 184172 | BAR = 1" AT PLOT SCALE

Jun. 11, 2018 - 12:33:42 - P:\CLIENTS\Veolia Waters - John Meunier\184172_5000218009 AEM Amaruq\Ingenierie\Dessins\PCL9-621 (HYDRAPOL CATIONIC)\5000218009-ELD-0002-AU-VWT-E04-09-1_E.dwg - o.lessard

LEFT BLANK

5 – ELECTRICITY AND CONTROL

5.3 – CONTROL ARCHITECTURE

LEFT BLANK

Cationic Polymer Preparation System
PLC9-621

PLC_XX
xxx.xxx.xxx.xxx

HMI_XX
xxx.xxx.xxx.xxx

ETH

Main Control Panel
PLC-001

PLC_XX
xxx.xxx.xxx.xxx

HMI_XX
xxx.xxx.xxx.xxx

ETH_XX
xxx.xxx.xxx.xxx

120 VAC Feed

120 VAC
(by others)

ETH

Coagulant Dosing
(Winter)

Coagulant Dosing
(Summer)

NaOH Dosing

HW HW HW

600 VAC Feed (3)

600 VAC Feed (2)

600 VAC Feed (3)

600 VAC Feed (3)

Centrifuge 1

PLC_XX
xxx.xxx.xxx.xxx

HMI_XX
xxx.xxx.xxx.xxx

HW

600 VAC Feed

Centrifuge 2

PLC_XX
xxx.xxx.xxx.xxx

HMI_XX
xxx.xxx.xxx.xxx

HW

600 VAC Feed

HW

Precipitation Reactor
Actiflo/Multiflo 1
Actiflo/Multiflo 2

Sludge Extraction
Sludge Tanks
Sludge Storage Tank
Centifuge Feed Pumps
Centrate Sump Pumps

NaOH Preparation
Coagulant Preparation
KmNO4 Preparation
Lifting Pumps

Control : From Main Control Panel
Motors Starters and VFDs: From MCC

575 VAC Motor (41)

600VAC Feed (4)

600 VAC Feed

600 VAC Feed (3)

600 VAC Feed (3)

600 VAC Feed (2)

HW HW HW HW HW HW HW

Anionic Polymer Preparation System

Anionic Polymer Dosing (Summer)

Anionic Polymer Dosing (Winter)

Cationic Polymer Dosing

KMnO4 Dosing

H2SO4 Dosing

120 VAC
(by others)

120 VAC Feed (2)

MCC / 600 VAC distribution
(by others)

575 VAC Motors Starters and VFDs (38)

M1-011 DOL	M5-011 DOL
M1-012 DOL	M5-012 DOL
M1-013 DOL	P5-011 VFD
M2-011 DOL	P5-012 VFD
M2-012 DOL	P5-013 VFD
M2-013 VFD	P6-011 DOL
S2-011 DOL	P6-021 DOL
P2-011 DOL	M9-541 DOL
P2-012 DOL	B9-513 DOL
P2-013 DOL	DF9-511 VFD
P2-014 DOL	M9-511 DOL
M2-021 DOL	P9-515 DOL
M2-022 DOL	VAC9-591 DOL
M2-023 VFD	FMM9-591 DOL
S2-021 DOL	FSM9-591 VFD
P2-021 DOL	M9-591 DOL
P2-022 DOL	PX-0XX
P2-023 DOL	PX-0XX
P4-011 DOL	
P4-021 DOL	

+ 600 VAC Feed (29)

See Motor List for details
* Additionnal equipment may be required
(to be specified by the client)

Electrical Container (by others)

NOTES :

All subnetmask are 255.255.255.0
All default gateway are xxx.xxx.xxx.xxx
All DNS: n/a

Veolia Scope	Hardwire
Existing	600 VAC Feed
By Others	575 VAC Motor
	Ethernet cable
	Modbus TCP/IP

VEOLIA

TITLE: Control Architecture
Amaruq

CLIENT: Agnico Eagle Mines

DATE	REV'D	CHK'D	APV'D	PROJECT	DRAWING	SHEET	REV
2018-05-10	PLG	XM	-	5000218009	5000218009_CA_0001_AU_VWT	1 OF 1	2

LEFT BLANK

5 – ELECTRICITY AND CONTROL

5.4 – INPUT AND OUTPUT LIST

LEFT BLANK

AEM Amaruq

5000218009_IOLS_0001_AU_VWT

Liste des entrées et sorties

Project number 5000218009

Rev	By	Chckd	App	Revision date	Description
1	XM	AS	XM	2018-05-22	INITIAL RELEASE

Revision	Description	Signal description	Identification	Control pannel	Rack	Slot	IO number	Type	Voltage	Power	Starter	Selector	Disconnect	Relay	Contact type	Junction box	Comments
	BMEXBP1200			PLC-001	1	0		Rack									
	BMXCPS3500			PLC-001	1	0		PS									
	BMEP582040			PLC-001	1	0		PLC_CTRL									
	Spare			PLC-001	1	2											
	BMENOC0301			PLC-001	1	3		ETH_COM									
	BMXDDI3202K			PLC-001	1	4		DI									
1	METAL PRECIPITATION REACTOR HIGH HIGH LEVEL	Signal	LSHH1-011	PLC-001	1	4	1	DI							DCNC		
1	ACTIFLO 1 HIGH HIGH LEVEL	Signal	LSHH2-011	PLC-001	1	4	2	DI							DCNC	JB2-011	
1	ACTIFLO 1 HIGH TORQUE	Signal	WAH2-011	PLC-001	1	4	3	DI							DCNC	JB2-011	
1	ACTIFLO 1 HIGH HIGH TORQUE	Signal	WAHH2-011	PLC-001	1	4	4	DI							DCNC	JB2-011	
1	ACTIFLO 2 HIGH HIGH LEVEL	Signal	LSHH3-011	PLC-001	1	4	5	DI							DCNC	JB2-021	
1	ACTIFLO 2 HIGH TORQUE	Signal	WAH3-011	PLC-001	1	4	6	DI							DCNC	JB2-021	
1	ACTIFLO 2 HIGH HIGH TORQUE	Signal	WAHH3-011	PLC-001	1	4	7	DI							DCNC	JB2-021	
1	SLUDGE TANK HIGH HIGH LEVEL	Signal	LSHH4-011	PLC-001	1	4	8	DI							DCNC		
1	SLUDGE TANK LOW LOW LEVEL	Signal	LSLL4-012	PLC-001	1	4	9	DI							DCNC		
1	SLUDGE STORAGE TANK HIGH HIGH LEVEL	Signal	LSHH5-011	PLC-001	1	4	10	DI							DCNC		
1	SLUDGE STORAGE TANK HIGH HIGH LEVEL	Signal	LSHH5-021	PLC-001	1	4	11	DI							DCNC		
1	SLUDGE STORAGE TANK LOW LEVEL	Signal	LSLL5-012	PLC-001	1	4	12	DI							DCNC		
1	SLUDGE STORAGE TANK LOW LEVEL	Signal	LSLL5-022	PLC-001	1	4	13	DI							DCNC		
1	SLUDGE STORAGE TANK LOW PRESSURE	Signal	PSL5-011	PLC-001	1	4	14	DI							DCNC		
1	SLUDGE STORAGE TANK LOW PRESSURE	Signal	PSL5-012	PLC-001	1	4	15	DI							DCNC		
1	SLUDGE STORAGE TANK P5-011 HIGH TEMPERATURE	Signal	TSH5-011	PLC-001	1	4	16	DI							DCNC		
1	SLUDGE STORAGE TANK P5-012 HIGH TEMPERATURE	Signal	TSH5-012	PLC-001	1	4	17	DI							DCNC		
1	SLUDGE TREATMENT DEWATERING SYSTEM 1	PLC Fault	CV6-011	PLC-001	1	4	18	DI								PLC6-011	
1	SLUDGE TREATMENT DEWATERING SYSTEM 1	Common Alarm	CV6-011	PLC-001	1	4	19	DI								PLC6-011	
1	SLUDGE TREATMENT DEWATERING SYSTEM 1	Sludge Pump Run Cmd	CV6-011	PLC-001	1	4	20	DI								PLC6-011	
1	SLUDGE TREATMENT DEWATERING SYSTEM 1	Polymer Pump Run Cmd	CV6-011	PLC-001	1	4	21	DI								PLC6-011	
1	SLUDGE TREATMENT DEWATERING SYSTEM 2	PLC Fault	CV6-021	PLC-001	1	4	22	DI								PLC6-021	
1	SLUDGE TREATMENT DEWATERING SYSTEM 2	Common Alarm	CV6-021	PLC-001	1	4	23	DI								PLC6-021	
1	SLUDGE TREATMENT DEWATERING SYSTEM 2	Sludge Pump Run Cmd	CV6-021	PLC-001	1	4	24	DI								PLC6-021	
1	SLUDGE TREATMENT DEWATERING SYSTEM 2	Polymer Pump Run Cmd	CV6-021	PLC-001	1	4	25	DI								PLC6-021	
1	CENTRATE CENTRIFUGE 1 HIGH HIGH LEVEL	Signal	LSHH6-012	PLC-001	1	4	26	DI							DCNC		
1	CENTRATE CENTRIFUGE 2 HIGH HIGH LEVEL	Signal	LSHH6-022	PLC-001	1	4	27	DI							DCNC		
1	CENTRATE CENTRIFUGE 1 LOW LOW LEVEL	Signal	LSLL6-011	PLC-001	1	4	28	DI							DCNC		
1	CENTRATE CENTRIFUGE 2 LOW LOW LEVEL	Signal	LSLL6-021	PLC-001	1	4	29	DI							DCNC		
1	CAUSTIC SODE PREPARATION METERING PUMP 1	Auto	P9-541	PLC-001	1	4	30	DI									
1	CAUSTIC SODE PREPARATION METERING PUMP 1	Running	P9-541	PLC-001	1	4	31	DI									
1	CAUSTIC SODE PREPARATION METERING PUMP 2	Auto	P9-542	PLC-001	1	4	32	DI									
	BMXDDI3202K			PLC-001	1	5		DI									
1	CAUSTIC SODE PREPARATION METERING PUMP 2	Running	P9-542	PLC-001	1	5	1	DI									
1	CAUSTIC SODE PREPARATION METERING PUMP 3	Auto	P9-543	PLC-001	1	5	2	DI									
1	CAUSTIC SODE PREPARATION METERING PUMP 3	Running	P9-543	PLC-001	1	5	3	DI									
1	P9-541 HIGH TEMPERATURE	Signal	TSH9-541	PLC-001	1	5	4	DI							DCNC	JB9-540	
1	P9-542 HIGH TEMPERATURE	Signal	TSH9-542	PLC-001	1	5	5	DI							DCNC	JB9-540	
1	P9-543 HIGH TEMPERATURE	Signal	TSH9-543	PLC-001	1	5	6	DI							DCNC	JB9-540	
1	COAGULANT PREPARATION LOW POWDER LEVEL	Signal	LSL9-513	PLC-001	1	5	7	DI							DCNC		
1	COAGULANT WINTER METERING PUMP 1	Auto	P9-511	PLC-001	1	5	8	DI									
1	COAGULANT WINTER METERING PUMP 1	Running	P9-511	PLC-001	1	5	9	DI									
1	COAGULANT WINTER METERING PUMP 2	Auto	P9-512	PLC-001	1	5	10	DI									
1	COAGULANT WINTER METERING PUMP 2	Running	P9-512	PLC-001	1	5	11	DI									
1	COAGULANT WINTER METERING PUMP 3	Auto	P9-513	PLC-001	1	5	12	DI									
1	COAGULANT WINTER METERING PUMP 3	Running	P9-513	PLC-001	1	5	13	DI									
1	P9-511 HIGH TEMPERATURE	Signal	TSH9-511	PLC-001	1	5	14	DI							DCNC	JB9-510	
1	P9-512 HIGH TEMPERATURE	Signal	TSH9-512	PLC-001	1	5	15	DI							DCNC	JB9-510	
1	P9-513 HIGH TEMPERATURE	Signal	TSH9-513	PLC-001	1	5	16	DI							DCNC	JB9-510	
1	SULFURIC ACID TANK LOW LEVEL	Signal	LSL9-531	PLC-001	1	5	17	DI							DCNC		
1	ANIONIC POLYMER PREPARATION FAULT	Signal	JB9-521	PLC-001	1	5	18	DI							DCNC		

AEM Amaruq

5000218009_IOLS_0001_AU_VWT

Liste des entrées et sorties

Project number 5000218009

Rev	By	Chckd	App	Revision date	Description
1	XM	AS	XM	2018-05-22	INITIAL RELEASE

Revision	Description	Signal description	Identification	Control pannel	Rack	Slot	IO number	Type	Voltage	Power	Starter	Selector	Disconnect	Relay	Contact type	Junction box	Comments
1	ANIONIC POLYMER WINTER METERING PUMP 1	Auto	P9-521	PLC-001	1	5	19	DI									
1	ANIONIC POLYMER WINTER METERING PUMP 1	Running	P9-521	PLC-001	1	5	20	DI									
1	ANIONIC POLYMER WINTER METERING PUMP 2	Auto	P9-522	PLC-001	1	5	21	DI									
1	ANIONIC POLYMER WINTER METERING PUMP 2	Running	P9-522	PLC-001	1	5	22	DI									
1	ANIONIC POLYMER WINTER METERING PUMP 3	Auto	P9-523	PLC-001	1	5	23	DI									
1	ANIONIC POLYMER WINTER METERING PUMP 3	Running	P9-523	PLC-001	1	5	24	DI									
1	P9-521 HIGH TEMPERATURE	Signal	TSH9-521	PLC-001	1	5	25	DI							DCNC	JB9-520	
1	P9-522 HIGH TEMPERATURE	Signal	TSH9-522	PLC-001	1	5	26	DI							DCNC	JB9-520	
1	P9-523 HIGH TEMPERATURE	Signal	TSH9-523	PLC-001	1	5	27	DI							DCNC	JB9-520	
1	P9-524 HIGH TEMPERATURE	Signal	TSH9-524	PLC-001	1	5	28	DI							DCNC		
1	P9-525 HIGH TEMPERATURE	Signal	TSH9-525	PLC-001	1	5	29	DI							DCNC		
1	P9-526 HIGH TEMPERATURE	Signal	TSH9-526	PLC-001	1	5	30	DI							DCNC		
1	KMnO4 PREPARATION LOW POWDER LEVEL	Signal	LSL9-591	PLC-001	1	5	31	DI							DCNC		
1	KMnO4 PREPARATION LOW WATER PRESSURE	Signal	PSL15-041	PLC-001	1	5	32	DI							DCNC		
	BMXDDI3202K			PLC-001	1	6		DI									
1	KMnO4 PREPARATION COVER CONTACT	Signal	ZS9-591	PLC-001	1	6	1	DI							DCNC		
1	P9-621 HIGH TEMPERATURE	Signal	TSH9-621	PLC-001	1	6	2	DI							DCNC		
1	P9-622 HIGH TEMPERATURE	Signal	TSH9-622	PLC-001	1	6	3	DI							DCNC		
1	P9-623 HIGH TEMPERATURE	Signal	TSH9-623	PLC-001	1	6	4	DI							DCNC		
1	SERVICE WATER HIGH HIGH LEVEL	Signal	LSHH15-002	PLC-001	1	6	5	DI							DCNC		
1	SERVICE WATER LOW LOW LEVEL	Signal	LSLL15-002	PLC-001	1	6	6	DI							DCNC		
1	SERVICE WATER FILTER 1	Signal	YS15-001	PLC-001	1	6	7	DI							DCNC		
1	SERVICE WATER FILTER 2	Signal	YS15-002	PLC-001	1	6	8	DI							DCNC		
1	SERVICE WATER FILTER 3	Signal	YS15-003	PLC-001	1	6	9	DI							DCNC		
				PLC-001	1	6	10	DI									
				PLC-001	1	6	11	DI									
				PLC-001	1	6	12	DI									
				PLC-001	1	6	13	DI									
				PLC-001	1	6	14	DI									
				PLC-001	1	6	15	DI									
				PLC-001	1	6	16	DI									
				PLC-001	1	6	17	DI									
				PLC-001	1	6	18	DI									
				PLC-001	1	6	19	DI									
				PLC-001	1	6	20	DI									
				PLC-001	1	6	21	DI									
				PLC-001	1	6	22	DI									
				PLC-001	1	6	23	DI									
				PLC-001	1	6	24	DI									
				PLC-001	1	6	25	DI									
				PLC-001	1	6	26	DI									
				PLC-001	1	6	27	DI									
				PLC-001	1	6	28	DI									
				PLC-001	1	6	29	DI									
				PLC-001	1	6	30	DI									
				PLC-001	1	6	31	DI									
				PLC-001	1	6	32	DI									
	BMXDDO3202K			PLC-001	1	7		DO									
1	SLUDGE TREATMENT DEWATERING SYSTEM 1	Sludge Pump Remote	CV6-011	PLC-001	1	7	1	DO								PLC6-011	
1	SLUDGE TREATMENT DEWATERING SYSTEM 1	Sludge Pump Running	CV6-011	PLC-001	1	7	2	DO								PLC6-011	
1	SLUDGE TREATMENT DEWATERING SYSTEM 1	Sludge Pump Fault	CV6-011	PLC-001	1	7	3	DO								PLC6-011	
1	SLUDGE TREATMENT DEWATERING SYSTEM 1	Polymer Pump Remote	CV6-011	PLC-001	1	7	4	DO								PLC6-011	
1	SLUDGE TREATMENT DEWATERING SYSTEM 1	Polymer Pump Running	CV6-011	PLC-001	1	7	5	DO								PLC6-011	
1	SLUDGE TREATMENT DEWATERING SYSTEM 1	Polymer Pump Fault	CV6-011	PLC-001	1	7	6	DO								PLC6-011	
1	SLUDGE TREATMENT DEWATERING SYSTEM 2	Sludge Pump Remote	CV6-021	PLC-001	1	7	7	DO								PLC6-021	
1	SLUDGE TREATMENT DEWATERING SYSTEM 2	Sludge Pump Running	CV6-021	PLC-001	1	7	8	DO								PLC6-021	
1	SLUDGE TREATMENT DEWATERING SYSTEM 2	Sludge Pump Fault	CV6-021	PLC-001	1	7	9	DO								PLC6-021	

AEM Amaruq

5000218009_IOLS_0001_AU_VWT

Liste des entrées et sorties

Project number 5000218009

Rev	By	Chckd	App	Revision date	Description
1	XM	AS	XM	2018-05-22	INITIAL RELEASE

Revision	Description	Signal description	Identification	Control pannel	Rack	Slot	IO number	Type	Voltage	Power	Starter	Selector	Disconnect	Relay	Contact type	Junction box	Comments
1	SLUDGE TREATMENT DEWATERING SYSTEM 2	Polymer Pump Remote	CV6-021	PLC-001	1	7	10	DO								PLC6-021	
1	SLUDGE TREATMENT DEWATERING SYSTEM 2	Polymer Pump Running	CV6-021	PLC-001	1	7	11	DO								PLC6-021	
1	SLUDGE TREATMENT DEWATERING SYSTEM 2	Polymer Pump Fault	CV6-021	PLC-001	1	7	12	DO								PLC6-021	
1	CAUSTIC SODE PREPARATION METERING PUMP 1	Cmd	P9-541	PLC-001	1	7	13	DO									
1	CAUSTIC SODE PREPARATION METERING PUMP 2	Cmd	P9-542	PLC-001	1	7	14	DO									
1	CAUSTIC SODE PREPARATION METERING PUMP 3	Cmd	P9-543	PLC-001	1	7	15	DO									
1	COAGULANT PREPARATION SERVICE WATER VALVE	Cmd	V9-518	PLC-001	1	7	16	DO	120V					1			
1	COAGULANT WINTER METERING PUMP 1	Cmd	P9-511	PLC-001	1	7	17	DO									
1	COAGULANT WINTER METERING PUMP 2	Cmd	P9-512	PLC-001	1	7	18	DO									
1	COAGULANT WINTER METERING PUMP 3	Cmd	P9-513	PLC-001	1	7	19	DO									
1	ANIONIC POLYMER WINTER METERING PUMP 1	Cmd	P9-521	PLC-001	1	7	20	DO									
1	ANIONIC POLYMER WINTER METERING PUMP 2	Cmd	P9-522	PLC-001	1	7	21	DO									
1	ANIONIC POLYMER WINTER METERING PUMP 3	Cmd	P9-523	PLC-001	1	7	22	DO									
1	ANIONIC POLYMER WINTER SERVICE WATER VALVE	Cmd	V9-521	PLC-001	1	7	23	DO	120V					1		JB9-520	
1	ANIONIC POLYMER WINTER SERVCIE WATER VALVE	Cmd	V9-522	PLC-001	1	7	24	DO	120V					1		JB9-520	
1	ANIONIC POLYMER SUMMER SERVICE WATER VALVE	Cmd	SV15-011	PLC-001	1	7	25	DO	120V					1			
1	ANIONIC POLYMER SUMMER SERVCIE WATER VALVE	Cmd	SV15-021	PLC-001	1	7	26	DO	120V					1			
1	KMnO4 PREPARATION SCREW DOOR VALVE	Cmd	SV15-041	PLC-001	1	7	27	DO	120V					1			
1	KMnO4 PREPARATION WATER VALVE	Cmd	SV15-042	PLC-001	1	7	28	DO	120V					1			
1	KMnO4 PREPARATION COMPRESSED AIR VALVE	Cmd	SV9-591	PLC-001	1	7	29	DO	120V					1			
1	KMnO4 PREPARATION VACUUM	Cmd	VCM9-591	PLC-001	1	7	30	DO	120v	10A		SFP		1			
1	KMnO4 PREPARATION TRANSFER VALVE		T9-591-V0002	PLC-001	1	7	31	DO	120V			SFP		1			motorized valve 120V OPEN, 120V CLOSE
1				PLC-001	1	7	32	DO									
	BMXDDO3202K			PLC-001	1	8		DO									
1	SERVICE WATER FILTER 1	Cmd	XS15-001	PLC-001	1	8	1	DO									
1	SERVICE WATER FILTER 2	Cmd	XS15-002	PLC-001	1	8	2	DO									
1	SERVICE WATER FILTER 3	Cmd	XS15-003	PLC-001	1	8	3	DO									
				PLC-001	1	8	4	DO									
				PLC-001	1	8	5	DO									
				PLC-001	1	8	6	DO									
				PLC-001	1	8	7	DO									
				PLC-001	1	8	8	DO									
				PLC-001	1	8	9	DO									
				PLC-001	1	8	10	DO									
				PLC-001	1	8	11	DO									
				PLC-001	1	8	12	DO									
				PLC-001	1	8	13	DO									
				PLC-001	1	8	14	DO									
				PLC-001	1	8	15	DO									
				PLC-001	1	8	16	DO									
				PLC-001	1	8	17	DO									
				PLC-001	1	8	18	DO									
				PLC-001	1	8	19	DO									
				PLC-001	1	8	20	DO									
				PLC-001	1	8	21	DO									
				PLC-001	1	8	22	DO									
				PLC-001	1	8	23	DO									
				PLC-001	1	8	24	DO									
				PLC-001	1	8	25	DO									
				PLC-001	1	8	26	DO									
				PLC-001	1	8	27	DO									
				PLC-001	1	8	28	DO									
				PLC-001	1	8	29	DO									
				PLC-001	1	8	30	DO									
				PLC-001	1	8	31	DO									
				PLC-001	1	8	32	DO									
	BMXAMI0800			PLC-001	1	9		AI									

AEM Amaruq

5000218009_IOLS_0001_AU_VWT

Liste des entrées et sorties

Project number 5000218009

Rev	By	Chckd	App	Revision date	Description
1	XM	AS	XM	2018-05-22	INITIAL RELEASE

Revision	Description	Signal description	Identification	Control pannel	Rack	Slot	IO number	Type	Voltage	Power	Starter	Selector	Disconnect	Relay	Contact type	Junction box	Comments
1	METAL PRECIPITATION REACTOR ORP	Signal	AIT1-011	PLC-001	1	9	1	AI	120V	100 W							
1	METAL PRECIPITATION REACTOR pH	Signal	AIT1-012	PLC-001	1	9	2	AI	24 VDC Loop								
1	RAW WATER TURBIDITY	Signal	AIT1-013	PLC-001	1	9	3	AI	120V	100 W							
1	METAL PRECIPITATION REACTOR ORP	Signal	AIT1-014	PLC-001	1	9	4	AI	120V	100 W							
1	METAL PRECIPITATION REACTOR TURBIDITY	Signal	AIT1-015	PLC-001	1	9	5	AI	120V	100 W							
1	RAW WATER FLOW	Signal	FIT1-011	PLC-001	1	9	6	AI	120V	100 W							
1	METAL PRECIPITATION REACTOR TEMPERATURE	Signal	TT15-001	PLC-001	1	9	7	AI	120V	100 W							
1				PLC-001	1	9	8	AI									
	BMXAMI0800			PLC-001	1	10		AI									
1	ACTIFLO 1 pH	Signal	AIT2-011	PLC-001	1	10	1	AI	120V	100 W						JB2-011	
1	ACTIFLO 1 TSS	Signal	AIT2-012	PLC-001	1	10	2	AI	24 VDC Loop							JB2-011	
1	ACTIFLO 1 FLOW	Signal	FIT2-011	PLC-001	1	10	3	AI	120V	100 W						JB2-011	
1	ACTIFLO 2 pH	Signal	AIT2-021	PLC-001	1	10	4	AI	120V	100 W						JB2-021	
1	ACTIFLO 2 TSS	Signal	AIT2-022	PLC-001	1	10	5	AI	24 VDC Loop							JB2-021	
1	ACTIFLO 2 FLOW	Signal	FIT3-011	PLC-001	1	10	6	AI	120V	100 W						JB2-021	
1	SLUDGE TANK FLOW	Signal	FIT4-011	PLC-001	1	10	7	AI	120V	100 W							
1	SLUDGE TANK TSS	Signal	AIT4-011	PLC-001	1	10	8	AI	120V	100 W							
	BMXAMI0800			PLC-001	1	11		AI	120V	100 W							
1	SLUDGE STORAGE TANK FLOW	Signal	FIT5-011	PLC-001	1	11	1	AI	120V	100 W							
1	SLUDGE STORAGE TANK FLOW	Signal	FIT5-012	PLC-001	1	11	2	AI	120V	100 W							
1	SLUDGE STORAGE TANK LEVEL	Signal	LIT5-013	PLC-001	1	11	3	AI	24 VDC Loop								
1	SLUDGE STORAGE TANK LEVEL	Signal	LIT5-023	PLC-001	1	11	4	AI	24 VDC Loop								
1	SLUDGE TREATMENT DEWATERING SYSTEM 1	Sludge Pump Speed Cmd	CV6-011	PLC-001	1	11	5	AI								PLC6-011	
1	SLUDGE TREATMENT DEWATERING SYSTEM 1	Polymer Pump Speed Cmd	CV6-011	PLC-001	1	11	6	AI								PLC6-011	
1	SLUDGE TREATMENT DEWATERING SYSTEM 2	Sludge Pump Speed Cmd	CV6-021	PLC-001	1	11	7	AI								PLC6-021	
1	SLUDGE TREATMENT DEWATERING SYSTEM 2	Polymer Pump Speed Cmd	CV6-021	PLC-001	1	11	8	AI								PLC6-021	
	BMEXBP1200			PLC-001	2	0		Rack									
	BMXAMI0800			PLC-001	2	0		AI									
1	COAGULANT PREPARATION MATURATION TANK LEVEL	Signal	LIT9-511	PLC-001	2	0	1	AI	24 VDC Loop								
1	COAGULANT PREPARATION DOSING TANK LEVEL	Signal	LIT9-512	PLC-001	2	0	2	AI	24 VDC Loop								
1	KMnO4 PREPARATION MATURATION TANK LEVEL	Signal	LT9-591	PLC-001	2	0	3	AI	24 VDC Loop								
1	KMnO4 PREPARATION STORAGE TANK LEVEL	Signal	LT9-592	PLC-001	2	0	4	AI	24 VDC Loop								
				PLC-001	2	0	5	AI									
				PLC-001	2	0	6	AI									
				PLC-001	2	0	7	AI									
				PLC-001	2	0	8	AI									
	BMXAMI0800			PLC-001	2	1		AI									
1	SERVICE WATER PRESSURE	Signal	PIT15-004	PLC-001	2	1	1	AI	24 VDC Loop								
1	SERVICE WATER TEMPERATURE	Signal	TT15-002	PLC-001	2	1	2	AI	24 VDC Loop								
1	SERVICE WATER FLOW	Signal	FIT15-001	PLC-001	2	1	3	AI	120V	100 W							
1	SERVICE WATER LEVEL	Signal	LIT15-002	PLC-001	2	1	4	AI	24 VDC Loop								
1	SERVICE WATER PRESSURE	Signal	PIT15-001	PLC-001	2	1	5	AI	24 VDC Loop								
1	SERVICE WATER PRESSURE	Signal	PIT15-002	PLC-001	2	1	6	AI	24 VDC Loop								
1	SERVICE WATER PRESSURE	Signal	PIT15-003	PLC-001	2	1	7	AI	24 VDC Loop								
				PLC-001	2	1	8	AI									
	BMXAMI0800			PLC-001	2	2		AI									
				PLC-001	2	2	1	AI									
				PLC-001	2	2	2	AI									
				PLC-001	2	2	3	AI									
				PLC-001	2	2	4	AI									
				PLC-001	2	2	5	AI									
				PLC-001	2	2	6	AI									
				PLC-001	2	2	7	AI									
				PLC-001	2	2	8	AI									
	BMXAMO0802			PLC-001	2	3		AO									
1	RAW WATER FLOW CONTROL VALVE	Position Cmd	FV1-012	PLC-001	2	3	1	AO	24 VDC								
1	ACTIFLO 1 FLOW CONTROL VALVE	Position Cmd	FCV2-011	PLC-001	2	3	2	AO	24 VDC							JB2-011	

VEOLIA

AEM Amaruq

5000218009_IOLS_0001_AU_VWT

Liste des entrées et sorties

Project number 5000218009

Rev	By	Chckd	App	Revision date	Description
1	XM	AS	XM	2018-05-22	INITIAL RELEASE

Revision	Description	Signal description	Identification	Control pannel	Rack	Slot	IO number	Type	Voltage	Power	Starter	Selector	Disconnect	Relay	Contact type	Junction box	Comments
1	ACTIFLO 2 FLOW CONTROL VALVE	Position Cmd	FCV3-011	PLC-001	2	3	3	AO	24 VDC							JB2-021	
1	SLUDGE TANK PINCH VALVE	Position Cmd	FCV4-011	PLC-001	2	3	4	AO	24 VDC								
1	SLUDGE TREATMENT DEWATERING SYSTEM 1	Sludge Pump Speed Feedback	CV6-011	PLC-001	2	3	5	AO								PLC6-011	
1	SLUDGE TREATMENT DEWATERING SYSTEM 1	Polymer Pump Speed Feedback	CV6-011	PLC-001	2	3	6	AO								PLC6-011	
1	SLUDGE TREATMENT DEWATERING SYSTEM 2	Sludge Pump Speed Feedback	CV6-021	PLC-001	2	3	7	AO								PLC6-021	
1	SLUDGE TREATMENT DEWATERING SYSTEM 2	Polymer Pump Speed Feedback	CV6-021	PLC-001	2	3	8	AO								PLC6-021	
	BMXAMO0802			PLC-001	2	4		AO									
1	CAUSTIC SODE PREPARATION METERING PUMP 1	Speed Cmd	P9-541	PLC-001	2	4	1	AO									
1	CAUSTIC SODE PREPARATION METERING PUMP 2	Speed Cmd	P9-542	PLC-001	2	4	2	AO									
1	CAUSTIC SODE PREPARATION METERING PUMP 3	Speed Cmd	P9-543	PLC-001	2	4	3	AO									
1	COAGULANT WINTER METERING PUMP 1	Speed Cmd	P9-511	PLC-001	2	4	4	AO									
1	COAGULANT WINTER METERING PUMP 2	Speed Cmd	P9-512	PLC-001	2	4	5	AO									
1	COAGULANT WINTER METERING PUMP 3	Speed Cmd	P9-513	PLC-001	2	4	6	AO									
1	SULFURIC ACID METERING PUMP 1	Speed Cmd	P9-531	PLC-001	2	4	7	AO								JB9-531	
1	SULFURIC ACID METERING PUMP 2	Speed Cmd	P9-532	PLC-001	2	4	8	AO								JB9-531	
	BMXAMO0802			PLC-001	2	5		AO									
1	ANIONIC POLYMER WINTER METERING PUMP 1	Speed Cmd	P9-521	PLC-001	2	5	1	AO									
1	ANIONIC POLYMER WINTER METERING PUMP 2	Speed Cmd	P9-522	PLC-001	2	5	2	AO									
1	ANIONIC POLYMER WINTER METERING PUMP 3	Speed Cmd	P9-523	PLC-001	2	5	3	AO									
1	SERVICE WATER FLOW CONTROL VALVE	Position Cmd	FCV15-001	PLC-001	2	5	4	AO	24 VDC								
1	SERVICE WATER TEMPERATURE CONTROL VALVE	Position Cmd	TCV15-002	PLC-001	2	5	5	AO	24 VDC								
				PLC-001	2	5	6	AO									
				PLC-001	2	5	7	AO									
				PLC-001	2	5	8	AO									
	BMXAMO0802			PLC-001	2	6		AO									
				PLC-001	2	6	1	AO									
				PLC-001	2	6	2	AO									
				PLC-001	2	6	3	AO									
				PLC-001	2	6	4	AO									
				PLC-001	2	6	5	AO									
				PLC-001	2	6	6	AO									
				PLC-001	2	6	7	AO									
				PLC-001	2	6	8	AO									
	Spare			PLC-001	2	7											
	Spare			PLC-001	2	8											
	Spare			PLC-001	2	9											
	Spare			PLC-001	2	10											
	Spare			PLC-001	2	11											

NOTE

1- Client standard
2- Provide POWER ON pilot light
3- Provide all internal Ethernet cables
4- Observe the minimum clearance required by manufacturers
5- Provide 120 Vac outlet for laptop connection
6- Provide internal lighting
7- Provide control panel identification on front door

LEFT BLANK

5 – ELECTRICITY AND CONTROL

5.5 – MOTOR LIST

LEFT BLANK

Motor List

Project : AMARUQ
Project # 5000218009
By : GP
Checked
Appvd

Revision 2
Date 2018-05-10
Par BB

Rev	Description	Process Block	Tag	Existing / New / Future	Service	Voltage	Fed by	HP	Required Power	VFD (Y/N)	MCC DOL / MCC VFD / MCC Feeder	FLA	P&ID	HOA	IP
	PANEL	Main Control Panel	PLC-001	New	duty (year)	120/1/60	Distribution Board	xx AMPS		N/A	N/A	TBC	Not shown	N/A	N/A
	MIXER	Unit 0101 - RX75-3 Mixer	M1-011	New	duty (year)	575/3/60	MCC	5 HP		N	DOL	TBC	PI001 SHEET 01	MCC	
	MIXER	Unit 0101 - RX75-3 Mixer	M1-012	New	duty (year)	575/3/60	MCC	5 HP		N	DOL	TBC	PI001 SHEET 01	MCC	
	MIXER	Unit 0101 - RX75-3 Mixer	M1-013	New	duty (year)	575/3/60	MCC	5 HP		N	DOL	TBC	PI001 SHEET 01	MCC	
	MIXER	Unit 0201 - Coagulation Mixer	M2-011	Existing	duty (year)	575/3/60	MCC			N	DOL	TBC	PI001 SHEET 02	MCC	
	MIXER	Unit 0201 - Injection Mixer	M2-012	Existing	duty (year)	575/3/60	MCC			N	DOL	TBC	PI001 SHEET 02	MCC	
	MIXER	Unit 0201 - Maturation Mixer	M2-013	Existing	duty (year)	575/3/60	MCC			Y	VFD	TBC	PI001 SHEET 02	MCC	
	SCRAPER	Unit 0201 - Scraper	S2-011	Existing	duty (year)	575/3/60	MCC			N	DOL	TBC	PI001 SHEET 02	MCC	
	PUMP	Actiflo Recirculation Pump	P2-011	New	duty (summer)	575/3/60	MCC	15 HP		N	DOL	TBC	PI001 SHEET 02	Local	
	PUMP	Actiflo Recirculation Pump	P2-012	New	duty (summer)	575/3/60	MCC	15 HP		N	DOL	TBC	PI001 SHEET 02	Local	
	PUMP	Clarified Water Pump	P2-013	Existing	duty (year)	575/3/60	MCC			N	DOL	TBC	PI001 SHEET 02	MCC	
	PUMP	Multiflo Extraction Pump	P2-014	New	duty (winter)	575/3/60	MCC	10 HP		N	DOL	TBC	PI001 SHEET 02	Local	
	MIXER	Unit 0301 - Coagulation mixer	M2-021	Existing	duty (year)	575/3/60	MCC			N	DOL	TBC	PI001 SHEET 03	MCC	
	MIXER	Unit 0301 - Injection mixer	M2-022	Existing	duty (year)	575/3/60	MCC			N	DOL	TBC	PI001 SHEET 03	MCC	
	MIXER	Unit 0301 - Maturation mixer	M2-023	Existing	duty (year)	575/3/60	MCC			Y	VFD	TBC	PI001 SHEET 03	MCC	
	SCRAPER	Unit 0301 - Scraper	S2-021	Existing	duty (year)	575/3/60	MCC			N	DOL	TBC	PI001 SHEET 03	MCC	
	PUMP	Actiflo Recirculation Pump	P2-021	New	duty (summer)	575/3/60	MCC	15 HP		N	DOL	TBC	PI001 SHEET 03	Local	
	PUMP	Actiflo Recirculation Pump	P2-022	New	duty (summer)	575/3/60	MCC	15 HP		N	DOL	TBC	PI001 SHEET 03	Local	
	PUMP	Multiflo Extraction Pump	P2-023	New	duty (winter)	575/3/60	MCC	10 HP		N	DOL	TBC	PI001 SHEET 03	Local	
	PUMP	Splitter Box Sludge Extraction Pump	P4-011	Existing	duty (year)	575/3/60	MCC			N	DOL	TBC	PI001 SHEET 04	MCC	
	PUMP	Splitter Box Sludge Extraction Pump	P4-021	Existing	standby (year)	575/3/60	MCC			N	DOL	TBC	PI001 SHEET 04	MCC	
	MIXER	Unit 0501 - RX75-2 Mixer	M5-011	New	duty (year)	575/3/60	MCC	5 HP		N	DOL	TBC	PI001 SHEET 05	MCC	
	MIXER	Unit 0501 - RX75-2 Mixer	M5-012	New	duty (year)	575/3/60	MCC	5 HP		N	DOL	TBC	PI001 SHEET 05	MCC	
	PUMP	Centrifuge Feed Pump	P5-011	New	duty (year)	575/3/60	MCC	7.5 HP		Y	VFD	TBC	PI001 SHEET 05	MCC (VFD Keypad)	
	PUMP	Centrifuge Feed Pump	P5-012	New	duty (year)	575/3/60	MCC	7.5 HP		Y	VFD	TBC	PI001 SHEET 05	MCC (VFD Keypad)	
	PUMP (FUTURE)	Supernatant Pump (FUTURE)	P5-013	Future	duty (year)	575/3/60	MCC	7.5 HP		Y	VFD	TBC	PI001 SHEET 05	MCC (VFD Keypad)	
	CENTRIFUGE #1 - PANEL	Centrifuge Control Panel	PLC6-011	New	duty (year)	575/3/60	MCC	60 AMPS		N/A	Feeder	TBC	PI001 SHEET 06	N/A	N/A
	CENTRIFUGE #2 - PANEL	Centrifuge Control Panel	PLC6-021	New	duty (year)	575/3/60	MCC	60 AMPS		N/A	Feeder	TBC	PI001 SHEET 06	N/A	N/A
	CENTRIFUGE #3 - PANEL (FUTURE)	Centrifuge Control Panel (FUTURE)	PLC6-031	Future	duty (year)	575/3/60	MCC	60 AMPS		N/A	Feeder	TBC	Not shown	N/A	N/A
	CENTRIFUGE #1 - SUMP PUMP	Centrifuge Pit Sump Pump	P6-011	New	duty (year)	575/3/60	MCC	1.5 HP		N	DOL	TBC	PI001 SHEET 06	MCC	
	CENTRIFUGE #2 - SUMP PUMP	Centrifuge Pit Sump Pump	P6-021	New	duty (year)	575/3/60	MCC	1.5 HP		N	DOL	TBC	PI001 SHEET 06	MCC	
	PUMP	Treated Water Lifting Pump	PX-0XX	Existing	duty (year)	575/3/60	MCC					TBC	PI001 SHEET 07	MCC	
	PUMP	Treated Water Lifting Pump	PX-0XX	Existing	duty (year)	575/3/60	MCC					TBC	PI001 SHEET 07	MCC	
	MIXER	Caustic Soda Preparation Mixer	M9-541	Existing	duty (year)	575/3/60	MCC			N	DOL	TBC	PI001 SHEET 08	MCC	
	JUNCTION BOX	Caustic Soda TSE feed, HOA and reset button	JB9-540	Existing	duty (year)	120/1/60	PLC-001			N/A	N/A	TBC	PI001 SHEET 18	N/A	N/A
	PUMP	Caustic Soda Dosing Pump	P9-541	Existing	2 duty (year) - 1 stand by	575/3/60	MCC			Y (Local)	Feeder	TBC	PI001 SHEET 08	Local (On Local JB)	N/A
	PUMP	Caustic Soda Dosing Pump	P9-542	Existing		575/3/60	MCC			Y (Local)	Feeder	TBC	PI001 SHEET 08	Local (On Local JB)	N/A
	PUMP	Caustic Soda Dosing Pump	P9-543	Existing		575/3/60	MCC			Y (Local)	Feeder	TBC	PI001 SHEET 08	Local (On Local JB)	N/A
	HOIST	Coagulant Hoist	M09-512	Existing	duty (year)	575/3/60	MCC			N/A	Feeder	TBC	PI001 SHEET 09	Local	N/A
	TROLLEY	Coagulant Trolley	M09-511	Existing	duty (year)	575/3/60	MCC			N/A	Feeder	TBC	PI001 SHEET 09	Local	N/A
	BLOWER	Coagulant Preparation Blower	B9-513	Existing	duty (year)	575/3/60	MCC			N	DOL	TBC	PI001 SHEET 09	MCC	
	VOLUMETRIC FEEDER	Coagulant Preparation Volumetric Feeder	DF9-511	Existing	duty (year)	575/3/60	MCC			Y	VFD	TBC	PI001 SHEET 09	MCC (VFD Keypad)	
	MIXER	Coagulant Preparation Mixer	M9-511	Existing	duty (year)	575/3/60	MCC			N	DOL	TBC	PI001 SHEET 09	MCC	
	PUMP	Coagulant Preparation Transfer Pump	P9-515	Existing	duty (year)	575/3/60	MCC			N	DOL	TBC	PI001 SHEET 09	MCC	
	PUMP	Skid 1001 - Coagulant Metering Pump	P9-514	New	duty (summer) - 1 duty/1 stand by	575/3/60	MCC	1 HP		Y (Local)	Feeder	TBC	PI001 SHEET 10	Local (VFD Keypad)	N/A
	PUMP	Skid 1001 - Coagulant Metering Pump	P9-513	New		575/3/60	MCC	1 HP		Y (Local)	Feeder	TBC	PI001 SHEET 10	Local (VFD Keypad)	N/A
	JUNCTION BOX	Coagulant TSE feed, HOA and reset button	JB9-510	Existing	duty (winter)	120/1/60	PLC-001			N/A	N/A	TBC	PI001 SHEET 11	N/A	N/A
	PUMP	Coagulant Dosing Pump	P9-511	Existing	2 duty (winter) - 1 stand by	575/3/60	MCC			Y (Local)	Feeder	TBC	PI001 SHEET 11	Local (On Local JB)	N/A
	PUMP	Coagulant Dosing Pump	P9-512	Existing		575/3/60	MCC			Y (Local)	Feeder	TBC	PI001 SHEET 11	Local (On Local JB)	N/A
	PUMP	Coagulant Dosing Pump	P9-513	Existing		575/3/60	MCC			Y (Local)	Feeder	TBC	PI001 SHEET 11	Local (On Local JB)	N/A
	PUMP	Skid 1201 - H2SO4 metering pump	P9-531	New	duty (year) - 2 duty/1 stand by	120/1/60	Distribution Board	1 Amp		N/A	N/A	TBC	PI001 SHEET 12	Local (Pump Keypad)	N/A
	PUMP	Skid 1201 - H2SO4 metering pump	P9-532	New		120/1/60	Distribution Board	1 Amp		N/A	N/A	TBC	PI001 SHEET 12	Local (Pump Keypad)	N/A
	PANEL	Anionic Polymer Preparation System	JB9-521	Existing	duty (winter)	575/3/60	MCC			N/A	Feeder	TBC	PI001 SHEET 13	N/A	N/A
	VACUM CONVEYOR	Anionic Polymer Vacum Conveyor	M09-521	Existing	duty (winter)	575/3/60	JB9-521			N	N/A	TBC	PI001 SHEET 13	On JB9-521	N/A
	VOLUMETRIC FEEDER	Anionic Polymer Volumetric Feeder	DF9-521	Existing	duty (winter)	575/3/60	JB9-521			N	N/A	TBC	PI001 SHEET 13	On JB9-521	N/A
	MIXER	Anionic Polymer Tank Mixer	M9-521	Existing	duty (winter)	575/3/60	JB9-521			N	N/A	TBC	PI001 SHEET 13	On JB9-521	N/A
	JUNCTION BOX	Anionic Polymer TSE feed, HOA and reset button	JB9-520	Existing	duty (winter)	120/1/60	PLC-001			N/A	N/A	TBC	PI001 SHEET 14	N/A	N/A
	PUMP	Anionic polymer metering pump	P9-521	Existing	duty (winter) - 2 duty/1 stand by	575/3/60	MCC			Y (Local)	Feeder	TBC	PI001 SHEET 14	Local (On Local JB)	N/A
	PUMP	Anionic polymer metering pump	P9-522	Existing		575/3/60	MCC			Y (Local)	Feeder	TBC	PI001 SHEET 14	Local (On Local JB)	N/A
	PUMP	Anionic polymer metering pump	P9-523	Existing		575/3/60	MCC			Y (Local)	Feeder	TBC	PI001 SHEET 14	Local (On Local JB)	N/A
	JUNCTION BOX	Skid 1401 - TSE feed and reset buttons	JB9-524	New	duty (summer)	120/1/60	PLC-001	-		N/A	N/A	TBC	PI001 SHEET 15	N/A	N/A
	PUMP	Skid 1401 - Anionic polymer metering pump	P9-524	New	duty (summer) - 2 duty/1 stand by	575/3/60	MCC	2 HP		Y (Local)	Feeder	TBC	PI001 SHEET 15	Local (VFD Keypad)	N/A
	PUMP	Skid 1401 - Anionic polymer metering pump	P9-525	New		575/3/60	MCC	2 HP		Y (Local)	Feeder	TBC	PI001 SHEET 15	Local (VFD Keypad)	N/A
	PUMP	Skid 1401 - Anionic polymer metering pump	P9-526	New		575/3/60	MCC	2 HP		Y (Local)	Feeder	TBC	PI001 SHEET 15	Local (VFD Keypad)	N/A
	VACUM CONVEYOR	KMnO4 Vacum Conveyor Motor	VAC9-591	New	duty (year)	575/3/60	MCC	2.5 HP		N	DOL	TBC	PI001 SHEET 16	MCC	
	AGITATOR	KMnO4 Feeder Hopper Agitator	FMM9-591	New	duty (year)	575/3/60	MCC	0.75 HP		N	DOL	TBC	PI001 SHEET 16	MCC	
	VOLUMETRIC FEEDER	KMnO4 Volumetric Feeder	FSM9-591	New	duty (year)	575/3/60	MCC	0.5 HP		Y	VFD	TBC	PI001 SHEET 16	MCC (VFD Keypad)	
	MIXER	KMnO4 Preparation Mixer	M9-591	New	duty (year)	575/3/60	MCC	0.33 HP		N	DOL	TBC	PI001 SHEET 16	MCC	
	PUMP	Skid 1601 - KMnO4 Metering pump	P9-591	New	duty (year) - 1 duty/1 stand by	575/3/60	MCC	1 HP		Y (Local)	Feeder	TBC	PI001 SHEET 17	Local (VFD Keypad)	N/A
	PUMP	Skid 1601 - KMnO4 Metering pump	P9-592	New		575/3/60	MCC	1 HP		Y (Local)	Feeder	TBC	PI001 SHEET 17	Local (VFD Keypad)	N/A
	PANEL	Cationic Polymer Preparation Control Panel	PLC9-621	New	duty (year)	575/3/60	MCC	30 Amp		N/A	Feeder	TBC	PI001 SHEET 18	N/A	N/A
	VOLUMETRIC FEEDER	Cationic Polymer Feeder Hopper Agitator	FSM9-621	New	duty (year)	575/3/60	PLC9-621	0.5 HP		N	N/A	TBC	PI001 SHEET 18	On PLC9-621	N/A
	AGITATOR	Cationic Polymer Hopper Agitator	FMM9-621	New	duty (year)	575/3/60	PLC9-621	0.75 HP		N	N/A	TBC	PI001 SHEET 18	On PLC9-621	N/A
	MIXER	Cationic Polymer Preparation Mixer	M9-621	New	duty (year)	575/3/60	PLC9-621	0.75 HP		N	N/A	TBC	PI001 SHEET 18	On PLC9-621	N/A
	JUNCTION BOX	Skid 1801 - TSE feed and reset buttons	JB9-621	New	duty (year)	120/1/60	PLC-001	-		N	N/A	TBC	PI001 SHEET 19	N/A	N/A
	PUMP	Cationic Polymer Dosing Pump	P9-621	New	duty (summer) - 2 duty/1 stand by duty (winter) - 1 duty/2 stand by	575/3/60	MCC	2 HP		Y (Local)	Feeder	TBC	PI001 SHEET 19	Local (VFD Keypad)	N/A
	PUMP	Cationic Polymer Dosing Pump	P9-622	New		575/3/60	MCC	2 HP		Y (Local)	Feeder	TBC	PI001 SHEET 19	Local (VFD Keypad)	N/A
	PUMP	Cationic Polymer Dosing Pump	P9-623	New		575/3/60	MCC	2 HP		Y (Local)	Feeder	TBC	PI001 SHEET 19	Local (VFD Keypad)	N/A

LEFT BLANK

6 – OPERATION AND MAINTENANCE

6.1 – ACTIFLO

LEFT BLANK

VEOLIA

Installation, Operation and Maintenance Manual

Actiflo® Package Plant

Document No: IOM_0001_ACP

Révision: 01 -- Date: October 2016

WATER TECHNOLOGIES

TABLE OF CONTENTS

TABLE OF CONTENTS **2**
LIST OF TABLES **7**
LIST OF FIGURES **7**
1 INTRODUCTION **8**
1.1 OBJECTIVES OF THIS MANUAL 9
1.2 SAFETY 9
1.3 STANDARDS 10
1.4 MODIFICATIONS DONE BY THE CLIENT 10
1.5 FIELD INSTALLATION – PAINT PROTECTION 11
1.6 WARRANTY 11
2 RECEIVING **13**
2.1 STORAGE 13
3 GENERAL INSTALLATION **17**
4 UNIT HANDLING **18**
4.1 LEVELING 21
4.2 ANCHORING TO CONCRETE FLOOR 21
4.3 UNWRAPPING 21
5 MECHANICAL INSTALLATION **22**
5.1 GRATING 22
5.2 HANDRAIL 22
5.3 SETTLING SECTION 22
5.4 TROUGH 22
5.5 SCRAPER DRIVE INSTALLATION 22
5.6 HYDROCYCLONE SUPPORT 23
5.7 COAGULATION / INJECTION / MATURATION TANK MIXER 23
5.8 IMPELLER INSTALLATION 24
5.9 STAIRS (Optional) 26
5.10 LADDER AND SAFETY GATE (Optional) 26

6 PERIPHERAL EQUIPMENT INSTALLATION 27
6.1 MICROSAND RECIRCULATION PUMP SYSTEM 27
6.2 COAGULATION pH METER 27
6.3 CLARIFIED WATER TURBIDIMETER 27
6.4 RAW WATER TURBIDIMETER (Optional) 27
6.5 RAW WATER FLOWMETER (Optional) 28
6.6 CLARIFIED WATER FLOWMETER (Optional) 28
6.7 PRESSURE SWITCH (Optional) 28
6.8 PRESSURE TRANSMITTER (Optional) 28
7 PIPING CONNECTION 29
7.1 WATER COLLECTOR 29
7.2 TANK DRAIN 29
7.3 SETTLED WATER TANK PARTIAL DRAIN 29
7.4 HYDROCYCLONE SLUDGE OUTLET 29
7.5 POLYMER FEEDING 29
7.6 RECIRCULATION FLEXIBLE PIPE 29
7.7 CLARIFIED WATER TURBIDIMETER 31
7.8 RAW WATER TURBIDIMETER (Optional) 31
7.9 LAMELLA CLEANING SYSTEM (Optional) 31
8 TORQUE VALUES 32
9 ELECTRICAL INSTALLATION 33
9.1 GROUNDING 33
9.2 CONTROL PANEL 33
9.3 TANK MIXER 33
9.4 SCRAPER 33
9.5 RECIRCULATION PUMP 33
9.6 CLARIFIED WATER TURBIDIMETER 33
9.7 COAGULATION pH METER 34
9.8 WATER LEVEL SWITCH 34
9.9 RAW WATER FLOWMETER (Optional) 34
9.10 RAW WATER TURBIDIMETER (Optional) 34
9.11 PRESSURE TRANSMITTER (Optional) 34
9.12 PRESSURE SWITCH (Optional) 34

10 ACTIFLO® CLARIFICATION PROCESS 35
10.1 GENERAL INFORMATION 35
10.2 OPERATION PRINCIPLES 35
10.2.1 COAGULATION 35
10.2.2 INJECTION 35
10.2.3 MATURATION 36
10.2.4 COUNTER-CURRENT LAMELLAR SETTLING 36
10.3 CHARACTERISTICS AND PERFORMANCES 36
11 DESCRIPTION OF COMPONENTS 37
11.1 ACTIFLO® CLARIFIERS 37
11.1.1 GENERAL DESCRIPTION 37
11.1.2 COAGULATION TANK 37
11.1.3 INJECTION TANK 37
11.1.4 MATURATION TANK 38
11.1.5 SETTLING TANK 38
11.1.5.1 Lamella Pack 38
11.1.5.2 Sludge Collection Hopper 39
11.1.5.3 Circular Scraper 39
11.1.5.4 Clarified Water Troughs 39
11.1.5.5 Partial Drainage 39
11.1.5.6 Complete Drainage 39
11.1.6 MICROSAND RECIRCULATION PIPING 39
11.1.6.1 Collection of Sludge and Microsand 39
11.1.6.2 Microsand Recirculation Pumps 40
11.1.6.3 Hydrocyclones 40
11.1.7 MICROSAND 40
11.1.8 COAGULANT 41
11.1.9 FLOCCULANT (POLYELECTROLYTE) 41
11.1.10 CONTROL PANEL 41
12 START-UP & OPERATION 42
12.1 START-UP 42
12.1.1 PRELIMINARY VERIFICATION 42
12.1.2 INITIAL MICROSAND LOADING 42

12.1.3 AUTOMATIC START-UP 43
12.2 NORMAL OPERATION 43
12.2.1 ACTIFLO® CLARIFIERS 43
12.2.1.1 Microsand Monitoring 43
12.2.1.2 Microsand Recirculation Pumps 47
12.2.1.3 Hydrocyclones 48
12.2.1.4 Mixers 49
12.2.1.5 Circular Scraper 49
12.2.1.5.1 SGT90 and Moeller Easy Relay Configuration (UNITED STATES) 49
12.2.1.5.2 HPL 220 Configuration (CANADA) 51
12.2.2 DOSAGE OF CHEMICALS 52
12.2.2.1 Coagulant 52
12.2.2.2 Flocculant (polyelectrolyte) 53
12.2.2.3 Alkali, pH Adjustment 53
13 SURVEY OF OPERATIONS 54
13.1 AUTOMATION 55
13.2 SHUT DOWN 55
13.3 TROUBLESHOOTING 55
13.3.1 INCREASE IN CLARIFIED WATER TURBIDITY 55
13.3.2 INCREASE IN CLARIFIED WATER COLOUR 56
13.3.3 STOPPING OF MICROSAND RECIRCULATION PUMP 57
13.3.4 POWER FAILURE 57
14 JAR TEST PROCEDURE 58
14.1 INTRODUCTION 58
14.2 MATERIAL REQUIRED 58
14.3 LABORATORY PROCEDURES 58
14.4 ANALYSIS 59
15 MAINTENANCE 60
15.1 ACTIFLO® CLARIFIER 60
15.1.1 LAMELLA PACK 60
15.1.1.1 Lamellas fouling 60
15.1.1.2 Cleaning frequency 60
15.1.1.3 Required equipment 61

15.1.1.4 Lamella cleaning procedure 61
15.1.1.5 Manual cleaning with water 61
15.1.1.6 Manual cleaning with air 62
15.1.1.7 Automatic Cleaning with Integrated System under the Lamella Modules (Optional) 62
15.1.1.8 Severe Obstruction 63
15.1.2 MIXERS 63
15.1.3 MICROSAND RECIRCULATION PUMPS 63
15.1.4 HYDROCYCLONES 64
15.1.5 SCRAPER 64
15.2 CONTROL PANEL 64
15.3 INSTRUMENTATION 64
15.4 VALVES 64
15.4.1 MANUAL VALVES 64
15.4.2 AUTOMATIC VALVES 64
15.5 PERIPHERAL EQUIPMENT 65
15.6 PAINT INSPECTION 65
15.7 PAINT REPAIR PROCEDURE 65
15.8 LUBRICATION 66
15.8.1 LUBRICATION SCHEDULE 67

LIST OF TABLES

Table 1: List of applicable standards 10
Table 2: Torque values for 304 and 316 stainless steel bolt 32
Table 3: Lubrication schedule 67

LIST OF FIGURES

Figure 1: Actiflo® lifting lugs location 18
Figure 2: Actiflo® lifting (1) 19
Figure 3: Actiflo® lifting (2) 19
Figure 4: Actiflo® lifting (3) 20
Figure 5: Actiflo® lifting (4) 20
Figure 6: Actiflo® lifting (5) 21
Figure 7: Mixer hub installation 24
Figure 8: Mixer blade installation 25
Figure 9: Microsand recirculation pump hose installation 30
Figure 10: Microsand sampling from hydrocyclone inlet sampling valve 43
Figure 11: Microsand sampling from hydrocyclone underflow 45
Figure 12: Moeller Easy Relay 49
Figure 13: HPL 220 Configuration parameters 51
Figure 14: HPL 220 DIP Switch settings 52
Figure 15: Clarified water colour - Troubleshoothing guide 56
Figure 16: Suggested material for lamella cleaning 61

1 INTRODUCTION

This document describes the functions of the various components of the Actiflo® Package Plant clarifier, describes the procedures for the installation, start-up and standard operation of the system. It also plans preventive maintenance measures and describe procedures for the regular maintenance of the equipment.

The components of the Actiflo® Package Plant clarifier are supplied by Veolia Water Technologies Canada (VWTC). This equipment of superior quality and proven design will insure years of operation without problems. However, in order to maintain peak efficiency and performance of the system, it is imperative to take into consideration the preventive measures and procedures described in this manual. These measures include the operation and maintenance of its components.

To obtain any additional information regarding characteristics, operation or maintenance of this equipment, or if a problem persists, please do not hesitate to contact us.

The Actiflo® system is manufactured in Canada by:

Veolia Water Technologies Canada
4105, Sartelon
Saint-Laurent, Qc.
Canada H4S 2B3
Phone: 514-334-7230
Fax: 514-334-5070

For technical support or service needs, for spare parts or to get assistance during your warranty period, you may contact us at the following number during regular business hours or write us at:

Veolia Water Technologies Canada – After Sales Support
1-844-SER-VWT9 | 1-844-737-8989 | vwtservicecanada@veolia.com

Our business hours are from
Monday to Friday
8:30am to 5pm EST

1.1 OBJECTIVES OF THIS MANUAL

- Describe the installation of the unit and its ancillary components.
- Describe and explain the functions of the various components of the Actiflo® clarifier and reaction tanks, if installed.
- Describe the procedure for the start-up and standard operation of the system.
- Plan preventive maintenance measures and describe procedures for the regular maintenance of the equipment.

1.2 SAFETY

Operation of the Actiflo® system should be done by qualified personnel only.

It is imperative to ensure the security of all operators during the operation and maintenance of all mechanical equipment. In order to avoid accidents, it is important to determine the correct way to proceed and conveniently select appropriate clothing for the job. All workers having access to the equipment must scrupulously respect all the standard rules of safety as well as the precautions described in this manual.

Workers, which are directly responsible for the operation and maintenance of the equipment, must be aware of standard rules of safety.

The following safety rules should be followed:

- Safety devices such as handrail and belt guards should be installed and inspected regularly.
- Access to the building should be limited to authorize personnel only.
- Non-authorized personnel must never approach rotating shafts, connections, etc., in order to avoid injuries.
- The owner should implement a safety program and provide training for operation staff.
- Material Safety Data Sheets (MSDS) should be available for each chemical product.
- Appropriate protective gear including safety glasses, hard hat, boots, gloves, and ear protection should be worn at all times.

Protection systems or any other type of safety device supplied by the manufacturer must be carefully installed. If these are not supplied by the manufacturer, the user must supply and install the safety devices necessary for the protection of employees responsible for the operation of the equipment.

WARNING: The lamella pack is pre-installed in the settling tank section of the Actiflo® clarifier. It is made of a very flammable material. Do not expose it to open flames or sparks. Do not allow any welding works nearby unless special precautions have been taken.

WARNING: The operation staff should be aware that coagulant is highly corrosive and polymer solution can be very slippery. Spills should be cleaned immediately according to the MSDS instructions.

WARNING: The microsand may contains fine particles of silica. Therefore, it must be handle safely and with caution by qualified staff. Consult the MSDS for further instructions.

1.3 STANDARDS

Unless specified otherwise, the equipment described in this manual is consistent with the most recent construction standards that are applicable, including:

American Society of Mechanical Engineers	ASME
Canadian Standards Association	CSA
Canadian Electrical Manufacturers Association	CEMA
National Electrical Manufacturers Association	NEMA
American Society for Testing and Materials	ASTM
American National Standard Institute	ANSI

Table 1: List of applicable standards

1.4 MODIFICATIONS DONE BY THE CLIENT

Please note that it is mandatory to contact Veolia Water Technologies Canada Inc. before undertaking any modification work to the equipment supplied in this project. In fact, any alteration made to any equipment (mechanical, control, computers, etc.) without prior notification and consent by VWTC voids the warranty of the mentioned equipment. Furthermore, the client is responsible for any additional cost necessary to restore the equipment to its original state.

1.5 FIELD INSTALLATION – PAINT PROTECTION

IMPORTANT NOTE TO CONTRACTORS

You are about to install Actiflo® Package Plant unit and is related equipment. Veolia Water Technologies Canada Inc. wants to warn you about potential problems related to installation of large steel units protected against corrosion by paint.

VWTC maintains a comprehensive quality program to prevent equipment from being affected by corrosion. Our fabrication methods are specially adapted to manufacturing of painted equipment. Every step of our fabrication and assembly process is checked to reduce corrosion issues. Each unit is also delivered under strict measures, meant to reduce potential corrosion problems and long product life.

However, we have identified that handling unit at job site is a key element of corrosion protection process. This operation completely escapes our control and is your responsibility. Consequently, we invite you to perform a thorough review of your installation procedures before handling VWTC products. Protecting units during and after installation is paramount to maintain corrosion risks to a bare minimum.

Likewise, after installation of units, you must insure complete equipment protection from working environment before unit is put into service. This will prevent damages caused by work not related to VWTC products taking place on site. Contractor is responsible for installation of any additional protection necessary at job site.

In order to maintain quality products free of defects, VWTC requests from contractor, that he takes all necessary measures to reduce risks of paint or equipment damage leading to steel corrosion. Among most important protection measures of paint protection, here are the principal ones:

- Making all men, working close to units, conscious of paint fragility and potential corrosion problems. Please encourage them to act with extreme care while working around installation.
- Protecting units from weld projection or falling debris, by covering unit with adequate plastic or cardboard hoods and padding.
- Protecting unit's tank bottom when installing mixers or other equipment inside unit.
- Keeping area and unit clean at all times.

All measures taken by contractor to insure paint protection will assure transfer to client of a quality product and will benefit to all.

1.6 WARRANTY

All equipment manufactured by **Veolia Water Technologies Canada Inc.** (herein defined as "Veolia Canada") is guaranteed to be free from defects in material and workmanship for a period of twelve (12) months from the date at which unit is placed in service, eighteen (18) months from the date of shipment, whichever occurs first. All equipment found with defects during this period will be replaced at

no extra charge when shipped prepaid FOB to the manufacturer's shop. All parts sold by Veolia Canada are warranted the same way for a period of three (3) months from date of shipment.

If the customer promptly notifies Veolia Canada in writing of a claimed defect in the equipment and said equipment is found not to be in conformity with this warranty, Veolia Canada will, at its option and expenses, repair or replace such defective part, prepaid FOB to the manufacturer's shop.

Veolia Canada must be given notice of such defect, and, where requested, such material must be returned to the manufacturer's shop, transportation charges prepaid, with written approval for the shipment by Veolia Canada

This warranty shall be void if start-up of equipment is not authorized by Veolia Canada, or if repairs and/or alterations are made without a written authorization by Veolia Canada. If the equipment or parts supplied by Veolia Canada are altered in any way without Veolia Canada consent, the present warranty will not be valid and have no effect.

The customer will use only Veolia Canada parts for all labour covered by this warranty.

The foregoing warranty excludes responsibility or liability for:

(a) Failures not reported promptly within the warranty period, above specified.
(b) Damage due to accident, abuse, shipment, improper installation or operation, or abnormal operation condition.
(c) Damage caused by client's replacement, repair or inspection of parts.
(d) Lesion or personal accidents, material damage or any direct or indirect expenses or loss of profit related to this warranty.
(e) Damage, loss, expenses, lesion or personal accidents directly or indirectly related to the installation, the operation or the failure of the equipment supplied by Veolia Canada

The foregoing warranty is exclusive and replaces all other warranties, expressed or implied, including but not limited to any warranty of bargaining or modification for a particular purpose.

This warranty does not cover the following:

(a) Costs of repair, modification or other work done or requested by the customer or the management and all indirect costs.
(b) All expenses related to regular maintenance of parts as prescribed in the operation and maintenance manuals supplied by Veolia Canada
(c) Costs of dismantling, installation, transportation and insurance.
(d) Travelling and living expenses for the personnel carrying out the repair under such warranty.
(e) This warranty is not a performance or production warranty.

Veolia Canada has the right to examine or to ask for details about defects before empowering the present warranty.

2 RECEIVING

Preliminary field-testing, inspection, and checkout of the unit, following installation, shall be performed by a qualified representative of both the supplier and the general contractor. Tests shall be conducted to demonstrate to the engineer that all system components furnished by the equipment supplier are fully operational, that all connecting piping is leak proof and properly anchored, and that the entire system furnished by the supplier is ready for continuous safe operation. The purpose of the checkout shall be to ensure that each individual system component has been correctly installed, shall operate fully in the manner intended, and is ready to perform its function as part of an integrated system when placed in continuous operation.

MISSING EQUIPMENT/SHIPPING DAMAGE NOTIFICATION

The condition of all delivered equipment must be verified by the responsible party upon arrival at site. Verification that all equipment has been delivered as per contract must also be done upon arrival at site. Notification of missing or damaged items must be sent to Veolia Water Technologies Canada (VWTC) within 10 days of receipt of equipment. If there is no documented notification of missing or damaged parts within 10 days, VWTC is not responsible for replacement of any items found to be missing or damaged at the time of installation and start-up of the supplied equipment. It is the responsibility of the party receiving the equipment to ensure all packaging is opened at the time of receipt to uncover and document any and all damages to the Freight Company and VWTC.

Photographs and written documentation should be provided on all damaged equipment.

2.1 STORAGE

The following instructions outline the duties and responsibilities of the responsible party for equipment storage. The responsible party shall assume responsibility for the equipment upon arrival at the project site. These instructions shall define the minimum expectations for storage of all equipment.

While this storage specification taken into account common environmental issues that may affect the system during storage, common sense should be the overriding factory in determining the best method to ensure the integrity and proper storage of the VWTC equipment.

Should it be necessary to delay installation and subsequent operation of a unit for more than one month from date of shipment, special precautions must be taken. If possible, all equipment should be stored indoors in a dry and sheltered environment having a relatively constant temperature (especially for gear reducers, motors, bearings, etc.).

Air may contain excessive moisture, pollutants, microorganisms, and other particulates that accelerate the deterioration of some materials. Humidity and pollutants can produce an aggressive atmosphere.

The storage environment into which a system is placed can have a dramatic effect on the long-term usefulness of some spare parts. Key environmental factors are:

1) Temperature
2) Relative Humidity
3) Pollutants

The environmental indoor conditions should not exceed the following ranges:

Min/Max Temperature Range between:	8°- 28°C (46°- 82°F)
Relative Humidity Range between:	40% +/- 5% (RH)

A. OUTDOOR STORAGE:

Pre mounted settling or filtering tanks can be stored outside with the following storage specifications:

1) Drain water completely with special attention for sections without drain on lower point.
2) Remove all motored, electronic equipment and instruments and store them indoor (heated and ventilated area).
3) Tanks must be stored with adequate support underneath to prevent distortion and to raise equipment above any undesirable ground or floor conditions. It will also prevent flooding damages.
4) Completely cover the equipment with a tarp or similar protections shield to prevent direct exposure to the elements (dust, rain, snow, etc.). The tarp should fit tightly around the equipment to prevent accumulation beneath tarp.
5) Make sure that the plastic tarp is in perfect condition. Repair plastic tarp if needed.
6) Remove all snow, dust or water accumulation from the top of the units.

B. INDOOR STORAGE:

All other equipment have to be stored indoors in a climate controlled environment under a clean dust free non-aggressive and dry environment, including but not limited to electrical enclosures, spare parts, etc.

1) The equipment should be stored in a manner to be kept free from allowing insects, rodents, etc. from entering the equipment.
2) Cover the equipment with a tarp or similar protective shield to prevent direct exposure to dust or any other contamination. However, never enclose the unit or components totally in plastic covers; always leave adequate ventilation of air to prevent condensation.
3) Storage volume depends on the size of the project.
4) Equipment must be checked on a weekly basis for tarp/wrap integrity and accumulation.
5) To avoid damage, do NOT stack crates.
6) To avoid damage, do NOT stack enclosures.
7) Do not store spares in barns, equipment sheds or any other building without the capacity for heating and cooling as needed.

C. SPECIAL MAINTENANCE REQUIREMENTS DURING STORAGE:

Mixers, Scraper and Recirculation Pumps

Long term storage methods must be applied to the unit including complete fill with lubricant. Protect machined surfaces and rotate shafts periodically (every month). Five (5) complete rotations of the output shafts are recommended each time.

Periodic checks should be made to ensure that no rusting or other damage has occurred. Should such be noted, corrective action should be quickly initiated. Prior to putting unit into service, drain lubricant and refill to proper level as determined by the mounting position. Refer to manufacturer documentation.

All motors must be removed and store indoor (in a heated and ventilated area). All motors must be run every 3 month as a preventive measure against the formation of corrosion.

Instrumentation

All instruments must be store inside. Refer to manufacturer documentation.

Electrical Equipment and Spare Parts

It is required that all electrical equipment is stored indoors in a climate controlled environment under a clean dust free non-aggressive and dry environment, including but not limited to electrical enclosures, spare parts, etc.

1) The electrical equipment should be stored in a manner to be kept free from allowing insects/rodents from entering the equipment.
2) Completely cover the equipment with a tarp or similar protective shield to prevent direct exposure to dust or any other contamination.
3) Storage volume depends on the size of the project.
4) Equipment should be checked on a weekly basis for tarp/wrap integrity and accumulation.
5) To avoid damage, do not stack crates.
6) To avoid damage, do not stack enclosures.
7) Do not store spares in barn, equipment sheds or any other building without the capacity for heating and cooling as needed.

Others Equipments

It is recommended that tanks and pumps be stored indoors and on a raised surface to avoid flooding however if this cannot be done, they must be places on secure, high ground and meet all other specifications provided in this document. The responsible party must be sure to elevate the equipment off of the ground.

If the equipment are stored outdoor they must be kept on a high ground not susceptible to flooding and elevate the equipment at least 10 inches (250 mm) of the ground. If there is reason known to the responsible party that more than 10 inches of elevation is required, appropriate measures should be taken. Completely cover the equipment with a tarp or similar protections shield to prevent direct

exposure to the elements (dust, rain, snow, etc.). The tarp should fit tightly around the equipment to prevent accumulation beneath tarp. Equipment to be checked on a weekly basis for tarp integrity and accumulation.

To avoid possible module damage, do not stack module crates.

Equipment Cleaning

VWTC is not responsible for cleaning of any equipment prior to installation and start-up due to the storage of the equipment. This is the complete responsibility of others.

The cleaning of the equipment, if necessary, must be completed prior to the VWTC start-up technician arriving at site.

Handling

Equipment will arrive at the project site in several different shipments, from various freight companies and in several different packaging containers. Typically a flatbed truck is used which requires a fork lift or a crane to remove the various items.

Control panels are shipped in a separate crate or wrapped for protection and should be removed from the flat bed with a fork lift along with all other items. Weight dependent upon system configuration.

3 GENERAL INSTALLATION

The Actiflo® package plant may be pre-mounted. However, for freight purpose and practical reasons, the installation of some items must be completed on site by the contractor. Please find below the list of tasks that need to be performed by the contractor at job site:

- Installation should be performed by qualified contractors.
- The contractor must ensure that the necessary lifting equipment is available on site to carry out the installation.
- All nuts & bolts need to be verified, accounted for and tightened.

WARNING:	The settling tubes are very flammable, do not use any open flames near it and do not allow any welding works in the nearby area unless safety precautions have been taken. Once the settling tubes are submerged in water (normal use), this warning is no longer applicable.

- Refer to all field installation drawings for the installation of each Actiflo® unit.
- If any paint touch-ups are required, refer to documentation for recommended paint preparation and application instructions.
- After installation completion, clean the tank sections of all debris and objects that could damage the rotating mechanisms, damage pumps or clog the recirculation line.
- Microsand is supplied in 50 lbs. bags in quantities required for the first fill. Sand will be added to the maturation tank during process start up. Sand should be poured slowly once tank is filled with water. Initial sand loading should be performed with supervision of start-up personnel.

4 UNIT HANDLING

- Install each unit at the designated location at site. Lifting lugs are on top of each unit to facilitate handling and shall be removed after proper installation of Actiflo® unit in order to install the handrails.
- For equipment handling please refer to the following sketch and pictures for proper handling of the tank.
- The general contractor is responsible for the equipment unloading and handling.

WARNING: Do not use the welded lugs on Actiflo® package unit sides to lift the tank. These are for transportation purpose only.

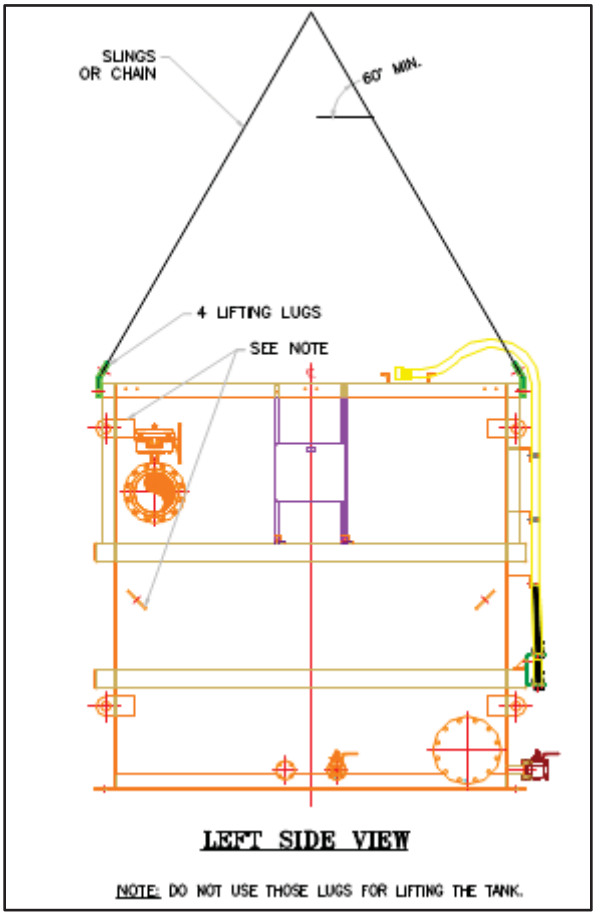

Figure 1: Actiflo® lifting lugs location

ATTENTION: DO NOT LIFT THIS WAY

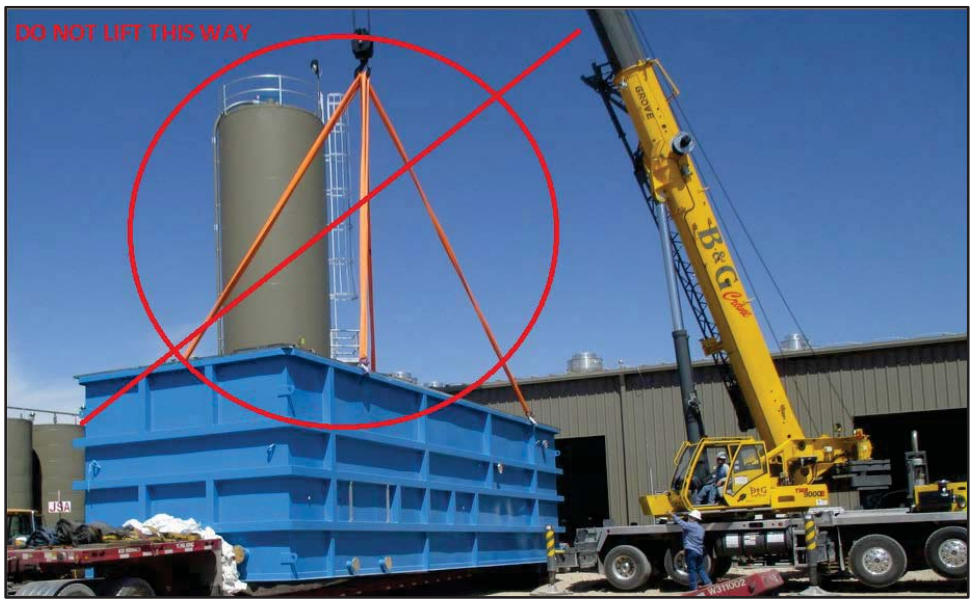

Figure 2: Actiflo® lifting (1)

PROPER LIFTING: ALWAYS HAVE AT LEAST TWO LIFTING POINTS

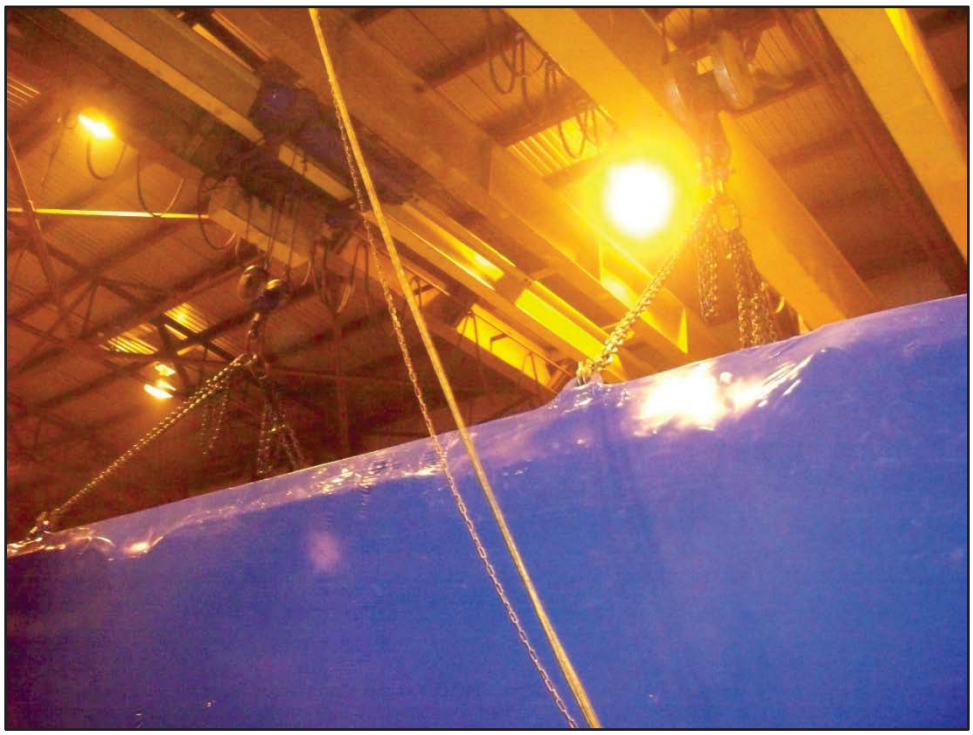

Figure 3: Actiflo® lifting (2)

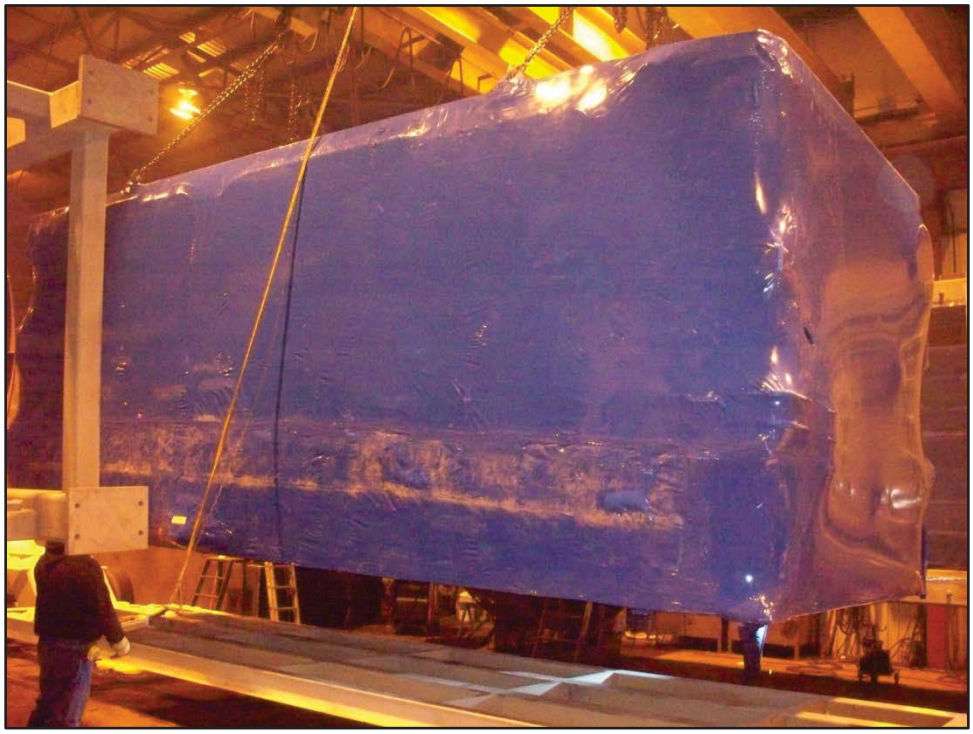

Figure 4: Actiflo® lifting (3)

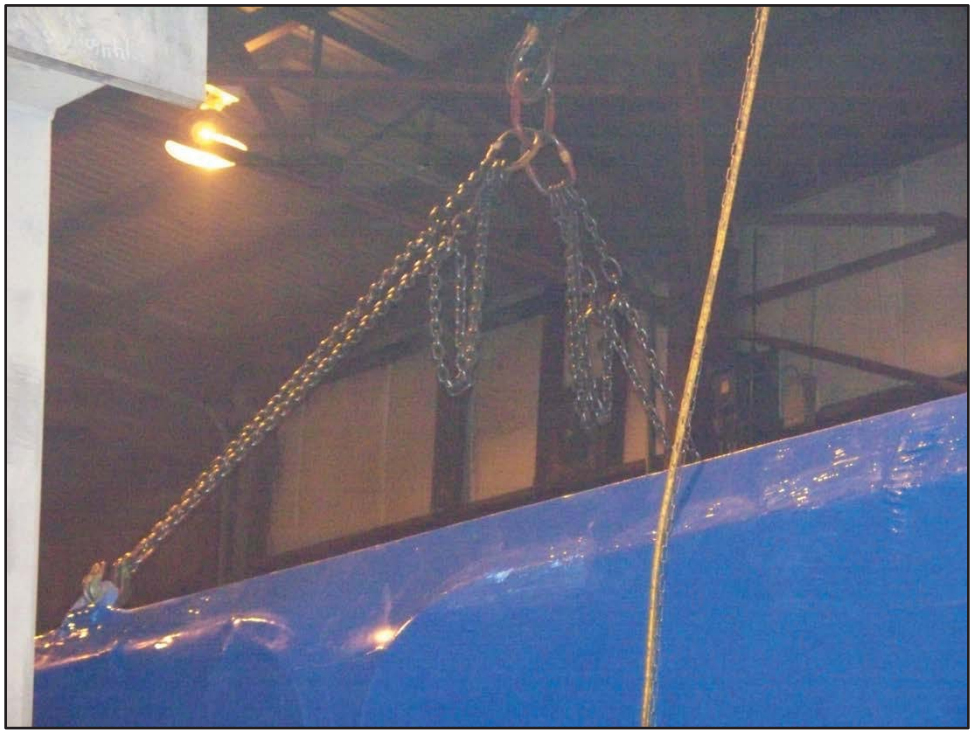

Figure 5: Actiflo® lifting (4)

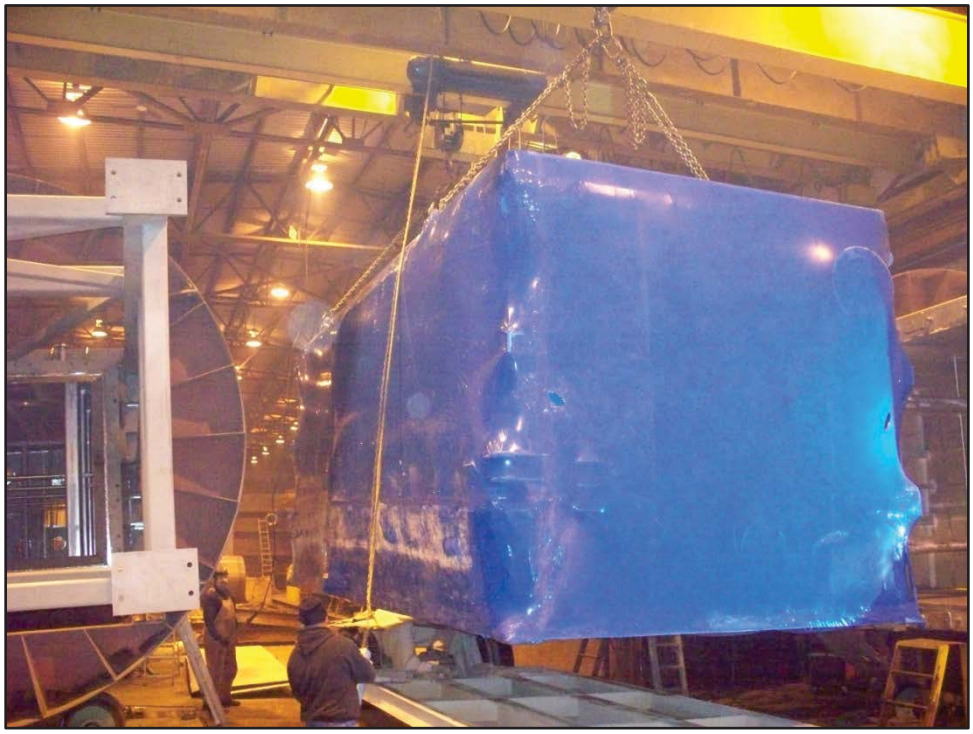

Figure 6: Actiflo® lifting (5)

4.1 LEVELING

- Unit base frame must be leveled within proper tolerance (max. 1/8” every 15 ft).

4.2 ANCHORING TO CONCRETE FLOOR

- Refer to field installation drawing for tank anchors location.
- Drill appropriate holes in concrete support piers, in line with the anchoring holes of the Actiflo® base and fasten the tank structure with anchors (may be provided by others).
- Add leveling/finishing grout under the base frame where required.

4.3 UNWRAPPING

- Unwrap the equipment and remove any temporary supports and plywood protections from the unit. Be cautious when removing instrumentation protection.

5 MECHANICAL INSTALLATION

5.1 GRATING

- Install grating on each unit. The grating may already be mounted as part of shop assembly.

5.2 HANDRAIL

- Install hand railing on each unit at the site. Please refer to the field installation drawings.

5.3 SETTLING SECTION

- Lamella packs are already installed in settling section.
- If required, be very cautious when manipulating the lamella packs in cold temperatures. They become very brittle and may break easily.

Warning: Lamella pack is highly flammable. Submerge with water as soon as possible.

5.4 TROUGH

- The troughs already installed in the settling section should be leveled using the adjustment nuts. All troughs must be at the same elevation. Tolerance should be 1/8”, so that water is distributed evenly within settling section.

5.5 SCRAPER DRIVE INSTALLATION

- Remove the transportation plate from the rake assembly.
- Lower the shaft of the rake using the eyebolt.
- Connect the rake drive to the shaft.
- Remove the eyebolt from the rake shaft.
- Add the lubricant in the primary gear box. Use Chevron lubricating oils FM Grade ISO 460 or equivalent FDA approved. Please be careful about the amount of oil that is put in the scraper drive assembly as too much oil may overflow into the tank. The oil level should correspond to about half of the height of the gear.
- Rectify alignment if necessary.
- All electrical connections must be completed.
- Rotation of the rake must be clockwise (CW).
- Ensure that there is no contact between the rake arm and the bottom of the hopper.
- Clean the tank sections of all debris and objects that could damage the rotating mechanisms.

- Inspect the recirculation inlet pipe. It should be free of any debris.

Note:	Pay particular attention to remove temporary material (wood, cardboard) at the bottom of the scraper that was used to prevent movement during transport.

5.6 HYDROCYCLONE SUPPORT

- Refer to the field installation drawings for proper hydrocyclone installation.
- Install the hydrocyclone assembly support on the maturation tank with supplied screws, nuts and washers at the site.
- Install the piping connections. It is important to drop one (1) meter (approximately 3 feet) at the sludge outlet of each hydrocyclone, to avoid backflow through hydrocyclone. Discharge of sludge pipe must not be submerged.

Note:	Disruption in hydrocyclone pressure distribution will potentially affect separations performances, hence adequate return of microsand to the process.

5.7 COAGULATION / INJECTION / MATURATION TANK MIXER

- Refer to field installation drawings for proper mixers installation.
- The mixers are delivered separately. The shafts are already assembled to the gear box. The contractor must assemble the impellers on the shafts at job site.
- Install the motor on the appropriate tank mixer following instructions given in the supplier's equipment manual.
- Verify the mixer blade installation and orientation.
- Verify that set screws are well tightened to secure the hub onto the shaft.
- Follow manufacturer recommendations for oil check and fill up procedure (manufacturer manual).
- All electrical connections must be completed.
- Refer to the following sketches for proper hubs installation in section 5.8.

5.8 IMPELLER INSTALLATION

WARNING:

- Ensure the use of a right hub (\ ) in the tanks.
- The leading edge of the blade shall be at 15° from horizontal and not at 75°.
- The screws and nuts must be installed on the wing with nuts on the opposite side from the blade or with screw head contacting blade or on blade side.

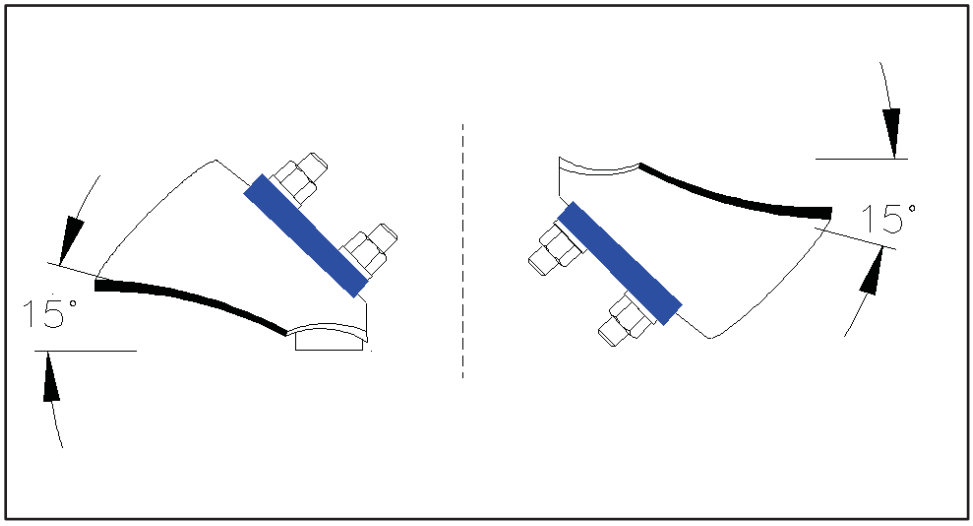

INSTALLATION: TWO POSSIBLE CHOICES

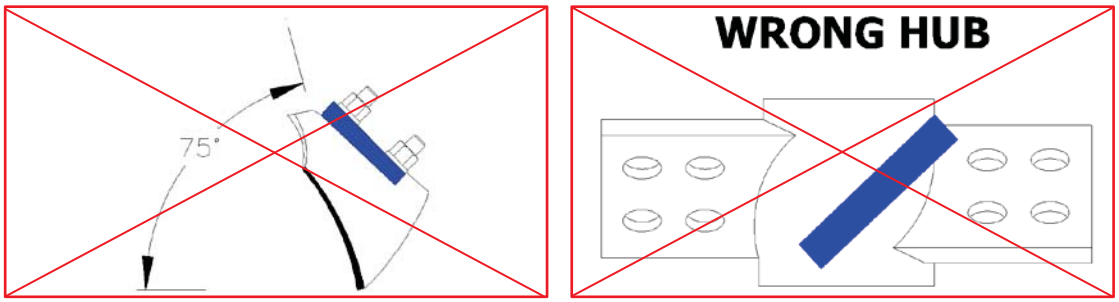

WRONG HUB INSTALLATION

Figure 7: Mixer hub installation

LEGEND	
CW-UP	Clockwise – Up
CW-DWN	Clockwise – Down
CCW-UP	Counterclockwise – Up
CCW-DWN	Counterclockwise – Down

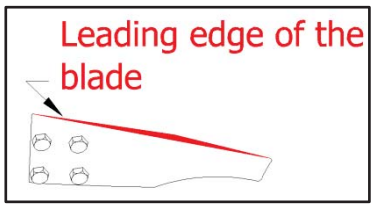

POSSIBLE MIXER INSTALLATION:

Refer to the field installation drawings for your particular application.

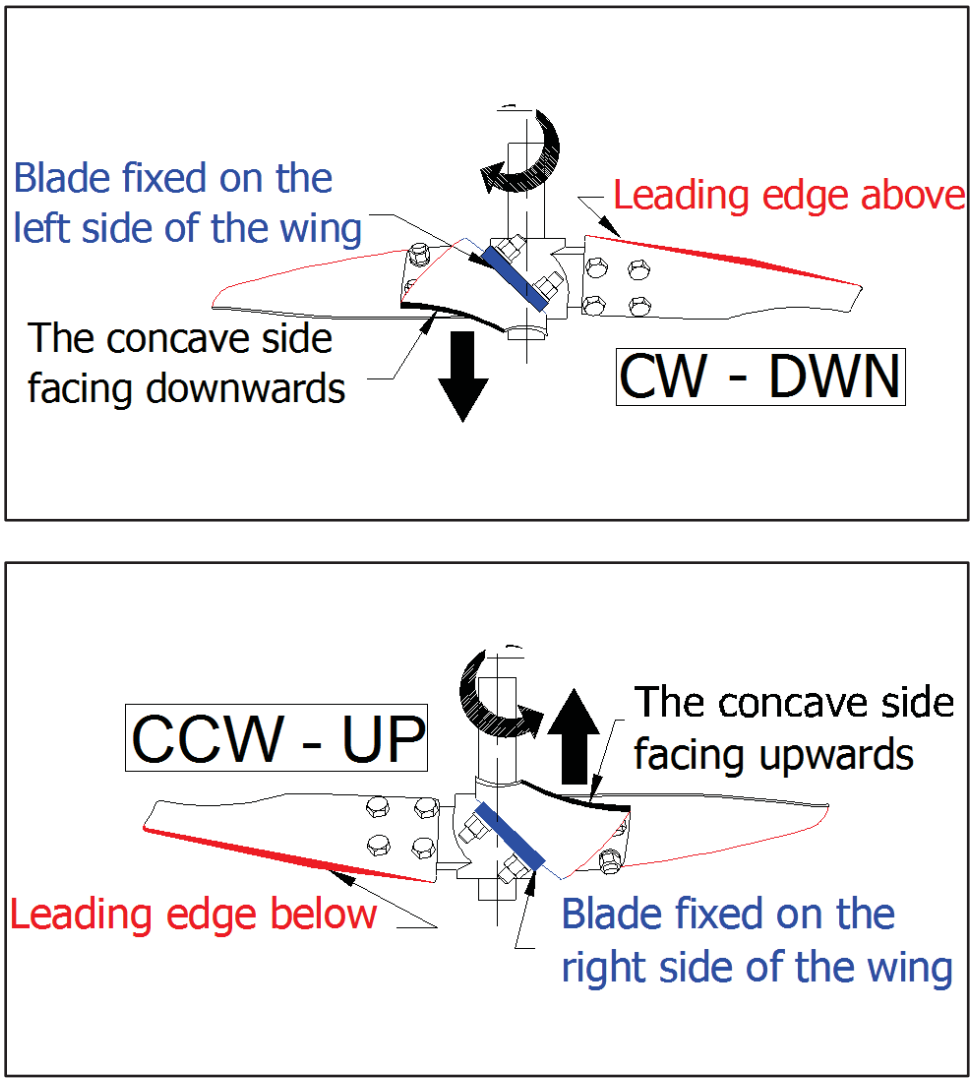

Figure 8: Mixer blade installation

5.9 STAIRS (Optional)

- Refer to field installation drawings for proper stairs installation.
- The stairs are delivered separately. The contractor must assemble and install the stairs at job site. Grout may be used underneath stairs legs to make sure that top of grating on tank matches stairs elevation.

5.10 LADDER AND SAFETY GATE (Optional)

- Install the ladder in place and fasten to unit at job site. Install the safety gate (optional) in the access opening of the ladder with the supplied screws and nuts. Refer to the field installation drawings.

6 PERIPHERAL EQUIPMENT INSTALLATION

6.1 MICROSAND RECIRCULATION PUMP SYSTEM

- Refer to field installation drawings for proper microsand recirculation pump system location and installation.
- Pump base frame must be leveled within proper tolerance.
- Drill appropriate holes in concrete floor and fasten the pump and flexible pipe supports with anchors.
- Connect the drip pan to a drain to avoid any leakage on the floor.

6.2 COAGULATION pH METER

- Refer to field installation drawings for proper coagulation pH meter installation.
- Install the coagulation pH meter with probe mounted to handrail on the settling tank side using supplied screws, nuts and washers. Refer to field installation drawings for proper location and installation.

6.3 CLARIFIED WATER TURBIDIMETER

FOR 1720E

- Install on a support on the effluent side of the tank. Refer to field installation drawings and manufacturer installation recommendations, for proper location and installation.

FOR SOLITAX

- Install the turbidimeter with probe mounted to handrail on the settling tank side using supplied screws, nuts and washers. Refer to field installation drawings and manufacturer installation recommendations, for proper location and installation.

6.4 RAW WATER TURBIDIMETER (Optional)

FOR SS7

- Install on a support beside the raw water valve. Refer to field installation drawings for proper location and installation.
- The connection and installation in the inlet piping to the sample port are by others and should respect manufacturer recommendations.

FOR SOLITAX

- Install in line pipe. Refer to field installation drawings and manufacturer installation recommendations, for proper location and installation.
- The connection and installation are by others.

6.5 RAW WATER FLOWMETER (Optional)

- Follow manufacturer installation recommendations (refer to manufacturer manual), to ensure adequate operation.

6.6 CLARIFIED WATER FLOWMETER (Optional)

- Follow manufacturer installation recommendations (refer to manufacturer manual), to ensure adequate operation.

6.7 PRESSURE SWITCH (Optional)

- Install on a support on the same side of the tank as the recirculation pump. Refer to field installation drawings and manufacturer installation recommendations, for proper location and installation.

6.8 PRESSURE TRANSMITTER (Optional)

- Install on the piping at the outlet of each recirculation pump. Refer to field installation drawings for proper location and installation.

7 PIPING CONNECTION

Note: Remove the flange protecting grease prior to the installation of the valves and pipes.

7.1 WATER COLLECTOR

- Install a pipe from the Actiflo® unit effluent flange to the clarified water collector.

7.2 TANK DRAIN

- Install a pipe from the tank drain valves to the trench drain.

7.3 SETTLED WATER TANK PARTIAL DRAIN

- Install a pipe from the pre-installed partial drain valve, located on Actiflo® effluent side, to the trench drain.

7.4 HYDROCYCLONE SLUDGE OUTLET

- Install a pipe from the hydrocyclone chamber sludge outlet flange to the trench drain.

Important: Provide sufficient pipe slope and size to prevent any backflow to the hydrocyclone chamber. It is important to drop one (1) meter (approximately 3 feet) at the sludge outlet of each hydrocyclone to avoid backflow through hydrocyclone. Discharge of sludge pipe must not be submerged.

7.5 POLYMER FEEDING

- Connect the supplied polymer injection tubing from the Actiflo® maturation and injection reservoirs to the appropriate hydrocyclone assembly support polymer distributor outlet.
- Supply polymer feeding pipe from the polymer metering pump skid outlet to the hydrocyclone assembly support polymer distributor inlet for the Actiflo® unit.

7.6 RECIRCULATION FLEXIBLE PIPE

- Refer to field installation drawings for proper recirculation pipe installation.
- Inspect the recirculation inlet pipe. It should be free of any debris.
- Connect the flexible pipe section using the connections provided.

- Pipe straps are supplied on the unit to secure the pipe along the tank wall. Install the recirculation flexible pipe in order to avoid any pipe drop that could cause sand accumulation and vibrations.
- Refer to the following pictures for proper installation.

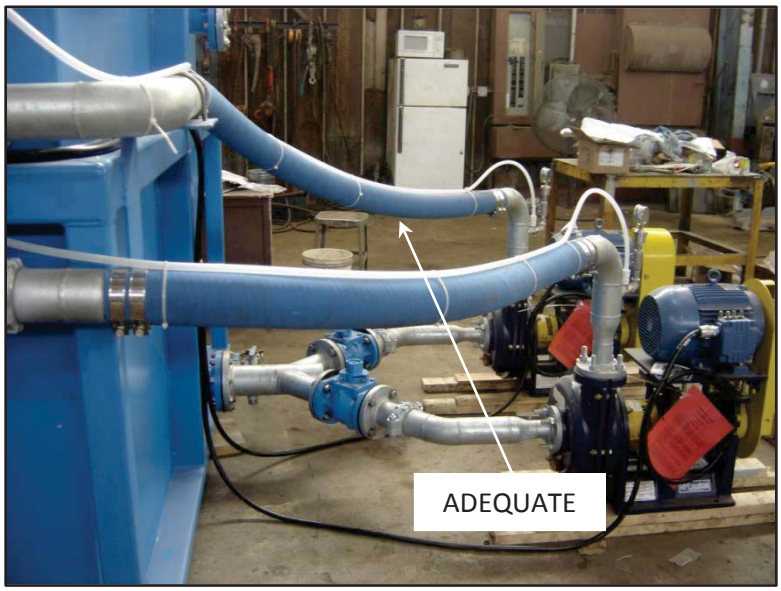

MICROSAND RECIRCULATION PUMP ADEQUATE HOSE INSTALLATION

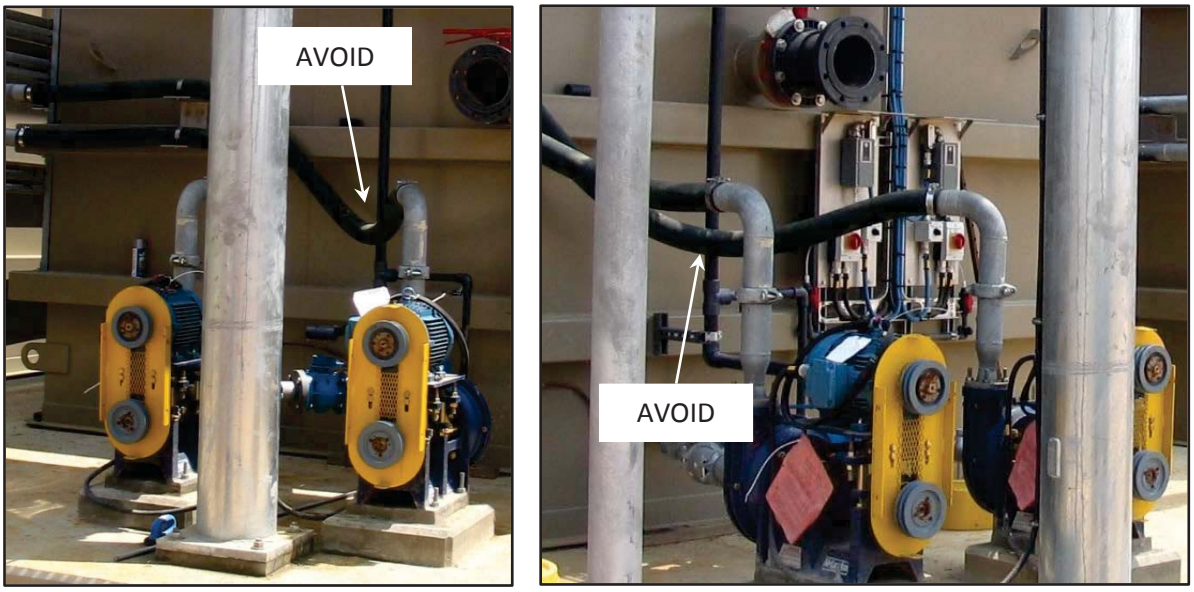

MICROSAND RECIRCULATION PUMP INCORRECT HOSE INSTALLATION

Figure 9: Microsand recirculation pump hose installation

7.7 CLARIFIED WATER TURBIDIMETER

FOR SS7

- Pipe the clarified water turbidimeter to an appropriate drain.
- Complete piping, if necessary, from the coupling located on the unit to the turbidimeter sampling inlet.

Important:	Provide sufficient slope to ensure correct draining. If connected to another drain line, make sure to avoid any backflow to the instrument. To avoid turbidimeter clogging, sample water piping must be connected prior to any coagulant or other viscous chemical product addition.

FOR SOLITAX

- N/A

7.8 RAW WATER TURBIDIMETER (Optional)

FOR SS7

- Pipe the raw water turbidimeter to an appropriate drain.
- Pipe the raw water turbidimeter bubble trap to appropriate sampling point connection.

FOR SOLITAX

- Refer to pipe orientation for supplied bracket to be mounted on inlet piping.

7.9 LAMELLA CLEANING SYSTEM (Optional)

- Refer to field installation drawings for proper system location and installation.
- Close all valves situated on the cleaning system conduct.
- Inspect the pipe inlet; it should be free of any debris.
- Connect the compressed air supply to pipe.
- Before feeding the system with air, reopen valves and refer to operation and maintenance manual.

8 TORQUE VALUES

BOLT	304 STAINLESS STEEL		316 STAINLESS STEEL	
SIZE	DRY	LUBRICATED	DRY	LUBRICATED
	in-lbs	in-lbs	in-lbs	in-lbs
1/4-20	75	64	79	67
1/4-28	94	80	99	84
5/16-18	132	112	138	117
5/16-24	142	121	147	125
3/8-16	236	201	247	210
3/8-24	259	220	271	230
7/16-14	376	320	393	334
7/16-20	400	340	418	355
	ft-lbs	ft-lbs	ft-lbs	ft-lbs
1/2-13	43	37	45	38
1/2-20	45	38	47	40
9/16-12	56	48	59	50
9/16-18	62	53	65	55
5/8-11	92	78	96	82
5/8-18	103	88	108	92
3/4-10	127	108	131	111
3/4-16	124	105	129	110
7/8-9	194	165	202	172
7/8-14	193	164	201	171
1 -8	286	243	299	254
1 -14	259	220	270	230
1-1/8 -7	413	351	432	367
1-1/8 -12	390	332	408	347
1-1/4 -7	523	445	546	464
1 1/4 -12	480	408	504	428
1-1/2 -6	888	755	930	791
1-1/2 -12	703	598	732	622

Table 2: Torque values for 304 and 316 stainless steel bolt

Notes:

1) Suggested maximum torque values is a guide based upon lab testing on dry or near dry fasteners wiped clean.
2) The use of this information is at sole risk of the user.
3) Values through 7/16" diameters are stated in inch-pounds; 1/2" diameter and over are stated in foot-pounds.

9 ELECTRICAL INSTALLATION

Note: Electrical work should be performed by a qualified contractor. Refer to control panel and electrical diagram for proper wiring installation.

9.1 GROUNDING

- Connect tanks earthing lugs in order to ground the tank.

9.2 CONTROL PANEL

- Supply wiring between unit (junction box optional) and the control panel.
- Supply power (575V or 460V / 3 ph / 60 Hz) to the control panel. Refer to technical datasheet.
- Before permanently wire the control panel, verify the rotation of each motor (clockwise or counter clockwise).

9.3 TANK MIXER

- Connect each mixer motor to control panel or junction box.

Warning: Never run a mixer without the tank being completely filled with water.

9.4 SCRAPER

- Connect scraper motor to control panel or junction box.

9.5 RECIRCULATION PUMP

- Connect each recirculation pump motor.

9.6 CLARIFIED WATER TURBIDIMETER

- Recommended supplier wiring instructions are given in the supplier manual.

Warning: Never cut the original cable between turbidimeter unit and its power supply unit. This cable must remain at full length.

9.7 COAGULATION pH METER

- Connect coagulation pH meter to junction box.

9.8 WATER LEVEL SWITCH

- Complete connection if any.
- Recommended supplier wiring instructions are given in the supplier manual.

9.9 RAW WATER FLOWMETER (Optional)

- Supply wiring between unit and control panel.
- Complete connection if any.
- Recommended supplier wiring instructions are given in the supplier manual.

9.10 RAW WATER TURBIDIMETER (Optional)

- Supply wiring between unit and control panel.
- Complete connection if any.
- Recommended supplier wiring instructions are given in the supplier manual.

9.11 PRESSURE TRANSMITTER (Optional)

- Supply wiring between unit and control panel.
- Complete connection if any.
- Recommended supplier wiring instructions are given in the supplier manual.

9.12 PRESSURE SWITCH (Optional)

- Supply wiring between unit and control panel.
- Complete connection if any.
- Recommended suppliers wiring instructions are given in the supplier manual.

10 ACTIFLO® CLARIFICATION PROCESS

10.1 GENERAL INFORMATION

The Actiflo® process is a compact system that will provide quality clarified water by a flocculation and high rate settling process.

Suspended particles and dissolved solids, previously destabilized with the injection of a coagulant in the raw water, are fixed to the microsand with the help of a flocculant (polyelectrolyte) added to the water. The floc being formed is subsequently separated from the water by counter-current lamellar settling with an ascending hydraulic flux.

Excellent efficiency of the Actiflo® process is reached using two proven techniques:

- Injection of microsand serves as support to the ballasted flocs and works as weight in order to create a very dense floc, thus providing a very high rate of settling.
- Lamellar settling allows increased settling surface in a reduced tank volume by using a set of inclined parallel tubes.

10.2 OPERATION PRINCIPLES

Raw water goes through four (4) successive steps that are part of the Actiflo® treatment process:

10.2.1 COAGULATION

Raw water is mixed with a coagulant using a rotating mixer in a rectangular-shaped tank. This insures a homogeneous diffusion of the coagulant in the water. The standard hydraulic retention time for this step is approximately two (2) minutes at nominal flow rate.

10.2.2 INJECTION

A precise amount of microsand and flocculant (polyelectrolyte) are added and mixed in the water using a rotating mixer in a rectangular-shaped tank. The energy induced by the mixer accelerates the contact between the flocs, the polyelectrolyte and microsand, thereby ensuring the formation of ballasted flocs. The standard hydraulic retention time for this step is approximately two (2) minutes at nominal flow rate.

10.2.3 MATURATION

The flocs previously formed are then maintained in suspension for a certain time in a large rectangular tank with the help of a rotating mechanical mixer. The smooth agitation of the water insures a gradual increase in floc size, reaching floc maturation. The standard hydraulic retention time for this step is approximately six (6) minutes at nominal flow rate.

10.2.4 COUNTER-CURRENT LAMELLAR SETTLING

Ballasted flocs precipitate to the bottom of a hopper and the clarified water is collected at the surface using troughs. The sludge is drawn out of the hopper by a pump and is directed toward a series of hydrocyclones. The hydrocyclones located above the injection tank separate the microsand from the sludge. The microsand is recirculated into the system via the underflow of the hydrocyclones while the sludge is evacuated through the overflow. The hydraulic retention time for the settling step is about three (3) minutes at nominal flow rate.

10.3 CHARACTERISTICS AND PERFORMANCES

By combining ballasted flocculation with lamellar settling, the Actiflo® process allows the system to operate at increased loading rates. This design feature can be very beneficial when raw water turbidity and flow rate vary greatly.

The Actiflo® process also accepts activated carbon dosages aimed at reducing taste and odours.

While at design flow, the time to complete all three (3) stages of treatment, i.e. coagulation / injection / maturation, is only 10 minutes. This very short hydraulic retention time enables the process to respond quickly to adjustments in chemical dosages. Ballasted flocculation produces high quality clarified water, even when operating under difficult conditions, such as very cold and/or very coloured waters or waters with a high turbidity.

Actiflo® pilot plant tests have demonstrated the efficiency of this process as well as its ability to rapidly respond to changes in raw water flow rate and/or characteristics.

11 DESCRIPTION OF COMPONENTS

11.1 ACTIFLO® CLARIFIERS

11.1.1 GENERAL DESCRIPTION

An Actiflo® clarifier is composed of coagulation, injection and maturation tanks, a lamellar settling tank with a hopper, a series of lamellar tubes and troughs for the collection of clarified water, a microsand recirculation circuit, piping and a control panel.

11.1.2 COAGULATION TANK

Raw water enters the Actiflo® at the bottom of the coagulation tank. Coagulant is added upstream of this tank to improve contact time.

The coagulation tank is equipped with a mechanical mixer composed of a shaft and a four-bladed propeller made of stainless steel. The mixer is vertically mounted and the induced water flow direction is downward.

The mixer is driven by a motor and a helical gear speed reducer. It is a totally enclosed fan cooled motor (TEFC) and operates at a constant speed. In case of thermo-mechanical overload, the motor stops automatically and an alarm warns the operator.

A manual drainage valve, located in the coagulation tank, allows draining this tank through the existing draining network.

11.1.3 INJECTION TANK

Coagulated water enters the top portion of the injection tank by going over a flooded overflow, which communicates directly with the coagulation tank. An accurate amount of microsand and polymer is added at the tank water surface. The polymer may also be directly added in the bottom injection or maturation tanks.

The injection tank is equipped with a mechanical mixer composed of a shaft and a four-bladed propeller made of stainless steel. The mixer is vertically mounted and the induced water flow direction is upward.

The mixer is driven by a motor and a helical gear speed reducer. It is a totally enclosed fan cooled motor (TEFC) and operates at a constant speed. In case of thermo-mechanical overload, the motor stops automatically and an alarm warns the operator.

A manual drainage valve, located in the injection tank, allows draining this tank and the maturation tank through the existing draining network.

11.1.4 MATURATION TANK

Water and flocculated solids originating from the injection tank enter at the bottom of the maturation tank through a common opening.

The maturation tank is equipped with a mechanical mixer composed of a shaft and a four-bladed propeller made of stainless steel. The mixer is vertically mounted and the induced water flow direction is downward. The maturation tank is equipped with baffles to insure better mixing.

The mixer is driven by a motor and a helical gear speed reducer. It is a totally enclosed fan cooled motor (TEFC) and may operate at a constant or variable speed. An adjustment to the rotating speed can be proven necessary when the incoming water flow rate is greatly reduced. In this case, it might be advantageous to compensate for losses in hydraulic energy by increasing the speed of rotation of the maturation mixer. In case of thermo-mechanical overload, the motor stops automatically and an alarm warns the operator. The unit automatic shutdown sequence is also initiated.

A manual drainage located, in the injection tank, allows draining the maturation tank through the existing draining network.

11.1.5 SETTLING TANK

The settling tank is composed of a set of lamella tubes, a sludge collection system and a clarified water collector.

The water coming from the maturation tank contains a suspension of microsand-ballasted flocs and enters the settling tank after going through a vertical baffle. The solids settle in the hopper while clarified water flows through the lamella pack to the clarified water troughs.

11.1.5.1 Lamella Pack

The lamella pack consists of several polystyrene tubes positioned at an angle of 60° from horizontal plane. They are disposed in such a way that they form hexagonal-shaped cells (honeycomb). Smaller solids that did not settle directly in the hopper will deposit on the lamella pack surface and subsequently settle in the sludge collection hopper by their own weight. Clarified water flows upwards to the collection troughs and out of the clarifier.

Warning: The lamella pack is installed in the settling tank section of the Actiflo® clarifier. It is made of a very flammable material. Do not expose it to open flames or sparks. Do not allow any welding works nearby unless special precautions have been taken.

11.1.5.2 Sludge Collection Hopper

The collection of sludge takes place within a pyramidal hopper located at the base of settling tank where the settling solids are pumped to the hydrocyclones.

11.1.5.3 Circular Scraper

The settling tank has a circular scraper equipped with a stainless steel drive shaft and scrapers. Rubber scrapers are fitted onto the metal support. The scraper is mounted vertically. The scraper moves the microsand that has settled at the bottom of the hopper to its center where a basin captures the accumulated sludge. The scraper is powered by a gear motor combination. This motor is totally enclosed fan cooled (TEFC).

11.1.5.4 Clarified Water Troughs

Clarified water is collected above the lamella modules by stainless steel troughs. The dimension and position of the square-edged notches are designed in order to obtain an optimal hydraulic distribution of the flow rate inside the settling tank.

11.1.5.5 Partial Drainage

A manual valve, installed below the settling lamellas, allows for partial draining of the settling tank to facilitate the preventive maintenance of the lamellar plates.

11.1.5.6 Complete Drainage

There is two (2) ways to achieve a complete drainage of the clarifier:

1) By opening the coagulation, injection and hopper drain manual valves.
2) By opening the coagulation and injection manual drainage valves and turning the recirculation pump on.

Warning: It is important that the recirculation pump does not operate without water.

11.1.6 MICROSAND RECIRCULATION PIPING

11.1.6.1 Collection of Sludge and Microsand

Sludge containing microsand is collected in the hopper and pumped to the hydrocyclones through galvanized steel pipes and flexible non-abrasive pipes that can withstand highly abrasive conditions.

In case of clogging, a clean-out assembly is provided to backwash and flush the suction line by connecting a pressurized service water hose.

11.1.6.2 Microsand Recirculation Pumps

The clarifier is provided with a centrifugal pump (second pump optional) equipped with a pulley and drive belt arrangement. A backup pump is also supplied. The backup pump may be used to supplement the first pump if higher influent solids are experienced. The impeller and the inside of the volute are coated with a material (usually natural rubber) resistant to microsand abrasion. The motor is totally enclosed fan cooled (TEFC). In case of a thermo-mechanical overload, the motor will automatically shut down and an alarm will warn the operator.

The recirculation pump operates at a constant pressure. An increase in pressure may be caused by an obstruction of the discharge pipe and a decrease in pressure may be caused by unpriming of the pump or an obstruction of the inlet pipe. An optional pressure switch/pressure transmitter could be located at the pump discharge. If the measured pressure becomes too low, the pump stops and an alarm will warn the operator.

11.1.6.3 Hydrocyclones

The sludge and microsand are pumped by the recirculation pump to a dedicated hydrocyclone where the microsand is separated from the sludge particles. This process allows the recycling of clean microsand back into the system. Sludge-microsand separation is accomplished by a vortex effect exerting a centrifugal force on the mixture of particles.

The microsand grains, more dense than sludge particles, descend along the internal surface of the hydrocyclone, while the sludge particles ascend. The microsand is returned to the injection tank while the sludge is evacuated out of the system through the hydrocyclone overflow piping.

11.1.7 MICROSAND

The recycling of microsand into the injection tank along with the polyelectrolyte solution (polymer), serves as support for the flocs formation. The floc, ballasted with the microsand grain, becomes considerably heavier and therefore can settle more rapidly. The microsand has the following characteristics:

- Effective size: 85 µm or 135 µm (refer to technical datasheet)
- Uniformity coefficient: < 1.6
- Available in bags of 22.7 kg (50 lbs)

A small portion of the microsand is lost in the process; therefore periodic addition of microsand in the system is required. Microsand is available from VWTC.

Warning: The microsand may contains fine particles of silica. Therefore, it must be handle safely and with caution by qualified staff. Consult the MSDS for further instructions.

11.1.8 COAGULANT

The coagulant to be used can either be alum $Al_2(SO_4)_3 \bullet 14\ H_20$, PASS (Poly Aluminum Silicate Sulphate) or PAC (Poly Aluminum Chloride). It is injected at the head of the process directly into the pipe leading to the tank.

By reacting with the alkaline components of the water, the coagulant forms a precipitate, which sticks to the colloidal particles in suspension and organic components in the raw water, thereby producing a floc. In some cases, an alkali (i.e. caustic soda) must be added to the water upstream of the clarifier, prior to the addition of coagulant.

The coagulant gets rapidly dispersed in the water when it is introduced into the coagulation tank.

Warning: The operation staff should be aware that coagulant is highly corrosive. Spills should be cleaned immediately according to the MSDS instructions.

11.1.9 FLOCCULANT (POLYELECTROLYTE)

The polyelectrolyte is a white powder generally sold in 50 lbs bags. The powder is naturally hygroscopic so it must be stored in a dry environment.

Polyelectrolyte is pumped into the injection and maturation tank along with the microsand. It forms a coating on the microsand particles in order to activate them and facilitate fixing of the floc onto the sand particle surface. Other injection points of polymer can also be used, that is, at the inlet of the maturation tank and at various locations inside the maturation tank.

Warning: The operation staff should be aware that polymer solution could be very slippery. Spills should be cleaned immediately according to the MSDS instructions.

11.1.10 CONTROL PANEL

The Actiflo® clarifier operation is fully automated but manual control is possible from the control panel interface. The control panel normally includes but is not limited to components such as fuses, starters, selectors, warning lights, PLC (Programmable Logic Controller) and operator interface.

The electrical circuit of the control panel performs the necessary functions for a fully automatic operation and equipment protection of the Actiflo® unit. The control panel gives the operator access to every mechanical component of the system. In addition, all the alarms are channelled through the control panel, which in turn warns the operator in the event of equipment malfunction.

Refer to the functional description of control system in the «Electricity and Control» section of the complete operation and maintenance manual for a control panel detailed description.

12 START-UP & OPERATION

12.1 START-UP

12.1.1 PRELIMINARY VERIFICATION

Before starting the Actiflo®, the following points must be checked:

- Remove any debris from the settling tank to prevent hydrocyclone clogging.
- Every section of the Actiflo® must be filled with water.
- Valves configuration on the microsand recirculation lines is adequate.
- Chemical metering systems must be ready to operate.
- Chemical storage tanks must be full.
- Chemical metering pumps must be calibrated and set for the desired dosage. These can however be adjusted once that the system is operational.
- All the field instruments must be calibrated (flowmeter, pressure transmitter).
- Verify the oil level in the mixers gear reducers and the grease in the recirculation pumps.
- Verify the rotation of each mixer.
- Verify the rotation of each recirculation pump; remove the belt to prevent impeller unscrewing if the rotation is the wrong way.
- Verify the proper installation of the mixer impellers, especially the height above tank floor (refer to technical sheet and field installation drawing).
- Adjust motor overload protection to the proper value as indicated on each motor nameplate.
- Record the pressure at the hydrocyclone inlet gauge. Refer to technical datasheet.

Once all these conditions have been checked, the system can be put into operation.

12.1.2 INITIAL MICROSAND LOADING

The standard microsand load in an Actiflo® clarifier is approximately 2000 lbs per MGD of design or 5 kg per m^3/h, flow rating of unit.

The addition of microsand is done by pouring it directly in the injection tank until the required concentration is reached. It is preferable to begin by adding a small quantity of microsand and measure the resulting microsand concentration in the hydrocyclone underflow after a whole recirculation cycle has been completed (15 to 20 minutes). The quantity of microsand should be increased until the optimal concentration in the underflow is reached (typically 80 to 200 ml/litre).

Warning: The microsand may contains fine particles of silica. Therefore, it must be handle safely and with caution by qualified staff. Consult the MSDS for further instructions.

12.1.3 AUTOMATIC START-UP

Refer to the functional description of control system of the «Electricity and Control» section of the complete operation and maintenance manual to start the Actiflo® system in automatic mode.

12.2 NORMAL OPERATION

Note:	In the case of a discrepancy between this section of the manual and the functional description of control system, the latest shall prevail.

12.2.1 ACTIFLO® CLARIFIERS

12.2.1.1 Microsand Monitoring

Although a minor amount of microsand is constantly discharged out of the process and a sand concentration between 5 and 15 g/L is sufficient for satisfactory operation of the Actiflo® process, the microsand concentration should always be maintained at recommended levels (5 to 15 g/L). This insures that the system is always prepared to treat the worst possible raw water conditions. Therefore, the operators should monitor the microsand concentration 2-3 times per day. The concentration can easily be estimated using the following methods.

A. Sampling from Hydrocyclone Inlet Sampling Valve

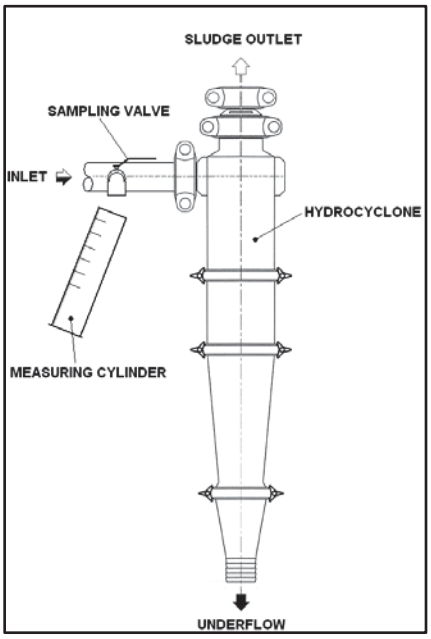

Figure 10: Microsand sampling from hydrocyclone inlet sampling valve

a. Verify that each operating hydrocyclone has an uninterrupted conical discharge. If you have a splashguard covering the apex tip, place it in the up position to verify this and make sure it stays in that position.
b. Obtain a 1000-2000 ml graduated cylinder to take the hydrocyclone inlet sample.
c. Open the ball valve located at the inlet piping of the hydrocyclone and fill the cylinder as close to the 1000 ml or 2000 ml mark as possible without over spilling. Caution: the 1000 ml cylinder may fill quickly and with force.
d. Allow the sample to settle for 3 minutes.
e. Record the volume of the settled sand (Vs) in ml along with the total sample volume (V) in ml. Refer to next figure.

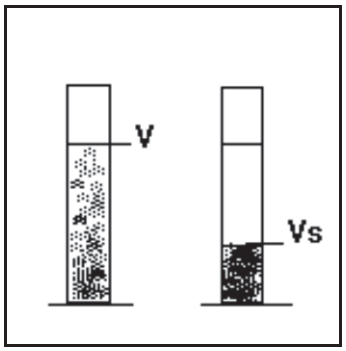

f. Repeat steps c) through e) on the same hydrocyclone two (2) more times.
g. Use the same sampling procedure as you did on the first hydrocyclone and repeat steps c) through f) for all hydrocyclones in operation on the system. For example, if you have two hydrocyclones operating on a given system you should have six (6) values for Vs and six (6) values for V.
h. To determine the concentration of sand in the entire system you must next average all collected values of Vs. Also, average all collected values of V. Now you can use the following two (2) equations to first determine Cs (microsand concentration in the hydrocyclone inlet) and lastly Cm (microsand concentration in the Actiflo® system).

Note: For the most accurate determination of microsand in any given system the sampling procedure above should be performed three (3) times throughout a 24 hour period. Three (3) separate values of Cm should be averaged to determine one final microsand concentration for the day. It is also important to record and trend the final daily value of Cm to give indication of microsand loss over an extended period of time.

B. Sampling from Hydrocyclone Underflow

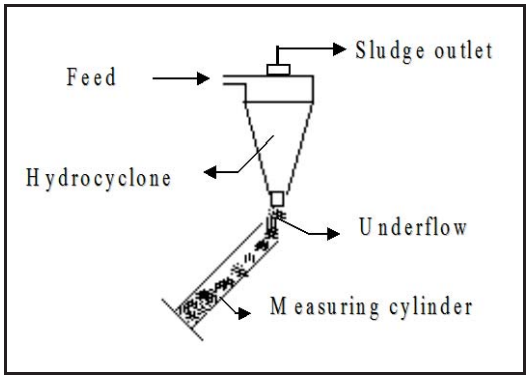

Figure 11: Microsand sampling from hydrocyclone underflow

a. Verify that each operating hydrocyclone has an uninterrupted conical discharge. If you have a splashguard covering the apex tip, place it in the up position to verify this. After verification the splashguard should be returned to the down position prior to sampling.
b. Obtain a 1000-2000 ml graduated cylinder to take the hydrocyclone underflow sample. The underflow discharge must be sampled entirely and not partially. However, it is important to be consistent and obtain the sample from the identical section of the underflow discharge every time a grab is taken. If the underflow discharge is constantly or periodically roping, the underflow discharge should be sampled with a swirling motion that catches the outer and center portions of the underflow in each sample.
c. Fill the cylinder as close to the 1000 ml or 2000 ml mark as possible without over filling/spilling. Caution: the 1000 ml cylinder may fill quickly and with force.
d. Allow the sample to settle for 3 minutes.
e. Record the volume of the settled sand (Vs) in ml along with the total sample volume (V) in ml. Refer to next figure.

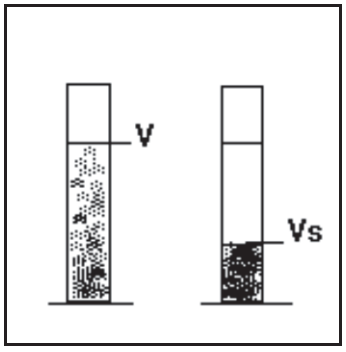

f. Repeat steps c) through e) on the same hydrocyclone two (2) more times.
g. Use the same sampling procedure as you did on the first hydrocyclone and repeat steps c) through f) for all hydrocyclones in operation on the system. For example if you have two (2) hydrocyclones operating on a given system you should have six (6) values for Vs and six (6) values for V.

h. To determine the concentration of sand in the entire system you must next average all collected values of Vs. Also, average all collected values of V. Now you can use the following two (2) equations to first determine Cs (microsand concentration in the hydrocyclone underflow) and lastly Cm (microsand concentration in the Actiflo® system).

C. Sand Concentration of Hydrocyclone Inlet

The microsand concentration of the hydrocyclone entrance is calculated with the following formula:

$$C_S = \frac{1000}{V} \times V_S \times 1.5$$

Where:
C_s: Microsand concentration in the hydrocyclone entrance (g/l)
V: Sample volume taken in a graduated cylinder (ml)
V_s Volume of the settled microsand after settling for 3 minutes (ml)
1.5: Density of the settled microsand (kg/l)

System Sand Concentration

Knowing the flow rate of the hydrocyclone entrance (gpm) and the microsand concentration (g/l) of the hydrocyclone entrance, the microsand concentration (g/l) in the Actiflo® system is determined using the following formula:

$$C_m = \frac{Q_{Hydro} \times N \times C_S}{Q_{in}}$$

Where:
C_m: Microsand concentration in the Actiflo® system (g/l)
C_s: Microsand concentration in the hydrocyclone entrance (g/l)
Q_{Hydro}: Hydrocyclone entrance flowrate (gpm)
N: No. of hydrocyclones in operation
Q_{in}: Influent flow rate (gpm)

D. Sand Concentration of Hydrocyclone Underflow

The microsand concentration of the hydrocyclone underflow is calculated with the following formula:

$$C_S = \frac{1000}{V} \times V_S \times 1.5$$

Where:
C_s: Microsand concentration in the hydrocyclone underflow (g/l)
V: Sample volume taken in a graduated cylinder (ml)
V_s: Volume of the settled microsand after settling for 3 minutes (ml)
1.5: Density of the settled microsand (kg/l)

System Sand Concentration

Knowing the flow rate of the hydrocyclone underflow (gpm) and the microsand concentration (g/l) of the hydrocyclone underflow, the microsand concentration (g/l) in the Actiflo® system is determined using the following formula:

$$C_m = \frac{UF \times N \times C_s}{Q_{in}}$$

Where:
C_m: Microsand concentration in the Actiflo® system (g/l)
C_s: Microsand concentration in the hydrocyclone underflow (g/l)
UF: Hydrocyclone underflow flowrate (gpm)
N: No. of hydrocyclones in operation
Q_{in}: Influent flow rate (gpm)

E. Microsand Addition

Some microsand is lost at the hydrocyclone overflow and at the Actiflo® effluent. Periodic microsand addition is required to compensate for these losses (in typical conditions, normal loss is from 3 to 6 g/m^3). The addition of microsand is done directly in the flocculation tank. Since microsand contains a small proportion of very fine particles, the turbidity of the clarified water could increase slightly for a short period following the addition of microsand.

In standard operation mode, if a sustained increase of the raw water turbidity happens, it may be necessary to increase the concentration of microsand in the system to maintain the removal efficiency.

12.2.1.2 Microsand Recirculation Pumps

Each Actiflo® has one (1) or two (2) recirculation pumps and associated piping. It is essential that a recirculation pump be in operation continuously. When the pump stops, sludge and microsand accumulate in the hopper; this may clog the recirculation line. When the recirculation pump needs to be stopped, the mixer in the maturation tank must be stopped first, followed by the scraper. The scraper will operate for a short period of time before stopping the pump. This allows the hopper to be emptied before stopping the pump. The duration may be adjusted by the operator on the control panel.

Recirculation Pumps Options:

If the pumps are protected by a pressure switch (optional) / pressure transmitter (optional), alarms will be issued in any of the following situations:

- Thermo-mechanical overload of the pump: this is normally a sign of overheating of the pump motor and can be caused by a mechanical breakdown or a pressure surge. The operator must correct this problem by verifying the pump and motor as well as the outlet piping and then reactivate the overload relay located inside the control panel.

- Low pressure at the pump outlet: this can be caused by incomplete priming of the pump or closed isolation valve or clogging of the pump suction line. The operator must make sure that there is no obstruction at the inlet of the pump and in such case, the sludge suction piping must be cleaned according to the following procedure:

    - Stop the pump.
    - Close the valve on the pump suction side.
    - Connect a service water hose to the clean-out outlet.
    - Open the service water valve.
    - Let the service water run for approximately five (5) minutes.
    - Put the equipment back into normal operation.
    - Restart the pump.

The low pressure alarm set point is adjustable via the low pressure switch and is usually set at 3 to 5 psi below the normal operating pressure of the pump. When an alarm is activated, the pump stops automatically and the alarm light blinks on the control panel. The operator must acknowledge the alarm by pressing the ALARM ACKNOWLEDGE button located on the control panel, fix the problem and then reset the system by pressing the ALARM RESET button. The pump will restart automatically.

12.2.1.3 Hydrocyclones

The operator must make sure that the hydrocyclone outlets are free of obstruction at all times. Debris, as small as 13 mm (1/2"), can clog the underflow.

Waste sludge is evacuated from the Actiflo® at the hydrocyclone overflow (70% to 90% of the hydrocyclone flow rate). A small amount of microsand is lost at the overflow. It is important to check on a daily basis if the loss is higher than normal. This can be verified by collecting a 1 L sample of the overflow into an *Imhoff* cone and measuring the volume of settled microsand after 2 or 3 minutes. Record the value and compare it with past measurements. Refer to troubleshooting section.

The same procedure is used to measure the concentration of sand at the hydrocyclone underflow (10% to 30% of the hydrocyclone flow rate):

- Collect a 1 L sample from the underflow (mixture of microsand and water).
- Allow the sample to settle for 2 or 3 minutes and then measure the volume of settled microsand.
- The volume of microsand should range between 80 and 200 ml/L of water (5 to 15 g/L).

Warning:	It is important to keep the cone underflow of the hydrocyclone at all times during operation of the Actiflo®. In absence of this cone, a premature wear of the tank wall may occur due to the sandblasting of the hydrocyclone.

12.2.1.4 Mixers

The mixers all have a specific rotation direction and speed. In the event of a mixer motor overload, the mixer automatically stops and an alarm warns the operator. The operator must press the ALARM ACKNOWLEDGE button, correct the problem and then reset the system by pressing ALARM RESET button. If the operator cannot correct the problem, the Actiflo® should be shut down, as it is impossible to produce clarified water with a mixer out of service.

12.2.1.5 Circular Scraper

When an overload occurs to the scraper motor or when a very high torque is detected, the motor shuts down automatically and an alarm warns the operator and the Actiflo® will stop as per the stop sequence.

12.2.1.5.1 SGT90 and Moeller Easy Relay Configuration (UNITED STATES)

a) Scraper Load Cell Adjustment (HIGH TORQUE)

Procedure to adjust the HIGH TORQUE alarm set point on the Moeller Easy Relay

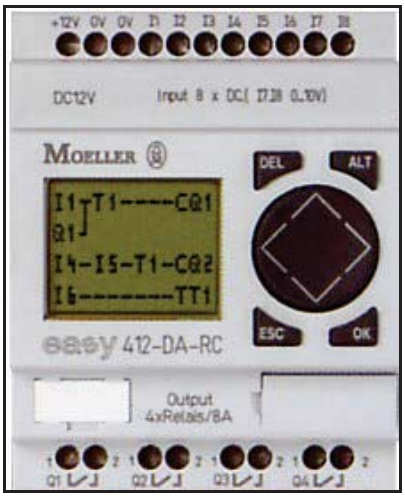

Figure 12: Moeller Easy Relay

In normal operation, the display indicates the values of inputs/output. To change the values of alarm set points:

Press:	**OK**	
Press:	▼	
Press:	▼	
Press:	**OK**	(On Parameter)
Press:	▼	(Cursor on A1)
Press:	**OK**	(On A1)
Press:	▼	(Cursor on I2)

Press: **OK** (Edit I2)
Press: ◄►▲▼ (to modify the HIGH TORQUE alarm set point)
Press: **OK**
Press: **ESC**
Press: **ESC**
Press: **ESC**

b) Scraper Load Cell Adjustment (HIGH HIGH TORQUE)

Procedure to adjust the HIGH HIGH TORQUE alarm set point on the Moeller Easy Relay

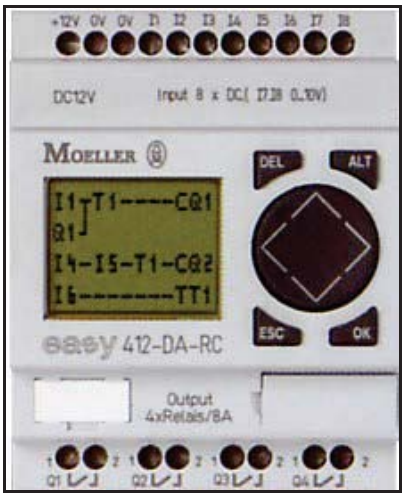

In normal operation, the display indicates the values of inputs/output. To change the values of alarm set points:

Press: **OK**
Press: ▼
Press: ▼
Press: **OK** (On Parameter)
Press: ▼ (Cursor on A2)
Press: **OK** (On A2)
Press: ▼ (Cursor on I2)
Press: **OK** (Edit I2)
Press: ◄►▲▼ (to modify the HIGH HIGH TORQUE alarm set point)
Press: **OK**
Press: **ESC**
Press: **ESC**
Press: **ESC**

12.2.1.5.2 HPL 220 Configuration (CANADA)

Mode	Function	Parameter	▼	▲	Display	Default
Meas'mt	Display measurement		Min. peak	Max. peak	Meas'mt [%]	
Limits	Limit 1 prog./display	Off,5-100%	Decrease	Increase	Limit 1	80
Limits	Limit 2 prog./display	Off,5-100%	Decrease	Increase	Limit 2	Off
Ts [S]	Start timer	0.0-25.0 Sec.	Decrease	Increase	Ts [Sec]	2.0 Sec.
Tr [S]	Alarm reaction timer 1	0.0-25.0 Sec.	Decrease	Increase	Tr [Sec]	0.1 Sec.
Tr [S]	Alarm reaction timer 2	0.0-25.0 Sec.	Decrease	Increase	Tr [Sec]	0.1 Sec.
Hyst's	Hysteresis 1	5-50%	Decrease	Increase	Hyst's [%]	10
Hyst's	Hysteresis 2	5-50%	Decrease	Increase	Hyst's [%]	10
Units						
Full scale	Max. input	20-100%	Decrease	Increase	'Full scale'	100
Offset	Offset adjustment ±	±10%(F.S.)	Decrease	Increase	Meas'mt [%]	---
Input	Input select	Vdiff, 10V, 20mA	Vdiff-10V-20mA	20mA-10V-Vdiff	"Inp"	Vdiff

Figure 13: HPL 220 Configuration parameters

a) Typical Adjustment

- Limits 1: Refer to the technical product data sheet
- Limits 2: Refer to the technical product data sheet
- Ts: 0
- Tr 1: 0
- Tr 2: 0
- Hyst's 1: 5
- Hyst's 2: 5
- Full Scale: 30 mV (with 500 N load cell and 10 VDC)
- Offset: 0
- Input: Vdiff

b) Limit 1 & 2 Adjustment

The limit 1 and 2 values can be adjusted by 0.5% increment and need to be set in the range from 0.5% to 100% of the load cell total value.

For example: The load should be limited at 238 N and the load cell can accept up to 500 N.

$$HPL_{Limit} = \frac{F_{Required}}{F_{Full\ Load}} \times 100$$

$$HPL_{Limit} = \frac{238}{500} \times 100 = 47.6\% \approx 48\%$$

The percentage value remain between the 0, 5% to 100% which is acceptable.

c) Dip Switch

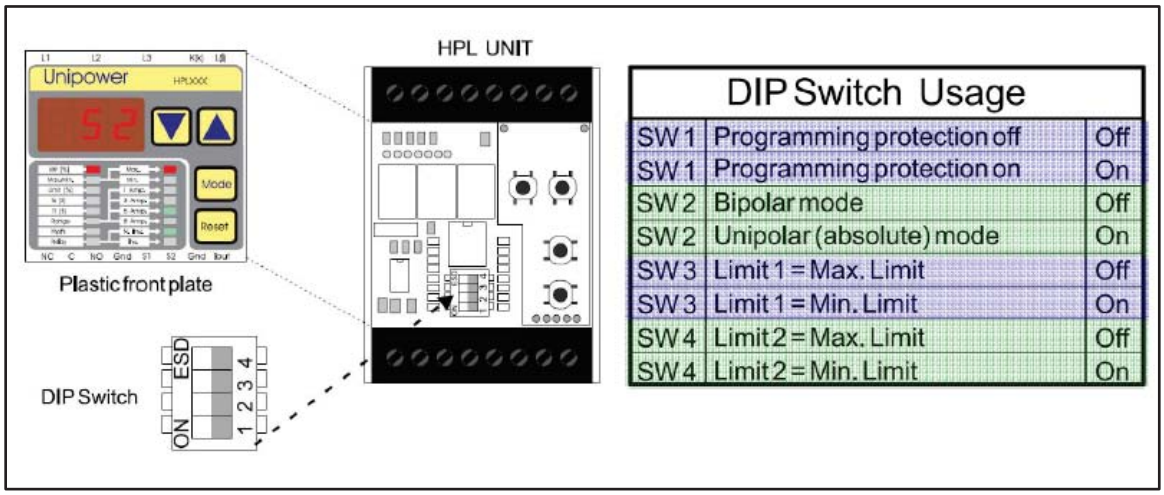

DIP Switch Usage		
SW 1	Programming protection off	Off
SW 1	Programming protection on	On
SW 2	Bipolar mode	Off
SW 2	Unipolar (absolute) mode	On
SW 3	Limit 1 = Max. Limit	Off
SW 3	Limit 1 = Min. Limit	On
SW 4	Limit 2 = Max. Limit	Off
SW 4	Limit 2 = Min. Limit	On

Figure 14: HPL 220 DIP Switch settings

1) Turn-off the HPL 220
2) Remove the cover
3) Set the dip switches according to the following:
   - SW1: **OFF**
   - SW2: **ON**
   - SW3: **OFF**
   - SW4: **OFF**
4) Reassemble the HPL 220

12.2.2 DOSAGE OF CHEMICALS

12.2.2.1 Coagulant

The coagulant is injected into the raw water feed line.

In either case, the dosage to be used varies according to the characteristics of the raw water. An increase in turbidity of the raw water must signify an increase in product dosage. The proper dosage is determined by a jar test.

The concentration of coagulant at the inlet of the system is calculated from the flow rate of the raw water and metering pumps:

$$Coagulant\ Concentration\ (mg/L) = \frac{Metering\ Pump\ Rate\ (mg/h)}{Raw\ Water\ Flow\ Rate\ (L/h)}$$

12.2.2.2 Flocculant (polyelectrolyte)

The polyelectrolyte is used in solution with a concentration ranging from 0.5 to 2.5 g/L, the produced solution is viscous. In order to obtain a high quality polymer, it is recommended to use non chlorinated filtered water for its preparation and transport. The concentration of polyelectrolyte in the clarifier should be between 0.40 to 0.90 mg/L. Depending on the quality of the raw water, this concentration can be increased or decreased. The polyelectrolyte concentration in the system is calculated from the flow rate of the raw water and metering pumps:

$$Polyelectrolyte\ Concentration\ (mg/L) = \frac{Metering\ Pump\ Rate\ (mg/h)}{Raw\ Water\ Flow\ Rate\ (L/h)}$$

The ideal dosage of polyelectrolyte can be determined with a jar test (refer to the jar test procedure in this manual).

Insufficient polymer dosage will cause free flocs to appear that are not ballasted by the microsand and which will not be correctly eliminated in the settling tank. The clarified water might have a higher turbidity and/or color, and an important aluminum concentration.

However, excess in polyelectrolyte dosage can produce very sticky sludge, which is difficult to recycle.

12.2.2.3 Alkali, pH Adjustment

The water pH is the most important factor to consider in a coagulation process. When using alum, maximum coagulation efficiency is reached when pH readings are between 5.5 and 7.0. If the raw water has a low pH, it is important to increase it by adding an alkaline product (ex. caustic soda, etc.) to the water upstream of the coagulation step.

Upstream of the coagulation step, the hydraulic residence time of the alkali must be long enough, allowing time for it to completely dissolve in the water, increasing the precision in the adjustment of the water pH.

13 SURVEY OF OPERATIONS

In order to insure a reliable survey of the Actiflo® system operation and to provide the operators with a useful data bank, we suggest to the operators to record the following parameters:

ON A HOURLY BASIS:

- Turbidity, raw water
- Color, raw water
- pH, raw water
- Turbidity, clarified water
- Color, clarified water
- PH, clarified water

EVERY EIGHT HOURS:

- Flow rate, raw water
- Flow rate, coagulant metering pump and calculated concentration
- Flow rate, polyelectrolyte metering pump and calculated concentration
- Flow rate, alkali metering pump and calculated concentration
- Alkalinity, clarified water
- Pressure at the recirculation pump outlet
- Pressure at the hydrocyclones inlet
- Microsand concentration at the hydrocyclone underflow

ON A DAILY BASIS:

- Total quantity of clarified water
- Mixers speed
- Electric current drawn by the mixers
- Other parameters of interest: dissolved iron and manganese, total organic carbon, etc.
- Alkalinity, raw water
- Average raw water flow

ON A WEEKLY BASIS:

- Flow rate of the hydrocyclone underflow
- Flow rate of the hydrocyclone overflow

13.1 AUTOMATION

Refer to the functional description of control system in the «Electricity and Control» section of the complete operation and maintenance manual.

13.2 SHUT DOWN

In manual mode, when the microsand recirculation pump needs to be stopped, the following procedure must be followed in order to prevent possible clogging problems:

- Stop the mixer in the maturation tank. This allows the microsand to settle in the maturation tank instead of in the hopper.
- After approximately 30 minutes, verify that the underflow of the hydrocyclone does not contain any microsand.
- The microsand recirculation pump can then be stopped without any risk of clogging the recirculation line.

13.3 TROUBLESHOOTING

13.3.1 INCREASE IN CLARIFIED WATER TURBIDITY

If the turbidity of the clarified water should increase suddenly, verify the following parameters:

- The flow rate of raw water: if it is greatly increased or diminished, dosage flow rate of coagulant and polyelectrolyte should be adjusted in consequence.
- The flow rate of coagulant and polyelectrolyte: the metering pumps must inject an accurate dosage of these chemicals, such that the desired concentrations in the system can be obtained.
- The quality of raw water: if the turbidity, colour and/or the alkalinity of the raw water are increased or decreased, it is normally necessary to adjust the concentration of coagulant in the system. This dosage can be predetermined with the help of a jar test. However, a change in the quality of the raw water does not usually require an adjustment in polyelectrolyte concentration.
- The concentration of microsand in the underflow of the hydrocyclone: this must approach a value between 80 and 200 ml/L (5 to 15 g/L). Deterioration in the raw water quality can necessitate an increase in the quantity of microsand in the system.
- Sludge-sand recirculation rates: these flow rate generated by the recirculation pump must be kept constant.
- Maturation mixer rotation speed: mixer speed can be read directly on the display of the corresponding variable frequency drive.

13.3.2 INCREASE IN CLARIFIED WATER COLOUR

Clarified water color (apparent and true) is one of the parameters to follow since it indicates the performance of the Actiflo® process and the proper dosage of coagulant and pH adjustment. The next figure shows the troubleshooting guide if clarified water color increases and actions to take.

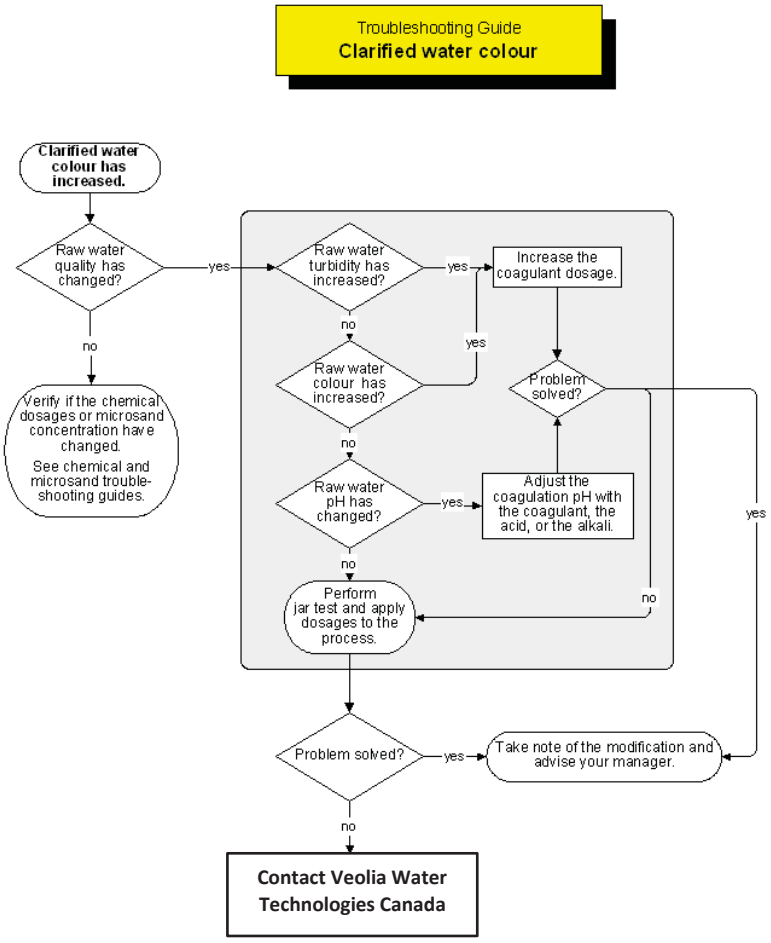

Figure 15: Clarified water colour - Troubleshoothing guide

13.3.3 STOPPING OF MICROSAND RECIRCULATION PUMP

In manual mode, when the microsand recirculation pump needs to be stopped, one must, in order to prevent possible clogging problems, proceed as follow:

- Stop the mixer in the maturation tank. This allows the microsand to settle in this tank instead of in the hopper.
- After approximately 30 minutes, verify that the underflow of the hydrocyclone does not contain any more sand.
- Afterwards, one can stop the pumping of sand without any risks of clogging the microsand recirculation circuit.

13.3.4 POWER FAILURE

Refer to the functional description of control system in the «Electricity and Control» section of the complete operation and maintenance manual.

14 JAR TEST PROCEDURE

14.1 INTRODUCTION

In order to simulate the Actiflo® process, a modified jar test procedure was developed. The procedure can be useful for optimizing process chemistry (pH, chemical dosages, etc.), which will produce settled water low in turbidity and with a high filterability index. Furthermore, the modified jar test procedure has the capability to evaluate or predict process performances of an existing Actiflo® unit and bring accurate diagnosis on operating troubleshooting.

14.2 MATERIAL REQUIRED

- Phipps & Bird jar test apparatus or equivalent lab stirrer allowing up to 300 RPM rotational speed
- Circular beakers (1 litre)
- Microsand
- Polymer (Allied Colloids, serial LT or equivalent)
- Coagulant (Alum, ferric chloride, PAC, PASS 100 or equivalent)
- Acid or base for pH and alkalinity adjustment (NaOH, aluminates, HCl, H_2SO_4, lime, carbonate, bicarbonate, CO_2, or equivalent)
- Turbidimeter (Hach 2100AN or equivalent)
- pH-meter (serial Hach EC or equivalent) and calibration solutions (pH=4, pH=7 and pH=10)
- Chronometer or stopwatch
- Micro pipettes 5 ml-1000 ml
- Disposable syringes 1 ml-5 ml

14.3 LABORATORY PROCEDURES

1. Record settled and raw water parameters values at the plant (turbidity, colour, dissolved aluminum, etc.) if the purpose of this test is to simulate the full scale unit.
2. Fill up the beakers with raw water.
3. Set the beakers on the bench.
4. Make sure raw water temperature corresponds to the desired temperature.
5. Set the paddle between 0.5 and 1.0 cm from the bottom of the beaker.
6. Start mixing and adjust rotation speed to 150 rpm.
7. If needed, add acid, base or equivalent and adjust at the optimum coagulation pH.
8. Add coagulant simultaneously in all beakers with micro-syringes from 0, 0.5, 1.0, 2.0 or 5 minutes after reaching the right pH in accordance with contact times simulated.
9. “A” minutes after adding coagulant (“A” corresponding to full-scale plant retention time in coagulation tank at the desired flow), add all microsand and half the quantity of polymer using a syringe.

10. After a delay of “B” minutes (“B” corresponding to full-scale plant retention time in injection tank at the desired flow), add the rest of polymer.
11. After a maturation contact time of “C” minutes (“C” corresponding to full-scale plant retention time in maturation at the desired flow), stop stirring and allow the water to settle for the next 3 minutes.
12. Sample settled water from 5 to 10 cm below the supernatant surface using a 100 ml syringe. Proceed slowly. Make required analysis.

Note: Contact times “A”, “B” and “C” will be explained and a table given for various flow conditions, during operator training sessions. Values for operation at typical design rate of 40 m/h are as follows: A: 2 min.; B: 2 min.; C: 6 min.

14.4 ANALYSIS

Turbidity, colour and other parameters.

1. Measure turbidity (NTU) using a turbidimeter.
2. Measure apparent colour (ACU) using a spectrometer.
3. Measure pH using pH meter.
4. Measure any other required parameters.

15 MAINTENANCE

15.1 ACTIFLO® CLARIFIER

15.1.1 LAMELLA PACK

WARNING

- Comply with all safety rules and policies if you need to access the settling tank.
- If you must go under the lamellas, make sure of the support beams integrity and the cleanliness of the lamellas.
- Before lowering the water under the lamellas, make sure you have removed some of the accumulated sludge in the lamellas (visible from the top of the clarifier) to reduce the supported weight.
- In the case of excessive plugging, the sludge weight can damage the lamellas and in extreme cases, collapse and cause serious injury to anyone under the modules.
- If lamellas are exposed to very cold temperatures, do not proceed with dewatering the lamellas because the cold makes them too fragile. It is then cleaned by keeping a layer of water above and uses the water jet to create pulsations in the lamella cells to loosen sludge.

15.1.1.1 Lamellas fouling

To maintain the Actiflo® performance, the lamellas should be cleaned regularly. The nature of the raw water, the quality of the clarified water produced and the flow rates handled are factors influencing the fouling. The lamellas fouling can be of two types:

- Visible (observable fouling from above lamellas)
- Invisible (fouling in the lower area of the lamellas)

The visible fouling may be an indicator of an invisible fouling in the lower area. In the case of significant invisible fouling, the lamellas can be damaged.

15.1.1.2 Cleaning frequency

There is a need for a regular cleaning of the lamella modules, by water jet or air jet, to maintain the Actiflo® clarifier performance. The recommended cleaning frequency is once every week. This may be more or less spaced according to the fouling rate observed. The cleaning frequency interval is the operator responsibility, although a minimum frequency is recommended.

15.1.1.3 Required equipment

Depending on whether the cleaning is carried out by air or water, it is suggested to use a PVC pipe fitted at its upstream end of a hose connector and elbow, nozzle or sprayer at its downstream end to direct water or air along the inclined axis of the lamellas. The length of PVC pipe should be sufficient for it to be handled from the top of the Actiflo® unit while allowing access to the bottom of the modules.

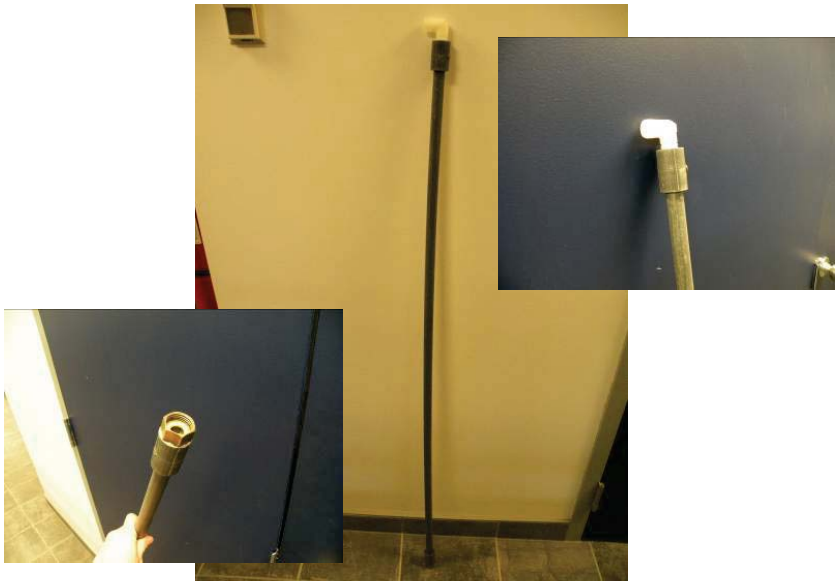

Figure 16: Suggested material for lamella cleaning

15.1.1.4 Lamella cleaning procedure

Lamellas cleaning can be achieved in 3 ways:

- Manual cleaning with water;
- Manual cleaning with air;
- Automatic cleaning with integrated system under the lamella modules (optional).

15.1.1.5 Manual cleaning with water

The cleaning procedure with water is:

1. Stop the Actiflo® unit according to the normal procedure;
2. Start the microsand recirculation system, in manual mode, including the scraper, if necessary, to assist in the disposal of cleaning sludge;
3. Slowly drain the basin using the partial drain located under the lamellas so as to have a lowering rate of 2 to 5 cm/min and start cleaning during emptying;
4. Open water jet on a wall of the decanter to prevent damage to the lamellas;

5. Clean the lamellas with a low pressure water jet (approximately 20 to 25 psi) using a cleaning tool (refer to previous figure). Repeat to clean every lamella. The water jet should be directed parallel to the lamella axis to clean the entire length;
6. With the aid of a high intensity light beam, validate the quality of the cleaning. When the lamellas are properly cleaned, it is possible to see through them;
7. Once completed, close the water jet on a wall of the decanter to prevent damage to the lamellas;
8. Finally, return the Actiflo® unit to service, to the sewer or to production depending on the quality of clarified water to be produced.

15.1.1.6 Manual cleaning with air

The cleaning procedure with air is:

1. Stop the Actiflo® unit according to the normal procedure;
2. Start the microsand recirculation system, in manual mode, including the scraper, if necessary, to assist in the disposal of cleaning sludge;
3. Insert the cleaning tool through the lamellas so that it goes below the lamella module and then inject air. Repeat to clean every lamella section;
4. Slowly drain the basin using the partial drain located under the lamellas so as to have a lowering rate of 2 to 5 cm/min;
5. Clean the lamellas with a low pressure water jet (approximately 20 to 25 psi) using a cleaning tool (refer to previous figure). Repeat to clean every lamella. The water jet should be directed parallel to the lamella axis to clean the entire length;
6. With the aid of a high intensity light beam, validate the quality of the cleaning. When the lamellas are properly cleaned, it is possible to see through them;
7. Once cleaning is completed, return the Actiflo® unit to service, to the sewer or to production depending on the quality of clarified water to be produced.

15.1.1.7 Automatic Cleaning with Integrated System under the Lamella Modules (Optional)

Please contact Veolia Water Technologies Canada to validate if this option is applicable. Refer to section 1 for contact.

The automatic cleaning system will clean the lamella modules according to a programmed sequence. The variation of the water level and air injection will be used for cleaning.

- The partial drain valve: used to drain the settling tank of the Actiflo® unit down to a few inches under the lamella.
- Backwash air valve: inject air under the lamellas with proper flow rate and pressure. Refer to technical datasheet.

Manual backwash sequence:

- Stop the Actiflo® unit according to the normal procedure.
- Open the partial drain valve to lower the level under the through.
- Open the backwash air valve and continue lowering the water level.
- Close the backwash air valve.
- Continue draining for a short time (with partial drain).
- Close the partial drain valve.
- Restart the Actiflo® unit.

Note:	Open confirmation from partial drain valve is needed to allow the opening of the air valve. Close confirmation from partial drain valve is needed to allow Actiflo® to restart.

15.1.1.8 Severe Obstruction

If the lamellas are severely obstructed or if the cleaning system is temporally down. It is recommended, every week, to stop the unit and partially drain the clarifier such that the lamellas are exposed (with the partial drain valve on the hopper). The lamellas can then be cleaned using a garden hose at 30 to 40 psi (maximum pressure). Remove any substance that is stuck to the settling module and which could interfere with the process efficiency.

15.1.2 MIXERS

For each mixer:

- Make sure that the gearbox remains clean.
- Check on a regular basis the oil level in the gearbox.
- Change the oil in the gearbox.
- Refer to the mixer manufacturer manual for complete inspection and maintenance requirements.

15.1.3 MICROSAND RECIRCULATION PUMPS

- Every day, proceed to a visual inspection of the packing adjustment.
- Every 1000 hours of service (every 6 weeks at 24 hr/day), lubricate the bearings and check belt tension.
- Twice a year, proceed to an inspection of the pump: dry seal, impeller, rubber coating, bearings, etc.
- Refer to the pump manufacturer manual for complete inspection and maintenance requirements.

15.1.4 HYDROCYCLONES

- After the first year, inspect the inside surface. Replace worn sections if needed. The first inspection will determine the frequency of replacement.
- Refer to the hydrocyclone manufacturer manual for complete inspection and maintenance requirements.

15.1.5 SCRAPER

- Every 8700 hours of operation, change the oil in the gear motor.
- Refer to the gear motor manufacturer manual for complete inspection and maintenance requirements.

15.2 CONTROL PANEL

For each panel, including junction boxes:

- Replace fuses when needed.
- In case of an electrical problem other than a fuse, contact a certified electrician and verify the circuits.
- Refer to the electrical drawings.

15.3 INSTRUMENTATION

For each instrument equipped with a controller/transmitter:

- Calibrate instrument on a regular basis.
- Refer to the manufacturer manual for calibration instructions and maintenance requirements.

15.4 VALVES

15.4.1 MANUAL VALVES

- No preventive maintenance required.
- Refer to the manufacturer manual, if needed.

15.4.2 AUTOMATIC VALVES

- Refer to the manufacturer manual for complete inspection and maintenance requirements.

15.5 PERIPHERAL EQUIPMENT

- Any other peripheral equipment needing maintenance should be inspected on a regular basis.
- Refer to the manufacturer manual for complete inspection and maintenance requirements.

15.6 PAINT INSPECTION

To maintain the life expectancy or life-cycle of Sherwin Williams Macropoxy 646 PW or Duraplate UHS coating system applied as an internal lining system for potable or fresh water tank, a well-planned inspection schedule is required. When the coating system is applied adequately to properly prepare steel substrate, it can last up to 15 years or more.

The recommend inspection schedule is:

- Inspect after 12 months following the initial application of the coating system. If the substrate is exposed, if the surface is damage or require repairs, perform spot repairs according to the coating system manufacturer instructions specified in the following section.
- Repeat inspection every 3 years and repair.

15.7 PAINT REPAIR PROCEDURE

This procedure applies to Sherwin Williams Macropoxy 646 PW or Duraplate UHS coating system applied as an internal lining system for potable or fresh water tank.

If the painted surface is damage or require repairs perform the following:

1. Clean the surface with solvent according to surface preparation standard SSPC SP1 to remove any contamination.
2. Perform abrasive blasting of the surface according to surface preparation standard SSPC SP10 or perform power tool cleaning to bare metal as per SSPC SP11.
3. Surface preparation must create or expose existing profile to meet the minimum requirement set in the Sherwin Williams product data sheet.
4. Lessen the unevenness between the existing coating and steel by sanding the edges of the existing coating to a smoother transition.
5. Sand 5 to 10 cm on the existing coating surrounding the repair area in order to obtain a matte and rough surface.
6. Clean again the surface according to SSPC SP1 to remove any contamination or dust.
7. Apply Macropoxy 646 PW or Duraplate UHS, depending on the paint type used in the project, to restore specified dry film thickness (DFT) measurement.

15.8 LUBRICATION

- Refer to the following table for the lubrication schedule.
- Refer to the manufacturer equipment manual for complete lubrication, inspection and maintenance requirements.

15.8.1 LUBRICATION SCHEDULE

Equipment to be serviced	Component serviced	Type of lubrication	Lubricant manufacturer	Lubricant brand name	Quantity of lubricant	Lubrication schedule	Comments
Scraper (SEW Eurodrive)	Reducer box (Applicable for ACP-400R and up)	Food grade oil	Chevron	FM Grade ISO 460 or equivalent	8 - 14 L (2.1 - 3.7 gallons)	Change oil every 8700 hours of continuous operation	Fill by the glass window up to the oil level plug or to about half of the height of the slewing ring (10L approx.)
	Gearmotor	Food grade oil	Klüberoil	4UH1-460 N	1.9 L (0.5 gallon) for primary gear reducer and 14.0 L (3.7 gallons) for secondary reducer	Check oil and oil level every 6 months Change oil every 3 years	When changing oil, also replace oil seal (do not install it in the same track).
	Gearmotor bearings	Food grade grease	Aral	Aralube BAB EP2	Low RPM bearings: Fill the cavities between the rolling elements one-third full with grease High RPM bearings: Fill the cavities between the rolling elements two-third full with grease	Replace anti-friction bearing grease every 3 years	Regreasing recommended at the same time as changing the oil or replacing bearings
	Motor bearings	Food grade grease	Aral	Aralube BAB EP2		Every 10000 hours of operation, check ball bearings and change if necessary	The motor anti-friction bearings are covered on both sides and cannot be regreased

Table 3: Lubrication schedule

Equipment to be serviced	Component serviced	Type of lubrication	Lubricant manufacturer	Lubricant brand name	Quantity of lubricant	Lubrication schedule	Comments
Mixers (Envirequip)	Motor bearings						The bearings are sealed for life. No additional lubrication required.
	Reducer box	Food grade oil	Chevron	FM ISO FM 220	5.4 L (1.4 gallons)	Check oil and oil level every 6 months Change oil every 2 years or 10000 hours	
	Reducer box bearings	Food grade grease	Mobil	Grease FM 222 (NLGI 2)	The bearing cavity should be packed to approximately 1/3 full with grease	Regrease bearings every 6 months	
Mixers (PMSL) (Food Grade)	Motor bearings	Grease	Esso	Alvania R3	0.14 oz - 0.32 oz (4.0 g - 9.0 g) (refer to manufacturer's instruction)	Regrease bearings every 12000 hours	Motors are not equipped with grease fittings. Lubrication is carried out during periodical overhauls when the motor is taken apart.
	Reducer box	Food grade oil	Chevron	Lubricating Oil FM	19 L (5 gallons) Except ACP2-75: 26.5 L (7 gallons)	Check oil level weekly (mixer must be off) Change oil in mixer drive every 6 months or 2500 hours.	After the initial break-in period, two weeks of operation, the oil should be changed while the equipment is at operating temperature.
	Reducer box bearings	Food grade grease	Bell Ray	No-Tox HD Grease #2		Add grease to all bearings, couplings, and seals every 6 months or 2500 hours.	

Table 3: Lubrication schedule

Equipment to be serviced	Component serviced	Type of lubrication	Lubricant manufacturer	Lubricant brand name	Quantity of lubricant	Lubrication schedule	Comments
Mixers (PMSL) (Synthetic)	Motor bearings	Grease	Esso	Alvania R3	0.14 oz - 0.32 oz (4.0 g - 9.0 g) (refer to manufacturer's instruction)	Regrease bearings every 12000 hours of operation	Motors are not equipped with grease fittings. Lubrication is carried out during periodical overhauls when the motor is taken apart.
	Reducer box	Synthetic grade oil	Chevron	Tegra 320	19 L (5 gallons) Except ACP2-75 : 26.5 L (7 gallons)	Check oil level weekly (mixer must be stopped) Change oil in mixer drive every 6 months or 2500 hours.	After initial start-up, sample the oil after the first 100 hours or three months of operation; thereafter, take samples for analysis every 2500 hours of operation or six months, whichever occurs first. Note that the initial oil analysis results may show remnants of the factory preservative oil.
	Reducer box bearings	Food grade grease	Chevron	Black Pearl EP (NLGI 2)		Add grease to all bearings, couplings and seals every 6 months or 2500 hours.	
Recirculation pump (McLanahan)	Pump	Grease	Shell	Alvania Grease 3 (NLGI 2)	Inject grease by six strokes of a regular size grease gun (2" diameter body)	Regrease bearings every 1000 hours of operation	
	Motor bearings	Grease	Esso	Polyrex® EM (NLGI 2)			Does not require lubrication as bearing life is 20000 hours
Recirculation pump (Seepex)	Pump	Grease	Please refer to manufacturer's operation and maintenance manual				
	Motor bearings	Grease	Esso	Polyrex EM (NLGI 2)	0.61 oz (17.3 g)	Regrease bearings every 4750 hours of operation	

Table 3: Lubrication schedule

LEFT BLANK

6 – OPERATION AND MAINTENANCE

6.2 – HYDRA-POL POLYMER PREPARATION SYSTEM

LEFT BLANK

VEOLIA

Hydra-Pol ™

Polymer Preparation System

Installation, Operation and Maintenance Manual

Document No: IOM_0001_HYDP
Revision: 02
Date: 2018.05.07

WATER TECHNOLOGIES

LEFT BLANK

TABLE OF CONTENTS

1 INTRODUCTION 4
2 SAFETY 5
2.1 INTRODUCTION 5
2.1.1 Utility Hazards 5
2.1.1.1 Electrical 6
2.1.1.2 Pressurized Water 6
2.1.2 Equipment Hazards 6
2.1.2.1 Rotating Parts 6
2.1.2.2 Operation and Maintenance 7
2.1.3 Chemical Hazards 7
3 SHIPPING 8
4 RECEIVING 8
5 HANDLING 9
5.1 GENERAL 9
5.2 STAINLESS STEEL MATERIAL HANDLING 9
6 STORAGE 10
6.1 GENERAL 10
6.2 STAINLESS STEEL MATERIAL STORAGE 11
6.3 SPECIAL MAINTENANCE REQUIREMENTS DURING STORAGE 11
6.4 EQUIPMENT CLEANING 11
7 HYDRA-POL™ PRINCIPLE AND DESCRIPTION 12
7.1 POLYMER HYDRATION PRINCIPLE 12
7.2 DESIGN SUMMARY 13
7.2.1 Datasheet 13
7.2.2 P&ID 14
7.2.3 General Arrangement Drawings 15
7.3 COMPONENTS DESCRIPTION 16
7.3.1 Dry Polymer Storage and Dosing 16
7.3.1.1 Hopper with Vacuum or Bulk Bag Unloader 16
7.3.1.2 Volumetric Feeder 16
7.3.2 Polymer Wetting and Transfer to the Maturation Tank 16
7.3.2.1 Isolation Valve 16
7.3.2.2 Solenoid Valve 17
7.3.2.3 Service Water Pressure Switch 17
7.3.2.4 Pressure Gauge 17
7.3.2.5 Wetting Cone and Eductor 17

7.3.2.6 Check Valve 17
7.3.2.7 Static Mixer 17
7.3.2.8 Level Switch 17
7.3.3 Polymer Maturation 18
7.3.3.1 Preparation Tank 18
7.3.3.2 Mixer 18
7.3.3.3 Butterfly Valve 18
7.3.3.4 Conductivity Probe (optional) 18
7.3.3.5 Pressure Transmitter 18
7.3.4 Polymer Solution Storage 18
7.3.4.1 Storage Tank 18
7.3.4.2 Pressure Transmitter 19
7.3.4.3 Control Panel 19
8 INSTALLATION 20
8.1 SERVICE WATER 20
8.1.1 Flowrate and Inlet Pressure 20
8.1.2 Water Temperature 20
8.1.3 Water Quality 21
8.2 RECOMMENDED ARRANGEMENT 21
8.3 PIPES CONNECTIONS 22
8.4 ELECTRICAL REQUIREMENT 22
9 INSTALLATION AND PRE START-UP INSPECTION 23
9.1 PRE-OPERATIONAL CHECKOUT 23
9.2 START-UP CHECKOUT 23
9.2.1 Mechanical, Electrical and Control Start-Up 23
9.2.1.1 Initial Checking and Adjustment 24
9.2.2 Hydraulic Test 25
9.2.3 Control Start-Up 25
9.2.4 Process Start-Up 26
9.2.4.1 Screw Calibration Procedure 26
9.2.4.1.1 Dosage Calculation 26
9.2.4.1.2 Feeder Capacity 26
9.2.5 Process Start-Up Records 27
10 TROUBLESHOOTING GUIDE 28
11 MAINTENANCE 30
12 SPARE PARTS 31
APPENDIX A START-UP CHECKOUT CHECKLIST 32
APPENDIX B COMPONENTS DATA SHEETS AND MAINTENANCE MANUALS 33

1 INTRODUCTION

This document provides handling, storage, installation, operation and maintenance instructions for the Hydra-Pol™ polymer preparation system. The components of the Hydra-Pol™ are supplied by Veolia Water Technologies Canada (**VWTC**).

To obtain any additional information regarding characteristics or instructions on this equipment, please do not hesitate to contact us.

The system was designed in Canada by:

Veolia Water Technologies Canada
4105, Sartelon
Saint-Laurent, Qc.
Canada H4S 2B3
Phone: 514-334-7230
Fax: 514-334-5070

For technical support or service needs, for spare parts or to get assistance during your warranty period, you may contact us at the following number during regular business hours or write us at:

Veolia Water Technologies Canada After Sales Support
1-844-SER-VWT9 | 1-844-737-8989 | vwtservicecanada@veolia.com

Our business hours are from
Monday to Friday
8:30am to 5pm EST

2 SAFETY

2.1 INTRODUCTION

It is important that the operator has understood the instructions of use, security and maintenance before using the Hydra-Pol™ system. The manufacturer cannot be held responsible for use or improper maintenance resulting from a breach or non-compliance with instructions. The Operation and Maintenance manual contents must be kept permanently close to the system in a safe place.

It is important for Operations and Maintenance individuals to understand the nature of the chemicals they are working with. Hydra-Pol™ systems are for the preparation and dosage of different chemicals, some of which can pose extreme slip/trip hazards if spilled. Other chemicals create fine dust and pose a risk to respiratory health.

The safety rules and guidelines issued to the operators are the primary precautions that are necessary for the prevention of accidents. The operators should be very familiar with these rules. The safety pictograms used in the plant are to be respected at all times.

Operators should always wear the safety equipment that is provided or required by their management. Such items as hard hats, safety shoes, safety glasses, gloves, breathing protection, protective clothing, protection harness and hearing protection are very basic and go a long way in preventing accidents.

Operators should be aware of the location of eye wash stations, safety showers, self-contained breathing apparatus, first aid stations, and other safety equipment furnished for the plant.

Good housekeeping will also eliminate safety hazards such as tripping or slipping. When spills happen, the floor should be cleaned as soon as possible (see Chemicals Hazards section).

2.1.1 Utility Hazards

Utility hazards exist on a system including high-voltage electricity, pressurized water, and high pressure air. Care should be taken when utilizing this system.

2.1.1.1 Electrical

Electrical connections must be made by certified electricians in compliance with all applicable codes and regulations. Electrical equipment should never be worked on unless it is turned off and locked and tagged out. The lockout system key should belong to the person doing the repair or the on-site electrician. This will remove the potential danger for electrical shock or accidental start-up.

Even though most electrical motors and switch boxes are designed to be water tight, the presence of water around electrical equipment always presents a hazard and therefore should be used with care.

2.1.1.2 Pressurized Water

Only the proper pressure fittings should be used in the piping system. Leaks should be repaired as soon as possible. Isolation valves on piping that are being repaired should be shut tight and locked out. Lock out the water inlet and remove pressure before starting any maintenance.

2.1.2 Equipment Hazards

2.1.2.1 Rotating Parts

<u>General instructions</u>

Since the system includes equipment with rotating parts (Dry polymer feeder and mixer), operators should avoid wearing loose clothing and jewellery. Loose clothing can present one of the biggest safety hazards that exist when working near equipment in process.

<u>Dry polymer Feeder</u>

- Never introduce hands into a running micro-batch feeder.
- Never open the inspection hatch when the feeder is running.
- It is however necessary fitting upstream the machine a fix safety grid or a hopper high enough to prevent damages to limbs according to the Machine Directive inforce. The same approach is necessary for the outlet: it is required using a vertical outlet or similar systems meant to prevent foreign bodies from entering the machine and cause damage to it, to persons or to their limbs. Always ensure the Machine Directive in force is being followed.
- Lock out the system before starting any maintenance.

<u>Mixer</u>

- Never introduce hands into the preparation tank if the system is not locked out.
- Lock-out the motor starter before starting any maintenance.

2.1.2.2 Operation and Maintenance

The system in its normal use can present a hazard if not operated or repaired in a safe manner.

All equipment should only be operated and repaired according to the recommended procedures of the manufacturer, and by qualified individuals.

Only recommended spare parts should be used.

Maintenance on pumps, piping, etc. should be performed only after valves are locked and tagged or slip blanks are installed to completely isolate the equipment being worked on. Instrumentation and controls should always be kept in good working order to help assure the safe operation of equipment. Never remove instruments or controls out of service until having communicated with the operator and have established a plan to define the operation maintenance steps. If air operated valves are used for isolation, the air line should be removed to prevent inadvertent operation of the valves. When possible the valve can also be locked in position.

When maintenance is finished on equipment, the protective caps provided must be reinstalled. If a protection must be left off, unwary personnel should be notified by using safety pictograms or installing temporary protection. Equipment should never be inspected or maintenance attempted while the equipment is operating. All pumps and various automatic valves may cause harm to an operator if care is not taken.

2.1.3 Chemical Hazards

Dry Polymer Material Safety Data Sheets (MSDS) should be available close to the system.

Since chemicals or chemical dosage are used during normal operation of treatment facility, the risks of exposure to toxic chemicals or chemical burns are present.

All plant personnel should be required to wear proper protective clothing when handling or working near these chemicals. A minimum wardrobe should include, but not be limited to, a plastic hard hat, coat, boots and gloves of a resistant material as well as a pair of safety glasses. Safety glasses, even with shields, are not adequate for use in areas where very acidic or basic materials are handled.

In the presence of water, polymer becomes very slippery. Spill recovery or remediation kits that include cat litter, rock salt and absorbent pads are very helpful in preventing trip/slip risks that result from polymer spills. In case of spill, wear appropriate personal protective equipment. Ventilate area. Prevent material from entering sewers, remove as much dry polymer as possible with a vacuum.

If the polymer has been wetted, the operator will remove as much as possible the wet polymer with a can and then, he will add an absorbent material (cat litter). He will let it soak it up for a while before he will shovel it into a disposal container. After the spill has been dried then a floor drain will allow washing the containment with a hose garden (warmest water possible).

3 SHIPPING

Most of the equipment and material for this project will be drop shipped from **VWTC** facilities and delivered directly to the site.

- All items delivered will be clearly identified with **VWTC**'s name, **VWTC**'s project name, **VWTC**'s project number.
- All shipments will have a clear Packing List identifying all parts in the shipment.
- All equipment will be tagged with the corresponding tag numbers shown on the design drawings (if applicable).

If there are more stringent requirements in the contract documents, they will take precedence over the above. If any of these requirements are not being followed, please notify the **VWTC** Project Manager immediately.

4 RECEIVING

The condition of all delivered equipment must be verified by the responsible party upon arrival at site. Verification that all equipment has been delivered as per contract must also be done upon arrival at site. Notification of missing or damaged items must be sent to Veolia Water Technologies Canada within five (5) working days of receipt of equipment. If there is no documented notification of missing or damaged parts within five (5) working days, Veolia Water Technologies Canada is not responsible for replacement of any items found to be missing or damaged at the time of installation and start-up of the supplied equipment. It is the responsibility of the party receiving the equipment to ensure all packaging is opened at the time of receipt to uncover and document any and all damages to the Freight Company and Veolia Water Technologies Canada.

Photographs and written documentation should be provided for all damaged equipment.

5 HANDLING

5.1 GENERAL

Equipment will arrive at the project site in several different shipments, from various freight companies and in several different packaging containers. Typically a flatbed truck is used which requires a fork lift or a crane to remove the items.

The Contractor is responsible for unloading and handling the equipment.

5.2 STAINLESS STEEL MATERIAL HANDLING

In order to minimize potential corrosion damage or unsightly surface marking, measures shall be taken to prevent contamination by iron, aluminium, copper, chlorides, and sulphides from lifting equipment. Stainless steel slippers or wooden packers should be used on forklift trucks to prevent contamination. Any resultant incidental contamination shall be removed at the earliest opportunity.

6 STORAGE

6.1 GENERAL

The following instructions outline the duties and responsibilities of the responsible party for equipment storage. The responsible party shall assume responsibility for the equipment upon arrival at the project site. These instructions shall define the minimum expectations for storage of all equipment. While this storage specification takes into account common environmental issues that may affect the system during storage, common sense should be the overriding factor in determining the best method to ensure the integrity and proper storage of the **VWTC** equipment.

For contractual purposes, **VWTC** demands the Client to send pictures of major equipment once it is placed in storage, any time it gets moved during storage and again prior to removing from storage. For outside storage, pictures must be sent every month. Alternatively, a written document (check list, etc.) confirming that proper storage conditions are maintained will suffice. Failing to do so would cancel the proposed warranty.

Should it be necessary to delay installation and subsequent operation of a unit for more than one month from date of receipt at Site, special precautions must be taken.

Although some equipment can be stored outdoors, indoor storage is preferred for most equipment.

The storage environment into which a system is placed can have a severe effect on the long-term usefulness of some parts. Key environmental factors are:

- Temperature
- Relative humidity
- Pollutants

Air may contain excessive moisture, pollutants, microorganisms, and other particulates that accelerate the deterioration of some materials. Humidity and pollutants can produce an aggressive atmosphere.

Indoor storage refers to storage in a climate controlled environment in a clean, non-aggressive, dry (non-condensing) and sheltered environment having a relatively constant temperature (especially for gear reducers, motors, bearings, etc.). Storage volume depends on the size of the project.

The environmental indoor conditions should not exceed the following ranges:

Min/Max Temperature Range between:	5°- 40°C
Relative Humidity (RH) Range between:	35% - 70%

1. Equipment should be stored in such a manner that it is free from allowing insects/rodents etc. from entering the equipment.
2. Cover the equipment with a tarp or similar protective shield to prevent direct exposure to dust or any other contamination. However, never enclose the unit or components totally in plastic covers; always leave adequate ventilation of air to prevent condensation.

Equipment must be checked on a weekly basis for tarp/wrap integrity and accumulation of dust or contaminants.

To avoid damage, do NOT stack crates.

To avoid damage, do NOT stack enclosures.

Do not store equipment or spares parts in barns, equipment sheds, or any other building without the capacity for heating and cooling as needed.

6.2 STAINLESS STEEL MATERIAL STORAGE

Stainless steel materials and products shall be stored separately from carbon steels and nonferrous materials. Materials should be stored under conditions that minimise the accumulation of dust and deposits. Any resultant incidental contamination shall be removed at the earliest opportunity.

6.3 SPECIAL MAINTENANCE REQUIREMENTS DURING STORAGE

After three (3) months of storage, long term storage methods must be applied to the unit including complete fill with lubricant. Protect machined surfaces and rotate shafts periodically (every month). Five (5) complete rotations of the output shafts are recommended each time.

Periodic checks should be made to ensure that no rusting or other damage has occurred. Should such be noted, corrective action should be taken immediately. Prior to putting the unit into service, drain lubricant and refill to the proper level as determined by the mounting position. Refer to manufacturer documentation.

All motors must be run every 3 month as a preventive measure against the formation of corrosion.

6.4 EQUIPMENT CLEANING

VWTC is not responsible for cleaning of any equipment prior to installation and start-up due to the storage of the equipment. This is the complete responsibility of others.

7 HYDRA-POL™ PRINCIPLE AND DESCRIPTION

7.1 POLYMER HYDRATION PRINCIPLE

Dry polymers must be diluted with water before use. The Hydra-Pol™ system is designed to handle all kind of dry polymer encountered in water treatment application (cationic, anionic and non-ionic). The uses of the Hydra-Pol™ polymer make up system allow activating between 90% and 100% of the dry polymer and help to minimize shipping and handling costs.

The challenge of dry polymer wetting is that the best activation each dry polymer particle should be wetted individually. When a clump of particles is wet, it forms an agglomeration called fisheyes that will dissolve slowly.

To avoid large agglomeration, the first polymer wetting and dilution must be done with a ratio between the service water and the dry polymer dosage. The wetting cone is designed for an optimal dissolving of dry polymer. The whirl created in the cone a high shearing stream that allows the polymer dispersion. After the powder dosage it cleans the cone. After the fast dispersion, the polymer hydration starts by forming a gel layer all around the polymer particles.

This dilution ratio is different depending on the type of polymer and the particle size. Anionic polymer must be more diluted than cationic polymer (see Table below).

The wetted polymer needs an aging time to reach its full activity; this aging time depends also on polymer type.

Polymer Powder	First Dilution	Aging Time
Anionic	0.2% – 0.25%	60 – 90 min
Cationic	0.3% – 0.5%	45 – 60 min

The polymer hydration changes its properties:

- Increase in molecule weight
- Charge interaction increase molecule size
- Entanglement in molecule increase viscosity
- Increase of conductivity

Dry polymers are susceptible to caking if stored under humid conditions. Caking interferes with the dilution process. It is recommended to store dry polymer in dry environment and respect powder life time.

7.2 DESIGN SUMMARY

7.2.1 Datasheet

If this polymer preparation system is integrated to a processing plant, refer to the Detailed Technical Documentation section of the Operation and Maintenance Manual for the preparation system datasheet.

7.2.2 P&ID

If this polymer preparation system is integrated to a processing plant, refer to the Process and/or Detailed Technical Documentation section of the Operation and Maintenance Manual for the preparation system drawings.

7.2.3 General Arrangement Drawings

If this polymer preparation system is integrated to a processing plant, refer to the Process and/or Detailed Technical Documentation section of the Operation and Maintenance Manual for the preparation system drawings.

7.3 COMPONENTS DESCRIPTION

The components of the Hydra-Pol™ system provide four main functions:

- Dry polymer storage and dosing
- Polymer wetting and transfer to the maturation tank
- Polymer maturation
- Polymer solution storage

7.3.1 Dry Polymer Storage and Dosing

7.3.1.1 Hopper with Vacuum or Bulk Bag Unloader

An integrated vacuum can fill a storage hopper located above the feeder. This vacuum allows manual transfer of polymer from dry bulk bags or other containers to the Hydra-Pol™ system.

The Hydra-Pol™ system is available with a bulk bag unloader option. It may be configured with a hoist and trolley or with a special frame for forklift loading. Each bulk bag unloader includes four (4) attachment points that raise the bulk bag to the polymer preparation system. An iris valve allows the discharge of the powder to a storage hopper.

7.3.1.2 Volumetric Feeder

WAM, model MBF, is a volumetric feeder that doses a dry material at a constant rate. It includes a homogenizer agitator installed in a hopper for a better material flow. The feed screw is made of stainless steel 304. The feeder includes, at the outlet, a T nozzle which directs the flow of the material, allows for isolation of the dosing screw, and has an inspection window where the powder dosing can be observed. The feeder contains a level switch, preventing the volumetric feeder from running when empty. A transition hopper is optional. It can be integrated with the volumetric feeder. It is made of stainless steel 304 and has a capacity of 100 L.

The feeder is also composed of a plunger which closes the T nozzle (at the exit of the metering) of the wetting cone. The operation of this device is controlled by a solenoid valve that allows a flow of water to the cylinder.

7.3.2 Polymer Wetting and Transfer to the Maturation Tank

7.3.2.1 Isolation Valve

An isolation ball valve is placed at the entry of the system to close the water inlet to the Hydra-Pol™. Two (2) others valves are placed at the outlet of the storage tank to drain or to close the conduit of the system. The valve is made of PVC with EPDM seals.

7.3.2.2 Solenoid Valve

Two solenoid valves are placed in the system. The first valve monitors the pressure of the inlet to the service water line. When the switch detects a fault, a switch commands the solenoid valve to close.

The second valve is used to let the water flow to the cylinder that triggers the opening of the dispenser. The return of this cylinder water flow goes to the wetting cone.

7.3.2.3 Service Water Pressure Switch

The pressure switch activation will trigger an error message and close the service water inlet valve if the inlet pressure is below its set point.

7.3.2.4 Pressure Gauge

The gauge is used to read the water inlet pressure.

7.3.2.5 Wetting Cone and Eductor

The wetting cone is a device that wets the metered powder and prevents material accumulation in the cone at the feeder output. It includes a tangential inlet to the cone that is controlled by a manual ball valve. It is very important to have the right amount of flow from this inlet into the cone to avoid having too little flow and a resulting accumulation of half-dry powder. However too much flow is also an issue, as it can cause water to splash up out of the cone and into the T nozzle.

An eductor, installed at the bottom of the wetting cone, draws the powder into the water flow through the system.

7.3.2.6 Check Valve

A check valve is placed after the output of the eductor. It prevents the return of the solution into the wetting cone when the system stops.

7.3.2.7 Static Mixer

The static mixer is a device which uses the flow energy to mix the water and the pre-wet polymer powder by means of mixing elements.

7.3.2.8 Level Switch

A level switch is installed in the hopper to signal the operator and stop the system when the level of powder becomes too low.

7.3.3 Polymer Maturation

7.3.3.1 Preparation Tank

The cylindrical preparation tank, made of stainless steel, allows the maturation process of the polymer solution. As stated in section 7.1, this timing depends on the volume of the batch, type of polymer and dosage. The tank plastic cover includes an access trap made of stainless steel. A butterfly valve is installed at the bottom of the tank to allow the transfer of the polymer solution to the storage tank. A hydrostatic pressure transmitter installed at the bottom of the tank to measure the level in the tank. An overflow is installed at the top of the tank.

7.3.3.2 Mixer

A mixer is installed on the cover of the preparation tank to allow maturation of the polymer solution. During the batching sequence, the mixer does not begin to run until the water level has reached the impellers. This level is set during commissioning and also dictates the point during the batching sequence when the volumetric feeder begins dosing.

7.3.3.3 Butterfly Valve

An open/closed actuated butterfly valve allows the solution transfer from the preparation tank to the storage tank when tanks are superimposed.

7.3.3.4 Conductivity Probe (optional)

A conductivity probe is installed in the preparation tank. Given experience, this conductivity probe will be able to reflect how the batch turned out. The conductivity is dependent on the service water, the temperature, the mixing/blending of the polymer, the polymer type and the dosage of polymer.

7.3.3.5 Pressure Transmitter

A hydrostatic pressure transmitter installed at the bottom of the tank measures the level in the tank. This level is set on commissioning and is integral to the batching sequence.

7.3.4 Polymer Solution Storage

7.3.4.1 Storage Tank

The cylindrical storage tank, made of stainless steel, allows the storage of the polymer solution. A support structure mounts the preparation tank above the storage tank. However, with tanks that have a larger capacity, tanks can be installed side by side and a pump allows the solution to be transfer from the

preparation tank to the storage tank. Anchor points are provided for fastening. An overflow is installed at the top of the tank.

7.3.4.2 Pressure Transmitter

A hydrostatic pressure transmitter installed at the bottom of the tank measures the level in the tank. This level is set on commissioning and controls when the batch in the preparation tank is transferred to the storage tank.

7.3.4.3 Control Panel

A control panel allows the fully automated system operation. It also allows the transmission of alarm signals to an external system.

8 INSTALLATION

8.1 SERVICE WATER

The Hydra-Pol™ system needs a clean water supply for the polymer activation a clean water supply. This water must meet quality criteria. The installer must connect the water supply as indicated on the general arrangement drawing.

8.1.1 Flowrate and Inlet Pressure

The required flow and pressure indicated on the technical data sheet are important to ensure proper system operation. These conditions must be met as a requirement for starting a batching sequence. When setting these inlet water standards, the dynamic head losses have to be taken into account. Non-compliance can lead to overflows at the wetting cone or plugging of the wetting cone due to improper blending. Inlet pressure is not to exceed 120 psig working pressure and must exceed 65 psig.

8.1.2 Water Temperature

The water temperature for the polymer make-up must preferably be between 10°C and 30°C. The ideal temperature is 15°C.

8.1.3 Water Quality

The service water should have preferably a low residual chlorine content (<0.5 mgCl_2/L). Chlorine can quickly deteriorate polymer solutions and thus reduce their effectiveness. Water having a high content of hardness (> 300 ppm $CaCO_3$) or alkalinity (>75 ppm) should also be avoided.

Parameter	Impact	Upper Allowable Limit
Total Hardness	High hardness causes precipitation in makedown vessels (most prevalent in high charge products)	<300 mg/L as Ca CO_3
pH	Low pH causes precipitation in makedown vessels	Makedown water pH in range of 6.0 to 8.0
Conductivity	High conductivity slows dissolution and reduces viscosity Low conductivity slows dissolution and reduces viscosity	< 10,000 µS/cm See following notes on conductivity
Chloride	No specific impacts distinct from that of conductivity as indicated above.	None specified. Refer to Conductivity limits.
Suspended Solids	High TSS promotes flocculation in makedown tank. Possible plugging of feed system.	< 5 mg/l (filtration at 100 µm).
Temperature	Warmer water promotes dissolution. Low temperature result in increased mixing time and potential for incomplete dissolution. Higher solution viscosities develop in low temperature solutions.	10 to 30°C
Metals(Fe^{2+}, Cu^{2+}...)	Cleavage of polymer chain and loss of activity.	< 1 mg/l each
Residual Oxidant	Degradation of polymer chain.	< 0.5 mg/l
Microbiological Activity	Degradation of polymer chain	< 10^3 CFU/ml aerobic or SRB

8.2 RECOMMENDED ARRANGEMENT

The installation should be performed by qualified personnel.

Select a location providing:

- An easy access to the system and an easy polymer handling.
- At least a clearance of one meter in front of the electrical panel.
- At least 72 inches of clearance behind the feeder for the maintenance.

In the presence of water, polymer becomes very slippery, it is recommended to take this hazard into account in the equipment layout.

It is recommended:

- To build a curb all around the area or install a plastic secondary containment.
- To secure the access to the top of tanks without entering into the secondary containment.
- To install a resistant coating and easy-to-wash on floors and curbs.
- To install tempered water hose close to the system.
- To install a closed floor drain in the secondary containment into which deteriorated polymer and the total volume of the Hydra-Pol™ tanks can be emptied.
- To design a concrete pad under the polymer tank to avoid flood damage to the instruments.
- To do not install equipment in areas of extreme heat, cold, dust or humidity. Avoid areas where objects or fluids can drop from overhead. Units are to be installed as close to the point of application as possible.

After selecting the optimal location, the installer will:

- Unpack the components.
- Install the preparation tank above the storage tank (if any) on a sturdy level surface. Fasten to prevent movement.
- Position powder dosing skid as the corresponding drawings on a sturdy level surface. Fasten to prevent movement.

8.3 PIPES CONNECTIONS

The installer has to connect the following pipes:

- Service water inlet.
- Tanks overflows and drains (they should be directed to an appropriate location according to local regulations).
- Pipe between the dosing system and the preparation tank. The dosing system should be located as close as possible from the preparation tank to reduce at the maximum the interconnecting pipe as shown on the General Arrangement drawing. Any extension of the pipe could bring an additional backpressure on the educator and change its performance.
- Transfer pipe between the two tanks (model over Hydra-Pol™ 7500).

8.4 ELECTRICAL REQUIREMENT

Electrical connections and maintenance must only be performed by qualified personnel. Electrical elements have to be connected according to local regulations. The Hydra-Pol™ system is usually provided with its own control panel.

The electrician has to connect:

- The mixer motor to the control panel
- Main power supply to the control panel
- Cables of instruments to the control panel

It is recommended to ground the dosing system frame and the two tanks (if made of steel).

9 INSTALLATION AND PRE START-UP INSPECTION

9.1 PRE-OPERATIONAL CHECKOUT

Included in appendices of this manual are standard **VWTC** checklist forms to be completed by the installer and returned to **VWTC** project manager prior **VWTC** onsite installation inspection. **VWTC** will schedule our field service visits prior to return of completed checklists but it is our policy to not dispatch field personnel to the jobsite until the completed and signed checklist is received by our project manager or field service manager.

9.2 START-UP CHECKOUT

9.2.1 Mechanical, Electrical and Control Start-Up

The mechanical and electrical start-up of the polymer make-up system includes the connection, verification and inspection of the following elements:

- Mounting
- Motors
- Mixers
- I/O Check
- Tubing and process connections
- Power connections and supply
- Valves
- Instrument calibration

9.2.1.1 Initial Checking and Adjustment

Prior to calibration the following elements will be verified:

FUNCTIONAL START-UP CHECKOUT	
Vacuum	Check that the air filter is in place.
	Check suction of the system. Do not put your hands on the suction nozzle.
Hoist & Trolley	Check that the hoist and the trolley operate correctly.
Feeder	Check whether foreign substances or water have entered the feeder. In such a case, clean thoroughly.
	Avoid any friction between the metering screw and the body. This requires opening the hopper and removing the T nozzle. Inspecting the screw/auger to be sure that it is flush with the walls of the hopper and inside the T nozzle is very important because removing the material can be difficult and risky.
	Check that the inspection hatch is closed (stainless steel feeder only).
	Check oil level in gear reducer.
	Check that the metering screw rotates counter clockwise when looking from the rear of the drive unit.
	Check that the feeder is working properly.
	Minimum speed and maximum speed must be verified.
Wetting Cone	Check that the wetting cone is completely clean and free from dirt or foreign objects.
	Check that the water flows tangentially into the cone.
	Ensure that the water speed is sufficient to create a vortex.
	Ensure that water speed is not too great to create splashing up into the T nozzle.
	Check that the metered powder falls vertically in the middle of the wetting cone.
Eductor	Check that the eductor is completely clean and free from dirt or foreign objects.
	Check that the service water pressure is higher than 65 psig in operation.
	Check that the eductor is working properly.
Piping	Check that the pipework are completely clean and free from dirt or foreign objects.
Manual valves	Check that all manual valves are working properly.
	The manual valves control the whirl and blending of the powder. Ensure that the flow is appropriate.
Automatic valves	Check that all automatic/electric valves are connected to the control panel.
	Check that all automatic/electric valves are working at proper times and the limit switches are set.
Instruments	Check that all instruments are properly calibrated.
	Check that all instruments are properly installed.
Pressure switch	Check that the pressure switch works properly by closing the water inlet valve.
	Check that the pressure switch is connected to the control panel.
	Check that the pressure switch works properly.
	Check the pressure gauge is working correctly.
Mixer	Check all bolts and nuts are properly tightened.
	Check the oil level in the gearbox.
	Check if installation of the mixer shaft is adequate.
	Check the direction of rotation of the agitator.
	Adjust the motor overload protection to the value shown on each motor nameplate.
	During start-up, listen for unusual noises and check for excessive vibration.
	Check the temperature of the motor and the gear reducer. The temperature should not exceed 180°F (82°C).
Static mixer	Check that the static mixer works properly.
Level transmitter	Check the calibration of the level transmitter.

9.2.2 Hydraulic Test

Due to the nature of the materials used in the Hydra-Pol™ systems, it is important that the hydraulic integrity of the system is verified even before the Control Start-Up is performed. The hydraulic inspection and testing is comprised of the following elements:

- Connect all fittings and walk the piping to be sure that the hydraulic pathway meets operational specifications.
- Verify that the service water system is ready to provide water and that the client is ready to accept water into their downstream system.
  - NOTE: this step is of extreme importance as during the construction phase, often communication with other workers is complicated and difficult. Be sure that you yourself check the discharge point and that no one is working in the area and that all risks are mitigated.
- Briefly allow water through the system by manually operating the valves. Check for leaks. Provided no leaking or loose connections are found, continue to the next step.
- Verify that the preparation tank and storage tank are clean and have head space to accept a few minutes of water. Manually operate the valves and booster pumps to allow for the operational pressure of the system is met. Walk the Hydra-Pol™ to verify that all tubing fittings are tight, that the T nozzle plunger is pulled back, and that the whirl in the wetting code is adequate.
  - NOTE: this step is of importance. If the whirl of the wetting cone is not adequate, then the wetting cone will clog with polymer and the clean-up will take hours.
- Allow the preparation and storage tank to fill with service water. Check that the level set-points give the desired volume for the sequencing and batching in the Process Start-Up section.
- Stop the system and do a final walk-through of all hydraulic and mechanical integrity.

9.2.3 Control Start-Up

The control start-up for the polymer make-up system include; connection, verification and inspection of the following elements:

- The alarms, start-up and shut down of the motors.
- The transmission of the electric signals of the different components as well as their configuration parameters if needed.
- The pumps alarm transmission to the plant system.
- I/O verification of instrumentation.
- Sequencing.
- The proper functioning of the electrical and process alarms.
- The variable frequency drives connection.
- The control panel.
- Other elements of control, if required.

Start-up and shut down sequencing will be checked:

- Normal start and stop sequencing.
- Alarms stop sequencing.
- Clearing alarms and restarting the process.

9.2.4 Process Start-Up

Once the mechanical, electrical, hydraulic and control start-up of the preparation system have been completed, the equipment commissioning can begin. The following steps will be performed.

9.2.4.1 Screw Calibration Procedure

Tests will be performed using water for the initial testing and the specific chemical for the final test.

- Calibration of the dosing screw at minimum, full range and intermediate speeds to set the functional output curve.
- Preparation unit concentration and dosage settings.

Powder polymer is injected into a preparation tank using a dosing apparatus. The apparatus operating time is calculated based on its capacity and the desired concentration.

9.2.4.1.1 Dosage Calculation

The operating dosing time is calculated based with the following formula:

$$T_s = \frac{CONC \times \left(\left(LEV_{stop} - LEV \right) \times SURF \right)}{CAP} \times 60$$

T_s:	Dosing apparatus operating time (sec)
CONC:	Polymer concentration adjustable to operator interface (g/l)
LEV:	Preparation tank current level (m)
LEV_{stop}:	Preparation stop level set point (m)
SURF:	Preparation tank surface (m^2)
CAP:	Dosing apparatus capacity adjustable to operator interface (kg/min)

Note: This formula may also be used to perform a manual preparation in case of automatic system failure. To ensure dosing accuracy of the tank, capacity must be validated by the operator.

9.2.4.1.2 Feeder Capacity

The feeder capacity must be checked by weighing the discharged amount of polymer powder/time.

The operator must repeat four (4) times the following procedure:

- Set a frequency on the VFD – Start with 60 Hz.
- Hold a sample shovel just under the outlet of the powder feeder.
- Then turn the switch for FEEDER to position H for a specific time.
- Weigh the contents in the sample shovel.

EXAMPLE (dry polymer):

Obtained value 2000 g/20 sec = 6 kg/min = feeder capacity

Assume that 0,3% concentration is to be mixed in a 400 L tank (see the actual value on the data sheet). The amount needed for each batch will be:

$$\frac{0.3 \times Size\ of\ tank\ (dm^3)}{100} = \frac{0.3 \times 400}{100} = 1.2\ kg$$

The dosing time of the powder feeder will then be:

$$\frac{1.2\ [Amount\ of\ polymer\ in\ kg]}{6\ [Capacity\ of\ feeder\ in\ kg/min]} = 0.2\ minute$$

This dosing time is set on the interface. Record the test procedures and test results/settings within the manual.

9.2.5 Process Start-Up Records

The personal in charge of the commissioning will furnish inspection sheets for equipment including:

- Project name
- Tag number and description
- Manufacturer
- Model and serial number
- Date, time and person who will perform calibration
- Calibration data to include:
  - Input, output and error at minimum, intermittent and maximum output range
- Space for comments
- Certification by installer and acknowledgment by contractor and date
- Adjustment of the service water flow rate and pressures (if required)

10 TROUBLESHOOTING GUIDE

COMPONENT	ISSUES	POSSIBLE CAUSES	ACTION
SERVICE WATER INLET	Service water low pressure.	Service water feed system low pressure.	Inspect service water system and booster pumps.
		Obstruction.	Clean pipes.
VACUUM	Reduction of the suction capacity at the vacuum filling of the polymer powder.	Clogging of the dust filter.	Remove the external filter and clean. Verify that the lid and viewport have no leaks.
		Max level in the powder hopper is exceeded and/or malfunctioning level sensors.	Stop the filling. Inspect the feedback from level indicators. If not reflective of material's level, inspect wiring and ability to detect material.
		The feeder shutter at the outlet of the feeder is not shut.	Filling must not be done while the feeder is operating. Wait until the feeder has stopped.
WETTING CONE	Clogging of the wetting cone.	The feeder shutter at the outlet of the feeder is not shut.	Check the function of the solenoid valve to the feeder shutter, or clean the shutter from possible polymer powder clogging.
		The water whirl in the wetting cone is too small.	Check water pressure.
FEEDER	Feeder does not run.	No power to the feeder.	Check the button or the on / off switch of the machine is turned on.
			Check that the isolating switch is in the on position.
			Check that the inverter is not set to 0 Hz.
			Check if there are short circuits, blown fuses or tripped breakers.
			Check that the power supply corresponds to control and motor requirements.

			Check if there are error messages in the drive controller screen.
	Feeder screw or agitator is damaged.	Foreign body inside feeder.	Remove foreign body and replace damaged components
	Feeder screw or agitator stops.	Hygroscopic material inside feeder has absorbed humidity.	Unload feeder completely when shutting down for long periods.
	Feeder – Rotating components unscrewed, no material handled.	Motor incorrectly wired.	Rewire (metering screw must turn counter clockwise when viewed from behind drive unit).
	Feeder – Sticking of hygroscopic products; Agglomeration of viscous materials; Contamination of the product.	Long shutdown period.	Unload feeder completely when shutting down for longer periods.
	Feeder makes scraping or grinding noise.	Foreign body inside feeder. Poor alignment of gearbox, hopper wall welding.	Visually inspect the hopper and the level of the auger by removing the T nozzle.
TANK	Maturation tank or storage tank overflow.	Level transmitter default.	Inspect level transmitter.
	Incorrect concentration of the polymer solution.	Wrong dosing time set point	Calibrate the dosing screw and adjust parameter.
		Polymer density change.	Calibrate the dosing screw and adjust parameter.
TRANSFER VALVE	Transfer valve not closing tight.	Debris present in the valve.	Remove the foreign object and check for possible damages.
		The adjustment of the travel stop is incorrect.	Adjust the actuator travel stop according to the manufacturer's instructions.
		Prepared polymer solution concentration is too high	Adjust the concentration

Note: If the preparation sequence is interrupted by a power failure or by component failure then the current polymer batch will be lost and will have to be drained. Broken components will have to be replaced before starting a new polymer batch.

11 MAINTENANCE

Any manipulation of metering equipment and chemicals should be done by qualified and trained personnel. Refer to product MSDS for safe material handling.

ITEM	DESCRIPTION	WEEKLY	MONTHLY	BI-MONTHLY	YEARLY	COMMENTS
MIXER	Gearbox visual inspection and noise	X				
	Check gearbox oil level	X				
PREPARATION TANK AND STORAGE TANK	Empty storage and preparation tanks. Check the presence of foreign matter at the bottom. Clean if necessary.				Every 6 months	Dispose of chemical residues appropriately
PIPING	Check for leaks.	X				
	Rinse pipes with lukewarm water.				Every 6 months	
LEVEL TRANSMITTER	Calibrate on a regular basis and / or when readings become inaccurate (specific to each type of use).				Every 6 months	
STATIC MIXER	Visual check. Clean if required	X				
FEEDER	If the feeder uses MBTX, MBTN or MBTT type shaft seals, check these on a monthly basis to make sure they are in good working condition.		X			Grease monthly
DISSOLVER CONE	Inspect the cone for the presence of polymer agglomeration. In case of loss of suction, remove and clean eductor with hot water. Inspect weekly to ensure that there is no accumulation of polymer or fouling and, if necessary, clean by draining the cone and the eductor with water.	X				
VALVES	Inspected and clean if required. Refer to supplier's maintenance manual.				Every 6 month	
DOSING SKID FRAME OR BULK BAG UNLOADER	Check the appearance of the structure, paying particular attention to the state of welds.		X			
	Check that all bolts are correctly tightened, in particular the vibrator fixing bolts.		X			

12 SPARE PARTS

It is highly recommended to keep in stock spare parts in sufficient quantity for all critical components to the proper functioning of the system.

Only the use of original Veolia spare parts will ensure proper and reliable operation of the system.

When ordering a spare part, please give the following information:

- Veolia's project number
- Veolia's project name
- Part number

APPENDIX A

START-UP CHECKOUT CHECKLIST
(TO BE COMPLETED BY CONTRACTOR)

LEFT BLANK

VEOLIA	HYDRA-POL START-UP CHECKOUT CHECKLIST		
Project		Date	
Structure		Revision	
Number		Doc. N°	
Reactor		Written by	

N°	ITEMS	X	COMMENTS
1	**AUXILIARY COMPONENTS TEST PROCEDURE**		
1.1	Place Main Disconnect to "ON"		
1.2	Put Water inlet valve in manual mode "OPEN" position		
1.3	Check service water pressure when valve placed in OPEN position		
1.4	Check water whirl in wetting cone		
1.5	Adjust manual wetting cone valve for desired whirl level		
1.6	Check service water is going to mixing tank		
1.7	Close manual water inlet valve		
1.8	Verify that water pressure switch alarm activates after **2 seconds**		
1.9	Open manual water inlet valve		
1.10	Verify that water pressure switch alarm is disabled		
1.11	Simulate (if possible) the function of powder hopper level switch		
1.12	Start powder vacuum conveyor (if supplied)		
1.13	Stop powder vacuum conveyor (if supplied)		
1.14	Start hoist & trolley (if supplied)		
1.15	Stop hoist & trolley (if supplied)		
1.16	AUXILIARIES COMPONENTS TEST PROCEDURE COMPLETED		
2.0	**MANUAL WET TEST PROCEDURE**		
2.1	Place Main Disconnect to "ON"		
2.2	Put water inlet valve in manual mode "OPEN" position		
2.3	Check service water pressure when valve placed in OPEN position		
2.4	Check water whirl in wetting cone		
2.5	Adjust manual wetting cone valve for desired whirl level		
2.6	Check service water is going to mixing tank		
2.7	Wait water level in mixing tank reaches mixer level + 100 mm (fully covering the impeller)		
2.8	Place mixer selector in manual mode "START" position		
2.9	Confirm impeller rotation follows supplier requirement		
2.10	Put feeder discharge valve in manual mode "OPEN" position		
2.11	Check feeder discharge valve is "OPEN"		
2.12	Place blending motor (if applicable) selector in manual mode "START" position		
2.13	Check blending motor (if applicable) is in"RUN" mode		

N°	ITEMS	X	COMMENTS
2.14	Place feeder motor selector in Manual mode "START" position		
2.15	Check feeder motor (if applicable) is in "RUN" mode		
2.16	Confirm screw feeder rotation follows requirement		
2.17	Place feeder motor selector in manual mode "STOP" position		
2.18	Place blending motor (if applicable) selector in manual mode "STOP" position		
2.19	Put feeder discharge valve in manual mode "CLOSE" position		
2.20	Put mixer in manual mode "STOP" position		
2.21	Put water inlet valve in manual mode "CLOSE" position		
2.22	Put mixing tank transfer valve in manual mode "OPEN" position		
2.23	Verify that water transfers from mixing tank to storage tank		
2.24	Put mixing tank transfer valve in manual mode "CLOSE" position		
2.25	MANUAL WET TEST PROCEDURE COMPLETED		
3.0	**FEEDER CALIBRATION PROCEDURE**		
3.1	Place polymer powder in storage hopper		Follow IOM for specific requirements
3.2	Put water inlet valve in manual mode "OPEN" position		
3.3	Check service water pressure when valve placed in OPEN position		
3.4	Check water whirl in wetting cone		
3.5	Adjust manual wetting cone valve for desired whirl level		
3.6	Check service water is going to mixing tank		
3.7	Wait water level in mixing tank reaches mixer level + 100 mm (fully covering the impeller)		
3.8	Place mixer selector in manual mode "START" position		
3.9	Put feeder discharge valve in manual mode "OPEN" position		
3.10	Check feeder discharge valve is "OPEN"		
3.11	Place blending motor (if applicable) selector in manual mode "START" position		
3.12	Install powder test sampling collection device at feeder discharge		
3.13	Place feeder motor selector in manual mode "START" position		
3.14	Let feeder run for 2-3 minutes until flowrate reach steady state is reached		
3.15	Place feeder motor selector in manual mode "STOP" position		
3.16	Dispose collected powder in storage hopper		
3.17	Install powder test sampling collection device at feeder discharge		
3.18	Place feeder motor selector in manual mode "START" position		
3.19	Run feeder for 1 minute and weigh collected powder sample		
3.20	Dispose collected powder in storage hopper		
3.21	Place feeder motor selector in manual mode "STOP" position		
3.22	Repeat 4 times the powder sampling procedure (1 min for each test)		
3.23	Remove highest and lowest weighted values and determine feeder real capacity by calculating the average value between the three closest values		
3.24	Insert feeder real capacity value in Hydra-Pol HMI (feeder calibration screen)		

N°	ITEMS	X	COMMENTS
3.25	Place all motor selectors on "STOP"		
3.26	Place all valve switches on "OFF"		
3.27	FEEDER CALIBRATION PROCEDURE IS COMPLETED		
4.0	**AUTOMATIC START-UP PROCEDURE**		
4.1	Put all valve selector switches in "AUTO" position		
4.2	Put all motor selector switches in "AUTO" position		
4.3	Check service water pressure when valve placed in AUTO position		
4.4	Check water whirl in wetting cone		
4.5	Adjust manual wetting cone valve for desired whirl level		
4.6	Check service water is going to mixing tank		
4.7	Confirm that mixer starts automaticaly		
4.8	Confirm that feeder discharge valve opens		
4.9	Confirm that blending motor starts		
4.10	Confirm that feeder starts		
4.11	Confirm that powder is fed to wetting system		
4.12	Confirm that feeder motor stops when feeding time is completed		
4.13	Confirm that blending motor stops		
4.14	Confirm that feeder discharge valve closes		
4.15	Confirm that water inlet valve closes when water level reaches HIGH LEVEL		
4.16	Confirm that mixer stops when mixing time is completed		
4.17	Confirm that mix tank discharge valve opens when mixing time is completed and liquid level in storage tank is under low level storage tank		
4.18	Confirm that mix tank discharge valve closes after transfer		
4.19	Confirm that new batch restarts automaticaly		
4.20	AUTOMATIC START-UP PROCEDURE IS COMPLETED		
5.0	**HYDRASTAT START-UP PROCEDURE**		
5.1	Calibrate probes according to MFG procedure		
5.2	Start SC-200 according to MFG procedure		
5.3	Wait until 2-3 automatic batches are completed		
5.4	Put Hydra-Stat in "Autocalibration mode" on HMI		
5.5	Hydra-Stat will generate setpoints and reference curve		
5.6	If make-up concentration is changed, new auto-calibration is required		

LEFT BLANK

APPENDIX B

COMPONENTS DATA SHEETS AND MAINTENANCE MANUALS

If this polymer preparation system is integrated to a processing plant, refer to the Manufacturer Operation and Maintenance Manual section of the Operation and Maintenance Manual for the preparation system component manufacturer manuals.

LEFT BLANK

6 – OPERATION AND MAINTENANCE

6.3 – SULFURIC ACID DOSING SKID

LEFT BLANK

Installation, Operation and Maintenance Manual

ELECTROMAGNETIC PUMPS – DOSING SKID SYSTEM

DOCUMENT NO: IOM_0041_PCH

SEPTEMBER 2016, REVISION 1

Veolia Water Technologies Canada Inc.
ISO 9001:2008
4105 Sartelon, St-Laurent (QC) H4S 2B3
Tel: 514-334-7230 ● Fax: 514-334-5070
www.veoliawatertechnologies.ca

NOTICE OF CONFIDENTIALITY
This document is confidential and contains proprietary information. It must not be shared with a third party without the written consent of Veolia Water Technologies Canada Inc.

TABLE OF CONTENTS

1 INTRODUCTION 3

2 SAFETY 4

2.1 INTRODUCTION 4
2.2 FALL HAZARDS 4
2.3 CHEMICALS HAZARDS 5
2.4 ELECTRICAL CONNECTIONS 5

3 SHIPPING 6

4 RECEIVING 6

5 HANDLING 6

5.1 GENERAL 6
5.2 POLYPROPYLENE MATERIAL HANDLING 6

6 STORAGE 7

6.1 GENERAL 7
6.1.1 INDOOR STORAGE 7
6.2 EQUIPMENT CLEANING 8

7 INSTALLATION 9

7.1 GENERAL 9
7.2 SYSTEM OVERVIEW 9
7.2.1 SUPPLY SIDE 9
7.2.1.1 FLOODED SUCTION 9
7.2.1.2 SUCTION LIFT 10
7.2.2 INTERCONNECTING PIPING 14
7.2.3 SUCTION LINE 14
7.2.4 DISCHARGE LINE 14
7.2.5 AIR BLEED VALVE BYPASS LINE (if applicable) 14
7.3 START-UP 16
7.3.1 INITIAL PRIME 16
7.3.2 SETTING VALVES 17
7.3.3 SETTING VALVES PROCEDURE 18
7.3.3.1 SET PRESSURE RELIEF VALVE (PRV) 18
7.3.3.2 SET BACK PRESSURE VALVE (BPV) 18
7.3.4 FLOW CALIBRATION 19
7.3.5 FLOW CALIBRATION PROCEDURE 21
7.4 ROUTINE MAINTENANCE 22
7.5 TROUBLESHOOTING GUIDE 24

1 INTRODUCTION

This document provides installation, operation and maintenance instructions for a dosing skid equipped with a solenoid driven diaphragm metering pump (electromagnetic pump). For specific information regarding the pump installed on the dosing system, refer to the manual of the manufacturer.

The skid components are supplied by Veolia Water Technologies Canada (VWTC).

Skid design and equipment selection are done by VWTC.

To obtain any additional information regarding characteristics or instructions on this equipment, please do not hesitate to contact us.

The system was designed in Canada by:

Veolia Water Technologies Canada
4105, Sartelon
Saint-Laurent, Qc.
Canada H4S 2B3
Phone: 514-334-7230
Fax: 514-334-5070

For technical support or service needs, for spare parts or to get assistance during your warranty period, you may contact us at the following number during regular business hours or write us at:

Veolia Water Technologies Canada After Sales Support
1-844-SER-VWT9 | 1-844-737-8989 | vwtservicecanada@veolia.com

Our business hours are from
Monday to Friday
8:30am to 5pm EST

2 SAFETY

2.1 INTRODUCTION

Your safety is of the utmost concern. Dosing pumps and systems can handle harsh or toxic chemicals and exposure can lead to serious injury or death. Always wear appropriate protective clothing (for example, safety glasses, gloves, coveralls, etc.) and follow safe handling procedures. Pay attention to what you're doing and note safety advisories where they are shown throughout this manual. Some examples of safety issues and precautions for chemical dosing systems are:

- Do not use dosing skid systems for flammable liquids.
- Prior to working on any portion of the skid system, disconnect pump(s) from power supply, de-pressurize the system and drain chemicals from the lines.
- Inspect tubing regularly and replace as necessary. When inspecting tubing, wear protective clothing and safety glasses.
- If skid system is exposed to sunlight, use UV-resistant tubing.
- Follow directions and warnings provided with chemicals from the chemical manufacturer. User/Owner is responsible for determining chemical compatibility with chemical feed pump(s) and system components.
- Secure chemicals, metering pump(s) and system, making them inaccessible to children, pets, and unauthorized personnel.
- Always wear protective clothing, including gloves and safety goggles when working on or near chemical metering pump(s) and system.
- All connections (threaded, screwed or bolted) may only be loosened when the system is not under pressure.
- Installation and start-up of chemical dosing system will require both mechanical (plumbing) and electrical work. Only qualified and licensed plumbers and electricians should perform this.

2.2 FALL HAZARDS

Common causes of slips are due to wet or oily surfaces and occasional spills.

Operators should reduce the risk of slipping on wet flooring by:

- Cleaning all spills immediately.
- Marking spills and wet area by using a cone or other warning device.

2.3 CHEMICALS HAZARDS

WHMIS Material Safety Data Sheets (MSDS) should be available for each chemical product. Since chemicals or chemical dosage are used during normal operation of treatment facility, the risks of fire, explosion and exposure to toxic chemicals or chemical burns are present. Chemicals typically used with dosing system are coagulant and polymer.

Operators should be made aware of the following:

- All chemicals which are used and any potentially dangerous reaction that could occur.
- Toxicity of all chemicals that are used or could be formed via reactions.
- Acidic or basic properties of all materials used.
- Potential fire or explosion hazards posed by the chemicals.
- Antidotes for exposure to toxic materials.
- Protective clothing that is recommended.
- Chemicals spills may be slippery.

2.4 ELECTRICAL CONNECTIONS

Electrical connections must be made by certified electricians in compliance with all applicable codes and regulations.

3 SHIPPING

Most of the equipment and material for this project will be drop shipped and delivered directly to the site.

- All items delivered will be clearly identified with VWTC's name, VWTC's project name and VWT's project number.
- All shipments will have a clear packing list identifying all parts in the shipment.
- All equipment will be tagged with the corresponding tag numbers shown on the design drawings (if applicable).

If there are more stringent requirements in the contract documents, they will take precedence over the above. If any of these requirements are not being followed, please notify the VWTC project manager immediately.

4 RECEIVING

The condition of all delivered equipment must be verified by the responsible party upon arrival at site. Verification that all equipment has been delivered as per contract must also be done upon arrival at site. Notification of missing or damaged items must be sent to VWTC within 10 days of receipt of equipment. If there is no documented notification of missing or damaged parts within 10 days, VWTC is not responsible for replacement of any items found to be missing or damaged at the time of installation and start-up of the supplied equipment. It is the responsibility of the party receiving the equipment to ensure all packaging is opened at the time of receipt to uncover and document any and all damages to the Freight Company and VWTC.

Photographs and written documentation should be provided on all damaged equipment.

5 HANDLING

5.1 GENERAL

The Contractor is responsible for the equipment unloading and handling.

5.2 POLYPROPYLENE MATERIAL HANDLING

Care should be taken to avoid damages to the surface of the polypropylene panels due to dragging or from sharp objects.

6 STORAGE

6.1 GENERAL

The following instructions outline the duties and responsibilities of the responsible party for equipment storage. The responsible party shall assume responsibility for the equipment upon arrival at the project site. These instructions shall define the minimum expectations for storage of all equipment.

While this storage specification takes into account common environmental issues that may affect the system during storage, common sense should be the overriding factor in determining the best method to ensure the integrity and proper storage of the VWTC equipment.

For contractual purposes, VWTC demands the Client to send pictures of major equipment once it is placed in storage, any time it gets moved during storage and again prior to removing from storage. For outside storage, pictures must be sent every month. Alternatively, a written document (check list, etc.) confirming that proper storage conditions are maintained will suffice. Failing to do so would cancel the proposed warranty.

Should it be necessary to delay installation and subsequent operation of a unit for more than one month from date of receipt on site, special precautions must be taken.

Although some equipment can be stored outdoors, indoor storage is preferred for most equipment.

The storage environment into which a system is placed can have a severe effect on the long-term usefulness of some spare parts. Key environmental factors are:

- Temperature
- Relative humidity
- Pollutants

Air may contain excessive moisture, pollutants, microorganisms, and other particulates that accelerate the deterioration of some materials. Humidity and pollutants can produce an aggressive atmosphere.

6.1.1 INDOOR STORAGE

Indoor storage refers to storage in a climate controlled environment under a clean non-aggressive, in a dry (non-condensing) and sheltered environment having a relatively constant temperature (especially for gear reducers, motors, bearings, etc.).

The environmental indoor conditions should not exceed the following ranges:

Min/Max temperature range between: 5°- 40°C
Relative humidity range between: 35% - 70% (RH)

1. Equipment should be stored in a manner to be kept free from allowing insects/rodents etc. from entering the equipment.
2. Cover the equipment with a tarp or similar protective shield to prevent direct exposure to dust or any other contamination. However, never enclose the unit or components totally in plastic covers; always leave adequate ventilation of air to prevent condensation.
3. Equipment stored near a window should be protected from UV rays.
4. Storage volume depends on the size of the project.
5. Equipment must be checked on a weekly basis for tarp/wrap integrity and accumulation.
6. To avoid damage, do NOT stack crates.
7. To avoid damage, do NOT stack enclosures.

8. Do not store spares in barns, equipment sheds, or any other building without the capacity for heating and cooling as needed.

6.2 EQUIPMENT CLEANING

VWTC is not responsible for cleaning of any equipment prior to installation and start-up due to the storage of the equipment. This is the complete responsibility of others.

7 INSTALLATION

7.1 GENERAL

The installation of the chemical dosing skids must be completed on site by the installation contractor.

Please find below the list of tasks that need to be performed by the contractor at job site:

- Installation should be performed by a qualified contactor.
- The installation contractor must ensure that the necessary lifting equipment is available on site to carry out the installation.
- All nuts & bolts need to be verified, accounted for and tightened.

7.2 SYSTEM OVERVIEW

The system is designed to pump chemicals at precisely controlled rates into another process or system.

Proper arrangement of piping and appurtenances on both the supply side and the process side are critical to the successful operation of the overall system. These are the responsibility of the installer of the system, and attention should be paid to the comments below:

Most VWTC pre-engineered skids will have electromagnetic pump(s) mounted on them at the factory, and the pump(s) will be connected to the piping integral to the skid with tubing.

7.2.1 SUPPLY SIDE

Dosing chemicals are usually sourced from a barrel or tote container. The source may be located above the centerline of the pump(s) which is referred to a 'flooded suction' or it may be located slightly below the centerline of the pump(s) which is referred to as 'suction lift'. Connections to and from the solution tank are most commonly made with hard piping. The solution tank should be covered to prevent contamination.

7.2.1.1 FLOODED SUCTION

This is the most trouble free type of installation. Since the supply line tubing is filled with chemical, priming is accomplished quickly and the chance of losing prime is reduced.

Recommended for very low flow rate applications, e.g. 2 ml/hr, or where pumping solutions such as sodium hypochlorite or hydrogen peroxide which can form air bubbles.

Supply line should gradually slope downward from the solution tank to the skid suction connection.

It is strongly recommended to add a drain provision on the suction side to facilitate emptying and flushing of the system for maintenance.

The next figure illustrates a typical pump skid system for flooded suction (chemical source above the pump centerline).

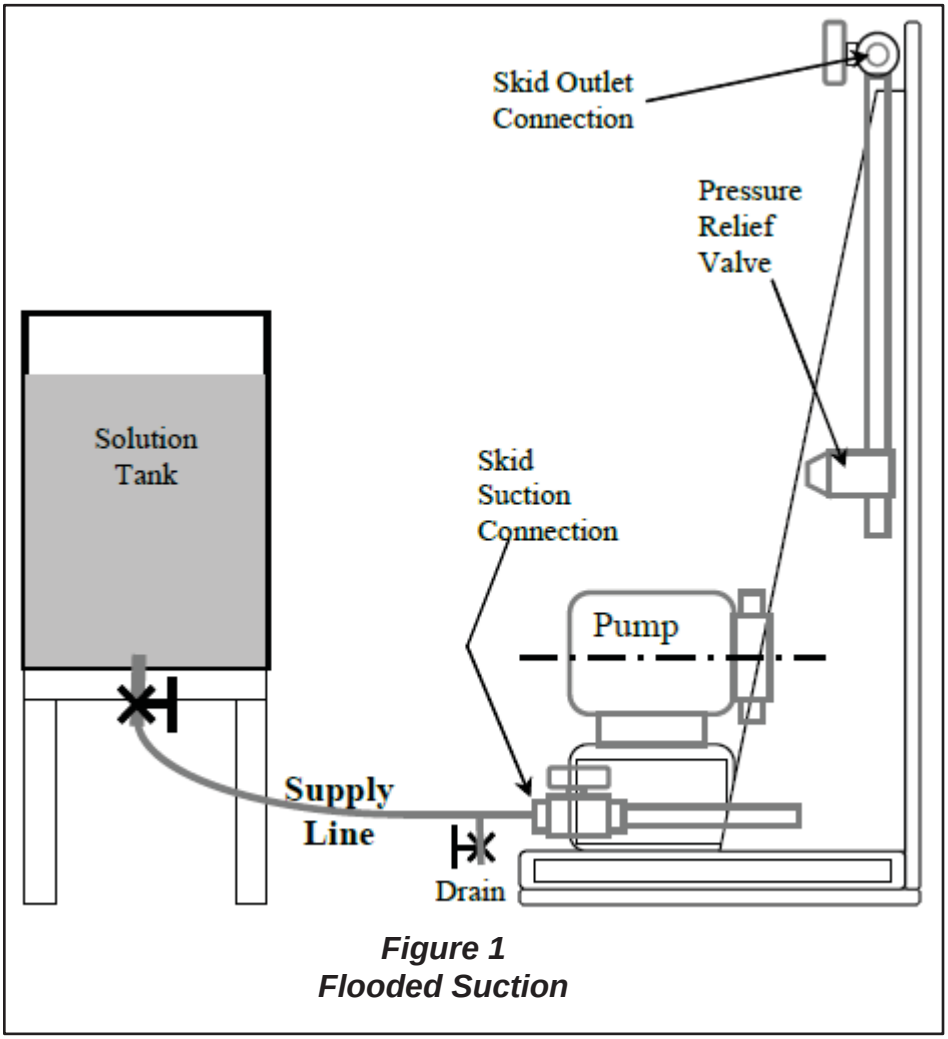

Figure 1
Flooded Suction

7.2.1.2 SUCTION LIFT

This is the most common arrangement for chemical metering applications since there is less chance of spillage.

Note that the maximum recommended lift is 5 feet (1.5 m). Verify specific recommended lift in pump manual.

Since the supply line will be in a vacuum condition, attention should be paid to the vapor pressure of the pumped liquid. Vapor formation in the supply line will prevent the pump from pumping.

Supply line should gradually slope up to the skid suction connection to prevent air pocket(s) which can impede flow.

It is strongly recommended to add a drain provision on the suction side to facilitate emptying and flushing of the system for maintenance.

The next figure illustrates a typical pump skid system with a suction lift arrangement.

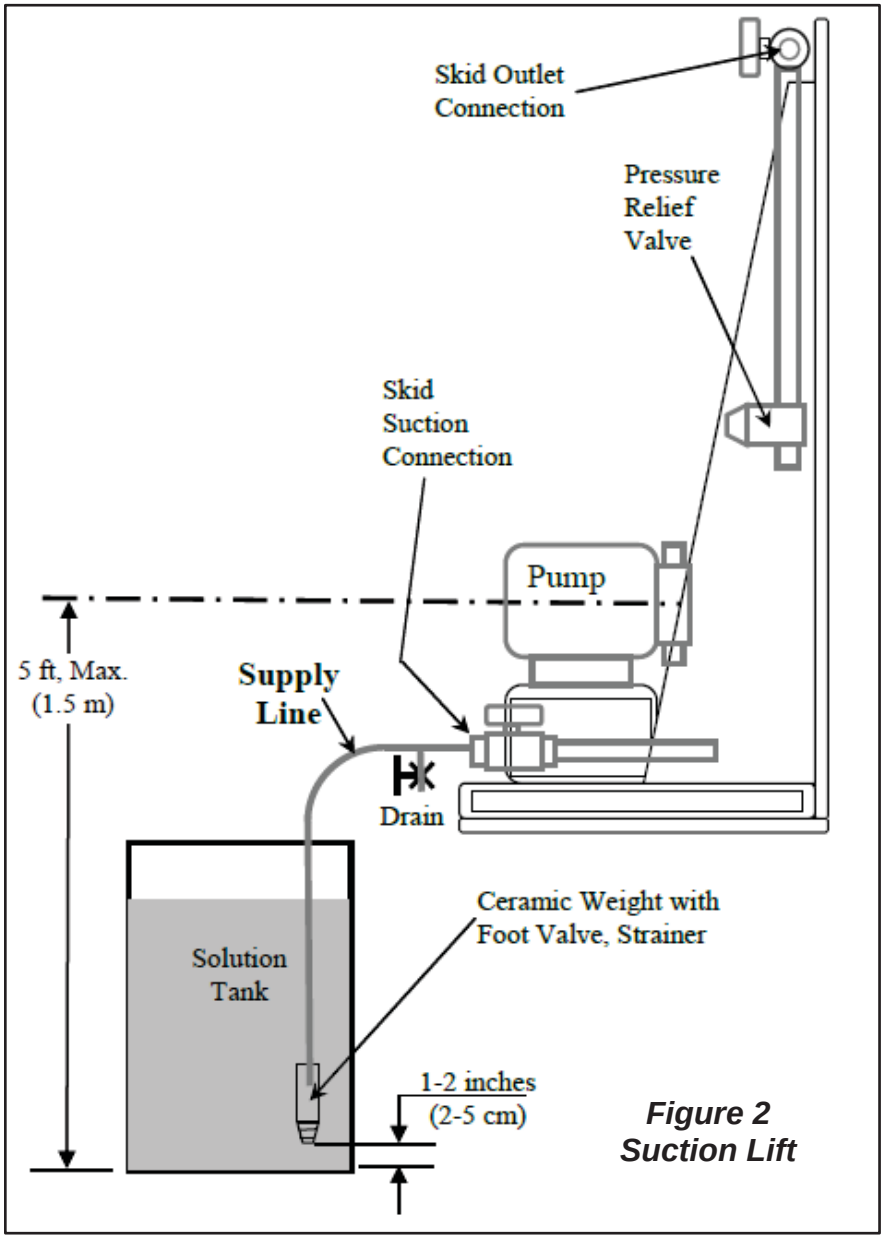

Figure 2
Suction Lift

Process Side

The injection point in the served process or system must be higher than the top of the solution supply tank to prohibit gravity feeding unless suitable backpressure is always present at the injection point.

In applications where the injection point is below the solution supply tank (e.g. injection into a well) or where the injection point may be at reduced pressure (e.g. injection into the suction side of a pump), installation of a back pressure/anti-siphon valve in the process feed line will prevent gravity feeding.

Note comments on process side piping/tubing on the next illustration.

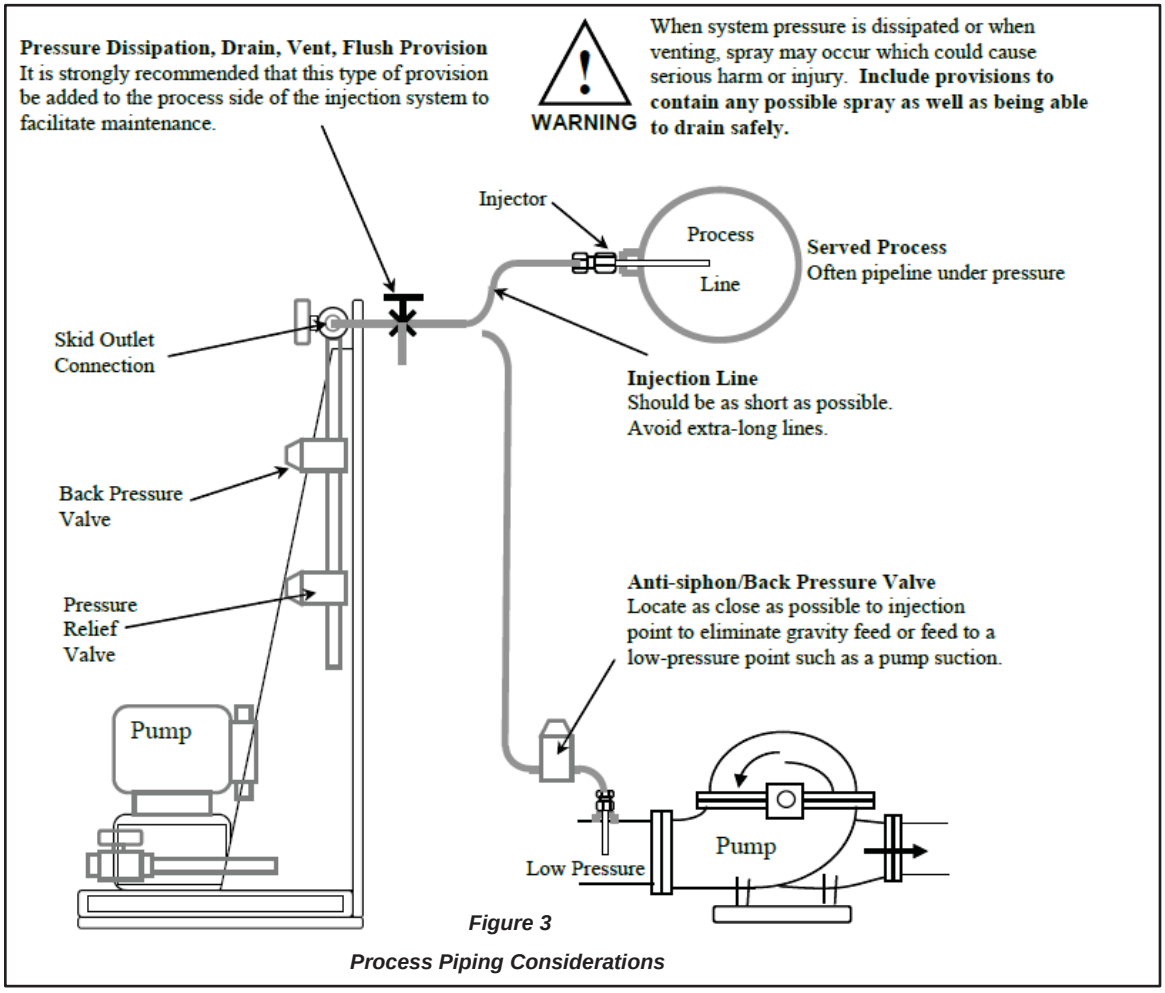

Figure 3

Process Piping Considerations

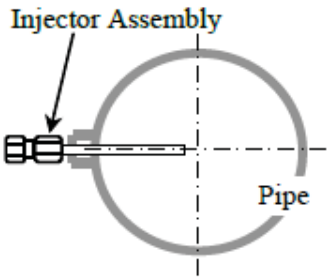

Injection Point

Injected chemicals may be corrosive to piping. To minimize corrosive effects, locate injector tip near center of process flow where velocities and mixing are at their highest rate. Trim tip as necessary. For larger pipe installations, longer injection assemblies are available.

Figure 4
Injection Point

Installation

Prior to attempting installation, familiarize yourself with the layout and components furnished with your pre-engineered skid system. These vary from system to system. Review the documentation supplied with your order.

Skid systems (and pumps) have been tested with water at the factory.

Some dosing chemicals will react with water, e.g., acids, polymers, etc. Check MSDS for the chemical to be handled. If adverse reaction with water is indicated, ensure that all portions of the skid piping, its components (and the pump) are free from the water prior to filling skid system with chemical.

Securely attach skid in its installation position to prevent falling or tipping.

Installation area should provide ease of access to skid components (and pumps) and the area should be kept free of clutter to enable safe operation and maintenance.

Note that skids are designed for ambient temperatures of 104°F (40°C) maximum. It is preferable that skid systems (and pumps) be located out of direct sunlight. If skid system is exposed to sunlight, provide protection for the pump/motor to prevent overheating and if skid is exposed to sunlight, use UV resistant tubing.

Connect the pump suction and discharge (refer to next figure) to the corresponding piping connections on the skid-mounted piping. Refer to installation drawing for location(s) of these piping connections. This is usually done with tubing, however always ensure that the connection material is compatible with the chemical to be pumped and suitable for the pressures and temperatures. Tubing connection fittings are usually plastic in which case they should be hand-tight only.

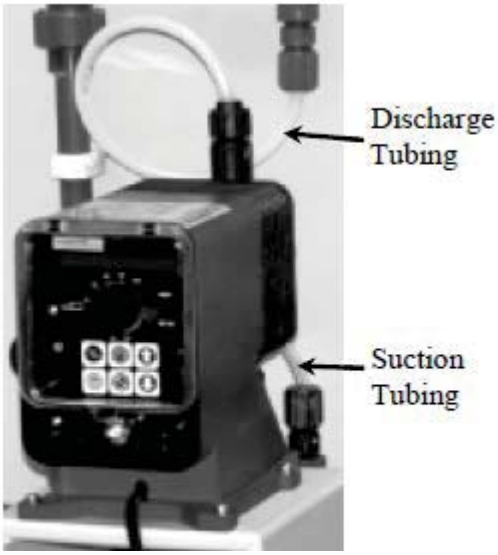

Figure 5
Typical Pump-to-Skid Tubing Connections

7.2.2 INTERCONNECTING PIPING

The next series of steps are the connection of your piping/tubing which include the chemical supply line, discharge line, pressure relief/bypass line and an air bleed return line.

These are your responsibility:

Ensure that for all piping, tubing, fittings and other appurtenances, their materials are compatible with the liquid to be pumped and the design is suitable for the pressures and temperatures of the application. System design must ensure safety for operation and maintenance as well as for anyone who may be in proximity to the system. Failure to do so may result in damage to equipment, personal injury or death.

7.2.3 SUCTION LINE

This line connects the source of the dosing chemical to the pre-engineered skid. Please refer to Figure 1 and Figure 2 on pages 10 and 11 respectively. If the source is below the centerline of the pump (suction lift condition), ensure that the suction line has a gradual rise up to the skid suction connection. If the source is above the centerline of the pump, ensure that the suction line has a gradual slope down to the skid suction connection. The purpose of this is to prevent air pocket(s) in the suction line which could affect proper operation of the pump. Include whatever provisions you consider necessary to facilitate the maintenance and operation such as isolation valve(s), drain and/or flush connections, etc., making sure that this sub-system enables SAFE OPERATION.

A foot valve is supplied with pumps, for use in suction lift arrangement.

7.2.4 DISCHARGE LINE

This line connects the skid to your served process. Please refer to the general description on page 12 and 13 and Figure 3 and Figure 4. This line should include the injector assembly that is usually furnished with the pump. If the injection point is below the dosing chemical source or if injecting into a low pressure area such as the suction of a pump, an anti-siphon/back pressure valve should be located as close as possible to the injection point to prevent unwanted chemical feeding. Include whatever provisions you consider necessary to facilitate maintenance and operation such as isolation valve(s), drain and/or flush connections, etc., making sure that this sub-system enables SAFE OPERATION.

7.2.5 AIR BLEED VALVE BYPASS LINE (if applicable)

Although most metering pumps are self-priming, they cannot pump against pressure when handling air in the priming cycle. An air bleed is necessary to enable the pump to prime, and an air bleed valve is provided for this. During the priming process, the air bleed valve is opened with the opening knob. Air will pass through the air bleed bypass line until the pump body is filled with process fluid. When the process fluid flows through the bypass line without any air bubbles, the pump is primed. The opening knob is then closed and the pump is ready for operation. Connect the air bleed bypass line to a suitable receptacle. This is often the suction source but can be a separate container. Firmly fix the outlet of the air bleed bypass line within the receiving receptacle to prevent any possible spraying.

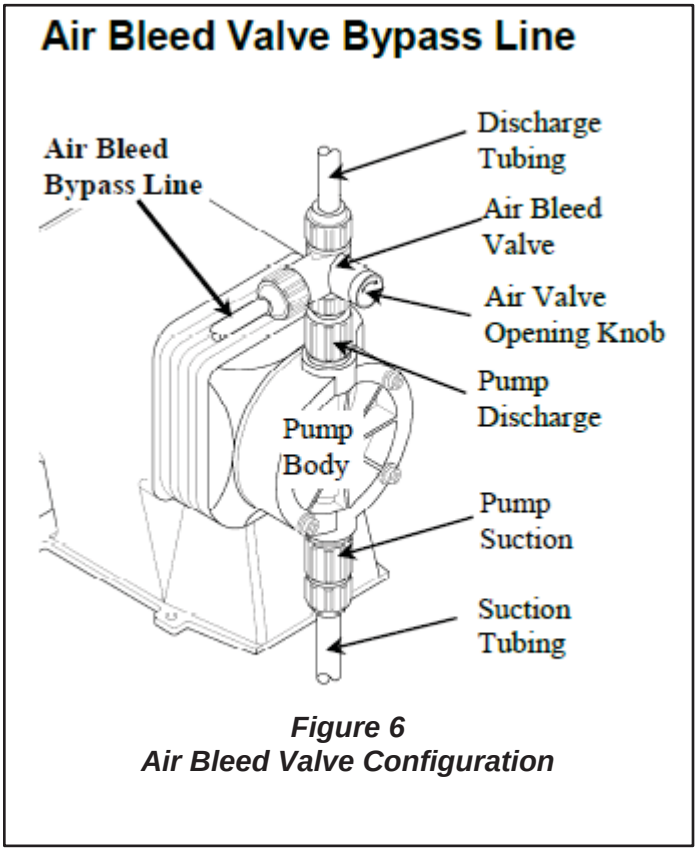

Figure 6
Air Bleed Valve Configuration

Check all piping and tubing connections on the skid to ensure they are tight.

Check all other system piping and/or tubing connections to ensure they are tight.

7.3 START-UP

7.3.1 INITIAL PRIME

The pump must be primed before it can function within the system. This will require an initial start of the pump.

Thoroughly review the installation, operation and maintenance manual for your pump prior to starting. Follow pump start-up instructions. Failure to do so may result in damage to equipment or serious injury.

Flooded Suction System

1. Close skid discharge valve and column isolation valve.
2. Open air bleed valve (turn opening knob counter clockwise, refer to Figure 6).
3. Open all valve(s) on the suction side – Skid suction connection valve and any valve(s) in your suction line.
4. Connect pump/motor to power source (pump/motor off).
5. Start pump using manufacturer's recommendations for initial operation settings.
6. Observe flow through air bleed bypass. When solid stream (no air bubbles) is observed, pump is primed.
7. Shut off pump.
8. Close air bleed valve (turn opening knob clockwise).

System with Suction Lift

With a suction lift configuration, the entire suction arrangement (suction line and skid suction piping) as well as the pump must be purged of air before the pump can function. The pump can evacuate the air, however this may take considerable time.

Optional:
If the dosing chemical can be handled safely, it may be helpful to add dosing chemical to the suction assembly via the top of the calibration column. This requires the installation of a foot valve at the entrance to the suction line within the chemical source container. Open the air bleed valve turning the opening knob counter clockwise (refer to Figure 6). Open column isolation valve. Open all valves in the suction line. Add dosing chemical into the top of the calibration column until liquid remains visible. Follow steps, below. Note that air bleed valve is open.

1. Close skid discharge valve and column isolation valve.
2. Open air bleed valve (turn opening knob counter clockwise, refer to Figure 6).
3. Open all valve(s) on the suction side – skid suction connection valve and any valve(s) in your suction line.
4. Connect pump/motor to power source (pump/motor off).
5. Start pump using manufacturer's recommendations for initial operation settings.
6. Observe flow through air bleed bypass. When solid stream (no air bubbles) is observed, pump is primed.
7. Shut off pump.
8. Close air bleed valve (turn opening knob clockwise).

7.3.2 SETTING VALVES

If furnished with your pre-engineered skid system, the pressure relief valve and back pressure valve will be pre-set at the factory. These pressure settings are related to the piping and components furnished with your skid as well as the pump(s) if furnished with the skid. Your system requirements may require changes to these settings and the valves will have to be re-set after maintenance. A general description and the setting procedures for these components are as follows:

Pressure Relief Valve (PRV)

A pressure relief valve must always be used with a chemical metering system that uses a positive displacement pump. This device is designed to protect the pump and system from over pressurization and it must be set to relieve at the maximum allowable pressure for the weakest point in the total system. This may be in your piping on the discharge side of the skid.

It is extremely important that you determine this pressure limitation and set the PRV accordingly.

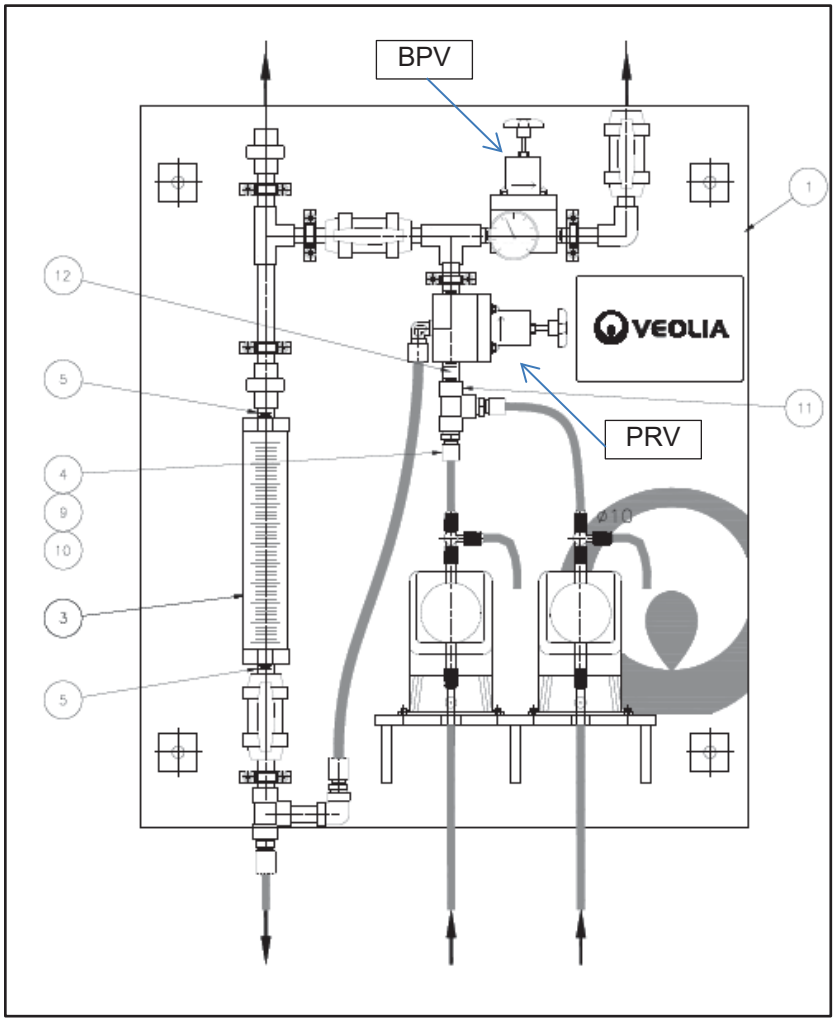

Figure 7 - Skid component locations (TYPICAL)

Back Pressure Valve (BPV)

The back pressure valve enables the pump to work against a constant pressure and will also function as an anti-siphon valve. This is especially important for injection systems that operate at low pressures or where there may be fluctuations in injector system pressure. The BPV is typically set at 50 PSIG, but a lower set pressure may be required depending upon your pump and your system configuration.

7.3.3 SETTING VALVES PROCEDURE

Prior to setting valve pressure, the skid discharge piping should be filled with liquid.

1. Set pulsation dampener air pressure (see above).
2. Adjust PRV and BPV to their lowest pressure setting (fully open).
3. Adjust skid discharge valve and/or system piping to allow venting from the skid discharge piping.
4. With pump primed, run pump until air is evacuated from the skid discharge piping.
5. Shut off pump.

7.3.3.1 SET PRESSURE RELIEF VALVE (PRV)

With pressure relief valve and back pressure valve fully open (lowest pressure setting):

1. Close skid discharge valve.
2. Start pump, monitor skid discharge gauge pressure. It should pulse slightly.
3. Gradually increase pressure at PRV until the skid pressure gauge reads the maximum allowable pump and/or system pressure at the highest pulsation pressure.
4. Shut down pump.
5. PRV is now set.

7.3.3.2 SET BACK PRESSURE VALVE (BPV)

After the pressure relief valve has been set, check to see that the BPV is fully open (lowest pressure setting):

1. Adjust skid discharge valve and/or system piping to allow free discharge from the skid discharge piping. Capture free discharge in an appropriate manner.
2. Start pump, monitor skid discharge gauge pressure.
3. Gradually increase pressure at BPV until correct pressure is indicated on the skid discharge gauge.
4. Shut down pump.
5. BPV is now set
6. Re-adjust system discharge piping/tubing to enable flow into the served process.

Check all system piping/tubing connections to ensure that they are properly tightened (hand-tight for plastic fittings) and leak-free.

Pumping system is now ready for operation.

7.3.4 FLOW CALIBRATION

Chemical metering systems are designed to provide chemicals to a process at precise flow rates. Metering pump output (flow rate) can be set as a function of both stroke lengths and stroke frequency. A calibration column is used to determine pump flow rate and to enable flow rate adjustments. The column must be filled with the dosing chemical prior to performing the calibration.

Use extreme care when handling chemicals.
Avoid any spray, splatter or spilling.
Always wear appropriate protective clothing.

Filling calibration Column

For a skid system with a cross-connect, the calibration column is filled by the pump.

1. Turn the column isolation valve to allow flow from the cross-connect into the calibration column.
2. Then turn the flow diverter valve to direct flow from the discharge header through the cross-connect into the calibration column.
3. Once the liquid level in the calibration column reaches slightly above the topmost scale mark, turn the flow diverter valve to re-direct flow into the system. Do not overfill.
4. Close column isolation valve.
5. Calibration column is filled and ready for the calibration procedure.

Note: While the calibration column is being filled in this manner, dosing chemical will not be provided to the served process.

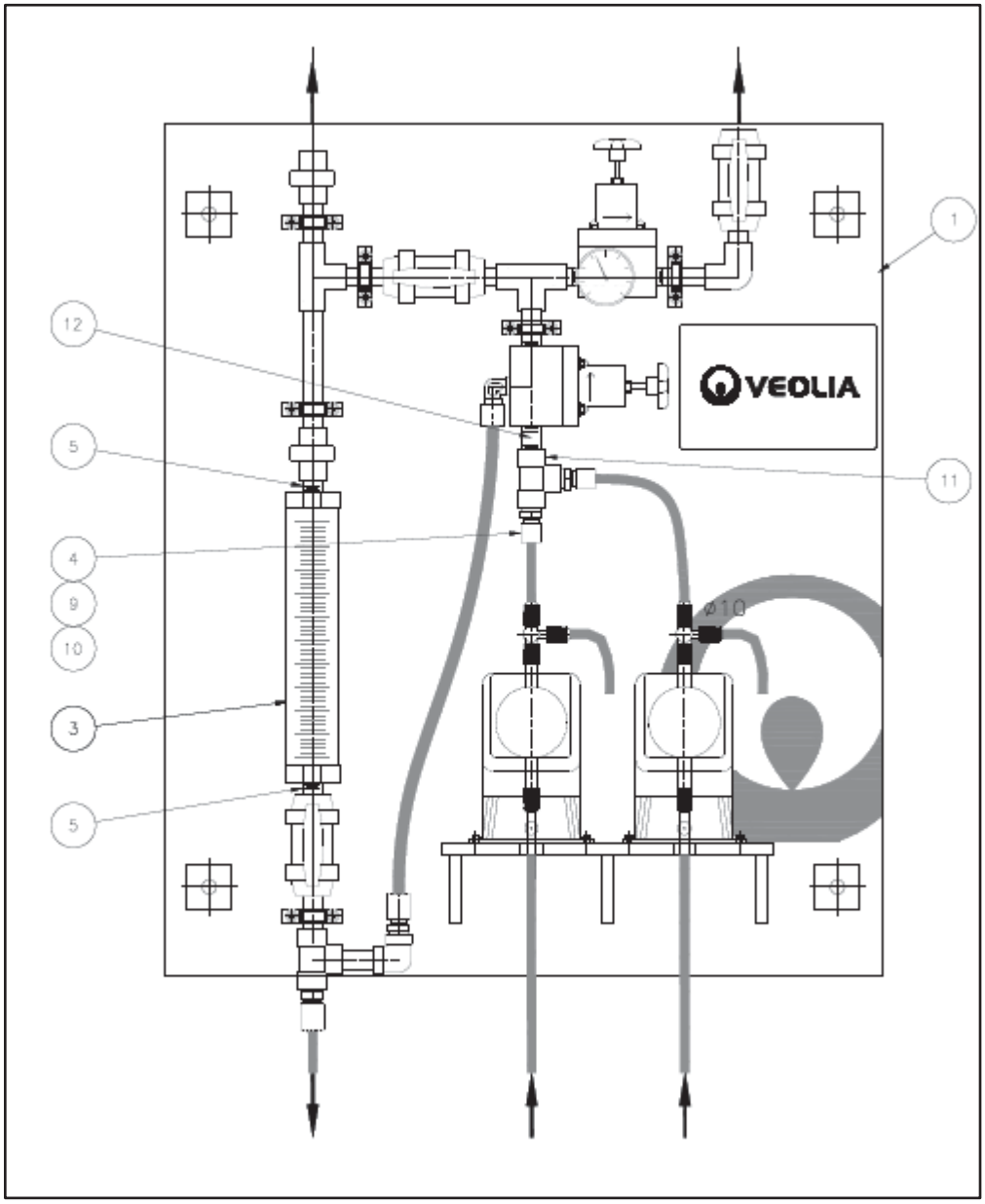

Figure 8 - Skid system with cross-connect (EXAMPLE)

For systems on suction lift (refer to Figure 2 on page 11)

1. Partially fill the calibration column through the top.
2. Open the column isolation valve briefly to vent any air that may be present in the suction header piping. Close the column isolation valve.
3. Fill the calibration column too slightly above the top scale mark.

Calibration column is filled and ready for the calibration procedure.

7.3.5 FLOW CALIBRATION PROCEDURE

The calibration column is filled to slightly above the top mark of the scale. The pump is then run in the system while being fed from the calibration column. After a 30 second time period, the liquid level reading on the scale will be a direct readout of the pump flow rate in US Gal/hr (note that a milliliter scale is also shown on the calibration column).

With the pump running in the system:

1. Open the column isolation valve so that the column feeds into the suction header, and immediately close the skid suction valve (refer to Figure 9 and 10).
2. Observe the liquid level in the calibration column. When it reaches the top scale mark, begin timing.
3. Allow 30 seconds to pass.
4. Open the skid suction valve and immediately close the column isolation valve.
5. Read pump output flow rate directly on the scale in US Gal/hr.

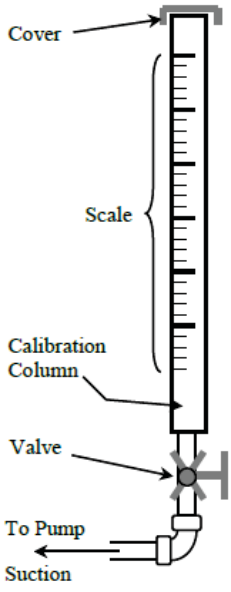

Figure 9
Calibration Column

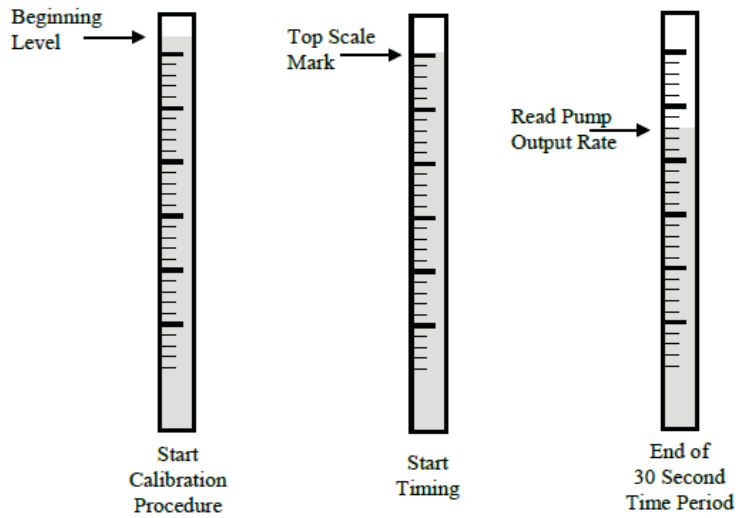

Figure 10
Liquid Levels During Calibration

Once the calibration is complete, compare the reading to the desired rate for your system. Refer to your pump operation manual and adjust flow rate up or down accordingly (this is usually done by changing stroke frequency). After pump adjustment is made, repeat calibration procedure. Continue until the desired flow rate is achieved.

7.4 ROUTINE MAINTENANCE

Before performing any Maintenance on your skid system or pump,

Skid components, pump(s) and your process piping may be under pressure!
Prior to working on any portion of the skid system, disconnect pump(s) from power supply, de-pressurize the entire system and drain chemicals from the lines.
Flush and neutralize as necessary.
Always wear suitable protection (gloves, safety glasses/goggles, etc.).

Routine maintenance will depend upon your service requirements: dosing chemical(s) being handled, environmental conditions, duty cycle(s) of pump(s), etc. When working on any component of your system, i.e., pump, valves, pulsation dampener, refer to the installation, operation and maintenance manual for that particular item. Some operational and maintenance checks that need to be performed are:

ITEM	MAINTENANCE	DAILY	WEEKLY	MONTHLY	YEARLY
Strainer	Check this for the presence of trapped solids and clean as necessary.		X		
Piping/Tubing Integrity	Routinely check piping, tubing, isolation valves and connections for leaks. Replace tubing as necessary.		X		
System Operation	Perform flow calibration regularly to ensure that dosing chemical is being added at the proper rate.			X	
Pressure Relief and Back Pressure Valves	Check to ensure that bolts are tight. Recommend monthly. Diaphragms should be replaced on an annual basis.				X
Calibration Column	If handling sticky chemicals, may require cleaning to view liquid level inside. Perform as				

ITEM	MAINTENANCE	DAILY	WEEKLY	MONTHLY	YEARLY
	necessary.				
Foot Valve	The pumps come equipped with a foot valve for the suction line. This valve should be checked for solids build up and blockages.		**X**		

7.5 TROUBLESHOOTING GUIDE

PROBLEM	POSSIBLE CAUSE	REMEDY
Pump doesn't deliver product	Air entering suction line	Check fittings for tightness Check integrity of tubing Check level in suction source-must be above foot valve at inlet
	Air trapped in suction line	Re-configure suction line to eliminate air pocket(s)
	Suction line kinked or clogged	Inspect, replace tubing
	Chemical source empty	Refill, re-prime pump
	Pump not primed, air/gas in system	Re-prime pump
	Air/gas bubbles forming in chemical	Reduce suction lift or change to flooded suction Consider chemical storage temperature
	Strainer clogged	Check strainer, clean
	Pressure Relief Valve Open	Check Pressure Relief Valve integrity Check Pressure Relief Valve setting
	Pump problem(s) may be: Diaphragm wear, rupture Check valves worn or clogged Low pump flow setting Voltage/electrical difficulty	Refer to pump instructions
Piping Vibration/chatter	Pulsation Dampener malfunction	Check Pulsation Dampener Integrity Check Dampener air pressure
Injection rate too high, too low	Pump output setting incorrect	Perform flow calibration
	Chemical concentration too high, low	Adjust chemical source strength
	Siphoning into well or low pressure point	Add Back Pressure Valve at injection point.
	Injector clogged, scaled, restricted	Check injector for solids or corrosion Clean as necessary or replace
Injection rate varies	Back Pressure Valve	Check Back Pressure Valve integrity Check Back Pressure Valve setting
Tubing failure	Sunlight/UV exposure	Change to UV-resistant tubing
	Corrosive attack	Determine material compatibility, change as necessary
Leaky fittings	Loose fittings	Tighten fittings-plastic fittings should be hand-tight only
	Corrosive attack	Determine material compatibility, change as necessary

6 – OPERATION AND MAINTENANCE

6.4 – COAGULANT AND $KMnO_4$ DOSING SKID

LEFT BLANK

Installation, Operation and Maintenance Manual

PULSAR SHADOW MECHANICAL DIAPHRAGM METERING PUMP DOSING SKID SYSTEM

DOCUMENT NO: IOM_0021_PCH

MARCH 2016, REVISION 1

Veolia Water Technologies Canada Inc.
ISO 9001:2008
4105 Sartelon, St-Laurent (QC) H4S 2B3
Tel: 514-334-7230 ● Fax: 514-334-5070
www.veoliawatertechnologies.ca

NOTICE OF CONFIDENTIALITY
This document is confidential and contains proprietary information. It must not be shared with a third party without the written consent of Veolia Water Technologies Canada Inc.

TABLE OF CONTENTS

1 INTRODUCTION 3

2 SAFETY 4

2.1 INTRODUCTION 4
2.2 FALL HAZARDS 4
2.3 CHEMICALS HAZARDS 5
2.4 ELECTRICAL CONNECTIONS 5

3 SHIPPING 6

4 RECEIVING 6

5 HANDLING 6

5.1 GENERAL 6
5.2 POLYPROPYLENE MATERIAL HANDLING 6

6 STORAGE 7

6.1 GENERAL 7
6.2 PVC PIPING STORAGE CONDITIONS 7

7 SKID OVERVIEW 8

8 INSTALLATION 9

8.1 OWNER-INSTALLED PIPING / TUBING 9
8.2 SUCTION LINE 10
8.3 DISCHARGE LINE 10

9 INITIAL START-UP 11

9.1 SETTING VALVES 11
9.2 PRESSURE RELIEF VALVE 11
9.3 FLOW CALIBRATION 12
9.4 VARIABLE FREQUENCY DRIVE SETTINGS 12

10 OPERATION PROCEDURES 13

11 ROUTINE MAINTENANCE 14

12 TROUBLESHOOTING GUIDE 15

13 LUBRICATION SCHEDULE - INSPECTION 17

14 SPARE PARTS 18

15 DRAWINGS 19

16 COMPONENTS TECHNICAL DATA SHEET 20

17 MANUFACTURERS OPERATION AND MAINTENANCE MANUAL 21

1 INTRODUCTION

This document provides installation, operation and maintenance instructions for a chemical dosing skid equipped with Pulsafeeder Pulsar Shadow mechanical diaphragm metering pump(s). For specific information regarding the pump installed on the dosing system, refer to the manual of the manufacturer.

The skid components are supplied by Veolia Water Technologies Canada (VWTC).

To obtain any additional information regarding characteristics or instructions on this equipment, please do not hesitate to contact us.

The system was designed in Canada by:

Veolia Water Technologies Canada
4105, Sartelon
Saint-Laurent, Qc.
Canada H4S 2B3
Phone: 514-334-7230
Fax: 514-334-5070

For technical support or service needs, for spare parts or to get assistance during your warranty period, you may contact us at the following number during regular business hours or write us at:

Veolia Water Technologies Canada After Sales Support
1-844-SER-VWT9 | 1-844-737-8989 | vwtservicecanada@veolia.com

Our business hours are from
Monday to Friday
8:30am to 5pm EST

2 SAFETY

2.1 INTRODUCTION

Your safety is of the utmost concern. Dosing pumps and systems can handle harsh or toxic chemicals and exposure can lead to serious injury or death. Always wear appropriate protective clothing (for example, safety glasses, gloves, coveralls, etc.) and follow safe handling procedures. Pay attention to what you're doing and note safety advisories where they are shown throughout this manual. Some examples of safety issues and precautions for chemical dosing systems are:

- Do not use dosing skid systems for flammable liquids.
- Prior to working on any portion of the skid system, disconnect pump(s) from power supply, de-pressurize the system and drain chemicals from the lines.
- Inspect tubing regularly and replace as necessary. When inspecting tubing, wear protective clothing and safety glasses.
- If skid system is exposed to sunlight, use UV-resistant tubing.
- Follow directions and warnings provided with chemicals from the chemical manufacturer. User/Owner is responsible for determining chemical compatibility with chemical feed pump(s) and system components.
- Secure chemicals, metering pump(s) and system, making them inaccessible to children, pets, and unauthorized personnel.
- Always wear protective clothing, including gloves and safety goggles when working on or near chemical metering pump(s) and system.
- All connections (threaded, screwed or bolted) may only be loosened when the system is not under pressure.
- Installation and start-up of chemical dosing system will require both mechanical (plumbing) and electrical work. Only qualified and licensed plumbers and electricians should perform this.

2.2 FALL HAZARDS

As per OSHA statistic's, the majority of falls results from trips and slips. Common causes of slips are due to wet or oily surfaces and occasional spills.

Operators should reduce the risk of slipping on wet flooring by:

- Cleaning all spills immediately.
- Marking spills and wet area by using a cone or other warning device.

2.3 CHEMICALS HAZARDS

WHMIS Material Safety Data Sheets (MSDS) should be available for each chemical product. Since chemicals or chemical dosage are used during normal operation of treatment facility, the risks of fire, explosion and exposure to toxic chemicals or chemical burns are present. Chemicals typically used with dosing system are coagulant and polymer.

Operators should be made aware of the following:

- All chemicals which are used and any potentially dangerous reaction that could occur.
- Toxicity of all chemicals that are used or could be formed via reactions.
- Acidic or basic properties of all materials used.
- Potential fire or explosion hazards posed by the chemicals.
- Antidotes for exposure to toxic materials.
- Protective clothing that is recommended.
- Chemicals spills may be slippery.

2.4 ELECTRICAL CONNECTIONS

Electrical connections must be made by certified electricians in compliance with all applicable codes and regulations.

3 SHIPPING

Most of the equipment and material for this project will be drop shipped and delivered directly to the site.

- All items delivered will be clearly identified with VWTC's name, VWTC's project name and VWT's project number.
- All shipments will have a clear Packing List identifying all parts in the shipment.
- All equipment will be tagged with the corresponding tag numbers shown on the design drawings (if applicable).

If there are more stringent requirements in the contract documents, they will take precedence over the above. If any of these requirements are not being followed, please notify the VWTC Project Manager immediately.

4 RECEIVING

The condition of all delivered equipment must be verified by the responsible party upon arrival at site. Verification that all equipment has been delivered as per contract must also be done upon arrival at site. Notification of missing or damaged items must be sent to VWTC within five (5) working days of receipt of equipment. If there is no documented notification of missing or damaged parts within five (5) working days, VWTC is not responsible for replacement of any items found to be missing or damaged at the time of installation and start-up of the supplied equipment. It is the responsibility of the party receiving the equipment to ensure all packaging is opened at the time of receipt to uncover and document any and all damages to the Freight Company and VWTC.

Photographs and written documentation should be provided for all damaged equipment.

5 HANDLING

5.1 GENERAL

Equipment will arrive at the project site in several different shipments, from various freight companies and in several different packaging containers. Typically a flatbed truck is used which requires a fork lift or a crane to remove the items.

The Contractor is responsible for unloading and handling the equipment.

5.2 POLYPROPYLENE MATERIAL HANDLING

Care should be taken to avoid damages to the surface of the polypropylene panels due to dragging or from sharp objects.

6 STORAGE

6.1 GENERAL

The following instructions outline the duties and responsibilities of the responsible party for equipment storage. The responsible party shall assume responsibility for the equipment upon arrival at the project site. These instructions shall define the minimum expectations for storage of all equipment.

While this storage specification takes into account common environmental issues that may affect the system during storage, common sense should be the overriding factor in determining the best method to ensure the integrity and proper storage of the VWTC equipment.

For contractual purposes, VWTC demands the Client to send pictures of major equipment once it is placed in storage, any time it gets moved during storage and again prior to removing from storage. Alternatively, a written document (check list, etc.) confirming that proper storage conditions are maintained will suffice. Failing to do so would cancel the proposed warranty.

Should it be necessary to delay installation and subsequent operation of a unit for more than one month from date of receipt at site, special precautions must be taken.

The chemical dosing skid shall be stored indoor at a temperature above 5°C. The storage environment into which a system is placed can have a severe effect on the long-term usefulness of some spare parts. Key environmental factors are:

- Temperature
- Relative humidity
- Pollutants

Air may contain excessive moisture, pollutants, microorganisms, and other particulates that accelerate the deterioration of some materials. Humidity and pollutants can produce an aggressive atmosphere.

6.2 PVC PIPING STORAGE CONDITIONS

Pipe units should be stored and placed on level ground. Caution shall be taken to avoid compression, damage or deformation to the ends of the pipes. Racks or dunnage shall be used to prevent damage to the bottom pipes during storage and to support them. Supports should be spaced to prevent pipe bending.

When exposure in excess of one year to direct sunlight is unavoidable, the pipes should be covered with an opaque material while permitting adequate air circulation above and around the pipes as required preventing excess heat accumulation. The interior of the pipes, as well as all end surfaces, should be kept free from dirt and foreign matter until the pipes are ready to be used.

7 SKID OVERVIEW

The dosing skid system is designed to pump chemicals at precisely controlled rates into another process or system.

Proper arrangement of piping and appurtenances on both the supply side are critical to the successful operation of the overall system. These are the responsibility of the owner/operator of the system, and attention should be paid to the comments below:

SUPPLY SIDE

Dosing chemicals are usually sourced from a storage tank. When the source is located above the centerline of the pump(s) this is referred to as a 'flooded suction'. Connections to and from the solution tank are most commonly made with hard piping. The feed tank should be covered to prevent contamination.

Supply line should gradually slope downward from the feed tank to the skid suction connection.

It is strongly recommended to add a drain provision on the suction side to facilitate emptying and flushing of the system for maintenance.

8 INSTALLATION

Prior to attempting installation, familiarize yourself with the layout and components furnished with your dosing skid system. These vary from system to system and review the documentation supplied with your system. Inspect your skid system for damages which may have occurred during transit. If damages are discovered, immediately file a claim with the carrier and contact Veolia Water Technologies for any required parts or components.

Skid systems, including pump(s), have been tested with water prior to shipment.

Some dosing chemicals will react with water, e.g., acids, polymers, etc. Check the MSDS for the chemical to be handled. If adverse reaction with water is indicated, ensure that all portions of the skid piping, its components and the pump, are free of water prior to filling the skid system with chemical.

Skid systems may be wall or floor mounted. Mounting holes are provided or can be drilled on the skid for both types of mounting. Securely attach the skid in its installation position to prevent falling or tipping.

The installation area should provide ease of access to skid components, including pump(s), and the area should be kept free of clutter to enable safe operation and maintenance.

Note that pumps/motors are designed for ambient temperatures of 104°F (40°C) maximum. It is preferable that skid systems and pump(s) be located out of direct sunlight. If the skid system is exposed to sunlight, provide protection for the pump/motor to prevent overheating and if the skid is exposed to sunlight, use UV resistant tubing.

If skid is exposed to sunlight, use UV-resistant tubing.

Most chemical dosing skids will have pump(s) mounted on them before shipment, and the pump(s) will be connected to the skid integral piping with tubing.

8.1 OWNER-INSTALLED PIPING / TUBING

The next series of steps are the connection of your piping/tubing which include the chemical supply line, discharge line, pressure relief/bypass line and an air bleed return line.

These are your responsibility and ensure that for all piping, tubing, fitting and other appurtenances, their materials are compatible with the liquid to be pumped and the design is suitable for the pressures and temperatures of the application. System design must ensure safety for operation and maintenance as well as for anyone who may be in proximity to the system. Failure to do so may result in damage to equipment, personal injury or death.

8.2 SUCTION LINE

This line connects the source of the dosing chemical to the dosing skid. Include whatever provisions you consider necessary to facilitate the maintenance and operation such as isolation valve(s), drain and/or flush connections, etc., making sure that this sub-system enables safe operation.

8.3 DISCHARGE LINE

This line connects the dosing skid to the served process. Include whatever provisions you consider necessary to facilitate maintenance and operation, such as isolation valve(s), drain and/or flush connections, etc., making sure that this system enables **SAFE OPERATION**.

9 INITIAL START-UP

The pump must be primed before it can function within the system. This will require an initial start of the pump.

Thoroughly review the installation, operation and maintenance manual for your pump prior to starting. Follow pump start-up instructions. Failure to do so may result in damage to equipment or serious injury.

FLOODED SUCTION SYSTEM

1. Close skid discharge valve and column isolation valve.
2. Connect pump/motor to power source (pump/motor off).
3. Start pump using manufacturer's recommendations for initial operation settings.
4. Shut off pump.

9.1 SETTING VALVES

If furnished with your dosing skid system, the pressure relief valve and back pressure valve will be preset prior to shipment. These pressure settings are related to the piping and components furnished with your skid as well as the pump(s) if furnished with the skid. Your system requirements may demand changes to these settings and the valves will have to be reset after maintenance such as diaphragm replacement. A general description and the setting procedures for these components are as follows.

9.2 PRESSURE RELIEF VALVE

A pressure relief valve (PRV) must always be used with a chemical metering system that uses a positive displacement pump. This device is designed to protect the pump and system from over pressurization and it must be set to relieve at the maximum allowable pressure for the weakest point in the total system. This may be in your piping on the discharge side of the skid. The pressure relief valves are factory set and cannot be modified. If the pressure set point is surpassed, the valve will need to be replaced. The pressure setting is indicated on the P&ID drawings.

Most dosing skid systems include a pressure relief valve and suction header where the PRV is directly connected from the discharge header to the suction header. If your skid system does not include a suction header, or if you are providing your own PRV, relief flow from the pressure relief port on the PRV must be directed to either the suction source or a separate receptacle. This is usually done with tubing.

Care must be taken to channel any free flow from the pumping system into an appropriate receptacle. Eliminate any possibility of splashing, spraying or spillage. Always wear suitable protective equipment (gloves, safety goggles/glasses, coveralls, etc.) when working with or around chemical dosing systems.

Check all system piping/tubing connections to ensure that they are properly tightened (handtight for plastic fittings) and leak free.

Pumping system is now ready for operation.

9.3 FLOW CALIBRATION

Chemical metering systems are designed to provide chemicals to a process at precise flow rates. Metering pump output (flow rate) can be set with a variable frequency drive (VFD). A calibration column is used to determine pump flow rate and to enable flow rate adjustments.

The procedures for filling the calibration column and for calibrating the pumps are described below. Review both complete procedures before proceeding with next steps.

FILLING THE CALIBRATION COLUMN BY OPENING THE COLUMN ISOLATION VALVE

- Use extreme care when handling chemicals.
- Avoid any spray, splatter or spilling.
- Always wear appropriate protective clothing.

FOR SYSTEMS WITH FLOODED SUCTION:

1. Open column isolation valve.
2. Liquid level in the column should rise to the level in the suction source. This may be higher than the top of the column, so prevent overfill by closing the column isolation valve when the liquid level in the calibration column reaches slightly above the top scale mark.
3. If the liquid level in the suction source is lower than the top scale mark, close the column isolation valve and add liquid through the top of the column to a point slightly above the top scale mark.

Calibration column is filled and ready for the calibration procedure.

9.4 VARIABLE FREQUENCY DRIVE SETTINGS

When powered up, the operator should check the direction of rotational direction of the pump. The following checklist indicates the steps to set the VFD parameters of an AC Tech drive. Other VFD may require different parameters.

1. Set start control source to terminal strip or local keypad.
2. Set acceleration parameter.
3. Set deceleration parameter.
4. Set motor overload in %.
5. Set start method on start on power up.
6. Set input function to 4-20 mA.
7. Set relay output to run (energizes when the drive is running).
8. Set drive mode to vector speed.
9. Set motor rated voltage.
10. Set motor rated current.
11. Set motor rated speed.
12. Run motor auto-calibration.

For more information refer to the VFD manual.

10 OPERATION PROCEDURES

The calibration column is filled to slightly above the top mark of the scale. The pump is then run in the system while being fed from the calibration column. After a 30 second time period, the liquid level reading on the scale will be a direct readout of the pump flow rate in US Gallons/hr (note that a millilitre scale is also shown on the calibration column).

With the pump running in the system:

1. Open the column isolation valve so that the column feeds into the suction header and immediately close the skid suction valve.
2. Observe the liquid level in the calibration column. When it reaches the top scale mark, begin timing.
3. Allow 30 seconds to pass.
4. Open the skid suction valve and immediately close the column isolation valve.
5. Read pump output flow rate directly on the scale in US Gallons/hr.

Once the calibration is complete, compare the reading to the desired rate for your system. Refer to your pump operation manual and adjust flow rate up or down accordingly (this is usually done by changing the frequency). After pump adjustment is made, repeat calibration procedure. Continue until the desired flow rate is achieved.

11 ROUTINE MAINTENANCE

Before performing any maintenance on your skid system or pump(s), skid components, pump(s) and your process piping may be under pressure!

Prior to working on any portion of the skid system:

- Disconnect pump(s) from power supply.
- De-pressurize the entire system.
- Drain chemicals from the lines.
- Flush and neutralize as necessary.
- Always wear suitable protection (gloves, safety glasses/goggles, etc.).

Routine maintenance will depend upon your service requirements: dosing chemical being handled, environmental conditions, duty cycle(s) of pump(s), etc. When working on any component of your system, i.e., pump(s) and valves, refer to the installation, operation and maintenance manual for that particular item.

Some operational and maintenance checks that need to be performed are:

Piping/Tubing Integrity: Routinely check piping, tubing, isolation valves and connections for leaks. Replace tubing as necessary. Recommend weekly check.

System Operation: Perform flow calibration regularly to ensure that dosing chemical is being added at the proper rate. Recommend monthly.

Pressure Relief: Check to ensure that bolts are tight. Recommend monthly. Diaphragms should be replaced on an annual basis.

Calibration Column: If handling sticky chemicals, may require cleaning to view liquid level inside. Perform as necessary.

Mechanical Diaphragm Metering Pump: Maintenance shall be as recommended in Manufacturer O&M Manual.

Note: Special tools may be required for dismantling and re-assembly of the pump. Before starting the dismantling, refer to the installation, operation and maintenance manual of the pump.

12 TROUBLESHOOTING GUIDE

DIFFICULTY	PROBABLE CAUSE	REMEDY
Pump does not start	Coupling disconnected	Connect coupling
	Faulty power source	Check power source
	Blown fuse and circuit breaker	Replace - Eliminate overload
	Broken wire	Locate and repair
	Wired improperly	Check diagram
	Pipe line blockage	Open valves
No Delivery	Motor not running	Check power source and wiring diagram
	Supply tank empty	Fill tank
	Lines clogged	Clean and flush
	Closed line valves	Open valves
	Ball check valves held open with solids	Clean and inspect
	Vapor lock, cavitation	Increase suction pressure
	Prime lost	Reprime, and check for leak
	Strainer clogged	Remove and clean. Replace screen if necessary
Low delivery	Motor speed too low	Check voltages, frequency, wiring and terminal connections. Check nameplate vs specifications
	Check valves worn or dirty	Clean, replace if damaged
	Calibration system error	Evaluate and correct
	Product viscosity too high	Lower viscosity by increasing product temperature. Increase pump and/or piping size
	Product cavitating	Increase suction pressure. Cool product as necessary
Delivery gradually drops	Check valve leakage	Clean, replace if damaged
	Leak in suction line	Locate and correct
	Strainer fouled	Clean or replace screen
	Product change	Check viscosity
	Supply tank vent plugged	Unplug vent
Delivery erratic	Leak in suction line	Locate and correct
	Product cavitating	Increase suction pressure
	Entrapped air or gas in product	Consult factory for suggested venting
	Motor speed erratic	Check voltage and frequency
	Fouled check valves	Clean, replace if necessary
Delivery higher than rated	Suction pressure higher than discharge pressure	Install backpressure valve or consult factory for piping recommendations
	Back pressure valve set too low	Increase setting
	Back pressure valve leaks	Repair, clean or replace
Pump loses internal oil	Diaphragm ruptured	Replace
	Leaky seal	Replace
	Cover gasket leaks	Replace or retighten
	Pump overfilled	Remove excess oil
Noisy gearing, knocking	Discharge pressure too high	Reduce pressure
	Water hammer	Install pulsation dampener
	Stroke length at partial setting	Non-destructive knocking is characteristic of lost motion pumps
	No oil or level incorrect	Replace or refill oil
Pump noisy	Pipe size too small	Increase size of piping - Install pulsation dampener
	Pipe runs too long	Install pulsation dampener in line
	Surge chambers flooded	Replace with air or inert gas. If a pulsation dampener is installed, replace diaphragm and recharge
	No surge chambers used	Install pulsation dampener
Motor overheats	Pump overloaded	Check operating conditions against pump design
	High or low voltage	Check power source
	Loose wire	Trace and correct
	Excessive discharge pressure	Correct conditions so ratings of pump are note exceeded

If problem(s) persist, please contact Veolia Water Technologies

13 LUBRICATION SCHEDULE - INSPECTION

ITEM	ACTION	FREQUENCY	TYPE OF LUBRICANT
Wet end inspection	Inspection (If diaphragm has failed, replace eccentric oil)	Refer to section 11	Refer to eccentric oil change
Check valve	Inspection	Refer to section 11	See note
Oil seals (qty 4) Pump shaft seal Motor adapter seal Gearbox oil seal Eccentric box seal	Inspection	Refer to section 11	See note
Motor bearing	Inspection/Lubrication	Refer to section 11	Lubricant (refer to motor nameplate)
Eccentric oil	Change oil	2 years (normal service) 1 year (severe service)	Pulsalube 9M (refer to Pulsafeeder Shadow maintenance manual)
Gear oil	Change oil	5 years (normal service) 2 years (severe service)	Pulsalube 8G (refer to Pulsafeeder Shadow maintenance manual)

Note: PULSAR Shadow KOPkits contain all replacement parts normally used in a preventive maintenance program

14 SPARE PARTS

It is highly recommended to keep in stock spare parts in sufficient quantity for all critical equipment to the proper functioning of the process.

Only the use of original Veolia spare parts will ensure proper and reliable operation.

When ordering a spare part, please give the following information:

- Veolia project number.
- Project name.
- Part number

15 DRAWINGS

If this dosing system is integrated to a processing plant, refer to the Process and/or Detailed Technical Documentation section of the Operation and Maintenance Manual for the dosing system drawings.

16 COMPONENTS TECHNICAL DATA SHEET

If this dosing system is integrated to a processing plant, refer to the Detailed Technical Documentation section of the Operation and Maintenance Manual for the dosing system data sheets.

17 MANUFACTURERS OPERATION AND MAINTENANCE MANUAL

If this dosing system is integrated to a processing plant, refer to the Manufacturer Operation and Maintenance Manual section of the Operation and Maintenance Manual for the dosing system manufacturer manuals.

LEFT BLANK

6 – OPERATION AND MAINTENANCE

6.5 – POLYMER DOSING SKID

LEFT BLANK

Installation, Operation and Maintenance Manual

SEEPEX PROGRESSIVE CAVITY PUMP DOSING SKID SYSTEM

DOCUMENT NO: IOM_0011_PCH

FEBRUARY 2016, REVISION 1

Veolia Water Technologies Canada Inc.
ISO 9001:2008
4105 Sartelon, St-Laurent (QC) H4S 2B3
Tel: 514-334-7230 ● Fax: 514-334-5070
www.veoliawatertechnologies.ca

NOTICE OF CONFIDENTIALITY
This document is confidential and contains proprietary information. It must not be shared with a third party without the written consent of Veolia Water Technologies Canada Inc.

WATER TECHNOLOGIES

TABLE OF CONTENTS

1 INTRODUCTION 3

2 SAFETY 4

2.1 INTRODUCTION 4
2.2 FALL HAZARDS 4
2.3 CHEMICALS HAZARDS 5
2.4 ELECTRICAL CONNECTIONS 5

3 SHIPPING 6

4 RECEIVING 6

5 HANDLING 6

5.1 GENERAL 6
5.2 POLYPROPYLENE MATERIAL HANDLING 6

6 STORAGE 7

6.1 GENERAL 7
6.2 PVC PIPING STORAGE CONDITIONS 7

7 SKID OVERVIEW 8

8 INSTALLATION 9

8.1 OWNER-INSTALLED PIPING / TUBING 9
8.2 SUCTION LINE / TRANSPORT WATER LINE 10
8.3 DISCHARGE LINE 10

9 INITIAL START-UP 11

9.1 SETTING VALVES 11
9.2 PRESSURE RELIEF VALVE 11
9.3 FLOW CALIBRATION 12
9.4 VARIABLE FREQUENCY DRIVE SETTINGS 12

10 OPERATION PROCEDURES 13

11 ROUTINE MAINTENANCE 14

12 TROUBLESHOOTING GUIDE 15

13 LUBRICATION SCHEDULE 16

14 SPARE PARTS 17

15 DRAWINGS 18

16 COMPONENTS TECHNICAL DATA SHEET 19

17 MANUFACTURERS OPERATION AND MAINTENANCE MANUAL 20

1 INTRODUCTION

This document provides installation, operation and maintenance instructions for a polymer dosing skid equipped with Seepex progressive cavity pump(s). For specific information regarding the pump installed on the dosing system, refer to the manual of the manufacturer.

The skid components supplied by Veolia Water Technologies Canada (VWTC).

To obtain any additional information regarding characteristics or instructions on this equipment, please do not hesitate to contact us.

The system was designed in Canada by:

Veolia Water Technologies Canada
4105, Sartelon
Saint-Laurent, Qc.
Canada H4S 2B3
Phone: 514-334-7230
Fax: 514-334-5070

For technical support or service needs, for spare parts or to get assistance during your warranty period, you may contact us at the following number during regular business hours or write us at:

Veolia Water Technologies Canada After Sales Support
1-844-SER-VWT9 | 1-844-737-8989 | vwtservicecanada@veolia.com

Our business hours are from
Monday to Friday
8:30am to 5pm EST

2 SAFETY

2.1 INTRODUCTION

Your safety is of the utmost concern. Dosing pumps and systems can handle harsh or toxic chemicals and exposure can lead to serious injury or death. Always wear appropriate protective clothing (for example, safety glasses, gloves, coveralls, etc.) and follow safe handling procedures. Pay attention to what you're doing and note safety advisories where they are shown throughout this manual. Some examples of safety issues and precautions for chemical dosing systems are:

- Do not use dosing skid systems for flammable liquids.
- Prior to working on any portion of the skid system, disconnect pump(s) from power supply, de-pressurize the system and drain chemicals from the lines.
- Inspect tubing regularly and replace as necessary. When inspecting tubing, wear protective clothing and safety glasses.
- If skid system is exposed to sunlight, use UV-resistant tubing.
- Follow directions and warnings provided with chemicals from the chemical manufacturer. User/Owner is responsible for determining chemical compatibility with chemical feed pump(s) and system components.
- Secure chemicals, metering pump(s) and system, making them inaccessible to children, pets, and unauthorized personnel.
- Always wear protective clothing, including gloves and safety goggles when working on or near chemical metering pump(s) and system.
- All connections (threaded, screwed or bolted) may only be loosened when the system is not under pressure.
- Installation and start-up of chemical dosing system will require both mechanical (plumbing) and electrical work. Only qualified and licensed plumbers and electricians should perform this.

2.2 FALL HAZARDS

As per OSHA statistic's, the majority of falls results from trips and slips. Common causes of slips are due to wet or oily surfaces and occasional spills.

Operators should reduce the risk of slipping on wet flooring by:

- Cleaning all spills immediately.
- Marking spills and wet area by using a cone or other warning device.

2.3 CHEMICALS HAZARDS

WHMIS Material Safety Data Sheets (MSDS) should be available for each chemical product. Since chemicals or chemical dosage are used during normal operation of treatment facility, the risks of fire, explosion and exposure to toxic chemicals or chemical burns are present. Chemicals typically used with dosing system are coagulant and polymer.

Operators should be made aware of the following:

- All chemicals which are used and any potentially dangerous reaction that could occur.
- Toxicity of all chemicals that are used or could be formed via reactions.
- Acidic or basic properties of all materials used.
- Potential fire or explosion hazards posed by the chemicals.
- Antidotes for exposure to toxic materials.
- Protective clothing that is recommended.
- Chemicals spills may be slippery.

2.4 ELECTRICAL CONNECTIONS

Electrical connections must be made by certified electricians in compliance with all applicable codes and regulations.

3 SHIPPING

Most of the equipment and material for this project will be drop shipped and delivered directly to the site.

- All items delivered will be clearly identified with VWTC's name, VWTC's project name and VWT's project number.
- All shipments will have a clear Packing List identifying all parts in the shipment.
- All equipment will be tagged with the corresponding tag numbers shown on the design drawings (if applicable).

If there are more stringent requirements in the contract documents, they will take precedence over the above. If any of these requirements are not being followed, please notify the VWTC Project Manager immediately.

4 RECEIVING

The condition of all delivered equipment must be verified by the responsible party upon arrival at site. Verification that all equipment has been delivered as per contract must also be done upon arrival at site. Notification of missing or damaged items must be sent to VWTC within five (5) working days of receipt of equipment. If there is no documented notification of missing or damaged parts within five (5) working days, VWTC is not responsible for replacement of any items found to be missing or damaged at the time of installation and start-up of the supplied equipment. It is the responsibility of the party receiving the equipment to ensure all packaging is opened at the time of receipt to uncover and document any and all damages to the Freight Company and VWTC.

Photographs and written documentation should be provided for all damaged equipment.

5 HANDLING

5.1 GENERAL

Equipment will arrive at the project site in several different shipments, from various freight companies and in several different packaging containers. Typically a flatbed truck is used which requires a fork lift or a crane to remove the items.

The Contractor is responsible for unloading and handling the equipment.

5.2 POLYPROPYLENE MATERIAL HANDLING

Care should be taken to avoid damages to the surface of the polypropylene panels due to dragging or from sharp objects.

6 STORAGE

6.1 GENERAL

The following instructions outline the duties and responsibilities of the responsible party for equipment storage. The responsible party shall assume responsibility for the equipment upon arrival at the project site. These instructions shall define the minimum expectations for storage of all equipment.

While this storage specification takes into account common environmental issues that may affect the system during storage, common sense should be the overriding factor in determining the best method to ensure the integrity and proper storage of the VWTC equipment.

For contractual purposes, VWTC demands the Client to send pictures of major equipment once it is placed in storage, any time it gets moved during storage and again prior to removing from storage. Alternatively, a written document (check list, etc.) confirming that proper storage conditions are maintained will suffice. Failing to do so would cancel the proposed warranty.

Should it be necessary to delay installation and subsequent operation of a unit for more than one month from date of receipt at site, special precautions must be taken.

The polymer dosing skid shall be stored indoor at a temperature above 5°C. The storage environment into which a system is placed can have a severe effect on the long-term usefulness of some spare parts. Key environmental factors are:

- Temperature
- Relative humidity
- Pollutants

Air may contain excessive moisture, pollutants, microorganisms, and other particulates that accelerate the deterioration of some materials. Humidity and pollutants can produce an aggressive atmosphere.

6.2 PVC PIPING STORAGE CONDITIONS

Pipe units should be stored and placed on level ground. Caution shall be taken to avoid compression, damage or deformation to the ends of the pipes. Racks or dunnage shall be used to prevent damage to the bottom pipes during storage and to support them. Supports should be spaced to prevent pipe bending.

When exposure in excess of one year to direct sunlight is unavoidable, the pipes should be covered with an opaque material while permitting adequate air circulation above and around the pipes as required preventing excess heat accumulation. The interior of the pipes, as well as all end surfaces, should be kept free from dirt and foreign matter until the pipes are ready to be used.

7 SKID OVERVIEW

The dosing skid system is designed to pump chemicals at precisely controlled rates into another process or system. Dilution water provides a minimum dilution ratio of 3:1 of dilution water to dosing chemical.

Proper arrangement of piping and appurtenances on both the supply side are critical to the successful operation of the overall system. These are the responsibility of the owner/operator of the system, and attention should be paid to the comments below:

SUPPLY SIDE

Dosing chemicals are usually sourced from a preparation system. When the source is located above the centerline of the pump(s) this is referred to as a 'flooded suction'. Connections to and from the solution tank are most commonly made with hard piping. The solution tank should be covered to prevent contamination.

Supply line should gradually slope downward from the solution tank to the skid suction connection.

It is strongly recommended to add a drain provision on the suction side to facilitate emptying and flushing of the system for maintenance.

8 INSTALLATION

Prior to attempting installation, familiarize yourself with the layout and components furnished with your dosing skid system. These vary from system to system and review the documentation supplied with your system. Inspect your skid system for damages which may have occurred during transit. If damages are discovered, immediately file a claim with the carrier and contact Veolia Water Technologies for any required parts or components.

Skid systems, including pump(s), have been tested with water prior to shipment.

Some dosing chemicals will react with water, e.g., acids, polymers, etc. Check the MSDS for the chemical to be handled. If adverse reaction with water is indicated, ensure that all portions of the skid piping, its components and the pump, are free of water prior to filling the skid system with chemical.

Skid systems may be wall or floor mounted. Mounting holes are provided or can be drilled on the skid for both types of mounting. Securely attach the skid in its installation position to prevent falling or tipping.

The installation area should provide ease of access to skid components, including pump(s), and the area should be kept free of clutter to enable safe operation and maintenance.

Note that pumps/motors are designed for ambient temperatures of 104°F (40°C) maximum. It is preferable that skid systems and pump(s) be located out of direct sunlight. If the skid system is exposed to sunlight, provide protection for the pump/motor to prevent overheating and if the skid is exposed to sunlight, use UV resistant tubing.

If skid is exposed to sunlight, use UV-resistant tubing.

Most chemical dosing skids will have Seepex pump(s) mounted on them before shipment, and the pump(s) will be connected to the skid integral piping with tubing.

8.1 OWNER-INSTALLED PIPING / TUBING

The next series of steps are the connection of your piping/tubing which include the chemical supply line, discharge line, pressure relief/bypass line and an air bleed return line.

These are <u>your</u> responsibility and ensure that for all piping, tubing, fitting and other appurtenances, their materials are compatible with the liquid to be pumped and the design is suitable for the pressures and temperatures of the application. System design must ensure safety for operation and maintenance as well as for anyone who may be in proximity to the system. Failure to do so may result in damage to equipment, personal injury or death.

8.2 SUCTION LINE / TRANSPORT WATER LINE

This line connects the source of the dosing chemical to the dosing skid. Include whatever provisions you consider necessary to facilitate the maintenance and operation such as isolation valve(s), drain and/or flush connections, etc., making sure that this sub-system enables safe operation.

8.3 DISCHARGE LINE

This line connects the dosing skid to the served process. Include whatever provisions you consider necessary to facilitate maintenance and operation, such as isolation valve(s), drain and/or flush connections, etc., making sure that this system enables **SAFE OPERATION**.

9 INITIAL START-UP

The pump must be primed before it can function within the system. This will require an initial start of the pump.

Thoroughly review the installation, operation and maintenance manual for your pump prior to starting. Follow pump start-up instructions. Failure to do so may result in damage to equipment or serious injury.

FLOODED SUCTION SYSTEM

1. Close skid discharge valve and column isolation valve.
2. Connect pump/motor to power source (pump/motor off).
3. Start pump using manufacturer's recommendations for initial operation settings.
4. Shut off pump.

9.1 SETTING VALVES

If furnished with your dosing skid system, the pressure relief valve and back pressure valve will be preset prior to shipment. These pressure settings are related to the piping and components furnished with your skid as well as the pump(s) if furnished with the skid. Your system requirements may demand changes to these settings and the valves will have to be reset after maintenance such as diaphragm replacement. A general description and the setting procedures for these components are as follows.

9.2 PRESSURE RELIEF VALVE

A pressure relief valve (PRV) must always be used with a chemical metering system that uses a positive displacement pump. This device is designed to protect the pump and system from over pressurization and it must be set to relieve at the maximum allowable pressure for the weakest point in the total system. This may be in your piping on the discharge side of the skid. The pressure relief valves are factory set and cannot be modified. If the pressure set point is surpassed, the valve will need to be replaced. The pressure settling is indicated on the P&ID drawings.

Most dosing skid systems include a pressure relief valve and suction header where the PRV is directly connected from the discharge header to the suction header. If your skid system does not include a suction header, or if you are providing your own PRV, relief flow from the pressure relief port on the PRV must be directed to either the suction source or a separate receptacle. This is usually done with tubing.

Care must be taken to channel any free flow from the pumping system into an appropriate receptacle. Eliminate any possibility of splashing, spraying or spillage. Always wear suitable protective equipment (gloves, safety goggles/glasses, coveralls, etc.) when working with or around chemical dosing systems.

Check all system piping/tubing connections to ensure that they are properly tightened (handtight for plastic fittings) and leak free.

Pumping system is now ready for operation.

9.3 FLOW CALIBRATION

Chemical metering systems are designed to provide chemicals to a process at precise flow rates. Metering pump output (flow rate) can be set with a variable frequency drive (VFD). A calibration column is used to determine pump flow rate and to enable flow rate adjustments.

The procedures for filling the calibration column and for calibrating the pumps are described below. Review both complete procedures before proceeding with next steps.

FILLING THE CALIBRATION COLUMN BY OPENING THE COLUMN ISOLATION VALVE

- Use extreme care when handling chemicals.
- Avoid any spray, splatter or spilling.
- Always wear appropriate protective clothing.

FOR SYSTEMS WITH FLOODED SUCTION:

1. Open column isolation valve.
2. Liquid level in the column should rise to the level in the suction source. This may be higher than the top of the column, so prevent overfill by closing the column isolation valve when the liquid level in the calibration column reaches slightly above the top scale mark.
3. If the liquid level in the suction source is lower than the top scale mark, close the column isolation valve and add liquid through the top of the column to a point slightly above the top scale mark.

Calibration column is filled and ready for the calibration procedure.

9.4 VARIABLE FREQUENCY DRIVE SETTINGS

When powered up, the operator should check the direction of rotational direction of the pump. The following checklist indicates the steps to set the VFD parameters of an AC Tech drive. Other VFD may require different parameters.

1. Set start control source to terminal strip or local keypad.
2. Set acceleration parameter.
3. Set deceleration parameter.
4. Set motor overload in %.
5. Set start method on start on power up.
6. Set input function to 4-20 mA.
7. Set relay output to run (energizes when the drive is running).
8. Set drive mode to vector speed.
9. Set motor rated voltage.
10. Set motor rated current.
11. Set motor rated speed.
12. Run motor auto-calibration.

For more information refer to the VFD manual.

10 OPERATION PROCEDURES

The calibration column is filled to slightly above the top mark of the scale. The pump is then run in the system while being fed from the calibration column. After a start-up period, the liquid level reading on the scale will be a direct readout of the pump flow rate in US Gallons/hr (note that a millilitre scale is also shown on the calibration column).

With the pump running in the system:

1. Open the column isolation valve so that the column feeds into the suction header and immediately close the skid suction valve.
2. Observe the liquid level in the calibration column. When it reaches the top scale mark, begin timing.
3. Allow 30 seconds to pass.
4. Open the skid suction valve and immediately close the column isolation valve.
5. Read pump output flow rate directly on the scale in US Gallons/hr.

Once the calibration is complete, compare the reading to the desired rate for your system. Refer to your pump operation manual and adjust flow rate up or down accordingly (this is usually done by changing the frequency). After pump adjustment is made, repeat calibration procedure. Continue until the desired flow rate is achieved.

11 ROUTINE MAINTENANCE

Before performing any maintenance on your skid system or pump(s), skid components, pump(s) and your process piping may be under pressure!

Prior to working on any portion of the skid system:

- Disconnect pump(s) from power supply.
- De-pressurize the entire system.
- Drain chemicals from the lines.
- Flush and neutralize as necessary.
- Always wear suitable protection (gloves, safety glasses/goggles, etc.).

Routine maintenance will depend upon your service requirements: dosing chemical being handled, environmental conditions, duty cycle(s) of pump(s), etc. When working on any component of your system, i.e., pump(s) and valves, refer to the installation, operation and maintenance manual for that particular item.

Some operational and maintenance checks that need to be performed are:

Piping/Tubing Integrity:	Routinely check piping, tubing, isolation valves and connections for leaks. Replace tubing as necessary. Recommend weekly check.
System Operation:	Perform flow calibration regularly to ensure that dosing chemical is being added at the proper rate. Recommend monthly.
Pressure Relief:	Check to ensure that bolts are tight. Recommend monthly. Diaphragms should be replaced on an annual basis.
Calibration Column:	If handling sticky chemicals, may require cleaning to view liquid level inside. Perform as necessary.
Progressive Cavity Pump:	Weekly check oil level. Oil should be changed on a 3 years basis. Motor bearings shall be repacked with grease every 3 years. Pump bearings shall be repacked every 3000 operating hours.

Note: Special tools are required for dismantling and re-assembly of the pump. Before starting the dismantling, refer to the installation, operation and maintenance manual of the pump.

12 TROUBLESHOOTING GUIDE

PROBLEM	POSSIBLE CAUSE	REMEDY
Pump doesn't deliver product	Air entering suction line	Check fittings for tightness Check integrity of tubing Check level in suction source-must be above foot valve at inlet
	Air trapped in suction line	Re-configure suction line to eliminate air pocket(s)
	Suction line kinked or clogged	Inspect, replace tubing
	Chemical source empty	Refill, re-prime pump
	Pump not primed, air/gas in system	Refer to pump instructions
	Air/gas bubbles forming in chemical	Reduce suction lift or change to flooded suction Consider chemical storage temperature
	Strainer clogged	Check strainer, clean
	Pressure relief valve open	Check pressure relief valve integrity Check pressure relief valve settings
	Pump problem(s) may be: Stator wear, rupture Check valves worn or clogged Low pump flow setting Voltage/electrical difficulty	Refer to pump instructions
	TSE alert is triggered (overheating)	Check overheating causes Acknowledge the alert/release relay: - Press reset button (at TSE control for 1 sec) - Shut-off operating voltage at the TSE control unit (terminal 1-3) - Actuate external contact (reset button close for 1 sec)
Piping Vibration/chatter	Pulsation dampener malfunction (if applicable)	Check pulsation dampener integrity Check dampener air pressure
Injection rate too high, too low	Pump output setting incorrect	Perform flow calibration
	Chemical concentration too high, low	Adjust chemical source strength
	Injector clogged, scaled, restricted	Check injector for solids or corrosion Clean as necessary or replace
Tubing failure	Sunlight/UV exposure	Change to UV resistant tubing
	Corrosive attack	Determine material compatibility, change as necessary
Leaky fittings	Loose fittings	Tighten fittings-plastic fittings should be handtight only
	Corrosive attack	Determine material compatibility, change as necessary

If problem(s) persist, please contact Veolia Water Technologies

13 LUBRICATION SCHEDULE

ITEM	ACTION	FREQUENCY	TYPE OF LUBRICANT
Gear reducer	Check oil level Change Oil	Weekly 3 years	ISO VG 220 (mineral oil) (ambient T°: -5 to 40°C)
Motor Bearing	Repack with grease	3 years	NLGI EP 2 (grease) (refer to motor nameplate)
Pump Bearing	Repack with grease	3000 operating hours	NLGI EP 2 (grease)
Pump Pin Joints	Repack with grease	Rotor replacement or 10000 operating hours whichever is first	Seepex special joint grease only (refer to Seepex manual)

14 SPARE PARTS

It is highly recommended to keep in stock spare parts in sufficient quantity for all critical equipment to the proper functioning of the process.

Only the use of original Veolia spare parts will ensure proper and reliable operation.

When ordering a spare part, please give the following information:

- Veolia project number.
- Project name.
- Part number

15 DRAWINGS

If this dosing system is integrated to a processing plant, refer to the Process and/or Detailed Technical Documentation section of the Operation and Maintenance Manual for the dosing system drawings.

16 COMPONENTS TECHNICAL DATA SHEET

If this dosing system is integrated to a processing plant, refer to the Detailed Technical Documentation section of the Operation and Maintenance Manual for the dosing system data sheets.

17 MANUFACTURERS OPERATION AND MAINTENANCE MANUAL

If this dosing system is integrated to a processing plant, refer to the Manufacturer Operation and Maintenance Manual section of the Operation and Maintenance Manual for the dosing system manufacturer manuals.

PACKAGE NUMBER: 6115-S-265-001
PURCHASE ORDER NUMBER: OC-671670

AGNICO EAGLE MINES
AMARUQ WTP, NUNAVUT
VEOLIA Project 5000 218 009

Operation and Maintenance Manual
Volume 2

Prepared by:
Veolia Water Technologies Canada Inc.
4105, Sartelon
Montreal, Quebec, Canada
H4S 2B3
Tel.: 514-334-7230

Revision: 1
Date: August 2018

VEOLIA DOCUMENT NO: 5000218009_OMM_0001_GEN_VWT

LEFT BLANK

TABLE OF CONTENTS
Operation & Maintenance Manual
Amaruq WTP, Nunavut

1 INTRODUCTION ..... VOLUME 1

1.1 GENERAL DESCRIPTION

2 SAFETY ..... VOLUME 1

2.1 GENERAL RECOMMENDATIONS
2.2 SAFETY DATA SHEETS

3 DRAWINGS ..... VOLUME 1

3.1 PROCESS FLOW DIAGRAM
3.2 PROCESS AND INSTRUMENTATION DIAGRAM
3.3 HYDRAULIC PROFILE DRAWING
3.4 GENERAL ARRANGEMENT DRAWING
3.5 FIELD INSTALLATION DRAWING
3.6 GENERAL ARRANGEMENT LAYOUT

4 DETAILED TECHNICAL DOCUMENTATION ..... VOLUME 1

4.1 EQUIPMENT LISTS
- 4.1.1 Valve List
- 4.1.2 Instrumentation List
- 4.1.3 Detailed List

4.2 PRODUCT DATA SHEETS
4.3 SHOP DRAWINGS
- 4.3.1 Precipitation Reactor – RX75-3
- 4.3.2 Sludge Tank – RX75-2
- 4.3.3 Centrifuge
- 4.3.4 Sulfuric Acid Dosing Skid
- 4.3.5 Polymer Preparation System – Hydra-Pol 3500
- 4.3.6 $KMnO_4$ Preparation System – Hydra-Pol 500
- 4.3.7 $KMnO_4$ Dosing Skid

TABLE OF CONTENTS
Operation & Maintenance Manual
Amaruq WTP, Nunavut

4.3.8 Coagulant Dosing Skid
4.3.9 Cationic Polymer Dosing Skid
4.3.10 Anionic Polymer Dosing Skid
4.3.11 Actiflo Recirculation Line Modification
4.3.12 Raw Water
4.3.13 Sludge Tanks
4.4 COMMISSIONING REPORT
4.5 LIST OF SUPPLIERS

5 ELECTRICITY AND CONTROL ..... VOLUME 1

5.1 FUNCTIONAL DESCRIPTION
5.2 WIRING DIAGRAMS
5.3 CONTROL ARCHITECTURE
5.4 INPUT AND OUTPUT LIST
5.5 MOTOR LIST

6 OPERATION AND MAINTENANCE ..... VOLUME 1

6.1 ACTIFLO
6.2 HYDRA-POL POLYMER PREPARATION SYSTEM
6.3 SULFURIC ACID DOSING SKID
6.4 COAGULANT AND $KMnO_4$ DOSING SKID
6.5 POLYMER DOSING SKID

7 MANUFACTURER MAINTENANCE MANUAL ..... VOLUME 2

7.1 MANUFACTURER LIST
7.2 MANUFACTURER INSTALLATION, OPERATION AND MAINTENANCE MANUAL

The system was manufactured in Canada by:

Veolia Water Technologies Canada
4105, Sartelon
Saint-Laurent, Qc.
Canada H4S 2B3
Phone: 514-334-7230
Fax: 514-334-5070

For technical support or service needs, for spare parts or to get assistance during your warranty period, you may contact us at the following number during regular business hours or write us at:

Veolia Water Technologies Canada – After Sales Support
1-844-SER-VWT9 | 1-844-737-8989 | vwtservicecanada@veolia.com

Our business hours are from:
Monday to Friday
8:30am to 5pm (EST)

Have the following information on hand for each request or call:

Project Name:
VWTC Reference Number:

LEFT BLANK

OPERATION AND MAINTENANCE MANUAL

VOLUME 2

LEFT BLANK

7 – MANUFACTURER MAINTENANCE MANUAL

7.1 – MANUFACTURER LIST

LEFT BLANK

AMARUQ WTP - NUNAVUT			
MANUFACTURER INSTALLATION, OPERATION AND MAINTENANCE MANUAL			
SECTION		MANUFACTURER LIST	
7.2			
	001	ALLEN BRADLEY	
		Model 836T, Pressure switch	
	002	ANDRITZ	
		Model D4L, Centrifuge	
	003	ASCO	
		EF8210G004, Solenoid valve	
		EF8210G022, Solenoid valve	
		8210G089, Solenoid valve	
		8210G094, Solenoid valve	
		(EF) 8345G001, Solenoid valve	
	004	ASCHROFT	
		Type 1009, Pressure gauge	
		Type 101, Diaphragm seal	
		Type 310, Diaphragm seal	
	005	BALDOR	
		Intergral horsepower series, Motor	
	006	CFF	
		Series SS-2, Ball valve	
	007	CHEMLINE	
		Type 21, Ball valve	
		Type SM2, Metering ball valve	
		Series BT-BC-FV-FT, Ball check and foot valves	
		Type 57, Butterfly valve	
		Series E, Electric actuator	
		Series PA, Pneumatic actuator	
		Series GV, Globe valve	
		Series SB12, Back pressure/relief valve	
		Series SG, Diaphragm seal w/ pressure gauge	
		Series FC/FS, Variable area flow meter	
	008	ENDRESS + HAUSER	
		Proline Promag 50W, Electromagnetic flowmeter	
		Liquiphant M FTL51, Level switch (vibronic)	
		Soliswitch FTE31, Level switch (paddle type)	
		Cerabar T PMC131, Pressure transducer	
		Cerabar S PMC71, Pressure transmitter	
	009	ENVIREQUIP	
		Series EVG/EVGX, Mixers	
		c/w Nord gear box	
	010	FLOWROX	
		Series PVE, Pinch valve	
	011	FLSMIDTH KREBS	
		Model U10-Gmax-9.5 SQIN, Hydrocyclone	
	012	FLYGT	
		ENM-10, Level switch	

SECTION		MANUFACTURER LIST
	013	GRUNDFOS
		DDA Series, Dosing pump
		CRN Series, Multi-stage centrifugal pump
	014	HACH
		Model Solitax sc, Turbity sensor
		Model sc200, Universal controller
		Model DPD1R1, pH sensor
		Model DRD1R5, ORP sensor
	015	HAPMAN
		Vacuum conveyor system
	016	KOFLO
		Model 1.5-40C-4-6-2, Static Mixer
		Model 2-40C-4-6-2, Static Mixer
	017	McLANAHAN
		Model M3H-CR 3/3, Microsand recirculation pump (P2-011/012/021/022)
		Model M3H-CR 1.5/1.5, Multiflo extraction pump (P2-014/023)
	018	NORD
		Clincher Series, Gear reducer
		c/w Nord motor
	019	ONYX VALVE
		Series PSW, Pressure gauge isolator ring
	020	PMP
		Model A201, Ball valve
	021	PRATT
		Series 601, Ballcentric plug valve
	022	PRIMARY FLUID SYSTEM
		Accudraw PVC Series, Calibration cylinder
		Accudraw Glass Series, Calibration cylinder
		Accupulse Series, Pulsation dampener
	023	PULSAFEEDER
		Pulsar Shadow Series, Mechanical diaphragm dosing pump
	024	SCHUTTE & KOERTING
		Figure 264, Eductor
	025	SEEPEX
		Series BN 05-12, Progressive cavity pump (cationic polymer) (P9-621/622/623)
		Series BN 05-12, Progressive cavity pump (anionic polymer) (P9-524/525/526)
		Series BN 17-06, Progressive cavity pump (sludge treatment) (P5-011/012)
	026	SULZER
		Model EJ 15D-2, Submersible pump
	027	WAM
		MBF Series, Micro batch feeder
		SBB Series, Flexible intermediate bulk container discharger (FIBC Discharger)
		VL Series, Slide gate valve

7 – MANUFACTURER MAINTENANCE MANUAL

7.2 – MANUFACTURER INSTALLATION, OPERATION AND MAINTENANCE MANUAL

LEFT BLANK

ALLEN BRADLEY

MODEL 386T, PRESSURE SWITCH

LEFT BLANK

Bulletin 836T Pressure Controls

ATTENTION: To prevent electrical shock, disconnect from power source before installing or servicing.

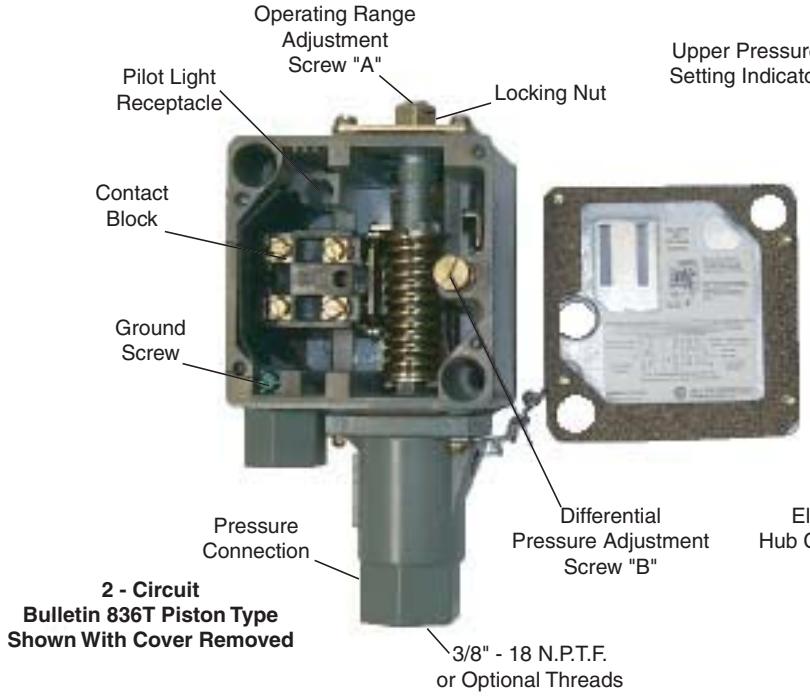

2 - Circuit Bulletin 836T Piston Type Shown With Cover Removed

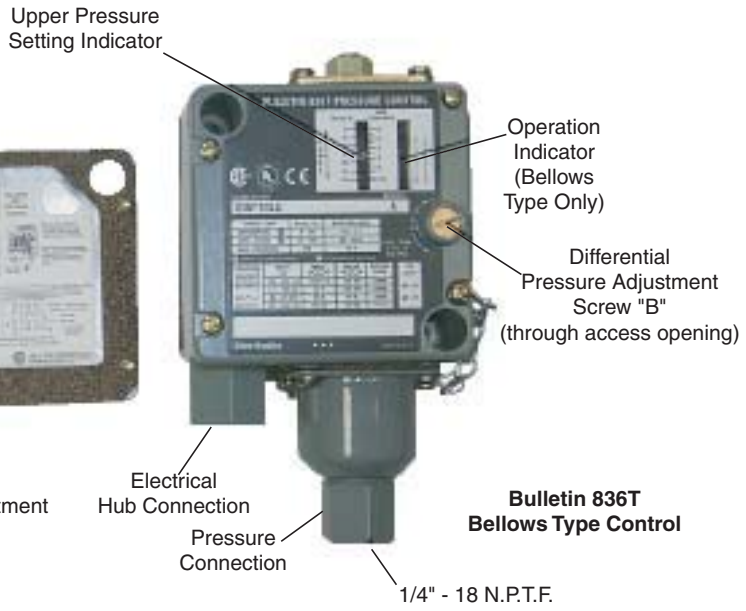

Bulletin 836T Bellows Type Control

DESCRIPTION - Bulletin 836T, Type 1, 4, & 13 oiltight pressure controls are designed for use on machine tool applications where a stream of oil or water may flow over the enclosure. Other applications would include areas where it is desirable to resist the entrance of lint, dust, and dirt into the enclosure.

The operating range pressure and differential are adjustable externally.

Bellows type devices are available from vacuum to pressures up to 650 psi.

ATTENTION: Copper alloy bellows may be used on water or air and other liquids or gases not corrosive to this alloy. Type 316 stainless steel bellows are available and are used for the more corrosive liquids and gases.

Piston type devices are available for pressures up to 5000 psi.

ATTENTION: Stainless steel piston type controls are designed for use on oil, water and waterbased fluids but must not be used on air or gases.

The 2 - Circuit contact block has one set of normally open and one set of normally closed contacts. These contacts may be arranged for single pole double-throw operation or separate circuit operation having the same polarity.

A 4 - Circuit contact block assembly with two normally open and two normally closed contacts is also available. An isolated terminal is furnished to provide a termination point when an optional power source is used. These contacts may be arranged for double pole double-throw operation or two isolated single pole double-throw, electrically isolated circuits. Circuits must be of the same polarity.

MOUNTING - The pressure control should be mounted securely to a firm base using two mounting screws. The recommended fastener for mounting is a 1/4"-20 or M6X1 metric screw. The applied torque should not exceed 70 lb-in (8 Nm).The mounting holes (see sketch) are easily accessible without removing the front cover assembly.

ATTENTION: The control should not be supported by only the electricaland pressure connections. A support wrench should be used when tightening the electrical hub and pressure connections.

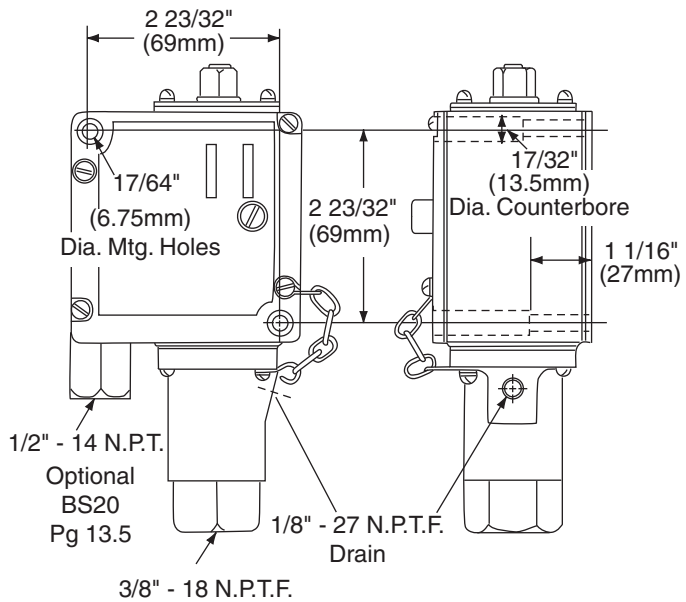

Piston Type Shown

OPERATION - A toggle mechanism operates the snap action switch at a predetermined pressure setting. For the 2 - Circuit snap switch the pressure causes the normally closed circuit 1-2 to open and normally open circuit 3-4 to close. This is known as the trip pressure. When the pressure returns to a lower predetermined setting, the circuit 1-2 will close and circuit 3-4 will open. This is known as the reset pressure. The difference between "trip" and "reset" pressure is the differential.
Similarly, for the 4 - Circuit snap switch, both normally closed circuits, 1-2 & 5-6 would open and both normally open circuits, 3-4 & 7-8 would close on increasing pressure. On decreasing pressure, the contacts would return to their original state at a predetermined setting.

Catalog number 836T-T251J can also be operated in a vacuum. At a higher vacuum setting (lower pressure toward 30" Hg) the 2 - Circuit switch contacts 1-2 will be closed and 3-4 open. At a lower vacuum (higher pressure toward 0 psi) circuit 1-2 will open and circuit 3-4 will close.

EXAMPLE: Control set to close contacts at 15" Hg vacuum, open at 5" Hg vacuum. For the 2 - Circuit switch, circuit 1-2 would be used. For the 4 - Circuit switch, circuits 1-2 or 5-6 would be used.

CONTACT BLOCK WIRING SYMBOL
(Increasing Pressure Operation)

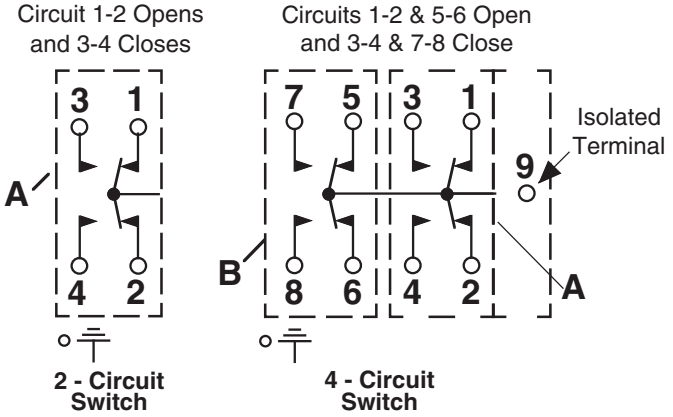

A or B circuits must be the same polarity.

ADJUSTMENT - Generally, unless otherwise specified, controls shipped from the factory are set at the maximum operating range pressure and minimum differential.

The following procedure should be used to set the control to a particular requirement.

OPERATING RANGE ADJUSTMENT: Turn lock nut on adjustment screw "A" counterclockwise to loosen. Turn range adjustment screw "A" clockwise to raise upper and lower pressure settings. To decrease the upper and lower settings, turn screw "A" counterclockwise. The approximate upper pressure setting is shown by an indicator in the left window between the calibration scales on the nameplate. When the proper setting is reached, tighten the lock nut on screw "A" clockwise.

DIFFERENTIAL ADJUSTMENT: When the differential screw "B" is up against the underside of the differential access opening in the cover the control will function at minimum differential. To increase the differential, turn adjustment screw "B" clockwise. This will decrease the lower setting only. The higher setting will not change. Similarly, to decrease the differential turn the differential adjustment screw "B" counterclockwise. This will raise the lower setting only.
Condensed instructions can be found on the inside of the front cover.

NOTE: The use of a pressure gauge is desirable when setting the control.

ATTENTION: The adjustment screw "A" should not be forced beyond the range of the control indicated on the calibrated scale. The adjustment screw "B" should not be adjusted beyond the maximum specified differential of the control.

Operating variables in a system may cause changing pressure requirements. It is recommended that a periodic inspection of the gauge pressure be made and the pressure control adjusted to compensate when necessary for these changes.

PISTON TYPE APPLICATIONS -

ATTENTION: All pistons are provided with a 1/8 inch threaded drainopening which should be connected to an oil return line leading to anoil reservoir which is vented to atmosphere. This reservoir may be at ahigher level of elevation than the control. The controls with seal ringsusually do not require return lines. However, the 1/8 inch threaded drainopening should never be plugged on either type of piston control. Thisalso includes the shipping plug which must be removed upon installa-tion. Filters should be used to reduce contamination of hydraulic fluid.

PILOT LIGHT OPTION - A high intensity neon glow pilot light is available for 120 volt, 60 hertz applications and can be installed at the factory or in the field. To order pilot light kit specify catalog number of existing control and add N9 to this number. Optional pilot lights are available on special orders.

The pilot light is wired to the contact block as follows:

A. **2 - Circuit**
Always connect lamp wires to same set of terminals used for the load. To light on increasing pressure connect across 1-2. To light on decreasing pressure connect across 3-4.

B. **4 - Circuit**
Consists of 2 electrically isolated single pole-double throw circuits. Connect lamp wires to same set of terminals used for load. To light on increasing pressure connect across 1-2 or 5-6. To light on decreasing pressure connect across 3-4 or 7-8.
(or)
An isolated terminal, 9, is provided as a termination point when an optional power source is used. This provides a convenient means for various circuit connections when separation of the load and pilot light is required. Circuits must be the same polarity for pilot light connections and switching of auxiliary equipment.

PAINTING - Standard controls are supplied with a removable paint mask on the nameplate. Remove the mask on final installation.

CONTACT BLOCK REPLACEMENT - To order Bulletin 836T Contact Block 2 - Circuit (SPDT-DB) Replacement Kit specify Catalog Number 836T-N1. For the 4 - Circuit (DPDT-DB) Contact Block Replacement Kit specify Catalog Number 836T-N2.

REPAIRS - Due to the integral construction of the Bulletin 836T Pressure Control, it is recommended it be returned to the factory for repairs (excluding contact block replacement). The control will be adjusted for optimum performance and tested to specifications.

ANDRITZ

MODEL D4L, CENTRIFUGE

LEFT BLANK

VEOLIA WATER TECHNOLOGIES CANADA, INC.
AGNICO EAGLE AMARUQ MINE WTP
SAINT-LAURENT, QC, CANADA

Operation & Maintenance Manual
VOLUME I

CENTRIFUGE SKID SYSTEM

Model: D4LC30CHP

Serial No.'s: 132907052 & 132907053

ANDRITZ Separation, Inc.

1010 Commercial Blvd South
Arlington, TX 76001

Phone: 817-465-5611
Fax: 817-472-8589

Andritz Job No: 831476

REVISION NO.:	0.0	MAY 2018

IMPORTANT!

This manual should be read in its entirety before attempting to install, operate, or repair the equipment supplied by ***ANDRITZ.*** One copy must be kept in the area of equipment installation and be available to operators and maintenance personnel. Failure to follow the instructions contained herein could result in invalidation of warranties or injury to personnel.

This manual is the confidential and proprietary information of ***ANDRITZ*** Separation, Inc. Any party accepting receipt of this manual does so on the express understanding and agreement that it will neither copy, reproduce, disclose to third parties, nor use this manual for any purposes other than those expressly agreed to by ***ANDRITZ*** Separation, Inc, in writing. Such party also agrees to indemnify ***ANDRITZ*** Separation, Inc, against any losses or damages suffered by ***ANDRITZ*** Separation, Inc, as a result of such parties' improper reproduction, disclosure, or use of this manual.

This page is intentionally left blank

DIRECTORY OF PARTIES TO THE PROJECT

END USER/OWNER	VEOLIA WATER TECHNOLOGIES CANADA, INC
	4105 Sartelon Saint-Laurent, QC Canada, H4S 2B3 Plant site: Agnico Eagle Amarunq Mine Baker Lake, NU, Canada X0C 0A0
ENGINEER	**VEOLIA WATER TECHNOLOGIES CANADA, INC**
Contact: Clément Bekaert, Engineer & Project Manager E-mail: clement.bekaert@veolia.com Phone: +1 514-334-7230 Mobile: +1 514-246-6232 Fax: +1 514-334-5070	4105 Sartelon Saint-Laurent, QC Canada, H4S 2B3
SPARE PARTS & SERVICE	**ANDRITZ SEPARATION, INC.**
Aftermarket Services Phone: +1 817-419-1768 Fax: +1 817-419-1968	1010 Commercial Blvd South Arlington, TX 76001, USA Phone: +1 817-465-5611 Fax: +1 817-419-1929

MECHANICAL ENGINEER:	ELECTRICAL ENGINEER:
APPROVED BY:	APPROVED BY:
DATE: 6/6/18	DATE: 6/6/2018

This page is intentionally left blank

TABLE OF CONTENTS

Chapter 1: Centrifuge Skid Delivery and Installation 1-1

1.1 General Safety for Lifting and Transportation 1-1

1.2 Receiving 1-1

1.3 Storage Instructions for the Centrifuge Skid 1-2

1.3.1 Short Term Storage – 3 Months or Less 1-2

1.3.2 Tools, Parts and Ancillary Equipment 1-2

1.3.3 Long Term Storage 1-3

1.3.4 Preparation of Loose Parts for Storage 1-3

1.3.5 Preparation of Machined Surfaces 1-3

1.3.6 Preparing to Crate for Long Term Storage Preparation 1-3

1.4 Storage Instructions for Control Panels 1-4

1.4.1 Short Term Storage for Control Panels (3 Months or Less) 1-4

1.4.2 Long Term Storage for Control Panels 1-4

1.5 Handling 1-5

1.6 Centrifuge Setup 1-5

1.6.1 Connections 1-6

1.6.2 Installation of the Electricals 1-6

1.6.3 Auxiliary Verifications 1-6

1.7 Installation Checklist 1-7

Chapter 2: Project Drawings & Data 2-1

2.1 Mechanical Drawings 2-1

2.2 Electrical Drawings/BOM 2-3

LIST OF FIGURES

Fig. No.	Title	Page
1-1	Centrifuge Skid Handling Diagram	1-5
1-2	Installation of Feed Head	1-6

LIST OF TABLES

Table No.	Title	Page
1-1	Installation Checklist for Andritz Centrifuges	1-7

CHAPTER 1

CENTRIFUGE SKID DELIVERY AND INSTALLATION

WARNING:

1.1 GENERAL SAFETY FOR LIFTING AND TRANSPORTATION

Qualifications

Personnel in charge of machine operation/lifting and transportation, must have the necessary qualifications.

Method

Use only recommended tools and methods.

Do not stand under the loaded hoist or place any parts of the body (hands, feet, etc.) under the machine being lifted.

Do not place fingers, hands, feet, or head in areas where there may be risk of pinching. Beware of sharp edges from worn parts.

CAUTION: An unattended or falling load can cause bodily harm or death as well as consequential equipment damage.

1.2 RECEIVING

The centrifuge skid unit arrives preassembled minus the conveyor. The conveyor frame will be offloaded individually. Refer to M818524-4 for lifting points to offload the skid. Use extreme caution when offloading so as not to dislocate the assembled equipment.

1.3 STORAGE INSTRUCTIONS FOR THE CENTRIFUGE SKID

Short term storage is a period of three months or less where the machine is out of service. ANDRITZ recommends indoor storage for the centrifuge skid system, including its motors, ancillary equipment, tools and spares.

1.3.1 Short Term Storage – 3 Months or Less

The centrifuge skid must be stored in a dry, dust-free, ventilated area with sufficient space around the skid so that it will not come into accidental contact with other equipment or environmental or workplace contaminants. The centrifuge and auxiliary equipment on the skid must be covered and completely enclosed with at least two layers of tarp if stored outside and one layer of tarp if stored inside. The centrifuge skid must be stored in an area where the ambient temperature is greater than 50 ºF.

If the centrifuge has been in use before storage, then it must be washed internally thoroughly, and all electrical switch gear must be locked out, before placing it in storage. New equipment may be stored as it arrives from the manufacturer.

Each centrifuge is lubricated before shipping. However, if the centrifuge has been in use, protect the bearing block bearings from moisture by injecting a third to a half an ounce of grease through the lubricators. Turn the rotating assembly by hand so that rolling elements are properly coated. Repeat this procedure every 6 months during storage.

Loosen the belts and coat the pulley with a light lubricant such as WD-40. This procedure is required to keep the belts from becoming deformed and to protect the pulley from corrosion during storage.

Check the manufacturer's manual of each auxiliary equipment for long-term storage recommendations.

CAUTION: A total filling of the bearing housing will result in abnormal heating during startup, which might then require partial disassembly to remove excess grease.

NOTE: The other bearings and the Cyclo reducer are enclosed in a tight housing filled with lubricant, and no maintenance is required.

1.3.2 Tools, Parts and Ancillary Equipment

Tools and spares (if supplied) must be crated and stored on blocks or a wooden pallet. Ancillary equipment should be left as it is shipped (wrapped on a pallet or crated).

1.3.3 Long Term Storage

It is recommended that a centrifuge skid system which is to be stored for a period in excess of three months be stored indoors in a heated building with the temperature maintained at a minimum of 50°F (10°C). This should be a warehouse-type building with no rotating machines that may cause floor vibration; the machine must be isolated from floor vibration.

Prior to storage, the machine should be tagged with a list of instructions followed during storage and special precautions to be taken before start-up.

This procedure does not imply any extension of ANDRITZ Standard Warranty.

Prior to start-up after long-term storage, it is mandatory that an ANDRITZ Service Engineer supervise the startup.

If the centrifuge has been in service before putting into long-term storage, then it must be washed internally thoroughly, and all electrical switch gear must be locked out before placing it in storage. The centrifuge must be covered and completely enclosed by a layer of tarp. The centrifuge must be stored in an area where the ambient temperature is greater than 50ºF (10ºC). It is recommended to store the centrifuge inside.

Tools and spares should be crated and stored on blocks or wooden pallet. Ancillary equipment should be left as it is shipped (wrapped on a pallet or crated).

1.3.4 Preparation of Loose Parts for Storage

All loose parts should be placed in a box lined with rust inhibitor paper. Do not put paper on the base of the box, but apply to sides. All machined, unpainted surfaces should be coated with Mobilarma® 355 or equivalent.

1.3.5 Preparation of Machined Surfaces

All exposed, unpainted steel surfaces on the centrifuge should also be coated with Mobilarma® 355 or equivalent.

1.3.6 Preparing to Crate for Long Term Storage Preparation

The entire centrifuge skid should be covered with a tarp made of rust inhibitor, waterproof paper. The tarp should be 8” (200mm) to 10” (250mm) above the base of the machine.

The following standard notes should then be stenciled on the outside surface of the tarp on both sides of the centrifuge, as follows:

TAG / STENCIL	Rotate the assembly by hand at least 5 revolutions in order to rotate the centrifuge.

1.4 STORAGE INSTRUCTIONS FOR CONTROL PANELS

ANDRITZ control panels are covered with stretch wrapping material and bolted to or braced securely in an enclosed wooden crate for shipment. The control panel crate provides exterior protection against weather precipitation and impact damage that could occur during shipment. Control panels with legs are securely bolted to a shipping skid to provide stability for movement of the control panel with a forklift after it is uncrated at the jobsite. The control panel should always remain secured to the shipping skid until it is ready to be removed and placed in its final destination. Control panels without legs are securely braced in the crate with wooden braces. These braces must be removed prior to lifting the control panel from the crate. Removal of control panels either from the crate or from the shipping skid should be done via the use of the lifting eyes on the control panel and with load-rated lifting straps.

The following statements are guidelines for proper short-term and long-term storage of industrial control panels that are delivered to the jobsite. Failure to adhere to the following storage requirements will render any written or implied ANDRITZ warranty null and void. It needs to also be understood that the shipping crate is not designed to be used as a long-term weather proof shelter for the control panel and that waterproof tarps should be placed over the top of the crate to prevent water seepage and material degradation if the crate is going to be subjected to the outdoors for any period of time; outdoor exposure should be only temporary and kept to a minimum.

1.4.1 Short Term Storage for Control Panels (3 Months or Less)

The industrial control panel should be stored indoors in a clean, dry, vibration-free, non-corrosive environment and be kept at a uniform temperature to prevent condensation. The control panel should be placed on a flat surface and in an upright position. If the control panel is removed from its shipping crate, it should be kept in its stretch wrapped material until it is ready for installation. The industrial control panel should not be tipped or laid flat during storage unless intentionally shipped in that manner by the factory. Proper measures should be taken to protect the control panel from exposure to excess dirt, temperature, and humidity. The control panel should be stored in an area where it will not be subjected to a lot of traffic by personnel, lift trucks, and so forth where potential injury to personnel or damage to the equipment could occur.

1.4.2 Long Term Storage for Control Panels

The industrial control panel should be stored indoors in a dry, vibration-free, non-corrosive environment and be kept at a uniform temperature to prevent condensation. The crate should be set on a flat surface and prepped for long-term storage by completely stretch wrapping it to keep it insulated from any excess dirt and any encroaching insects, vermin, etc.. The crated control panel should be stored in an area where it will not be subjected to a lot of traffic by personnel, lift trucks, and so forth where potential injury to personnel or damage to the equipment could occur.

NOTE: If necessary, temporary electrical heating should be installed to prevent condensation within the control panel, approximately 150 watts per section is usually adequate for the average control panel for most environments. All loose packing of flammable materials should be removed prior to energizing space heaters.

1.5 HANDLING

The skids will arrive as shown in drawing M831476-2. The conveyors and vent piping will be shipped loose. It is the contractor's responsibility to ensure the sling and spreader bar(s) are adequately sized to handle the load. It is also the responsibility of the contractor to ensure the crane is sized to lift and place the load as required. The weight of the skid is approximately 5,883 kgs (12,970 lbs).

1.6 CENTRIFUGE SETUP

The contractor should prepare the foundation as shown in drawing M831476-2 with anchor bolts located, as shown in the detail. The skid should be located such that the sludge inlet and centrate connections can be located. Once in place the skid should be levelled in all directions to within 1/16 inch. High strength grout should be used around the anchor bolts.

The conveyor and vent piping can then be installed. The reminder of the piping connection as well as wiring should be completed. The shipping straps which secure the machine to the stand can be removed.

The rotating assembly is locked on both ends by one radial screw. The bolts can be backed off to allow the rotation assembly to turn freely.

1.6.1 Connections

All connecting piping must be self-supporting. Refer to drawing M831476-3 for all connection locations and sizes.
The following connections need to be made:

- Product flanges
- Wash water connection
- Polymer connection
- Check that the flexible expansion joints can absorb both vertical and horizontal displacement. Axial compression – 38mm, (1 ½"), Axial extension – 16mm ($^{5}/_{8}$"), Lateral offset – 19mm (¾").
- Check feed pump

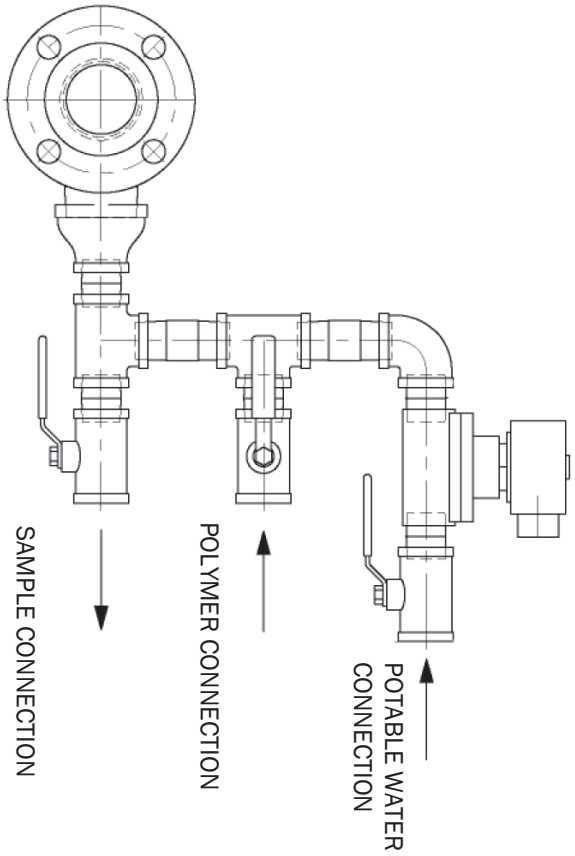

Figure 1-2 Installation of the Feed Head

1.6.2 Installation of the Electricals

Refer to electrical drawings, Chapter 2, §2.2, for all required electrical connections.

1.6.3 Auxiliary Verifications

- Supplied Tools
- Lubrication amounts
- Standard tools
- Test product
- Power and fluids
- Electrician / Automation engineer on site

An Installation Checklist has been included at the end of this chapter.

1.7 INSTALLATION CHECKLIST

This checklist, as well as ensuring equipment is correctly installed will also maximize the efficiency of the Andritz field technician's visit to the site during installation and start-up.

TABLE 1-1. INSTALLATION CHECKLIST FOR ANDRITZ CENTRIFUGES

Check List	**Yes**	**No**	**Not Applicable**
CENTRIFUGE CABLES			
• Inverters			
• Centrifuge Connections			
• Wire Connection			
• Command circuit (relays, I/O/Automate)			
POWER			
• Electricity			
• Raw water or rinse circuit			
• Compressed air			
INSTALLATION			
• Leaks			
• Rotation direction of peripheral motors			
• Sensors			
• Measurement controls (flow meter, flow indicators)			
PRODUCT			
• Quality and quantity			
PRODUCT EVACUATION			
• Trap / Hopper			
• Scroll pump			
MAINTENANCE MEANS FOR MACHINE DISMANTLE			
• Rails, lifting beams			
ELECTRICIAN / AUTOMATION ENGINEER ON SITE			
• Presence required			

This page is intentionally left blank

CHAPTER 2

PROJECT DRAWINGS

2.1 MECHANICAL DRAWINGS

The following certified mechanical drawings are included:

M831476-1 D4L Centrifuge Skid General Arrangement

M831476-2A D4L Centrifuge Skid, Skid Assembly General Arrangement Unit 0601

M831476-2B D4L Centrifuge Skid, Skid Assembly General Arrangement Unit 0602

M831476-3 Manifold Assembly

M831476-4 D4L Centrifuge Skid, Skid Assembly General Arrangement (to be provided in submittal of final O&M)

This page is intentionally left blank

PIPING CONNECTIONS		
PORT	SIZE	DESCRIPTION
A	2"–150 LB ANSI FLANGE	FEED INLET
B	RECTANGULAR 12–1/2" x 19–1/2"	SEDIMENTS DISCHARGE
C	1" NPT	SLUDGE SAMPLE
D	1" NPT	POLYMER CONNECTION
E	1" NPT	WASHWATER CONNECTION
F	8"–150 LB ANSI FLANGE	VENT
G	5"–150 LB ANSI FLANGE	EFFLUENTS OUTLET
H	ø1.327"	FRAME DRAIN

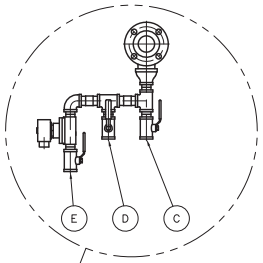

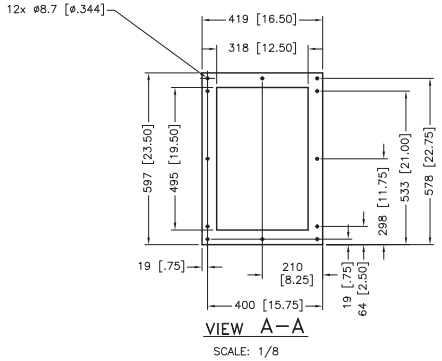

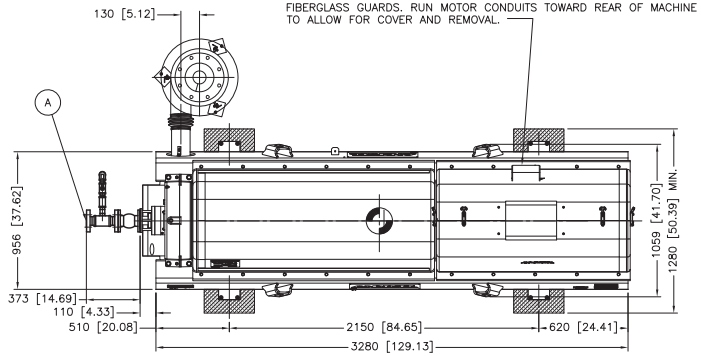

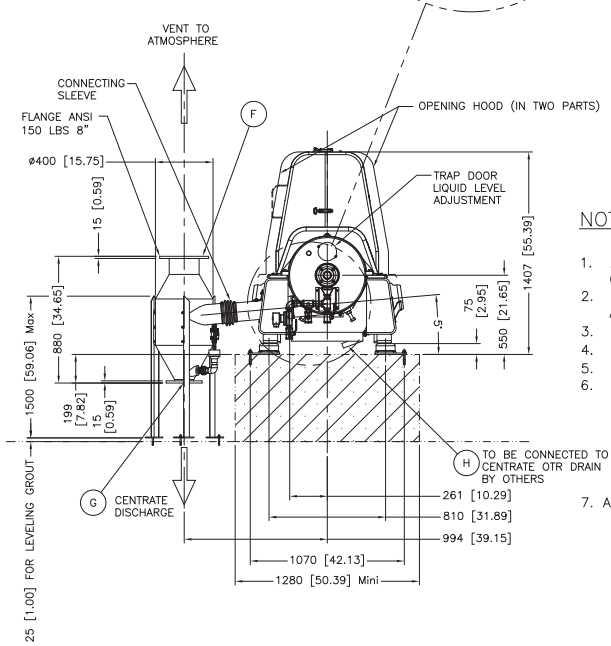

NOTES:

1. ALL PIPING TO AND FROM MACHINE TO BE COMPLETED WITH FLEXIBLE CONNECTIONS.
2. SEE FOUNDATION DETAILS FOR DESIGN LOADS AND CONNECTION DETAILS.
3. ALL DIMENSIONS ARE IN mm WITH inches IN [ ].
4. DRY WEIGHT OF MACHINE 3059 kg [6744 lbs].
5. SCROLL WEIGHT 510 kg [1124 lbs].
6. PROCESS REQUIREMENTS
   WASHWATER: 35.2–70.4GPM @ 43.5–58PSI
   SHUTDOWN: 15min
   CIP: 10min
   AIR FLOW: 118CFM
   MINIMUM SLUDGE INLET PRESSURE: 7.5PSI AT CENTRIFUGE FEED FLANGE.
7. ALL CHUTES TO BE SUPPORTED BY OTHERS UNLESS NOTED OTHERWISE.

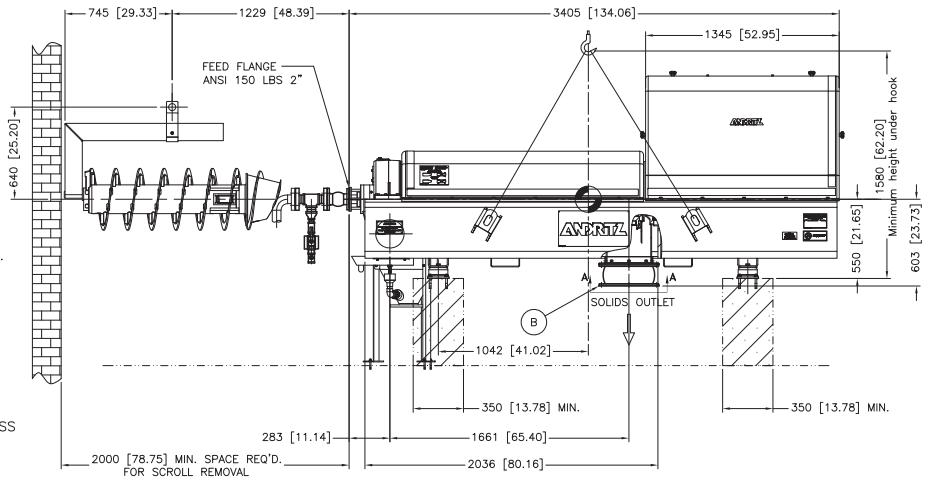

THIS DRAWING IS COPY RIGHTED
THIS DRAWING IS A TRADE SECRET AND ONLY ENTRUSTED TO THE RECEIVER FOR HIS PERSONAL USE. WITHOUT THE SIGNED WRITTEN CONSENT OF ANDRITZ SEPARATION, INC., IT MUST NOT BE COPIED NOR MADE AVAILABLE TO THIRD PARTIES, INCLUDING COMPETITORS, NOR MADE ACCESSIBLE TO SUCH PARTIES. ANY ILLEGAL USE BY THE RECEIVER OR THIRD PARTIES FOR WHOM HE IS RESPONSIBLE CAN CONSTITUTE A CAUSE FOR LEGAL ACTION. THIS DRAWING MUST BE RETURNED ON REQUEST OF THE COMPANY.

ANDRITZ SEPARATION, INC.
1010 COMMERCIAL BLVD, SOUTH
ARLINGTON, TEXAS 76017
Phone: (817)465-5611
Telefax: (817)472-8589

CERTIFIED CORRECT FOR INSTALLATION
BY: T.BARTOSH DATE: 4/10/18
PROJECT No. 831476

THESE DWGS. REFLECT CUSTOMER'S CHANGES AND APPROVAL ON PREVIOUS DWG. TRANSMITTALS

ESTIMATED WEIGHT IN LBS:	DRAWN BY: QG	DATE 04/10/18
UNLESS OTHERWISE SPECIFIED: DIMENSIONS ARE IN INCHES	CHECKED BY:	DATE
FABRICATION TOLERANCES .XXX±.040 ANG±1° HOLE±.020	APPROVED BY: JG	DATE 4/10/18
MACHINING TOLERANCES .XXX±.005 ANG±.5° HOLE±.020	THIRD ANGLE PROJECTION	
MILL FINISH ALL OVER		

ANDRITZ SEPARATION, INC.
1010 COMMERCIAL BLVD. SOUTH
ARLINGTON, TEXAS 76001
PHONE: (817) 465-5611

TITLE: VEOLIA AGNICO AMARUQ
D4L CENTRIFUGE
GENERAL ARRANGEMENT

SIZE	DRAWING NUMBER	REV
D	M831476–1	0

SCALE 1/16 | FILE M831476–1 | SHEET 1 OF 1

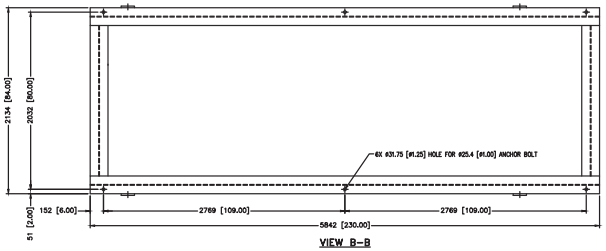

VIEW B–B

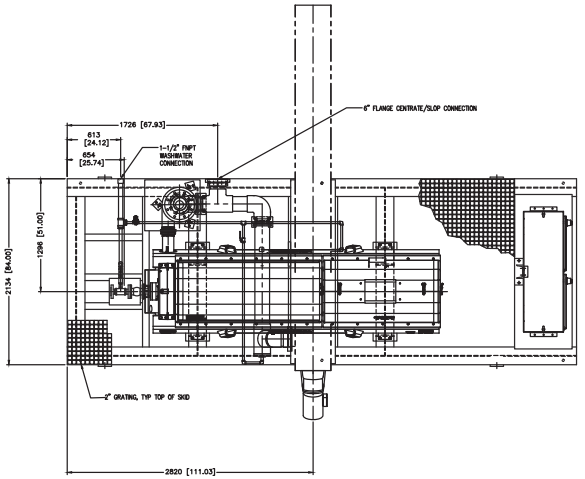

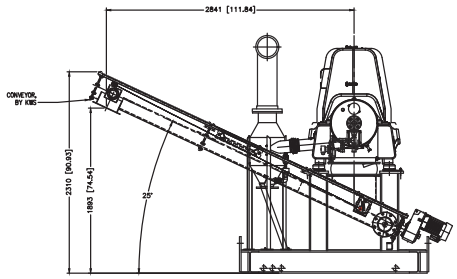

VIEW A–A
WASHWATER PIPING NOT SHOWN IN THIS VIEW

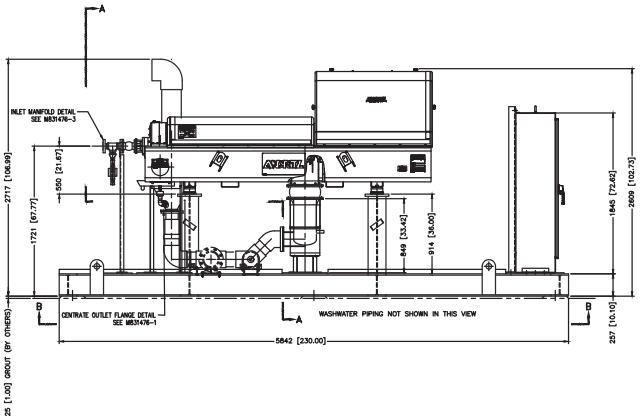

UNIT 0601

NOTES:
1. FOUNDATION DESIGN TO BE BY OTHERS.
2. ALL DIMENSIONS ARE IN mm WITH Inches IN [ ].
3. PIPING TO/FROM SKID IS BY OTHERS.
4. PROCESS REQUIREMENTS: SEE NOTE 6 ON DRAWING M831476-1.
5. APPROXIMATE DRY WEIGHT OF SKID: 5883 kg [12,970 lbs].
   APPROXIMATE OPERATING WEIGHT OF SKID: 6677 kg [14,720 lbs].
6. SKID TO BE LEVEL IN ALL DIRECTIONS WITHIN 1.6mm [.063 inch].

THIS DRAWING IS COPY RIGHTED
THE DRAWING IS A TRADE SECRET OF ANDRITZ AND IS NOT INTENDED TO BE DISCLOSED, COPIED OR USED IN WHOLE OR IN PART WITHOUT THE WRITTEN PERMISSION OF ANDRITZ. IT MUST NOT BE COPIED, NOR MADE AVAILABLE TO THIRD PARTIES, INCLUDING COMPETITORS, NOR BE ACCESSIBLE TO SUCH PARTIES. ANDRITZ RETAINS ALL RIGHTS IN THE DRAWING, INCLUDING THE RIGHTS OF DISPOSAL, USE AND REPRODUCTION. FOR EXAMPLE, IT GIVES NO RIGHT TO PATENT, UTILITY MODEL, DESIGN OR COPYRIGHT. THE DRAWING MUST BE RETURNED ON REQUEST OF THE COMPANY.

ASAP DOCUMENT No.–

ESTIMATED WEIGHT IN LBS:	DRAWN BY: OO	DATE 05/05/18	
UNLESS OTHERWISE SPECIFIED: DIMENSIONS ARE IN INCHES	CHECKED BY:	DATE	
FABRICATION TOLERANCES: .XXX±.005 .XXX±1° HOLES±.020	APPROVED BY: JG	DATE 6/6/18	
MACHINING TOLERANCES: .XXX±.005 .XXX±1° HOLES±.020	THIRD ANGLE PROJECTION		
MILL FINISH ALL OVER			

ANDRITZ SEPARATION, INC.
1010 COMMERCIAL BLVD. SOUTH
ARLINGTON, TEXAS 76001
PHONE: (817) 465-5611

CERTIFIED CORRECT FOR INSTALLATION
BY: T.BARTOSH DATE: 6/6/18
PROJECT No. 831476

THESE DWGS. REFLECT CUSTOMER'S CHANGES AND APPROVAL OR PRIORITY DWG. TRANSMITTALS

TITLE: VEOLIA ADNOC AMARUG
DAL CENTRIFUGE SKID ASSEMBLY
GENERAL ARRANGEMENT UNIT 0601

SIZE	DRAWING NUMBER	REV
E	M831476-2A	0

SCALE 1/16 FILE M831476-2A SHEET 1 OF 1

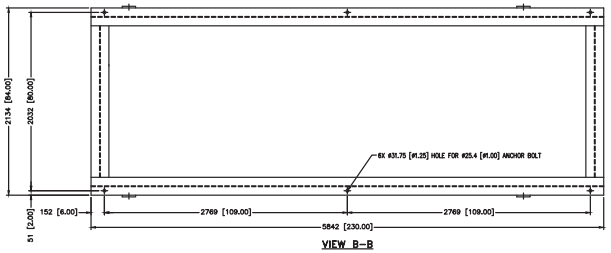

VIEW B–B

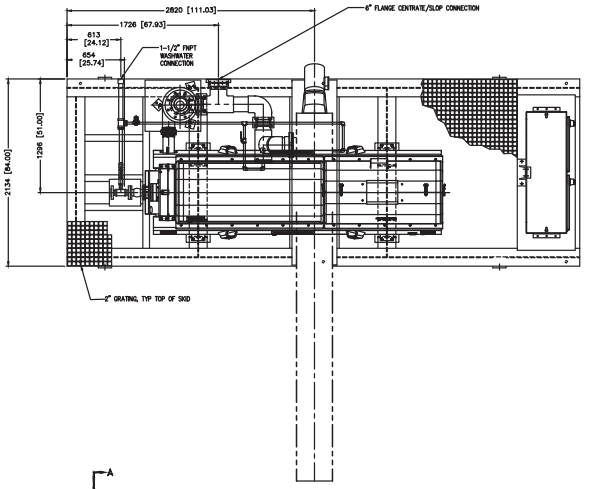

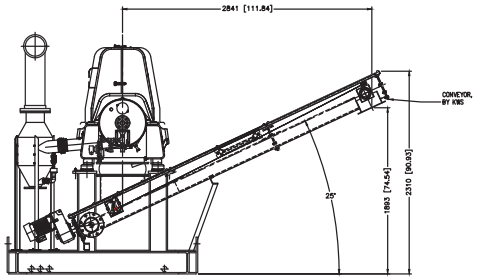

VIEW A–A
WASHWATER PIPING NOT SHOWN IN THIS VIEW

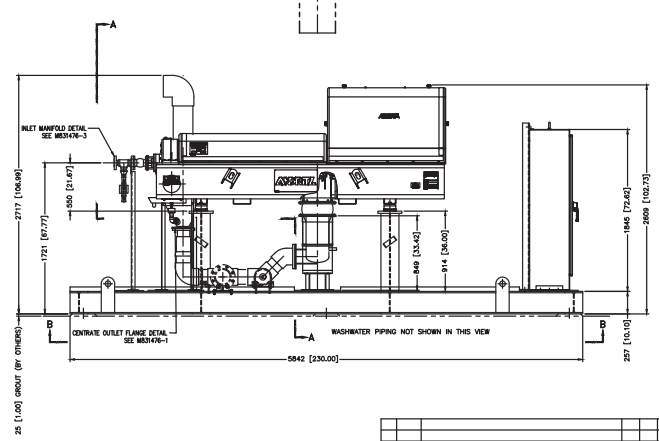

NOTES:
1. FOUNDATION DESIGN TO BE BY OTHERS.
2. ALL DIMENSIONS ARE IN mm WITH inches IN [ ].
3. PIPING TO/FROM SKID IS BY OTHERS.
4. PROCESS REQUIREMENTS: SEE NOTE 6 ON DRAWING M831476–1.
5. APPROXIMATE DRY WEIGHT OF SKID: 5883 kg [12,970 lbs].
   APPROXIMATE OPERATING WEIGHT OF SKID: 6677 kg [14,720 lbs].
6. SKID TO BE LEVEL IN ALL DIRECTIONS WITHIN 1.6mm [.063 inch].

UNIT 0602

REV	ER	REVISION	BY	APVD	DATE
A	NONE	UPDATED PER CUSTOMER COMMENTS	QG	JB	6/6/18

ASAP DOCUMENT No.–

1010 COMMERCIAL BLVD, SOUTH
ARLINGTON, TEXAS 76001
Phone: (817)465-5611
Telefax: (817)472-8000

CERTIFIED CORRECT FOR INSTALLATION
BY: J.BARTOSH DATE: 6/6/18
PROJECT No. B31476

THESE DRAWS, REFLECT CUSTOMER'S CHANGES AND APPROVAL ON PREVIOUS DWG. TRANSMITTALS

ESTIMATED WEIGHT IN LBS:
UNLESS OTHERWISE SPECIFIED DIMENSIONS ARE IN INCHES
FABRICATION TOLERANCES
.XXX±.010 ANGLE±1°
MACHINING TOLERANCES
.XXX±.005 ANGLE±1°
MILL FINISH ALL OVER

DRAWN BY: QG — DATE: 06/05/18
CHECKED BY: — DATE:
APPROVED BY: JB — DATE: 6/6/18
THIRD ANGLE PROJECTION

ANDRITZ
ANDRITZ SEPARATION, INC.
1010 COMMERCIAL BLVD, SOUTH
ARLINGTON, TEXAS 76001
PHONE: (817) 465-5611

TITLE: VEOLIA ADACO AMARUG
D4L CENTRIFUGE SKID ASSEMBLY
GENERAL ARRANGEMENT UNIT 0602

SIZE: E — DRAWING NUMBER: M831476–2B — REV: A
SCALE: 1/16 — FILE: M831476–2B — SHEET 1 OF 1

THIS DRAWING IS COPY PROTECTED
THIS DRAWING IS A TRADE SECRET AND ONLY DISCLOSED TO THE RECIPIENT FOR HIS PERSONAL USE. PROCESS OF ANY KIND OR OTHER COMMENT OR PROVIDED INFORMATION, DOES, IT MUST NOT BE COPIED AND MADE AVAILABLE TO THIRD PARTIES, NOR MAY ANY USE OF THE RECIPIENT OR THIRD PARTIES, NOR MAY ANY PERSON OR ANY OTHER PERSON, OR ANY PERSON WHO IS ACCORDING TO THIS PARTIES, ANY PERSON WHO IS ACCORDING TO THIRD PARTIES FOR WHICH HE IS RESPONSIBLE FOR SUBMITTING A CHOICE FOR LEGAL ACTION, THIS DRAWING MUST BE RETURNED ON REQUEST OF THE COMPANY.

No	PART No	QTY	DESCRIPTION	MATERIAL
01	PINIX1.0CMN	5	CLOSE NIPPLE, 1"	316L
02	PINIX1.0CMN3	2	NIPPLE, 1 x 3 LG	316L
03	PINIX2.0CMN	3	CLOSE NIPPLE, 2"	316L
04	PI90X1.0CFN	1	90° ELBOW, 1"	316L
05	PITEX1.0CFN	2	TEE, 1" FNPT	316L
06	PITEX2.0CFN	1	TEE, 2" FNPT	316L
07	PIREX2X1CFN	1	REDUCER, CONC., 2 X 1 SCH 40 FNPT	316L
08	PIFLX2.0FFN	2	FLANGE, 2 (150 LB) THREADED	316L
09	VBLX1.0FFN	3	BALL VALVE, 1" FNPT	316L
10	131417950	1	ASCO EF8210G4, 1" SOLENOID VALVE	BRASS

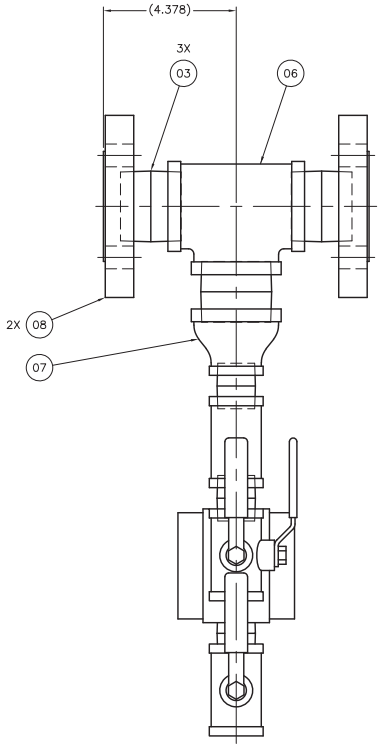

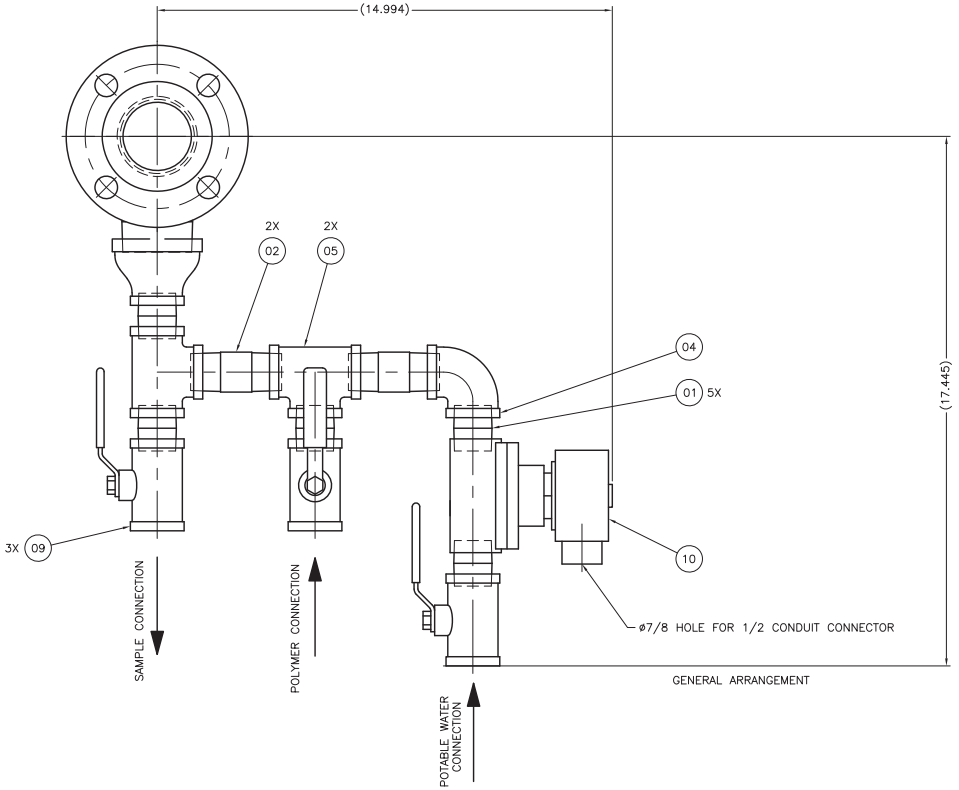

GENERAL ARRANGEMENT

6 NOTE:
1. ALL THREADED PIPE JOINTS TO BE SEALED WITH RECTORSEAL 5 PIPE THREAD SEALANT

THIS DRAWING IS COPY RIGHTED
THIS DRAWING IS A TRADE SECRET AND ONLY ENTRUSTED TO THE RECIEVER FOR HIS PERSONAL USE. WITHOUT THE SIGNED WRITTEN CONSENT OF ANDRITZ-RUTHNER, INC., IT MUST NOT BE COPIED NOR MADE AVAILABLE TO THIRD PARTIES, INCLUDING COMPETITORS, NOR MADE ACCESSIBLE TO SUCH PARTIES. ANY ILLEGAL USE BY THE RECIEVER OR THIRD PARTIES FOR WHICH HE IS RESPONSIBLE CAN CONSTITUTE A CAUSE FOR LEGAL ACTION. THIS DRAWING MUST BE RETURNED ON REQUEST OF THE COMPANY.

1010 COMMERCIAL BLVD. SOUTH
ARLINGTON, TEXAS 76017
Phone: (817)465-5611
Telefax: (817)472-8589

CERTIFIED CORRECT FOR INSTALLATION
BY: T.BARTOSH DATE: 4/10/18
PROJECT No.: 831476
THESE DWGS. REFLECT CUSTOMER'S CHANGES AND APPROVAL ON PREVIOUS DWG. TRANSMITTALS

ESTIMATED WEIGHT IN LBS:
UNLESS OTHERWISE SPECIFIED: DIMENSIONS ARE IN INCHES
FABRICATION TOLERANCES .XXX±.040 ANG±1° HOLE±.020
MACHINING TOLERANCES .XXX±.005 ANG±.5° HOLE±.020
MILL FINISH ALL OVER

DRAWN BY:	TB	DATE 4/10/18
CHECKED BY:		DATE
APPROVED BY:	TB	DATE 4/11/18
THIRD ANGLE PROJECTION		

ANDRITZ
ANDRITZ-RUTHNER, INC.
1010 COMMERCIAL BLVD. SOUTH
ARLINGTON, TEXAS 76001
PHONE: (817) 465-5611

TITLE: CENTRIFUGE
MANIFOLD ASSEMBLY

SIZE	DRAWING NUMBER	REV
D	M831476-3	0

SCALE 1/2 | FILE M831476-3 | SHEET 1 OF 1

2.2 ELECTRICAL DRAWINGS

The following certified electrical drawings are included:

E831476-T1 D4L Centrifuge Skid Drawing Report List

E831476-BM1 D4L Centrifuge Skid Bill of Materials

E831476-BM2 D4L Centrifuge Skid Bill of Materials

E831476-P1 D4L Centrifuge Skid Panel Layout

E831476-P2 D4L Centrifuge Skid Back Panel Layout

E831476-P3 D4L Centrifuge Skid Terminal Block Plan (AC)

E831476-P4 D4L Centrifuge Skid Terminal Block Plan (DC)

E831476-P5 D4L Centrifuge Skid Nameplates

E831476-P6 D4L Centrifuge Skid Control Panel Skid Mounting Angle

E831476-SL1 D4L Centrifuge Skid Single Line Schematic

E831476-S1 D4L Centrifuge Skid Power Distribution Schematic

E831476-S2 D4L Centrifuge Skid 480VAC Power Distribution

E831476-S3 D4L Centrifuge Skid Power Distribution

E831476-S4 D4L Centrifuge Skid Low Voltage Power Distribution

E831476-S5 D4L Centrifuge Skid AC Ctrl Power Distribution (Cont.)

E831476-S6 D4L Centrifuge Skid DC Power Distribution

E831476-S7 D4L Centrifuge Skid Communications

E831476-S8 D4L Centrifuge Skid OIT Schematic

E831476-S9 D4L Centrifuge Skid PLC Power Supply and CPU

E831476-S10 D4L Centrifuge Skid Bank 1 Slot 1 Digital Inputs

E831476-S11 D4L Centrifuge Skid Bank 1 Slot 2 Digital Inputs

E831476-S13 D4L Centrifuge Skid Bank 1 Slot 3 Digital Outputs

E831476-S15 D4L Centrifuge Skid Bank 1 Slot 4 Analog Inputs

E831476-S16 D4L Centrifuge Skid Bank 1 Slot 5 Analog Outputs

E831476-S20	D4L Centrifuge Skid Field Devices
E831476-N1	D4L Centrifuge Skid Network Architecture
E831476-PP1	D4L Centrifuge Skid Point to Point (Centrifuge Loads)
E831476-PP2	D4L Centrifuge Skid Point to Point Instrumentation JB
E831476-PP3	D4L Centrifuge Skid Point to Point (Cont. for Customer Use)
E831476-PP4	D4L Centrifuge Skid Point to Point Sludge
E831476-PP5	D4L Centrifuge Skid Point to Point Polymer
E831476-PP6	D4L Centrifuge Skid Point to Point Conveyor
E831476-IOM1	D4L Centrifuge Skid I/O Map List
E831476-IOM2	D4L Centrifuge Skid I/O Map List

For reference:

E831476-PID	D4L Centrifuge Skid, Skid I&C Legend
E831476-PID-2	D4L Centrifuge Skid, Skid P&ID

ANDRITZ Separation

VEOLIA AGNICO AMARUQ
D4L CENTRIFUGE SKID
0

SH	LOCATION	SEC	DWGDESC	FILENAME
1		TRANSMITTALS	DRAWING REPORT LIST	E831476-T1
2	CFG-CP	BILL OF MATERIALS	BILL OF MATERIALS	E831476-BM1
3	CFG-CP	BILL OF MATERIALS	BILL OF MATERIALS	E831476-BM2
4	CFG-CP	PANEL LAYOUT	PANEL LAYOUT	E831476-P1
5	CFG-CP	PANEL LAYOUT	BACKPANEL LAYOUT	E831476-P2
6		PANEL LAYOUT	TERMINAL BLOCK PLAN □AC□	E831476-P3
7		PANEL LAYOUT	TERMINAL BLOCK PLAN □DC□	E831476-P4
8		PANEL LAYOUT	NAMEPLATES	E831476-P5
9	CFG-CP	PANEL LAYOUT	CONTROL PANEL SKID MOUNTING ANGLES	E831476-P6
10		SINGLE LINE SCHEMATICS	SINGLE LINE SCHEMATIC	E831476-SL1
11	CFG-CP	SCHEMATICS	DRAWING REPORT LIST	E831476-S1
12	CFG-CP	SCHEMATICS	480VAC POWER DISTRIBUTION	E831476-S2
13	CFG-CP	SCHEMATICS	POWER DISTRIBUTION SCHEMATIC	E831476-S3
14	CFG-CP	SCHEMATICS	LOW VOLTAGE POWER DISTRIBUTION	E831476-S4
15	CFG-CP	SCHEMATICS	AC CTRL POWER DISTRIBUTION □CONT.□	E831476-S5
16	CFG-CP	SCHEMATICS	DC POWER DISTRIBUTION	E831476-S6
17	CFG-CP	SCHEMATICS	COMMUNICATIONS	E831476-S7
18	CFG-CP	SCHEMATICS	OIT SCHEMATIC	E831476-S8
19	CFG-CP	SCHEMATICS	EMBEDDED PLC POWER SUPPLY	E831476-S9
20	CFG-CP	SCHEMATICS	BANK 1 SLOT 1 DIGITAL INPUTS	E831476-S10
21	CFG-CP	SCHEMATICS	BANK 1 SLOT 2 DIGITAL INPUTS	E831476-S11
22	CFG-CP	SCHEMATICS	BANK 1 SLOT 3 DIGITAL OUTPUTS	E831476-S13
23	CFG-CP	SCHEMATICS	BANK 1 SLOT 4 ANALOG INPUTS	E831476-S15
24	CFG-CP	SCHEMATICS	BANK 1 SLOT 5 ANALOG OUTPUTS	E831476-S16
25	CFG-CP	SCHEMATICS	FIELD DEVICES	E831476-S20
26	CFG-CP	NETWORK ARCHITECTURE	NETWORK ARCHITECTURE	E831476-N1
27		POINT TO POINT	POINT TO POINT □CENTRIFUGE LOADS□	E831476-PP1
28		POINT TO POINT	POINT TO POINT INSTRUMENTATION □B	E831476-PP2
29		POINT TO POINT	POINT TO POINT □CONT FOR CUST USE□	E831476-PP3
30		POINT TO POINT	POINT TO POINT SLUDGE	E831476-PP4
31		POINT TO POINT	POINT TO POINT POLYMER	E831476-PP5
32		POINT TO POINT	POINT TO POINT CONVEYOR	E831476-PP6
33		REPORTS	I/O MAP LIST	E831476-IOM1
34		REPORTS	I/O MAP LIST	E831476-IOM2

SCHEMATIC SYMBOL LEGENDS

Code	Schematic Symbol	Description
AB		Alarm Beacon
AH		Alarm Horn
CB		Circuit Breaker
CR		Relay Coil
		Contact N.O.
		Contact N.C.
DI		Diode
DS		Disconnect
DV		Analog Device
EGND		Earth Ground
FAN		Enclosure Fan/Exhaust
FLT		Level Switch N.C.
		Level Switch N.O.
FS		Flow Switch N.O.
		Flow Switch N.C.
FU	X	Fuse X=Amp Rating
GNDx		Ground X=Isolation Ground Number
LS		Limit Switch N.C.
		Limit Switch N.C.; Held Open
		Limit Switch N.O.
		Limit Switch N.O.; Held Closed
LT		Pilot Light X=color (A=amber,B=blue, G=green,R=red)
		Pilot Light – Push to Test X=color (A=amber,B=blue, G=green,R=red)
M		Contactor Coil
MOT		Motor
OIT		Operator Interface Terminal
OL		Overload Relay

Code	Schematic Symbol	Description
PB		Pushbutton N.O.
		Pushbutton N.C.
		Pushbutton N.O.; Mushroom Head
		Pushbutton N.C.; Mushroom Head
PCS		Pull Cord N.C.
		Pull Cord N.O.
PE		Photo Eye N.O.
		Photo Eye N.C.
PDB		Distribution Block (Power or Ground)
PLUG		Male Plug
PS		Pressure Switch N.C.
		Pressure Switch N.O.
PX		Proximity Switch N.C.
		Proximity Switch N.O.
R		Resistor/Heater
RECPT		120VAC Receptacle
RTD		RTD Transmitter
SOL		Solenoid
SS	OX	Selector Switch N.O.; 2 Pos; Maintained
	OX	Selector Switch N.C.; 2 Pos; Spring Left
	OOX	Selector Switch N.C; 3 Pos; Keyed; Maintained
	OOX	Selector Switch N.O.; 3 Pos; Spring Center
SSLT	OX	Illuminated Selector Switch N.O.; 2 Pos
TAS		Temperature Switch N.O.
		Temperature Switch N.C.
TI		Timer
WLT		Work Light
XF		Transformer

TERMINAL BLOCK LEGEND

Type	Schematic Symbol	Description
PLC	IN-XX X	PLC Input
	OUT-XX X	PLC Output
TB	WIRE#	Terminal Block
	STRIP# WIRE# GNDx	Ground Terminal Block X=Isolation Ground Number
	WIRE# GNDx	Chassis Ground Bar
LUG	▼ ▼ ▼	Lug Line Side
	V V V	Lug Load Side

COMPONENT TAGGING AND WIRE NUMBERS

This drawing set was created based on a page line number standard. All device numbers, wire numbers, and referencing follows this standard unless existing devices or wiring is being documented. The following illustrations explain how section, sheet and row numbers are used.

Cross Reference

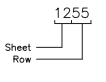

Wire Number

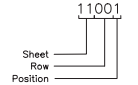

Device Naming

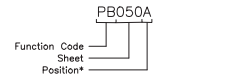

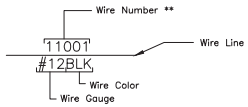

* First Position Blank
** Hidden on wire network with terminal displaying wire number.

WIRING LINES

Wire

To be wired by others

Metal Jumper

MISC. LEGENDS

▲ Supplied By Others

X Revision/Change X=Revision Number

1010 COMMERCIAL BLVD. SOUTH
ARLINGTON, TEXAS 76001
Phone: (817)465-5611
Telefax: (817)472-8589

APPROVED FOR CONSTRUCTION
BY: BJM DATE:
PROJECT No.831476

NOTES

THIS DRAWING IS COPY RIGHTED THIS DRAWING IS A TRADE SECRET AND ONLY ENTRUSTED TO THE RECEIVER FOR HIS PERSONAL USE, WITHOUT THE STATED WRITTEN CONSENT OF ANDRITZ SEPARATION INC. IT MUST NOT BE COPIED, NOR MADE AVAILABLE TO THIRD PARTIES, INCLUDING COMPETITORS, NOR MADE ACCESSIBLE TO SUCH PARTIES. ANY ILLEGAL USE BY THE RECEIVER OR THIRD PARTIES FOR WHICH HE IS RESPONSIBLE CAN CONSTITUTE A CAUSE FOR LEGAL ACTION. THIS DRAWING MUST BE RETURNED ON REQUEST OF THE COMPANY.

REV	EIR	REVISION	BY	APVD	DATE
1		CERTIFIED	HL	BJM	04/13/18
0		APPROVAL DRAWINGS: INITIAL RELEASE	HL	BJM	04/04/18

ESTIMATED WEIGHT IN LBS:

UNLESS OTHERWISE SPECIFIED: DIMENSIONS ARE IN INCHES FABRICATION TOLERANCES .XXX±.040 ANG±1° HOLE±.020 MACHINING TOLERANCES .XXX±.005 ANG±.5° HOLE±.020 MILL FINISH ALL OVER

THIRD ANGLE PROJECTION

DRAWN BY:	HL	DATE 04/04/18
CHECKED BY:	BJM	DATE 04/04/18
APPROVED BY:	CMP	DATE 04/04/18
LOCATION:	CFG-CP	

ANDRITZ SEPARATION INC.
1010 COMMERCIAL BLVD. SOUTH
ARLINGTON, TEXAS 76001
PHONE: (817) 465-5611

TITLE: VEOLIA AGNICO AMARUQ D4L CENTRIFUGE SKID DRAWING REPORT LIST

SIZE	DRAWING NUMBER	REV
B	E831476-T1	1

PREV. SHEET: | NEXT SHEET: 2 | SHEET 1 OF 34

CENTRIFUGE - CONTROL PANEL COMPONENTS (CFG-CP)

LOC	ITEMS	QTY	CATALOG	MFG	DESCRIPTION	TAGS
CFG-CP	1	1	A72XM5418SSN4	HOFFMAN	FREESTANDING ENCLOSURE, STAINLESS STEEL 304, NEMA 4X, 72"H x 54"W x 18"D, TWO-DOOR, 3 POINT LATCH, FOR FLANGE MOUNT DISCONNECTS	
CFG-CP	2	1	A72PM54	HOFFMAN	PANEL FOR FREE-STAND TYPE 4,4X,12, FITS ENCLOSURE 72.00X54.00	
CFG-CP	3	1	800H-2HRWH2KB6	AB	30.5□□□ TYPE 4/4X/13 SEL SWITCH-ILLUM, 2 POS, UNIVERSAL LED, 12-120AC 50/60HZ, WHITE, STD KNOB MAINT, KB6 MAINTAINED CAM, NO CONTACTS	SSLT436
CFG-CP	4	2	800T-XD1M	AB	CONTACT BLOCK, MAX DUTY BLOCK 1 N.O.	SSLT436
CFG-CP	5	1	800H-TFRXT6A4	AB	NON-ILLUMINATED PUSH BUTTON TRIGGER ACTION, TWO POSITION MAINTAINED, MUSHROOM HEAD, RED, FINGER GUARDS ON TERMINALS, 2-NCLB/2-NC CONTACTS	PB501
CFG-CP CFG-CP	6	2	20-HIM-C6S.	AB	POWERFLEX ARCHITECTURE CLASS REMOTE ENHANCED HIM, IP66 □NEMA 4X/12□INDOOR USE ONLY INC. 1202 C30 CABLE	OIT118 OIT153
CFG-CP	7	1	2711P-T10C22D9P	AB	PANELVIEW PLUS 7 PERFORMANCE TERMINAL, TOUCH SCREEN, 10.4 INCHES, TFT COLOR, TWO ETHERNET PORTS, 24V DC, WINDOWS CE OS LICENSE, PERFORMANCE MODEL	OIT814
CFG-CP	8	1	855BS-N35BL4	AB	ROUND 90□□□ BEACON 1/2" CONDUIT MOUNT, STANDARD, 24/48V AC/DC FULL VOLTAGE, LED STROBE SELECTABLE SINGLE/DOUBLE FLASH, RED	AB1313
CFG-CP CFG-CP	9	2	300837153	ANDRITZ	ANDRITZ SEPARATION STD LOGO	
CFG-CP	10	1	871P-G1	EDWARDS SIGNALING	VIBRATING HORN 24VDC NEMA 4X	AH1304
CFG-CP	11	1	1609-D1000N	AB	UPS, NEXT GEN, DELUXE MODEL, 1000VA, 120VAC INPUT/OUTPUT	UPS445
CFG-CP	12	1	P-R2-K2RF0	GRACE PORT	GFCI RECEPTACLE UL TYPE 4X GFCI/ R□45 ETHERNET	PORT430
CFG-CP	13	3	1609-SBAT	AB	40C BATTERY, UPS ACCESSORY	UPS445
CFG-CP	14	1	199-DR1	AB	ZINC/STEEL DIN RAIL EN 50022 □35□□□ x 7.5□□□ x 1□□□	
CFG-CP	15	1	20G11NE041AA0NNNNN	AB	AC DRIVE, □/EMBEDDED ETHERNET/IP, 600VAC, 3PH, FILTERED, CM □UMPER REMOVED, AC INPUT □/DC TERMINALS, PRECHARGE, DB TRANSISTOR, 40HP ND, 30HP HD, FR5	VFD104
CFG-CP	16	1	20G11NE011AA0NNNNN	AB	AC DRIVE, □/EMBEDDED ETHERNET/IP, 600VAC, 3PH, FILTERED, CM □UMPER REMOVED, AC INPUT □/DC TERMINALS, PRECTARGE, DB TRANSISTOR, 10HP ND, 7.5HP HD, FR3	VFD139
CFG-CP	17	1	800FP-SM22PX21	AB	22□□□, 2 POSITION SELECTOR SWITCH, PLASTIC, MAINTAINED, BLACK, STD KNOB, STD ORIENTATION, 2 N.O. 1 N.C. STD BLOCK	SS436
CFG-CP	18	1	M22-IVS	EATON	ADAPTER, DIN RAIL□FOR M22 MODULAR SWITCHES□MOUNTS ONE SWITCH TO DIN RAIL	SS436
CFG-CP	19	1	1492-FB2C30-L	AB	2 POLE FUSE BLOCK - CLASS CC	FU359
CFG-CP	20	2	FNQ-R-6	BUSSMANN	FUSE - CLASS CC 6A	FU359
CFG-CP CFG-CP	21	2	1492-FB1C30-L	AB	1 POLE FUSE BLOCK - CLASS CC	FU365 FU457
CFG-CP	22	1	FNQ-R-10	BUSSMANN	FUSE - CLASS CC 10A	FU457
CFG-CP	23	1	4983-DC120-20	AB		SP412
CFG-CP	24	1	104-C09E□22	AB	IEC CONTACTOR, DC-OPERATED REVERSING, 104-C SERIES	M1351
CFG-CP CFG-CP	25 47	2	100-SB10	AB	AUXILIARY CONTACT, SIDE MOUNT	M1351 M1354
CFG-CP CFG-CP CFG-CP CFG-CP CFG-CP CFG-CP CFG-CP CFG-CP CFG-CP CFG-CP	26	10	700-HLT12Z24	AB	HL TYPE TERMINAL BLOCK RELAY, DPDT □C/O□,10A CONTACT RATING, W/SCREW TERMINALS, 24VDC, TOUCH SAFE, LIGHT INDICATOR, SURGE SUPPRESSOR	CR1307 CR1310 CR1319 CR1339 CR1342 CR1345 CR1348 CR2008 CR446 CR448
CFG-CP	27	1	140M-C2E-B25	AB	IEC MOTOR PROTECTION CIRCUIT BREAKER, STANDARD MAGNETIC TRIP, 140M □C-FRAME□	MPCB236
CFG-CP	28	1	140M-C-AFAR10A01	AB		MPCB236
CFG-CP CFG-CP	29	2	700-HC24A1-3-4	AB	HC TYPE MINIATURE ICE CUBE RELAY, BLADE TERMINALS AND SOCKET 700-HN103	MCR507 MCR510
CFG-CP CFG-CP	29	2	700-HN103	AB	SCREW TERMINAL SOCKET, GUARDED TERMINAL CONSTRUCTION	MCR507 MCR510
CFG-CP CFG-CP	30	2	100-SA20	AB	AUXILIARY CONTACT, SIDE MOUNT 2 NO	MCR507 MCR510
CFG-CP	31	1	100-C23D200	AB	100-C CONTACTOR, 4-POLE	CR436
CFG-CP	32	1	100-FA20	AB	AUXILIARY CONTACT, FRONT MOUNT	CR436
CFG-CP	33	1	700-HN177.	AB	END BARRIER FOR 700-HL, BLACK	CR446
CFG-CP	34	1	700-TB□08B.	AB	□UMPER LINK, 8-WAY, BLUE	CR446
CFG-CP CFG-CP CFG-CP CFG-CP CFG-CP	35	5	1492-SPM1C030	AB	SUPPLEMENTARY PROTECTORS, 1-POLE, TRIP CURVE C, 3 A, NO NEUTRAL	CB401 CB428 CB501 CB555 CB562
CFG-CP	36	1	1492-SPM1C040	AB	SUPPLEMENTARY PROTECTORS, 1-POLE, TRIP CURVE C, 4 A, NO NEUTRAL	CB522
CFG-CP CFG-CP	37	2	1492-SPM1C050	AB	SUPPLEMENTARY PROTECTORS, 1-POLE, TRIP CURVE C, 5 A, NO NEUTRAL	CB516 CB519
CFG-CP	38	1	1606-XLE240EN	AB	SWITCHED MODE POWER SUPPLY, 1606 SERIES	PW604
CFG-CP	39	1	1492-SPM1C150	AB	SUPPLEMENTARY PROTECTORS, 1-POLE, TRIP CURVE C, 15 A, NO NEUTRAL	CB436
CFG-CP	40	1	FNQ-R-15	BUSSMANN	FUSE - CLASS CC 15A	FU365
CFG-CP	41	1	140G-G6C3-C60	AB	140G - MOLDED CASE CIRCIUT BREAKER, G-FRAME, 65KAIC, T/M - THERMAL MAGNETIC, RATED CURRENT 60A	CB101

CENTRIFUGE - CONTROL PANEL COMPONENTS (CFG-CP)

LOC	ITEMS	QTY	CATALOG	MFG	DESCRIPTION	TAGS
CFG-CP	42	2	140G-G-T C3H	AB	140G - FRAME-G, TERMINAL COVER, 3 POLE, QTY 2, HIGH	CB101
CFG-CP	43	1	140G-G-MTL63.	AB	140G - G-FRAME, MULTI TERMINAL LUG, QTY 3, 6X14-2.2.5-35□	CB101
CFG-CP	44	1	140G-G-TLC13	AB	140G - G-FRAME, TERMINAL LUG, QTY 3, 1X14-1/0 □2.5-50□	CB101
CFG-CP	45	1	140G-G-FCX04	AB	140G - FLEX-CABLE MECHANISM, NON-METALIC FLANGE HANDLE, 4 FT, FOR G-FRAME CIRCUIT BREAKERS	CB101
CFG-CP	48	1	1497B-A13-M11-0-N	AB	CONTROL POWER TRANSFORMER, TYPE 1497B, 2.0KVA, VOLTAGE PRIMARY: 600/575/550V 60H□□, SECONDARY 120V/240V 60H□□WITHOUT FUSE BLOCK	XF362
CFG-CP	49	1	FSC-2	SCHNEIDER ELECTRIC	FINGERSAFE COVER, 2 COVERS PER KIT, FOR 250-5000VA CLASS 9070 TRANSFORMERS	XF362
CFG-CP	50	1	1769-ECR	AB	COMPACT I/O END CAP RIGHT SIDE	
CFG-CP	51	1	1769-OF4	AB	1768/1769 COMPACTLOGIX SYSTEM, 4 CHANNEL ANALOG CURENT/VOLTAGE OUTPUT MODULE	PLC1601
CFG-CP	52	1	1769-IF8	AB	1768/1769 COMPACTLOGIX SYSTEM 8, 8 CHANNEL ANALOG CURRENT/VOLTAGE INPUT MODULE	PLC1501
CFG-CP	53	1	1769-OW16	AB	1769 COMPACTLOGIX RELAY OUTPUT MODULE 16 POINTS	PLC1301
CFG-CP CFG-CP	54	2	1769-IQ16	AB	1769 COMPACTLOGIX PLC 1500 COMPACT SERIES DC INPUT MODULE 16 POINT SINK/SOURCE	PLC1001 PLC1101
CFG-CP	55	1	1769-PA4	AB	COMPACT LOGIX SYSTEM, POWER SUPPLY 120/240VAC INPUT 4AMP□□ 5VDC OUTPUT	PLCPS907
CFG-CP	56	1	1769-L30ER	AB	COMPACTLOGIX 5370 L3 CONTROLLER, DUAL ETHERNET W/DLR CAPABILITY, 1MB MEMORY, 8 I/O EXPANSION, 16 ETHERNET IP NODES, WITH 1GB SD CARD	PLCIO935
CFG-CP	57	1	T60060-3CR	BUSSMANN	3 POLE FUSE BLOCK - CLASS T	FU104
CFG-CP	58	3	□S-50	BUSSMANN	FUSE - CLASS T	FU104
CFG-CP	60	1	1783-US8T	AB	UNMANAGED ETHERNET SWITCH, R□45, 8 PORT	ETH701
CFG-CP	61	1	T32F717D	ENM	ELAPSED TIME METER 24VDC, DIN RAIL MOUNT	ETM1316
CFG-CP	62	1	LEDA1S35	HOFFMAN	LED ENCLOSURE LIGHT, ON/OFF SWITCH, SCREW MOUNTED 90VAC-260VAC 13.82"	WLT401
CFG-CP	63	1	LEDA20C	HOFFMAN	LED LIGHT INPUT CONNECTOR/CABLE ASSEMBLY 2000□□□ FOR AC LED LIGHTS	WLT401
CFG-CP	64	1	DW2503	IFM EFECTOR		SM636
CFG-CP	65	1	2S2/0-HEX	LUGS DIRECT	MECHANICAL LUG DOUBLE WIRE DOUBLE BARREL 2/0-14AWG	
CFG-CP	66	1	US3□2I	MERSEN	FUSE BLOCK FOR DC FUSES	FU145
CFG-CP	67	1	HS□20	MERSEN	600VAC 20A CLASS □HS FUSE	FU145
CFG-CP	68	1	RLW-004605	MTE	RLW LINE/LOAD REACTOR IMPEDANCE 5□□, 46A, OPEN REACTOR	LR104
CFG-CP	69	8	3035467	PHOENIX CONTACT	UNIVERSAL TERMINAL BLOCK - UTTB 4 DOUBLE LEVEL YELLOW	TBEXT
CFG-CP CFG-CP CFG-CP CFG-CP CFG-CP CFG-CP	70	10	3047293	PHOENIX CONTACT	END COVER UT DOUBLE LEVEL D-UTTB 2,5/4 GRAY	TBAC1 TBAC3 TBCDI TBCDO TBEXT
CFG-CP CFG-CP CFG-CP CFG-CP CFG-CP CFG-CP CFG-CP CFG-CP CFG-CP CFG-CP	71	26	0800886	PHOENIX CONTACT	END BRACKET - E/NS 35 N	TBAC1 TBAC2 TBAC3 TBCAI TBCAO TBCDI TBCDO TBDC1 TBEXT
CFG-CP CFG-CP	72	4	3214314	PHOENIX CONTACT	END COVER UT THREE LEVEL D-UT 2,5-3L GRAY	TBCAI TBCAO
CFG-CP CFG-CP	73	28	3214301	PHOENIX CONTACT	3 LEVEL TERMINAL BLOCK WITH PE FOOT UT 2,5-PE/L/L, 24A MAX	TBCAI TBCAO
CFG-CP	74	2	0824581	PHOENIX CONTACT	MARKER FOR TERMINAL BLOCK, WIDTH 5.2□□□ UT-2,5	TBCAI
CFG-CP	75	1	2963860	PHOENIX CONTACT	DIN RAIL MOUNTED RECEPTACLE SINGLE OUTLET 15A NEMA 5-15	RECPT439
CFG-CP CFG-CP CFG-CP	76	69	3044102	PHOENIX CONTACT	UNIVERSAL TERMINAL BLOCK - UT 4 SINGLE LEVEL GRAY	TBAC2 TBDC1 TBDC2
CFG-CP CFG-CP	77	4	3047028	PHOENIX CONTACT	END COVER UT 4,6 SINGLE LEVEL D-UT 2,5/10	TBAC2 TBDC1
CFG-CP CFG-CP CFG-CP CFG-CP CFG-CP	78	124	3044814	PHOENIX CONTACT	UNIVERSAL TERMINAL BLOCK - UTTB 4 DOUBLE LEVEL GRAY	TBAC1 TBAC3 TBCDI TBCDO
CFG-CP CFG-CP CFG-CP CFG-CP CFG-CP CFG-CP CFG-CP CFG-CP CFG-CP CFG-CP	79	76	3030271	PHOENIX CONTACT	PLUG-IN □UMPER FOR UT 4 TERMINAL BLOCKS, 10 POSITIONS, RED	CB612 CB615 CB618 CB621 CB624 CB630 TBAC1 TBCDI

1010 COMMERCIAL BLVD., SOUTH
ARLINGTON, TEXAS 76001
Phone: (817)465-5611
Telefax: (817)472-8589

APPROVED FOR CONSTRUCTION
BY: BJM DATE:
PROJECT No.831476

NOTES
1. QUANTITIES SHOWN IN THIS BILL OF MATERIALS ARE FOR 1 (ONE) MACHINE/TRAIN ASSEMBLY, AND TYPICAL FOR 1 (ONE) MACHINES/TRAINS TO BE ORDERED.
2. HOFFMAN OR EQUAL

THIS DRAWING IS COPY RIGHTED THIS DRAWING IS A TRADE SECRET AND ONLY ENTRUSTED TO THE RECEIVER FOR HIS PERSONAL USE WITHOUT THE EXPRESS WRITTEN CONSENT OF ANDRITZ SEPARATION INC. IT MUST NOT BE COPIED NOR MADE AVAILABLE TO THIRD PARTIES, INCLUDING COMPETITORS, NOR MADE ACCESSIBLE TO SUCH PARTIES. ANY ILLEGAL USE BY THE RECEIVER OR THIRD PARTIES FOR WHICH HE IS RESPONSIBLE CAN CONSTITUTE A CAUSE FOR LEGAL ACTION. THIS DRAWING MUST BE RETURNED ON REQUEST OF THE COMPANY.

REV	EIR	REVISION	BY	APVD	DATE
1		CERTIFIED	HL	BJM	04/13/18
0		APPROVAL DRAWINGS: INITIAL RELEASE	HL	BJM	04/04/18

ESTIMATED WEIGHT IN LBS:

UNLESS OTHERWISE SPECIFIED: DIMENSIONS ARE IN INCHES
FABRICATION TOLERANCES .XX±0.040 ANG±1° HOLE±.020
MACHINING TOLERANCES .XXX±.005 ANG±.5° HOLE±.020
MILL FINISH ALL OVER

THIRD ANGLE PROJECTION

DRAWN BY:	HL	DATE 04/04/18
CHECKED BY:	BJM	DATE 04/04/18
APPROVED BY:	CMP	DATE 04/04/18
LOCATION:	CFG-CP	

ANDRITZ SEPARATION INC.
1010 COMMERCIAL BLVD. SOUTH
ARLINGTON, TEXAS 76001
PHONE: (817) 465-5611

TITLE
VEOLIA AGNICO AMARUQ
D4L CENTRIFUGE SKID
BILL OF MATERIALS

SIZE	DRAWING NUMBER	REV
B	E831476-BM1	1

PREV. SHEET: 1 | NEXT SHEET: 3 | SHEET 2 OF 34

CENTRIFUGE - CONTROL PANEL COMPONENTS (CFG-CP)

LOC	ITEMS	QTY	CATALOG	MFG	DESCRIPTION	TAGS
CFG-CP CFG-CP	80	68	0824589	PHOENIX CONTACT	MARKER FOR TERMINAL BLOCK, WIDTH 6.2□ □ UT-4	TBAC1 TBCDI
CFG-CP	81	2	3047167	PHOENIX CONTACT	PARTITION PLATE FOR UT 4,6 SINGLE LEVEL ATP-UT	TBAC2
CFG-CP CFG-CP	82	2	2800835	PHOENIX CONTACT	THERMOMAGNETIC DEVICE CIRCUIT BREAKER 1 POSITION 0.5A SFB CURVE	CB627 CB636
CFG-CP CFG-CP CFG-CP CFG-CP CFG-CP CFG-CP CFG-CP CFG-CP	83	8	2801305	PHOENIX CONTACT	BASE ELEMENT SCREW CONNECTION	CB612 CB615 CB618 CB621 CB624 CB627 CB630 CB636
CFG-CP CFG-CP	84	2	2800837	PHOENIX CONTACT	THERMOMAGNETIC DEVICE CIRCUIT BREAKER 1 POSITION 2A SFB CURVE	CB615 CB630
CFG-CP CFG-CP	85	2	2800838	PHOENIX CONTACT	THERMOMAGNETIC DEVICE CIRCUIT BREAKER 1 POSITION 3A SFB CURVE	CB612 CB624
CFG-CP CFG-CP	86	2	2800836	PHOENIX CONTACT	THERMOMAGNETIC DEVICE CIRCUIT BREAKER 1 POSITION 1A SFB CURVE	CB618 CB621
CFG-CP	92	1	3011038	PHOENIX CONTACT	MULTI-LEVEL TERMINAL BLOCK - DLKB 2,5-PE	TB1
CFG-CP	96	1	VPCI-111	CORTEC	CORROSION INHIBITOR FOR MOISTURE, AIRBORNE CONTAMINANTS, H2S, SO2, NH3, ETC. 11 CUBIC FEET COVERAGE	

CENTRIFUGE - CONTROL PANEL COMPONENTS (CFG-FLD)

LOC	ITEMS	QTY	CATALOG	MFG	DESCRIPTION	TAGS
CFG-FLD	87	3	3045208	PHOENIX CONTACT	UNIVERSAL TERMINAL BLOCK - UT 6 BLACK	TB3PH
CFG-FLD	88	1	3044157	PHOENIX CONTACT	UNIVERSAL GROUND TERMINAL BLOCK - UT 6-PE	TB3PH
CFG-FLD	89	1	RS-2E	CCC	MODEL RS SAFETY STOP CONTROL ;2 SP/DT SWITCHES NO LIGHT W/EPOXY COATING, NEMA 1,3,3R,4,4X	PCS510
CFG-FLD	90	1	RS-28	CCC	;*****USE CROSBY 1011261 SS-450 AS REPLACEMENT********** ; CABLE END FITTING CABLE CLAMP	PCS510
CFG-FLD	91	15	RS-26	CCC	3/32 ORANGE NYLON COATED CABLE, ;FOOT□	PCS510
CFG-FLD	93	1	NG501A	IFM EFECTOR	INDUCTIVE SENSOR, M18X1 DIAMETER METAL HOUSING, 2 DC WIRE DC, 8.2DC, NORMALLY OPEN NO,MICRO QUICK DISCONNECT, SENSING RANGE 8.□ □, FLUSH MOUNTABLE, EX II	PRS641
CFG-FLD	94	1	ENC05A	IFM EFECTOR	CORDSET ANGLED CONNECTOR M12 FEMALE 5PIN - 4 WIRE, ATEX, FOR USE IN HAZARDOUS AREAS, LENGHT 5M	PRS641

ON-SITE INSTALLED PROGRAMMING SOFTWARE (PROVIDED BY OTHERS)

COMPONENT	MFG	DESCRIPTION	VERSION
PLC	AB	STUDIO50000	24.00
OIT	AB	FACTORY TALK VIEW ME	8.0

1010 COMMERCIAL BLVD. SOUTH
ARLINGTON, TEXAS 76001
Phone: (817)465-5611
Telefax: (817)472-8589

APPROVED FOR CONSTRUCTION
BY: BJM DATE:
PROJECT No.831476

NOTES
1. QUANTITIES SHOWN IN THIS BILL OF MATERIALS ARE FOR 1 (ONE) MACHINE/TRAIN ASSEMBLY, AND TYPICAL FOR 1 (ONE) MACHINES/TRAINS TO BE ORDERED.
2. HOFFMAN OR EQUAL

THIS DRAWING IS COPY RIGHTED THIS DRAWING IS A TRADE SECRET AND ONLY ENTRUSTED TO THE RECEIVER FOR HIS PERSONAL USE, WITHOUT THE SIGNED WRITTEN CONSENT OF ANDRITZ SEPARATION INC. IT MUST NOT BE COPIED OR MADE AVAILABLE TO THIRD PARTIES, INCLUDING COMPETITORS, NOR MADE ACCESSIBLE TO SUCH PARTIES. ANY ILLEGAL USE BY THE RECEIVER OR THIRD PARTIES FOR WHICH HE IS RESPONSIBLE CAN CONSTITUTE A CAUSE FOR LEGAL ACTION. THIS DRAWING MUST BE RETURNED ON REQUEST OF THE COMPANY.

REV	BY	REVISION	BY	APVD	DATE
1		CERTIFIED	HL	BJM	04/13/18
0		APPROVAL DRAWINGS: INITIAL RELEASE	HL	BJM	04/04/18

ESTIMATED WEIGHT IN LBS:

UNLESS OTHERWISE SPECIFIED:
DIMENSIONS ARE IN INCHES
FABRICATION TOLERANCES
.XXX±.040 ANG±1° HOLE±.020
MACHINING TOLERANCES
.XXX±.005 ANG±.5° HOLE±.020
MILL FINISH ALL OVER

THIRD ANGLE PROJECTION

DRAWN BY: HL DATE 04/04/18
CHECKED BY: BJM DATE 04/04/18
APPROVED BY: CMP DATE 04/04/18
LOCATION:

ANDRITZ SEPARATION INC.
1010 COMMERCIAL BLVD. SOUTH
ARLINGTON, TEXAS 76001
PHONE: (817) 465-5611

TITLE: VEOLIA AGNICO AMARUQ
D4L CENTRIFUGE SKID
BILL OF MATERIALS

SIZE: B | DRAWING NUMBER: E831476-BM2 | REV: 1

PREV. SHEET: 2 | NEXT SHEET: 4 | SHEET 3 OF 34

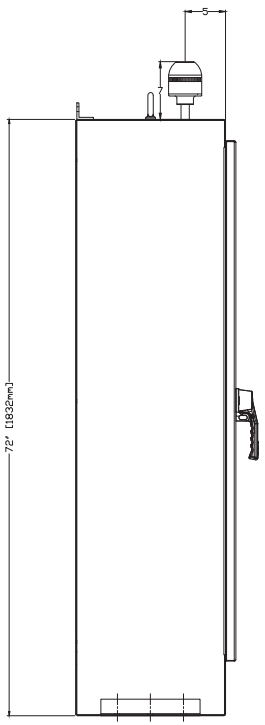

LEFT SIDE VIEW

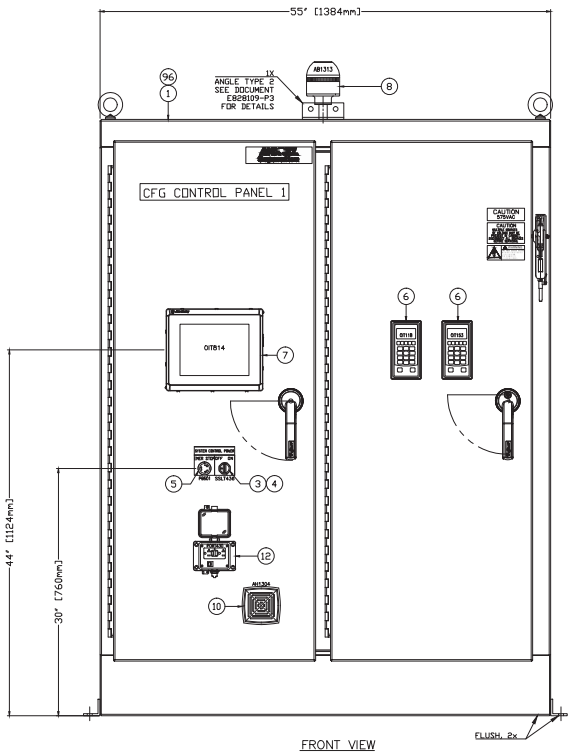

FRONT VIEW

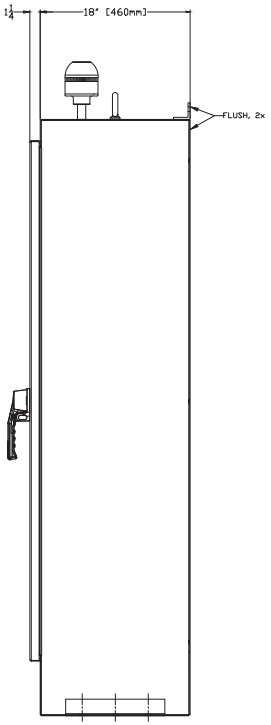

RIGHT SIDE VIEW

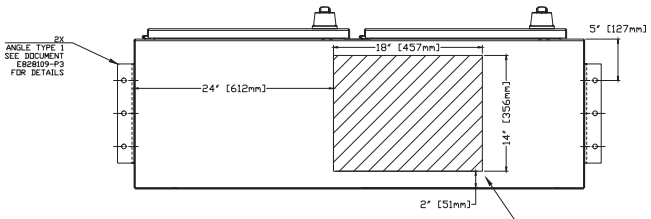

BOTTOM VIEW

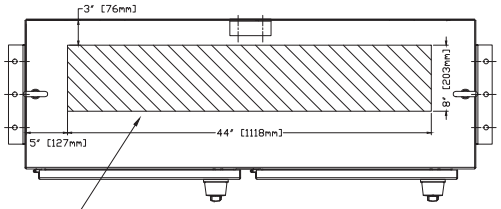

TOP VIEW

CONDUIT ENTRY AREAS

NOTES:

1. ENCLOSURE IS NEMA 4X 304L SS, WITH FLANGE DISCONNECT. THREE POINT LATCH AND PIANO HINGES.
2. ALL PUSHBUTTON OPERATORS ARE HEAVYDUTY NEMA 4X RATED. CONTACTS ARE RATED 10 AMPS AT 600 VAC.
3. ALL WIRING TO CONFORM TO CANADIAN ELECTRIC CODE AND INCLUDES PERMANENT WIRE MARKERS.
4. ALL CONTROL PANEL COMPONENTS WITH GROUND SYMBOLS OR GROUND SCREWS SHALL BE CHASSIS GROUND.
5. PANEL IS UL508A LISTED AND CSA LISTED.
6. KEYNOTE CALL OUTS REFER TO BILL OF MATERIAL ON SHEET E831476-BM1.
7. CONTROL WIRE SHALL CONFORM TO UL STANDARDS, AND SHALL BE TYPE MTW, COLOR CODED BY VOLTAGE AND FUNCTIONS, WITH IDENTIFICATION FERRULES APPLIED AT EACH WIRE END.

1010 COMMERCIAL BLVD. SOUTH
ARLINGTON, TEXAS 76001
Phone: (817)465-5611
Telefax: (817)472-8589

APPROVED FOR CONSTRUCTION
BY: BJM DATE:
PROJECT No.831476

NOTES

THIS DRAWING IS COPY RIGHTED THIS DRAWING IS A TRADE SECRET AND ONLY ENTRUSTED TO THE RECEIVER FOR HIS PERSONAL USE, WITHOUT THE SIGNED WRITTEN CONSENT OF ANDRITZ SEPARATION INC. IT MUST NOT BE COPIED, LOANED, MADE AVAILABLE TO THIRD PARTIES, INCLUDING COMPETITORS, NOR MADE ACCESSIBLE TO SUCH PARTIES. ANY ILLEGAL USE BY THE RECEIVER OR THIRD PARTIES FOR WHICH HE IS RESPONSIBLE CAN CONSTITUTE A CAUSE FOR LEGAL ACTION. THIS DRAWING MUST BE RETURNED ON REQUEST OF THE COMPANY.

REV	EIR	REVISION	BY	APVD	DATE
1		CERTIFIED	HL	BJM	04/13/18
0		APPROVAL DRAWINGS: INITIAL RELEASE	HL	BJM	04/04/18

ESTIMATED WEIGHT IN LBS:

UNLESS OTHERWISE SPECIFIED:
DIMENSIONS ARE IN INCHES
FABRICATION TOLERANCES
.XXX±.040 ANG±1° HOLE±.020
MACHINING TOLERANCES
.XXX±.005 ANG±.5° HOLE±.020
MILL FINISH ALL OVER

THIRD ANGLE PROJECTION

DRAWN BY:	HL	DATE 04/04/18
CHECKED BY:	BJM	DATE 04/04/18
APPROVED BY:	CMP	DATE 04/04/18
LOCATION:		

ANDRITZ SEPARATION INC.
1010 COMMERCIAL BLVD. SOUTH
ARLINGTON, TEXAS 76001
PHONE: (817) 465-5611

TITLE: VEOLIA AGNICO AMARUQ
D4L CENTRIFUGE SKID
PANEL LAYOUT

SIZE	DRAWING NUMBER	REV
B	E831476-P1	1

PREV. SHEET: 3 | NEXT SHEET: 5 | SHEET 4 OF 34

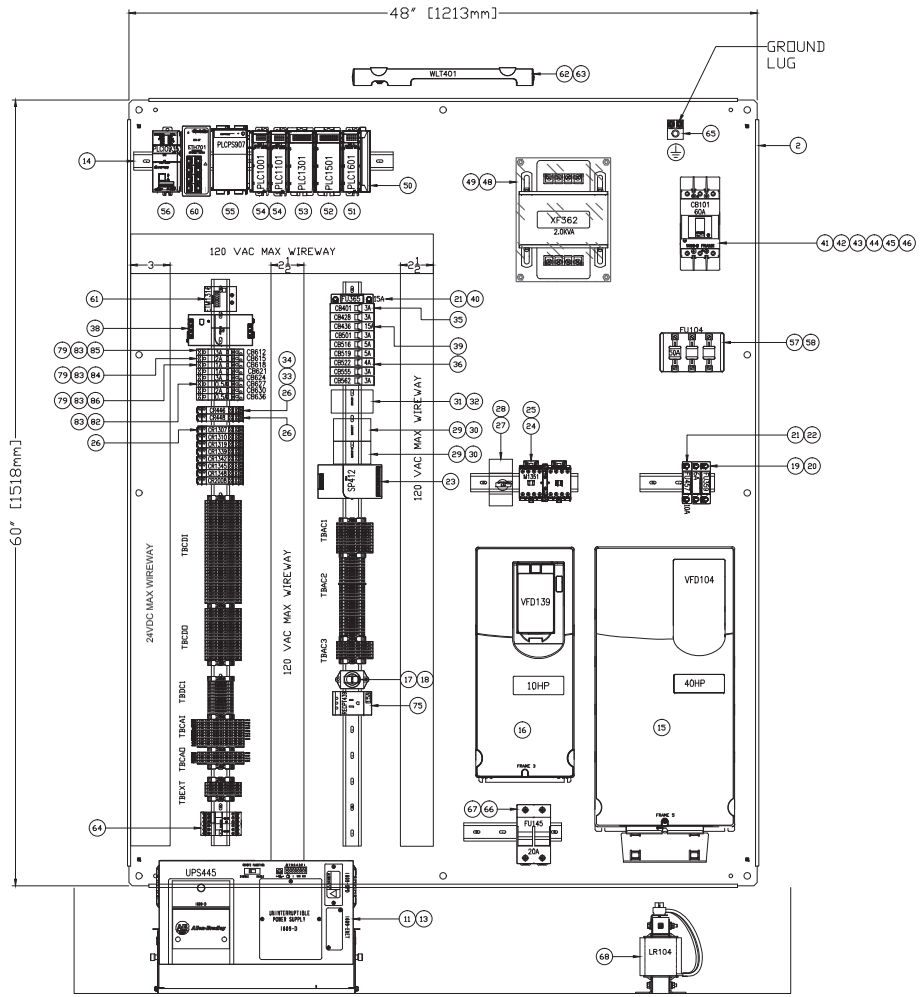

SUBPANEL LAYOUT

NOTES:

1. ENCLOSURE IS NEMA 4X 304L SS, WITH FLANGE DISCONNECT. THREE POINT LATCH AND PIANO HINGES.
2. ALL PUSHBUTTON OPERATORS ARE HEAVYDUTY NEMA 4X RATED. CONTACTS ARE RATED 10 AMPS AT 600 VAC.
3. ALL WIRING TO CONFORM TO CANADIAN ELECTRIC CODE AND INCLUDES PERMANENT WIRE MARKERS.
4. ALL CONTROL PANEL COMPONENTS WITH GROUND SYMBOLS OR GROUND SCREWS SHALL BE CHASSIS GROUND.
5. PROVIDE 20% SPARE TERMINALS.
6. PANEL IS UL508A LISTED AND CSA LISTED.
7. KEYNOTE CALL OUTS REFER TO BILL OF MATERIAL ON SHEET E831476-BM1.
8. CONTROL WIRE SHALL CONFORM TO UL STANDARDS, AND SHALL BE TYPE MTW, COLOR CODED BY VOLTAGE AND FUNCTIONS, WITH IDENTIFICATION FERRULES APPLIED AT EACH WIRE END.

1010 COMMERCIAL BLVD. SOUTH
ARLINGTON, TEXAS 76001
Phone: (817)465-5611
Telefax: (817)472-8589

APPROVED FOR CONSTRUCTION
BY: BJM DATE:
PROJECT No.831476

NOTES

THIS DRAWING IS COPY RIGHTED THIS DRAWING IS A TRADE SECRET AND ONLY ENTRUSTED TO THE RECEIVER FOR HIS PERSONAL USE, WITHOUT THE SIGNED WRITTEN CONSENT OF ANDRITZ SEPARATION INC. IT MUST NOT BE COPIED, LOAN MADE AVAILABLE TO THIRD PARTIES, DISCLOSING COMPETITORS, NOR MADE ACCESSIBLE TO SUCH PARTIES. ANY ILLEGAL USE BY THE RECEIVER OR THIRD PARTIES FOR WHICH HE IS RESPONSIBLE CAN CONSTITUTE A CAUSE FOR LEGAL ACTION. THIS DRAWING MUST BE RETURNED ON REQUEST OF THE COMPANY.

REV	EIR	REVISION	BY	APVD	DATE
1		CERTIFIED	HL	BJM	04/13/18
0		APPROVAL DRAWINGS: INITIAL RELEASE	HL	BJM	04/04/18

ESTIMATED WEIGHT IN LBS:

UNLESS OTHERWISE SPECIFIED: DIMENSIONS ARE IN INCHES FABRICATION TOLERANCES .XXX±.040 ANG±1° HOLE±.020 MACHINING TOLERANCES .XXX±.005 ANG±.5° HOLE±.020 MILL FINISH ALL OVER

THIRD ANGLE PROJECTION

DRAWN BY:	HL	DATE 04/04/18
CHECKED BY:	BJM	DATE 04/04/18
APPROVED BY:	CMP	DATE 04/04/18

LOCATION:

ANDRITZ SEPARATION INC.
1010 COMMERCIAL BLVD. SOUTH
ARLINGTON, TEXAS 76001
PHONE: (817) 465-5611

TITLE: VEOLIA AGNICO AMARUQ
D4L CENTRIFUGE SKID
BACKPANEL LAYOUT

SIZE	DRAWING NUMBER	REV
B	E831476-P2	1

PREV. SHEET: 4 | NEXT SHEET: 6 | SHEET 5 OF 34

TOP

120VAC DISTRIBUTION FROM CPT –TBAC1

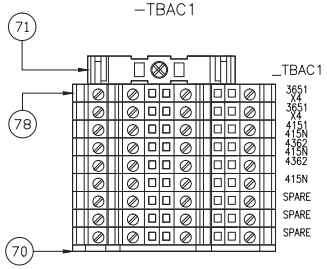

120VAC DISTRIBUTION FROM POWER CTRL SWITCH –TBAC2

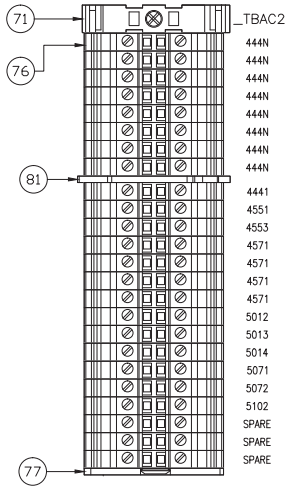

120VAC POWER TO FIELD PROCESS AREA INSTRUMENTS –TBAC3

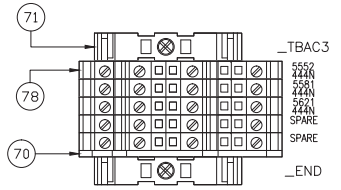

120VAC CONTROLLER (PLC) DIGITAL INPUTS –TBCDI

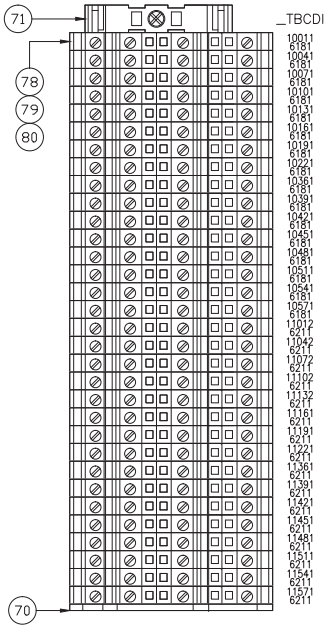

120VAC CONTROLLER (PLC) DIGITAL OUTPUTS –TBCDO

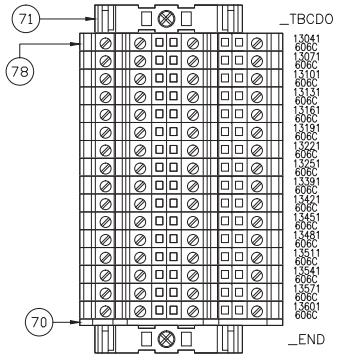

2–LEVEL TERMINAL BLOCK DETAIL

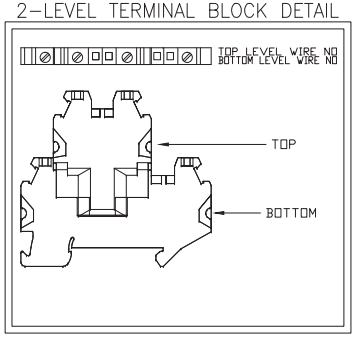

3 PHASE AC POWER TO FIELD COMPONENTS –TB3PH

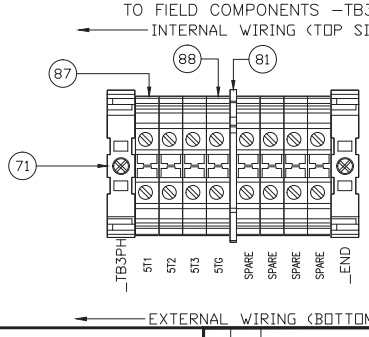

1010 COMMERCIAL BLVD. SOUTH
ARLINGTON, TEXAS 76001
Phone: (817)465-5611
Telefax: (817)472-8589

APPROVED FOR CONSTRUCTION
BY: BJM DATE:
PROJECT No.831476

NOTES

THIS DRAWING IS COPY RIGHTED THIS DRAWING IS A TRADE SECRET AND ONLY ENTRUSTED TO THE RECEIVER FOR HIS PERSONAL USE, WITHOUT THE STATED WRITTEN CONSENT OF ANDRITZ SEPARATION INC. IT MUST NOT BE COPIED, NOR MADE AVAILABLE TO THIRD PARTIES, INCLUDING COMPETITORS, NOR MADE ACCESSIBLE TO SUCH PARTIES. ANY ILLEGAL USE BY THE RECEIVER OR THIRD PARTIES FOR WHICH HE IS RESPONSIBLE CAN CONSTITUTE A CAUSE FOR LEGAL ACTION. THIS DRAWING MUST BE RETURNED ON REQUEST OF THE COMPANY.

REV	EIR	REVISION	BY	APVD	DATE
1		CERTIFIED	HL	BJM	04/13/18
0		APPROVAL DRAWINGS: INITIAL RELEASE	HL	BJM	04/04/18

ESTIMATED WEIGHT IN LBS:

UNLESS OTHERWISE SPECIFIED: DIMENSIONS ARE IN INCHES FABRICATION TOLERANCES .XXX±.040 ANG±1° HOLE±.020 MACHINING TOLERANCES .XXX±.005 ANG±.5° HOLE±.020 MILL FINISH ALL OVER

THIRD ANGLE PROJECTION

DRAWN BY:	HL	DATE 04/04/18
CHECKED BY:	BJM	DATE 04/04/18
APPROVED BY:	CMP	DATE 04/04/18
LOCATION:	CFG–CP	

ANDRITZ SEPARATION INC.
1010 COMMERCIAL BLVD. SOUTH
ARLINGTON, TEXAS 76001
PHONE: (817) 465–5611

TITLE: VEOLIA AGNICO AMARUQ
D4L CENTRIFUGE SKID
TERMINAL BLOCK PLAN (AC)

SIZE: B | DRAWING NUMBER: E831476–P3 | REV: 1

PREV. SHEET: 5 | NEXT SHEET: 7 | SHEET 6 OF 34

TOP

24VDC DISTRIBUTION FROM DC POWER SUPPLY –TBDC1

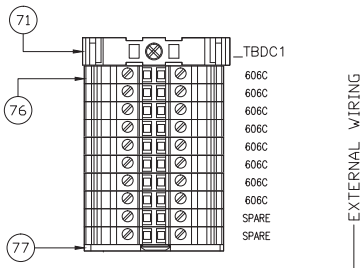

24VDC POWER TO FIELD PROCESS INSTRUMENTS –TBDC2

NON–APPLICABLE

INTERNAL WIRING
EXTERNAL WIRING

4–20mA CONTROLLER (PLC) ANALOG INPUTS –TBCAI

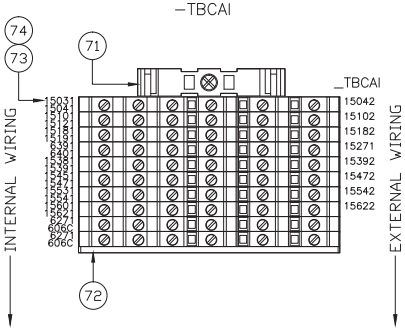

4–20mA CONTROLLER (PLC) ANALOG OUTPUTS –TBCAO

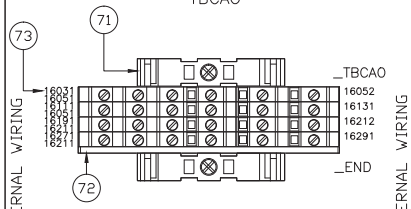

DRY CONTACTS FOR CUSTOMER USE –TBEXT

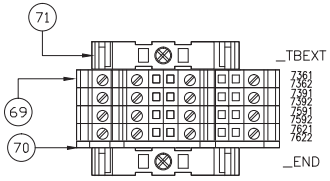

2–LEVEL TERMINAL BLOCK DETAIL

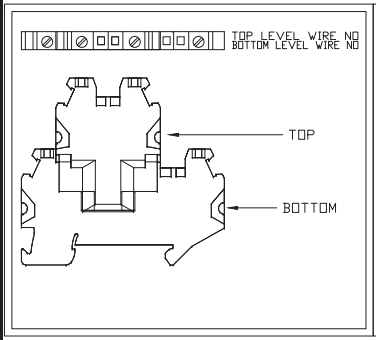

3–LEVEL TERMINAL BLOCK DETAIL

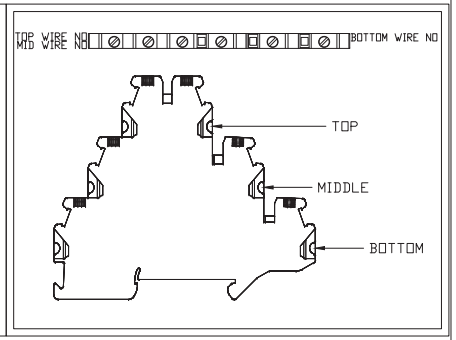

ANDRITZ SEPARATION INC.
1010 COMMERCIAL BLVD. SOUTH
ARLINGTON, TEXAS 76001
Phone: (817)465–5611
Telefax: (817)472–8589

APPROVED FOR CONSTRUCTION
BY: BJM DATE:
PROJECT No. 831476

NOTES

THIS DRAWING IS COPY RIGHTED THIS DRAWING IS A TRADE SECRET AND ONLY ENTRUSTED TO THE RECEIVER FOR HIS PERSONAL USE. WITHOUT THE STATED WRITTEN CONSENT OF ANDRITZ SEPARATION INC. IT MUST NOT BE COPIED, NOR MADE AVAILABLE TO THIRD PARTIES, INCLUDING COMPETITORS, NOR MADE ACCESSIBLE TO SUCH PARTIES. ANY ILLEGAL USE BY THE RECEIVER OR THIRD PARTIES FOR WHICH HE IS RESPONSIBLE CAN CONSTITUTE A CAUSE FOR LEGAL ACTION. THIS DRAWING MUST BE RETURNED ON REQUEST OF THE COMPANY.

REV	EIR	REVISION	BY	APVD	DATE
1		CERTIFIED	HL	BJM	04/13/18
0		APPROVAL DRAWINGS: INITIAL RELEASE	HL	BJM	04/04/18

ESTIMATED WEIGHT IN LBS:

UNLESS OTHERWISE SPECIFIED: DIMENSIONS ARE IN INCHES FABRICATION TOLERANCES .XXX±.040 ANG±1° HOLE±.020 MACHINING TOLERANCES .XXX±.005 ANG±.5° HOLE±.020 MILL FINISH ALL OVER

THIRD ANGLE PROJECTION

DRAWN BY:	HL	DATE 04/04/18
CHECKED BY:	BJM	DATE 04/04/18
APPROVED BY:	CMP	DATE 04/04/18
LOCATION:	CFG–CP	

ANDRITZ SEPARATION INC.
1010 COMMERCIAL BLVD. SOUTH
ARLINGTON, TEXAS 76001
PHONE: (817) 465–5611

TITLE
VEOLIA AGNICO AMARUQ
D4L CENTRIFUGE SKID
TERMINAL BLOCK PLAN (DC)

SIZE	DRAWING NUMBER	REV
B	E831476–P4	1

PREV. SHEET: 6 | NEXT SHEET: 8 | SHEET 7 OF 34

NAMEPLATES:

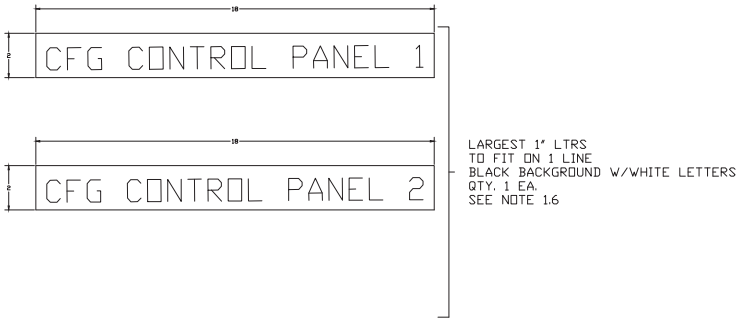

LARGEST 1" LTRS
TO FIT ON 1 LINE
BLACK BACKGROUND W/WHITE LETTERS
QTY. 1 EA.
SEE NOTE 1.6

NOTES:

1. FURNISH NAMEPLATES AS INDICATED ON DRAWINGS
   - 1.1. LETTERS SHALL BE GOTHIC UPPER CASE (CAPITAL LETTERS), MINIMUM HEIGHT SHALL BE 1/8 INCH WITH A 3/64 INCH SPACE BETWEEN LINES.
   - 1.2. NAMEPLATES SHALL BE MADE OF LAMINATED ENGRAVING STOCK HAVING CORE AND SURFACE COLORS AS SHOWN ON DRAWINGS.
   - 1.3. THE CHARACTERS SHALL BE ENGRAVED USING AN INDUSTRY STANDARD ENGRAVING MACHINE.
   - 1.4. NAMEPLATES SHALL BE ATTACHED TO THE ENCLOSURE USING HIGH PERFORMANCE ADHESIVE
   - 1.5. ALL LEGEND PLATES SHALL CONFORM TO ISA RECOMMENDED PRACTICE PUBLICATION ISARP60.6.
   - 1.6. LAYOUT AND WIRING DESIGN TYPICAL FOR BOTH CONTROL PANELS, EXCEPT FOR NAMEPLATE.

MACHINE NAMEPLATE KITS
(QUANTITIES PER MACHINE)

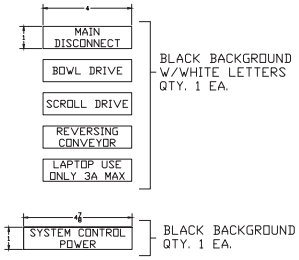

BLACK BACKGROUND
W/WHITE LETTERS
QTY. 1 EA.

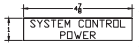

BLACK BACKGROUND W/WHITE LETTERS
QTY. 1 EA.

RED BACKGROUND W/BLACK LETTERS
QTY. 1 EA.

GRAY BACKGROUND W/BLACK LETTERS
QTY. 1 EA.

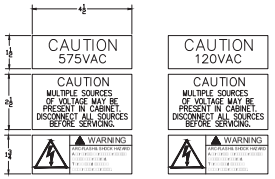

SAP# 300837153

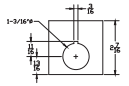

TYPICAL ALL
SWITCH PLATES

1		CERTIFIED	HL	BJM	04/13/18
0		APPROVAL DRAWINGS: INITIAL RELEASE	HL	BJM	04/04/18
REV	EIR	REVISION	BY	APVD	DATE

ANDRITZ SEPARATION, INC.
1010 COMMERCIAL BLVD. SOUTH
ARLINGTON, TEXAS 76001
Phone: (817)465-5611
Telefax: (817)472-8589

APPROVED FOR CONSTRUCTION
BY: BJM DATE:
PROJECT No. 831476

NOTES

THIS DRAWING IS COPY RIGHTED THIS DRAWING IS A TRADE SECRET AND ONLY ENTRUSTED TO THE RECEIVER FOR HIS PERSONAL USE. WITHOUT THE STATED WRITTEN CONSENT OF ANDRITZ SEPARATION INC. IT MUST NOT BE COPIED, NOR MADE AVAILABLE TO THIRD PARTIES, INCLUDING COMPETITORS, NOR MADE ACCESSIBLE TO SUCH PARTIES. ANY ILLEGAL USE BY THE RECEIVER OR THIRD PARTIES FOR WHICH HE IS RESPONSIBLE CAN CONSTITUTE A CAUSE FOR LEGAL ACTION. THIS DRAWING MUST BE RETURNED ON REQUEST OF THE COMPANY.

ESTIMATED WEIGHT IN LBS:	
UNLESS OTHERWISE SPECIFIED: DIMENSIONS ARE IN INCHES FABRICATION TOLERANCES .XXX±.040 ANG±1° HOLE±.020 MACHINING TOLERANCES .XXX±.005 ANG±.5° HOLE±.020 MILL FINISH ALL OVER	
THIRD ANGLE PROJECTION	
DRAWN BY:	HL
DATE	04/04/18
CHECKED BY:	BJM
DATE	04/04/18
APPROVED BY:	CMP
DATE	04/04/18
LOCATION:	CFG-CP

ANDRITZ SEPARATION INC.
1010 COMMERCIAL BLVD. SOUTH
ARLINGTON, TEXAS 76001
PHONE: (817) 465-5611

TITLE: VEOLIA AGNICO AMARUQ
D4L CENTRIFUGE SKID
NAMEPLATES

SIZE	DRAWING NUMBER	REV
B	E831476-P5	1

PREV. SHEET: 7 | NEXT SHEET: 9 | SHEET 8 OF 34

ANGLE TYPE 1 :
QTY 2

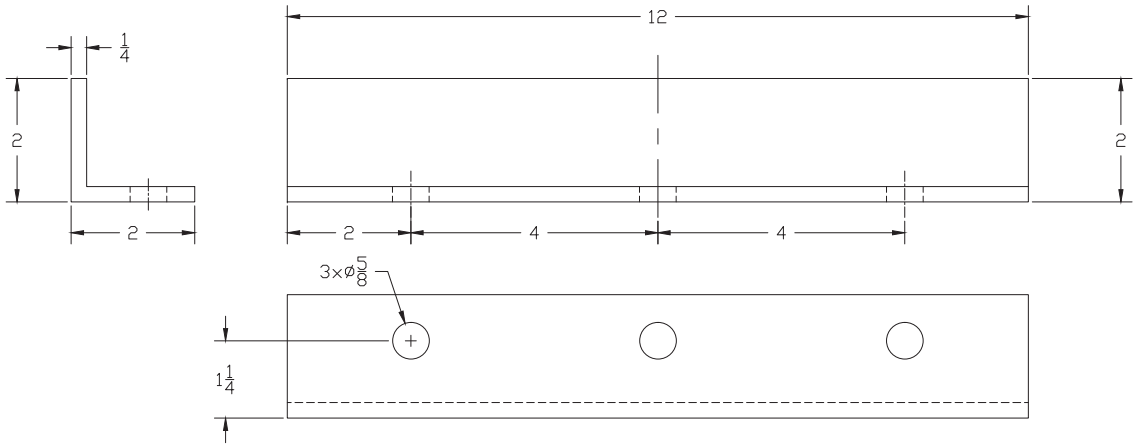

NOTES:

1. ANGLE MATERIAL: SAME AS CENTRIFUGE CONTROL PANEL ENCLOSURE
2. ANGLES SHALL BE WELDED TO CENTRIFUGE CONTROL PANEL (CFG–CP) AS SHOWN ON DOCUMENT E828109–P1
3. REINFORCE ZONES WHERE ANGLES ARE TO BE WELDED ACCORDINGLY

ANGLE TYPE 2
QTY 2

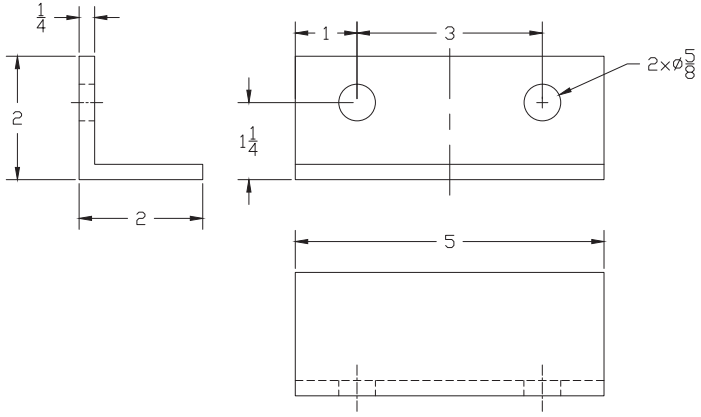

1010 COMMERCIAL BLVD. SOUTH
ARLINGTON, TEXAS 76001
Phone: (817)465-5611
Telefax: (817)472-8589

APPROVED FOR CONSTRUCTION
BY: BJM DATE:
PROJECT No.831476

NOTES

THIS DRAWING IS COPY RIGHTED THIS DRAWING IS A TRADE SECRET AND ONLY ENTRUSTED TO THE RECEIVER FOR HIS PERSONAL USE, WITHOUT THE STATED WRITTEN CONSENT OF ANDRITZ SEPARATION INC. IT MUST NOT BE COPIED, NOR MADE AVAILABLE TO THIRD PARTIES, INCLUDING COMPETITORS, NOR MADE ACCESSIBLE TO SUCH PARTIES. ANY ILLEGAL USE BY THE RECEIVER OR THIRD PARTIES FOR WHICH HE IS RESPONSIBLE CAN CONSTITUTE A CAUSE FOR LEGAL ACTION. THIS DRAWING MUST BE RETURNED ON REQUEST OF THE COMPANY.

REV	EIR	REVISION	BY	APVD	DATE
1		CERTIFIED	HL	BJM	04/13/18
0		APPROVAL DRAWINGS: INITIAL RELEASE	HL	BJM	04/04/18

ESTIMATED WEIGHT IN LBS:

UNLESS OTHERWISE SPECIFIED:
DIMENSIONS ARE IN INCHES
FABRICATION TOLERANCES
.XXX±.040 ANG±1° HOLE±.020
MACHINING TOLERANCES
.XXX±.005 ANG±.5° HOLE±.020
MILL FINISH ALL OVER

THIRD ANGLE PROJECTION

DRAWN BY:	HL	DATE 04/04/18
CHECKED BY:	BJM	DATE 04/04/18
APPROVED BY:	CMP	DATE 04/04/18

LOCATION:

ANDRITZ SEPARATION INC.
1010 COMMERCIAL BLVD. SOUTH
ARLINGTON, TEXAS 76001
PHONE: (817) 465–5611

TITLE: VEOLIA AGNICO AMARUQ
D4L CENTRIFUGE SKID
CONTROL PANEL SKID MOUNTING ANGLES

SIZE: B | DRAWING NUMBER: E831476–P6 | REV: 1

PREV. SHEET: 8 | NEXT SHEET: 10 | SHEET 9 OF 34

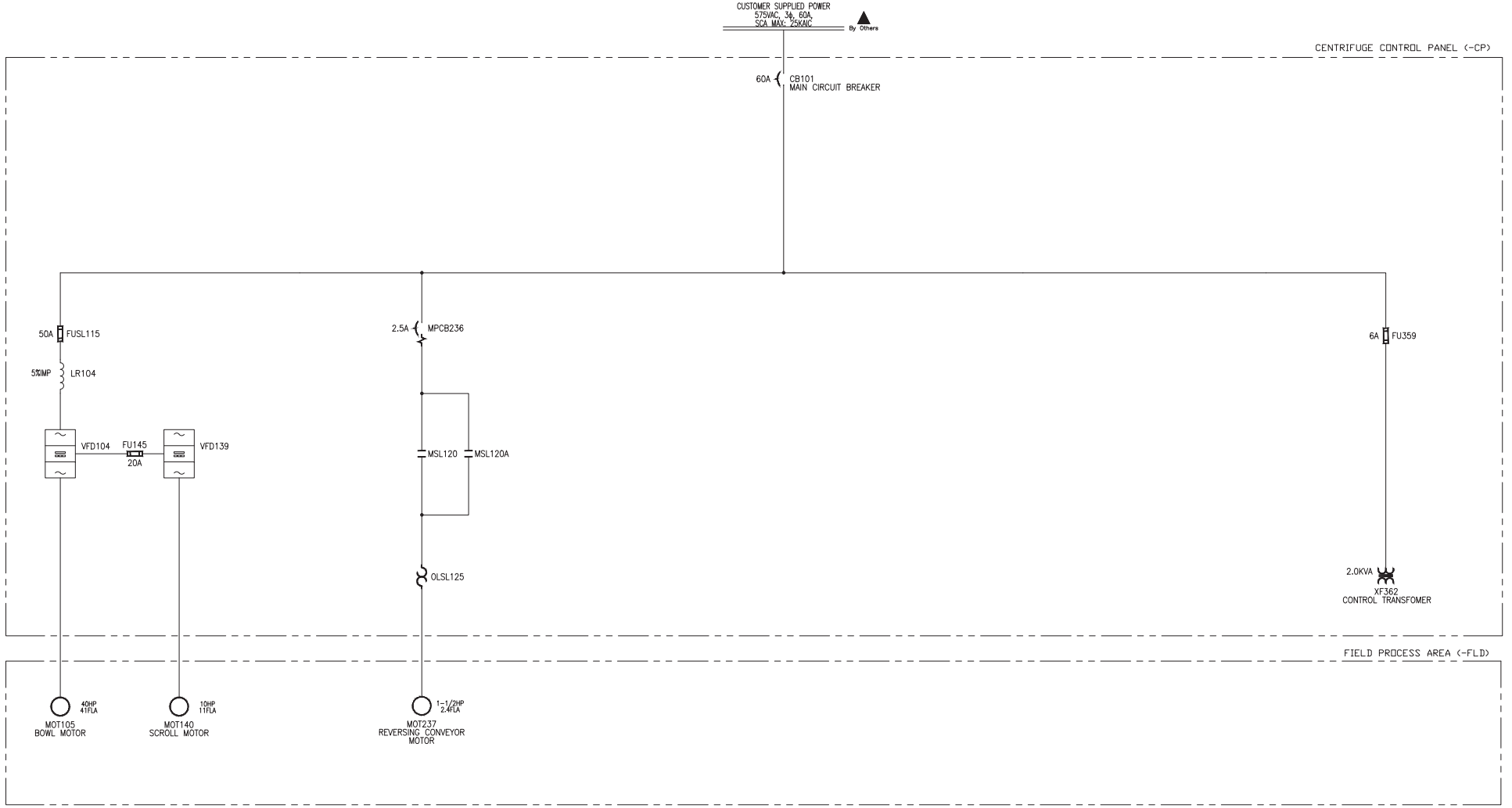

1010 COMMERCIAL BLVD. SOUTH
ARLINGTON, TEXAS 76001
Phone: (817)465-5611
Telefax: (817)472-8589

APPROVED FOR CONSTRUCTION
BY: BJM DATE:
PROJECT No.831476

NOTES

THIS DRAWING IS COPY RIGHTED THIS DRAWING IS A TRADE SECRET AND ONLY ENTRUSTED TO THE RECEIVER FOR HIS MEMORIAL USE. WITHOUT THE STATED WRITTEN CONSENT OF ANDRITZ SEPARATION INC. IT MUST NOT BE COPIED, NOR MADE AVAILABLE TO THIRD PARTIES, INCLUDING COMPETITORS, NOR MADE ACCESSIBLE TO SUCH PARTIES. ANY ILLEGAL USE BY THE RECEIVER OR THIRD PARTIES FOR WHICH HE IS RESPONSIBLE CAN CONSTITUTE A CAUSE FOR LEGAL ACTION. THIS DRAWING MUST BE RETURNED ON REQUEST OF THE COMPANY.

REV	EIR	REVISION	BY	APVD	DATE
1		CERTIFIED	HL	BJM	04/13/18
0		APPROVAL DRAWINGS: INITIAL RELEASE	HL	BJM	04/04/18

ESTIMATED WEIGHT IN LBS:

UNLESS OTHERWISE SPECIFIED:
DIMENSIONS ARE IN INCHES
FABRICATION TOLERANCES
.XXX±.040 ANG±1° HOLE±.020
MACHINING TOLERANCES
.XXX±.005 ANG±.5° HOLE±.020
MILL FINISH ALL OVER

THIRD ANGLE PROJECTION

DRAWN BY:	HL	DATE 04/04/18
CHECKED BY:	BJM	DATE 04/04/18
APPROVED BY:	CMP	DATE 04/04/18

LOCATION:

ANDRITZ SEPARATION INC.
1010 COMMERCIAL BLVD. SOUTH
ARLINGTON, TEXAS 76001
PHONE: (817) 465-5611

TITLE: VEOLIA AGNICO AMARUQ
D4L CENTRIFUGE SKID
SINGLE LINE SCHEMATIC

SIZE: B | DRAWING NUMBER: E831476-SL1 | REV: 1

PREV. SHEET: 9 | NEXT SHEET: 11 | SHEET 10 OF 34

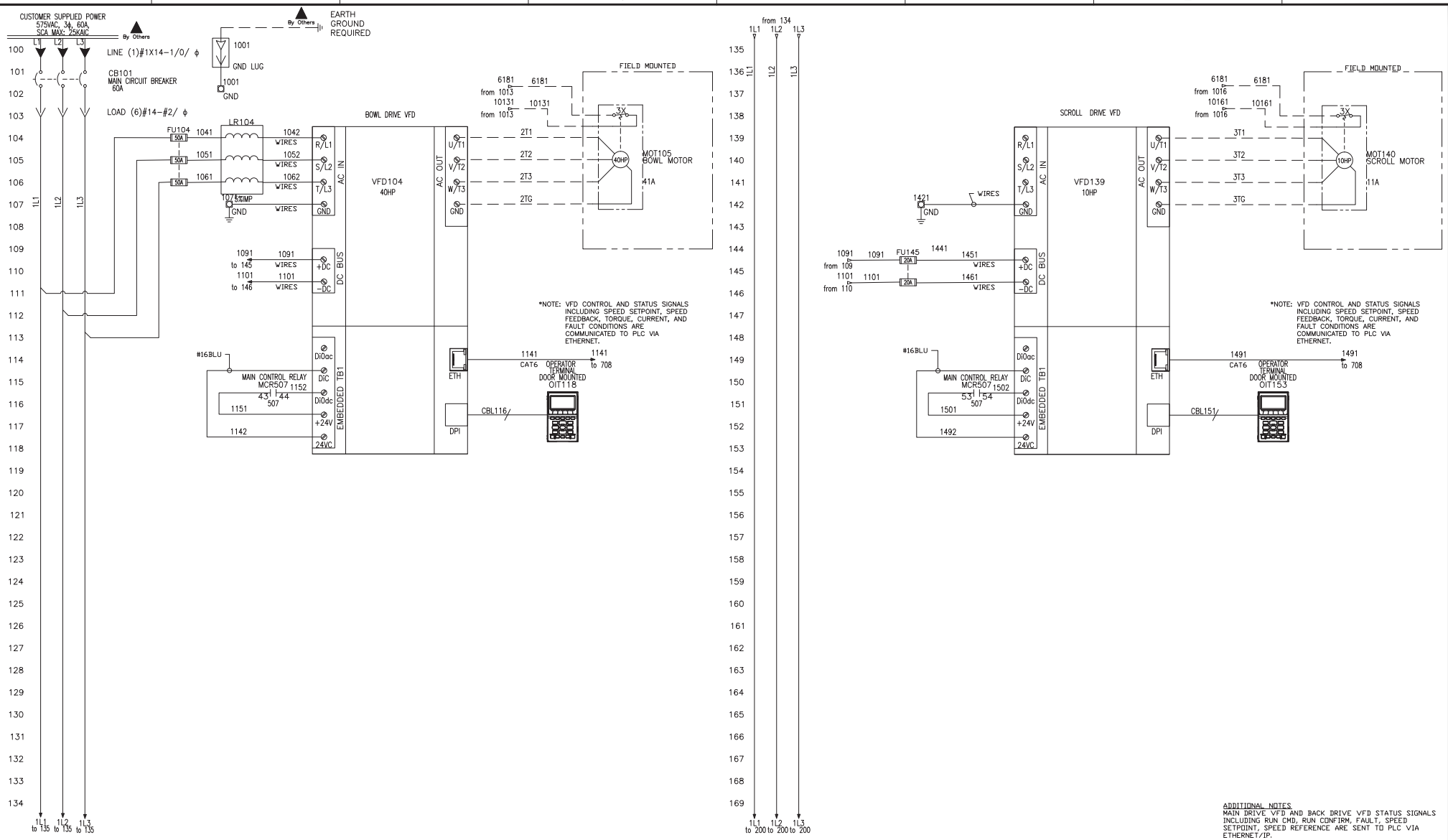

ADDITIONAL NOTES
MAIN DRIVE VFD AND BACK DRIVE VFD STATUS SIGNALS INCLUDING RUN CMD, RUN CONFIRM, FAULT, SPEED SETPOINT, SPEED REFERENCE ARE SENT TO PLC VIA ETHERNET/IP.

ANDRITZ SEPARATION INC.
1010 COMMERCIAL BLVD. SOUTH
ARLINGTON, TEXAS 76001
Phone: (817)465-5611
Telefax: (817)472-8589

APPROVED FOR CONSTRUCTION
BY: BJM DATE:
PROJECT No.831476

NOTES

THIS DRAWING IS COPY RIGHTED THIS DRAWING IS A TRADE SECRET AND ONLY ENTRUSTED TO THE RECEIVER FOR HIS PERSONAL USE, WITHOUT THE STATED WRITTEN CONSENT OF ANDRITZ SEPARATION INC. IT MUST NOT BE COPIED, NOR MADE AVAILABLE TO THIRD PARTIES, INCLUDING COMPETITORS, NOR MADE ACCESSIBLE TO SUCH PARTIES. ANY ILLEGAL USE BY THE RECEIVER OR THIRD PARTIES FOR WHICH HE IS RESPONSIBLE CAN CONSTITUTE A CAUSE FOR LEGAL ACTION. THIS DRAWING MUST BE RETURNED ON REQUEST OF THE COMPANY.

REV	EIR	REVISION	BY	APVD	DATE
1		CERTIFIED	HL	BJM	04/13/18
0		APPROVAL DRAWINGS: INITIAL RELEASE	HL	BJM	04/04/18

ESTIMATED WEIGHT IN LBS:

UNLESS OTHERWISE SPECIFIED: DIMENSIONS ARE IN INCHES FABRICATION TOLERANCES .XXX±.040 ANG±1° HOLE±.020 MACHINING TOLERANCES .XXX±.005 ANG±.5° HOLE±.020 MILL FINISH ALL OVER

THIRD ANGLE PROJECTION

DRAWN BY:	HL	DATE 04/04/18
CHECKED BY:	BJM	DATE 04/04/18
APPROVED BY:	CMP	DATE 04/04/18
LOCATION:		

ANDRITZ SEPARATION INC.
1010 COMMERCIAL BLVD. SOUTH
ARLINGTON, TEXAS 76001
PHONE: (817) 465-5611

TITLE
VEOLIA AGNICO AMARUQ
D4L CENTRIFUGE SKID
POWER DISTRIBUTION SCHEMATIC

SIZE	DRAWING NUMBER	REV
B	E831476-S1	1

PREV. SHEET: 10 | NEXT SHEET: 12 | SHEET 11 OF 34

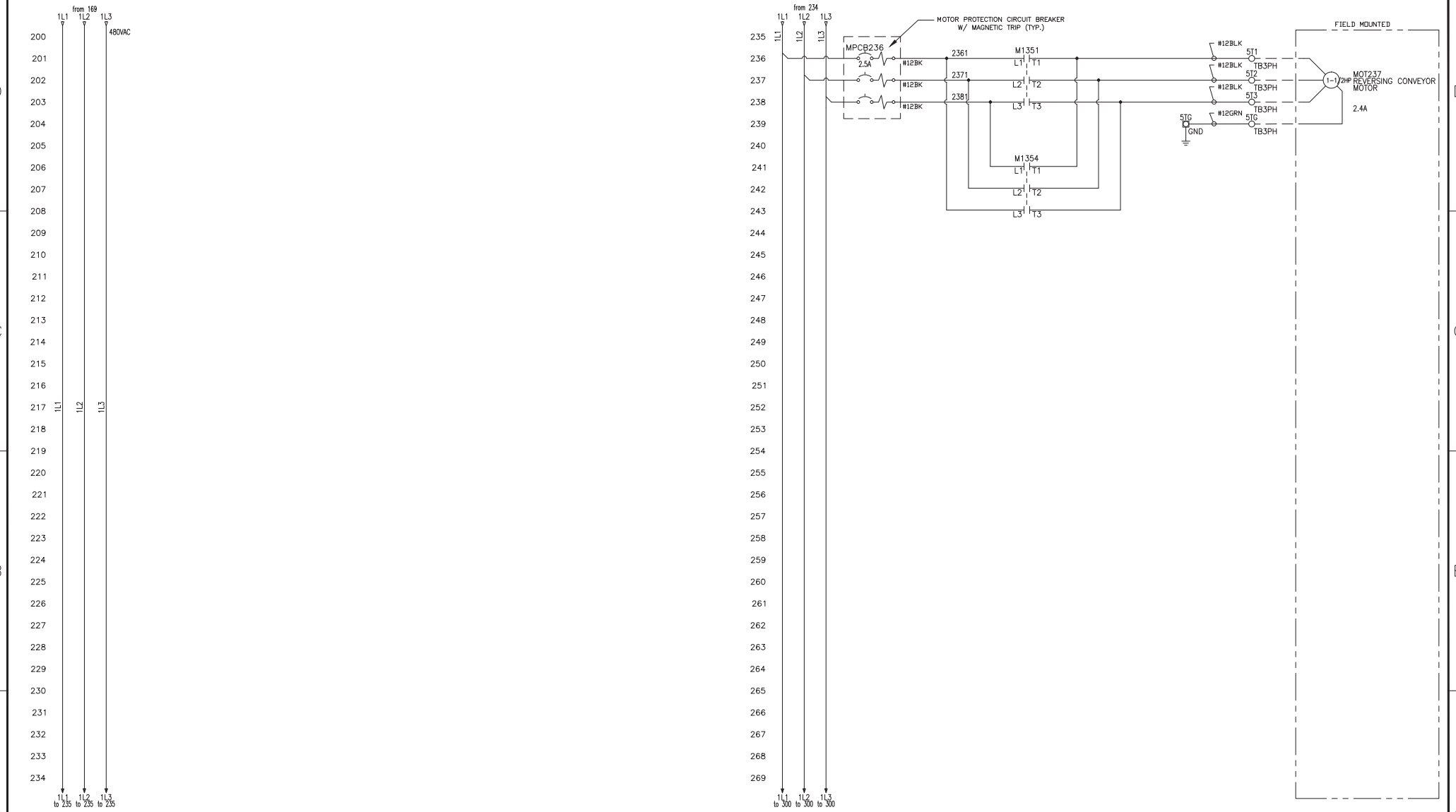

1010 COMMERCIAL BLVD. SOUTH
ARLINGTON, TEXAS 76001
Phone: (817)465-5611
Telefax: (817)472-8589

APPROVED FOR CONSTRUCTION

BY: BJM DATE:

PROJECT No.831476

NOTES

THIS DRAWING IS COPY RIGHTED THIS DRAWING IS A TRADE SECRET AND ONLY ENTRUSTED TO THE RECEIVER FOR HIS MEDICAL USE. WITHOUT THE STATED WRITTEN CONSENT OF ANDRITZ SEPARATION INC. IT MUST NOT BE COPIED, NOR MADE AVAILABLE TO THIRD PARTIES, INCLUDING COMPETITORS, NOR MADE ACCESSIBLE TO SUCH PARTIES. ANY ILLEGAL USE BY THE RECEIVER OR THIRD PARTIES FOR WHICH HE IS RESPONSIBLE CAN CONSTITUTE A CAUSE FOR LEGAL ACTION. THIS DRAWING MUST BE RETURNED ON REQUEST OF THE COMPANY.

REV	EIR	REVISION	BY	APVD	DATE
1		CERTIFIED	HL	BJM	04/13/18
0		APPROVAL DRAWINGS: INITIAL RELEASE	HL	BJM	04/04/18

ESTIMATED WEIGHT IN LBS:

UNLESS OTHERWISE SPECIFIED: DIMENSIONS ARE IN INCHES FABRICATION TOLERANCES .XXX±.040 ANG±1° HOLE±.020 MACHINING TOLERANCES .XXX±.005 ANG±.5° HOLE±.020 MILL FINISH ALL OVER

THIRD ANGLE PROJECTION

DRAWN BY:	HL	DATE 04/04/18
CHECKED BY:	BJM	DATE 04/04/18
APPROVED BY:	CMP	DATE 04/04/18

LOCATION:

ANDRITZ SEPARATION INC.
1010 COMMERCIAL BLVD. SOUTH
ARLINGTON, TEXAS 76001
PHONE: (817) 465-5611

TITLE

VEOLIA AGNICO AMARUQ
D4L CENTRIFUGE SKID
480VAC POWER DISTRIBUTION

SIZE	DRAWING NUMBER	REV
B	E831476-S2	1

PREV. SHEET:	NEXT SHEET:	SHEET OF
1.1	1.3	1.2 34

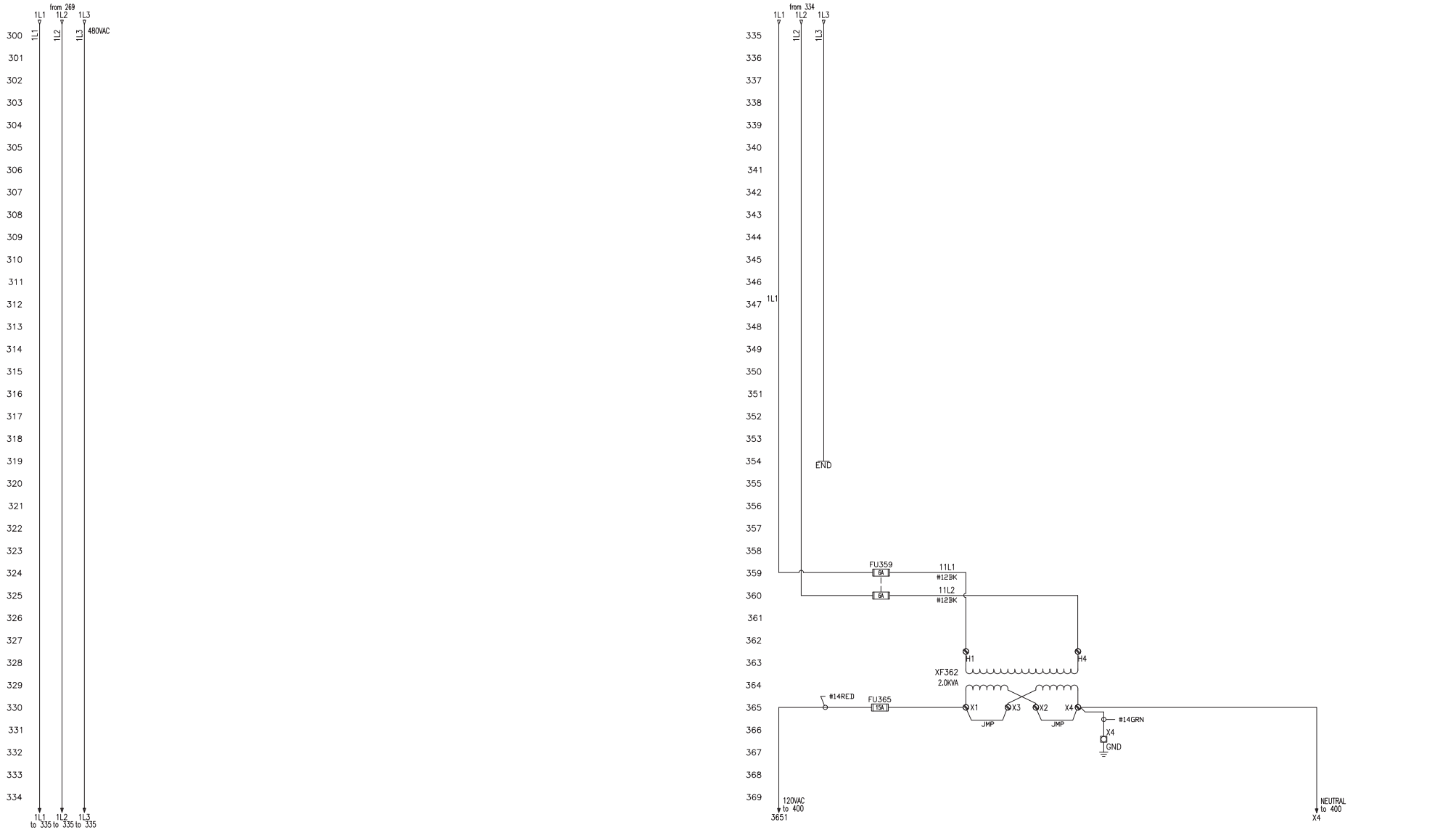

1010 COMMERCIAL BLVD. SOUTH
ARLINGTON, TEXAS 76001
Phone: (817)465-5611
Telefax: (817)472-8589

APPROVED FOR CONSTRUCTION
BY: BJM DATE:
PROJECT No.831476

NOTES

THIS DRAWING IS COPY RIGHTED THIS DRAWING IS A TRADE SECRET AND ONLY ENTRUSTED TO THE RECEIVER FOR HIS PERSONAL USE. WITHOUT THE STATED WRITTEN CONSENT OF ANDRITZ SEPARATION INC. IT MUST NOT BE COPIED, NOR MADE AVAILABLE TO THIRD PARTIES, INCLUDING COMPETITORS, NOR MADE ACCESSIBLE TO SUCH PARTIES. ANY ILLEGAL USE BY THE RECEIVER OR THIRD PARTIES FOR WHICH HE IS RESPONSIBLE CAN CONSTITUTE A CAUSE FOR LEGAL ACTION. THIS DRAWING MUST BE RETURNED ON REQUEST OF THE COMPANY.

REV	EIR	REVISION	BY	APVD	DATE
1		CERTIFIED	HL	BJM	04/13/18
0		APPROVAL DRAWINGS: INITIAL RELEASE	HL	BJM	04/04/18

ESTIMATED WEIGHT IN LBS:

UNLESS OTHERWISE SPECIFIED:
DIMENSIONS ARE IN INCHES
FABRICATION TOLERANCES
.XXX±.040 ANG±1° HOLE±.020
MACHINING TOLERANCES
.XXX±.005 ANG±.5° HOLE±.020
MILL FINISH ALL OVER

THIRD ANGLE PROJECTION

DRAWN BY:	HL	DATE 04/04/18
CHECKED BY:	BJM	DATE 04/04/18
APPROVED BY:	CMP	DATE 04/04/18

LOCATION:

ANDRITZ SEPARATION INC.
1010 COMMERCIAL BLVD. SOUTH
ARLINGTON, TEXAS 76001
PHONE: (817) 465-5611

TITLE
VEOLIA AGNICO AMARUQ
D4L CENTRIFUGE SKID
POWER DISTRIBUTION SCHEMATIC

SIZE	DRAWING NUMBER	REV
B	E831476-S3	1

PREV. SHEET:	NEXT SHEET:	SHEET OF
12	14	13 34

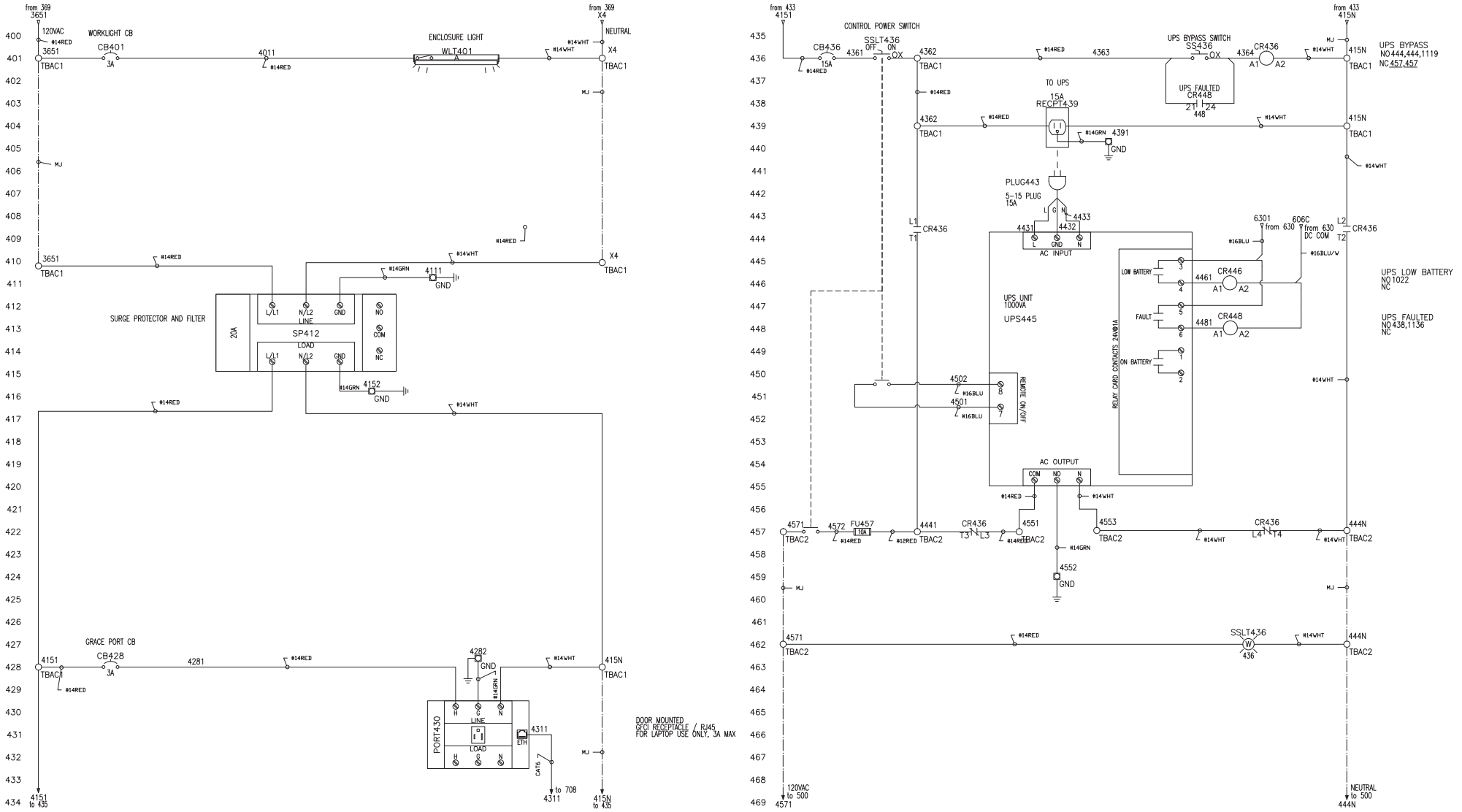

1		CERTIFIED	HL	BJM	04/13/18
0		APPROVAL DRAWINGS: INITIAL RELEASE	HL	BJM	04/04/18
REV	EIR	REVISION	BY	APVD	DATE

1010 COMMERCIAL BLVD. SOUTH
ARLINGTON, TEXAS 76001
Phone: (817)465-5611
Telefax: (817)472-8589

APPROVED FOR CONSTRUCTION
BY: BJM DATE:
PROJECT No.831476

NOTES

THIS DRAWING IS COPY RIGHTED THIS DRAWING IS A TRADE SECRET AND ONLY ENTRUSTED TO THE RECEIVER FOR HIS MEDICAL USE, WITHOUT THE STATED WRITTEN CONSENT OF ANDRITZ SEPARATION INC. IT MUST NOT BE COPIED, NOR MADE AVAILABLE TO THIRD PARTIES, INCLUDING COMPETITORS, NOR MADE ACCESSIBLE TO SUCH PARTIES. ANY ILLEGAL USE BY THE RECEIVER OR THIRD PARTIES FOR WHICH HE IS RESPONSIBLE CAN CONSTITUTE A CAUSE FOR LEGAL ACTION. THIS DRAWING MUST BE RETURNED ON REQUEST OF THE COMPANY.

ESTIMATED WEIGHT IN LBS:

UNLESS OTHERWISE SPECIFIED: DIMENSIONS ARE IN INCHES FABRICATION TOLERANCES .XXX±.040 ANG±1° HOLE±.020 MACHINING TOLERANCES .XXX±.005 ANG±.5° HOLE±.020 MILL FINISH ALL OVER

THIRD ANGLE PROJECTION

DRAWN BY:	HL	DATE 04/04/18
CHECKED BY:	BJM	DATE 04/04/18
APPROVED BY:	CMP	DATE 04/04/18
LOCATION:		

ANDRITZ SEPARATION INC.
1010 COMMERCIAL BLVD. SOUTH
ARLINGTON, TEXAS 76001
PHONE: (817) 465-5611

TITLE
VEOLIA AGNICO AMARUQ
D4L CENTRIFUGE SKID
LOW VOLTAGE POWER DISTRIBUTION

SIZE	DRAWING NUMBER	REV
B	E831476-S4	1

PREV. SHEET: 13 | NEXT SHEET: 15 | SHEET 14 OF 34

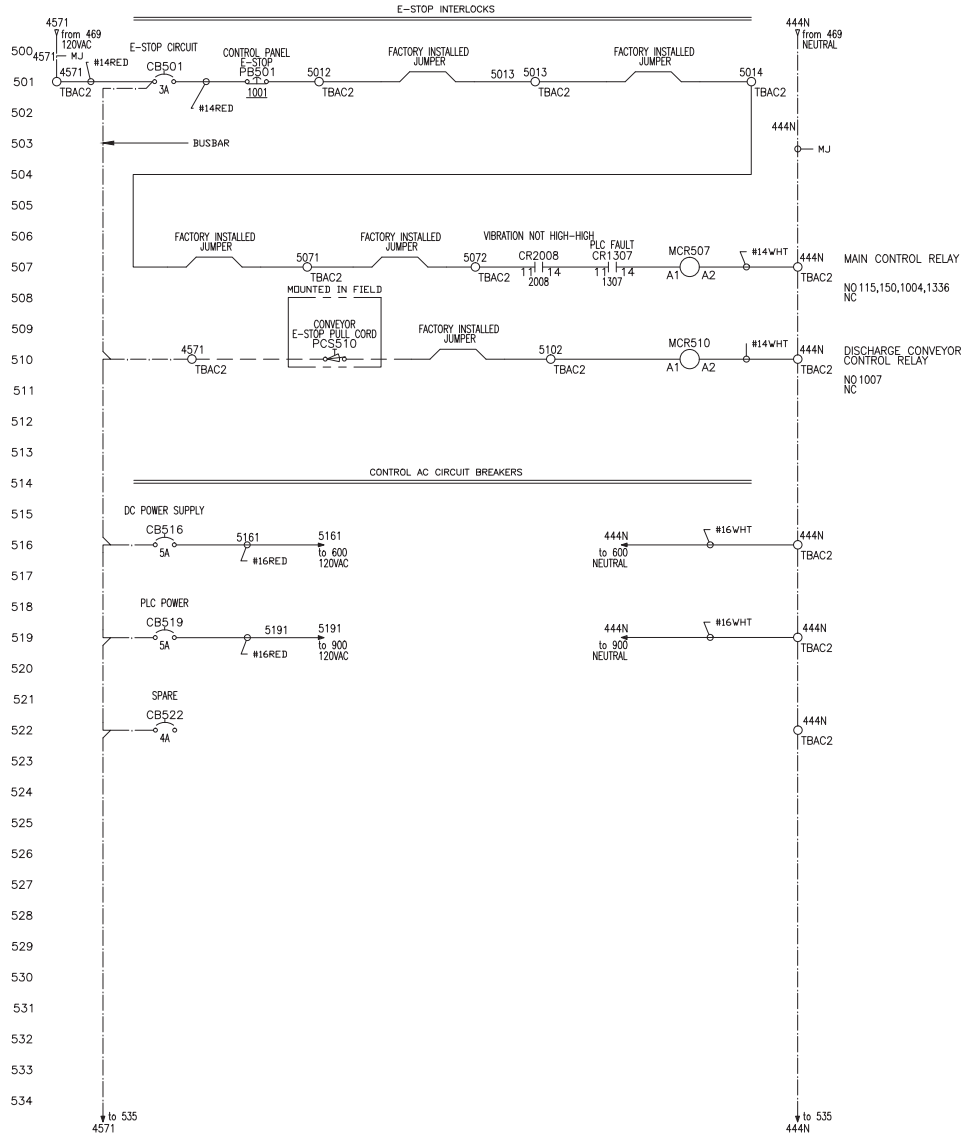

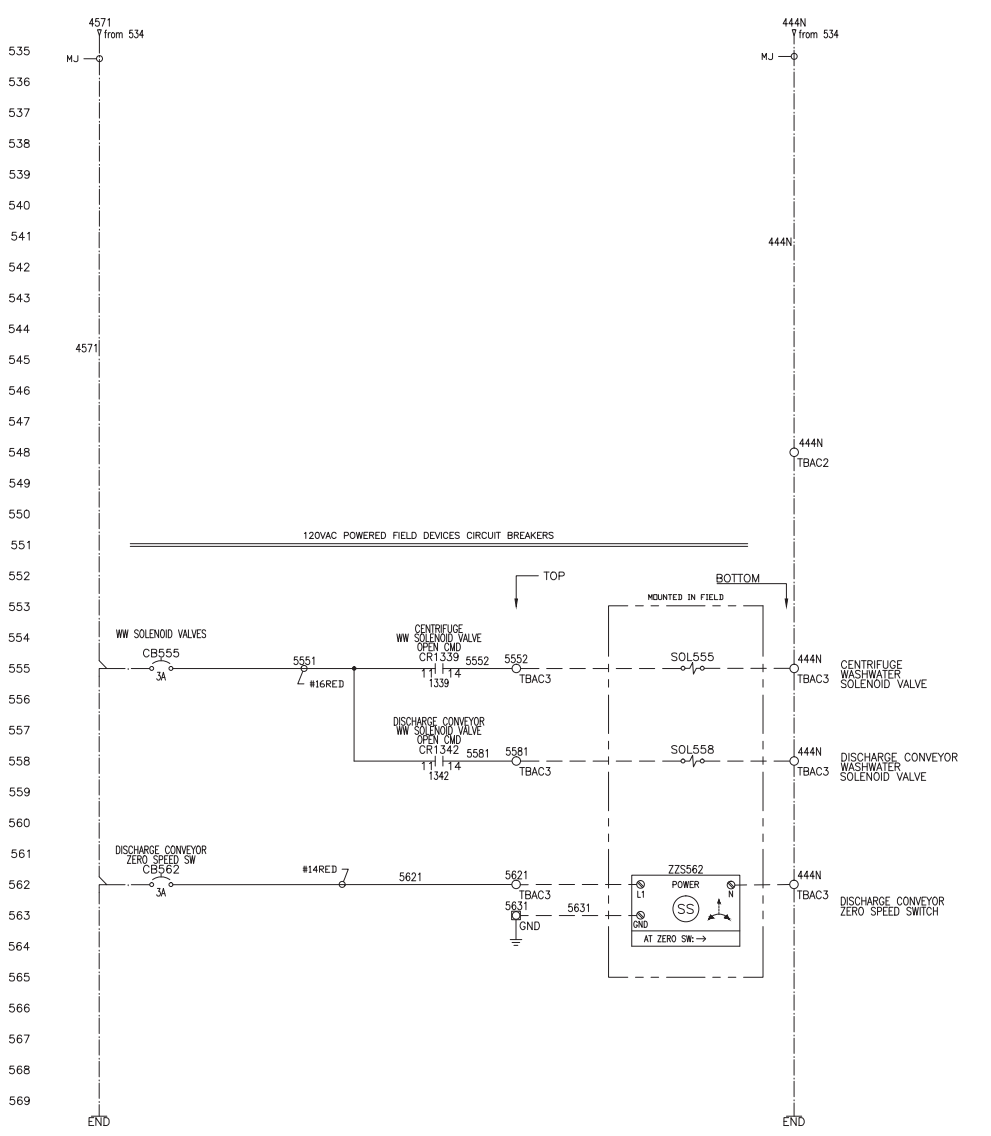

ESTIMATED WEIGHT IN LBS:	
DRAWN BY:	HL
DATE	04/04/18
CHECKED BY:	BJM
DATE	04/04/18
APPROVED BY:	CMP
DATE	04/04/18
LOCATION:	

UNLESS OTHERWISE SPECIFIED: DIMENSIONS ARE IN INCHES. FABRICATION TOLERANCES .XXX±.040 ANG±1° HOLE±.020. MACHINING TOLERANCES .XXX±.005 ANG±.5° HOLE±.020. MILL FINISH ALL OVER.

THIRD ANGLE PROJECTION

ANDRITZ SEPARATION INC.
1010 COMMERCIAL BLVD. SOUTH
ARLINGTON, TEXAS 76001
PHONE: (817) 465-5611

1010 COMMERCIAL BLVD. SOUTH
ARLINGTON, TEXAS 76001
Phone: (817)465-5611
Telefax: (817)472-8589

APPROVED FOR CONSTRUCTION
BY: BJM DATE:
PROJECT No. 831476

NOTES

THIS DRAWING IS COPY RIGHTED. THIS DRAWING IS A TRADE SECRET AND ONLY ENTRUSTED TO THE RECEIVER FOR HIS MEMORIAL USE. WITHOUT THE STATED WRITTEN CONSENT OF ANDRITZ SEPARATION INC. IT MUST NOT BE COPIED, NOR MADE AVAILABLE TO THIRD PARTIES, INCLUDING COMPETITORS, NOR MADE ACCESSIBLE TO SUCH PARTIES. ANY ILLEGAL USE BY THE RECEIVER OR THIRD PARTIES FOR WHICH HE IS RESPONSIBLE CAN CONSTITUTE A CAUSE FOR LEGAL ACTION. THIS DRAWING MUST BE RETURNED ON REQUEST OF THE COMPANY.

REV	EIR	REVISION	BY	APVD	DATE
1		CERTIFIED	HL	BJM	04/13/18
0		APPROVAL DRAWINGS: INITIAL RELEASE	HL	BJM	04/04/18

TITLE
VEOLIA AGNICO AMARUQ
D4L CENTRIFUGE SKID
AC CTRL POWER DISTRIBUTION (CONT.)

SIZE	DRAWING NUMBER	REV
B	E831476-S5	1

PREV. SHEET:	NEXT SHEET:	SHEET	OF
14	16	15	34

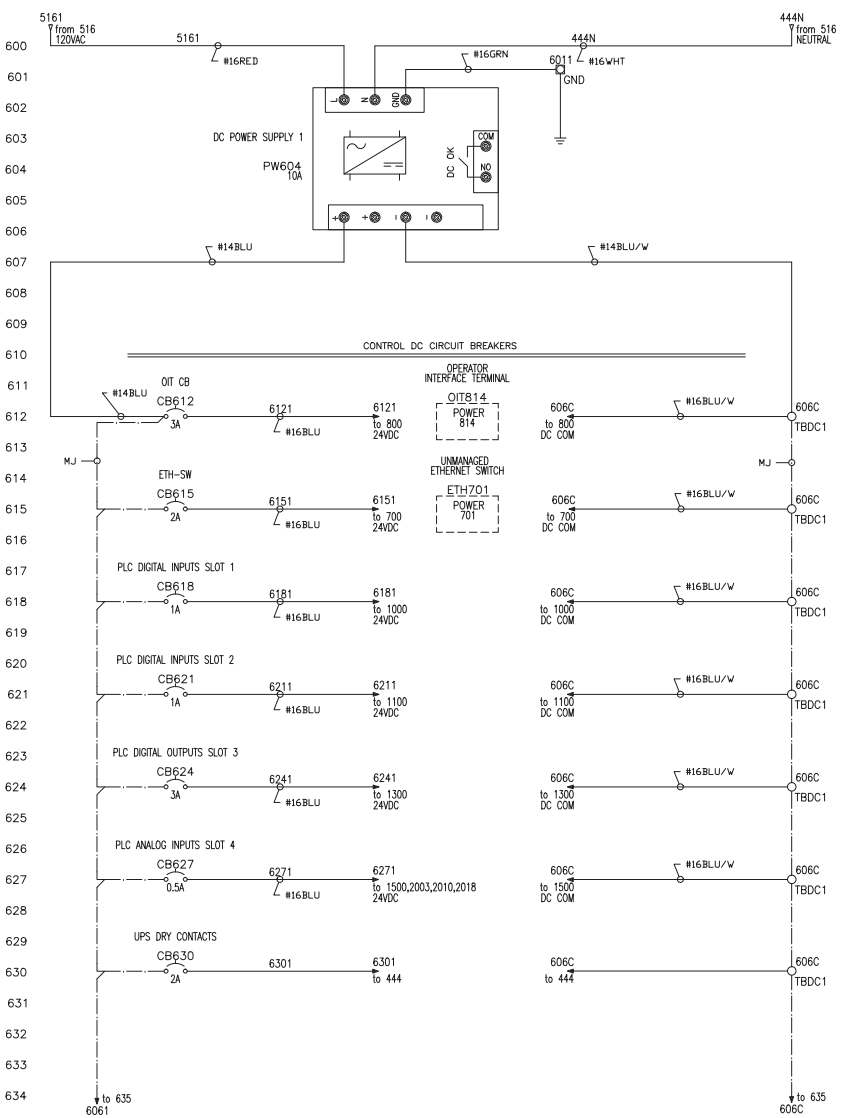

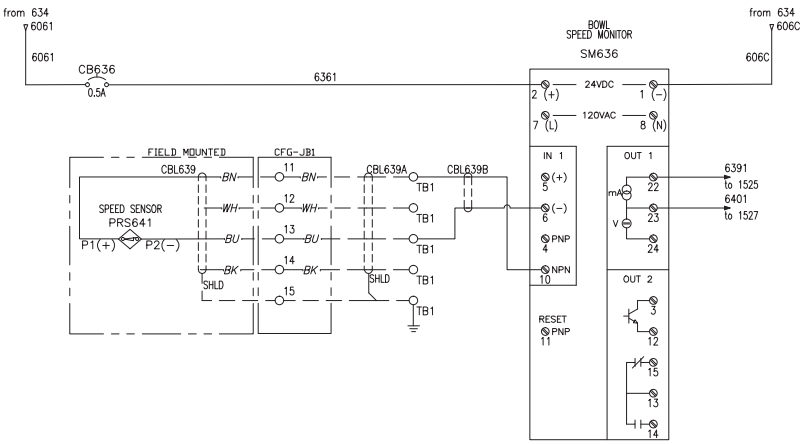

1		CERTIFIED	HL	BJM	04/13/18
0		APPROVAL DRAWINGS: INITIAL RELEASE	HL	BJM	04/04/18
REV	EIR	REVISION	BY	APVD	DATE

1010 COMMERCIAL BLVD. SOUTH
ARLINGTON, TEXAS 76001
Phone: (817)465-5611
Telefax: (817)472-8589

APPROVED FOR CONSTRUCTION
BY: BJM DATE:
PROJECT No.831476

NOTES

THIS DRAWING IS COPY RIGHTED THIS DRAWING IS A TRADE SECRET AND ONLY ENTRUSTED TO THE RECEIVER FOR HIS MEMORIAL USE. WITHOUT THE EXPRESS WRITTEN CONSENT OF ANDRITZ SEPARATION INC. IT MUST NOT BE COPIED, NOR MADE AVAILABLE TO THIRD PARTIES, INCLUDING COMPETITORS, NOR MADE ACCESSIBLE TO SUCH PARTIES. ANY ILLEGAL USE BY THE RECEIVER OR THIRD PARTIES FOR WHICH HE IS RESPONSIBLE CAN CONSTITUTE A CAUSE FOR LEGAL ACTION. THIS DRAWING MUST BE RETURNED ON REQUEST OF THE COMPANY.

ESTIMATED WEIGHT IN LBS:

UNLESS OTHERWISE SPECIFIED:
DIMENSIONS ARE IN INCHES
FABRICATION TOLERANCES
.XXX±.040 ANG±1° HOLE±.020
MACHINING TOLERANCES
.XXX±.005 ANG±.5° HOLE±.020
MILL FINISH ALL OVER

THIRD ANGLE PROJECTION

DRAWN BY:	HL	DATE 04/04/18
CHECKED BY:	BJM	DATE 04/04/18
APPROVED BY:	CMP	DATE 04/04/18

LOCATION:

ANDRITZ SEPARATION INC.
1010 COMMERCIAL BLVD. SOUTH
ARLINGTON, TEXAS 76001
PHONE: (817) 465-5611

TITLE
VEOLIA AGNICO AMARUQ
D4L CENTRIFUGE SKID
DC POWER DISTRIBUTION

SIZE	DRAWING NUMBER	REV
B	E831476-S6	1

PREV. SHEET: 15 | NEXT SHEET: 17 | SHEET 16 OF 34

ETHERNET SWITCH CONNECTIONS

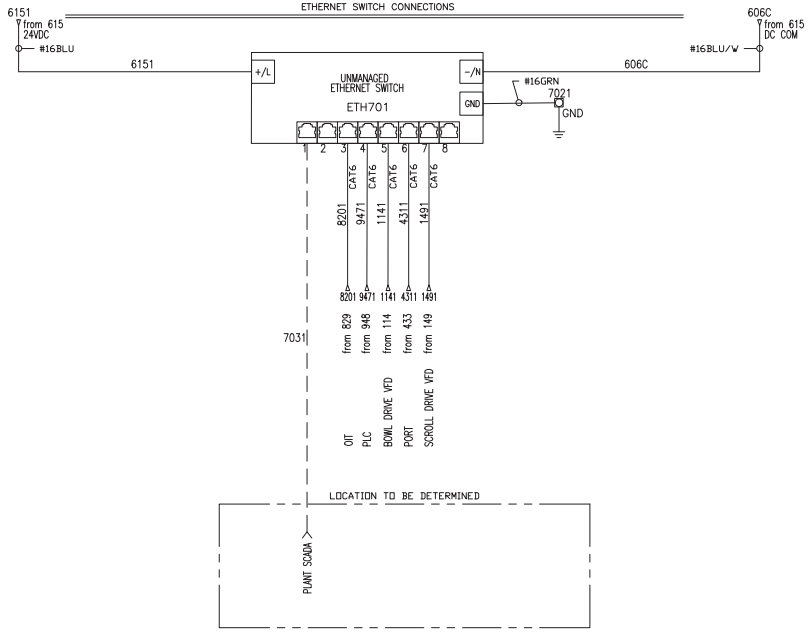

DRY CONTACTS FOR CUSTOMER USE (NON-MCR INTERLOCKED) 6A RATED CONTACTS RESISTIVE

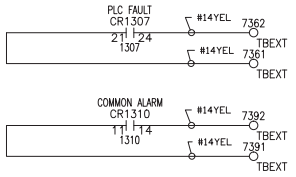

DRY CONTACTS (MCR INTERLOCKED) 6A RATED CONTACTS RESISTIVE

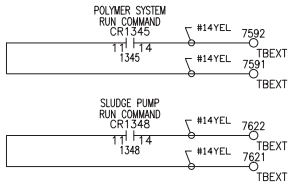

1010 COMMERCIAL BLVD. SOUTH
ARLINGTON, TEXAS 76001
Phone: (817)465-5611
Telefax: (817)472-8589

APPROVED FOR CONSTRUCTION
BY: BJM DATE:
PROJECT No.831476

NOTES

THIS DRAWING IS COPY RIGHTED THIS DRAWING IS A TRADE SECRET AND ONLY ENTRUSTED TO THE RECEIVER FOR HIS PERSONAL USE. WITHOUT THE EXPRESS WRITTEN CONSENT OF ANDRITZ SEPARATION INC. IT MUST NOT BE COPIED, NOR MADE AVAILABLE TO THIRD PARTIES, INCLUDING COMPETITORS, NOR MADE ACCESSIBLE TO SUCH PARTIES. ANY ILLEGAL USE BY THE RECEIVER OR THIRD PARTIES FOR WHICH HE IS RESPONSIBLE CAN CONSTITUTE A CAUSE FOR LEGAL ACTION. THIS DRAWING MUST BE RETURNED ON REQUEST OF THE COMPANY.

REV	EIR	REVISION	BY	APVD	DATE
1		CERTIFIED	HL	BJM	04/13/18
0		APPROVAL DRAWINGS: INITIAL RELEASE	HL	BJM	04/04/18

ESTIMATED WEIGHT IN LBS:

UNLESS OTHERWISE SPECIFIED: DIMENSIONS ARE IN INCHES
FABRICATION TOLERANCES .XXX±.040 ANG±1° HOLE±.020
MACHINING TOLERANCES .XXX±.005 ANG±.5° HOLE±.020
MILL FINISH ALL OVER

THIRD ANGLE PROJECTION

DRAWN BY:	HL	DATE 04/04/18
CHECKED BY:	BJM	DATE 04/04/18
APPROVED BY:	CMP	DATE 04/04/18

LOCATION:

ANDRITZ SEPARATION INC.
1010 COMMERCIAL BLVD. SOUTH
ARLINGTON, TEXAS 76001
PHONE: (817) 465-5611

TITLE: VEOLIA AGNICO AMARUQ
D4L CENTRIFUGE SKID
COMMUNICATIONS

SIZE	DRAWING NUMBER	REV
B	E831476-S7	1

PREV. SHEET: 16 | NEXT SHEET: 18 | SHEET 17 OF 34

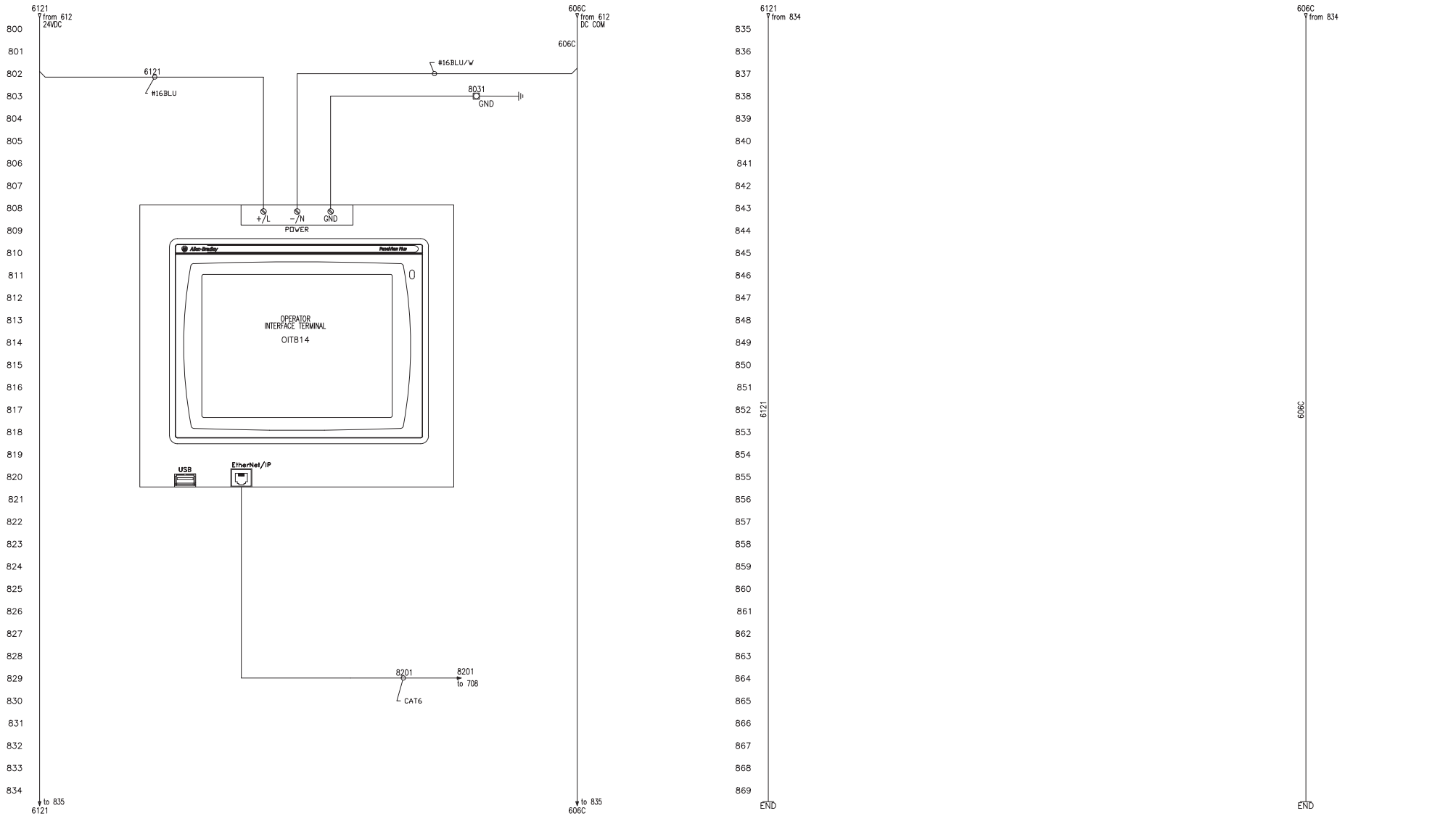

1010 COMMERCIAL BLVD. SOUTH
ARLINGTON, TEXAS 76001
Phone: (817)465-5611
Telefax: (817)472-8589

APPROVED FOR CONSTRUCTION
BY: BJM DATE:
PROJECT No.831476

NOTES

THIS DRAWING IS COPY RIGHTED THIS DRAWING IS A TRADE SECRET AND ONLY ENTRUSTED TO THE RECEIVER FOR HIS MEDICAL USE. WITHOUT THE STATED WRITTEN CONSENT OF ANDRITZ SEPARATION INC. IT MUST NOT BE COPIED, NOR MADE AVAILABLE TO THIRD PARTIES, INCLUDING COMPETITORS, NOR MADE ACCESSIBLE TO SUCH PARTIES. ANY ILLEGAL USE BY THE RECEIVER OR THIRD PARTIES FOR WHICH HE IS RESPONSIBLE CAN CONSTITUTE A CAUSE FOR LEGAL ACTION. THIS DRAWING MUST BE RETURNED ON REQUEST OF THE COMPANY.

REV	EIR	REVISION	BY	APVD	DATE
1		CERTIFIED	HL	BJM	04/13/18
0		APPROVAL DRAWINGS: INITIAL RELEASE	HL	BJM	04/04/18

ESTIMATED WEIGHT IN LBS:

UNLESS OTHERWISE SPECIFIED:
DIMENSIONS ARE IN INCHES
FABRICATION TOLERANCES
.XXX±.040 ANG±1° HOLE±.020
MACHINING TOLERANCES
.XXX±.005 ANG±.5° HOLE±.020
MILL FINISH ALL OVER

THIRD ANGLE PROJECTION

DRAWN BY:	HL	DATE 04/04/18
CHECKED BY:	BJM	DATE 04/04/18
APPROVED BY:	CMP	DATE 04/04/18

LOCATION:

ANDRITZ SEPARATION INC.
1010 COMMERCIAL BLVD. SOUTH
ARLINGTON, TEXAS 76001
PHONE: (817) 465-5611

TITLE
VEOLIA AGNICO AMARUQ
D4L CENTRIFUGE SKID
OIT SCHEMATIC

SIZE	DRAWING NUMBER	REV
B	E831476-S8	1

PREV. SHEET: 17 | NEXT SHEET: 19 | SHEET 18 OF 34

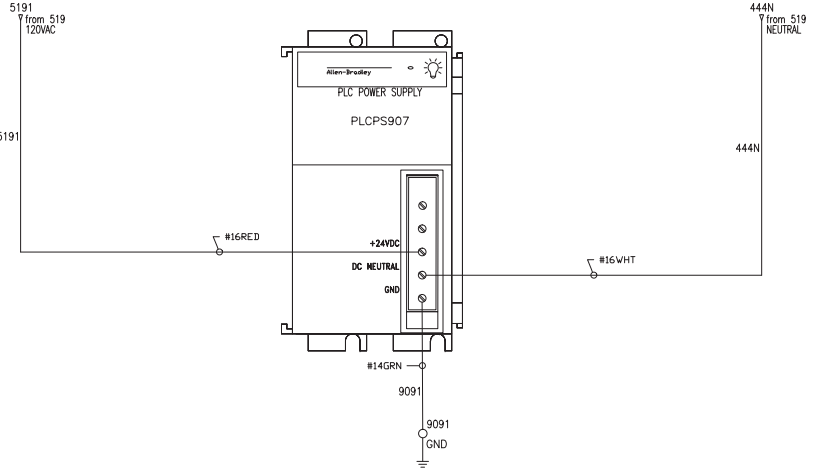

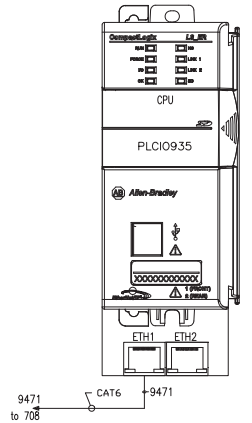

1		CERTIFIED	HL	BJM	04/13/18
0		APPROVAL DRAWINGS: INITIAL RELEASE	HL	BJM	04/04/18
REV	EIR	REVISION	BY	APVD	DATE

1010 COMMERCIAL BLVD. SOUTH
ARLINGTON, TEXAS 76001
Phone: (817)465-5611
Telefax: (817)472-8589

APPROVED FOR CONSTRUCTION
BY: BJM DATE:
PROJECT No.831476

NOTES

THIS DRAWING IS COPY RIGHTED THIS DRAWING IS A TRADE SECRET AND ONLY ENTRUSTED TO THE RECEIVER FOR HIS PERSONAL USE. WITHOUT THE STATED WRITTEN CONSENT OF ANDRITZ SEPARATION INC. IT MUST NOT BE COPIED, NOR MADE AVAILABLE TO THIRD PARTIES, INCLUDING COMPETITORS, NOR MADE ACCESSIBLE TO SUCH PARTIES. ANY ILLEGAL USE BY THE RECEIVER OR THIRD PARTIES FOR WHICH HE IS RESPONSIBLE CAN CONSTITUTE A CAUSE FOR LEGAL ACTION. THIS DRAWING MUST BE RETURNED ON REQUEST OF THE COMPANY.

ESTIMATED WEIGHT IN LBS:

UNLESS OTHERWISE SPECIFIED:
DIMENSIONS ARE IN INCHES
FABRICATION TOLERANCES
.XXX±.040 ANG±1° HOLE±.020
MACHINING TOLERANCES
.XXX±.005 ANG±.5° HOLE±.020
MILL FINISH ALL OVER

THIRD ANGLE PROJECTION

DRAWN BY:	HL	DATE 04/04/18
CHECKED BY:	BJM	DATE 04/04/18
APPROVED BY:	CMP	DATE 04/04/18

LOCATION:

ANDRITZ SEPARATION INC.
1010 COMMERCIAL BLVD. SOUTH
ARLINGTON, TEXAS 76001
PHONE: (817) 465-5611

TITLE
VEOLIA AGNICO AMARUQ
D4L CENTRIFUGE SKID
PLC POWER SUPPLY AND CPU

SIZE	DRAWING NUMBER	REV
B	E831476-S9	1

PREV. SHEET:	NEXT SHEET:	SHEET	OF
18	20	19	34

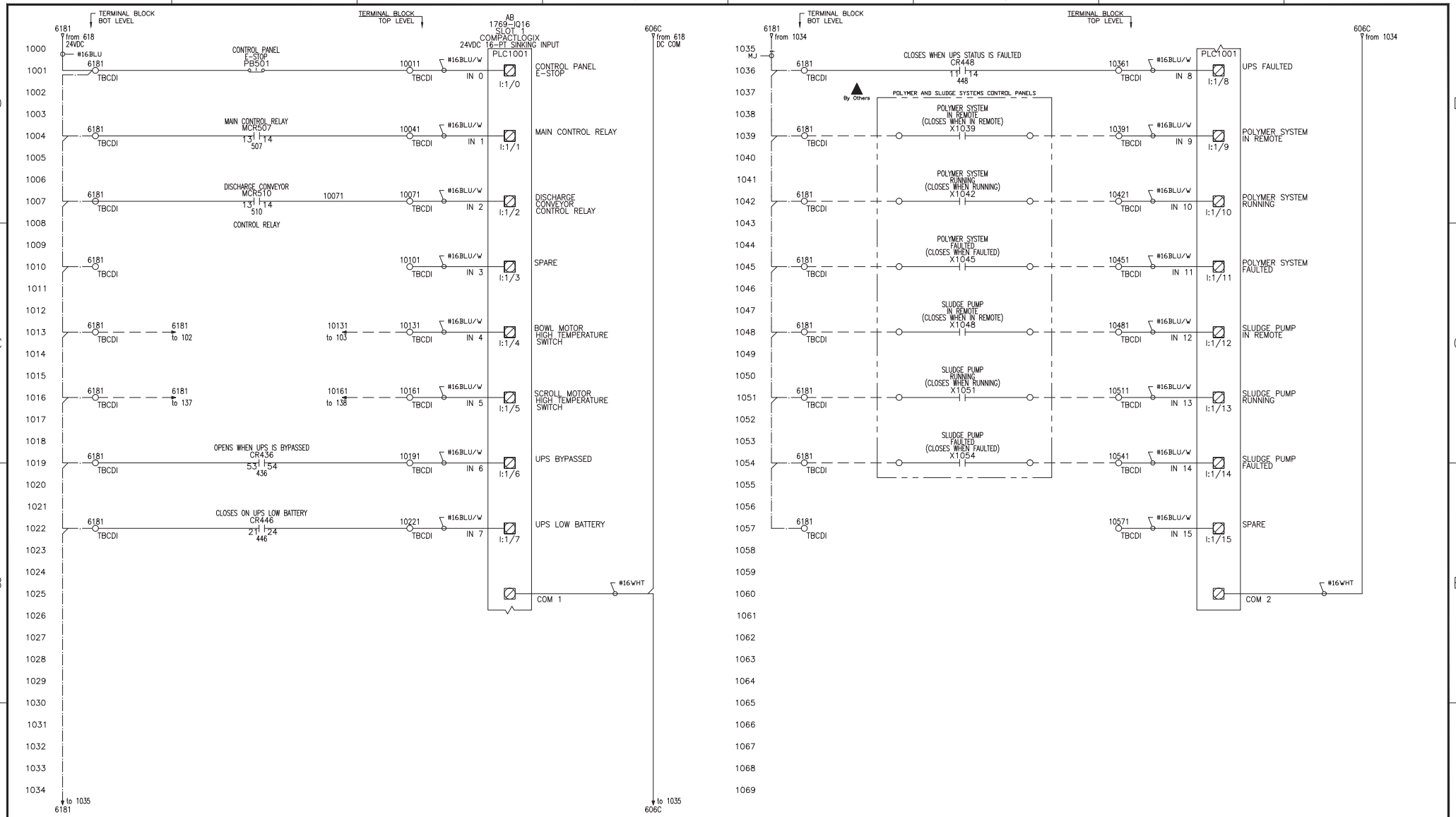

1010 COMMERCIAL BLVD. SOUTH
ARLINGTON, TEXAS 76001
Phone: (817)465-5611
Telefax: (817)472-8589

APPROVED FOR CONSTRUCTION
BY: BJM DATE:
PROJECT No.831476

NOTES

THIS DRAWING IS COPY RIGHTED THIS DRAWING IS A TRADE SECRET AND ONLY ENTRUSTED TO THE RECEIVER FOR HIS MEMORIAL USE. WITHOUT THE STATED WRITTEN CONSENT OF ANDRITZ SEPARATION INC. IT MUST NOT BE COPIED, NOR MADE AVAILABLE TO THIRD PARTIES, INCLUDING COMPETITORS, NOR MADE ACCESSIBLE TO SUCH PARTIES. ANY ILLEGAL USE BY THE RECEIVER OR THIRD PARTIES FOR WHICH HE IS RESPONSIBLE CAN CONSTITUTE A CAUSE FOR LEGAL ACTION. THIS DRAWING MUST BE RETURNED ON REQUEST OF THE COMPANY.

REV	EIR	REVISION	BY	APVD	DATE
1		CERTIFIED	HL	BJM	04/13/18
0		APPROVAL DRAWINGS: INITIAL RELEASE	HL	BJM	04/04/18

ESTIMATED WEIGHT IN LBS:

UNLESS OTHERWISE SPECIFIED: DIMENSIONS ARE IN INCHES FABRICATION TOLERANCES .XXX±.040 ANGLE±1° HOLE±.020 MACHINING TOLERANCES .XXX±.005 ANGLE.5° HOLE±.020 MILL FINISH ALL OVER

THIRD ANGLE PROJECTION

DRAWN BY:	HL	DATE 04/04/18
CHECKED BY:	BJM	DATE 04/04/18
APPROVED BY:	CMP	DATE 04/04/18
LOCATION:		

ANDRITZ SEPARATION INC.
1010 COMMERCIAL BLVD. SOUTH
ARLINGTON, TEXAS 76001
PHONE: (817) 465-5611

TITLE
VEOLIA AGNICO AMARUQ
D4L CENTRIFUGE SKID
BANK 1 SLOT 1 DIGITAL INPUTS

SIZE	DRAWING NUMBER	REV
B	E831476-S10	1

PREV. SHEET: 19 | NEXT SHEET: 21 | SHEET 20 OF 34

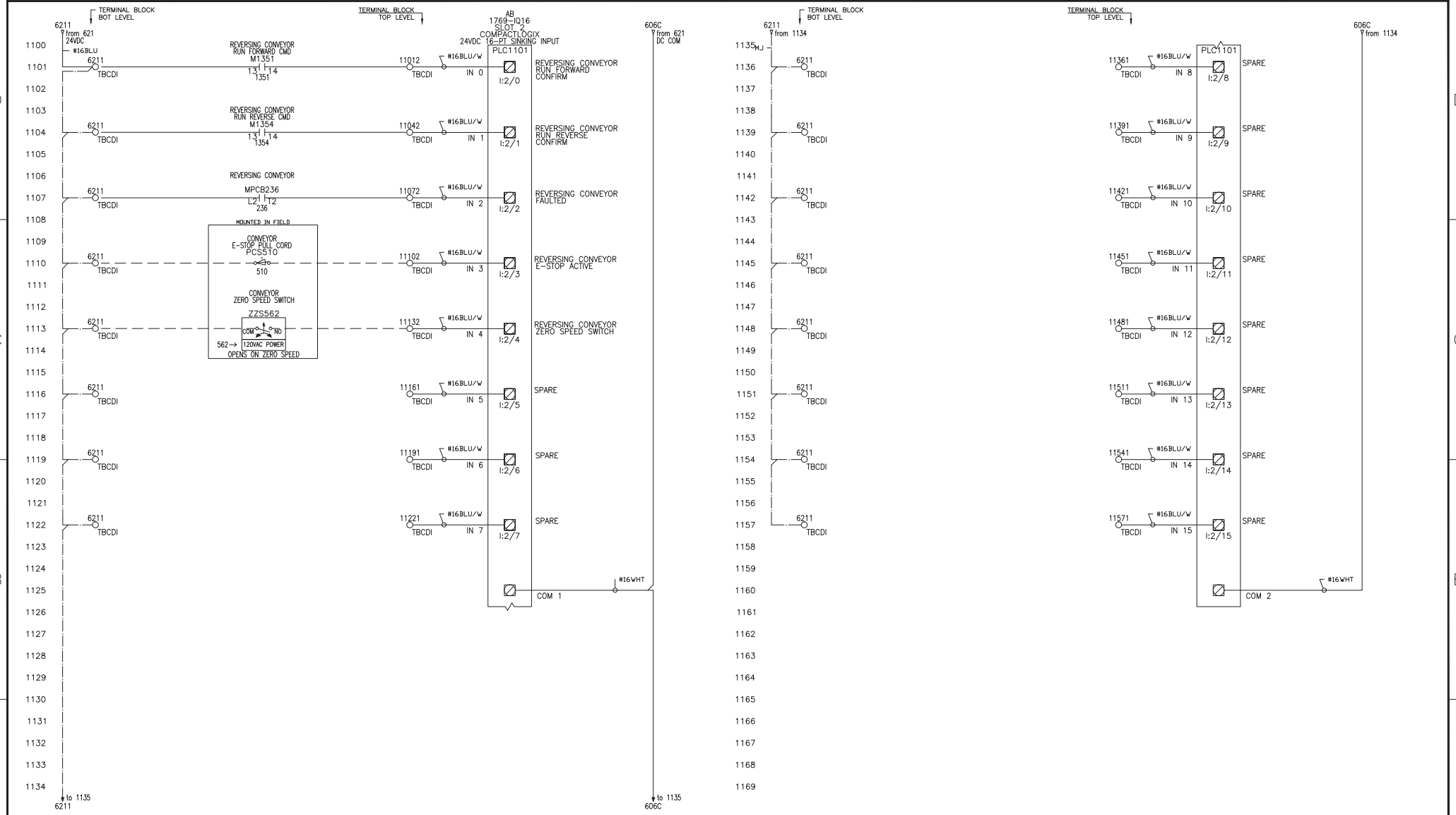

NOTES

THIS DRAWING IS COPY RIGHTED THIS DRAWING IS A TRADE SECRET AND ONLY ENTRUSTED TO THE RECEIVER FOR HIS PERSONAL USE, WITHOUT THE EXPRESS WRITTEN CONSENT OF ANDRITZ SEPARATION INC. IT MUST NOT BE COPIED, NOR MADE AVAILABLE TO THIRD PARTIES, INCLUDING COMPETITORS, NOR MADE ACCESSIBLE TO SUCH PARTIES. ANY ILLEGAL USE BY THE RECEIVER OR THIRD PARTIES FOR WHICH HE IS RESPONSIBLE CAN CONSTITUTE A CAUSE FOR LEGAL ACTION. THIS DRAWING MUST BE RETURNED ON REQUEST OF THE COMPANY.

REV	BY	REVISION	BY	APVD	DATE
1		CERTIFIED	HL	BJM	04/13/18
0		APPROVAL DRAWINGS: INITIAL RELEASE	HL	BJM	04/04/18

ESTIMATED WEIGHT IN LBS:

UNLESS OTHERWISE SPECIFIED: DIMENSIONS ARE IN INCHES FABRICATION TOLERANCES .XXX±.040 ANG±1° HOLE±.020 MACHINING TOLERANCES .XXX±.005 ANG±.5° HOLE±.020 MILL FINISH ALL OVER

THIRD ANGLE PROJECTION

DRAWN BY:	HL	DATE 04/04/18
CHECKED BY:	BJM	DATE 04/04/18
APPROVED BY:	CMP	DATE 04/04/18

LOCATION:

ANDRITZ SEPARATION INC.
1010 COMMERCIAL BLVD. SOUTH
ARLINGTON, TEXAS 76001
PHONE: (817) 465-5611

TITLE
VEOLIA AGNICO AMARUQ
D4L CENTRIFUGE SKID
BANK 1 SLOT 2 DIGITAL INPUTS

SIZE	DRAWING NUMBER	REV
B	E831476-S11	1

PREV. SHEET: 20 | NEXT SHEET: 22 | SHEET 21 OF 34

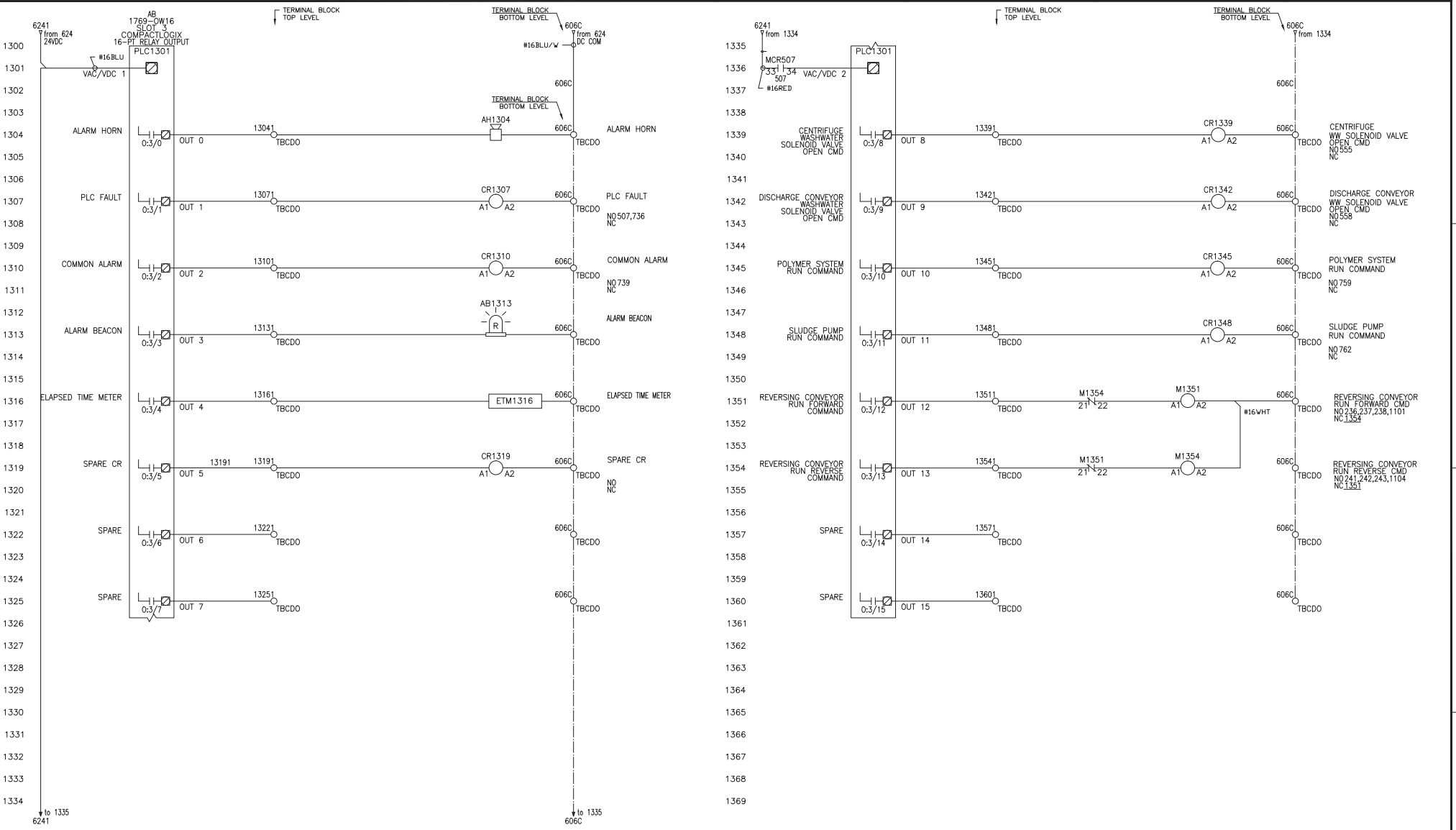

1010 COMMERCIAL BLVD. SOUTH
ARLINGTON, TEXAS 76001
Phone: (817)465-5611
Telefax: (817)472-8589

APPROVED FOR CONSTRUCTION
BY: BJM DATE:
PROJECT No. 831476

NOTES

THIS DRAWING IS COPY RIGHTED. THIS DRAWING IS A TRADE SECRET AND ONLY ENTRUSTED TO THE RECEIVER FOR HIS PERSONAL USE. WITHOUT THE STATED WRITTEN CONSENT OF ANDRITZ SEPARATION INC. IT MUST NOT BE COPIED, NOR MADE AVAILABLE TO THIRD PARTIES, INCLUDING COMPETITORS, NOR MADE ACCESSIBLE TO SUCH PARTIES. ANY ILLEGAL USE BY THE RECEIVER OR THIRD PARTIES FOR WHICH HE IS RESPONSIBLE CAN CONSTITUTE A CAUSE FOR LEGAL ACTION. THIS DRAWING MUST BE RETURNED ON REQUEST OF THE COMPANY.

REV	EIR	REVISION	BY	APVD	DATE
1		CERTIFIED	HL	BJM	04/13/18
0		APPROVAL DRAWINGS: INITIAL RELEASE	HL	BJM	04/04/18

ESTIMATED WEIGHT IN LBS:

UNLESS OTHERWISE SPECIFIED: DIMENSIONS ARE IN INCHES. FABRICATION TOLERANCES .XX±0.040 ANG±1° HOLE±.020. MACHINING TOLERANCES .XXX±.005 ANG±.5° HOLE±.020. MILL FINISH ALL OVER.

THIRD ANGLE PROJECTION

DRAWN BY:	HL	DATE 04/04/18
CHECKED BY:	BJM	DATE 04/04/18
APPROVED BY:	CMP	DATE 04/04/18
LOCATION:		

ANDRITZ SEPARATION INC.
1010 COMMERCIAL BLVD. SOUTH
ARLINGTON, TEXAS 76001
PHONE: (817) 465-5611

TITLE
VEOLIA AGNICO AMARUQ
D4L CENTRIFUGE SKID
BANK 1 SLOT 3 DIGITAL OUTPUTS

SIZE	DRAWING NUMBER	REV
B	E831476-S13	1

PREV. SHEET: 21 | NEXT SHEET: 23 | SHEET 22 OF 34

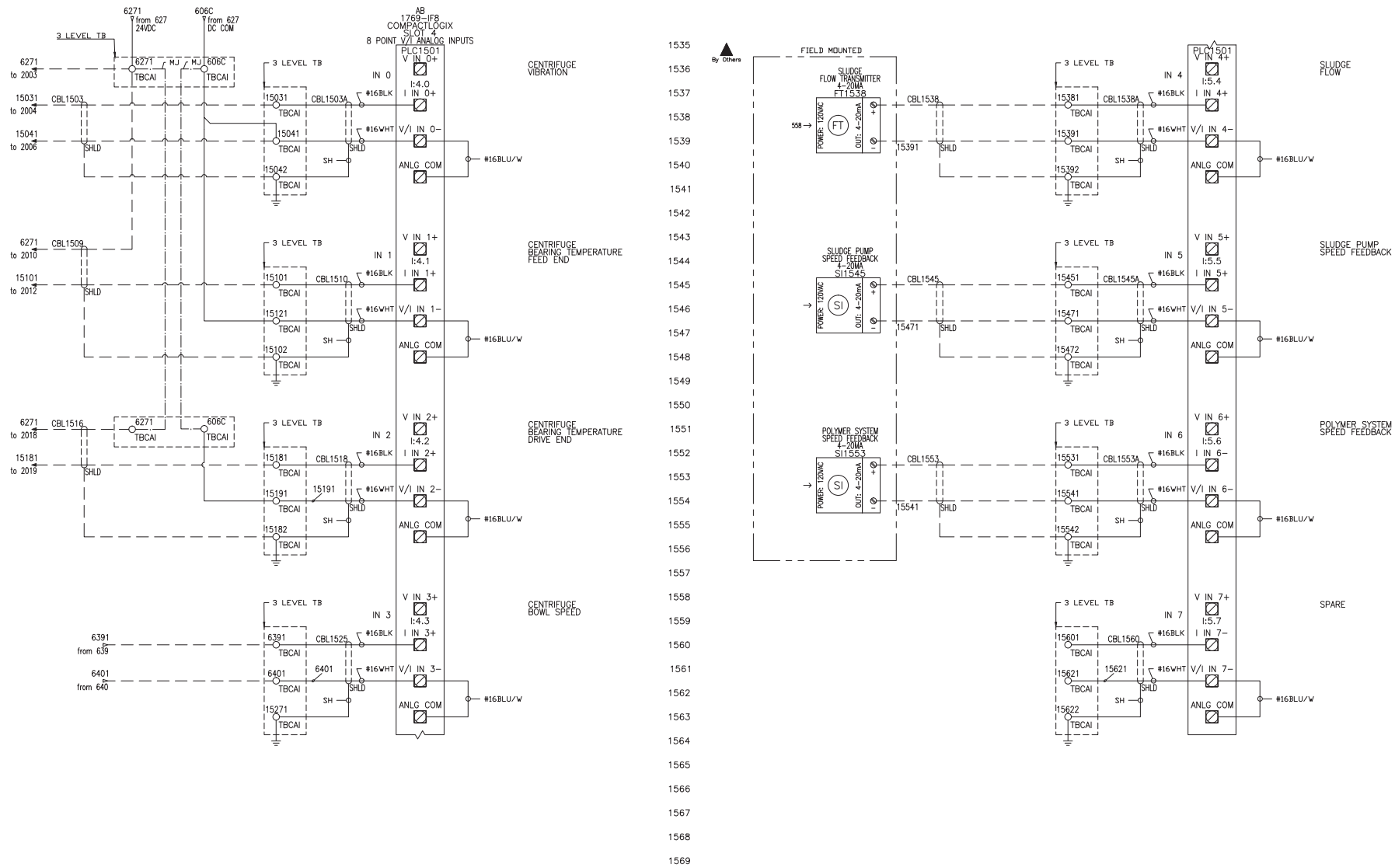

1010 COMMERCIAL BLVD. SOUTH
ARLINGTON, TEXAS 76001
Phone: (817)465-5611
Telefax: (817)472-8589

APPROVED FOR CONSTRUCTION
BY: BJM DATE:
PROJECT No. 831476

NOTES

THIS DRAWING IS COPY RIGHTED THIS DRAWING IS A TRADE SECRET AND ONLY ENTRUSTED TO THE RECEIVER FOR HIS PERSONAL USE. WITHOUT THE SIGNED WRITTEN CONSENT OF ANDRITZ SEPARATION INC., IT MUST NOT BE COPIED NOR MADE AVAILABLE TO THIRD PARTIES, INCLUDING COMPETITORS, NOR MADE ACCESSIBLE TO SUCH PARTIES. ANY ILLEGAL USE BY THE RECEIVER OR THIRD PARTIES FOR WHICH HE IS RESPONSIBLE CAN CONSTITUTE A CAUSE FOR LEGAL ACTION. THIS DRAWING MUST BE RETURNED ON REQUEST OF THE COMPANY.

REV	EIR	REVISION	BY	APVD	DATE
1		CERTIFIED	HL	BJM	04/13/18
0		APPROVAL DRAWINGS: INITIAL RELEASE	HL	BJM	04/04/18

ESTIMATED WEIGHT IN LBS:

UNLESS OTHERWISE SPECIFIED: DIMENSIONS ARE IN INCHES FABRICATION TOLERANCES .XXX±.040 ANG±1° HOLE±.020 MACHINING TOLERANCES .XXX±.005 ANG±.5° HOLE±.020 MILL FINISH ALL OVER

THIRD ANGLE PROJECTION

DRAWN BY: HL	DATE 04/04/18	
CHECKED BY: BJM	DATE 04/04/18	
APPROVED BY: CMP	DATE 04/04/18	
LOCATION:		

ANDRITZ SEPARATION INC.
1010 COMMERCIAL BLVD. SOUTH
ARLINGTON, TEXAS 76001
PHONE: (817) 465-5611

TITLE
VEOLIA AGNICO AMARUQ
D4L CENTRIFUGE SKID
BANK 1 SLOT 4 ANALOG INPUTS

SIZE B | DRAWING NUMBER E831476-S15 | REV 1

PREV. SHEET: 22 | NEXT SHEET: 24 | SHEET 23 OF 34

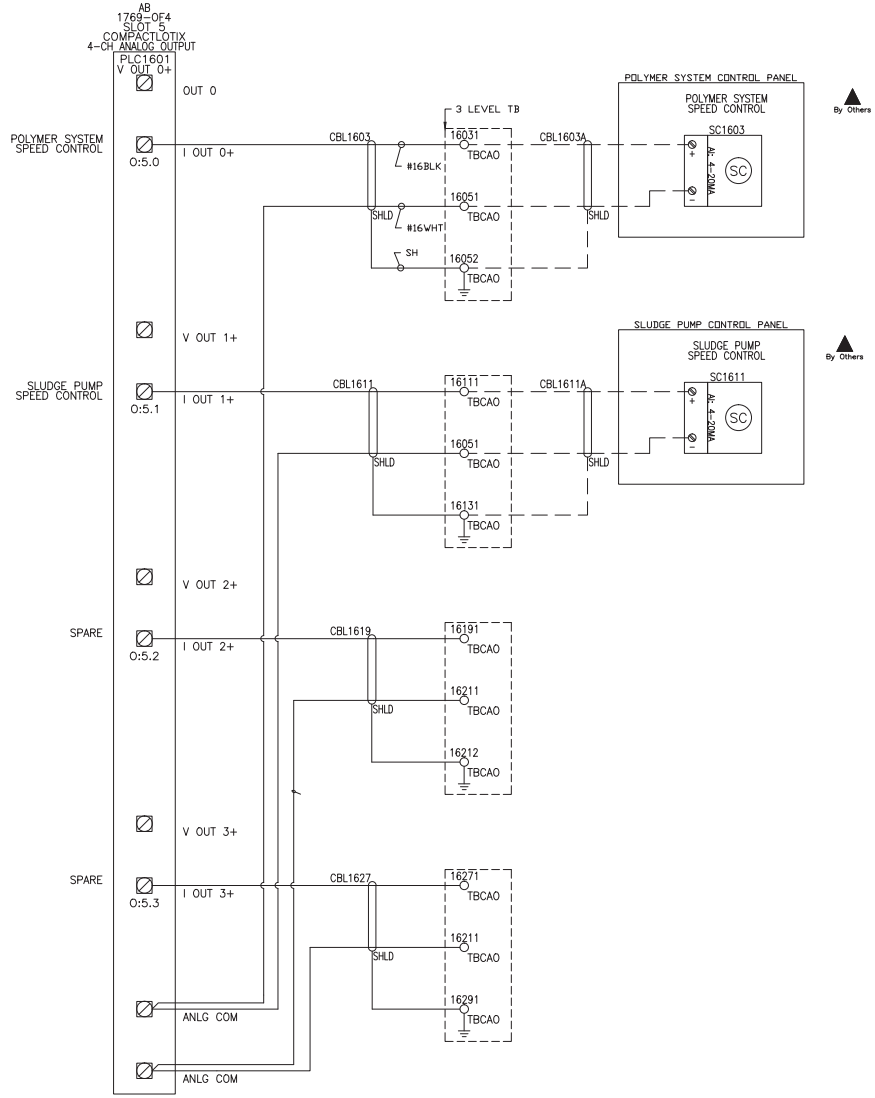

1010 COMMERCIAL BLVD. SOUTH
ARLINGTON, TEXAS 76001
Phone: (817)465-5611
Telefax: (817)472-8589

APPROVED FOR CONSTRUCTION
BY: BJM DATE:
PROJECT No.831476

NOTES

THIS DRAWING IS COPY RIGHTED THIS DRAWING IS A TRADE SECRET AND ONLY ENTRUSTED TO THE RECEIVER FOR HIS PERSONAL USE. WITHOUT THE STATED WRITTEN CONSENT OF ANDRITZ SEPARATION INC. IT MUST NOT BE COPIED, NOR MADE AVAILABLE TO THIRD PARTIES, INCLUDING COMPETITORS, NOR MADE ACCESSIBLE TO SUCH PARTIES. ANY ILLEGAL USE BY THE RECEIVER OR THIRD PARTIES FOR WHICH HE IS RESPONSIBLE CAN CONSTITUTE A CAUSE FOR LEGAL ACTION. THIS DRAWING MUST BE RETURNED ON REQUEST OF THE COMPANY.

REV	EIR	REVISION	BY	APVD	DATE
1		CERTIFIED	HL	BJM	04/13/18
0		APPROVAL DRAWINGS: INITIAL RELEASE	HL	BJM	04/04/18

ESTIMATED WEIGHT IN LBS:

UNLESS OTHERWISE SPECIFIED:
DIMENSIONS ARE IN INCHES
FABRICATION TOLERANCES
.XXX±.040 ANG±1° HOLE±.020
MACHINING TOLERANCES
.XXX±.005 ANG±.5° HOLE±.020
MILL FINISH ALL OVER

THIRD ANGLE PROJECTION

DRAWN BY:	HL	DATE 04/04/18
CHECKED BY:	BJM	DATE 04/04/18
APPROVED BY:	CMP	DATE 04/04/18

LOCATION:

ANDRITZ SEPARATION INC.
1010 COMMERCIAL BLVD. SOUTH
ARLINGTON, TEXAS 76001
PHONE: (817) 465-5611

TITLE
VEOLIA AGNICO AMARUQ
D4L CENTRIFUGE SKID
BANK 1 SLOT 5 ANALOG OUTPUTS

SIZE	DRAWING NUMBER	REV
B	E831476-S16	1

PREV. SHEET: 23 | NEXT SHEET: 25 | SHEET 24 OF 34

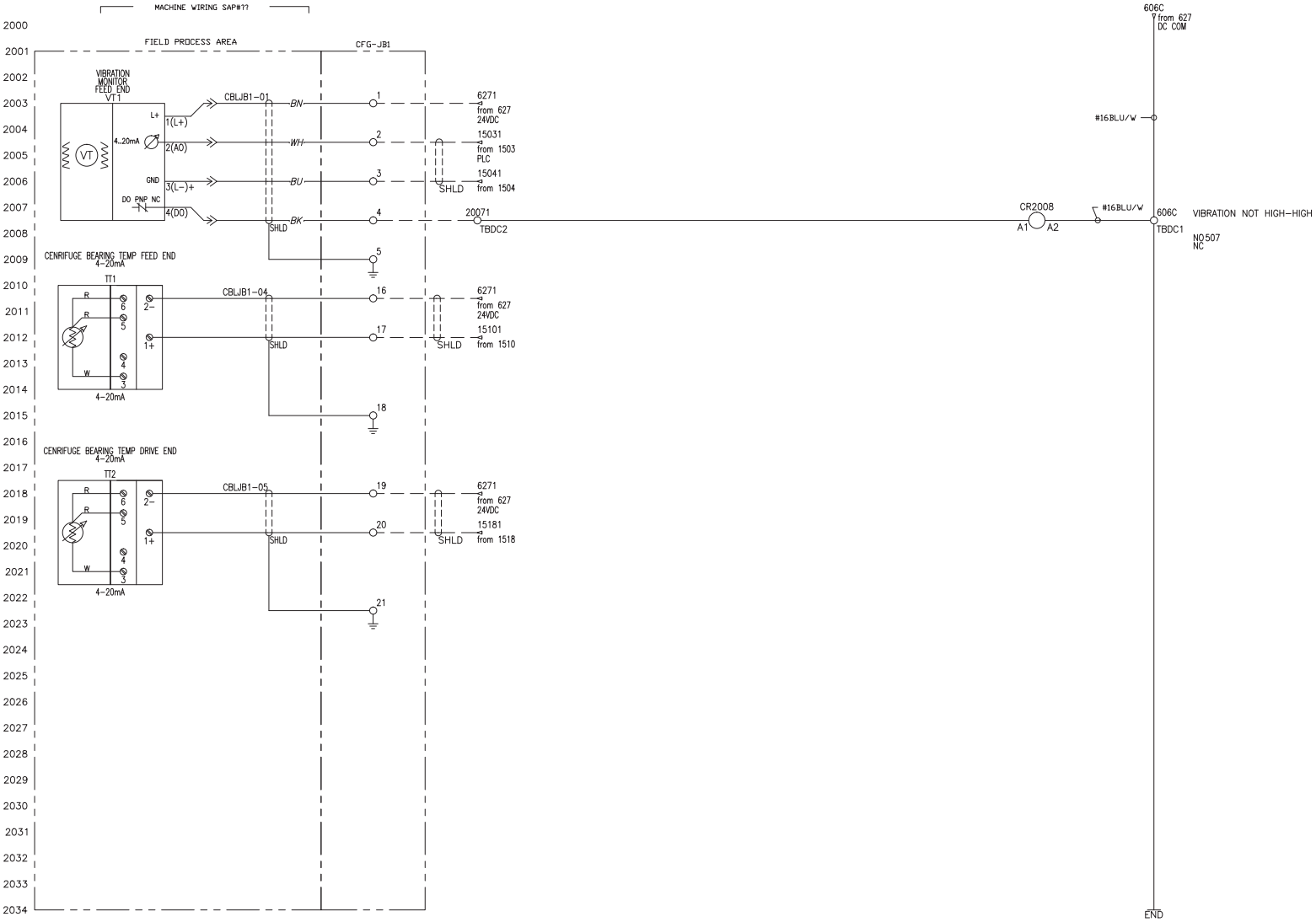

1		CERTIFIED	HL	BJM	04/13/18
0		APPROVAL DRAWINGS: INITIAL RELEASE	HL	BJM	04/04/18
REV	EIR	REVISION	BY	APVD	DATE

1010 COMMERCIAL BLVD. SOUTH
ARLINGTON, TEXAS 76001
Phone: (817)465-5611
Telefax: (817)472-8589

APPROVED FOR CONSTRUCTION
BY: BJM DATE:
PROJECT No.831476

NOTES

THIS DRAWING IS COPY RIGHTED THIS DRAWING IS A TRADE SECRET AND ONLY ENTRUSTED TO THE RECEIVER FOR HIS MECHANICAL USE. WITHOUT THE STATED WRITTEN CONSENT OF ANDRITZ SEPARATION INC. IT MUST NOT BE COPIED, NOR MADE AVAILABLE TO THIRD PARTIES, INCLUDING COMPETITORS, NOR MADE ACCESSIBLE TO SUCH PARTIES. ANY ILLEGAL USE BY THE RECEIVER OR THIRD PARTIES FOR WHICH HE IS RESPONSIBLE CAN CONSTITUTE A CAUSE FOR LEGAL ACTION. THIS DRAWING MUST BE RETURNED ON REQUEST OF THE COMPANY.

ESTIMATED WEIGHT IN LBS:

UNLESS OTHERWISE SPECIFIED: DIMENSIONS ARE IN INCHES
FABRICATION TOLERANCES .XXX±.040 ANG±1° HOLE±.020
MACHINING TOLERANCES .XXX±.005 ANG±.5° HOLE±.020
MILL FINISH ALL OVER

THIRD ANGLE PROJECTION

DRAWN BY: HL	DATE 04/04/18	
CHECKED BY: BJM	DATE 04/04/18	
APPROVED BY: CMP	DATE 04/04/18	
LOCATION:		

ANDRITZ SEPARATION INC.
1010 COMMERCIAL BLVD. SOUTH
ARLINGTON, TEXAS 76001
PHONE: (817) 465-5611

TITLE
VEOLIA AGNICO AMARUQ
D4L CENTRIFUGE SKID
FIELD DEVICES

SIZE	DRAWING NUMBER	REV
B	E831476-S20	1

PREV. SHEET: 24 | NEXT SHEET: 26 | SHEET 25 OF 34

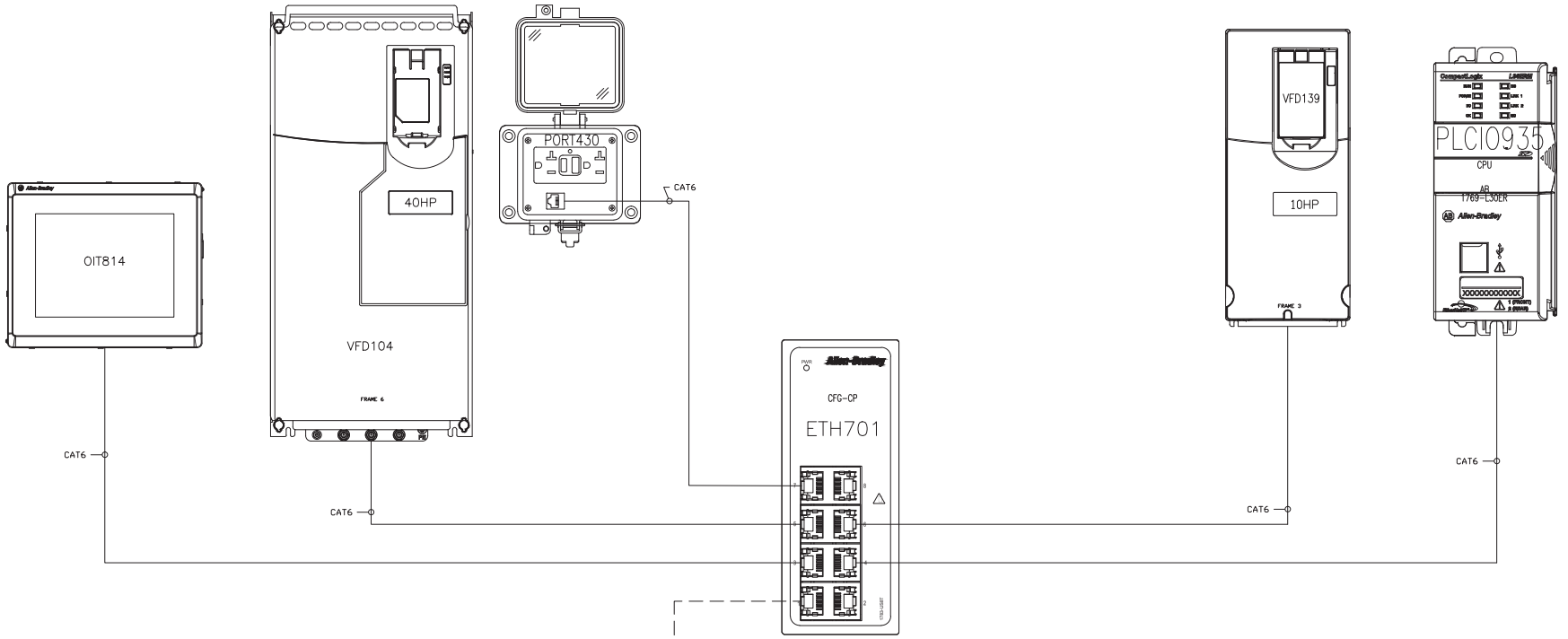

1010 COMMERCIAL BLVD. SOUTH
ARLINGTON, TEXAS 76001
Phone: (817)465-5611
Telefax: (817)472-8589

APPROVED FOR CONSTRUCTION
BY: BJM DATE:
PROJECT No.831476

NOTES

THIS DRAWING IS COPY RIGHTED THIS DRAWING IS A TRADE SECRET AND ONLY ENTRUSTED TO THE RECEIVER FOR HIS MEDICAL USE. WITHOUT THE STATED WRITTEN CONSENT OF ANDRITZ SEPARATION INC. IT MUST NOT BE COPIED, NOR MADE AVAILABLE TO THIRD PARTIES, INCLUDING COMPETITORS, NOR MADE ACCESSIBLE TO SUCH PARTIES. ANY ILLEGAL USE BY THE RECEIVER OR THIRD PARTIES FOR WHICH HE IS RESPONSIBLE CAN CONSTITUTE A CAUSE FOR LEGAL ACTION. THIS DRAWING MUST BE RETURNED ON REQUEST OF THE COMPANY.

REV	EIR	REVISION	BY	APVD	DATE
1		CERTIFIED	HL	BJM	04/13/18
0		APPROVAL DRAWINGS: INITIAL RELEASE	HL	BJM	04/04/18

ESTIMATED WEIGHT IN LBS:

UNLESS OTHERWISE SPECIFIED:
DIMENSIONS ARE IN INCHES
FABRICATION TOLERANCES
.XXX±.040 ANG±1° HOLE±.020
MACHINING TOLERANCES
.XXX±.005 ANG±.5° HOLE±.020
MILL FINISH ALL OVER

THIRD ANGLE PROJECTION

DRAWN BY:	HL	DATE 04/04/18
CHECKED BY:	BJM	DATE 04/04/18
APPROVED BY:	CMP	DATE 04/04/18
LOCATION:		

ANDRITZ SEPARATION INC.
1010 COMMERCIAL BLVD. SOUTH
ARLINGTON, TEXAS 76001
PHONE: (817) 465-5611

TITLE: VEOLIA AGNICO AMARUQ
D4L CENTRIFUGE SKID
NETWORK ARCHITECTURE

SIZE: B | DRAWING NUMBER: E831476-N1 | REV: 1

PREV. SHEET: 25 | NEXT SHEET: 27 | SHEET 26 OF 34

CUSTOMER FURNISHED SWITCHGEAR/PANELBOARD	CENTRIFUGE CONTROL PANEL (–CP)	FIELD PROCESS AREA (–FLD)	NOTES

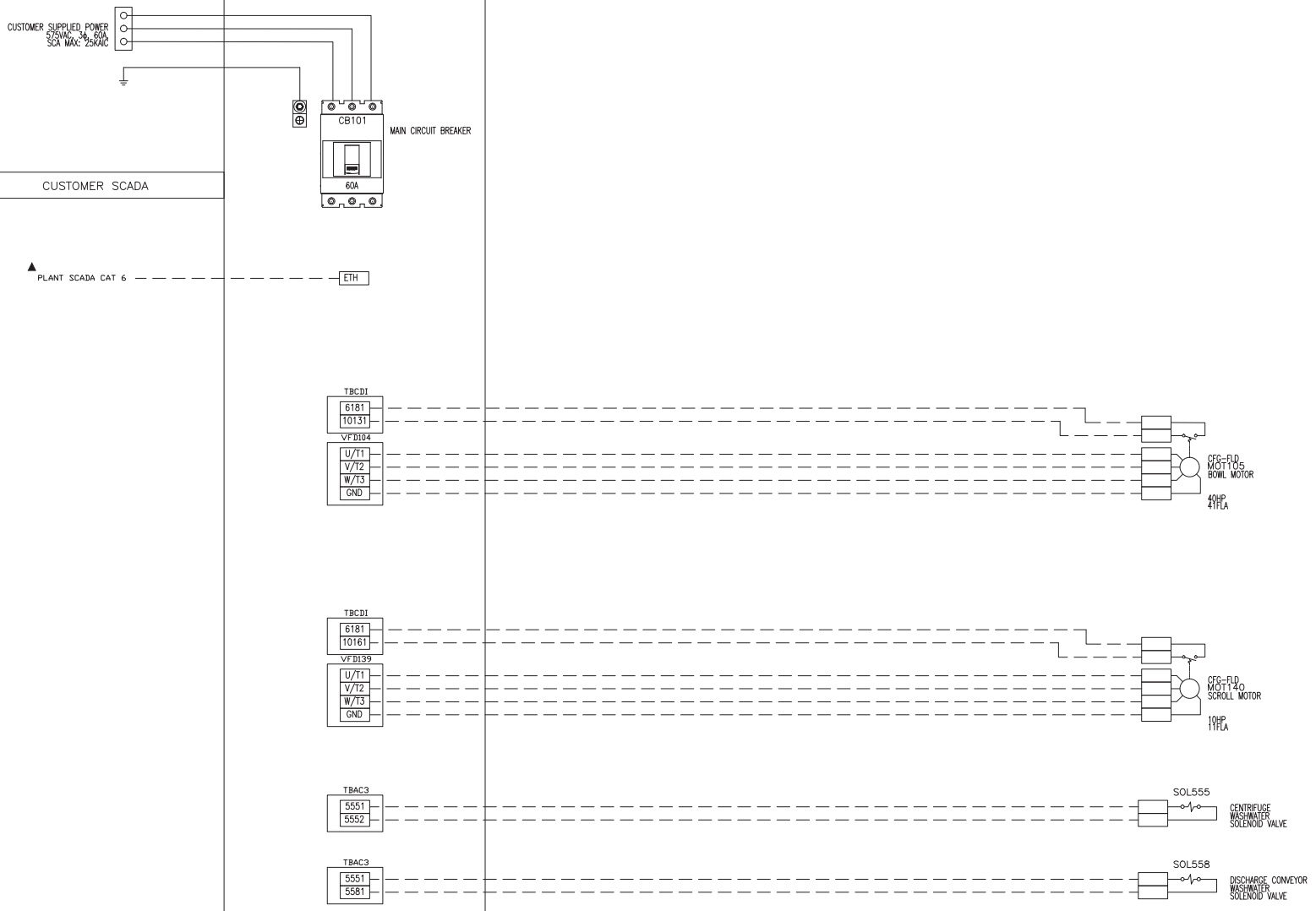

CONTROL PANEL MUST BE SUPPLIED WITH POWER SOURCE GROUND FOR PROPER OPERATION OF INSTRUMENTS.

1. MOTOR GROUND WIRE MUST GO DIRECTLY TO VFD GROUND TERMINAL (PE).
2. THIS POINT TO POINT DRAWING IS DERIVED FROM PROJECT SCHEMATICS. REFER TO PROJECT SCHEMATICS FOR FURTHER CLARIFICATION.
3. IF TERMINAL NUMBERS ARE KNOWN FOR EQUIPMENT SUPPLIED BY OTHERS. PLEASE PROVIDE NUMBERS FOR COMPLETION OF DRAWING.

ANDRITZ SEPARATION INC.
1010 COMMERCIAL BLVD. SOUTH
ARLINGTON, TEXAS 76001
Phone: (817)465-5611
Telefax: (817)472-8589

APPROVED FOR CONSTRUCTION
BY: BJM DATE:
PROJECT No.831476

NOTES

THIS DRAWING IS COPY RIGHTED THIS DRAWING IS A TRADE SECRET AND ONLY ENTRUSTED TO THE RECEIVER FOR HIS PERSONAL USE WITHOUT THE STATED WRITTEN CONSENT OF ANDRITZ SEPARATION INC. IT MUST NOT BE COPIED, NOR MADE AVAILABLE TO THIRD PARTIES, INCLUDING COMPETITORS, NOR MADE ACCESSIBLE TO SUCH PARTIES. ANY ILLEGAL USE BY THE RECEIVER OR THIRD PARTIES FOR WHICH HE IS RESPONSIBLE CAN CONSTITUTE A CAUSE FOR LEGAL ACTION. THIS DRAWING MUST BE RETURNED ON REQUEST OF THE COMPANY.

REV	EIR	REVISION	BY	APVD	DATE
1		CERTIFIED	HL	BJM	04/13/18
0		APPROVAL DRAWINGS: INITIAL RELEASE	HL	BJM	04/04/18

ESTIMATED WEIGHT IN LBS:

UNLESS OTHERWISE SPECIFIED:
DIMENSIONS ARE IN INCHES
FABRICATION TOLERANCES
.XXX±.040 ANG±1° HOLE±.020
MACHINING TOLERANCES
.XXX±.005 ANG±.5° HOLE±.020
MILL FINISH ALL OVER

THIRD ANGLE PROJECTION

DRAWN BY:	HL	DATE 04/04/18
CHECKED BY:	BJM	DATE 04/04/18
APPROVED BY:	CMP	DATE 04/04/18
LOCATION:		

ANDRITZ SEPARATION INC.
1010 COMMERCIAL BLVD. SOUTH
ARLINGTON, TEXAS 76001
PHONE: (817) 465-5611

TITLE
VEOLIA AGNICO AMARUQ
D4L CENTRIFUGE SKID
POINT TO POINT (CENTRIFUGE LOADS)

SIZE	DRAWING NUMBER	REV
B	E831476–PP1	1

PREV. SHEET:	NEXT SHEET:	SHEET OF
26	28	27 34

CUSTOMER SCADA	CENTRIFUGE CONTROL PANEL (–CP)	INSTRUMENTATION JB (CFG–JB1)	FIELD PROCESS AREA (–FLD) (SEE MACHINE WIRING DOCUMENTATION)	NOTES

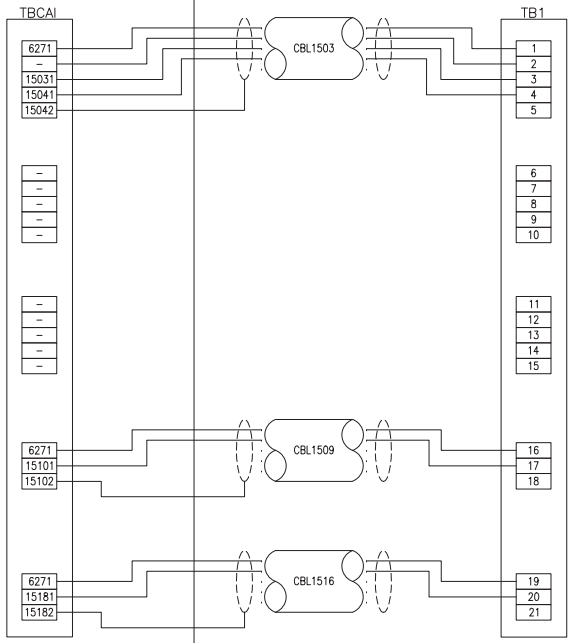

SAP#XXXXXXX
STANDARD MACHINE WIRING

1010 COMMERCIAL BLVD. SOUTH
ARLINGTON, TEXAS 76001
Phone: (817)465-5611
Telefax: (817)472-8589

APPROVED FOR CONSTRUCTION
BY: BJM DATE:
PROJECT No.831476

NOTES

THIS DRAWING IS COPY RIGHTED THIS DRAWING IS A TRADE SECRET AND ONLY ENTRUSTED TO THE RECEIVER FOR HIS MEMORIAL USE. WITHOUT THE STATED WRITTEN CONSENT OF ANDRITZ SEPARATION INC. IT MUST NOT BE COPIED, NOR MADE AVAILABLE TO THIRD PARTIES, INCLUDING COMPETITORS, NOR MADE ACCESSIBLE TO SUCH PARTIES. ANY ILLEGAL USE BY THE RECEIVER OR THIRD PARTIES FOR WHICH HE IS RESPONSIBLE CAN CONSTITUTE A CAUSE FOR LEGAL ACTION. THIS DRAWING MUST BE RETURNED ON REQUEST OF THE COMPANY.

REV	EIR	REVISION	BY	APVD	DATE
1		CERTIFIED	HL	BJM	04/13/18
0		APPROVAL DRAWINGS: INITIAL RELEASE	HL	BJM	04/04/18

ESTIMATED WEIGHT IN LBS:

UNLESS OTHERWISE SPECIFIED:
DIMENSIONS ARE IN INCHES
FABRICATION TOLERANCES
.XXX±.040 ANG±1° HOLE±.020
MACHINING TOLERANCES
.XXX±.005 ANG±.5° HOLE±.020
MILL FINISH ALL OVER

THIRD ANGLE PROJECTION

DRAWN BY:	HL	DATE 04/04/18
CHECKED BY:	BJM	DATE 04/04/18
APPROVED BY:	CMP	DATE 04/04/18

LOCATION:

ANDRITZ SEPARATION INC.
1010 COMMERCIAL BLVD. SOUTH
ARLINGTON, TEXAS 76001
PHONE: (817) 465-5611

TITLE
VEOLIA AGNICO AMARUQ
D4L CENTRIFUGE SKID
POINT TO POINT INSTRUMENTATION JB

SIZE	DRAWING NUMBER	REV
B	E831476–PP2	1

PREV. SHEET:	NEXT SHEET:	SHEET OF
27	29	28 34

CENTRIFUGE CONTROL PANEL (–CP)	FIELD PROCESS AREA (–FLD)	NOTES

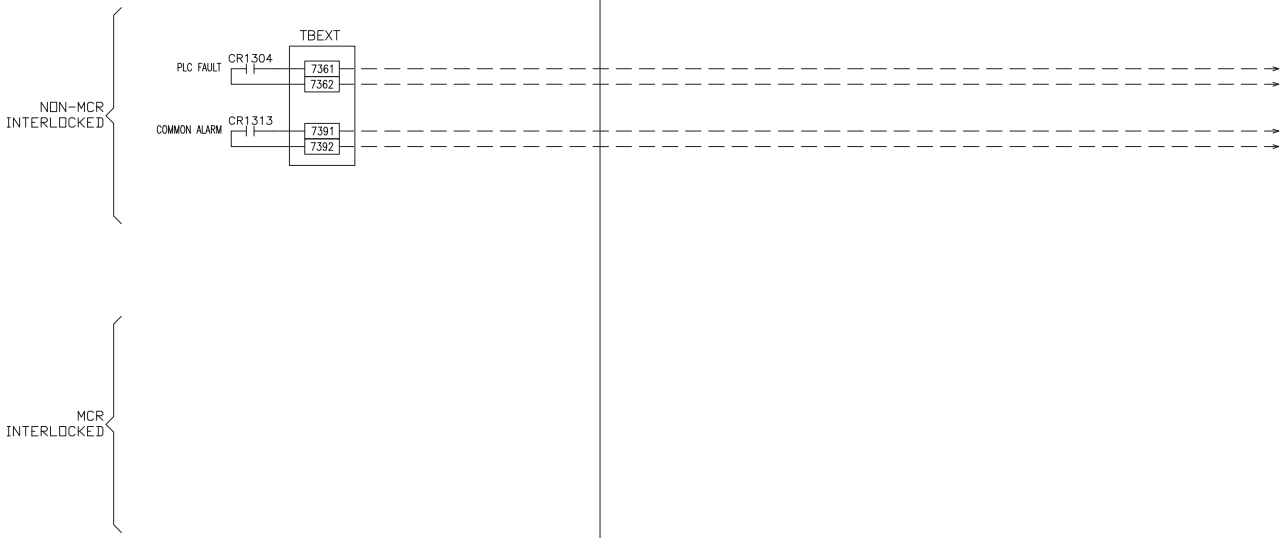

ANDRITZ SEPARATION INC.
1010 COMMERCIAL BLVD. SOUTH
ARLINGTON, TEXAS 76001
Phone: (817)465–5611
Telefax: (817)472–8589

APPROVED FOR CONSTRUCTION
BY: BJM DATE:
PROJECT No. 831476

NOTES

THIS DRAWING IS COPY RIGHTED THIS DRAWING IS A TRADE SECRET AND ONLY ENTRUSTED TO THE RECEIVER FOR HIS PERSONAL USE. WITHOUT THE STATED WRITTEN CONSENT OF ANDRITZ SEPARATION INC. IT MUST NOT BE COPIED, NOR MADE AVAILABLE TO THIRD PARTIES, INCLUDING COMPETITORS, NOR MADE ACCESSIBLE TO SUCH PARTIES. ANY ILLEGAL USE BY THE RECEIVER OR THIRD PARTIES FOR WHICH HE IS RESPONSIBLE CAN CONSTITUTE A CAUSE FOR LEGAL ACTION. THIS DRAWING MUST BE RETURNED ON REQUEST OF THE COMPANY.

REV	EIR	REVISION	BY	APVD	DATE
1		CERTIFIED	HL	BJM	04/13/18
0		APPROVAL DRAWINGS: INITIAL RELEASE	HL	BJM	04/04/18

ESTIMATED WEIGHT IN LBS:

UNLESS OTHERWISE SPECIFIED:
DIMENSIONS ARE IN INCHES
FABRICATION TOLERANCES
.XXX±.040 ANG±1° HOLE±.020
MACHINING TOLERANCES
.XXX±.005 ANG±.5° HOLE±.020
MILL FINISH ALL OVER

THIRD ANGLE PROJECTION

DRAWN BY:	HL	DATE 04/04/18
CHECKED BY:	BJM	DATE 04/04/18
APPROVED BY:	CMP	DATE 04/04/18

LOCATION:

ANDRITZ SEPARATION INC.
1010 COMMERCIAL BLVD. SOUTH
ARLINGTON, TEXAS 76001
PHONE: (817) 465–5611

TITLE
VEOLIA AGNICO AMARUQ
D4L CENTRIFUGE SKID
POINT TO POINT (CONT FOR CUST USE)

SIZE	DRAWING NUMBER	REV
B	E831476–PP3	1

PREV. SHEET:	NEXT SHEET:	SHEET OF
28	30	29 34

CENTRIFUGE CONTROL PANEL (-CP)

FIELD PROCESS AREA (-FLD)

NOTES

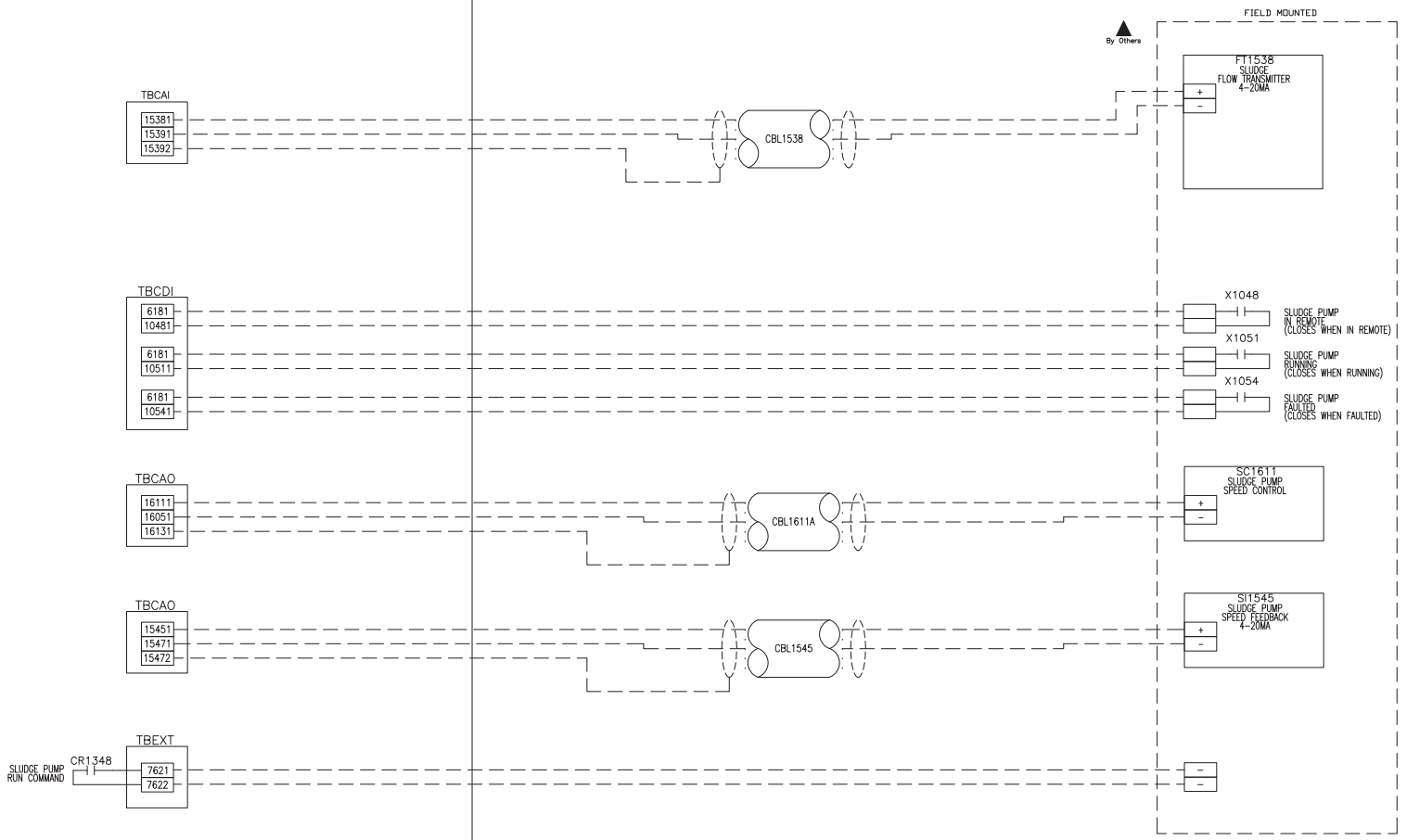

1010 COMMERCIAL BLVD. SOUTH
ARLINGTON, TEXAS 76001
Phone: (817)465-5611
Telefax: (817)472-8589

APPROVED FOR CONSTRUCTION

BY: BJM DATE:

PROJECT No.831476

NOTES

THIS DRAWING IS COPY RIGHTED THIS DRAWING IS A TRADE SECRET AND ONLY ENTRUSTED TO THE RECEIVER FOR HIS PERSONAL USE, WITHOUT THE STATED WRITTEN CONSENT OF ANDRITZ SEPARATION INC. IT MUST NOT BE COPIED, NOR MADE AVAILABLE TO THIRD PARTIES, INCLUDING COMPETITORS, NOR MADE ACCESSIBLE TO SUCH PARTIES. ANY ILLEGAL USE BY THE RECEIVER OR THIRD PARTIES FOR WHICH HE IS RESPONSIBLE CAN CONSTITUTE A CAUSE FOR LEGAL ACTION. THIS DRAWING MUST BE RETURNED ON REQUEST OF THE COMPANY.

REV	EIR	REVISION	BY	APVD	DATE
1		CERTIFIED	HL	BJM	04/13/18
0		APPROVAL DRAWINGS: INITIAL RELEASE	HL	BJM	04/04/18

ESTIMATED WEIGHT IN LBS:

UNLESS OTHERWISE SPECIFIED:
DIMENSIONS ARE IN INCHES
FABRICATION TOLERANCES
.XXX±.040 ANG±1° HOLE±.020
MACHINING TOLERANCES
.XXX±.005 ANG±.5° HOLE±.020
MILL FINISH ALL OVER

THIRD ANGLE PROJECTION

DRAWN BY:	HL	DATE 04/04/18
CHECKED BY:	BJM	DATE 04/04/18
APPROVED BY:	CMP	DATE 04/04/18
LOCATION:		

ANDRITZ SEPARATION INC.
1010 COMMERCIAL BLVD. SOUTH
ARLINGTON, TEXAS 76001
PHONE: (817) 465-5611

TITLE
VEOLIA AGNICO AMARUQ
D4L CENTRIFUGE SKID
POINT TO POINT SLUDGE

SIZE	DRAWING NUMBER	REV
B	E831476-PP4	1

PREV. SHEET: 29 | NEXT SHEET: 31 | SHEET 30 OF 34

CENTRIFUGE CONTROL PANEL (-CP)

POLYMER SYSTEM CONTROL PANEL (POL-CP)

NOTES

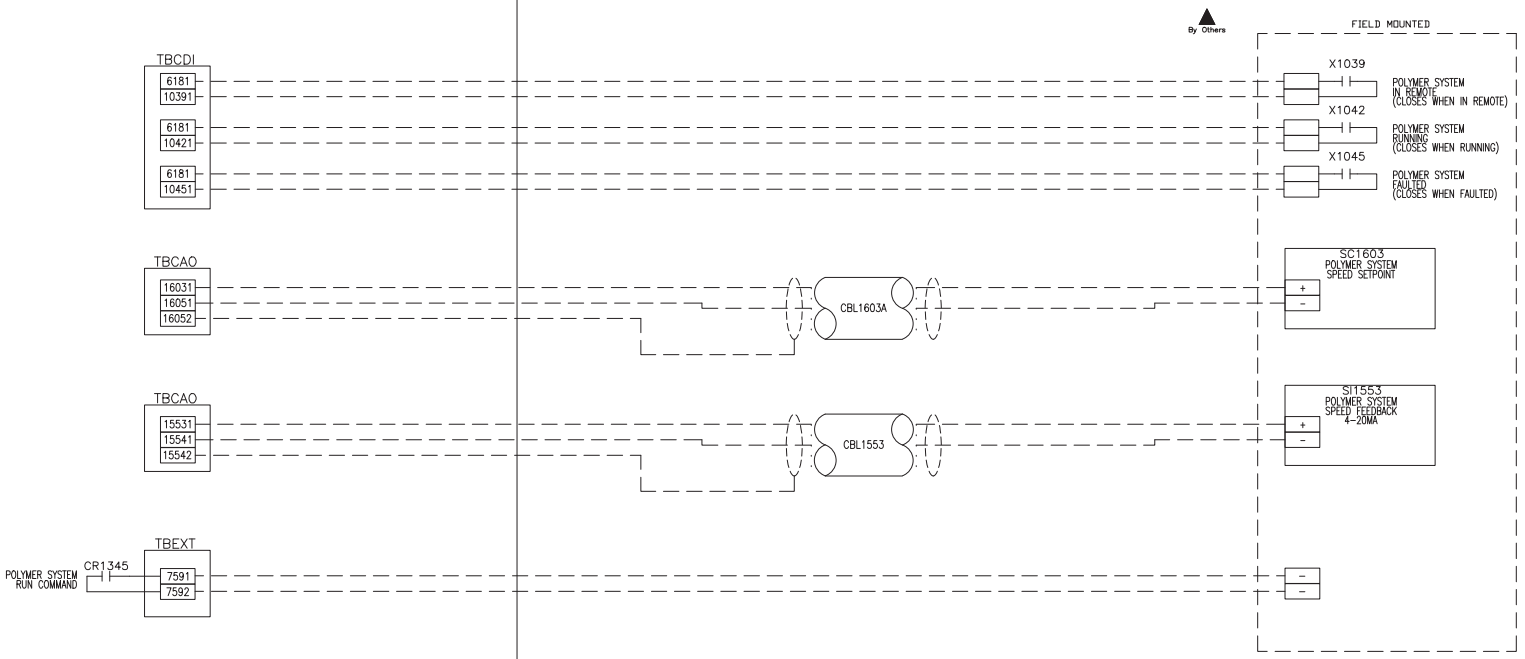

1010 COMMERCIAL BLVD. SOUTH
ARLINGTON, TEXAS 76001
Phone: (817)465-5611
Telefax: (817)472-8589

APPROVED FOR CONSTRUCTION

BY: BJM DATE:

PROJECT No.831476

NOTES

THIS DRAWING IS COPY RIGHTED THIS DRAWING IS A TRADE SECRET AND ONLY ENTRUSTED TO THE RECEIVER FOR HIS PERSONAL USE, WITHOUT THE SIGNED WRITTEN CONSENT OF ANDRITZ SEPARATION INC. IT MUST NOT BE COPIED, LOANED, MADE AVAILABLE TO THIRD PARTIES, DISCLOSING COMPETITORS, NOR MADE ACCESSIBLE TO SUCH PARTIES. ANY ILLEGAL USE BY THE RECEIVER OR THIRD PARTIES FOR WHICH HE IS RESPONSIBLE CAN CONSTITUTE A CAUSE FOR LEGAL ACTION. THIS DRAWING MUST BE RETURNED ON REQUEST OF THE COMPANY.

REV	EIR	REVISION	BY	APVD	DATE
1		CERTIFIED	HL	BJM	04/13/18
0		APPROVAL DRAWINGS: INITIAL RELEASE	HL	BJM	04/04/18

ESTIMATED WEIGHT IN LBS:

UNLESS OTHERWISE SPECIFIED: DIMENSIONS ARE IN INCHES FABRICATION TOLERANCES .XXX±.040 ANG±1° HOLE±.020 MACHINING TOLERANCES .XXX±.005 ANG±.5° HOLE±.020 MILL FINISH ALL OVER

THIRD ANGLE PROJECTION

DRAWN BY:	HL	DATE 04/04/18
CHECKED BY:	BJM	DATE 04/04/18
APPROVED BY:	CMP	DATE 04/04/18

LOCATION:

ANDRITZ SEPARATION INC.
1010 COMMERCIAL BLVD. SOUTH
ARLINGTON, TEXAS 76001
PHONE: (817) 465-5611

TITLE: VEOLIA AGNICO AMARUQ
D4L CENTRIFUGE SKID
POINT TO POINT POLYMER

SIZE	DRAWING NUMBER	REV
B	E831476-PP5	1

PREV. SHEET: 30 | NEXT SHEET: 32 | SHEET 31 OF 34

CUSTOMER SCADA	CENTRIFUGE CONTROL PANEL (–CP)	FIELD PROCESS AREA (–FLD)	NOTES

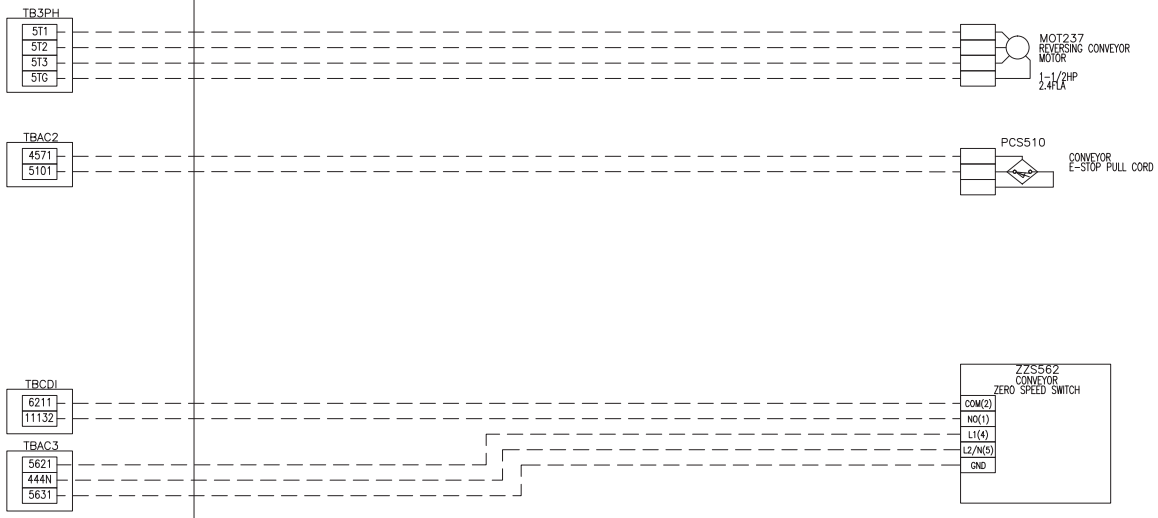

1010 COMMERCIAL BLVD. SOUTH
ARLINGTON, TEXAS 76001
Phone: (817)465-5611
Telefax: (817)472-8589

APPROVED FOR CONSTRUCTION
BY: BJM DATE:
PROJECT No.831476

NOTES

THIS DRAWING IS COPY RIGHTED THIS DRAWING IS A TRADE SECRET AND ONLY ENTRUSTED TO THE RECEIVER FOR HIS PERSONAL USE. WITHOUT THE STATED WRITTEN CONSENT OF ANDRITZ SEPARATION INC. IT MUST NOT BE COPIED, NOR MADE AVAILABLE TO THIRD PARTIES, INCLUDING COMPETITORS, NOR MADE ACCESSIBLE TO SUCH PARTIES. ANY ILLEGAL USE BY THE RECEIVER OR THIRD PARTIES FOR WHICH HE IS RESPONSIBLE CAN CONSTITUTE A CAUSE FOR LEGAL ACTION. THIS DRAWING MUST BE RETURNED ON REQUEST OF THE COMPANY.

REV	EIR	REVISION	BY	APVD	DATE
1		CERTIFIED	HL	BJM	04/13/18
0		APPROVAL DRAWINGS: INITIAL RELEASE	HL	BJM	04/04/18

ESTIMATED WEIGHT IN LBS:

UNLESS OTHERWISE SPECIFIED:
DIMENSIONS ARE IN INCHES
FABRICATION TOLERANCES
.XXX±.040 ANG±1° HOLE±.020
MACHINING TOLERANCES
.XXX±.005 ANG±.5° HOLE±.020
MILL FINISH ALL OVER

THIRD ANGLE PROJECTION

DRAWN BY:	HL	DATE 04/04/18
CHECKED BY:	BJM	DATE 04/04/18
APPROVED BY:	CMP	DATE 04/04/18
LOCATION:		

ANDRITZ SEPARATION INC.
1010 COMMERCIAL BLVD. SOUTH
ARLINGTON, TEXAS 76001
PHONE: (817) 465-5611

TITLE
VEOLIA AGNICO AMARUQ
D4L CENTRIFUGE SKID
POINT TO POINT CONVEYOR

SIZE	DRAWING NUMBER	REV
B	E831476-PP6	1

PREV. SHEET: 31 | NEXT SHEET: 33 | SHEET 32 OF 34

CFG PLC I/O MAP LIST

TAGNAME	ADDR	TERM	TERMDESC	DESCA	DESCB	DESCC	DESCD	DESCE	LREF
PLC 1001	I:1/0		IN 0	CONTROL PANEL	E-STOP				1001
PLC 1001	I:1/1		IN 1	MAIN CONTROL RELAY					1004
PLC 1001	I:1/2		IN 2	DISCHARGE	CONVEYOR	CONTROL RELAY			1007
PLC 1001	I:1/3		IN 3	SPARE					1010
PLC 1001	I:1/4		IN 4	MAIN DRIVE MOTOR	HIGH TEMPERATURE	SWITCH			1013
PLC 1001	I:1/5		IN 5	SCROLL DRIVE MOTOR	HIGH TEMPERATURE	SWITCH			1016
PLC 1001	I:1/6		IN 6	UPS BYPASSED					1019
PLC 1001	I:1/7		IN 7	UPS LOW BATTERY					1022
PLC 1001			COM 1						1025
PLC 1001	I:1/8		IN 8	UPS FAULTED					1036
PLC 1001	I:1/9		IN 9	POLYMER SYSTEM	IN REMOTE				1039
PLC 1001	I:1/10		IN 10	POLYMER SYSTEM	RUNNING				1042
PLC 1001	I:1/11		IN 11	POLYMER SYSTEM	FAULTED				1045
PLC 1001	I:1/12		IN 12	SLUDGE PUMP	IN REMOTE				1048
PLC 1001	I:1/13		IN 13	SLUDGE PUMP	RUNNING				1051
PLC 1001	I:1/14		IN 14	SLUDGE PUMP	FAULTED				1054
PLC 1001	I:1/15		IN 15	SPARE					1057
PLC 1001			COM 2						1060
PLC 1101	I:2/0		IN 0	REVERSING CONVEYOR	RUN FORWARD	CONFIRM			1101
PLC 1101	I:2/1		IN 1	REVERSING CONVEYOR	RUN REVERSE	CONFIRM			1104
PLC 1101	I:2/2		IN 2	REVERSING CONVEYOR	FAULTED				1107
PLC 1101	I:2/3		IN 3	REVERSING CONVEYOR	E-STOP ACTIVE				1110
PLC 1101	I:2/4		IN 4	REVERSING CONVEYOR	ZERO SPEED SWITCH				1113
PLC 1101	I:2/5		IN 5	SPARE					1116
PLC 1101	I:2/6		IN 6	SPARE					1119
PLC 1101	I:2/7		IN 7	SPARE					1122
PLC 1101			COM 1						1125
PLC 1101	I:2/8		IN 8	SPARE					1136
PLC 1101	I:2/9		IN 9	SPARE					1139
PLC 1101	I:2/10		IN 10	SPARE					1142
PLC 1101	I:2/11		IN 11	SPARE					1145
PLC 1101	I:2/12		IN 12	SPARE					1148
PLC 1101	I:2/13		IN 13	SPARE					1151
PLC 1101	I:2/14		IN 14	SPARE					1154
PLC 1101	I:2/15		IN 15	SPARE					1157
PLC 1101			COM 2						1160
PLC 1301			VAC/VDC 1						1301
PLC 1301	O:3/0		OUT 0	ALARM HORN					1304
PLC 1301	O:3/1		OUT 1	PLC FAULT					1307
PLC 1301	O:3/2		OUT 2	COMMON ALARM					1310
PLC 1301	O:3/3		OUT 3	ALARM BEACON					1313
PLC 1301	O:3/4		OUT 4	ELAPSED TIME METER					1316
PLC 1301	O:3/5		OUT 5	SPARE CR					1319
PLC 1301	O:3/6		OUT 6	SPARE					1322
PLC 1301	O:3/7		OUT 7	SPARE					1325
PLC 1301			VAC/VDC 2						1336
PLC 1301	O:3/8		OUT 8	CENTRIFUGE	WASHWATER	SOLENOID VALVE	OPEN CMD		1339
PLC 1301	O:3/9		OUT 9	DISCHARGE CONVEYOR	WASHWATER	SOLENOID VALVE	OPEN CMD		1342
PLC 1301	O:3/10		OUT 10	POLYMER SYSTEM	RUN COMMAND				1345
PLC 1301	O:3/11		OUT 11	SLUDGE PUMP	RUN COMMAND				1348

CFG PLC I/O MAP LIST

TAGNAME	ADDR	TERM	TERMDESC	DESCA	DESCB	DESCC	DESCD	DESCE	LREF
PLC1301	O:3/12		OUT 12	REVERSING CONVEYOR	RUN FORWARD	COMMAND			1351
PLC1301	O:3/13		OUT 13	REVERSING CONVEYOR	RUN REVERSE	COMMAND			1354
PLC1301	O:3/14		OUT 14	SPARE					1357
PLC1301	O:3/15		OUT 15	SPARE					1360
PLC1501	I:4.0	V IN 0□	IN 0	CENTRIFUGE	VIBRATION				1501
PLC1501		I IN 0□							1503
PLC1501		V/I IN 0-							1504
PLC1501		V/I IN 0-							1504
PLC1501		ANLG COM							1506
PLC1501		ANLG COM							1506
PLC1501	I:4.1	V IN 1□	IN 1	CENTRIFUGE	BEARING TEMPERATURE	FEED END			1509
PLC1501		I IN 1□							1510
PLC1501		V/I IN 1-							1512
PLC1501		V/I IN 1-							1512
PLC1501		ANLG COM							1513
PLC1501		ANLG COM							1513
PLC1501	I:4.2	V IN 2□	IN 2	CENTRIFUGE	BEARING TEMPERATURE	DRIVE END			1516
PLC1501		I IN 2□							1518
PLC1501		V/I IN 2-							1519
PLC1501		V/I IN 2-							1519
PLC1501		ANLG COM							1521
PLC1501		ANLG COM							1521
PLC1501	I:4.3	V IN 3□	IN 3	CENTRIFUGE	BOWL SPEED				1524
PLC1501		I IN 3□							1525
PLC1501		V/I IN 3-							1527
PLC1501		V/I IN 3-							1527
PLC1501		ANLG COM							1528
PLC1501		ANLG COM							1528
PLC1501	I:5.4	V IN 4□	IN 4	SLUDGE	FLOW				1536
PLC1501		I IN 4□							1538
PLC1501		V/I IN 4-							1539
PLC1501		V/I IN 4-							1539
PLC1501		ANLG COM							1541
PLC1501		ANLG COM							1541
PLC1501	I:5.5	V IN 5□	IN 5	SLUDGE PUMP	SPEED FEEDBACK				1544
PLC1501		I IN 5□							1545
PLC1501		V/I IN 5-							1547
PLC1501		V/I IN 5-							1547
PLC1501		ANLG COM							1548
PLC1501		ANLG COM							1548
PLC1501	I:5.6	V IN 6□	IN 6	POLYMER SYSTEM	SPEED FEEDBACK				1551
PLC1501		I IN 6-							1553
PLC1501		V/I IN 6-							1554
PLC1501		V/I IN 6-							1554
PLC1501		ANLG COM							1556
PLC1501		ANLG COM							1556
PLC1501	I:5.7	V IN 7□	IN 7	SPARE					1559
PLC1501		I IN 7-							1560
PLC1501		V/I IN 7-							1562
PLC1501		V/I IN 7-							1562

ANDRITZ SEPARATION INC.
1010 COMMERCIAL BLVD. SOUTH
ARLINGTON, TEXAS 76001
Phone: (817)465-5611
Telefax: (817)472-8589

APPROVED FOR CONSTRUCTION
BY: BJM DATE:
PROJECT No.831476

NOTES

THIS DRAWING IS COPY RIGHTED THIS DRAWING IS A TRADE SECRET AND ONLY ENTRUSTED TO THE RECEIVER FOR HIS PERSONAL USE. WITHOUT THE STATED WRITTEN CONSENT OF ANDRITZ SEPARATION INC. IT MUST NOT BE COPIED, NOR MADE AVAILABLE TO THIRD PARTIES, INCLUDING COMPETITORS, NOR MADE ACCESSIBLE TO SUCH PARTIES. ANY ILLEGAL USE BY THE RECEIVER OR THIRD PARTIES FOR WHICH HE IS RESPONSIBLE CAN CONSTITUTE A CAUSE FOR LEGAL ACTION. THIS DRAWING MUST BE RETURNED ON REQUEST OF THE COMPANY.

REV	EIR	REVISION	BY	APVD	DATE
1		CERTIFIED	HL	BJM	04/13/18
0		APPROVAL DRAWINGS: INITIAL RELEASE	HL	BJM	04/04/18

ESTIMATED WEIGHT IN LBS:

UNLESS OTHERWISE SPECIFIED: DIMENSIONS ARE IN INCHES FABRICATION TOLERANCES .XXX±.040 ANG±1° HOLE±.020 MACHINING TOLERANCES .XXX±.005 ANG±.5° HOLE±.020 MILL FINISH ALL OVER

THIRD ANGLE PROJECTION

DRAWN BY: HL	DATE	04/04/18
CHECKED BY: BJM	DATE	04/04/18
APPROVED BY: CMP	DATE	04/04/18
LOCATION:		

ANDRITZ SEPARATION INC.
1010 COMMERCIAL BLVD. SOUTH
ARLINGTON, TEXAS 76001
PHONE: (817) 465-5611

TITLE: VEOLIA AGNICO AMARUQ
D4L CENTRIFUGE SKID
I/O MAP LIST

SIZE	DRAWING NUMBER	REV
B	E831476-IOM1	1

PREV. SHEET: 32 | NEXT SHEET: 34 | SHEET 33 OF 34

CFG PLC I/O MAP LIST

TAGNAME	ADDR	TERM	TERMDESC	DESCA	DESCB	DESCC	DESCD	DESCE	LREF
PLC 1501		ANLG COM							1563
PLC 1501		ANLG COM							1563
PLC 1601		V OUT 0□	OUT 0						1601
PLC 1601	O:5.0		I OUT 0□	POLYMER SYSTEM	SPEED CONTROL				1603
PLC 1601			V OUT 1□						1609
PLC 1601	O:5.1		I OUT 1□	SLUDGE PUMP	SPEED CONTROL				1611
PLC 1601			V OUT 2□						1617
PLC 1601	O:5.2		I OUT 2□	SPARE					1619
PLC 1601			V OUT 3□						1625
PLC 1601	O:5.3		I OUT 3□	SPARE					1627
PLC 1601		ANLG COM							1631
PLC 1601		ANLG COM							1633

ANDRITZ SEPARATION INC.
1010 COMMERCIAL BLVD. SOUTH
ARLINGTON, TEXAS 76001
Phone: (817)465-5611
Telefax: (817)472-8589

APPROVED FOR CONSTRUCTION
BY: BJM DATE:
PROJECT No.831476

NOTES

THIS DRAWING IS COPY RIGHTED THIS DRAWING IS A TRADE SECRET AND ONLY ENTRUSTED TO THE RECEIVER FOR HIS MEDICAL USE. WITHOUT THE STATED WRITTEN CONSENT OF ANDRITZ SEPARATION INC. IT MUST NOT BE COPIED, NOR MADE AVAILABLE TO THIRD PARTIES, INCLUDING COMPETITORS, NOR MADE ACCESSIBLE TO SUCH PARTIES. ANY ILLEGAL USE BY THE RECEIVER OR THIRD PARTIES FOR WHICH HE IS RESPONSIBLE CAN CONSTITUTE A CAUSE FOR LEGAL ACTION. THIS DRAWING MUST BE RETURNED ON REQUEST OF THE COMPANY.

REV	EIR	REVISION	BY	APVD	DATE
1		CERTIFIED	HL	BJM	04/13/18
0		APPROVAL DRAWINGS: INITIAL RELEASE	HL	BJM	04/04/18

ESTIMATED WEIGHT IN LBS:

UNLESS OTHERWISE SPECIFIED:
DIMENSIONS ARE IN INCHES
FABRICATION TOLERANCES
.XXX±.040 ANG±1° HOLE±.020
MACHINING TOLERANCES
.XXX±.005 ANG±.5° HOLE±.020
MILL FINISH ALL OVER

THIRD ANGLE PROJECTION

DRAWN BY:	HL	DATE 04/04/18
CHECKED BY:	BJM	DATE 04/04/18
APPROVED BY:	CMP	DATE 04/04/18

LOCATION:

ANDRITZ SEPARATION INC.
1010 COMMERCIAL BLVD. SOUTH
ARLINGTON, TEXAS 76001
PHONE: (817) 465-5611

TITLE: VEOLIA AGNICO AMARUQ
D4L CENTRIFUGE SKID
I/O MAP LIST

SIZE	DRAWING NUMBER	REV
B	E831476-IOM2	1

PREV. SHEET:	NEXT SHEET:	SHEET OF
33		34 34

ISA TABLE

INSTRUMENT IDENTIFICATION

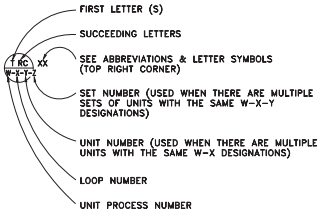

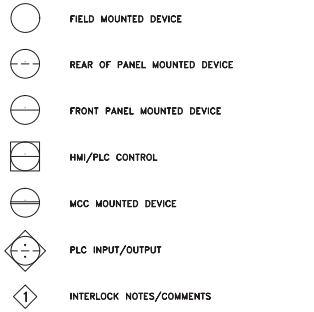

SPECIAL CASES

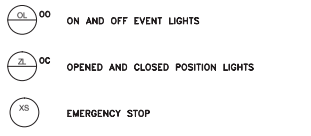

INSTRUMENTATION IDENTIFICATION

LETTER	FIRST-LETTER		SUCCEEDING-LETTERS		
	PROCESS OR INITIATING VARIABLE	MODIFIER	READOUT OR PASSIVE FUNCTION	OUTPUT FUNCTION	MODIFIER
A	ANALYSIS		ALARM		
B	BURNER, COMBUSTION		USER'S CHOICE	USER'S CHOICE	USER'S CHOICE
C	USER'S CHOICE			CONTROL	
D	DENSITY (S,G)	DIFFERENTIAL			
E	VOLTAGE		PRIMARY ELEMENT		
F	FLOW RATE	RATIO			
G	USER'S CHOICE		GLASS, GAUGE VIEWING DEVICE	GATE	
H	HAND (MANUAL)				HIGH
I	CURRENT (ELECTRICAL)		INDICATE		
J	POWER	SCAN			
K	TIME, TIME SCHEDULE	TIME RATE OF CHANGE		CONTROL STATION	
L	LEVEL		LIGHT (PILOT)		LOW
M	MOTION	MOMENTARY			MIDDLE
N	USER'S CHOICE		USER'S CHOICE	USER'S CHOICE	USER'S CHOICE
O	USER'S CHOICE		ORIFICE, RESTRICTION		
P	PRESSURE, VACUUM		POINT (TEST) CONNECTION		
Q	QUANTITY	INTEGRATE			
R	RADIATION		RECORD OR PRINT		
S	SPEED, FREQUENCY	SAFETY		SWITCH	
T	TEMPERATURE			TRANSMIT	
U	MULTIVARIABLE		MULTIFUNCTION	MULTIFUNCTION	MULTIFUNCTION
V	VIBRATION, MECH. ANALYSIS			VALVE, DAMPER LOUVER	
W	WEIGHT, FORCE		WELL		
X	UNCLASSIFIED	X AXIS	UNCLASSIFIED	UNCLASSIFIED	UNCLASSIFIED
Y	EVENT, STATE OR PRESENCE	Y AXIS		RELAY, COMPUTE, CONVERT	
Z	POSITION	Z AXIS		DRIVER, ACTUATOR UNCLASSIFIED FINAL CONTROL ELEMENT	

TRANSDUCERS

A	ANALOG	I	CURRENT
D	DIGITAL	P	PNEUMATIC
E	VOLTAGE	PF	PULSE FREQUENCY
F	FREQUENCY	PD	PULSE DURATION
H	HYDRAULIC	R	RESISTANCE

EXAMPLE:

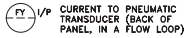

LINE LEGEND

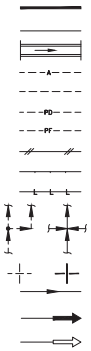

INTERFACE SYMBOLS

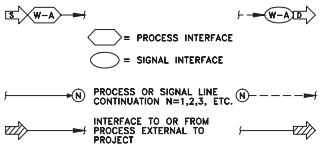

ABBREVIATIONS & LETTER SYMBOLS

AC	ALTERNATING CURRENT
ALKY	ALKALINITY
AM	AUTO-MANUAL
CAM	COMPUTER-AUTO-MANUAL
CCS	CENTRAL CONTROL SYSTEM
CL_2	CHLORINE (TYPICAL: USE STANDARD CHEMICAL
CM	COMPUTER-MANUAL ELEMENT ABBREVIATIONS)
COD	CHEMICAL OXYGEN DEMAND
CP-X	CONTROL PANEL NO. X
CS	CONSTANT SPEED
DC	DIRECT CURRENT
DO	DISSOLVED OXYGEN
FAL	FAIL
FCL_2	FREE CHLORINE RESIDUAL
FOS	FAST-OFF-SLOW
FOSA	FAST-OFF-SLOW-AUTO
FOSR	FAST-OFF-SLOW-REMOTE
FP-W-X	FIELD PANEL NO. WX (W=UNIT PROCESS NUMBER
FR	FORWARD-REVERSE
HDNS	HARDNESS
HOA	HAND-OFF-AUTO
HOR	HAND-OFF-REMOTE
LEL	LOWER EXPLOSIVE LIMIT
LOS	LOCKOUT STOP
LR	LOCAL-REMOTE
MA	MANUAL-AUTO
MBAS	METHYLENE BLUE ACTIVE SUBSTANCES
MC	MODULATE-CLOSE
MCC-X	MOTOR CONTROL CENTER NO. X
MS	MOTOR STARTER
OC	OPEN-CLOSE (D)
OCR	OPEN-CLOSE-REMOTE
OCA	OPEN-CLOSE-AUTO
OO	ON-OFF
OOA	ON-OFF-AUTO
OOR	ON-OFF-REMOTE
OP	ORTHO PHOSPHORUS
ORP	OXIDATION REDUCTION POTENTIAL
OSC	OPEN-STOP-CLOSE
pH	HYDROGEN ION CONCENTRATION
RM-X	REMOTE MULTIPLEXING MODULE NO. X
RTU-X	REMOTE TELEMETRY UNIT NO. X
SC	SPEED CONTROL
SF	SLOWER-FASTER
SS	START-STOP
SSC	SUPERVISORY SET POINT CONTROL
TCL_2	TOTAL CHLORINE RESIDUAL
TOC	TOTAL ORGANIC CARBON
TOD	TOTAL OXYGEN DEMAND
TURB	TURBIDITY
VFD	VARIABLE FREQUENCY DRIVE
VHC	VOLATILE HYDROCARBONS
VIB	VIBRATION
VS	VARIABLE SPEED

PROJECT SPECIFIC ABBREV.

PROJ NO.

GENERAL NOTES

1) THIS IS A STANDARD LEGEND, THEREFORE, NOT ALL OF THIS INFORMATION MAY BE USED ON THIS PROJECT.

PROJECT SPECIFIC NOTES

▲ -SUPPLIED BY OTHERS

ANDRITZ SEPARATION, INC.
1010 COMMERCIAL BLVD. SOUTH
ARLINGTON, TEXAS 76001
Phone: (817)465-5611
Telefax: (817)472-8589

APPROVED FOR CONSTRUCTION
BY: BJM DATE:
PROJECT NO.: 831476

NOTES

THIS DRAWING IS COPY RIGHTED. THIS DRAWING IS A TRADE SECRET AND ONLY ENTRUSTED TO THE RECEIVER FOR HIS PERSONAL USE. WITHOUT THE STATED WRITTEN CONSENT OF ANDRITZ SEPARATION INC. IT MUST NOT BE COPIED, NOR MADE AVAILABLE TO THIRD PARTIES, INCLUDING COMPETITORS, NOR MADE ACCESSIBLE TO SUCH PARTIES. ANY ILLEGAL USE BY THE RECEIVER OR THIRD PARTIES FOR WHICH HE IS RESPONSIBLE CAN CONSTITUTE A CAUSE FOR LEGAL ACTION. THIS DRAWING MUST BE RETURNED ON REQUEST OF THE COMPANY.

REV	EIR	REVISION	BY	APVD	DATE
1		CERTIFIED	HL	BJM	04/13/18
0		APPROVAL DRAWINGS: INITIAL RELEASE	HL	BJM	04/04/18

ESTIMATED WEIGHT IN LBS:

UNLESS OTHERWISE SPECIFIED: DIMENSIONS ARE IN INCHES
FABRICATION TOLERANCES .XXX±.040 ANG±1° HOLE±.020
MACHINING TOLERANCES .XXX±.005 ANG±.5° HOLE±.020
MILL FINISH ALL OVER

THIRD ANGLE PROJECTION

DRAWN BY:	HL	DATE 04/04/18
CHECKED BY:	BJM	DATE 04/04/18
APPROVED BY:	CMP	DATE 04/04/18

LOCATION:

ANDRITZ SEPARATION, INC.
1010 COMMERCIAL BLVD. SOUTH
ARLINGTON, TEXAS 76001
PHONE: (817) 465-5611

TITLE: VEOLIA AGNICO AMARUQ
D4L CENTRIFUGE SKID
I & C LEGEND

SIZE	DRAWING NUMBER	REV
B	E831476-PID-1	1

PREV. SHEET: | NEXT SHEET: 2 | SHEET 1 OF 2

MCP

Start/Stop Command
Running
Polymer System Fail
Speed Setpoint
Speed Indication
Load Indication

Start/Stop Command
Running
Sludge Feed Pump Fail
Speed Setpoint
Speed Indication
Load Indication

Differential Speed Indication
Centrifuge Vibration Indication
Scroll Speed Indication
Bowl Speed Indication
Polymer Pump Feed Rate
Sludge Pump Feed Rate
Centrifuge Wash Water Valve
Reversing Conveyor WW Valve
Feed Bearing Temperature
Centrifuge Vibration Monitor
Centrifuge Speed Monitor
Drive Bearing Temperature
Bowl Motor High Temp.
Scroll Motor High Temp.
Power Failure Alarm
Vibration (3rd Strike)
Bowl Drive Motor Overheated
Bowl Drive Motor Failure
Bowl Drive Motor VFD fault
Scroll Drive Motor Overheated
Scroll Drive Motor VFD Fault
Scroll Drive High Torque alarm
Centrifuge Bowl Overspeed

Start/Stop Command
Running
Fail
Speed Setpoint
Speed Indication
Load Indication

Start/Stop Command
Forward/Reverse
2nd ACCEL/DECEL
Running
Fail
Speed Setpoint
Speed Indication
Torque Indication

Run Forward Command
Run Reverse Command
Running Forward
Running Reverse
Reversing Conveyor Alarm
Emergency Stop
Zero Speed Sensor

S/S HS | FAIL FAL | SPEED SETPT SC | SPEED IND SI | RUNNING YI
POLYMER PUMP

S/S HS | FAIL FAL | SPEED SETPT SC | SPEED IND SI | RUNNING YI
SLUDGE PUMP

S/S HS | FAIL FAL | SPEED IND SI | SPEED SETPT SC | LOAD IND II | RUNNING YI
BOWL DRIVE VFD

S/S HS | ACCEL/DECEL WSHH | FAIL FAL | SPEED IND SI | F/R HS | RUNNING YI | SPEED SETPT SC | TORQUE IND WI
SCROLL DRIVE VFD

RUN HS | RUN HS | FAIL FAL | ZERO SPEED ZSS | RUNNING YI | RUNNING YI | ESTOP ES1 | TORQUE IND WI
REVERSING CONVEYOR

CENTRIFUGE CONTROL PANEL

NOTE: SOME SIGNALS MAY BE HARDWIRED OR TRANSMITTED VIA ETHERNET

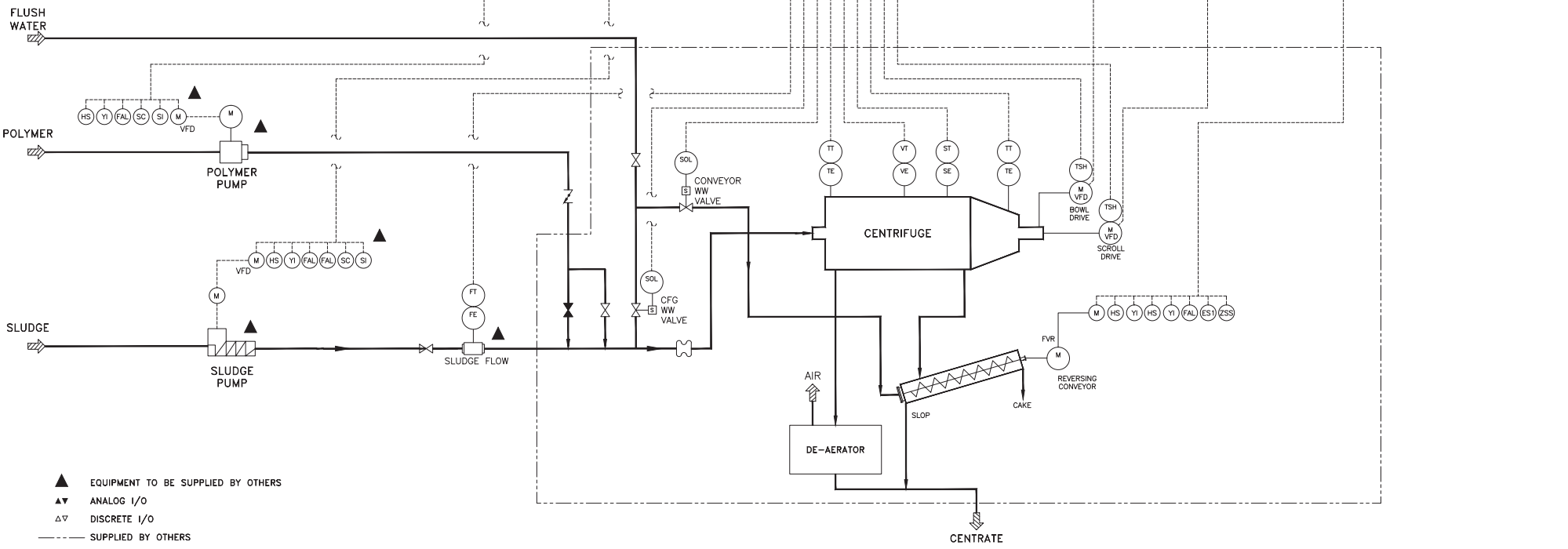

▲ EQUIPMENT TO BE SUPPLIED BY OTHERS
▲▼ ANALOG I/O
△▽ DISCRETE I/O
——— SUPPLIED BY OTHERS

ANDRITZ SEPARATION INC.
1010 COMMERCIAL BLVD. SOUTH
ARLINGTON, TEXAS 76001
Phone: (817)465-5611
Telefax: (817)472-8589

APPROVED FOR CONSTRUCTION
BY: BJM DATE:
PROJECT No. 831476

NOTES

THIS DRAWING IS COPY RIGHTED THIS DRAWING IS A TRADE SECRET AND ONLY ENTRUSTED TO THE RECEIVER FOR HIS PERSONAL USE. WITHOUT THE STATED WRITTEN CONSENT OF ANDRITZ SEPARATION INC. IT MUST NOT BE COPIED, NOR MADE AVAILABLE TO THIRD PARTIES, INCLUDING COMPETITORS, NOR MADE ACCESSIBLE TO SUCH PARTIES. ANY ILLEGAL USE BY THE RECEIVER OR THIRD PARTIES FOR WHICH HE IS RESPONSIBLE CAN CONSTITUTE A CAUSE FOR LEGAL ACTION. THIS DRAWING MUST BE RETURNED ON REQUEST OF THE COMPANY.

REV	EIR	REVISION	BY	APVD	DATE
1		CERTIFIED	HL	BJM	04/13/18
0		APPROVAL DRAWINGS: INITIAL RELEASE	HL	BJM	04/04/18

ESTIMATED WEIGHT IN LBS:

UNLESS OTHERWISE SPECIFIED: DIMENSIONS ARE IN INCHES
FABRICATION TOLERANCES .XXX±.040 ANG±1° HOLE±.020
MACHINING TOLERANCES .XXX±.005 ANG±.5° HOLE±.020
MILL FINISH ALL OVER

THIRD ANGLE PROJECTION

DRAWN BY:	HL	DATE 04/04/18
CHECKED BY:	BJM	DATE 04/04/18
APPROVED BY:	CMP	DATE 04/04/18
LOCATION:		

ANDRITZ SEPARATION INC.
1010 COMMERCIAL BLVD. SOUTH
ARLINGTON, TEXAS 76001
PHONE: (817) 465-5611

TITLE: VEOLIA AGNICO AMARUQ
D4L CENTRIFUGE SKID
P & ID

SIZE: B | DRAWING NUMBER: E831476-PID-2 | REV: 1
PREV. SHEET: 1 | NEXT SHEET: | SHEET 2 OF 2

ISA TABLE

INSTRUMENT IDENTIFICATION

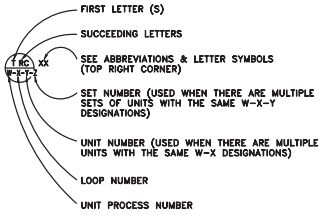

FIELD MOUNTED DEVICE

REAR OF PANEL MOUNTED DEVICE

FRONT PANEL MOUNTED DEVICE

HMI/PLC CONTROL

MCC MOUNTED DEVICE

PLC INPUT/OUTPUT

INTERLOCK NOTES/COMMENTS

SPECIAL CASES

ON AND OFF EVENT LIGHTS

OPENED AND CLOSED POSITION LIGHTS

EMERGENCY STOP

INSTRUMENTATION IDENTIFICATION

LETTER	FIRST-LETTER: PROCESS OR INITIATING VARIABLE	FIRST-LETTER: MODIFIER	SUCCEEDING-LETTERS: READOUT OR PASSIVE FUNCTION	SUCCEEDING-LETTERS: OUTPUT FUNCTION	SUCCEEDING-LETTERS: MODIFIER
A	ANALYSIS		ALARM		
B	BURNER, COMBUSTION		USER'S CHOICE	USER'S CHOICE	USER'S CHOICE
C	USER'S CHOICE			CONTROL	
D	DENSITY (S,G)	DIFFERENTIAL			
E	VOLTAGE		PRIMARY ELEMENT		
F	FLOW RATE	RATIO			
G	USER'S CHOICE		GLASS, GAUGE VIEWING DEVICE	GATE	
H	HAND (MANUAL)				HIGH
I	CURRENT (ELECTRICAL)		INDICATE		
J	POWER	SCAN			
K	TIME, TIME SCHEDULE	TIME RATE OF CHANGE		CONTROL STATION	
L	LEVEL		LIGHT (PILOT)		LOW
M	MOTION	MOMENTARY			MIDDLE
N	USER'S CHOICE		USER'S CHOICE	USER'S CHOICE	USER'S CHOICE
O	USER'S CHOICE		ORIFICE, RESTRICTION		
P	PRESSURE, VACUUM		POINT (TEST) CONNECTION		
Q	QUANTITY	INTEGRATE			
R	RADIATION		RECORD OR PRINT		
S	SPEED, FREQUENCY	SAFETY		SWITCH	
T	TEMPERATURE			TRANSMIT	
U	MULTIVARIABLE		MULTIFUNCTION	MULTIFUNCTION	MULTIFUNCTION
V	VIBRATION, MECH. ANALYSIS			VALVE, DAMPER LOUVER	
W	WEIGHT, FORCE		WELL		
X	UNCLASSIFIED	X AXIS	UNCLASSIFIED	UNCLASSIFIED	UNCLASSIFIED
Y	EVENT, STATE OR PRESENCE	Y AXIS		RELAY, COMPUTE, CONVERT	
Z	POSITION	Z AXIS		DRIVER, ACTUATOR UNCLASSIFIED FINAL CONTROL ELEMENT	

TRANSDUCERS

A	ANALOG	I	CURRENT
D	DIGITAL	P	PNEUMATIC
E	VOLTAGE	PF	PULSE FREQUENCY
F	FREQUENCY	PD	PULSE DURATION
H	HYDRAULIC	R	RESISTANCE

EXAMPLE:

CURRENT TO PNEUMATIC TRANSDUCER (BACK OF PANEL, IN A FLOW LOOP)

LINE LEGEND

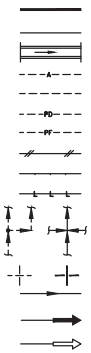

INTERFACE SYMBOLS

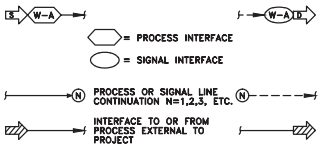

ABBREVIATIONS & LETTER SYMBOLS

AC	ALTERNATING CURRENT
ALKY	ALKALINITY
AM	AUTO-MANUAL
CAM	COMPUTER-AUTO-MANUAL
CCS	CENTRAL CONTROL SYSTEM
CL_2	CHLORINE (TYPICAL: USE STANDARD CHEMICAL
CM	COMPUTER-MANUAL ELEMENT ABBREVIATIONS)
COD	CHEMICAL OXYGEN DEMAND
CP-X	CONTROL PANEL NO. X
CS	CONSTANT SPEED
DC	DIRECT CURRENT
DO	DISSOLVED OXYGEN
FAL	FAIL
FCL_2	FREE CHLORINE RESIDUAL
FOS	FAST-OFF-SLOW
FOSA	FAST-OFF-SLOW-AUTO
FOSR	FAST-OFF-SLOW-REMOTE
FP-W-X	FIELD PANEL NO. WX (W=UNIT PROCESS NUMBER
FR	FORWARD-REVERSE
HDNS	HARDNESS
HOA	HAND-OFF-AUTO
HOR	HAND-OFF-REMOTE
LEL	LOWER EXPLOSIVE LIMIT
LOS	LOCKOUT STOP
LR	LOCAL-REMOTE
MA	MANUAL-AUTO
MBAS	METHYLENE BLUE ACTIVE SUBSTANCES
MC	MODULATE-CLOSE
MCC-X	MOTOR CONTROL CENTER NO. X
MS	MOTOR STARTER
OC	OPEN-CLOSE (D)
OCR	OPEN-CLOSE-REMOTE
OCA	OPEN-CLOSE-AUTO
OO	ON-OFF
OOA	ON-OFF-AUTO
OOR	ON-OFF-REMOTE
OP	ORTHO PHOSPHORUS
ORP	OXIDATION REDUCTION POTENTIAL
OSC	OPEN-STOP-CLOSE
pH	HYDROGEN ION CONCENTRATION
RM-X	REMOTE MULTIPLEXING MODULE NO. X
RTU-X	REMOTE TELEMETRY UNIT NO. X
SC	SPEED CONTROL
SF	SLOWER-FASTER
SS	START-STOP
SSC	SUPERVISORY SET POINT CONTROL
TCL_2	TOTAL CHLORINE RESIDUAL
TOC	TOTAL ORGANIC CARBON
TOD	TOTAL OXYGEN DEMAND
TURB	TURBIDITY
VFD	VARIABLE FREQUENCY DRIVE
VHC	VOLATILE HYDROCARBONS
VIB	VIBRATION
VS	VARIABLE SPEED

PROJECT SPECIFIC ABBREV.

PROJ NO.

GENERAL NOTES

1) THIS IS A STANDARD LEGEND, THEREFORE, NOT ALL OF THIS INFORMATION MAY BE USED ON THIS PROJECT.

PROJECT SPECIFIC NOTES

▲ -SUPPLIED BY OTHERS

ANDRITZ SEPARATION INC.
1010 COMMERCIAL BLVD. SOUTH
ARLINGTON, TEXAS 76001
Phone: (817)465-5611
Telefax: (817)472-8589

APPROVED FOR CONSTRUCTION
BY: BJM DATE: 04/24/18
PROJECT N□: 831476

NOTES

THIS DRAWING IS COPY RIGHTED. THIS DRAWING IS A TRADE SECRET AND ONLY ENTRUSTED TO THE RECEIVER FOR HIS PERMISSION/USE WITHOUT THE EXPRESS WRITTEN CONSENT OF ANDRITZ SEPARATION INC. IT MUST NOT BE COPIED NOR MADE AVAILABLE TO THIRD PARTIES, BIDDING COMPETITORS, NOR MADE ACCESSIBLE TO SUCH PARTIES. ANY ILLEGAL USE BY THE RECEIVER OR THIRD PARTIES FOR WHICH HE IS RESPONSIBLE CAN CONSTITUTE A CAUSE FOR LEGAL ACTION. THIS DRAWING MUST BE RETURNED ON REQUEST OF THE COMPANY.

REV	EIR	REVISION	BY	APVD	DATE
1		CERTIFIED	HL	BJM	04/24/18
0		APPROVAL DRAWINGS: INITIAL RELEASE	HL	BJM	04/04/18

ESTIMATED WEIGHT IN LBS:

UNLESS OTHERWISE SPECIFIED: DIMENSIONS ARE IN INCHES
FABRICATION TOLERANCES .XXX±.040 ANG±1° HOLE±.020
MACHINING TOLERANCES .XXX±.005 ANG±.5° HOLE±.020
MILL FINISH ALL OVER

THIRD ANGLE PROJECTION

DRAWN BY:	HL	DATE 04/04/18
CHECKED BY:	BJM	DATE 04/04/18
APPROVED BY:	CMP	DATE 04/04/18

LOCATION:

ANDRITZ SEPARATION INC.
1010 COMMERCIAL BLVD. SOUTH
ARLINGTON, TEXAS 76001
PHONE: (817) 465-5611

TITLE: VEOLIA AGNICO AMARUQ
D4L CENTRIFUGE SKID
I & C LEGEND

SIZE: B | DRAWING NUMBER: E831476-PID-1 | REV: 1

PREV. SHEET: | NEXT SHEET: 2 | SHEET 1 OF 2

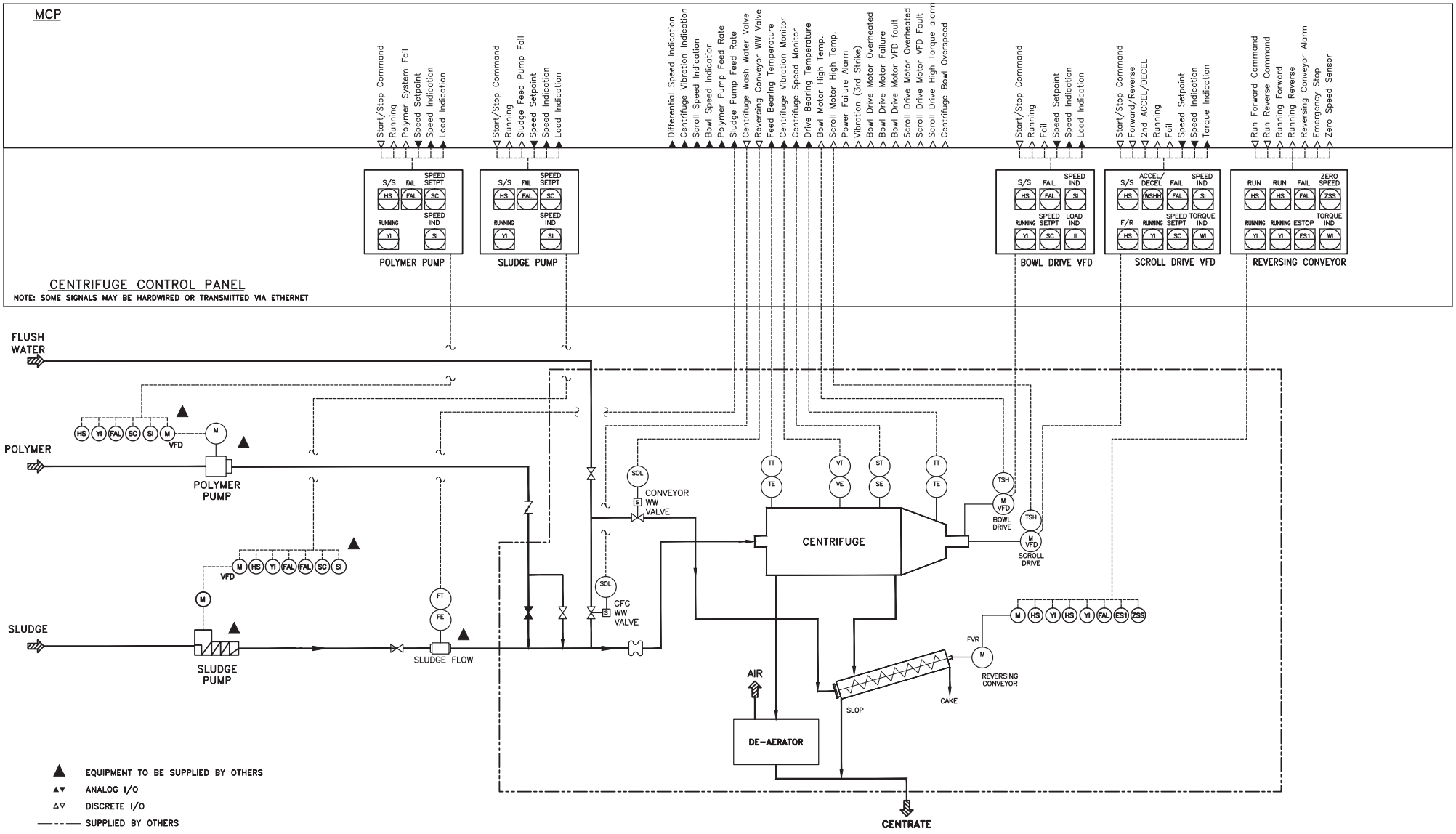

ANDRITZ SEPARATION INC.
1010 COMMERCIAL BLVD. SOUTH
ARLINGTON, TEXAS 76001
Phone: (817)465-5611
Telefax: (817)472-8589

APPROVED FOR CONSTRUCTION
BY: BJM DATE: 04/24/18
PROJECT No.: B31476

NOTES

THIS DRAWING IS COPY RIGHTED THIS DRAWING IS A TRADE SECRET AND ONLY ENTRUSTED TO THE RECEIVER FOR HIS PERSONAL USE. WITHOUT THE EXPRESS WRITTEN CONSENT OF ANDRITZ SEPARATION INC. IT MUST NOT BE COPIED, NOR MADE AVAILABLE TO THIRD PARTIES, INCLUDING COMPETITORS, NOR MADE ACCESSIBLE TO SUCH PARTIES. ANY ILLEGAL USE BY THE RECEIVER OR THIRD PARTIES FOR WHICH HE IS RESPONSIBLE CAN CONSTITUTE A CAUSE FOR LEGAL ACTION. THIS DRAWING MUST BE RETURNED ON REQUEST OF THE COMPANY.

REV	EIR	REVISION	BY	APVD	DATE
1		CERTIFIED	HL	BJM	04/24/18
0		APPROVAL DRAWINGS: INITIAL RELEASE	HL	BJM	04/04/18

ESTIMATED WEIGHT IN LBS:

UNLESS OTHERWISE SPECIFIED: DIMENSIONS ARE IN INCHES
FABRICATION TOLERANCES .XXX±.040 ANG±1° HOLE±.020
MACHINING TOLERANCES .XXX±.005 ANG±.5° HOLE±.020
MILL FINISH ALL OVER

THIRD ANGLE PROJECTION

DRAWN BY:	HL	DATE 04/04/18
CHECKED BY:	BJM	DATE 04/04/18
APPROVED BY:	CMP	DATE 04/04/18
LOCATION:		

ANDRITZ SEPARATION INC.
1010 COMMERCIAL BLVD. SOUTH
ARLINGTON, TEXAS 76001
PHONE: (817) 465-5611

TITLE: VEOLIA AGNICO AMARUQ
D4L CENTRIFUGE SKID
P & ID

SIZE	DRAWING NUMBER	REV
B	E831476-PID-2	1

PREV. SHEET: 1 | NEXT SHEET: | SHEET 2 OF 2

ASCO

EF8210G004, SOLENOID VALVE
EF8210G022, SOLENOID VALVE
8210G089, SOLENOID VALVE

LEFT BLANK

Installation & Maintenance Instructions

2-WAY INTERNAL PILOT-OPERATED SOLENOID VALVES
NORMALLY CLOSED OPERATION — GENERAL SERVICE
1" , 1¼" OR 1½" NPT

SERIES
8210
8211

NOTICE: See separate solenoid installation and maintenance instructions for information on: Wiring, Solenoid Temperature, Cause of Improper Operation, Coil or Solenoid Replacement.

DESCRIPTION

Series 8210 valves are 2-way normally closed internal pilot-operated solenoid valves designed for general service. Valves are made of rugged forged brass or die cast stainless steel. Series 8210 valves are provided with a general purpose solenoid enclosure. Series EF8210 and 8211 are the same as Series 8210 except they are provided with an explosionproof or explosionproof/watertight solenoid enclosure.

Notice: Brass valves are not certified as lead-free under the Safe Water Drinking Act SWDA 1417 and are not intended for use on drinking water systems. They are intended for control of water in industrial applications. Consult ASCO for valves rated for use in potable water applications.

OPERATION

Normally Closed: Valve is closed when solenoid is de-energized; open when energized.

IMPORTANT: Minimum operating pressure differential is 5 psi.

Manual Operator (optional feature)

Manual operator allows manual operation when desired or during an electrical power outage. To engage manual operator(open the valve), turn lever clockwise until it hits a stop. Valve will now be in the same position as when the solenoid is energized. To disengage manual operator (close the valve), turn lever counterclockwise until it hits a stop.

To engage, turn lever clockwise until it hits a stop.

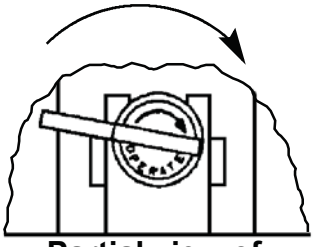

Partial view of Manual Operator

⚠ CAUTION: For valve to operate electrically, manual operator lever must be fully rotated counterclockwise.

INSTALLATION

Check nameplate for correct catalog number, pressure, voltage, frequency, and service. Never apply incompatible fluids or exceed pressure rating of the valve. Installation and valve maintenance to be performed by qualified personnel.

Future Service Considerations

Provision should be made for performing seat leakage, external leakage, and operational tests on the valve with a nonhazardous, noncombustible fluid after disassembly and reassembly.

Temperature Limitations

For maximum valve ambient and fluid temperatures, refer to chart below. Check catalog number prefix and watt rating on nameplate.

Watt Rating AC/DC	Catalog Number Prefix	Solenoid Class	Maximum Ambient Temp.	Maximum Fluid Temp.
6 AC	None or DF	F	122 °F (50 °C)	180 °F (82 °C)
	HT	H	140 °F (60 °C)	180 °F (82 °C)
6.1 AC	None, KF, SF or SC	F	125 °F (54 °C)	180 °F (82 °C)
	HT, KH, ST or SU	H	140 °F (60 °C)	180 °F (82 °C)
11.2 DC	None or HT	F or H	77 °F (25 °C)	150 °F (65 °C)
11.6 DC	None, HT, KF, KH, SC, SF or ST	F or H	104 °F (40 °C)	150 °F (65 °C)

Positioning

This valve is designed to perform properly when mounted in any position. However,for optimum life and performance, the solenoid should be mounted vertically and upright to reduce the possibility of foreign matter accumulating in the solenoid base sub-assembly area.

Piping

Connect piping to valve according to markings on valve body. Apply pipe compound sparingly to male pipe threads only. If applied to valve threads, the compound may enter the valve and cause operational difficulty. Avoid pipe strain by properly supporting and aligning piping. When tightening the pipe, do not use valve or solenoid as a lever. Locate wrenches applied to valve body or piping as close as possible to connection point.

⚠ CAUTION: To protect the solenoid valve, install a strainer or filter suitable for the service involved in the inlet side as close to the valve as possible. Clean periodically depending on service conditions. See ASCO Series 8600 and 8601 for strainers.

MAINTENANCE

⚠ WARNING: To prevent the possibility of death, injury or property damage, turn off electrical power, depressurize valve, and vent fluid to a safe area before servicing the valve

Note: It is not necessary to remove the valve from the pipeline for repairs

All Rights Reserved.

©ASCO Valve, Inc.® 50 Hanover Road, Florham Park, New Jersey 07932 www.ascovalve.com

Cleaning

All solenoid valves should be cleaned periodically. The time between cleanings will vary depending on the medium and service conditions. In general,if the voltage to the coil is correct, sluggish valve operation, excessive noise or leakage will indicate that cleaning is required. In the extreme case, faulty valve operation will occur and the valve may fail to open or close. Clean strainer or filter when cleaning the valve.

Preventive Maintenance

- Keep medium flowing through the valve as free from dirt and foreign material as possible.
- Periodic exercise of the valve should be considered if ambient or fluid conditions are such that corrosion, elastomer degradation, fluid contamination build up, or other conditions that could impede solenoid valve shifting are possible. The actual frequency of exercise necessary will depend on specific operating conditions. A successful operating history is the best indication of a proper interval between exercise cycles.
- Depending on the medium and service conditions, periodic inspection of internal valve parts for damage or excessive wear is recommended. Thoroughly clean all parts. If parts are worn or damaged, install a complete rebuild kit.

Causes of Improper Operation

- **Incorrect Pressure:** Check valve pressure. Pressure to valve must be within range specified on nameplate.
- **Excessive Leakage:** Disassemble valve and clean all parts. If parts are worn or damaged, install a complete ASCO Rebuild Kit.

Valve Disassembly

1. Disassemble valve in an orderly fashion using exploded views for identification and placement of parts. Refer to Figure 1 for AC construction; Figure 2 for DC construction. For 1" or 1 ¼" NPT valve construction, see Figure 1; for 1 ½" NPT valve construction, see Figure 2.
2. Remove solenoid enclosure. See separate instructions.

- For valves supplied with optional manual operators,see section on ***Disassembly of Manual Operator.***

3. Unscrew solenoid base sub-assembly from valve body. Then remove core assembly with core spring and solenoid base gasket. For AC construction (Figure 1) core spring is a loose piece.
4. For normal maintenance (cleaning) it is not necessary to remove the valve seat. However, for valve seat removal use a 7/16" thin wall socket wrench
5. Remove bonnet screws, valve bonnet, diaphragm spring, diaphragm assembly, body gasket, body passage eyelet(present on current valve constructions only) and body passage gasket.
6. All parts are now accessible for cleaning or replacement. If parts are worn or damaged, install a complete ASCO Rebuild Kit.

- Service Notice -

When installing a new ASCO Rebuild Kit, please be aware that the diaphragm assembly may not be identical to the diaphragm assembly in the valve. See Figure 1 for alternate diaphragm constructions. The two diaphragm constructions are interchangeable and will perform equally well.

⚠ CAUTION: To ensure proper valve operation, install all parts supplied in ASCO Rebuild Kit. Do not mix old and new parts.

Valve Reassembly

1. Lubricate body gasket, body passage gasket, bonnet gasket and solenoid base gasket with DOW CORNING® 200 Fluid lubricant or an equivalent high-grade silicone fluid.
2. Install body passage gasket, body passage eyelet, diaphragm assembly, diaphragm spring, valve bonnet and bonnet screws. Hand thread screws as far as possible. Then torque bonnet screws in a crisscross manner to 144 ± 15 in-lbs [16,3 ± 1,7 Nm].
3. If removed, install valve seat in valve body. Apply a small amount of thread compound compatible with valve media to valve seat threads. Torque valve seat to 75 ± 10 in-lbs [8,5 ± 1,1 Nm].

- For valves supplied with optional manual operator, see section on ***Reassembly of Manual Operator.***

4. For AC construction (Figure 1), install core spring in core assembly. Wide end of core spring in core first, closed end protrudes from top of core.
5. Install solenoid base gasket, core assembly with core spring and solenoid base sub-assembly in valve body. Torque solenoid base sub-assembly to 175 ± 25 in-lbs [19,8 ± 2,8 Nm].
6. Install solenoid. See separate instructions.

⚠ WARNING: To prevent the possibility of death, serious injury or property damage, check valve for proper operation before returning to service. Also perform internal seat and external leakage tests with a nonhazardous, noncombustible fluid.

7. Restore line pressure and electrical power supply to valve.
8. After maintenance is completed, operate the valve a few times to be sure of proper operation. A *metallic click* indicates the solenoid is operating.

Disassembly of Manual Operator

1. Unscrew solenoid base sub-assembly from manual operator body.
2. Unscrew manual operator body from valve body. Then remove stem retainer from base of manual operator body and stem/spacer sub-assembly.
3. Pull stem/spacer sub-assembly with stem gasket from side of manual operator body. Then remove core assembly with core spring, solenoid base gasket and manual operator bonnet gasket.
4. For further disassembly refer to section on *Valve Disassembly* step 4.

Reassembly of Manual Operator

1. Lubricate stem gasket with DOW CORNING® 111 Compound lubricant or an equivalent high-grade silicone grease.
2. For AC construction (Figure 1), install core spring in core assembly. Wide end of core spring in core first, closed end protrudes from top of core.
3. Holding the manual operator body in a horizontal position, install core assembly with core spring from the bottom end.
4. Insert the stem/spacer sub-assembly with the stem gasket into the side hole of the manual operator body. Rotate the lever of the stem/spacer sub-assembly to the 12 o'clock position.
5. Install stem retainer on base of manual operator body and simultaneously engage it into the slot provided on the stem/spacer sub-assembly.

IMPORTANT: The spacer on the stem/spacer sub-assembly must be inside of the stem retainer for AC construction (Figure 1) and outside of the stem retainer for DC construction (Figure 2).

6. Install manual operator bonnet gasket and body with preassembled parts into valve body. Torque manual operator body to 175 ± 25 in-lbs [19,8 ± 2,8 Nm].
7. Replace solenoid base gasket and solenoid base sub-assembly. Torque solenoid base sub-assembly to 175 ± 25 in-lbs [19,8 ± 2,8 Nm].
8. For further reassembly, refer to *Valve Reassembly* step 6.

©ASCO Valve, Inc.® 50 Hanover Road, Florham Park, New Jersey 07932 www.ascovalve.com

Torque Chart

Part Name	Torque Value Inch-Pounds	Torque Value Newton-Meters
Solenoid base sub-assembly	175 ± 25	19,8 ± 2,8
Manual operator body		
Bonnet screw	144 ± 15	16,3 ± 1,7
Valve seat	75 ± 10	8,5 ± 1,1

ORDERING INFORMATION FOR ASCO REBUILD KITS

Parts marked with an asterisk (*) in the exploded view are supplied in Rebuild Kits. When Ordering Rebuild Kits for ASCO valves, order the Rebuild Kit number stamped on the valve nameplate. If the number of the kit is not visible, order by indicating the number of kits required, and the Catalog Number and Serial Number of the valve(s) for which they are intended.

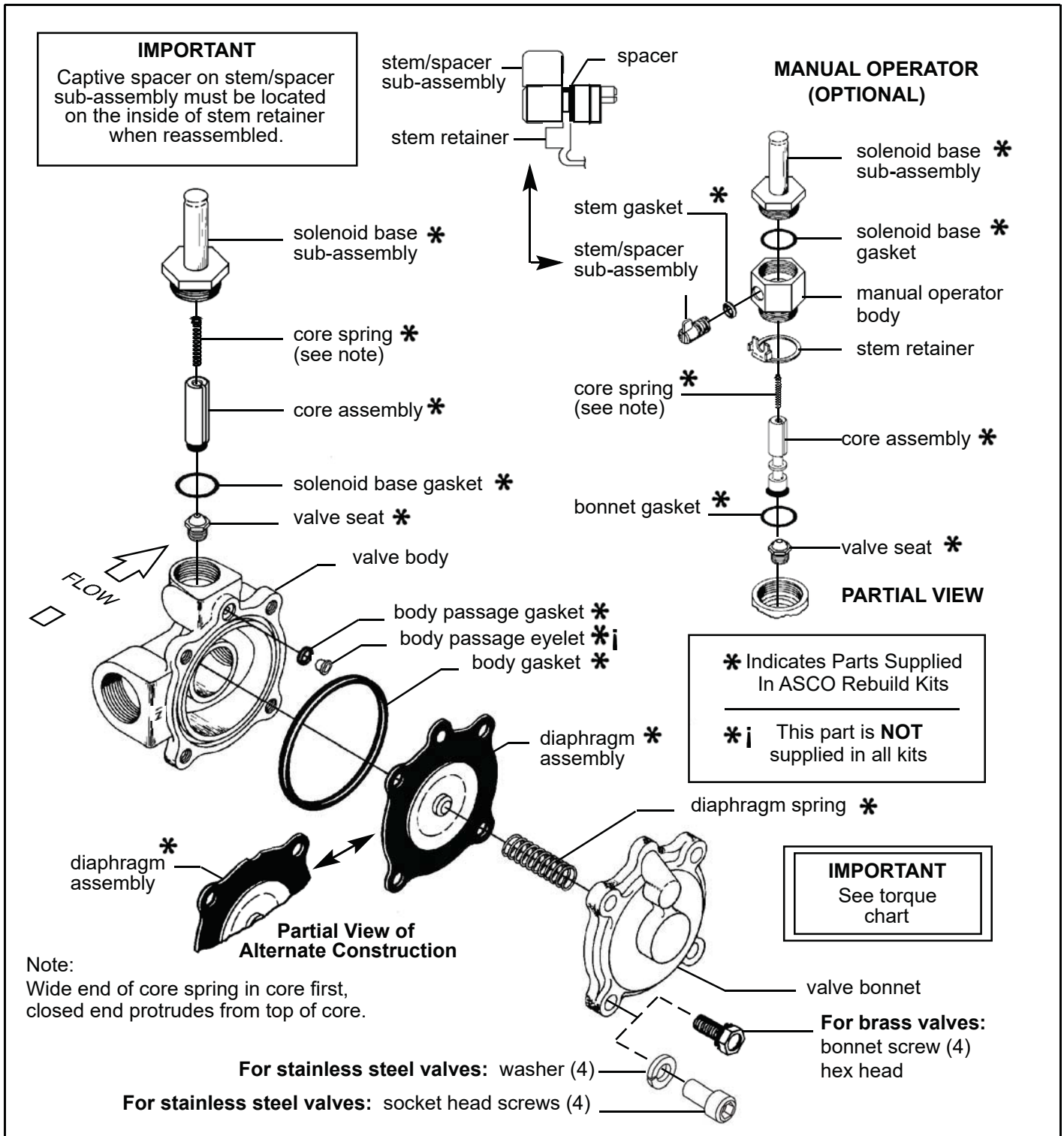

Figure 1. Series 8210 valve without solenoid, AC construction with 1 or 1 ¼" NPT valve body shown.

©ASCO Valve, Inc.® 50 Hanover Road, Florham Park, New Jersey 07932 www.ascovalve.com

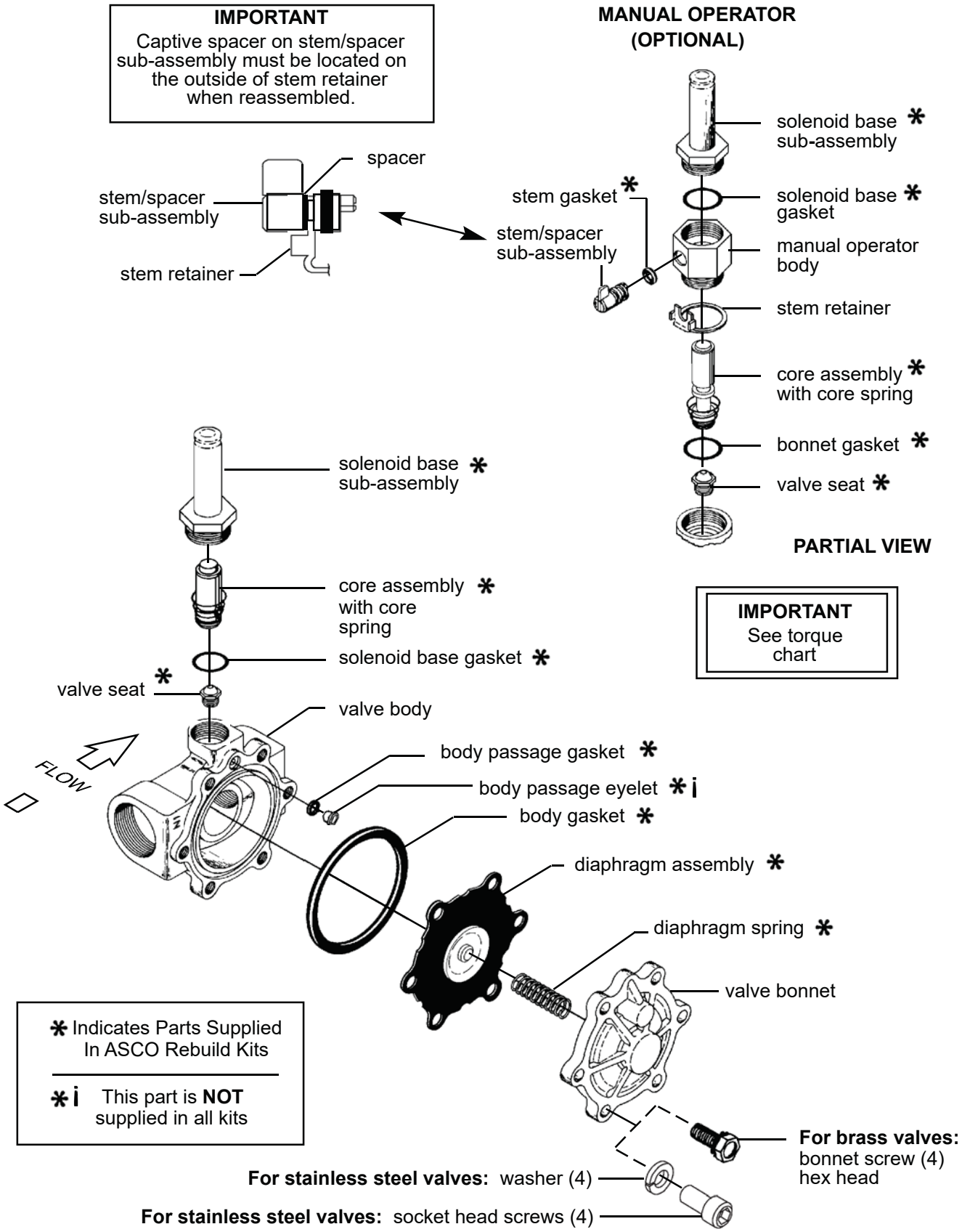

Figure 2. Series 8210 valve without solenoid, DC construction with 1 ½" NPT valve body shown.

©ASCO Valve, Inc.® 50 Hanover Road, Florham Park, New Jersey 07932 www.ascovalve.com

Installation&Maintenance Instructions

ASCO Red-Hat II™

OPEN-FRAME, GENERAL PURPOSE, WATERTIGHT/EXPLOSIONPROOF SOLENOIDS

SERIES

8016G/H

— SERVICE NOTICE —

ASCO™ solenoid valves with design change letter "G" or "H" in the catalog number (ex. 8210G1) have an epoxy encapsulated ASCO Red Hat II® solenoid. This solenoid replaces some of the solenoids with metal enclosures and open-frame constructions. Follow these installation and maintenance instructions if your valve or operator uses this solenoid.

DESCRIPTION

Catalog numbers 8016G/H1 and 8016G/H2 are epoxy encapsulated pull-type solenoids. The green solenoid with lead wires and 1/2 conduit connection is designed to meet Enclosure Type 1-General Purpose, Type 2-Dripproof, Types 3 and 3S-Raintight, and Types 4 and 4X-Watertight. The black solenoid on catalog numbers prefixed "EF" is designed to meet Enclosure Types 3 and 3S-Raintight, Types 4 and 4X-Watertight, Types 6 and 6P-Submersible, Type7, Explosionproof Class I, Division1 Groups A, B, C, & D and Type 9, -Dust-Ignitionproof Class II, Division1 Groups E, F & G. The Class II, Groups F & G Dust Locations designation is not applicable for solenoids or solenoid valves used for steam service or when a class "H" solenoid is used. See *Temperature Limitations* section for solenoid identification and nameplate/retainer for service. When installed just as a solenoid and not attached to an ASCO valve, the core has a 0.250-28 UNF-2B tapped hole, 0.38 minimum full thread.

Series 8016G/H are available in:

- **Open-Frame Construction:** The green solenoid may be supplied with 1/4″ spade, screw or DIN terminals. (Refer to Figure 4)
- **Panel Mounted Construction:** These solenoids are specifically designed to be panel mounted by the customer through a panel having a .062 to .093 maximum wall thickness. (Refer to Figure 3 and section on *Installation of Panel Mounted Solenoid*).

Optional Features For Type 1 - General Purpose Construction Only

- **Junction Box:** This junction box construction meets Enclosure Types 2, 3, 3S, 4, and 4X. Only solenoids with 1/4″ spade or screw terminals may have a junction box. The junction box provides a 1/2″ conduit connection, grounding and spade or screw terminal connections within the junction box (See Figure 5).
- **DIN Plug Connector Kit No. K236034:** Use this kit only for solenoids with DIN terminals. The DIN plug connector kit provides a two pole with grounding contact DIN Type 43650 construction (See Figure 6).

OPERATION

When the solenoid is energized, the core is drawn into the solenoid base sub-assembly.

IMPORTANT: When the solenoid is de-energized, the initial return force for the core, whether developed by spring, pressure, or weight, must exert a minimum force to overcome residual magnetism created by the solenoid. Minimum return force for AC construction is 0.69lbs (3.1N) and 0.31 lbs (1.38N) for DC.

INSTALLATION

Check nameplate for correct catalog number, service, and wattage. Check front of solenoid for voltage and frequency.

⚠ WARNING: Electrical hazard from the accessibility of live parts. To prevent the possibility of death, serious injury or property damage, install the open - frame solenoid in an enclosure.

FOR BLACK ENCLOSURE TYPES 7 AND 9 ONLY

⚠CAUTION: To prevent fire or explosion, do not install solenoid and/or valve where ignition temperature of hazardous atmosphere is less than 165°C. On valves used for steam service or when a class "H" solenoid is used, do not install in hazardous atmosphere where ignition temperature is less than 180°C. See nameplate/retainer for service.

NOTE: These solenoids have an internal non-resetable thermal fuse to limit solenoid temperature in the event that extraordinary conditions occur which could cause excessive temperatures. These conditions include high input voltage, a jammed core, excessive ambient temperature or a shorted solenoid, etc. This unique feature is a standard feature only in solenoids with black explosionproof/dust-ignitionproof enclosures (Types 7 & 9).

⚠CAUTION: To protect the solenoid valve or operator, install a strainer or filter, suitable for the service involved in the inlet side as close to the valve or operator as possible. Clean periodically depending on service conditions. See ASCO Series 8600 and 8601 for strainers.

Temperature Limitations

For maximum valve ambient temperatures, refer to chart. The temperature limitations listed, only indicate maximum application temperatures for field wiring rated at 90°C. Check catalog number prefix and watt rating on nameplate to determine maximum ambient temperature. See valve installation and maintenance instructions for maximum fluid temperature.

 All Rights Reserved.

NOTE: For steam service, refer to *Wiring* section, *Junction Box* for temperature rating of supply wires.

Temperature Limitations For Series 8016G Solenoids for use on Valves Rated at 6.1, 8.1, 9.1, 10.6 or 11.1 Watts			
Watt Rating	Catalog Number Coil Prefix	Class of Insulation	Maximum § Ambient Temp.
6.1, 8.1, 9.1 & 11.1	None, FB, KF, KP, SC, SD, SF & SP	F	125°F (52°C)
6.1, 8.1, 9.1 & 11.1	HB, HT, KB, KH, SS, ST & SU	H	140°F (60°C)
10.6**	None, KF, SF, SC, HT, KH, ST & SU	F & H	104°F (40°C)
7.1 @ 60Hz (8.1 @ 50Hz)		F & H	175°F (79°C)*
10.6**		F & H	140°F (60°C)

§ Minimum ambient temperature -40°F (-40°C).

* When used with watertight aluminum junction boxers (screw or spade) max. ambient and fluid temperature will be reduced to 157°F (69.4°C)

** 10.6 Watt solenoids rated for 104°F are 8030, 8260, 8316, 8321, 8320, 8360 & 8344 valves while those rated for 140°F are 8040 valves

Temperature Limitations for Series 8003H, 8007H and 8202H solenoids						
		Watt Ratings			Maximum Ambient Temperature	
Prefix ①	Coil Class	AC		DC		
		60 Hz	50 Hz		°C	°F
EF	FT	6.1	8.1	-	52	125
EF	FB	9.1	11.1	-		
	FT	6.1	8.1	-	55	131
	FB	9.1	11.1	-		
	HT	-	-	10.6	40 ②	104②
	HB	-	-	18.6		
EF	HT	-	-	10.6		
EF	HB	-	-	18.6		
	HT	6.1	8.1	-	60 ③	140 ③
	HB	9.1	11.1	-		
EF	HT	6.1	8.1	-		
EF	HB	9.1	11.1	-		

①= EF data applies to Explosionproof coils only.

②= Some DC solenoid valves can be operated at maximum ambient temperature of 55°C / 131°F with reduced pressure ratings. See valve I&M for maximum operating pressure differential ratings.

③= Steam Service Valves have a maximum ambient temperature of 55° C/ 131°F.

Positioning

This solenoid is designed to perform properly when mounted in any position. However, for optimum life and performance, the solenoid should be mounted vertically and upright to reduce the possibility of foreign matter accumulating in the solenoid base sub-assembly area.

Wiring

Wiring must comply with local codes and the National Electrical Code. All solenoids supplied with lead wires are provided with a grounding wire which is green or green with yellow stripes and a 1/2″ conduit connection. To facilitate wiring, the solenoid may be rotated 360°. For the watertight and explosionproof solenoid, electrical fittings must be approved for use in the approved hazardous locations.

Additional Wiring Instructions For Optional Features:

- **Open-Frame solenoid with 1/4″ spade terminals.**

For solenoids supplied with screw terminal connections use #12-18 AWG stranded copper wire rated at 90°C or greater. Torque terminal block screws to10±2 in-lbs [1,0±1,2 Nm]. A tapped hole is provided in the solenoid for grounding, use a #10-32 machine screw. Torque grounding screw to 15-20 in-lbs [1,7-2,3 Nm]. On solenoids with screw terminals, the socket head screw holding the terminal block to the solenoid is the grounding screw. Torque the screw to 15-20 in-lbs [1,7-2,3 Nm] with a 5/32″ hex key wrench.

- **Junction Box**

The junction box is used with spade or screw terminal solenoids only and is provided with a grounding screw and a 1/2″ conduit connection. Connect #12-18 AWG standard copper wire only to the screw terminals. Within the junction box use field wire that is rated 90°C or greater for connections. For steam service use 105°C rated wire up to 50 psi or use 125°C rated wire above 50 psi. After electrical hookup, replace cover gasket, cover, and screws. Tighten screws evenly in a crisscross manner.

- **DIN Plug Connector Kit No. K236034**

1. The open-frame solenoid is provided with DIN terminals to accommodate the plug connector kit.
2. Remove center screw from plug connector. Using a small screwdriver, pry terminal block from connector cover.
3. Use #12-18 AWG stranded copper wire rated at 90°C or greater for connections. Strip wire leads back approximately 1/4″ for installation in socket terminals. The use of wire-end sleeves is also recommended for these socket terminals. Maximum length of wire-end sleeves to be approximately 1/4″. Tinning of the ends of the lead wires is not recommended.
4. Thread wire through gland nut, gland gasket, washer and connector cover.

NOTE: Connector housing may be rotated in 90° increments from position shown for alternate positioning of cable entry.

5. Check DIN connector terminal block for electrical markings. Then make electrical hookup to terminal block according to markings on it. Snap terminal block into connector cover and install center screw.
6. Position connector gasket on solenoid and install plug connector. Torque center screw to 5±1 in-lbs [0,6±1,1 Nm].

NOTE: Alternating current (AC) and direct current (DC) solenoids are built differently and cannot be converted from one to the other by changing the coil.

©ASCO Valve, Inc. 50 Hanover Road, Florham Park, New Jersey 07932 www.ascovalve.com

Installation of Solenoid

Solenoids may be assembled as a complete unit. Tightening is accomplished by means of a hex flange at the base of the solenoid.

Installation of Panel Mounted Solenoid (See Figure 3)

Disassemble solenoid following instruction under *Solenoid Replacement* then proceed.

3/4" Valve Bonnet Construction

1. Install retainer (convex side to solenoid) in 1.312 diameter mounting hole in customer panel.
2. Position spring washer over plugnut/core tube sub-assembly.
3. Install plugnut/core tube sub-assembly through retainer in customer panel then replace solenoid, nameplate and red cap.

15/16" Valve Bonnet Construction

1. Install solenoid base sub-assembly through 0.69 diameter mounting hole in customer panel.
2. Position spring washer on opposite side of panel over solenoid base sub-assembly then replace.

Solenoid Temperature

Standard solenoids are designed for continuous duty service. When the solenoid is energized for a long period, the solenoid becomes hot and can be touched by hand only for an instant. This is a safe operating temperature.

MAINTENANCE

⚠ WARNING: To prevent the possibility of death, serious injury or property damage, turnoff electrical power, depressurize solenoid operator and/or valve, and vent fluid to a safe area before servicing.

Cleaning

All solenoid operators and valves should be cleaned periodically. The time between cleaning will vary depending on medium and service conditions. In general, if the voltage to the solenoid is correct, sluggish valve operation, excessive noise or leakage will indicate that cleaning is required. Clean strainer or filter when cleaning the valve.

Preventive Maintenance

- Keep the medium flowing through the solenoid operator or valve as free from dirt and foreign material as possible.
- Periodic exercise of the valve should be considered if ambient or fluid conditions are such that corrosion, elastomer degradation, fluid contamination build up, or other conditions that could impede solenoid valve shifting are possible. The actual frequency of exercise necessary will depend on specific operating conditions. A successful operating history is the best indication of a proper interval between exercise cycles.
- Depending on the medium and service conditions, periodic inspection of internal valve parts for damage or excessive wear is recommended. Thoroughly clean all parts. Replace any worn or damaged parts.

Causes of Improper Operation

- **Faulty Control Circuit:** Check the electrical system by energizing the solenoid. A metallic *click* signifies that the solenoid is operating. Absence of the *click* indicates loss of power supply. Check for loose or blown fuses, open-circuited or grounded solenoid, broken leadwires or splice connections.
- **Burned-Out Solenoid:** Check for open-circuited solenoid. Replace if necessary. Check supply voltage; it must be the same as specified on nameplate/retainer and marked on the solenoid. Check ambient temperature and check that the core is not jammed.
- **Low Voltage:** Check voltage across the solenoid leads. Voltage must be at least 85% of rated voltage.

Solenoid Replacement

1. On solenoids with lead wires disconnect conduit, coil leads, and grounding wire.

NOTE: Any optional parts attached to the old solenoid must be reinstalled on the new solenoid.

2. Disassemble solenoids with optional features as follows:
   - **Spade or Screw Terminals**

   Remove terminal connections, grounding screw, grounding wire, and terminal block (screw terminal type only).

NOTE: For screw terminals, the socket head screw holding the terminal block serves as a grounding screw.

   - **Junction Box**

   Remove conduit and socket head screw (use 5/32″ hex key wrench) from center of junction box. Disconnect junction box from solenoid.

   - **DIN Plug Connector**

   Remove center screw from DIN plug connector. Disconnect DIN plug connector from adapter. Remove socket head screw (use 5/32″ hex key wrench), DIN terminal adapter, and gasket from solenoid.

3. Snap off red cap from top of solenoid base sub-assembly.
4. Push down on solenoid. Then using a suitable screwdriver, insert blade in slot provided between solenoid and nameplate/retainer. Pry up slightly and push to remove. Then remove solenoid from solenoid base sub-assembly.
5. Reassemble using exploded views for parts identifcation and placement.

Disassembly and Reassembly of Solenoids

1. Remove solenoid, see *Solenoid Replacement*.
2. Remove spring washer from solenoid base sub-assembly.
3. Unscrew solenoid base sub-assembly.

NOTE: Some solenoid constructions have a plugnut/core tube sub-assembly, bonnet gasket and bonnet in place of the solenoid base sub-assembly. To remove bonnet use special wrench adapter supplied in ASCO Rebuild Kit. For wrench adapter only, order ASCO Wrench Kit No. K218948.

4. The core is now accessible for cleaning or replacement.
5. If the solenoid is part of a valve, refer to basic valve installation and maintenance instructions for further disassembly.
6. Reassemble using exploded views for identification and placement of parts.

©ASCO Valve, Inc. 50 Hanover Road, Florham Park, New Jersey 07932 www.ascovalve.com

ORDERING INFORMATION FOR ASCO SOLENOIDS

When Ordering Solenoids for ASCO Solenoid Operators or Valves, order the number stamped on the solenoid. Also specify voltage and frequency.

Torque Chart

Part Name	Torque Value in Inch-Pounds	Torque Value in Newton-Meters
solenoid base sub-assembly	175 ± 25	19,8± 2,8
valve bonnet (3/4" bonnet construction)	90 ± 10	10,2 ± 1,1
bonnet screw (3/8" or 1/2" NPT pipe size)	25	2,8
bonnet screw (3/4" NPT pipe size)	40	4,5

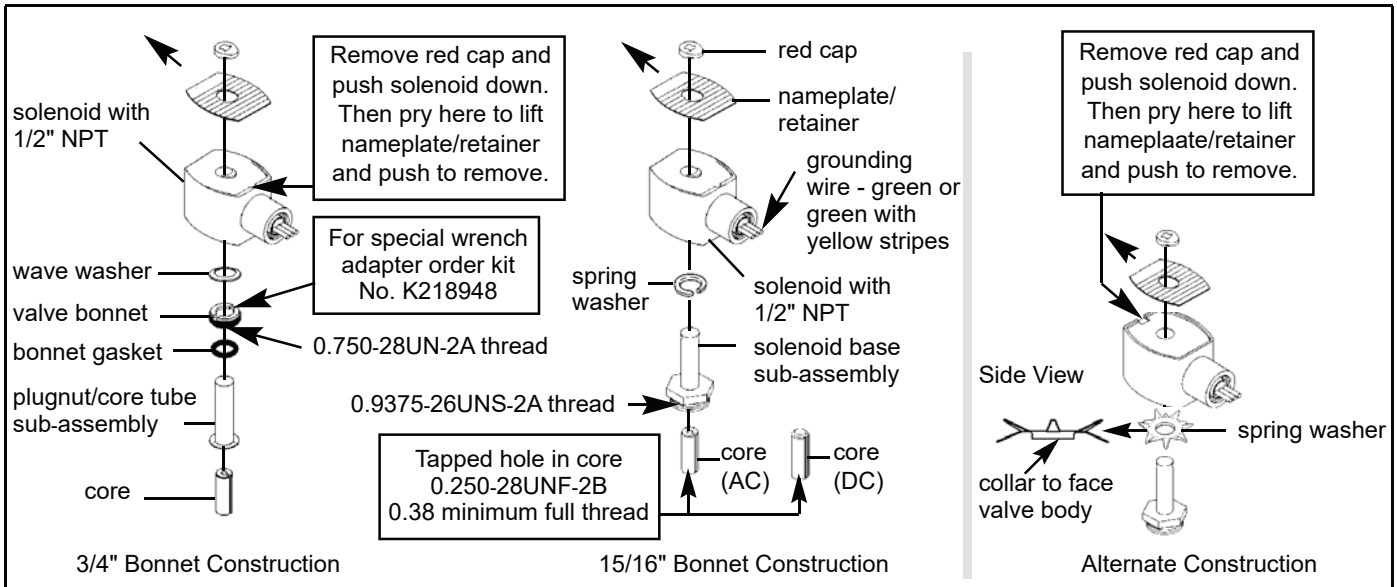

Figure 1. Series 8016G/H solenoids

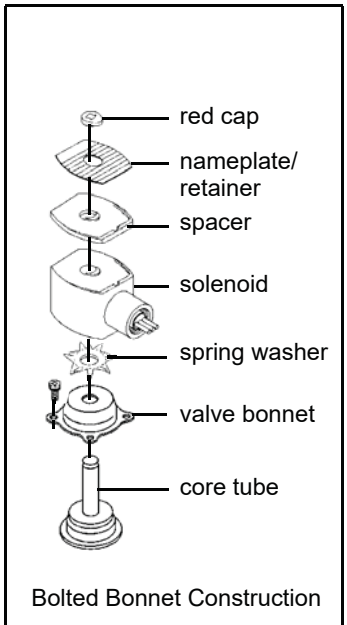

Figure 2. Series 8016G/H solenoids

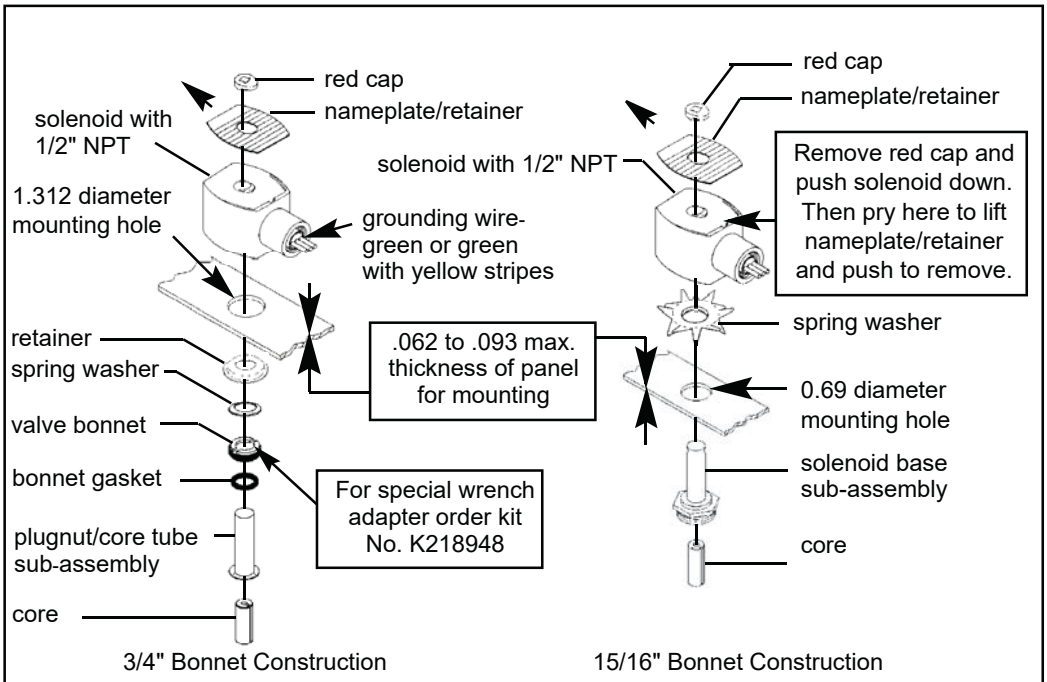

Figure 3. Series 8016G/H panel mounted solenoids

©ASCO Valve, Inc. 50 Hanover Road, Florham Park, New Jersey 07932 www.ascovalve.com

Installation&Maintenance Instructions

ASCO Red-Hat II™

OPEN-FRAME, GENERAL PURPOSE, WATERTIGHT/EXPLOSIONPROOF SOLENOIDS

SERIES

8016G/H

NOTICE: See Installation and Maintenance Instructions, I&M No. V6583R11 - Section 1 of 2 for detailed instructions.

Torque Chart

Part Name	Torque Value in Inch–Pounds	Torque Value in Newton–Meters
terminal block screws	10 ± 2	1,1 ± 0,2
socket head screw	15 – 20	1,7 – 2,3
center screw	5 ± 1	0,6 ± 0,1

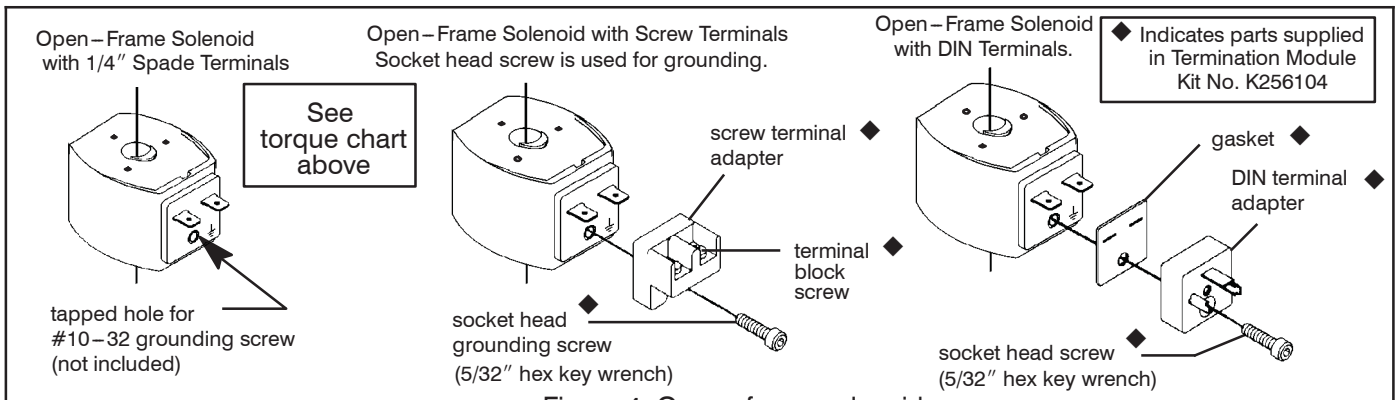

Figure 4. Open–frame solenoids

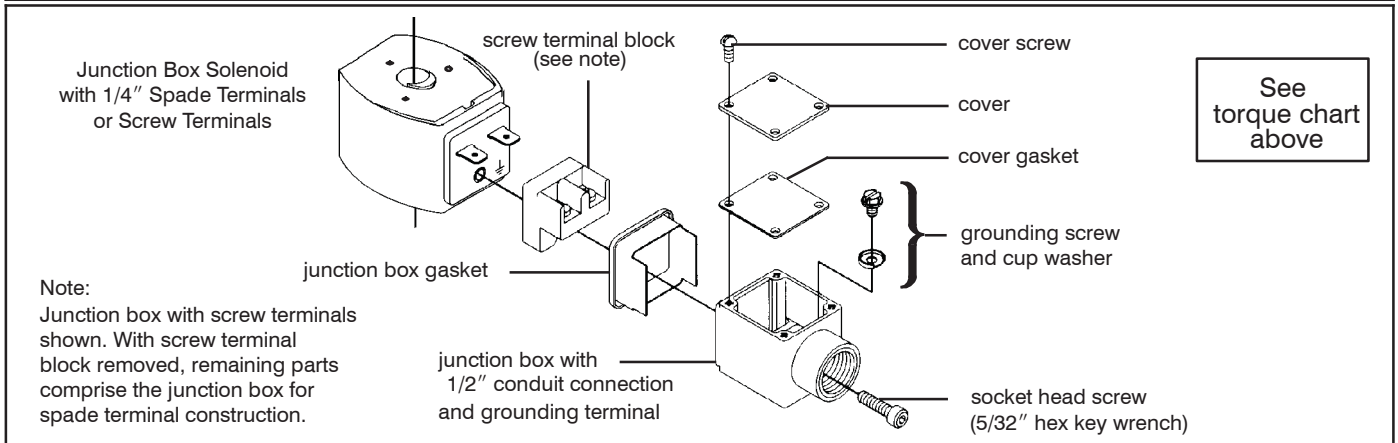

Figure 5. Junction box (optional feature)

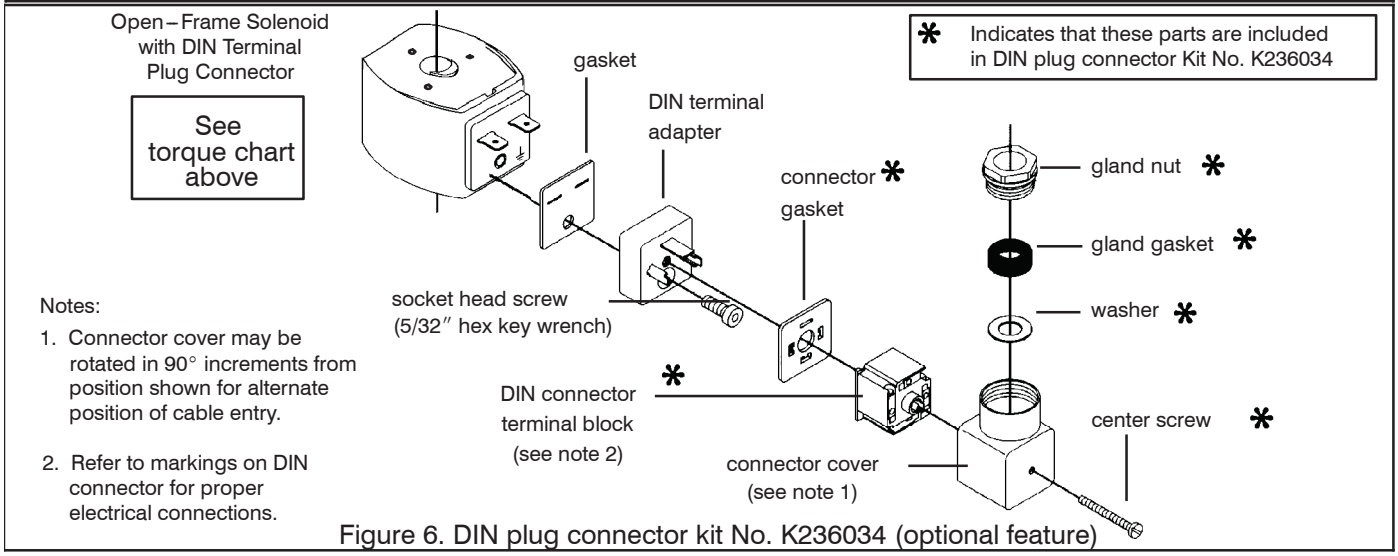

Figure 6. DIN plug connector kit No. K236034 (optional feature)

 All Rights Reserved.

©ASCO Valve, Inc. 50 Hanover Road, Florham Park, New Jersey 07932

GB

GENERAL INSTALLATION AND MAINTENANCE INSTRUCTIONS

Note: These general Installation and Maintenance Instructions must be read in conjunction with the Instruction Sheet for the specific product.

INSTALLATION

ASCO Numatics components are intended to be used only within the technical characteristics as specified on the nameplate. Changes to the equipment are only allowed after consulting the manufacturer or its representative. Before installation, depressurize the piping system and clean internally.
The equipment may be mounted in any position if not otherwise indicated on the product by means of an arrow.
The flow direction and pipe connection of valves are indicated on the body.

The pipe connections have to be in accordance with the size indicated on the nameplate and fitted accordingly.

Caution:
- Reducing the connections may cause improper operation or malfunctioning.
- For the protection of the equipment install a strainer or filter suitable for the service involved in the inlet side as close to the product as possible.
- If tape, paste, spray or a similar lubricant is used when tightening, avoid particles entering the system.
- Use proper tools and locate wrenches as close as possible to the connection point.
- To avoid damage to the equipment. DO NOT OVERTIGHTEN pipe connections
- Do not use valve or solenoid as lever.
- The pipe connections should not apply any force, torque or strain to the product.

ELECTRICAL CONNECTION

In case of electrical connections, they are only to be made by trained personnel and have to be in accordance with the local regulations and standards.

Caution:
- Turn off electrical power supply and de-energize the electrical circuit and voltage carrying parts before starting work.
- All electrical screw terminals must be properly tightened according to the standards before putting into service.
- Dependent upon the voltage electrical components must be provided with an earth connection and satisfy local regulations and standards.

The equipment can have one of the following electrical terminals:
- Spade plug connections according to ISO-4400 or 3 x DIN-46244 (when correctly installed, this connection provides IP-65 protection).
- Embedded screw terminals in metal enclosure with "Pg" cable gland
- Spade terminals (AMP type).
- Flying leads or cables.

PUTTING INTO SERVICE

Before pressurizing the system, first carry-out an electrical test. In case of solenoid valves, energize the coil a few times and notice a metal click signifying the solenoid operation.

SERVICE

Most of the solenoid valves are equipped with coils for continuous duty service. To prevent the possibility of personal or property damage, do not touch the solenoid which can become hot under normal operating conditions.

SOUND EMISSION

The emission of sound depends on the application, medium and nature of the equipment used. The exact determination of the sound level can only be carried out by the user having the valve installed in his system

MAINTENANCE

Maintenance of ASCO Numatics products is dependent on service conditions. Periodic cleaning is recommended, the timing of which will depend on the media and service conditions. During servicing, components should be examined for excessive wear. A complete set of internal parts is available as spare parts or rebuild kit. If a problem occurs during installation/maintenance or in case of doubt please contact ASCO Numatics or authorized representatives.

*A separate Declaration of Incorporation relating to EU-Directive 2006/42/EC Annex IIB is available on request for applicable products. Please provide product identification number and serial numbers of products concerned.

The product, , when marked CE, complies with the essential requirements of the EMC 2004/108/EC (until April 20th 2016) and EMC 2014/30/EU (from April 20th 2016) and LVD 2006/95/EC (until April 20th 2016) and LVD 2014/35/EU (from April 20th 2016). A separate Declaration of Conformity is available on request. Please provide product identification number and serial numbers of the products concerned.

FR

INSTRUCTIONS GÉNÉRALES D'INSTALLATION ET D'ENTRETIEN

Note: Ces instructions générales d'installation et d'entretien complètent la notice spécifique du produit.

MONTAGE

Les composants ASCO Numatics sont conçus pour les domaines de fonctionnement indiqués sur la plaque signalétique ou la documentation. Aucune modification ne peut être réalisée sur le matériel sans l'accord préalable du fabricant ou de son représentant. Avant de procéder au montage, dépressuriser les canalisations er effectuer un nettoyage inteme.
A moins qu'une fléche ou la notice n'indique un sens de montage spécifique de la tête magnétique, le produit peut être monté dans n'importe quelle position
Le sens de circulation du fluide est indiqué par repères sur le corps er dans la documentation.
La dimension des tuyauteries doit correspondre au raccordement indiqué sur le corps, l'étiquette ou la notice.

Attention:
- Une restriction des tuyauteries peut entraîner des dysfonctionnements.
- Afin de protéger le matériel, installer une crépine ou un filtre adéquat en amont, aussi près que possible du produit.
- En cas d' utilisation de ruban; pàte, aérosol ou autre lubrifiant lors du serrage, veiller à ce qu" aucun corps étranger ne pénètre dans le circuit.
- Utiliser un outillage approprié et placer les clés aussi près que possible du point de raccordement.
- Afin d'éviter toute détérioration, NE PAS TROP SERRER les raccords des tuyauteries.
- Ne pas se servir de la vanne ou de tête magnétique comme d'un levier.
- The pipe connections should not apply any force, torque or strain to the product.

RACCORDEMENT ÉLECTRIQUE

Le raccordement électrique doit être réalisé par un personnel qualifié et selon les normes et règlements locaux.

Attention:
- Avant toute intervention, couper l'alimentation électrique pour mettre hors tension les composants.
- Toutes les bornes à vis doivent être serrées correctement avant la mise en service.
- Selon la tension, les composants électrique doivent être mis à la terre conformément aux normes et règlements locaux.

Selon les cas, le raccordement électrique s'effectué par:
- Connecteur débrochable ISO-4400 ou 3 x DIN-46244 avec degré de protection IP-65 lorsque le raccordement est correctement effectué.
- Bornes à vis solidaires du bobinage, sous boîter métallique avec presse-étoupe "Pg--".
- Cosses (type AMP).
- Fils ou câbles solidaires de la bobine.

MISE EN SERVICE

Avant de mettre le circuit sous pression, effectuer un essai électrique. Dans le cas d'une électrovanne, mettre la bobine sous tension plusieurs fois er écouter le "clic" métallique qui signale le fonctionnement de la tête magnétique.

FONCTIONNEMENT

La plupart des électrovannes comportant des bobinages prévus pour mise sous tension permanente. Pour éviter toute brûlure, ne pas toucher la tête magnétique qui, en fonctionnement normal et en permanence sous tension, peut atteindre une température élevée.

BRUIT DE FONCTIONNEMENT

Le bruit de fonctionnement varie selon l'utilisation, le fluide et le type de matériel employé. L'utilisateur ne pourra déterminer avec précision le niveau sonore émis qu'après avoir monté le composant sur l'installation.

ENTRETIEN

L'entretien nécessaire aux produits ASCO Numatics varie avec leurs conditions d'utilisation. Il est souhaitable de procéder à un nettoyage périodique dont l'intervalle varie suivant la nature du fluide, les conditions de fonctionnement et le milieu ambiant. Lors de l'intervention. Les composants doivent être examinés our détecter toute usure excessive. Un ensemble de pièces internes est proposé en pièces de rechange pour procéder à la réfection. En cas de problème lors du montage/entretien ou en cas de doute, veuillez contacter ASCO Numatics ou ses représentants officiels.

*Une déclaration d'incorporation relative à la directive UE 2006/42/CE Annexe II B est disponible sur demande pour les produits applicables. Veuillez fournir le numéro d'identification du produit et les numéros de série des produits concernés.

Lorsqu'il est marqué du label CE, le produit est conforme aux exigences essentielles des directives CEM 2004/108/CE (jusqu'au 20 avril 2016) et CEM 2014/30/UE (à partir du 20 avril 2016) et des directives Basse tension 2006/95/CE (jusqu'au 20 avril 2016) et 2014/35/UE (à partir du 20 avril 2016). Une déclaration de conformité peut être fournie sur simple demande. Veuillez fournir le numéro d'identification du produit et les numéros de série des produits concernés.

DE

ALLGEMEINE BETRIEBSANLEITUNG

Achtung: Diese Allgemeine Betriebsanleitung gilt in Zusammenhang mit der jeweiligen Betriebsanleitung für die speziellen Produkte.

EINBAU

Die ASCO Numatics-Komponenten dürfen nur innerhalb der auf den Typenschildern angenebenen Daten eingesetzt warden, Veränderungen an den Produkten sind nur nach Rücksprache mit ASCO Numatics zulässig.
Vor dem Einbau der Ventile muß das Rohrleitungssystem drucklos geschaltet und innen gereinigt werden.
Die Einbaulage der Produkte ist genereil beliebig. Ausnahme: Die mit einem Pfeil gekennzeichneten Produkte müssen entsprechend der Pfeilrichtung montiert werden.
Die Durchflußrichtung und der Eingang von Ventilen sind gekennzeichnet.

Die Rohranschlüsse sollten entsprechend den Größenangaben auf den Typenschildern mit handelsüblichen Verschraubungen durchgeführt werden. Dabei ist folgendes zu beachten:
- Eine Reduzierung der Anschlüsse kann zu Leistungs-und Funktionsminderungen führen.
- Zum Schutz der Ventile sollten Schmutzfänger oder Filter so dicht wie möglich in den Ventileingang integriert werden.
- Bei Abdichtung am Gewinde ist darauf zu achten, daß kein Dichtungsmaterial in die Rohrleitung oder das Ventil gelangt.
- Zur Montage darf nur geeignetes Werkzeug verwendetwerden.
- Konische Verschraubungen sind sorgfältig anzuziehen. Es ist darauf zu achten, daß beim Anziehen das Gehäuse nicht beschädigt wird.
- Spule und Führungsrohr von Ventilen dürfen nicht als Gegenhalter benutzt werde.
- Die Rohrleitungsanschlüsse sollen fluchten und dürfen keine Spannungen auf das Ventil übertragen.

ELECTRISCHER ANSCHLUß

Der elektrische Anschluß ist von Fachpersonal entsprechend den geltenden VDE-und CEE Richtlinien auszuführen. Es ist besonders auf foigendes zu achten:
- Vor Beginn der Arbeiten ist sicherzustellen, daß alle elektrischen Leitungen und Netzteile spannungslos geschaltet sind.
- Alle Anschlußklemmen sind nach Beendigung der Arbeiten vorschriftsmäßig entsprechend den geltenden Regeln anzuziehen.
- Je nach Spannungsbereich muß das Ventil nach den geltenden Regeln einen Schutzleiteranschluß erhalten.

Der Magnetantrieb kann je nach Bauart folgende Anschlüsse haben:
- Anschluß für Gerätesteckdose nach DIN 43650 Form A/ISO 4400 oder 3 x DIN 46244 (durch ordnungsgemäße Montage der Gerätesteckdose wird Schutzklasse IP 65 erreicht).
- Anschlüsse innerhalb eines Blechgehäuses mittels Schraubklemmen. Kabeleinführung ins Gehäuse mit PG-Verschraubung.
- Offene Spulen mit Flachsteckern (AMP-Fahnen) oder mit eingegossenen Kabelenden.

INBETRIEBNAHME

Vor Druckbeaufschlagung des Produktes sollte eine elektrische Funktionsprüfung erfolgen:

Bei Ventilen Spannung an der Magnetspule mehrmals ein-und ausschalten. Es muß ein Klicken zu hören sein.

BETRIEB

Die meisten Ventile sind mit Spulen für Dauerbetrieb ausgerüstet. Zur Vermeidung von Personen-und Sachschäden sollte jede Berührung mit dem Ventil vermieden werden, da die Magnetspule bei längerem Betrieb sehr heiß werden kann.

GERÄUSCHEMISSION

Diese hängt sehr stark vom Anwendungsfall, den Betriebsdaten und dem Medium, mit denen das Produkt beaufschlagt wird, ab. Eine Aussage über die Geräuschemission des Produktes muß deshalb von demjenigen getroffen werden, der das Produkt innerhalb einer Maschine in Betrieb nimmit.

WARTUNG

Die Wartung hängt von den Einsatzbedigungen ab. In entsprechenden Zeitabständen muß das Produkt geöffnet und gereinigt werden. Für die Überholung der ASCO Numatics-Produkte können Ersatzteilsätze geliefert werden. Treten Schwierigkeiten bel Einbau, Betrieb oder Wartung auf, sowie bei Unklarheiten, ist mit ASCO Numatics Rücksprache zu halten.

ASCO Numatics Produkte sind entsprechend der EG-Richtlinie 89/392/EWG gefertigt.

*Eine separate Herstellererklärung im Sinne der Richtlinie 2006/42/EWG Anhang II B ist auf Anfrage für die entsprechenden Produkte erhältlich. Geben Sie bitte die Kennnummer sowie die Seriennummer der betreffenden Produkte an.

Das Produkt, wenn mit CE gekennzeichnet, erfüllt die Anforderungen von EMV 2004/108/EWG (bis 20. April 2016) und EMV 2014/30/EU (vom 20. April 2016) und LVD 2006/95/EWG (bis 20. April 2016) und LVD 2014/35/EU (vom 20. April 2016). Eine separate Konformitätserklärung ist auf Anfrage erhältlich. Geben Sie bitte die Kennnummer sowie die Seriennummer der betreffenden Produkte an.

ASCO
50 Hanover Road
Florham Park, New Jersey 07932
Tel. (973) 966-2000
Fax (973) 966-2628

ASCO
1561 Columbia Highway
Aiken, South Carolina 29801
Tel. (803) 641-9200
Fax (803) 641-9290

ASCO Valves® E 264274 - 04/2016 All Rights Reserved.
©ASCO Valve, Inc. 50 Hanover Road, Florham Park, New Jersey 07932 www.ascovalve.com

ASCO

8320G094, SOLENOID VALVE

LEFT BLANK

Installation & Maintenance Instructions

2-WAY INTERNAL PILOT-OPERATED SOLENOID VALVES
HUNG DIAPHRAGM — 3/8 ", 1/2" AND 3/4" NPT
NORMALLY CLOSED OPERATION

SERIES
8210
8211

NOTICE: See separate solenoid installation and maintenance instructions for information on: Wiring, Solenoid Temperature, Cause of Improper Operation, Coil or Solenoid Replacement.

DESCRIPTION

Series 8210 valves are 2-way normally closed, internal pilot operated solenoid valves. Valve body and bonnet are of brass construction. Series 8210 valves may be provided with a general purpose/watertight, open-frame or explosionproof/ watertight solenoid.

Series 8210 and 8211 valves with suffix "HW" in the catalog number are specifically designed for hot water service.

Notice: These valves are not certified as lead-free under the Safe Water Drinking Act SWDA 1417 and are not intended for use on drinking water systems. They are intended for control of water in industrial applications. Consult ASCO for valves rated for use in potable water applications.

OPERATION

Normally Closed: Valve is closed when solenoid is de-energized; open when energized.

Manual Operator (Optional)

Valves with suffix "MO" in catalog number are provided with a manual operator which allows manual operation when desired or during an interruption of electrical power. To operate valve manually, push in knurled cap and rotate 180°. Disengage manual operator by rotating knurled cap counterclockwise 180° before operating electrically.

Manual Operator Location (Refer to Figure 3)

Manual operator (when shipped from factory) will be located over the valve outlet. Manual operator may be relocated at 90° increments by rotating valve bonnet. Remove bonnet screws (4) and rotate valve bonnet with solenoid to desired position. Replace bonnet screws (4) and torque in a crisscross manner to 110±10 inch pounds.

If valve is installed in the system and is operational, proceed in the following manner:

⚠ WARNING: To prevent the possibility of death, serious injury or property damage, depressurize valve and vent fluid to a safe area before servicing the valve.

1. Remove the solenoid - see separate solenoid instructions.
2. Remove bonnet screws (4) and rotate valve bonnet to desire position.
3. Replace bonnet screws (4) and torque in a crisscross manner to 110±10 inch pounds.
4. Replace all solenoid parts.

INSTALLATION

Check nameplate for correct catalog number, pressure, voltage, frequency, and service. Never apply incompatible fluids or exceed pressure rating of the valve. Installation and valve maintenance to be performed by qualified personnel.

Temperature Limitations

For maximum valve ambient and fluid temperatures, refer to chart. The temperature limitations listed are for UL applications. For non UL applications, higher ambient and fluid temperature limitations are available. Consult factory. Check catalog number on nameplate to determine maximum temperatures.

Construction	Max. Fluid Temp, °F
AC Construction (Alternating Current)	180
DC Construction (Direct Current)	150
Catalog Numbers Suffixed "HW" AC Construction (Alternating Current)	210

Note: For Maximum Ambient Temperature specifications, see separate solenoid instructions.

Positioning

This valve is designed to perform properly when mounted in any position. However, for optimum life and performance, the solenoid should be mounted vertically and upright to reduce the possibility of foreign matter accumulating in the solenoid base sub-assembly area.

Mounting

For mounting bracket (optional feature) dimensions, refer to Figure 1.

Piping

Connect piping to valve according to markings on valve body. Apply pipe compound or PTFE tape sparingly to male pipe threads only. If applied to valve threads, the compound may enter the valve and cause operational difficulty. Avoid pipe strain by properly supporting and aligning piping. When tightening the pipe, do not use valve or solenoid as a lever. Locate wrenches applied to valve body or piping as close as possible to connection point.

IMPORTANT: Valves with Suffix "HW" in the catalog number have a special diaphragm material which is specifically compounded for hot water service. This material can be attacked by oil and grease. Wipe the pipe threads clean of cutting oils and use PTFE tape to seal pipe joints.

IMPORTANT: To protect the solenoid valve, install a strainer or filter suitable for the service involved in the inlet side as close to the valve as possible. Clean periodically depending on service conditions. See ASCO Series 8600 and 8601 for strainers.

All Rights Reserved.

©ASCO Valve, Inc.® 50 Hanover Road, Florham Park, New Jersey 07932 www.ascovalve.com

MAINTENANCE

⚠ WARNING: To prevent the possibility of death, serious injury or property damage, depressurize valve and vent fluid to a safe area before servicing the valve.

NOTE: It is not necessary to remove the valve from the pipeline for repairs.

Cleaning

All solenoid valves should be cleaned periodically. The time between cleanings will vary depending on the medium and service conditions. In general, if the voltage to the coil is correct, sluggish valve operation, excessive noise or leakage will indicate that cleaning is required. In the extreme case, faulty valve operation will occur and the valve may fail to open or close. Clean strainer or filter when cleaning the valve.

Preventive Maintenance

- Keep the medium flowing through the valve as free from dirt and foreign material as possible.
- Periodic exercise of the valve should be considered if ambient or fluid conditions are such that corrosion, elastomer degradation, fluid contamination build up, or other conditions that could impede solenoid valve shifting are possible. The actual frequency of exercise necessary will depend on specific operating conditions. A successful operating history is the best indication of a proper interval between exercise cycles.
- Depending on the medium and service conditions, periodic inspection of internal valve parts for damage or excessive wear is recommended. Thoroughly clean all parts. If parts are worn or damaged, install a complete ASCO Rebuild Kit.

Causes of Improper Operation

- **Incorrect Pressure:** Check valve pressure. Pressure to valve must be within range specified on nameplate.
- **Excessive Leakage:** Disassemble valve and clean all parts. If parts are worn or damaged, install a complete ASCO Rebuild Kit.

Coil Replacement (See separate solenoid instructions)

Valve Disassembly (Refer to Figures 2 and 3)

1. Remove the solenoid - see separate solenoid instructions.
2. Unscrew solenoid base sub-assembly and remove bonnet gasket.
3. Remove valve bonnet screws (4) and valve bonnet.
4. For normal maintenance, it is not necessary to disassemble the manual operator (optional feature) unless external leakage is evident. To disassemble, remove stem pin, manual operator stem, stem spring and stem gasket.
5. Remove core spring, core/diaphragm sub-assembly and body gasket. CAUTION: Do not damage or distort hanger spring between core/diaphragm sub-assembly.
6. All parts are now accessible for cleaning or replacement. Replace worn or damaged parts with a complete Spare Parts Kit for best results.

Valve Reassembly

1. Reassemble in reverse order of disassembly paying careful attention to exploded views provided for identification and placement of parts.
2. Lubricate body gasket and solenoid base gasket with DOW CORNING® 200 fluid lubricant or an equivalent high-grade silicone fluid. Lubricate manual operator stem gasket with DOW CORNING® 111 Compound lubricant or an equivalent high-grade silicone grease. On oxygen valves Suffix "N" and special cleaning valves where silicone lubricants are not allowed use FLOROLUBE® GR-362, LG-160 or KRYTOX® GPL -226.

Note: Only the gaskets specified above should be lubricated.

3. Replace body gasket and core/diaphragm sub-assembly. Locate the bleed hole in core/diaphragm sub-assembly approximately 45° from the valve outlet.
4. Replace core spring with wide end in core first; closed end protrudes from top of core.
5. If removed, replace manual operator stem, stem spring, stem gasket and stem pin.
6. Replace valve bonnet and bonnet screws (4). Torque bonnet screws (4) in a crisscross manner to 110±10 inch pounds.
7. Replace bonnet gasket and solenoid base sub-assembly. Put solenoid base sub-assembly to 175±25 inch pounds.
8. Replace solenoid enclosure and retaining cap or clip.
9. After maintenance, operate the valve a few times to be sure of proper opening and closing.

ORDERING INFORMATION FOR ASCO REBUILD KITS

Parts marked with an asterisk(*) in the exploded view are supplied in Rebuild Kits. When Ordering Rebuild Kits for ASCO Valves, order the Rebuild Kit number stamped on the valve nameplate. If the number of the kit is not visible, order by indicating the number of kits required, and the Catalog Number and Serial Number of the valve(s) for which they are intended.

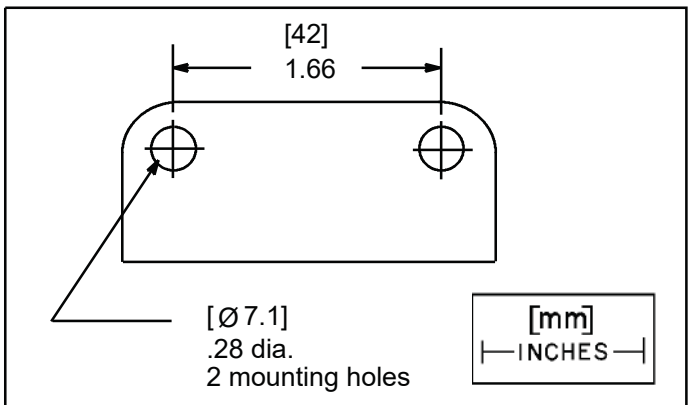

Figure 1. Mounting bracket dimensions

©ASCO Valve, Inc.® 50 Hanover Road, Florham Park, New Jersey 07932 www.ascovalve.com

* Indicates parts supplied in ASCO Rebuild Kit

Torque solenoid base sub-assembly to 175±25 inch pounds.

Torque bonnet screws (4) in a crisscross manner to 110±10 inch pounds.

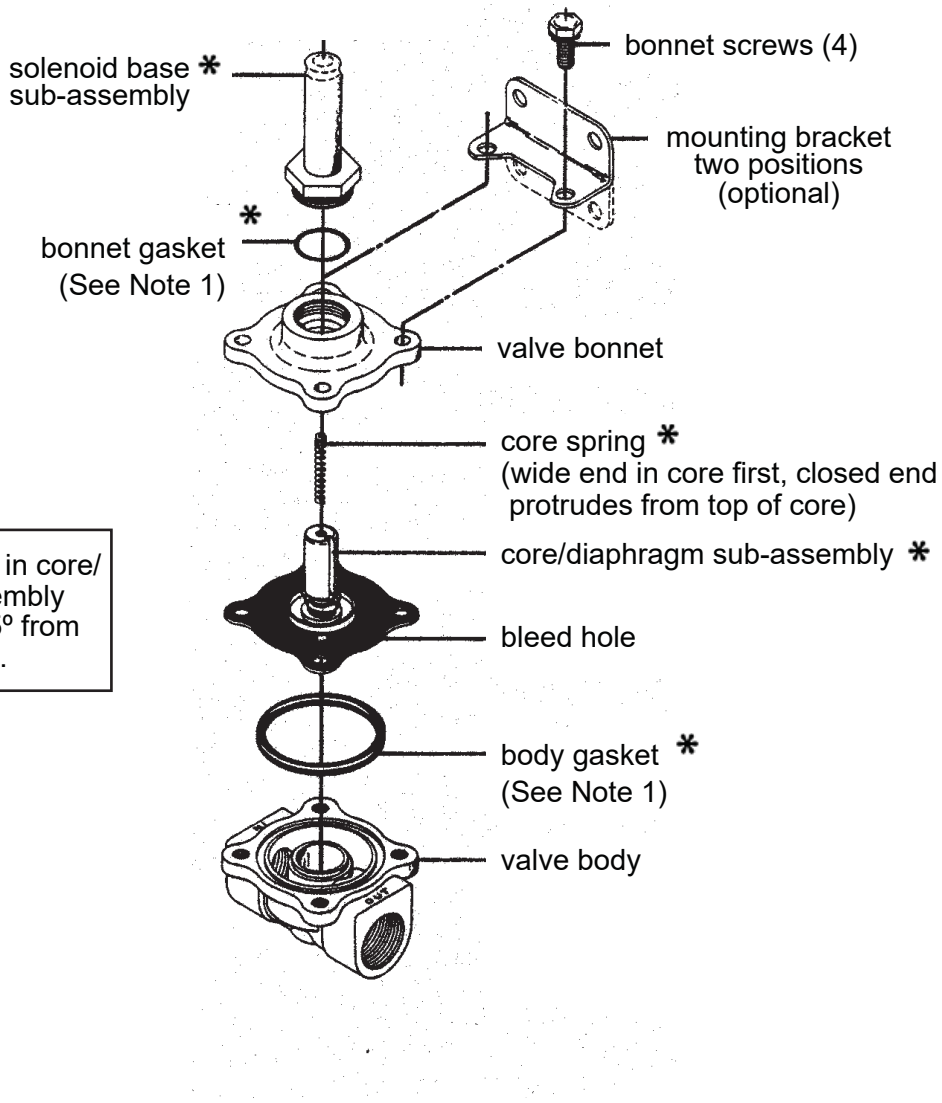

Locate bleed hole in core/ diaphragm assembly approximately 45º from valve outlet.

Note 1: Lubrication required for body and bonnet gaskets. See valve reassembly instructions

Figure 2. Series 8210 - 3/8", 1/2" & 3/4" NPT - AC Construction

©ASCO Valve, Inc.® 50 Hanover Road, Florham Park, New Jersey 07932 www.ascovalve.com

* Indicates parts supplied in ASCO Rebuild Kit

Torque solenoid base sub-assembly to 175±25 inch pounds.

Torque bonnet screws (4) in a crisscross manner to 110±10 inch pounds.

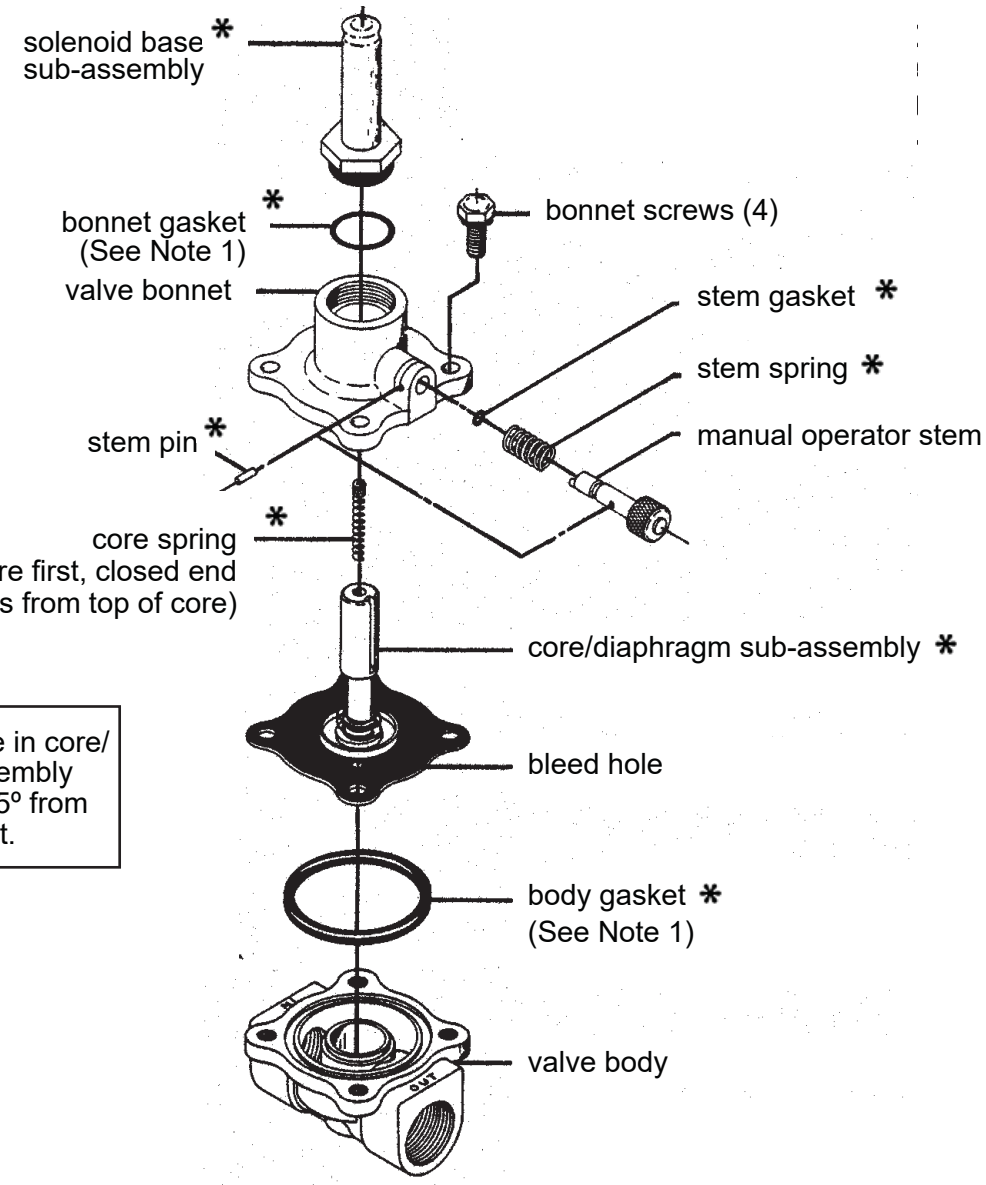

Locate bleed hole in core/diaphragm assembly approximately 45º from valve outlet.

Note 1: Lubrication required for body and bonnet gaskets. See valve reassembly instructions

Figure 3. Series 8210 - Manual Operator

©ASCO Valve, Inc.® 50 Hanover Road, Florham Park, New Jersey 07932 www.ascovalve.com

Installation&Maintenance Instructions

ASCO Red-Hat II™

OPEN-FRAME, GENERAL PURPOSE, WATERTIGHT/EXPLOSIONPROOF SOLENOIDS
OPTIONAL FEATURE FOR OPEN FRAME (GENERAL PURPOSE) CONSTRUCTION ONLY

SERIES
8003G/H
8007G/H
8202G/H

— SERVICE NOTICE —

ASCO® solenoid valves with design change letter "G" or "H" in the catalog number (ex. 8210G1) have an epoxy encapsulated ASCO™ Red Hat II™ solenoid. This solenoid replaces some of the solenoids with metal enclosures and open-frame constructions. Follow these installation and maintenance instructions if your valve or operator uses this solenoid.

See separate instructions for basic valve.

DESCRIPTION

Catalog numbers 8003G/H, 8007G/H and 8202G/H and are epoxy encapsulated pull-type solenoids. The green solenoid with lead wires and 1/2 conduit connection is designed to meet Enclosure Type 1-General Purpose, Type 2-Dripproof, Types 3 and 3S-Raintight, and Types 4 and 4X-Watertight. The black solenoid on catalog numbers prefixed "EF" or "EV" is designed to meet Enclosure Types 3 and 3S-Raintight, Types 4 and 4X-Watertight, Types 6 and 6P-Submersible, Type 7, Explosionproof Class I, Division1 Groups A, B, C, & D and Type 9, -Dust-Ignitionproof Class II, Division1 Groups E, F & G. The Class II, Groups F & G Dust Locations designation is not applicable for solenoids or solenoid valves used for steam service or when a class "H" solenoid is used. See *Temperature Limitations* section for solenoid identification and nameplate/retainer for service. When installed just as a solenoid and not attached to an ASCO valve, the core has a 0.250-28 UNF-2B tapped hole, 0.38 or 0.63 minimum full thread.

NOTE: Catalog number prefix "EV" denotes stainless steel construction.

Solenoid catalog numbers 8202G/H1, 8202G/H3, 8202G/H5 and 8202G/H7 are epoxy encapsulated push-type, reverse-acting solenoids having the same enclosure types as previously stated for Catalog numbers 8003G/H1 and 8003G/H2. 8007G/H are 3-way solenoid operators with a pipe port or adapter, exhaust protector or vent at the top of the solenoid base sub-assembly.

Series 8003G/H, 8007G/H and 8202G/H solenoids are also available in:

- **Open-Frame Construction:** The green solenoid may be supplied with 1/4″ spade, screw or DIN terminals. (Refer to Figure 4)
  - □ **DIN Plug Connector Kit No. K236034:** Use this kit only for solenoids with DIN terminals. The DIN plug connector kit provides a two pole with grounding contact DIN Type 43650 construction (See Figure 6).
- **Panel Mounted Construction:** These solenoids are specifically designed to be panel mounted by the customer. Refer to Figures specified in this I&M and the section on *Installation of Panel Mounted Solenoid* for details.
- **Junction Box:** This junction box construction meets Enclosure Types 2, 3, 3S, 4, and 4X. Only solenoids with 1/4″ spade or screw terminals may have a junction box. The junction box provides a 1/2″ conduit connection, grounding and spade or screw terminal connections within the junction box (See Figure 5).
- **Multipin Connectors:** All Multipin connectors (VT, VB, ZT, ZB) do not have any enclosure ratings.

NOTE: For China RoHS Hazardous Substances table, please go to the link below or scan QR code:
www.asco.com/ChinaRoHSDisclosure

OPERATION

Series 8003G/H and 8007G/H - When the solenoid is energized, the core is drawn into the solenoid base sub-assembly.

IMPORTANT: When the solenoid is de-energized, the initial return force for the core, whether developed by spring,pressure, or weight, must exert a minimum force to overcome residual magnetism created by the solenoid. Minimum return force for AC construction is 11 ounces, and 5 ounces for DC construction.

Series 8202G/H - When the solenoid is energized, the disc holder assembly seats against the orifice. When the solenoid is de-energized , the disc holder assembly returns. **IMPORTANT: Initial return force for the disc or disc holder assembly, whether developed by spring, pressure, or weight, must exert a minimum force to overcome residual magnetism created by the solenoid. Minimum return force is 1pound, 5 ounces.**

INSTALLATION

Check nameplate for correct catalog number, service, and wattage. Check front of solenoid for voltage and frequency.

⚠ WARNING: Electrical hazard from the accessibility of live parts. To prevent the possibility of death, serious injury or property damage, install the open - frame solenoid in an enclosure.

⚠ AVERTISSEMENT: Risque d'accès aux parties électriques actives. Afin d'éviter tout risque de mort, blessure ou dommage, installer la bobine dans un boitier.

FOR BLACK ENCLOSURE TYPES 7 AND 9 ONLY

⚠CAUTION: To prevent fire or explosion, do not install solenoid and/or valve where ignition temperature of hazardous atmosphere is less than 165°C. On valves used for steam service or when a class "H" solenoid is used, do not install in hazardous atmosphere where ignition temperature is less than 180°C. See nameplate/retainer for service.

⚠ ATTENTION : Afin d'éviter le risque de de feu ou d'explosion, ne pas installer la bobine ou l'électrovanne ou la température d'inflammation en atmosphère explosible est inferieure à 165°C. Pour les vannes vapeur ou lorsqu'une bobine de classe H est utilisée, ne pas installer en atmosphère explosible lorsque la température d'inflammation est inférieure à 180°C. Consulter les conditions d'utilisations sures indiquées sur le produit ou dans la notice.

NOTE: These solenoids have an internal non-resetable thermal fuse to limit solenoid temperature in the event that extraordinary conditions occur which could cause excessive temperatures. These conditions include high input voltage, a jammed core, excessive ambient temperature or a shorted solenoid, etc. This unique feature is a standard feature only in solenoids with black explosionproof/dust-ignitionproof enclosures (Types 7 & 9).

 All Rights Reserved.
©ASCO Valve, Inc. 50 Hanover Road, Florham Park, New Jersey 07932

⚠ CAUTION: To protect the solenoid valve or operator, install a strainer or filter, suitable for the service involved in the inlet side as close to the valve or operator as possible. Clean periodically depending on service conditions. See ASCO Series 8600 and 8601 for strainers.

⚠ ATTENTION : Afin de protéger l'électrovanne ou l'actionneur, installer une crépine ou un filtre adapté le plus proche possible en amont de l'électrovanne ou de l'actionneur. Nettoyer périodiquement le filtre en fonction des conditions d'utilisation. Se référer aux séries 8600 et 8601 pour les crépines.

Temperature Limitations

For maximum solenoid ambient temperatures, refer to chart. The temperature limitations listed, only indicate maximum application temperatures for field wiring rated at 90°C. Check catalog number prefix and watt rating on nameplate to determine maximum ambient temperature. See valve installation and maintenance instructions for maximum ambient and fluid temperatures.

NOTE: For steam service, refer to *Wiring* section, *Junction Box* for temperature rating of supply wires.

Temperature Limitations For Series 8003G, 8007G or 8202G			
Watt Rating	Catalog Number Coil Prefix	Class of Insulation	Maximum § Ambient Temp.
10.1 & 17.1	None, FB, KF, KP, SC, SD, SF, SP, VT, VB, ZT & ZB	F	125°F (52°C)
10.1, 17.1 & 24.6	HB, HT, KB, KH, SS, ST, SU, HC	H	140°F (60°C)
11.6 & 22.6	None, FB, KF, KP, SC, SD, SF, SP, VT, VB, ZT & ZB	F	104°F (40°C)
11.6 & 22.6	HP, HT, KB, KH, SS, ST, SU & SV	H	104°F (40°C)
15.6	None, KB, SS, SV	H	104°F (40°C)

§ Minimum ambient temperature -40°F (-40°C).

Temperature Limitations for Series 8003H, 8007H and 8202H solenoids						
		Watt Ratings			Maximum Ambient Temperature	
Prefix [1]	Coil Class	AC 60 Hz	AC 50 Hz	DC	°C	°F
EF, EV	FT	10.1	10.1	-	52	125
EF, EV	FB	17.1	17.1	-		
	FT	10.1	10.1	-	55	131
	FB	17.1	17.1	-		
	HT	-	-	11.6	40 [2]	104 [2]
	HF	-	-	15.6		
	HB	-	-	22.6		
EF, EV	HT	-	-	11.6		
EF, EV	HF	-	-	15.6		
EF, EV	HB	-	-	22.6		
	HT	10.1	10.1	-	60 [3]	140 [3]
	HB	17.1	17.1	-		
EF, EV	HT	10.1	10.1	-		
EF, EV	HB	17.1	17.1	-		
EF, EV	HC	-	-	24.6		

[1] = EF, EV data applies to Explosionproof coils only.

[2] = Some DC solenoid valves can be operated at maximum ambient temperature of 55°C / 131°F with reduced pressure ratings. See valve I&M for maximum operating pressure differential ratings.

[3] = Steam Service Valves have a maximum ambient temperature of 55° C/ 131°F.

Positioning

This solenoid is designed to perform properly when mounted in any position. However, for optimum life and performance, the solenoid should be mounted vertically and upright to reduce the possibility of foreign matter accumulating in the solenoid base sub-assembly area.

Wiring

Wiring must comply with local codes and the National Electrical Code. All solenoids supplied with lead wires are provided with a grounding wire which is green or green with yellow stripes and a 1/2″ conduit connection. To facilitate wiring, the solenoid may be rotated 360°. For explosionproof solenoid version, the conduit lead wires are factory sealed for use in hazardous locations.

⚠ CAUTION: Cryogenic Applications - Solenoid lead wire insulation should not be subjected to cryogenic temperatures. Adequate lead wire protection and routing must be provided.

⚠ ATTENTION: Application cryogénique. Les câbles électriques ne doivent pas être soumis à des températures cryogéniques. Une protection adequate des cables électriques doit être fournie.

Additional Wiring Instructions For Optional Features:

- **Open-Frame solenoid with 1/4″ spade terminals.**

For solenoids supplied with screw terminal connections use #12-18 AWG stranded copper wire rated at 90°C or greater. Torque terminal block screws to 10±2 in-lbs [1,0±1,2 Nm]. A tapped hole is provided in the solenoid for grounding, use a #10-32 machine screw. Torque grounding screw to 15-20 in-lbs [1,7-2,3 Nm]. On solenoids with screw terminals, the socket head screw holding the terminal block to the solenoid is the grounding screw. Torque the screw to 15-20 in-lbs [1,7-2,3 Nm] with a 5/32″ hex key wrench.

- **Junction Box**

The junction box is used with spade or screw terminal solenoids only and is provided with a grounding screw and a 1/2″ conduit connection. Connect #12-18 AWG standard copper wire only to the screw terminals. Within the junction box use field wire that is rated 90°C or greater for connections. For steam service use 105°C rated wire up to 50 psi or use 125°C rated wire above 50 psi. After electrical hookup, replace cover gasket, cover, and screws. Tighten screws evenly in a crisscross manner.

Multipin Connector		
Connector Type	Mating Connector	Application
VT / VB	4-Pin, M12, Female, Single Keyway	DC
	4-Pin, M12, Female, Dual Reverse Keyway	AC
ZT / ZB	3-Pin, Mini, Female, Single Keyway	AC / DC

- **DIN Plug Connector Kit No. K236034**
  1. The open-frame solenoid is provided with DIN terminals to accommodate the plug connector kit.
  2. Remove center screw from plug connector. Using a small screwdriver, pry terminal block from connector cover.
  3. Use #12-18 AWG stranded copper wire rated at 90°C or greater for connections. Strip wire leads back approximately 1/4″ for installation in socket terminals. The use of wire-end sleeves is also recommended for these socket terminals. Maximum length of wire-end sleeves to be approximately 1/4″. Tinning of the ends of the lead wires is not recommended.
  4. Thread wire through gland nut, gland gasket, washer and connector cover.

NOTE: Connector housing may be rotated in 90° increments from position shown for alternate positioning of cable entry.

©ASCO Valve, Inc. 50 Hanover Road, Florham Park, New Jersey 07932 www.ascovalve.com

5. Check DIN connector terminal block for electrical markings. Then make electrical hookup to terminal block according to markings on it. Snap terminal block into connector cover and install center screw.
6. Position connector gasket on solenoid and install plug connector. Torque center screw to 5±1 in-lbs [0,6±1,1 Nm].

NOTE: Alternating current (AC) and direct current (DC) solenoids are built differently and cannot be converted from one to the other by changing the coil.

Installation of Solenoid

Solenoids may be assembled as a complete unit. Tightening is accomplished by means of a hex flange at the base of the solenoid.

Installation of Panel Mounted Solenoid (See Figures 1 and 2)

1. Disassemble solenoid following instruction under *Solenoid Replacement* then proceed.
2. Install solenoid base sub-assembly through customer panel. 8202H panel mounted solenoids include a retainer to adapt the solenoid base sub-assembly to the customer panel. (See Figure 2)
3. Position finger washer on opposite side of panel over solenoid base sub-assembly.
4. Replace solenoid, nameplate/retainer and red cap.
5. Make electrical hookup, see *Wiring* section.

Solenoid Temperature

Standard solenoids are designed for continuous duty service. When the solenoid is energized for a long period, the solenoid becomes hot and can be touched by hand only for an instant. This is a safe operating temperature.

MAINTENANCE

⚠ WARNING: To prevent the possibility of death, serious injury or property damage, turnoff electrical power, depressurize solenoid operator and/or valve, and vent fluid to a safe area before servicing.

⚠ AVERTISSEMENT: Pour éviter tous danger de mort, de blessure grave ou de dommage matériel, avant d'intervenir sur la vanne, couper le courant, purger la vanne dans une zone sécurisée.

Cleaning

All solenoid operators and valves should be cleaned periodically. The time between cleaning will vary depending on medium and service conditions. In general, if the voltage to the solenoid is correct, sluggish valve operation, excessive noise or leakage will indicate that cleaning is required. Clean strainer or filter when cleaning the valve.

Preventive Maintenance

- Keep the medium flowing through the solenoid operator or valve as free from dirt and foreign material as possible.
- Periodic exercise of the valve should be considered if ambient or fluid conditions are such that corrosion, elastomer degradation, fluid contamination build up, or other conditions that could impede solenoid valve shifting are possible. The actual frequency of exercise necessary will depend on specific operating conditions. A successful operating history is the best indication of a proper interval between exercise cycles.
- Depending on the medium and service conditions, periodic inspection of internal valve parts for damage or excessive wear is recommended. Thoroughly clean all parts. Replace any worn or damaged parts.

Causes of Improper Operation

- **Faulty Control Circuit:** Check the electrical system by energizing the solenoid. A metallic *click* signifies that the solenoid is operating. Absence of the *click* indicates loss of power supply. Check for loose or blown fuses, open-circuited or grounded solenoid, broken leadwires or splice connections.
- **Burned-Out Solenoid:** Check for open-circuited solenoid. Replace if necessary. Check supply voltage; it must be the same as specified on nameplate/retainer and marked on the solenoid. Check ambient temperature and check that the core is not jammed.
- **Low Voltage:** Check voltage across the solenoid leads. Voltage must be at least 85% of rated voltage.

Solenoid Replacement

1. Disconnect conduit, coil leads, and grounding wire.

NOTE: Any optional parts attached to the old solenoid must be reinstalled on the new solenoid. For 3-way construction, piping or tubing must be removed from pipe adapter.

2. Disassemble solenoids with optional features as follows:
   - **Spade or Screw Terminals**
     Remove terminal connections, grounding screw, grounding wire, and terminal block (screw terminal type only).

NOTE: For screw terminals, the socket head screw holding the terminal block serves as a grounding screw.

   - **Junction Box**
     Remove conduit and socket head screw (use 5/32″ hex key wrench) from center of junction box. Disconnect junction box from solenoid.
   - **DIN Plug Connector**
     Remove center screw from DIN plug connector. Disconnect DIN plug connector from adapter. Remove socket head screw (use 5/32″ hex key wrench), DIN terminal adapter, and gasket from solenoid.
3. Remove red cap or retainer from top of solenoid base sub-assembly. For 3-way construction with pipe adapter (Figure 3), remove pipe adapter, nameplate and solenoid. Omit steps 4 and 5.
4. Push down on solenoid. Then using a suitable screwdriver, insert blade between solenoid and nameplate/retainer. Pry up slightly and push to remove. NOTE: Series 8202G/H solenoids have a spacer between the nameplate/retainer and solenoid.
5. Remove solenoid from solenoid base sub-assembly.
6. Reassemble in reverse order of disassembly. Use exploded views for identification and placement of parts.
7. Torque pipe adapter to 90 inch-pounds maximum [10,2 Nm maximum]. Then make up piping or tubing to pipe adapter on solenoid.

Disassembly and Reassembly of Solenoids

1. Remove solenoid, see *Solenoid Replacement*.
2. Remove spring washer from solenoid base sub-assembly. For 3-way construction, remove pipe adapter and plugnut gasket.
3. Unscrew solenoid base sub-assembly from valve body.
4. Remove internal solenoid parts for cleaning or replacement. Use exploded views for identification and placement of parts.
5. If the solenoid is part of a valve, refer to basic valve installation and maintenance instructions for further disassembly.
6. Torque solenoid base sub-assembly and adapter to 175±25 in-lbs [19,8±2,8 Nm].

ORDERING INFORMATION FOR ASCO SOLENOIDS

When Ordering Solenoids for ASCO Solenoid Operators or Valves, order the number stamped on the solenoid. Also specify voltage and frequency.

©ASCO Valve, Inc. 50 Hanover Road, Florham Park, New Jersey 07932 www.ascovalve.com

Torque Chart

Part Name	Torque Value in Inch-Pounds	Torque Value in Newton-Meters
solenoid base sub-assembly	175 ± 25	19,8 ± 2,8
pipe adapter	90 maximum	10,2 maximum

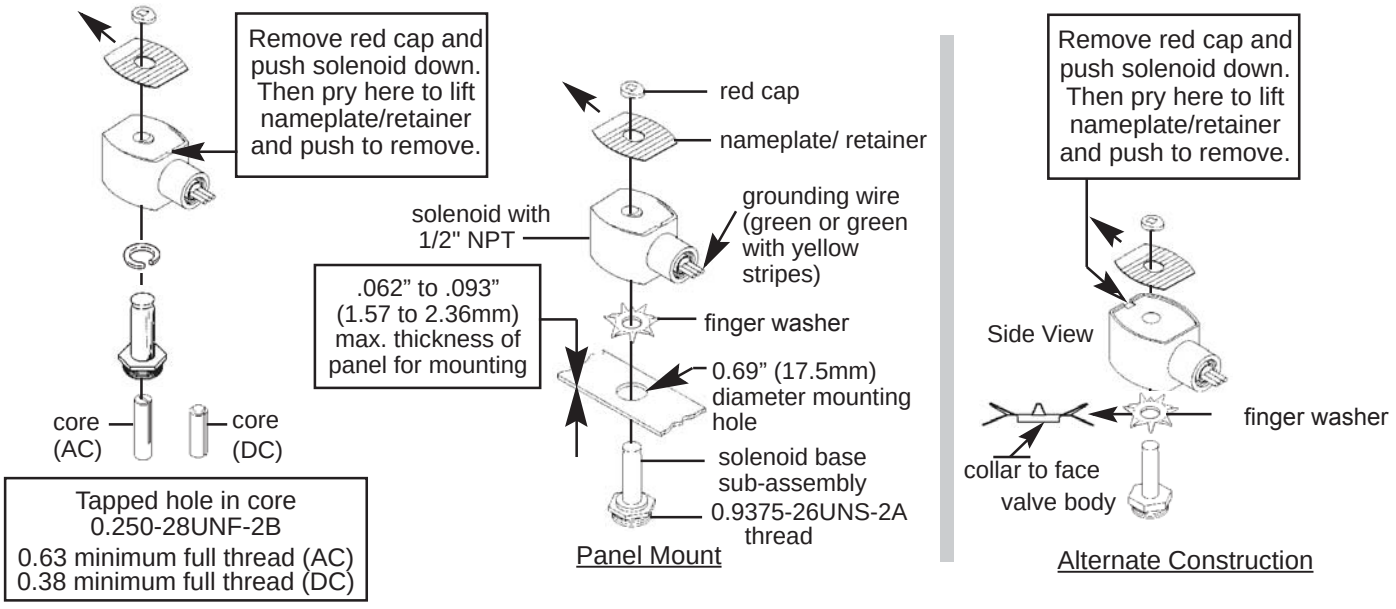

Figure 1. Series 8003G/H Solenoids

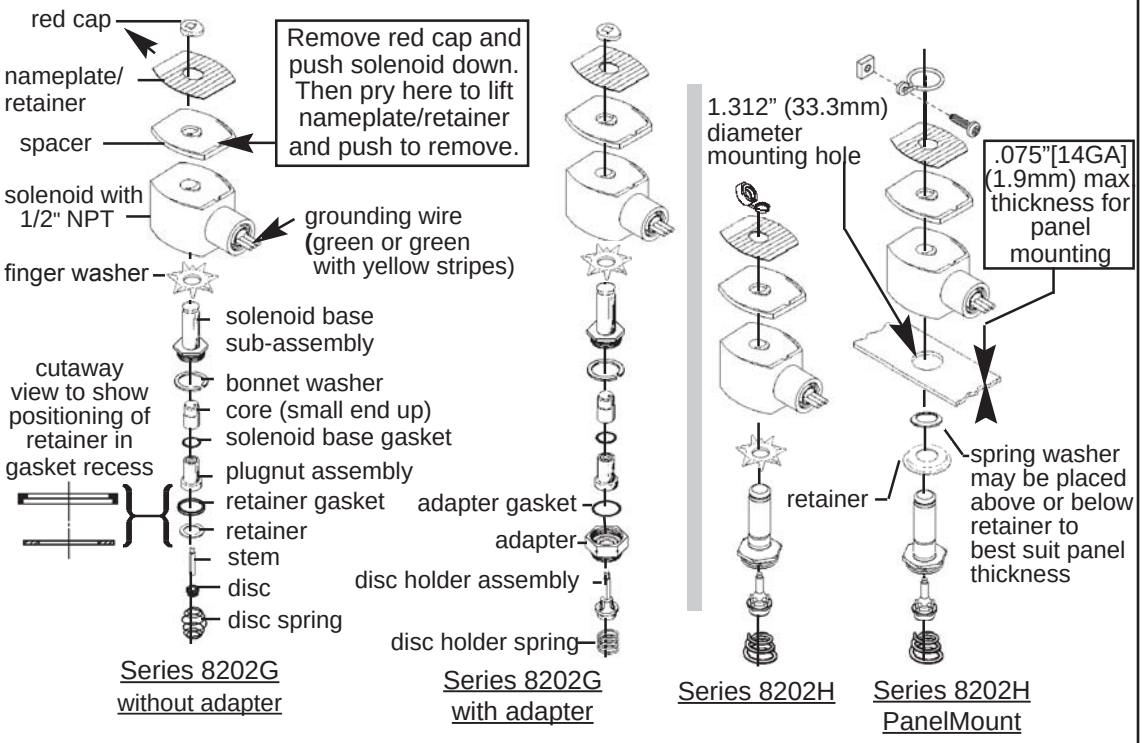

Figure 2. Series 8202G/H Solenoids

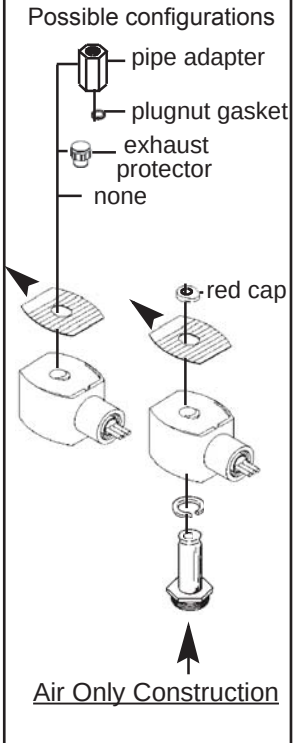

Figure 3. Series 8007G/H

©ASCO Valve, Inc. 50 Hanover Road, Florham Park, New Jersey 07932 www.ascovalve.com

Installation&Maintenance Instructions

ASCO Red-Hat II™

OPEN-FRAME, GENERAL PURPOSE, WATERTIGHT/EXPLOSIONPROOF SOLENOIDS
OPTIONAL FEATURE FOR OPEN FRAME (GENERAL PURPOSE) CONSTRUCTION ONLY

SERIES
8003G/H
8007G/H
8202G/H

NOTICE: See Installation and Maintenance Instructions, I&M No. V_6584_R19 - Section 1 of 2 for detailed instructions.

Torque Chart

Part Name	Torque Value in Inch-Pounds	Torque Value in Newton-Meters
terminal block screws	10 ± 2	1,1 ± 0,2
socket head screw	15 - 20	1,7 - 2,3
center screw	5±1	0,6 ± 0,1

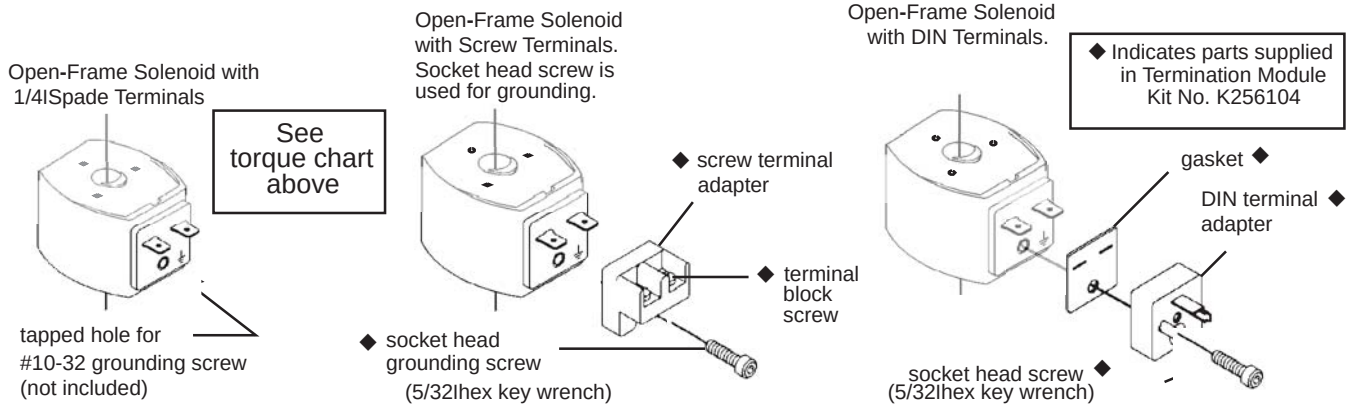

Figure 4. Open-frame solenoids

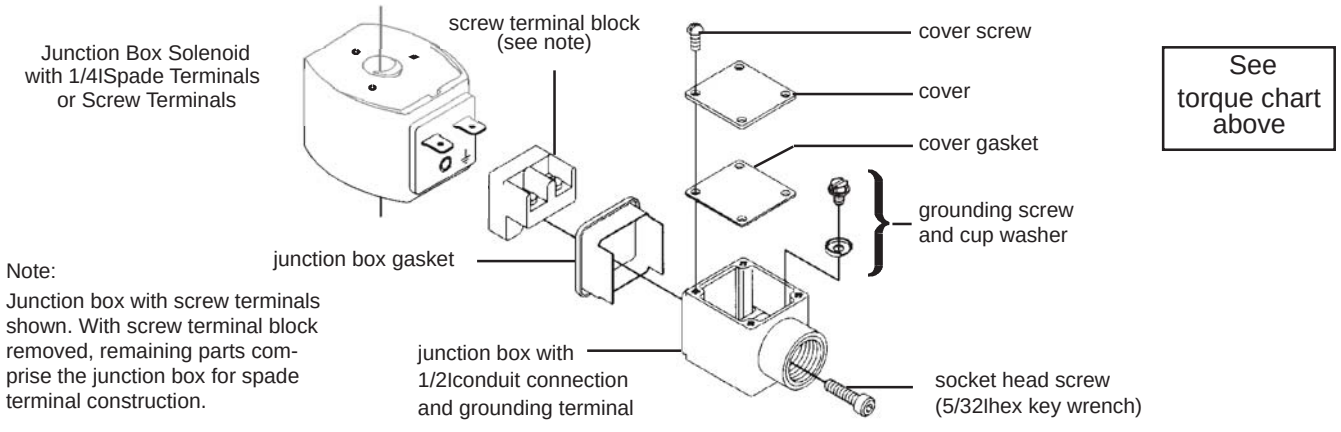

Figure 5. Junction box (optional feature)

 All Rights Reserved.
©ASCO Valve, Inc. 50 Hanover Road, Florham Park, New Jersey 07932

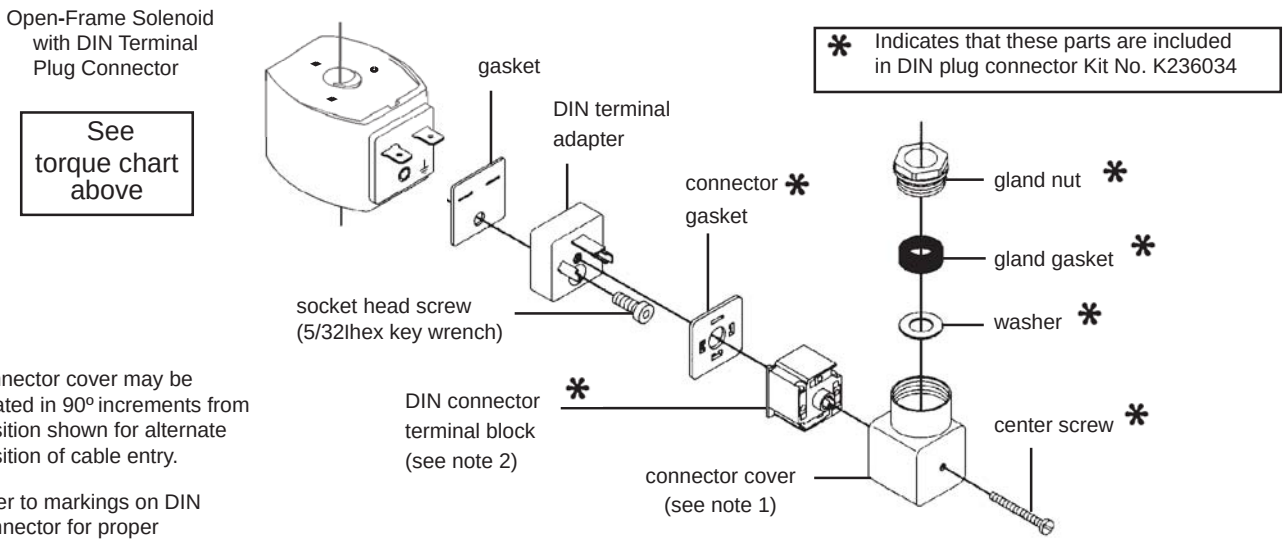

Figure 6. DIN plug connector kit No. K236034 (optional feature)

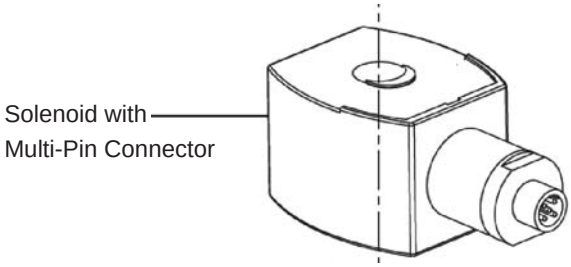

DC: For mating connector, use 4-pin M12 x 1 threaded female connector.

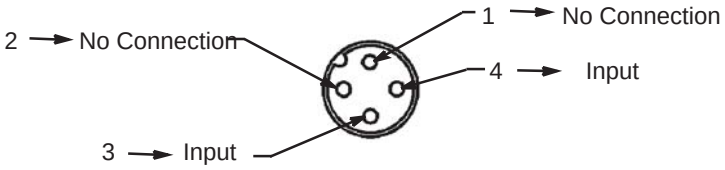

Electrical Connection Size:
DC: Single keyway M12 x 1 (*Not polarity sensitive)*
AC: Dual keyway 1/2-20UNF Thread

Figure 7.
4-Pin Anodized Aluminum Electrical Termination (VT/VB)

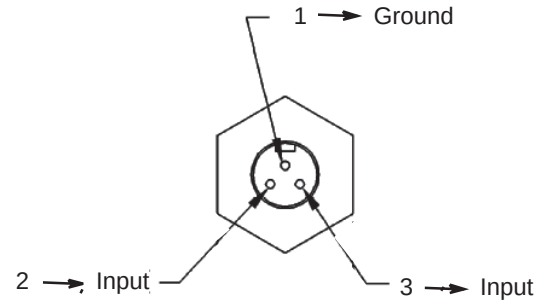

Electrical Connection Size:
DC/AC: 7/8-16 UNS-2A

Figure 8.
Mini 3-pin Epoxy Coated Zinc Electrical Termination (ZT/ZB)

©ASCO Valve, Inc. 50 Hanover Road, Florham Park, New Jersey 07932 www.ascovalve.com

GB

GENERAL INSTALLATION AND MAINTENANCE INSTRUCTIONS

Note: These general Installation and Maintenance Instructions must be read in conjunction with the Instruction Sheet for the specific product.

INSTALLATION

ASCO Numatics components are intended to be used only within the technical characteristics as specified on the nameplate. Changes to the equipment are only allowed after consulting the manufacturer or its representative. Before installation, depressurize the piping system and clean internally.
The equipment may be mounted in any position if not otherwise indicated on the product by means of an arrow.
The flow direction and pipe connection of valves are indicated on the body.

The pipe connections have to be in accordance with the size indicated on the nameplate and fitted accordingly.

Caution:
- Reducing the connections may cause improper operation or malfunctioning.
- For the protection of the equipment install a strainer or filter suitable for the service involved in the inlet side as close to the product as possible.
- If tape, paste, spray or a similar lubricant is used when tightening, avoid particles entering the system.
- Use proper tools and locate wrenches as close as possible to the connection point.
- To avoid damage to the equipment. DO NOT OVERTIGHTEN pipe connections
- Do not use valve or solenoid as lever.
- The pipe connections should not apply any force, torque or strain to the product.

ELECTRICAL CONNECTION

In case of electrical connections, they are only to be made by trained personnel and have to be in accordance with the local regulations and standards.

Caution:
- Turn off electrical power supply and de-energize the electrical circuit and voltage carrying parts before starting work.
- All electrical screw terminals must be properly tightened according to the standards before putting into service.
- Dependent upon the voltage electrical components must be provided with an earth connection and satisfy local regulations and standards.

The equipment can have one of the following electrical terminals:
- Spade plug connections according to ISO-4400 or 3 x DIN-46244 (when correctly installed, this connection provides IP-65 protection).
- Embedded screw terminals in metal enclosure with "Pg" cable gland
- Spade terminals (AMP type).
- Flying leads or cables.

PUTTING INTO SERVICE

Before pressurizing the system, first carry-out an electrical test. In case of solenoid valves, energize the coil a few times and notice a metal click signifying the solenoid operation.

SERVICE

Most of the solenoid valves are equipped with coils for continuous duty service. To prevent the possibility of personal or property damage, do not touch the solenoid which can become hot under normal operating conditions.

SOUND EMISSION

The emission of sound depends on the application, medium and nature of the equipment used. The exact determination of the sound level can only be carried out by the user having the valve installed in his system

MAINTENANCE

Maintenance of ASCO Numatics products is dependent on service conditions. Periodic cleaning is recommended, the timing of which will depend on the media and service conditions. During servicing, components should be examined for excessive wear. A complete set of internal parts is available as spare parts or rebuild kit. If a problem occurs during installation/maintenance or in case of doubt please contact ASCO Numatics or authorized representatives.

*A separate Declaration of Incorporation relating to EU-Directive 2006/42/EC Annex IIB is available on request for applicable products. Please provide product identification number and serial numbers of products concerned.

The product, , when marked CE, complies with the essential requirements of the EMC 2004/108/EC (until April 20th 2016) and EMC 2014/30/EU (from April 20th 2016) and LVD 2006/95/EC (until April 20th 2016) and LVD 2014/35/EU (from April 20th 2016). A separate Declaration of Conformity is available on request. Please provide product identification number and serial numbers of the products concerned.

FR

INSTRUCTIONS GÉNÉRALES D'INSTALLATION ET D'ENTRETIEN

Note: Ces instructions générales d'installation et d'entretien complètent la notice spécifique du produit.

MONTAGE

Les composants ASCO Numatics sont conçus pour les domaines de fonctionnement indiqués sur la plaque signalétique ou la documentation. Aucune modification ne peut être réalisée sur le matériel sans l'accord préalable du fabricant ou de son représentant. Avant de procéder au montage, dépressuriser les canalisations er effectuer un nettoyage inteme.
A moins qu'une fléche ou la notice n'indique un sens de montage spécifique de la tête magnétique, le produit peut être monté dans n'importe quelle position
Le sens de circulation du fluide est indiqué par repères sur le corps er dans la documentation.
La dimension des tuyauteries doit correspondre au raccordement indiqué sur le corps, l'étiquette ou la notice.

Attention:
- Une restriction des tuyauteries peut entraîner des dysfonctionnements.
- Afin de protéger le matériel, installer une crépine ou un filtre adéquat en amont, aussi près que possible du produit.
- En cas d' utilisation de ruban; pàte, aérosol ou autre lubrifiant lors du serrage, veiller à ce qu" aucun corps étranger ne pénètre dans le circuit.
- Utiliser un outillage approprié et placer les clés aussi près que possible du point de raccordement.
- Afin d'éviter toute détérioration, NE PAS TROP SERRER les raccords des tuyauteries.
- Ne pas se servir de la vanne ou de tête magnétique comme d'un levier.
- The pipe connections should not apply any force, torque or strain to the product.

RACCORDEMENT ÉLECTRIQUE

Le raccordement électrique doit être réalisé par un personnel qualifié et selon les normes et règlements locaux.

Attention:
- Avant toute intervention, couper l'alimentation électrique pour mettre hors tension les composants.
- Toutes les bornes à vis doivent être serrées correctement avant la mise en service.
- Selon la tension, les composants électrique doivent être mis à la terre conformément aux normes et règlements locaux.

Selon les cas, le raccordement électrique s'effectué par:
- Connecteur débrochable ISO-4400 ou 3 x DIN-46244 avec degré de protection IP-65 lorsque le raccordement est correctement effectué.
- Bornes à vis solidaires du bobinage, sous boîter métallique avec presse-étoupe "Pg--".
- Cosses (type AMP).
- Fils ou câbles solidaires de la bobine.

MISE EN SERVICE

Avant de mettre le circuit sous pression, effectuer un essai électrique. Dans le cas d'une électrovanne, mettre la bobine sous tension plusieurs fois er écouter le "clic" métallique qui signale le fonctionnement de la tête magnétique.

FONCTIONNEMENT

La plupart des électrovannes comportant des bobinages prévus pour mise sous tension permanente. Pour éviter toute brûlure, ne pas toucher la tête magnétique qui, en fonctionnement normal et en permanence sous tension, peut atteindre une température élevée.

BRUIT DE FONCTIONNEMENT

Le bruit de fonctionnement varie selon l'utilisation, le fluide et le type de matériel employé. L'utilisateur ne pourra déterminer avec précision le niveau sonore émis qu'après avoir monté le composant sur l'installation.

ENTRETIEN

L'entretien nécessaire aux produits ASCO Numatics varie avec leurs conditions d'utilisation. Il est souhaitable de procéder à un nettoyage périodique dont l'intervalle varie suivant la nature du fluide, les conditions de fonctionnement et le milieu ambiant. Lors de l'intervention. Les composants doivent être examinés our détecter toute usure excessive. Un ensemble de pièces internes est proposé en pièces de rechange pour procéder à la réfection. En cas de problème lors du montage/entretien ou en cas de doute, veuillez contacter ASCO Numatics ou ses représentants officiels.

*Une déclaration d'incorporation relative à la directive UE 2006/42/CE Annexe II B est disponible sur demande pour les produits applicables. Veuillez fournir le numéro d'identification du produit et les numéros de série des produits concernés.

Lorsqu'il est marqué du label CE, le produit est conforme aux exigences essentielles des directives CEM 2004/108/CE (jusqu'au 20 avril 2016) et CEM 2014/30/UE (à partir du 20 avril 2016) et des directives Basse tension 2006/95/CE (jusqu'au 20 avril 2016) et 2014/35/UE (à partir du 20 avril 2016). Une déclaration de conformité peut être fournie sur simple demande. Veuillez fournir le numéro d'identification du produit et les numéros de série des produits concernés.

DE

ALLGEMEINE BETRIEBSANLEITUNG

Achtung: Diese Allgemeine Betriebsanleitung gilt in Zusammenhang mit der jeweiligen Betriebsanleitung für die speziellen Produkte.

EINBAU

Die ASCO Numatics-Komponenten dürfen nur innerhalb der auf den Typenschildern angenebenen Daten eingesetzt warden, Veränderungen an den Produkten sind nur nach Rücksprache mit ASCO Numatics zulässig.
Vor dem Einbau der Ventile muß das Rohrleitungssystem drucklos geschaltet und innen gereinigt werden.
Die Einbaulage der Produkte ist genereil beliebig. Ausnahme: Die mit einem Pfeil gekennzeichneten Produkte müssen entsprechend der Pfeilrichtung montiert werden.
Die Durchflußrichtung und der Eingang von Ventilen sind gekennzeichnet.

Die Rohranschlüsse sollten entsprechend den Größenangaben auf den Typenschildern mit handelsüblichen Verschraubungen durchgeführt werden. Dabei ist folgendes zu beachten:
- Eine Reduzierung der Anschlüsse kann zu Leistungs-und Funktionsminderungen führen.
- Zum Schutz der Ventile sollten Schmutzfänger oder Filter so dicht wie möglich in den Ventileingang integriert werden.
- Bei Abdichtung am Gewinde ist darauf zu achten, daß kein Dichtungsmaterial in die Rohrleitung oder das Ventil gelangt.
- Zur Montage darf nur geeignetes Werkzeug verwendetwerden.
- Konische Verschraubungen sind sorgfältig anzuziehen. Es ist darauf zu achten, daß beim Anziehen das Gehäuse nicht beschädigt wird.
- Spule und Führungsrohr von Ventilen dürfen nicht als Gegenhalter benutzt werde.
- Die Rohrleitungsanschlüsse sollen fluchten und dürfen keine Spannungen auf das Ventil übertragen.

ELECTRISCHER ANSCHLUß

Der elektrische Anschluß ist von Fachpersonal entsprechend den geltenden VDE-und CEE Richtlinien auszuführen. Es ist besonders auf foigendes zu achten:
- Vor Beginn der Arbeiten ist sicherzustellen, daß alle elektrischen Leitungen und Netzteile spannungslos geschaltet sind.
- Alle Anschlußklemmen sind nach Beendigung der Arbeiten vorschriftsmäßig entsprechend den geltenden Regeln anzuziehen.
- Je nach Spannungsbereich muß das Ventil nach den geltenden Regeln einen Schutzleiteranschluß erhalten.

Der Magnetantrieb kann je nach Bauart folgende Anschlüsse haben:
- Anschluß für Gerätesteckdose nach DIN 43650 Form A/ISO 4400 oder 3 x DIN 46244 (durch ordnungsgemäße Montage der Gerätesteckdose wird Schutzklasse IP 65 erreicht).
- Anschlüsse innerhalb eines Blechgehäuses mittels Schraubklemmen. Kabeleinführung ins Gehäuse mit PG-Verschraubung.
- Offene Spulen mit Flachsteckern (AMP-Fahnen) oder mit eingegossenen Kabelenden.

INBETRIEBNAHME

Vor Druckbeaufschlagung des Produktes sollte eine elektrische Funktionsprüfung erfolgen:

Bei Ventilen Spannung an der Magnetspule mehrmals ein-und ausschalten. Es muß ein Klicken zu hören sein.

BETRIEB

Die meisten Ventile sind mit Spulen für Dauerbetrieb ausgerüstet. Zur Vermeidung von Personen-und Sachschäden sollte jede Berührung mit dem Ventil vermieden werden, da die Magnetspule bei längerem Betrieb sehr heiß werden kann.

GERÄUSCHEMISSION

Diese hängt sehr stark vom Anwendungsfall, den Betriebsdaten und dem Medium, mit denen das Produkt beaufschlagt wird, ab. Eine Aussage über die Geräuschemission des Produktes muß deshalb von demjenigen getroffen werden, der das Produkt innerhalb einer Maschine in Betrieb nimmit.

WARTUNG

Die Wartung hängt von den Einsatzbedigungen ab. In entsprechenden Zeitabständen muß das Produkt geöffnet und gereinigt werden. Für die Überholung der ASCO Numatics-Produkte können Ersatzteilsätze geliefert werden. Treten Schwierigkeiten bel Einbau, Betrieb oder Wartung auf, sowie bei Unklarheiten, ist mit ASCO Numatics Rücksprache zu halten.

ASCO Numatics Produkte sind entsprechend der EG-Richtlinie 89/392/EWG gefertigt.

*Eine separate Herstellererklärung im Sinne der Richtlinie 2006/42/EWG Anhang II B ist auf Anfrage für die entsprechenden Produkte erhältlich. Geben Sie bitte die Kennnummer sowie die Seriennummer der betreffenden Produkte an.

Das Produkt, wenn mit CE gekennzeichnet, erfüllt die Anforderungen von EMV 2004/108/EWG (bis 20. April 2016) und EMV 2014/30/EU (vom 20. April 2016) und LVD 2006/95/EWG (bis 20. April 2016) und LVD 2014/35/EU (vom 20. April 2016). Eine separate Konformitätserklärung ist auf Anfrage erhältlich. Geben Sie bitte die Kennnummer sowie die Seriennummer der betreffenden Produkte an.

ASCO
50 Hanover Road
Florham Park, New Jersey 07932
Tel. (973) 966-2000
Fax (973) 966-2628

ASCO
1561 Columbia Highway
Aiken, South Carolina 29801
Tel. (803) 641-9200
Fax (803) 641-9290

ASCO Valves® E 264274 - 04/2016 All Rights Reserved.
©ASCO Valve, Inc. 50 Hanover Road, Florham Park, New Jersey 07932 www.ascovalve.com

LEFT BLANK

ASCO

(EF) 8345G001, SOLENOID VALVE

LEFT BLANK

Installation & Maintenance Instructions

2-POSITION 4-WAY FUNCTION VALVES

MIDGET SIZE - 1/4 NPT

SERIES 8345G/H

IMPORTANT: See separate solenoid installation and maintenance instructions for information on: Wiring, Solenoid Temperature,Causes of Improper Operation,and Coil or Solenoid Replacement.

DESCRIPTION

Series 8345 valves are 2-position 4-way midget size solenoid valves with rugged forged brass or stainless steel bodies. These valves are extremely compact to meet the requirements where space and weight are important and are primarily used to control small double acting cylinders not larger than 4 inches in diameter. Series 8345 valves may be provided with a general purpose or explosionproof solenoid enclosure.

OPERATION

Solenoid De-energized: Flow is from Pressure "P" to Cylinder "A" and from Cylinder "B" to Exhaust "EB". Exhaust "EA" is closed.

Solenoid Energized: Flow is from Pressure "P" to Cylinder "B" and from Cylinder "A" to Exhaust "EA". Exhaust "EB" is closed.

IMPORTANT: Minimum operating pressure differential is 10 psi.

Flow Diagrams

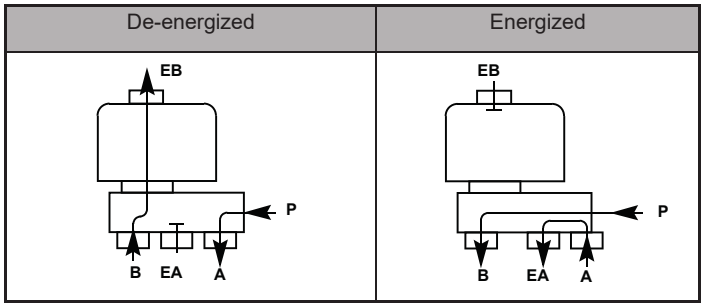

Manual Operator (optional feature)

Manual operator allows manual operation when desired or during an electrical power outage. To operate manual operator, rotate groove pin counter-clockwise 180º. Valve will then remain in the solenoid energized position until stem is rotated clockwise to original position. Manual operator must be in clockwise position for proper electrical operation.

INSTALLATION

Check nameplate for correct catalog number, pressure, voltage, frequency, and service. Never apply incompatible fluids or exceed pressure rating of the valve. Installation and valve maintenance to be performed by qualified personnel.

Temperature Limitations

For maximum valve ambient and fluid temperatures, refer to chart below. Check catalog number on nameplate to determine temperature limitation.

Wattage	Catalog Number Coil Prefix	Coil Class	Max. Ambient Temp.°F	Max. Fluid Temp.°F
10.1	none, KF, SF, SC, EF or EV	F	125	180
10.1	HT, KH, ST, SU, EFHT or EVHT	H	140	180
11.6	none, HT, KF, KH, SC, SF, EF or EV	F or H	104	104

Positioning

This valve is designed to perform properly when mounted in any position. However,for optimum life and performance, the solenoid should be mounted vertically and upright to reduce the possibility of foreign matter accumulating in the solenoid base sub-assembly area.

Mounting

Refer to Figure 1 for Mounting dimensions.

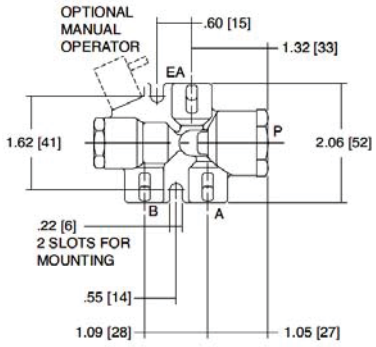

Figure 1. Mounting Dimensions

Piping

Connect piping to valve according to markings on valve body. Apply pipe compound or PTFE tape sparingly to male pipe threads only. If applied to valve threads, the compound may enter the valve and cause operational difficulty. Avoid pipe strain by properly supporting and aligning piping. When tightening the pipe, do not use valve or solenoid as a lever. Locate wrenches applied to valve body or piping as close as possible to connection point.

To ensure proper operation of the valve, the pressure and exhaust lines must be full area without restriction. A minimum differential pressure (10psi), as stamped on the nameplate, must be maintained between pressure and exhaust at the moment of shifting. Air reservoirs must have adequate capacity to maintain this minimum pressure during shifting. To check pressure during shifting, install a pressure gauge in the piping as close to valve as possible.

CAUTION: To protect the solenoid valve, install a strainer or filter suitable for the service involved in the inlet side as close to the valve as possible. Clean periodically depending on service conditions. See ASCO Series 8600 and 8601 for strainers.

Wiring

Wiring must comply with Local and National Electrical Codes. For valves equipped with an Explosionproof/Watertight Solenoid Enclosure, the electrical fittings must be approved for use in the approved hazardous Location. Housings for all solenoids are provided with accommodations or connections for a 1/2 inch conduit. To facilitate wiring, the solenoid enclosure may be rotated 360°.

Solenoid Temperature

Standard catalog valves are supplied with coils designed for continuous duty service. When the solenoid is energized for a long period, the solenoid becomes hot and can be touched by hand only for an instant. This is a safe operating temperature. Any excess heating will be indicated by smoke and the odor of burning coil insulation

MAINTENANCE

⚠ WARNING: To prevent the possibility of death, injury or property damage, turn off electrical power, depressurize valve, and vent fluid to a safe area before servicing the valve

Note: It is not necessary to remove the valve from the pipeline for repairs. However, piping or tubing must be removed from Pressure "P" connection and Exhaust "EB" connection on air and liquid constructions.

Cleaning

All solenoid valves should be cleaned periodically. The time between cleanings will vary depending on the medium and service conditions. In general,if the voltage to the coil is correct, sluggish valve operation, excessive noise or leakage will indicate that cleaning is required. In the extreme case, faulty valve operation will occur and the valve may fail to open or close. Clean strainer or filter when cleaning the valve.

All Rights Reserved.

©ASCO Valve, Inc. 50 Hanover Road, Florham Park, New Jersey 07932

Preventive Maintenance

- Keep medium flowing through the valve as free from dirt and foreign material as possible.
- Periodic exercise of the valve should be considered if ambient or fluid conditions are such that corrosion, elastomer degradation, fluid contamination build up, or other conditions that could impede solenoid valve shifting are possible. The actual frequency of exercise necessary will depend on specific operating conditions. A successful operating history is the best indication of a proper interval between exercise cycles.
- Depending on the medium and service conditions, periodic inspection of internal valve parts for damage or excessive wear is recommended. Thoroughly clean all parts. If parts are worn or damaged, install a complete rebuild kit.

Causes of Improper Operation

- **Faulty Control Circuit:** Check the electrical system by energizing the solenoid. A metallic click signifies that the solenoid is operating. The absence of the click indicates loss of power supply. Check for loose or blown fuses, open-circuited or grounded coil, broken lead wires or splice connections.
- **Burned-Out Coil:** Check for open-circuited coil. Replace if necessary. Check supply voltage; it must be the same as specified on nameplate and as marked on the coil.
- **Low Voltage:** Check voltage across the coil leads. Voltage must be at least 85% of nameplate rating.
- **Incorrect Pressure:** Check valve pressure. Pressure to valve must be within range specified on nameplate.
- **Excessive Leakage:** Disassemble valve and clean all parts. If parts are worn or damaged, install a complete ASCO Rebuild Kit.

Valve Disassembly

1. Disassemble valve in an orderly fashion using exploded views for identification and placement of parts.
2. Remove solenoid enclosure. See separate instructions.
3. Unscrew solenoid base sub-assembly and remove bonnet gasket.
4. For normal maintenance (cleaning) it is not necessary to disassemble the manual operator (optional feature) unless external leakage is evident. If disassembly is required, remove stem pin, manual operator stem, stem spring and stem gasket from valve body.
5. Remove core spring and core sub-assembly.
6. Unscrew end cap and remove end cap gasket, body gasket and disc.
7. Unscrew end plug and remove end plug gasket, piston and piston U-cup.
8. All parts are now accessible for cleaning or replacement. If parts are worn or damaged, install a complete ASCO Rebuild Kit

Valve Reassembly

1. Lubricate piston U-cup and all gaskets with Parker Super Lube Compound or an equivalent high-grade silicone grease.
2. Position piston U-cup on piston with mouth or open end facing in the direction of the end plug.
3. Install piston into valve body. Position end plug gasket on end plug and install into valve body. Torque end plug to 200±10 in-lbs [22,6±1,1 Nm].
4. Position body gasket and end cap gasket on end cap. Lubricate disc with DOW CORNING® 111 Compound or an equivalent high grade silicone grease. Install disc and end cap into valve body. Torque end cap to 200±10 in-lbs [22,6±1,1 Nm].
5. If removed, assembly and replace manual operator stem, stem spring, stem gasket and stem pin.
6. Position solenoid base gasket in valve body.
7. Install core assembly and core spring into solenoid base sub-assembly. Thread solenoid base sub-assembly into valve body. Torque solenoid base sub-assembly to 175±25 in-lbs [19,8±2,8 Nm].
8. Install solenoid,see separate solenoid instructions. Then make electrical hookup to solenoid.

⚠ WARNING: To prevent the possibility of death, serious injury or property damage, check valve for proper operation before returning to service. Also perform internal seat and external leakage tests with a nonhazardous, noncombustible fluid.

9 Restore line pressure and electrical power supply to valve.

10. After maintenance is completed, operate the valve a few times to be sure of proper operation. A metallic click signifies the solenoid is operating.

ORDERING INFORMATION FOR ASCO REBUILD KITS

Parts marked with an asterisk (*) in the exploded view are supplied in Rebuild Kits. When Ordering Rebuild Kits for ASCO valves, order the Rebuild Kit number stamped on the valve nameplate. If the number of the kit is not visible, order by indicating the number of kits required, and the Catalog Number and Serial Number of the valve(s) for which they are intended.

©ASCO Valve, Inc.® 50 Hanover Road, Florham Park, New Jersey 07932 www.ascovalve.com

Torque Chart

Part Name	Toque Value Inch-Pounds	Torque Value Newton-Meters
solenoid base sub-assembly	175 ± 25	19,8 ± 2,8
end cap/end plug	200 ± 10	22,6 ± 1,1

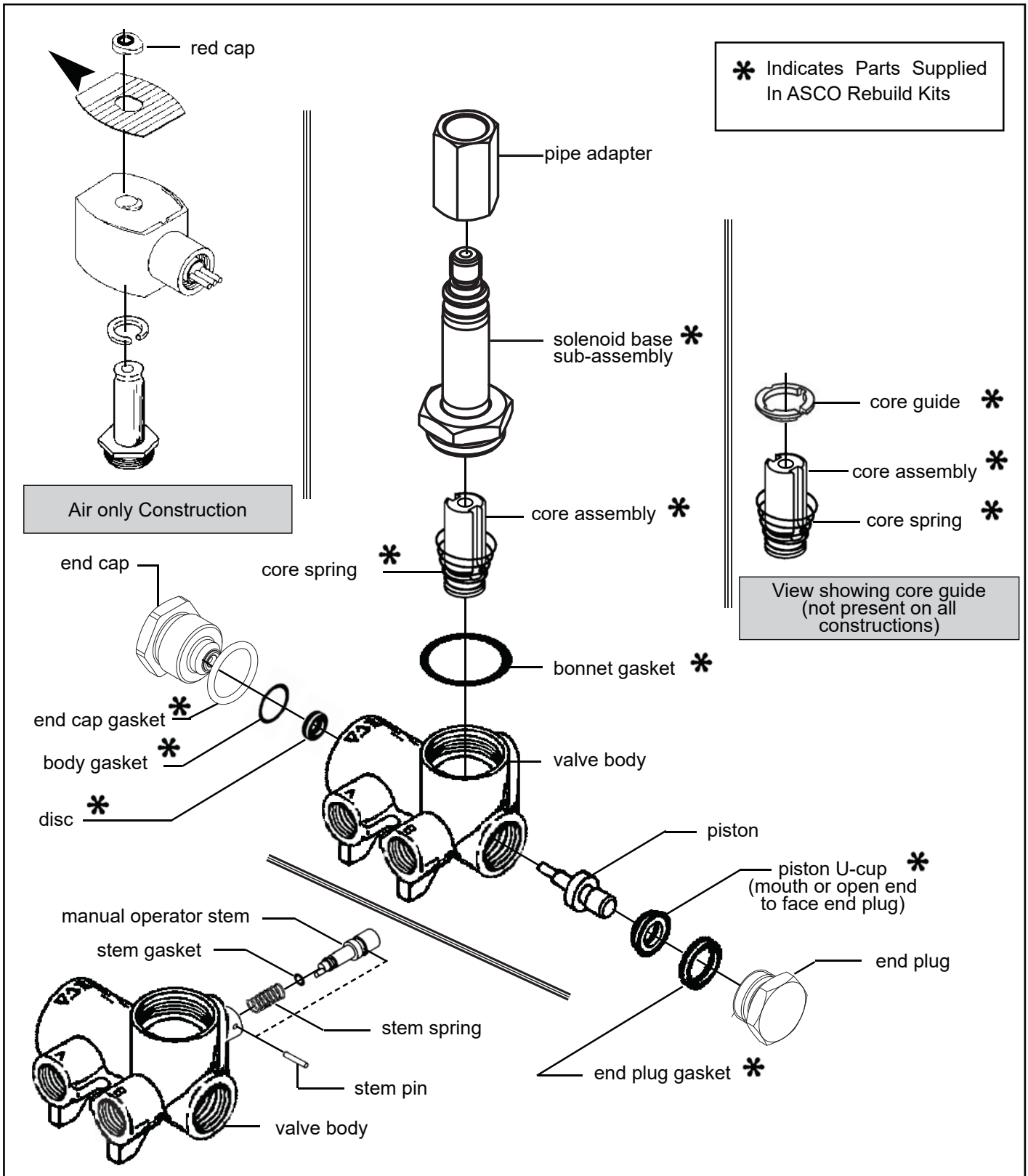

Series 8345 - without solenoid

©ASCO Valve, Inc.® 50 Hanover Road, Florham Park, New Jersey 07932 www.ascovalve.com

This page is intentionally left blank

Installation&Maintenance Instructions

ASCO Red-Hat II®

OPEN-FRAME, GENERAL PURPOSE, WATERTIGHT/EXPLOSIONPROOF SOLENOIDS

SERIES
8003G/H
8007G/H
8202G/H

— SERVICE NOTICE —

ASCO® solenoid valves with design change letter "G" or "H" in the catalog number (ex. 8210G1) have an epoxy encapsulated ASCO® Red Hat II® solenoid. This solenoid replaces some of the solenoids with metal enclosures and open-frame constructions. Follow these installation and maintenance instructions if your valve or operator uses this solenoid.

See separate instructions for basic valve.

DESCRIPTION

Catalog numbers 8003G/H, 8007G/H and 8202G/H and are epoxy encapsulated pull-type solenoids. The green solenoid with lead wires and 1/2 conduit connection is designed to meet Enclosure Type 1-General Purpose, Type 2-Dripproof, Types 3 and 3S-Raintight, and Types 4 and 4X-Watertight. The black solenoid on catalog numbers prefixed "EF" or "EV" is designed to meet Enclosure Types 3 and 3S-Raintight, Types 4 and 4X-Watertight, Types 6 and 6P-Submersible, Type7, Explosionproof Class I, Division1 Groups A, B, C, & D and Type 9, -Dust-Ignitionproof Class II, Division1 Groups E, F & G. The Class II, Groups F & G Dust Locations designation is not applicable for solenoids or solenoid valves used for steam service or when a class "H" solenoid is used. See *Temperature Limitations* section for solenoid identification and nameplate/retainer for service. When installed just as a solenoid and not attached to an ASCO valve, the core has a 0.250-28 UNF-2B tapped hole, 0.38 or 0.63 minimum full thread.

NOTE: Catalog number prefix "EV" denotes stainless steel construction.

Solenoid catalog numbers 8202G/H1, 8202G/H3, 8202G/H5 and 8202G/H7 are epoxy encapsulated push-type, reverse-acting solenoids having the same enclosure types as previously stated for Catalog numbers 8003G/H1 and 8003G/H2. 8007G/H are 3-way solenoid operators with a pipe port or adapter, exhaust protector or vent at the top of the solenoid base sub-assembly.

Series 8003G/H, 8007G/H and 8202G/H solenoids are available in:

- **Open-Frame Construction:** The green solenoid may be supplied with 1/4″ spade, screw or DIN terminals. (Refer to Figure 4)
- **Panel Mounted Construction:** These solenoids are specifically designed to be panel mounted by the customer. Refer to Figures specified in this I&M and the section on *Installation of Panel Mounted Solenoid* for details.

Optional Features For Type 1 - General Purpose Construction Only

- **Junction Box:** This junction box construction meets Enclosure Types 2, 3, 3S, 4, and 4X. Only solenoids with 1/4″ spade or screw terminals may have a junction box. The junction box provides a 1/2″ conduit connection, grounding and spade or screw terminal connections within the junction box (See Figure 5).
- **DIN Plug Connector Kit No. K236034:** Use this kit only for solenoids with DIN terminals. The DIN plug connector kit provides a two pole with grounding contact DIN Type 43650 construction (See Figure 6).

OPERATION

Series 8003G/H and 8007G/H - When the solenoid is energized, the core is drawn into the solenoid base sub-assembly.

IMPORTANT: When the solenoid is de-energized, the initial return force for the core, whether developed by spring,pressure, or weight, must exert a minimum force to overcome residual magnetism created by the solenoid. Minimum return force for AC construction is 11 ounces, and 5 ounces for DC construction.

Series 8202G/H - When the solenoid is energized, the disc holder assembly seats against the orifice. When the solenoid is de-energized , the disc holder assembly returns. **IMPORTANT: Initial return force for the disc or disc holder assembly, whether developed by spring, pressure, or weight, must exert a minimum force to overcome residual magnetism created by the solenoid. Minimum return force is 1pound, 5 ounces.**

INSTALLATION

Check nameplate for correct catalog number, service, and wattage. Check front of solenoid for voltage and frequency.

⚠ WARNING: Electrical hazard from the accessibility of live parts. To prevent the possibility of death, serious injury or property damage, install the open - frame solenoid in an enclosure.

FOR BLACK ENCLOSURE TYPES 7 AND 9 ONLY

⚠CAUTION: To prevent fire or explosion, do not install solenoid and/or valve where ignition temperature of hazardous atmosphere is less than 165°C. On valves used for steam service or when a class "H" solenoid is used, do not install in hazardous atmosphere where ignition temperature is less than 180°C. See nameplate/retainer for service.

NOTE: These solenoids have an internal non-resetable thermal fuse to limit solenoid temperature in the event that extraordinary conditions occur which could cause excessive temperatures. These conditions include high input voltage, a jammed core, excessive ambient temperature or a shorted solenoid, etc. This unique feature is a standard feature only in solenoids with black explosionproof/dust-ignitionproof enclosures (Types 7 & 9).

⚠CAUTION: To protect the solenoid valve or operator, install a strainer or filter, suitable for the service involved in the inlet side as close to the valve or operator as possible. Clean periodically depending on service conditions. See ASCO Series 8600 and 8601 for strainers.

All Rights Reserved.

©ASCO Valve, Inc. 50 Hanover Road, Florham Park, New Jersey 07932

Temperature Limitations

For maximum valve ambient temperatures, refer to chart. The temperature limitations listed, only indicate maximum application temperatures for field wiring rated at 90°C. Check catalog number prefix and watt rating on nameplate to determine maximum ambient temperature. See valve installation and maintenance instructions for maximum fluid temperature.

NOTE: For steam service, refer to *Wiring* section, *Junction Box* for temperature rating of supply wires.

Temperature Limitations For Series 8003G, 8007G or 8202G Solenoids for use on Valves Rated at 10.1, 11.6, 15.6, 17.1, or 22.6 Watts			
Watt Rating	Catalog Number Coil Prefix	Class of Insulation	Maximum § Ambient Temp.
10.1 & 17.1	None, FB, KF, KP, SC, SD, SF, SP, VT, VB, ZT & ZB	F	125°F (52°C)
10.1 & 17.1	HB, HT, KB, KH, SS, ST, SU	H	140°F (60°C)
11.6 & 22.6	None, FB, KF, KP, SC, SD, SF, SP, VT, VB, ZT & ZB	F	104°F (40°C)
11.6 & 22.6	HP, HT, KB, KH, SS, ST, SU & SV	H	104°F (40°C)
15.6	None, KB, SS, SV	H	104°F (40°C)

§ Minimum ambient temperature -40°F (-40°C).

Temperature Limitations for Series 8003H, 8007H and 8202H solenoids						
		Watt Ratings			Maximum Ambient Temperature	
Prefix [1]	Coil Class	AC		DC		
		60 Hz	50 Hz		°C	°F
EF, EV	FT	10.1	10.1	-	52	125
EF, EV	FB	17.1	17.1	-		
	FT	10.1	10.1	-	55	131
	FB	17.1	17.1	-		
	HT	-	-	11.6	40 [2]	104 [2]
	HF	-	-	15.6		
	HB	-	-	22.6		
EF, EV	HT	-	-	11.6		
EF, EV	HF	-	-	15.6		
EF, EV	HB	-	-	22.6		
	HT	10.1	10.1	-	60 [3]	140 [3]
	HB	17.1	17.1	-		
EF, EV	HT	10.1	10.1	-		
EF, EV	HB	17.1	17.1	-		

[1] = EF, EV data applies to Explosionproof coils only.

[2] = Some DC solenoid valves can be operated at maximum ambient temperature of 55°C / 131°F with reduced pressure ratings. See valve I&M for maximum operating pressure differential ratings.

[3] = Steam Service Valves have a maximum ambient temperature of 55° C/ 131°F.

Positioning

This solenoid is designed to perform properly when mounted in any position. However, for optimum life and performance, the solenoid should be mounted vertically and upright to reduce the possibility of foreign matter accumulating in the solenoid base sub-assembly area.

Wiring

Wiring must comply with local codes and the National Electrical Code. All solenoids supplied with lead wires are provided with a grounding wire which is green or green with yellow stripes and a 1/2″ conduit connection. To facilitate wiring, the solenoid may be rotated 360°. For the watertight and explosionproof solenoid, electrical fittings must be approved for use in the approved hazardous locations.

⚠CAUTION: Cryogenic Applications - Solenoid lead wire insulation should not be subjected to cryogenic temperatures. Adequate lead wire protection and routing must be provided.

Additional Wiring Instructions For Optional Features:

- **Open-Frame solenoid with 1/4″ spade terminals.**

For solenoids supplied with screw terminal connections use #12-18 AWG stranded copper wire rated at 90°C or greater. Torque terminal block screws to 10±2 in-lbs [1,0±1,2 Nm]. A tapped hole is provided in the solenoid for grounding, use a #10-32 machine screw. Torque grounding screw to 15-20 in-lbs [1,7-2,3 Nm]. On solenoids with screw terminals, the socket head screw holding the terminal block to the solenoid is the grounding screw. Torque the screw to 15-20 in-lbs [1,7-2,3 Nm] with a 5/32″ hex key wrench.

- **Junction Box**

The junction box is used with spade or screw terminal solenoids only and is provided with a grounding screw and a 1/2″ conduit connection. Connect #12-18 AWG standard copper wire only to the screw terminals. Within the junction box use field wire that is rated 90°C or greater for connections. For steam service use 105°C rated wire up to 50 psi or use 125°C rated wire above 50 psi. After electrical hookup, replace cover gasket, cover, and screws. Tighten screws evenly in a crisscross manner.

- **DIN Plug Connector Kit No. K236034**

1. The open-frame solenoid is provided with DIN terminals to accommodate the plug connector kit.
2. Remove center screw from plug connector. Using a small screwdriver, pry terminal block from connector cover.
3. Use #12-18 AWG stranded copper wire rated at 90°C or greater for connections. Strip wire leads back approximately 1/4″ for installation in socket terminals. The use of wire-end sleeves is also recommended for these socket terminals. Maximum length of wire-end sleeves to be approximately 1/4″. Tinning of the ends of the lead wires is not recommended.
4. Thread wire through gland nut, gland gasket, washer and connector cover.

©ASCO Valve, Inc. 50 Hanover Road, Florham Park, New Jersey 07932 www.ascovalve.com

NOTE: Connector housing may be rotated in 90° increments from position shown for alternate positioning of cable entry.

5. Check DIN connector terminal block for electrical markings. Then make electrical hookup to terminal block according to markings on it. Snap terminal block into connector cover and install center screw.
6. Position connector gasket on solenoid and install plug connector. Torque center screw to 5±1 in-lbs [0,6±1,1 Nm].

NOTE: Alternating current (AC) and direct current (DC) solenoids are built differently and cannot be converted from one to the other by changing the coil.

Installation of Solenoid

Solenoids may be assembled as a complete unit. Tightening is accomplished by means of a hex flange at the base of the solenoid.

Installation of Panel Mounted Solenoid (See Figures 1 and 2)

1. Disassemble solenoid following instruction under *Solenoid Replacement* then proceed.
2. Install solenoid base sub-assembly through customer panel. 8202H panel mounted solenoids include a retainer to adapt the solenoid base sub-assembly to the customer panel. (See Figure 2)
3. Position finger washer on opposite side of panel over solenoid base sub-assembly.
4. Replace solenoid, nameplate/retainer and red cap.
5. Make electrical hookup, see *Wiring* section.

Solenoid Temperature

Standard solenoids are designed for continuous duty service. When the solenoid is energized for a long period, the solenoid becomes hot and can be touched by hand only for an instant. This is a safe operating temperature.

MAINTENANCE

⚠ WARNING: To prevent the possibility of death, serious injury or property damage, turnoff electrical power, depressurize solenoid operator and/or valve, and vent fluid to a safe area before servicing.

Cleaning

All solenoid operators and valves should be cleaned periodically. The time between cleaning will vary depending on medium and service conditions. In general, if the voltage to the solenoid is correct, sluggish valve operation, excessive noise or leakage will indicate that cleaning is required. Clean strainer or filter when cleaning the valve.

Preventive Maintenance

- Keep the medium flowing through the solenoid operator or valve as free from dirt and foreign material as possible.
- Periodic exercise of the valve should be considered if ambient or fluid conditions are such that corrosion, elastomer degradation, fluid contamination build up, or other conditions that could impede solenoid valve shifting are possible. The actual frequency of exercise necessary will depend on specific operating conditions. A successful operating history is the best indication of a proper interval between exercise cycles.
- Depending on the medium and service conditions, periodic inspection of internal valve parts for damage or excessive wear is recommended. Thoroughly clean all parts. Replace any worn or damaged parts.

Causes of Improper Operation

- **Faulty Control Circuit:** Check the electrical system by energizing the solenoid. A metallic *click* signifies that the solenoid is operating. Absence of the *click* indicates loss of power supply. Check for loose or blown fuses, open-circuited or grounded solenoid, broken leadwires or splice connections.
- **Burned-Out Solenoid:** Check for open-circuited solenoid. Replace if necessary. Check supply voltage; it must be the same as specified on nameplate/retainer and marked on the solenoid. Check ambient temperature and check that the core is not jammed.
- **Low Voltage:** Check voltage across the solenoid leads. Voltage must be at least 85% of rated voltage.

Solenoid Replacement

1. Disconnect conduit, coil leads, and grounding wire.

NOTE: Any optional parts attached to the old solenoid must be reinstalled on the new solenoid. For 3-way construction, piping or tubing must be removed from pipe adapter.

2. Disassemble solenoids with optional features as follows:
   - **Spade or Screw Terminals**

     Remove terminal connections, grounding screw, grounding wire, and terminal block (screw terminal type only).

NOTE: For screw terminals, the socket head screw holding the terminal block serves as a grounding screw.

   - **Junction Box**

     Remove conduit and socket head screw (use 5/32″ hex key wrench) from center of junction box. Disconnect junction box from solenoid.

   - **DIN Plug Connector**

     Remove center screw from DIN plug connector. Disconnect DIN plug connector from adapter. Remove socket head screw (use 5/32″ hex key wrench), DIN terminal adapter, and gasket from solenoid.

©ASCO Valve, Inc. 50 Hanover Road, Florham Park, New Jersey 07932 www.ascovalve.com

3. Remove red cap or retainer from top of solenoid base sub-assembly. For 3-way construction with pipe adapter (Figure 3), remove pipe adapter, nameplate and solenoid. Omit steps 4 and 5.
4. Push down on solenoid. Then using a suitable screwdriver, insert blade between solenoid and nameplate/retainer. Pry up slightly and push to remove. NOTE: Series 8202G/H solenoids have a spacer between the nameplate/retainer and solenoid.
5. Remove solenoid from solenoid base sub-assembly.
6. Reassemble in reverse order of disassembly. Use exploded views for identification and placement of parts.
7. Torque pipe adapter to 90 inch-pounds maximum [10,2 Nm maximum]. Then make up piping or tubing to pipe adapter on solenoid.

Disassembly and Reassembly of Solenoids

1. Remove solenoid, see *Solenoid Replacement*.
2. Remove spring washer from solenoid base sub-assembly. For 3-way construction, remove pipe adapter and plugnut gasket.
3. Unscrew solenoid base sub-assembly from valve body.
4. Remove internal solenoid parts for cleaning or replacement. Use exploded views for identification and placement of parts.
5. If the solenoid is part of a valve, refer to basic valve installation and maintenance instructions for further disassembly.
6. Torque solenoid base sub-assembly and adapter to 175±25 in-lbs [19,8±2,8 Nm].

ORDERING INFORMATION FOR ASCO SOLENOIDS

When Ordering Solenoids for ASCO Solenoid Operators or Valves, order the number stamped on the solenoid. Also specify voltage and frequency.

©ASCO Valve, Inc. 50 Hanover Road, Florham Park, New Jersey 07932 www.ascovalve.com

Installation&Maintenance Instructions

ASCO Red-Hat II®

OPEN-FRAME, GENERAL PURPOSE, WATERTIGHT/EXPLOSIONPROOF SOLENOIDS

SERIES
8003G/H
8007G/H
8202G/H

NOTICE: See Installation and Maintenance Instructions, I&M No. V_6584_R16 - Section 1 of 2 for detailed instructions.

Torque Chart

Part Name	Torque Value in Inch-Pounds	Torque Value in Newton-Meters
solenoid base sub-assembly	175 ± 25	19,8± 2,8
pipe adapter	90 maximum	10,2 maximum

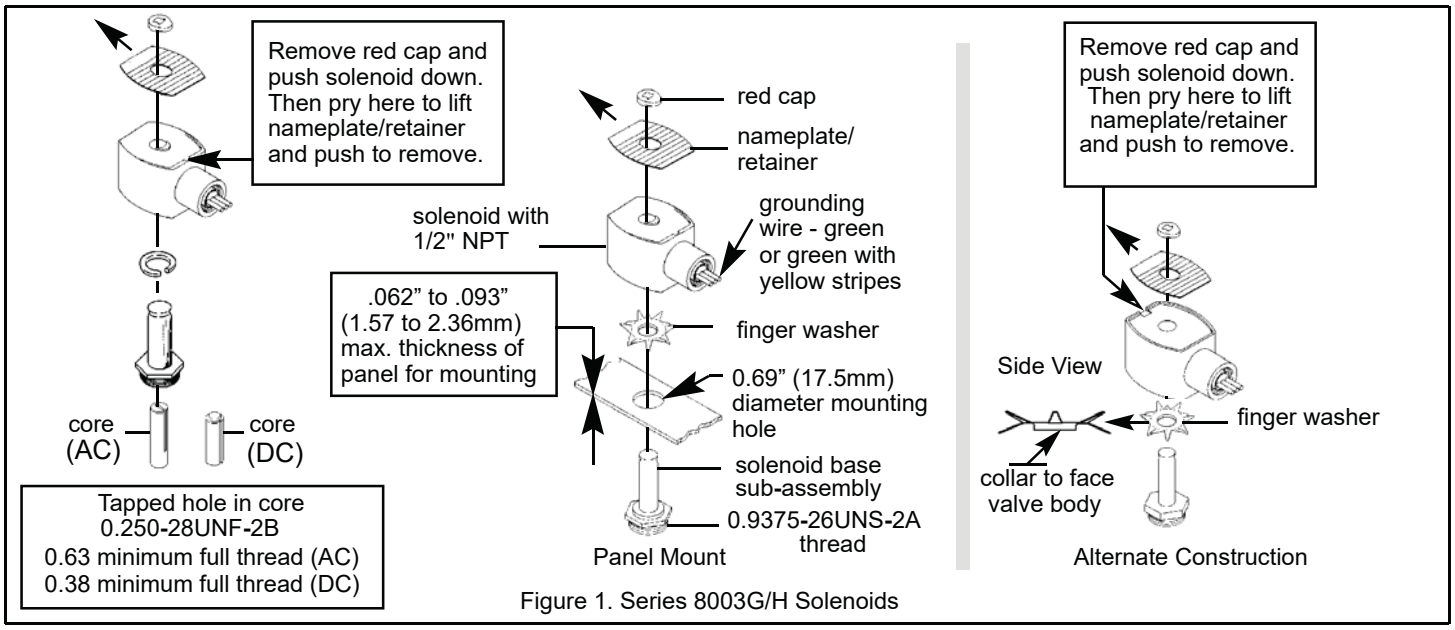

Figure 1. Series 8003G/H Solenoids

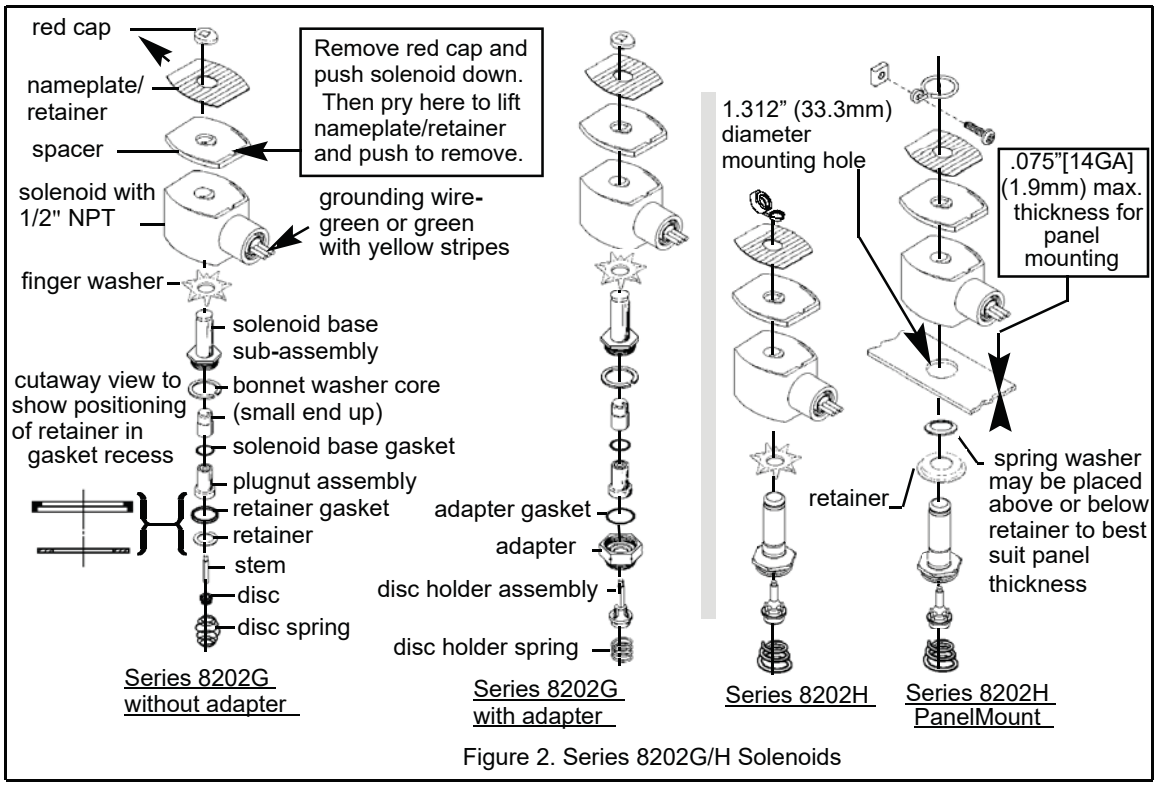

Figure 2. Series 8202G/H Solenoids

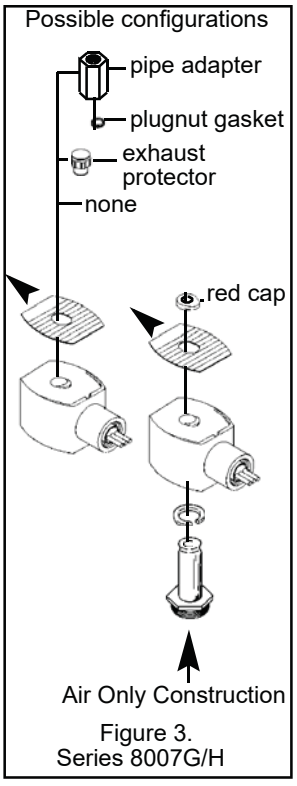

Figure 3. Series 8007G/H

 All Rights Reserved.

Torque Chart

Part Name	Torque Value in Inch-Pounds	Torque Value in Newton-Meters
terminal block screws	10 ± 2	1,1 ± 0,2
socket head screw	15 - 20	1,7 - 2,3
center screw	5±1	0,6 ± 0,1

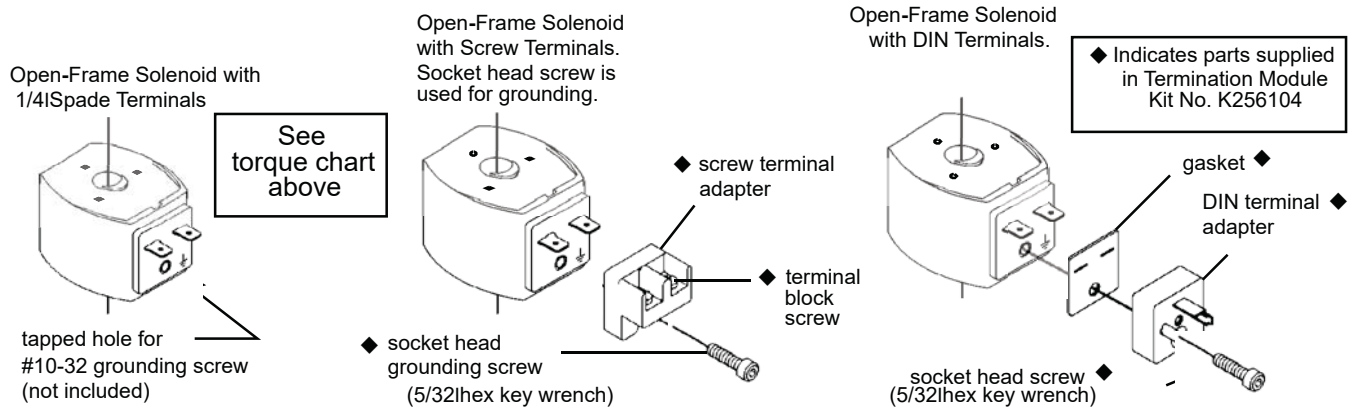

Figure 4. Open-frame solenoids

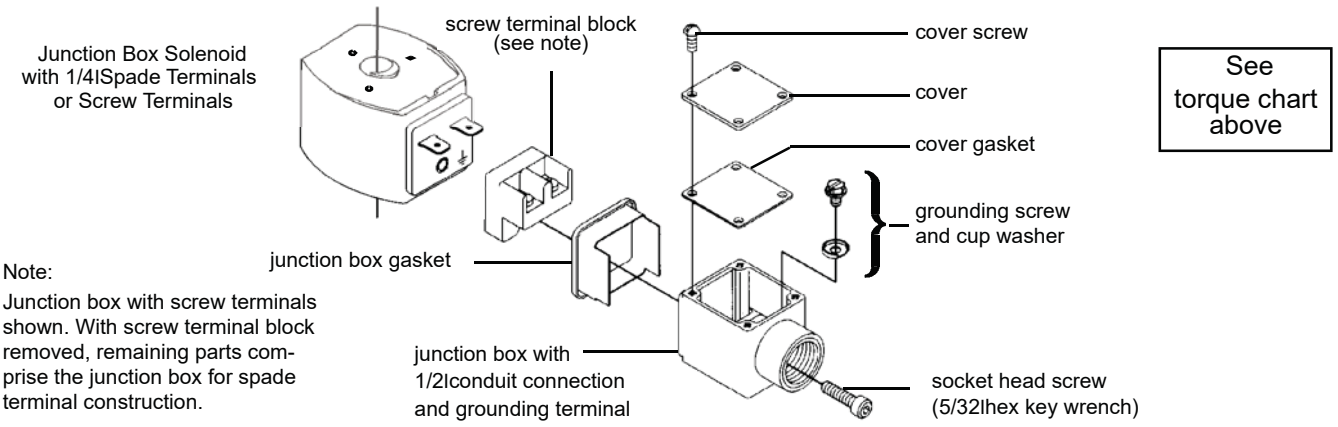

Figure 5. Junction box (optional feature)

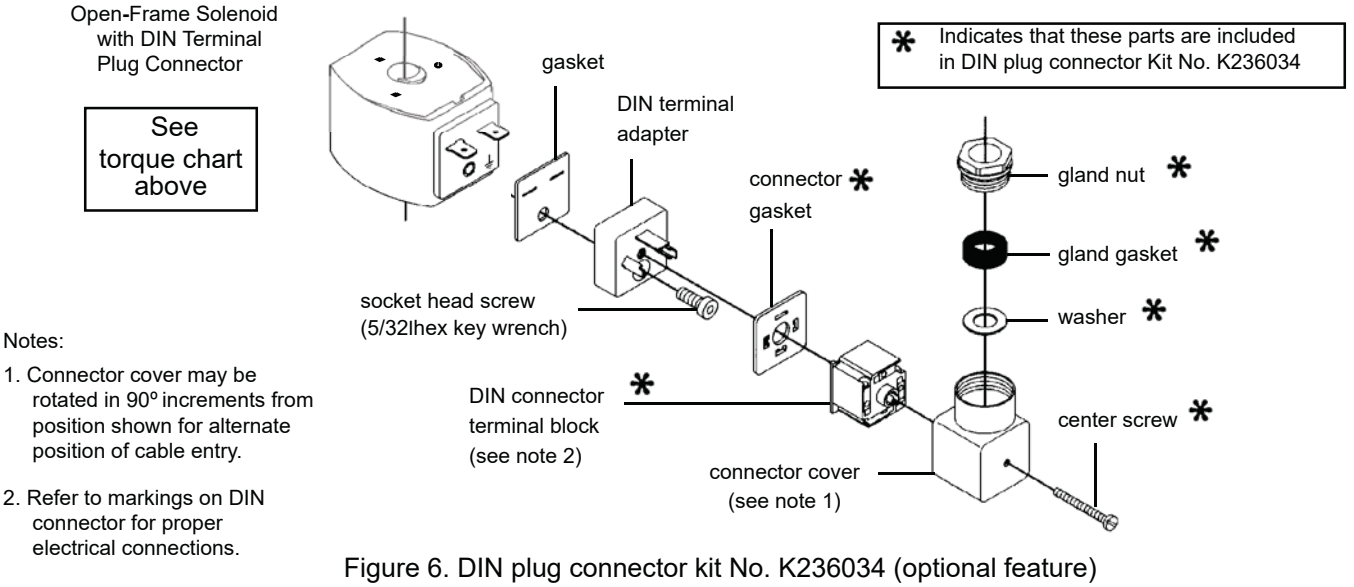

Figure 6. DIN plug connector kit No. K236034 (optional feature)

©ASCO Valve, Inc. 50 Hanover Road, Florham Park, New Jersey 07932 www.ascovalve.com

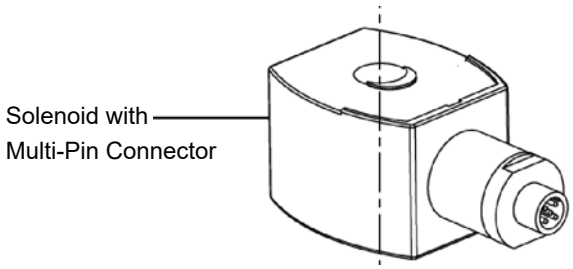

DC: For mating connector, use 4-pin M12 x 1 threaded female connector.

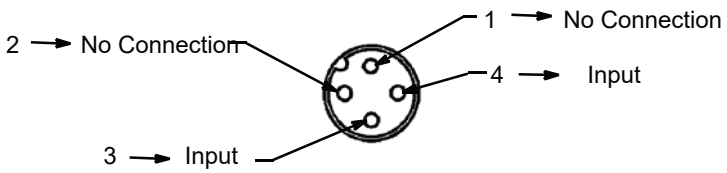

Electrical Connection Size:
DC: Single keyway M12 x 1 (*Not polarity sensitive)*
AC: Dual keyway 1/2-20UNF Thread

Figure 7.
4-Pin Anodized Aluminum Electrical Termination
(VT/VB)

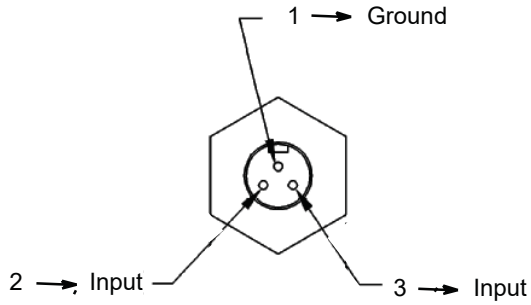

Electrical Connection Size:
DC/AC: 7/8-16 UNS-2A

Figure 8.
Mini 3-pin Epoxy Coated Zinc Electrical Termination
(ZT/ZB)

©ASCO Valve, Inc. 50 Hanover Road, Florham Park, New Jersey 07932 www.ascovalve.com

GB

GENERAL INSTALLATION AND MAINTENANCE INSTRUCTIONS

Note: These general Installation and Maintenance Instructions must be read in conjunction with the Instruction Sheet for the specific product.

INSTALLATION

ASCO Numatics components are intended to be used only within the technical characteristics as specified on the nameplate. Changes to the equipment are only allowed after consulting the manufacturer or its representative. Before installation, depressurize the piping system and clean internally.
The equipment may be mounted in any position if not otherwise indicated on the product by means of an arrow.
The flow direction and pipe connection of valves are indicated on the body.

The pipe connections have to be in accordance with the size indicated on the nameplate and fitted accordingly.

Caution:
- Reducing the connections may cause improper operation or malfunctioning.
- For the protection of the equipment install a strainer or filter suitable for the service involved in the inlet side as close to the product as possible.
- If tape, paste, spray or a similar lubricant is used when tightening, avoid particles entering the system.
- Use proper tools and locate wrenches as close as possible to the connection point.
- To avoid damage to the equipment. DO NOT OVERTIGHTEN pipe connections
- Do not use valve or solenoid as lever.
- The pipe connections should not apply any force, torque or strain to the product.

ELECTRICAL CONNECTION

In case of electrical connections, they are only to be made by trained personnel and have to be in accordance with the local regulations and standards.

Caution:
- Turn off electrical power supply and de-energize the electrical circuit and voltage carrying parts before starting work.
- All electrical screw terminals must be properly tightened according to the standards before putting into service.
- Dependent upon the voltage electrical components must be provided with an earth connection and satisfy local regulations and standards.

The equipment can have one of the following electrical terminals:
- Spade plug connections according to ISO-4400 or 3 x DIN-46244 (when correctly installed, this connection provides IP-65 protection).
- Embedded screw terminals in metal enclosure with "Pg" cable gland
- Spade terminals (AMP type).
- Flying leads or cables.

PUTTING INTO SERVICE

Before pressurizing the system, first carry-out an electrical test. In case of solenoid valves, energize the coil a few times and notice a metal click signifying the solenoid operation.

SERVICE

Most of the solenoid valves are equipped with coils for continuous duty service. To prevent the possibility of personal or property damage, do not touch the solenoid which can become hot under normal operating conditions.

SOUND EMISSION

The emission of sound depends on the application, medium and nature of the equipment used. The exact determination of the sound level can only be carried out by the user having the valve installed in his system

MAINTENANCE

Maintenance of ASCO Numatics products is dependent on service conditions. Periodic cleaning is recommended, the timing of which will depend on the media and service conditions. During servicing, components should be examined for excessive wear. A complete set of internal parts is available as spare parts or rebuild kit. If a problem occurs during installation/maintenance or in case of doubt please contact ASCO Numatics or authorized representatives.

*A separate Declaration of Incorporation relating to EU-Directive 2006/42/EC Annex IIB is available on request for applicable products. Please provide product identification number and serial numbers of products concerned.

The product, , when marked CE, complies with the essential requirements of the EMC 2004/108/EC (until April 20th 2016) and EMC 2014/30/EU (from April 20th 2016) and LVD 2006/95/EC (until April 20th 2016) and LVD 2014/35/EU (from April 20th 2016). A separate Declaration of Conformity is available on request. Please provide product identification number and serial numbers of the products concerned.

FR

INSTRUCTIONS GÉNÉRALES D'INSTALLATION ET D'ENTRETIEN

Note: Ces instructions générales d'installation et d'entretien complètent la notice spécifique du produit.

MONTAGE

Les composants ASCO Numatics sont conçus pour les domaines de fonctionnement indiqués sur la plaque signalétique ou la documentation. Aucune modification ne peut être réalisée sur le matériel sans l'accord préalable du fabricant ou de son représentant. Avant de procéder au montage, dépressuriser les canalisations er effectuer un nettoyage inteme.
A moins qu'une fléche ou la notice n'indique un sens de montage spécifique de la tête magnétique, le produit peut être monté dans n'importe quelle position
Le sens de circulation du fluide est indiqué par repères sur le corps er dans la documentation.
La dimension des tuyauteries doit correspondre au raccordement indiqué sur le corps, l'étiquette ou la notice.

Attention:
- Une restriction des tuyauteries peut entraîner des dysfonctionnements.
- Afin de protéger le matériel, installer une crépine ou un filtre adéquat en amont, aussi près que possible du produit.
- En cas d' utilisation de ruban; pàte, aérosol ou autre lubrifiant lors du serrage, veiller à ce qu" aucun corps étranger ne pénètre dans le circuit.
- Utiliser un outillage approprié et placer les clés aussi près que possible du point de raccordement.
- Afin d'éviter toute détérioration, NE PAS TROP SERRER les raccords des tuyauteries.
- Ne pas se servir de la vanne ou de tête magnétique comme d'un levier.
- The pipe connections should not apply any force, torque or strain to the product.

RACCORDEMENT ÉLECTRIQUE

Le raccordement électrique doit être réalisé par un personnel qualifié et selon les normes et règlements locaux.

Attention:
- Avant toute intervention, couper l'alimentation électrique pour mettre hors tension les composants.
- Toutes les bornes à vis doivent être serrées correctement avant la mise en service.
- Selon la tension, les composants électrique doivent être mis à la terre conformément aux normes et règlements locaux.

Selon les cas, le raccordement électrique s'effectué par:
- Connecteur débrochable ISO-4400 ou 3 x DIN-46244 avec degré de protection IP-65 lorsque le raccordement est correctement effectué.
- Bornes à vis solidaires du bobinage, sous boîter métallique avec presse-étoupe "Pg--".
- Cosses (type AMP).
- Fils ou câbles solidaires de la bobine.

MISE EN SERVICE

Avant de mettre le circuit sous pression, effectuer un essai électrique. Dans le cas d'une électrovanne, mettre la bobine sous tension plusieurs fois er écouter le "clic" métallique qui signale le fonctionnement de la tête magnétique.

FONCTIONNEMENT

La plupart des électrovannes comportant des bobinages prévus pour mise sous tension permanente. Pour éviter toute brûlure, ne pas toucher la tête magnétique qui, en fonctionnement normal et en permanence sous tension, peut atteindre une température élevée.

BRUIT DE FONCTIONNEMENT

Le bruit de fonctionnement varie selon l'utilisation, le fluide et le type de matériel employé. L'utilisateur ne pourra déterminer avec précision le niveau sonore émis qu'après avoir monté le composant sur l'installation.

ENTRETIEN

L'entretien nécessaire aux produits ASCO Numatics varie avec leurs conditions d'utilisation. Il est souhaitable de procéder à un nettoyage périodique dont l'intervalle varie suivant la nature du fluide, les conditions de fonctionnement et le milieu ambiant. Lors de l'intervention. Les composants doivent être examinés our détecter toute usure excessive. Un ensemble de pièces internes est proposé en pièces de rechange pour procéder à la réfection. En cas de problème lors du montage/entretien ou en cas de doute, veuillez contacter ASCO Numatics ou ses représentants officiels.

*Une déclaration d'incorporation relative à la directive UE 2006/42/CE Annexe II B est disponible sur demande pour les produits applicables. Veuillez fournir le numéro d'identification du produit et les numéros de série des produits concernés.

Lorsqu'il est marqué du label CE, le produit est conforme aux exigences essentielles des directives CEM 2004/108/CE (jusqu'au 20 avril 2016) et CEM 2014/30/UE (à partir du 20 avril 2016) et des directives Basse tension 2006/95/CE (jusqu'au 20 avril 2016) et 2014/35/UE (à partir du 20 avril 2016). Une déclaration de conformité peut être fournie sur simple demande. Veuillez fournir le numéro d'identification du produit et les numéros de série des produits concernés.

DE

ALLGEMEINE BETRIEBSANLEITUNG

Achtung: Diese Allgemeine Betriebsanleitung gilt in Zusammenhang mit der jeweiligen Betriebsanleitung für die speziellen Produkte.

EINBAU

Die ASCO Numatics-Komponenten dürfen nur innerhalb der auf den Typenschildern angenebenen Daten eingesetzt warden, Veränderungen an den Produkten sind nur nach Rücksprache mit ASCO Numatics zulässig.
Vor dem Einbau der Ventile muß das Rohrleitungssystem drucklos geschaltet und innen gereinigt werden.
Die Einbaulage der Produkte ist genereil beliebig. Ausnahme: Die mit einem Pfeil gekennzeichneten Produkte müssen entsprechend der Pfeilrichtung montiert werden.
Die Durchflußrichtung und der Eingang von Ventilen sind gekennzeichnet.

Die Rohranschlüsse sollten entsprechend den Größenangaben auf den Typenschildern mit handelsüblichen Verschraubungen durchgeführt werden. Dabei ist folgendes zu beachten:
- Eine Reduzierung der Anschlüsse kann zu Leistungs-und Funktionsminderungen führen.
- Zum Schutz der Ventile sollten Schmutzfänger oder Filter so dicht wie möglich in den Ventileingang integriert werden.
- Bei Abdichtung am Gewinde ist darauf zu achten, daß kein Dichtungsmaterial in die Rohrleitung oder das Ventil gelangt.
- Zur Montage darf nur geeignetes Werkzeug verwendetwerden.
- Konische Verschraubungen sind sorgfältig anzuziehen. Es ist darauf zu achten, daß beim Anziehen das Gehäuse nicht beschädigt wird.
- Spule und Führungsrohr von Ventilen dürfen nicht als Gegenhalter benutzt werde.
- Die Rohrleitungsanschlüsse sollen fluchten und dürfen keine Spannungen auf das Ventil übertragen.

ELECTRISCHER ANSCHLUß

Der elektrische Anschluß ist von Fachpersonal entsprechend den geltenden VDE-und CEE Richtlinien auszuführen. Es ist besonders auf foigendes zu achten:
- Vor Beginn der Arbeiten ist sicherzustellen, daß alle elektrischen Leitungen und Netzteile spannungslos geschaltet sind.
- Alle Anschlußklemmen sind nach Beendigung der Arbeiten vorschriftsmäßig entsprechend den geltenden Regeln anzuziehen.
- Je nach Spannungsbereich muß das Ventil nach den geltenden Regeln einen Schutzleiteranschluß erhalten.

Der Magnetantrieb kann je nach Bauart folgende Anschlüsse haben:
- Anschluß für Gerätesteckdose nach DIN 43650 Form A/ISO 4400 oder 3 x DIN 46244 (durch ordnungsgemäße Montage der Gerätesteckdose wird Schutzklasse IP 65 erreicht).
- Anschlüsse innerhalb eines Blechgehäuses mittels Schraubklemmen. Kabeleinführung ins Gehäuse mit PG-Verschraubung.
- Offene Spulen mit Flachsteckern (AMP-Fahnen) oder mit eingegossenen Kabelenden.

INBETRIEBNAHME

Vor Druckbeaufschlagung des Produktes sollte eine elektrische Funktionsprüfung erfolgen:

Bei Ventilen Spannung an der Magnetspule mehrmals ein-und ausschalten. Es muß ein Klicken zu hören sein.

BETRIEB

Die meisten Ventile sind mit Spulen für Dauerbetrieb ausgerüstet. Zur Vermeidung von Personen-und Sachschäden sollte jede Berührung mit dem Ventil vermieden werden, da die Magnetspule bei längerem Betrieb sehr heiß werden kann.

GERÄUSCHEMISSION

Diese hängt sehr stark vom Anwendungsfall, den Betriebsdaten und dem Medium, mit denen das Produkt beaufschlagt wird, ab. Eine Aussage über die Geräuschemission des Produktes muß deshalb von demjenigen getroffen werden, der das Produkt innerhalb einer Maschine in Betrieb nimmit.

WARTUNG

Die Wartung hängt von den Einsatzbedigungen ab. In entsprechenden Zeitabständen muß das Produkt geöffnet und gereinigt werden. Für die Überholung der ASCO Numatics-Produkte können Ersatzteilsätze geliefert werden. Treten Schwierigkeiten bel Einbau, Betrieb oder Wartung auf, sowie bei Unklarheiten, ist mit ASCO Numatics Rücksprache zu halten.

ASCO Numatics Produkte sind entsprechend der EG-Richtlinie 89/392/EWG gefertigt.

*Eine separate Herstellererklärung im Sinne der Richtlinie 2006/42/EWG Anhang II B ist auf Anfrage für die entsprechenden Produkte erhältlich. Geben Sie bitte die Kennnummer sowie die Seriennummer der betreffenden Produkte an.

Das Produkt, wenn mit CE gekennzeichnet, erfüllt die Anforderungen von EMV 2004/108/EWG (bis 20. April 2016) und EMV 2014/30/EU (vom 20. April 2016) und LVD 2006/95/EWG (bis 20. April 2016) und LVD 2014/35/EU (vom 20. April 2016). Eine separate Konformitätserklärung ist auf Anfrage erhältlich. Geben Sie bitte die Kennnummer sowie die Seriennummer der betreffenden Produkte an.

ASCO
50 Hanover Road
Florham Park, New Jersey 07932
Tel. (973) 966-2000
Fax (973) 966-2628

ASCO
1561 Columbia Highway
Aiken, South Carolina 29801
Tel. (803) 641-9200
Fax (803) 641-9290

ASCO Valves® E 264274 - 04/2016 All Rights Reserved.
©ASCO Valve, Inc. 50 Hanover Road, Florham Park, New Jersey 07932 www.ascovalve.com

ASCHROFT

TYPE 1009, PRESSURE GAUGE

LEFT BLANK

ASHCROFT®

PRESSURE GAUGE INSTALLATION, OPERATION AND MAINTENANCE

I&M008-10098-5/02 (250-1353-K) Rev. 11/10

This page is intentionally left blank

CONTENTS

		Page
1.0	**Selection and Application**	
1.1	Range	4
1.2	Temperature	4
1.3	Media	4
1.4	Oxidizing media	4
1.5	Pulsation/Vibration	4
1.6	Gauge fills	4
1.7	Mounting	4
2.0	**Temperature**	
2.1	Ambient Temperature	4
2.2	Accuracy	4
2.3	Steam service	4
2.4	Hot or very cold media	4
2.5	Diaphragm seals	5
2.6	Autoclaving	5
3.0	**Installation**	
3.1	Installation Location	5
3.2	Gauge reuse	5
3.3	Tightening of gauge	5
3.4	Process isolation	5
3.5	Surface mounting	5
3.6	Flush mounting	5
4.0	**Operation**	
4.1	Frequency of inspection	5
4.2	In-service inspection	5
4.3	When to check accuracy	5
4.4	When to recalibrate	5
4.5	Other considerations	5
4.6	Spare parts	5
5.0	**Gauge Replacement**	5
6.0	**Accuracy: Procedures/Definitions**	6
6.1	Calibration - Rotary movement gauges	7
7.0	**Diaphragm Seals**	
7.1	General	8
7.2	Installation	8
7.3	Operation	8
7.4	Maintenance	8
7.5	Failures	8
8.0	**Dampening Devices**	
8.1	General	8
8.2	Throttle Screws & Plugs	8
8.3	Ashcroft Pulsation Dampener	8
8.4	Ashcroft Pressure Snubber	8
8.5	Ashcroft Needle Valves	8
8.6	Chemiquip® Pressure Limiting Valves	8
9.0	**Test Equipment & Tool Kits**	
9.1	Pressure Instrument Testing Equipment	9
9.2	Tools & Tool Kits	9
9.3	Kits to Convert a Dry Gauge to a Liquid Filled or Weather Proof Case Gauge	9
9.4	2½ & 3½ 1009 Duralife® Gauge Tools	10
Appendix		
	Type 1188 Bellows Gauge Calibration Procedure	11
	Type 1009 Calibration Procedure (Vacuum-Previous Style)	12
	Type 1009 Calibration Procedure (Pressure-Previous Style)	13
	Type 1009 Calibration Procedure (Pressure & Vacuum-Current Style)	14
	Type 1279 & 1379 I&M Liquid Fill Conversion Instruction	15-16
	Type 1082 Calibration Procedure	17-18

Cover photo courtesy of Johnson/Yokogawa Co.

Chemiquip® is a registered trademark of Chemiquip Products Co. Inc.

1.0 SELECTION & APPLICATION

Users should become familiar with ASME B40.100 (Gauges – Pressure Indicating Dial Type – Elastic Element) before specifying pressure measuring gauges. That document – containing valuable information regarding gauge construction, accuracy, safety, selection and testing – may be ordered from:

ASME International
Three Park Avenue
New York, N.Y. 10016-5990
800-843-2763 (US/Canada)
001-800-843-2763 (Mexico)
973-882-1170 outside North America
email: infocentral@asme.org
www.asme.org

WARNING: To prevent misapplication, pressure gauges should be selected considering media and ambient operating conditions. Improper application can be detrimental to the gauge, causing failure and possible personal injury, property damage or death. The information contained in this manual is offered as a guide in making the proper selection of a pressure gauge. Additional information is available from Ashcroft Inc.

The following is a highlight of some of the more important considerations:

1.1 Range – The range of the instrument should be approximately twice the maximum operating pressure. Too low a range may result in (a) low fatigue life of the elastic element due to high operating stress and (b) susceptibility to overpressure set due to pressure transients that exceed the normal operating pressure. Too high a range may yield insufficient resolution for the application.

1.2 Temperature – Refer to Section 2 of this manual for important information concerning temperature related limitations of pressure gauges, both dry and liquid filled.

1.3 Media – The material of the process sensing element must be compatible with the process media. Use of a diaphragm seal with the gauge is recommended for process media that (a) is corrosive to the process sensing element; (b) contain heavy particulates (slurries) or (c) are very viscous including those that harden at room temperature.

1.4 Oxidizing media – Gauges for direct use on oxidizing media should be specially cleaned. Gauges for oxygen service should be ordered to variation X6B and will carry the ASME required dial marking "USE NO OIL" in red letters. Gauges for direct use on other oxidizing media may be ordered to variation X6W. They will be cleaned but carry no dial marking. *PLUS!*™ Performance gauges or Halocarbon filled gauge or diaphragm fill is required for use with oxidizing media; order variation XCF.

1.5 Pulsation/Vibration – Pressure pulsation can be dampened by several mechanisms; the patented *PLUS! Performance* gauge will handle the vast majority of applications. One exception to this is high frequency pulsation which is difficult to detect. The only indication may be an upscale zero shift due to movement wear. These applications should be addressed with a liquid filled gauge, or in extreme cases, a remotely mounted liquid filled gauge connected with a length of capillary line. The small diameter of the capillary provides excellent dampening, but can be plugged. The Ashcroft 1106 pulsation dampener and 1112 snubber are auxiliary devices which dampen pulsation with less tendency to plug.

1.6 Gauge fills. – Once it has been determined that a liquid filled gauge is in order, the next step is selecting the type of fill. **Glycerin** satisfies most applications. While being the least expensive fill, its usable temperature range is 20/180°F. **Silicone** filled gauges have a broader service range: –40/250°F. Oxidizing media require the use of **Halocarbon,** with a service range of –40/250°F. Pointer motion will be slowed at the low end of the low end of these temperature ranges.

1.7 Mounting – Users should predetermine how the gauge will be mounted in service: stem (pipe), wall (surface) or panel (flush). Ashcroft wall or panel mounting kits should be ordered with the gauge. See Section 3.

2.0 TEMPERATURE

2.1 Ambient Temperature – To ensure long life and accuracy, pressure gauges should preferably be used at an ambient temperature between –20 and +150°F (–30 to +65°C). At very low temperatures, standard gauges may exhibit slow pointer response. Above 150°F, the accuracy will be affected by approximately 1.5% per 100°F. Other than discoloration of the dial and hardening of the gasketing and degradation of accuracy, non-liquid filled Type 1279 (phenolic case) and 1379 (aluminum case) Duragauge® gauge, with standard glass windows, can withstand continuous operating temperatures up to 250°F. Unigauge models 2½″ and 3½″ 1009 and 1008S liquid filled gauges can withstand 200°F but glycerin fill and the acrylic window of Duragauge® gauges will tend to yellow. Silicone fill will have much less tendency to yellow. Low pressure, liquid filled Types 1008 and 1009 gauges may have some downscale errors caused by liquid fill expansion. This can be alleviated by venting the gauge at the top plug (pullout the blue plug insert). To do this the gauge must be installed in the vertical position.

Although the gauge may be destroyed and calibration lost, gauges can withstand short times at the following temperatures: gauges with all welded pressure boundary joints, 750°F (400°C); gauges with silver brazed joints, 450°F (232°C) and gauges with soft soldered joints, 250°F (121°C). For expected long term service below –20°F (–30°C) Duragauge® and 4½″ 1009 gauges should be hermetically sealed and specially lubricated; add "H" to the product code for hermetic sealing. Add variation XVY for special lubricant. Standard Duralife® gauges may be used to –50°F (–45°C) without modification.

2.2 Accuracy – Heat and cold affect accuracy of indication. A general rule of thumb for **dry gauges** is 0.5% of full scale change for every 40°F change from 75°F. Double that allowance for gauges with hermetically sealed or liquid filled cases, except for Duragauge® gauges where no extra allowance is required due to the elastomeric, compensating back. Above 250°F there may exist very significant errors in indication.

2.3 Steam service – In order to prevent live steam from entering the Bourdon tube, a siphon filled with water should be installed between the gauge and the process line. Siphons can be supplied with ratings up to 4,000 psi. If freezing of the condensate in the loop of the siphon is a possibility, a diaphragm seal should be used to isolate the gauge from the process steam. Siphons should also be used whenever condensing, hot vapors (not just steam) are present. Super heated steam should have enough piping or capillary line ahead of the siphon to maintain liquid water in the siphon loop.

2.4 Hot or very cold media – A five foot capillary line assembly will bring most hot or cold process media within the recommended gauge ambient temperature range. For media above

750°F (400°C) the customers should use their own small diameter piping to avoid possible corrosion of the stainless steel. The five foot capillary will protect the gauges used on the common cryogenic (less than –300°F (200°C) gases, liquid argon, nitrogen, and oxygen.) The capillary and gauge must be cleaned for oxygen service. The media must not be corrosive to stainless steel, and must not plug the small bore of the capillary.

2.5 Diaphragm seals – A diaphragm seal should be used to protect gauges from corrosive media, or media that will plug the instrument. Diaphragm seals are offered in a wide variety of designs and corrosion resistant materials to accommodate almost any application and most connections. Visit www.ashcroft.com for details.

2.6 Autoclaving – Sanitary gauges with clamp type connections are frequently steam sterilized in an autoclave. Gauges equipped with polysulfone windows will withstand more autoclave cycles than those equipped with polycarbonate windows. Gauges equipped with plain glass or laminated safety glass **should not be autoclaved.** Gauge cases should be vented to atmosphere (removing the rubber fill/safety plug if necessary) **before** autoclaving to prevent the plastic window from cracking or excessively distorting. If the gauge is liquid filled, the fill should be drained from the case and the front ring loosened before autoclaving.

3.0 INSTALLATION

3.1 Location – Whenever possible, gauges should be located to minimize the effects of vibration, extreme ambient temperatures and moisture. Dry locations away from very high thermal sources (ovens, boilers etc.) are preferred. If the mechanical vibration level is extreme, the gauge should be remotely located (usually on a wall) and connected to the pressure source via flexible tubing.

3.2 Gauge reuse – ASME B40.100 recommends that gauges not be moved indiscriminately from one application to another. The cumulative number of pressure cycles on an in-service or previously used gauge is generally unknown, so it is generally safer to install a new gauge whenever and wherever possible. This will also minimize the possibility of a reaction with previous media.

3.3 Tightening of gauge – Torque should never be applied to the gauge case. Instead, an open end or adjustable wrench should always be used on the wrench flats of the gauge socket to tighten the gauge into the fitting or pipe. NPT threads require the use of a suitable thread sealant, such as pipe dope or teflon tape, and must be tightened very securely to ensure a leak tight seal.

CAUTION: Torque applied to a diaphragm seal or its attached gauge, that tends to loosen one relative to the other, can cause loss of fill and subsequent inaccurate readings. Always apply torque **only** to the wrench flats on the lower seal housing when installing filled, diaphragm seal assemblies or removing same from process lines.

3.4 Process isolation – A shut-off valve should be installed between the gauge and the process in order to be able to isolate the gauge for inspection or replacement without shutting down the process.

3.5 Surface mounting – Also known as wall mounting. Gauges should be kept free of piping strains. The gauge case mounting feet, if applicable, will ensure clearance between the pressure relieving back and the mounting surface.

3.6 Flush mounting – Also known as panel mounting. The applicable panel mounting cutout dimensions can be found at www.ashcroft.com

4.0 OPERATION

4.1 Frequency of inspection – This is quite subjective and depends upon the severity of the service and how critical the accuracy of the indicated pressure is. For example, a monthly inspection frequency may be in order for critical, severe service applications. Annual inspections, or even less frequent schedules, are often employed in non-critical applications.

4.2 In-service inspection – If the accuracy of the gauge cannot be checked in place, the user can at least look for (a) erratic or random pointer motion; (b) readings that are suspect – especially indications of pressure when the user believes the true pressure is 0 psig. Any gauge which is obviously not working or indicating erroneously, should be immediately valved-off or removed from service to avoid a possible pressure boundary failure.

4.3 When to check accuracy – Any suspicious behavior of the gauge pointer warrants that a full accuracy check be performed. Even if the gauge is not showing any symptoms of abnormal performance, the user may want to establish a frequency of bench type inspection.

4.4 When to recalibrate – This depends on the criticality of the application. If the accuracy of a 3-2-3% commercial type gauge is only 0.5% beyond specification, the user must decide whether it's worth the time and expense to bring the gauge back into specification. Conversely if the accuracy of a 0.25% test gauge is found to be 0.1% out of specification then the gauge should be recalibrated.

4.5 Other considerations – These include (a) bent or unattached pointers due to extreme pressure pulsation; (b) broken windows which should be replaced to keep dirt out of the internals; (c) leakage of gauge fill; (d) case damage – dents and/or cracks; (e) any signs of service media leakage through the gauge including its connection; (f) discoloration of gauge fill that impedes readability.

4.6 Spare parts – As a general rule it is recommended that the user maintain in inventory one complete Ashcroft® instrument for every ten (or fraction thereof) of that instrument type in service.

5.0 GAUGE REPLACEMENT

It is recommended that the user stock one complete Ashcroft® instrument for every ten (or fraction thereof) of that instrument type in service. With regard to gauges having a service history, consideration should be given to discarding rather than repairing them. Gauges in this category include the following:

a. Gauges that exhibit a span shift greater than 10%. It is possible the Bourdon tube has suffered thinning of its walls by corrosion.

b. Gauges that exhibit a zero shift greater than 25%. It is likely the Bourdon tube has seen significant overpressure leaving residual stresses that may be detrimental to the application.

c. Gauges which have accumulated over 1,000,000 pressure cycles with significant pointer excursion.

d. Gauges showing any signs of corrosion and/or leakage of the pressure system.

e. Gauges which have been exposed to high temperature or exhibit signs of having been exposed to high temperature – specifically 250°F or greater for soft soldered systems; 450°F or greater for brazed systems; and 750°F or greater for welded systems.

f. Gauges showing significant friction error and/or wear of the movement and linkage.

g. Gauges having damaged sockets, especially damaged threads.

h. Liquid filled gauges showing loss of case fill.

NOTE: ASME B40.100 does not recommend moving gauges from one application to another. This policy is prudent in that it encourages the user to procure a new gauge, properly tailored by specification, to each application that arises.

6.0 ACCURACY: PROCEDURES/DEFINITIONS

Accuracy inspection – Readings at approximately five points equally spaced over the dial should be taken, both upscale and downscale, before and after lightly rapping the gauge to remove friction. **A pressure standard with accuracy at least four times greater than the accuracy of the gauge being tested is recommended.**

Equipment – A finely regulated pressure supply will be required. It is critical that the piping system associated with the test setup be leaktight. The gauge under test should be positioned as it will be in service to eliminate positional errors due to gravity.

Method – ASME B40.100 recommends that **known** pressure (based on the reading from the pressure standard used) be applied to the gauge under test. Readings including any error from the nominal input pressure, are then taken from the gauge under test. The practice of aligning the pointer of the gauge under test with a dial graduation and then reading the error from the master gauge ("reverse reading") can result in inconsistent and misleading data and should NOT be used.

Calibration chart – After recording all of the readings it is necessary to calculate the errors associated with each test point using the following formula: ERROR in percent = 100 times (TRUE VALUE minus READING) ÷ RANGE. Plotting the individual errors (Figure 1) makes it possible to visualize the total gauge characteristic. The plot should contain all four curves: upscale – before rap; upscale – after rap; downscale – before rap; downscale – after rap. "*Rap*" means lightly tapping the gauge **before** reading to remove friction as described in ASME B40.100.

Referring to Figure 1, several classes of error may be seen:

Zero – An error which is approximately equal over the entire scale. This error can be manifested when either the gauge is

FIG. 1

TYPICAL CALIBRATION CHART

INDICATED VALUE (PSI)

True Value – PSI	Increasing – Without RAP	Increasing – With RAP	Decreasing – Without RAP	Decreasing – With RAP
0	–.4	0	–.4	0
40	+.8	+1.0	+1.4	+1.1
80	+.4	+.5	+1.2	+1.0
120	–.4	–1.0	+.8	+.6
160	–.8	–.5	+.6	+.4
200	+.4	+.8	+.4	+.4

ERROR (% OF FULL SCALE)

True Value – % of Range	Increasing – Without RAP	Increasing – With RAP	Decreasing – Without RAP	Decreasing – With RAP
0	–.20	0	–.20	0
20	+.40	+.50	+.70	+.55
40	+.20	+.25	+.60	+.50
60	–.20	–.05	+.40	+.30
80	–.40	–.25	+.30	+.20
100	+.20	+.40	+.20	+.20

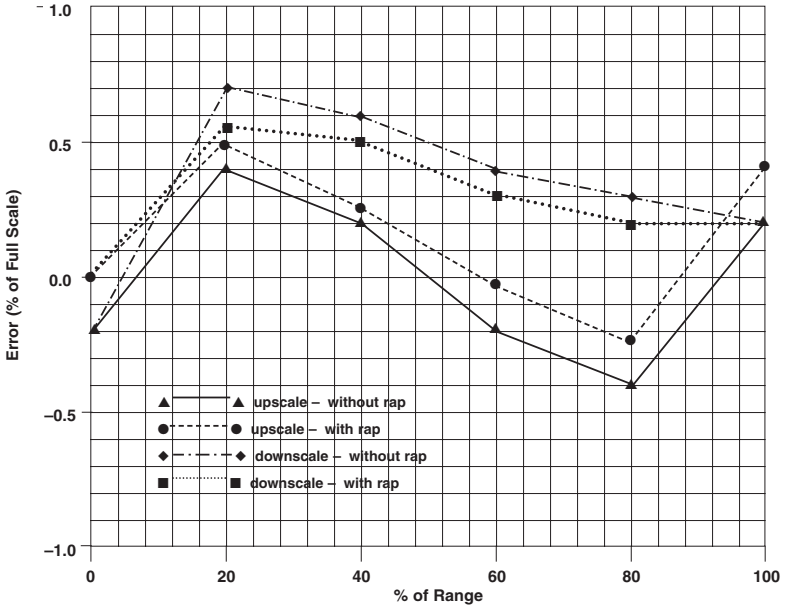

dropped or overpressured and the Bourdon tube takes a permanent set. This error may often be corrected by simply repositioning the pointer. Except for test gauges, it is recommended that the pointer be set at midscale pressure to "split" the errors.

Span – A span error exists when the error at full scale pressure is different from the error at zero pressure. This error is often proportional to the applied pressure. Most Ashcroft gauges are equipped with an internal, adjusting mechanism with which the user can correct any span errors which have developed in service.

Linearity – A gauge that has been properly spanned can still be out of specification at intermediate points if the response of the gauge as seen in Figure 1 (Typical Calibration Chart) is not linear. The Ashcroft Duragauge® pressure gauge is equipped with a rotary movement feature which permits the user to minimize this class of error. Other Ashcroft gauge designs (e.g., 1009 Duralife®) require that the dial be moved left or right prior to tightening the dial screws.

Hysteresis – Some Bourdon tubes have a material property known as hysteresis. This material characteristic results in differences between the upscale and downscale curves. This class of error can **not** be eliminated by adjusting the gauge movement or dial position.

Friction – This error is defined as the difference in readings before and after lightly tapping the gauge case at a check point. Possible causes of friction are burrs or foreign material in the movement gearing, "bound" linkages between the movement and the bourdon tube, or an improperly tensioned hairspring. If correcting these potential causes of friction does not eliminate excessive friction error, the movement should be replaced.

6.1 Calibration – Rotary Movement Gauges and Type 1259 Gauges – Inspect gauge for accuracy. Many times gauges are simply "off zero" and a simple pointer adjustment using the micrometer pointer is adequate. If inspection shows the gauge warrants recalibration to correct span and/or linearity errors, proceed as follows:

a. Remove ring, window and, if solid front case, the rear closure assembly.

b. Pressurize the gauge **once** to full scale and back to zero.

c. Refer to Figure 2 (Ashcroft System Assembly w/Rotary Gear Movement) for a view of a typical Ashcroft rotary system assembly with component parts identified. Refer to Figure 2A for link configuration of Type 1259 gauge.

FIG. 2 ASHCROFT SYSTEM ASSEMBLY W/ROTARY GEAR MOVEMENT

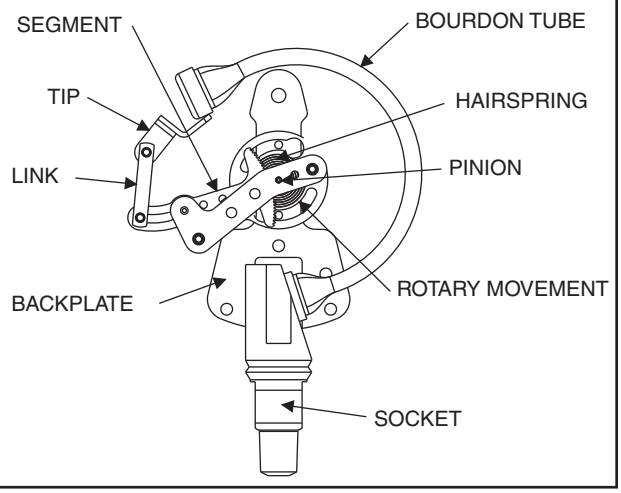

FIG. 2A ASHCROFT TYPE 1259 SYSTEM ASSEMBLY

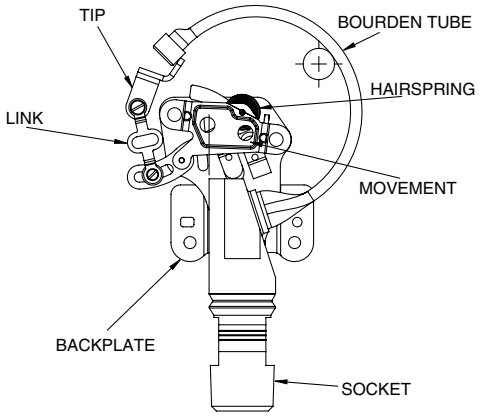

d. Adjust the micrometer pointer so that it rests at the true zero position. For open front gauges the pointer and dial must also be disassembled and the pointer should then be lightly pressed onto the pinion at the 9:00 o'clock position.

e. Apply full scale pressure and note the magnitude of the span error. With open front gauges, ideal span (270 degrees) will exist when at full scale pressure the pointer rests exactly at the 6:00 o'clock position.

f. If the span has shifted significantly (span error greater than 10%), the gauge should be replaced because there may be some partial corrosion inside the Bourdon tube which could lead to ultimate failure. If the span error exceeds 0.25%, loosen the lower link screw and move the lower end of the link toward the movement to increase span or away to decrease span. An adjustment of 0.004 inch will change the span by approximately 1%. This is a repetitive procedure which often requires more than one adjustment of the link position and the subsequent rechecking of the errors at zero and full scale pressure.

g. Apply midscale pressure and note error in reading. Even though the gauge is accurate at zero and full scale, it may be inaccurate at the midpoint. This is called linearity error. For corrections to linearity with the Type 1259 gauges refer to Figure 2B. For rotary movement gauges,

FIG. 2B LINEARITY ADJUSTMENT & LINK CONFIGURATION FOR ASHCROFT TYPE 1259

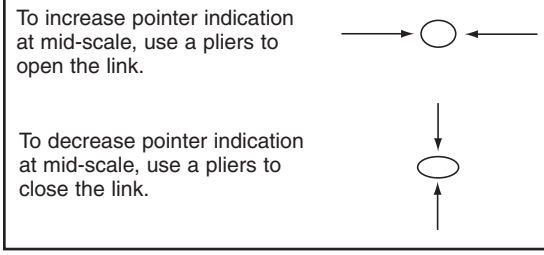

note the following: if the error is positive, the movement should be rotated counter clockwise. Rotating the movement one degree will change this error by approximately 0.25%. Rotating the movement often affects span and it should be subsequently rechecked and readjusted if necessary according to step 6.1e and 6.1f.

h. While recalibrating the gauge, the friction error – difference in readings taken with and without rap – should be noted. This error should not exceed the basic accuracy

of the gauge. If the friction error is excessive, the movement should be replaced. One possible cause of excessive friction is improper adjustment of the hairspring. The hairspring torque,or tension, must be adequate without being excessive. The hairspring should also be level, unwind evenly (no turns rubbing) and it should never tangle.

NOTES:

1 For operation of test gauge external zero reset, refer to Figure 1 on page 19.

2 For test gauge calibration procedure, refer to Figure 2 on page 20.

7.0 DIAPHRAGM SEALS

7.1 General – A diaphragm seal (isolator) is a device which is attached to the inlet connection of a pressure instrument to isolate its measuring element from the process media. The space between the diaphragm and the instrument's pressure sensing element is solidly filled with a suitable liquid. Displacement of the liquid fill in the pressure element, through movement of the diaphragm, transmits process pressure changes directly to a gauge, switch or any other pressure instrument. When diaphragm seals are used with pressure gauges, an additional 0.5% tolerance must be added to the gauge accuracy because of the diaphragm spring rate.

Used in a variety of process applications where corrosives, slurries or viscous fluids may be encountered, the diaphragm seal affords protection to the instrument where:

- The process fluid being measured would normally clog the pressure element.
- Pressure element materials capable of withstanding corrosive effects of certain fluids are not available.
- The process fluid might freeze due to changes in ambient temperature and damage the element.

7.2 Installation – Refer to bulletin OH-1 for information regarding (a) seal configurations; (b) filling fluids; (c) temperature range of filling fluids; (d) diaphragm material pressure and temperature limits; (e) bottom housing material pressure and temperature limits; (f) pressure rating of seal assembly; (g) accuracy/temperature errors of seal assembly; (h) diaphragm seal displacement. The volumetric displacement of the diaphragm must at least equal the volumetric displacement of the measuring element in the pressure instrument to which the seal is to be attached.

It is imperative that the pressure instrument/diaphragm seal assembly be **properly** filled prior to being placed in service. Ashcroft diaphragm seal assemblies should only be filled by a seal assembler certified by Ashcroft Inc. Refer to section 3.3 for a cautionary note about not applying torque on either the instrument or seal relative to the other.

7.3 Operation – All Ashcroft® diaphragm seals, with the exception of Type 310 mini-seals, are continuous duty. Should the pressure instrument fail, or be removed accidentally or deliberately, the diaphragm will seat against a matching surface preventing damage to the diaphragm or leakage of the process fluid.

7.4 Maintenance – Clamp type diaphragm seals – Types 100, 200 and 300 – allow for replacement of the diaphragm or diaphragm capsule, if that ever becomes necessary. The Type 200 top housing must also be replaced with the diaphragm. With all three types the clamping arrangement allows field disassembly to permit cleaning of the seal interior.

7.5 Failures – Diaphragm failures are generally caused by either corrosion, high temperatures or fill leakage. Process media build-up on the process side of the diaphragm can also require seal cleaning or replacement. Consult Customer Service, Stratford CT for advice on seal failures and/or replacement.

WARNING: All seal components should be selected considering process and ambient operating conditions to prevent misapplication. Improper application could result in failure, possible personal injury, property damage or death.

8.0 DAMPENING DEVICES

8.1 General – Some type of dampening device should be used whenever the pressure gauge may be exposed to repetitive pressure fluctuations that are fairly rapid, high in magnitude and especially when transitory pressure spikes exceeding the gauge range are present (as with starting and stopping action of valves and pumps). A restricted orifice of some kind is employed through which pressure fluctuations must pass before they reach the Bourdon tube. The dampener reduces the magnitude of the pressure pulse thus extending the life of the Bourdon tube and movement. This reduction of the pressure pulsation as "seen" by the pressure gauge is generally evidenced by a reduction in the pointer travel. If the orifice is very small the pointer may indicate the average service pressure, with little or no indication of the time varying component of the process pressure.

Commonly encountered media (e.g. – water and hydraulic oil) often carry impurities which can plug the orifice over time thus rendering the gauge inoperative until the dampener is cleaned or replaced.

Highly viscous media and media that tend to periodically harden (e.g., asphalt) require a diaphragm seal be fitted to the gauge. The seal contains an internal orifice which dampens the pressure fluctuation within the fill fluid.

8.2 Throttle Screws & Plugs – These accessories provide dampening for the least cost. They have the advantage of fitting completely within the gauge socket and come in three types: (a) a screwed-in type which permits easy removal for cleaning or replacement; (b) a pressed in, non-threaded design and (c) a pressed in, threaded design which provides a highly restrictive, helical flow path. Not all styles are available on all gauge types.

8.3 Ashcroft Pulsation Dampener – Type 1106 Ashcroft pulsation dampener is a moving pin type in which the restricted orifice is the clearance between the pin and any one of five preselected hole diameters. Unlike a simple throttle screw/plug, this device has a self-cleaning action in that the pin moves up and down under the influence of pressure fluctuations.

8.4 Ashcroft Pressure Snubber – The heart of the Type 1112 pressure snubber is a thick porous metal filter disc. The disc is available in four standard porosity grades.

8.5 Ashcroft Needle Valves – Type 7001 thru 7004 steel needle valves provide varying degrees of dampening. These devices, in the event of plugging, can easily be opened to allow the pressure fluid to clear away the obstruction.

8.6 Chemiquip® Pressure Limiting Valves – Model PLV-255, PLV-2550, PLV-5460, PLV-5500 and PLV-6430, available with and without built-in snubbers, automatically "shut off" at adjustable preset values of pressure to protect the gauge from damage to overpressure. They are especially useful on hydraulic systems wherein hydraulic transients (spikes) are common.

9.0 TEST EQUIPMENT & TOOL KITS

See our website www.ashcroft.com for more details

9.1 Pressure Instrument Testing Equipment

Type 1305D Deadweight Tester

Type 1327D Pressure Gauge Comparator

Type 1327CM “Precision” Gauge Comparator

9.2 Tools & Tool Kits For Recalibration of 4½˝ and Larger Gauges

Type 2505 universal carrying case for 1082 test gauge

Type 266A132-01 span wrench for 1082 test gauge

Type 1281 socket O-Ring kit for 1279/1379 lower connect

Type 1285 4½˝ ring wrench for 1279/1379 lower & back connect

Type 1286 6˝ ring wrench for 1379 lower & back connect

Type 3220 pointer puller (all gauges except 1009 Duralife®)

Type 3530 pinion back-up tool for 1009 Duralife®

Type 3220 Handjack set

Type 1105 Tool Kit

9.3 Kits to Convert a Dry Gauge to a Liquid Filled or Weather Proof Case Gauge

Type 1280 conversion kit for 4½˝ lower connect 1279/1379

Type 1283 conversion kit for 4½˝ back connect 1279/1379

Type 1284 conversion kit for 6˝ lower & back connect

TYPE 1105
TOOL KIT

TYPE 3220
HAND JACK SET

9.4 2½ & 3½ 1009 Duralife® Gauge Tools

Description	Part No.
Pointer Puller Screw/Pin[2][3][4]	112A381-01
Pointer Puller Body[2][3][4]	292A133-01
Pointer Staker[2][4]	188A101-01
Span Wrench[2][5] (to adjust span)	266A137-01
Ring Wrench 3½″[1][5] (for ring removal) (35 1009)	266B134-01
Ring Wrench 2½″[1][5] (for ring removal) (25 1009)	266B135-01
Nest 2½″ & 3½″[1][5] (to hold gauge for ring removal) (25/35 1009)	266B136-01
Ring Removal Tool[6] (25 1009)	101B221-02
Ring Removal Tool[6] (35 1009)	101B221-01
Nest 2½″[6] (to hold gauge for ring removal) (25 1009)	101B220-02
Nest 3½″[6] (to hold gauge for ring removal) (35 1009)	101B220-01
Type 1230 throttle plug insertion (¼ NPT) for 1009 Duralife®	1230
Type 1231 throttle plug insertion (½ NPT) for 1009 Duralife® (body only)	1231
Tool to open orifice on push-in throttle plug	101A206-01

(1) Formerly 1206T Tool Kit.
(2) Formerly some parts in 1205T Tool Kit.
(3) Both parts must be purchased together.
(4) Previous and current design.
(5) Previous design only.
(6) Current design only.

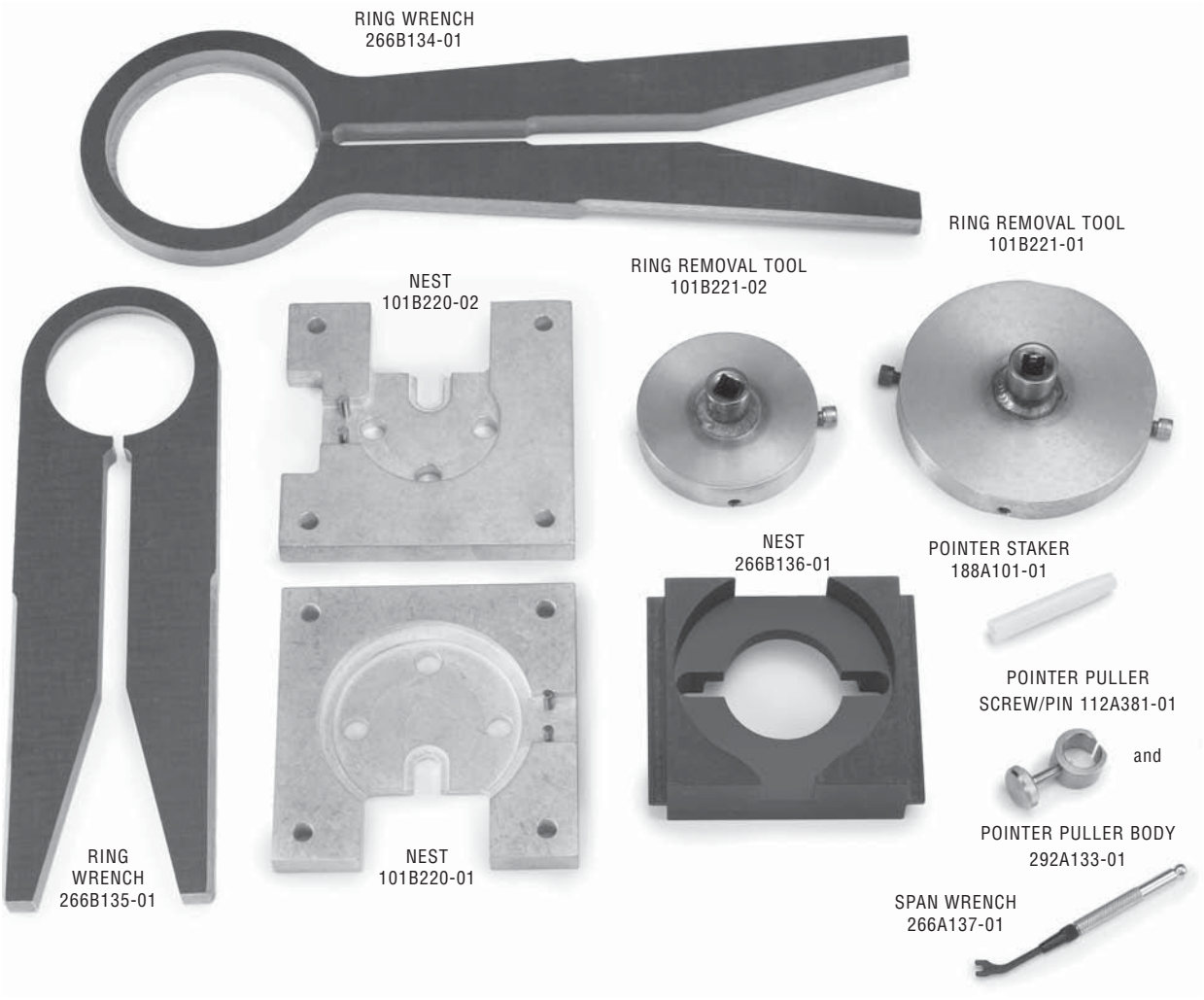

ASHCROFT® Type 1188 Bellows Gauge Calibration Procedure

CALIBRATION & TROUBLE CORRECTION DIAGRAM

RANGE SPAN ADJUSTMENT

RANGE TOO SHORT
Adjust slide "S" inward

RANGE TOO LONG
Adjust slide "S" outward

POINTER JUMPING

STICKY PARTS
Clean all bearings and gear teeth

LOOSE HAIRSPRING
Remove backlash by disengaging pinion & rotate to tighten

COUNTER BALANCE RUBBING
Bend if necessary to clear socket in travel

NOTE: After adjusting range span, set both movement stops. Set the underload stop so that the pointer will stop at zero. Set the overload stop so that the pointer will pass the maximum range approximately 5˝.

After adjusting span re-zero pointer by removing from pinion and re-assembling at the proper dial mark.

SLUGGISH MOVEMENT

TIGHT HAIRSPRING
Loosen by disengaging pinion & rotate

NON LINEAR

NON LINEAR FIRST 3RD.

ADJ. ANGLE OF PULL BY INCREASING ANGLE "A"

NON LINEAR LAST 3RD.

ADJ. ANGLE OF PULL BY DECREASING ANGLE "A"

NOTE: To increase or decrease angle "A," bend tip inward or outward as required. Doing this may run the movement segment off the pinion. This can be corrected by cutting off one end off the link "E" decreasing its length, or makin a new length from .032 dia. phos. bronze wire.
Caution: When reproducing link end, follow figure 44 very closely. this will prevent too much play, or, binding in operation.

REF: Replacing System Bellows
After assembling bellows to the gauge socket securely, subject system to 30 psi for five minutes, allowing bellows to travel approximately 1/8˝ against the overload stop. After this, heat treat system for 15 hours at 250°F, this procedure is necssary to prevent gauge drift.

SLIDE AND LINK (angle "A")
Enlarged view of slide and link

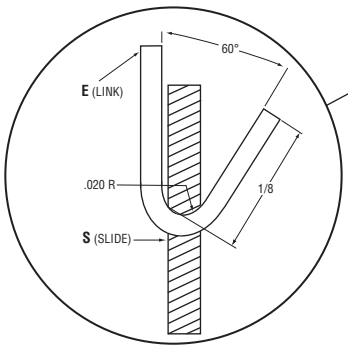

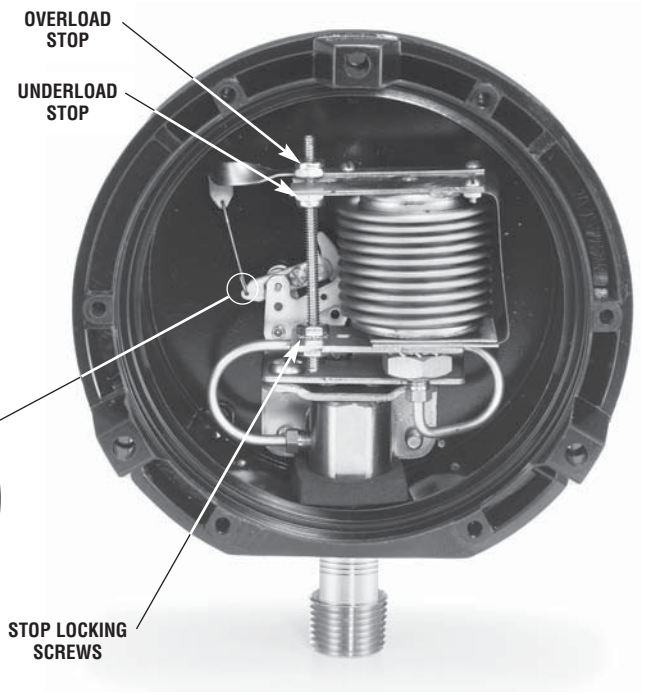

© Ashcroft Inc., 250 E. Main St., Stratford, CT 06614-5145, Tel: 203-378-8281, Fax: 203-385-0499, www.ashcroft.com
All sales subject to standard terms and conditions of sale. I&M008-10173-3/10 (1188)

ASHCROFT® Previous Type 1009 Duralife® Calibration Procedure – Vacuum Range

ASHCROFT®

1. Remove ring, window and gasket pointer.
2. Using a pencil, refer to dial and mark the 0 and 25˝ Hg positions on the case flange.
3. Remove dial.
4. Apply 25˝ Hg vac.
5. Lightly press pointer onto pinion carefully aligning it with the 25˝ Hg vac. mark on the flange.
6. Release vacuum fully.
7. Note agreement of pointer to zero mark on flange.
8. If span is high or low, turn span block as shown in Figure 1.

Figure 1 –

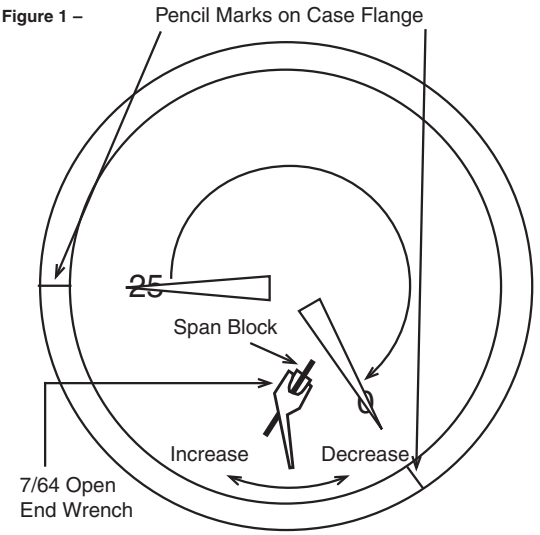

9. Repeat steps 4 through 8 until span is correct.
10. Remove pointer.
11. With 25˝ Hg vac applied, reassemble dial, dial screws (finger tight) and point.
12. Apply 15˝ Hg vac. and note accuracy of indication. If required, slide dial left or right to reduce error to 1% maximum.
13. Firmly tighten dial screws.
14. Firmly tap pointer onto pinion.
15. recheck accuracy at 15 and 25˝ Hg vac. (Figure 2).
16. Reassemble window, gasket and ring.

Figure 2 –

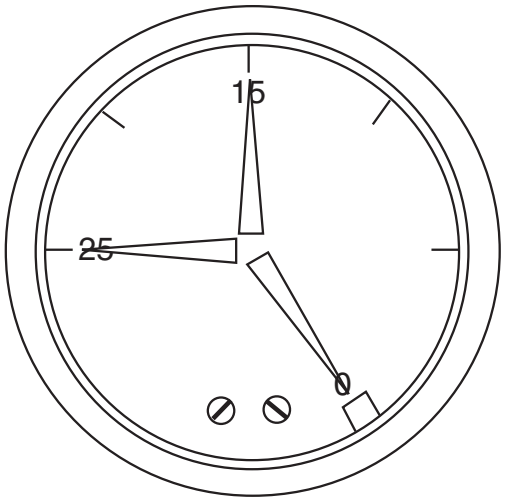

Notes: See page 10 for any tools required to calibrate.

For models produced prior to September 2008 for 2½˝ version and December 2008 for 3½˝ version.
Back of gauge will have a date code sticker.

© 2010 Ashcroft Inc., 250 East Main Street, Stratford, CT 06614-5145, USA, Tel: 203-378-8281, Fax: 203-385-0499, www.ashcroft.com
All sales subject to standard terms and conditions of sale. I&M008-10077 9/01 AMR 05/10

ASHCROFT® Previous Type 1009 Duralife® Calibration Procedure – Pressure Range

Step 1. With the dial off, install pointer at 9 o'clock "lightly," Figure 3.

Figure 3 –

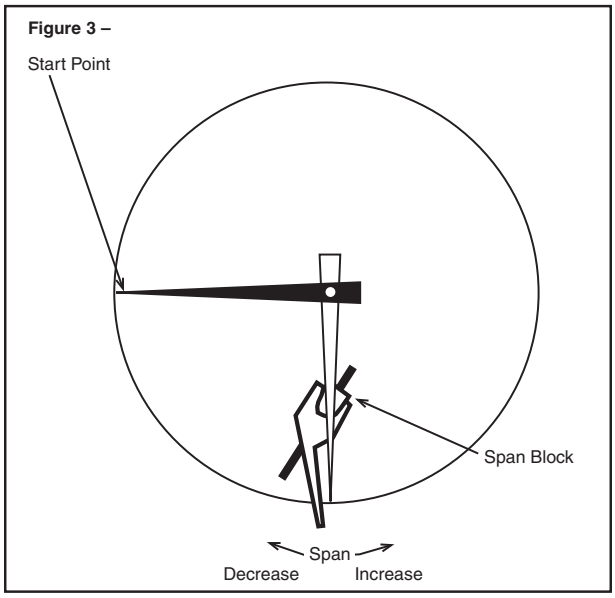

Step 2. Go to full scale pressure…rotate span block with tool until pointer rests at 6 o'clock.

Step 3. Go to zero pressure (9 o'clock)…if pointer has not moved away from start point, go to Step 4. If pointer has moved, repeat Step 1 until span is correct.

Step 4. Install dial with screws snug.

Figure 4 –

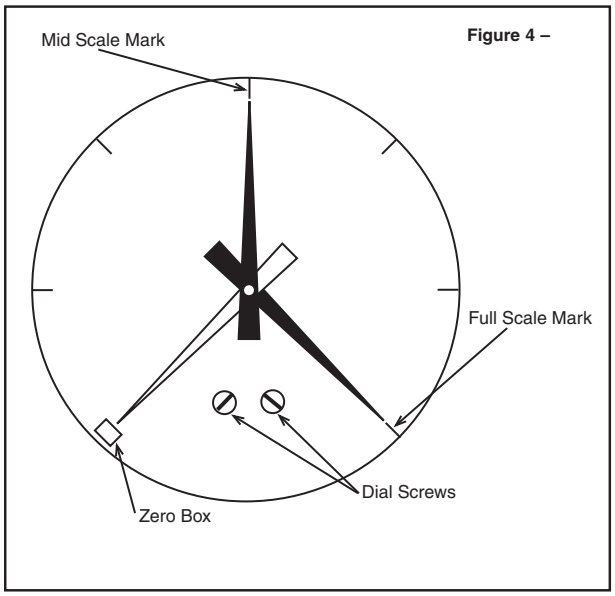

Step 5. Install pointer centered in zero box, Figure 4.

Step 6. Go to full scale pressure…check that pointer is within 1% of full scale mark. If not, remove pointer and dial and return to step 1, Figure 4.

Step 7. Go to mid-scale pressure…rotate dial until mid-scale mark is aligned with pointer, Figure 4.

Step 8. Tighten dials screws and stake on pointer.

Step 9. Check zero and full scale. Reassemble window, gasket and ring.

Notes: See page 10 for any tools required to calibrate.

For models produced prior to September 2008 for 2½˝ version and December 2008 for 3½˝ version.
Back of gauge will have a date code sticker.

© 2010 Ashcroft Inc., 250 East Main Street, Stratford, CT 06614-5145, USA, Tel: 203-378-8281, Fax: 203-385-0499, www.ashcroft.com
All sales subject to standard terms and conditions of sale. I&M008-10077 9/01 AMR 05/10

ASHCROFT® Current Type 1009 Duralife® Calibration Procedure – Pressure and Vacuum Range

Calibration – 1009 Duralife® Gauge –
Inspect gauge for accuracy. At times gauges are simply "off zero" and opening the ventable plug at the top of the gauge will relieve internal gauge pressure and correct the offset. If this is not adequate and inspection shows that the gauge warrants recalibration to correct zero, span and/or linearity errors, proceed as follows:

Remove ring, window, and gasket using Ashcroft Ring Removal Tools P/N 101B220-02 and 101B221-02 for 2½" gauges and 101B220-01 and 101B221-01 for 3½" gauges.

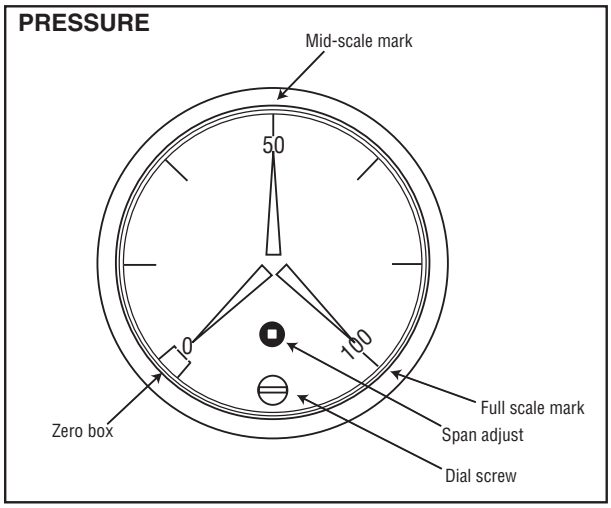

Positive Pressure Ranges –

1. Adjust pointer with a slotted screwdriver until it is in the center of the zero box. This is often all that is required it correct calibration issues.

2. Apply full scale pressure. If error exceeds 1% rotate the black span adjustment device with a #0 square drive bit. Clockwise increases span, counterclockwise decrease span.

3. Fully exhaust pressure and check that pointer still is still in the zero box. If not, repeat step 1 and 2

4. Once 0 and full scale are within tolerance, pressurize gauge to mid-scale.

5. If gauge is within 1%, calibration is complete. If not loosen the dial screw and rotate dial left or right to adjust midpoint. Retighten dial screw.

6. If an adjustment was made in step 5, recheck the gauge at zero and full scale, adjust accordingly until zero, mid and full scale points are in tolerance.

Vacuum Range –

1. Adjust pointer with a slotted screwdriver until it is in the center of the zero box. This is often all that is required it correct calibration issues.

2. Apply 25 inches Hg vacuum. If the error exceeds 1% adjust pointer with a slotted screwdriver until gauge is within tolerance.

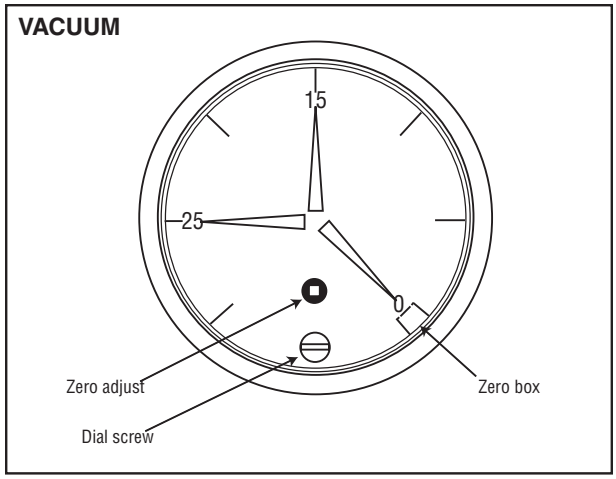

3. Vent to 0 pressure and check pointer position in the zero box. If error exceeds 1% rotate the black span adjustment device with a #0 square drive bit. Clockwise rotation moves pointer clockwise, counterclockwise rotation moves the pointer counterclockwise.

4. Repeat step 1 and 2 until 0 and 25 inches of Hg are within gauge tolerance.

5. Apply 15 inches Hg vacuum. If gauge is within 1%, calibration is complete. If not loosen the dial screw and rotate dial left or right to adjust midpoint. Retighten dial screw.

6. If an adjustment was made in step 4, recheck the gauge at zero and 25 inches of Hg vacuum, adjust accordingly until zero, 15 and 25 inches Hg are in tolerance.

7. Continue below.

Re-assemble window and ring to gauge:

a. If plastic window is used, push window back into front of gauge, ensure the o-ring does not roll out of window groove (lubricate if necessary). Align the tabs of the window with the tabs of the case front. Once window is in place, install ring and tighten with tools referenced above and shown on page 10.

b If safety glass is used, reinstall window, gasket, and ring. Ensure that the gasket is seated properly under all four tabs of the ring and does not wrinkle when ring is tightened.

Note: Tighten ring: Apply 120-200inlb of torque. Rotate ring clockwise to tighten. Warning: over tightening of safety glass may induce cracking.

Notes: See page 10 for any tools required to calibrate.

For models produced after September 2008 for 2½˝ version and December 2008 for 3½˝ version.
Back of gauge will have a date code sticker.

© 2010 Ashcroft Inc., 250 East Main Street, Stratford, CT 06614-5145, USA, Tel: 203-378-8281, Fax: 203-385-0499, www.ashcroft.com
All sales subject to standard terms and conditions of sale. I&M008-10081-05/10 AMR 05/10

Type 1279 & 1379 Solid Front Duragauge® Pressure Gauge Liquid Fill Conversion Instructions

ASHCROFT®

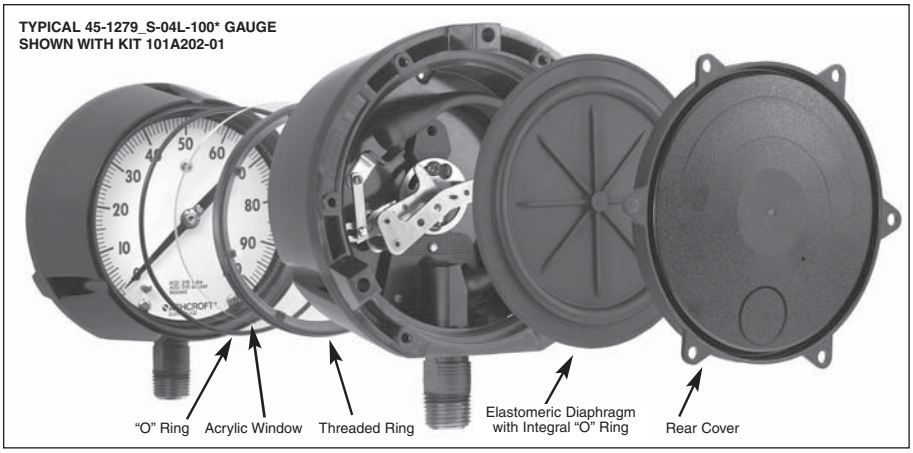

	1279		1379		
	4½˝ LOWER	4½˝ BACK	4½˝ LOWER	4½˝ BACK	6˝ LOWER & BACK
KIT PART NO.	101A202-01	101A203-01	1280	1283	1284
	QUANTITY INCLUDED				
ACRYLIC WINDOW	1	1	1	1	1
FRONT O-RING	1	1	1	1	1
DIAPHRAGM	1	1	1	1	2(1-LC:1-BC)
REAR COVER	1	1	1	1	2(1-LC:1-BC)
COVER SCREWS	4	4	-	-	-
THROTTLE SCREWS	2	2	2	2	2
GARTER SPRING	–	1	1	1	1
FILL IDENTIFICATION	1	1	1	1	1
THREADED RING	–	–	1	1	1

	Ambient Temp. Limits		60 psi and Under Down Scale Zero Shift Required
	°F	°C	
Weatherproof	–50/150	–45/65	N/A
Hermetically Sealed	–10/125	–25/50	N/A
Glycerin Filled	0/150	30/65	.15 psi
Silicone Filled	–50/150	–45/65	.12 psi

1. Unscrew front threaded ring (turn CCW). Remove and discard glass window. For range spans 60 psi and under, shift pointer down scale by the amount shown in the table. With either the glass or plastic window, replace the O-ring with one furnished in the kit.

2. Remove protective paper from acrylic plastic window taking care not to scratch window. Assemble window in gauge.

3. Moisten face of threaded ring with silicone oil or silicone grease where ring bears up against window. Replace front threaded ring and tighten firmly hand tight. See instructions on reverse side for applying proper torque to ring to establish desired squeeze on O-ring seal. **(Fig. 4).**

It is important to hold gauge **rigidly,** otherwise ring lugs may be damaged during removal or assembly process.

4. From rear of gauge, remove and discard these parts: rear cover and cover gaskets from case.

Note: Disregard Step No.s 5a and 5b if converting to hermetically sealed version.

When converting a 45-1379 with the top fill hole configuration, p/n 256A176-01 fill plug is required and must be ordered separately.

5. Filling Procedures:

a. Manual Filling Procedure: Place gauge face down on bench and **tip gauge** by blocking up front with a ⅜ inch block at the 12 o'clock dial position. Tipping of the gauge is necessary so fluid will flow into front cavity of the case. Pour in fill liquid to within about 1⁄16 inch of rear seal lip. When bubbles stop rising, front cavity is filled. Remove ⅜ inch block and pour in liquid until level is about 1⁄16 inch below rear sealing lip.

Note: An alternative method of filling is to fill the front dial cavity, adding the front window, etc., as in Step No. 3. Then fill the rear of the gauge. This method eliminates the need to tip the gauge.

b. Vacuum Pump Fill Procedure: (This procedure is recommended when filling a large number of gauges.) Place gauge face down and insert a 1⁄8 inch diameter tube, connected to a vacuum pump, through the 12 o'clock position hole in the rear, solid front portion of the case **(see Fig. 5).** Evacuate the air from the front dial cavity while pouring in the fill fluid through the case back. The vacuum will displace the air with fluid. When the dial cavity is solidly filled, remove the tubing and continue to pour the fill fluid to within 1⁄16 inch BELOW the O-ring channel lip.

Pre-measuring fill amount is not necessary with above methods. For reference, amount of fill is approximately 400 ml. or 14 fluid oz. (4½˝ GA.) and 455 ml. or 16 fluid oz. (6˝ GA.).

c. Note: The liquid fill level should be ⅜˝ (±1⁄8) as measured from the inside of the ring at the 12:00 o'clock position.

6. On lower connection gauges, assemble rear seal diaphragm to case.

For back connection gauges see instructions on reverse side. **(Fig. 2/4).**

7. For 1279:

Assemble rear cover and six self tapping screws in a criss-cross pattern and torque to 200 in lbs.

For 1379:

- Thread rear ring and torque to 200 in lbs
- Install stainless steel back cover using two screws

8. Assemble throttle screw to threaded hole in socket.

Note: If system is monel (socket wrenc flat stamped "PHS" or "PH") use monel throttle screw.

9. Check appropriate box on fill identification label, and peel off label back, and attach fill label to gauge case.

10. If gauge is to be repackaged:

a. Include enclosed instruction sheet inside carton.

b. Change type number on carton label to:
(1) Hermetically Sealed – 1279(*)SH.
(2) Liquid Filled – 1279(*)SL.
*Bourdon Tube System Code

Glycerin or silicone should not be used in applications involving Oxygen, Chlorine, Nitric Acid, Hydrogen Peroxide or other strong oxidizing agents, because of danger of spontaneous chemical reaction, ignition or explosion. Halocarbon should be specified. Products with this fill can be ordered from factory.The use of fluids other than those listed in the table above (for example, Hydrocarbon-based oils) may result in leakage caused by a reaction between the fluid and the elastomeric seals. Consult the factory before filling with any other fluid.

© 2007 Ashcroft Inc., 250 East Main Street, Stratford, CT 06614 USA, Tel: 203-378-8281, Fax 203-385-0402 www.ashcroft.com
All sales subject to standard terms and conditions of sale. All rights reserved. I&M008-10090 (84B276) Rev 11/10

Type 1279 & 1379 Solid Front Duragauge® Pressure Gauge Liquid Fill Conversion Instructions

ASHCROFT®

INSTRUCTIONS FOR USING CONE TOOL AND RING WRENCH

Garter Spring & Diaphragm Assembly (Back Connection Gauge Only)

A. Place cone tool over socket shank as shown.

B. Moisten lip of socket and outer O-ring surface with silicone oil or grease.

C. Place diaphragm with rib side facing upward over cone into case grove.
Diaphragm O-ring must be completely in socket-shank grove.

D. Place garter spring over cone as shown and slide onto diaphragm in socket grove

E. Assemble rear cover with screws per step 7.

Front Ring Assembly (All Gauges)

A. Assemble ring to case by hand to start.

B. Place ring on wrench as shown

C. Use ½˝ drive extension and torque ring to 200 in. lb

Alternate Method

A. Tighten ring snugly by hand

B. Mark case and ring.

C. Turn ring another 100 to 120 degrees (slightly less than ½ turn) using the ring wrench and ½˝ drive socket wrench or place the blunt end of a wooden or plastic dowel against a ring lug and tap with a hammer.

INSTRUCTIONS FOR LIQUID FILLING ASHCROFT® TYPE 1279 AND 1379 SOLID FRONT DURAGAUGE® PRESSURE GAUGES USING A VACUUM PUMP

A. Insert a length of ⅛ ˝ diameter tubing through the 12 o'clock position hole in the rear, solid front portion of the case, as shown.

B. Evacuate the air from the front dial cavity while pouring in the fill fluid through the case back. The vacuum will displace the air with fluid.*

C. When the dial cavity is solidly filled, remove the tubing and continue to pour the fill fluid to within 1/16 ˝ below the o-ring channel lip, as shown.

D. When converting a 45-1379 with the top fill hole configuration, p/n 256A176-01 fill plug is required and must be ordered separately.

*To prevent breakage, reduce vacuum to 15 in. Hg for plain glass and safety glass.

BACK CONNECTION ASSEMBLED GAUGE

Fig. 2

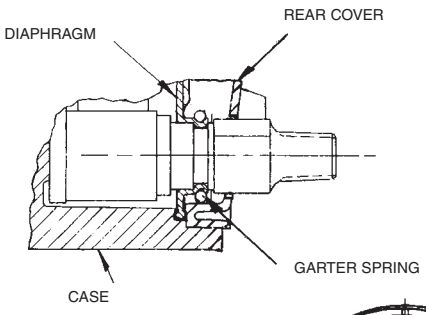

Fig. 3

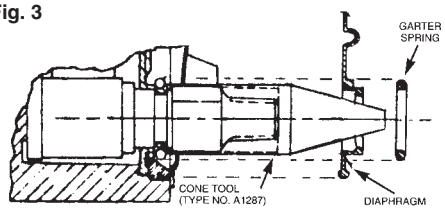

Fig. 4

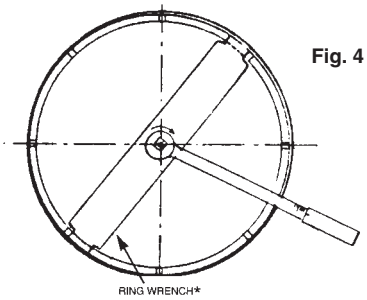

Fig. 5

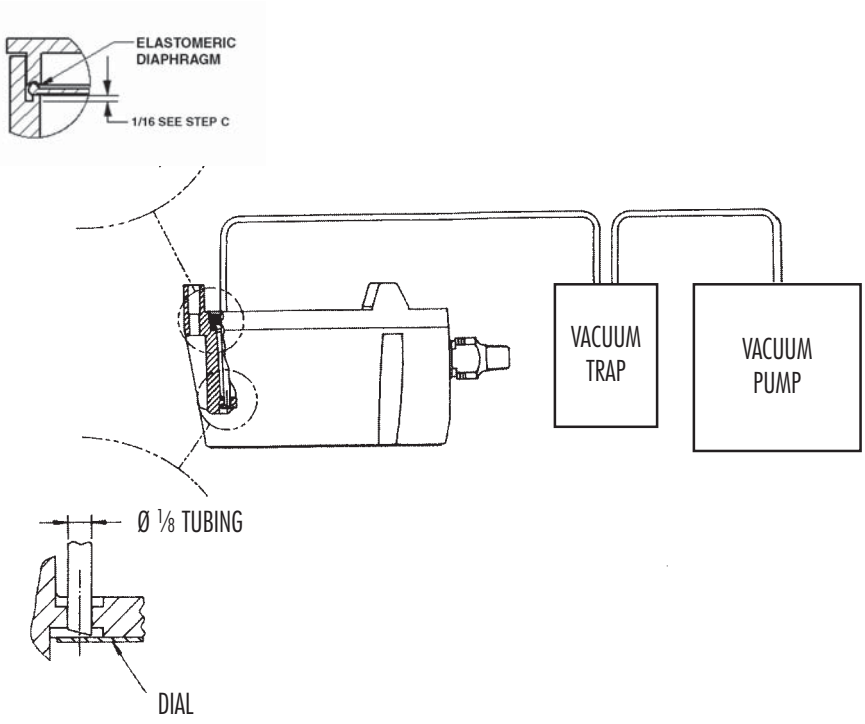

© 2007 Ashcroft Inc., 250 East Main Street, Stratford, CT 06614 USA, Tel: 203-378-8281, Fax 203-385-0402 www.ashcroft.com
All sales subject to standard terms and conditions of sale. All rights reserved. I&M008-10090 (84B276) Rev 11/10

INSTRUCTIONS FOR USE OF EXTERNAL EASY ZERO™ ADJUST FEATURE*

Fig. 1

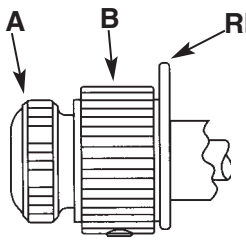

1. LOOSEN RING-LOCKING SCREW **A**.
2. OBTAIN REQUIRED ADJUSTMENT BY ROTATING KNOB **B** CLOCKWISE OR COUNTER-CLOCKWISE.
3. TIGHTEN SCREW **A** DOWN ON KNOB **B**.

*Applicable only for test gauge with hinged ring design.

ADDITIONAL CALIBRATION INSTRUCTIONS

1) "Standards shall have nominal errors no greater than ¼ of these permitted for the gauge being tested." *(Ref: ASME B40=100-1998)*
2) The instrument used as the calibration standard should have a maximum range no greater than 2x that of the gauge being tested. (i.e. Do not use a 400psi standard to test a 15psi gauge.)
3) "Known pressure shall be applied at each test point on increasing pressure (or vacuum) from one end to the other end of the scale. At each test point the gauge shall be . . .
lightly tapped, and then read . . ."
(*Ref: ASME B40.1 ¶ 6.2.4.1*)
4) To read gauge indication, move eye over red pointer tip at OD of printed dial until red reflection in mirror band is no longer visible, and then read the pointer position in reference to the dial.

© Ashcroft Inc., 250 E. Main St., Stratford, CT 06614-5145, Tel: 203-378-8281, Fax: 203-385-0499, www.ashcroft.com
All sales subject to standard terms and conditions of sale. I&M008-10082 11/01 RevB (250-2917-4) AMR 10/07

Fig. 2

THIS TEST GAUGE IS PROVIDED WITH A MICROSPAN™ ADJUSTMENT TO SIMPLIFY CALIBRATION. THE FLOW CHART BELOW OUTLINES THE RECOMMENDED CALIBRATION PROCEDURE

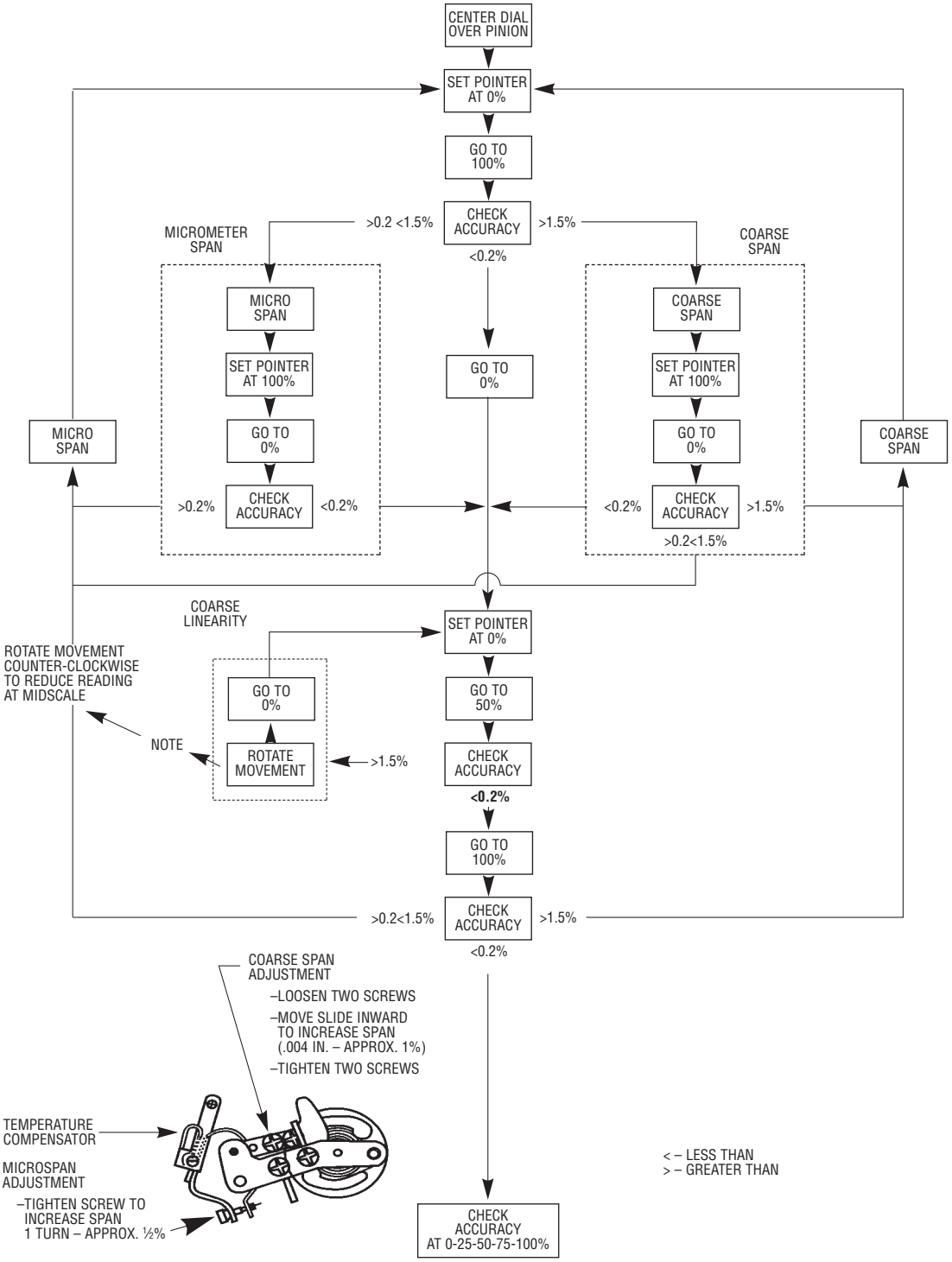

© Ashcroft Inc., 250 E. Main St., Stratford, CT 06614-5145, Tel: 203-378-8281, Fax: 203-385-0499, www.ashcroft.com
All sales subject to standard terms and conditions of sale. I&M008-10082 11/01 RevB (250-2917-4) AMR 10/07

This page is intentionally left blank

Ashcroft Inc.,
250 East Main Street
Stratford, CT 06614-5145
U.S.A.
Tel: 203-378-8281
Fax: 203-385-0408 (Domestic)
Fax: 203-385-0357 (International)
email: info@ashcroft.com
www.ashcroft.com
I&M008-10098-5/02 (250-1353-K) Rev. 11/10

Visit our web site www.ashcroft.com

ASCHROFT

TYPE 101, DIAPHRAGM SEAL
TYPE 310, DIAPHRAGM SEAL

LEFT BLANK

Type 100 Series Threaded Capsule Diaphragm Seal

TYPE 100 SHOWN

PRODUCT FEATURES

- The top housing and diaphragm capsule are interchangeable with all Ashcroft bottom housings.
- A fill/bleed connection is standard, which permits filling the seal and instrument simultaneously after evacuation and allows the fill to flow into the completed unit.
- A Viton O-ring, compatible with all standard fill fluids, and a Teflon back-up ring provide a seal between the diaphragm capsule and the top housing.
- A thin Teflon PTFE gasket between the diaphragm and bottom housing ensures a leak-tight corrosion resistant seal even at high pressure.
- Top housing and pressure instrument are removable.
- Continuous-duty design will prevent loss of process fluid if pressure instrument is removed or fails.

APPLICATIONS INCLUDE:

- Elevated process temperatures
- Corrosive service
- Isolation of the process for safety
- Suspended solids in the process
- Sanitary connections
- Minimize process dead leg
- Ease of cleaning between batches

When isolation of the process from an instrument is required, Ashcroft® offers a comprehensive line of diaphragm seals. Seal types include threaded, flanged, in-line threaded, in-line flanged, in-line socket weld, in-line butt weld, saddle and sanitary seals. Also available is a complete offering of isolation or iso-rings and isolation or iso-spools.

SPECIFICATIONS

Model Number:	Type 100, 101, 102, 103, 104, 105, 106, 107, 108
Process Connection Size:	See Table A (Pg. 2)
Instrument Connection Size:	¼, ½ NPT
Diaphragm Material:	See Table B (Pg. 2)
Bottom Housing Materials:	See Table C (Pg. 2)
Filling Fluid:	Glycerin, Halocarbon, Silicone, Stylltherm

OPTIONS	**Code**
316 stainless steel top housing	**YT**
Stainless steel clamp rings and flanged ring – includes 300 stainless steel clamping bolts (1500 psi max)	**SE**
300 series stainless steel clamping bolts (max pres is 1500 psi)	**SB**
Pipe plugs for flushing connections – pipe plugs are available in the same materials as bottom housings per Table C (Pg. 2)	**PU**
5000 psi pressure rating – (Type 100 only) threaded inlet only, no flushing connection (metal diaphragm only)	**HP**
Welded instrument to diaphragm seal	**DU**
Dual flushing connections (½ NPT) (Limited to 2″ thru 3″ flanged seals	**DB**
Ring joint (Flanged seal only)	**RJ**
Flat face (Flanged seal only)	**FF**
Clean for gaseous oxygen or strong oxidizing agent applications	**6B**

All specifications are subject to change without notice.
All sales subject to standard terms and conditions.
© Ashcroft Inc. 2011 Rev. 08/2011

Ashcroft Inc., 250 East Main Street, Stratford, CT 06614 USA
Tel: 203-378-8281 • Fax: 203-385-0408
email: info@ashcroft.com • www.ashcroft.com

Type 100 Series Threaded Capsule Diaphragm Seal

TYPE 100 SERIES THREADED CAPSULE SEAL TYPES

Type 100 –Threaded
¼, ½, ¾, 1 NPT

Type 101 –Threaded
with flushing connection
¼, ½, ¾, 1 NPT

Type 102 – Raised Face Flanged
½″, ¾″, 1″, 1½″, 2″, 3″

Type 103 – Raised Face Flanged
½″, ¾″, 1″, 1½″, 2″, 3
with flushing conection

Type 104 – In-line Threaded
¼, ½, ¾, 1 NPT

Type 105 – Saddle
3,″ 4″ pipe only

Type 106 – In-line Flanged
½″, ¾″, 1″, 1½″, 2″, 3″, 4″, 6″, 8″

Type 107 – In-line Socket Weld
½″, ¾″, 1″, 1½″, 2″

Type 108 – In-line Butt Weld
¼″, ½″, ¾″, 1″, 1½″, 2″

Table A – Process Connection/Type Number

	Process Connection Size/Code—Inches											Type Number
	Size	¼	½	¾	1	1½	2	3	4	6	8	
Process Connection	Code	25	50	75	10	15	20	30	40	60	80	
Threaded–female NPT		•	•	•	•	•						100
Threaded–female NPT (with flushing conn.)		•	•	•	•	•						101
Flanged(1)			•	•	•	•	•	•				102
Flanged (with flushing conn.)			•	•	•	•	•	•				103
In-line—threaded NPT		•	•	•	•							104
Saddle								•	AND LARGER			105
In-line—butt weld		•	•	•	•	•	•					108
In-line—flanged(2)			•	•	•	•	•	•	•	•	•	106
In-line—socket weld		•	•	•	•	•	•					107

Pressure Ratings—All 2500 psi except flanged seals are per ASME B 16.5, temperature limit determined by diaphragm, bottom housing and/or filling fluid.

Table B – Diaphragm Material

Material	Code
316L stainless steel	S
304L stainless steel	C
Monel 400	P
Nickel	N
Carpenter 20	D
Tantalum	U
Hastelloy B	G
Hastelloy C 22(3)	J
Hastelloy C 276(3)	H
Halar Coated Monel	PH
Gold Plated 304 SS	W

Table C – Housing Materials

Bottom	Code	Top
Steel	B	Nickel
304L SS	C	Nickel
316L SS	S	Nickel
Hastelloy B	G	Nickel
Hastelloy C 22(3)	J	Nickel
Hastelloy C 276(3)	H	Nickel
Carpenter 20	D	Nickel
Monel “400”	M	Nickel
Inconel “600”	W	Nickel
Nickel	N	Nickel
PVC(4)(9)	V	Nickel
Tantalum clad SS(5)	SU	Nickel
Halar coated SS(6)	BH	Nickel
Teflon flanged steel(7)	T	Nickel
Kynar(8)(9)	KY	Nickel
Titanium	TI	Nickel

Table D – Instrument Connection

Size – NPT	Code
¼	02T
½	04T

Notes:

(1) 150, 300, 600, 900, 1500 & 2500 class flanges.
(2) 1″ 150 thru 8″ 300 class flanges only.
(3) Use on applications where NACE standard MR-01-75/ISO 1516 w/Sept. 2005 corrigendums.
(4) Maximum Press./Temp.
Threaded: 200 psi/74°F, 125 psi/125°F, 80 psi/150°F.
Flanged: 75 psi/100°F.
(5) Type 102 only.
(6) Type 102 only – Temp. Limits: –40/300°F.
(7) Only available in 1″, 1½″, & 2″ 150 class, Types 102. Max. Press./Temp. – 270 psi and 150°F. Consult factory for conditions beyond these limits.
(8) Maximum Pressure/Temp.: 200 psi and 180°F.
(9) Type 100: ¼ or ½ NPT only. Larger sizes offered with solvent weld joint. N/A in 101 or 103 design.

Table E – Filling Fluid

Filling	Service	Connection to Instrument	Temperature Range °F	Code
Glycerin	Pressure	Direct Only	0/400	CG
Silicone	Pressure/Vacuum	Direct or Flexible Line	–40/600	CK
Halocarbon	Pressure/Vacuum in presence of strong oxidizing agent	Direct or Flexible Line	–70/300	CF
Sylltherm	Pressure/Vacuum	Direct or Flexible Line	–40/750	HA

Monel is a registered trademark of Huntington Alloys, Inc.
Hastelloy is a registered trademark of Cabot Corp.
Halocarbon is a registered trademark of Halocarbon Products
GYLON 3510 is a registered trademark of Garlock Inc.

HOW TO ORDER:

1. **From Table A...**select TYPE NUMBER based on process connection, process connection size and diaphragm type/construction. (e.g., Threaded/1″/capsule–code-10-100)
2. **From Table B...**select DIAPHRAGM MATERIAL. (e.g., 316L stainless steel–code S)
3. **From Table C...**select BOTTOM HOUSING MATERIAL. (e.g., 316 stainless steel–code S)
4. **From Table D...**select INSTRUMENT CONNECTION size. (e.g., 1/4 NPT–code 02T)
5. **From Table E...**select FILLING FLUID, if diaphragm seal will be attached to instrument. (e.g., Glycerin–code CG)

Typical code: 10–100SS–02T–CG

All specifications are subject to change without notice.
All sales subject to standard terms and conditions.
© Ashcroft Inc. 2011 Rev. 08/2011

Ashcroft Inc., 250 East Main Street, Stratford, CT 06614 USA
Tel: 203-378-8281 • Fax: 203-385-0408
email: info@ashcroft.com • www.ashcroft.com

Type 100 Series Threaded Capsule Diaphragm Seal

DIMENSIONS

Type 100 – Threaded
¼, ½, ¾, 1 NPT

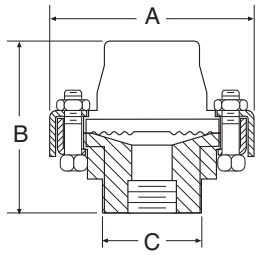

A		B		C	
in	mm	in	mm	in	mm
3¾	(95)	2⅞	(73)	1 13/16	(46)

Type 101 –Threaded
¼, ½, ¾, 1 NPT (with flushing conection)

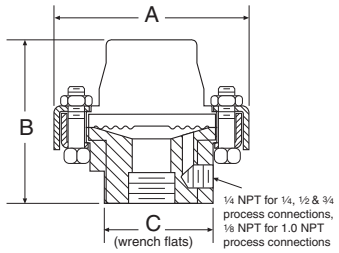

A		B		C	
in	mm	in	mm	in	mm
3¾	(95)	2⅞	(73)	1 13/16	(46)

Type 102 – Flanged
½,″ ¾,″

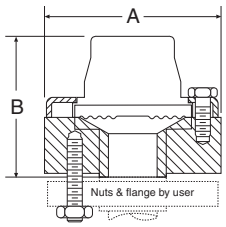

Flange Size	Flange Rating #	A in	A mm	B in	B mm
	150	3½	(89)	2 15/16	(75)
½″	300 or 600	3¾	(95)	3	(76)
	900 or 1500	4¾	(121)	3 3/16	(81)
	150	3⅞	(98)	2 13/16	(71)
¾″	300 or 600	4⅝	(117)	3	(76)
	900 or 1500	5⅛	(130)	3 3/16	(81)

Type 102 – Flanged 1″ (raised face only)
one piece bottom housing, with and without flushing connection

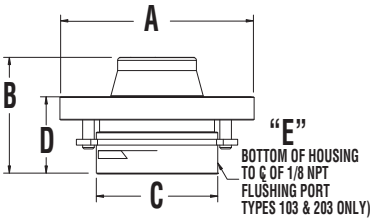

Flange Size	Flange Rating #	A in.	A mm	B in.	B mm	C in.	C mm
1	150 300 or 600	4-1/4 5	(100) (127)	2-9/16	(65)	1-23/32	(69)

Flange Size	Flange Rating #	D in.	D mm	103 & 203 only E in.	E mm
1	150 300 or 600	1-5/8	(41)	3/8	(9)

Type 102 – Flanged 1″ (raised face only)
one piece bottom housing, with and without flushing connection

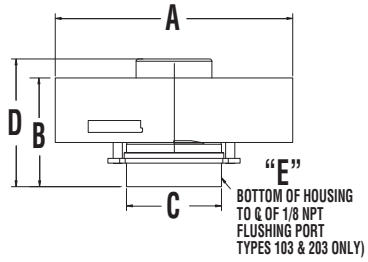

Flange Size	Flange Rating #	A in.	A mm	B in.	B mm	C in.	C mm
1	900 or 1500 2500	5-7/8 6-1/4	(149) (159)	2-7/8	(73)	2-1/4	(57)

Flange Size	Flange Rating #	D in.	D mm	103 & 203 only E in.	E mm
1	900 or 1500 2500	3-3/8	(86)	3/8	(9)

Type 102 – Flanged (raised face only)
1½,″ 2,″ 3″ one piece bottom housing - all materials except PVC, Teflon and Kynar

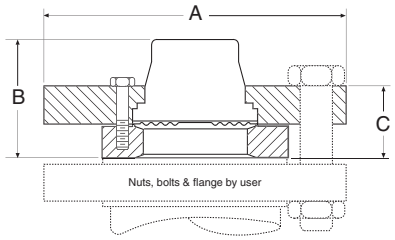

Flange Size	Flange Rating #	A in	A mm	B in	B mm	C in	C mm
	150	5	(127)			1½	(38)
1½″	300 or 600	6¼	(159)	2⅜	(61)	1½	(38)
	900 or 1500	7	(178)			1½	(38)
	150	6	(152)			1⅜	(35)
2″	300 or 600	6½	(165)	1 15/16	(49)	1½	(38)
	900 or 1500	8½	(216)			2⅛	(54)
	150	7½	(191)	2	(51)	1⅝	(41)
3″	300 or 600	8¼	(206)	2 1/16	(52)	1⅞	(47)
	900 or 1500	10½	(267)	2 11/16	(68)	3¼	(82)

Type 102 – Flanged 1″ (raised face only)
two piece bottom housing, 1½,″ 2,″ - PVC, Teflon and Kynar

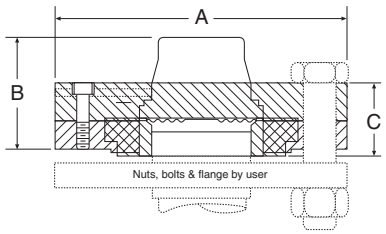

Flange Size	Flange Rating #	A in	A mm	B in	B mm	C in	C mm
1½″	150	5	(127)	2 5/16	(59)	1 13/32	(39)
2″	150	6	(152)	2⅛	(54)	1 9/16	(40)

Type 103 – Flanged
½,″ ¾″ (with flushing conection)

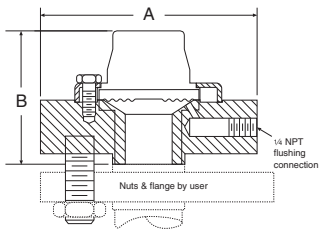

Flange Size	Flange Rating #	A in	A mm	B in	B mm
	150	3½	(89)	2 15/16	(75)
½″	300 or 600	3¾	(95)	3	(76)
	900 or 1500	4¾	(121)	3 3/16	(81)
	150	3⅞	(98)	2 13/16	(71)
¾″	300 or 600	4⅝	(117)	3	(76)

All specifications are subject to change without notice.
All sales subject to standard terms and conditions.
© Ashcroft Inc. 2011 Rev. 08/2011

Ashcroft Inc., 250 East Main Street, Stratford, CT 06614 USA
Tel: 203-378-8281 • Fax: 203-385-0408
email: info@ashcroft.com • www.ashcroft.com

Type 100 Series Threaded Capsule Diaphragm Seal

DIMENSIONS

Type 103 – Flanged 1½″, 2″, 3″ (raised face only)
one piece bottom housing with flushing connection

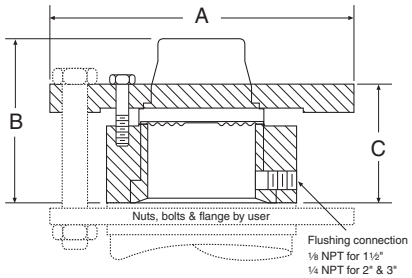

Flange Size	Rating #	A in	A mm	B in	B mm	C in	C mm
1½″	150	5	(127)	3	(76)	2 1/16	(52)
	300 or 600	6¼	(159)				
	900 or 1500	7	(178)				
2″	150	6	(152)	3 11/32	(84)	2⅜	(60)
	300 or 600	6½	(165)				
	900 or 1500	8½	(215)				
3″	150	7½	(191)	3 3/32	(79)	2 7/32	(56)
	300 or 600	8¼	(210)	3 3/16	(81)	2 7/32	(57)
	900	9½	(241)	3 23/32	(94)	2¾	(70)
	1500	10½	(267)				

Type 105 – Saddle
4″ Pipe only

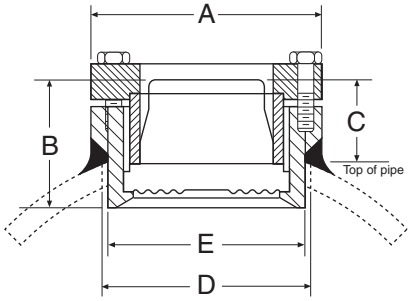

A in	A mm	B in	B mm	C in	C mm	D in	D mm	E in	E mm
3½	(89)	1 15/16	(50)	1 3/16	(31)	3	(76)	2 31/32	(75)

Type 104 – In-Line Threaded
¼, ½, ¾, 1 NPT

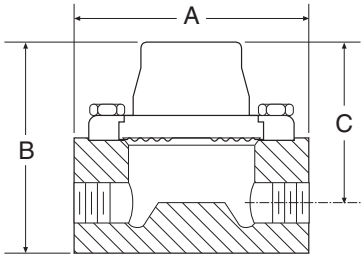

Process Connection	A in	A mm	B in	B mm	C in	C mm
¼ NPT	4	(102)	2 5/8	(67)	2 1/8	(54)
½ NPT			3 5/8	(92)	2¾	(70)
¾ NPT			3 7/8	(98)	3	(76)
1 NPT			3 7/8	(98)	3	(76)

Type 106 – In-Line Flanged
½″, 1″, 1½″, 2″, 3″

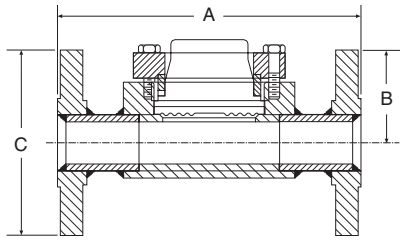

Flange Size	Rating #	A in	A mm	B in	B mm	C in	C mm
½″	150	7	(178)	2 7/16	(62)	3½	(89)
	300	7	(178)			3⅞	(98)
1″	150	7	(178)	2 7/16	(62)	4¼	(108)
	300	8	(203)			4⅞	(123)
1½″	150	8	(203)	2 11/16	(68)	5	(127)
	300	9	(229)			6⅛	(155)
2″	150	9	(229)	2 15/16	(75)	6	(152)
	300	10	(254)			6½	(165)
3″	150	11	(279)	3⅝	(92)	7½	(229)
	300	12	(305)			8¼	(254)

Type 105 – Saddle
3″ Pipe only

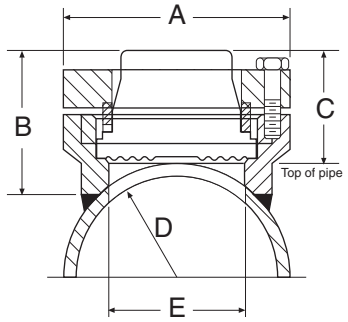

A in	A mm	B in	B mm	C in	C mm	D in	D mm	E in	E mm
3½	(89)	2¼	(57)	1⅞	(48)	1¾	(44)	2⅛	(54)

Type 106 – In-Line Flanged
4″, 6″, 8″

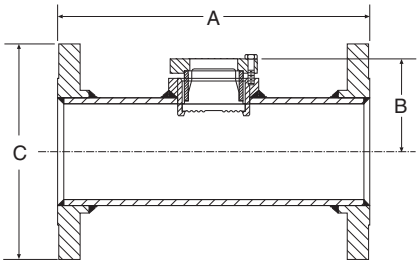

Flange Size	Rating #	A in	A mm	B in	B mm	C in	C mm
4″	150	13	(330)	3⅜	(86)	9	(229)
	300	14	(356)			10	(254)
6″	150	16	(406)	4 7/16	(113)	11	(279)
	300	17	(432)			12½	(318)
8″	150	16	(406)	5 7/16	(138)	13½	(343)

Type 107 – In-Line Welded
¼″, ½″, ¾″, 1″, 1½″, 2″

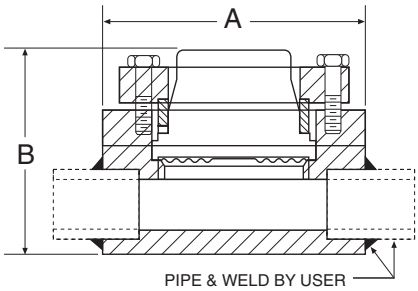

Pipe Size	A in	A mm	B in	B mm
¼″	4	(102)	2 11/32	(60)
½″, ¾″			2 11/32	(60)
1″			2 15/32	(63)
1½″			2 23/32	(69)
2″			2 31/32	(75)

ISO 9001
REGISTERED FIRM

BULLETIN DS-100

All specifications are subject to change without notice.
All sales subject to standard terms and conditions.
© Ashcroft Inc. 2011 Rev. 08/2011

Ashcroft Inc., 250 East Main Street, Stratford, CT 06614 USA
Tel: 203-378-8281 • Fax: 203-385-0408
email: info@ashcroft.com • www.ashcroft.com

ASHCROFT®
Trust the shield.™

Type 310, 315 All-Welded "Mini" Diaphragm Seal

PRODUCT FEATURES

- Compact size to fit space-restricted areas
- Designed to protect transducers, mini-switches and 3½″ or smaller pressure gauges from corrosion, plugging or freeze-up
- All-welded metal construction prevents leakage of process media
- Rated for 2500 psi at 100°F
- Fill/bleed connection is standard
- Available with male process connection (Type 310)

The compact size of the Ashcroft® 310 mini-seal allows it to fit into space-restricted areas and is designed to protect transducers, mini-switches, and 3½" or smaller dial size pressure gauges from corrosion, plugging or freeze- up. All welded metal construction prevents leakage of process media. It is rated for 2500 psi at 100°F and has a 316L stainless steel top housing standard. Lower housing materials include 316L stainless steel or Hastelloy C. Diaphragm materials include 316L stainless, Hastelloy C or Tantalum. ¼ NPT or ½ NPT process connection sizes are available.

PRODUCT SPECIFICATIONS

Model Number:	Type 310, 315
Process Connection Size:	¼″, ½″ (⅛″, ¾″, 1″- 310 only) (see table A)
Instrument Connection Size:	⅛, ¼ NPT
Diaphragm Material:	316L SS, Hastelloy C276, Tantalum, Monel
Bottom Housing Materials:	316L SS, Hastelloy C276, Monel, Hastelloy B
Filling Fluid:	Glycerin, Silicone, Halocarbon, Syltherm

All specifications are subject to change without notice.
All sales subject to standard terms and conditions.
© Ashcroft Inc. 2015 09/15

Ashcroft Inc., 250 East Main Street, Stratford, CT 06614 USA
Tel: 203-378-8281 • Fax: 203-385-0408
email: info@ashcroft.com • www.ashcroft.com

Type 310, 315 All-Welded "Mini" Diaphragm Seal

Table A – Process Connection

Process Connection	Size	Code
Threaded – male NPT*	⅛	01
Threaded – male NPT*	¼	02
Threaded – male NPT*	½	04
Threaded – male NPT*	¾	06
Threaded – male NPT*	1	08
Threaded – female NPT†	¼	25
Threaded – female NPT†	½	50

*Available in Type 310 only.
†Available in Types 310 & 315.

Pressure Ratings – All 2500 psi except flanged seals are per ASME B 16.5, temperature limit determined by diaphragm, bottom housing and/or filling fluid.

Table B – Type

Description	Code
All-welded mini-seal	310
All-welded midi-seal w/flushing connection	315

Table C – Diaphragm Materials

Materials	Code
316L stainless steel	S
Hastelloy C-276	H
Tantalum	U
Monel	P

Table D – Housing Materials

Bottom(1)	Code	Top(2)
316L SS	S	316L SS
Hastelloy C-276	H	316L SS
Monel	M	Monel

(1) Other bottom housing materials on application.
(2) Top housing material is 316L SS (standard). Monel mini-seal standard with monel top housing.

Table E – Instrument Connection

Instrument Connection	Size	Code
Threaded – female NPT	¼	02T
Threaded – female NPT	⅛	01T

NOTES:
(1) For use with most 3½″ and smaller gauges. Movementless gauge 4½″ (exception).
(2) Other bottom housing materials on application.
(3) Top housing material is 316L SS (standard). Monel mini-seal standard with monel top housing.
(4) Not available with monel bottom housing.

Table F – Filling Fluid

Fill	Service	Connection to Instrument	Temperature Range °F	Code
Glycerin	Pressure	Direct Only	0/400	CG
Silicone	Pressure/Vacuum	Direct or Flexible Line	–40/600	CK
Halocarbon	Pressure/Vacuum in presence of strong oxidizing agent	Direct or Flexible Line	–70/300	CF
Syltherm	Pressure	Direct or Flexible Line	–40/750	HA

Monel is a registered trademark of Huntington Alloys, Inc.
Hastelloy is a registered trademark of Cabot Corp.
Halocarbon is a registered trademark of Halocarbon Products
GYLON 3510 is a registered trademark of Garlock Inc.

HOW TO ORDER:

1. **From Table A...** select PROCESS CONNECTION (e.g., 1/4″ process code 25)
2. **From Table B...** select TYPE (310)
3. **From Table B...** select DIAPHRAGM MATERIAL. (e.g., 316L stainless steel–code S)
4. **From Table C...** select BOTTOM HOUSING MATERIAL. (e.g., 316 stainless steel–code S)
5. **From Table D...** select INSTRUMENT CONNECTION size. (e.g., 1/4 NPT–code 02T)
6. **From Table E...** select FILLING FLUID, if diaphragm seal will be attached to instrument. (e.g., Glycerin–code CG)

Coded order: **25-310SS-02T-CG**

Dimension

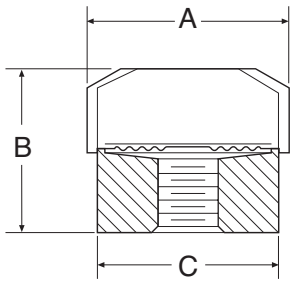

Types 310 mini-seal – Threaded ¼, ½, ¾, NPT

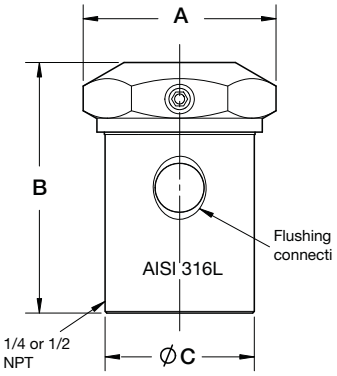

Types 315 mini-seal – Threaded ¼, ½, ¾, NPT

	A		B		C	
	in	mm	in	mm	in	mm
Type 310	1.75	(38)	.81	(30)	1.34	(34)
Type 315	1.73	(44)	2.25	(57.2)	1.34	(34)

All specifications are subject to change without notice.
All sales subject to standard terms and conditions.
© Ashcroft Inc. 2015 09/15

Ashcroft Inc., 250 East Main Street, Stratford, CT 06614 USA
Tel: 203-378-8281 • Fax: 203-385-0408
email: info@ashcroft.com • www.ashcroft.com

BALDOR

INTEGRAL HORSEPOWER SERIES, MOTOR

LEFT BLANK

BALDOR • RELIANCE

Integral Horsepower
AC Induction Motors

Installation & Operating Manual

2/09 MN400

Any trademarks used in this manual are the property of their respective owners.

Table of Contents

Section 1
General Information 1-1
Overview 1-1
Limited Warranty 1-1
Safety Notice 1-1
Receiving 1-2
Handling 1-2
Storage 1-3
Removal From Storage 1-4
Section 2
Installation & Operation 2-1
Overview 2-1
Location 2-1
Mounting 2-1
Alignment 2-1
Doweling & Bolting 2-2
Guarding 2-2
Power Connection 2-2
Conduit Box 2-2
AC Power 2-2
Rotation 2-3
First Time Start Up 2-4
Coupled Start Up 2-4
Jogging and Repeated Starts 2-4
Section 3
Maintenance & Troubleshooting 3-1
General Inspection 3-1
Relubrication & Bearings 3-1
Type of Grease 3-1
Relubrication Intervals 3-1
Relubrication Procedure 3-3
Troubleshooting Chart 3-4
Suggested bearing and winding RTD setting guidelines 3-5

Section 1
General Information

Overview This manual contains general procedures that apply to Baldor Motor products. Be sure to read and understand the Safety Notice statements in this manual. For your protection, do not install, operate or attempt to perform maintenance procedures until you understand the Warning and Caution statements.
A Warning statement indicates a possible unsafe condition that can cause harm to personnel.
A Caution statement indicates a condition that can cause damage to equipment.

Important: **This instruction manual is not intended to include a comprehensive listing of all details for all procedures required for installation, operation and maintenance. This manual describes general guidelines that apply to most of the motor products shipped by Baldor. If you have a question about a procedure or are uncertain about any detail, Do Not Proceed. Please contact your Baldor distributor for more information or clarification.**

Before you install, operate or perform maintenance, become familiar with the following:

- NEMA Publication MG-2, Safety Standard for Construction and guide for Selection, Installation and Use of Electric Motors and Generators.
- The National Electrical Code
- Local codes and Practices

Limited Warranty

www.baldor.com/support/warranty_standard.asp

Safety Notice: This equipment contains high voltage! Electrical shock can cause serious or fatal injury. Only qualified personnel should attempt installation, operation and maintenance of electrical equipment.

Be sure that you are completely familiar with NEMA publication MG-2, safety standards for construction and guide for selection, installation and use of electric motors and generators, the National Electrical Code and local codes and practices. Unsafe installation or use can cause conditions that lead to serious or fatal injury. Only qualified personnel should attempt the installation, operation and maintenance of this equipment.

WARNING: **Do not touch electrical connections before you first ensure that power has been disconnected. Electrical shock can cause serious or fatal injury. Only qualified personnel should attempt the installation, operation and maintenance of this equipment.**

WARNING: **Disconnect all electrical power from the motor windings and accessory devices before disassembly of the motor. Electrical shock can cause serious or fatal injury.**

WARNING: **Be sure the system is properly grounded before applying power. Do not apply AC power before you ensure that all grounding instructions have been followed. Electrical shock can cause serious or fatal injury. National Electrical Code and Local codes must be carefully followed.**

WARNING: **Avoid extended exposure to machinery with high noise levels. Be sure to wear ear protective devices to reduce harmful effects to your hearing.**

WARNING: **Surface temperatures of motor enclosures may reach temperatures which can cause discomfort or injury to personnel accidentally coming into contact with hot surfaces. When installing, protection should be provided by the user to protect against accidental contact with hot surfaces. Failure to observe this precaution could result in bodily injury.**

WARNING: **This equipment may be connected to other machinery that has rotating parts or parts that are driven by this equipment. Improper use can cause serious or fatal injury. Only qualified personnel should attempt to install operate or maintain this equipment.**

WARNING: **Do not by-pass or disable protective devices or safety guards. Safety features are designed to prevent damage to personnel or equipment. These devices can only provide protection if they remain operative.**

WARNING: **Avoid the use of automatic reset devices if the automatic restarting of equipment can be hazardous to personnel or equipment.**

WARNING: **Be sure the load is properly coupled to the motor shaft before applying power. The shaft key must be fully captive by the load device. Improper coupling can cause harm to personnel or equipment if the load decouples from the shaft during operation.**

WARNING: **Use proper care and procedures that are safe during handling, lifting, installing, operating and maintaining operations. Improper methods may cause muscle strain or other harm.**

WARNING: **Thermostat contacts automatically reset when the motor has slightly cooled down. To prevent injury or damage, the control circuit should be designed so that automatic starting of the motor is not possible when the thermostat resets.**

Safety Notice Continued

WARNING: **UL Listed motors must only be serviced by UL Approved Authorized Baldor Service Centers if these motors are to be returned to a hazardous and/or explosive atmosphere.**

WARNING: **Pacemaker danger – Magnetic and electromagnetic fields in the vicinity of current carrying carrying conductors and permanent magnet motors can result result in a serious health hazard to persons with cardiac pacemakers, metal implants, and hearing aids. To avoid risk, stay way from the area surrounding a permanent magnet motor.**

WARNING: **Before performing any motor maintenance procedure, be sure that the equipment connected to the motor shaft cannot cause shaft rotation. If the load can cause shaft rotation, disconnect the load from the motor shaft before maintenance is performed. Unexpected mechanical rotation of the motor parts can cause injury or motor damage.**

WARNING: **Use only UL/CSA listed explosion proof motors in the presence of flammable or combustible vapors or dust.**

WARNING: **Motors that are to be used in flammable and/or explosive atmospheres must display the UL label on the nameplate along with CSA listed logo. Specific service conditions for these motors are defined in NFPA 70 (NEC) Article 500.**

WARNING: **Guards must be installed for rotating parts such as couplings, pulleys, external fans, and unused shaft extensions, should be permanently guarded to prevent accidental contact by personnel. Accidental contact with body parts or clothing can cause serious or fatal injury.**

Caution: **To prevent premature equipment failure or damage, only qualified maintenance personnel should perform maintenance.**

Caution: **Do not over–lubricate motor as this may cause premature bearing failure.**

Caution: **Do not over tension belts. Excess tension may damage the motor or driven equipment.**

Caution: **Do not lift the motor and its driven load by the motor lifting hardware. The motor lifting hardware is adequate for lifting only the motor. Disconnect the load (gears, pumps, compressors, or other driven equipment) from the motor shaft before lifting the motor.**

Caution: **If eye bolts are used for lifting a motor, be sure they are securely tightened. The lifting direction should not exceed a 20° angle from the shank of the eye bolt or lifting lug. Excessive lifting angles can cause damage.**

Caution: **To prevent equipment damage, be sure that the electrical service is not capable of delivering more than the maximum motor rated amps listed on the rating plate.**

Caution: **If a HI POT test (High Potential Insulation test) must be performed, follow the precautions and procedure in NEMA MG1 and MG2 standards to avoid equipment damage.**

If you have any questions or are uncertain about any statement or procedure, or if you require additional information please contact your Baldor distributor or an Authorized Baldor Service Center.

Receiving

Each Baldor Electric Motor is thoroughly tested at the factory and carefully packaged for shipment. When you receive your motor, there are several things you should do immediately.

1. Observe the condition of the shipping container and report any damage immediately to the commercial carrier that delivered your motor.
2. Verify that the part number of the motor you received is the same as the part number listed on your purchase order.

Handling

The motor should be lifted using the lifting lugs or eye bolts provided.

Caution: **Do not lift the motor and its driven load by the motor lifting hardware. The motor lifting hardware is adequate for lifting only the motor. Disconnect the load (gears, pumps, compressors, or other driven equipment) from the motor shaft before lifting the motor.**

1. Use the lugs or eye bolts provided to lift the motor. Never attempt to lift the motor and additional equipment connected to the motor by this method. The lugs or eye bolts provided are designed to lift only the motor. Never lift the motor by the motor shaft or the hood of a WPII motor.
2. To avoid condensation inside the motor, do not unpack until the motor has reached room temperature. (Room temperature is the temperature of the room in which it will be installed). The packing provides insulation from temperature changes during transportation.
3. When lifting a WPII (Weather Proof Type 2) motor, do not lift the motor by inserting lifting lugs into holes on top of the cooling hood. These lugs are to be used for hood removal only. A spreader bar should be used to lift the motor by the cast lifting lugs located on the motor frame.

4. If the motor must be mounted to a plate with the driven equipment such as pump, compressor etc., it may not be possible to lift the motor alone. For this case, the assembly should be lifted by a sling around the mounting base. The entire assembly can be lifted as an assembly for installation.

   Do not lift the assembly using the motor lugs or eye bolts provided. Lugs or eye bolts are designed to lift motor only. If the load is unbalanced (as with couplings or additional attachments) additional slings or other means must be used to prevent tipping. In any event, the load must be secure before lifting. If the load is unbalanced (as with couplings or additional attachments) additional slings or other means must be used to prevent tipping. In any event, the load must be secure before lifting.

Storage

Storage requirements for motors and generators that will not be placed in service for at least six months from date of shipment.

Improper motor storage will result in seriously reduced reliability and failure. An electric motor that does not experience regular usage while being exposed to normally humid atmospheric conditions is likely to develop rust in the bearings or rust particles from surrounding surfaces may contaminate the bearings. The electrical insulation may absorb an excessive amount of moisture leading to the motor winding failure.

A wooden crate “shell” should be constructed to secure the motor during storage. This is similar to an export box but the sides & top must be secured to the wooden base with lag bolts (not nailed as export boxes are) to allow opening and reclosing many times without damage to the “shell”.

Minimum resistance of motor winding insulation is 5 Meg ohms or the calculated minimum, which ever is greater. Minimum resistance is calculated as follows: **Rm = kV + 1**

where: (Rm is minimum resistance to ground in Meg−Ohms and
kV is rated nameplate voltage defined as Kilo−Volts.)

Example: For a 480VAC rated motor Rm =1.48 meg−ohms (use 5 MΩ).
For a 4160VAC rated motor Rm = 5.16 meg−ohms.

Preparation for Storage

1. Some motors have a shipping brace attached to the shaft to prevent damage during transportation. The shipping brace, if provided, must be removed and stored for future use. The brace must be reinstalled to hold the shaft firmly in place against the bearing before the motor is moved.
2. Store in a clean, dry, protected warehouse where control is maintained as follows:
   a. Shock or vibration must not exceed 2 mils maximum at 60 hertz, to prevent the bearings from brinelling. If shock or vibration exceeds this limit vibration isolation pads must be used.
   b. Storage temperatures of 10°C (50°F) to 49°C (120°F) must be maintained.
   c. Relative humidity must not exceed 60%.
   d. Motor space heaters (when present) are to be connected and energized whenever there is a possibility that the storage ambient conditions will reach the dew point. Space heaters are optional.

   Note: Remove motor from containers when heaters are energized, reprotect if necessary.
3. Measure and record the resistance of the winding insulation (dielectric withstand) every 30 days of storage.
   a. If motor insulation resistance decreases below the minimum resistance, contact your Baldor District office.
   b. Place new desiccant inside the vapor bag and re−seal by taping it closed.
   c. If a zipper−closing type bag is used instead of the heat−sealed type bag, zip the bag closed instead of taping it. Be sure to place new desiccant inside bag after each monthly inspection.
   d. Place the shell over the motor and secure with lag bolts.
4. Where motors are mounted to machinery, the mounting must be such that the drains and breathers are fully operable and are at the lowest point of the motor. Vertical motors must be stored in the vertical position. Storage environment must be maintained as stated in step 2.

5. Motors with anti−friction bearings are to be greased at the time of going into extended storage with periodic service as follows:
   a. Motors marked “Do Not Lubricate” on the nameplate do not need to be greased before or during storage.
   b. Ball and roller bearing (anti−friction) motor shafts are to be rotated manually every 3 months and greased every 6 months in accordance with the Maintenance section of this manual.
   c. Sleeve bearing (oil lube) motors are drained of oil prior to shipment. The oil reservoirs must be refilled to the indicated level with the specified lubricant, (see Maintenance). The shaft should be rotated monthly by hand at least 10 to 15 revolutions to distribute oil to bearing surfaces.
   d. “Provisions for oil mist lubrication” − These motors are packed with grease. Storage procedures are the same as paragraph 5b.
   e. “Oil Mist Lubricated” − These bearings are protected for temporary storage by a corrosion inhibitor. If stored for greater than 3 months or outdoor storage is anticipated, connected to the oil mist system while in storage. If this is not possible, add the amount of grease indicated under “Standard Condition” in Section 3, then rotate the shaft 15 times by hand.
6. All breather drains are to be fully operable while in storage (drain plugs removed). The motors must be stored so that the drain is at the lowest point. All breathers and automatic “T” drains must be operable to allow breathing and draining at points other than through the bearings around the shaft. Vertical motors should be stored in a safe stable vertical position.
7. Coat all external machined surfaces with a rust preventing material. An acceptable product for this purpose is Exxon Rust Ban # 392.

Non−Regreaseable Motors

Non−regreasable motors with “Do Not Lubricate” on the nameplate should have the motor shaft rotated 15 times to redistribute the grease within the bearing every 3 months or more often.

All Other Motor Types

Before storage, the following procedure must be performed.

1. Remove the grease drain plug, if supplied, (opposite the grease fitting) on the bottom of each bracket prior to lubricating the motor.
2. The motor with regreasable bearing must be greased as instructed in Section 3 of this manual.
3. Replace the grease drain plug after greasing.
4. The motor shaft must be rotated a minimum of 15 times after greasing.
5. Motor Shafts are to be rotated at least 15 revolutions manually every 3 months and additional grease added every nine months (see Section 3) to each bearing.
6. Bearings are to be greased at the time of removal from storage.

Removal From Storage

1. Remove all packing material.
2. Measure and record the electrical resistance of the winding insulation resistance meter at the time of removal from storage. The insulation resistance must not be less than 50% from the initial reading recorded when the motor was placed into storage. A decrease in resistance indicates moisture in the windings and necessitates electrical or mechanical drying before the motor can be placed into service. If resistance is low, contact your Baldor District office.
3. Regrease the bearings as instructed in Section 3 of this manual.
4. Reinstall the original shipping brace if motor is to be moved. This will hold the shaft firmly against the bearing and prevent damage during movement.

Section 2
Installation & Operation

Overview Installation should conform to the National Electrical Code as well as local codes and practices. When other devices are coupled to the motor shaft, be sure to install protective devices to prevent future accidents. Some protective devices include, coupling, belt guard, chain guard, shaft covers etc. These protect against accidental contact with moving parts. Machinery that is accessible to personnel should provide further protection in the form of guard rails, screening, warning signs etc.

Location It is important that motors be installed in locations that are compatible with motor enclosure and ambient conditions. Improper selection of the motor enclosure and ambient conditions can lead to reduced operating life of the motor.

Proper ventilation for the motor must be provided. Obstructed airflow can lead to reduction of motor life.

1. **Open Drip−Proof/WPI** motors are intended for use indoors where atmosphere is relatively clean, dry, well ventilated and non−corrosive.
2. **Totally Enclosed and WPII** motors may be installed where dirt, moisture or dust are present and in outdoor locations.

Severe Duty, IEEE 841 and Washdown Duty enclosed motors are designed for installations with high corrosion or excessive moisture conditions. These motors should not be placed into an environment where there is the presence of flammable or combustible vapors, dust or any combustible material, unless specifically designed for this type of service.

Hazardous Locations are those where there is a risk of ignition or explosion due to the presence of combustible gases, vapors, dust, fibers, or flyings. Facilities requiring special equipment for hazardous locations are typically classified in accordance with local requirements. In the US market, guidance is provided by the National Electric Code.

Caution: **Do not lift the motor and its driven load by the motor lifting hardware. The motor lifting hardware is adequate for lifting only the motor. Disconnect the load (gears, pumps, compressors, or other driven equipment) from the motor shaft before lifting the motor.**

Mounting The motor must be securely installed to a rigid foundation or mounting surface to minimize vibration and maintain alignment between the motor and shaft load. Failure to provide a proper mounting surface may cause vibration, misalignment and bearing damage.

Foundation caps and sole plates are designed to act as spacers for the equipment they support. If these devices are used, be sure that they are evenly supported by the foundation or mounting surface.

After installation is complete and accurate alignment of the motor and load is accomplished, the base should be grouted to the foundation to maintain this alignment.

The standard motor base is designed for horizontal or vertical mounting. Adjustable or sliding rails are designed for horizontal mounting only. Consult your Baldor distributor or authorized Baldor Service Center for further information.

Alignment Accurate alignment of the motor with the driven equipment is extremely important. The pulley, sprocket, or gear used in the drive should be located on the shaft as close to the shaft shoulder as possible. It is recommended to heat the pulley, sprocket, or gear before installing on the motor shaft. Forcibly driving a unit on the motor shaft will damage the bearings.

1. **Direct Coupling**
   For direct drive, use flexible couplings if possible. Consult the drive or equipment manufacturer for more information. Mechanical vibration and roughness during operation may indicate poor alignment. Use dial indicators to check alignment. The space between coupling hubs should be maintained as recommended by the coupling manufacturer.
2. **End-Play Adjustment**
   The axial position of the motor frame with respect to its load is also extremely important. The motor bearings are not designed for excessive external axial thrust loads. Improper adjustment will cause failure.
3. **Pulley Ratio**
   The pulley ratio should not exceed 8:1.

Caution: **Do not over tension belts. Excess tension may damage the motor or driven equipment.**

4. **Belt Drive**
   Align sheaves carefully to minimize belt wear and axial bearing loads (see End-Play Adjustment). Belt tension should be sufficient to prevent belt slippage at rated speed and load. However, belt slippage may occur during starting.
5. Sleeve bearing motors are only suitable for coupled loads.

Doweling & Bolting After proper alignment is verified, dowel pins should be inserted through the motor feet into the foundation. This will maintain the correct motor position should motor removal be required. (Baldor motors are designed for doweling.)

1. Drill dowel holes in diagonally opposite motor feet in the locations provided.
2. Drill corresponding holes in the foundation.
3. Ream all holes.
4. Install proper fitting dowels.
5. Mounting bolts must be carefully tightened to prevent changes in alignment. Use a flat washer and lock washer under each nut or bolt head to hold the motor feet secure. Flanged nuts or bolts may be used as an alternative to washers.

WARNING: Guards must be installed for rotating parts such as couplings, pulleys, external fans, and unused shaft extensions, should be permanently guarded to prevent accidental contact by personnel. Accidental contact with body parts or clothing can cause serious or fatal injury.

Guarding Guards must be installed for rotating parts such as couplings, pulleys, external fans, and unused shaft extensions. This is particularly important where the parts have surface irregularities such as keys, key ways or set screws. Some satisfactory methods of guarding are:

1. Covering the machine and associated rotating parts with structural or decorative parts of the driven equipment.
2. Providing covers for the rotating parts. Covers should be sufficiently rigid to maintain adequate guarding during normal service.

Power Connection Motor and control wiring, overload protection, disconnects, accessories and grounding should conform to the National Electrical Code and local codes and practices. Flying leads must be insulated with two full wraps of electrical grade insulating tape or heat shrink tubing.

Conduit Box For ease of making connections, an oversize conduit box is provided.
The box can be rotated 360° in 90° increments.
Auxiliary conduit boxes are provided on some motors for accessories such as space heaters, RTD's etc.

AC Power Connect the motor leads as shown on the connection diagram located on the name plate or inside the cover on the conduit box. Be sure the following guidelines are met:

1. AC power is within ±10% of rated voltage with rated frequency. (See motor name plate for ratings).
   OR
2. AC power is within ±5% of rated frequency with rated voltage.
   OR
3. A combined variation in voltage and frequency of ±10% (sum of absolute values) of rated values, provided the frequency variation does not exceed ±5% of rated frequency.

Performance within these voltage and frequency variations are shown in Figure 2-2.

Figure 2-1 Accessory Connections

HEATERS H1 — H2 H1 — H2	One heater is installed in each end of motor. Leads for each heater are labeled H1 & H2. (Like numbers should be tied together).
THERMISTORS T1 T2	Three thermistors are installed in windings and tied in series. Leads are labeled T1 & T2.
WINDING RTDS RED RED WHITE	Winding RTDs are installed in windings (2) per phase. Each set of leads is labeled W1, W2, W3, W4, W5, & W6.
BEARING RTD RED RED WHITE	* One bearing RTD is installed in Drive endplate (PUEP), leads are labeled RTDDE. * One bearing RTD is installed in Opposite Drive endplate (FREP), leads are labeled RTDODE. * Note RTD may have 2–Red/1–White leads; or 2–White/1–Red Lead.

Figure 2-2 Typical Motor Performance VS Voltage Variations

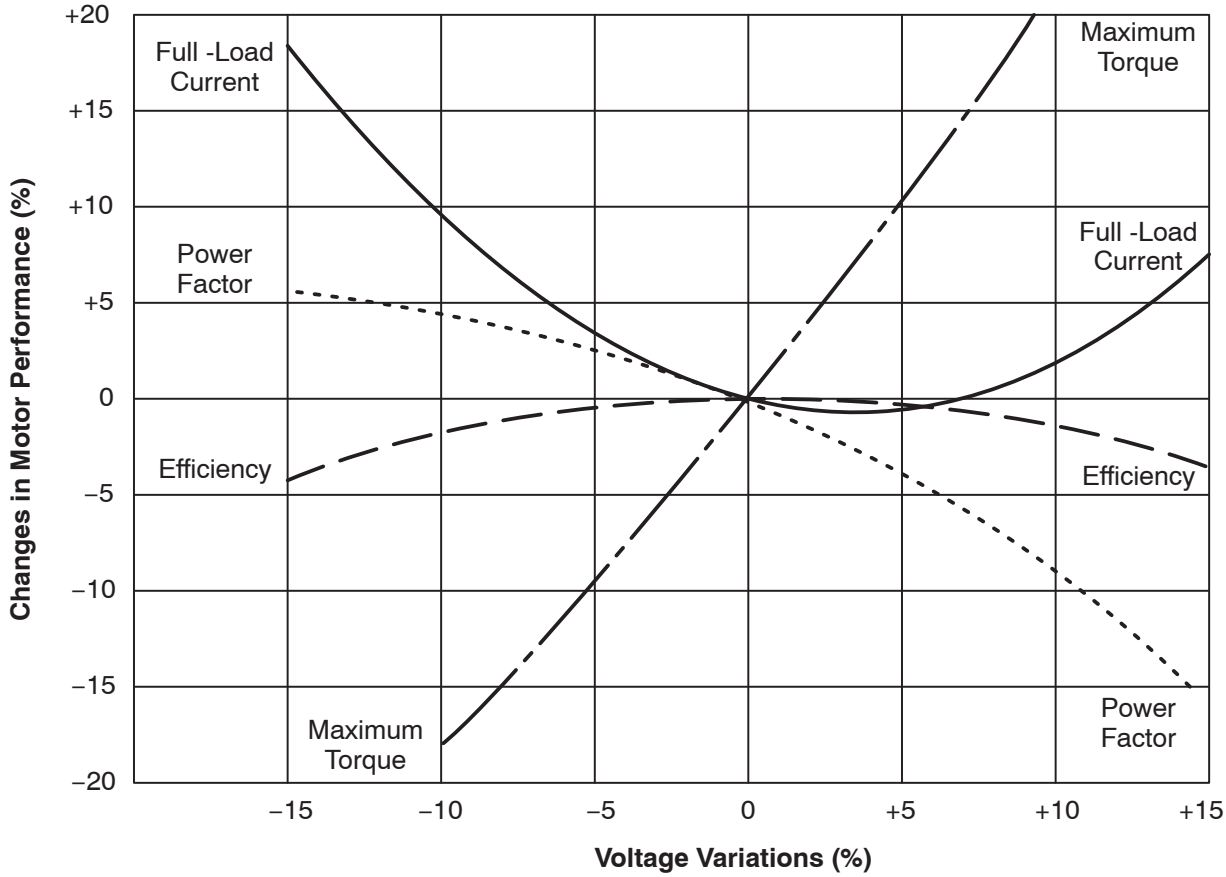

Rotation All three phase motors are reversible. To reverse the direction of rotation, disconnect and lock out power and interchange any two of the three line leads for three phase motors. For single phase motors, check the connection diagram to determine if the motor is reversible and follow the connection instructions for lead numbers to be interchanged. Not all single phase motors are reversible.

Adjustable Frequency Power Inverters used to supply adjustable frequency power to induction motors produce wave forms with lower order harmonics with voltage spikes superimposed. Turn−to−turn, phase−to−phase, and ground insulation of stator windings are subject to the resulting dielectric stresses. Suitable precautions should be taken in the design of these drive systems to minimize the magnitude of these voltage spikes. Consult the drive instructions for maximum acceptable motor lead lengths, and proper grounding.

First Time Start Up Be sure that all power to motor and accessories is off. Be sure the motor shaft is disconnected from the load and will not cause mechanical rotation of the motor shaft.

1. Make sure that the mechanical installation is secure. All bolts and nuts are tightened etc.
2. If motor has been in storage or idle for some time, check winding insulation integrity.
3. Inspect all electrical connections for proper termination, clearance, mechanical strength and electrical continuity.
4. Be sure all shipping materials and braces (if used) are removed from motor shaft.
5. Manually rotate the motor shaft to ensure that it rotates freely.
6. Replace all panels and covers that were removed during installation.
7. Momentarily apply power and check the direction of rotation of the motor shaft.
8. If motor rotation is wrong, be sure power is off and change the motor lead connections. Verify rotation direction before you continue.
9. Start the motor and ensure operation is smooth without excessive vibration or noise. If so, run the motor for 1 hour with no load connected.
10. After 1 hour of operation, disconnect power and connect the load to the motor shaft. Verify all coupling guards and protective devices are installed. Ensure motor is properly ventilated.

Coupled Start Up This procedure assumes a coupled start up. Also, that the first time start up procedure was successful.

1. Check the coupling and ensure that all guards and protective devices are installed.
2. Check that the coupling is properly aligned and not binding.
3. The first coupled start up should be with no load. Apply power and verify that the load is not transmitting excessive vibration back to the motor though the coupling or the foundation. Vibration should be at an acceptable level.
4. Run for approximately 1 hour with the driven equipment in an unloaded condition.

The equipment can now be loaded and operated within specified limits. Do not exceed the name plate ratings for amperes for steady continuous loads.

Jogging and Repeated Starts Repeated starts and/or jogs of induction motors generally reduce the life of the motor winding insulation. A much greater amount of heat is produced by each acceleration or jog than by the same motor under full load. If it is necessary to repeatedly start or jog the motor, it is advisable to check the application with your local Baldor distributor or Baldor Service Center.

Heating - Duty rating and maximum ambient temperature are stated on the motor name plate. Do not exceed these values. If there is any question regarding safe operation, contact your local Baldor District Office or Baldor Service Center.

Section 3
Maintenance & Troubleshooting

WARNING: UL Listed motors must only be serviced by UL Approved Authorized Baldor Service Centers if these motors are to be returned to a hazardous and/or explosive atmosphere.

General Inspection Inspect the motor at regular intervals, approximately every 500 hours of operation or every 3 months, whichever occurs first. Keep the motor clean and the ventilation openings clear. The following steps should be performed at each inspection:

WARNING: Do not touch electrical connections before you first ensure that power has been disconnected. Electrical shock can cause serious or fatal injury. Only qualified personnel should attempt the installation, operation and maintenance of this equipment.

1. Check that the motor is clean. Check that the interior and exterior of the motor is free of dirt, oil, grease, water, etc. Oily vapor, paper pulp, textile lint, etc. can accumulate and block motor ventilation. If the motor is not properly ventilated, overheating can occur and cause early motor failure.
2. Use a “Megger” periodically to ensure that the integrity of the winding insulation has been maintained. Record the Megger readings. Immediately investigate any significant drop in insulation resistance.
3. Check all electrical connectors to be sure that they are tight.

Relubrication & Bearings Bearing grease will lose its lubricating ability over time, not suddenly. The lubricating ability of a grease (over time) depends primarily on the type of grease, the size of the bearing, the speed at which the bearing operates and the severity of the operating conditions. Good results can be obtained if the following recommendations are used in your maintenance program.

Type of Grease A high grade ball or roller bearing grease should be used. Recommended grease for standard service conditions is **Polyrex EM (Mobil)**. Do not mix greases unless compatibility has been checked and verified.

Equivalent and compatible greases include:
Texaco Polystar, Rykon Premium #2, Pennzoil Pen 2 Lube and Chevron SRI.

Relubrication Intervals Recommended relubrication intervals are shown in Table 3-1. It is important to realize that the recommended intervals of Table 3-1 are based on average use.

Refer to additional information contained in Tables 3-2, 3-3 and 3-4.

Table 3-1 Relubrication Intervals *

NEMA / (IEC) Frame Size	Rated Speed - RPM					
	10000	6000	3600	1800	1200	900
Up to 210 incl. (132)	**	2700 Hrs.	5500 Hrs.	12000 Hrs.	18000 Hrs.	22000 Hrs.
Over 210 to 280 incl. (180)		**	3600 Hrs.	9500 Hrs.	15000 Hrs.	18000 Hrs.
Over 280 to 360 incl. (225)		**	* 2200 Hrs.	7400 Hrs.	12000 Hrs.	15000 Hrs.
Over 360 to 5800 incl. (300)		**	*2200 Hrs.	3500 Hrs.	7400 Hrs.	10500 Hrs.

* Relubrication intervals are for ball bearings.
For vertically mounted motors and roller bearings, divide the relubrication interval by 2.

** For motors operating at speeds greater than 3600 RPM, contact Baldor for relubrication recommendations.

Table 3-2 Service Conditions

Severity of Service	Hours per day of Operation	Ambient Temperature Maximum	Atmospheric Contamination
Standard	8	40° C	Clean, Little Corrosion
Severe	16 Plus	50° C	Moderate dirt, Corrosion
Extreme	16 Plus	>50° C* or Class H Insulation	Severe dirt, Abrasive dust, Corrosion, Heavy Shock or Vibration
Low Temperature		<–29° C **	

* Special high temperature grease is recommended (Dow Corning DC44). Note that Dow Corning DC44 grease does not mix with other grease types. Thoroughly clean bearing & cavity before adding grease.

** Special low temperature grease is recommended (Aeroshell 7).

Table 3-3 Relubrication Interval Multiplier

Severity of Service	Multiplier
Standard	1.0
Severe	0.5
Extreme	0.1
Low Temperature	1.0

Some motor designs use different bearings on each motor end. This is normally indicated on the motor nameplate. In this case, the larger bearing is installed on the motor Drive endplate. For best relubrication results, only use the appropriate amount of grease for each bearing size (not the same for both).

Table 3-4 Bearings Sizes and Types

Frame Size NEMA (IEC)	Bearing Description (These are the "Large" bearings (Shaft End) in each frame size)			
	Bearing	Weight of Grease to add * oz (Grams)	Volume of grease to be added	
			in^3	teaspoon
56 to 140 (90)	6203	0.08 (2.4)	0.15	0.5
140 (90)	6205	0.15 (3.9)	0.2	0.8
180 (100–112)	6206	0.19 (5.0)	0.3	1.0
210 (132)	6307	0.30 (8.4)	0.6	2.0
250 (160)	6309	0.47 (12.5)	0.7	2.5
280 (180)	6311	0.61 (17)	1.2	3.9
320 (200)	6312	0.76 (20.1)	1.2	4.0
360 (225)	6313	0.81 (23)	1.5	5.2
400 (250)	6316	1.25 (33)	2.0	6.6
440 (280)	6319	2.12 (60)	4.1	13.4
5000 to 5800 (315–450)	6328	4.70 (130)	9.2	30.0
5000 to 5800 (315–450)	NU328	4.70 (130)	9.2	30.0
360 to 449 (225–280)	NU319	2.12 (60)	4.1	13.4
AC Induction Servo				
76 Frame 180 (112)	6207	0.22 (6.1)	0.44	1.4
77 Frame 210 (132)	6210	0.32 (9.0)	0.64	2.1
80 Frame 250(160)	6213	0.49 (14.0)	0.99	3.3

* Weight in grams = .005 DB of grease to be added

Note: Not all bearing sizes are listed. For intermediate bearing sizes, use the grease volume for the next larger size bearing.

Caution: To avoid damage to motor bearings, grease must be kept free of dirt. For an extremely dirty environment, contact your Baldor distributor or an authorized Baldor Service Center for additional information.

Relubrication Procedure Be sure that the grease you are adding to the motor is compatible with the grease already in the motor. Consult your Baldor distributor or an authorized service center if a grease other than the recommended type is to be used.

Caution: Do not over−lubricate motor as this may cause premature bearing failure.

With Grease Outlet Plug

1. With the motor stopped, clean all grease fittings with a clean cloth.
2. Remove grease outlet plug.

Caution: Over−lubricating can cause excessive bearing temperatures, premature lubrication breakdown and bearing failure.

3. Add the recommended amount of grease.
4. Operate the motor for 15 minutes with grease plug removed. This allows excess grease to purge.
5. Re-install grease outlet plug.

Without Grease Provisions

Note: Only a Baldor authorized and UL or CSA certified service center can disassemble a UL/CSA listed explosion proof motor to maintain it's UL/CSA listing.

1. Disassemble the motor.
2. Add recommended amount of grease to bearing and bearing cavity. (Bearing should be about 1/3 full of grease and outboard bearing cavity should be about 1/2 full of grease.)
3. Assemble the motor.

Sample Relubrication Determination

Assume - NEMA 286T (IEC 180), 1750 RPM motor driving an exhaust fan in an ambient temperature of 43° C and the atmosphere is moderately corrosive.

1. Table 3-1 list 9500 hours for standard conditions.
2. Table 3-2 classifies severity of service as "Severe".
3. Table 3-4 shows that 1.2 in^3 or 3.9 teaspoon of grease is to be added.

Note: Smaller bearings in size category may require reduced amounts of grease.

Table 3-5 Troubleshooting Chart

Symptom	Possible Causes	Possible Solutions
Motor will not start	Usually caused by line trouble, such as, single phasing at the starter.	Check source of power. Check overloads, fuses, controls, etc.
Excessive humming	High Voltage.	Check input line connections.
	Eccentric air gap.	Have motor serviced at local Baldor service center.
Motor Over Heating	Overload. Compare actual amps (measured) with nameplate rating.	Locate and remove source of excessive friction in motor or load. Reduce load or replace with motor of greater capacity.
	Single Phasing.	Check current at all phases (should be approximately equal) to isolate and correct the problem.
	Improper ventilation.	Check external cooling fan to be sure air is moving properly across cooling fins. Excessive dirt build-up on motor. Clean motor.
	Unbalanced voltage.	Check voltage at all phases (should be approximately equal) to isolate and correct the problem.
	Rotor rubbing on stator.	Check air gap clearance and bearings.
		Tighten “Thru Bolts”.
	Over voltage or under voltage.	Check input voltage at each phase to motor.
	Open stator winding.	Check stator resistance at all three phases for balance.
	Grounded winding.	Perform dielectric test and repair as required.
	Improper connections.	Inspect all electrical connections for proper termination, clearance, mechanical strength and electrical continuity. Refer to motor lead connection diagram.
Bearing Over Heating	Misalignment.	Check and align motor and driven equipment.
	Excessive belt tension.	Reduce belt tension to proper point for load.
	Excessive end thrust.	Reduce the end thrust from driven machine.
	Excessive grease in bearing.	Remove grease until cavity is approximately $^3/_4$ filled.
	Insufficient grease in bearing.	Add grease until cavity is approximately $^3/_4$ filled.
	Dirt in bearing.	Clean bearing cavity and bearing. Repack with correct grease until cavity is approximately $^3/_4$ filled.
Vibration	Misalignment.	Check and align motor and driven equipment.
	Rubbing between rotating parts and stationary parts.	Isolate and eliminate cause of rubbing.
	Rotor out of balance.	Have rotor balance checked are repaired at your Baldor Service Center.
	Resonance.	Tune system or contact your Baldor Service Center for assistance.
Noise	Foreign material in air gap or ventilation openings.	Remove rotor and foreign material. Reinstall rotor. Check insulation integrity. Clean ventilation openings.
Growling or whining	Bad bearing.	Replace bearing. Clean all grease from cavity and new bearing. Repack with correct grease until cavity is approximately $^3/_4$ filled.

Suggested bearing and winding RTD setting guidelines

Most large frame AC Baldor motors with a 1.15 service factor are designed to operate below a Class B (80°C) temperature rise at rated load and are built with a Class H winding insulation system. Based on this low temperature rise, RTD (Resistance Temperature Detectors) settings for Class B rise should be used as a starting point. Some motors with 1.0 service factor have Class F temperature rise.

The following tables show the suggested alarm and trip settings for RTDs. Proper bearing and winding RTD alarm and trip settings should be selected based on these tables unless otherwise specified for specific applications.

If the driven load is found to operate well below the initial temperature settings under normal conditions, the alarm and trip settings may be reduced so that an abnormal machine load will be identified.

The temperature limits are based on the installation of the winding RTDs imbedded in the winding as specified by NEMA. Bearing RTDs should be installed so they are in contact with the outer race on ball or roller bearings or in direct contact with the sleeve bearing shell.

Winding RTDs – Temperature Limit In °C (40°C Maximum Ambient)

Motor Load	Class B Temp Rise ≤ 80°C (Typical Design)		Class F Temp Rise ≤ 105°C		Class H Temp Rise ≤ 125°C	
	Alarm	Trip	Alarm	Trip	Alarm	Trip
≤ Rated Load	130	140	155	165	175	185
Rated Load to 1.15 S.F.	140	150	160	165	180	185

Note: • Winding RTDs are factory production installed, not from Mod–Express.
• When Class H temperatures are used, consider bearing temperatures and relubrication requirements.

Bearing RTDs – Temperature Limit In °C (40°C Maximum Ambient)

Bearing Type Oil or Grease	Anti–Friction		Sleeve	
	Alarm	Trip	Alarm	Trip
Standard*	95	100	85	95
High Temperature**	110	115	105	110

Note: * Bearing temperature limits are for standard design motors operating at Class B temperature rise.
** High temperature lubricants include some special synthetic oils and greases.

Greases that may be substituted that are compatible with Polyrex EM (but considered as “standard” lubricants) include the following:

– Texaco Polystar – Rykon Premium #2 – Chevron SRI #2
– Mobilith SHC–100 – Pennzoil Pennzlube EM–2 – Chevron Black Pearl
– Darmex 707 – Darmex 711 – Petro–Canada Peerless LLG

See the motor nameplate for replacement grease or oil recommendation.
Contact Baldor application engineering for special lubricants or further clarifications.

Baldor District Offices

UNITED STATES

ARIZONA

PHOENIX
4211 S 43RD PLACE
PHOENIX, AZ 85040
PHONE: 602-470-0407
FAX: 602-470-0464

ARKANSAS

CLARKSVILLE
1001 COLLEGE AVE.
CLARKSVILLE, AR 72830
PHONE: 479-754-9108
FAX: 479-754-9205

CALIFORNIA

LOS ANGELES
6480 FLOTILLA
COMMERCE, CA 90040
PHONE: 323-724-6771
FAX: 323-721-5859

HAYWARD
21056 FORBES STREET
HAYWARD, CA 94545
PHONE: 510-785-9900
FAX: 510-785-9910

COLORADO

DENVER
3855 FOREST STREET
DENVER, CO 80207
PHONE: 303-623-0127
FAX: 303-595-3772

9980 PARK MEADOWS DRIVE
SUITE 214
LONE TREE, CO 80124-6739
PHONE: 303-339-9629
FAX: 303-339-9633

CONNECTICUT

WALLINGFORD
65 SOUTH TURNPIKE ROAD
WALLINGFORD, CT 06492
PHONE: 203-269-1354
FAX: 203-269-5485

FLORIDA

TAMPA/PUERTO RICO/
VIRGIN ISLANDS
3906 EAST 11TH AVENUE
TAMPA, FL 33605
PHONE: 813-248-5078
FAX: 813-247-2984

GEORGIA

ATLANTA
62 TECHNOLOGY DR.
ALPHARETTA, GA 30005
PHONE: 770-772-7000
FAX: 770-772-7200

5490 MCGINNIS FERRY PLACE
SUITE 133
ALPHARETTA, GA 30005
PHONE: 770-752-4254
FAX: 770-752-4257

ILLINOIS

CHICAGO
4 SAMMONS COURT
BOLINGBROOK, IL 60440
PHONE: 630-296-1400
FAX: 630-226-9420

INDIANA

COLUMBUS
3300 TENTH ST
COLUMBUS, IN 47201
PHONE: 812-378-2556
FAX: 812-378-2555

INDIANAPOLIS
5525 W. MINNESOTA STREET
INDIANAPOLIS, IN 46241
PHONE: 317-246-5100
FAX: 317-246-5110

IOWA

DES MOINES
1800 DIXON STREET, SUITE C
DES MOINES, IA 50316
PHONE: 515-263-6929
FAX: 515-263-6515

KANSAS

5030 BOB BILLINGS PKWY STE B
LAWRENCE, KS 66049
PHONE: 785-749-4339
FAX: 785-749-4217

MARYLAND

BALTIMORE
6660 SANTA BARBARA RD.
SUITE 22-24
ELKRIDGE, MD 21075
PHONE: 410-579-2135
FAX: 410-579-2677

MASSACHUSETTS

BOSTON
6 PULLMAN STREET
WORCESTER, MA 01606
PHONE: 508-854-0708
FAX: 508-854-0291

MICHIGAN

DETROIT
33782 STERLING PONDS BLVD.
STERLING HEIGHTS, MI 48312
PHONE: 586-978-9800
FAX: 586-978-9969

GRAND RAPIDS
668 THREE MILE ROAD NW
GRAND RAPIDS, MI 49504
PHONE: 616-785-1784
FAX: 616-785-1788

MINNESOTA

MINNEAPOLIS
21080 134TH AVE. NORTH
ROGERS, MN 55374
PHONE: 763-428-3633
FAX: 763-428-4551

MISSOURI

ST LOUIS
422 INDUSTRIAL DRIVE
MARYLAND HEIGHTS, MO 63043
PHONE: 314-298-1800
FAX: 314-298-7660

KANSAS CITY
1501 BEDFORD AVENUE
NORTH KANSAS CITY, MO 64116
PHONE: 816-587-0272
FAX: 816-587-3735

NEW YORK

AUBURN
ONE ELLIS DRIVE
AUBURN, NY 13021
PHONE: 315-255-3403
FAX: 315-253-9923

NORTH CAROLINA

GREENSBORO
1220 ROTHERWOOD ROAD
GREENSBORO, NC 27406
PHONE: 336-272-6104
FAX: 336-273-6628

OHIO

CINCINNATI
2929 CRESCENTVILLE ROAD
WEST CHESTER, OH 45069
PHONE: 513-771-2600
FAX: 513-772-2219

CLEVELAND
8929 FREEWAY DRIVE
MACEDONIA, OH 44056
PHONE: 330-468-4777
FAX: 330-468-4778

29525 CHAGRIN BLVD SUITE 208
CLEVELAND, OH 44122
PHONE: 216-360-8296
FAX: 216-360-4172

OKLAHOMA

TULSA
2 EAST DAWES
BIXBY, OK 74008
PHONE: 918-366-9320
FAX: 918-366-9338

OREGON

PORTLAND
20393 SW AVERY COURT
TUALATIN, OR 97062
PHONE: 503-691-9010
FAX: 503-691-9012

PENNSYLVANIA

KING OF PRUSSIA
1060 FIRST AVE STE 400
KING OF PRUSSIA, PA 19406
PHONE: 610-768-8018
FAX: 215-672-5759

PHILADELPHIA
1035 THOMAS BUSCH
MEMORIAL HIGHWAY
PENNSAUKEN, NJ 08110
PHONE: 856-661-1442
FAX: 856-663-6363

PITTSBURGH
159 PROMINENCE DRIVE
NEW KENSINGTON, PA 15068
PHONE: 724-889-0092
FAX: 724-889-0094

TENNESSEE

MEMPHIS
4000 WINCHESTER ROAD
MEMPHIS, TN 38118
PHONE: 901-365-2020
FAX: 901-365-3914

TEXAS

ADDISON
3939 BELT LINE ROAD #250
ADDISON, TX 75001
PHONE: 972-499-7746, 499-7747
FAX: 972-242-1505

DALLAS
3040 QUEBEC
DALLAS, TX 75247
PHONE: 214-634-7271
FAX: 214-634-8874

HOUSTON
4647 PINE TIMBERS
SUITE # 135
HOUSTON, TX 77041
PHONE: 713-895-7062
FAX: 713-690-4540

UTAH

SALT LAKE CITY
2230 SOUTH MAIN STREET
SALT LAKE CITY, UT 84115
PHONE: 801-832-0127
FAX: 801-832-8911

VIRGINIA

RICHMOND
6767 FOREST HILL AVE STE 305
RICHMOND, VA 23225
PHONE: 804-545-6848
FAX: 804-545-6840

WASHINGTON

KIRKLAND, WA
550 KIRKLAND WAY STE 205
KIRKLAND, WA 98033
PHONE: 425-952-5000
FAX: 775-255-8019

WISCONSIN

MILWAUKEE
2725 SOUTH 163RD STREET
NEW BERLIN, WI 53151
PHONE: 262-784-5940
FAX: 262-784-1215

WAUKESHA
N14 W23777 STONE RIDGE DRIVE
SUITE 170
WAUKESHA, WI 53188
PHONE: 262-347-2000
FAX: 262-437-0258

INTERNATIONAL SALES

FORT SMITH, AR
P.O. BOX 2400
FORT SMITH, AR 72902
PHONE: 479-646-4711
FAX: 479-648-5895

CANADA

EDMONTON, ALBERTA
4053-92 STREET
EDMONTON, ALBERTA T6E 6R8
PHONE: 780-434-4900
FAX: 780-438-2600

11428-168 STREET
EDMONTON, ALBERTA T5M 3T9
PHONE: 780-822-7865
FAX: 780-822-7878

MISSISSAUGA, ONTARIO
244 BRITANNIA ROAD EAST
MISSISSAUGA, ONTARIO L4Z 1S6
PHONE: 905-890-5110
FAX: 905-890-5540

OAKVILLE, ONTARIO
2750 COVENTRY ROAD
OAKVILLE, ONTARIO L6H 6R1
PHONE: 905-829-3301
FAX: 905-829-3302

DORVAL, QUEBEC
95 RUE LINDSAY
DORVAL QUEBEC H9P 2S6
PHONE: 514-422-8818
FAX: 514-422-8982

MONTREAL, QUEBEC
1844 WILLIAM STREET
MONTREAL, QUEBEC H3J 1R5
PHONE: 514-933-2711
FAX: 514-933-8639

VANCOUVER,
BRITISH COLUMBIA
1538 KEBET WAY
PORT COQUITLAM,
BRITISH COLUMBIA V3C 5M5
PHONE 604-421-2822
FAX: 604-421-3113

WINNIPEG, MANITOBA
54 PRINCESS STREET
WINNIPEG, MANITOBA R3B 1K2
PHONE: 204-942-5205
FAX: 204-956-4251

AUSTRALIA

UNIT 3, 6 STANTON ROAD
SEVEN HILLS, NSW 2147, AUSTRALIA
PHONE: (61) (2) 9674 5455
FAX: (61) (2) 9674 2495

UNIT 8, 5 KELLETTS ROAD
ROWVILLE, VICTORIA, 3178
AUSTRALIA
PHONE: (61) (3) 9753 4355
FAX: (61) (3) 9753 4366

EL SALVADOR

RESIDENCIAL PINARES DE SUIZA
POL. 15 #44,
NVA. SAN SALVADOR, EL SALVADOR
PHONE: +503 2288-1519
FAX: +503 2288-1518

CHILE

LUIS THAYER OJEDA 166,
OF 402 – PROVIDENCIA
SANTIAGO, CHILE
PHONE: 56-2-290-0762
FAX: 56-2-290-0762

CHINA

5299 BEI SONG ROAD
SONGJIANG
201611 SHANGHAI, CHINA
PHONE: +86 21 5760 5335
FAX : +86 21 5760 5336

UNIT 905, 9TH FLOOR,
TOWER B WANDA PLAZA
NO. 93 JIANGUO ROAD,
CHAOYANG DISTRICT
BEIJING, 100022, CHINA
PHONE +86 (010) 58205516
FAX +86 (010) 58204231

GERMANY

DIESELSTRASSE 22
D-85551 KIRCHHEIM
MUNICH, GERMANY
PHONE: +49 89 90 5080
FAX: +49 89 90 50 8492

HERMANN-HEINRICH-GOSSEN-
STRASSE 3
D-50858 KÖLN, GERMANY
PHONE: 49 2234 37941 0
FAX: 49 2234 37941 64

INDIA

14, COMMERCE AVENUE
MAHAGANESH COLONY
PAUD ROAD
PUNE – 411038
MAHARASHTRA, INDIA
PHONE: 91 20 25452717, 25452718
FAX: 91 20 25452719

ITALY

BALDOR ASR AG
SUCCURSALE DI MENDRISIO
VIA BORROMINI, 20A
CH-6850 MENDRISIO
SWITZERLAND
PHONE: 0041 91 640 99 50
FAX: 0041 91 630 26 33

JAPAN

DIA BLDG 802,
2-21-1 TSURUYA-CHO,
KANAGAWA-KU
YOKOHAMA, 221-0835, JAPAN
PHONE: 81-45-412-4506
FAX: 81-45-412-4507

KOREA

RM 1715, SUSEO TOWER, 725,
SUSEO-DONG, GANGNAM-GU,
SEOUL 135-757 KOREA
TEL : (82) 2 2226 9369
FAX : (82) 2 2226 9368

MEXICO

LEON, GUANAJUATO
KM. 2.0 BLVD. AEROPUERTO
LEÓN 37545, GUANAJUATO, MÉXICO
PHONE: 52 477 761 2030
FAX: 52 477 761 2010

MIDDLE EAST & NORTH AFRICA

VSE INTERNATIONAL CORP.
P. O. BOX 5618
BUFFALO GROVE, IL 60089-5618
PHONE: 847 590 5547
FAX: 847 590 5587

SINGAPORE

18, KAKI BUKIT ROAD 3
#03-09 ENTREPRENEUR
BUSINESS CENTRE
SINGAPORE 415978
PHONE: (65) 6744 2572
FAX: (65) 6747 1708

PANAMA

AVE. RICARDO J. ALFARO
EDIFICIO SUN TOWERS MALL
PISO 2, LOCAL 55
CIUDAD DE PANAMÁ, PANAMÁ
PHONE: +507 236-5155
FAX: +507 261-5355

SWITZERLAND

POSTFACH 73
SCHUTZENSTRASSE 59
CH-8245 FEUERTHALEN
SWITZERLAND
PHONE: +41 52 647 4700
FAX: +41 52 659 2394

TAIWAN

1F, NO 126 WENSHAN 3RD STREET,
NANTUN DISTRICT,
TAICHUNG CITY 408
TAIWAN R.O.C
PHONE: (886) 4 238 04235
FAX: (886) 4 238 04463

UNITED KINGDOM

6 BRISTOL DISTRIBUTION PARK
HAWKLEY DRIVE
BRISTOL BS32 0BF U.K.
PHONE: +44 1454 850000
FAX: +44 1454 859001

VENEZUELA

AV. ROMA. QTA EL MILAGRO. URB.
CALIFORNIA NORTE
CARACAS, 1070 VENEZUELA
PHONE: 58-414-114-8623
FAX: 58-412-322-5790

BALDOR ELECTRIC COMPANY
World Headquarters
P.O. Box 2400 Fort Smith, AR 72901–2400
(479) 646–4711 Fax (479) 648–5792
www.baldor.com

© 2009 Baldor Electric Company
All rights reserved. Printed in USA
MN400
2/09

CFF

SERIES SS-2, BALL VALVE

LEFT BLANK

SS·2 BALL

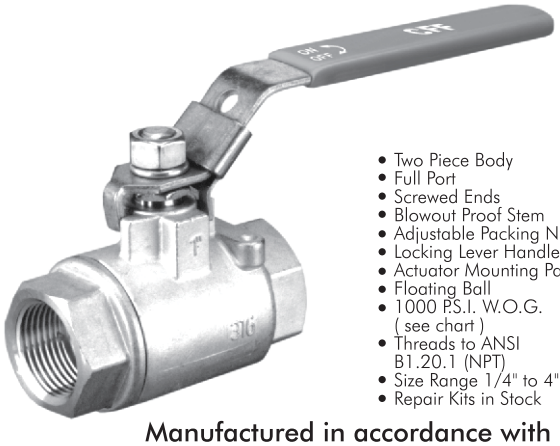

- Two Piece Body
- Full Port
- Screwed Ends
- Blowout Proof Stem
- Adjustable Packing Nut
- Locking Lever Handle
- Actuator Mounting Pad
- Floating Ball
- 1000 P.S.I. W.O.G. (see chart)
- Threads to ANSI B1.20.1 (NPT)
- Size Range 1/4" to 4"
- Repair Kits in Stock

Manufactured in accordance with ISO 9002 quality standards.

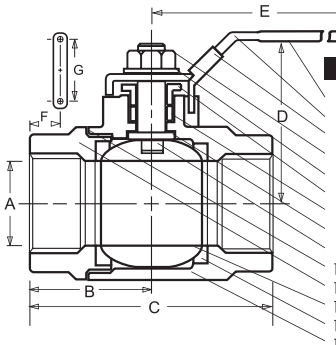

	NAME/MATERIAL
1	Plastic Cover/ Plastic
2	Handle/ Stainless Steel 304
3	Lock Device/ Stainless Steel 304
4	Stem Nut/ Stainless Steel 304
5	Stem Washer/ Stainless Steel 304
6	Gland Nut/ Stainless Steel 304
7	Stem Packing/ Teflon
8	Thrust Washer/ Rein. Teflon 15% GFT
9	Stem/ Stainless Steel 316
10	Joint Gasket/ Teflon
11	Cap/ Stainless Steel 316; CF 8M
12	Ball/ Stainless Steel 316
13	Seat/ Rein. Teflon 15% GFT
14	Body/ Stainless Steel 316; CF 8M

SS · 2 BALL VALVE

DIMENSIONS								
	Nominal Size	(mm/in) A	(mm/in) B	(mm/in) C	(mm/in) D	(mm/in) E	(mm/in) F	(mm/in) G
8	¼	11.6	30	60	45	110	12.7	28.45
		0.457	1.181	2.362	1.772	433.1	0.50	1.120
10	⅜	12.7	30	60	45	110	12.7	28.45
		0.50	1.181	2.362	1.772	433.1	0.50	1.120
15	½	15	32	64	45	130	12.7	28.45
		0.591	1.260	2.520	1.772	5.118	0.50	1.120
20	¾	20	38.5	77	50	130	22.10	34.80
		0.787	1.516	3.032	1.969	5.118	0.87	1.37
25	1	25.4	45	90	65	155	22.10	38.10
		1.00	1.772	3.543	2.559	6.102	0.87	1.37
32	1¼	32	50	100	70	155	23.62	38.10
		1.260	1.967	3.937	2.756	6.102	0.93	1.50
40	1½	38.1	59	118	75	185	23.62	38.10
		1.50	2.323	4.646	2.953	7.283	0.93	1.50
50	2	50.8	68.5	137	85	185	23.62	38.10
		2.00	2.697	5.398	3.346	7.283	0.93	1.50
65	2½	65	82.5	165	136	250	—	70
		2.561	3.248	6.496	5.364	9.843	—	2.756
80	3	80	97.5	195	149	250	—	70
		3.152	3.839	7.677	5.866	9.843	—	2.756

Design and materials are subject to change without notice.

PRESSURE/TEMP. RATING

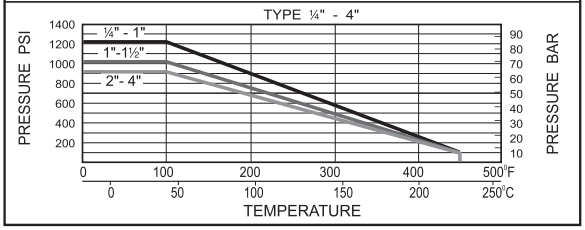

FLOW COEFFICIENT CV										
Size (in.)	¼	⅜	½	¾	1	1¼	1½	2	2½	3
Cv	6	7	10	25	35	46	80	110	310	360
Operating Torques (lbs.)	36	36	43	65	101	158	187	230	430	1380

Visit us on-line at:
www.cffstainless.com

MANUFACTURER INSTALLATION OPERATION AND MAINTENANCE MANUAL

AMARUQ WTP – NUNAVUT

VEOLIA PROJECT: 5000 218 009

CHEMLINE

TYPE 21, BALL VALVE

LEFT BLANK

CHEMLINE Plastics Limited

Your Pipeline To Quality Valves, Strainers, Flowmeters and Controls

55 Guardsman Road
Thornhill, Ontario
L3T 6L2
Canada
Tel: 905-889-7890
Fax: 905-889-8553

MAINTENANCE & INSTALLATION INSTRUCTIONS
For Chemline Type 21 True Union Ball Valve Size 1/2"- 4"

Installation:

1. Make sure all surfaces are clear and free of debris prior to installing valve in pipeline. Pipeline should be empty at connection site.

2. Valve should be set to the closed position.

3. When installing valves with socket connections, ensure that only PVC solvent cement is used. Excessive use of cement can cause sticking in the valve interior, therefore use caution when applying cement, especially on vertical piping.

4. For threaded connections we recommend the use of sealing tape and, with the use of a strap wrench, to tighten no more than 2 full turns past finger-tight. Use of a pipe wrench can deform the pipe or union nut and cause damage to the valve and/or connection(s).

5. Flanged connections should be torqued evenly and in a symmetrical pattern with a torque wrench and as per the figure and chart below:

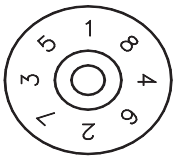

RECOMMENDED FLANGE BOLT TORQUES

VALVE SIZE	FLANGE	BOLT TORQUE	IN FT-LB	AXIAL MISALIGNMENT	PARALLELISM (INCH)
	PSI - 50	PSI - 100	PSI – 150		
1½	11	13	14	0.04	0.03
2	13	14	16	0.04	0.03
2½	13	14	16	0.04	0.03
3	18	20	22	0.04	0.03
4	20	20	22	0.04	0.04
5	22	15	29	0.04	0.04
6	25	15	32	0.04	0.04
8	25	32	40	0.06	0.04
10	25	32	40	0.06	0.04
12	29	36	43	0.06	0.04
14	32	36	43	0.06	0.04
16	36	[58-85 PSI]	58	0.06	0.04
18	36	[58-85 PSI]	-		
20	72	-	-		
24	72	-	-		

Maintenance Instructions Type 21 Ball Valve cont.

Maintenance:

Refer to **ASSEMBLY DRAWING T21V Rev. 0.** And proceed as follows:

1. Turn valve to the closed position.
2. Unscrew union nut (5) from both ends of valve.
3. Remove end connectors (4).
4. On solid mold end, remove face o-ring (9). This completely disassembles this end of valve.
5. Pull upward on handle (7) to remove.
6. On opposite end of valve, remove face o-ring (9) and use handle (7) as a spanner wrench to remove carrier (3).
7. Remove carrier o-ring (10).
8. Remove seat (6) and seat cushion (12) to expose ball (2).
9. Remove ball (2) by pushing from solid molded end of body.
10. Remove stem (6) by pushing it down into body (1).
11. Remove stem o-rings 11(A) and 11(B) from groves in stem.
12. Remove other seat (6) and seat cushion (12).
13. Inspect all parts for wear and replace as necessary.
14. Before re-assembling valve, lubricate all o-rings with Dow Corning III silicone compound or equivalent.
15. To re-assemble valve follow steps 1 through 10 in reverse order.

NOTE: If mounting actuator on mounting flange (13), make sure handle (7) is removed and stem (6) and actuator are aligned.

After replacing carrier (3), the face of the carrier should remain slightly projected from the end of the body. Make sure the ball rotates smoothly with only a touch of resistance.

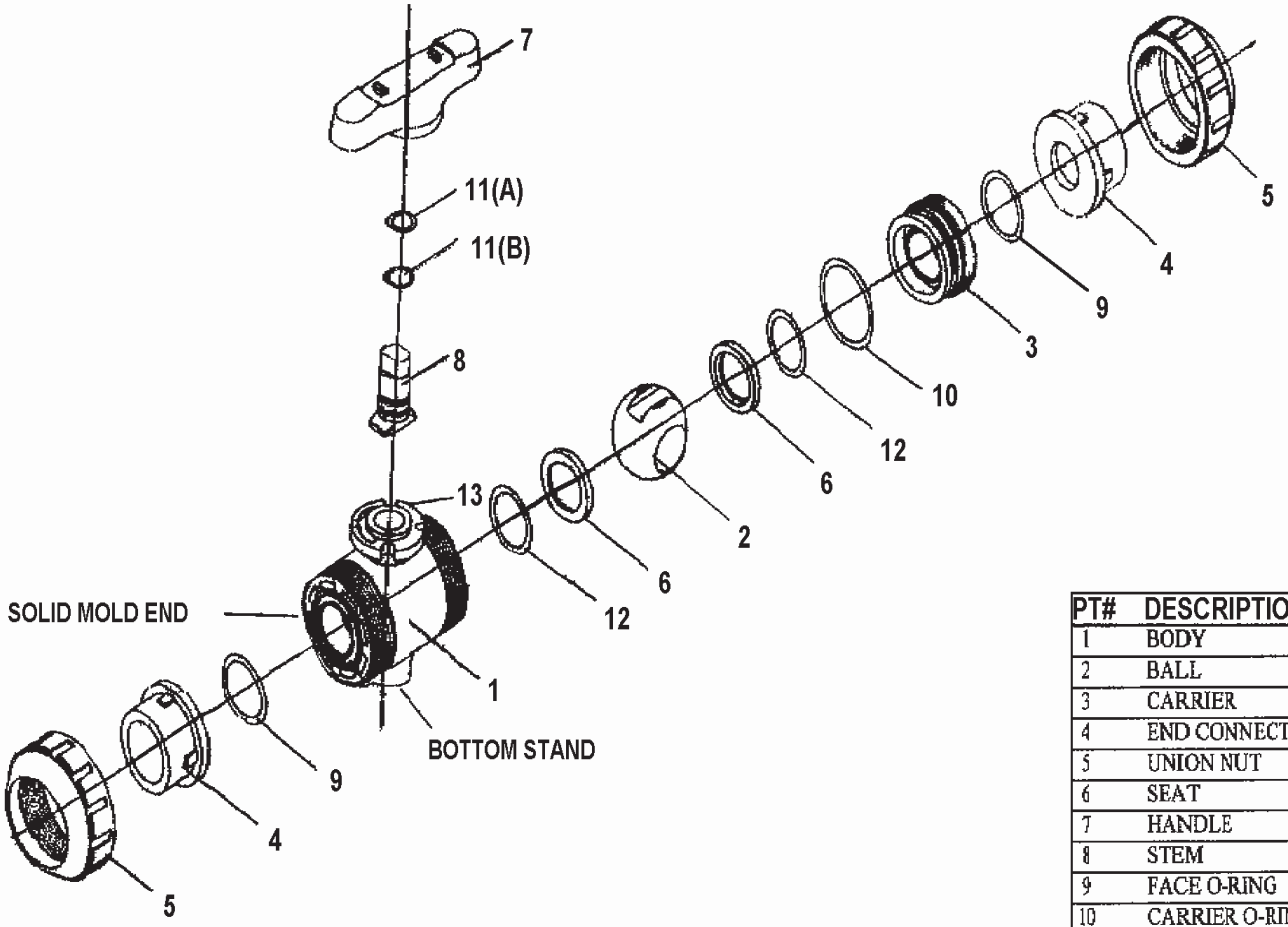

PT#	DESCRIPTION	QTY	MATERIALS
1	BODY	1	PVC/PP/PVDF/CPVC
2	BALL	1	PVC/PP/PVDF/CPVC
3	CARRIER	1	CPE/EPDM/VITON/HYP.
4	END CONNECTOR	2	PVC/PP/PVDF/CPVC
5	UNION NUT	2	PVC/PP/PVDF/CPVC
6	SEAT	1	CPE/EPDM/CITON/HYP.
7	HANDLE	1	PVC/PP/PVDF/CPVC
8	STEM	1	PVC/PP/PVDF/CPVC
9	FACE O-RING	2	CPE/EPDM/VITON/HYP.
10	CARRIER O-RING	1	CPE/EPDM/VITON/HYP.
11(A)	STEM O-RING (Upper)	1	CPE/EPDM/VITON/HYP.
11(B)	STEM O-RING (Lower)	1	CPE/EPDM/VITON/HYP.
12	SEAT CUSHION	2	CPE/EPDM/VITON/HYP
13	MOUNTING FLANGE	1	PVC/PP/PVDF/CPVC

TITLE CHEMLINE TYPE 21 TRUE UNION BALL VALVE	SCALE		DATE	CHEMLINE PLASTICS	
	DR. BY				
REFERENCE SIZES 1/2" - 4"	CHKD BY			DWG. NO. T21V	REV. 0
	APP. BY				

This page is intentionally left blank

PDF Published April 28, 2017

ChemFlare™ End Connectors

CHEMLINE PLASTICS
SUPERIOR FLOW SOLUTIONS

PVC CPVC PP PVDF

SERIES: ChemFlare™

VALVE SIZES: 3/8", 1/2", 3/4", 1" & 1-1/4"

TUBING SIZES: 1/4", 3/8", 1/2", 3/4", 1" & 1-1/4"

All Chemline valves with True Union ends are available with ChemFlare™ end connections. ChemFlare™ is a long term leak-free connection design for difficult applications such as sodium hypochlorite[1]. These flared end connections are easy to install and allow for compact plumbing and a small footprint.

They are available on all Chemline valves which have True Union ends, flow meters and controls up to 1-1/4". They connect PFA tubing down to 1/4" size.

Tubing must be flared using a mechanical flare tool or by heating and using a forming flare tool (preferred method). Consult Chemline for flare tools.

features

Full Valve Working Pressure

Weldless Design

- Eliminates all fusion welds and glued joints
- Threaded connection between flared end and tube nut is not wetted

Easy Installation

- Flaring the tube ends is easy
- Assembly is by hand[2]

Low Down Time

- No welding or curing waiting time. The system may be pressure tested immediately.

Minimum Dead Volume

- The flared tubing connection has minimum dead volume desirable on sodium hypochlorite and ultrapure applications

[1] For sodium hypochlorite applications Chemline recommends venting ball valves by drilling a hole on the upstream side of the ball in the closed position.
[2] ChemFlare™ fitting nuts should be hand tightened only. Use of a wrench can result in excessive tightening and stripped threads.

04/17 ©Chemline Plastics Limited 2017
Chemline is a registered trade mark of Chemline Plastics Limited

ChemFlare™ for Type 21 Ball Valves

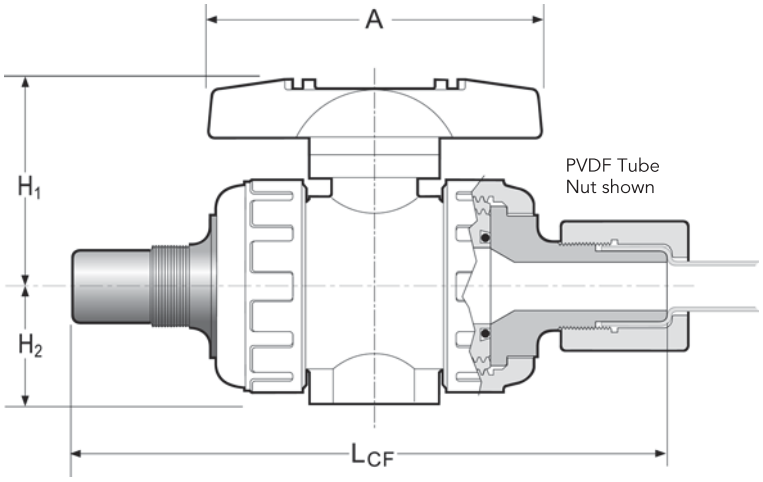

DIMENSIONS INCHES

Valve Size	Tube Size[1]	A	H_1	H_2	L_{CF}
1/2″	1/4″	3.6	2.03	1.14	5.52
1/2″	3/8″	3.6	2.03	1.14	6.04
1/2″	1/2″	3.6	2.03	1.14	6.12
3/4″	3/4″	3.9	2.34	1.38	6.52
1″	1″	4.3	2.68	1.54	7.26
1-1/4″	1-1/4″	4.8	3.17	1.85	9.58

MAXIMUM PRESSURES PSI

		PVC				PP					PVDF					
Valve Size	Tube Size[1]	20°C 68°F	30°C 86°F	40°C 104°F	50°C 122°F	30°C 86°F	40°C 104°F	50°C 122°F	60°C 140°F	70°C 158°F	30°C 86°F	50°C 122°F	70°C 158°F	80°C 176°F	90°C 194°F	100°C 212°F
1/2″	1/4″	150	105	60	15	150	90	60	37	15	150	100	60	45	30	15
1/2″	3/8″	150	105	60	15	150	90	60	37	15	150	100	60	45	30	15
1/2″	1/2″	150	105	60	15	150	90	60	37	15	150	100	60	45	30	15
3/4″	3/4″	150	105	60	15	150	90	60	37	15	150	100	60	45	30	15
1″	1″	150	105	60	15	150	90	60	37	15	150	100	60	45	30	15
1-1/4″	1-1/4″	150	105	60	15	150	90	60	37	15	150	100	60	45	30	15

Temperature Ranges: PVC 0 to 60°C (32 to 140°F), **PP** –20 to 90°C (–4 to 194°F), **PVDF** –40 to 100°C (–40 to 212°F).
[1] ChemFlare™ ends are available for reduced tube sizes down to 1/4″. Tube nuts are always supplied with end connectors.

SAMPLE SPECIFICATION

1. All True Union Ball Valves in PVC, CPVC, PP or PVDF shall be Chemline Type 21 or equal sizes 1/2″ to 2″ in PVC, CPVC, and PVDF rated at 230 psi and in PP 150 psi maximum working pressure. Sizes 2-1/2″, 3″ and 4″ rated at 150 psi maximum working pressure with EPDM , FKM (Viton®) or CPE seals. Cushioned PTFE ball seats shall be provided for positive closure with minimum stem torques.
2. All valves will have Safety Shear stem design, blowout-proof with double o-rings for safety. The top o-ring groove shall be deeper so that if the stem breaks under excessive torque the lower o-ring will remain intact and the valve will hold pressure.
3. All valves shall be full port and two-way blocking.
4. All PVC/EPDM and PVC/FKM (Viton®) valves shall be certified under NSF/ANSI Standard 61 for contact with drinking water.
5. All valves will be CRN (Canadian Registration Number) registered with TSSA.
6. All valves for sodium hypochlorite service shall have the ball vented on the upstream side to prevent the accumulation of chlorine gas due to off-gassing.
7. All valves shall have chemical resistant labels permanently marked with manufacturing number to provide production level traceability.
8. PVC compound shall have an ASTM cell classification 12454, as per ASTM D-1784 (CSA Report LO 4000-1172) and a chemical resistance equal to S20-1-3-R as per ASTM D5260.
9. End connections shall be ChemFlare™ design for connection to flared PFA tubing.

ChemFlare™ for Type 21 Ball Valves

TYPE 21 CONNECTOR DIMENSIONS INCHES

Tube Conn.	Item No.	A	B	C	D	E	F	G	H	I	J	K	L	M	N	Thread
1/4"	21005-4-4N[1]	1.470	1.215	0.590	0.185	0.310	0.500	0.440	0.047	0.125	0.302	0.500	1.435	0.000	0.000	1/2 – 20 UNF
3/8"	21005-4-6N	1.470	1.215	0.590	0.185	0.310	0.500	0.500	0.047	0.251	0.420	0.625	1.695	0.200	0.200	5/8 – 20 UN
1/2"	21005-4-8N	1.470	1.215	0.590	0.185	0.310	0.419	0.591	0.055	0.376	0.547	0.735	1.705	0.200	0.200	3/4 – 20 UNEF
3/4"	21005-4-12N	1.470	1.215	0.590	0.185	0.310	0.441	0.591	0.055	0.626	0.785	1.000	1.802	0.200	0.200	1 – 20 UNEF
1/4"	21007-4-4N	1.860	1.500	0.797	0.180	0.370	0.500	0.440	0.047	0.125	0.302	0.500	1.510	0.000	0.000	1/2 – 20 UNF
3/8"	21007-4-6N	1.860	1.500	0.797	0.180	0.370	0.500	0.500	0.047	0.251	0.420	0.625	1.770	0.200	0.200	5/8 – 20 UN
1/2"	21007-4-8N	1.860	1.500	0.797	0.180	0.370	0.419	0.591	0.055	0.376	0.574	0.735	1.780	0.200	0.200	3/4 – 20 UNEF
3/4"	21007-4-12N	1.860	1.500	0.797	0.180	0.370	0.441	0.591	0.055	0.626	0.785	1.000	1.802	0.200	0.200	1 – 20 UNEF
1"	21007-4-16N	1.860	1.500	0.797	0.180	0.370	0.600	0.635	0.130	0.876	1.142	1.435	1.955	0.200	0.200	1-7/16 – 12 UN
1/4"	21010-4-4N	2.100	1.800	0.987	0.230	0.340	0.500	0.440	0.047	0.125	0.302	0.500	1.510	0.000	0.000	1/2 – 20 UNF
3/8"	21010-4-6N	2.100	1.800	0.987	0.230	0.340	0.500	0.500	0.047	0.251	0.420	0.625	1.770	0.200	0.200	5/8 – 20 UN
1/2"	21010-4-8N	2.100	1.800	0.987	0.230	0.340	0.419	0.591	0.055	0.376	0.547	0.735	1.780	0.200	0.200	3/4 – 20 UNEF
3/4"	21010-4-12N	2.100	1.800	0.987	0.230	0.340	0.441	0.591	0.055	0.626	0.785	1.000	1.802	0.200	0.200	1 – 20 UNEF
1"	21010-4-16N	2.100	1.800	0.987	0.230	0.340	0.600	0.635	0.130	0.876	1.142	1.435	1.955	0.200	0.200	1-7/16 – 12 UN
1/4"	21012-4-4FN	2.530	2.190	1.220	0.230	0.454	0.500	0.440	0.047	0.125	0.302	0.500	1.624	0.000	0.000	1/2 – 20 UNF
3/8"	21012-4-6FN	2.530	2.190	1.220	0.230	0.454	0.500	0.500	0.047	0.251	0.420	0.625	1.884	0.200	0.200	5/8 – 20 UN
1/2"	21012-4-8FN	2.530	2.190	1.220	0.230	0.454	0.419	0.591	0.055	0.376	0.547	0.735	1.894	0.200	0.200	3/4 – 20 UNEF
3/4"	21012-4-12N	2.530	2.190	1.220	0.230	0.454	0.441	0.591	0.055	0.626	0.785	1.000	1.916	0.200	0.200	1 – 20 UNEF
1"	21012-4-16N	2.530	2.190	1.220	0.230	0.454	0.600	0.635	0.130	0.876	1.142	1.435	2.069	0.200	0.200	1-7/16 – 12 UN
1-1/4"	21012-4-20N	2.530	2.190	1.220	0.230	0.454	0.760	0.820	0.165	1.095	1.430	1.745	2.414	0.150	0.150	1-3/4 – 11.5 UN
1"	21015-4-16N	3.040	2.680	1.500	0.280	0.354	0.600	0.635	0.130	0.876	1.142	1.435	2.069	0.200	0.200	1-7/16 – 12 UN
1"	21020-4-16N	3.800	3.170	2.000	0.340	0.454	0.600	0.635	0.130	0.876	1.142	1.435	2.069	0.200	0.200	1-7/16 – 12 UN
1-1/4"	21020-4-20N	3.800	3.170	2.000	0.340	0.454	0.760	0.820	0.165	1.095	1.430	1.745	2.414	0.150	0.150	1-3/4 – 11.5 UN

[1] All fittings with 1/4" tube connections to have threads up to the flange face. See dimensions M and N.

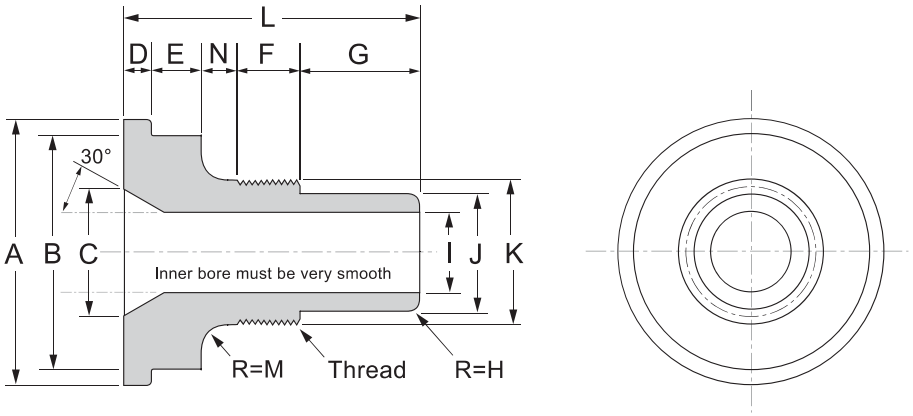

ORDERING EXAMPLE

ChemFlare™ End Connections for Type 21 Ball Valves	21	005	–4	A	8N	–1
Valve Size	**005** – 1/2"	**007** – 3/4"	**010** – 1"	**012** – 1-1/4"		
End Connector	**–4** – for all sizes					
Material	**A** – PVC	**C** – CPVC	**B** – PP	**K** – PVDF		
Tube Size[2]	**4N** – 1/4"	**6N** – 3/8"	**8N** – 1/2"	**12N** – 3/4"	**16N** – 1"	**20N** – 1-1/4"
Tube Nut	**–1** – includes nut		**Blank** – without nut			

Example: Chemline ChemFlare™ End Connectors for Type 21 True Union Ball Valves, 1/2" valve size, PVC, with 1/2" tube size, including nuts.

[2] Tube size must be equal or smaller than the valve size.

CHEMLINE PLASTICS
SUPERIOR FLOW SOLUTIONS

55 Guardsman Road, Thornhill, ON, L3T 6L2, Canada | ISO 9001:2008 Certified
1.800.930.2436 (CHEM) | fax.905.889.8553 | request@chemline.com | chemline.com

ChemFlare™ for SB Series Back Pressure/Relief Valves

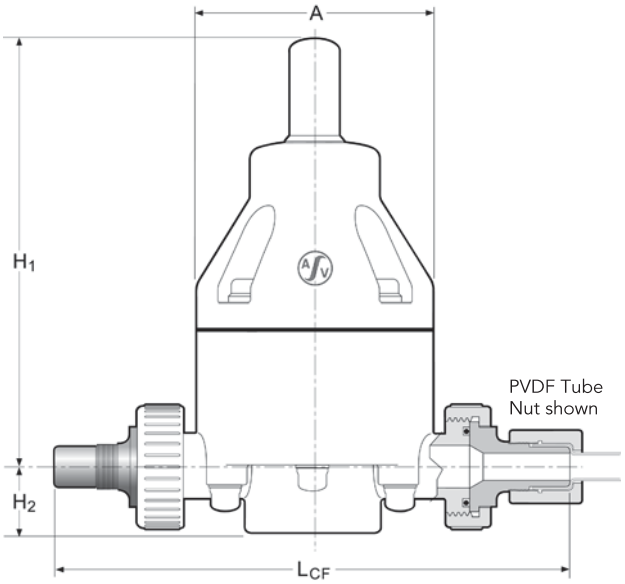

DIMENSIONS INCHES

Valve Size	Tube Size[1]	A	H_1	H_2 PVC	H_2 PP/PVDF	L_{CF}
3/8″	3/8″	3.2	6.9	1.0	0.9	8.20
1/2″	1/4″	3.2	6.9	1.0	0.9	7.74
1/2″	3/8″	3.2	6.9	1.0	0.9	8.26
1/2″	1/2″	3.2	6.9	1.0	0.9	8.34
3/4″	3/4″	4.2	8.0	1.5	1.4	9.72
1″	1″	4.2	8.0	1.5	1.4	10.20
1-1/4″	1-1/4″	5.8	10.3	2.2	2.1	13.25

MAXIMUM PRESSURES PSI

		PVC				PP					PVDF					
Valve Size	Tube Size[1]	20°C 68°F	30°C 86°F	40°C 104°F	50°C 122°F	30°C 86°F	40°C 104°F	50°C 122°F	60°C 140°F	70°C 158°F	30°C 86°F	50°C 122°F	70°C 158°F	80°C 176°F	90°C 194°F	100°C 212°F
1/2″	1/4″	150	105	60	15	150	90	60	37	15	150	100	60	45	30	15
1/2″	3/8″	150	105	60	15	150	90	60	37	15	150	100	60	45	30	15
1/2″	1/2″	150	105	60	15	150	90	60	37	15	150	100	60	45	30	15
3/4″	3/4″	150	105	60	15	150	90	60	37	15	150	100	60	45	30	15
1″	1″	150	105	60	15	150	90	60	37	15	150	100	60	45	30	15
1-1/4″	1-1/4″	150	105	60	15	150	90	60	37	15	150	100	60	45	30	15

Temperature Ranges: PVC 0 to 60°C (32 to 140°F), **PP** –20 to 90°C (–4 to 194°F), **PVDF** –40 to 100°C (–40 to 212°F).

[1] ChemFlare™ ends are available for reduced tube sizes down to 1/4″. Tube nuts are always supplied with end connectors.

SAMPLE SPECIFICATION

1. All Back Pressure/Relief Valves in PVC, PP or PVDF shall be Chemline SB10 or SB11 Series or equal in sizes 1/2″ to 2″. SB10 shall have inlet set pressure range of 3 to 60 psi and SB11 shall have an inlet set pressure range of 7 to 150 psi. SB12 valves shall have an inlet set pressure range of 5 to 150 psi. All valves shall have a maximum inlet pressure rating of 150 psi. Valves shall be suitable for aggressive, clean, non-scaling chemicals.
2. All valves shall have a large PTFE coated control diaphragm to fully open at 10-15% over pressure, provide low hysteresis (“backlash”) and no flutter.
3. Static seals shall be EPDM or FPM (Viton®).
4. End connections shall be ChemFlare™ design for connection to flared PFA tubing.
5. PVC compound shall have an ASTM cell classification 13463-A, with minimum suffix “A” designation for chemical resistance as per ASTM D-1784.
6. All polypropylene material shall conform to ASTM D-4101 PP 0211B67272 material requirements.
7. All PVDF material shall be unpigmented conforming to ASTM D-3222 Type 2 suspension resin material requirements and also with USDA Title 21, Chapter I, Part 177.2510 requirements for contact with food.
8. All valves shall have chemical resistant labels permanently marked with manufacturing number to provide production level traceability.

ChemFlare™ for SB Series Back Pressure/Relief Valves

SB/SR CONNECTOR DIMENSIONS INCHES

Tube Conn.	Item No.	A	B	C	D	E	F	G	H	I	J	K	L	M	N	Thread
1/4"	SB002-17-4N[1]	0.927	0.845	0.250	0.200	0.230	0.500	0.440	0.047	0.125	0.302	0.500	1.370	0.000	0.000	1/2 – 20 UNF
1/4"	SB003-17-4N[1]	0.940	0.865	0.317	0.200	0.250	0.500	0.440	0.047	0.125	0.302	0.500	1.390	0.000	0.000	1/2 – 20 UNF
3/8"	SB003-17-6N	0.940	0.865	0.317	0.200	0.250	0.500	0.500	0.047	0.251	0.420	0.625	1.650	0.200	0.200	5/8 – 20 UN
1/2"	SB003-17-8N	0.940	0.865	0.317	0.200	0.250	0.419	0.591	0.055	0.376	0.547	0.735	1.660	0.200	0.200	3/4 – 20 UNEF
1/4"	SB005-17-4N[1]	1.190	1.080	0.590	0.200	0.250	0.500	0.440	0.047	0.125	0.302	0.500	1.390	0.000	0.000	1/2 – 20 UNF
3/8"	SB005-17-6N	1.190	1.080	0.590	0.200	0.250	0.500	0.500	0.047	0.251	0.420	0.625	1.650	0.200	0.200	5/8 – 20 UN
1/2"	SB005-17-8N	1.190	1.080	0.590	0.200	0.250	0.419	0.591	0.055	0.376	0.574	0.735	1.660	0.200	0.200	3/4 – 20 UNEF
3/4"	SB005-17-12N	1.190	1.080	0.590	0.200	0.250	0.441	0.591	0.055	0.626	0.785	1.000	1.482	0.200	0.200	1 – 20 UNEF
1/4"	SB007-17-4N	1.520	1.410	0.797	0.240	0.250	0.500	0.440	0.047	0.125	0.302	0.500	1.430	0.000	0.000	1/2 – 20 UNF
3/8"	SB007-17-6N	1.520	1.410	0.797	0.240	0.250	0.500	0.500	0.047	0.251	0.420	0.625	1.690	0.200	0.200	5/8 – 20 UN
1/2"	SB007-17-8N	1.520	1.410	0.797	0.240	0.250	0.419	0.591	0.055	0.376	0.547	0.735	1.700	0.200	0.200	3/4 – 20 UNEF
3/4"	SB007-17-12N	1.520	1.410	0.797	0.240	0.250	0.441	0.591	0.055	0.626	0.785	1.000	1.722	0.200	0.200	1 – 20 UNEF
1"	SB007-17-16N	1.520	1.410	0.797	0.240	0.250	0.600	0.635	0.130	0.876	1.142	1.435	2.004	0.200	0.200	1-7/16 – 12 UN
1/4"	SB010-17-4N	1.750	1.630	1.090	0.240	0.310	0.500	0.440	0.047	0.125	0.302	0.500	1.490	0.000	0.000	1/2 – 20 UNF
3/8"	SB010-17-6N	1.750	1.630	1.090	0.240	0.310	0.500	0.500	0.047	0.251	0.420	0.625	1.750	0.200	0.200	5/8 – 20 UN
1/2"	SB010-17-8N	1.750	1.630	1.090	0.240	0.310	0.419	0.591	0.055	0.376	0.547	0.735	1.760	0.200	0.200	3/4 – 20 UNEF
3/4"	SB010-17-12N	1.750	1.630	1.090	0.240	0.310	0.441	0.591	0.055	0.626	0.785	1.000	1.782	0.200	0.200	1 – 20 UNEF
1"	SB010-17-16N	1.750	1.630	1.090	0.240	0.310	0.600	0.635	0.130	0.876	1.142	1.435	2.004	0.200	0.200	1-7/16 – 12 UN
1"	SB012-17-16N	2.223	2.068	1.090	0.240	0.310	0.600	0.635	0.130	0.876	1.142	1.435	2.004	0.200	0.200	1-7/16 – 12 UN

[1] All fittings with 1/4" tube connections to have threads up to the flange face. See dimensions M and N.

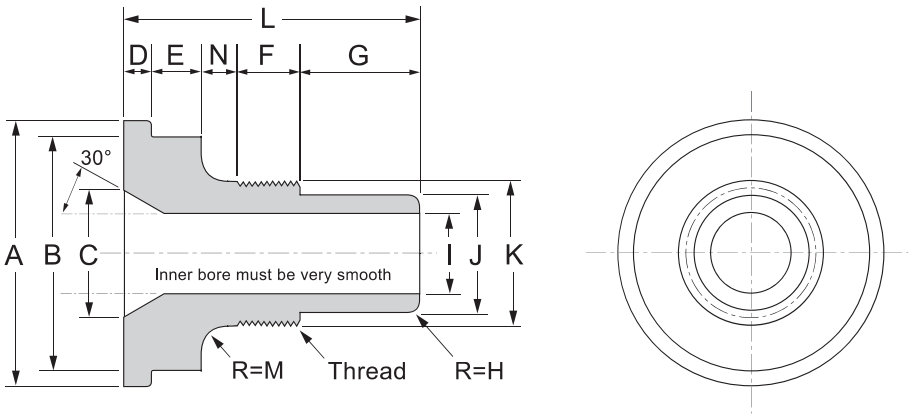

ORDERING EXAMPLE

ChemFlare™ End Connections for SB Series Back Pressure/Relief Valves	SB	005	–17	A	8N	–1
Valve Size	**003** – 3/8" **005** – 1/2" **007** – 3/4" **010** – 1" **012** – 1-1/4"					
End Connector	**–17** – for all sizes					
Material	**A** – PVC **C** – CPVC **B** – PP **K** – PVDF					
Tube Size[2]	**4N** – 1/4" **6N** – 3/8" **8N** – 1/2" **12N** – 3/4" **16N** – 1" **20N** – 1-1/4"					
Tube Nut	**–1** – includes nut **Blank** – without nut					

Example: Chemline ChemFlare™ End Connectors for SB10, SB11 and SB12 Back Pressure Relief Valves, 1/2" valve size, PVC, with 1/2" tube size, including nuts.

[2] Tube size must be equal or smaller than the valve size.

CHEMLINE PLASTICS
SUPERIOR FLOW SOLUTIONS

55 Guardsman Road, Thornhill, ON, L3T 6L2, Canada | ISO 9001:2008 Certified
1.800.930.2436 (CHEM) | fax.905.889.8553 | request@chemline.com | chemline.com

LEFT BLANK

MANUFACTURER INSTALLATION OPERATION AND MAINTENANCE MANUAL

AMARUQ WTP – NUNAVUT

VEOLIA PROJECT: 5000 218 009

CHEMLINE

TYPE SM2, METERING BALL VALVE

LEFT BLANK

PDF Published October 18, 2017

Metering Ball Valves

CHEMLINE PLASTICS
SUPERIOR FLOW SOLUTIONS

Chemline SM Series Metering Ball Valve is designed for fine linear flow control of chemicals or clean fluids. The ball is solid with graduated V-groove cut on the outside surface. Precise linear flow control is accomplished through 180° rotation of the handle. With a positioning electric actuator, this becomes an inexpensive control valve. If higher C_V values are required, refer to SP Series Proportional ball valves.

PVC PP

SERIES: SM2
SIZES: 1/2" – 1"
ENDS: Threaded, Socket, Butt[1] or ChemFlare™ [2]
SEATS: PTFE
O-RINGS: EPDM, FPM (Viton®)

Integral 180° Scale with 5° Increments
- Linear flow control and settable flow rates

features

Precise Linear Flow Control
- Provided by a special V-groove ball and wide handle travel (0° to 180°)

Full Size Range
- 6 valves sizes 1/2" to 2" offers a large selection of C_V values

High End Ball Valve Features
- Full Blocking design
- Double Stem O-Rings for safety
- PTFE seats with elastomer cushion
  - Automatically compensates for seat wear or expansion
- 230 psi pressure rated (PVC)

Low Stem Torques
- Due to floating ball design and cushioned PTFE seats

Bidirectional
- Works with flow in either direction

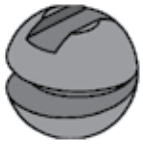

Ball Detail

[1]Butt ends for fusion to Chemline metric PP piping.
[2]For ChemFlare™ end connectors, consult Chemline.

10/17 ©Chemline Plastics Limited 2017
Chemline is a registered trade mark of Chemline Plastics Limited

Metering Ball Valves

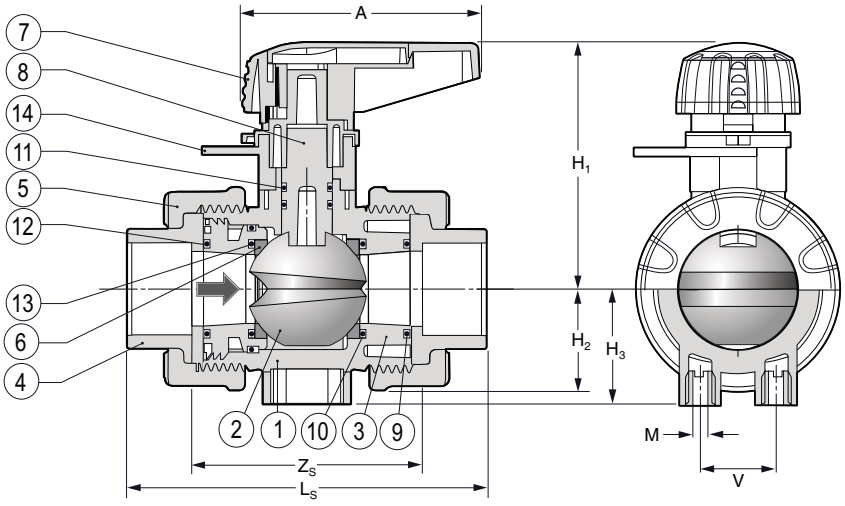

PARTS

No.	Part	Pcs.	Materials
1	Body	1	PVC, PP, PVDF
2	Ball	1	PVC, PP, PVDF
3	Carrier	1	PVC, PP, PVDF
4	End Connector	2	PVC, PP, PVDF
5	Union Nut	5	PVC, PP, PVDF
6	Ball Seat	2	PTFE
7	Handle	1	PVC
8	Stem	1	PVC, PP, PVDF
9	Carrier Face O-Ring	1	EPDM, FPM(Viton®)
10	Carrier O-Ring	1	EPDM, FPM(Viton®)
11	Stem O-Ring[1]	2	EPDM, FPM(Viton®)
12	Face O-Ring	1	EPDM, FPM(Viton®)
13	Seat Cushion[1]	2	EPDM, FPM(Viton®)
14	Position Indicator Scale	1	PVC

DIMENSIONS INCHES

							PVC			PP		
Size	A	H_1	H_3	H	M	V	Z_s	L_s	H_2	Z_s	L_s	H_2
1/2″	2.62	2.48	1.10	2.50	M5	0.98	2.48	3.74	0.99	2.64	3.74	1.06
3/4″	3.21	3.03	1.20	2.70	M5	0.98	2.83	4.33	1.16	3.03	4.29	1.18
1″	3.21	3.39	1.60	3.00	M6	1.02	3.11	4.84	1.39	3.27	4.69	1.57

ELECTRICALLY OR PNEUMATICALLY ACTUATED

The metering ball valve becomes a proportional control valve with the addition of a Q or E Series electric or P Series pneumatic actuator with 4-20 mA positioner

- Thermoplastic housing and mounting bracket
- Manual override
- Position indication
- Mechanical travel stops
- Different voltages are available

Q Series Electric

E Series Electric

P Series Pneumatic

E Series Electric Actuator on a SM2 Valve

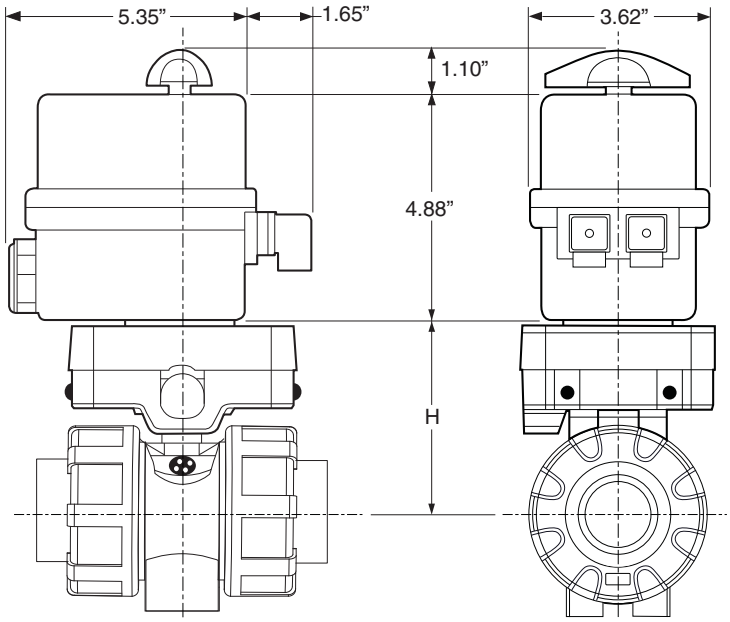

Side View

Port View

Metering Ball Valves

WORKING PRESSURES PSI

NET WEIGHTS LB. Cv VALUES

Size	PVC 20°C 68°F	PVC 40°C 104°F	PVC 60°C 140°F	PP 20°C 68°F	PP 40°C 104°F	PP 60°C 140°F	PP 80°C 176°F	PVC	PP	USGPM Flow at 1 psi △P
1/2″	230	130	30	150	100	65	20	0.35	0.29	1.4
3/4″	230	130	30	150	100	65	20	0.60	0.44	1.9
1″	230	130	30	150	100	65	20	0.84	0.64	2.3

Temperature Ranges: PVC 0 to 60°C (32 to 140°F), PP 0 to 95°C (32 to 203°F)

Cv VALUE vs. VALVE OPENING

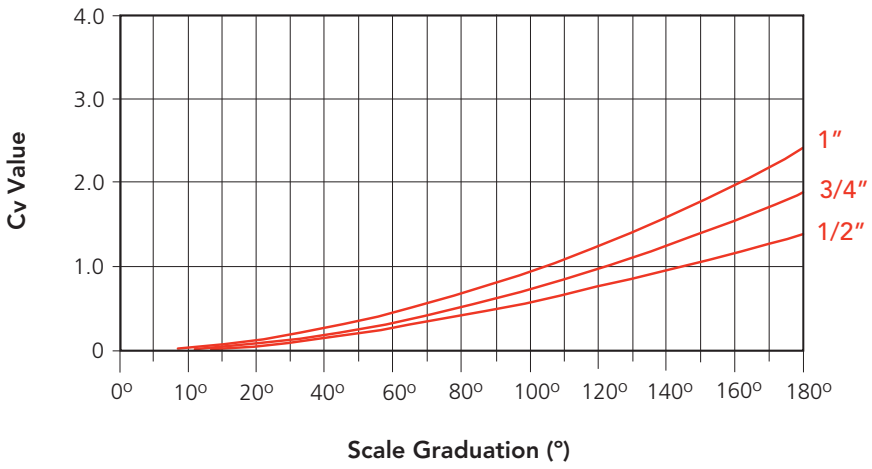

SAMPLE SPECIFICATION

1. All low flow control valves, 1/2″ to 1″, will be Chemline SM Series metering ball valves.
2. Body material will be PVC or PP, and o-rings will be EPDM or FPM (Viton®).
3. Body will be full blocking design with double stem o-rings for safety, rated at 230 psi maximum working pressure for PVC and 150 psi for PP material.
4. Ball will be floating design, molded solid with a V-groove for linear flow control over a 180° range of handle rotation.
5. Seats will be PTFE with elastomer cushions for positive closure with minimum stem torques and automatic compensation for seat wear and expansion.
6. Position indicating scale will be 0° to 180° with 5° increments for fine flow control and settable flow rates.
7. End connections will be 1/2″ to 1″ ANSI socket or FNPT threaded or 150 lb flanged or butt fusion for Chemline metric PP pipe or ChemFlare™ for PFA tubing.

ORDERING EXAMPLE

Chemline Metering Ball Valves	SM2	A	010	E	S
Valve Material	**A** – PVC	**B** – PP			
Size	**005** – 1/2″	**007** – 3/4″	**010** – 1″		
Seals	**E** – EPDM	**V** – FPM (Viton®)			
Ends	**S** – Socket	**T** – Threaded	**B** – Butt[1]	**CF** – ChemFlare™	

Example: SM2 Series Ball Valve, PVC, 1″, EPDM seals, socket ends.

[1] PP metric butt fusion ends (1/2″ to 2″) connect to Chemline PP piping systems.

VACUUM RATING

- 29.9 inches mercury

OPTIONS & ACCESSORIES

- **Reduced Ends**
- **Electric or Pneumatic Actuator with Positioner**
  – Operates as a linear control valve

55 Guardsman Road, Thornhill, ON, L3T 6L2, Canada | ISO 9001:2008 Certified
1.800.930.2436 (CHEM) | fax.905.889.8553 | request@chemline.com | chemline.com

LEFT BLANK

CHEMLINE

SERIES BT-BC-FV-FT, BALL CHECK AND FOOT VALVES

LEFT BLANK

CHEMLINE Plastics Limited

Your Pipeline To Quality Valves, Strainers, Flowmeters and Controls

55 Guardsman Road
Thornhill, Ontario
L3T 6L2
Canada
Tel: 905-889-7890
Fax: 905-889-8553

MAINTENANCE INSTRUCTIONS
For Chemline Ball Check Valves and Ball Foot Valves Sizes 1/2" to 4"

Maintenance

Refer to dwg. **APR-050** or **ASSEMBLY DRAWING BC-003 rev.0** and proceed as follows:

1. Loosen union nut (5) and remove valve from line.
   (Note: make sure there is no pressure in line prior to removing valve.)

2. **Important** Hold seat/seal (3) in place while removing valve, as the seat, stop ring (6) and ball (2) may fall out.

3. Remove seat (3), stop ring (6) and ball (2). Inspect for excessive wear. The ball should not show signs of wear or deformation.

4. When re-installing ball (2), stop ring (6) and seat (3), check inside body for any foreign debris that may have become lodged in the valve.

5. Replace union nut (5) and tighten.

6. For Foot Valves with strainer baskets, remove basket (7) and clean thoroughly.

FLANGE END

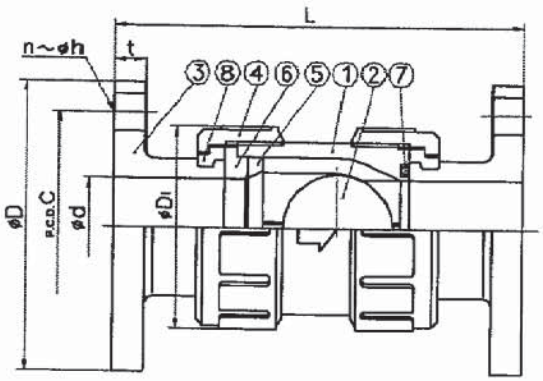

THREAD CONNECTION

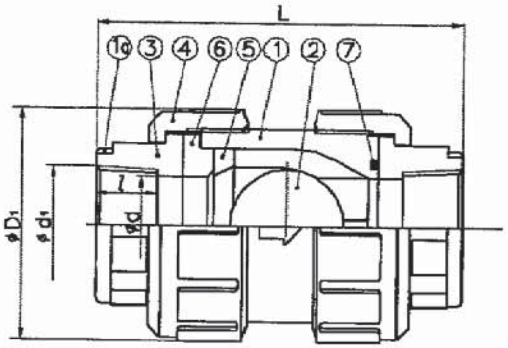

SOCKET CONNECTION

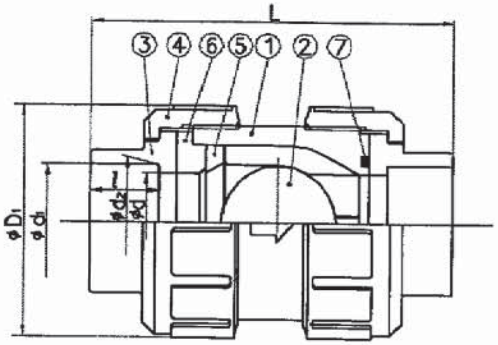

DIMENSIONS TABLE

NOMINAL SIZE		FLANGE □ ANSI 150LBS □ ANSI 125LBS						□ THREAD				
		D	C	n	h	L	t	d_1	l	L	d	D_1
½"	15	3.50	2.38	4	0.63	5.12	0.47	½– 14 NPT	0.59	3.39	0.59	1.89
¾	20	3.86	2.76	4	0.63	6.10	0.55	¾– 14 NPT	0.67	4.06	0.79	2.36
1	25	4.25	3.13	4	0.63	6.50	0.55	1 – 11½NPT	0.79	4.45	0.98	2.76
1¼	30	—	—	—	—	—	—	1¼– 11½NPT	0.87	5.00	1.22	3.78
1½	40	5.00	3.88	4	0.63	7.56	0.63	1½– 11½NPT	0.98	5.94	1.57	3.78
2	50	5.98	4.74	4	0.75	8.43	0.63	2 – 11½NPT	1.10	6.97	2.01	4.17

Part No. _____
Body Material _____
Elastomer Material _____
End Connection _____

UNIT: inch

NOMINAL SIZE		SOCKET															
		PVC . C–PVC								PVDF				PVDF,PP			
		□ ANSI SCH 40				□ ANSI SCH 80				□ ANSI				□ IPS			
		d_1	d_2	l	L	d_1	d_2	l	L	d_1	d_2	l	L	d_1	d_2	l	L
½"	15	0.848	0.836	0.688	3.43	0.848	0.836	0.875	3.80	0.825	—	0.890	3.83	0.831	—	0.625	3.31
¾	20	1.058	1.046	0.719	3.86	1.058	1.046	1.000	4.41	1.030	—	1.015	4.49	1.041	—	1.000	4.43
1	25	1.325	1.310	0.875	4.37	1.325	1.310	1.125	4.88	1.300	—	1.140	4.98	1.305	—	0.815	4.35
1¼	30	1.670	1.655	0.938	4.92	1.670	1.655	1.250	5.55	1.650	—	1.265	5.58	—	—	—	—
1½	40	1.912	1.894	1.094	5.94	1.912	1.894	1.375	6.50	1.890	—	1.390	6.57	1.889	—	1.250	5.57
2	50	2.387	2.369	1.156	6.77	2.387	2.369	1.500	7.44	2.360	—	1.515	7.57	2.364	—	1.250	6.49

NOTE. The shape and appearance of assembly differ a little with nominal size compared to this drawing.

Customer _____
Customer PO# _____
Chemline PS# _____

No.	DESCRIPTION	No.REQ'D	MATERIAL	REMARKS
1a	RING	2	STAINLESS STEEL (SUS304)	C-PVC body/thread connection used for ½"~1"
8	STOP RING (B)	2	PVDF	used for Flange end
7	O–RING	1	□EPDM, □FPM	
6	SEAT RING	1	□others( )	
5	STOP RING (A)	1	□ PVC	
4	UNION NUT	2	□ C–PVC	
3	END CONNECTOR	2	□ PP	
2	BALL	1	□ PVDF	
1	BODY	1		

TRUE UNION BALL CHECK VALVE ASS'LY
□FLANGE END, □SOCKET CONNECTION, □THREAD CONNECTION
ANSI : ½ ~ 2"

DRAWN	LC	DATE	SCALE
CHECKED		09/28/99	~
APPROVED		DRAWING No APR–050	△

CHEMLINE PLASTICS LTD.

CHEMLINE

TYPE 57, BUTTERFLY VALVE

LEFT BLANK

Serial No.	H-V036E-4

Butterfly Valves

Type 57 : 40mm(1 1/2") - 350mm(14")
Type 56 : 400mm(16")

User's Manual

Contents

(1) General Operating Instructions 1

(2) General Instructions for Transportation, Unpacking and Storage 1

(3) Names of Parts 2

(4) Comparison between Working Temperature and Pressure 4

(5) Installation Procedure 5

(6) Operating Procedure 8

(7) Disassembly and Assembly Procedure for Parts Replacement 10

(8) Installation Procedure for Handle 12

(9) Adjustment Procedure for Stopper on Gear Type 13

(10) Inspection Items 13

(11) Troubleshooting 14

(12) Handling of Residual and Waste Materials 14

(13) Inquires 15

ASAHI AV VALVES

(1) General Operating Instructions

Operate the valve within the pressure vs. temperature range.
The valve can be damaged by operating beyond the allowable range.
Select a valve material that is compatible with the media, refer to "CHEMLINE CHEMICAL RESISTANCE GUIDE".
Some chemicals may damage incompatible valve materials.
Do not use the valve on condition that fluid has crystallized.
(The valve will not operate properly.)
Do not step on the valve or apply excessive weight on valve. (It can be damaged.)
Do not exert excessive force in closing the valve.
Make sure to consult a waste treatment dealer to dispose of the valves.
(Poisonous gas is generated when the valve is burned improperly.)
Allow sufficient space for maintenance and inspection.
Keep the valve away from excessive heat or fire. (It can be deformed, or destroyed.)
Do not change or replace valve parts under line pressure.
The valve is not designed to bear any kind of external load. Never stand on or place anything heavy on the valve at anytime.
Using a positive-pressure gas with our plastic piping may pose dangerous condition due to the repellent force peculiar to compressed fluids, even when the gas is under the same pressure as water. Therefore, be sure to take the necessary safety precautions such as covering the piping protective material. For inquiries, please contact us.

(2) General Instructions for Transportation, Unpacking and Storage

Keep the valve in its original packaging until needed for installation.
Avoid contact with any coal tar creosote, insecticides, vermicides or paint.
The force of swelling may damage the valve.
The valve is not designed to handle any kind of impact. Avoid throwing or dropping the valve.
Avoid scratching the valve with any sharp object.

(3) Parts description

Type57: 40mm (1-1/2") – 350mm (14")

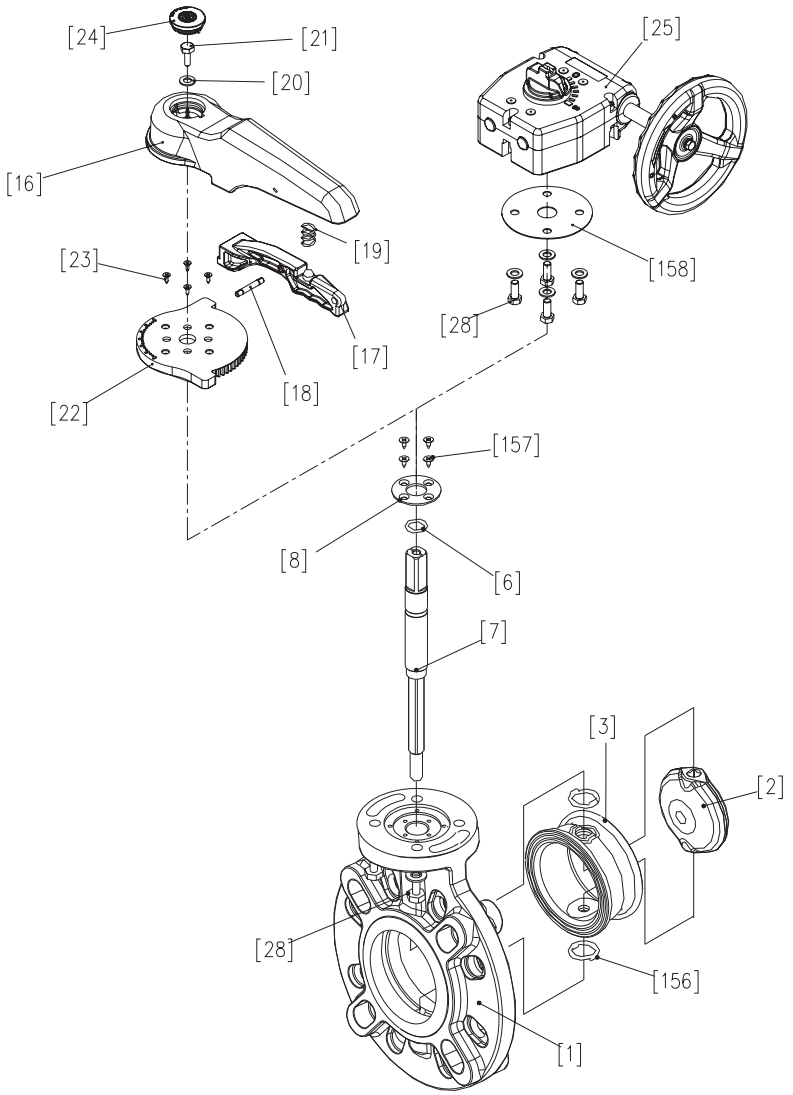

No.	Description	No.	Description	No.	Description
[1]	Body	[17]	Handle Lever	[24]	Cap (A)
[2]	Disc	[18]	Pin	[25]	Gear Box
[3]	Seat	[19]	Spring	[28]	Bolt (C)
[6]	O-Ring (C)	[20]	Washer (A)	[156]	Stabilization Ring
[7]	Stem	[21]	Bolt (A)	[157]	Screw (F)
[8]	Stem Holder (A)	[22]	Locking Plate	[158]	Gasket (L)
[16]	Handle (A)	[23]	Screw (B)		

Type56 (Gear Type): 400mm (16")

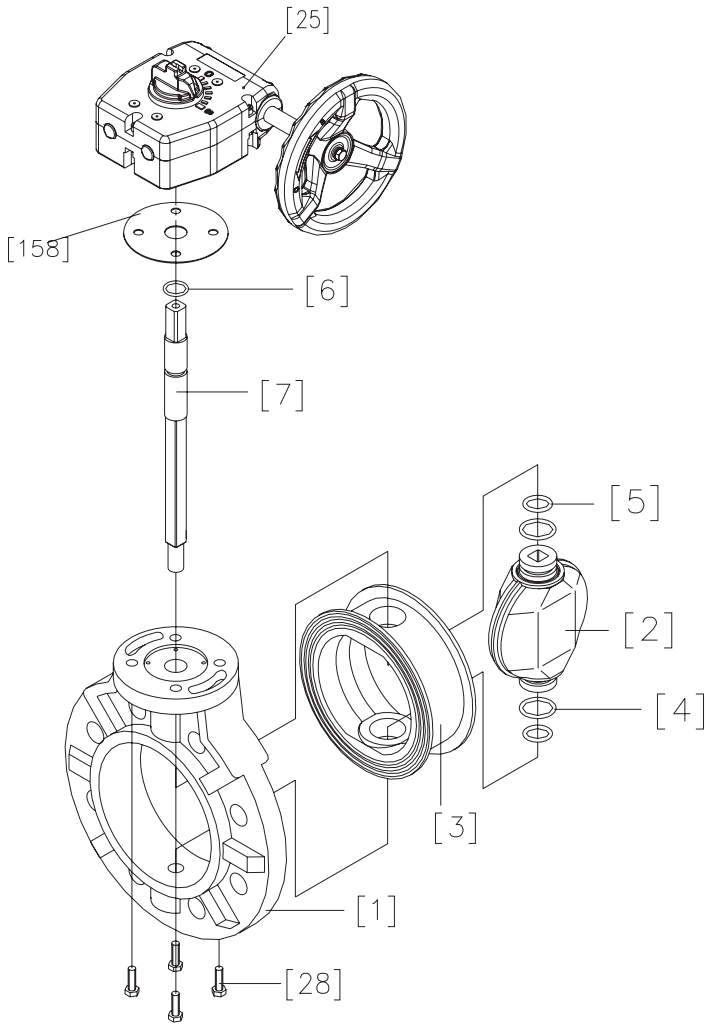

No.	Description	No.	Description	No.	Description
[1]	Body	[5]	O-Ring (B)	[28]	Bolt (C)
[2]	Disc	[6]	O-Ring (C)	[158]	Gasket (L)
[3]	Seat	[7]	Stem		
[4]	O-Ring (A)	[25]	Gear Box		

(4) Working Temperature vs. Pressure

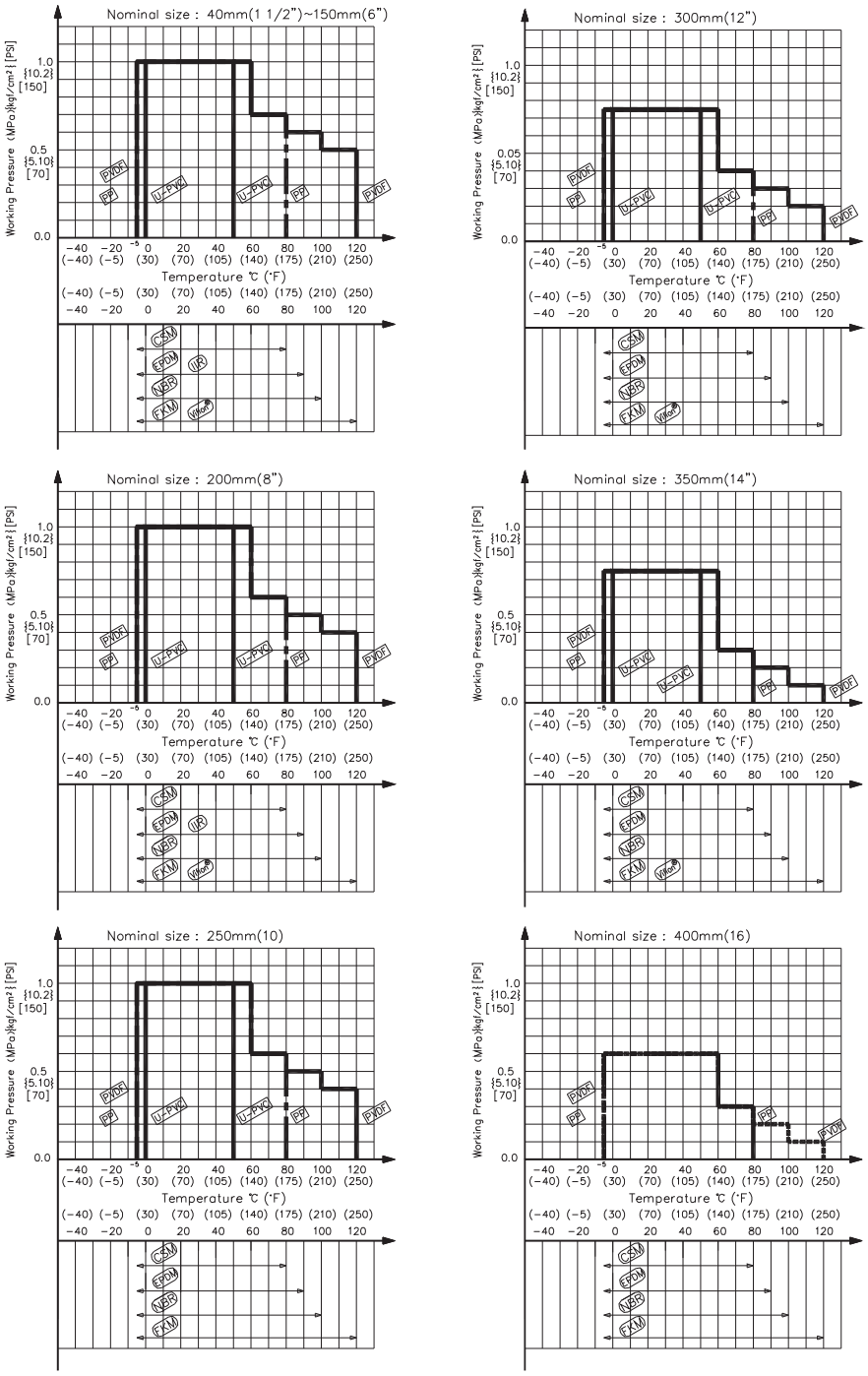

Caution

Do not operate the valve beyond the range of working temperature and pressure.
(The valve can be damaged.)

(5) Installation Procedure

⚠ Caution

1) The valve disc is sent in the position indicated by. solid lines in Fig. 5-1 prior to shipment from the factory. If the valve is opened or closed after unpacking, it must be reset in this position before installation. Failure to do so will result in damage to the surface of the valve seat during handling and installation.
2) The valve most not be dropped or thrown against other objects, since the sealing surface of the disc and the sealing surface of the valve seat may easily be damaged.
3) Care must be used during piping installation to ensure that the pipes or flanges are properly aligned so that the valve disc does not contact them in any setting. Misalignment as in Fig.5-2 will result in damage to the valve.
4) The installed valve must never be opened or closed when foreign matter such as sand is present in the pipeline.

Fig. 5-1

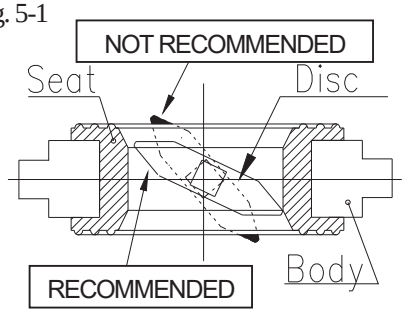

Fig. 5-2

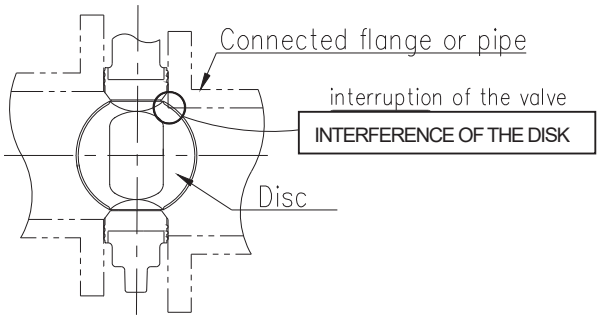

In case of the thick wall of the connection part (flange and pipe) is too thick, shave the flange or the pipe inside in order to avoid the contact of pipe and disc. If inside diameter of the connection part is larger than size D, shaving is not necessity.

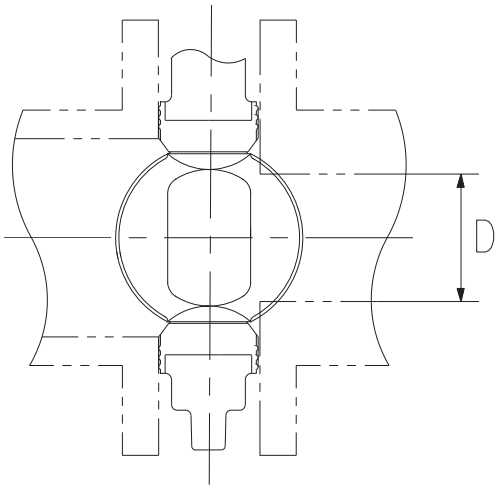

Nominal Size	Diameter D
40mm (1 1/2”)	30mm (1.18”)
50mm (2”)	44mm (1.73”)
65mm (2 1/2”)	67mm (2.64”)
80mm (3”)	71mm (2.80”)
100mm (4”)	90mm (3.54”)
125mm (5”)	115mm (4.53”)
150mm (6”)	136mm (5.35”)
200mm (8”)	179mm (7.05”)
250mm (10”)	237mm (9.33”)
300mm (12”)	289mm (11.38”)
350mm (14”)	340mm (13.39”)
400mm (16”)	370mm (14.57”)

Necessary items

- Torque Wrench
- Spanner Wrench

Procedure

Caution

The disk [2] is prevented from overflowing. (The disk [2] is damaged.)

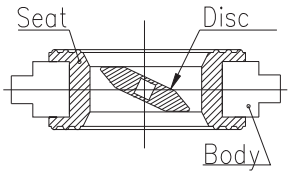

1) Install the valve between flanges and open the valve slightly.
2) Insert bolts, set nuts and washer and tighten the bolts and nuts temporarily by hand.

Caution

When you insert a valve between flanges, please insert after extending the fields of flanges fully.
(If you insert a valve by force without fully extending fields of flanges, a liner may be turned over and suffer a crack..)

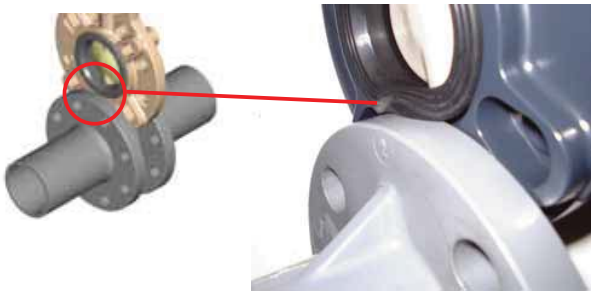

The parallelism and axial misalignment of the flange surface should be under the values shown in the following table to prevent damage the valve. (A failure to observe them can cause destruction due to stress application to the pipe)

Unit : mm (inch)

Nom. Size	Axial Misalignment	Parallelism (a – b)
40 - 80mm (1 1/2”-3”)	1.0 (0.04)	0.8 (0.03)
100-150mm (4”-6”)	1.0 (0.04)	1.0 (0.04)
200-400mm (8”-16”)	1.5 (0.06)	1.0 (0.04)

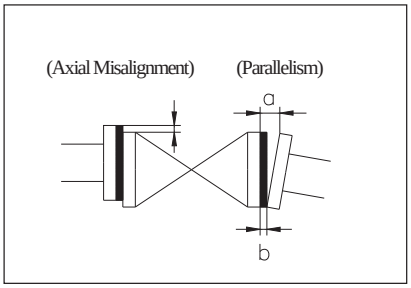

3) Tighten the bolts and nuts gradually with torque wrench to the specified torque in a diagonal manner. (Refer to Fig. 5-3)

Recommended torque value Unit N-m kgf-cm [lb-inch]

Nom. Size	40mm (1 1/2”)	50, 65mm (2”,2 1/2”)	80, 100 mm (3”,4”)
Torque value	20.0 {204} [177]	22.5 {230} [200]	30.0 {306} [266]

Fig. 5-3

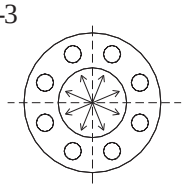

Nom. Size	125, 150 mm (5”,6”)	200, 250 mm (8”,10”)	300, 350 mm (12”,14”)	400 mm (16”)
Torque value	40.0 {408} [355]	55.0 {561} [488]	60.0 {612} [532]	80.0 {816} [710]

Caution : Avoid excessive tightening. (The valve can be damaged.)

<JIS Standard>

Dimension of Insert Bolt A

Nom. Size		Bolt (Minimum)			Nut	Washer
		d	L	S		
40mm	1 1/2”	M16	125mm (4.92”)	35mm (1.38”)	M16	16mm (0.63”)
50mm	2”		125mm (4.92”)			
65mm	2 1/2”		130mm (5.12”)			
80mm	3”		130mm (5.12”)			
100mm	4”		145mm (5.71”)			
125mm	5”	M20	165mm (6.50”)	40mm (1.57”)	M20	20mm (0.79”)
150mm	6”		175mm (6.89”)			
200mm	8”		190mm (7.48”)			
250mm	10”	M22	220mm (8.66”)		M22	22mm (0.87”)
300mm	12”		245mm (9.65”)			
350mm	14”		250mm (9.82”)			
400mm	16”	M24	300mm (11.81”)	45mm (1.77”)	M24	24mm (0.94”)

Dimension of Insert Bolt B

Nom. Size		Bolt (Minimum)				Nut	Washer
		$_1$	L_1	S_1	S_2		
400mm	16”	M24	120mm (4.72”)	45mm (1.77”)	27mm (1.06”)	M24	24mm (0.94”)

<ANSI Standard>

Dimension of Insert Bolt A

Nom. Size		Bolt (Minimum)			Nut	Washer
		d	L	S		
40mm	1 1/2”	5/8”-11	125mm (4.92”)	35mm (1.38”)	5/8” - 11	5/8” Flat (0.63”)
50mm	2”		125mm (4.92”)			
65mm	2 1/2”		130mm (5.12”)			
80mm	3”		130mm (5.12”)			
100mm	4”		145mm (5.71”)			
125mm	5”	3/4" - 10	165mm (6.50”)	40mm (1.57”)	3/4" - 10	3/4" Flat (0.79”)
150mm	6”		175mm (6.89”)			
200mm	8”		190mm (7.48”)			
250mm	10”	7/8” - 9	220mm (8.66”)		7/8” - 9	7/8” Flat (0.87”)
300mm	12”		245mm (9.65”)			
350mm	14”		250mm (9.82”)			
400mm	16”	1” - 8	300mm (11.81”)	45mm (1.77”)	1” - 8	1” Flat (0.94”)

Dimension of Insert Bolt B

Nom. Size		Bolt (Minimum)				Nut	Washer
		$_1$	L_1	S_1	S_2		
400mm	16”	1” - 8	120mm (4.72”)	45mm (1.77”)	27mm (1.06”)	1” - 8	1” Flat (0.94”)

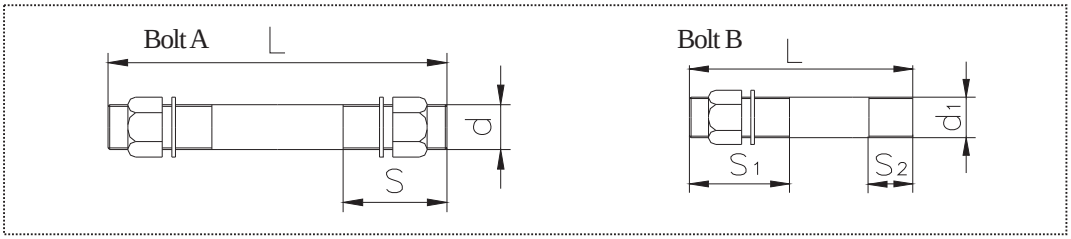

Caution

The gasket is unnecessary. (The seat [3] carries out the role of the gasket.)

(6) Operating Procedure

Caution

The lever operation and the steering wheel operation are done by the hand.

1) Open and close the valve by turning handle smoothly.
   Turn clockwise to close and counterclockwise to open.
2) In case of lever type (40-200 mm{1 1/2”-8”}), the direction of handle is same as the disc as shown in Fig. 6-1.
   For the full-shut (Close) position, the handle is perpendicular to the piping axis direction.
   For the full-opened position, the handle is parallel to the piping axis direction.

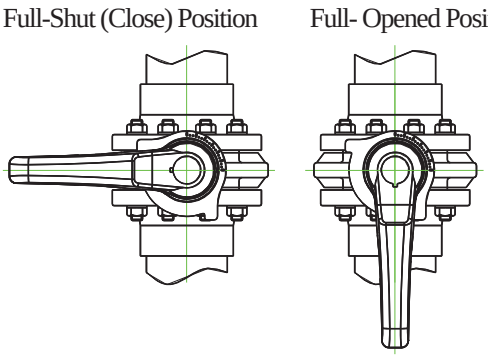

Fig. 6 – 1

3) In case of gear type (40-400 mm {1 1/2”-16”}), the indicator shows the position of the disc on the top of gear box. (Fig.6-2)
   For the full-shut (close) position, the indication shows Shut (S).
   For the full-opened position, the indication shows Open (O).

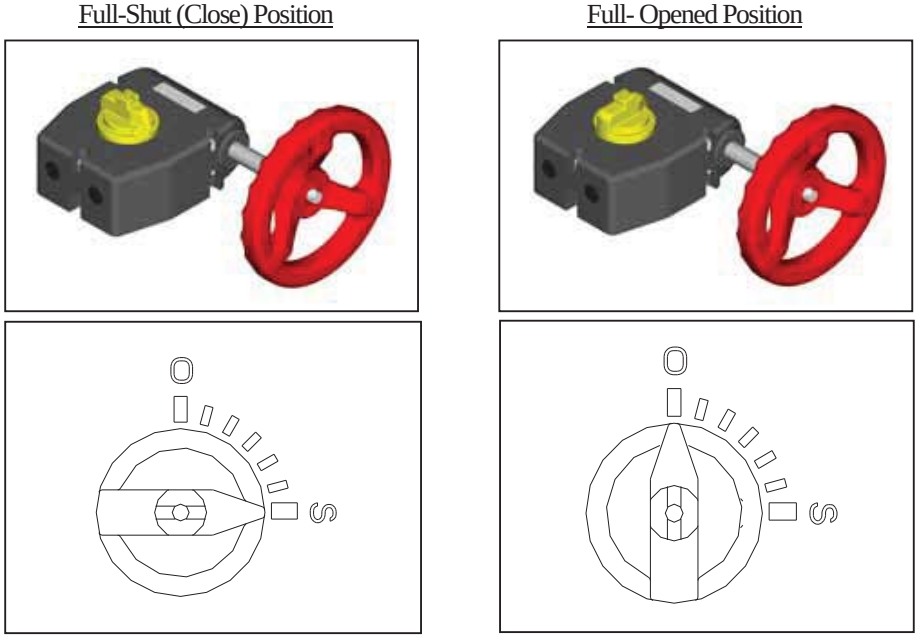

Fig. 6 – 2

Technical Data for Operation

Nom. Size	Stem Torque (N m)		Required Hand-Wheel Torque (N m)		Length of Lever and Diameter of Handle (mm)		Required Operating Force (N)	
	Peak	Seal	Peak	Seal	Lever	Gear	Lever	Gear
40mm (1 1/2")	5	5	0.4	0.4	220	80	23	5.0
50mm (2")	10	10	0.8	0.8	220	80	46	10
65mm (2 1/2")	15	15	1.2	1.2	220	80	68	15
80mm (3")	20	20	1.7	1.7	250	80	80	22
100mm (4")	30	30	2.5	2.5	250	80	120	32
125mm (5")	65	40	5.4	3.3	320	80	125	42
150mm (6")	85	65	7.0	5.4	320	80	205	68
200mm (8")	190	165	16	13	420	80	395	163
250mm (10")	300	250	25	21	-	80	-	263
300mm (12")	370	330	25	22	-	150	-	147
350mm (14")	420	400	28	27	-	150	-	180
400mm (16")	930	780	63	53	-	150	-	353

Note : Data mentioned in the table above is reference only.

These data are measured in standard condition and it slightly differs depending on conditions.

(7) Disassembly and Assembly Procedure for Parts Replacement

Necessary items

- Protective Gloves
- Goggles
- Spanner Wrench
- Vise
- Grease (Silicone)
- Square Lumber
- Circular Stick (Plastic or Wood)
- Pressing Machine
- Hammer
- Screw Driver (+)
- Screw Driver (–)

Caution

Wear protective gloves and goggles in case some dangerous fluid remains in the valve body.
(You might be injured by working without them.)
The handle part can be removed with line pressure present. The locking plate [22] can't be removed with line pressure present. If locking plate [22] needs to be removed, there can not be line pressure present.

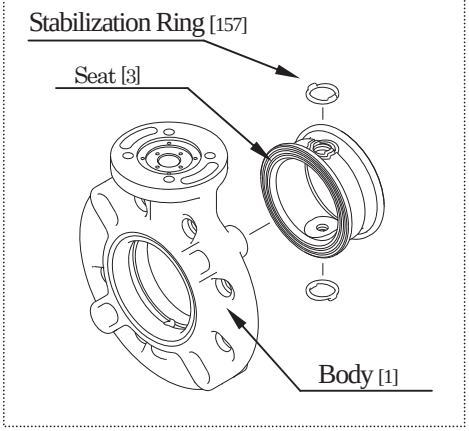

<< Disassembly >>

Procedure

1) Drain fluid completely from the pipeline.
2) Leave the valve slightly opened.
3) Loosen the connecting bolts and nuts.
4) Remove the valve from the pipeline.

Lever Type <Nominal size 40mm-200mm (1 1/2"-8")

5) To remove handle[16], first take off the cap [24] by using screw driver (–) and release bolt [21] by using socket wrench, then pull up the handle [16] while holding handle lever[17].
6) To take off locking plate [22], release 4 self-tapping screws [23] by using screw driver(+) and take off stem holder[8].

Gear Type <Nominal size 40mm-400mm (1 1/2"-16")

5) Loosen set bolt [28] for gear box [25] and pull off the gear box upward with gasket [158].
6) <Nominal size 40mm-350mm (1 1/2"-14") *It advances 400mm (16") as follows.>
To take off stem holder [8]. Release 4 tapping screws [157] by using screw driver (+).

Lever & Gear Type

7) Hold flat surface of Stem [7] with vise and pull off valve body[1].
8) (A) Set the valve body [1] on square lumbers at edges of valve body on the press and put a lumber on the disc[2].
Operate the press slowly and push disc [2] and seat [3] out if the valve body[1].
(B) Set the valve body [1] on square lumbers at edges of valve body and put a circular stick on the disc[2].
Strike the circular stick with a hammer and remove disc [2] and seat [3] out of the valve body[1].
9) Set the disc [2] parallel to the working desk to half opened position. Push the seat[3], and remove the disc[2].
10) <Nominal size 40mm-350mm (1 1/2"-14") *It advances 400mm (16") as follows.>
Remove the stabilization ring [156] and the O-ring(C) [6]from the stem[7].

<< Assembly >>

Procedure

1) Put the O-ring(C) [6]onto the stem[7].
2) Before starting assembly, grease (Silicone) should be spread on the top and bottom disc[2], the stem hole of the seat [3] and the stem O-ring(C)[6].
3) <Nominal size: 40mm-350mm(1 1/2”-14”) *It advances 400mm (16”) as follows.>
   Insert the stabilization ring [156] into the upper side slot of the seat [3]. The upper side slot of seat [3] has larger stem hole than lower side.

⚠ Caution

Make certain tabs are properly aligned. Both upper and lower stabilization ring [156] are identical.

4) Insert the stem [7] about 1/3 into the body [1]. Install the seat [3] into the body [1] by aligning upper seat stem hole with the stem [7].
5) Collapse the left or right side of seat [3] in towards opposing side exposing lower stem hole by screw driver (–).
   <Nominal size: 40mm-350mm (1 1/2”-14”) *It advances 400mm (16”) as follows.>
   Install the stabilization ring [156] into the body [1] aligning tabs of ring with center groove of the body [1]. Seat [3] tabs should line up when bottom of seat is reset into body of valve.
6) Remove the stem [7].
7) Reset the seat [3] into the body [1].

⚠ Caution

<Nominal size: 40mm-350mm(1 1/2”-14”) *It advances 400mm (16”) as follows.>
Make certain stabilization rings [156] sit flush inside of seat [3] with tabs properly aligned. If stabilization rings [156] are not installed correctly, the seat [3] will not sit in the body [1] properly. This is indicated by a visible gap between seat [1] and body [1], and disc [2] will not fit properly.

8) To install disc [2], make certain valve size on disc [2] is in upright direction. Install top of disc [2] into seat [3] aligning with upper stem hole.
9) Rotate disc [2] to 75% (Approx.) closed position and install stem [7] about 50% into the body [1].
10) Press in bottom of disc [2] to lower stem hole.

⚠ Caution

Look into valve body [1] to be certain full square in disc [2] is centered with upper valve [1] stem hole. If not, repeat step 8), 9), and 10).
Make certain line scribed on top of stem [7] indicates disc [2] position while installing stem [7].

11) Install the stem [7] into valve body [1] and disc [2]. If disc [2] is properly aligned, stem [7] should slide in smoothly. If stem [7] does not slide in smoothly, report from step 8) to properly align the disc [2] in the valve body [1].
12) <Nominal size: 40mm-350mm(1 1/2”-14”) *It advances 400mm (16”) as follows.>
    Install stem holder [8] onto valve body [1] with countersunk holes facing up using 4 screws [157].
13) To install lever or gear operator reverse disassembly procedure #5).
14) After assembly, make sure that the valve can be fully opened and closed smoothly.

(8) Installation procedure for handle

Necessary items

- ●Plastic Hammer
- ●Socket Wrench
- ●Screw Driver
- ●Goggles
- ●Protective Gloves

⚠ Caution

Do not give any unjust force to cap, in installing or removing the cap.
It can be damaged

Installation

Procedure

1) Install the handle on the stem. Set the direction of handle in the indication line at the top of stem.
2) Fix the handle at the top of stem with the attached bolts and washer by using socket wrench.
3) Set the convex part at the side of the cap and the concave of the handle, and set in the cap by striking lightly by using a plastic hammer.

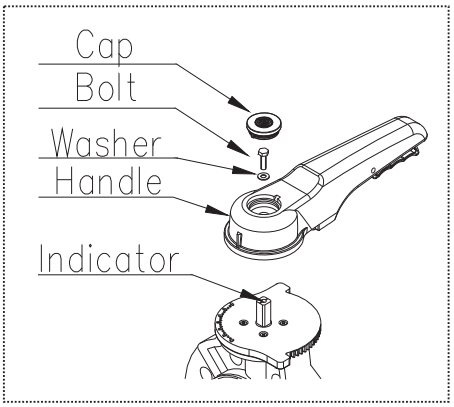

Nominal Size	40-100mm (1 1/2”-4”)	125-200mm (5”-8”)
Bolt Size	M6×15L	M8×15L
Socket Size	10	13

Remove

Procedure

1) To remove the cap, push up the side of the cap by using a screw driver
2) Loose the bolts and washer by using a socket wrench, then remove the handle.

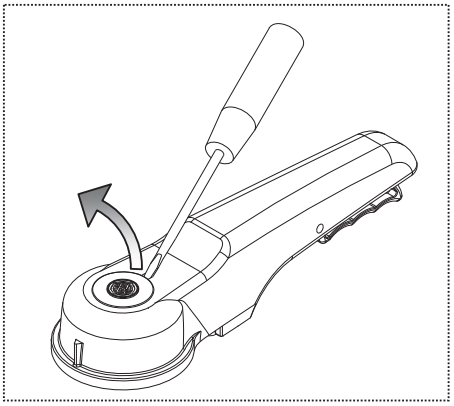

(9) Adjustment Procedure for Stopper Gear Type

Necessary Items

- Hexagon Wrench

The adjustments for full-opened and full-shut position are step-less, and it can be done with the stopper adjuster.

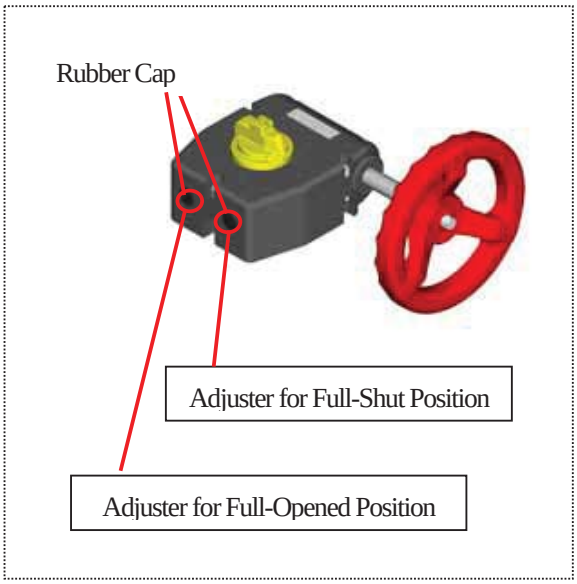

Adjustment for Full-shut (Full-opened) position

1) Remove the rubber cap of Full-closing (Full-opening) adjuster.
2) Loosen the first stopper hex-bolt completely by Hex. Wrench.
3) Adjust the disc of valve to required position.
4) Tighten the stopper hex-bolts.
5) Put the rubber cap of Full-closing (Full-opening) adjuster back on gearbox.

(10) Inspection Items

Inspect the following items.

(1)	Check for flaw, crack, or deformation on the valve.
(2)	Check for leaks to the outside.
(3)	Check for the deformation of seat due to improper installation of valve.
(4)	Check for the smoothness of handle operation..

(11) Troubleshooting

Phenomenon	Cause	Treatment
Fluid is not stopped in the full closed position at the seat.	1) The stopper is not set correctly. 2) The seat is damaged or worn. 3) Foreign materials are caught. 4) The disc is damaged or worn. 5) The connecting bolts are over tightened or tightened unevenly.	Adjust the stopper. Replace the seat. Clean it up. Replace the disc. Adjust and retighten.
Fluid leaks to the outside.	1) The seat is damaged or worn. 2) The connecting bolts are not tightened in proper torque or evenly.	Replace the seat. Adjust and retighten.
The handle does not work smoothly.	1) Foreign materials have adhered. 2) The gear box is damaged. 3) The connecting bolt is over tightened.	Clean it up. Repair or replace. Adjust and retighten.
Valve does not operate	1) The gear box is damaged 2) The stem is damaged.	Repair or replace. Replace the stem.

(12) Handling of Residual and Waste Materials

⚠ Caution

Make sure to consult waste treatment dealer to dispose valves.
(Poisonous gas is generated when the valve is burned improperly.)

LEFT BLANK

MANUFACTURER INSTALLATION OPERATION AND MAINTENANCE MANUAL

AMARUQ WTP – NUNAVUT

VEOLIA PROJECT: 5000 218 009

CHEMLINE

SERIES E, ELECTRIC ACTUATOR

LEFT BLANK

+PLUS

CE

Système sécurité
FAIL SAFE
Security system

Positionnement
POSI
Positioning

3 Positions
GF3
3 Positions

10Nm
»
100Nm

Facteur de marche
50%
Duty rating

Indice de protection
IP66
Enclosure

Anti-condensation intégrée
Integrated anti-condensation

ER PLUS

ACTIONNEUR ÉLECTRIQUE
DOCUMENTATION TECHNIQUE
MISE EN SERVICE

ELECTRIC ACTUATOR
TECHNICAL LITERATURE
SET UP PROCEDURE

ELEKTRISCHE STELLANTRIEBE
TECHNISCHE UNTERLAGEN
BETRIEBSANLEITUNG

ACTUADOR ELÉCTRICO
DOCUMENTACIÓN TECNICA
PUESTA EN SERVICIO

100% CONTROL MADE IN EU 100% CONTROL

TABLE DES MATIÈRES

EN TABLE OF CONTENTS
D INHALTSVERZEICHNIS
ES INDICE DE MATERIAS

Instructions et consignes de sécurité

Instructions and security 4
Betriebsanleitung und Sicherheitshinweise 5
Instrucciones y seguridad ..... 6 — **3**

Indicateur de position

Position indicator 7
Stellungsanzeige 7
Indocador de posición ..... 7 — **7**

Encombrements

Dimensions 8
Dimensionen 8
dimenciones ..... 8 — **8**

Commande manuelle de secours

Emergency manual override 9
Handnotbetätigung 9
Mando manual de socorro ..... 9 — **9**

Branchements électriques

Electric wiring 10
Elektrische Verbindung 10
Conexiones eléctricas ..... 10 — **10**

Cartes électroniques

Electronic cards 14
Elektronische Karten 14
Tarjetas electrónicas ..... 14 — **14**

Modèles FAILSAFE

FAILSAFE models 16
FAILSAFE Modele 16
Modelos FAILSAFE ..... 16 — **16**

Modèles POSI

POSI models 19
POSI Modele 19
Modelos POSI ..... 19 — **19**

Modèles GF3

GF3 models 28
GF3 Modele 28
Modelos GF3 ..... 28 — **28**

Données techniques

Thechnical datas 30
Technischen daten 30
Datos technicos ..... 30 — **30**

DESCRIPTION

Ces actionneurs électriques ont été conçus pour permettre le pilotage d'une vanne 1/4 tour. Pour tout autre application, nous consulter préalablement. Nous ne pouvons être tenus responsables en cas d'autre utilisation.

TRANSPORT ET STOCKAGE

- Les transporteurs étant responsables des avaries et des retards de livraison, les destinataires doivent émettre des réserves, le cas échéant, avant de prendre livraison des marchandises. Les envois directs d'usine sont soumis aux mêmes conditions.
- Le transport sur site est effectué dans un emballage rigide.
- Les produits doivent être stockés dans des endroits propres, secs et aérés, de préférence sur des palettes de manutention ou sur des étagères.

MAINTENANCE

- La maintenance est assurée par notre usine. Si le matériel ne fonctionne pas, vérifier le câblage suivant le schéma électrique et l'alimentation de l'actionneur électrique concerné.
- Pour toute question, prendre contact avec le service après-vente.
- Pour nettoyer l'extérieur de l'appareil, utiliser un chiffon (et de l'eau savonneuse).
  NEPAS UTILISER D'AGENT A BASE DE SOLVANT OU D'ALCOOL

GARANTIE

- 100% des actionneurs ont été testés et réglés en usine.
- Ces produits sont garantis 2 ans ou 50000 manœuvres contre tous vices de fabrication et de matière, à partir de la date de livraison (facteur de service et classe du modèle suivant la norme CEI34).
- Cette garantie n'est valable que dans le cas où le matériel aura été, entre temps, ni démonté, ni réparé. Cette garantie ne s'étend pas à l'usure provoquée par suite de chocs ou maladresse, ainsi que par l'utilisation du matériel dans les conditions qui ne seraient pas conforme à ses caractéristiques. Cette garantie est strictement limitée au remplacement de la ou des pièces d'origines reconnues défectueuses, par nos services, après expertise. Les frais de port aller et retour, ainsi que la main d'œuvre, restent à la charge du client. Aucune responsabilité ne serait nous incomber au sujet des accidents ou risques directs ou indirects découlant d'une défectuosité de nos matériels. La garantie ne couvre pas les conséquences d'immobilisation et exclut tout versement d'indemnité. Les accessoires et adaptations ne sont pas couverts par cette garantie. Au cas où le client n'aurait pas réalisé ponctuellement les paiements stipulés aux échéances convenues, notre garantie sera suspendue jusqu'au paiement des échéances en retard et sans que cette suspension puisse augmenter la durée de la garantie à la mise à disposition.

RETOUR DE MARCHANDISE

- L'acheteur est tenu de vérifier au moment de la livraison la conformité de la marchandise par rapport à sa définition.
- L'acceptation par l'acheteur de la marchandise dégage le fournisseur de toute responsabilité, si l'acheteur découvre une non-conformité postérieurement à la date d'acceptation. Dans un tel cas, les frais de mise en conformité seront à la charge de l'acheteur qui supportera également seul, les conséquences financières du dommage. Les retours des marchandises sont acceptés que si nous les avons préalablement autorisés : ils doivent nous parvenir franco de tous frais à domicile et ne comporter que des produits dans leur emballage d'origine. Les marchandises rendues sont portées au crédit de l'acheteur, déduction faite des 20% de reprise du matériel calculé sur la base du montant initial des marchandises retournées.

CONSIGNES DE SECURITE ⚠ A lire avant toute installation du produit

- L'alimentation électrique doit être coupée avant toute intervention sur l'actionneur électrique (avant de démonter le capot ou de manipuler la commande manuelle de secours).
- Toute intervention doit être effectuée par un électricien qualifié ou une personne formée aux règles d'ingénierie électrique, de sécurité et tout autre directive applicable.
- Respecter impérativement l'ordre des consignes de raccordement et de mise en service décrites dans le manuel sans quoi le bon fonctionnement n'est plus garanti. Vérifier les indications portées sur la plaque d'identification de l'actionneur : elles doivent correspondre à votre réseau électrique d'alimentation.

⚠

- Ne pas monter l'actionneur « tête en bas ».
Risques encourus :
Disfonctionnement du mécanisme de débrayage
Possible écoulement de graisse sur la partie électronique

- Ne pas monter l'actionneur à moins de 30 cm d'une source de perturbations électromagnétiques

INSTRUCTIONS AND SECURITY

DESCRIPTION

These electric actuators have been designed to perform the control of a valve with 90° rotation. Please consult us for any different application. We cannot be held responsible if the mentioned actuators are used in contradiction to this advice.

TRANSPORT AND STORAGE

- The forwarding agents being held as responsible for damages and delays of the delivered goods, the consignees are obliged to express if applicable their reserves, prior to accept the goods. The goods delivered directly ex works are subject to the same conditions.
- The transport to the place of destination is carried out by using rigid packing material.
- The products must be stored in clean, dry, and ventilated places preferably on appropriate palettes or shelves.

MAINTENANCE

- Maintenance is ensured by our factory. If the supplied unit does not work, please check the wiring according to the electric diagram as well as the power supply of the concerned electric actuator.
- For any question, please contact our after-sales service.
- To clean the outside of the actuator, use a lint and soapy water.
  DO NOT USE CLEANING PRODUCT WITH SOLVENT OR ALCOHOL

GUARANTEE

- 100% of the actuators are fully tested and set in the factory.
- These products are guaranteed two years from the delivery date or 50,000 operating cycles against all types of manufacturing and material faults (operating time and model class according to standard CEI34).
- This guarantee will only be valid if the unit has not been disassembled or self-repaired during its service life. It does not cover any wear and damage caused by shocks or faulty operation neither by the use of the unit under conditions not in accordance with its nominal characteristics. The guarantee is strictly limited to the replacement of original parts found defective on checking by our service personnel. The cost of shipping to our premises, the return of devices to the customer as well as the repair cost will be chargeable. We will not assume the responsibility for any direct or indirect accidents/risks originated by a failure of our products. The guarantee does not cover the consequences of breakdown and excludes any payments for indemnities. The accessories and adaptations are excluded from the guarantee. In the case where a customer has not proceeded to payments within the agreed period, our guarantee will be suspended until the delayed payments have been received and with the consequence that this suspension will not prolong the guarantee period in any case.

RETURN OF GOODS

- The customer is obliged to check the conformity of the goods with regard to their definition at the time of delivery.
- The acceptance of the goods by the purchaser disclaims the supplier of all responsibility if the purchaser discovers any non-conformity after the date of acceptance. In such case, the repair cost will be borne by the purchaser who will also exclusively bear all financial consequences of any resulting damage. Returned goods will only be accepted if our prior agreement has been given to this procedure : the goods must be sent free of all cost and being shipped solely and in their original packing. The returned goods will be credited to the purchaser with a reduction of 20% on the unit's price charged in accordance with the original invoice of the returned goods.

SAFETY INSTRUCTIONS To be read prior to the installation of the product

- The electric power supply must be switched-off before any intervention on the electric actuator (i.e. prior demounting its cover or manipulating the manual override knob).
- Any intervention must only be carried out by a qualified electrician or other person instructed in accordance with the regulations of electric engineering, safety, and all other applicable directives.
- Strictly observe the wiring and set-up instructions as described in the manual: otherwise, the proper working of the actuator can not be guaranteed anymore. Verify that the indications given on the identification label of the actuator fully correspond to the characteristics of the electric supply.

- Do not mount the actuator « upside down ».
Risks:
Declutching mechanism failure
Possible flow of the grease on the electronic board

- Do not mount the actuator less than 30 cm of a electromagnetic disturbances source.

BESCHREIBUNG

Die elektrischen Stellantriebe wurden entwickelt, um Ventile mit Vierteldrehung zu steuern. Bitte ziehen Sie uns vor jeder anderen Verwendung zur Rate. Für jeglichen weitergehenden Einsatz können wir keine Verantwortung übernehmen.

TRANSPORT UND LAGERUNG

- Da die Spediteure für Schäden und Lieferverspätungen verantwortlich sind, müssen die Empfänger gegebenenfalls vor Annahme der Waren Vorbehalte äußern. Lieferungen direkt ab Werk unterliegen den gleichen Bedingungen.
- Der Transport vor Ort erfolgt in einer festen Verpackung.
- Die Lagerung muss an einem sauberen, gelüfteten und trockenen Ort erfolgen, bevorzugt auf Transportpaletten oder in Regalen.

WARTUNG

- Die Wartung wird in unserem Werk vorgenommen. Falls das Material nicht funktioniert, überprüfen Sie bitte die Kabelanschlüsse nach dem Schaltplan und die Stromzufuhr des betreffenden elektrischen Stellantriebes.
- Bei Fragen wenden Sie sich bitte an den Kundendienst.
- Verwenden Sie zur Außenreinigung des Antriebs ein Tuch und Seifenlösung.
  BITTE NIE LÖSUNGSMITTEL ODER ALKOHOLHALTIGE MITTEL ZUR REINIGUNG BENUTZEN.

GARANTIE

- 100% der Stellantriebe werden im Werk geprüft und eingestellt.
- Die Produkte unterliegen einer Garantie von zwei Jahren oder 50000 Bedienvorgängen bezüglich allen Herstellungs- und Materialfehlern, vom Datum der Auslieferung an (Einschaltdauer und Modellklasse nach Norm CEI34).
- Diese Garantie tritt nur in Kraft, wenn die Ware zwischenzeitlich weder repariert noch zerlegt worden ist. Sie bezieht sich weder auf Verschleiß durch Stöße oder Fehlbedienung noch auf den Einsatz des Materials unter nicht geeigneten Bedingungen. Diese Garantie ist eingeschränkt auf den Ersatz des oder der Originalteile, die von uns nach Begutachtung als defekt anerkannt wurden. Die Frachtkosten für Hin- und Rückweg sowie der Arbeitslohn obliegen dem Kunden. Wir übernehmen keinerlei Verantwortung bezüglich Unfällen oder direkten oder indirekten Risiken, die sich aus einem Defekt unserer Waren ergeben. Die Garantie deckt die Folgen eines Stillstandes nicht ab und schließt jede Entschädigungs-zahlung aus. Zubehör und Umbauten fallen nicht unter die Garantie. Für den Fall, daß der Kunde zeitweise nicht den Zahlungen zu den vereinbarten Fälligkeiten nachgekommen ist, wird die Garantie bis zur Zahlung der verspäteten Fälligkeiten ausgesetzt, ohne daß diese Unterbrechung die Dauer der gewährleisteten Garantie verlängert.

RÜCKSENDUNG VON WAREN

- Der Käufer ist gehalten, bei Erhalt der Ware die Übereinstimmung mit den Vorgaben zu überprüfen.
- Die Annahme der Ware durch den Käufer befreit den Lieferanten von jeglicher Verantwortung, falls der Käufer eine Reklamation nach dem Zeitpunkt der Annahme feststellt. In einem solchen Fall obliegen dem Käufer allein die Kosten für die Beseitigung sowie die Folgekosten des Schadens. Warenrücksendungen werden nur angenommen, wenn wir sie zuvor genehmigt haben: sie müssen frei Haus, ohne jegliche Gebühren, an unseren Firmensitz geliefert werden und dürfen ausschliesslich originalverpackte Ware enthalten. Die zurückgesendeten Waren werden dem Käufer gutgeschrieben, abzüglich 20% Warenrücksendungspauschale, veranschlagt auf Grundlage des ursprünglichen Rechnungsbetrags der zurückgesandten Waren.

ANLEITUNG UND SICHERHEITSHINWEISE

Vor jeglicher Installation des Produktes zu lesen

- Die Stromzufuhr muss vor jeglichem Eingriff am elektrischen Stellantrieb unterbrochen werden (bevor die Haube abgenommen oder die Handnotbetätigung bedient wird).
- Jeglicher Eingriff darf nur von qualifizierten Elektrikern oder von nach den Regeln der Elektrotechnik, der Sicherheit und allen anderen anwendbaren Normen geschultem Personal vorgenommen werden.
- Beachten Sie unbedingt die Reihenfolge der Anweisungen zum Anschliessen und zur Inbetriebnahme, welche im Handbuch beschrieben werden, ansonsten wird die einwandfreie Funktion nicht gewährleistet. Überprüfen Sie die Angaben auf dem Typenschild des Stellantriebes : sie müssen Ihrer Stromversorgung entsprechen.

- Antrieb nie uber Kopf einbauen

Risiken:

Störung der Kupplung des Antriebes

Mögliche Fettleckage auf die elektronische Karte

- Immer einen Mindestabstand von 30cm zu einer elektromagnetischens Störquelle einhalten .

INSTRUCCIONES Y SEGURIDAD

DESCRIPCIÓN

Estos actuadores eléctricos han sido concebidos para permitir el pilotaje de válvulas 1/4 de vuelta. Para otra aplicación, consultarnos. No podemos valorar responsabilidad en caso de otra utilización.

TRANSPORTE Y ALMACENAMIENTO

Al ser responsables los transportistas de averías y retrasos de entrega, los destinatarios deben emitir reservas, si llega el caso, antes de tomar entrega de las mercancías. Los envíos directos de fábrica están sometidos en las mismas condiciones.

- El transporte sobre sitio es efectuado en un embalaje rígido.
- Los productos deben ser almacenados en lugares limpios, secos y airados, preferentemente sobre paletas de manutención o sobre estanterías.

MANTENIMIENTO

- El mantenimiento es asegurado por nuestra fábrica. Si el material no funciona, verificar que el cableado, sigue el esquema eléctrico y la alimentación del actuador eléctrico concernido.
- Para toda pregunta, entrar en contacto con servicio posventa.
- Para limpiar el exterior del actuador, utilizar un trapo, y del agua jabonosa.
  NO UTILIZAR PRODUCTO DE LIMPIEZA CON DISOLVENTE O ALCOHOL

GARANTÍA

- El 100% de los actuadores están sometidos a un testigo y vienen ajustados de fábrica.
- Este producto es garantizado 2 años o 50000 maniobras contra todo vicio de fabricación y de materia, a partir de la fecha de entrega (factor de servicio y clase del modelo, sigue la norma CEI34).
- Esta garantía es valida tan solo en caso de que el material habrá sido, entre tanto, ni desmontado, ni reparado. Esta garantía no se extiende al desgaste provocado por choques o torpeza, así como por la utilización del material en las condiciones que serian conformes a sus características. Esta garantía es estrictamente limitada a la sustitución de una o varias piezas de orígenes reconocidas defectuosas por nuestros servicios, después de sometirlos a un control de expertos. Los gastos de transportes ida y vuelta así como la mano de obra, se quedan al cargo del cliente. Ninguna responsabilidad debe incumbirnos respeto a los accidentes o los riesgos directos o indirectos que emanarían de una defectuosidad de nuestros materiales. La garantía no cubre las consecuencias de inmovilización y excluye todo pago de indemnidad. Los accesorios y las adaptaciones no son cubiertos por esta garantía. En caso de que el cliente no habría realizado puntualmente los pagos estipulados a los vencimientos convencionales, nuestra garantía será suspendida hasta el pago de los vencimientos tardes y sin que esta suspensión pueda aumentar la duración de la garantía a la disposición.

DEVOLUCIÓN DE LA MERCANCÍA

- El comprador debe verificar al momento de la entrega la conformidad de la mercancía en relación a su definición.
- La aceptación por el comprador de la mercancía suelta al proveedor de toda responsabilidad; igual que si el comprador descubre una non conformidad posteriormente a la fecha de aceptación. En tal caso, los gastos de devolución para conformidad están a cargo del comprador que soportara también las consecuencias financieras del daño. Las devoluciones de las mercancías son aceptadas que si previamente las autorizamos: deben llegar sin cargo a nuestro domicilio y comportar solamente productos dentro sus embalajes de origen. Las mercancías devueltas son abonadas a cuenta del comprador, deducción hecha de 20% por devolución del material, calculado sobre el importe inicial de las mercancías devueltas.

CONSEJOS DE SEGURIDAD A leer antes de toda instalación del producto.

- La alimentación eléctrica debe ser cortada antes de toda intervención sobre el actuador eléctrico (antes de desmontar la tapa o de manipular el mando de socorro).
- Toda intervención debe ser efectuada por un electricista cualificado o una otra persona formada a las reglas de seguridad y otras directivas aplicables.
- Respetar obligatoriamente el orden de las consignas de conexión y de las puestas en marcha descritas en el manual al fin de garantizar el buen funcionamiento. Verificar las indicaciones puestas sobre la placa de identificación del actuador : deben corresponder a su red eléctrico de alimentación.

- No montar el actuador "cabeza de bajo"
Riesgos incurridos :
Avería del mecanismo de desembrague
derrame Posible de grasa sobre la tarjeta electrónica

- No montar el actuador por menos de 30 cm de una fuente de perturbaciones electromagnéticas

INDICATEUR DE POSITION

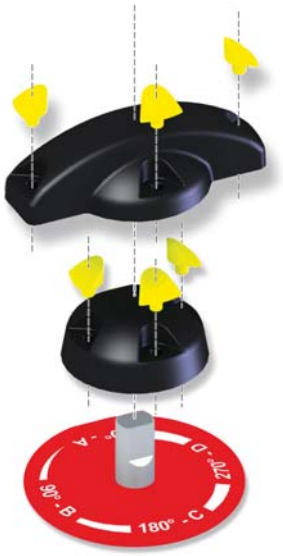

Indicateur modulable, livré avec 5 repères de signalisation (3 jaunes + 2 noirs), à positionner en fonction du type de vanne à piloter.

Modular position indicator with three removable position markers **(3 yellow + 2 black)**, *adjustable according the type of valve to be actuated.*

Stellungsanzeige mit 5 einstellbaren Markierungsknöpfen (3 gelbe + 2 schwarze), die je nach Armaturtyp zu positionnieren sind

Indicador modulable, entregado con 5 marcas de señalización (3 amarillos y 2 negros), a colocar con arreglo al tipo de válvula a maniobrar

poignée avec indicateur de position pour ER10/20
Handle with position indicator for ER10/20
Hebel mit intergrierter Stellungsanzeige für ER10/20
puñado con indicador de posición para ER10/20

Indicateur de position pour ER35-60-100
Position indicator for ER35-60-100
Stellungsanzeige fur ER35-60-100
Indicador de posición para ER35-60-100

Vanne 2 voies en position fermée
2 ways valve in closed position
2 Wege Armatur in Zu Stellung
Válvulas de 2 vias en position cerrada

Vanne 3 voies de type L
3 ways L type valve
3 Wege Ventil Typ „L“
Válvulas de 3 vias de tipo L

Vanne 3 voies de type T
3 ways T type valve
3 Wege Ventil Typ „T“
Válvulas de 3 vias de tipo T

ENCOMBREMENTS

EN **DIMENSIONS**
D **DIMENSIONEN**
ES **DIMENCIONES**

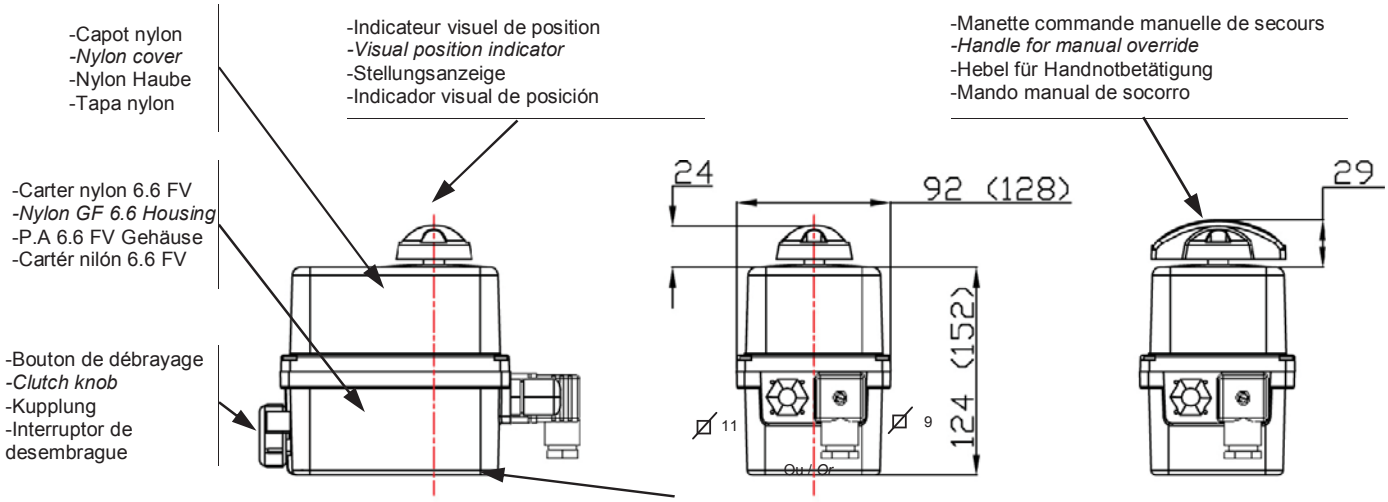

ER10/20

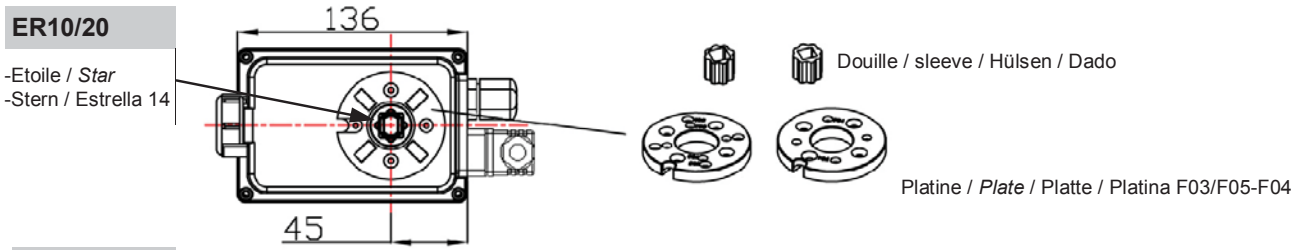

ER35/60/100

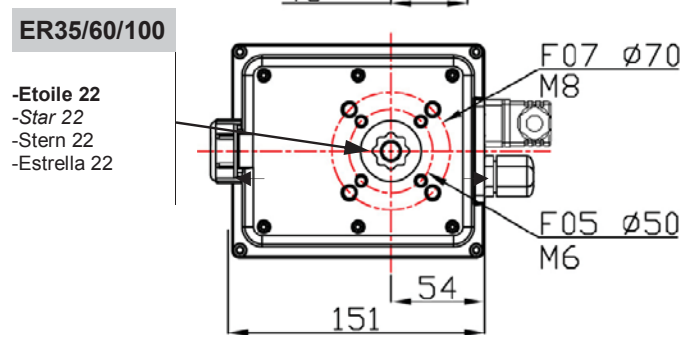

Carré / Etoile	Profondeur
Square / Star drive nut	*Depth*
Vierkant / Stern	Tiefe
Cuadrado / Estrella	Profundidad
14	16
17	19
22	24

Fixation ISO F	Diamètre	Taraudé M	Profondeur	Nombre de vis
ISO F flange	*Diameter*	*M threaded*	*Depth*	*Screws quantity*
ISO F Anschluss	Diameter	M Gewinde	Tiefe	Anzahl der Schrauben
Fijación ISO F	Diámetro	Aterrajado M	Profundidad	Número de tornillos
F03	36	M5	14.2	4
F04	42	M5	14.2	4
F05	50	M6	14.2 / 16.4	4
F07	70	M8	16.4	4

COMMANDE MANUELLE DE SECOURS

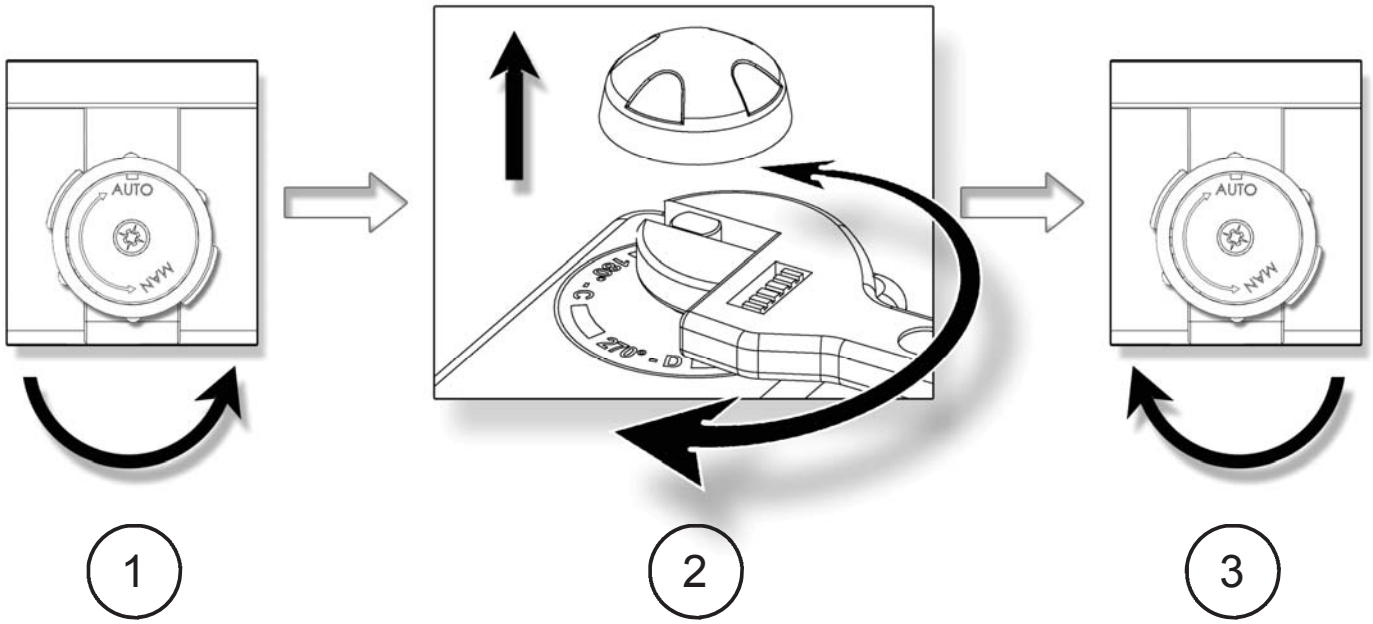

FR

L'actionneur fonctionne en priorité électrique. S'assurer que l'alimentation est coupée avant de le manœuvrer manuellement.

1. Tourner le bouton de débrayage vers la position MAN (sens antihoraire) et le maintenir dans cette position.
2. Tourner l'axe sortant de l'actionneur à l'aide d'une clé à molette.
3. Pour revenir en position automatique, relâcher le bouton de débrayage (rappel par ressort).

GB

The priority functionning mode of this actuator is electric. Be sure than the power supply is switched off before using the manual override.

1. Turn the knob to position MAN (counter-clockwise) and hold it in position.
2. Turn the outgoing drive shaft of the actuator with the help of an adjusting spanner.
3. In order to re-engage the reduction, release the knob (spring return).

D

Die Priorität der Funktion des Antriebs ist Automatikbetrieb. Bitte prüfen, dass die Stromversorgung abgeschaltet ist bevor der Antrieb von Hand betätigt wird .

1. Stellen Sie den Schalter auf MAN (gegen den Uhrzeigersinn) um und halten Sie ihn in dieser Position.
2. Drehen Sie die Achse des Stellantriebes mit Hilfe eines Rollgabelschlüssels.
3. Um den Kraftschluss wiederherzustellen, lassen Sie den Kupplungsschalter los (federrückstellend).

ES

El actuador funciona en prioridad eléctrico. Asegurarse que la alimentación es cortada antes de maniobrarlo manualmente.

1. Girar el interruptor de desembrague hacia la posición MAN y mantenerlo en esta posición.
2. Girar el eje saliente del actuador con la ayuda de una llave inglesa.
3. Para reenganchar la reducción, relajar el interruptor de desembrague (retorno por mueles)

BRANCHEMENTS ÉLECTRIQUES

EN ELECTRIC WIRING
D ELEKTRISCHE VERBINDUNG
ES CONEXIONES ELÉCTRICAS

FR **BRANCHEMENTS ÉLECTRIQUES - INSTRUCTIONS** 11
GB ELECTRIC WIRING - INSTRUCTIONS 11
D ELEKTRISCHE VERBINDUNG - INSTRUKTIONEN 12
ES CONEXIONES ELÉCTRICAS - INSTRUCCIONES 12

FR **SCHÉMA ÉLECTRIQUE** 13
GB ELECTRIC WIRING 13
D SCHALTPLAN 13
ES ESQUEMA ELÉCTRICO 13

Symboles utilisés :

Danger : risque de choc électrique

Terre de protection

Tension continue

Tension alternative

- Le branchement à une prise de Terre est obligatoire au-delà de 42V suivant la norme en vigueur.
- L'actionneur étant branché en permanence, il doit être raccordé à un dispositif de sectionnement (interrupteur, disjoncteur), assurant la coupure d'alimentation de l'appareil.
- La température du bornier peut atteindre 90°C
- Pour une utilisation avec de grandes longueurs de câbles, le courant induit généré par les câbles ne doit pas dépasser 1mA
- Afin d'optimiser la sécurité des installations, le câblage du report défaut (D1 et D2) est fortement conseillé.

Used symbols :

Danger : risk of electric shock

Earth protection

Direct voltage

Alternating voltage

- As stipulated in the applicable regulation, the connection to earth contact is compulsory for devices with working voltages exceeding 42 V.
- The actuator is always powered, so it must be connected to a disconnection system (switch, circuit breaker) to ensure the actuator power cut.
- The terminal temperature can reach 90°C
- For a use with a long power supply wiring, the induction current generated by the wires musn't be higher than 1mA
- To optimize the installation security, please connect the failure feedback signal (D1 and D2).

Verwendete Symbole :

Gefahr : Gefahr eines elektrischen Schlages

Schutzerdung

Gleichspannung

Wechselspannung

- Die Erdung ist nach der geltenden Norm bei über 42V vorgeschrieben.
- Der Antrieb ist dauerhaft unter Spannung, daher muß beim Anschluß ein Abschaltsystem (Leistungsschalter) vorgesehen werden um die Unterbrechung der Stromzufuhr zu gewährleisten.
- Die Terminal-Temperatur kann bis zu 90°C erreichen.
- Bei Verwendung einer langen Zuleitung für die Spannungsversorgung darf die Induktionsspannung der Leitung nicht größer als 1mA sein.
- Um die Sicherheit der Anlagen zu optimisieren empfehlen wir die Verkablung der Fehlermeldung (D1/D2 Stecker)

Símbolos utilizados:

Peligro: riesgo de choque eléctrico

Tierra de protección

Tensión continua

Tensión alternativa

- El enchufe a una toma de tierra es obligatorio más allá de 42V según la norma corriente.
- El actuador esta siempre conectado, debe ser empalmado a un dispositivo de seccionamiento (interruptor, disyuntor), asegurando la cortadura de alimentación del aparato.
- La temperatura del Terminal de conexión puede alcanzar 90°C
- Para una utilización con los grandes largo de cables, la corriente induce engendrado por los cables no debe adelantar 1mA
- Para optimizar la seguridad de las instalaciones, el cableado del señal de retorno de la información de defecto (D1 y D2) es aconsejado

RESPECTER LES CONSIGNES DE SECURITE

Nos presse-étoupe acceptent un câble de diamètre compris entre 7mm et 12mm.

- Retirer l'indicateur visuel, dévisser les 4 vis et retirer le capot.

CABLAGE DE L'ALIMENTATION ET DE LA COMMANDE

- Vérifier sur l'actionneur que la tension indiquée sur l'étiquette correspond à la tension du réseau.
- Connecter les fils sur le connecteur suivant le mode de pilotage souhaité. (Voir schémas p.13 ou p.22 pour les modèles POSI)
- Pour garantir le bon fonctionnement de la résistance anti-condensation, l'actionneur doit être alimenté en permanence

CABLAGE DE LA RECOPIE (Sauf POSI : p.21)

Nos actionneurs sont par défaut équipés de 2 contacts fins de course auxiliaires secs, soit normalement ouverts, soit normalement fermés (voir schéma électrique DSBL0436). Par défaut, la came blanche est utilisée pour détecter l'ouverture (FC1) et la came noire pour détecter la fermeture (FC2).
Les fins de courses auxiliaires doivent être connectés avec des câbles rigides. Si la tension appliquée est supérieure à 42V, l'utilisateur doit prévoir un fusible dans la ligne d'alimentation.

- Dévisser le presse-étoupe droit et passer le câble.
- Enlever 25mm de gaine et dénuder chaque fil de 8mm.
- Connecter les fils sur le bornier suivant le schéma p.13 (ou p.22 pour les modèles POSI) .
- Revisser le presse-étoupe (s'assurer du bon remontage de celui-ci afin de garantir une bonne étanchéité).

REGLAGE DES CONTACTS FINS DE COURSE

L'actionneur est préréglé en usine. Ne pas toucher les 2 cames inférieures sous peine de perturber le fonctionnement de l'actionneur voire d'endommager ce dernier.

- Pour ajuster la position des contacts auxiliaires, faire pivoter les 2 cames supérieures en utilisant la clé appropriée.
- Remonter le capot, visser les 4 vis et monter l'indicateur visuel.

RESPECT SAFETY INSTRUCTIONS

Our cable glands are designed for cables with a diameter between 7mm and 12mm.

- Remove the position indicator, unscrew the four screws and take off the cover.

SUPPLY AND CONTROL WIRING

- Ensure that the voltage indicated on the actuator ID label corresponds to the voltage supply.
- Connect the wires to the connector in accordance with the required control mode. (see diagram p.13 or p.22 for POSI models)
- To ensure the correct functioning of the anti condensation heater, the actuator must be always supplied

WIRING OF THE FEEDBACK SIGNAL (Except POSI: p.21)

Our actuators are equipped with two simple limit switch contacts normally set either in open position, either in closed position (see wiring diagram DSBA0436). As per factory setting, the white cam is used to detect the open position (FC1) and the black cam is used to detect the closed position (FC2).
The auxiliary limit switches must be connect with rigid wires. If the applied voltage is higher than 42V, the user must foresee a fuse in the power supply line.

- Unscrew the right cable gland and insert the cable.
- Remove 25mm of the cable sheath and strip each wire by 8mm.
- Connect the wires to the terminal strip in accordance with the diagram 13 (or p.22 for POSI models).
- Tighten the cable gland (Ensure that it's well mounted to guaranty the proofness).

SETTING OF END LIMIT SWITCHES

The actuator is pre-set in our factory. Do not touch the two lower cams in order to avoid any malfunctioning or even damage to the actuator.

- To adjust the position of the auxiliary contacts, make rotate the two superior cams by using the appropriate wrench.
- Re-mount the cover, fasten the four screws and attach the position indicator.

BEACHTEN SIE UNBEDINGT DIE SICHERHEIT ANWEISUNGEN

Unsere Kabelverschraubungen sind zulässig für Kabel mit einem Durchmesser zwischen 7mm und 12mm.

- Den Stellanzeiger abziehen, die vier Schrauben lösen und die Haube abnehmen.

VERKABELUNG DER STROMZUFUHR UND DER STEUERUNG

- Überprüfen Sie am Stellantrieb, daß die angegebene Spannung auf dem Typenschild der Spannung des Netzes entspricht.
- Schließen Sie die Drähte an der Verbindung an, je nach gewünschter Steuerungsart. (bitte siehe Schaltplan S.13 oder 23 für POSI)
- Die richtige Funktion der Heizwiderstände zu gewährleisten, muss der Antrieb immer mit Strom versorgt sein

VERKABELUNG DER RÜCKMELDUNG (außer den Modellen POSI: S.21)

Unsere Stellantriebe sind serienmäßig mit 2 einfachen Endschalterkontakten versehen, welche normalerweise geöffnet sind (NO). Gemäß Voreinstellung dient die weiße Nocke dazu, die Öffnung zu erfassen (FC1) und die schwarze Nocke, um das Schliessen zu erfassen (FC2).

- Die Klemmen "Kunde" müssen mit biegesteif Anschlusskabel verkabelt werden. Sollte die Spannung 42v überschritten, so muss vom Anwender eine Sicherung in der Stromzufuhr vorgesehen werden.

- Lösen Sie die Kabelverschraubung und führen Sie das Kabel durch.
- Entfernen Sie 25mm der Ummantelung und legen Sie jeden Draht auf 8mm frei.
- Schließen Sie die Drähte gemäß dem nebenstehenden Schaltplan an der Klemmleiste an. (siehe Schaltplan S.13 oder S.23 für POSI)
- Die Kabelverschraubung wieder festziehen.

EINSTELLUNG DER ENDSCHALTERKONTAKTE

Der Stellantrieb wird im Werk voreingestellt. Berühren Sie die beiden unteren Nocken nicht, da sonst die Funktion des Stellantriebes gestört oder letzterer sogar beschädigt werden kann.

- Um die Position der Hilfskontakte einzustellen, drehen Sie die beiden oberen Nocken unter Zuhilfenahme eines geeigneten Schlüssels.
- Die Haube wieder anbringen, die vier Schrauben anziehen und den Stellanzeiger aufstecken.

RESPETAR LAS CONSIGNAS DE SEGURIDAD

Nuestros prensas a estopa aceptan un cable de diámetro entre 7mm y 12mm.

- Quitar el indicador visual, destornillar los 4 tornillos y quitar la tapa.

CABLEADO DE LA ALIMENTACIÓN

- Verificar sobre el actuador que el voltaje indicado sobre la etiqueta corresponde al voltaje de la red.
- Conectar los cables sobre el conector siguiente el modo de pilotaje deseado. (ver esquema p.13 o p.23 para los actuadores POSI)
- Para un buen funcionamiento de la resistencia anti-condensación, el actuador debe ser alimentado en permanencia

CABLEADO DE LA RECOPIA (salvo los modelos POSI : P.21)

Nuestros actuadores son equipados por defecto de 2 contactos de finales de carrera auxiliares secos normalmente abiertos o normalmente cerrados (Ver el esquema eléctrico DSBL0436). Por defecto, la leva blanca es utilizada para detectar la apertura (FC1) y la leva negra para detectar el cierre (FC2).

Los finales de carrera deben ser conectados con cables rígidos. Si la tensión aplicada es superiora a 42V, el usuario debe prever un fusible en la alimentación.

- Destornillar la prensa a estopa de derecho y pasar el cable .
- Quitar 25mm de tubo y desnudar cada cable de 8mm .
- Conectar los cables sobre el terminal según el esquema p.13 (o p.23 para los actuadotes POSI)..
- Reatornillar la prensa-estopa correctamente para garantizar una buena hermeticidad

REGLAJE DE LOS CONTACTOS DE FINALES DE CARRERA

El actuador es preajustado en fábrica. No tocar las 2 levas inferiores so pena de perturbar el funcionamiento del actuador incluso de dañarlo .

- Para ajustar la posición de los contactos auxiliares, hacer girar las 2 levas superioras utilizando la llave apropiada.
- Volver a montar la tapa, atornillar los 4 tornillos y montar el indicador visual .

SCHÉMA ÉLECTRIQUE

CABLAGE CLIENT SUGGERE / *SUGGESTED CUSTOMER WIRING*
EMPFOHLENE VERDRAHTUNG / CABLEADO SUGERIDO CLIENTE

Mode 3 points modulants
3-points modulating mode
3-Punkt-Modus
Modo 3 puntos modulantes

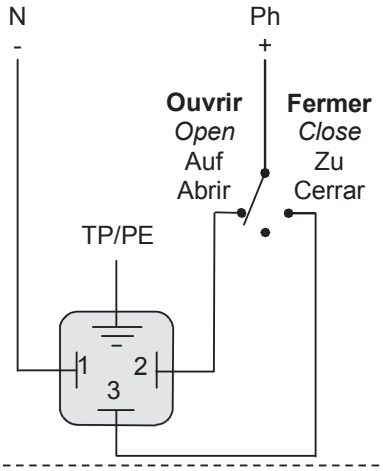

Mode Tout ou rien (ON/OFF)
On-Off mode
Auf-Zu Modus
Modo Todo o nada (ON-OFF),

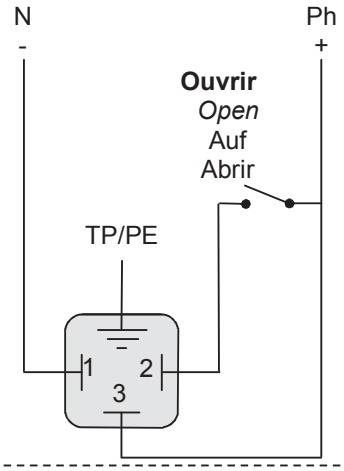

REP	**DESIGNATION** / BESCHREIBUNG DESIGNACIÓN
FC0	**Fin de course ouverture** *Open limit switch* Endschalter AUF Final de carrera apertura
FCF	**Fin de course fermeture** *Close limit switch* Endschalter ZU Final de carrera cierre
FC1	**Fin de course auxiliaire 1** *Auxiliary limit switch 1* Zusätzlicher Endschalter 1 Final de carrera auxiliar 1
FC2	**Fin de course auxiliaire 2** *Auxiliary limit switch 2* Zusätzlicher Endschalter 2 Final de carrera auxiliar 2
D1/D2	**Bornier report défaut (24V DC / 3A max)** *Failure report Terminal strip (24V DC / 3A max)* Fehlermeldung Klemmleiste (24V DC / 3A max) Terminal retorno de defecto (24V DC / 3A max)

RECOPIE / *FEEDBACK*
RÜCKMELDUNG

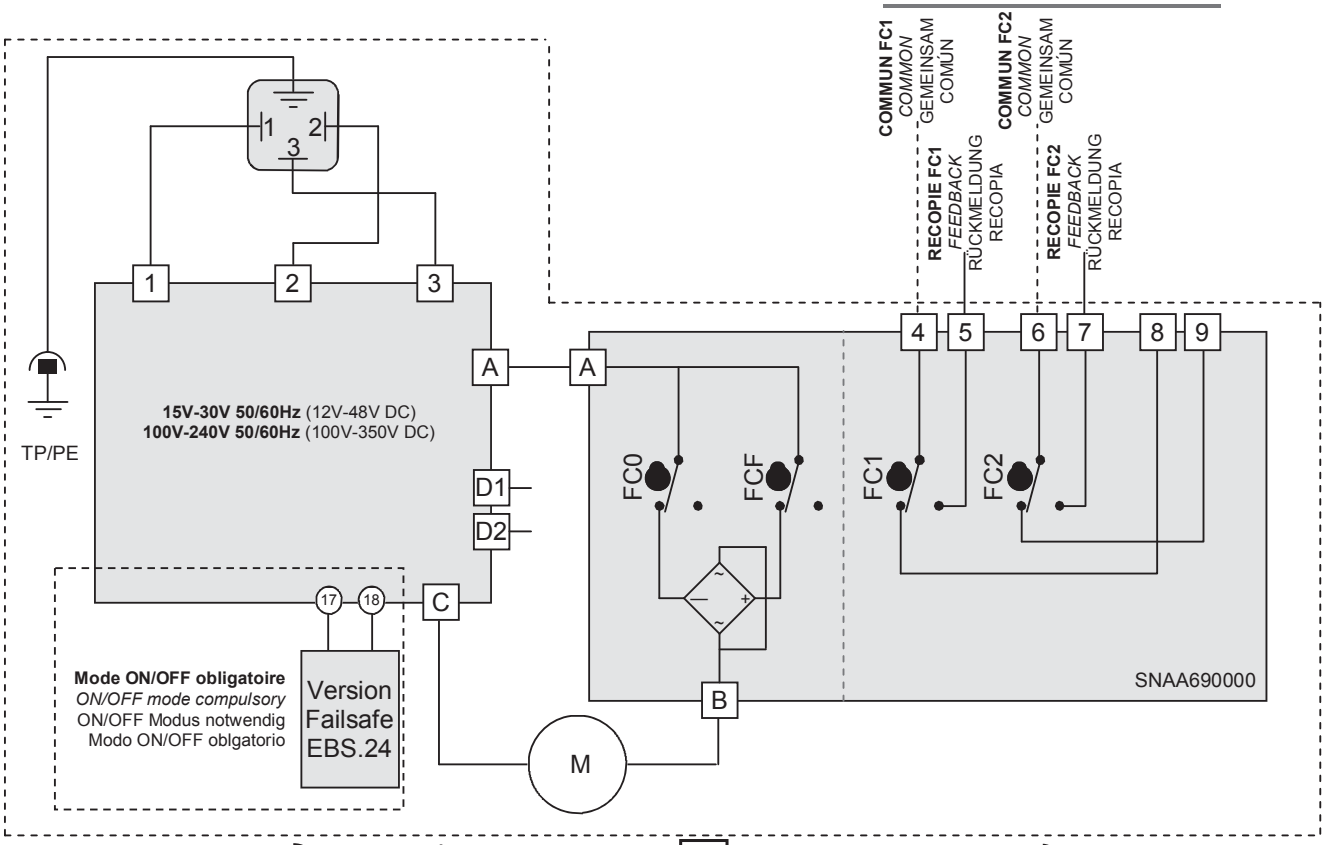

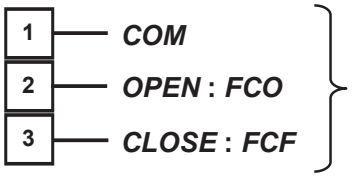

ALIMENTATION / *POWER SUPPLY* / **SPANNUNGSVERSORGUNG** / ALIMENTACIÓN

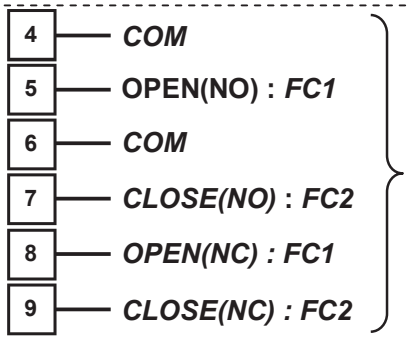

FINS DE COURSE / *LIMIT SWITCH OUTPUT* / **RÜCKMELDUNG** / RECOPIA

DSBL0436

La température du bornier peut atteindre 90°C
The terminal temperature can reach 90°C
Die Terminal-Temperatur kann bis zu 90°C erreichen.
La temperatura del Terminal de conexión puede alcanzar 90°C

Cartes d'alimentation et commande pour ER 10-20-35 / *Pilot and power supply cards for ER 10-20-35*
Steuerung und Stromversorgung Karten fur ER 10-20-35 / Tarjetas de alimentación y mando para ER 10-20-35

SNAA720100
15V-30V 50/60Hz (12V-48V DC)

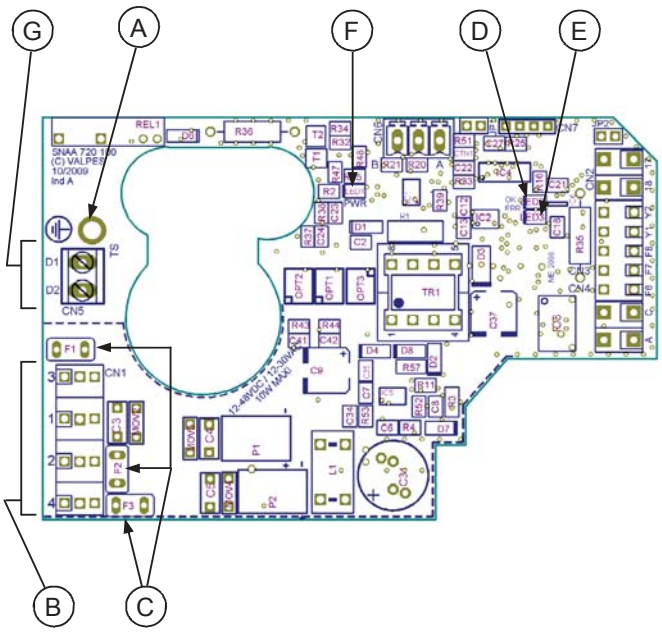

SNAA720000
100V-240V 50/60Hz (100V-350V DC)

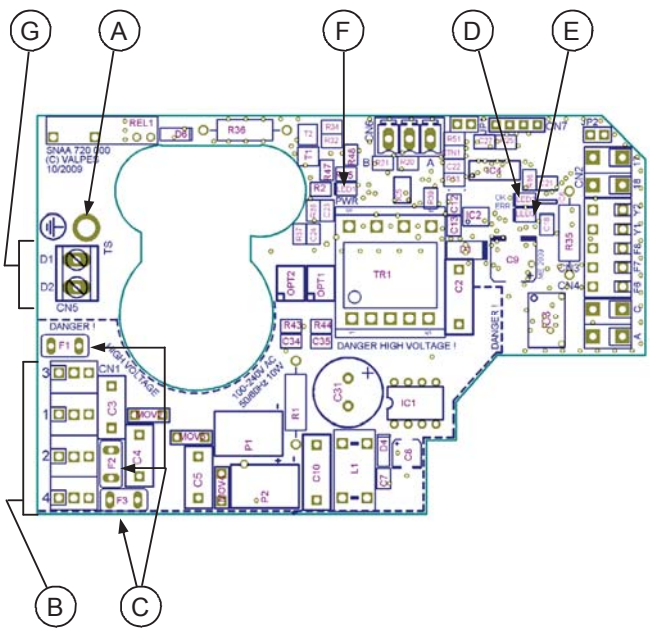

Rep.	Désignation	*Designation*	Bezeichnung	Designación
A	**Vis de terre**	*Earth screw*	Erde Schraube	Tornillo de tierra
B	**Bornier alimentation et commande**	*Pilot and power supply terminal strip*	Steuerung und Stromversorgung Verbindung	Terminal de alimentación y mando
C*	**Fusibles protection carte**	*Card protection fuses*	Karte Sicherung	Fusibles de protección de la tarjeta
D	**LED 2 : microprocesseur ok**	*LED 2 : microprocessor ok*	LED 2 : Mikroprozessor ok	Diodo 2 : microprocesador ok
E**	**LED 3 : défaut détecté**	*LED 3 : detected failure*	LED 3 : Aufgespürter Fehler	Diodo 3 : Defecto detectado
F	**LED 1 : présence tension**	*LED 1 : power presence*	LED 1 : Spannungsanwesenheit	Diodo 1: Presencia de tensión
G	**Bornier report défaut (24V DC - 3A max)**	*Failure reportTerminal strip (24V* DC - 3A max*)*	Fehlermeldung Klemmleiste (24V DC - 3A max)	Terminal retorno de defecto (24V DC - 3A max)

* **Fusibles pour carte multi-tensions** / *Fuses for multivolt card* / Sicherung für Multispannung Karte :
- **Carte** / *Card* / Karte **SNAA720100** : 2A / T 250V (Multicomp MST 2A 250V)
- **Carte** / *Card* / Karte **SNAA720000** : 500mA / T 250V (Multicomp MST500MA 250V)

** **Défauts possibles : limitation de courant, limitation thermique ou erreur programme**
=> vérifier que le couple de la vanne n'est pas supérieur au couple maximum fourni par l'actionneur
=> vérifier que l'actionneur ne dépasse pas la durée sous tension donnée (surchauffe possible)
Pour redémarrer l'actionneur, inverser le sens de marche ou l'éteindre et le remettre sous tension.

Possible defects : limitation of current, thermic limitation or program error
=> check that the valve torque is not superior to the maximum torque stand by the actuator
=> check that the actuator do not exceed the duty cycle indicated (possible overheat)
To re-start the actuator, reverse the sense of rotation or switch the power off and on.

Mögliche Fehler : Strombegrenzung, thermische Begrenzung oder Programmsfehler
=> Überprüfen sie das Drehmoment von dem Ventil
=> Überprüfen sie das die Einschaltdauer nicht grober als spezifisiert in die technischen Daten von den Antrieb ist
Um die Antrieb neue zu starten, muss man den Drehrichtung auswechseln oder die Spannung Auf/Zu Umschalten.

Defectos posibles : limitación de corriente, limitación térmica o error del programa
=> comprobar que el par de la valvula no es superior al par máxima soportado por el actuador
=> comprobar que el actuador no adelanta el tiempo bajo tensión dado (recalentamiento posible)
Para arrancar de nuevo el actuador, invertir la dirección del functionamiento o apagarlo y ponerlo bajo tensión.

Cartes d'alimentation et commande pour ER 35-60-100 / *Pilot and power supply cards for ER 35-60-100*
Steuerung und Stromversorgung Karten fur ER 35-60-100 / Tarjetas de alimentación y mando para ER 35-60-100

SNAA730100
15V-30V 50/60Hz (12V-48V DC)

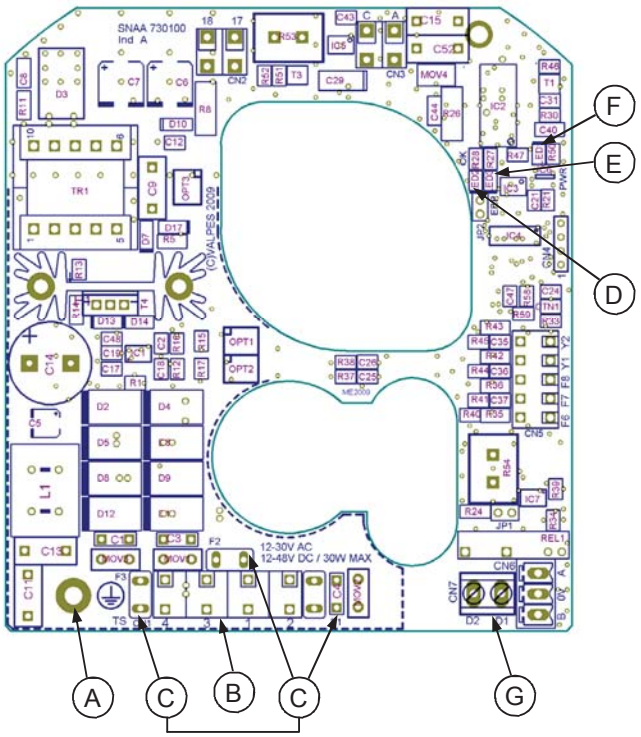

SNAA730000
100V-240V 50/60Hz (100V-350V DC)

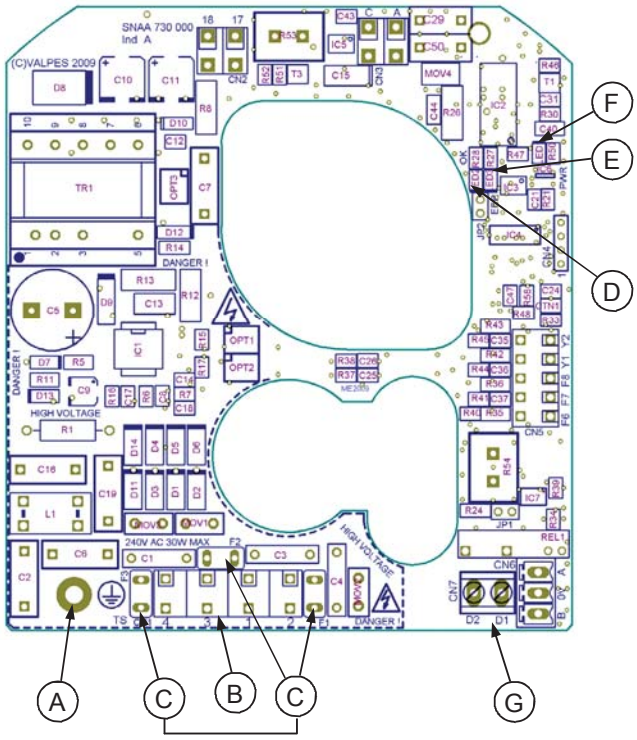

Rep.	Désignation	*Designation*	Bezeichnung	Designación
A	**Vis de terre**	*Earth screw*	Erde Schraube	Tornillo de tierra
B	**Bornier alimentation et commande**	*Pilot and power supply terminal strip*	Steuerung und Stromversorgung Verbindung	Terminal de alimentación y mando
C*	**Fusibles protection carte**	*Card protection fuses*	Karte Sicherung	Fusibles de protección de la tarjeta
D	**LED 2 : microprocesseur ok**	*LED 2 : microprocessor ok*	LED 2 : Mikroprozessor ok	Diodo 2 : microprocesador ok
E**	**LED 3 : défaut détecté**	*LED 3 : detected failure*	LED 3 : Aufgespürter Fehler	Diodo 3 : Defecto detectado
F	**LED 1 : présence tension**	*LED 1 : power presence*	LED 1 : Spannungsanwesenheit	Diodo 1: Presencia de tensión
G	**Bornier report défaut (24V DC - 3A max)**	*Failure reportTerminal strip (24V* DC - 3A max*)*	Fehlermeldung Klemmleiste (24V DC - 3A max)	Terminal retorno de defecto (24V DC - 3A max)

* **Fusibles pour carte multi-tensions** / *Fuses for multivolt card* / Sicherung für Multispannung Karte :
- **Carte** / *Card* / Karte **SNAA730100** : 5A / T 125V (Littelfuse 39615000000)
- **Carte** / *Card* / Karte **SNAA730000** : 3,15A / T 250V (Multicomp MST 3,15A 250V)

** **Défauts possibles : limitation de courant, limitation thermique ou erreur programme**
=> vérifier que le couple de la vanne n'est pas supérieur au couple maximum fourni par l'actionneur
=> vérifier que l'actionneur ne dépasse pas la durée sous tension donnée (surchauffe possible)
Pour redémarrer l'actionneur, inverser le sens de marche ou l'éteindre et le remettre sous tension.

Possible defects : limitation of current, thermic limitation or program error
=> check that the valve torque is not superior to the maximum torque stand by the actuator
=> check that the actuator do not exceed the duty cycle indicated (possible overheat)
To re-start the actuator, reverse the sense of rotation or switch the power off and on.

Mögliche Fehler : Strombegrenzung, thermische Begrenzung oder Programmsfehler
=> Überprüfen sie das Drehmoment von dem Ventil
=> Überprüfen sie das die Einschaltdauer nicht grober als spezifisiert in die technischen Daten von den Antrieb ist
Um die Antrieb neue zu starten, muss man den Drehrichtung auswechseln oder die Spannung Auf/Zu Umschalten.

Defectos posibles : limitación de corriente, limitación térmica o error del programa
=> comprobar que el par de la valvula no es superior al par máxima soportado por el actuador
=> comprobar que el actuador no adelanta el tiempo bajo tensión dado (recalentamiento posible)
Para arrancar de nuevo el actuador, invertir la dirección del functionamiento o apagarlo y ponerlo bajo tensión.

FAILSAFE - Description et caractéristiques

FAILSAFE - Description and spécifications..... **15**
FAILSAFE - Beschreibung und Eigenschaften..... **15**
FAILSAFE - Descripción y características **15**

15

FAILSAFE - Schéma électrique

FAILSAFE - Electric wiring **16**
FAILSAFE - Schaltplan..... **16**
FAILSAFE - Esquema eléctrico **16**

16

Actionneurs avec système de sécurité intégré (mode Tout ou Rien obligatoire)
Actuator with failsafe integrated security system (ON/OFF mode compulsory)
Stellantriebe mit Sicherheitsblock (AUF/ZU Modus notwendig)
Actuadores con systéma de seguridad (Modo ON/OFF obligatorío)

Le modèle failsafe intègre un bloc batterie de secours piloté par une carte électronique. Sa fonction est de prendre le relais en cas de coupure d'alimentation aux bornes 1, 2 et 3 de l'actionneur. Le modèle failsafe peut être configuré en normalement ouvert (NO) ou normalement Fermé (NF) selon l'application client.
La carte pilotant la batterie gère le cycle de charge et vérifie l'état de la batterie. Si un défaut est détecté au niveau de la batterie, un contact sec entre les bornes 65 et 66 s'ouvre. Si ce contact est relayé par le client il a ainsi la possibilité de détecter un défaut sans ouvrir l'actionneur et de prévoir le remplacement de la batterie.
Le modèle failsafe fonctionne en câblage ON/OFF.
Un autre schéma de câblage est possible en utilisant les bornes 1,2, 3 et 65, 66 , l'avantage de ce câblage est que le pilotage moteur n'est autorisé que lorsque le contact entre 65 et 66 est fermé et donc le bloc batterie en état de marche.

Failsafe option integrate battery pack monitored by electronic board in the actuator. Its function is to relay in case of power supply failure on terminal PIN 1,2 and 3 of the actuator. The fail safe option could be set on different position like normally open (NO) or normally close (NC) depends on customer application.
The electronic board monitors the battery pack and check the status of battery (cycle load and failure)
If a battery failure is detected , a contact on PIN 66 and 66 switch off .If customer use this contact he could be aware that there is a failure on battery in the actuator without remove cover and plan the replacement.
Fail safe option requiered ON/OFF mode.
An another wiring diagram is also available using terminal PIN 1, 2, 3 and 65, 66. The advantage of it is actuator could not ne derive if failure battery pack is detected

---

FAILSAFE-Modelle beinhalten einen Batteriesatz, der von der elektronischen Karte im Antrieb gesteuert wird. Seine Aufgabe ist, einen Spannungsausfall an Klemme 1,2 und 3 zu überbrücken. Die FAILSAFE-Position kann zwischen ÖFFNER (NC) oder SCHLIESSER (NO) abhängig vom Verwendungszweck frei gewählt werden.
Die elektronische Karte prüft stets den Batteriesatz (Ladezustand bzw. Ausfall). Wenn ein Batterieausfall erkannt wird, kann dieser über einen an Klemme 65 und 66 angelegten Schaltkreis signalisiert werden. Somit kann der Anwender den Zustand der Batterie überwachen, ohne den Antriebsdeckel entfernen zu müssen.
Die FAILSAFE-Option ist sowohl im AUF/ZU-Modus als auch im 3-Punkt-Modulier-Modus verwendbar.
Durch Spannungsversorgung an Klemme 1, 2, 3 über Klemme 65 und 66 kann sichergestellt werden, daß der Antrieb bei schlechtem Batteriezustand nicht mehr die Sicherheitsposition verlässt.

El modelo failsafe integra un bloque de baterías de seguridad, pilotado por una tarjeta electrónica. Su función es de tomar el relevo en caso de apagón a los conectadores 1, 2 y 3 del actuador. El modelo failsafe puede ser configurado en normalmente abierto (NO) o normalmente cerrado (NF), según la utilización del cliente.
La tarjeta comprueba el ciclo de carga y el estado de la batería. Si un defecto es detectado al nivel de la batería, un contacto seco entre los conectadores 65 y 66 se abre. Si este contacto es utilizado, el cliente tiene la posibilidad de detectar un defecto sin abrir el actuador y así prever el reemplazo de la batería.
El modelo failsafe funciona con el modo ON/OFF.
Un otro tipo de cableado es posible utilizando los conectadores 1, 2, 3 y 65, 66, la ventaja de este cableado es que el pilotaje del motor es autorizado solamente cuando el contacto entre 65 y 66 es cerrado, luego, que el bloque de baterías en estado de funcionamiento.

Tension / *Voltage* / Spannung / Voltaje	18V DC
Courant nominal / *Nominal current* / Nennstrom / Corriente nominal	0,8A
Courant maximal / *Maximal current* / Max. Strom / Corriente máximo	2,4A
Durée initiale de charge / *Initial loading time* / Ladezeit / Duración de cargada	14h max
Relais de report d'état de la charge / *Load state feedback relay* Rückmelderelais für Ladezustand /	24V DC - 1A max
Température / *Temperature* / Temperatur / Temperatura	-10°C à/*to*/bis/a 40°C

CARTE ELECTRONIQUE CHARGEUR / *LOADING ELECTRONIC CARD*
LOADER ELECTRONISCHE KARTE / TARJETA ELÉCTRONICA CARGADORA

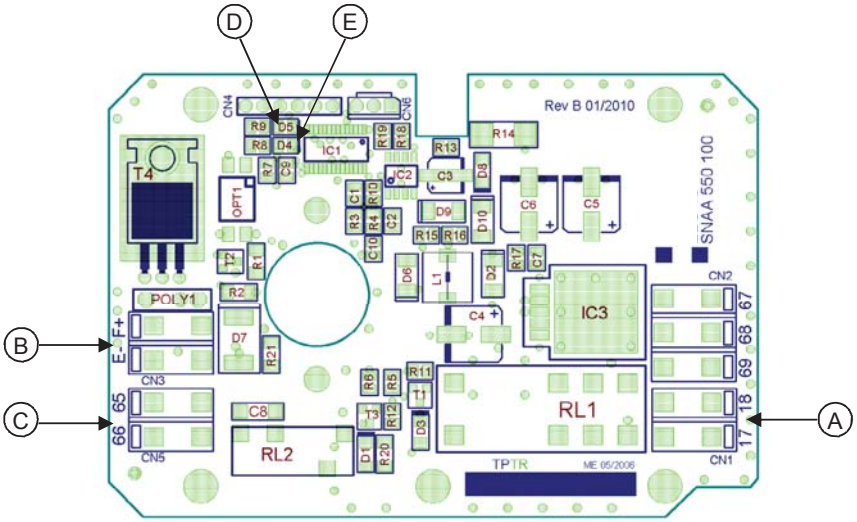

Rep.	Désignation	*Designation*	Bezeichnung	Designación
A	**Connecteur 18V DC**	*18V DC terminal strip*	18V DC Verbindung	Conectador 18V DC
B	**Connecteur bloc batterie**	*Block battery terminal strip*	Batterie Block Verbindung	Conectador de las baterías
C	**Connecteur report d'état (défaut de charge/batterie)**	*State feedback terminal strip (load or battery failure)*	Verbindung für Rückmeldung (Ladezustand bzw. Ausfall)	Conectador del retorno de information (
D*	**LED verte**	*Green LED*	Grüne LED	LED verde
E**	**LED rouge**	*Red LED*	Rote LED	LED rojo

* **LED verte allumée : fonctionnement sur réseau / LED verte clignotante : fonctionnement sur batteries (max. 3min)**
Green *LED lighting : functioning on network / Green LED twinkling : functioning on battery (max. 3min)*
Grüne LED leuchtet auf : Betrieb auf Netz / Grüne LED blinkt auf : Betrieb auf Batterie (max. 3min)
LED verde enciendo : funcionamento conectado sobre el red eléctrico / LED verde parpadeo : funcionamento con baterías (max. 3min)

** **LED rouge éteinte : batteries chargées / LED rouge clignotante : batteries en charge (max. 14h)**
Red LED switched off : loaded battery / Red LED twinkling : battery loading (max. 14h)
Rote LED leuchtet auf : beladene Batterie / Rote LED blinkt auf : Batterie beladet (max. 14h)
LED rojo apagado : baterías cargadas / LED rojo parpadeo : baterías se cargan (max. 14h)

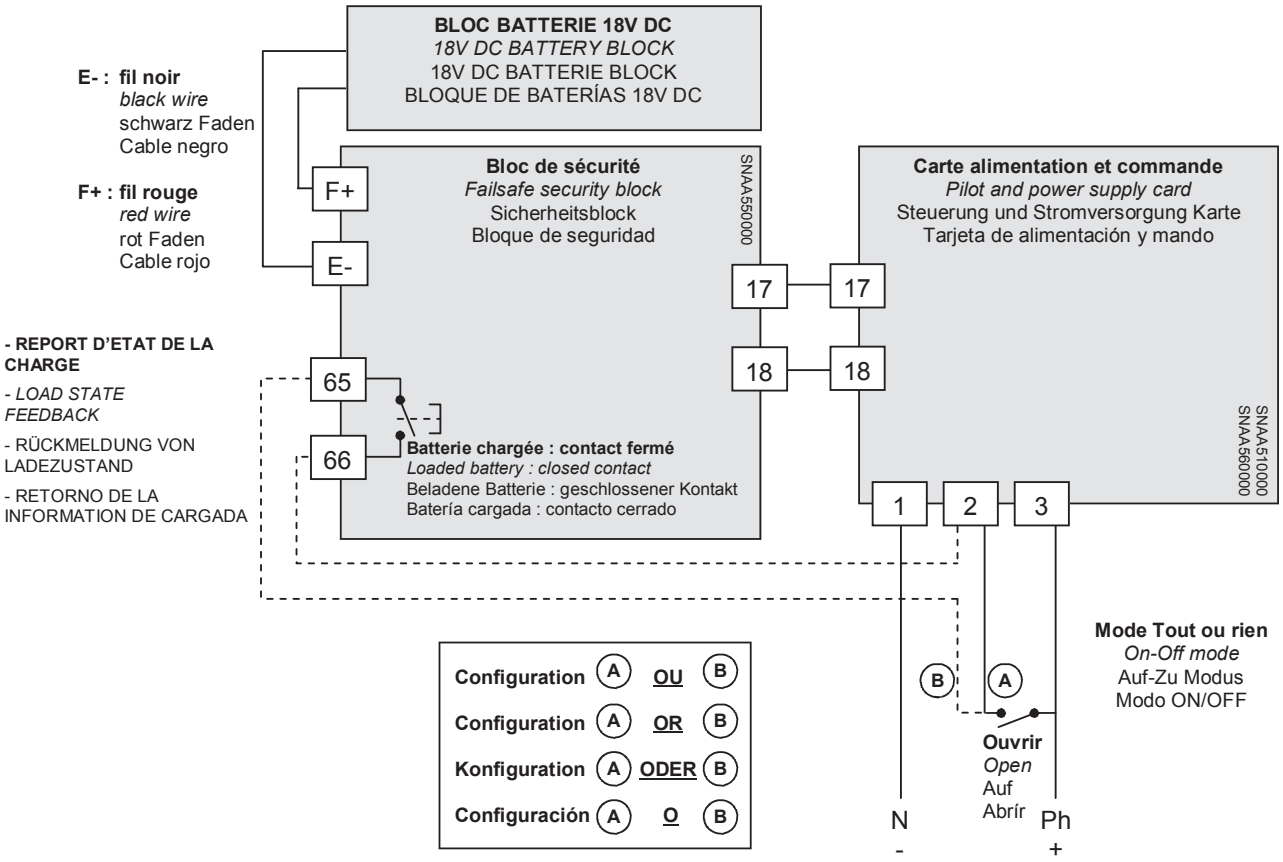

Fermé par défaut / *Pre-set to closed* / Voreinstellung geschlossen / Cerado por defecto

Configuration A ou B :

A- Mode standard : en cas de pilotage de l'actionneur avec un automate, le report d'état de la charge peut être connecté à celui-ci pour plus de sécurité.

B- Mode de sécurité totale (en utilisant le relais de report d'état, bornes 65 et 66) : l'actionneur n'ouvrira la vanne que si le bloc de sécurité est opérationnel (charge suffisante, carte initialisée).

Configuration A or B :

A- Standard mode : *when piloting the actuator with an automat (PLC), the load state feedback can be connected to it for more safety.*

B- Total security mode *(using the feedback relay, terminals 65 and 66) : the actuator will open only if the security block is operational (sufficient loading, initialized card).*

Konfiguration A oder B :

A- Standard Modus : Im Fälle der Steuerung des Antrieb mit einer Automat kann der Rückmeldung des Batteriesladung an diesen hier für Sicherheit angeschlossen sein.

B- Total Sicherheit Modus (mit benutzung des Rückmeldungsrelais, Klemmen 65 und 66) : der Antrieb wird den Hahn nur öffnen wenn das Sicherheitsblock geladen ist (gemïgenede Ladung, initializierte Karte).

Configuración A o B :

A - Modo estándar : en caso de un pilotaje del actuador con un autómata, el retorno de la información de carga puede ser conectado a éste para más de seguridad.

B - Moda de seguridad total (utilizando el relé de retorno de estado, conectadores 65 y 66): el actuador abrirá la válvula solazmente si el bloque de seguridad es operativo (carga suficiente, tarjeta inicializada).

POSI - Carte électronique — **18**
POSI - Electronic card 18
POSI - Elektronische Karte 18
POSI - Tarjeta electricónica 18

POSI - Branchements électriques — **19**
POSI - Electric connections 19
POSI - Elektrische Verbindung 19
POSI - Conexiones eléctricas 19

POSI - Schéma électrique — **20**
POSI - Electric wiring 20
POSI - Schaltplan 21
POSI - Esquema eléctrico 21

POSI - Séquence de paramétrage — **22**
POSI - Parameter selection sequence 23
POSI - Parametrisierungsschritte 24
POSI - Secuencia de reglaje 25

Différents types de consigne (pilotage carte Bornier N°15 et N°16)
Nos cartes sont paramétrables en usine sur demande. Le signal de commande (consigne) et signal de recopie peuvent être de nature différente (courant ou tension). **Sans aucune information du client les cartes sont paramétrées en courant 4-20mA (consigne+recopie client)**

Pilotage en 0-10V et 0-20mA :
Lors d'un événement extérieur, absence de consigne (coupure accidentelle câble par ex) mais en présence de l'alimentation carte.
La convention veut que l'actionneur se retrouve en une position définie (vanne ouverte ou fermée). En standard nos actionneurs se fermeront en absence de consigne, mais d'autres états sont possibles sur demande

Pilotage en 4-20mA.
La convention veut que l'actionneur reste dans sa position lors de la coupure de la consigne (coupure accidentelle câble par ex) mais en présence de l'alimentation carte.
Lors du rétablissement de la consigne l'actionneur se repositionne automatiquement selon la valeur de la consigne

---

Various control types (control signal on terminals N°15 and N°16)
On request, our cards can be set in factory. The consign and the feedback signal can have different forms (current or voltage).
Without any information from the customer, the cards are set for current 4-20mA (control + feedback signal)

Control in modes 0-10V and 0-20mA
In case of outside event, absence of control signal (accidental wires cut for example) but in presence of power, the actuator will travel to defined position (open or closed valve).
In standard our actuators will close themselves in absence of control signal but there are other possibilities on request.

Control in mode 4-20mA
In case of outside event, absence of control signal (accidental wires cut for example) but in presence of power, the actuator will stay in its position.
In the both cases, when the control signal is restored, the actuator reach automatically the position corresponding to control signal value.

Verschiedene Steuersignale (über Anschlüsse 15 und 16)

Unsere Karten können nach Bedarf parametriert werden. Ein– und Ausgangssignal können dabei unabhängig voreinander gewählt werden (Strom– oder Spannungssignal). **Standardmäßige Voreinstellung ist 4-20mA für Ein– und Ausgangssignal.**

Ansteuerung mit 0-10V oder 0-20mA:
Bei Ausfall des Steuersignals (z.B. Kabelbruch) aber Aufrechterhaltung der Spannungsversorgung fährt der Antrieb in die voreingestellte Sicherheitsposition (Auf oder Zu). **Standardmäßige Voreinstellung ist « Schliesser ».**

Ansteuerung mit 4-20mA:
Bei Ausfall des Steuersignals (z.B. Kabelbruch) aber Aufrechterhaltung der Spannungsversorgung verharrt der Antrieb in seiner letzten Position.
In beiden Fällen fährt der Antrieb automatisch in die dem Steuersignal entsprechende Position, sobald es wieder anliegt.

Diferentes tipos de mando – Bornes N°15 y N°16)
Nuestras tarjetas, a petición, pueden ser parametrizadas en fábrica. El señal de mando y el señal de recopia pueden ser de tipos diferentes, corriente o tensión. **Sin ninguna información del cliente las tarjetas son parametrizadas en el modo corriente 4-20mA (mando + recopia cliente)**

Pilotaje en 0-10V y 0-20mA :
En el caso de un acontecimiento exterior, ausencia de mando (corte accidental del cableado por ejemplo) pero en presencia de la alimentación de la tarjeta, el actuador coloca la válvula en una posición definida (válvula abierta o cerrada).
Por defecto, nuestros actuador se cerrarán en ausencia de mando pero otras posibilidades son posibles a petición.

Pilotaje en 4-20mA.
En el caso de un acontecimiento exterior, ausencia de mando (corte accidental del cableado por ejemplo) pero en presencia de la alimentación de la tarjeta, el actuador se queda en la misma posición.
Cuando se restablece el mando, el actuador se reposiciona automáticamente según el valor del mando

Carte de positionnement P6 (0-20mA / 4-20mA / 0-10V)
P6 positioning card (0-20mA / 4-20mA / 0-10V)
P6 Regelkarte (0-20mA / 4-20mA / 0-10V)
Tarjeta de posicionamiento P6 (0-20mA / 4-20mA / 0-10V)

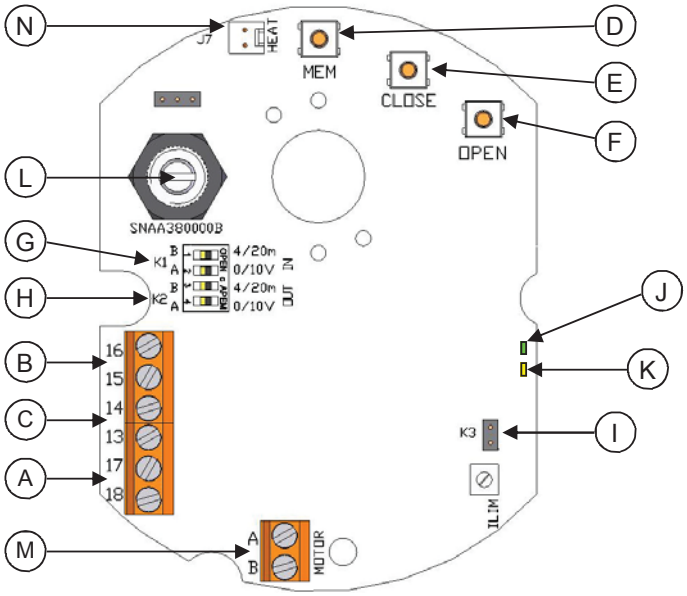

Rep.	Désignation	*Designation*
A	**Bornier d'alimentation 24V AC/DC**	*24V AC/DC power supply terminal trip*
B	**Bornier de consigne**	*Instruction terminal trip*
C	**Bornier de recopie**	*Feed back terminal trip*
D	**Bouton de réglage MEM**	*Adjustment button MEM*
E	**Bouton de réglage CLOSE**	*Adjustment button CLOSE*
F	**Bouton de réglage OPEN**	*Adjustment button OPEN*
G	**Cavalier K1**	*K1 shunt*
H	**Cavalier K2**	*K2 shunt*
I	**Cavalier K3**	*K3 shunt*
J	**LEDs verte et rouge**	*Green and red LEDs*
K	**LED jaune : présence tension**	*Yellow LED : power supply indication*
L	**Potentiomètre**	*Potentiometer*
M	**Connexion moteur**	*Motor connexion*
N	**Connecteur résistance de réchauffage**	*Heating resistor connector*

Rep.	Bezeichnung	Designación
A	24V AC/DC Spannungsversorgung	Terminal de alimentación 24V AC/DC
B	Anschlussklemmen des Signalgebers	Terminal de mando
C	Anschlussklemmen der Rückmeldung	Terminal de recopia
D	Einstellknopf MEM	Pulsador de reglaje MEM
E	Einstellknopf CLOSE	Pulsador de reglaje CLOSE
F	Einstellknopf OPEN	Pulsador de reglaje OPEN
G	K1 Steckbrücke	Grapa K1
H	K2 Steckbrücke	Grapa K2
I	K3 Steckbrücke	Grapa K3
J	Grüne und rote LEDs	LEDs verdes y rojos
K	Gelb LED : Stromversorgung Anzeige	LED amarillo : Presencia de tención
L	Potentiometer	Potenciómetro
M	Motor Zusammenhang	Conexión del motor
N	Heizwiderstandsverbindung	Conector de la resistencia de calefacción

ACTIONNEUR DEJA PRE-REGLE EN USINE

CABLAGE CONSIGNE ET RECOPIE DE LA CARTE P6

Afin de limiter les perturbations électromagnétiques, l'utilisation de câbles blindés est obligatoire (câbles supérieurs à 3m).

- Dévisser le presse-étoupe droit et passer le câble.
- Connecter la consigne entre les bornes 15 et 16 (annexe p.20 rep.B).
  La borne 15 est la polarité négative (-) et la borne 16 la polarité positive (+).
- Connecter la recopie entre les bornes 13 et 14 (annexe p.20 rep.C).
  La borne 13 est la polarité positive (+) et la borne 14 la polarité négative (-).
- Revisser le presse-étoupe (s'assurer du bon remontage de celui-ci afin de garantir une bonne étanchéité).

Montage départ usine : par défaut, consigne et recopie en 4-20mA, sens normal.
Pour reparamétrer la carte : voir page 24, « Séquence de paramétrage ».
Pour vérifier le bon fonctionnement de la carte : voir page 24, « Mode de fonctionnement normal ».

ACTUATOR PRE-SET IN FACTORY

POSITIONING CARD WIRING (OUTPUT AND INPUT SIGNAL)

In order to avoid electromagnetic perturbations, it is compulsory to use shielded cables (cables longer than 3m).

- Unscrew the right gland and pass the cable.
- Connect the input signal between terminals 15 and 16 (attached p.20 mark.B)..
  Terminal 15 is the negative polarity (-) and terminal 16 is the positive polarity (+).
- Connect the output signal between terminals 13 and 14.(attached p.20 mark.B)..
  Terminal 13 is the positive polarity (+) and terminal 14 is the negative polarity (-).
- Tighten the cable gland (Ensure that it's well mounted to guaranty the proofness).

The feedback must be connect with rigid wires. If the applied voltage is higher than 42V, the user must foresee a fuse in the power supply line.
Factory setting : by default, 4-20mA input and output signals with normal rotation sense.
To proceed to a new setting of the card : please see page 25, "Parameter selection sequence".
To check the proper operation of the card : please see page 25, "Normal operating mode".

STELLANTRIEB IST SCHON IM WERK VOREINGESTELLT

REGELUNGKARTE VERKABELUNG (SIGNALMELDUNG UND RUCKMELDUNG)

Um elektromagnetische Störungen zu vermeiden, müssen abgeschirmte Kabel benutzt werden (Kabel länger als 3m).

- Lösen Sie die Kabelverschraubung und führen Sie das Kabel durch.
- Verkabeln Sie den Signalgeber zwischen den Klemmen 15 und 16.
  Die Klemme 15 ist negativ gepolt (-) und die Klemme 16 positiv (+).
- Verkabeln Sie den Positionrückmelder zwischen den Klemmen 13 und 14.
  Die Klemme 13 ist positiv gepolt (+) und die Klemme 14 negativ (-).
- Die Kabelverschraubung wieder befestigen.

Aufbau ab Werk : Voreingestellt, Signalgeber und Rückmeldung 4-20mA, im normal Drehrichtung.
Um die Karte wieder zu programmieren : siehe Seite 26, « Parametrisierungsschritte ».
Um die richtige Arbeitsweise zu prüfen : siehe Seite 26, « Normalbetrieb ».

ACTUADOR YA PREREGLADO EN FÁBRICA

CABLEADO, MANDO Y RECOPIA DE LA TARJETA P6

Al fin de limitar las perturbación electromagnéticas, la utilización de cables blindados es obligatoria (cables de longitud más que 3m).

- Destornillar la prensa a estopa de derecho y pasar el cable .
- Conectar el mando entre los bornes 15 y 16. (anexo p.20 Ref. B)
  El borne 15 es la polaridad negativa (-) y el borne 16 la polaridad positiva (+).
- Conectar la recopia entre los bornes 13 y 14. (anexo p.20 Ref. C).
  El borne 13 es la polaridad positiva (+) y el borne 14 la polaridad negativa (-).
- Reatornillar la prensa-estopa correctamente para garantizar una buena hermeticidad

Montaje a la salida de fábrica : Por defecto, mando y recopia en 4-20mA, dirección normal.
Para ajustar de nuevo la tarjeta : ver página 27, « Secuencia de reglaje ».
Para verificar el buen funcionamiento de la tarjeta : ver página 27, « Modo de funcionamiento normal ».

POSI - SHÉMA ÉLECTRIQUE

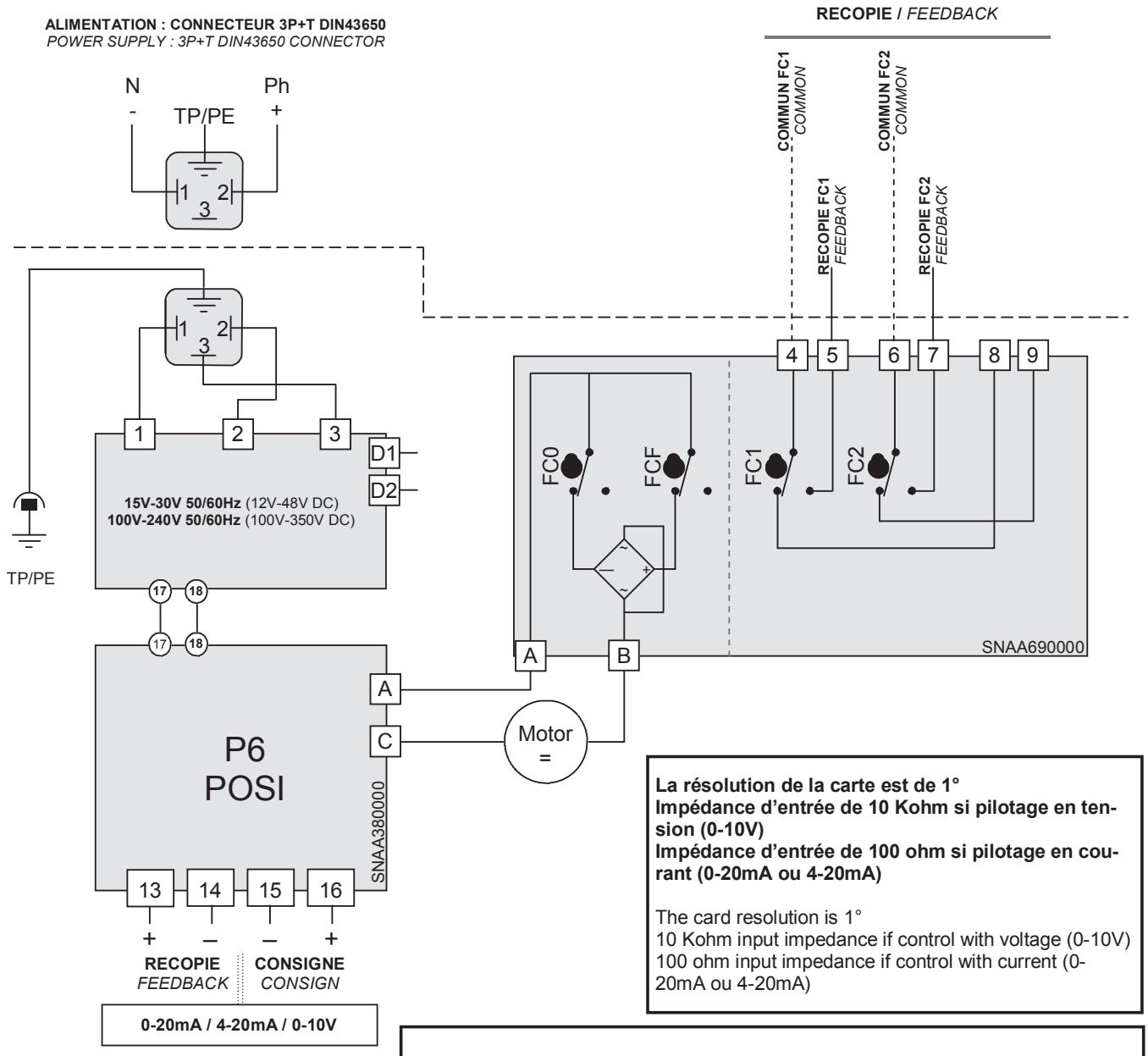

La résolution de la carte est de 1°
Impédance d'entrée de 10 Kohm si pilotage en tension (0-10V)
Impédance d'entrée de 100 ohm si pilotage en courant (0-20mA ou 4-20mA)

The card resolution is 1°
10 Kohm input impedance if control with voltage (0-10V)
100 ohm input impedance if control with current (0-20mA ou 4-20mA)

REP	DESIGNATION
FC0	**Fin de course ouverture** *Open limit switch*
FCF	**Fin de course fermeture** *Close limit switch*
FC1	**Fin de course auxiliaire 1** *Auxiliary limit switch 1*
FC2	**Fin de course auxiliaire 2** *Auxiliary limit switch 2*
D1/D2	**Bornier report défaut (24V DC / 3A max)** *Failure report Terminal strip (24V DC / 3A max)*

La tension de pilotage doit être de type T.B.T.S. (Très Basse Tension de Sécurité)
The control voltage must be .S.E.L.V. (Safety Extra Low Voltage)

La température du bornier peut atteindre 90°C
The terminal temperature can reach 90°C

La recopie doit être connecté avec des câbles rigides. Si la tension appliquée est supérieure à 42V, l'utilisateur doit prévoir un fusible dans la ligne d'alimentation.
The feedback must be connect with rigid wires. If the applied voltage is higher than 42V, the user must foresee a fuse in the power supply line.

Pour une utilisation avec de grandes longueurs de câbles, le courant induit généré par les câbles ne doit pas dépasser 1mA
For a use with a long power supply wiring, the induction current generated by the wires musn't be higher than 1mA

Les câbles utilisés doivent être rigides (tensions pour la recopie : 4 à 250V AC/DC)
The used wires must be rigid (feedback voltages : 4 to 250V AC

SPANNUNGSVERSORGUNG : 3P+T DIN43650 VERBINDUNG
ALIMENTACIÓN : CONECTOR 3P+T DIN43650

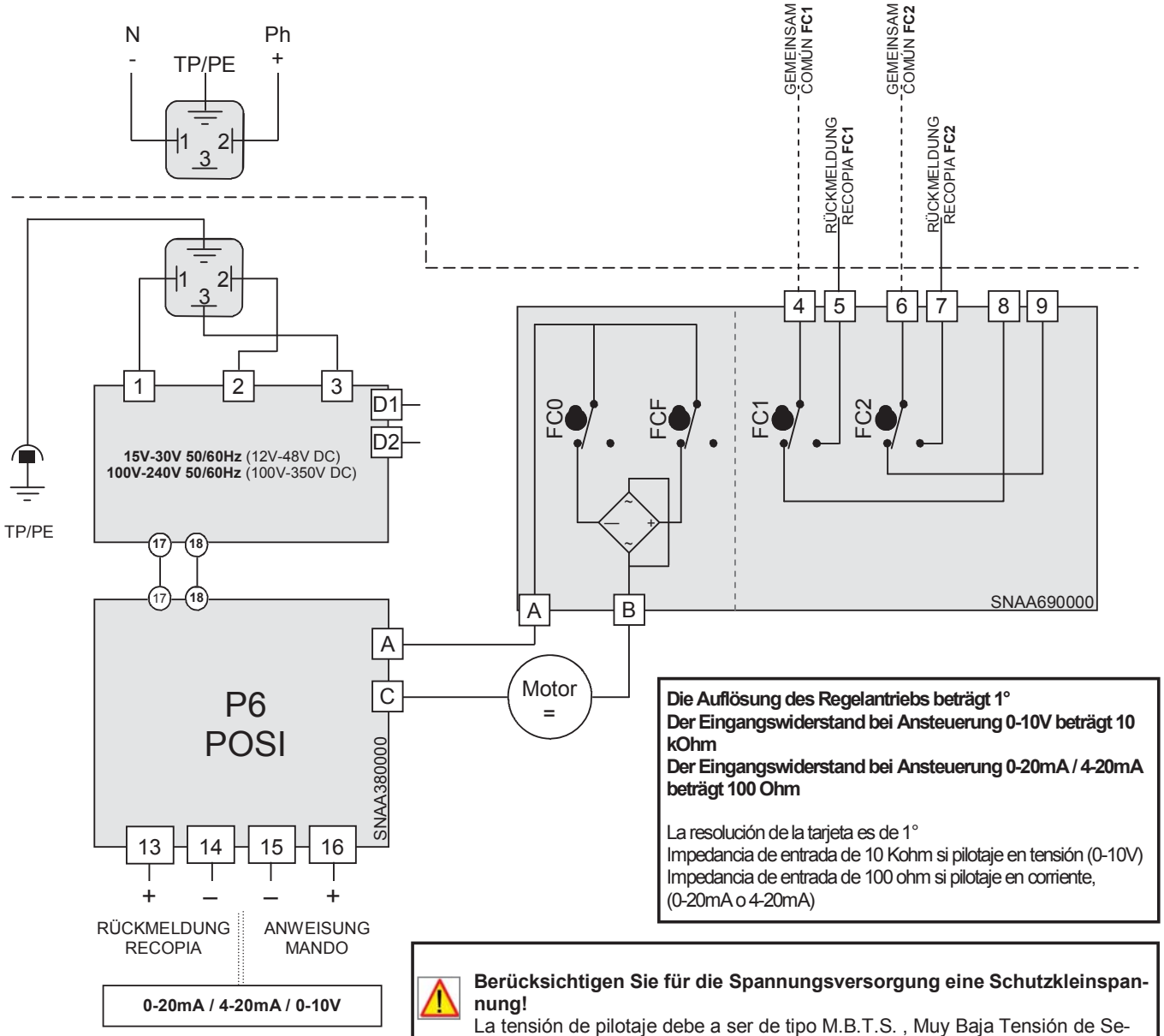

Die Auflösung des Regelantriebs beträgt 1°
Der Eingangswiderstand bei Ansteuerung 0-10V beträgt 10 kOhm
Der Eingangswiderstand bei Ansteuerung 0-20mA / 4-20mA beträgt 100 Ohm

La resolución de la tarjeta es de 1°
Impedancia de entrada de 10 Kohm si pilotaje en tensión (0-10V)
Impedancia de entrada de 100 ohm si pilotaje en corriente, (0-20mA o 4-20mA)

REP	BESCHREIBUNG DESIGNACIÓN
FC0	Endschalter AUF Final de carrera apertura
FCF	Endschalter ZU Final de carrera cierre
FC1	Zusätzlicher Endschalter 1 Final de carrera auxiliar 1
FC2	Zusätzlicher Endschalter 2 Final de carrera auxiliar 2
D1/D2	Fehlermeldung Klemmleiste (24V DC / 3A max) Terminal retorno de defecto (24V DC / 3A max)

Berücksichtigen Sie für die Spannungsversorgung eine Schutzkleinspannung!
La tensión de pilotaje debe a ser de tipo M.B.T.S. , Muy Baja Tensión de Seguridad,

Die Terminal-Temperatur kann bis zu 90°C erreichen
La temperatura del Terminal de conexión puede alcanzar 90°C

Die Klemmen "Kunde" müssen mit biegesteif Anschlusskabel verkabelt werden. Sollte die Spannung 42v überschritten, so muss vom Anwender eine Sicherung in der Stromzufuhr vorgesehen werden.
La recopia debe ser conectada con cables rígidos. Si la tensión aplicada es superiora a 42V, el usuario debe prever un fusible en la alimentación.

Bei Verwendung einer langen Zuleitung für die Spannungsversorgung darf die Induktionsspannung der Leitung nicht größer als 1mA sein.
Para una utilización con los grandes largo de cables, la corriente induce engendrado por los cables no debe adelantar 1mA

Die Anschlusskabel müssen biegesteif sein (Rückmeldespannungen 4 bis 250V AC/DC)
Los cables eléctricos utilizados deben ser rígidos (tención para el señal de retorno : 4 hasta 250V AC/DC)

SEQUENCES DE PARAMETRAGE

1 Positionnement des cavaliers K1, K2 et K3

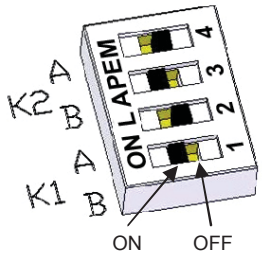

- Positionner les cavaliers d'après le tableau suivant (avant chaque modification, mettre la carte hors tension) :

Consigne	Recopie	Cavalier K1		Cavalier K2		Cavalier K3
		A	B	A	B	
0-10V	**0-10V**	ON	OFF	ON	OFF	OFF
0-10V	**0-20mA**	ON	OFF	OFF	ON	OFF
0-10V	**4-20mA**	ON	OFF	OFF	ON	ON
0-20mA	**0-10V**	OFF	ON	ON	OFF	OFF
0-20mA	**0-20mA**	OFF	ON	OFF	ON	OFF
0-20mA	**4-20mA**	OFF	ON	OFF	ON	ON
4-20mA	**0-10v**	OFF	ON	ON	OFF	OFF
4-20mA	**0-20mA**	OFF	ON	OFF	ON	OFF
4-20mA	**4-20mA**	OFF	ON	OFF	ON	ON

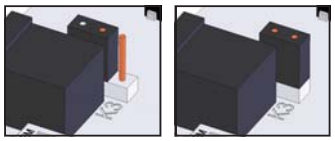

K3 OFF K3 ON

2 Choix du sens de la vanne

2.1 Sens normal (par défaut)
- Appuyer sur **OPEN** et mettre la carte sous tension en maintenant le bouton enfoncé.
- La **LED verte s'allume**. Relâcher le bouton **OPEN.**
- Débrancher la carte.

2.2 Sens inverse
- Appuyer sur **CLOSE** et mettre la carte sous tension en maintenant le bouton enfoncé.
- La **LED rouge s'allume**. Relâcher le bouton **CLOSE.**
- Débrancher la carte.

3 Choix du type de consigne

3.1 Consigne en tension 0-10V
- Appuyer sur **MEM** et mettre la carte sous tension en maintenant le bouton enfoncé.
- La **LED rouge clignote 3 fois**. Relâcher le bouton.
- Débrancher la carte.

3.2 Consigne en courant 0-20mA
- Appuyer sur **MEM** et **OPEN** et mettre la carte sous tension en maintenant les boutons enfoncés.
- La **LED rouge clignote 3 fois**. Relâcher les boutons.
- Débrancher la carte.

3.3 Consigne en courant 4-20mA (par défaut)
- Appuyer sur **MEM** et **CLOSE** et mettre la carte sous tension en maintenant les boutons enfoncés.
- La **LED rouge clignote 3 fois**. Relâcher les boutons.
- Débrancher la carte.

4 Mode apprentissage

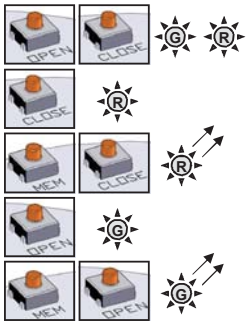

- Appuyer sur **OPEN** et **CLOSE** et mettre la carte sous tension en maintenant les boutons enfoncés.
- Les **2 LEDs s'allument**. Relâcher les boutons, les 2 LEDs s'éteignent. Le mode apprentissage est sélectionné.

- Appuyer sur **CLOSE** pour faire venir la vanne en position fermée. La **LED rouge s'allume**.
- Mémoriser la position fermée par **MEM + CLOSE,** la **LED rouge clignote 2 fois** pour acquitter.

- Appuyer sur **OPEN** pour faire venir la vanne en position ouverte. La **LED verte s'allume**.
- Mémoriser la position ouverte par **MEM + OPEN,** la **LED verte clignote 2 fois** pour acquitter.

- Les positions sont mémorisées, débrancher la carte.

MODE DE FONCTIONNEMENT NORMAL

- Mettre la carte sous tension. La **LED verte clignote 3 fois**.
- Lors du fonctionnement normal, la LED verte s'allume lorsque le moteur ouvre la vanne, et la LED rouge lorsque le moteur ferme la vanne.
- Lorsque les 2 LEDs sont éteintes, le moteur n'est pas sollicité.

- En cas de couple trop important, les **2 LEDs s'allument** pour indiquer la limitation et l'actionneur s'arrête. Pour le redémarrer, il faut soit inverser le sens de marche, soit éteindre et remettre sous tension la carte.

PARAMETER SELECTION SEQUENCE

1 Shunts positioning K1, K2 and K3

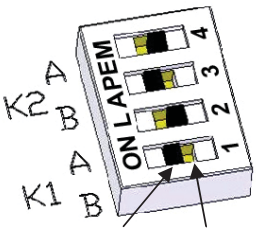

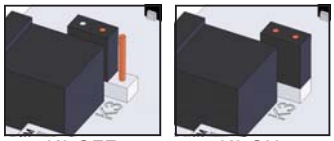

K3 OFF K3 ON

- Position the shunts as follows (before modification, switch off the card) :

Input signal	Output signal	Schunt K1		Schunt K2		Schunt K3
		A	B	A	B	
0-10V	**0-10V**	ON	OFF	ON	OFF	OFF
0-10V	**0-20mA**	ON	OFF	OFF	ON	OFF
0-10V	**4-20mA**	ON	OFF	OFF	ON	ON
0-20mA	**0-10V**	OFF	ON	ON	OFF	OFF
0-20mA	**0-20mA**	OFF	ON	OFF	ON	OFF
0-20mA	**4-20mA**	OFF	ON	OFF	ON	ON
4-20mA	**0-10v**	OFF	ON	ON	OFF	OFF
4-20mA	**0-20mA**	OFF	ON	OFF	ON	OFF
4-20mA	**4-20mA**	OFF	ON	OFF	ON	ON

2 Selection of the flow direction of the valve

2.1 Normal flow direction (by default)
- Press the **OPEN** button and apply the operating voltage to the card while keeping this button depressed.
- The **green LED lights up**. Release the **OPEN** button.
- Disconnect the card.

2.2 Inverse flow direction
- Press the **CLOSE** button and apply the operating voltage to the card while keeping this button depressed.
- The **red LED lights up**. Release the **CLOSE** button.
- Disconnect the card.

3 Selection of the type of set value

3.1 Voltage set value 0-10V
- Press the **MEM** button and apply the operating voltage to the card while keeping this button depressed.
- The **red LED will light up 3 times**. Release this button.
- Disconnect the card.

3.2 Current set value 0-20mA
- Press the **MEM** and **OPEN** buttons and apply the operating voltage to the card while keeping these buttons depressed.
- The **red LED will light up 3 times**. Release these buttons.
- Disconnect the card.

3.3 Current set value 4-20mA (by default)
- Press the **MEM** and **CLOSE** buttons and apply the operating voltage to the card while keeping these buttons depressed.
- The **red LED will light up 3 times**. Release these buttons.
- Disconnect the card.

4 Learning mode

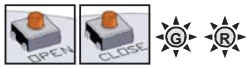

- Press the **OPEN** and **CLOSE** buttons and apply the operating voltage to the card while keeping these buttons depressed.
- The **2 LEDs will light up**. Release these buttons and the 2 LEDs will extinguish. The card is now in the learning mode.

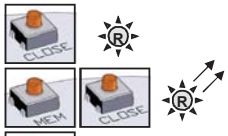

- Press the **CLOSE** button to put the valve in its closed position. The **red LED will light up**.
- Store this selected closed position by pushing **MEM + CLOSE,** the **red LED will light up 2 times** as a confirmation of acknowledgement.

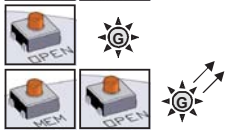

- Press the **OPEN** button to put the valve in its open position. The **green LED will light up**.
- Store this selected open position by pushing **MEM + OPEN,** the **green LED will light up 2 times** as a confirmation of acknowledgement.

- Now, the positions selected have been stored. Disconnect the card.

NORMAL OPERATING MODE

- Apply the operating voltage to the card. The **green LED will light up 3 times**.
- Under normal operating conditions, the green LED will light up when the drive motor opens the valve, and the red LED will light up when the drive motor closes it.
- If both LEDs remain extinguished, it means that the drive motor has not been triggered.

- In the case of an over torque, the motor stops and the **2 LEDS lights** then together to indicate the action of the torque limiter. To re-start it, you must either reverse the sense of rotation, either switch the power off and on.

PARAMETRISIERUNGSSCHRITTE

1 Position der Steckbrücke K1, K2 und K3

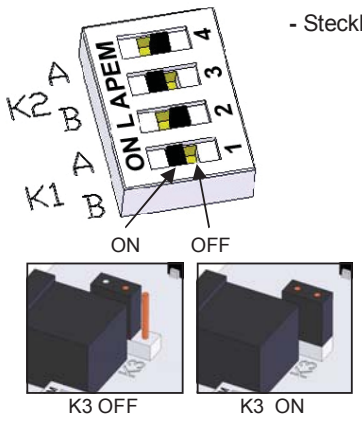

- Steckbrücken Positionierung (Vor jeder Änderung, die Karte spannungsfrei machen) :

Signalgeber	Rückmeldung	Steckbrücke K1		Steckbrücke K2		Steckbrücke K3
		A	B	A	B	
0-10V	**0-10V**	ON	OFF	ON	OFF	OFF
0-10V	**0-20mA**	ON	OFF	OFF	ON	OFF
0-10V	**4-20mA**	ON	OFF	OFF	ON	ON
0-20mA	**0-10V**	OFF	ON	ON	OFF	OFF
0-20mA	**0-20mA**	OFF	ON	OFF	ON	OFF
0-20mA	**4-20mA**	OFF	ON	OFF	ON	ON
4-20mA	**0-10v**	OFF	ON	ON	OFF	OFF
4-20mA	**0-20mA**	OFF	ON	OFF	ON	OFF
4-20mA	**4-20mA**	OFF	ON	OFF	ON	ON

2 Festlegung der Drehrichtung des Absperrventils

2.1 Normale Drehrichtung (Voreingestellt)
- Auf **OPEN** drücken und die Karte einschalten, dabei den Knopf gedrückt halten.
- Die **GRÜNE LED leuchtet auf**. Den Knopf **OPEN** loslassen.
- Die Karte spannungsfrei machen.

2.2 Umgekehrte Drehrichtung
- Auf **CLOSE** drücken und die Karte einschalten, dabei den Knopf gedrückt halten.
- Die **ROTE LED leuchtet auf**. Den Knopf **CLOSE** loslassen.
- Die Karte spannungsfrei machen.

3 Einstellung des Eingang Signal

3.1 Eingang Signal bei Spannung 0-10V
- auf **MEM** drücken und die Karte einschalten, dabei den Knopf gedrückt halten.
- die **rote LED leuchtet dreimal auf**. Den Knopf loslassen.
- Die Karte spannungsfrei schalten.

3.2 Eingang Signal bei Strom 0-20mA
- auf **MEM** und **OPEN** drücken und die Karte einschalten, dabei die Knöpfe gedrückt halten.
- die **rote LED leuchtet dreimal auf**. Die Knöpfe loslassen.
- Die spannungsfrei schalten.

3.3 Eingang Signal bei Strom 4-20mA (Ab Werk voreingestellt)
- auf **MEM** und **CLOSE** drücken und die Karte einschalten, dabei die Knöpfe gedrückt halten.
- die **rote LED leuchtet dreimal auf**. Die Knöpfe loslassen.
- Die spannungsfrei schalten.

4 Lernmodus

- auf **OPEN** und **CLOSE** drücken und die Karte einschalten, dabei die Knöpfe gedrückt halten.
- Die **beiden LEDs leuchten auf**. Die Knöpfe loslassen, die **beiden LEDs erlöschen**. Der Lernmodus ist gewählt.

- auf **CLOSE** drücken, um das Absperrventil in die geschlossene Position zu bringen. **Die rote LED leuchtet auf**.
- Die geschlossene Position durch **MEM + CLOSE** speichern, die **rote LED leuchtet 2 zur Bestätigung auf**.

- auf **OPEN** drücken, um das Absperrventil in die geöffnete Position zu bringen. **Die grüne LED leuchtet auf**.
- Die geöffnete Position durch **MEM + OPEN** speichern, die **grüne LED leuchtet 2 zur Bestätigung auf**.
- Die Positionen sind gespeichert, die Karte spannungsfrei machen.

NORMALBETRIEB

- Die Karte einschalten. Die **grüne LED leuchtet dreimal auf**, um anzuzeigen, dass der Startvorgang korrekt ausgeführt wird.
- Im Normalbetrieb leuchtet die grüne LED auf, wenn der Antrieb das Absperrventil öffnet, und die rote LED, wenn der Antrieb das Absperrventil schliesst.
- Wenn keine der beiden LEDs aufleuchtet, wird der Antrieb nicht angesteuert.

- Im zu hoch Drehmoment Fall, **leuchten die beiden LEDs an** und stoppt der Antrieb. Um der Antrieb wieder zu starten, muss man den Drehrichtung auswechseln oder die Spannung Auf/Zu Umschalten.

SECUENCIA DE REGLAJE

1 Posicionamiento de las grapas K1, K2 y K3

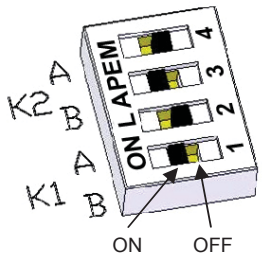

- Colocar las grapas según la tabla siguiente (antes de cada modificación, Desconectar la tarjeta) :

Mando	Recopia	Grapa K1		Grapa K2		grapa K3
		A	B	A	B	
0-10V	**0-10V**	ON	OFF	ON	OFF	OFF
0-10V	**0-20mA**	ON	OFF	OFF	ON	OFF
0-10V	**4-20mA**	ON	OFF	OFF	ON	ON
0-20mA	**0-10V**	OFF	ON	ON	OFF	OFF
0-20mA	**0-20mA**	OFF	ON	OFF	ON	OFF
0-20mA	**4-20mA**	OFF	ON	OFF	ON	ON
4-20mA	**0-10v**	OFF	ON	ON	OFF	OFF
4-20mA	**0-20mA**	OFF	ON	OFF	ON	OFF
4-20mA	**4-20mA**	OFF	ON	OFF	ON	ON

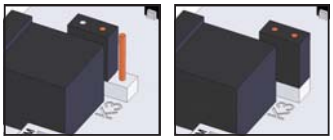

2 Elección de la dirección de la válvula

2.1 Dirección normal (por defecto)
- apoyar sobre **OPEN** y poner la tarjeta bajo tensión manteniendo el pulsador hundido.
- **El LED verde se enciende**. Relajar el pulsador **OPEN**.
- Desconectar la tarjeta.

2.2 Dirección inversa
- apoyar sobre **CLOSE** y poner la tarjeta bajo tensión manteniendo el pulsador hundido.
- **El LED rojo se enciende**. Relajar el pulsador **CLOSE**.
- Desconectar la tarjeta.

3 Elección del tipo de mando

3.1 Mando bajo tensión 0-10V
- apoyar sobre **MEM** y poner la tarjeta bajo tensión manteniendo el pulsador hundido.
- **El LED rojo parpadea 3 veces**. Relajar el pulsador.
- Desconectar la tarjeta.

3.2 Mando bajo tensión 0-20mA
- apoyar sobre **MEM** y **OPEN** y poner la tarjeta bajo tensión manteniendo los pulsadores hundidos.
- **El LED rojo parpadea 3 veces**. Relajar el pulsador.
- Desconectar la tarjeta.

3.3 Mando bajo tensión 4-20mA (por defecto)
- apoyar sobre **MEM** y **CLOSE** y poner la tarjeta bajo tensión manteniendo los pulsadores hundidos.
- **El LED rojo parpadea 3 veces**. Relajar el pulsador.
- Desconectar la tarjeta.

4 Modo aprendizaje

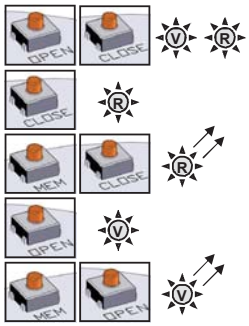

- apoyar sobre **OPEN** y **CLOSE** y poner la tarjeta bajo tensión manteniendo los pulsadores hundidos.
- **Los 2 LED se encienden**. Relajar los pulsadores , Los 2 LED se apagan. El Modo aprendizaje es seleccionado.

- apoyar sobre **CLOSE** , Para hacer venir la válvula en posición cerrada. **El LED rojo se enciende**.
- Memorizar la posición cerrada apoyando sobre **MEM + CLOSE**, El **LED rojo parpadea 2 veces** para confirmar.

- apoyar sobre **OPEN** , Para hacer venir la válvula en posición abierta. **El LED verde se enciende**.
- Memorizar la posición abierta apoyando sobre **MEM + OPEN**, El **LED verde parpadea 2 veces** para confirmar.

- Las posiciones memorizadas, Desconectar la tarjeta.

MODO FUNCIONAMIENTO NORMAL

- Poner la tarjeta bajo tensión, El **LED verde parpadea 3 veces**.
- Durante el funcionamiento normal, el LED verde se enciende cuando el motor abre la válvula y el LED rojo cuando el motor cierre la válvula.
- Cuando los 2 LED son apagados, el motor no es solicitado.

- En caso de par demasiado importante, los **2 LED se encienden** para indicar la limitación y el actuador cesa de funcionar. Para arrancarlo de nuevo, hay que o invertir la dirección de funcionamiento, o desconectar y poner de nuevo la tarjeta bajo tensión.

Actionneurs avec possibilité d'une troisième position
Actuator with a third position
Stellantrieb mit einer dritten Position
Actuadores con una tercera posición

L'option GF3 permet à l'actionneur d'être piloté en 3 positions. Les trois positions peuvent être comprises entre 0° et 180°. En standard les actionneurs sont réglés en usine à 0° 90° 180°, ce qui correspond à une vanne 3 voies standard. D'autres configurations sont possibles mais cela doit être précisé par le client lors de la commande.
Les 3 positions sont pilotées par 4 contacts (FCO,FCF,FCIO,FCIF) et 3 contacts de recopie (FC1,FC2,FC3)
Les contacts FC1,FC2 sont des contacts NO (fermeture du circuit en position extrême) et FC3 est un contact NF. (ouverture du circuit en position intermédiaire).

GF3 option allow actuator to be drive and stop in 3 positions.
These 3 positions could be between 0° to 180°.In standard actuators are setting in our workshop at 0° 90° 180° that's fit with standard 3 ways ball valve .
Others positions still available but customer have to price on the order witch position is request.
These 3 positions are controlled by 4 switches (FCO,FCF,FCIO and FCIF) and 3 switches for feed back signal
Switches FC1,FC2 are NO contact (close the circuit in extreme position) and FC3 is a NC contact (open the circuit in intermediate position)

Die GF3-Ausführung erlaubt dem Anwender, den Antrieb in 3 vordefinierte Stellungen zu verfahren.
Diese 3 Positionen können in einem Schwenkbereich zwischen 0° bis 180° liegen. In der Standardausführung werden sie passend zu 3-Wege-Standardventilen auf 0°, 90° und 180° voreingestellt.
Andere Voreinstellungen sind möglich und müssen im Bedarfsfall durch den Kunden im Auftrag vermerkt sein.
Das Anfahren der 3 Positionen wird durch 4 Mikroschalter (FCO,FCF,FCIO and FCIF) und die Positionsrückmeldung durch 3 weitere Mikroschalter realisiert. Die Schalter FC1 und FC2 haben "Öffner"-Funktion (schliessen den Stromkreis am jeweiligen Ende des Schwenkbereichs) und der Schalter FC3 hat "Schliesser"-Funktion (öffnet den Stromkreis in der Zwischenstellung).

La opción GF3 permite que el actuador es pilotado en 3 posiciones. Las tres posiciones pueden ser comprendidas entre 0° y 180°. En estándar, los actuadores son reglados en fábrica a 0° 90° 180°, lo que corresponde a una válvula 3 vías estándares. Otras configuraciones son posibles pero el cliente debe precisarlo cuando hace el pedido.
Las 3 posiciones son pilotadas por 4 contactos, FCO,FCF,FCIO,FCIF, y 3 contactos de recopía, (FC1,FC2,FC3)
Los contactos FC1,FC2 son contactos normalmente abiertos (circuito cerrado en posición extrema) y FC3 es un contacto cerrado abierto (circuito abierto en posición intermediaria).

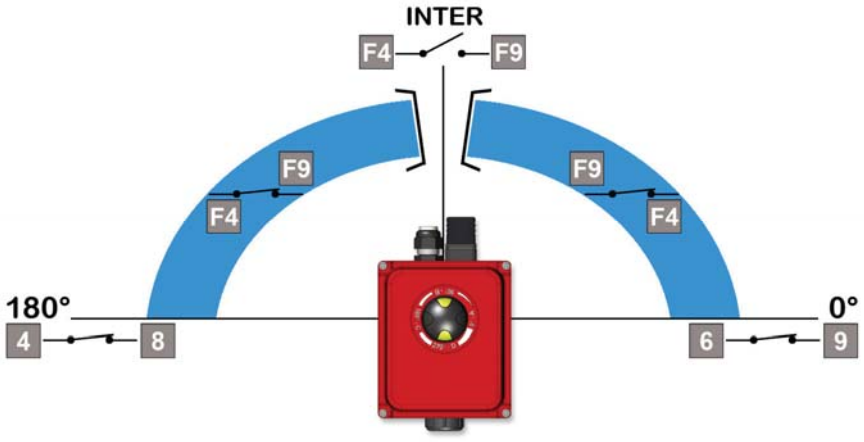

	Borne / Terminal		
	6 & 9	4 & 8	F4 & F9
0°	**Fermé** / Closed / Zu / Cerrado	**Ouvert** / Open / Auf / abierto	**Fermé** / Closed / Zu / Cerrado
inter	**Ouvert** / Open / Auf / abierto	**Ouvert** / Open / Auf / abierto	**Ouvert** / Open / Auf / abierto
180°	**Ouvert** / Open / Auf / abierto	**Fermé** / Closed / Zu / Cerrado	**Fermé** / Closed / Zu / Cerrado

La température du bornier peut atteindre 90°C
The terminal temperature can reach 90°C
Die Terminal-Temperatur kann bis zu 90°C erreichen.
La temperatura del Terminal de conexión puede alcanzar 90°C

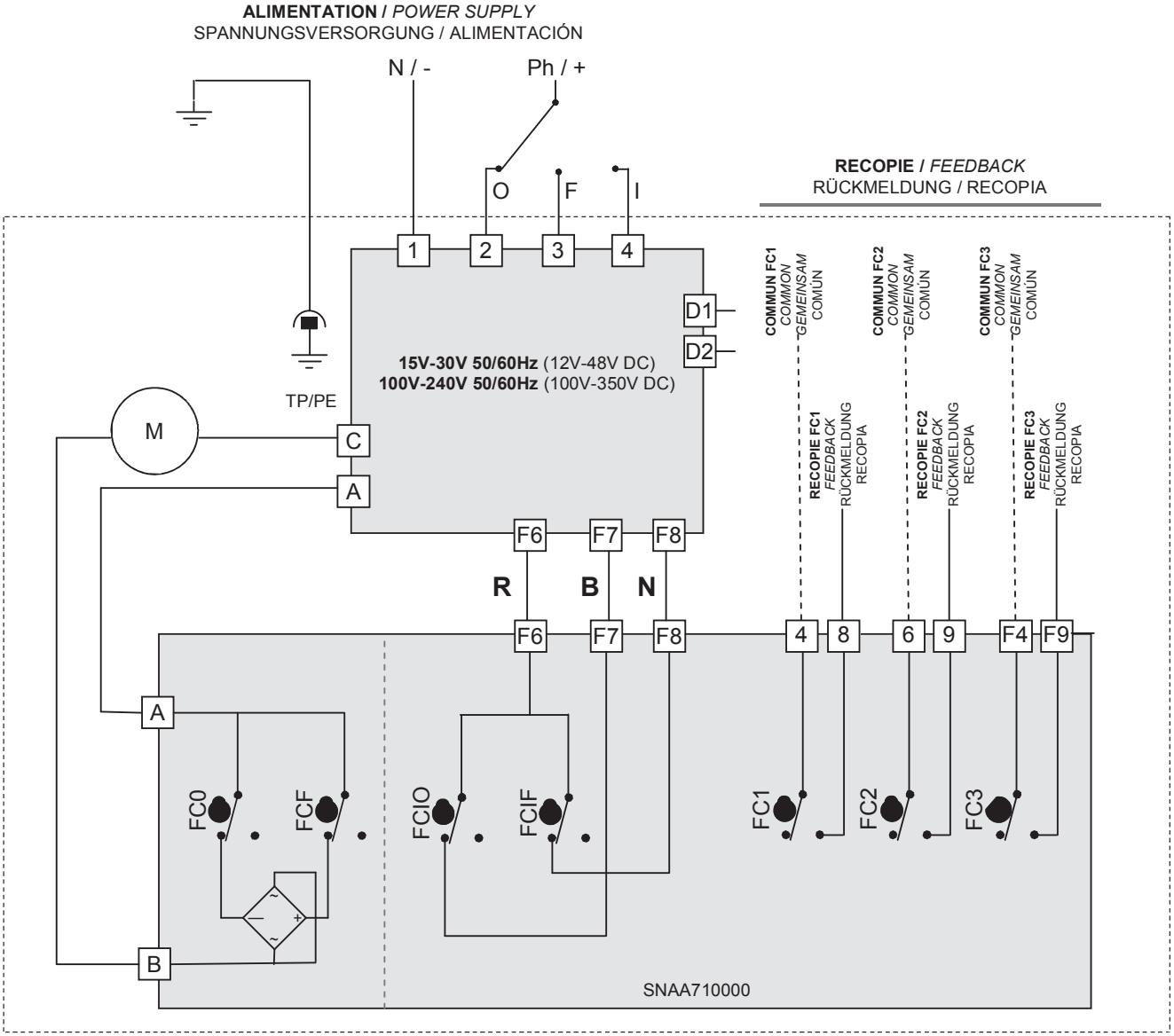

REP	DESIGNATION / BESCHREIBUNG / DESIGNACIÓN	REP	DESIGNATION / BESCHREIBUNG / DESIGNACIÓN
FCO	**Fin de course ouverture** *Open limit switch* Endschalter AUF Final de carrera apertura	FC1	**Fin de course auxiliaire 1** *Auxiliary limit switch 1* Zusätzlicher Endschalter 1 Final de carrera auxiliar 1
FCF	**Fin de course fermeture** *Close limit switch* Endschalter ZU Final de carrera cierre	FC2	**Fin de course auxiliaire 2** *Auxiliary limit switch 2* Zusätzlicher Endschalter 2 Final de carrera auxiliar 2
FCIO	**Fin de course intermédiaire ouverture** *Intermediate open limit switch* Zwischenendschalter AUF Final de carrera intermedia apertura	FC3	**Fin de course auxiliaire 3** *Auxiliary limit switch 3* Zusätzlicher Endschalter 3 Final de carrera auxiliar 3
FCIF	**Fin de course intermédiaire fermeture** *Intermediate close limit switch* Zwischenendschalter ZU Final de carrera intermedia cierre	D1/D2	**Bornier report défaut (24V DC / 3A max)** *Failure reportTerminal strip (24V DC / 3A max)* Fehlermeldung Klemmleiste (24V DC / 3A max) Terminal retorno de defecto (24V DC / 3A max)

DONNÉES TECHNIQUES

DONNEES TECHNIQUES / *TECHNICAL DATA*						
Type (actionneur électrique 1/4 tour) / Type (1/4 turn electric actuator)	ER10	ER20	ER35	ER35	ER60	ER100
Protection IP / *IP protection (EN60529)*	IP66 (étanche aux poussières, jet d'eaux « débit <12.5 L/min » dusttight, water spraying « flow <12.5 L/min »)					
Résistance à la corrosion (utilisation en intérieur et extérieur) / *Corrosion resistance (outdoor and indoor use)*	Plastique / *plastic : PA6.6 FV 25% V0 et / and Nylon* *Toutes pièces métalliques :INOX 304L ou Acier + traitement Zn* *Raw material : 304L Stainless Steel or Steel + Zn treatment*					
Température / *Temperature*	-10°C à/*to +55°C (FAILSAFE : -10°C à/to +40°C)*					
Hydrométrie / *Hydrometry*	< 81% à 31°C (88°F) avec décroissance linéaire jusqu'à 50% à 40°C(selon EN61010-1) < 81% to 31°C (88°F) with lineary decrease down to 50% at 40°C (according EN61010-1)					
Degré de pollution / *Pollution degree*	Classe 2 / *Class 2*					
Altitude / *Altitude*	0 à/*to 2000m*					
Poids / *Weight*	1 Kg			2.1 Kg		
DONNEES MECANIQUES / *MECHANICAL DATA*						
Couple nominal / *Nominal torque*	10Nm	20Nm	35Nm	35Nm	60Nm	100Nm
Temps de manœuvre 90° (ER rapide) *1/4 turn travel time (Fast ER)*	11s	11s	25s	7s	12s	23s
Temps de manœuvre 90° (ER lent) *1/4 turn travel time (slow ER)*				41s	79s	119s
Temps de manœuvre 90° (ER POSI) *1/4 turn travel time (ER POSI)*		25s		41s	79s	119s
Embase de fixation / *Mounting actuator base (ISO5211)*	Etoile/*Star 14* *F03-F04-F05*			Etoile/*Star 22* *F05-F07*		
Angle de rotation / *Swing angle*	90° (autres sur demande / *others on request)*					
Butées mécaniques / *Mechanical end stops*	90° +/- 5°					
Commande manuelle / *Manual override*	Axe sortant / *Out axle*					
Sens de rotation / *Direction of rotation*	Sens antihoraire pour ouvrir / *Anticlockwise to open*					
DONNEES ELECTRIQUES / *ELECTRICAL DATA*						
Tension / *Voltage ±10%*	15V à/to 30V AC (12V à/to 48V DC) ou/*or 100V à/to 240V AC (100V à/to 350V DC)*					
Fréquence / *Frequency*	50/60Hz					
Puissance consommée *Power consumption*	15W (0.08A) cos φ = 0.75			45W (0.15A) cos φ = 0.75		
Catégorie surtension / *Overvoltage category*	Catégorie II / *Category II*					
Limiteur de couple / *Torque limiter*	Électrique / *electric*					
Durée sous tension / *Duty cycle (CEI34)*	50%					
Tension maximale contacts fins de course / *Limit switches maximal voltage*	4V à/to 250V AC/DC (Surtension catégorie II / Overvoltage category II)					
Courant maximal contacts fins de course / *Limit switches maximal current*	10mA à/to 5A max					
Raccordement électrique */ Electrical wiring*	1 Presse étoupe ISO M20 / *1 ISO M20 gland* *1 connecteur 3P+T DIN43650 / 1 DIN43650 3P+T connector*					
Courrant de démarrage *Inrush current*	35A					

TECHNISCHEN DATEN / DATOS TECNICOS						
Typ (90° elektrisches Stellantrieb) / Tipo (actuador eléctrico 1/4 vuelta)	ER10	ER20	ER35	ER35	ER60	ER100
IP Schutzart / Protección IP (EN60529)	IP66 (Staub schutzt, Spritz wasserdicht « Durchfluss <12.5 L/min » / Estanco a los polvos, chorros de agua « caudal <12.5 L/min »)					
Rostschutz (Innen und Außeneinsatz) Resistencia a la corrosión (utilización Interior y exterior)	Plastik / plástico : PA6.6 FV 25% und / y Nylon Alle Metall Teile :INOX 304L oder Stahlguss + Härtung Zn Todas las piezas metálicas : inox 304 o acero + tratamiento Zn					
Temperatur / Temperatura	-10°C bis/hasta *+55°C (FAILSAFE: -10°C bis/hasta +40°C)*					
Hydrometrie / Hidrometría	< 81% a 31°C (88°F) con un decrecimiento lineal hasta 50% a 40°C(según EN61010-1) < 81% bis 31°C (88°F) mit linearer Abnahme bis zu 50% bei 40°C (gemäß EN61010-1)					
Verschmutzungsgrad / Grado de polución	Klasse 2 / *Class 2*					
Höhe / Altitud	0 bis/hasta *2000m*					
Gewicht / Peso	1 Kg			2.1 Kg		
MECHANISCHE DATEN / DATOS MECÁNICOS						
Drehmoment / Par nominal	10Nm	20Nm	35Nm	35Nm	60Nm	100Nm
Stellzeit (Standard) / Tiempo de maniobra 1/4 (ER rápido)	11s	11s	25s	7s	12s	23s
Stellzeit (langsam) / Tiempo de maniobra 1/4 (ER lento)				41s	79s	119s
Stellzeit () / Tiempo de maniobra 1/4 (ER POSI)		25s		41s	79s	119s
Befestigungssockel / Platina de fijación (ISO5211)	Stern/*Estrella 14* *F03-F04-F05*			Stern/*Estrella 22* *F05-F07*		
Drehwinkel / Ángulo de rotación	90° (andere auf Anfrage / *otros bajo demanda)*					
Mechanische Endlagenbegrenzung / Topes mecánicos	90° +/- 5°					
Handbetätigung / Mando manual	Rusgehende Achse / *eje saliente*					
Drehrichtung / Dirección de rotación	Gegen uhr Richtung zu öffnen / *Dirección anti-horario para abrir*					
ELEKTRISCHE TEILEN / DATOS ELÉCTRICOS						
Spannung / *Voltaje* *±10%*	15V bis/hasta 30V AC (12V bis/hasta 48V DC) oder/*o 100V bis/hasta 240V AC (100V bis/hasta 350V DC)*					
Frequenz / Frecuencia	50/60Hz					
Gesamte Leistungsaufnahme / Potencia consumida	15W (0.08A) cos φ = 0.75			45W (0.15A) cos φ = 0.75		
Überspannungskategorie / Categoría sobretensión	Kategorie II / *Categoría II*					
Drehmoment Begrenzer / Limitador de par	Elektrisch / *Eléctrico*					
Einschalt-Dauer / Tiempo bajo tensión (CEI34)	50%					
Maximale Spannung der elektrischen Endschalter / Tensión máxima contactos finales de carrera	4V *bis/hasta 250V AC/DC* (Überspannung kategorie II / categoría sobretensión II)					
Maximaler Strom der elektrischen Endschalter / Intensidad máxima contactos finales de carrera	10mA *bis/hasta 5A max*					
Elektrischer Anschluss / *Conexión eléctrica*	1 Kabel Verschraubung ISO M20 / prensaestopas *1 ISO M20* *1 Konnektor 3P+T DIN43650 / 1 DIN43650 3P+T conectador*					
Einschaltstromspitze *Corriente de arranque*	35A					

ACTIONNEUR ÉLECTRIQUE
ELECTRIC ACTUATOR
ELEKTRISCHE STELLANTRIEBE
ACTUADOR ELÉCTRICO

DSBA3200 rév.20/12/2010

CHEMLINE

SERIES PA, PNEUMATIC ACTUATOR

LEFT BLANK

CHEMLINE Plastics Limited

Your Pipeline To Quality Valves, Strainers, Flowmeters and Controls

55 Guardsman Road
Thornhill, Ontario
L3T 6L2
Canada
Tel: 905-889-7890
Fax: 905-889-8553

INSTALLATION AND MAINTENANCE INSTRUCTIONS
For Chemline P-Series Pneumatic Actuators

General:

The P series actuator is a double-opposed piston, double rack and pinion, quarter-turn operator.

The body and end caps are Polyamide plastic in the PP-Series, Rilsan-coated Aluminum in the PA and PG-Series, 316 stainless steel in the P3-Series and Xylan-coated Aluminum in the PH-Series.

This style of actuator has two opposed pistons with racks engaging with a single pinion on actuator shaft. Racks and pinion engage with massive teeth over the full length of the pinion, resulting in balanced forces with minimal backlash. The lower air port opens the actuator in a counter-clockwise direction and the upper port closes the actuator in a clockwise direction, looking from the top of the actuator.

Operating medium requirement:

1. The condition and quality of the compressed air supply to an actuator will affect the efficiency and the life of the seals, bearings and actuator in general. Actuators are to be used with clean, dry air, gas or non-aggressive fluids for satisfactory operation, although lubricated air is acceptable and fluids must be compatible with actuator internals and contain no suspended particles. Natural gas can also be used with the Rilsan-coated aluminum models.

2. We recommend installing a shutoff valve ahead of the actuator to allow the removal of the specific valve and actuator.

3. If air lubricators are used, the lubricant selected must be compatible with Nylon 66 (also known as Polyamide) and Nitrile (also known as Buna –N).

4. Factory assembled units are sized for operating air pressures of 60 psi minimum to 120 psi maximum If lower air supply pressures are available, actuator/valve combination has to be resized.

5. Actuator operating environment temperature limits are –32°C to 90°C (–32°C to265°C for the PH-Series).

Maintenance & Installation Instructions P Series Actuators cont.

Installation:

1. Unpowered actuators are in their "normal" state and are mounted onto valves placed in their fail-safe state, resulting in "Normally-Closed" or "Normally-Open" assemblies. The flats and the ISO slot on the top output shaft, as well as the indicator knob, should be aligned or modified to indicate the valve position.

2. Remove the valve handle according to that valve's maintenance manual.

3. On old-style multi-port valves, install the interference-fit saddle on/around the neck of the valve, tighten the set-screws, drop/tap the coupling into the hole in the saddle and onto the valve shaft, then mount the actuator with appropriate nuts/bolts/washers.

4. On Type-21/23 ball valves and Type-56/57 butterfly valves, center the mounting bracket on the ISO mounting pad, secure with nuts/bolts/washers, drop/tap the coupling onto the valve shaft and mount the actuator as above.

5. Test the actuator for alignment by cycling to the fully open and fully closed positions. Loosen mounting nuts and adjust if necessary, then retighten the nuts and retest for positioning. All nuts/bolts should be snug (hand-tight) but not excessively over-tightened.

6. If the mounted valve is installed other than straight up (actuator on top), the actuator should be supported separately in order to prevent side-loading, loosening of fasteners and increased pressure on the valve stem.

Maintenance:

'P' Series double rack and pinion actuators do not need any preventive maintenance. However, we recommend that you stock the spare parts listed below. Specify actuator model# and drawing part# or description when ordering. Refer to **ASSEMBLY DRAWING PPNA rev 0**. and proceed as follows:

(1) One set of piston O-rings (7)
(2) One set of end cap O-rings (6)
(3) One set of output shaft O-rings (8 & 9)
(4) Retaining ring shaft (10)
(5) Flat Washer (11)

Maintenance & Installation Instructions P Series Actuators cont.

IMPORTANT - Extreme care should be taken when disassembling end caps on spring return models as they are under tension.

1. Isolate actuator from electrical power supply and compressed air supply. Remove from line.

2. Sandwich actuator lengthwise through end caps (2) in a hydraulic press or large vise. Remove end cap retaining ring (13) and gradually release hydraulic pressure, or open vise until springs are fully released.

3. To replace piston O-rings (7) and end cap O-rings (6), remove end cap (2), spring(s) (12) and O-rings (6 & 7).

4. To replace output shaft O-rings (8 & 9), retaining ring shaft (10) and flat washers (11), remove position indicator (14), lift up and replace retaining ring (10) and flat washer (11).

5. Pull down shaft (4) and/or pinion (5), remove and replace shaft top O-rings (8) and shaft bottom O-rings (9).

6. To reassemble, reinstall the shaft (4) and/or pinion (5), washer (11) and retaining ring (10). Sit the actuator on a benchtop with the air port/solenoid mounting pad side of the actuator body (1) facing you while the slotted top part of the shaft (4) is pointing up. Slide the pistons (3) into the body from either end so that the teeth on the left-hand piston face you while the teeth on the right-hand piston face away from you. Ensure that both sets of piston teeth face and engage the pinion/shaft, then turn the shaft clockwise, as seen from the top, to pull the pistons into the body. Confirm that both pistons bottom out against the shaft properly by checking that the slot on top of the actuator shaft is pointing end-to-end when the shaft can turn no further and by comparing the distance from both piston faces to the ends of the body. If pistons are not engaged identically, turn shaft counterclockwise to push out pistons and hold one or both pistons to skip pinion teeth, if applicable, and repeat until both pistons bottom out at the same time. This bottoming out simulates the 90-degree rotation that occurs when air is applied to the actuator. Proceed with spring installation, if applicable, then reverse steps 2, 3 and 4.

Periodic checks should be performed to ensure tightness of all fittings.

NOTE 1: FOR SPRING-RETURN MODELS ONLY, DOUBLE-ACTING HAVE NO SPRINGS AND A FLAT END CAP.

NOTE 2: ON SOME SIZES, SHAFT AND PINION ARE ONE PIECE.

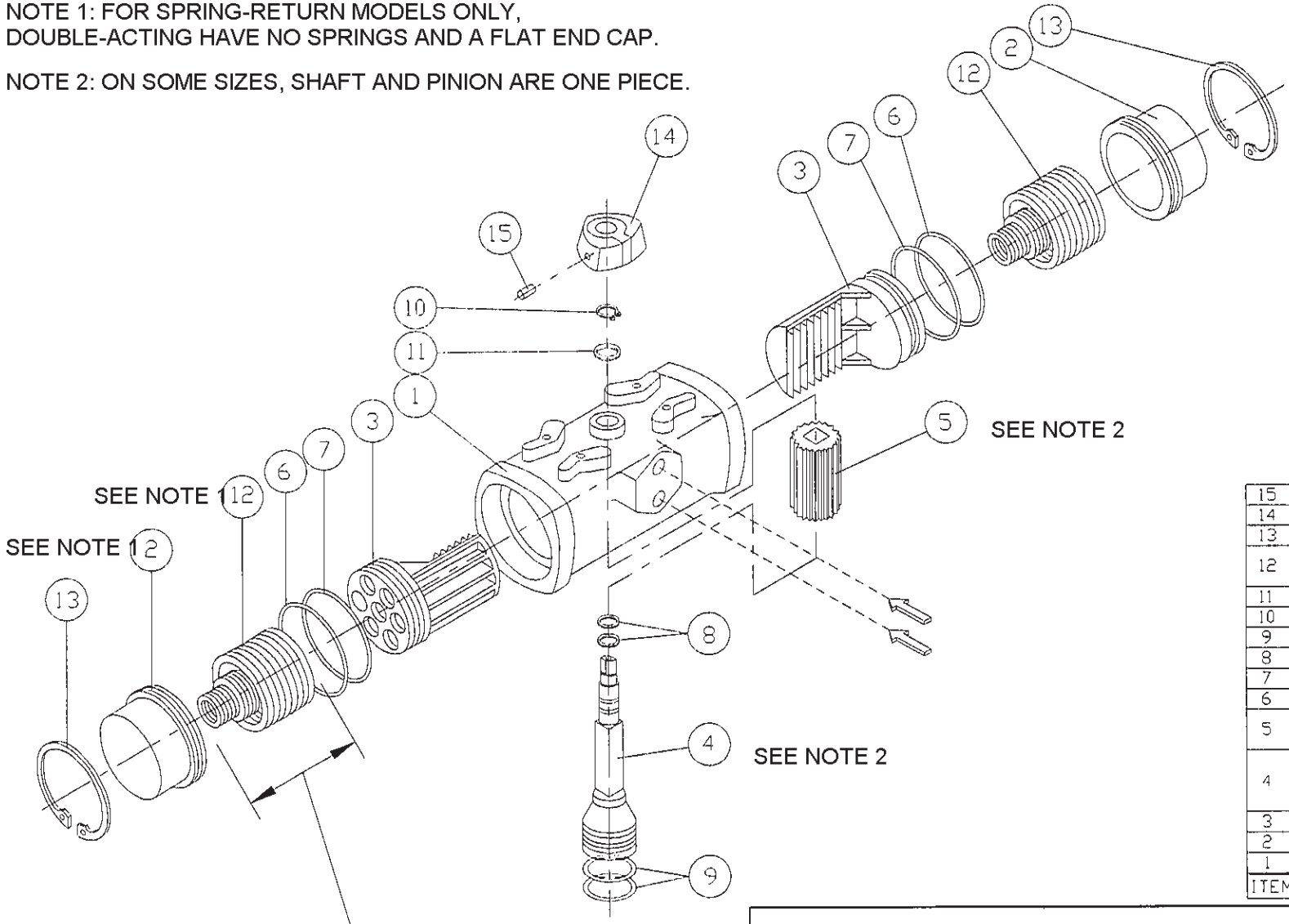

ITEM	DESCRIPTION	QTY
15	SET SCREW	1
14	POSITION INDICATOR	1
13	RETAINING RING (END CAP)	2
12	SPRING SET	1
11	FLAT WASHER	1
10	RETAINING RING (SHAFT)	1
9	O-RING (SHAFT BOTTOM)	2
8	O-RING (SHAFT TOP)	2
7	O-RING (PISTON)	2
6	O-RING (END CAP)	2
5	PINION	1
4	SHAFT	1
3	PISTON (WITH RACK)	2
2	END CAP	2
1	ACTUATOR BODY	1

THIS DRAWING AND ALL INFORMATION HEREON IS THE PROPERTY OF ASAHI/AMERICA. ANY COPYING, REPRODUCTION OR UNAUTHORIZED USE IS FORBIDDEN WITHOUT WRITTEN CONSENT.

	NAME	DATE
DR	KENICHI MIYAZAKI	9/4/01
APPD	DAVE HURLEY	9/4/01
PROD	LEO LESTER	9/4/01
WO#/CO#		
FILE		

CHEMLINE PLASTICS

P-SERIES ACTUATOR EXPLODED VIEW

SIZE	DWG. NO.	REV
A	1233	A
SCALE NTS	SHEET 1 OF 1	

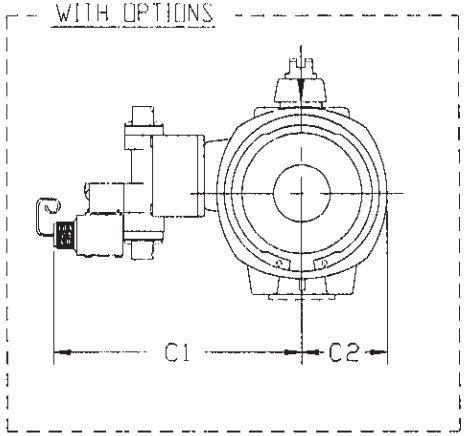

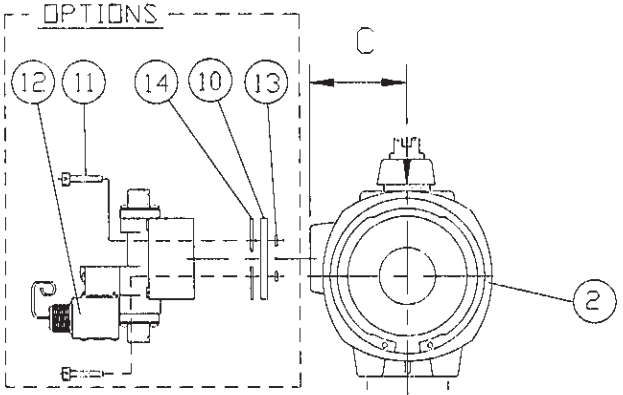

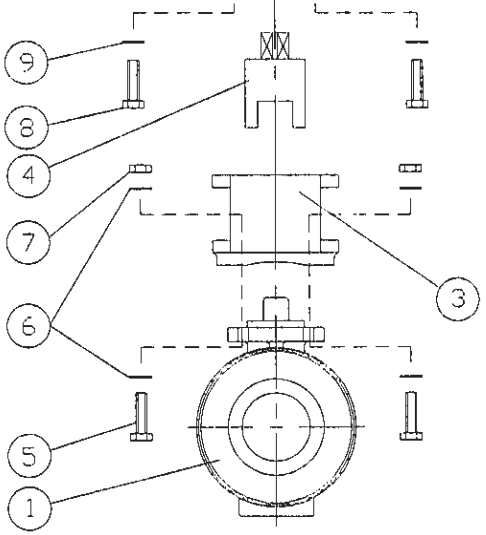

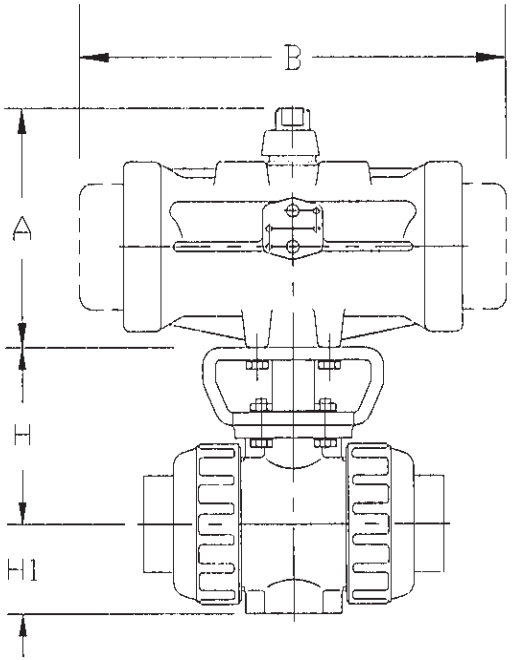

UNIT: INCH

VALVE SIZE	A		B		C		C1		C2	
	A-A	A-S	A-A	A-S	A-A	A-S	A-A	A-S	A-A	A-S
1/2"	3.34	3.34	4.22	5.55	1.47	1.47	5.41	5.41	1.21	1.21
3/4"	3.34	3.34	4.22	5.55	1.47	1.47	5.41	5.41	1.21	1.21
1"	3.34	3.34	4.22	5.55	1.47	1.47	5.41	5.41	1.21	1.21
1-1/4"	3.34	3.34	4.22	5.55	1.47	1.47	5.41	5.41	1.21	1.21
1-1/2"	3.34	4.40	4.22	5.86	1.47	1.73	5.41	5.66	1.21	1.41
2"	3.34	5.00	4.22	7.64	1.47	1.97	5.41	5.89	1.21	1.85

ITEM	DESCRIPTION	MATERIAL	QTY
14	GASKET (OPTIONS)	NBR	2
13	O-RING (OPTIONS)	NBR	2
12	SOLENOID (ASCO) (OPTIONS)	ZYTEL	1
11	SCREW SOC HD (OPTIONS)	300SS	1
10	MOUNTING PLATE (OPTIONS)	ZYTEL	1
9	FLAT WASHER (M6.0)	STAINLESS STEEL	4
8	BOLT (FOR A79 (PW) USE M5.0x.8-16LG) (FOR B79 (PO) USE M6.0x1-16LG) (FOR C79 (P1) USE M8.0x1.25-16LG)	STAINLESS STEEL	4
7	NUT (FOR 1/2" THRU 1-1/4" : M5.0x.8) (FOR 1/2" THRU 1-1/4" : M6.0x1)	STAINLESS STEEL	4
6	FLAT WASHER (FOR 1/2" THRU 1-1/4" : M5.0) (FOR 1/2" THRU 1-1/4" : M6.0)	STAINLESS STEEL	8
5	BOLT (FOR 1/2" THRU 1-1/4" : M5.0x.8-16LG) (FOR 1/2" THRU 1-1/4" : M6.0x1-20LG)	STAINLESS STEEL	4
4	COUPLING	STAINLESS STEEL 303	1
3	MOUNTING BRACKET	PPG	1
2	ACTUATOR	☐ GLASS FILLED POLYAMIDE ☐ STAINLESS STEEL (OPTION) ☐ RILSAN COATED CAST ALUMINUM (OPTION)	1
1	BALL VALVE TYPE 21	PVC,CPVC,PP,PVDF	1

UNIT: INCH

VALVE SIZE	1/2"	3/4"	1"	1-1/4"	1-1/2"	2"
H	2.76	3.01	3.29	3.64	3.98	4.43
H1	1.14	1.38	1.54	1.85	2.17	2.60

NOTE. The shape and appearance of assembly differ a little with nominal size compared to this drawing.

THIS DRAWING AND ALL INFORMATION HEREON IS THE PROPERTY OF ASAHI/AMERICA. ANY COPYING, REPRODUCTION OR UNAUTHORIZED USE IS FORBIDDEN WITHOUT WRITTEN CONSENT.

	NAME	DATE
DR	KENICHI MIYAZAKI	8/14/01
APPD	DAVE HURLEY	8/14/01
PROD	LEO LESTER	8/14/01
WO#/CO#		
FILE		

CHEMLINE PLASTICS

BALL VALVE TYPE21 PNEUMATIC ACT. 1/2" THRU 2"

SIZE	DWG. NO.	REV
A	0114BV	A

SCALE NTS

SHEET 1 OF 1

UNIT: INCH

VALVE SIZE	A		B		C		C1		C2	
	A-A	A-S	A-A	A-S	A-A	A-S	A-A	A-S	A-A	A-S
2-1/2"	5.00	5.00	7.00	8.74	1.97	1.97	5.89	5.89	1.85	1.85
3"	5.00	6.49	7.00	11.49	1.97	2.56	5.89	6.48	1.85	2.36
4"	6.49	6.49	9.21	11.49	2.56	2.56	6.48	6.48	2.36	2.36

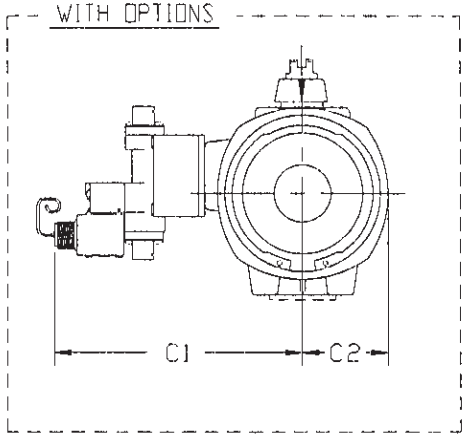

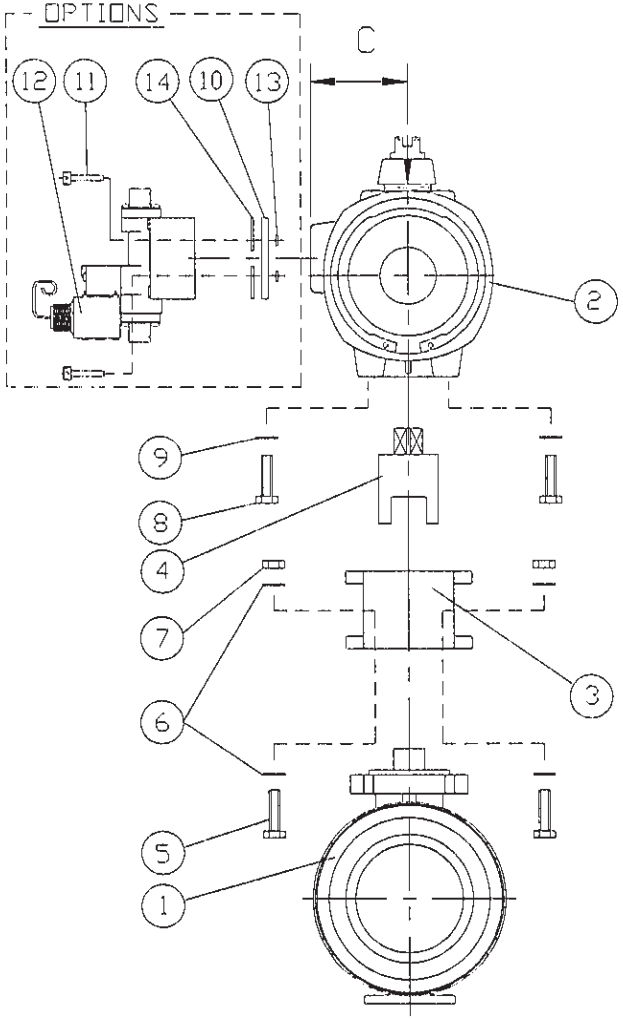

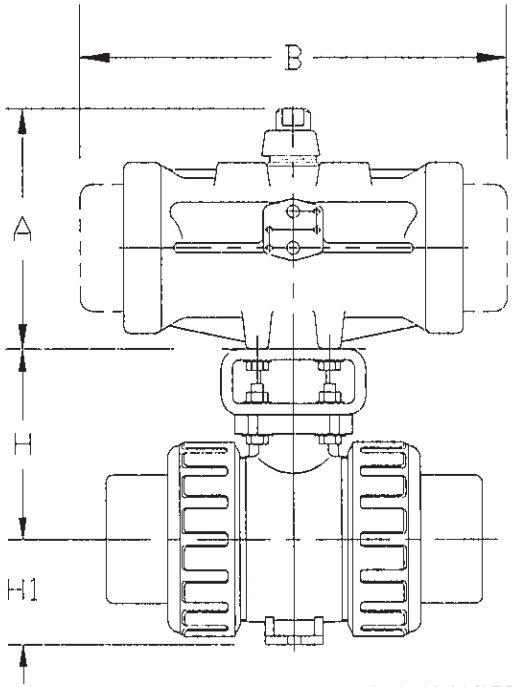

ITEM	DESCRIPTION	MATERIAL	QTY
14	GASKET (OPTIONS)	NBR	2
13	O-RING (OPTIONS)	NBR	2
12	SOLENOID (ASCO) (OPTIONS)	ZYTEL	1
11	SCREW SOC HD (OPTIONS)	300SS	1
10	MOUNTING PLATE (OPTIONS)	ZYTEL	1
9	FLAT WASHER (M6.0)	STAINLESS STEEL	4
8	BOLT (FOR A79 (PW) USE M5.0x.8-16LG) (FOR B79 (P0) USE M6.0x1-16LG) (FOR C79 (P1) USE M8.0x1.25-16LG)	STAINLESS STEEL	4
7	NUT (FOR 2-1/2" AND 3" : M8.0x1.25) (FOR 4" : M10.0x1.50)	STAINLESS STEEL	4
6	FLAT WASHER (FOR 2-1/2" AND 3" : M8.0) (FOR 4" : M10.0)	STAINLESS STEEL	8
5	BOLT (FOR 2-1/2" AND 3" : M8.0x1.25-35LG) (FOR 4" : M10.0x1.50-40LG)	STAINLESS STEEL	4
4	COUPLING	STAINLESS STEEL 303	1
3	MOUNTING BRACKET	PPG	1
2	ACTUATOR	☐ GLASS FILLED POLYAMIDE ☐ STAINLESS STEEL (OPTION) ☐ RILSAN COATED CAST ALUMINUM (OPTION)	1
1	BALL VALVE TYPE 21	PVC,CPVC,PP,PVDF	1

UNIT: INCH

VALVE SIZE	2-1/2"	3"	4"
H	5.12	5.47	6.97
H1	2.83	3.35	4.33

NOTE. The shape and appearance of assembly differ a little with nominal size compared to this drawing.

THIS DRAWING AND ALL INFORMATION HEREON IS THE PROPERTY OF ASAHI/AMERICA. ANY COPYING, REPRODUCTION OR UNAUTHORIZED USE IS FORBIDDEN WITHOUT WRITTEN CONSENT.

	NAME	DATE
DR	KENICHI MIYAZAKI	8/14/01
APPD	DAVE HURLEY	8/14/01
PROD	LEO LESTER	8/14/01
WO#/CO#		
FILE		

CHEMLINE PLASTICS

BALL VALVE TYPE21 PNEUMATIC ACT. 2-1/2" THRU 4"

SIZE	DWG. NO.	REV
A	0115BV	A

SCALE NTS

SHEET 1 OF 1

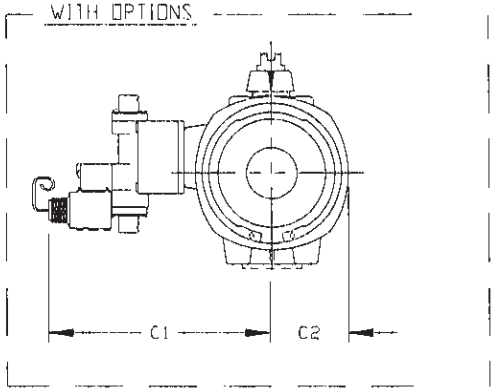

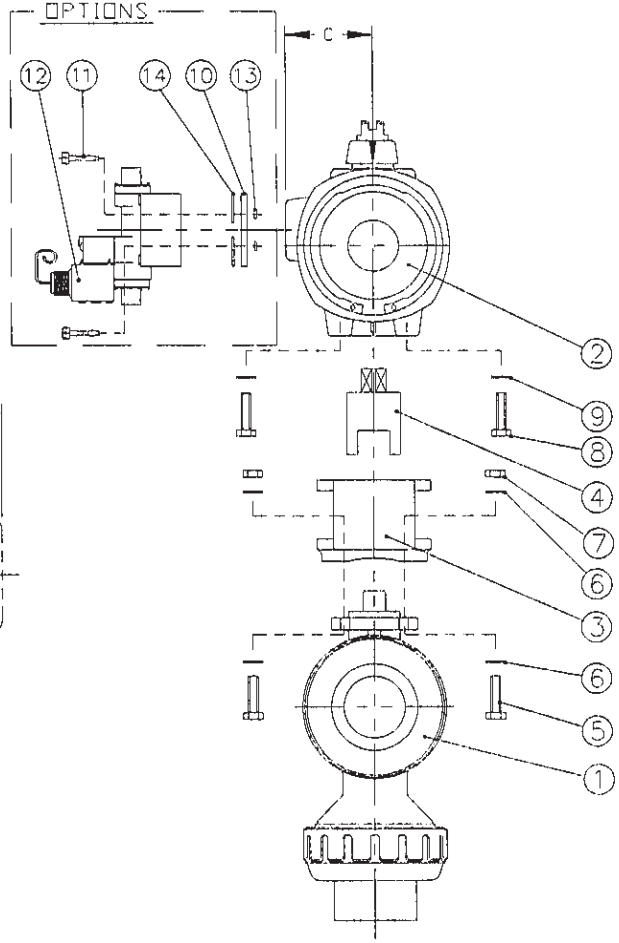

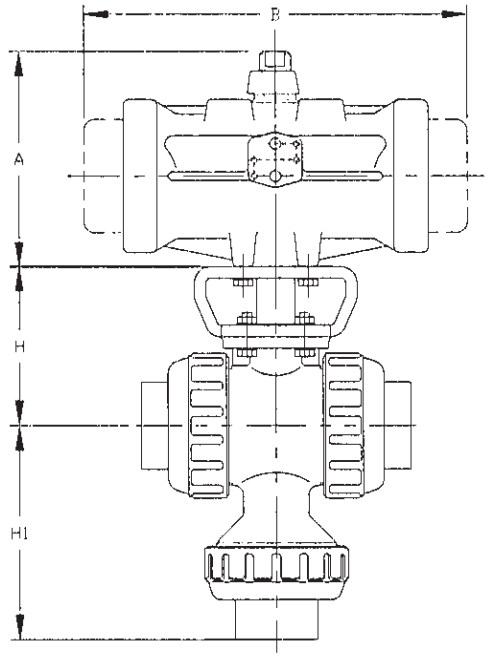

NOTE: 1) THE SHAPE AND APPEARANCE OF ASSEMBLY DIFFER A LITTLE WITH NOMINAL SIZE COMPARED TO THIS DRAWING.
2) FOR DETAILED VALVE DIMENSIONS, REFER TO DWG. NO. 0126BV, 0127BV, 0128BV.
L-PORT : DWG. NO. 0126BV
DOUBLE L-PORT : DWG NO. 0127BV
CROSS PORT . DWG NO 0128BV

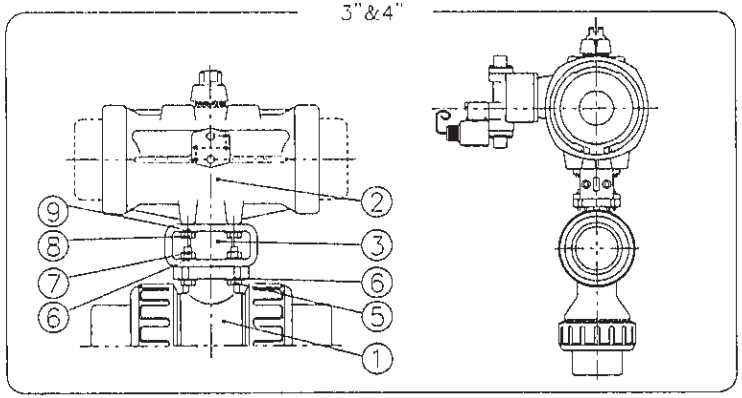

DIMENSIONS TABLE UNIT: inch

VALVE SIZE	A		B		C		C1		C2	
	A-A	A-S	A-A	A-S	A-A	A-S	A-A	A-S	A-A	A-S
1/2"	3.34	3.34	4.22	5.55	1.47	1.47	5.41	5.41	1.21	1.21
3/4"	3.34	3.34	4.22	5.55	1.47	1.47	5.41	5.41	1.21	1.21
1"	3.34	3.34	4.22	5.55	1.47	1.47	5.41	5.41	1.21	1.21
1-1/2"	3.34	4.40	4.22	5.86	1.47	1.73	5.41	5.66	1.21	1.41
2"	3.34	5.00	4.22	7.64	1.47	1.97	5.41	5.89	1.21	1.85
3"	5.00	6.49	7.00	11.49	1.97	2.56	5.89	6.48	1.85	2.36
4"	6.49	6.49	9.21	11.49	2.56	2.56	6.48	6.48	2.36	2.36

NOMINAL SIZE		H	FLANGED		THREADED		SOCKET						SPIGOT (BUTT END)	
							PVC,CPVC		PP,PVDF (DIN)		PP,PVDF (IPS)			
			H1	L	H1	L	H1	L	H1	L	H1	L	H1	L
½"	15mm	2.76	3.70	5.63	2.89	4.02	3.08	4.45	2.80	3.90	3.09	4.45	3.27	4.88
¾	20	3.01	4.50	6.77	3.48	4.72	3.56	5.08	3.27	4.49	3.61	5.08	3.90	5.67
1	25	3.29	5.24	7.36	4.13	5.16	4.32	5.75	3.94	4.84	4.37	5.75	4.53	6.06
1½	40	3.98	6.50	8.35	5.53	6.42	5.71	7.24	5.16	5.83	5.85	7.24	6.02	6.85
2	50	4.43	7.34	9.21	6.61	7.76	6.66	8.23	6.06	6.93	6.76	8.23	7.01	8.82
3	80	5.47	10.06	11.97	9.25	10.39	9.59	11.10	8.82	9.88	11.10	11.10	9.69	11.61
4	100	6.97	12.01	14.65	11.77	14.17	11.58	13.90	10.98	12.20	14.37	14.37	11.85	12.72

ITEM	DESCRIPTION	MATERIAL	QTY
14	GASKET (OPTIONS)	NBR	2
13	O-RING (OPTIONS)	NBR	2
12	SOLENOID (ASCO) (OPTIONS)	ZYTEL	1
11	SCREW SOC HD (OPTIONS)	STAINLESS STEEL	1
10	MOUNTING PLATE (OPTIONS)	ZYTEL	1
9	FLAT WASHER (M6.0)	STAINLESS STEEL	4
8	BOLT (FOR A79 (PW) USE M5.0x.8-16LG) (FOR B79 (PO) USE M6.0x1-16LG) (FOR C79 (P1) USE M8.0x1.25-16LG)	STAINLESS STEEL	4
7	NUT (FOR 1/2" THRU 1-1/4" : M5.0x.8) (FOR 1-1/2" THRU 2" : M6.0x1) (FOR 3" : M8.0x1.25) (FOR 4" : M10.0x1.50)	STAINLESS STEEL	4
6	FLAT WASHER (FOR 1/2" THRU 1-1/4" : M5.0) (FOR 1-1/2" THRU 2" : M6.0) (FOR 3" : M8.0) (FOR 4" : M10.0)	STAINLESS STEEL	8
5	BOLT (FOR 1/2" THRU 1" : M5.0x.8-16LG) (FOR 1-1/2" THRU 2" : M6.0x1-20LG) (FOR 3" : M8.0x1.25-35LG) (FOR 4" : M10.0x1.50-40LG)	STAINLESS STEEL	4
4	COUPLING	STAINLESS STEEL 303	1
3	MOUNTING BRACKET	PPG	1
2	ACTUATOR	☐ GLASS FILLED POLYAMIDE ☐ STAINLESS STEEL (OPTION) ☐ RILSAN COATED CAST ALUMINUM (OPTION)	1
1	MULTIPORT BALL VALVE TYPE23	PVC,CPVC,PP,PVDF	1

THIS DRAWING AND ALL INFORMATION HEREON IS THE PROPERTY OF ASAHI/AMERICA. ANY COPYING, REPRODUCTION OR UNAUTHORIZED USE IS FORBIDDEN WITHOUT WRITTEN CONSENT

	NAME	DATE
DR	KENICHI MIYAZAKI	1/28/03
APPD	DAVE HURLEY	1/28/03
PROD	LEO LESTER	1/28/03
WO#/CO#		
FILE		

CHEMLINE PLASTICS

TYPE 23 MULTIPORT BALL VALVE 1/2" TO 4" WITH PNEUMATIC ACTUATOR

SIZE	DWG. NO.	REV
A	0139BV	A
SCALE NTS	SHEET 1 OF 1	

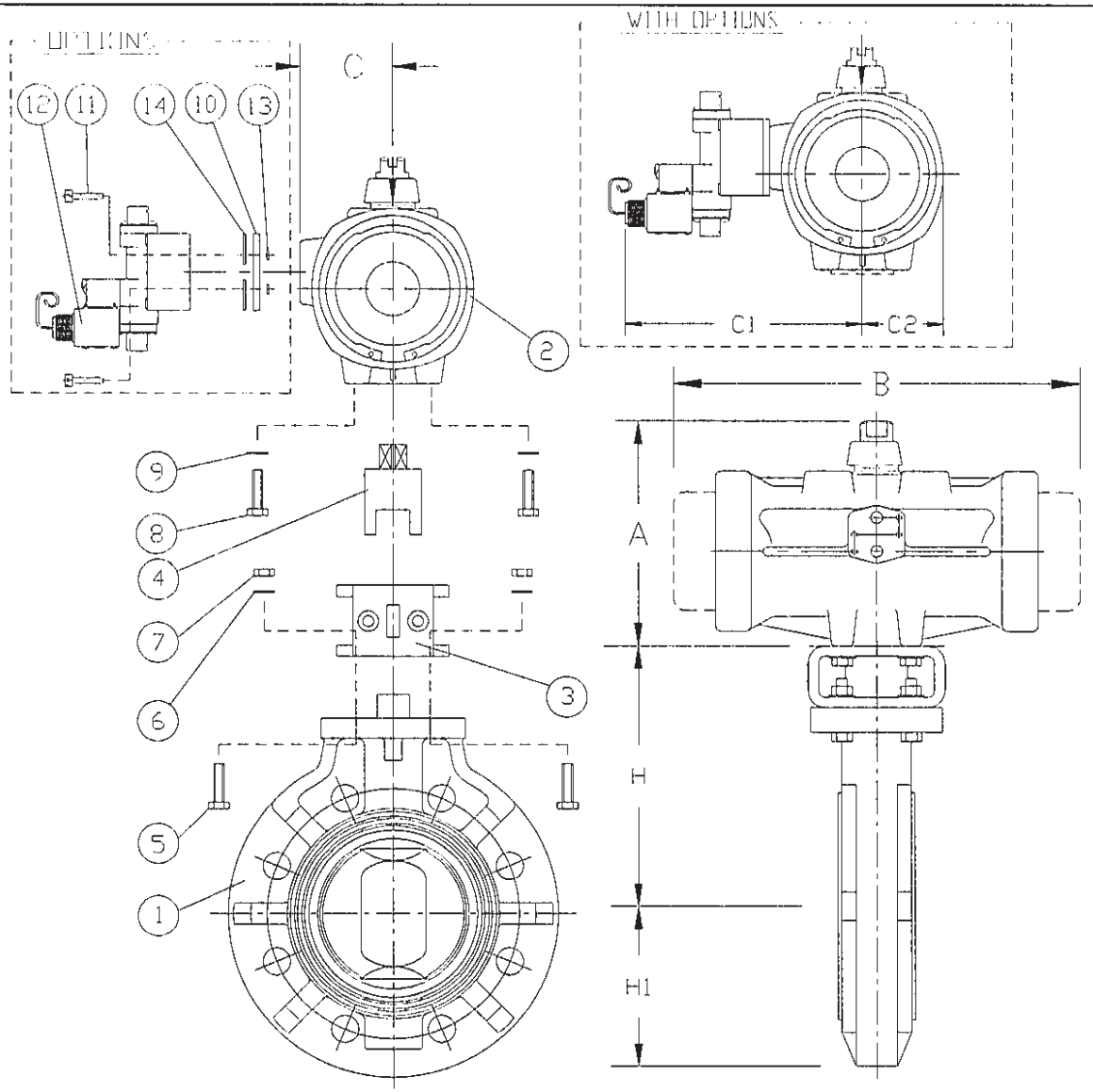

UNIT: INCH

VALVE SIZE	A		B		C		C1		C2	
	A-A	A-S	A-A	A-S	A-A	A-S	A-A	A-S	A-A	A-S
1-1/2"	4.40	5.00	4.92	8.74	1.73	1.73	5.66	5.89	1.41	1.85
2"	4.40	5.00	4.92	8.74	1.73	1.73	5.66	5.89	1.41	1.85
2-1/2"	4.40	5.00	4.92	8.74	1.73	1.73	5.66	5.89	1.41	1.85
3"	5.00	6.49	7.00	11.50	1.96	1.96	5.89	6.48	1.85	2.36
4"	5.00	6.49	7.00	11.50	1.96	1.96	5.89	6.48	1.85	2.36
5"	5.00	8.54	7.00	17.04	1.96	1.96	5.89	7.47	1.85	3.23
6"	6.49	8.54	9.21	17.04	2.55	2.55	6.48	7.47	2.36	3.23

ITEM	DESCRIPTION	MATERIAL	QTY
14	GASKET (OPTIONS)	NBR	2
13	O-RING (OPTIONS)	NBR	2
12	SOLENOID (ASCO) (OPTIONS)	ZYTEL	1
11	SCREW SOC HD (OPTIONS)	STAINLESS STEEL 303	1
10	MOUNTING PLATE (OPTIONS)	ZYTEL	1
9	FLAT WASHER (FOR BP79 : M6.0) (FOR CP79 AND DP79 : M8.0) (FOR E79 : M10.0)	STAINLESS STEEL	4
8	BOLT (FOR BP79 : M6.0x1.00-16LG) (FOR CP79 AND DP79 : M8.0x1.25-16LG) (FOR E79 : M10.0x1.50-20LG)	STAINLESS STEEL	4
7	NUT (FOR 1-1/2" THRU. 4" : M8.0x1.25) (FOR 6" : M10.0x1.50)	STAINLESS STEEL	4
6	FLAT WASHER (FOR 1-1/2" THRU. 4" : M8.0) (FOR 6" : M10.0)	STAINLESS STEEL	8
5	BOLT (FOR 1-1/2" THRU. 4" : M8.0x1.25-35LG) (FOR 6" : M10.0x1.50-40LG)	STAINLESS STEEL	4
4	COUPLING	STAINLESS STEEL 303	1
3	MOUNTING BRACKET	PPG	1
2	ACTUATOR	☐ GLASS FILLED POLYAMIDE ☐ STAINLESS STEEL (OPTION) ☐ RILSAN COATED CAST ALUMINUM (OPTION)	1
1	BUTTERFLY VALVE TYPE 56	PVC,PP,PVDF	1

UNIT: INCH

VALVE SIZE	1-1/2"	2"	2-1/2"	3"	4"	5"	6"
H	5.51	5.75	6.18	6.46	7.16	8.46	8.97
H1	2.95	3.27	3.66	3.94	4.53	5.00	5.63

NOTE: 1. The shape and appearance of assembly differ a little with nominal size compared to this drawing.
2. For 1-1/2" thru. 4" Mounting Bracket : F7 x F05,F07
For 5" and 6" Mounting Bracket : F10 x F07,F10

THIS DRAWING AND ALL INFORMATION HEREON IS THE PROPERTY OF ASAHI/AMERICA. ANY COPYING, REPRODUCTION OR UNAUTHORIZED USE IS FORBIDDEN WITHOUT WRITTEN CONSENT

	NAME	DATE
DR	KENICHI MIYAZAKI	10/1/01
APPD	DAVE HURLEY	10/1/01
PROD	LEO LESTER	10/1/01
WO#/CO#		
FILE		

CHEMLINE PLASTICS

BUTTERFLY VALVE TYPE56 PNEUMATIC ACT. 1-1/2" THRU 6"

SIZE	DWG. NO.	REV
A	0204BF	A

SCALE NTS

SHEET 1 OF 1

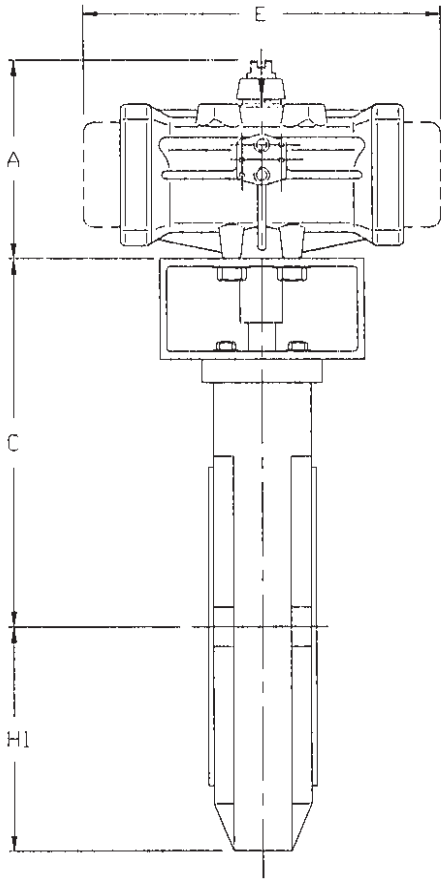

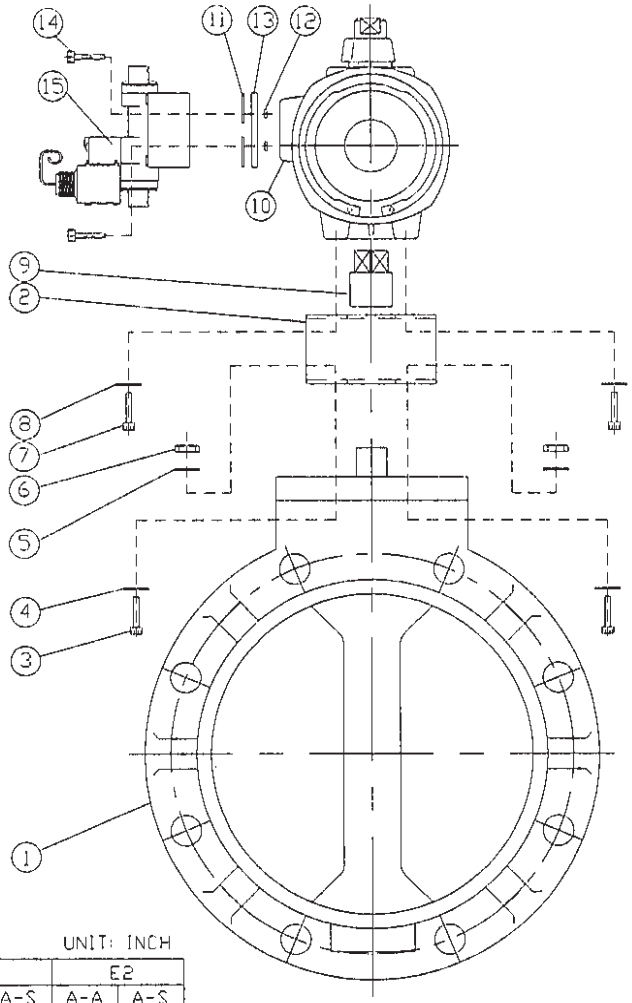

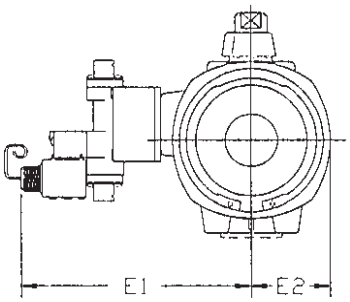

NOTE: ACTUATOR BODY IS CAST ALUMINUM WITH RILSAN (POLYAMIDE NYLON 11) COATING FOR VALVE SIZES 8 THROUGH 24 AIR-AIR AND 5 THROUGH 12 AIR-SPRING. ACTUATOR BODY IS AVAILABLE IN STAINLESS STEEL OR GLASS FILLED POLYAMIDE FOR VALVE SIZES 1 1/2 THROUGH 6 AIR-AIR AND 1 1/2 THROUGH 4 AIR-SPRING

No.	DESCRIPTION	MATERIAL	QTY
15	SOLENOID, ASCO (OPTIONS)	ZYTEL	1
14	SCREW, SOC HEAD (OPTIONS)	STAINLESS STEEL 303	2
13	PLATE MOUNTING (OPTIONS)	ZYTEL	1
12	O-RING (OPTIONS)	NBR	2
11	GASKET (OPTIONS)	NBR	2
10	ACTUATOR (SEE NOTE)	SERIES 79P	1
9	SHAFT ADAPTER	STAINLESS STEEL 303	1
8	FLAT WASHER	STAINLESS STEEL 303	4
7	SCREW	STAINLESS STEEL 303	4
6	NUT, HEX LOCKING	STAINLESS STEEL 303	4
5	WASHER, FLAT	STAINLESS STEEL 303	4
4	WASHER, FLAT	STAINLESS STEEL 303	4
3	SCREW	STAINLESS STEEL 303	4
2	MOUNTING BRACKET	STAINLESS STEEL 303	1
1	BUTTERFLY VALVE TYPE56	PVC, PP, PVDF	1

UNIT: INCH

VALVE SIZE	C	H1	A		E		E1		E2	
			A-A	A-S	A-A	A-S	A-A	A-S	A-A	A-S
1 1/2	5.50	2.95	4.40	5.00	4.92	8.74	6.02	6.25	1.41	1.85
2	5.57	3.25	4.40	5.00	4.92	8.74	6.02	6.25	1.41	1.85
2 1/2	6.08	3.66	4.40	5.00	4.92	8.74	6.02	6.25	1.41	1.85
3	6.28	3.94	5.00	6.49	7.00	11.49	6.25	6.84	1.85	2.36
4	6.56	4.53	5.00	6.49	7.00	11.49	6.25	6.84	1.85	2.36
5	8.05	5.00	5.00	8.54	7.00	17.04	6.25	7.83	1.85	3.23
6	9.01	5.63	6.49	8.54	9.21	17.04	6.84	7.83	2.36	3.23
8	11.27	6.69	8.54	11.26	12.12	25.28	7.83	8.42	3.23	3.78
10	12.46	7.99	8.54	13.07	12.12	20.83	7.83	9.41	3.23	4.76
12	14.69	9.53	11.26	13.07	16.46	20.83	8.42	9.41	3.78	4.76
14	14.81	10.24	11.26	15.47	16.46	22.44	8.42	11.84	3.78	6.75
16	16.78	11.81	11.26	16.53	16.46	32.83	8.42	12.52	3.78	7.16

NOTE. The shape and appearance of assembly differ a little with nominal size compared to this drawing.

THIS DRAWING AND ALL INFORMATION HEREON IS THE PROPERTY OF ASAHI/AMERICA. ANY COPYING, REPRODUCTION OR UNAUTHORIZED USE IS FORBIDDEN WITHOUT WRITTEN CONSENT.

	NAME	DATE
DR	KENICHI MIYAZAKI	9/6/01
APPD	DAVE HURLEY	9/6/01
PROD	LEO LESTER	9/6/01
WO#/CO#		
FILE		

CHEMLINE PLASTICS

BUTTERFLY VALVE TYPE56 PNEUMATIC ACT. 1-1/2" THRU. 16"

SIZE	DWG. NO.	REV
A	0167BF	B
SCALE NTS	SHEET 1 OF 1	

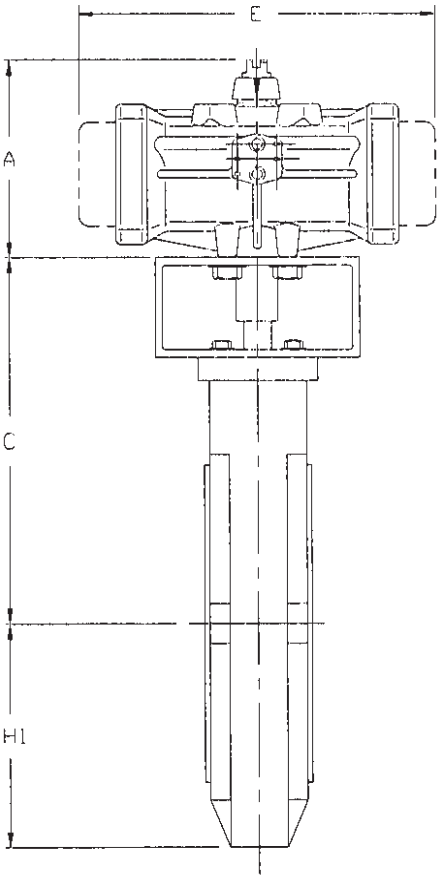

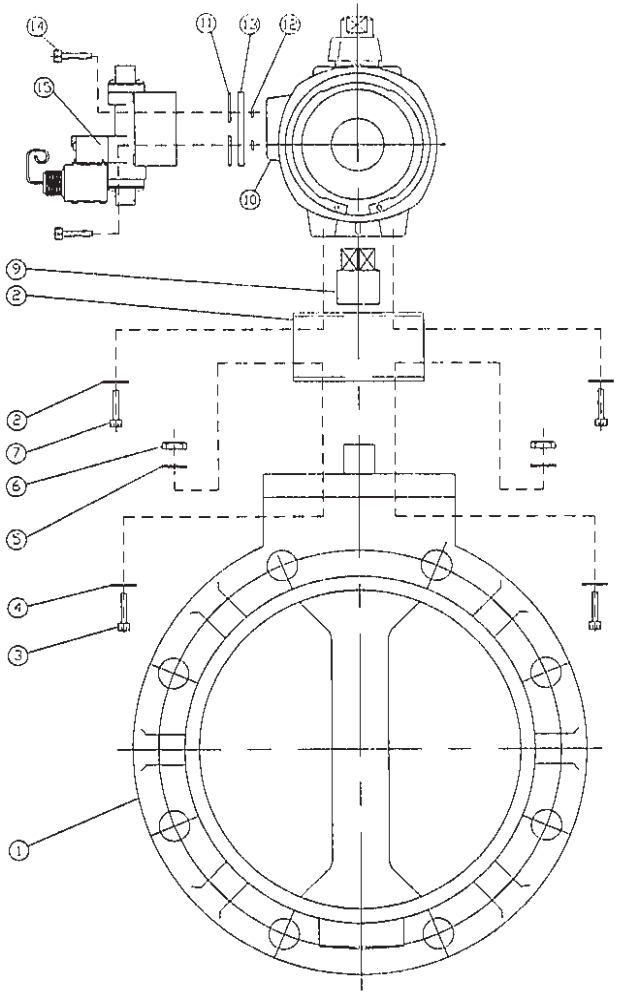

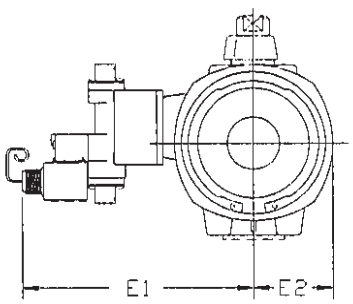

NOTE: ACTUATOR BODY IS CAST ALUMINUM WITH RILSAN (POLYAMIDE NYLON II) COATING FOR VALVE SIZES 18 THROUGH 24 AIR-AIR AND 12 AIR-SPRING.

No.	DESCRIPTION	MATERIAL	QTY
15	SOLENOID, ASCO (OPTIONS)	ZYTEL	1
14	SCREW, SOC HEAD (OPTIONS)	300SS	2
13	PLATE MOUNTING (OPTIONS)	ZYTEL	1
12	O-RING (OPTIONS)	NBR	2
11	GASKET (OPTIONS)	NBR	2
10	ACTUATOR (SEE NOTE)	SERIES 79P	1
9	SHAFT ADAPTER	300SS	1
8	WASHER, LOCK	300SS	4
7	SCREW	300SS	4
6	NUT, HEX LOCKING	300SS	4
5	WASHER, FLAT	300SS	4
4	WASHER, FLAT	300SS	4
3	SCREW	300SS	4
2	MOUNTING BRACKET	300SS	1
1	BUTTERFLY VALVE TYPE75	PVC, PP, PVDF	1

UNIT: INCH

VALVE SIZE	C	H1	A		E		E1		E2	
			A-A	A-S	A-A	A-S	A-A	A-S	A-A	A-S
18	17.57	12.40	11.26	16.53	16.46	32.83	8.42	12.52	3.78	7.16
20	18.75	13.78	13.07	16.53	17.09	32.83	9.41	12.52	4.76	7.16
24	21.31	16.02	13.07	16.53	17.09	32.83	9.41	12.52	4.76	7.16

NOTE. The shape and appearance of assembly differ a little with nominal size compared to this drawing.

THIS DRAWING AND ALL INFORMATION HEREON IS THE PROPERTY OF ASAHI/AMERICA. ANY COPYING, REPRODUCTION OR UNAUTHORIZED USE IS FORBIDDEN WITHOUT WRITTEN CONSENT.

	NAME	DATE
DR	KENICHI MIYAZAKI	9/6/01
APPD	DAVE HURLEY	9/6/01
PROD	LEO LESTER	9/6/01
WO#/CO#		
FILE		

CHEMLINE PLASTICS

BUTTERFLY VALVE TYPE75 PNEUMATIC ACT. 18" THRU. 24"

SIZE	DWG. NO.	REV
A	1230	A

SCALE NTS

SHEET 1 OF 1

CHEMLINE

SERIES GV, GLOBE VALVE

LEFT BLANK

CHEMLINE Plastics Limited

Your Pipeline To Quality Valves, Strainers, Flowmeters and Controls

55 Guardsman Road
Thornhill, Ontario
L3T 6L2
Canada
Tel: 905-889-7890
Fax: 905-889-8553

MAINTENANCE INSTRUCTIONS
For Chemline Globe Valves Sizes 1/2" - 2"

Maintenance (Sizes 1/2" to 2")

Refer to **ASSEMBLY DRAWING GV-01(A).** And proceed as follows:

1. Remove bonnet and stem assembly (2 through 5) by unscrewing gland nut (6). The complete stem assembly should lift out of the valve body.
   (Note: make sure there is no pressure in line prior to removing valve.)

2. The stem (4) is removed from the bonnet assembly by first removing the handwheel (3) by unscrewing nut (9). Loosen the stem packing (8) and inspect for excessive wear and cracking.

3. Lubricate the seal (7) before replacing the shaft (4). Dow Corning III silicone compound recommended.

4. Inspect the body seat (1) and disc seat (5) for excessive wear and pitting. Pitting is caused by foreign objects being jammed between the sealing surfaces when closing the valve. If the disc seat (5) is damaged, replace the part.
   Important: If the body seat is damaged replace the complete valve.

5. To reassemble valve, reverse steps 1 to 4 above.

(NOTE) When replacing the stem assembly back into the valve body, be sure that the stem NOT in the closed position. If it is, the stem may be over extended and could damage the body seat when the bonnet is re-tightened.

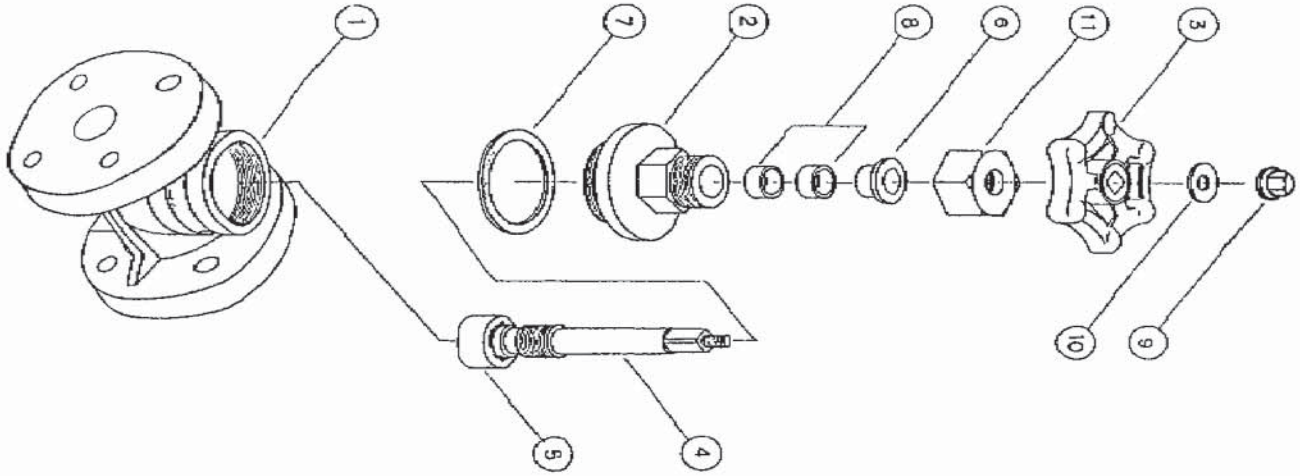

PART	DESCRIPTION	QTY	MATERIAL
1	BODY	1	PVC/PP
2	BONNET	1	PVC/PP
3	HANDWHEEL	1	PP
4	STEM	1	PVC/PP
5	DISC	1	PP
6	GLAND	1	PVC/PP
7	BONNET SEAL	1	EPDM
8	STEM PACKING	2	EPDM
10	NUT	1	PVC
11	WASHER	1	PVC
12	GLAND NUT	1	PVC/PP
13	DISC RETAINER	1	PP
14	STEM TOP	1	BRASS
15	YOLK	1	PP
16	YOLK SLEEVE	1	BRONZE
17	BOLT & NUT	8	SS. 304
18	STUD & NUT	2	SS. 304

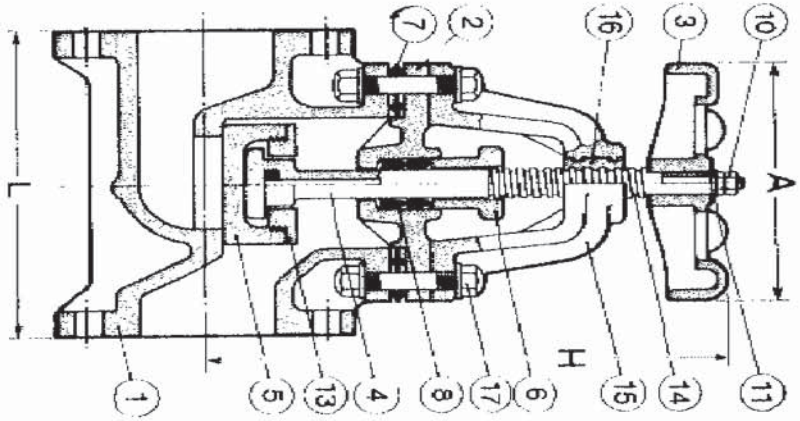

TITLE: CHEMLINE GLOBE VALVE SIZES	SCALE		DATE	CHEMLINE PLASTICS	
	DR. BY				
REFERENCE: 1/2" - 2"	CHKD. BY			DWG. NO.	REV.
	APP. BY			GV01(A)	0

CHEMLINE Plastics Limited

Your Pipeline To Quality Valves, Strainers, Flowmeters and Controls

55 Guardsman Road
Thornhill, Ontario
L3T 6L2
Canada
Tel: 905-889-7890
Fax: 905-889-8553

MAINTENANCE INSTRUCTIONS
For Chemline Globe Valves Sizes 2-1/2"- 4"

Maintenance (2-1/2" - 4")

Refer to **ASSEMBLY DRAWING GV-01(B).** And proceed as follows:

1. Remove bonnet and stem assembly (2 through 5) by unscrewing gland nut (2), or by loosening and removing bolts (17). The complete stem assembly should lift out of the valve body. (Note: make sure there is no pressure in line prior to removing valve.)

2. The stem (4) is removed from the bonnet assembly by first removing the handwheel (3) by unscrewing nut (9). Loosen the stem and inspect for excessive wear and cracking.

3. Lubricate the seal (7) before replacing the shaft (4). Dow Corning III silicone compound recommended.

4. Inspect the body seat (1) and disc seat (5) for excessive wear and pitting. Pitting is caused by foreign objects being jammed between the sealing surfaces when closing the valve. If the disc seat (5) is damaged, replace the part.
   Important: If the body seat is damaged replace the complete valve.

5. To reassemble valve, reverse steps 1 to 4 above.

   (NOTE) When replacing the stem assembly back into the valve body, be sure that the stem is NOT in the closed position. If it is, the stem may be over extended and could damage the body seat when the body is re-tightened.

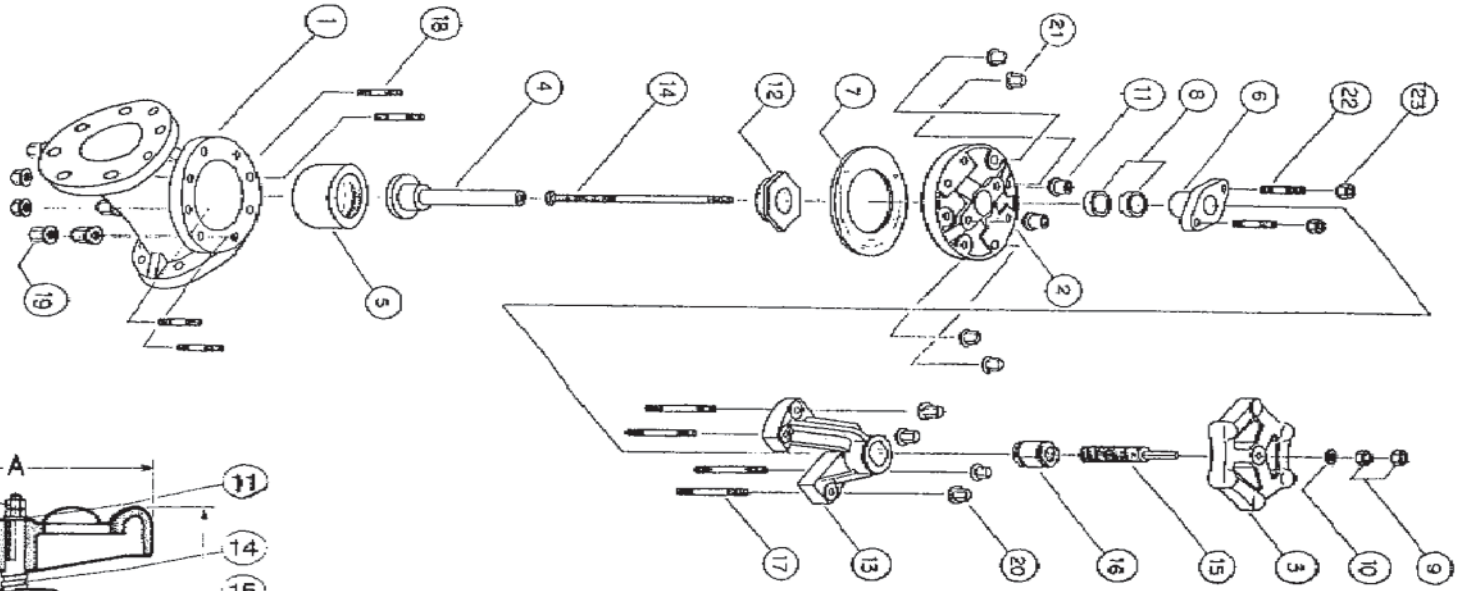

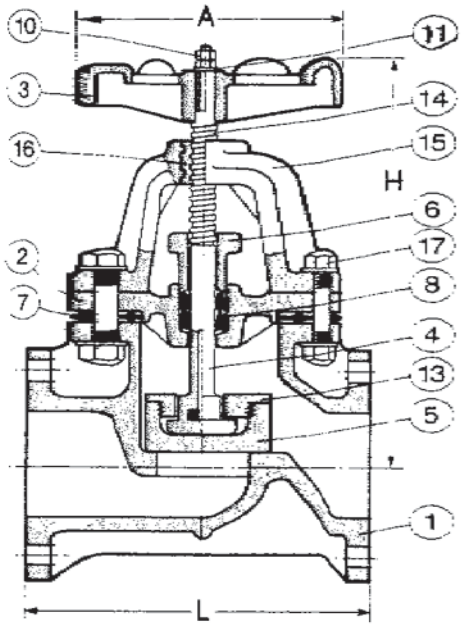

1	BODY	1	PVC/PP	11	WASHER	1	PVC
2	PVC	1	PVC/PP	12	GLAND NUT	1	PVC/PP
3	HANDWHEEL	1	PP	13	DISC RETAINER	1	PP
4	STEM	1	PVC/PP	14	STEM TOP	1	BRASS
5	DISC	1	PP	15	YOLK	1	PP
6	GLAND	1	PVC/PP	16	YOLK SLEEVE	1	BRONZE
7	BONNET SEAL	1	EPDM	17	BOLT & NUT	8	304 S.S.
8	STEM PACKING	2	EPDM	18	STUD & NUT	2	304 S.S
10	NUT	1	PVC				

TITLE: CHEMLINE GLOBE VALVE SIZES	SCALE		DATE	CHEMLINE PLASTICS	
	DR. BY				
REFERENCE: 2 - 1/2" - 4"	CHKD. BY			DWG. NO. GVQ1 (B)	REV. 0
	APP. BY				

MANUFACTURER INSTALLATION OPERATION AND MAINTENANCE MANUAL

AMARUQ WTP – NUNAVUT

VEOLIA PROJECT: 5000 218 009

CHEMLINE

SERIES SB12, BACK PRESSURE/RELIEF VALVE

LEFT BLANK

CHEMLINE Plastics Limited

Your Pipeline To Quality Valves, Strainers, Flowmeters and Controls

55 Guardsman Road
Thornhill, Ontario
L3T 6L2
Canada
Tel: 905-889-7890
Fax: 905-889-8553

MAINTENANCE INSTRUCTIONS
For Chemline 3/8" - 1-1/2" SB Series Pressure Relief Valves

Installation:

1. Always mount a filter or strainer in the line immediately before the valve to avoid damage to the valve from dirt or particles. Valve is spring operated, therefore can be installed in any orientation.

2. **To adjust pressure use the adjustment screw (8) and a pressure gauge**.
   - the valve will be closed at the set pressure and will start to open when the operating pressure rises above the set pressure.
   - connect the compressed air supply to the inlet of the valve. Adjust the flow of the air to the desired set pressure by turning clockwise to increase the set pressure, counterclockwise to decrease it.
   - with the valve being closed, adjust the screw (8) until the valve starts to open. Fix the adjusting screw in place with the locking nut (9).

3. For installation in an application where the temperature is 0° C or less. Check with Chemline Engineering
   Technical staff prior to installation.

Maintenance

Refer to **ASSEMBLY DRAWING SB10/11 rev 0.** And proceed as follows.

1. Loosen and remove cap (10).

2. Loosen counter nut (9) and remove adjustment screw (8).

3. Remove body cap (12a), body bolt (12b), body nut (12c) and washer (12d).

4. Lift up and remove bonnet (2).

5. Remove pressure plate (7a) and ball bearing (7b) to reach relief spring (3).

6. Loosen piston screw (11), remove spring plate (6) and draw piston assembly (5) downward and out of body (1).
   Note: Piston assembly (5) is all parts (5a) outer piston assembly
   (5b) inner piston assembly
   (5c) seat
   (5d) piston o-ring

Piston assembly is removed from body as a unit. It can then be further disassembled into the component parts listed above.

7 Remove diaphragm (4).

8. Remove seal (14) at intermediate flange (13).

9. Inspect all parts for wear and abrasion, replace seals, diaphragm etc. if necessary.

10. To re-assemble valve follow steps 1 through 9 in reverse order.

TROUBLESHOOTING

FAILURE		REASON	REPAIR
VALVE LEAKS AT DIAPHGRAM (4)		CLAMPING PRESSURE FOR DIAPHRAGM (4) TOO LOW.	TIGHTEN SCREWS (12)
PRESSURE RISES ABOVE SET PRESSURE	{A)	VALVE SEAT (5c) & SEALS (14) & (5d) ARE	CHECK SEALS OF PISTON (5) BODY (14) - REPLACE
	(B)	DEFECTIVE DIAPHRAGM (4) LEAKING	REPLACE.
	(C)	PISTON (5) BORE AT BODY (1) DIRTY	DISMANTLE PISTON (5) AND CLEAN BORE
VALVE CLOSED (DOES NOT OPEN)		VALVE MOUNTED IN WRONG DIRECTION.	TURN VALVE IN DIRECTION OF ARROWS
FLUIDS PENETRATE ADJUSTING SCREW (8)		DIAPHRAGM (4) DEFECTIVE.	REPLACE DIAPHRAGM (4)
LEAKING AT PLUG AT VALVE BODY		O-RING SEAL LEAKING	DISMANTLE PLUG AND REPLACE SEAL

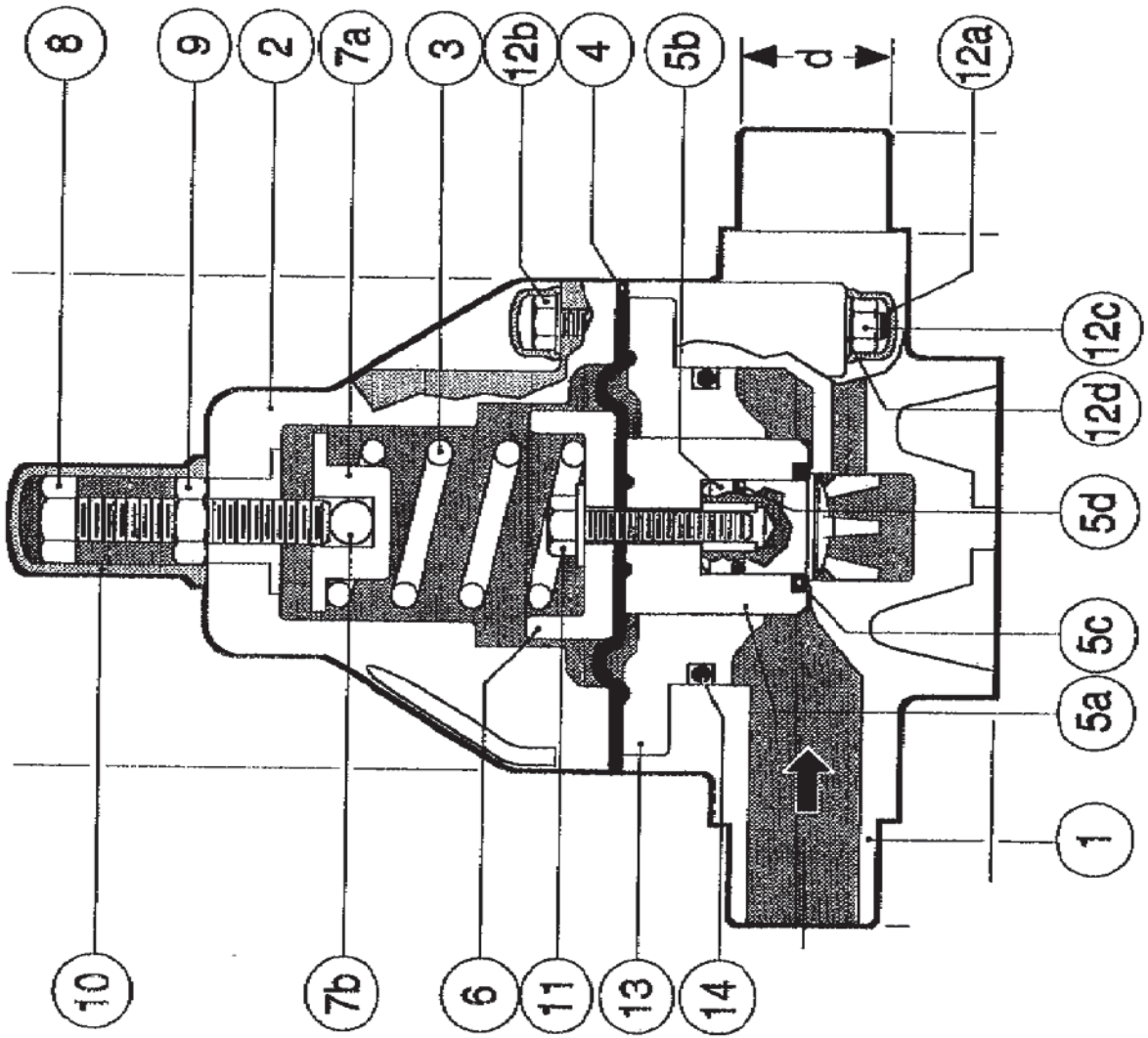

Part	Description	Pcs
1	BODY	1
2	BONNET	1
3	RELIEF SPRING	1
4	DIAPHRAGM	1
5(a)	OUTER PISTON	1
	(PART OF ASSY)	
5(b)	INNER PISTON	1
	(PART OF ASSY)	
5(c)	SEAT	2
	(PART OF ASSY)	
5(d)	PISTON O-RING	2
	(PART OF ASSY)	
6	SPRING PLATE	1
7(a)	PRESS. PLATE	1
7(b)	BALL BEARING	1
8	ADJ. SCREW	1
9	COUNTER NUT	1
10	CAP	1
11	PISTON SCREW	1
12 (a)	BODY CAP	4/6
12 (b)	BODY BOLT	4/6
12 (c)	BODY NUT	4/6
12 (d)	BODY WASHER	4/6
13	INT. FLANGE	2
14	SEAL	2

TITLE: CHEMLINE SB PRESSURE RELIEF VALVES	SCALE		DATE	CHEMLINE PLASTICS
	DR. BY			
REFERENCE: 3/8" - 1-1/2"	CHKD. BY			DWG. NO. SB1011 REV. 0
	APP. BY			

This page is intentionally left blank

CHEMLINE Plastics Limited

Your Pipeline To Quality Valves, Strainers, Flowmeters and Controls

55 Guardsman Road
Thornhill, Ontario
L3T 6L2
Canada
Tel: 905-889-7890
Fax: 905-889-8553

MAINTENANCE & INSTALLATION INSTRUCTIONS
For Chemline 2" – 4" SB Series Pressure Relief Valves

Installation:

1. Always mount a filter or strainer in the line immediately before the valve to avoid damage to the valve from dirt or particles. Valve is spring operated, therefore can be installed in any orientation.

2. **To adjust pressure use the adjustment screw (8) and a pressure gauge**.
   - the valve will be closed at the set pressure and will start to open when the operating pressure rises above the set pressure.
   - connect the compressed air supply to the inlet of the valve. Adjust the flow of the air to the desired set pressure by turning clockwise to increase the set pressure, counterclockwise to decrease it.
   - with the valve being closed, adjust the screw (8) until the valve starts to open. Fix the adjusting screw in place with the locking nut (9).

3. For installation in an application where the temperature is 0° C or less. Check with Chemline Engineering
   Technical staff prior to installation.

Maintenance:

Refer to **ASEMBLY DRAWING SB1201 rev 0.** And proceed as follows:

1. Loosen and remove cap (10).

2. Loosen counter nut (9) and remove adjustment screw (8).

3. Remove body cap (12c), body nut and bolt (12a) and washer (12b).

4. Lift up and remove bonnet (2).

5. Remove pressure plate (7a) and ball bearing (7b) to reach relief spring (3).

6. Draw piston assembly (5) downward and out of body (1).
   Note: Piston assembly (5) is all parts (5a) outer piston assembly
   (5b) plug
   (5c) seat
   Piston assembly is removed from the body as a unit. It can then be further disassembled into the component parts listed above.

7. Remove diaphragm (4).

8. Remove seal (14) at intermediate flange (13).

9. Inspect all parts for wear and abrasion, replace seals, diaphragms etc. if necessary.

10. To re-assemble valve follow steps 1 through 10 in reverse order.

TROUBLESHOOTING

FAILURE		REASON	REPAIR
VALVE LEAKS AT DIAPHGRAM (4)		CLAMPING PRESSURE FOR DIAPHRAGM (4) TOO LOW.	TIGHTEN SCREWS (12)
PRESSURE RISES ABOVE SET PRESSURE	{A)	VALVE SEAT (5c) & SEALS (14) ARE	CHECK SEALS OF PISTON (5) BODY (14) - REPLACE
	(B)	DEFECTIVE DIAPHRAGM (4) LEAKING	REPLACE.
	(C)	PISTON (5) BORE AT BODY (1) DIRTY	DISMANTLE PISTON (5) AND CLEAN BORE
VALVE CLOSED (DOES NOT OPEN)		VALVE MOUNTED IN WRONG DIRECTION.	TURN VALVE IN DIRECTION OF ARROWS
FLUIDS PENETRATE ADJUSTING SCREW (8)		DIAPHRAGM (4) DEFECTIVE.	REPLACE DIAPHRAGM (4)
LEAKING AT PLUG AT VALVE BODY		O-RING SEAL LEAKING	DISMANTLE PLUG AND REPLACE SEAL

PART	DESCRIPTION	PCS
1	BODY	1
2	BONNET	1
3	RELIEF SPRING	1
4	DIAPHRAGM	1
5 (a)	OUTER PISTON	1
5 (b)	PLUG	1
5 (c)	SEAT	2
6	SPRING PLATE	1
7 (a)	PRESSURE PLATE	1
7 (b)	BALL BEARING	1
8	ADJUSTING SCREW	1
9	COUNTER NUT	1
10	CAP	1
12 (a)	BODY NUT & BOLT	4/6
12 (b)	BODY WASHER	4/6
12 (c)	BODY CAP	4/6
13	INTERMED. FLANGE	2
14	SEAL	2

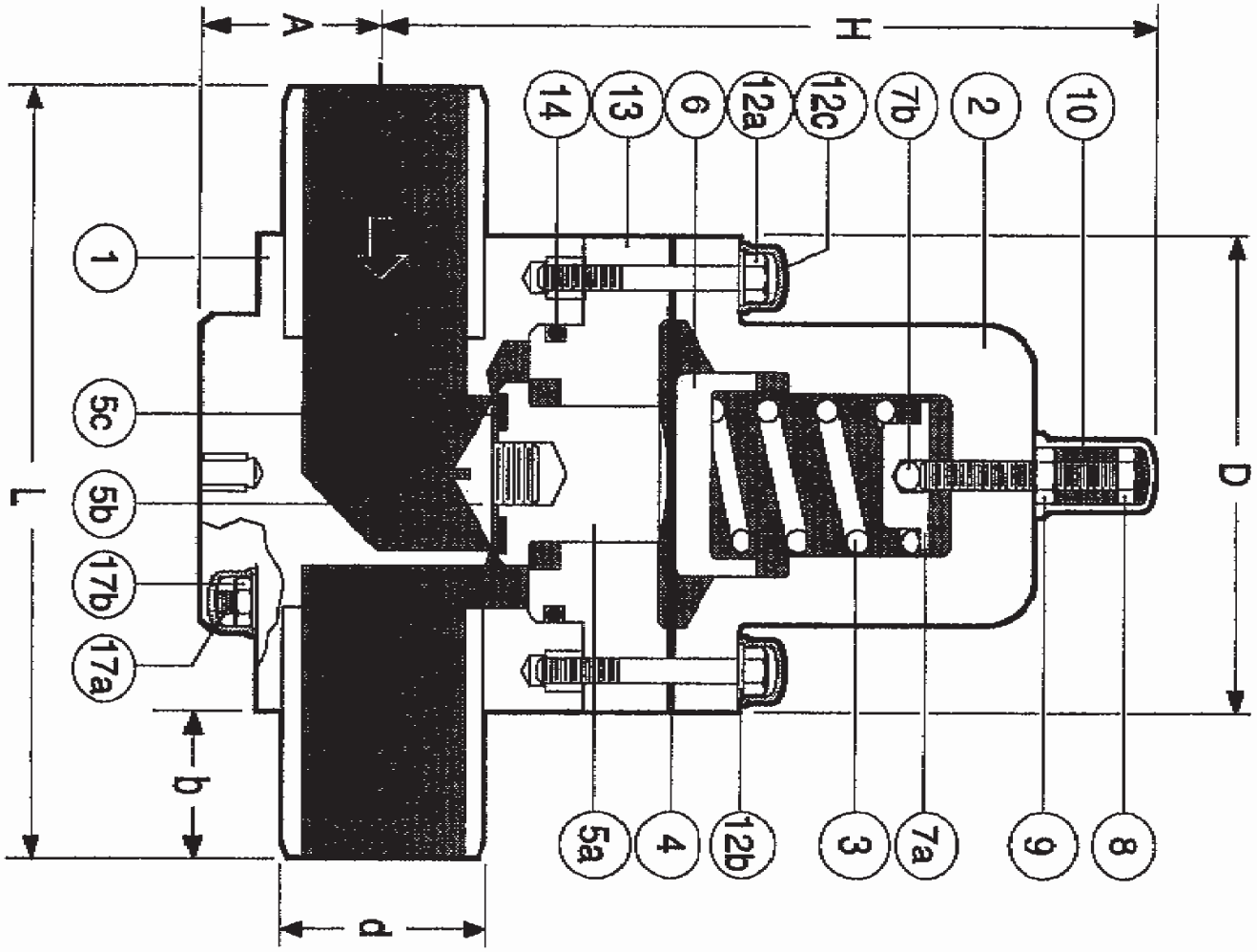

TITLE: CHEMLINE SB/12 SERIES	SCALE		DATE	CHEMLINE PLASTICS	
	DR. BY				
REFERENCE: PRESSURE RELIEF VALVES 2-4"	CHKD. BY			DWG. NO.	REV.
	APP. BY			SB1201	0

LEFT BLANK

CHEMLINE

SERIES SG, DIAPHRAGM SEAL WITH PRESSURE GAUGE

LEFT BLANK

CHEMLINE Plastics Limited

Your Pipeline To Quality Valves, Strainers, Flowmeters and Controls

55 Guardsman Road
Thornhill, Ontario
L3T 6L2
Canada
Tel: 905-889-7890
Fax: 905-889-8553

MAINTENANCE INSTRUCTIONS
For Chemline SG Series Gauge Isolator 1/4"and 1/2"

Maintenance:

Refer to drawing on page 2 of the **SG Gauge Isolator Data Page**

1. Gauge isolators can be mounted and filled with glycerine at Chemline prior to delivery, or isolators can be mounted and filled on site.
2. Remove isolator from valve.
3. To disassemble isolator remove gauge (6) from upper chamber/bonnet (3).
4. Separate bonnet (3) from body (1).
5. Drain glycerin (or other fluid) from both chambers (1 & 3), prior to removing diaphragm (2).
6. Check teflon diaphragm (2) for wear and replace if necessary.
7. Refill upper chamber (3) and replace diaphragm (2).
8. To reassemble diaphragm follow steps 1 through 4 in reverse, to hand-tight plus ¼ turn (approx. 30 in-lb).

This page is intentionally left blank

PDF Published June 23, 2014

Gauge Isolators

CHEMLINE PLASTICS
SUPERIOR FLOW SOLUTIONS

PVC PP PVDF

CRN Registered Consult Chemline

NSF[4] Certified to NSF/ANSI 61

SERIES: SG

INLET CONNECTION: 1/4" or 1/2" Threaded[1]

INSTRUMENT CONNECTION: 1/4" or 1/2" Threaded

DIAPHRAGM: PTFE

[1] Other available inlet connections are 1/2" socket or 1/2" to 1" flanged.
[2] Other fluids are available for special applications such as chlorine service.
[3] Glass reinforced polypropylene.
[4] PVC isolators are certified under NSF/ANSI Standard 61 for contact with drinking water.

Chemline SG Series Gauge Isolators allow inexpensive pressure gauges, or any other pressure instrument to be used in corrosive services. The upper chamber (gauge side) is filled with a stable fluid such as glycol or glycerine[2]. A diaphragm separates it from the lower chamber which receives the media under pressure.

The 1/2" gauge connection allows use of the popular 4" and 4-1/2" diameter gauges. Pressure switches or transmitters may also be installed. Customers can easily fill isolators and install their own gauges.

features

Easy to Mount Gauges

- It is easy to fill an isolator and field mount a gauge. No special equipment is required.
- Will accept popular 4" and 4-1/2" diameter gauges

Provision for Fill Port

- Housing may be drilled and tapped by Chemline or customer for a threaded fill port. This is used for filling isolator using a vacuum filling station

High Chemical Resistance

- Choice of body materials for a wide range of applications
- PTFE bonded EPDM dished diaphragm for high chemical resistance and sensitivity

Heavy Duty Design for Safety

- PPG[3] top chamber
- Heavy wall connection ports

CRN Registration number by province

- Ontario: OH16085.5

Optional Gauges

- Isolators are available alone or with gauge mounted and prefilled with glycol[2]

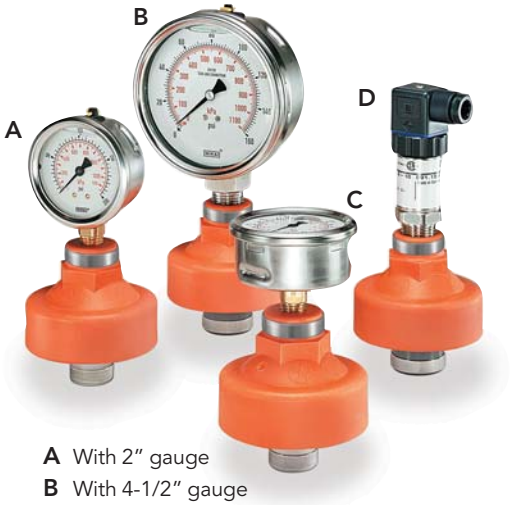

A With 2" gauge
B With 4-1/2" gauge
C With 2" back mount gauge
D With pressure transmitter

06/14 ©Chemline Plastics Limited 2014
Chemline is a registered trade mark of Chemline Plastics Limited

Gauge Isolators

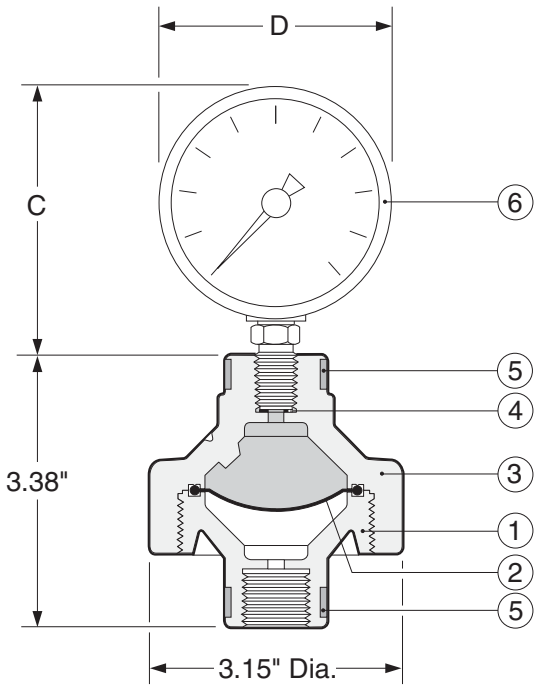

PARTS

No.	Part	Pcs.	Materials
1	Body	1	PVC, PP, PVDF
2	Diaphragm	1	PTFE
3	Bonnet	1	PPG[1]
4	Gasket	1	EPDM
5	Stainless Steel Bands	2	304 SS
6	Optional Gauge	1	See below

[1]PPG = Glass reinforced polypropylene

OPTIONAL GAUGES

- Chemline offers the gauges listed below mounted to isolator and prefilled with glycol, glycerine or special fluid for chlorine applications. These gauges have dials and cases filled with either glycol (standard), glycerine or silicon for corrosion resistance and dampening.
- Chemline SG gauge isolators are not recommended for vacuum applications. They will not affect the gauge accuracy as low as approximately 3 psi. The accuracy depends on the process conditions and the gauge installed on it.

OTHER OPTIONS

- **Flanged** inlet connections
- **Threaded Fill Port** – drilled, tapped and plugged
- Chemline will mount any pressure instrument supplied free issue by customer

DIMENSIONS (Gauge Isolator with optional gauge installed) INCHES

Optional Gauge Ordering No.	Gauge Diameter	Gauge Connection	Housing	Bourdon Tube	Window	Accuracy	Dimensions C	Dimensions D(max.)
P025-xx	2-1/2"	1/4"	316 SS	Brass	Polycarbonate	±1.5% of span	3.1	2.5
P025-xx-SS	2-1/2"	1/4"	316 SS	316 SS	Polycarbonate	±1.5% of span	3.1	2.5
P025-xx-SS/BM	2-1/2" Back Mount	1/4"	316 SS	316 SS	Polycarbonate	±1.5% of span	1.6	2.5
P025-xx-BM	2-1/2" Back Mount	1/4"	316 SS	Brass	Polycarbonate	±1.5% of span	1.6	2.5
P040-xx-SS	4"	1/2"	316 SS	316 SS	Safety Glass	±1% of span	4.5	4.0
P045-xx-SS	4-1/2"	1/2"	PBTP Plastic[2]	316 SS	Acrylic	±0.5% of span	6.3	5.8

xx denotes the maximum gauge pressure i.e., 30, 60, 100, 160 or 200 psi. See data page for recommended working pressures.
[2] PBTP = glass filled polyester.

WORKING PRESSURES PSI

WEIGHTS

Material	10 – 20°C 50 – 68°F	30°C 86°F	40°C 104°F	50°C 122°F	60°C 140°F	70°C 158°F	80°C 176°F	90°C 194°F	100°C 212°F	120°C 248°F	Net Weights Pounds[3]
PVC	150	100	80	45	15	–	–	–	–	–	1.0
PP	150	125	100	80	65	45	–	–	–	–	0.7
PVDF	150	150	150	125	105	85	70	60	45	30	1.3

Temperature Ranges: PVC 0 to 60°C (32 to 140°F), **PP** 10 to 80°C (50 to 176°F), **PVDF** –30 to 120°C (–22 to 248°F).
NR = Not Recommended. [3] Weights are for unfilled 1/2" x 1/2" isolators without gauges. 1/2" x 1/4" isolators are 20% lighter.

ORDERING EXAMPLE

Chemline Gauge Isolators SG		A	005-	002	P	G
Body Material	**A** – PVC	**B** – PP	**K** – PVDF			
Inlet Size	**002** – 1/4"	**005** – 1/2"(Standard)				
Instrument Connection	**002** – 1/4"	**005** – 1/2"				
Diaphragm	**P** – PTFE bonded EPDM					
Filling & Mounting	**G** –Add only if isolator is supplied filled with glycol and gauge or pressure instrument is mounted by Chemline. Separate gauge item numbers are listed above.					

Example: Chemline SG Series Gauge Isolator, PVC, 1/2" x 1/4" FNPT inlet x instrument connections, PTFE diaphragm.

CHEMLINE PLASTICS
SUPERIOR FLOW SOLUTIONS
55 Guardsman Road, Thornhill, ON, L3T 6L2, Canada | ISO 9001:2008 Certified
tel.905.889.7890 | fax.905.889.8553 | request@chemline.com | chemline.com

CHEMLINE

SERIES FC/FS, VARIABLE AREA FLOW METER

LEFT BLANK

CHEMLINE Plastics Limited

Your Pipeline To Quality Valves, Strainers, Flowmeters and Controls

55 Guardsman Road
Thornhill, Ontario
L3T 6L2
Canada
Tel: 905-889-7890
Fax: 905-889-8553

INSTALLATION & MAINTENANCE INSTRUCTIONS
For Chemline FC/FS Series Variable Area Flowmeter Sizes 5" and 7"

Installation & Maintenance:

Refer to **ASSEMBLY DRAWING SFM1 REV 0**. And proceed as follows:

1. Install in line (where flow readings are required).
2. Unscrew union nuts (5).
3. Remove end connectors (6).
4. Tube (1) will slide out when end connectors (6) are removed.
5. Upper and lower float stops will come out with the end connectors (6).
6. Remove and clean or replace o-rings (7).
7. Remove float (2) from tube (1) and clean.
8. Remove range indicator (8) from tube and clean or replace.
9. It is recommended that spare o-rings (7) and range indicators (8) be kept.

Maximum Working Pressures and Temperature Ranges

Construction				
Tube	**Union Nuts**	**Ends**	**Pressure**	**Temperature**
PVC	PVC	PVC	150 psi	0 to 60° C
Polyamide (PA)	PVC	PVC	150 psi	0 to 60° C
Polyamide (PA	PPG	PP or CPVC	150 psi	0 to 80° C
Polysulfone (PSU)	PPG	PP or CPVC	150 psi	0 to 90° C
Polysulfone (PSU)	PVDF	PVDF	150 psi	0 to 120° C
PVDF	PVDF	PVDF	150 psi	-40 to 120° C

Ranges, Conversion Charts, Sizing, Scale Correction Factors etc. are available on the Chemline Data Page and also available from the Chemline Technical Department.

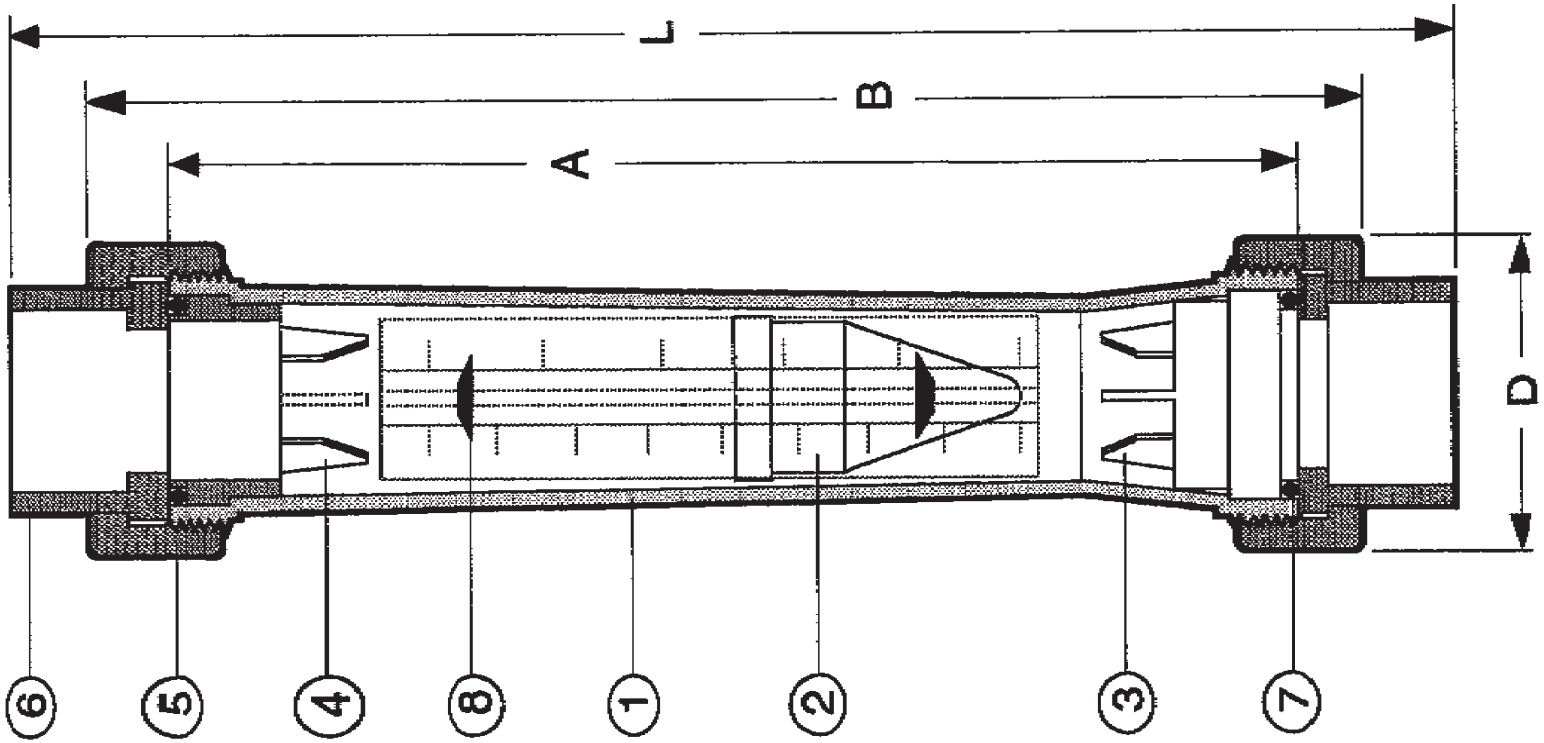

TITLE	SCALE	NTS	DATE	REFERENCE	
FS / FC VARIABLE-AREA FLOWMETERS	DR. BY	DB	02/22/91		
CHEMLINE PLASTICS LIMITED 55 GUARDSMAN ROAD, THORNHILL, ONTARIO L3T 6L2 TEL: (905) 889-7890 - FAX (905) 889-8553	CHK BY			DWG. NO.	REV.
	APP BY			SFM1	0

LEFT BLANK

ENDRESS + HAUSER

PROLINE PROMAG 50W, ELECTROMAGNETIC FLOWMETER

LEFT BLANK

BA00046D/06/EN/16.15
71279854

Valid as of version
V 2.04.XX (device software)

Operating Instructions
Proline Promag 50
HART

Electromagnetic flowmeter

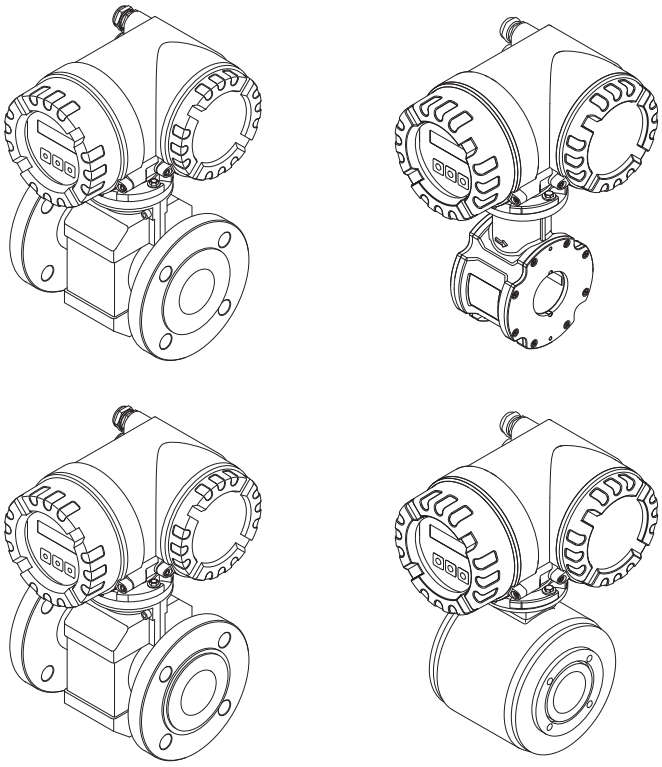

Endress+Hauser
People for Process Automation

Table of contents

1 Safety instructions 4

1.1 Designated use 4
1.2 Installation, commissioning and operation 4
1.3 Operational safety 4
1.4 Return 5
1.5 Notes on safety conventions and icons 5

2 Identification 6

2.1 Device designation 6
2.2 Certificates and approvals 8
2.3 Registered trademarks 9

3 Installation 10

3.1 Incoming acceptance, transport and storage . . . 10
3.2 Installation conditions 12
3.3 Installation instructions 20
3.4 Post-installation check 46

4 Wiring 47

4.1 Connecting the remote version 47
4.2 Connecting the measuring unit 53
4.3 Potential equalization 56
4.4 Degree of protection 59
4.5 Post-connection check 60

5 Operation. 61

5.1 Display and operating elements 61
5.2 Brief operating instructions on the function matrix 62
5.3 Displaying error messages 64
5.4 Communication 65

6 Commissioning 73

6.1 Function check 73
6.2 Switching on the measuring device 73
6.3 Quick Setup 74
6.4 Configuration 75
6.5 Adjustment 76
6.6 Data storage device (HistoROM) 77

7 Maintenance 78

7.1 Exterior cleaning 78
7.2 Seals 78

8 Accessories 79

8.1 Device-specific accessories 79
8.2 Measuring principle-specific accessories 79
8.3 Communication-specific accessories 80
8.4 Service-specific accessories 81

9 Troubleshooting 82

9.1 Troubleshooting instructions 82
9.2 System error messages 83
9.3 Process error messages 85
9.4 Process errors without messages 86
9.5 Response of outputs to errors 87
9.6 Spare parts 89
9.7 Return 97
9.8 Disposal 97
9.9 Software history 97

10 Technical data 99

10.1 Technical data at a glance 99

Index 128

1 Safety instructions

1.1 Designated use

The measuring device described in this Operating Manual is to be used only for measuring the flow rate of conductive fluids in closed pipes.

A minimum conductivity of 20 µS/cm is required for measuring demineralized water. Most liquids can be measured as of a minimum conductivity of 5 µS/cm.

Examples:
- Acids, alkalis
- Drinking water, wastewater, sewage sludge
- Milk, beer, wine, mineral water, etc.

Resulting from incorrect use or from use other than that designated the operational safety of the measuring devices can be suspended. The manufacturer accepts no liability for damages being produced from this.

1.2 Installation, commissioning and operation

Please note the following:
- Installation, connection to the electricity supply, commissioning and maintenance of the device must be carried out by trained, qualified specialists authorized to perform such work by the facility's owner-operator. The specialist must have read and understood this Operating Manual and must follow the instructions it contains.
- The device must be operated by persons authorized and trained by the facility's owner-operator. Strict compliance with the instructions in the Operating Manual is mandatory.
- With regard to special fluids, including fluids used for cleaning, Endress+Hauser will be happy to assist in clarifying the corrosion-resistant properties of wetted materials. However, minor changes in temperature, concentration or in the degree of contamination in the process may result in variations in corrosion resistance. For this reason, Endress+Hauser does not accept any responsibility with regard to the corrosion resistance of wetted materials in a specific application.
  The user is responsible for the choice of suitable wetted materials in the process.
- If welding work is performed on the piping system, do not ground the welding appliance through the Promag flowmeter.
- The installer must ensure that the measuring system is correctly wired in accordance with the wiring diagrams. The transmitter must be grounded apart from when special protective measures are taken (e.g. galvanically isolated SELV or PELV power supply)
- Invariably, local regulations governing the opening and repair of electrical devices apply.

1.3 Operational safety

Please note the following:
- Measuring systems for use in hazardous environments are accompanied by separate Ex documentation, which is an integral part of this Operating Manual. Strict compliance with the installation instructions and ratings as stated in this supplementary documentation is mandatory. The symbol on the front of this Ex documentation indicates the approval and the certification body (e.g. Ex Europe, FM USA, CSA Canada).
- The measuring device complies with the general safety requirements in accordance with EN 61010-1, the EMC requirements of IEC/EN 61326 and NAMUR Recommendations NE 21 and NE 43.
- Depending on the application, the seals of the process connections of the Promag H sensor require periodic replacement.

- When hot fluid passes through the measuring tube, the surface temperature of the housing increases. In the case of the sensor, in particular, users should expect temperatures that can be close to the fluid temperature. If the temperature of the fluid is high, implement sufficient measures to prevent burning or scalding.
- The manufacturer reserves the right to modify technical data without prior notice. Your Endress+Hauser distributor will supply you with current information and updates to these Operating Instructions.

1.4 Return

The measuring device must be returned if repairs or a factory calibration are required, or if the wrong measuring device has been ordered or delivered. According to legal regulations, Endress+Hauser, as an ISO-certified company, is required to follow certain procedures when handling returned products that are in contact with medium.

To ensure swift, safe and professional device returns, please read the return procedures and conditions on the Endress+Hauser website at www.services.endress.com/return-material

1.5 Notes on safety conventions and icons

The devices are designed to meet state-of-the-art safety requirements, have been tested, and left the factory in a condition in which they are safe to operate. The devices comply with the applicable standards and regulations in accordance with EN 61010-1 "Safety requirements for electrical equipment for measurement, control and laboratory use".
The devices can, however, be a source of danger if used incorrectly or for anything other than the designated use. Consequently, always pay particular attention to the safety instructions indicated in this Operating Manual by the following icons:

Warning!
"Warning" indicates an action or procedure which, if not performed correctly, can result in injury or a safety hazard. Comply strictly with the instructions and proceed with care.

Caution!
"Caution" indicates an action or procedure which, if not performed correctly, can result in incorrect operation or destruction of the device. Comply strictly with the instructions.

Note!
"Note" indicates an action or procedure which, if not performed correctly, can have an indirect effect on operation or trigger an unexpected response on the part of the device.

2 Identification

2.1 Device designation

The flow measuring system consists of the following components:

- Promag 50 transmitter
- Promag D/E/H/L/P/W sensor

In the *compact version*, the transmitter and sensor form a single mechanical unit; in the *remote version* they are installed separately.

2.1.1 Nameplate of the transmitter

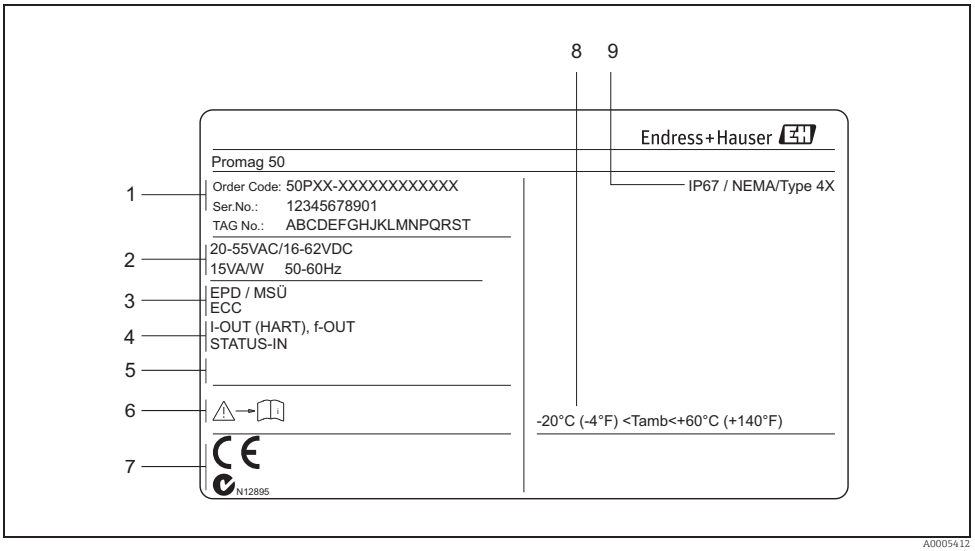

Fig. 1: Nameplate specifications for the "Promag 50" transmitter (example)

1 Ordering code/serial number: See the specifications on the order confirmation for the meanings of the individual letters and digits.
2 Power supply, frequency, power consumption
3 Additional information:
EPD/MSÜ: with Empty Pipe Detection
ECC: with electrode cleaning
4 Outputs available:
I-OUT (HART): with current output (HART)
f-OUT (HART): with frequency output
STATUS-IN: with status input (power supply)
5 Reserved for information on special products
6 Observe device documentation
7 Reserved for additional information on device version (approvals, certificates)
8 Permitted ambient temperature range
9 Degree of protection

2.1.2 Nameplate of the sensor

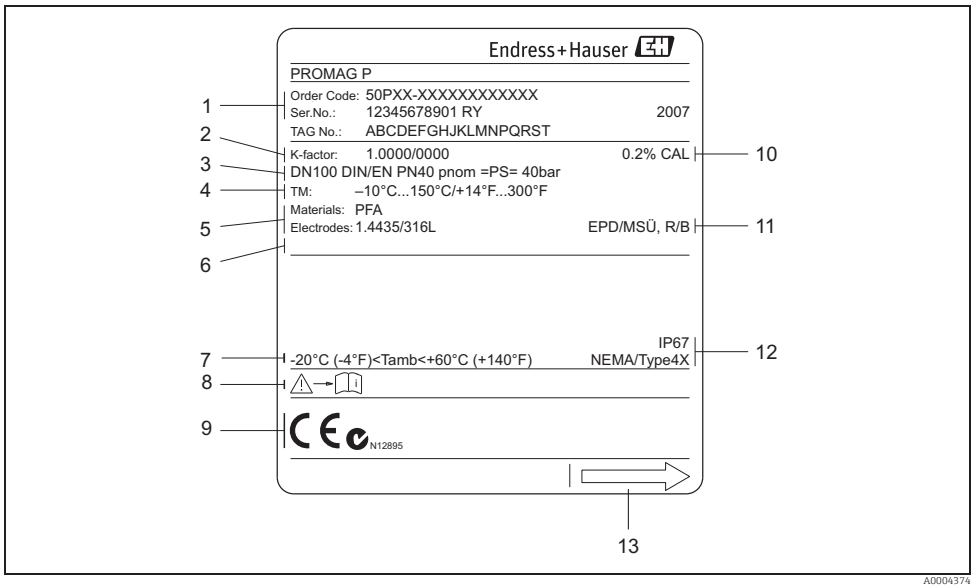

Fig. 2: Nameplate specifications for the "Promag" sensor (example)

1 *Ordering code/serial number: See the specifications on the order confirmation for the meanings of the individual letters and digits.*
2 *Calibration factor with zero point*
3 *Nominal diameter / Pressure rating*
4 *Fluid temperature range*
5 *Materials: lining/measuring electrodes*
6 *Reserved for information on special products*
7 *Permitted ambient temperature range*
8 *Observe device documentation*
9 *Reserved for additional information on device version (approvals, certificates)*
10 *Calibration tolerance*
11 *Additional information (examples):*
- *EPD/MSÜ: with Empty Pipe Detection electrode*
- *R/B: with reference electrode*

12 *Degree of protection*
13 *Flow direction*

2.1.3 Nameplate, connections

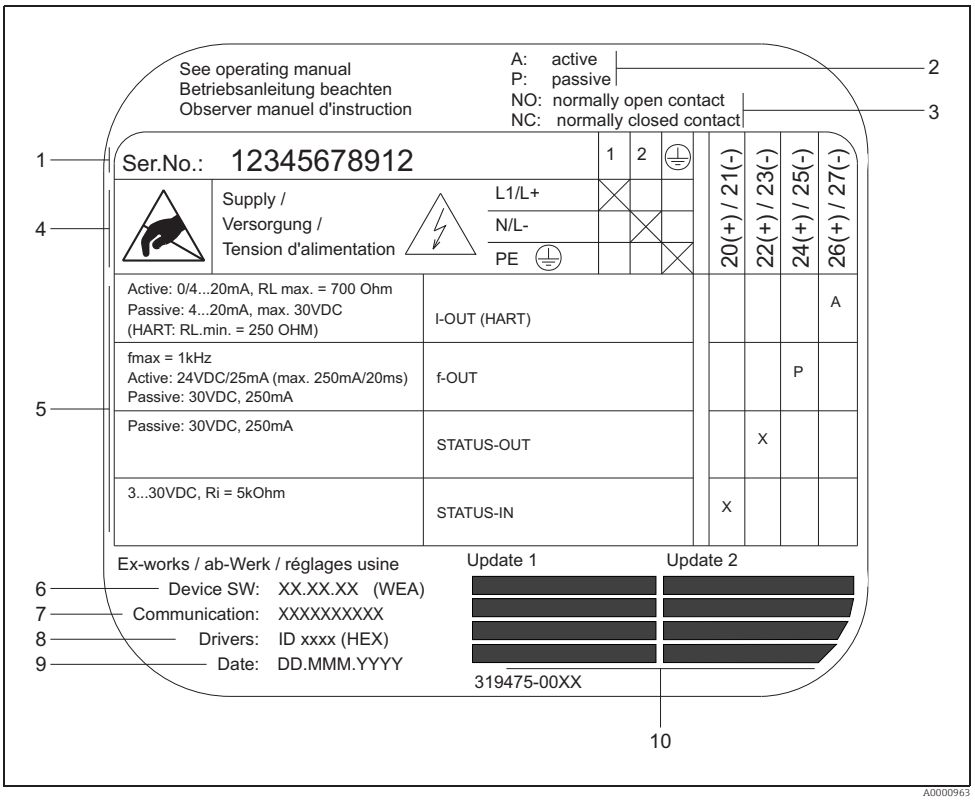

Fig. 3: Nameplate specifications for transmitter (example)

1 Serial number
2 Possible configuration of current output
3 Possible configuration of relay contacts
4 Terminal assignment, cable for power supply: 85 to 260 V AC, 20 to 55 V AC, 16 to 62 V DC
*Terminal **No. 1**: L1 for AC, L+ for DC*
*Terminal **No. 2**: N for AC, L– for DC*
5 Signals present at inputs and outputs, possible configuration and terminal assignment (20 to 27), see also "Electrical values of inputs/outputs"
6 Version of device software currently installed
7 Installed communication type, e.g.: HART, PROFIBUS PA, etc.
8 Information on current communication software (Device Revision and Device Description), e.g.: Dev. 01 / DD 01 for HART
9 Date of installation
10 Current updates to data specified in points 6 to 9

2.2 Certificates and approvals

The devices are designed to meet state-of-the-art safety requirements in accordance with sound engineering practice. They have been tested and left the factory in a condition in which they are safe to operate.

The devices comply with the applicable standards and regulations in accordance with EN 61010-1 "Safety requirements for electrical equipment for measurement, control and laboratory use" and with the EMC requirements of IEC/EN 61326/A1.

The measuring system described in this Operating Manual is therefore in conformity with the statutory requirements of the EC Directives. Endress+Hauser confirms successful testing of the device by affixing to it the CE mark.

The measuring system meets the EMC requirements of the "Australian Communications and Media Authority (ACMA)".

2.3 Registered trademarks

KALREZ® and VITON®
Registered trademarks of E.I. Du Pont de Nemours & Co., Wilmington, USA

TRI-CLAMP®
Registered trademark of Ladish & Co., Inc., Kenosha, USA

HART®
Registered trademark of the HART Communication Foundation, Austin, USA

HistoROM™, S-DAT®, Field Xpert™, FieldCare®, Fieldcheck®, Applicator®
Registered or registration-pending trademarks of Endress+Hauser Flowtec AG, Reinach, CH

3 Installation

3.1 Incoming acceptance, transport and storage

3.1.1 Incoming acceptance

On receipt of the goods, check the following:
- Check the packaging and the contents for damage.
- Check the shipment, make sure nothing is missing and that the scope of supply matches your order.

3.1.2 Transport

The following instructions apply to unpacking and to transporting the device to its final location:
- Transport the devices in the containers in which they are delivered.
- Do not remove the protective plates or caps on the process connections until you are ready to install the device. This is particularly important in the case of sensors with PTFE linings.

Special notes on flanged devices

Caution!
- The wooden covers mounted on the flanges from the factory protect the linings on the flanges during storage and transportation. In case of Promag L they are additionally used to hold the lap joint flanges in place. Do not remove these covers until **immediately before** the device in the pipe.
- Do not lift flanged devices by the transmitter housing, or the connection housing in the case of the remote version.

Transporting flanged devices DN ≤ 300 (12")

Use webbing slings slung round the two process connections. Do not use chains, as they could damage the housing.

Warning!
Risk of injury if the measuring device slips. The center of gravity of the assembled measuring device might be higher than the points around which the slings are slung.
At all times, therefore, make sure that the device does not unexpectedly turn around its axis or slip.

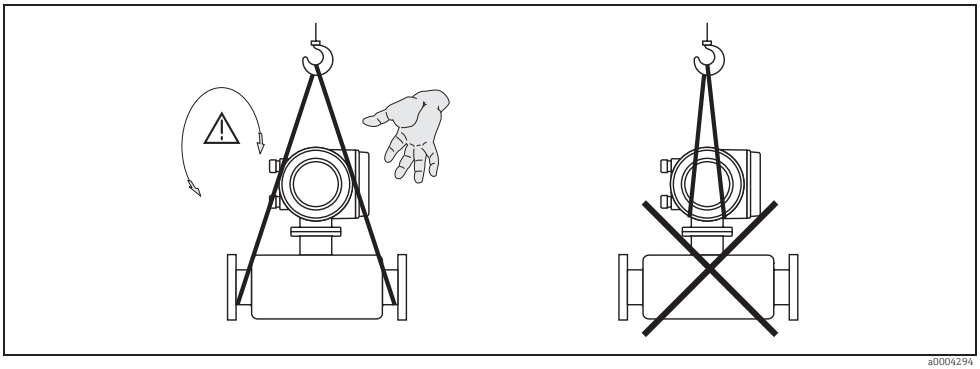

Fig. 4: Transporting sensors with DN ≤ 300 (12")

Transporting flangeddevices DN ≥ 350 (14")

Use only the metal eyes on the flanges for transporting the device, lifting it and positioning the sensor in the piping.

Caution!
Do not attempt to lift the sensor with the tines of a fork-lift truck beneath the metal casing. This would buckle the casing and damage the internal magnetic coils.

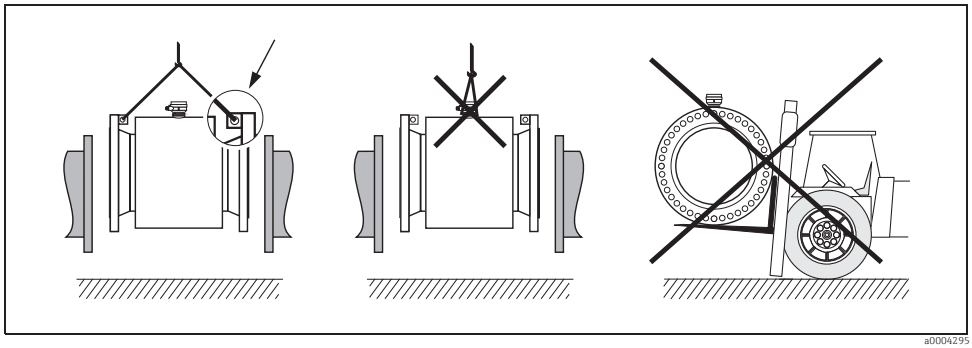

Fig. 5: Transporting sensors with DN ≥ 350 (14")

3.1.3 Storage

Please note the following:
- Pack the measuring device in such a way as to protect it reliably against impact for storage (and transportation). The original packaging provides optimum protection.
- The storage temperature corresponds to the operating temperature range of the measuring transmitter and the appropriate measuring sensors → 🖹 102.
- Do not remove the protective plates or caps on the process connections until you are ready to install the device. This is particularly important in the case of sensors with PTFE linings.
- The measuring device must be protected against direct sunlight during storage in order to avoid unacceptably high surface temperatures.
- Choose a storage location where moisture does not collect in the measuring device. This will help prevent fungus and bacteria infestation which can damage the liner.

3.2 Installation conditions

3.2.1 Dimensions

The dimensions and installation lengths of the sensor and transmitter can be found in the "Technical Information" for the device in question. This document can be downloaded as a PDF file from www.endress.com. A list of the "Technical Information" documents available is provided in the "Documentation" section on → 127.

3.2.2 Mounting location

Entrained air or gas bubble formation in the measuring tube can result in an increase in measuring errors.
Avoid the following locations:
- Highest point of a pipeline. Risk of air accumulating!
- Directly upstream from a free pipe outlet in a vertical pipeline.

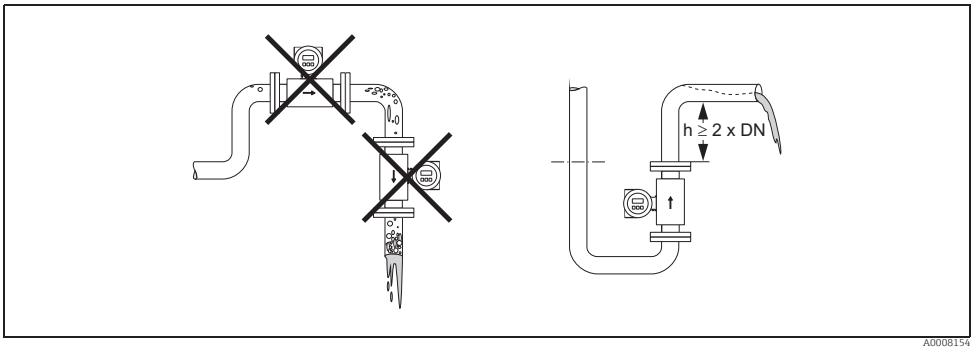

Fig. 6: Mounting location

Installation of pumps

Do **not** install the sensor on the intake side of a pump. This precaution is to avoid low pressure and the consequent risk of damage to the lining of the measuring tube. Information on the lining's resistance to partial vacuum can be found on → 107.

It might be necessary to install pulse dampers in systems incorporating reciprocating, diaphragm or peristaltic pumps. Information on the measuring system's resistance to vibration and shock can be found on → 103.

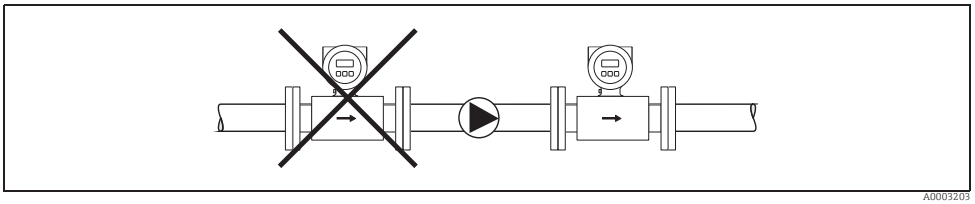

Fig. 7: Installation of pumps

Partially filled pipes

Partially filled pipes with gradients necessitate a drain-type configuration.
The Empty Pipe Detection function (EPD → 📄 76) offers additional protection by detecting empty or partially filled pipes.

Caution!
Risk of solids accumulating. Do not install the sensor at the lowest point in the drain. It is advisable to install a cleaning valve.

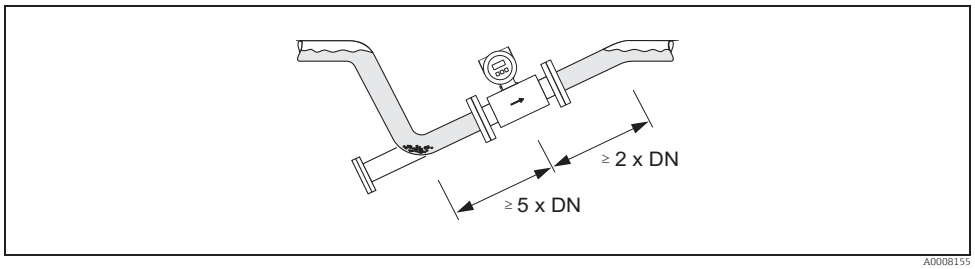

Fig. 8: Installation in a partially filled pipe

Down pipes

Install a siphon or a vent valve downstream of the sensor in down pipes whose length h ≥ 5 m (16.4 ft). This precaution is to avoid low pressure and the consequent risk of damage to the lining of the measuring tube.
This measure also prevents the system losing prime, which could cause air pockets.
Information on the lining's resistance to partial vacuum can be found on → 📄 107.

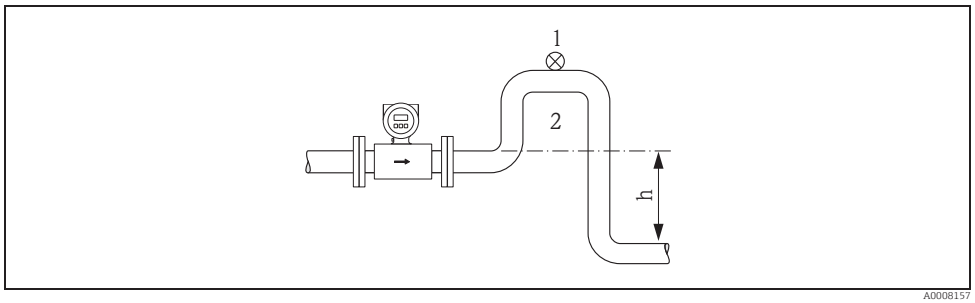

Fig. 9: Measures for installation in a down pipe

1 Vent valve
2 Pipe siphon
h Length of down pipe

3.2.3 Orientation

An optimum orientation position helps avoid gas and air accumulations and deposits in the measuring tube. However, Promag offers the additional Empty Pipe Detection (EPD) function to ensure the detection of partially filled measuring tubes, e.g. in the case of degassing fluids or varying process pressure:

- Electrode Cleaning Circuit (ECC) for applications with accretive fluids, e.g. electrically conductive deposits (→ "Description of Device Functions" manual).
- Empty Pipe Detection (EPD) ensures the detection of partially filled measuring tubes, e.g. in the case of degassing fluids (→ 🖹 76)
- Exchangeable Measuring Electrodes for abrasive fluids (→ 🖹 95)

Vertical orientation

This is the ideal orientation for self-emptying piping systems and for use in conjunction with Empty Pipe Detection.

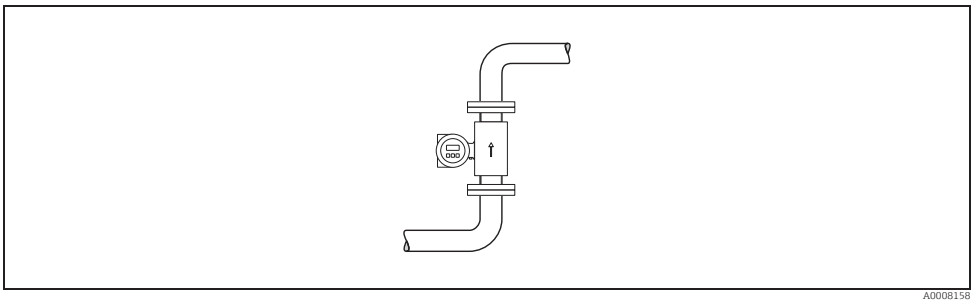

A0008158

Fig. 10: Vertical orientation

Horizontal orientation

The measuring electrode plane should be horizontal. This prevents brief insulation of the two measuring electrodes by entrained air bubbles.

Caution!
Empty Pipe Detection functions correctly only when the measuring device is installed horizontally and the transmitter housing is facing upward (→ 🖹 10). Otherwise there is no guarantee that Empty Pipe Detection will respond if the measuring tube is only partially filled or empty.

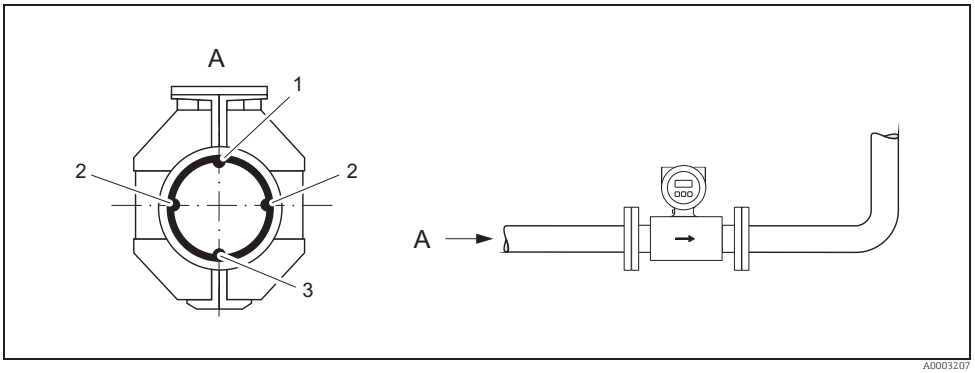

A0003207

Fig. 11: Horizontal orientation

1 EPD electrode for the detection of empty pipes (not with Promag D and Promag H (DN 2 to 15 / 1/12 to ½"))
2 Measuring electrodes for signal detection
3 Reference electrode for the potential equalization (not with Promag D and H)

Inlet and outlet run

If possible, install the sensor upstream from fittings such as valves, T-pieces, elbows, etc. The following inlet and outlet runs must be observed in order to meet accuracy specifications:
- Inlet run: ≥ 5 × DN
- Outlet run: ≥ 2 × DN

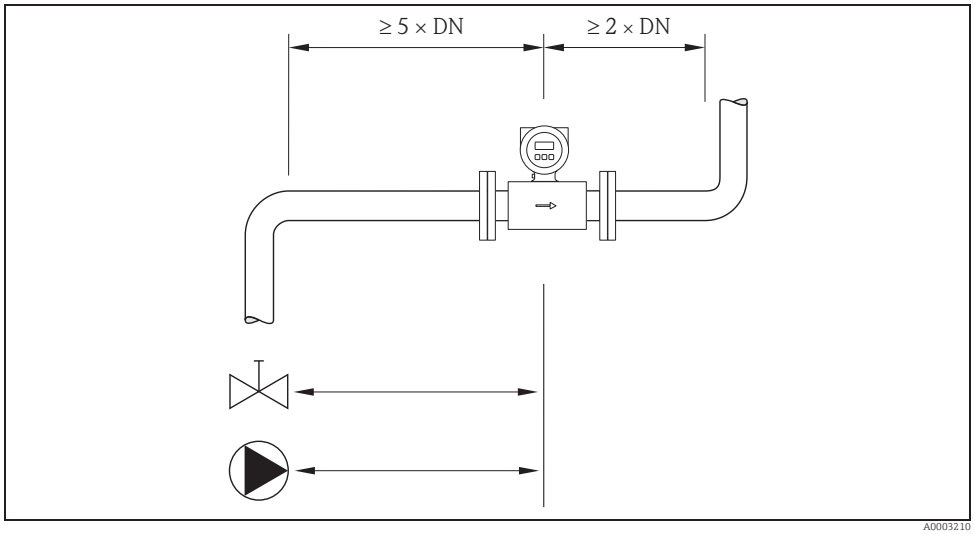

Fig. 12: Inlet and outlet runs

3.2.4 Vibrations

Secure the piping and the sensor if vibration is severe.

Caution!
If vibrations are too severe, we recommend the sensor and transmitter be mounted separately. Information on resistance to vibration and shock can be found on → 103.

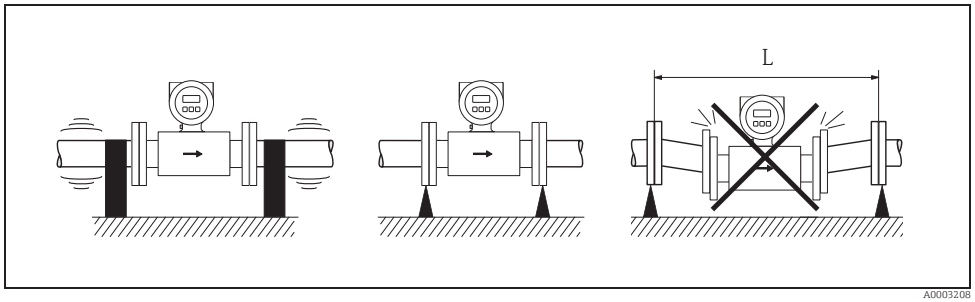

Fig. 13: Measures to prevent vibration of the device (L > 10 m (32.8 ft))

3.2.5 Foundations, supports

If the nominal diameter is DN ≥ 350 (14"), mount the sensor on a foundation of adequate load-bearing strength.

Caution!
Risk of damage.
Do not support the weight of the sensor on the metal casing: the casing would buckle and damage the internal magnetic coils.

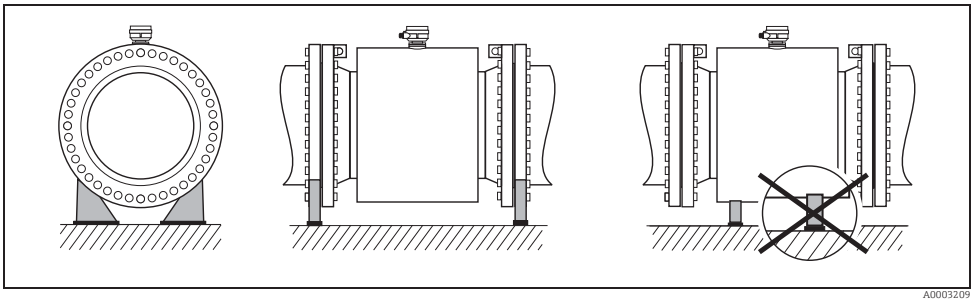

Fig. 14: Correct support for large nominal diameters (DN ≥ 350 / 14")

3.2.6 Adapters

Suitable adapters to DIN EN 545 (double-flange reducers) can be used to install the sensor in larger-diameter pipes.
The resultant increase in the rate of flow improves measuring accuracy with very slow-moving fluids. The nomogram shown here can be used to calculate the pressure loss caused by reducers and expanders.

Note!
The nomogram only applies to liquids of viscosity similar to water.

1. Calculate the ratio of the diameters d/D.
2. From the nomogram read off the pressure loss as a function of flow velocity (*downstream* from the reduction) and the d/D ratio.

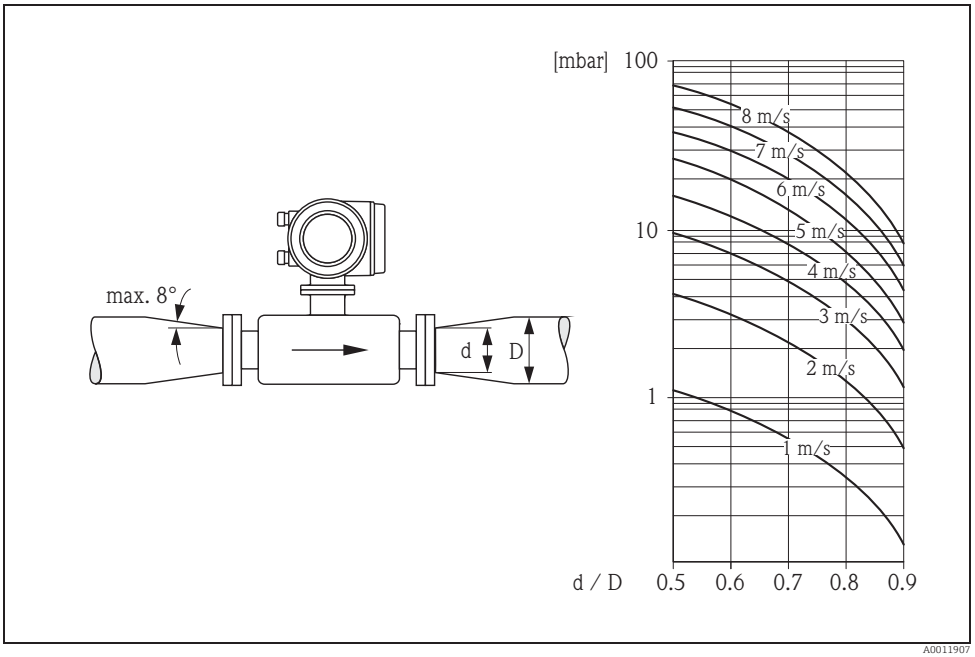

Fig. 15: Pressure loss due to adapters

3.2.7 Nominal diameter and flow rate

The diameter of the pipe and the flow rate determine the nominal diameter of the sensor. The optimum velocity of flow is between 2 and 3 m/s (6.5 to 9.8 ft/s).

The velocity of flow (v), moreover, has to be matched to the physical properties of the fluid:
- v < 2 m/s (v < 6.5 ft/s): for abrasive fluids
- v > 2 m/s (v > 6.5 ft/s): for fluids producing buildup

Note!
Flow velocity can be increased, if necessary, by reducing the nominal diameter of the sensor (→ 16).

Recommended flow (SI units)

Nominal diameter	Promag D	Promag E/P	Promag H	Promag L	Promag W
[mm]	Min./max. full scale value (v ≈ 0.3 or 10 m/s) in [dm³/min]				
2	–	–	0.06 to 1.8	–	–
4	–	–	0.25 to 7	–	–
8	–	–	1 to 30	–	–
15	–	4 to 100	4 to 100	–	–
25	9 to 300	9 to 300	9 to 300	9 to 300	9 to 300
32	–	15 to 500	–	15 to 500	15 to 500
40	25 to 700	25 to 700	25 to 700	25 to 700	25 to 700
50	35 to 1100	35 to 1100	35 to 1100	35 to 1100	35 to 1100
65	60 to 2000	60 to 2000	60 to 2000	60 to 2000	60 to 2000
80	90 to 3000	90 to 3000	90 to 3000	90 to 3000	90 to 3000
100	145 to 4700	145 to 4700	145 to 4700	145 to 4700	145 to 4700
125	–	220 to 7500	–	220 to 7500	220 to 7500
[mm]	Min./max. full scale value (v ≈ 0.3 or 10 m/s) in [m³/h]				
150	–	20 to 600	–	20 to 600	20 to 600
200	–	35 to 1100	–	35 to 1100	35 to 1100
250	–	55 to 1700	–	55 to 1700	55 to 1700
300	–	80 to 2400	–	80 to 2400	80 to 2400
350	–	110 to 3300	–	110 to 3300	110 to 3300
375	–	–	–	140 to 4200	140 to 4200
400	–	140 to 4200	–	140 to 4200	140 to 4200
450	–	180 to 5400	–	180 to 5400	180 to 5400
500	–	220 to 6600	–	220 to 6600	220 to 6600
600	–	310 to 9600	–	310 to 9600	310 to 9600
700	–	–	–	420 to 13500	420 to 13500
750	–	–	–	480 to 15200	480 to 15200
800	–	–	–	550 to 18000	550 to 18000
900	–	–	–	690 to 22500	690 to 22500
1000	–	–	–	850 to 28000	850 to 28000
1050	–	–	–	950 to 40000	950 to 40000
1200	–	–	–	1250 to 40000	1250 to 40000
1400	–	–	–	–	1700 to 55000
1600	–	–	–	–	2200 to 70000
1800	–	–	–	–	2800 to 90000
2000	–	–	–	–	3400 to 110000

Recommended flow (US units)

Nominal diameter [inch]	Promag D	Promag E/P	Promag H	Promag L	Promag W
	Min./max. full scale value (v ≈ 0.3 or 10 m/s) in [gal/min]				
1/12"	–	–	0.015 to 0.5	–	–
1/8"	–	–	0.07 to 2	–	–
8"	–	–	0.25 to 8	–	–
½"	–	1.0 to 27	1.0 to 27	–	–
1"	2.5 to 80	2.5 to 80	2.5 to 80	2.5 to 80	2.5 to 80
1 ¼"	–	4 to 130	–	–	4 to 130
1 ½"	7 to 190	7 to 190	7 to 190	7 to 190	7 to 190
2"	10 to 300	10 to 300	10 to 300	10 to 300	10 to 300
2 ½"	16 to 500	16 to 500	16 to 500	16 to 500	16 to 500
3"	24 to 800	24 to 800	24 to 800	24 to 800	24 to 800
4"	40 to 1250	40 to 1250	40 to 1250	40 to 1250	40 to 1250
5"	–	60 to 1950	–	60 to 1950	60 to 1950
6"	–	90 to 2650	–	90 to 2650	90 to 2650
8"	–	155 to 4850	–	155 to 4850	155 to 4850
10"	–	250 to 7500	–	250 to 7500	250 to 7500
12"	–	350 to 10600	–	350 to 10600	350 to 10600
14"	–	500 to 15000	–	500 to 15000	500 to 15000
15"	–	–	–	600 to 19000	600 to 19000
16"	–	600 to 19000	–	600 to 19000	600 to 19000
18"	–	800 to 24000	–	800 to 24000	800 to 24000
20"	–	1000 to 30000	–	1000 to 30000	1000 to 30000
24"	–	1400 to 44000	–	1400 to 44000	1400 to 44000
28"	–	–	–	1900 to 60000	1900 to 60000
30"	–	–	–	2150 to 67000	2150 to 67000
32"	–	–	–	2450 to 80000	2450 to 80000
36"	–	–	–	3100 to 100000	3100 to 100000
40"	–	–	–	3800 to 125000	3800 to 125000
42"	–	–	–	4200 to 135000	4200 to 135000
48"	–	–	–	5500 to 175000	5500 to 175000
[inch]	Min./max. full scale value (v ≈ 0.3 or 10 m/s) in [Mgal/d]				
54"	–	–	–	–	9 to 300
60"	–	–	–	–	12 to 380
66"	–	–	–	–	14 to 500
72"	–	–	–	–	16 to 570
78"	–	–	–	–	18 to 650

3.2.8 Length of connecting cable

In order to ensure measuring accuracy, comply with the following instructions when installing the remote version:

- Fix cable run or lay in armored conduit. Cable movements can falsify the measuring signal especially in the case of low fluid conductivities.
- Route the cable well clear of electrical machines and switching elements.
- Ensure potential equalization between sensor and transmitter, if necessary.
- The permitted connecting cable length L_{max} is determined by the fluid conductivity (→ 16). A minimum conductivity of 20 µS/cm is required for measuring demineralized water. Most liquids can be measured as of a minimum conductivity of 5 µS/cm.
- The maximum connecting cable length is 10 m (32.8 ft) when empty pipe detection (EPD → 76) is switched on.

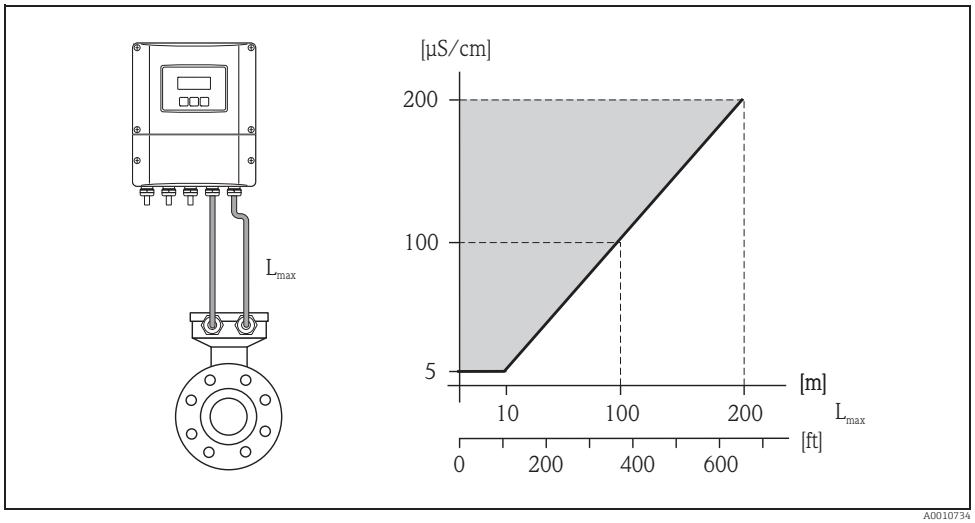

Fig. 16: Permissible cable length for the remote version

Area shaded gray = permitted range
Lmax = connecting cable length in [m]
Fluid conductivity in [µS/cm]

3.3 Installation instructions

3.3.1 Installing the Promag D sensor

The sensor is installed between the pipe flanges with a mounting kit. The device is centered using recesses on the sensor (→ 🖹 21).

Note!
A mounting kit consisting of mounting bolts, seals, nuts and washers can be ordered separately (→ 🖹 79). Centering sleeves are provided with the device if they are required for the installation.

Caution!
When installing the transmitter in the pipe, observe the necessary torques (→ 🖹 22).

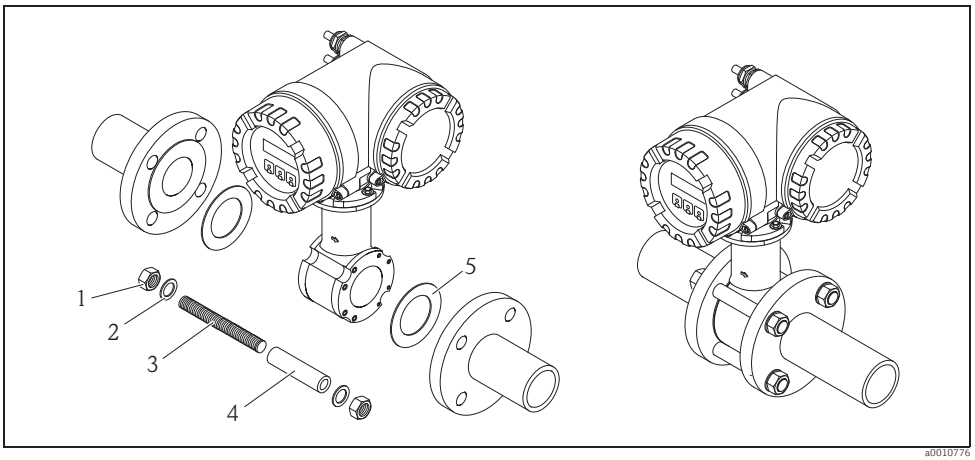

Fig. 17: Mounting the sensor

1 Nut
2 Washer
3 Mounting bolt
4 Centering sleeve
5 Seal

Seals

When installing the sensor, make sure that the seals used do not project into the pipe cross-section.

Caution!
Risk of short circuit! Do not use electrically conductive sealing compounds such as graphite! An electrically conductive layer could form on the inside of the measuring tube and short-circuit the measuring signal.

Note!
Use seals with a hardness rating of 70° Shore A.

Arrangement of the mounting bolts and centering sleeves

The device is centered using recesses on the sensor. The arrangement of the mounting bolts and the use of the centering sleeves supplied depend on the nominal diameter, the flange standard und the pitch circle diameter.

	Process connection		
	EN (DIN)	ASME	JIS
DN 25 to 40 (1 to 1 ½")	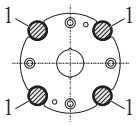 A0010896	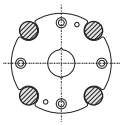 A0010824	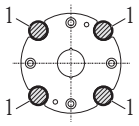 A0010896
DN 50 (2")	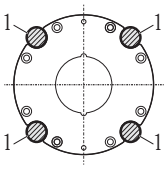 A0010897	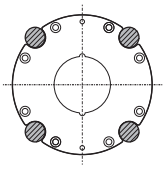 A0010825	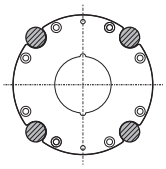 A0010825
DN 65 (–)	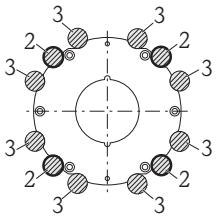 A0012170	–	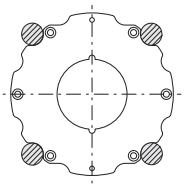 A0012171
DN 80 (3")	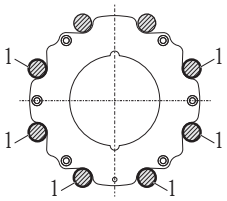 A0010898	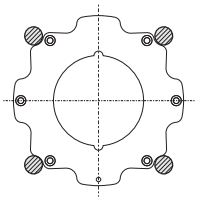 A0010827	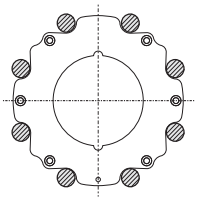 A0010826
DN 100 (4")	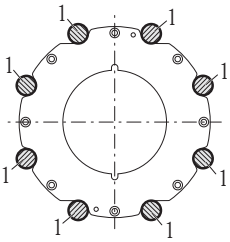 A0012168	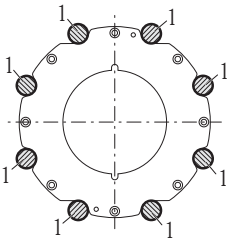 A0012168	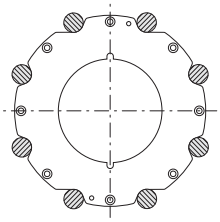 A0012169

1 = Mounting bolts with centering sleeves
2 = EN (DIN) flanges: 4-hole → with centering sleeves
3 = EN (DIN) flanges: 8-hole → without centering sleeves

Screw tightening torques (Promag D)

Please note the following:
- The tightening torques listed below are for lubricated threads only.
- Always tighten the screws uniformly and in diagonally opposite sequence.
- Overtightening the screws will deform the sealing faces or damage the seals.
- The tightening torques listed below apply only to pipes not subjected to tensile stress.

The tightening torques apply to situations where an EPDM soft material flat seal (e.g. 70° Shore A) is used.

Tightening torques, mounting bolts and centering sleeves for EN (DIN) PN 16

Nominal diameter [mm]	Mounting bolts [mm]	Centering sleeve length [mm]	Tightening torque [Nm] with a process flange with a	
			smooth seal face	raised face
25	4 × M12 × 145	54	19	19
40	4 × M16 × 170	68	33	33
50	4 × M16 × 185	82	41	41
65[1)]	4 × M16 × 200	92	44	44
65[2)]	8 × M16 × 200	– [3)]	29	29
80	8 × M16 × 225	116	36	36
100	8 × M16 × 260	147	40	40

[1)] EN (DIN) flanges: 4-hole → with centering sleeves
[2)] EN (DIN) flanges: 8-hole → without centering sleeves
[3)] A centering sleeve is not required. The device is centered directly via the sensor housing.

Tightening torques, mounting bolts and centering sleeves for JIS 10K

Nominal diameter [mm]	Mounting bolts [mm]	Centering sleeve length [mm]	Tightening torque [Nm] with a process flange with a	
			smooth seal face	raised face
25	4 × M16 × 170	54	24	24
40	4 × M16 × 170	68	32	25
50	4 × M16 × 185	– *	38	30
65	4 × M16 × 200	– *	42	42
80	8 × M16 × 225	– *	36	28
100	8 × M16 × 260	– *	39	37

* A centering sleeve is not required. The device is centered directly via the sensor housing.

Tightening torques, mounting bolts and centering sleeves for ASME Class 150

Nominal diameter [inch]	Mounting bolts [inch]	Centering sleeve length [inch]	Tightening torque [lbf · ft] with a process flange with a	
			smooth seal face	raised face
1"	4 × UNC 1/2" × 5.70"	– *	14	7
1 ½"	4 × UNC 1/2" × 6.50"	– *	21	14
2"	4 × UNC 5/8" × 7.50"	– *	30	27
3"	4 × UNC 5/8" × 9.25"	– *	31	31
4"	8 × UNC 5/8" × 10,4"	5,79	28	28

* A centering sleeve is not required. The device is centered directly via the sensor housing.

3.3.2 Installing the Promag E sensor

Caution!
- The protective covers mounted on the two sensor flanges guard the PTFE, which is turned over the flanges. Consequently, do not remove these covers until **immediately before** the sensor is installed in the pipe.
- The covers must remain in place while the device is in storage.
- Make sure that the lining is not damaged or removed from the flanges.

Note!
Bolts, nuts, seals, etc. are not included in the scope of supply and must be supplied by the customer.

The sensor is designed for installation between the two piping flanges.
- Observe in any case the necessary screw tightening torques on → 📄 24
- If grounding disks are used, follow the mounting instructions which will be enclosed with the shipment

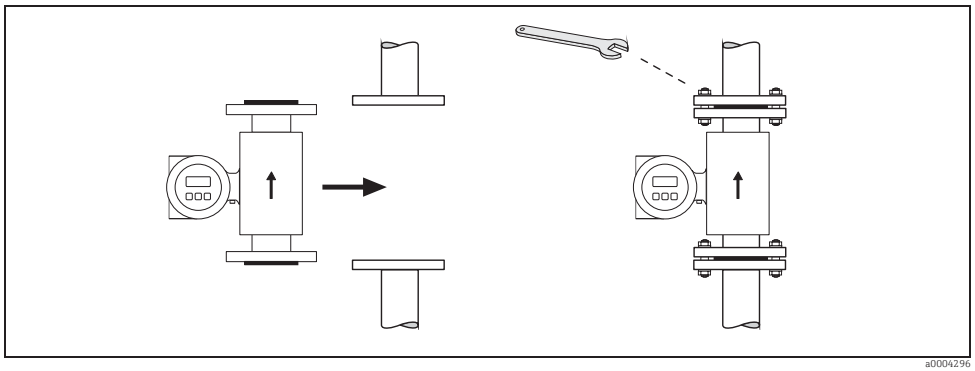

Fig. 18: Installing the Promag E sensor

Seals

Comply with the following instructions when installing seals:
- PFA or PTFE lining → **No** seals are required!
- For DIN flanges, use only seals according to EN 1514-1.
- Make sure that the seals do not protrude into the piping cross-section.

Caution!
Risk of short circuit! Do not use electrically conductive sealing compounds such as graphite! An electrically conductive layer could form on the inside of the measuring tube and short-circuit the measuring signal.

Ground cable

- If necessary, special ground cables for potential equalization can be ordered as an accessory (→ 📄 79).
- Information on potential equalization and detailed mounting instructions for the use of ground cables can be found on → 📄 56

Tightening torques for threaded fasteners (Promag E)

Please note the following:
- The tightening torques listed below are for lubricated threads only.
- Always tighten the screws uniformly and in diagonally opposite sequence.
- Overtightening the screws will deform the sealing faces or damage the seals.
- The tightening torques listed below apply only to pipes not subjected to tensile stress.

Tightening torques for:
- EN (DIN) → 🖹 24
- ASME → 🖹 25
- JIS → 🖹 25

Promag E tightening torques for EN (DIN)

Nominal diameter [mm]	EN (DIN) Pressure rating [bar]	Threaded fasteners	Max. tightening torque [Nm]
15	PN 40	4 × M 12	11
25	PN 40	4 × M 12	26
32	PN 40	4 × M 16	41
40	PN 40	4 × M 16	52
50	PN 40	4 × M 16	65
65 *	PN 16	8 × M 16	43
80	PN 16	8 × M 16	53
100	PN 16	8 × M 16	57
125	PN 16	8 × M 16	75
150	PN 16	8 × M 20	99
200	PN 10	8 × M 20	141
200	PN 16	12 × M 20	94
250	PN 10	12 × M 20	110
250	PN 16	12 × M 24	131
300	PN 10	12 × M 20	125
300	PN 16	12 × M 24	179
350	PN 6	12 × M 20	200
350	PN 10	16 × M 20	188
350	PN 16	16 × M 24	254
400	PN 6	16 × M 20	166
400	PN 10	16 × M 24	260
400	PN 16	16 × M 27	330
450	PN 6	16 × M 20	202
450	PN 10	20 × M 24	235
450	PN 16	20 × M 27	300
500	PN 6	20 × M 20	176
500	PN 10	20 × M 24	265
500	PN 16	20 × M 30	448
600	PN 6	20 × M 24	242
600	PN 10	20 × M 27	345
600 *	PN 16	20 × M 33	658
* Designed acc. to EN 1092-1 (not to DIN 2501)			

Promag E tightening torques for ASME

Nominal diameter		ASME		Max. tightening torque PTFE	
[mm]	[inch]	Pressure rating [lbs]	Threaded fasteners	[Nm]	[lbf · ft]
15	½"	Class 150	4 × ½"	6	4
25	1"	Class 150	4 × ½"	11	8
40	1 ½"	Class 150	4 × ½"	24	18
50	2"	Class 150	4 × 5/8"	47	35
80	3"	Class 150	4 × 5/8"	79	58
100	4"	Class 150	8 × 5/8"	56	41
150	6"	Class 150	8 × ¾"	106	78
200	8"	Class 150	8 × ¾"	143	105
250	10"	Class 150	12 × 7/8"	135	100
300	12"	Class 150	12 × 7/8"	178	131
350	14"	Class 150	12 × 1"	260	192
400	16"	Class 150	16 × 1"	246	181
450	18"	Class 150	16 × 1 1/8"	371	274
500	20"	Class 150	20 × 1 1/8"	341	252
600	24"	Class 150	20 × 1 ¼"	477	352

Promag E tightening torques for JIS

Nominal diameter [mm]	JIS Pressure rating	Threaded fasteners	Max. tightening torque [Nm] PTFE
15	20K	4 × M 12	16
25	20K	4 × M 16	32
32	20K	4 × M 16	38
40	20K	4 × M 16	41
50	10K	4 × M 16	54
65	10K	4 × M 16	74
80	10K	8 × M 16	38
100	10K	8 × M 16	47
125	10K	8 × M 20	80
150	10K	8 × M 20	99
200	10K	12 × M 20	82
250	10K	12 × M 22	133
300	10K	16 × M 22	99

3.3.3 Installing the Promag H sensor

The sensor is supplied to order, with or without pre-installed process connections. Pre-installed process connections are secured to the sensor with 4 or 6 hex-head threaded fasteners.

Caution!
The sensor might require support or additional attachments, depending on the application and the length of the piping run. When plastic process connections are used, the sensor must be additionally supported mechanically. A wall-mounting kit can be ordered separately from Endress+Hauser as an accessory (→ 📖 79).

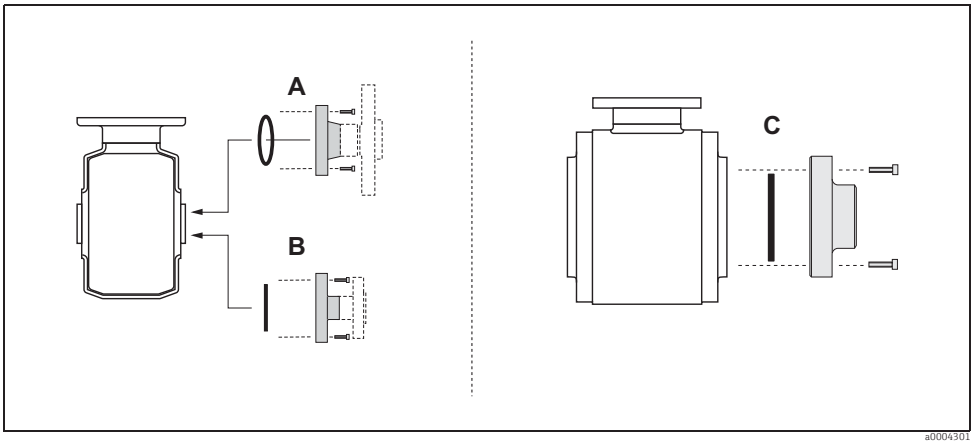

Abb. 19: Promag H process connections (DN 2 to 25 / 1/12 to 1", DN 40 to 100 / 1½ to 4")

A = DN 2 to 25 / 1/12 to 1": process connections with O-ring
– welding flanges (DIN EN ISO 1127, ODT / SMS),
– flange (EN (DIN), ASME, JIS), flange PVDF (EN (DIN), ASME, JIS)
– external and internal thread, hose connection, PVC adhesive fitting

B = DN 2 to 25 / 1/12 to 1": process connections with aseptic gasket vseal
– weld nipples (DIN 11850, ODT/SMS)
– Clamp (ISO 2852, DIN 32676, L14 AM7)
– coupling (DIN 11851, DIN 11864-1, SMS 1145)
– flange DIN 11864-2

C = DN 40 to 100 / 1½ to 4": process connections with aseptic gasket seal
– weld nipples (DIN 11850, ODT/SMS)
– Clamp (ISO 2852, DIN 32676, L14 AM7)
– coupling (DIN 11851, DIN 11864-1, ISO 2853, SMS 1145)
– flange DIN 11864-2

Seals

When installing the process connections, make sure that the seals are clean and correctly centered.

Caution!
- With metal process connections, you must fully tighten the screws. The process connection forms a metallic connection with the sensor, which ensures a defined compression of the seal.
- With plastic process connections, note the max. torques for lubricated threads (7 Nm / 5.2 lbf ft). With plastic flanges, always use seals between connection and counter flange.
- The seals must be replaced periodically, depending on the application, particularly in the case of gasket seals (aseptic version)!
  The period between changes depends on the frequency of cleaning cycles, the cleaning temperature and the fluid temperature. Replacement seals can be ordered as accessories → 📖 79.

Usage and assembly of ground rings (DN 2 to 25 / 1/12 to 1")

In case the process connections are made of plastic (e.g. flanges or adhesive fittings), the potential between the sensor and the fluid must be equalized using additional ground rings. If the ground rings are not installed this can affect the accuracy of the measurements or cause the destruction of the sensor through the electrochemical erosion of the electrodes.

Caution!

- Depending on the option ordered, plastic disks may be installed at the process connections instead of ground rings. These plastic disks serve only as spacers and have no potential equalization function. In addition, they provide a sealing function at the interface between the sensor and process connection. For this reason, with process connections without ground rings, these plastic disks/seals must not be removed, or must always be installed.
- Ground rings can be ordered separately from Endress+Hauser as accessories (→ 79). When placing the order, make certain that the ground ring is compatible with the material used for the electrodes. Otherwise, there is a risk that the electrodes may be destroyed by electrochemical corrosion! Information about the materials can be found on → 120.
- Ground rings, including the seals, are mounted within the process connections. Therefore, the fitting length is not affected.

1. Loosen the four or six hexagonal headed bolts (1) and remove the process connection from the sensor (4).
2. Remove the plastic disk (3), including the two O-ring seals (2).
3. Place one seal (2) in the groove of the process connection.
4. Place the metal ground ring (3) on the process connection.
5. Now place the second seal (2) in the groove of the ground ring.
6. Finally, mount the process connection on the sensor again.
   With plastic process connections, note the max. torques for lubricated threads (7 Nm / 5.2 lbf ft).

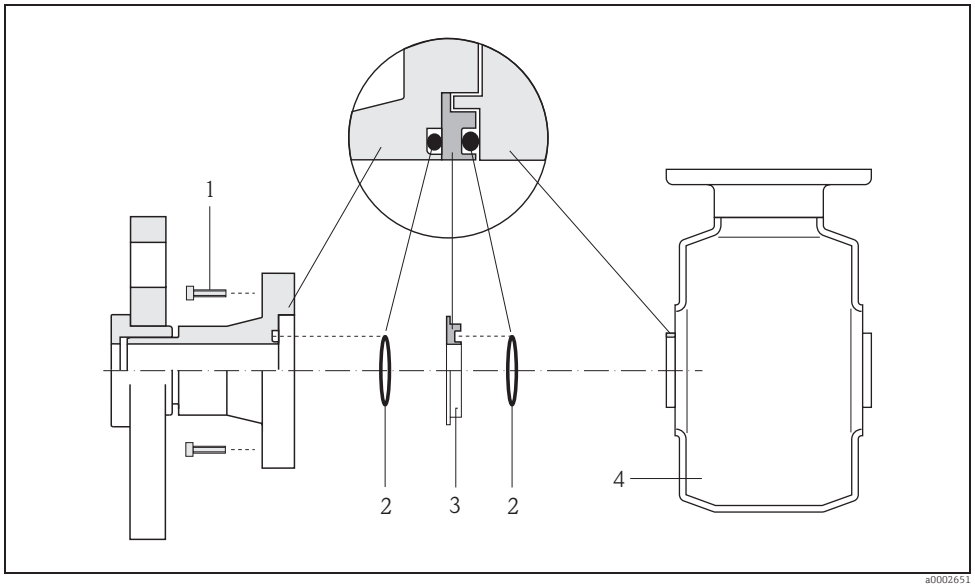

Fig. 20: Installing ground rings with Promag H (DN 2 to 25 / 1/12 to 1")

1 = Hexagonal-headed bolt (process connection)
2 = O-ring seals
3 = Ground ring or plastic disk (spacer)
4 = Sensor

Welding the transmitter into the piping (weld nipples)

Caution!
Risk of destroying the measuring electronics. Make sure that the welding machine is *not* grounded via the sensor or the transmitter.

1. Tack-weld the sensor into the pipe. A suitable welding jig can be ordered separately as an accessory (→ 79).
2. Loosen the screws on the process connection flange and remove the sensor, complete with the seal, from the pipe.
3. Weld the process connection to the pipe.
4. Reinstall the sensor in the pipe. Make sure that everything is clean and that the seal is correctly seated.

Note!
- If thin-walled foodstuffs pipes are not welded correctly, the heat could damage the installed seal. It is therefore advisable to remove the sensor and the seal prior to welding.
- The pipe has to be spread approximately 8 mm to permit disassembly.

Cleaning with pigs

If pigs are used for cleaning, it is essential to take the inside diameters of the measuring tube and process connection into account. All the dimensions and lengths of the sensor and transmitter are provided in the separate documentation "Technical Documentation" → 127.

3.3.4 Installing the Promag L sensor

Caution!
- The protective covers mounted on the two sensor flanges (DN 25 to 300 / 1 to 12") are used to hold the lap joint flanges in place and to protect the PTFE liner during transportation. Consequently, do not remove these covers until immediately before the sensor is installed in the pipe.
- The covers must remain in place while the device is in storage.
- Make sure that the lining is not damaged or removed from the flanges.

Note!
Bolts, nuts, seals, etc. are not included in the scope of supply and must be supplied by the customer.

The sensor is designed for installation between the two piping flanges.
- Observe in any case the necessary screw tightening torques on → 30
- If grounding disks are used, follow the mounting instructions which will be enclosed with the shipment
- To comply with the device specification, a concentrical installation in the measuring section is required

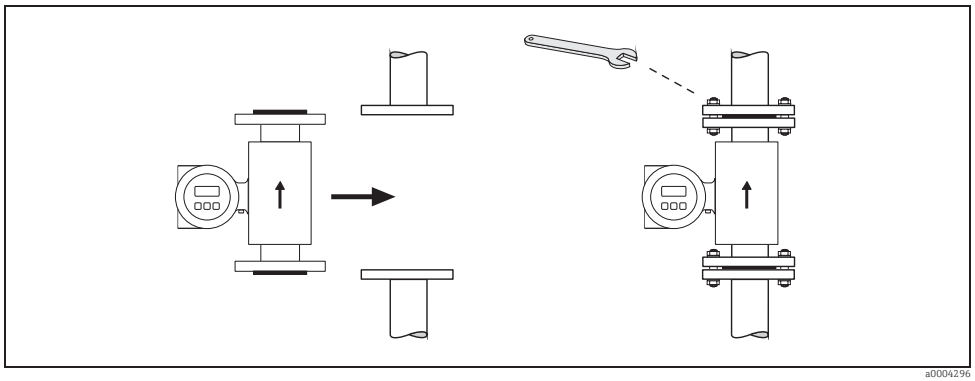

Fig. 21: Installing the Promag L sensor

Seals

Comply with the following instructions when installing seals:
- Hard rubber lining → additional seals are **always** necessary.
- Polyurethane lining → **no** seals are required.
- PTFE lining → **no** seals are required.
- For DIN flanges, use only seals according to EN 1514-1.
- Make sure that the seals do not protrude into the piping cross-section.

Caution!
Risk of short circuit!
Do not use electrically conductive sealing compounds such as graphite! An electrically conductive layer could form on the inside of the measuring tube and short-circuit the measuring signal.

Ground cable

- If necessary, special ground cables for potential equalization can be ordered as an accessory (→ 79).
- Information on potential equalization and detailed mounting instructions for the use of ground cables can be found on → 58.

Screw tightening torques (Promag L)

Please note the following:
- The tightening torques listed below are for lubricated threads only.
- Always tighten the screws uniformly and in diagonally opposite sequence.
- Overtightening the screws will deform the sealing faces or damage the seals.
- The tightening torques listed below apply only to pipes not subjected to tensile stress.

Promag L tightening torques for EN (DIN)

Nominal diameter	EN (DIN)		Max. tightening torque		
			Hard rubber	Polyurethane	PTFE
[mm]	Pressure rating [bar]	Threaded fasteners	[Nm]	[Nm]	[Nm]
25	PN 10/16	4 × M 12	-	6	11
32	PN 10/16	4 × M 16	-	16	27
40	PN 10/16	4 × M 16	-	16	29
50	PN 10/16	4 × M 16	-	15	40
65*	PN 10/16	8 × M 16	-	10	22
80	PN 10/16	8 × M 16	-	15	30
100	PN 10/16	8 × M 16	-	20	42
125	PN 10/16	8 × M 16	-	30	55
150	PN 10/16	8 × M 20	-	50	90
200	PN 16	12 × M 20	-	65	87
250	PN 16	12 × M 24	-	126	151
300	PN 16	12 × M 24	-	139	177
350	PN 6	12 × M 20	111	120	-
350	PN 10	16 × M 20	112	118	-
400	PN 6	16 × M 20	90	98	-
400	PN 10	16 × M 24	151	167	-
450	PN 6	16 × M 20	112	126	-
450	PN 10	20 × M 24	153	133	-
500	PN 6	20 × M 20	119	123	-
500	PN 10	20 × M 24	155	171	-
600	PN 6	20 × M 24	139	147	-
600	PN 10	20 × M 27	206	219	-
700	PN 6	24 × M 24	148	139	-
700	PN 10	24 × M 27	246	246	-
800	PN 6	24 × M 27	206	182	-
800	PN 10	24 × M 30	331	316	-
900	PN 6	24 × M 27	230	637	-
900	PN 10	28 × M 30	316	307	-
1000	PN 6	28 × M 27	218	208	-
1000	PN 10	28 × M 33	402	405	-
1200	PN 6	32 × M 30	319	299	-
1200	PN 10	32 × M 36	564	568	-

* Designed acc. to EN 1092-1 (not to DIN 2501)

Promag L tightening torques for ASME

Nominal diameter		ASME	Threaded fasteners	Max. tightening torque					
		Pressure rating		Hard rubber		Polyurethane		PTFE	
[mm]	[inch]	[lbs]		[Nm]	[lbf · ft]	[Nm]	[lbf · ft]	[Nm]	[lbf · ft]
25	1"	Class 150	4 × 5/8"	-	-	5	4	14	13
40	1 ½"	Class 150	8 × 5/8"	-	-	10	17	21	15
50	2"	Class 150	4 × 5/8"	-	-	15	11	40	29
80	3"	Class 150	4 × 5/8"	-	-	25	18	65	48
100	4"	Class 150	8 × 5/8"	-	-	20	15	44	32
150	6"	Class 150	8 × ¾"	-	-	45	33	90	66
200	8"	Class 150	8 × ¾"	-	-	65	48	87	64
250	10"	Class 150	12 × 7/8"	-	-	126	93	151	112
300	12"	Class 150	12 × 7/8"	-	-	146	108	177	131
350	14"	Class 150	12 × 1"	135	100	158	117	-	-
400	16"	Class 150	16 × 1"	128	94	150	111	-	-
450	18"	Class 150	16 × 1 1/8"	204	150	234	173	-	-
500	20"	Class 150	20 × 1 1/8"	183	135	217	160	-	-
600	24"	Class 150	20 × 1 ¼"	268	198	307	226	-	-

Promag L tightening torques for AWWA

Nominal diameter		AWWA	Threaded fasteners	Max. tightening torque					
		Pressure rating		Hartgummi		Polyurethane		PTFE	
[mm]	[inch]			[Nm]	[lbf · ft]	[Nm]	[lbf · ft]	[Nm]	[lbf · ft]
700	28"	Class D	28 × 1 ¼"	247	182	292	215	-	-
750	30"	Class D	28 × 1 ¼"	287	212	302	223	-	-
800	32"	Class D	28 × 1 ½"	394	291	422	311	-	-
900	36"	Class D	32 × 1 ½"	419	309	430	317	-	-
1000	40"	Class D	36 × 1 ½"	420	310	477	352	-	-
1050	42"	Class D	36 × 1 ½"	528	389	518	382	-	-
1200	48"	Class D	44 × 1 ½"	552	407	531	392	-	-

Promag L tightening torques for AS 2129

Nominal diameter	AS 2129	Threaded fasteners	Max. tightening torque		
	Pressure rating		Hard rubber	Polyurethane	PTFE
[mm]			[Nm]	[Nm]	[Nm]
350	Table E	12 × M 24	203	-	-
400	Table E	12 × M 24	226	-	-
450	Table E	16 × M 24	226	-	-
500	Table E	16 × M 24	271	-	-
600	Table E	16 × M 30	439	-	-
700	Table E	20 × M 30	355	-	-
750	Table E	20 × M 30	559	-	-
800	Table E	20 × M 30	631	-	-
900	Table E	24 × M 30	627	-	-
1000	Table E	24 × M 30	634	-	-
1200	Table E	32 × M 30	727	-	-

Promag L tightening torques for AS 4087

Nominal diameter [mm]	AS 4087 Pressure rating	Threaded fasteners	Max. tightening torque		
			Hard rubber [Nm]	Polyurethane [Nm]	PTFE [Nm]
350	PN 16	12 × M 24	203	-	-
375	PN 16	12 × M 24	137	-	-
400	PN 16	12 × M 24	226	-	-
450	PN 16	12 × M 24	301	-	-
500	PN 16	16 × M 24	271	-	-
600	PN 16	16 × M 27	393	-	-
700	PN 16	20 × M 27	330	-	-
750	PN 16	20 × M 30	529	-	-
800	PN 16	20 × M 33	631	-	-
900	PN 16	24 × M 33	627	-	-
1000	PN 16	24 × M 33	595	-	-
1200	PN 16	32 × M 33	703	-	-

3.3.5 Installing the Promag P sensor

Caution!
- The protective covers mounted on the two sensor flanges guard the PTFE, which is turned over the flanges. Consequently, do not remove these covers until **immediately before** the sensor is installed in the pipe.
- The covers must remain in place while the device is in storage.
- Make sure that the lining is not damaged or removed from the flanges.

Note!
Bolts, nuts, seals, etc. are not included in the scope of supply and must be supplied by the customer.

The sensor is designed for installation between the two piping flanges.
- Observe in any case the necessary screw tightening torques on → 📄 34
- If grounding disks are used, follow the mounting instructions which will be enclosed with the shipment

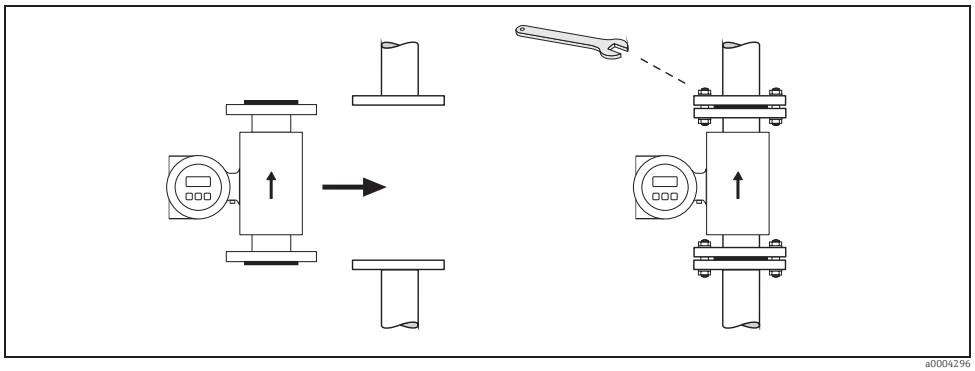

Fig. 22: Installing the Promag P sensor

Seals

Comply with the following instructions when installing seals:
- PFA or PTFE lining → **No** seals are required!
- For DIN flanges, use only seals according to EN 1514-1.
- Make sure that the seals do not protrude into the piping cross-section.

Caution!
Risk of short circuit! Do not use electrically conductive sealing compounds such as graphite! An electrically conductive layer could form on the inside of the measuring tube and short-circuit the measuring signal.

Ground cable

- If necessary, special ground cables for potential equalization can be ordered as an accessory (→ 📄 79).
- Information on potential equalization and detailed mounting instructions for the use of ground cables can be found on → 📄 56

Installing the high-temperature version (with PFA lining)

The high-temperature version has a housing support for the thermal separation of sensor and transmitter. The high-temperature version is always used for applications in which high ambient temperatures are encountered **in conjunction with** high fluid temperatures. The high-temperature version is obligatory if the fluid temperature exceeds +150 °C.

Note!
You will find information on permissible temperature ranges on → 🖹 104

Insulation

Pipes generally have to be insulated if they carry very hot fluids, in order to avoid energy losses and to prevent accidental contact with pipes at temperatures that could cause injury. Guidelines regulating the insulation of pipes have to be taken into account.

Caution!
Risk of measuring electronics overheating. The housing support dissipates heat and its entire surface area must remain uncovered. Make sure that the sensor insulation does not extend past the top of the two sensor shells.

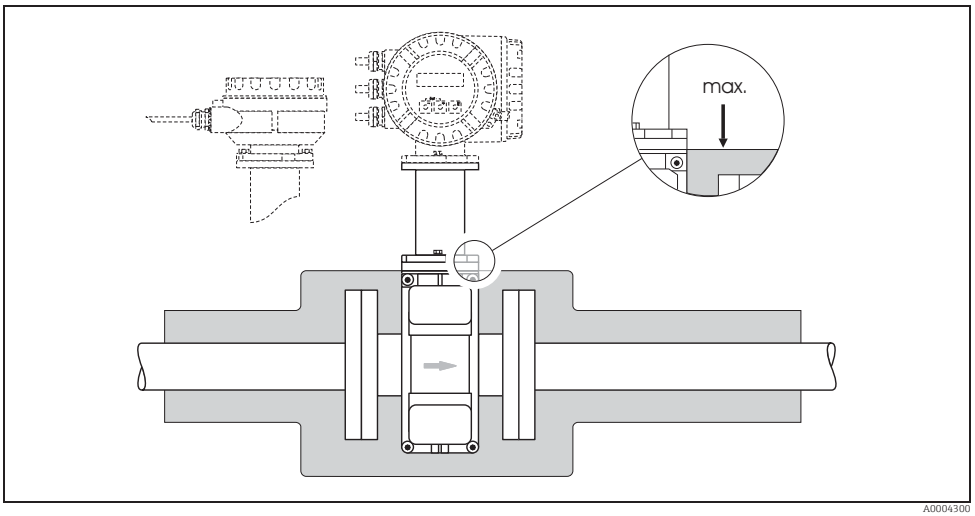

Fig. 23: Promag P (high-temperature version): Insulating the pipe

Tightening torques for threaded fasteners (Promag P)

Please note the following:
- The tightening torques listed below are for lubricated threads only.
- Always tighten the screws uniformly and in diagonally opposite sequence.
- Overtightening the screws will deform the sealing faces or damage the seals.
- The tightening torques listed below apply only to pipes not subjected to tensile stress.

Tightening torques for:
- EN (DIN) → 🖹 35
- ASME → 🖹 35
- JIS → 🖹 36
- AS 2129 → 🖹 36
- AS 4087 → 🖹 36

Promag P tightening torques for EN (DIN)

Nominal diameter [mm]	EN (DIN) Pressure rating [bar]	Threaded fasteners	Max. tightening torque [Nm]	
			PTFE	PFA
15	PN 40	4 × M 12	11	–
25	PN 40	4 × M 12	26	20
32	PN 40	4 × M 16	41	35
40	PN 40	4 × M 16	52	47
50	PN 40	4 × M 16	65	59
65 *	PN 16	8 × M 16	43	40
65	PN 40	8 × M 16	43	40
80	PN 16	8 × M 16	53	48
80	PN 40	8 × M 16	53	48
100	PN 16	8 × M 16	57	51
100	PN 40	8 × M 20	78	70
125	PN 16	8 × M 16	75	67
125	PN 40	8 × M 24	111	99
150	PN 16	8 × M 20	99	85
150	PN 40	8 × M 24	136	120
200	PN 10	8 × M 20	141	101
200	PN 16	12 × M 20	94	67
200	PN 25	12 × M 24	138	105
250	PN 10	12 × M 20	110	–
250	PN 16	12 × M 24	131	–
250	PN 25	12 × M 27	200	–
300	PN 10	12 × M 20	125	–
300	PN 16	12 × M 24	179	–
300	PN 25	16 × M 27	204	–
350	PN 10	16 × M 20	188	–
350	PN 16	16 × M 24	254	–
350	PN 25	16 × M 30	380	–
400	PN 10	16 × M 24	260	–
400	PN 16	16 × M 27	330	–
400	PN 25	16 × M 33	488	–
450	PN 10	20 × M 24	235	–
450	PN 16	20 × M 27	300	–
450	PN 25	20 × M 33	385	–
500	PN 10	20 × M 24	265	–
500	PN 16	20 × M 30	448	–
500	PN 25	20 × M 33	533	–
600	PN 10	20 × M 27	345	–
600 *	PN 16	20 × M 33	658	–
600	PN 25	20 × M 36	731	–

* Designed acc. to EN 1092-1 (not to DIN 2501)

Promag P tightening torques for ASME

Nominal diameter		ASME Pressure rating [lbs]	Threaded fasteners	Max. tightening torque			
				PTFE		PFA	
[mm]	[inch]			[Nm]	[lbf · ft]	[Nm]	[lbf · ft]
15	½"	Class 150	4 × ½"	6	4	–	–
15	½"	Class 300	4 × ½"	6	4	–	–
25	1"	Class 150	4 × ½"	11	8	10	7
25	1"	Class 300	4 × 5/8"	14	10	12	9
40	1 ½"	Class 150	4 × ½"	24	18	21	15
40	1 ½"	Class 300	4 × ¾"	34	25	31	23
50	2"	Class 150	4 × 5/8"	47	35	44	32
50	2"	Class 300	8 × 5/8"	23	17	22	16
80	3"	Class 150	4 × 5/8"	79	58	67	49

Nominal diameter		ASME		Max. tightening torque			
				PTFE		PFA	
[mm]	[inch]	Pressure rating [lbs]	Threaded fasteners	[Nm]	[lbf · ft]	[Nm]	[lbf · ft]
80	3"	Class 300	8 × ¾"	47	35	42	31
100	4"	Class 150	8 × 5/8"	56	41	50	37
100	4"	Class 300	8 × ¾"	67	49	59	44
150	6"	Class 150	8 × ¾"	106	78	86	63
150	6"	Class 300	12 × ¾"	73	54	67	49
200	8"	Class 150	8 × ¾"	143	105	109	80
250	10"	Class 150	12 × 7/8"	135	100	–	–
300	12"	Class 150	12 × 7/8"	178	131	–	–
350	14"	Class 150	12 × 1"	260	192	–	–
400	16"	Class 150	16 × 1"	246	181	–	–
450	18"	Class 150	16 × 1 1/8"	371	274	–	–
500	20"	Class 150	20 × 1 1/8"	341	252	–	–
600	24"	Class 150	20 × 1 ¼"	477	352	–	–

Promag P tightening torques for JIS

Nominal diameter	JIS		Max. tightening torque [Nm]	
[mm]	Pressure rating	Threaded fasteners	PTFE	PFA
25	10K	4 × M 16	32	27
25	20K	4 × M 16	32	27
32	10K	4 × M 16	38	–
32	20K	4 × M 16	38	–
40	10K	4 × M 16	41	37
40	20K	4 × M 16	41	37
50	10K	4 × M 16	54	46
50	20K	8 × M 16	27	23
65	10K	4 × M 16	74	63
65	20K	8 × M 16	37	31
80	10K	8 × M 16	38	32
80	20K	8 × M 20	57	46
100	10K	8 × M 16	47	38
100	20K	8 × M 20	75	58
125	10K	8 × M 20	80	66
125	20K	8 × M 22	121	103
150	10K	8 × M 20	99	81
150	20K	12 × M 22	108	72
200	10K	12 × M 20	82	54
200	20K	12 × M 22	121	88
250	10K	12 × M 22	133	–
250	20K	12 × M 24	212	–
300	10K	16 × M 22	99	–
300	20K	16 × M 24	183	–

Promag P tightening torques for AS 2129

Nominal diameter [mm]	AS 2129 Pressure rating	Threaded fasteners	Max. tightening torque [Nm] PTFE
25	Table E	4 × M 12	21
50	Table E	4 × M 16	42

Promag P tightening torques for AS 4087

Nominal diameter [mm]	AS 4087 Pressure rating	Threaded fasteners	Max. tightening torque [Nm] PTFE
50	PN 16	4 × M 16	42

3.3.6 Installing the Promag W sensor

Note!
Bolts, nuts, seals, etc. are not included in the scope of supply and must be supplied by the customer.

The sensor is designed for installation between the two piping flanges.
- Observe in any case the necessary screw tightening torques on → 37
- If grounding disks are used, follow the mounting instructions which will be enclosed with the shipment

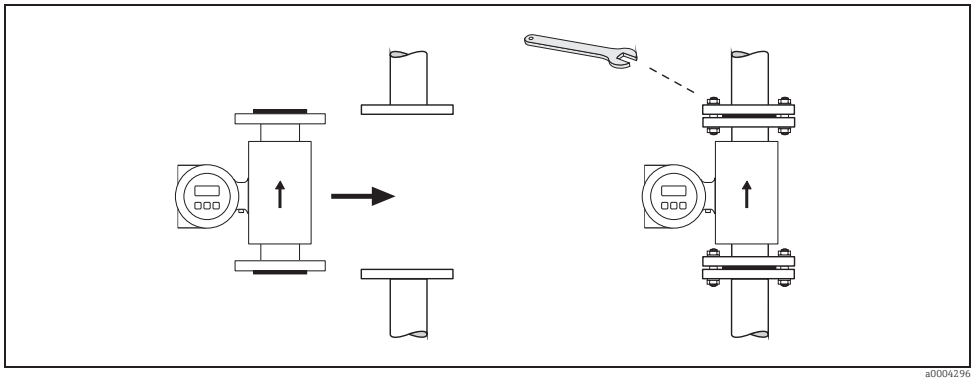

Fig. 24: Installing the Promag W sensor

Seals

Comply with the following instructions when installing seals:
- Hard rubber lining → additional seals are **always** necessary.
- Polyurethane lining → **no** seals are required.
- For DIN flanges, use only seals according to EN 1514-1.
- Make sure that the seals do not protrude into the piping cross-section.

Caution!
Risk of short circuit!
Do not use electrically conductive sealing compounds such as graphite! An electrically conductive layer could form on the inside of the measuring tube and short-circuit the measuring signal.

Ground cable

- If necessary, special ground cables for potential equalization can be ordered as an accessory (→ 79).
- Information on potential equalization and detailed mounting instructions for the use of ground cables can be found on → 58

Screw tightening torques (Promag W)

Please note the following:
- The tightening torques listed below are for lubricated threads only.
- Always tighten the screws uniformly and in diagonally opposite sequence.
- Overtightening the screws will deform the sealing faces or damage the seals.
- The tightening torques listed below apply only to pipes not subjected to tensile stress.

Tightening torques for:
- EN (DIN)→ 🖹 38
- JIS→ 🖹 40
- ASME→ 🖹 39
- AWWA → 🖹 40
- AS 2129 → 🖹 41
- AS 4087 → 🖹 41

Promag W tightening torques for EN (DIN)

Nominal diameter [mm]	EN (DIN) Pressure rating [bar]	Threaded fasteners	Max. tightening torque [Nm] Hard rubber	Polyurethane
25	PN 40	4 × M 12	-	15
32	PN 40	4 × M 16	-	24
40	PN 40	4 × M 16	-	31
50	PN 40	4 × M 16	48	40
65*	PN 16	8 × M 16	32	27
65	PN 40	8 × M 16	32	27
80	PN 16	8 × M 16	40	34
80	PN 40	8 × M 16	40	34
100	PN 16	8 × M 16	43	36
100	PN 40	8 × M 20	59	50
125	PN 16	8 × M 16	56	48
125	PN 40	8 × M 24	83	71
150	PN 16	8 × M 20	74	63
150	PN 40	8 × M 24	104	88
200	PN 10	8 × M 20	106	91
200	PN 16	12 × M 20	70	61
200	PN 25	12 × M 24	104	92
250	PN 10	12 × M 20	82	71
250	PN 16	12 × M 24	98	85
250	PN 25	12 × M 27	150	134
300	PN 10	12 × M 20	94	81
300	PN 16	12 × M 24	134	118
300	PN 25	16 × M 27	153	138
350	PN 6	12 × M 20	111	120
350	PN 10	16 × M 20	112	118
350	PN 16	16 × M 24	152	165
350	PN 25	16 × M 30	227	252
400	PN 6	16 × M 20	90	98
400	PN 10	16 × M 24	151	167
400	PN 16	16 × M 27	193	215
400	PN 25	16 × M 33	289	326
450	PN 6	16 × M 20	112	126
450	PN 10	20 × M 24	153	133
450	PN 16	20 × M 27	198	196
450	PN 25	20 × M 33	256	253
500	PN 6	20 × M 20	119	123
500	PN 10	20 × M 24	155	171
500	PN 16	20 × M 30	275	300
500	PN 25	20 × M 33	317	360
600	PN 6	20 × M 24	139	147
600	PN 10	20 × M 27	206	219
600 *	PN 16	20 × M 33	415	443
600	PN 25	20 × M 36	431	516
700	PN 6	24 × M 24	148	139
700	PN 10	24 × M 27	246	246
700	PN 16	24 × M 33	278	318

Nominal diameter [mm]	EN (DIN) Pressure rating [bar]	Threaded fasteners	Max. tightening torque [Nm] Hard rubber	Polyurethane
700	PN 25	24 × M 39	449	507
800	PN 6	24 × M 27	206	182
800	PN 10	24 × M 30	331	316
800	PN 16	24 × M 36	369	385
800	PN 25	24 × M 45	664	721
900	PN 6	24 × M 27	230	637
900	PN 10	28 × M 30	316	307
900	PN 16	28 × M 36	353	398
900	PN 25	28 × M 45	690	716
1000	PN 6	28 × M 27	218	208
1000	PN 10	28 × M 33	402	405
1000	PN 16	28 × M 39	502	518
1000	PN 25	28 × M 52	970	971
1200	PN 6	32 × M 30	319	299
1200	PN 10	32 × M 36	564	568
1200	PN 16	32 × M 45	701	753
1400	PN 6	36 × M 33	430	398
1400	PN 10	36 × M 39	654	618
1400	PN 16	36 × M 45	729	762
1600	PN 6	40 × M 33	440	417
1600	PN 10	40 × M 45	946	893
1600	PN 16	40 × M 52	1007	1100
1800	PN 6	44 × M 36	547	521
1800	PN 10	44 × M 45	961	895
1800	PN 16	44 × M 52	1108	1003
2000	PN 6	48 × M 39	629	605
2000	PN 10	48 × M 45	1047	1092
2000	PN 16	48 × M 56	1324	1261
* Designed acc. to EN 1092-1 (not to DIN 2501)				

Promag W tightening torques for ASME

Nominal diameter [mm]	[inch]	ASME Pressure rating [lbs]	Threaded fasteners	Max. tightening torque Hard rubber [Nm]	[lbf · ft]	Polyurethane [Nm]	[lbf · ft]
25	1"	Class 150	4 × ½"	-	-	7	5
25	1"	Class 300	4 × 5/8"	-	-	8	6
40	1 ½"	Class 150	4 × ½"	-	-	10	7
40	1 ½"	Class 300	4 × ¾"	-	-	15	11
50	2"	Class 150	4 × 5/8"	35	26	22	16
50	2"	Class 300	8 × 5/8"	18	13	11	8
80	3"	Class 150	4 × 5/8"	60	44	43	32
80	3"	Class 300	8 × ¾"	38	28	26	19
100	4"	Class 150	8 × 5/8"	42	31	31	23
100	4"	Class 300	8 × ¾"	58	43	40	30
150	6"	Class 150	8 × ¾"	79	58	59	44
150	6"	Class 300	12 × ¾"	70	52	51	38
200	8"	Class 150	8 × ¾"	107	79	80	59
250	10"	Class 150	12 × 7/8"	101	74	75	55
300	12"	Class 150	12 × 7/8"	133	98	103	76
350	14"	Class 150	12 × 1"	135	100	158	117
400	16"	Class 150	16 × 1"	128	94	150	111
450	18"	Class 150	16 × 1 1/8"	204	150	234	173
500	20"	Class 150	20 × 1 1/8"	183	135	217	160
600	24"	Class 150	20 × 1 ¼"	268	198	307	226

Promag W tightening torques for JIS

Nominal diameter [mm]	JIS Pressure rating	Threaded fasteners	Max. tightening torque [Nm]	
			Hard rubber	Polyurethane
25	10K	4 × M 16	-	19
25	20K	4 × M 16	-	19
32	10K	4 × M 16	-	22
32	20K	4 × M 16	-	22
40	10K	4 × M 16	-	24
40	20K	4 × M 16	-	24
50	10K	4 × M 16	40	33
50	20K	8 × M 16	20	17
65	10K	4 × M 16	55	45
65	20K	8 × M 16	28	23
80	10K	8 × M 16	29	23
80	20K	8 × M 20	42	35
100	10K	8 × M 16	35	29
100	20K	8 × M 20	56	48
125	10K	8 × M 20	60	51
125	20K	8 × M 22	91	79
150	10K	8 × M 20	75	63
150	20K	12 × M 22	81	72
200	10K	12 × M 20	61	52
200	20K	12 × M 22	91	80
250	10K	12 × M 22	100	87
250	20K	12 × M 24	159	144
300	10K	16 × M 22	74	63
300	20K	16 × M 24	138	124

Promag W tightening torques for AWWA

Nominal diameter		AWWA		Max. tightening torque			
				Hard rubber		Polyurethane	
[mm]	[inch]	Pressure rating	Threaded fasteners	[Nm]	[lbf · ft]	[Nm]	[lbf · ft]
700	28"	Class D	28 × 1 ¼"	247	182	292	215
750	30"	Class D	28 × 1 ¼"	287	212	302	223
800	32"	Class D	28 × 1 ½"	394	291	422	311
900	36"	Class D	32 × 1 ½"	419	309	430	317
1000	40"	Class D	36 × 1 ½"	420	310	477	352
1050	42"	Class D	36 × 1 ½"	528	389	518	382
1200	48"	Class D	44 × 1 ½"	552	407	531	392
1350	54"	Class D	44 × 1 ¾"	730	538	633	467
1500	60"	Class D	52 × 1 ¾"	758	559	832	614
1650	66"	Class D	52 × 1 ¾"	946	698	955	704
1800	72"	Class D	60 × 1 ¾"	975	719	1087	802
2000	78"	Class D	64 × 2"	853	629	786	580

Promag W tightening torques for AS 2129

Nominal diameter [mm]	AS 2129 Pressure rating	Threaded fasteners	Max. tightening torque [Nm] Hard rubber
50	Table E	4 × M 16	32
80	Table E	4 × M 16	49
100	Table E	8 × M 16	38
150	Table E	8 × M 20	64
200	Table E	8 × M 20	96
250	Table E	12 × M 20	98
300	Table E	12 × M 24	123
350	Table E	12 × M 24	203
400	Table E	12 × M 24	226
450	Table E	16 × M 24	226
500	Table E	16 × M 24	271
600	Table E	16 × M 30	439
700	Table E	20 × M 30	355
750	Table E	20 × M 30	559
800	Table E	20 × M 30	631
900	Table E	24 × M 30	627
1000	Table E	24 × M 30	634
1200	Table E	32 × M 30	727

Promag W tightening torques for AS 4087

Nominal diameter [mm]	AS 4087 Pressure rating	Threaded fasteners	Max. tightening torque [Nm] Hard rubber
50	Table E	4 × M 16	32
80	PN 16	4 × M 16	49
100	PN 16	4 × M 16	76
150	PN 16	8 × M 20	52
200	PN 16	8 × M 20	77
250	PN 16	8 × M 20	147
300	PN 16	12 × M 24	103
350	PN 16	12 × M 24	203
375	PN 16	12 × M 24	137
400	PN 16	12 × M 24	226
450	PN 16	12 × M 24	301
500	PN 16	16 × M 24	271
600	PN 16	16 × M 27	393
700	PN 16	20 × M 27	330
750	PN 16	20 × M 30	529
800	PN 16	20 × M 33	631
900	PN 16	24 × M 33	627
1000	PN 16	24 × M 33	595
1200	PN 16	32 × M 33	703

3.3.7 Turning the transmitter housing

Turning the aluminum field housing

Warning!
The turning mechanism in devices with Ex d/de or FM/CSA Cl. I Div. 1 classification is not the same as that described here. The procedure for turning these housings is described in the Ex-specific documentation.

1. Loosen the two securing screws.
2. Turn the bayonet catch as far as it will go.
3. Carefully lift the transmitter housing:
   – Promag D: approx. 10 mm (0.39 in) above the securing screws
   – Promag E/H/L/P/W: to the stop
4. Turn the transmitter housing to the desired position:
   – Promag D: max. 180° clockwise or max. 180° counterclockwise
   – Promag E/H/L/P/W: max. 280° clockwise or max. 20° counterclockwise
5. Lower the housing into position and re-engage the bayonet catch.
6. Retighten the two securing screws.

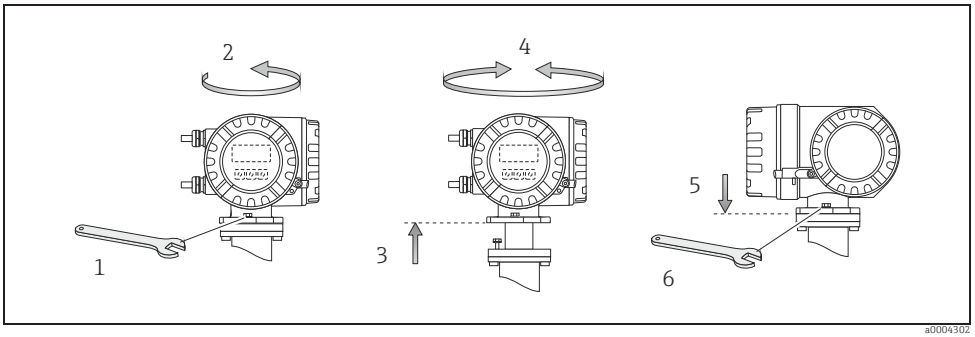

Fig. 25: Turning the transmitter housing (aluminum field housing)

Turning the stainless-steel field housing

1. Loosen the two securing screws.
2. Carefully lift the transmitter housing as far as it will go.
3. Turn the transmitter housing to the desired position (max. 2 × 90° in either direction).
4. Lower the housing into position.
5. Retighten the two securing screws.

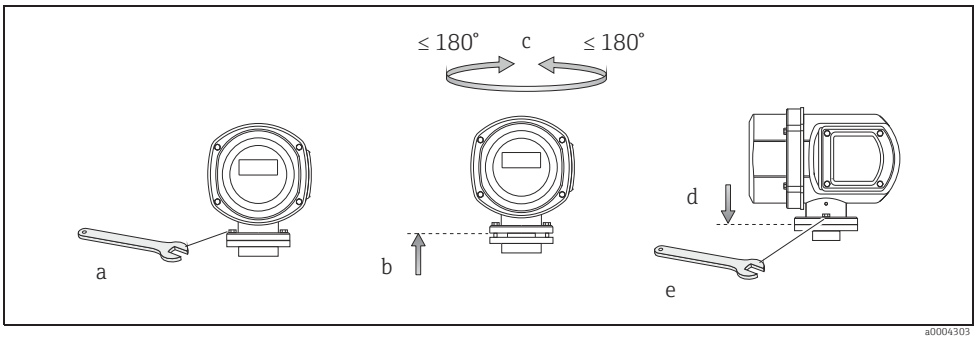

Fig. 26: Turning the transmitter housing (stainless-steel field housing)

3.3.8 Turning the onsite display

1. Unscrew the cover of the electronics compartment from the transmitter housing.
2. Press the side latches on the display module and remove it from the electronics compartment cover plate.
3. Turn the display to the desired position (max. 4 × 45° in both directions) and reset it onto the cover plate of the electronics compartment.
4. Screw the cover of the electronics compartment firmly back onto the transmitter housing.

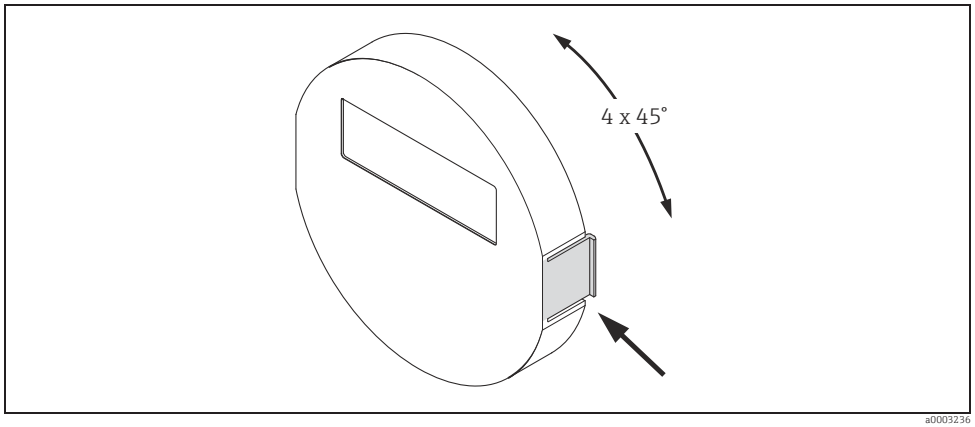

Fig. 27: Turning the local display (field housing)

3.3.9 Installing the wall-mount housing

There are various ways of installing the wall-mount transmitter housing:

- Direct wall mounting
- Installation in control panel (with separate mounting kit, accessories) → 🖹 45
- Pipe mounting (with separate mounting kit, accessories) → 🖹 45

Caution!

- Make sure that the ambient temperature does not exceed the permissible range at the mounting location, –20 to +60 °C (–4 to +140 °F), optional –40 to +60 °C (–40 to +140 °F). Install the device at a shady location. Avoid direct sunlight.
- Always install the wall-mount housing in such a way that the cable entries are pointing down.

Direct wall mounting

1. Drill the holes as illustrated in the graphic.
2. Remove the cover of the connection compartment (a).
3. Push the two securing screws (b) through the appropriate bores (c) in the housing.
   – Securing screws (M6): max. Ø 6.5 mm (0.26")
   – Screw head: max. Ø 10.5 mm (0.41")
4. Secure the transmitter housing to the wall as indicated.
5. Screw the cover of the connection compartment (a) firmly onto the housing.

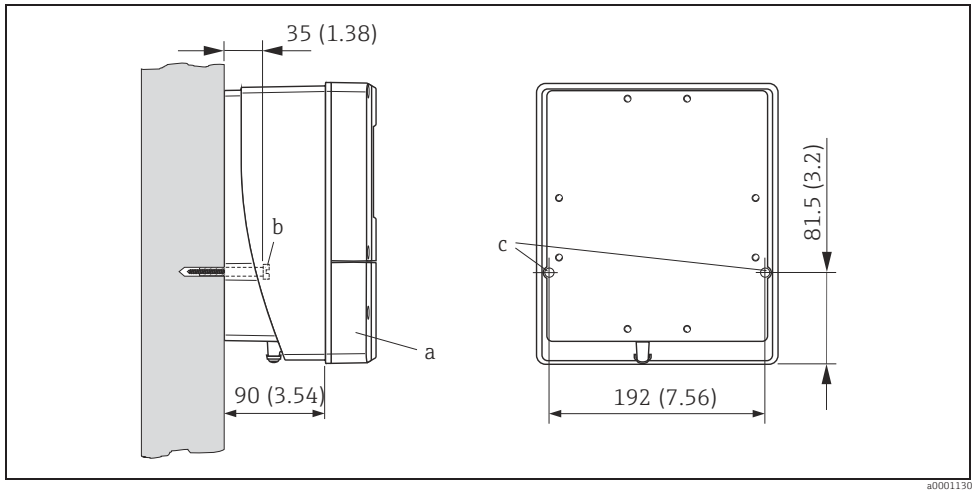

Fig. 28: Mounted directly on the wall

Panel-mounted installation

1. Prepare the opening in the panel as illustrated in the graphic.
2. Slide the housing into the opening in the panel from the front.
3. Screw the fasteners onto the wall-mount housing.
4. Place the threaded rods in the fasteners and screw them down until the housing is seated tightly against the panel. Afterwards, tighten the locking nuts. Additional support is not necessary.

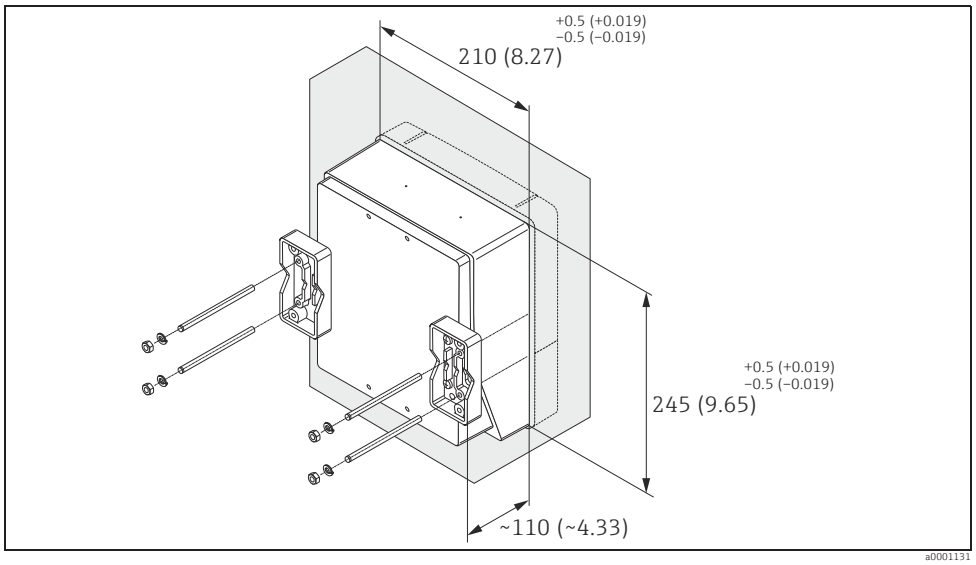

Fig. 29: Panel installation (wall-mount housing)

Pipe mounting

The assembly should be performed by following the instructions in the graphic.

Caution!
If the device is mounted to a warm pipe, make certain that the housing temperature does not exceed +60 °C (+140 °F), which is the maximum permissible temperature.

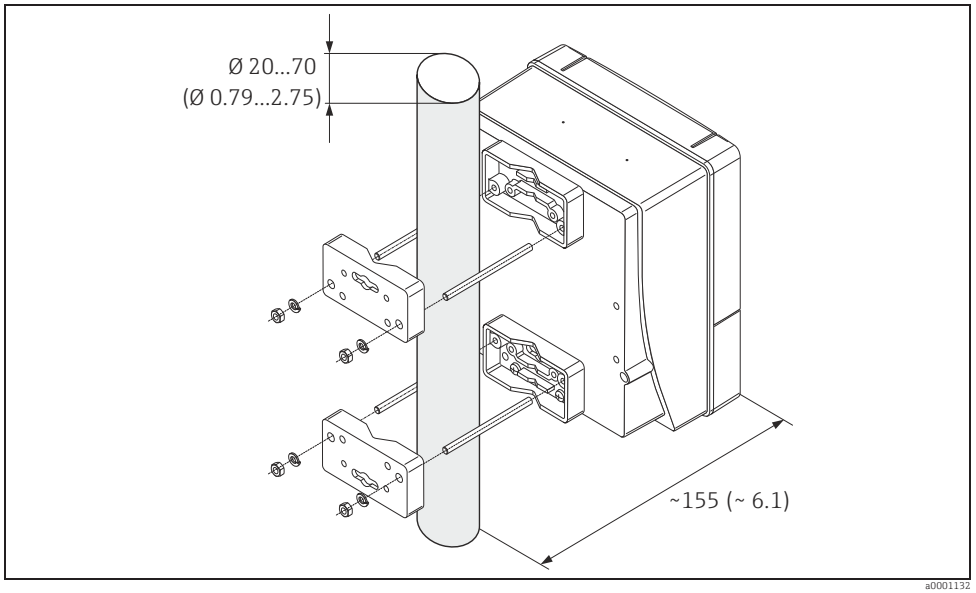

Fig. 30: Pipe mounting (wall-mount housing)

3.4 Post-installation check

Perform the following checks after installing the measuring device in the pipe:

Device condition and specifications	Notes
Is the device damaged (visual inspection)?	-
Does the device correspond to specifications at the measuring point, including process temperature and pressure, ambient temperature, minimum fluid conductivity, measuring range, etc.?	→ 🖹 104
Installation	**Notes**
Does the arrow on the sensor nameplate match the actual direction of flow through the pipe?	-
Is the position of the measuring electrode plane correct?	→ 🖹 14
Is the position of the empty pipe detection electrode correct?	→ 🖹 14
Were all screws tightened to the specified torques when the sensor was installed?	Promag D → 🖹 22 Promag E → 🖹 24 Promag L → 🖹 30 Promag P → 🖹 34 Promag W → 🖹 37
Were the correct seals used (type, material, installation)?	Promag D → 🖹 20 Promag E → 🖹 23 Promag H → 🖹 26 Promag L→ 🖹 29 Promag P → 🖹 33 Promag W → 🖹 37
Are the measuring point number and labeling correct (visual inspection)?	-
Process environment / process conditions	**Notes**
Were the inlet and outlet runs respected?	Inlet run ≥ 5 × DN Outlet run ≥ 2 × DN
Is the measuring device protected against moisture and direct sunlight?	-
Is the sensor adequately protected against vibration (attachment, support)?	Acceleration up to 2 g by analogy with IEC 600 68-2-8

4 Wiring

Warning!
When connecting Ex-certified devices, see the notes and diagrams in the Ex-specific supplement to these Operating Instructions.
Please do not hesitate to contact your Endress+Hauser representative if you have any questions.

Note!
The device does not have an internal circuit breaker. For this reason, assign the device a switch or power-breaker switch capable of disconnecting the power supply line from the mains.

4.1 Connecting the remote version

4.1.1 Connecting Promag D/E/H/L/P/W

Warning!
- Risk of electric shock! Switch off the power supply before opening the device. Do **not** install or wire the device while it is connected to the power supply. Failure to comply with this precaution can result in irreparable damage to the electronics.
- Risk of electric shock! Connect the protective conductor to the ground terminal on the housing before the power supply is applied.

Caution!
- Only sensors and transmitters with the same serial number can be connected to one another. Communication problems can occur if the devices are not connected in this way.
- Risk of damaging the coil driver. Always switch off the power supply before connecting or disconnecting the coil cable.

Procedure

1. Transmitter: Remove the cover from the connection compartment (a).
2. Sensor: Remove the cover from the connection housing (b).
3. Feed the signal cable (c) and the coil cable (d) through the appropriate cable entries.

   Caution!
   Route the connecting cables securely (see "Connecting cable length" → 19).
4. Terminate the signal and coil current cable as indicated in the table:
   Promag D/E/L/P/W → Refer to the table → 50
   Promag H → Refer to the "Cable termination" table → 51
5. Establish the wiring between the sensor and the transmitter.
   The electrical wiring diagram that applies to your device can be found:
   ▶ In the corresponding graphic:
   → 31 (Promag D) → 32 (Promag E/L/P/W); → 33 (Promag H)
   ▶ In the cover of the sensor and transmitter

   Note!
   The cable shields of the Promag H sensor are grounded by means of the strain relief terminals (see also the "Cable termination" table → 51)

   Caution!
   Insulate the shields of cables that are not connected to eliminate the risk of short-circuits with neighboring cable shields inside the connection housing.
6. Transmitter: Screw the cover on the connection compartment (a).
7. Sensor: Secure the cover on the connection housing (b).

Promag D

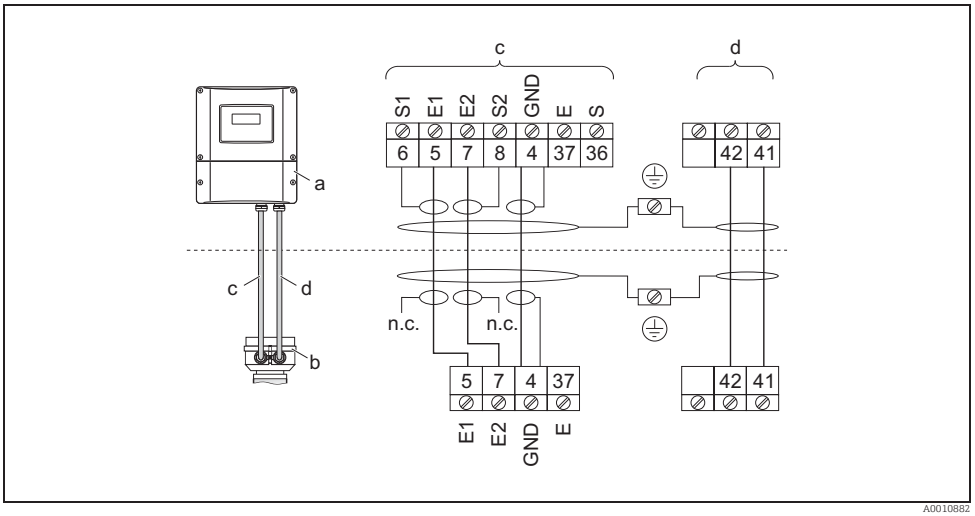

Fig. 31: Connecting the remote version of Promag D

a Wall-mount housing connection compartment
b Cover of the sensor connection housing
c Signal cable
d Coil current cable
n.c. Not connected, insulated cable shields

Wire colors/Terminal No.:
5/6 = braun, 7/8 = white, 4 = green, 37/36 = yellow

Promag E/L/P/W

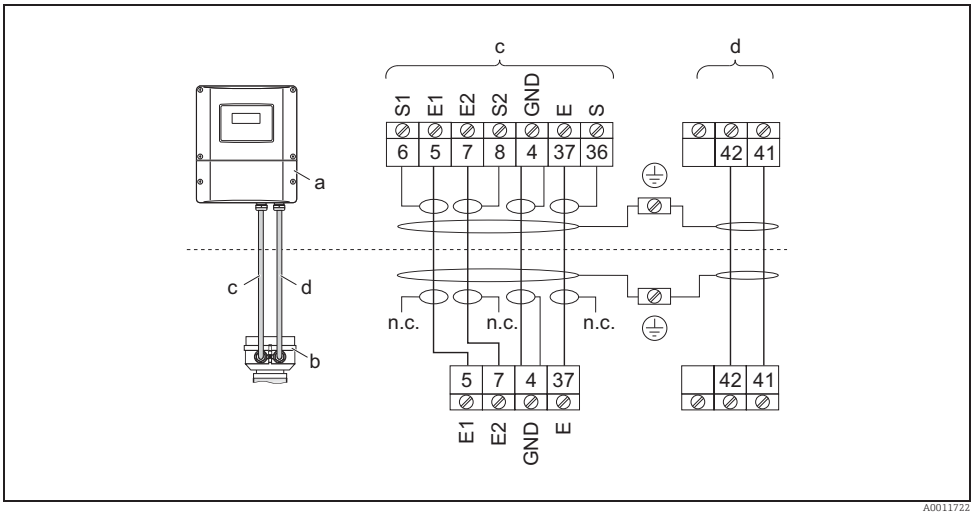

Fig. 32: Connecting the remote version of Promag E/L/P/W

a Wall-mount housing connection compartment
b Cover of the sensor connection housing
c Signal cable
d Coil current cable
n.c. Not connected, insulated cable shields

Wire colors/Terminal No.:
5/6 = braun, 7/8 = white, 4 = green, 37/36 = yellow

Promag H

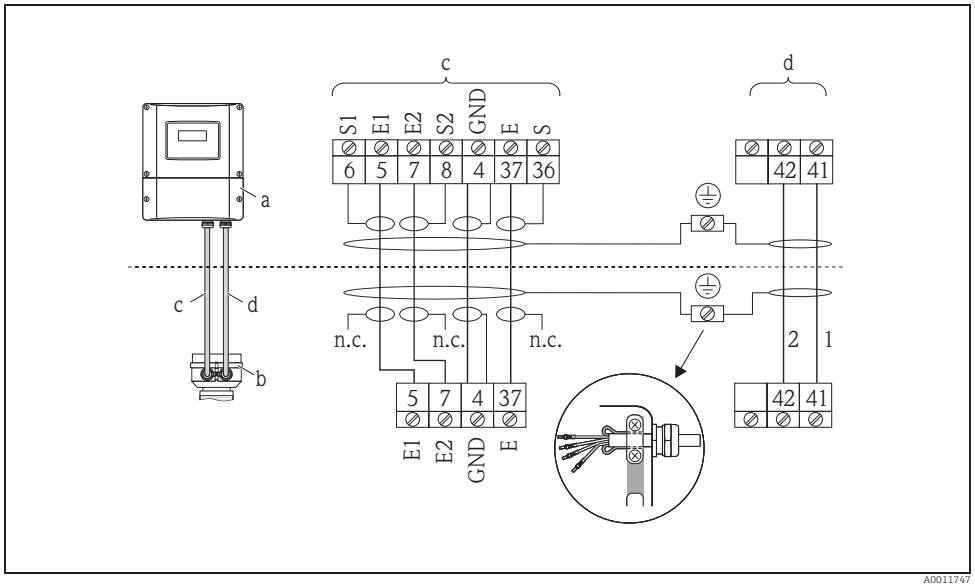

Fig. 33: Connecting the remote version of Promag H

a Wall-mount housing connection compartment
b Cover of the sensor connection housing
c Signal cable
d Coil current cable
n.c. Not connected, insulated cable shields

Wire colors/Terminal No.:
5/6 = braun, 7/8 = white, 4 = green, 37/36 = yellow

Cable termination for the remote version
Promag D/E/L/P/W

Terminate the signal and coil current cables as shown in the figure below (Detail A).
Ferrules must be provided on the fine-wire cores (Detail B: ① = red ferrules, ∅ 1.0 mm; ② = white ferrules, ∅ 0.5 mm).
* Stripping only for reinforced cables

Caution!
When fitting the connectors, pay attention to the following points:
- *Signal cable* → Make sure that the ferrules do not touch the wire shield on the sensor side.
  Minimum distance = 1 mm (exception "GND" = green cable)
- *Coil current cable* → Insulate one core of the three-core wire at the level of the core reinforcement; you only require two cores for the connection.

TRANSMITTER

Signal cable

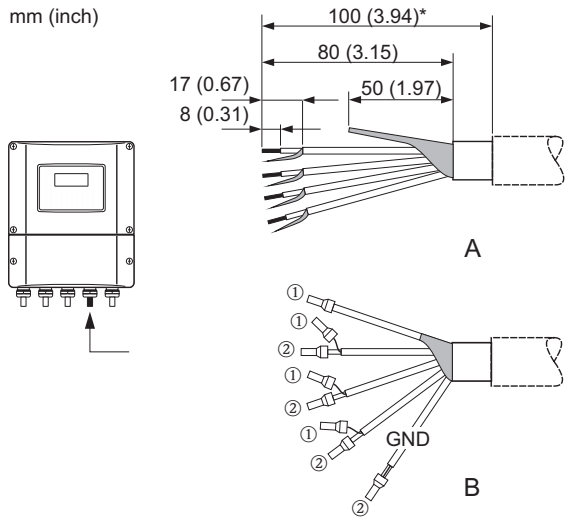

Coil current cable

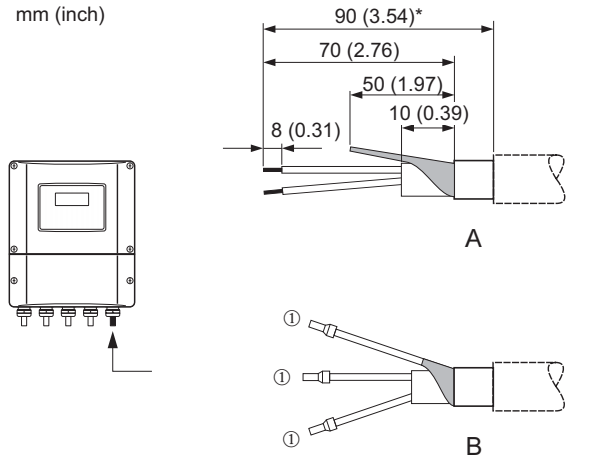

SENSOR

Signal cable

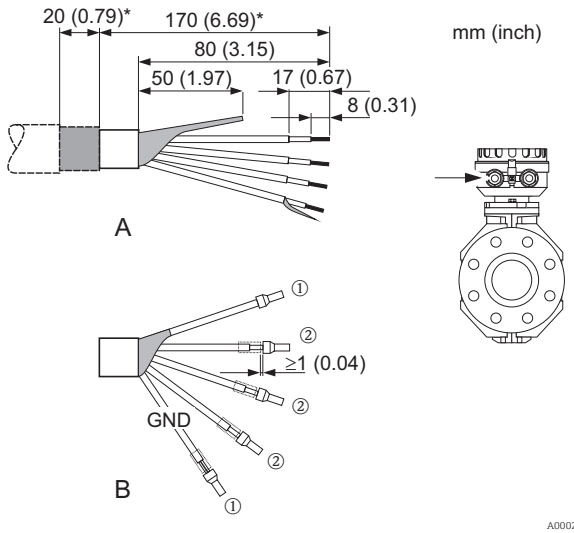

Coil current cable

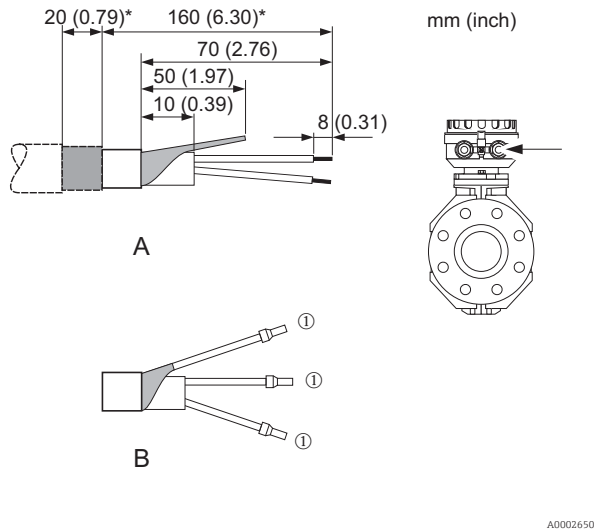

Cable termination for the remote version
Promag H

Terminate the signal and coil current cables as shown in the figure below (Detail A).
Ferrules must be provided on the fine-wire cores (Detail B: ① = red ferrules, ∅ 1.0 mm; ② = white ferrules, ∅ 0.5 mm).

Caution!
When fitting the connectors, pay attention to the following points:
- *Signal cable* → Make sure that the ferrules do not touch the wire shield on the sensor side. Minimum distance = 1 mm (exception "GND" = green cable).
- *Coil current cable* → Insulate one core of the three-core wire at the level of the core reinforcement; you only require two cores for the connection.
- On the sensor side, reverse both cable shields approx. 15 mm over the outer jacket. The strain relief ensures an electrical connection with the connection housing.

TRANSMITTER

Signal cable

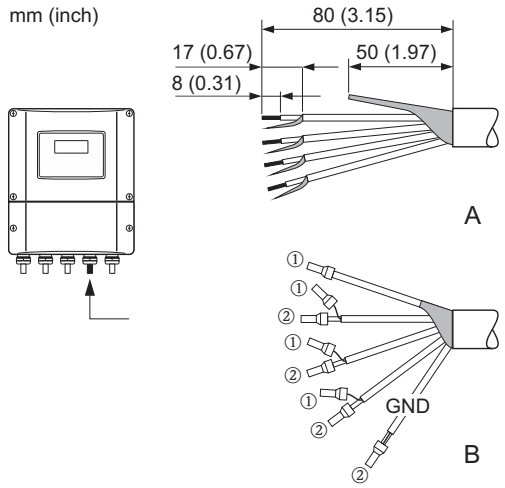

Coil current cable

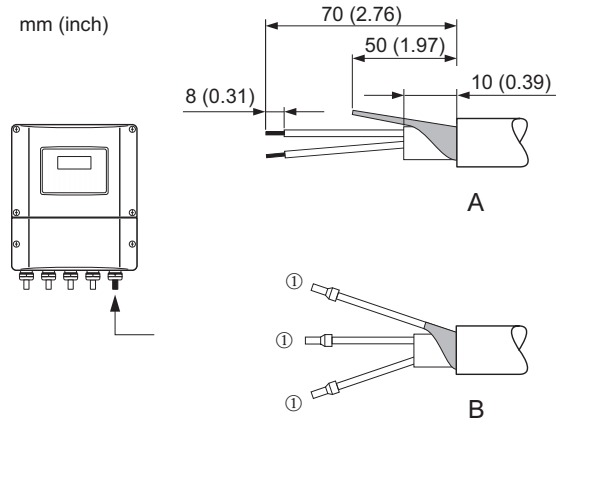

SENSOR

Signal cable

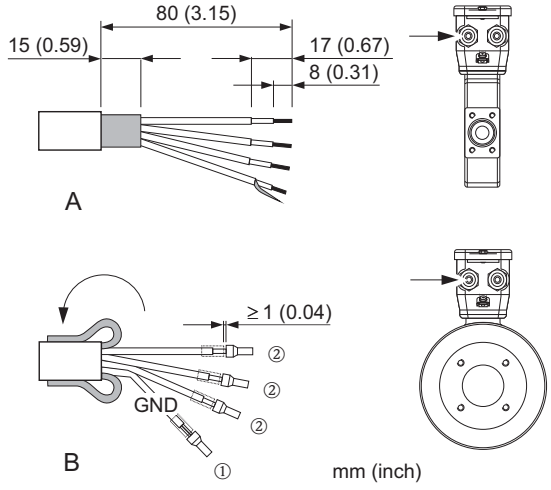

Coil current cable

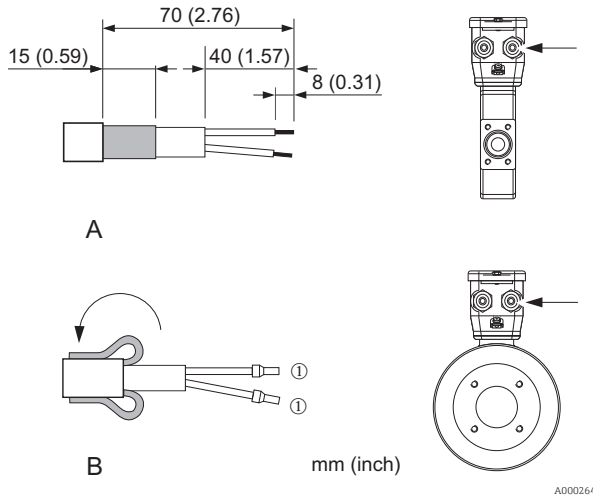

4.1.2 Cable specifications

Signal cable

- 3 × 0.38 mm² PVC cable with common, braided copper shield (∅ ~7 mm) and individually shielded cores
- With Empty Pipe Detection (EPD): 4 × 0.38 mm² PVC cable with common, braided copper shield (∅ ~ 7 mm) and individually shielded cores
- Conductor resistance: ≤ 50 Ω/km
- Capacitance: core/shield: ≤ 420 pF/m
- Permanent operating temperature: –20 to +80 °C
- Cable cross-section: max. 2.5 mm²

Coil cable

- 2 × 0.75 mm² PVC cable with common, braided copper shield (∅ ~ 7 mm)
- Conductor resistance: ≤ 37 Ω/km
- Capacitance: core/core, shield grounded: ≤ 120 pF/m
- Operating temperature: –20 to +80 °C
- Cable cross-section: max. 2.5 mm²
- Test voltage for cable insulation: ≥1433 V AC r.m.s. 50/60 Hz or ≥2026 V DC

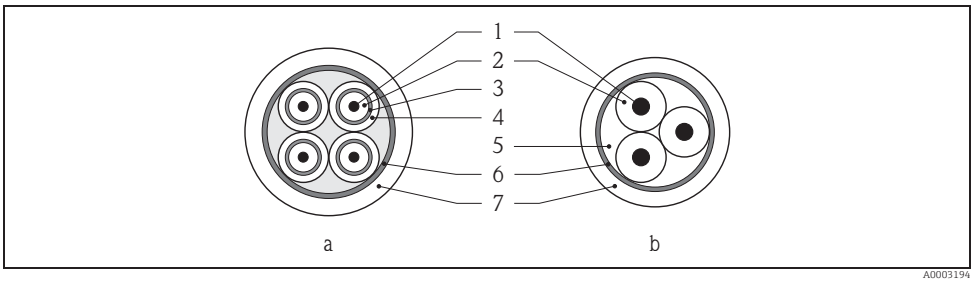

Fig. 34: Cable cross-section

a Signal cable
b Coil current cable

1 Core
2 Core insulation
3 Core shield
4 Core jacket
5 Core reinforcement
6 Cable shield
7 Outer jacket

Reinforced connecting cables

As an option, Endress+Hauser can also deliver reinforced connecting cables with an additional, reinforcing metal braid. Reinforced connecting cables should be used when laying the cable directly in the ground, if there is a risk of damage from rodents or if using the measuring device below IP 68 degree of protection.

Operation in zones of severe electrical interference:

The measuring device complies with the general safety requirements in accordance with EN 61010 and the EMC requirements of IEC/EN 61326.

Caution!
Grounding is by means of the ground terminals provided for the purpose inside the connection housing. Ensure that the stripped and twisted lengths of cable shield to the ground terminal are as short as possible.

4.2 Connecting the measuring unit

4.2.1 Connecting the transmitter

Warning!
- Risk of electric shock! Switch off the power supply before opening the device. Do not install or wire the device while it is energized. Failure to comply with this precaution can result in irreparable damage to the electronics.
- Risk of electric shock! Connect the protective conductor to the ground terminal on the housing before the power supply is applied (not necessary if the power supply is galvanically isolated).
- Compare the specifications on the nameplate with the local voltage supply and frequency. Also comply with national regulations governing the installation of electrical equipment.

1. Remove the cover of the connection compartment (f) from the transmitter housing.
2. Feed the power supply cable (a) and the signal cable (b) through the appropriate cable entries.
3. Perform the wiring:
   – Wiring diagram (aluminum housing) → 35
   – Wiring diagram (stainless steel housing) → 36
   – Wiring diagram (wall-mount housing) → 37
   – Terminal assignment → 55
4. Screw the cover of the connection compartment (f) firmly onto the transmitter housing.

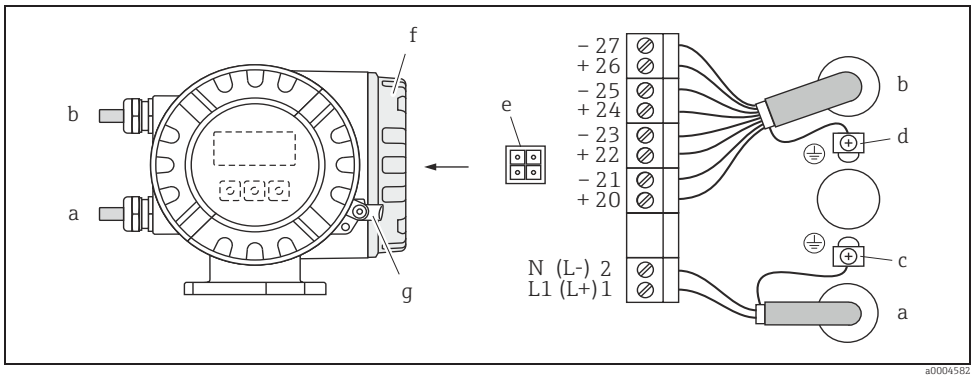

Fig. 35: Connecting the transmitter (aluminum field housing). Cable cross-section: max. 2.5 mm²

a Cable for power supply: 85 to 260 V AC, 20 to 55 V AC, 16 to 62 V DC
*Terminal **No. 1**: L1 for AC, L+ for DC*
*Terminal **No. 2**: N for AC, L- for DC*
*b Signal cable: Terminals **Nos. 20–27** → 55*
c Ground terminal for protective ground
d Ground terminal for signal cable shield
e Service connector for connecting service interface FXA193 (Fieldcheck, FieldCare)
f Cover of the connection compartment
g Securing clamp

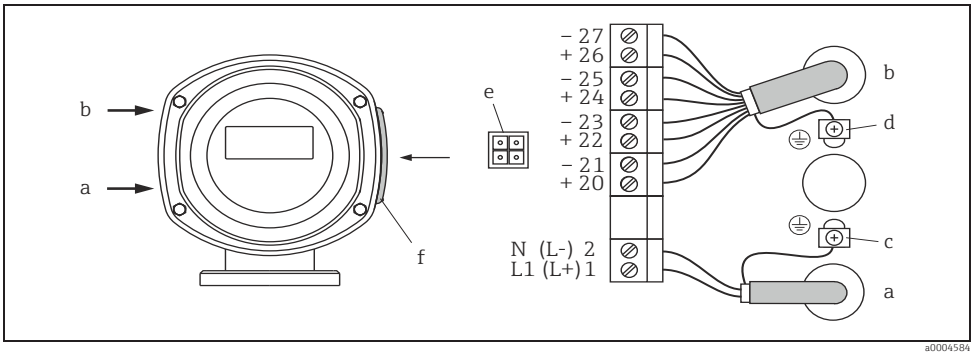

Fig. 36: Connecting the transmitter (stainless steel field housing); cable cross-section: max. 2.5 mm²

a Cable for power supply: 85 to 260 V AC, 20 to 55 V AC, 16 to 62 V DC
*Terminal **No. 1**: L1 for AC, L+ for DC*
*Terminal **No. 2**: N for AC, L- for DC*
*b Signal cable: Terminals **Nos. 20–27** → 🖹 55*
c Ground terminal for protective ground
d Ground terminal for signal cable shield
e Service connector for connecting service interface FXA193 (Fieldcheck, FieldCare)
f Cover of the connection compartment

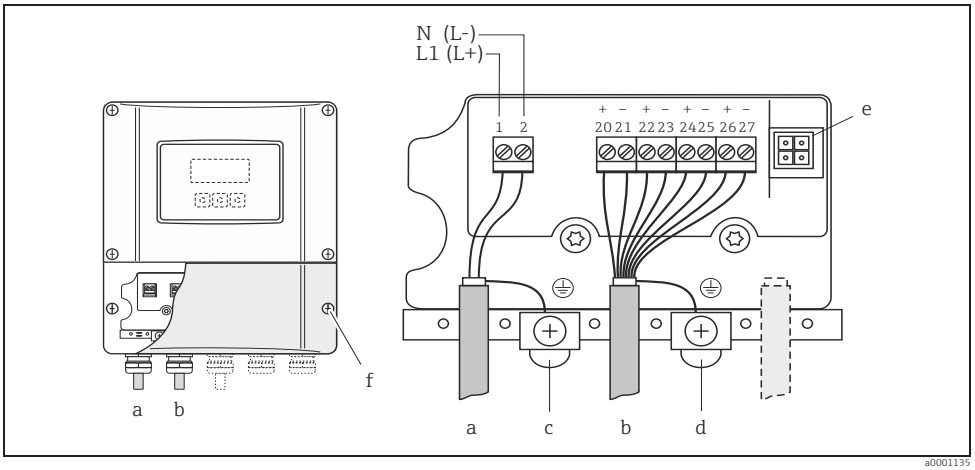

Fig. 37: Connecting the transmitter (wall-mount housing); cable cross-section: max. 2.5 mm²

a Cable for power supply: 85 to 260 V AC, 20 to 55 V AC, 16 to 62 V DC
*Terminal **No. 1**: L1 for AC, L+ for DC*
*Terminal **No. 2**: N for AC, L- for DC*
*b Signal cable: Terminals **Nos. 20–27** → 🖹 55*
c Ground terminal for protective ground
d Ground terminal for signal cable shield
e Service connector for connecting service interface FXA193 (Fieldcheck, FieldCare)
f Cover of the connection compartment

4.2.2 Terminal assignment

Order version	Terminal No. (inputs / outputs)			
	20 (+) / 21 (–)	22 (+) / 23 (–)	24 (+) / 25 (–)	26 (+) / 27 (–)
50***-**********W	-	-	-	Current output HART
50***-**********A	-	-	Frequency output	Current output HART
50***-**********D	Status input	Status output	Frequency output	Current output HART
50***-**********S	-	-	Frequency output Ex i	Current output, Ex i, active, HART
50***-**********T	-	-	Frequency output Ex i	Current output, Ex i, passive, HART

Note!
Functional values of the inputs and outputs → 📄 99

4.2.3 HART connection

Users have the following connection options at their disposal:
- Direct connection to transmitter by means of terminals 26(+) and 27 (–)
- Connection by means of the 4 to 20 mA circuit.

Note!
- The measuring loop's minimum load must be at least 250 Ω.
- After commissioning, make the following settings:
- CURRENT SPAN function → "4–20 mA HART"
- Switch HART write protection on or off → 📄 66

Connection of the HART handheld communicator

See also the documentation issued by the HART Communication Foundation, and in particular HCF LIT 20: "HART, a technical summary".

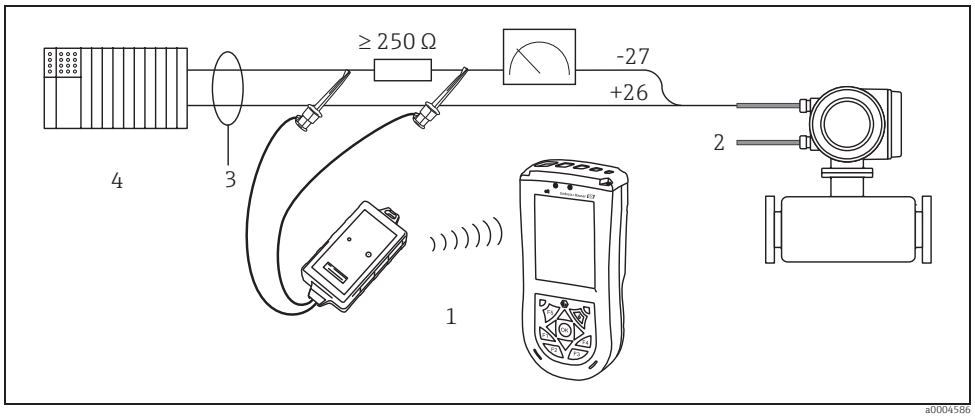

Fig. 38: Electrical connection of HART handheld Field Xpert SFX100

1 HART handheld Field Xpert SFX100
2 Auxiliary energy
3 Shielding
4 Other devices or PLC with passive input

Connection of a PC with an operating software

In order to connect a PC with operating software (e.g. "FieldCare"), a HART modem (e.g. "Commubox FXA195") is needed.

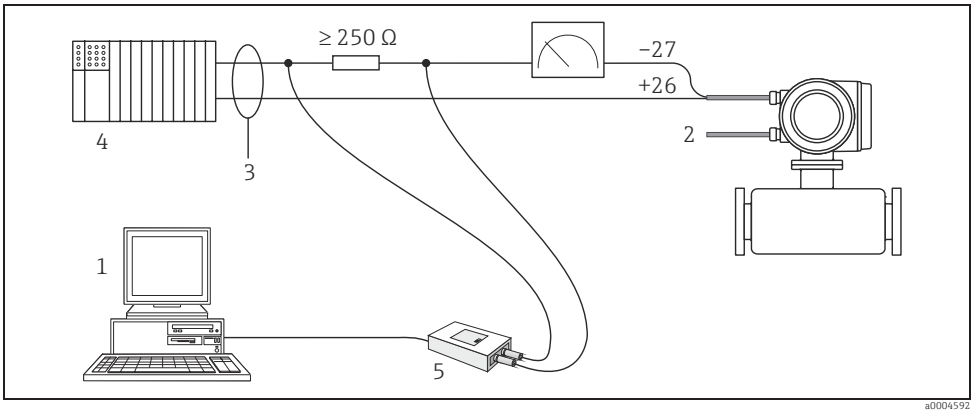

Fig. 39: Electrical connection of a PC with operating software

1 PC with operating software
2 Auxiliary energy
3 Shielding
4 Other devices or PLC with passive input
5 HART modem, e.g. Commubox FXA195

4.3 Potential equalization

Warning!
The measuring system must be included in the potential equalization.

Perfect measurement is only ensured when the fluid and the sensor have the same electrical potential. This is ensured by the reference electrode integrated in the sensor as standard.

The following should also be taken into consideration for potential equalization:
- Internal grounding concepts in the company
- Operating conditions, such as the material/grounding of the pipes (see Table)

4.3.1 Potential equalization for Promag D

- No reference electrode is integrated!
  For the two ground disks of the sensor an electrical connection to the fluid is always ensured.
- Exampels for connections → 57

4.3.2 Potential equalization for Promag E/L/P/W

- Reference electrode integrated in the sensor as standard
- Exampels for connections → 58

4.3.3 Potential equalization for Promag H

No reference electrode is integrated!
For the metal process connections of the sensor an electrical connection to the fluid is always ensured.

Caution!
If using process connections made of a synthetic material, ground rings have to be used to ensure that potential is equalized (→ 27). The necessary ground rings can be ordered separately from Endress+Hauser as accessories (→ 79).

4.3.4 Exampels for potential equalization connections for Promag D

Standard case

Operating conditions	Potential equalization
When using the measuring device in a: ▪ Metal, grounded pipe ▪ Plastic pipe ▪ Pipe with insulating lining Potential equalization takes place via the ground terminal of the transmitter (standard situation). Note! When installing in metal pipes, we recommend you connect the ground terminal of the transmitter housing with the piping.	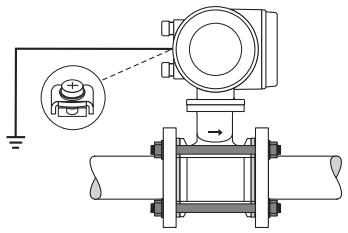 a00012172 *Fig. 40: Via the ground terminal of the transmitter*

Special cases

Operating conditions	Potential equalization
When using the measuring device in a: ▪ Metal pipe that is not grounded This connection method also applies in situations where: ▪ Customary potential equalization cannot be ensured ▪ Excessively high equalizing currents can be expected Potential equalization takes place via the ground terminal of the transmitter and the two pipe flanges. Here, the ground cable (copper wire, 6 mm² / 0.0093 in²) is mounted directly on the conductive flange coating with flange screws.	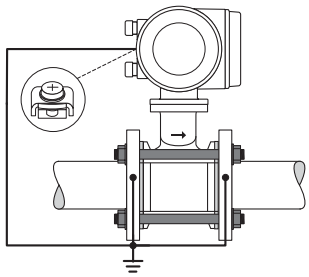 a00012173 *Fig. 41: Via the ground terminal of the transmitter and the flanges of the pipe .*
When using the measuring device in a: ▪ Pipe with a cathodic protection unit The device is installed potential-free in the pipe. Only the two flanges of the pipe are connected with a ground cable (copper wire, 6 mm² (0.0093 in²)). Here, the ground cable is mounted directly on the conductive flange coating with flange screws. Note the following when installing: ▪ The applicable regulations regarding potential-free installation must be observed. ▪ There should be **no** electrically conductive connection between the pipe and the device. ▪ The mounting material must withstand the applicable torques.	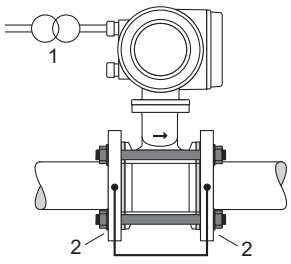 a00012174 *Fig. 42: Potential equalization and cathodic protection* *1 Power supply isolation transformer* *2 Electrically isolated*

4.3.5 Exampels for potential equalization connections for Promag E/L/P/W

Standard case

Operating conditions	Potential equalization
When using the measuring device in a: ▪ Metal, grounded pipe Potential equalization takes place via the ground terminal of the transmitter (standard situation). Note! When installing in metal pipes, we recommend you connect the ground terminal of the transmitter housing with the piping.	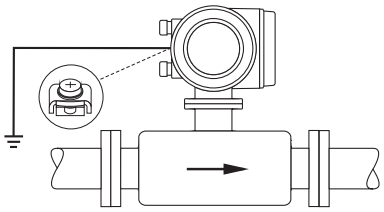 A0011892 *Fig. 43: Via the ground terminal of the transmitter*

Special cases

Operating conditions	Potential equalization
When using the measuring device in a: ▪ Metal pipe that is not grounded This connection method also applies in situations where: ▪ Customary potential equalization cannot be ensured ▪ Excessively high equalizing currents can be expected Both sensor flanges are connected to the pipe flange by means of a ground cable (copper wire, 6 mm² / 0.0093 in²) and grounded. Connect the transmitter or sensor connection housing, as applicable, to ground potential by means of the ground terminal provided for the purpose. Ground cable installation depends on the nominal diameter: ▪ DN ≤ 300 (12"): The ground cable is mounted directly on the conductive flange coating with the flange screws. ▪ DN ≥ 350 (14"): The ground cable is mounted directly on the metal transport bracket. Note! The ground cable for flange-to-flange connections can be ordered separately as an accessory from Endress+Hauser.	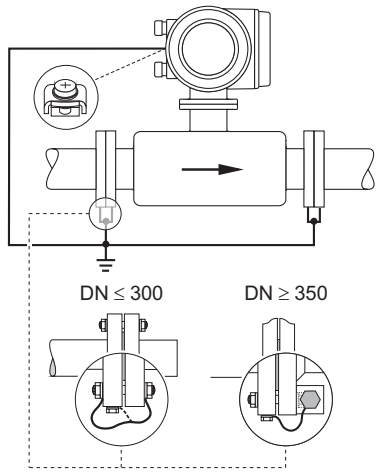 A0011893 *Fig. 44: Via the ground terminal of the transmitter and the flanges of the pipe*
When using the measuring device in a: ▪ Plastic pipe ▪ Pipe with insulating lining This connection method also applies in situations where: ▪ Customary potential equalization cannot be ensured ▪ Excessively high equalizing currents can be expected Potential equalization takes place using additional ground disks, which are connected to the ground terminal via a ground cable (copper wire, min. 6 mm² / 0.0093 in²). When installing the ground disks, please comply with the enclosed Installation Instructions.	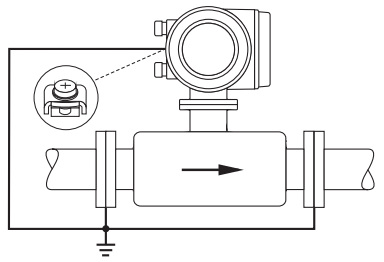 A0011895 *Fig. 45: Via the ground terminal of the transmitter*

Operating conditions	Potential equalization
When using the measuring device in a: ▪ Pipe with a cathodic protection unit The device is installed potential-free in the pipe. Only the two flanges of the pipe are connected with a ground cable (copper wire, 6 mm² / 0.0093 in²). Here, the ground cable is mounted directly on the conductive flange coating with flange screws. Note the following when installing: ▪ The applicable regulations regarding potential-free installation must be observed. ▪ There should be **no** electrically conductive connection between the pipe and the device. ▪ The mounting material must withstand the applicable torques.	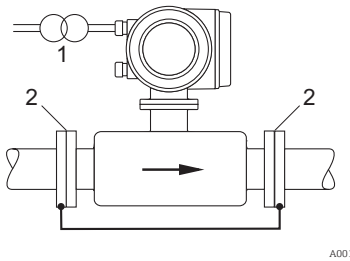 A0011896 *Fig. 46: Potential equalization and cathodic protection* *1 Power supply isolation transformer* *2 Electrically isolated*

4.4 Degree of protection

The devices meet all the requirements of IP 67 degree of protection.

Compliance with the following points is mandatory following installation in the field or servicing in order to ensure that IP 67 protection is maintained:
- The housing seals must be clean and undamaged when inserted into their grooves. The seals must be dried, cleaned or replaced if necessary.
- All threaded fasteners and screw covers must be firmly tightened.
- The cables used for connection must be of the specified outside diameter → 52.
- Firmly tighten the cable entries.
- The cables must loop down before they enter the cable entries ("water trap"). This arrangement prevents moisture penetrating the entry. Always install the measuring device in such a way that the cable entries do not point up.
- Remove all unused cable entries and insert plugs instead.
- Do not remove the grommet from the cable entry.

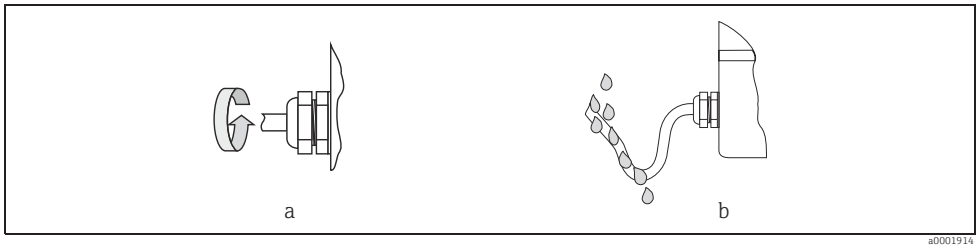

a0001914

Fig. 47: Installation instructions, cable entries

Caution!
Do not loosen the threaded fasteners of the sensor housing, as otherwise the degree of protection guaranteed by Endress+Hauser no longer applies.

Note!
The Promag E/L/P/W sensors can be supplied with IP 68 rating (permanent immersion in water to a depth of 3 meters (10 ft)). In this case the transmitter must be installed remote from the sensor.
The Promag L sensors with IP 68 rating are only available with stainless steel flanges.

4.5 Post-connection check

Perform the following checks after completing electrical installation of the measuring device:

Device condition and specifications	Notes
Are cables or the device damaged (visual inspection)?	-
Electrical connection	**Notes**
Does the supply voltage match the specifications on the nameplate?	▪ 85 to 250 V AC (50 to 60 Hz) ▪ 20 to 28 V AC (50 to 60 Hz) 11 to 40 V DC
Do the cables used comply with the necessary specifications?	→ 🖹 52
Do the cables have adequate strain relief?	-
Is the cable type route completely isolated? Without loops and crossovers?	-
Are the power-supply and signal cables correctly connected?	See the wiring diagram inside the cover of the terminal compartment
Only remote version: Is the flow sensor connected to the matching transmitter electronics?	Check serial number on nameplates of sensor and connected transmitter.
Only remote version: Is the connecting cable between sensor and transmitter connected correctly?	→ 🖹 47
Are all screw terminals firmly tightened?	-
Have the measures for grounding/potential equalization been correctly implemented?	→ 🖹 56
Are all cable entries installed, firmly tightened and correctly sealed? Cables looped as "water traps"?	→ 🖹 59
Are all housing covers installed and firmly tightened?	-

5 Operation

5.1 Display and operating elements

The local display enables you to read all important parameters directly at the measuring point and configure the device.
The display area consists of two lines; this is where measured values are displayed, and/or status variables (direction of flow, partially filled pipe, bar graph, etc.). You can change the assignment of display lines to variables at will in order to customize the display to suit your needs and preferences (→ "Description of Device Functions" manual).

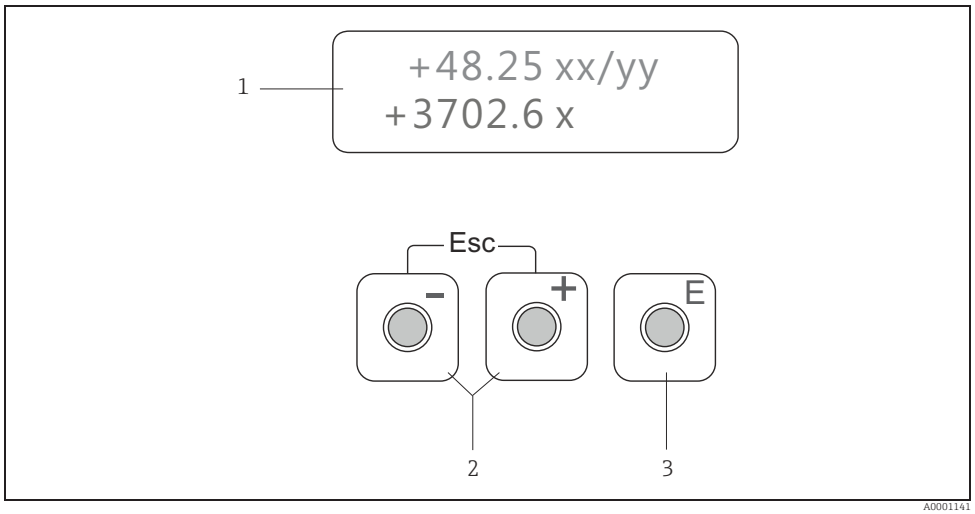

Fig. 48: Display and operating elements

1 Liquid crystal display
The two-line liquid-crystal display shows measured values, dialog texts, error messages and information messages. The display as it appears when normal measuring is in progress is known as the HOME position (operating mode).
- *Upper display line: Shows primary measured values, e.g. volume flow in [ml/min] or in [%].*
- *Lower display line: Shows supplementary measured variables and status variables, e.g. totalizer reading in [m3], bar graph, measuring point designation*

2 Plus/minus keys
- *Enter numerical values, select parameters*
- *Select different function groups within the function matrix*

Press the +/- keys simultaneously to trigger the following functions:
- *Exit the function matrix step by step → HOME position*
- *Press and hold down +/- keys for longer than 3 seconds → Return directly to HOME position*
- *Cancel data entry*

3 Enter key
- *HOME position → Entry into the function matrix*
- *Save the numerical values you input or settings you change*

5.2 Brief operating instructions on the function matrix

Note!
- See the general notes on → 63.
- Detailed description of all the functions → "Description of Device Functions" manual

The function matrix comprises two levels, namely the function groups and the functions of the function groups.
The groups are the highest-level grouping of the control options for the device. A number of functions is assigned to each group. You select a group in order to access the individual functions for operating and configuring the device.

1. HOME position → E → Enter the function matrix
2. Select a function group (e.g. OPERATION)
3. Select a function (e.g. LANGUAGE)
   Change parameter/enter numerical values:
   ± → select or enter enable code, parameters, numerical values
   E → save your entries
4. Exit the function matrix:
   – Press and hold down Esc key (Esc) for longer than 3 seconds → HOME position
   – Repeatedly press Esc key (Esc) → return step by step to HOME position

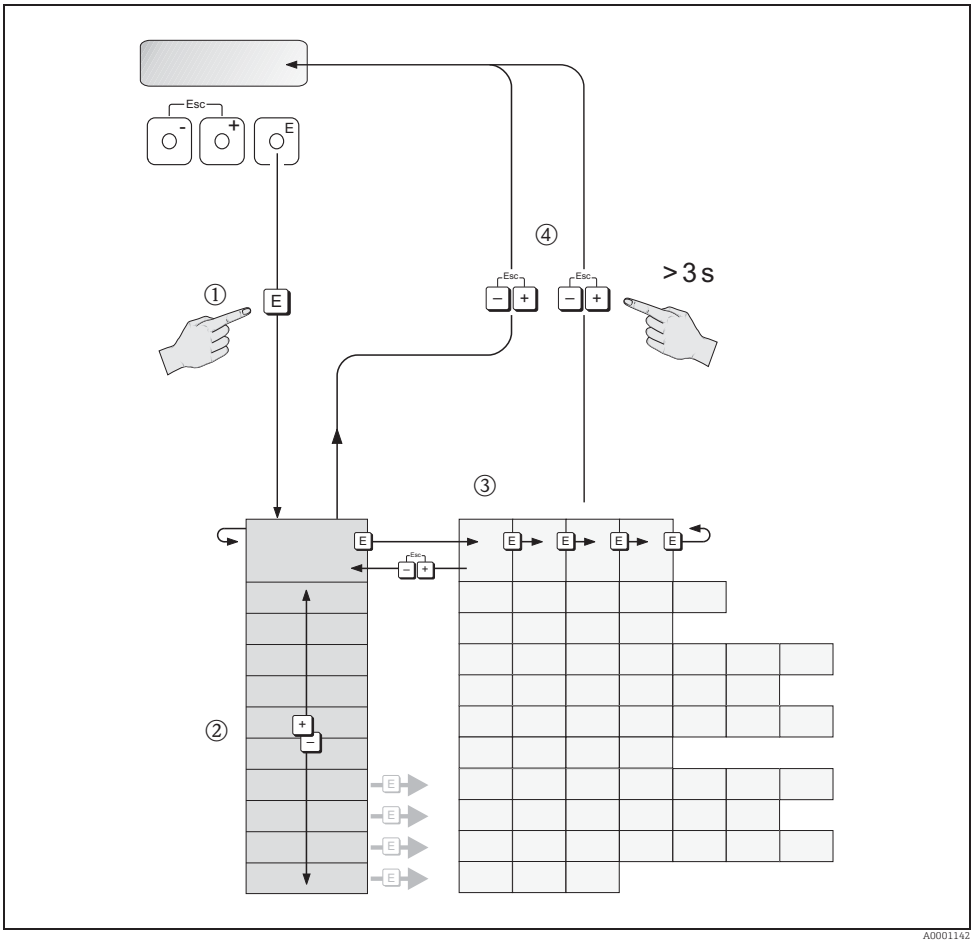

Fig. 49: Selecting functions and configuring parameters (function matrix)

5.2.1 General notes

The Quick Setup menu (→ 📖 73) is adequate for commissioning in most instances. Complex measuring operations on the other hand necessitate additional functions that you can configure as necessary and customize to suit your process parameters. The function matrix, therefore, comprises a multiplicity of additional functions which, for the sake of clarity, are arranged in a number of function groups.

Comply with the following instructions when configuring functions:
- You select functions as described on → 📖 62.
- You can switch off certain functions (OFF). If you do so, related functions in other function groups will no longer be displayed.
- Certain functions prompt you to confirm your data entries.
  Press ± to select "SURE [YES]" and press E again to confirm. This saves your setting or starts a function, as applicable.
- Return to the HOME position is automatic if no key is pressed for 5 minutes.

Note!
- The transmitter continues to measure while data entry is in progress, i.e. the current measured values are output via the signal outputs in the normal way.
- If the power supply fails, all preset and configured values remain safely stored in the EEPROM.

Caution!
All functions are described in detail, including the function matrix itself, in the "Description of Device Functions" manual, which is a separate part of these Operating Instructions.

5.2.2 Enabling the programming mode

The function matrix can be disabled. Disabling the function matrix rules out the possibility of inadvertent changes to device functions, numerical values or factory settings. A numerical code (factory setting = 50) has to be entered before settings can be changed.
If you use a code number of your choice, you exclude the possibility of unauthorized persons accessing data (→ see the "Description of Device Functions" manual).

Comply with the following instructions when entering codes:
- If programming is disabled and the ± operating elements are pressed in any function, a prompt for the code automatically appears on the display.
- If "0" is specified as the customer's code, programming is always enabled.
- The Endress+Hauser service organization can be of assistance if you mislay your personal code.

Caution!
Changing certain parameters such as all sensor characteristics, for example, influences numerous functions of the entire measuring system, particularly measuring accuracy.
There is no need to change these parameters under normal circumstances and consequently, they are protected by a special code known only to the Endress+Hauser service organization.
Please contact Endress+Hauser if you have any questions.

5.2.3 Disabling the programming mode

Programming is disabled if you do not press the operating elements within 60 seconds following automatic return to the HOME position.
You can also disable programming in the "ACCESS CODE" function by entering any number (other than the customer's code).

5.3 Displaying error messages

5.3.1 Type of error

Errors which occur during commissioning or measuring operation are displayed immediately. If two or more system or process errors occur, the error with the highest priority is the one shown on the display.

The measuring system distinguishes between two types of error:
- *System errors* → 📄 *83:*
  This group comprises all device errors, e.g. communication errors, hardware faults, etc.
- *Process errors* → 📄 85:
  This group comprises all application errors, e.g. empty pipe, etc.

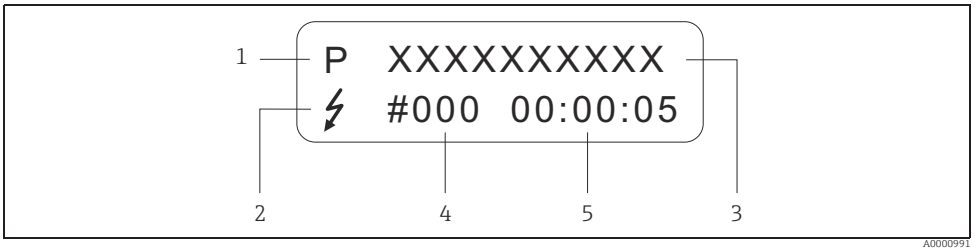

Fig. 50: Error messages on the display (example)

1 Error type:
– P = process error
– S = system error
2 Error message type:
– ϟ = fault message
– ! = notice message
3 Error designation: e.g. EMPTY PIPE = measuring tube is only partly filled or completely empty
4 Error number: e.g. #401
5 Duration of most recent error occurrence (in hours, minutes and seconds)

5.3.2 Error message types

Users have the option of weighting certain errors differently, in other words having them classed as "Fault messages" or "Notice messages". You can define messages in this way with the aid of the function matrix (→ "Description of Device Functions" manual).
Serious system errors, e.g. module defects, are always identified and classed as "fault messages" by the measuring device.

Notice message (!)

- Displayed as → Exclamation mark (!), error type (S: system error, P: process error)
- The error in question has no effect on the outputs of the measuring device.

Fault message (ϟ)

- Displayed as → Lightning flash (ϟ), error type (S: system error, P: process error).
- The error in question has a direct effect on the outputs.
  The response of the individual outputs (failsafe mode) can be defined in the function matrix using the "FAILSAFE MODE" function (→ "Description of Device Functions" manual).

Note!
For security reasons, error messages should be output via the status output.

5.4 Communication

In addition to local operation, the measuring device can be configured and measured values can be obtained by means of the HART protocol. Digital communication takes place using the 4–20 mA current output HART → 🖹 55.

The HART protocol allows the transfer of measuring and device data between the HART master and the field devices for configuration and diagnostics purposes.
The HART master, e.g. a handheld terminal or PC-based operating programs (such as FieldCare), require device description (DD) files which are used to access all the information in a HART device. Information is exclusively transferred using so-called "commands". There are three different command classes:

- *Universal commands:*
  All HART device support and use universal commands.
  The following functionalities are linked to them:
  – Identify HART devices
  – Reading digital measured values (volume flow, totalizer, etc.)
- *Common practice commands:*
  Common practice commands offer functions which are supported and can be executed by most but not all field devices.
- *Device-specific commands:*
  These commands allow access to device-specific functions which are not HART standard. Such commands access individual field device information, amongst other things, such as empty/full pipe calibration values, low flow cutoff settings, etc.

Note!
The device has access to all three command classes. A list of all the "Universal commands" and "Common practice commands" is provided on → 🖹 67.

5.4.1 Operating options

For the complete operation of the measuring device, including device-specific commands, there are DD files available to the user to provide the following operating aids and programs:

Field Xpert HART Communicator

Selecting device functions with a HART Communicator is a process involving a number of menu levels and a special HART function matrix.
The HART manual in the carrying case of the HART Communicator contains more detailed information on the device.

Operating program "FieldCare"

FieldCare is Endress+Hauser's FDT-based plant Asset Management Tool and allows the configuration and diagnosis of intelligent field devices. By using status information, you also have a simple but effective tool for monitoring devices. The Proline flow measuring devices are accessed via a service interface or via the service interface FXA193.

Operating program "SIMATIC PDM" (Siemens)

SIMATIC PDM is a standardized, manufacturer-independent tool for the operation, configuration,
maintenance and diagnosis of intelligent field devices.

Operating program "AMS" (Emerson Process Management)

AMS (Asset Management Solutions): program for operating and configuring devices.

5.4.2 Current device description files

The following table illustrates the suitable device description file for the operating tool in question and then indicates where these can be obtained.

HART protocol:

Valid for device software:	2.04.XX	→ Function DEVICE SOFTWARE
Device data HART Manufacturer ID: Device ID:	 11_{hex} (ENDRESS+HAUSER) 41_{hex}	 → Function MANUFACTURER ID → Function DEVICE ID
HART version data:	Device Revision 6/ DD Revision 1	
Software release:	01.2011	

Operating program:	**Sources for obtaining device descriptions:**
Handheld Field Xpert SFX100	Use update function of handheld terminal
FieldCare / DTM	▪ www.endress.com → Download ▪ CD-ROM (Endress+Hauser order number 56004088) ▪ DVD (Endress+Hauser order number 70100690)
AMS	www.endress.com → Download
SIMATIC PDM	www.endress.com → Download

Tester/simulator:	**Sources for obtaining device descriptions:**
Fieldcheck	Update by means of FieldCare with the flow device FXA193/291 DTM in the Fieldflash module

Note!
The "Fieldcheck" tester/simulator is used for testing flowmeters in the field. When used in conjunction with the "FieldCare" software package, test results can be imported into a database, printed out and used for official certification. Contact your Endress+Hauser representative for more information.

5.4.3 Device variables

The following device variables are available using the HART protocol:

Code (decimal)	Device variable
0	OFF (not assigned)
1	Volume flow
250	Totalizer 1
251	Totalizer 2

At the factory, the process variables are assigned to the following device variables:
- Primary process variable (PV) → Volume flow
- Second process variable (SV) → Totalizer 1
- Third process variable (TV) → not assigned
- Fourth process variable (FV) → not assigned

Note!
You can set or change the assignment of device variables to process variables using Command 51.

5.4.4 Switching HART write protection on/off

The HART write protection can be switched on and off using the HART WRITE PROTECT device function (→ "Description of Device Functions" manual).

5.4.5 Universal and common practice HART commands

The following table contains all the universal commands supported by the device.

Command No. HART command / Access type		Command data (numeric data in decimal form)	Response data (numeric data in decimal form)
Universal commands			
0	Read unique device identifier Access type = read	none	Device identification delivers information on the device and the manufacturer. It cannot be changed. The response consists of a 12 byte device ID: – Byte 0: fixed value 254 – Byte 1: Manufacturer ID, 17 = E+H – Byte 2: Device type ID, 65 = Promag 50 – Byte 3: Number of preambles – Byte 4: Universal commands rev. no. – Byte 5: Device-specific commands rev. no. – Byte 6: Software revision – Byte 7: Hardware revision – Byte 8: Additional device information – Bytes 9-11: Device identification
1	Read primary process variable Access type = read	none	– Byte 0: HART unit code of the primary process variable – Bytes 1-4: Primary process variable Factory setting: Primary process variable = Volume flow Note! ▪ Manufacturer-specific units are represented using the HART unit code "240". ▪ You can change the assignment of device variables to process variables using Command 51.
2	Read the primary process variable as current in mA and percentage of the set measuring range Access type = read	none	– Bytes 0-3: actual current of the primary process variable in mA – Bytes 4-7: % value of the set measuring range Factory setting: Primary process variable = Volume flow Note! You can change the assignment of device variables to process variables using Command 51.
3	Read the primary process variable as current in mA and four dynamic process variables Access type = read	none	24 bytes are sent as a response: – Bytes 0-3: primary process variable current in mA – Byte 4: HART unit code of the primary process variable – Bytes 5-8: Primary process variable – Byte 9: HART unit code of the second process variable – Bytes 10-13: Second process variable – Byte 14: HART unit code of the third process variable – Bytes 15-18: Third process variable – Byte 19: HART unit code of the fourth process variable – Bytes 20-23: Fourth process variable *Factory setting:* ▪ Primary process variable = Volume flow ▪ Second process variable = Totalizer 1 ▪ Third process variable = OFF (not assigned) ▪ Fourth process variable = OFF (not assigned) Note! ▪ Manufacturer-specific units are represented using the HART unit code "240". ▪ You can change the assignment of device variables to process variables using Command 51.
6	Set HART shortform address Access type = write	Byte 0: desired address (0 to 15) Factory setting: 0 Note! With an address >0 (multidrop mode), the current output of the primary process variable is set to 4 mA.	Byte 0: active address

Command No. HART command / Access type		Command data (numeric data in decimal form)	Response data (numeric data in decimal form)
11	Read unique device identification using the TAG (measuring point designation) Access type = read	Bytes 0-5: TAG	Device identification delivers information on the device and the manufacturer. It cannot be changed. The response consists of a 12 byte device ID if the given TAG agrees with the one saved in the device: – Byte 0: fixed value 254 – Byte 1: Manufacturer ID, 17 = E+H – Byte 2: Device type ID, 65 = Promag 50 – Byte 3: Number of preambles – Byte 4: Universal commands rev. no. – Byte 5: Device-specific commands rev. no. – Byte 6: Software revision – Byte 7: Hardware revision – Byte 8: Additional device information – Bytes 9-11: Device identification
12	Read user message Access type = read	none	Bytes 0-24: User message Note! You can write the user message using Command 17.
13	Read TAG, descriptor and date Access type = read	none	– Bytes 0-5: TAG – Bytes 6-17: descriptor – Bytes 18-20: Date Note! You can write the TAG, descriptor and date using Command 18.
14	Read sensor information on primary process variable	none	– Bytes 0-2: Sensor serial number – Byte 3: HART unit code of sensor limits and measuring range of the primary process variable – Bytes 4-7: Upper sensor limit – Bytes 8-11: Lower sensor limit – Bytes 12-15: Minimum span Note! ▪ The data relate to the primary process variable (= volume flow). ▪ Manufacturer-specific units are represented using the HART unit code "240".
15	Read output information of primary process variable Access type = read	none	– Byte 0: Alarm selection ID – Byte 1: Transfer function ID – Byte 2: HART unit code for the set measuring range of the primary process variable – Bytes 3-6: upper range, value for 20 mA – Bytes 7-10: lower range, value for 4 mA – Bytes 11-14: Damping constant in [s] – Byte 15: Write protection ID – Byte 16: OEM dealer ID, 17 = E+H Factory setting: Primary process variable = Volume flow Note! ▪ Manufacturer-specific units are represented using the HART unit code "240". ▪ You can change the assignment of device variables to process variables using Command 51.
16	Read the device production number Access type = read	none	Bytes 0-2: Production number
17	Write user message Access = write	You can save any 32-character long text in the device under this parameter: Bytes 0-23: Desired user message	Displays the current user message in the device: Bytes 0-23: Current user message in the device
18	Write TAG, descriptor and date Access = write	With this parameter, you can store an 8 character TAG, a 16 character descriptor and a date: – Bytes 0-5: TAG – Bytes 6-17: descriptor – Bytes 18-20: Date	Displays the current information in the device: – Bytes 0-5: TAG – Bytes 6-17: descriptor – Bytes 18-20: Date
19	Write the device production number Access = write	Bytes 0-2: Production number	Bytes 0-2: Production number

The following table contains all the common practice commands supported by the device.

Command No. HART command / Access type		Command data (numeric data in decimal form)	Response data (numeric data in decimal form)
Common practice commands			
34	Write damping value for primary process variable Access = write	Bytes 0-3: Damping value of the primary process variable "volume flow" in seconds *Factory setting:* Primary process variable = Current output damping	Displays the current damping value in the device: Bytes 0-3: Damping value in seconds
35	Write measuring range of primary process variable Access = write	Write the desired measuring range: – Byte 0: HART unit code of the primary process variable – Bytes 1-4: upper range, value for 20 mA – Bytes 5-8: lower range, value for 4 mA *Factory setting:* Primary process variable = Volume flow Note! ▪ The start of the measuring range (4 mA) must correspond to the zero flow. ▪ If the HART unit code is not the correct one for the process variable, the device will continue with the last valid unit.	The currently set measuring range is displayed as a response: – Byte 0: HART unit code for the set measuring range of the primary process variable – Bytes 1-4: upper range, value for 20 mA – Bytes 5-8: lower range, value for 4 mA Note! ▪ Manufacturer-specific units are represented using the HART unit code "240". ▪ You can change the assignment of device variables to process variables using Command 51.
38	Device status reset (configuration changed) Access = write	none	none Note! It is also possible to execute this HART command when write protection is activated (= ON)!
40	Simulate input current of primary process variable Access = write	Simulation of the desired output current of the primary process variable. An entry value of 0 exits the simulation mode: Bytes 0-3: Output current in mA *Factory setting:* Primary process variable = Volume flow Note! You can set the assignment of device variables to process variables using Command 51.	The momentary output current of the primary process variable is displayed as a response: Bytes 0-3: Output current in mA
42	Perform master reset Access = write	none	none
44	Write unit of primary process variable Access = write	Set unit of primary process variable. Only units which are suitable for the process variable are transferred to the device: Byte 0: HART unit code *Factory setting:* Primary process variable = Volume flow Note! ▪ If the written HART unit code is not the correct one for the process variable, the device will continue with the last valid unit. ▪ If you change the unit of the primary process variable, this has a direct impact on the system units.	The current unit code of the primary process variable is displayed as a response: Byte 0: HART unit code Note! Manufacturer-specific units are represented using the HART unit code "240".
48	Read additional device status Access = read	none	The device status is displayed in extended form as the response: Coding: see table → 71

Command No. HART command / Access type		Command data (numeric data in decimal form)	Response data (numeric data in decimal form)
50	Read assignment of the device variables to the four process variables Access = read	none	Display of the current variable assignment of the process variables: – Byte 0: Device variable code to the primary process variable – Byte 1: Device variable code to the second process variable – Byte 2: Device variable code to the third process variable – Byte 3: Device variable code to the fourth process variable *Factory setting:* ▪ Primary process variable: Code 1 for volume flow ▪ Second process variable: Code 250 for totalizer ▪ Third process variable: Code 0 for OFF (not assigned) ▪ Fourth process variable: Code 0 for OFF (not assigned)
51	Write assignment of the device variables to the four process variables Access = write	Setting of the device variables to the four process variables: – Byte 0: Device variable code to the primary process variable – Byte 1: Device variable code to the second process variable – Byte 2: Device variable code to the third process variable – Byte 3: Device variable code to the fourth process variable *Factory setting:* ▪ Primary process variable: Volume flow ▪ Second process variable: Totalizer 1 ▪ Third process variable: OFF (not assigned) ▪ Fourth process variable: OFF (not assigned)	The variable assignment of the process variables is displayed as a response: – Byte 0: Device variable code to the primary process variable – Byte 1: Device variable code to the second process variable – Byte 2: Device variable code to the third process variable – Byte 3: Device variable code to the fourth process variable
53	Write device variable unit Access = write	This command sets the unit of the given device variables. Only those units which suit the device variable are transferred: – Byte 0: Device variable code – Byte 1: HART unit code Code of the supported device variables: See information → 📄 66 ✎ Note! ▪ If the written unit is not the correct one for the device variable, the device will continue with the last valid unit. ▪ If you change the unit of the device variable, this has a direct impact on the system units.	The current unit of the device variables is displayed in the device as a response: – Byte 0: Device variable code – Byte 1: HART unit code ✎ Note! Manufacturer-specific units are represented using the HART unit code "240".
59	Write number of preambles in response message Access = write	This parameter sets the number of preambles which are inserted in the response messages: Byte 0: Number of preambles (4 to 20)	The current number of preambles is displayed in the response telegram: Byte 0: Number of preambles

5.4.6 Device status and error messages

You can read the extended device status, in this case, current error messages, via Command "48". The command delivers information which is partly coded in bits (see table below).

Note!
- You can find a detailed explanation of the device status and error messages and their elimination on → 🖹 71
- Bits and bytes not listed are not assigned.

Byte	Bit	Error No.	Short error description
0	0	001	Serious device error
	1	011	Measuring amplifier has faulty EEPROM
	2	012	Error when accessing data of the measuring amplifier EEPROM
1	1	031	S-DAT: defective or missing
	2	032	S-DAT: Error accessing saved values
	5	051	I/O and the amplifier are not compatible.
3	3	111	Totalizer checksum error
	4	121	I/O board and amplifier not compatible.
4	3	251	Internal communication fault on the amplifier board.
	4	261	No data reception between amplifier and I/O board
5	0	321	Coil current of the sensor is outside the tolerance.
	7	339	Flow buffer: The temporarily buffered flow portions (measuring mode for pulsating flow) could not be cleared or output within 60 seconds.
6	0	340	
	1	341	
	2	342	
	3	343	Frequency buffer: The temporarily buffered flow portions (measuring mode for pulsating flow) could not be cleared or output within 60 seconds.
	4	344	
	5	345	
	6	346	
	7	347	Pulse buffer: The temporarily buffered flow portions (measuring mode for pulsating flow) could not be cleared or output within 60 seconds.
7	0	348	
	1	349	
	2	350	
	3	351	Current output: Flow is out of range.
	4	352	
	5	353	
	6	354	
	7	355	Frequency output: Flow is out of range.
8	0	356	
	1	357	
	2	358	

Byte	Bit	Error No.	Short error description
8	3	359	Pulse output: Flow is out of range.
	4	360	
	5	361	
	6	362	
10	7	401	Measuring tube partially filled or empty
11	2	461	EPD calibration not possible because the fluid's conductivity is either too low or too high.
	4	463	The EPD calibration values for empty pipe and full pipe are identical, and therefore incorrect.
12	1	474	Maximum flow value entered is overshot
	7	501	Amplifier software version is loaded. Currently no other commands are possible.
13	0	502	Upload/download of device files. Currently no other commands are possible.
14	3	601	Positive zero return active
	7	611	Simulation current output active
15	0	612	
	1	613	
	2	614	
	3	621	Simulation frequency output active
	4	622	
	5	623	
	6	624	
	7	631	Simulation pulse output active
16	0	632	
	1	633	
	2	634	
	3	641	Simulation status output active
	4	642	
	5	643	
	6	644	
17	7	671	Simulation of the status input active
18	0	672	
	1	673	
	2	674	
	3	691	Simulation of response to error (outputs) active
	4	692	Simulation of volume flow active

6 Commissioning

6.1 Function check

Make sure that all final checks have been completed before you start up your measuring point:
- Checklist for "Post-installation check" → 46
- Checklist for "Post-connection check" → 60

6.2 Switching on the measuring device

Once the connection checks have been successfully completed, it is time to switch on the power supply. The device is now operational. The measuring device performs a number of post switch-on self-tests. As this procedure progresses the following sequence of messages appears on the local display:

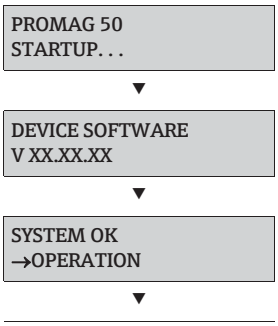

Start-up message

Current software version

Beginning of normal measuring mode

Normal measuring mode commences as soon as start-up completes.
Various measured-value and/or status variables (HOME position) appear on the display.

Note!
If start-up fails, an error message indicating the cause is displayed.

6.3 Quick Setup

In the case of measuring devices without a local display, the individual parameters and functions must be configured via the operating program, e.g. FieldCare.
If the measuring device is equipped with a local display, all the important device parameters for standard operation, as well as additional functions, can be configured quickly and easily by means of the following Quick Setup menu.

6.3.1 "Commissioning" Quick Setup menu

This Quick Setup menu guides you systematically through the setup procedure for all the major device functions that have to be configured for standard measuring operation.

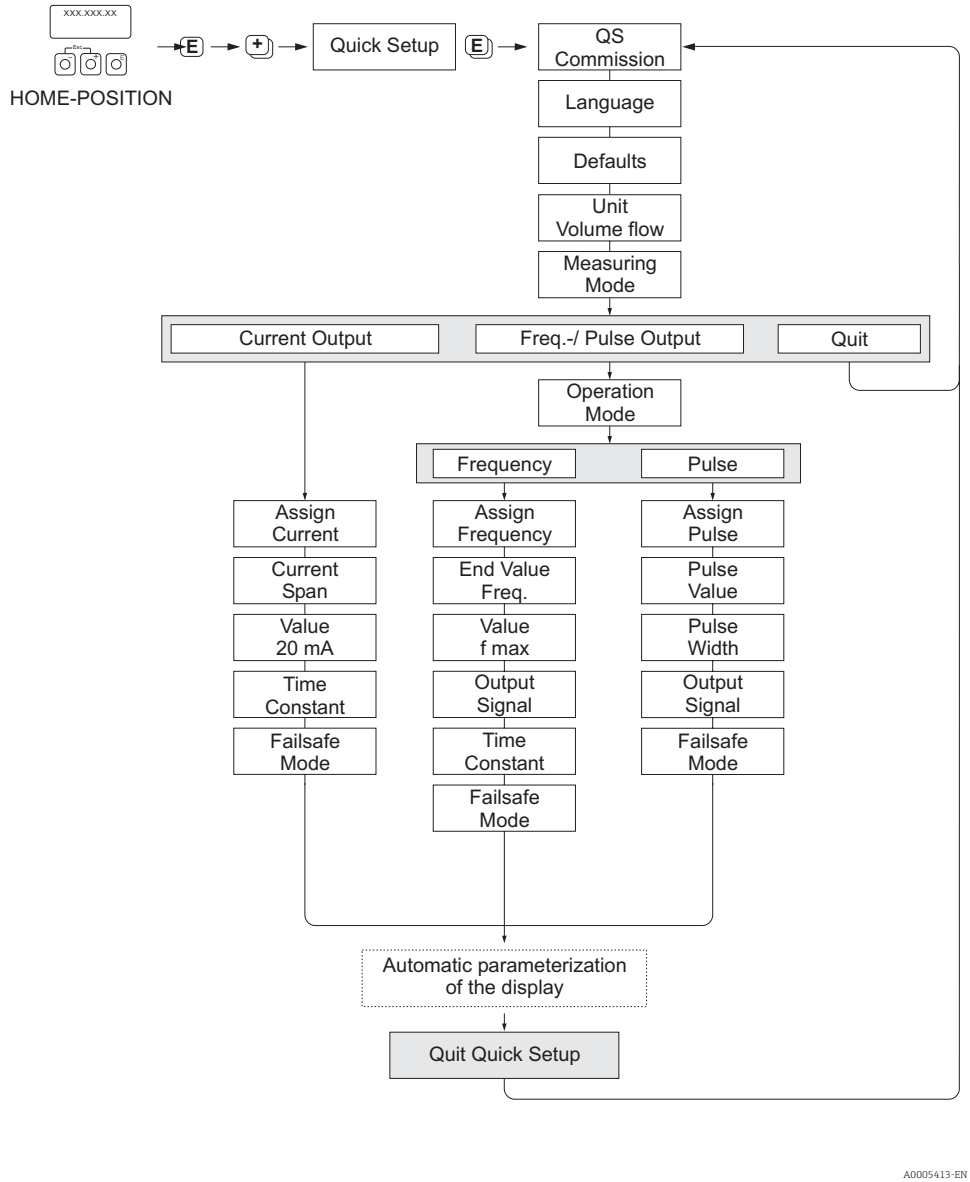

Fig. 51: "QUICK SETUP COMMISSIONING" menu for the rapid configuration of important device functions

6.4 Configuration

6.4.1 Current output: active/passive

The current output is configured as "active" or "passive" by means of various jumpers on the I/O board.

Warning!
Risk of electric shock! Exposed components carry dangerous voltages. Make sure that the power supply is switched off before you remove the cover of the electronics compartment.

1. Switch off power supply.
2. Remove the I/O board → 90
3. Position the jumper → 52

   Caution!
   Risk of destroying the measuring device. Set the jumpers exactly as shown in the graphic. Pay strict attention to the position of the jumpers as indicated in the graphic.
4. Installation of the I/O board is the reverse of the removal procedure.

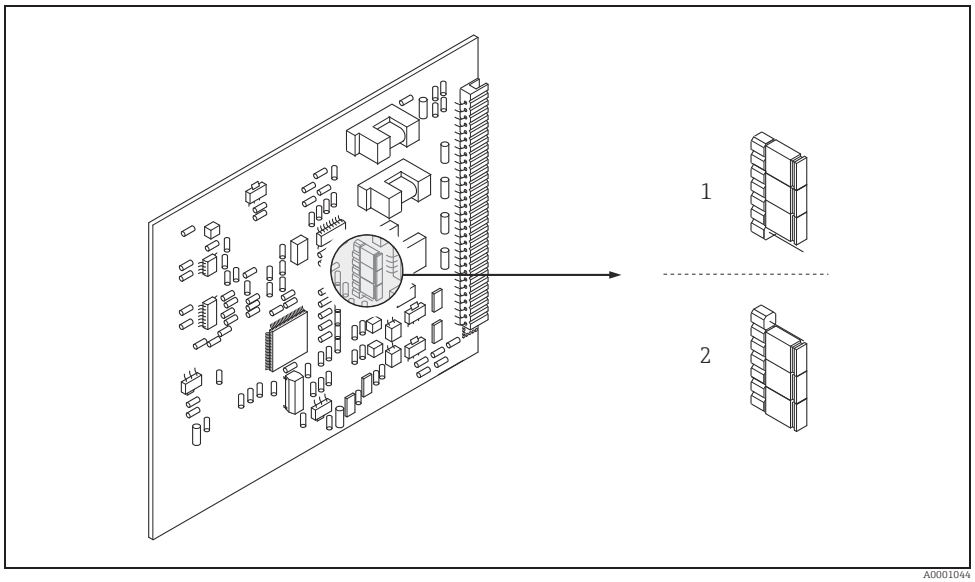

Fig. 52: Configuring current outputs using jumpers (I/O board)

1 Active current output (factory setting)
2 Passive current output

6.5 Adjustment

6.5.1 Empty-pipe/full-pipe adjustment

Flow cannot be measured correctly unless the measuring tube is completely full.
This status can be permanently monitored using the Empty Pipe Detection:

- EPD = Empty Pipe Detection (with the help of an EPD electrode)
- OED = Open Electrode Detection (Empty Pipe Detection with the help of the measuring electrodes, if the sensor is not equipped with an EPD electrode or the orientation is not suitable for using EPD).

Caution!
Detailed information on the empty-pipe/full-pipe adjustment procedure can be found in the "Description of Device Functions" manual:
- EPD/OED ADJUSTMENT (carrying out the adjustment).
- EPD (switching on and off EPD/OED).
- EPD RESPONSE TIME (input of the response time for EPD/OED).

Note!
- The EPD function is not available unless the sensor is fitted with an EPD electrode.
- The devices are already calibrated at the factory with water (approx. 500 µS/cm). If the fluid conductivity differs from this reference, empty-pipe/full-pipe adjustment has to be performed again on site.
- The default setting for EPD when the devices are delivered is OFF; the function has to be activated if required.
- The EPD process error can be output by means of the configurable relay output.

Performing empty-pipe and full-pipe adjustment (EPD)

1. Select the appropriate function in the function matrix:
   HOME → E → ± → PROCESS PARAMETER → E → ± → EPD ADJUSTMENT
2. Empty the piping:
   – The wall of the measuring tube should still be wet with fluid during EPD empty pipe adjustment
   – The wall of the measuring tube/the measuring electrodes should **no longer** be wet with fluid during OED empty pipe adjustment
3. Start empty-pipe adjustment: Select "EMPTY PIPE ADJUST" or "OED EMPTY ADJUST" and press E to confirm.
4. After empty-pipe adjustment, fill the piping with fluid.
5. Start full-pipe adjustment: Select "FULL PIPE ADJUST" or "OED FULL ADJUST" and press E to confirm.
6. Having completed the adjustment, select the setting "OFF" and exit the function by pressing E.
7. Switch on empty pipe detection in the EPD function:
   – EPD empty pipe adjustment: Select ON STANDARD or ON SPECIAL and press E to confirm
   – OED empty pipe adjustment: Select OED and confirm with E.

   Caution!
   The adjustment coefficients must be valid before you can activate the EPD function. If adjustment is incorrect the following messages might appear on the display:
   – FULL = EMPTY
   The adjustment values for empty pipe and full pipe are identical. In cases of this nature you must repeat empty-pipe or full-pipe adjustment!
   – ADJUSTMENT NOT OK
   Adjustment is not possible because the fluid's conductivity is out of range.

6.6 Data storage device (HistoROM)

At Endress+Hauser, the term HistoROM refers to various types of data storage modules on which process and measuring device data are stored. It is possible to plug these modules into other devices to copy device configurations from one device to another, for example.

6.6.1 HistoROM/S-DAT (sensor-DAT)

The S-DAT is an exchangeable data storage device in which all sensor relevant parameters are stored, i.e., diameter, serial number, calibration factor, zero point.

7 Maintenance

No special maintenance work is required.

7.1 Exterior cleaning

When cleaning the exterior of measuring devices, always use cleaning agents that do not attack the surface of the housing and the seals.

7.2 Seals

The seals of the Promag H sensor must be replaced periodically, particularly in the case of gasket seals (aseptic version).
The period between changes depends on the frequency of cleaning cycles, the cleaning temperature and the fluid temperature.

Replacement seals (accessories) → 79.

8 Accessories

Various accessories, which can be ordered separately from Endress+Hauser, are available for the transmitter and the sensor. Your Endress+Hauser service organization can provide detailed information on the specific order codes on request.

8.1 Device-specific accessories

Accessory	Description	Order code
Proline Promag 50 transmitter	Transmitter for replacement or storage. Use the order code to define the following specifications: ▪ Approvals ▪ Degree of protection/version ▪ Cable for remote version ▪ Cable entry ▪ Display/power supply/operation ▪ Software ▪ Outputs/inputs	50XXX – XXXXX******

8.2 Measuring principle-specific accessories

Accessory	Description	Order code
Mounting set for Promag 50 transmitter	Mounting set for the transmitter (remote version). Suitable for: ▪ Wall mounting ▪ Pipe mounting ▪ Panel-mounted installation Mounting set for aluminum field housing. Suitable for: ▪ Pipe mounting	DK5WM – *
Wall-mounting kit for Promag H	Wall-mounting kit for the Promag H sensor.	DK5HM – **
Cable for remote version	Coil and signal cables, various lengths.	DK5CA – **
Mounting kit for Promag D, wafer version	▪ Mounting bolts ▪ Nuts incl. washers ▪ Flange seals ▪ Centering sleeves (if required for the flange)	DKD** – **
Set of seals for Promag D	Set of seals consisting of two flange seals.	DK5DD – ***
Mounting kit for Promag H	▪ 2 process connections ▪ Threaded fasteners ▪ Seals	DKH** – ****
Set of seals for Promag H	For regular replacement of the seals of the Promag H sensor.	DK5HS – ***
Welding jig for Promag H	Weld nipple as process connection: welding jig for installation in pipe.	DK5HW – ***
Adapter connection for Promag A, H	Adapter connections for installing a Promag 10 H instead of a Promag 30/33 A or Promag 30/33 H DN 25.	DK5HA – *****
Ground rings for Promag H	Ground rings for potential equalization.	DK5HR – ***
Ground cable for Promag E/L/P/W	Ground cable for potential equalization.	DK5GC – ***
Ground disk for Promag E/L/P/W	Ground disk for potential equalization.	DK5GD – * * ***
Process display RIA45	Multifunctional 1-channel display unit: ▪ Universal input ▪ Transmitter power supply ▪ Limit relay ▪ Analog output	RIA45 – ******

Accessory	Description	Order code
Process display RIA251	Digital display device for looping into the 4 to 20 mA current loop.	RIA251 – **
Field display unit RIA16	Digital field display device for looping into the 4 to 20 mA current loop.	RIA16 – ***
Application Manager RMM621	Electronic recording, display, balancing, control, saving and event and alarm monitoring of analog and digital input signals. Values and conditions determined are output by means of analog and digital output signals. Remote transmission of alarms, input values and calculated values using a PSTN or GSM modem.	RMM621 – **********

8.3 Communication-specific accessories

Accessory	Description	Order code
HART Communicator Field Xpert SFX 100	Handheld terminal for remote configuration and for obtaining measured values via the HART current output (4 to 20 mA) and FOUNDATION Fieldbus. Contact your Endress+Hauser representative for more information.	SFX100 – *******
Fieldgate FXA320	Gateway for remote interrogation of HART sensors and actuators via Web browser: ▪ 2-channel analog input (4 to 20 mA) ▪ 4 binary inputs with event counter function and frequency measurement ▪ Communication via modem, Ethernet or GSM ▪ Visualization via Internet/Intranet in Web browser and/or WAP cellular phone ▪ Limit value monitoring with alarm by e-mail or SMS ▪ Synchronized time stamping of all measured values.	FXA320 – *****
Fieldgate FXA520	Gateway for remote interrogation of HART sensors and actuators via Web browser: ▪ Web server for remote monitoring of up to 30 measuring points ▪ Intrinsically safe version [EEx ia]IIC for applications in hazardous areas ▪ Communication via modem, Ethernet or GSM ▪ Visualization via Internet/Intranet in Web browser and/or WAP cellular phone ▪ Limit value monitoring with alarm by e-mail or SMS ▪ Synchronized time stamping of all measured values ▪ Remote diagnosis and remote configuration of connected HART devices	FXA520 – ****
FXA195	The Commubox FXA195 connects intrinsically safe Smart transmitters with HART protocol to the USB port of a personal computer. This makes the remote operation of the transmitters possible with the aid of configuration programs (e.g. FieldCare). Power is supplied to the Commubox by means of the USB port	FXA195 – *

8.4 Service-specific accessories

Accessory	Description	Order code
Applicator	Software for selecting and planning flowmeters. The Applicator software can be downloaded from the Internet or ordered on CD-ROM for installation on a local PC. Contact your Endress+Hauser representative for more information.	DXA80 – *
Fieldcheck	Tester/simulator for testing flowmeters in the field. When used in conjunction with the "FieldCare" software package, test results can be imported into a database, printed out and used for official certification. Contact your Endress+Hauser representative for more information.	50098801
FieldCare	FieldCare is Endress+Hauser's FDT-based asset management tool. It can configure all intelligent field units in your system and helps you manage them. By using status information, it is also a simple but effective way of checking their status and condition.	See the product page on the Endress+Hauser Web site: www.endress.com
Memograph M graphic display recorder	The Memograph M graphic display recorder provides information on all the relevant process variables. Measured values are recorded correctly, limit values are monitored and measuring points analyzed. The data are stored in the 256 MB internal memory and also on a DSD card or USB stick. Memograph M boasts a modular design, intuitive operation and a comprehensive security concept. The ReadWin® 2000 PC software is part of the standard package and is used for configuring, visualizing and archiving the data captured. The mathematics channels which are optionally available enable continuous monitoring of specific power consumption, boiler efficiency and other parameters which are important for efficient energy management.	RSG40 – **********
FXA193	Service interface from the device to the PC for operation via FieldCare.	FXA193 – *

9 Troubleshooting

9.1 Troubleshooting instructions

Always start troubleshooting with the checklist below if faults occur after start-up or during operation. The routine takes you directly to the cause of the problem and the appropriate remedial measures.

Check the display	
No display visible and no output signals present.	1. Check the supply voltage → terminals 1, 2 2. Check the power line fuse → 🖹 94 85 to 260 V AC: 0.8 A slow-blow / 250 V 20 to 55 V AC / 16 to 62 V DC: 2 A slow-blow / 250 V 3. Measuring electronics defective → order spare parts → 🖹 89
No display visible, but output signals are present.	1. Check whether the ribbon-cable connector of the display module is correctly plugged into the amplifier board → 🖹 90 2. Display module defective → order spare parts → 🖹 89 3. Measuring electronics defective → order spare parts → 🖹 89
Display texts are in a foreign language.	Switch off power supply. Press and hold down both the OS buttons and switch on the measuring device. The display text will appear in English (default) and is displayed at maximum contrast.
Measured value indicated, but no signal at the current or pulse output.	Electronics board defective → order spare parts → 🖹 89
↓	
Error messages on display	
Errors which occur during commissioning or measuring operation are displayed immediately. Error messages consist of a variety of icons: the meanings of these icons are as follows (example): – Error type: **S** = system error, **P** = process error – Error message type: ϟ = fault message, **!** = notice message – **EMPTY PIPE** = Type of error, e.g. measuring tube is only partly filled or completely empty – **03:00:05** = duration of error occurrence (in hours, minutes and seconds) – **#**401 = error number ☞ Caution! ▪ See the information on → 🖹 64! ▪ The measuring system interprets simulations and positive zero return as system errors, but displays them as notice message only.	
Error number: No. 001 – 399 No. 501 – 699	System error (device error) has occurred → 🖹 83
Error number: No. 401 - 499	Process error (application error) has occurred → 🖹 85
↓	
Other error (without error message)	
Some other error has occurred.	Diagnosis and rectification → 🖹 86

9.2 System error messages

Serious system errors are **always** recognized by the device as "Fault message", and are shown as a lightning flash (ϟ) on the display. Fault messages immediately affect the outputs.

Caution!
In the event of a serious fault, a flowmeter might have to be returned to the manufacturer for repair. The necessary procedures on → 🖹 5 must be carried out before you return a flowmeter to Endress+Hauser. Always enclose a duly completed "Declaration of Contamination" form. You will find a master copy of this form at the back of this manual.

Note!
Also observe the information on → 🖹 64.

No.	Error message / Type	Cause	Remedy (spare part → 🖹 89)
S = System error ϟ = Fault message (with an effect on the outputs) ! = Notice message (without an effect on the outputs)			
No. # 0xx → Hardware error			
001	S: CRITICAL FAILURE $: # 001	Serious device error	Replace the amplifier board.
011	S: AMP HW EEPROM $: # 011	Amplifier: Defective EEPROM	Replace the amplifier board.
012	S: AMP SW EEPROM $: # 012	Amplifier: Error accessing EEPROM data	The EEPROM data blocks in which an error has occurred are displayed in the TROUBLESHOOTING function. Press Enter to acknowledge the errors in question; default values are automatically inserted instead of the errored parameter values. Note! The measuring device has to be restarted if an error has occurred in a totalizer block (see error No. 111 / CHECKSUM TOTAL).
031	S: SENSOR HW DAT $: # 031	1. S-DAT is not plugged into the amplifier board correctly (or is missing). 2. S-DAT is defective.	1. Check whether the S-DAT is correctly plugged into the amplifier board. 2. Replace the S-DAT if it is defective. Check that the new replacement DAT is compatible with the measuring electronics. Check the: - Spare part set number - Hardware revision code 3. Replace measuring electronics boards if necessary. 4. Plug the S-DAT into the amplifier board.
032	S: SENSOR SW DAT $: # 032		
No. # 1xx → Software error			
101	S: GAIN ERROR AMP $: # 101	Gain deviation compared to reference gain > 25%.	Replace the amplifier board.
111	S: CHECKSUM TOTAL $: # 111	Totalizer checksum error.	1. Restart the measuring device. 2. Replace the amplifier board if necessary.
121	S: A / C COMPATIB. !: # 121	Due to different software versions, I/O board and amplifier board are only partially compatible (possibly restricted functionality). Note! – This message is only listed in the error history. – Nothing is shown on the display.	Module with lower software version has either to be updated by FieldCare with the required software version or the module has to be replaced.

No.	Error message / Type	Cause	Remedy (spare part → 📄 89)
No. # 2xx → Error in DAT / no communication			
251	S: COMMUNICATION I/O $: # 251	Internal communication fault on the amplifier board.	Replace the amplifier board.
261	S: COMMUNICATION I/O $: # 261	No data reception between amplifier and I/O board or faulty internal data transfer.	Check the BUS contacts.
No. # 3xx → System limits exceeded			
321	S: TOL. COIL CURR. $: # 321	Sensor: Coil current is out of tolerance.	⚠ Warning! Switch off power supply before manipulating the coil current cable, coil current cable connector or measuring electronics boards! Remote version: 1. Check wiring of terminals 41/42 → 📄 47 2. Check coil current cable connector. Compact and remote version: Replace measuring electronics boards if necessary
339 to 342	S: STACK CUR OUT n !: # 339 to 342	The temporarily buffered flow portions (measuring mode for pulsating flow) could not be cleared or output within 60 seconds.	1. Change the upper or lower limit setting, as applicable. 2. Increase or reduce flow, as applicable. Recommendations in the event of fault category = FAULT MESSAGE ($) ▪ Configure the fault response of the output to "ACTUAL VALUE" so that the temporary buffer can be cleared. ▪ Clear the temporary buffer by the measures described under Item 1.
343 to 346	S: STACK FREQ. OUT n !: # 343 to 346		
347 to 350	S: STACK PULSE OUT n !: # 343 to 346	The temporarily buffered flow portions (measuring mode for pulsating flow) could not be cleared or output within 60 seconds.	1. Increase the setting for pulse weighting 2. Increase the max. pulse frequency if the totalizer can handle a higher number of pulses. 3. Increase or reduce flow, as applicable. Recommendations in the event of fault category = FAULT MESSAGE ($) ▪ Configure the fault response of the output to "ACTUAL VALUE" so that the temporary buffer can be cleared. ▪ Clear the temporary buffer by the measures described under Item 1.
351 to 354	S: CURRENT RANGE n !: # 351 to 354	Current output: flow is out of range.	1. Change the upper or lower limit setting, as applicable. 2. Increase or reduce flow, as applicable.
355 to 358	S: FREQ. RANGE n !: # 355 to 358	Frequency output: flow is out of range.	1. Change the upper or lower limit setting, as applicable. 2. Increase or reduce flow, as applicable.
359 to 362	S: PULSE RANGE !: # 359 to 362	Pulse output: the pulse output frequency is out of range.	1. Increase the setting for pulse weighting 2. When selecting the pulse width, choose a value that can still be processed by a connected counter (e.g. mechanical counter, PLC etc.). *Determine the pulse width:* – Variant 1: Enter the minimum duration that a pulse must be present at the connected counter to ensure its registration. – Variant 2: Enter the maximum (pulse) frequency as the half "reciprocal value" that a pulse must be present at the connected counter to ensure its registration. Example: The maximum input frequency of the connected counter is 10 Hz. The pulse width to be entered is: $\frac{1}{2 \cdot 10\ \text{Hz}} = 50\ \text{ms}$ a0004437 3. Reduce flow.

No.	Error message / Type	Cause	Remedy (spare part → 89)
No. # 5xx → Application error			
501	S: SW.-UPDATE ACT. !: # 501	New amplifier or communication (I/O module) software version is loaded. Currently no other functions are possible.	Wait until the procedure is finished. The device will restart automatically.
502	S: UP-/DOWNLOAD ACT !: # 502	Uploading or downloading the device data via operating program. Currently no other functions are possible.	Wait until the procedure is finished.
No. # 6xx → Simulation mode active			
601	S: POS. ZERO-RETURN !: # 601	Positive zero return active Caution! This message has the highest display priority!	Switch off positive zero return
611 to 614	S: SIM. CURR. OUT. n !: # 611 to 614	Simulation current output active	
621 to 624	S: SIM. FREQ. OUT. n !: # 621 to 624	Simulation frequency output active	Switch off simulation
631 to 634	S: SIM. PULSE n !: # 631 to 634	Simulation pulse output active	Switch off simulation
641 to 644	S: SIM. STAT. OUT n !: # 641 to 644	Simulation status output active	Switch off simulation
671 to 674	S: SIM. STATUS IN n !: # 671 to 674	Simulation status input active	Switch off simulation
691	S: SIM. FAILSAFE !: # 691	Simulation of response to error (outputs) active	Switch off simulation
692	S: SIM. MEASURAND !: # 692	Simulation of a measured variable active (e.g. mass flow).	Switch off simulation
698	S: DEV. TEST ACT. !: # 698	The measuring device is being checked on site via the test and simulation device.	–

9.3 Process error messages

Note!
Also observe the information on → 64.

No.	Error message / Type	Cause	Remedy (spare part → 89)
P = Process error $ = Fault message (with an effect on the outputs) ! = Notice message (without an effect on the outputs)			
401	EMPTY PIPE $: # 401	Measuring tube partially filled or empty	1. Check the process conditions of the plant 2. Fill the measuring tube
461	ADJ. NOT OK !: # 461	EPD calibration not possible because the fluid's conductivity is either too low or too high.	The EPD function cannot be used with fluids of this nature.
463	FULL = EMPTY $: # 463	The EPD calibration values for empty pipe and full pipe are identical, therefore incorrect.	Repeat calibration, making sure procedure is correct → 76.

9.4 Process errors without messages

Symptoms	Rectification
Remark: You may have to change or correct certain settings in functions in the function matrix in order to rectify the fault.	
Flow values are negative, even though the fluid is flowing forwards through the pipe.	1. Remote version: – Switch off the power supply and check the wiring → 47 – If necessary, reverse the connections at terminals 41 and 42 2. Change the setting in the "INSTALLATION DIRECTION SENSOR" function accordingly
Measured-value reading fluctuates even though flow is steady.	1. Check grounding and potential equalization → 56 2. Check the fluid for presence of gas bubbles. 3. In the "SYSTEM DAMPING" function → increase the value
Measured-value reading shown on display, even though the fluid is at a standstill and the measuring tube is full.	1. Check grounding and potential equalization → 56 2. Check the fluid for presence of gas bubbles. 3. Activate the "LOW FLOW CUTOFF" function, i.e. enter or increase the value for the switching point.
Measured-value reading on display, even though measuring tube is empty.	1. Perform empty-pipe/full-pipe adjustment and then switch on Empty Pipe detection → 76 2. Remote version: Check the terminals of the EPD cable → 47 3. Fill the measuring tube.
The current output signal is always 4 mA, irrespective of the flow signal at any given time.	1. Select the "BUS ADDRESS" function and change the setting to "0". 2. Value for creepage too high. Reduce the value in the "LOW FLOW CUTOFF" function.
The fault cannot be rectified or some other fault not described above has arisen. In these instances, please contact your Endress+Hauser service organization.	The following options are available for tackling problems of this nature: **Request the services of an Endress+Hauser service technician** If you contact our service organization to have a service technician sent out, please be ready to quote the following information: – Brief description of the fault – Nameplate specifications (→ 6): order code, serial number **Returning devices to Endress+Hauser** The necessary procedures (→ 5) must be carried out before you return a flowmeter requiring repair or calibration to Endress+Hauser. Always enclose a duly completed "Declaration of Conformity" form with the flowmeter. You will find a master copy of this form at the back of this manual. **Replace transmitter electronics** Components in the measuring electronics defective → order spare parts → 89

9.5 Response of outputs to errors

Note!
The failsafe mode of totalizers, current, pulse and frequency outputs can be customized by means of various functions in the function matrix. You will find detailed information on these procedures in the "Description of Device Functions" manual.

You can use positive zero return to set the signals of the current, pulse and status outputs to their fallback value, for example when measuring has to be interrupted while a pipe is being cleaned. This function takes priority over all other device functions: simulations, for example, are suppressed.

Failsafe mode of outputs and totalizers		
	Process/system error is current	**Positive zero return is activated**
Caution! System or process errors defined as "Notice messages" have no effect whatsoever on the inputs and outputs. See the information on → 67		
Current output	MINIMUM VALUE 0–20 mA → 0 mA 4–20 mA → 2 mA 4–20 mA HART → 2 mA 4–20 mA NAMUR →3.5 mA 4–20 mA HART NAMUR →3.5 mA 4–20 mA US → 3.75 mA 4–20 mA HART US → 3,75 mA 0–20 mA (25 mA) → 0 mA 4–20 mA (25 mA) → 2 mA 4–20 mA (25 mA) HART → 2 mA MAXIMUM VALUE 0–20 mA → 22 mA 4–20 mA → 22 mA 4–20 mA HART → 22 mA 4–20 mA NAMUR → 22.6 mA 4–20 mA HART NAMUR → 22.6 mA 4–20 mA US → 22.6 mA 4–20 mA HART US → 22.6 mA 0–20 mA (25 mA) → 25 mA 4–20 mA (25 mA) → 25 mA 4–20 mA (25 mA) HART → 25 mA HOLD VALUE Last valid value (preceding occurrence of the fault) is output. ACTUAL VALUE Measured value display on the basis of the current flow measurement. The fault is ignored.	Output signal corresponds to "zero flow"
Pulse output	MIN/MAX VALUE → FALLBACK VALUE Signal output → no pulses HOLD VALUE Last valid value (preceding occurrence of the fault) is output. ACTUAL VALUE Fault is ignored, i.e. normal measured-value output on the basis of ongoing flow measurement.	Output signal corresponds to "zero flow"
Frequency output	*FALLBACK VALUE* Signal output → 0 Hz *FAILSAFE LEVEL* Output of the frequency specified in the FALİLSAFE VALUE function. *HOLD VALUE* Measured value display on the basis of the last saved value preceding occurrence of the fault. *ACTUAL VALUE* Measured value display on the basis of the current flow measurement. The fault is ignored.	Output signal corresponds to "zero flow"

Failsafe mode of outputs and totalizers		
	Process/system error is current	**Positive zero return is activated**
Totalizer	*STOP* The totalizers are paused until the error is rectified. *ACTUAL VALUE* The fault is ignored. The totalizer continues to count in accordance with the current flow value. *HOLD VALUE* The totalizer continues to count the flow in accordance with the last valid flow value (before the error occurred).	Totalizer stops
Status output	In the event of a fault or power supply failure: Status output → non-conductive	No effect on status output

9.6 Spare parts

Detailed troubleshooting instructions are provided in the previous sections → 82
The measuring device, moreover, provides additional support in the form of continuous self-diagnosis and error messages.
Fault rectification can entail replacing defective components with tested spare parts. The illustration below shows the available scope of spare parts.

Note!
You can order spare parts directly from your Endress+Hauser service organization by providing the serial number printed on the transmitter's nameplate → 6

Spare parts are shipped as sets comprising the following parts:
- Spare part
- Additional parts, small items (threaded fasteners, etc.)
- Mounting instructions
- Packaging

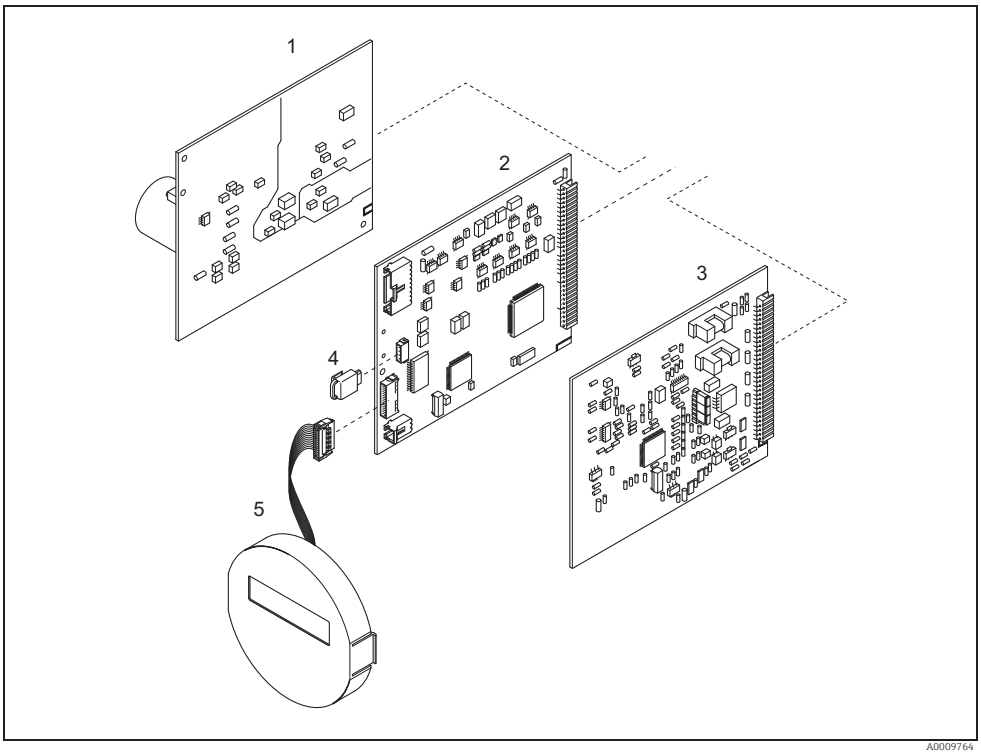

Fig. 53: Spare parts for Promag 50 transmitter (field and wall-mounted housings)

1 Power unit board (85 to 260 V AC, 20 to 55 V AC, 16 to 62 V DC)
2 Amplifier board
3 I/O board (COM module)
4 HistoROM / S-DAT (sensor data memory)
5 Display module

9.6.1 Removing and installing printed circuit boards

Field housing: removing and installing printed circuit boards → 54

Warning!
- Risk of electric shock!
  Exposed components carry dangerous voltages. Make sure that the power supply is switched off before you remove the cover of the electronics compartment.
- Risk of damaging electronic components (ESD protection). Static electricity can damage electronic components or impair their operability. Use a workplace with a grounded working surface purpose-built for electrostatically sensitive devices!
- If you cannot guarantee that the dielectric strength of the device is maintained in the following steps, then an appropriate inspection must be carried out in accordance with the manufacturer's specifications.
- When connecting Ex-certified devices, see the notes and diagrams in the Ex-specific supplement to these Operating Instructions.

Caution!
Use only original Endress+Hauser parts.

1. Switch off power supply.
2. Unscrew cover of the electronics compartment from the transmitter housing.
3. Remove the local display (1) as follows:
   – Press in the latches (1.1) at the side and remove the display module.
   – Disconnect the ribbon cable (1.2) of the display module from the amplifier board.
4. Remove the screws and remove the cover (2) from the electronics compartment.
5. Remove the boards (4, 6): Insert a suitable tool into the hole (3) provided for the purpose and pull the board clear of its holder.
6. Remove amplifier board (5):
   – Disconnect the plug of the electrode signal cable (5.1) including S-DAT (5.3) from the board.
   – Loosen the plug locking of the coil current cable (5.2) and gently disconnect the plug from the board, i.e. without moving it to and fro.
   – Insert a thin pin into the hole (3) provided for the purpose and pull the board clear of its holder.
7. Installation is the reverse of the removal procedure.

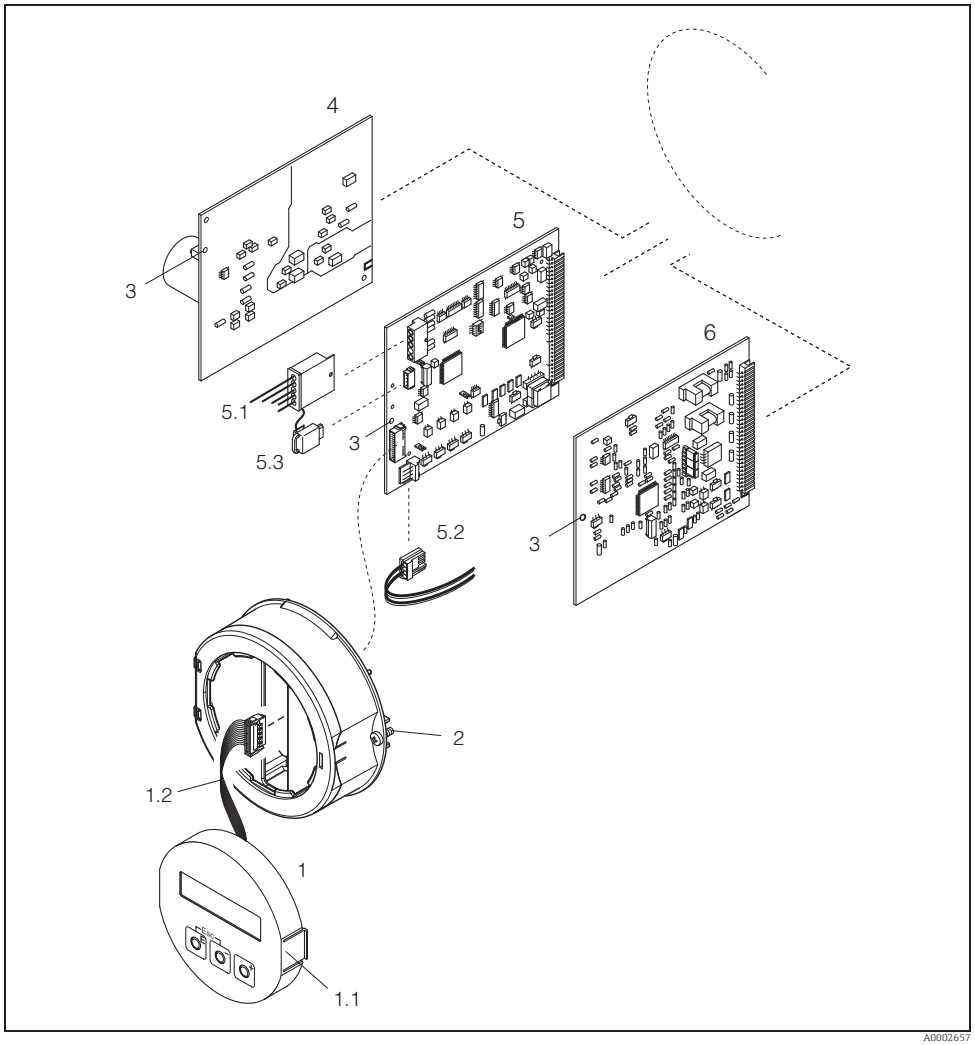

Fig. 54: Field housing: removing and installing printed circuit boards

1 Local display
1.1 Latch
1.2 Ribbon cable (display module)
2 Screws of electronics compartment cover
3 Aperture for installing/removing boards
4 Power supply board
5 Amplifier board
5.1 Electrode signal cable (sensor)
5.2 Coil current cable (sensor)
5.3 Histo-ROM / S-DAT (sensor data memory)
6 I/O board

Wall-mount housing: removing and installing printed circuit boards → 55

Warning!
- Risk of electric shock!
  Exposed components carry dangerous voltages. Make sure that the power supply is switched off before you remove the cover of the electronics compartment.
- Risk of damaging electronic components (ESD protection). Static electricity can damage electronic components or impair their operability. Use a workplace with a grounded working surface purpose-built for electrostatically sensitive devices!
- If you cannot guarantee that the dielectric strength of the device is maintained in the following steps, then an appropriate inspection must be carried out in accordance with the manufacturer's specifications.
- When connecting Ex-certified devices, see the notes and diagrams in the Ex-specific supplement to these Operating Instructions.

Caution!
Use only original Endress+Hauser parts.

1. Switch off power supply.
2. Remove the screws and open the hinged cover (1) of the housing. Remove screws of the electronics module (2).
3. Then push up electronics module and pull it as far as possible out of the wall-mounted housing.
4. Disconnect the following cable plugs from amplifier board (7):
   – Electrode signal cable plug (7.1) including S-DAT (7.3).
   – Plug of coil current cable (7.2). To do so, loosen the plug locking of the coil current cable and gently disconnect the plug from the board, i.e. without moving it to and fro.
   – Ribbon cable plug (3) of the display module.
5. Remove the screws and remove the cover (4) from the electronics compartment.
6. Remove the boards (6, 7, 8): Insert a suitable tool into the hole (5) provided for the purpose and pull the board clear of its holder.
7. Installation is the reverse of the removal procedure.

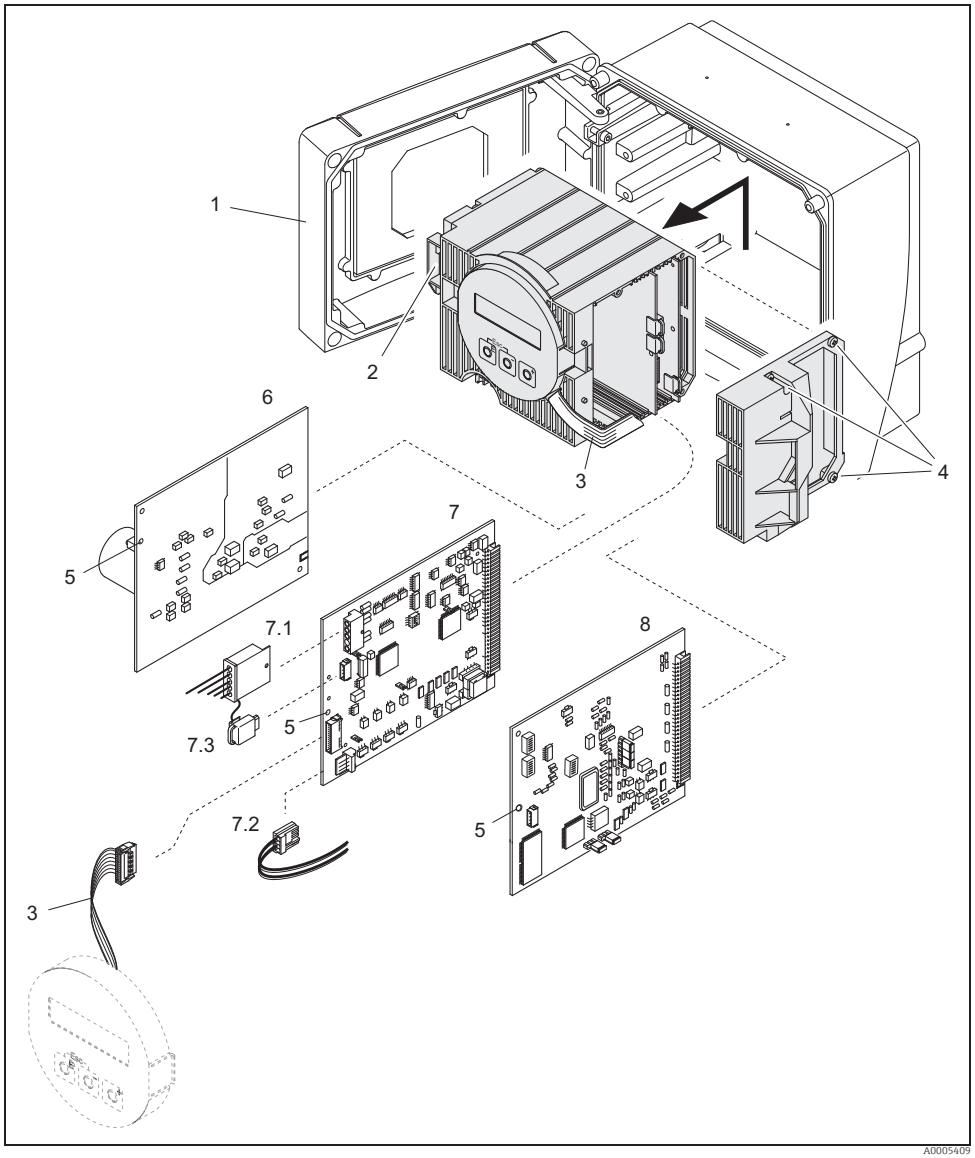

Fig. 55: Wall-mount housing: removing and installing printed circuit boards

1 Housing cover
2 Electronics module
3 Ribbon cable (display module)
4 Cover of electronics compartment (3 screws)
5 Aperture for installing/removing boards
6 Power supply board
7 Amplifier board
7.1 Electrode signal cable (sensor)
7.2 Coil current cable (sensor)
7.3 Histo-ROM / S-DAT (sensor data memory)
8 I/O board

9.6.2 Replacing the device fuse

Warning!
Risk of electric shock! Exposed components carry dangerous voltages. Make sure that the power supply is switched off before you remove the cover of the electronics compartment.

The main fuse is on the power supply board (→ 56).
The procedure for replacing the fuse is as follows:

1. Switch off power supply.
2. Remove the power supply board: field housing → 90, wall-mount housing → 92
3. Remove cap (1) and replace the device fuse (2).
   Use only fuses of the following type:
   – Power supply 20 to 55 V AC / 16 to 62 V DC → 2.0 A slow-blow / 250 V; 5.2 × 20 mm
   – Power supply 85 to 260 V AC → 0.8 A slow-blow / 250 V; 5.2 × 20 mm
   – Ex-rated devices → see the Ex documentation.
4. Installation is the reverse of the removal procedure.

Caution!
Use only original Endress+Hauser parts.

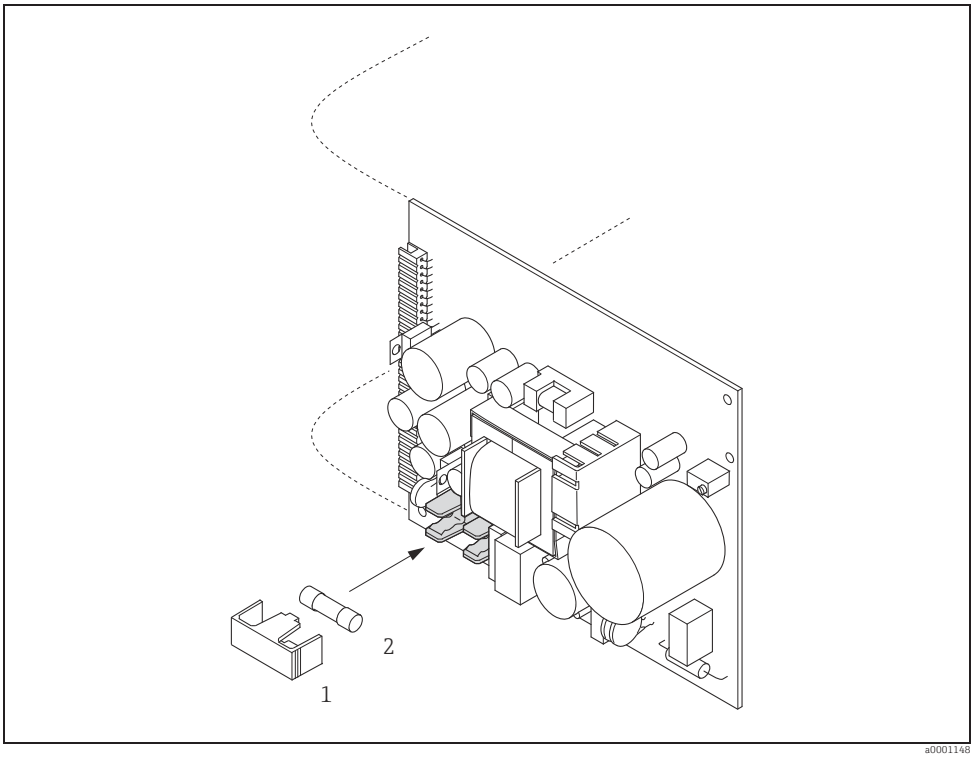

Fig. 56: Replacing the device fuse on the power supply board

1 Protective cap
2 Device fuse

9.6.3 Replacing the exchangeable electrode

The Promag W sensor (DN 350 to 2000 / 14 to 78") is available with exchangeable measuring electrodes as an option. This design permits the measuring electrodes to be replaced or cleaned under process conditions.

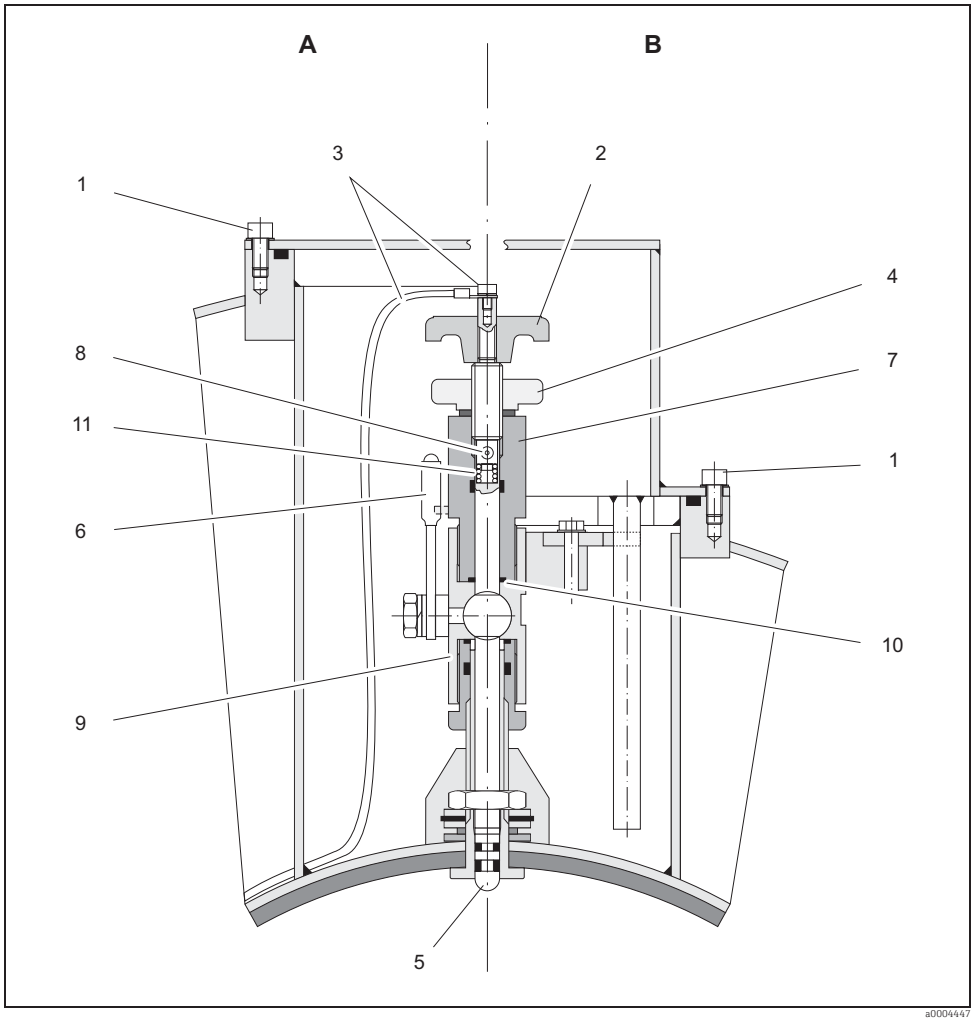

Fig. 57: Apparatus for replacing exchangeable measuring electrodes

View A = DN 1200 to 2000 (48 to 78")

View B = DN 350 to 1050 (14 to 42")

1 Allen screw
2 Handle
3 Electrode cable
4 Knurled nut (locknut)
5 Measuring electrode
6 Stop cock (ball valve)
7 Retaining cylinder
8 Locking pin (for handle)
9 Ball-valve housing
10 Seal (retaining cylinder)
11 Coil spring

Removing the electrode	Installing the electrode
1 Loosen Allen screw (1) and remove the cover.	1 Insert new electrode (5) into retaining cylinder (7) from below. Make sure that the seals at the tip of the electrode are clean.
2 Remove electrode cable (3) secured to handle (2).	2 Mount handle (2) on the electrode and insert locking pin (8) to secure it in position. Caution! Make sure that coil spring (11) is inserted. This is essential to ensure correct electrical contact and correct measuring signals.
3 Loosen knurled nut (4) by hand. This knurled nut acts as a locknut.	3 Pull the electrode back until the tip of the electrode no longer protrudes from retaining cylinder (7).
4 Remove electrode (5) by turning handle (2). The electrode can now be pulled out of retaining cylinder (7) as far as a defined stop. Warning! Risk of injury. Under process conditions (pressure in the piping system) the electrode can recoil suddenly against its stop. Apply counter-pressure while releasing the electrode.	4 Screw the retaining cylinder (7) onto ball-valve housing (9) and tighten it by hand. Seal (10) on the cylinder must be correctly seated and clean. Note! Make sure that the rubber hoses on retaining cylinder (7) and stop cock (6) are of the same color (red or blue).
5 Close stop cock (6) after pulling out the electrode as far as it will go. Warning! Do not subsequently open the stop cock, in order to prevent fluid escaping.	5 Open stop cock (6) and turn handle (2) to screw the electrode all the way into the retaining cylinder.
6 Remove the electrode complete with retaining cylinder (7).	6 Screw knurled nut (4) onto the retaining cylinder. This firmly locates the electrode in position.
7 Remove handle (2) from electrode (5) by pressing out locking pin (8). Take care not to lose coil spring (11).	7 Use the Allen screw to secure electrode cable (3) to handle (2). Caution! Make sure that the machine screw securing the electrode cable is firmly tightened. This is essential to ensure correct electrical contact and correct measuring signals.
8 Remove the old electrode and insert the new electrode. Replacement electrodes can be ordered separately from Endress+Hauser.	8 Reinstall the cover and tighten Allen screw (a).

9.7 Return

Caution!
Do not return a measuring device if you are not absolutely certain that all traces of hazardous substances have been removed, e.g. substances which have penetrated crevices or diffused through plastic.
Costs incurred for waste disposal and injury (burns, etc.) due to inadequate cleaning will be charged to the owner-operator.

The following steps must be taken before returning a flow measuring device to Endress+Hauser, e.g. for repair or calibration:
- Always enclose a duly completed "Declaration of contamination" form. Only then can Endress+Hauser transport, examine and repair a returned device.
- Enclose special handling instructions if necessary, for example a safety data sheet as per EC REACH Regulation No. 1907/2006.
- Remove all residues. Pay special attention to the grooves for seals and crevices which could contain residues. This is particularly important if the substance is hazardous to health, e.g. flammable, toxic, caustic, carcinogenic, etc.

Note!
You will find a preprinted "Declaration of contamination" form at the back of these Operating Instructions.

9.8 Disposal

Observe the regulations applicable in your country!

9.9 Software history

Date	Software version	Changes to software	Operating Instructions
01.2011	Amplifier: V 2.04.XX	Introduction of new nominal diameters; calf values to 2.5	71249447 / 15.14
11.2009	Amplifier: V 2.03.XX	Introduction of Calf history	71106181 / 12.09 71105332 / 11.09
06.2009	Amplifier: V 2.02.XX	Introduction of Promag L	71095684 / 06.09
03.2009	Amplifier: V 2.02.XX	Introduction of Promag D Introduction of new nominal diameter	71088677 / 03.09
11.2004	Amplifier: 1.06.01 Communication module: 1.04.00	Software update relevant only for production	50097089 / 10.03
10.2003	Amplifier: 1.06.00 Communication module: 1.03.00	Software expASMEon: ▪ Language groups ▪ Flow direction pulse output selectable New functionalities: ▪ Second Totalizer ▪ Adjustable backlight (display) ▪ Operation hours counter ▪ Simulation function for pulse output ▪ Counter for access code ▪ Reset function (fault history) ▪ Up-/download with FieldTool	50097089 / 10.03

Date	Software version	Changes to software	Operating Instructions
08.2003	Communication module: 1.02.01	Software expASMEon: ▪ New / revised functionalities New functionalities: ▪ Current span NAMUR NE 43 ▪ Failsafe mode function ▪ Troubleshooting function ▪ System and process error messages ▪ Response of status output	50097089 / 08.03
08.2002	Amplifier: 1.04.00	Software expASMEon: ▪ New / revised functionalities New functionalities: ▪ Current span NAMUR NE 43 ▪ EPD (new mode) ▪ Failsafe mode function ▪ Acknowledge fault function ▪ Troubleshooting function ▪ System and process error messages ▪ Response of status output	50097089 / 08.02
03.2002	Amplifier: 1.03.00	Software expASMEon: ▪ Suitability for custody transfer measurement Promag 50/51	none
06.2001	Amplifier: 1.02.00 Communication module: 1.02.00	Software expASMEon: ▪ New functionalities: New functionalities: ▪ General device functions ▪ "OED" software function ▪ "Pulse width" software function	50097089 / 06.01
09.2000	Amplifier: 1.01.01 Communication module: 1.01.00	Software expASMEon: ▪ Functional adaptations	none
08.2000	Amplifier: 1.01.00	Software expASMEon: ▪ Functional adaptations	none
04.2000	Amplifier: 1.00.00 Communication module: 1.00.00	Original software Compatible with: ▪ FieldTool ▪ Commuwin II (version 2.05.03 and higher) ▪ HART Communicator DXR 275 (from OS 4.6) with Rev. 1, DD1	50097089 / 04.00

Note!
Uploads or downloads between the individual software versions are only possible with a special service software.

10 Technical data

10.1 Technical data at a glance

10.1.1 Application

→ 📄 4

10.1.2 Function and system design

Measuring principle

Electromagnetic flow measurement on the basis of Faraday's Law.

Measuring system

→ 📄 6

10.1.3 Input

Measured variable

Flow velocity (proportional to induced voltage)

Measuring range

Typically v = 0.01 to 10 m/s (0.033 to 33 ft/s) with the specified accuracy

Operable flow range

Over 1000 : 1

Input signal

Status input (auxiliary input)

- Galvanically isolated
- U = 3 to 30 V DC
- Ri = 5 kΩ
- Can be configured for: totalizer reset, positive zero return, error message reset.

10.1.4 Output

Output signal

Current output

- Galvanically isolated
- Active/passive can be selected:
  - Active: 0/4 to 20 mA, R_L < 700 Ω (HART: R_L ≥ 250 Ω)
  - Passive: 4 to 20 mA, supply voltage V_S 18 to 30 V DC, R_i ≥150 Ω)
- Time constant can be selected (0.01 to 100s)
- Full scale value adjustable
- Temperature coefficient: typ. 0.005% o.f.s./°C, resolution: 0.5 µA

o.f.s. = of full scale value

Pulse/frequency output

- Galvanically isolated
- Passive: 30 V DC / 250 mA
- Open collector
- Can be configured as:
  - Pulse output
    Pulse value and pulse polarity can be selected, max. pulse width adjustable (0.5 to 2000 ms)
  - Frequency output
    Full scale frequency 2 to 1000 Hz (f_{max} = 1.25 Hz), on/off ratio 1:1, pulse width max. 10 s

Signal on alarm

Current output

Failsafe mode can be selected (e.g. in accordance with NAMUR Recommendation NE 43)

Pulse/frequency output

Failsafe mode can be selected

Status output

"Not conductive" in the event of fault or power supply failure

Load

See "Output signal"

Switching output

Status output

- Galvanically isolated
- Max. 30 V DC/250 mA
- Open collector
- Can be configured for: error messages, empty pipe detection (EPD), flow direction, limit values

Low flow cut off

Low flow cut off, switch-on point can be selected as required

Galvanic isolation

All circuits for inputs, outputs, and power supply are galvanically isolated from each other.

10.1.5 Power supply

Electrical connections

→ 🖹 47

Supply voltage (power supply)

- 20 to 55 V AC, 45 to 65 Hz
- 85 to 260 V AC, 45 to 65 Hz
- 16 to 62 V DC

Cable entry

Power supply and signal cables (inputs/outputs):

- Cable entry M20 × 1.5 (8 to 12 mm/0.31 to 0.47 inch)
- Sensor cable entry for armored cables M20 × 1.5 (9.5 to 16 mm / 0.37 to 0.63 inch)
- Threads for cable entries ½" NPT, G ½"

Connecting cable for remote version:

- Cable entry M20 × 1.5 (8 to 12 mm/0.31 to 0.47 inch)
- Sensor cable entry for armored cables M20 × 1.5 (9.5 to 16 mm / 0.37 to 0.63 inch)
- Threads for cable entries ½" NPT, G ½"

Cable specifications

→ 🖹 52

Power consumption

Power consumption

- AC: <15 VA (incl. sensor)
- DC: <15 W (incl. sensor)

Switch-on current

- max. 8.5 A (< 50 ms) for 24 V DC
- max. 3 A (< 5 ms) for 260 V AC

Power supply failure

- Lasting min. 1 cycle frequency:
- EEPROM saves measuring system data
- S-DAT: exchangeable data storage chip which stores the data of the sensor (nominal diameter, serial number, calibration factor, zero point etc.)

Potential equalization

→ 🖹 56

10.1.6 Performance characteristics

Reference operating conditions

To DIN EN 29104 and VDI/VDE 2641:

- Fluid temperature: +28 ± 2 °C (+82 ± 4 °F)
- Ambient temperature: +22 ± 2 °C (+72 ± 4 °F)
- Warm-up period: 30 minutes

Installation:

- Inlet run >10 × DN
- Outlet run > 5 × DN
- Sensor and transmitter grounded.
- The sensor is centered in the pipe.

Maximum measured error

- Current output: plus typically ± 5 µA
- Pulse output: ± 0.5% o.r. ± 1 mm/s
  Option: ± 0.2% o.r. ± 2 mm/s (o.r. = of reading)

Fluctuations in the supply voltage do not have any effect within the specified range.

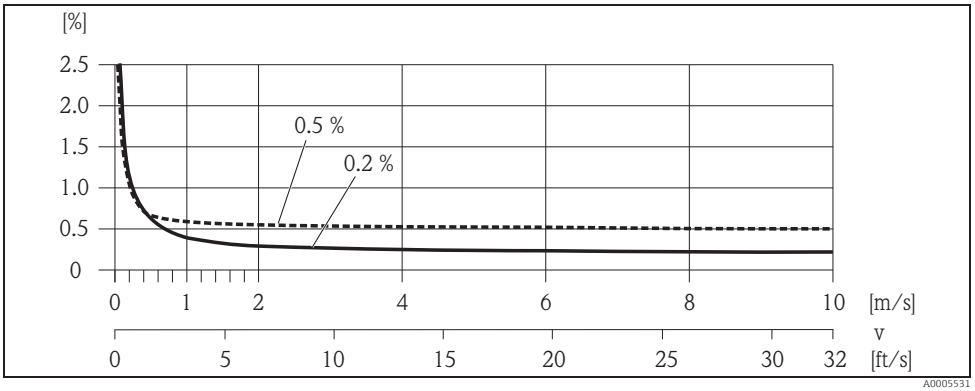

Fig. 58: Max. measured error in % of reading

Repeatability

Max. ± 0.1% o.r. ± 0.5 mm/s (o.r. = of reading)

10.1.7 Installation

Installation instructions

Any orientation (vertical, horizontal), restrictions and installation instructions → 📄 12

Inlet and outlet run

If possible, install the sensor upstream from fittings such as valves, T-pieces, elbows, etc. The following inlet and outlet runs must be observed in order to meet accuracy specifications (→ 📄 15, → 🖼 12):

- Inlet run: ≥ 5 × DN
- Outlet run: ≥ 2 × DN

Adapters

→ 📄 16

Length of connecting cable

→ 📄 19

10.1.8 Environment

Ambient temperature range

- Transmitter: −20 to +60 °C (−4 to +140 °F)

  ✎ Note!
  At ambient temperatures below −20 (−4 °F) the readability of the display may be impaired.
- Sensor (Flange material carbon steel): −10 to +60 °C (+14 to +140 °F)

Caution!
- The permitted temperature range of the measuring tube lining may not be undershot or overshot (→ "Operating conditions: Process" → "Medium temperature range").
- Install the device in a shady location. Avoid direct sunlight, particularly in warm climatic regions.
- The transmitter must be mounted separate from the sensor if both the ambient and fluid temperatures are high.

Storage temperature

The storage temperature corresponds to the operating temperature range of the measuring transmitter and the appropriate measuring sensors.

Caution!
- The measuring device must be protected against direct sunlight during storage in order to avoid unacceptably high surface temperatures.
- A storage location must be selected where moisture does not collect in the measuring device. This will help prevent fungus and bacteria infestation which can damage the liner.

Degree of protection

- Standard: IP 67 (NEMA 4X) for transmitter and sensor
- Optional: IP 68 (NEMA 6P) for remote version of Promag E/L/P/W sensor. Promag L only with stainless steel flanges.

Shock and vibration resistance

Acceleration up to 2 g following IEC 60068-2-6
(high-temperature version: no data available)

CIP cleaning

Caution!
The maximum fluid temperature permitted for the device may not be exceeded.

CIP cleaning is possible:
Promag E (100 °C / 212 °F), Promag H/P

CIP cleaning is not possible:
Promag D/L/W

SIP cleaning

Caution!
The maximum fluid temperature permitted for the device may not be exceeded.

SIP cleaning is possible:
Promag H

SIP cleaning is not possible:
Promag D/E/L/P/W

Electromagnetic compatibility (EMC)

- As per IEC/EN 61326 and NAMUR Recommendation NE 21
- Emission: to limit value for industry EN 55011

10.1.9 Process

Medium temperature range

The permissible temperature depends on the lining of the measuring tube

Promag D

0 to +60 °C (+32 to +140 °F) for polyamide

Promag E

−10 to +110 °C (+14 to +230 °F) for PTFE,
Restrictions → see the following diagram

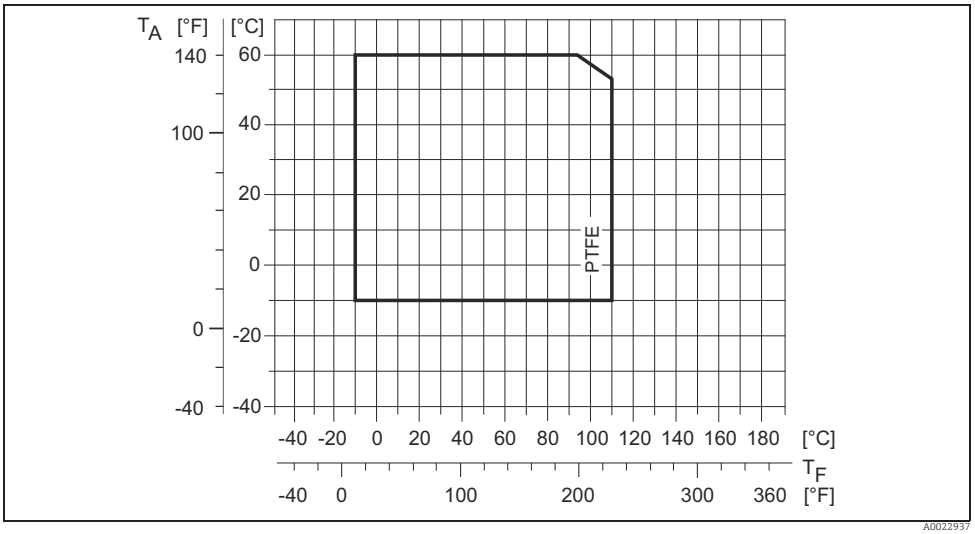

Fig. 59: Compact and remote version Promag E (TA = ambient temperature; TF = fluid temperature)

Promag H

Sensor:
- DN 2 to 25 (1/12 to 1"): −20 to +150 °C (−4 to +302 °F)
- DN 40 to 100 (1 ½ to 4"): −20 to +150 °C (−4 to +302 °F)

Seals:
- EPDM: −20 to +150 °C (−4 to +302 °F)
- Silicone (VMQ): −20 to +150 °C (−4 to +302 °F)
- Viton (FKM): −20 to +150 °C (−4 to +302 °F)
- Kalrez: −20 to +150 °C (−4 to +302 °F)

Promag L

- 0 to +80 °C (+32 to +176 °F) for hard rubber (DN 350 to 2400 / 14 to 90")
- −20 to +50 °C (−4 to +122 °F) for polyurethane (DN 25 to 1200 / 1 to 48")
- −20 to +90 °C (−4 to +194 °F) for PTFE (DN 25 to 300 / 1 to 12")

Promag P

Standard
- −40 to +130 °C (−40 to +266 °F) for PTFE (DN 15 to 600 / ½ to 24"),
  Restrictions → see the following diagrams
- −20 to +130 °C (−4 to +266 °F) for PFA/HE (DN 25 to 200 / 1 to 8"),
  Restrictions → see the following diagrams
- −20 to +150 °C (−4 to +302 °F) for PFA (DN 25 to 200 / 1 to 8"),
  Restrictions → see the following diagrams

Optional
High-temperature version (HT): −20 to +180 °C (−4 to +356 °F) for PFA (DN 25 to 200 / 1 to 8")

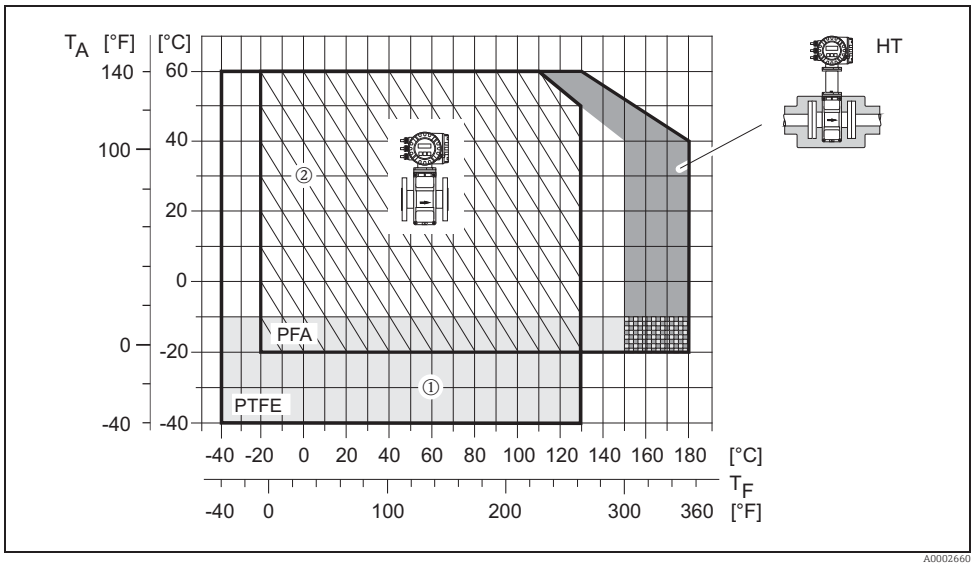

Abb. 60: Compact version Promag P (with PFA- or PTFE-lining)

TA = ambient temperature; TF = fluid temperature; HT = high-temperature version with insulation
m = light gray area → temperature range from −10 to −40 °C (−14 to −40 °F) is valid for stainless steel version only
n = diagonal hatched area → foam lining (HE) and degree of protection IP 68 = fluid temperature max. 130°C / 266 °F

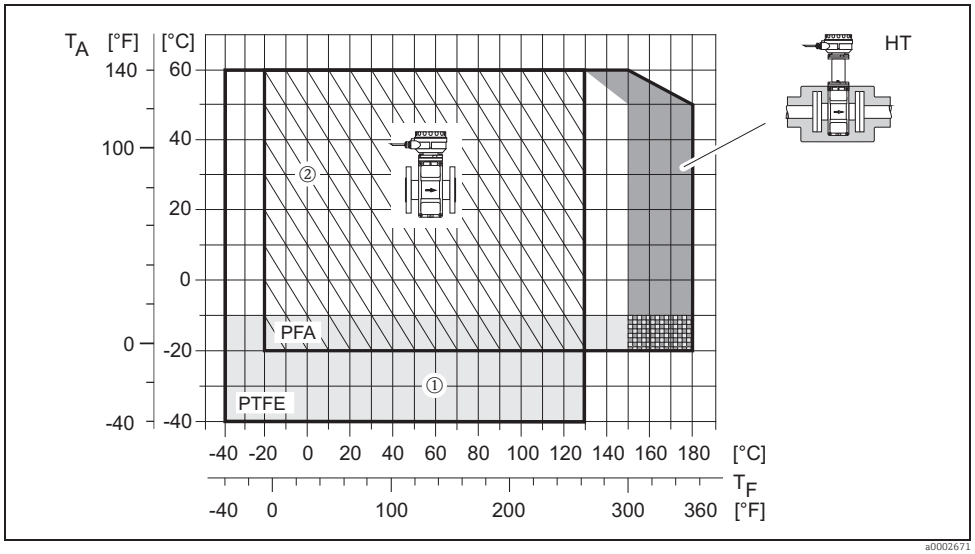

Abb. 61: Remote version Promag P (with PFA- or PTFE-lining)

TA = ambient temperature; TF = fluid temperature; HT = high-temperature version with insulation
m = light gray area → temperature range from −10 to −40 °C (−14 to −40 °F) is valid for stainless steel version only
n = diagonal hatched area → foam lining (HE) and degree of protection IP68 = fluid temperature max. 130°C / 266 °F

Promag W

- 0 to +80 °C (+32 to +176 °F) for hard rubber (DN 50 to 2000 / 2 to 78")
- −20 to +50 °C (−4 to +122 °F) for polyurethane (DN 25 to 1200 / 1 to 48")

Conductivity

The minimum conductivity is ≥ 5 µS/cm (≥ 20 µS/cm for demineralized water)

Note!
Note that in the case of the remote version, the requisite minimum conductivity is also influenced by the length of the connecting cable → 19

Medium pressure range (nominal pressure)

Promag D

- EN 1092-1 (DIN 2501)
  - PN 16
- ASME B 16.5
  - Class 150
- JIS B2220
  - 10K

Promag E

- EN 1092-1 (DIN 2501)
  - PN 10 (DN 200 to 600 / 8 to 24")
  - PN 16 (DN 65 to 600 / 3 to 24")
  - PN 40 (DN 15 to 150 / ½ to 2")
- ASME B 16.5
  - Class 150 (½ to 24")
- JIS B2220
  - 10K (DN 50 to 300 / 2 to 12")
  - 20K (DN 15 to 40 / ½ to 1½")

Promag H

The permissible nominal pressure depends on the process connection and the seal:
- PN 16, PN 40, Class 150, 10 K → Welding nipple, couplings, flanges, hose connection, adhesive fitting (with O-ring seal)
- PN 16 → Welding nipple, couplings, clamp, flange (with aseptic gasket seal)

Promag L

- EN 1092-1 (DIN 2501)
  - PN 6 (DN 350 to 2400 / 14 to 90")
  - PN 10 (DN 200 to 2400 / 8 to 90")
  - PN 16 (DN 25 to 300 / 1 to 12")
- EN 1092-1, lap joint flange, stampel plate
  - PN 10 (DN 25 to 300 / 1 to 12")
- ASME B16.5
  - Class 150 (1 to 24")
- AWWA
  - Class D (28 to 90")
- AS2129
  - Table E (350 to 1200 / 14 to 48")
- AS4087
  - PN 16 (350 to 1200 / 14 to 48")

Promag P

- EN 1092-1 (DIN 2501)
  - PN 10 (DN 200 to 600 / 8 to 24")
  - PN 16 (DN 65 to 600 / 3 to 24")
  - PN 25 (DN 200 to 600 / 8 to 24")
  - PN 40 (DN 25 to 150 / 1 to 6")

- ASME B 16.5
  - Class 150 (1 to 24")
  - Class 300 (1 to 6")
- JIS B2220
  - 10K (DN 50 to 300 / 2 to 12")
  - 20K (DN 25 to 300 / 1 to 12")
- AS 2129
  - Table E (DN 25 / 1"), 50 / 2")
- AS 4087
  - PN 16 (DN 50 / 2")

Promag W

- EN 1092-1 (DIN 2501)
  - PN 6 (DN 350 to 2000 / 14 to 84")
  - PN 10 (DN 200 to 2000 / 8 to 84")
  - PN 16 (DN 65 to 2000 / 3 to 84")
  - PN 25 (DN 200 to 1000 / 8 to 40")
  - PN 40 (DN 25 to 150 / 1 to 6")
- ASME B 16.5
  - Class 150 (1 to 24")
  - Class 300 (1 to 6")
- AWWA
  - Class D (28 to 78")
- JIS B2220
  - 10K (DN 50 to 300 / 2 to 12")
  - 20K (DN 25 to 300 / 1 to 12")
- AS 2129
  - Table E (DN 80 / 3", 100 / 4", 150 to 1200 / 6 to 48")
- AS 4087
  - PN 16 (DN 80 / 3", 100 / 4", 150 to 1200 / 6 to 48")

Pressure tightness

Promag D

Measuring tube: 0 mbar abs (0 psi abs) with a fluid temperature of ≤ 60 °C (140 °F)

Promag E (Measuring tube lining: PTFE)

Nominal diameter		Resistance of measuring tube lining to partial vacuum Limit values for abs. pressure [mbar] ([psi]) at various fluid temperatures							
		25 °C		80 °C		100 °C		110 °C	
		77 °F		176 °F		212 °F		230 °F	
[mm]	[inch]	[mbar]	[psi]			[mbar]	[psi]	[mbar]	[psi]
15	½"	0	0	0	0	0	0	100	1.45
25	1"	0	0	0	0	0	0	100	1.45
32	–	0	0	0	0	0	0	100	1.45
40	1 ½"	0	0	0	0	0	0	100	1.45
50	2"	0	0	0	0	0	0	100	1.45
65	–	0	0	*	*	40	0.58	130	1.89
80	3"	0	0	*	*	40	0.58	130	1.89
100	4"	0	0	*	*	135	1.96	170	2.47
125	–	135	1.96	*	*	240	3.48	385	5.58
150	6"	135	1.96	*	*	240	3.48	385	5.58
200	8"	200	2.90	*	*	290	4.21	410	5.95
250	10"	330	4.79	*	*	400	5.80	530	7.69

Nominal diameter		Resistance of measuring tube lining to partial vacuum Limit values for abs. pressure [mbar] ([psi]) at various fluid temperatures							
		25 °C		80 °C		100 °C		110 °C	
		77 °F		176 °F		212 °F		230 °F	
[mm]	[inch]	[mbar]	[psi]			[mbar]	[psi]	[mbar]	[psi]
300	12"	400	5.80	*	*	500	7.25	630	9.14
350	14"	470	6.82	*	*	600	8.70	730	10.59
400	16"	540	7.83	*	*	670	9.72	800	11.60
450	18"	Partial vacuum is impermissible!							
500	20"								
600	24"								
* No value can be quoted.									

Promag H (Measuring tube lining: PFA)

Nominal diameter		Resistance of measuring tube lining to partial vacuum Limit values for abs. pressure [mbar] ([psi]) at various fluid temperatures					
		25 °C	80 °C	100 °C	130 °C	150 °C	180 °C
[mm]	[inch]	77 °F	176 °F	212 °F	266 °F	302 °F	356 °F
2 to 100	1/12 to 4"	0	0	0	0	0	0

Promag L (Measuring tube lining: Polyurethane, Hard rubber)

Nominal diameter		Measuring tube lining	Resistance of measuring tube lining to partial vacuum Limit values for abs. pressure [mbar] ([psi]) at various fluid temperatures		
			25 °C	50 °C	80 °C
[mm]	[inch]		77 °F	122 °F	176 °F
25 to 1200	1 to 48"	25 to 1200	1 to 48"	0	–
350 to 2400	14 to 90"	Hard rubber	0	0	0

Promag L (Measuring tube lining: PTFE)

Nominal diameter		Resistance of measuring tube lining to partial vacuum Limit values for abs. pressure [mbar] ([psi]) at various fluid temperatures			
		25 °C		90 °C	
		77 °F		194 °F	
[mm]	[inch]	[mbar]	[psi]	[mbar]	[psi]
25	1"	0	0	0	0
32	–	0	0	0	0
40	1 ½"	0	0	0	0
50	2"	0	0	0	0
65	–	0	0	40	0.58
80	3"	0	0	40	0.58
100	4"	0	0	135	1.96
125	–	135	1.96	240	3.48
150	6"	135	1.96	240	3.48
200	8"	200	2.90	290	4.21
250	10"	330	4.79	400	5.80
300	12"	400	5.80	500	7.25

Promag P (Measuring tube lining: PFA)

Promag P Nominal diameter		Resistance of measuring tube lining to partial vacuum Limit values for abs. pressure [mbar] ([psi]) at various fluid temperatures					
		25 °C	80° C	100 °C	130 °C	150 °C	180 °C
[mm]	[inch]	77 °F	176° F	212 °F	266 °F	302 °F	356 °F
25	1"	0	0	0	0	0	0
32	-	0	0	0	0	0	0
40	1 ½"	0	0	0	0	0	0
50	2"	0	0	0	0	0	0
65	-	0	*	0	0	0	0
80	3"	0	*	0	0	0	0
100	4"	0	*	0	0	0	0
125	-	0	*	0	0	0	0
150	6"	0	*	0	0	0	0
200	8"	0	*	0	0	0	0
* No value can be quoted.							

Promag P (Measuring tube lining: PTFE)

Nominal diameter		Resistance of measuring tube lining to partial vacuum Limit values for abs. pressure [mbar] ([psi]) at various fluid temperatures									
		25 °C		80 °C		100 °C		130 °C		150 °C	180 °C
		77 °F		176 °F		212 °F		266 °F		302 °F	356 °F
[mm]	[inch]	[mbar]	[psi]			[mbar]	[psi]	[mbar]	[psi]		
25	1"	0	0	0	0	0	0	100	1.45	–	–
32	–	0	0	0	0	0	0	100	1.45	–	–
40	1 ½"	0	0	0	0	0	0	100	1.45	–	–
50	2"	0	0	0	0	0	0	100	1.45	–	–
65	–	0	0	*	*	40	0.58	130	1.89	–	–
80	3"	0	0	*	*	40	0.58	130	1.89	–	–
100	4"	0	0	*	*	135	1.96	170	2.47	–	–
125	–	135	1.96	*	*	240	3.48	385	5.58	–	–
150	6"	135	1.96	*	*	240	3.48	385	5.58	–	–
200	8"	200	2.90	*	*	290	4.21	410	5.95	–	–
250	10"	330	4.79	*	*	400	5.80	530	7.69	–	–
300	12"	400	5.80	*	*	500	7.25	630	9.14	–	–
350	14"	470	6.82	*	*	600	8.70	730	10.59	–	–
400	16"	540	7.83	*	*	670	9.72	800	11.60	–	–
450	18"	Partial vacuum is impermissible!									
500	20"										
600	24"										
* No value can be quoted.											

Promag W

Nominal diameter		Measuring tube lining	Resistance of measuring tube lining to partial vacuum Limit values for abs. pressure [mbar] ([psi]) at various fluid temperatures						
			25 °C	50 °C	80 °C	100 °C	130 °C	150 °C	180 °C
[mm]	[inch]		77 °F	122 °F	176 °F	212 °F	266 °F	302 °F	356 °F
25 to 1200	1 to 40"	Polyurethane	0	0	–	–	–	–	–
50 to 2000	2 to 78"	Hard rubber	0	0	0	–	–	–	–

Limiting flow

→ 🖹 17

Pressure loss

- No pressure loss if the sensor is installed in a pipe of the same nominal diameter (Promag H: only DN 8 and larger).
- Pressure losses for configurations incorporating adapters according to DIN EN 545 (see "Adapters" → 🖹 16)

10.1.10 Mechanical construction

Design, dimensions

The dimensions and installation lengths of the sensor and transmitter can be found in the "Technical Information" for the device in question. This document can be downloaded as a PDF file from www.endress.com. A list of the "Technical Information" documents available is provided in the "Documentation" section on → 🖹 127.

Weight (SI units)

Promag D

Weight data in kg				
Nominal diameter		Compact version	Remote version (without cable)	
[mm]	[inch]		Sensor	Transmitter
25	1"	4.5	2.5	6.0
40	1 ½"	5.1	3.1	6.0
50	2"	5.9	3.9	6.0
65	2 ½"	6.7	4.7	6.0
80	3"	7.7	5.7	6.0
100	4"	10.4	8.4	6.0
Transmitter Promag (compact version): 3.4 kg (Weight data valid without packaging material)				

Promag E

Weight data in kg							
Nominal diameter		Compact version					
		EN (DIN)				ASME	JIS
[mm]	[inch]	PN 6	PN 10	PN 16	PN 40	Class 150	10K
15	½"	–	–	–	6.5	6.5	6.5
25	1"	–	–	–	7.3	7.3	7.3
32	–	–	–	–	8.0	–	7.3
40	1½"	–	–	–	9.4	9.4	8.3
50	2"	–	–	–	10.6	10.6	9.3
65	–	–	–	12.0	–	–	11.1
80	3"	–	–	14.0	–	14.0	12.5
100	4"	–	–	16.0	–	16.0	14.7
125	–	–	–	21.5	–	–	21.0
150	6"	–	–	25.5	–	25.5	24.5
200	8"	–	45.0	46.0	–	45.0	41.9
250	10"	–	65.0	70.0	–	75.0	69.4
300	12"	–	70.0	81.0	–	110.0	72.3
350	14"	77.4	88.4	99.4	–	137.4	–
400	16"	89.4	104.4	120.4	–	168.4	–
450	18"	99.4	112.4	133.4	–	191.4	–
500	20"	114.4	132.4	182.4	–	228.4	–
600	24"	155.4	162.4	260.4	–	302.4	–

- Transmitter (compact version): 1.8 kg
- Weight data without packaging material

Weight data in kg								
Nominal diameter		Remote version (without cable)						Transmitter
		Sensor						
		EN (DIN)				ASME	JIS	
[mm]	[inch]	PN 6	PN 10	PN 16	PN 40	Class 150	10K	Wall-mount housing
15	½"	–	–	–	4.5	4.5	4.5	6.0
25	1"	–	–	–	5.3	5.3	5.3	
32	–	–	–	–	6.0	–	5.3	
40	1½"	–	–	–	7.4	7.4	6.3	
50	2"	–	–	–	8.6	8.6	7.3	
65	–	–	–	10.0	–	–	9.1	
80	3"	–	–	12.0	–	12.0	10.5	
100	4"	–	–	14.0	–	14.0	12.7	
125	–	–	–	19.5	–	–	19.0	
150	6"	–	–	23.5	–	23.5	22.5	
200	8"	–	43.0	44.0	–	43.0	39.9	
250	10"	–	63.0	68.0	–	73.0	67.4	
300	12"	–	68.0	79.0	–	108.0	70.3	
350	14"	73.1	84.1	95.1	–	133.1		
400	16"	85.1	100.1	116.1	–	164.1		
450	18"	95.1	108.1	129.1	–	187.1		
500	20"	110.1	128.1	178.1	–	224.1		
600	24"	158.1	158.1	256.1	–	298.1		

- Transmitter (remote version): 3.1 kg
- Weight data without packaging material

Promag H

Weight data in kg				
Nominal diameter		Compact version	Remote version (without cable)	
[mm]	[inch]	DIN	Sensor	Transmitter
2	1/12"	5.2	2	6.0
4	1/8"	5.2	2	6.0
8	3/8"	5.3	2	6.0
15	½"	5.4	1.9	6.0
25	1"	5.5	2.8	6.0
40	1 ½"	6.5	4.5	6.0
50	2"	9.0	7.0	6.0
65	2 ½"	9.5	7.5	6.0
80	3"	19.0	17.0	6.0
100	4"	18.5	16.5	6.0
Transmitter Promag (compact version): 3.4 kg (Weight data valid for standard pressure ratings and without packaging material)				

Promag L

Weight data in kg												
Nominal diameter		Compact version (including transmitter)[1]										
[mm]	[inch]	EN (DIN)						ASME/ AWWA		AS		
25	1"	PN 6	–	PN 10	–	PN 16	7.3	ASME / Class 150	7.9	PN 16	–	Tabelle E	–
32	1 ¼"		–		–		8.0		–		–		–
40	1 ½"		–		–		9.0		7.5		–		–
50	2"		–		–		9.4		7.6		–		–
65	2 ½"		–		–		10.4		–		–		–
80	3"		–		–		12.4		12.8		–		–
100	4"		–		–		14.4		16.1		–		–
125	5"		–		–		15.9		–		–		–
150	6"		–		–		23.9		24.4		–		–
200	8"		–		43.4		44.9		49.6		–		–
250	10"		–		63.4		70.7		75.1		–		–
300	12"		–		68.4		85.8		100		–		–
350	14"		77.4		88.4		103		137		99.4		99.4
375	15"		–		–		–		–		105		–
400	16"		89.4		104		124		168		120		120
450	18"		99.4		112		139		191		133		143
500	20"		114		132		174		228		182		182
600	24"		155		162		303		302		260		260
700	28"		190		240		288	AWWA / Class D	266		367		346
750	30"		–		–		–		318		445		433
800	32"		240		315		364		383		503		493
900	36"		308		393		456		470		702		690
1000	40"		359		468		579		587		759		761
1050	42"		–		–		–		670		–		–
1200	48"		529		717		866		901		–		1237
–	54"		–		–		–		1273		–		–
1400	–		784		1114		1274		–		–		–
–	60"		–		–		–		1594		–		–
1600	–		1058		1624		1872		–		–		–
1650	66"		–		–		–		2131		–		–
1800	72"		1418		2107		2409		2568		–		–
2000	78"		1877		2630		2997		3113		–		–
–	84"		–		–		–		3755		–		–
2200	–		2512		3422		–		–		–		–
–	90"		–		–		–		4797		–		–
2400	–		2996		4094		–		–		–		–
Transmitter Promag (compact version): 3.1 kg (Weight data valid without packaging material)													

1) Lap joint flanges / welded flanges DN > 300 (12")

Weight data in kg

Nominal diameter		Remote version (sensor plus sensor housing without cable)[1]											
[mm]	[inch]	EN (DIN)						ASME/ AWWA		AS			
25	1"	PN 6	–	PN 10	–	PN 16	5.3	ASME / Class 150	5.9	PN 16	–	Tabelle E	–
32	1 ¼"		–		–		6.0		–		–		–
40	1 ½"		–		–		7.0		5.5		–		–
50	2"		–		–		7.4		5.6		–		–
65	2 ½"		–		–		8.4		–		–		–
80	3"		–		–		10.4		10.8		–		–
100	4"		–		–		12.4		14.1		–		–
125	5"		–		–		13.9		–		–		–
150	6"		–		–		21.9		22.4		–		–
200	8"		–		41.4		42.9		47.6		–		–
250	10"		–		61.4		68.7		73.1		–		–
300	12"		–		66.4		83.8		98		–		–
350	14"		75.4		86.4		103		135		97.4		97.4
375	15"		–		102		–		–		103		–
400	16"		87.4		102		124		166		118		118
450	18"		97.4		110		139		189		131		141
500	20"		112		130		174		226		180		180
600	24"		153		160		303		300		258		258
700	28"		188		238		288	AWWA / Class D	264		365		344
750	30"		–		–		–		316		443		431
800	32"		238		313		364		381		501		491
900	36"		306		391		456		468		700		688
1000	40"		357		466		579		585		757		759
1050	42"		–		–		–		668		–		–
1200	48"		527		715		866		899				1235
–	54"		–		–		–		1271		–		–
1400	–		782		1112		1274		–		–		–
–	60"		–		–		–		1592		–		–
1600	–		1056		1622		1872		–		–		–
1650	66"		–		–		–		2129		–		–
1800	72"		1416		2105		2409		2566		–		–
2000	78"		1875		2628		2997		3111		–		–
–	84"		–		–		–		3753		–		–
2200	–		2510		3420		–		–		–		–
–	90"		–		–		–		4795		–		–
2400	–		2994		4092		–		–		–		–

Transmitter Promag (remote version): 3.4 kg
(Weight data valid without packaging material)

1) Lap joint flanges / welded flanges DN > 300 (12")

Weight data in kg						
Nominal diameter		Compact version[1]		Remote version (without cable)[1]		
[mm]	[inch]	EN (DIN)		Sensor EN (DIN)		Transmitter
25	1"	PN 10	5.8	PN 10	3.8	4.2
32	1 ¼"		5.4		3.4	4.2
40	1 ½"		6.3		4.7	4.2
50	2"		5.4		3.4	4.2
65	2 ½"		6.2		4.2	4.2
80	3"		7.2		5.2	4.2
100	4"		9.7		7.7	4.2
125	5"		13.2		11.2	4.2
150	6"		17.2		15.2	4.2
200	8"		35.7		33.7	4.2
250	10"		54.2		52.2	4.2
300	12"		55.2		53.2	4.2
Transmitter Promag (compact version): 1.8 kg (Weight data valid for standard pressure ratings and without packaging material)						

1) Lap joint flanges, stamped plate

Promag P

Weight data in kg													
Nominal diameter		Compact version						Remote version (without cable)					
								Sensor					Trans-mitter
[mm]	[inch]	EN (DIN) / AS*		JIS		ASME/ AWWA		EN (DIN) / AS*		JIS		ASME/ AWWA	
15	½"	PN 40	6.5	10K	6.5	Class 150	6.5	PN 40	4.5	10K	4.5	Class 150	4.5	6.0
25	1"		7.3		7.3		7.3		5.3		5.3		5.3	6.0
32	1 ¼"		8.0		7.3		–		6.0		5.3		–	6.0
40	1 ½"		9.4		8.3		9.4		7.4		6.3		7.4	6.0
50	2"		10.6		9.3		10.6		8.6		7.3		8.6	6.0
65	2 ½"	PN 16	12.0		11.1		–	PN 16	10.0		9.1		–	6.0
80	3"		14.0		12.5		14.0		12.0		10.5		12.0	6.0
100	4"		14.4		14.7		16.0		14.0		12.7		14.0	6.0
125	5"		16.0		21.0		–		19.5		19.0		–	6.0
150	6"		21.5		24.5		25.5		23.5		22.5		23.5	6.0
200	8"	PN 10	45		41.9		45	PN 10	43		39.9		43	6.0
250	10"		65		69.4		75		63		67.4		73	6.0
300	12"		70		72.3		110		68		70.3		108	6.0
350	14"		115				175		113				173	6.0
400	16"		135				205		133				203	6.0
450	18"		175				255		173				253	6.0
500	20"		175				285		173				283	6.0
600	24"		235				405		233				403	6.0
Transmitter Promag (compact version): 3.4 kg High-temperature version: + 1.5 kg (Weight data valid for standard pressure ratings and without packaging material) * Flanges according to AS are only available for DN 25 and 50.														

Promag W

Weight data in kg

Nominal diameter		Compact version						Remote version (without cable)						
								Sensor						Trans-mitter
[mm]	[inch]	EN (DIN) / AS*		JIS		ASME/ AWWA		EN (DIN) / AS*		JIS		ASME/ AWWA		
25	1"	PN 40	7.3	10K	7.3	Class 150	7.3	PN 40	5.3	10K	5.3	Class 150	5.3	6.0
32	1 ¼"		8.0		7.3		–		6.0		5.3		–	6.0
40	1 ½"		9.4		8.3		9.4		7.4		6.3		7.4	6.0
50	2"		10.6		9.3		10.6		8.6		7.3		8.6	6.0
65	2 ½"	PN 16	12.0		11.1		–	PN 16	10.0		9.1		–	6.0
80	3"		14.0		12.5		14.0		12.0		10.5		12.0	6.0
100	4"		16.0		14.7		16.0		14.0		12.7		14.0	6.0
125	5"		21.5		21.0		–		19.5		19.0		–	6.0
150	6"		25.5		24.5		25.5		23.5		22.5		23.5	6.0
200	8"	PN 10	45		41.9		45	PN 10	43		39.9		43	6.0
250	10"		65		69.4		65		63		67.4		73	6.0
300	12"		70		72.3		110		68		70.3		108	6.0
350	14"		115				175		113				173	6.0
400	16"		135				205		133				203	6.0
450	18"		175				255		173				253	6.0
500	20"		175				285		173				283	6.0
600	24"		235				405		233				403	6.0
700	28"		355			Class D	400		353			Class D	398	6.0
–	30"		–				460		–				458	6.0
800	32"		435				550		433				548	6.0
900	36"		575				800		573				798	6.0
1000	40"		700				900		698				898	6.0
–	42"	PN 6	–				1100	PN 6	–				1098	6.0
1200	48"		850				1400		848				1398	6.0
–	54"		–				2200		–				2198	6.0
1400	–		1300				–		1298				–	6.0
–	60"		–				2700		–				2698	6.0
1600	–		1700				–		1698				–	6.0
–	66"		–				3700		–				3698	6.0
1800	72"		2200				4100		2198				4098	6.0
–	78"		–				4600		–				4598	6.0
2000	–		2800				–		2798				–	6.0

Transmitter Promag (compact version): 3.4 kg
(Weight data valid for standard pressure ratings and without packaging material)
*Flanges according to AS are only available for DN 80, 100, 150 to 400, 500 and 600

Weight (US units)

Promag D

Weight data in lbs				
Nominal diameter		Compact version	Remote version (without cable)	
[mm]	[inch]		Sensor	Transmitter
25	1"	10	6	13
40	1 ½"	11	7	13
50	2"	13	9	13
80	3"	17	13	13
100	4"	23	19	13
Transmitter Promag (compact version): 7.5 lbs (Weight data valid without packaging material)				

Promag E (ASME)

Weight data in lbs				
Nominal diameter		Compact version	Remote version (without cable)	
			Sensor	Transmitter
		ASME	ASME	
[mm]	[inch]	Class 150	Class 150	Wall-mount housing
15	½"	14.3	9.92	13.2
25	1"	16.1	11.7	
40	1½"	20.7	16.3	
50	2"	23.4	19.0	
80	3"	30.9	26.5	
100	4"	35.3	30.9	
150	6"	56.2	51.8	
200	8"	99.2	94.8	
250	10"	165.4	161.0	
300	12"	242.6	238.1	
350	14"	303.0	293.5	
400	16"	371.3	361.8	
450	18"	422.0	412.6	
500	20"	503.6	494.1	
600	24"	666.8	657.3	

- Transmitter: 4.0 lbs (compact version); 6.8 lbs (remote version)
- Weight data without packaging material

Promag H

Weight data in lbs				
Nominal diameter		Compact version	Remote version (without cable)	
[mm]	[inch]		Sensor	Transmitter
2	1/12"	11	4	13
4	1/8"	11	4	13
8	3/8"	12	4	13
15	½"	12	4	13
25	1"	12	6	13
40	1 ½"	14	10	13
50	2"	20	15	13
65	2 ½"	21	17	13
80	3"	42	37	13
100	4"	41	36	13
Transmitter Promag (compact version): 7.5 lbs (Weight data valid for standard pressure ratings and without packaging material)				

Promag L (ASME/AWWA)

Weight data in lbs					
Nominal diameter		Compact version[1]		Remote version1)	
[mm]	[inch]	ASME/AWWA		ASME/AWWA	
25	1"	ASME / Class 150	17.4	ASME / Class 150	13
32	1 ¼"		–		–
40	1 ½"		16.5		12.1
50	2"		16.8		12.3
65	2 ½"		–		–
80	3"		28.2		23.8
100	4"		35.5		31.1
125	5"		–		–
150	6"		53.8		49.4
200	8"		109		105
250	10"		166		161
300	12"		221		216
350	14"		302		298
375	15"		–		–
400	16"		370		366
450	18"		421		417
500	20"		503		498
600	24"		666		662
700	28"	AWWA / Class D	587	AWWA / Class D	582
750	30"		701		697
800	32"		845		840
900	36"		1036		1032
1000	40"		1294		1290
1050	42"		1477		1473
1200	48"		1987		1982
–	54"		2807		2803
1400	–		–		–
–	60"		3515		3510
1600	–		–		–
1650	66"		4699		4694
1800	72"		5662		5658
2000	78"		6864		6860
–	84"		8280		8275
2200	–		–		–
–	90"		10577		10573
2400	–		–		–
Transmitter Promag (compact version): 4.0 lbs Transmitter Promag (remote version): 6.8 lbs (Weight data valid without packaging material)					

1) Lap joint flanges / welded flanges DN > 300 (12")

Promag P (ASME/AWWA)

Weight data in lbs						
Nominal diameter		Compact version		Remote version (without cable)		
[mm]	[inch]				Sensor	Transmitter
15	½"	Class 150	14	Class 150	10	13
25	1"		16		12	13
40	1 ½"		21		16	13
50	2"		23		19	13
80	3"		31		26	13
100	4"		35		31	13
150	6"		56		52	13
200	8"		99		95	13
250	10"		165		161	13
300	12"		243		238	13
350	14"		386		381	13
400	16"		452		448	13
450	18"		562		558	13
500	20"		628		624	13
600	24"		893		889	13
Transmitter Promag (compact version): 7.5 lbs High-temperature version: 3.3 lbs (Weight data valid for standard pressure ratings and without packaging material)						

Promag W (ASME/AWWA)

Weight data in lbs						
Nominal diameter		Compact version		Remote version (without cable)		
[mm]	[inch]			Sensor		Transmitter
25	1"	Class 150	16	Class 150	12	13
40	1 ½"		21		16	13
50	2"		23		19	13
80	3"		31		26	13
100	4"		35		31	13
150	6"		56		52	13
200	8"		99		95	13
250	10"		143		161	13
300	12"		243		238	13
350	14"		386		381	13
400	16"		452		448	13
450	18"		562		558	13
500	20"		628		624	13
600	24"		893		889	13
700	28"	Class D	882	Class D	878	13
–	30"		1014		1010	13
800	32"		1213		1208	13
900	36"		1764		1760	13
1000	40"		1985		1980	13
–	42"		2426		2421	13
1200	48"		3087		3083	13
–	54"		4851		4847	13
–	60"		5954		5949	13
–	66"		8159		8154	13
1800	72"		9041		9036	13
–	78"		10143		10139	13

Transmitter Promag (compact version): 7.5 lbs
(Weight data valid for standard pressure ratings and without packaging material)

Material

Promag D

- Transmitter housing: powder-coated die-cast aluminum
- Sensor housing: powder-coated die-cast aluminum
- Measuring tube: polyamide, O-rings EPDM
  (Drinking water approvals: WRAS BS 6920, ACS, NSF 61, KTW/W270)
- Electrodes: 1.4435 (316, 316L)
- Ground disks: 1.4301 (304)

Promag E

- Transmitter housing
  - Compact housing: powder-coated die-cast aluminum
  - Wall-mount housing: powder-coated die-cast aluminum
- Sensor housing
  - DN 25 to 300 (1 to 12"): powder-coated die-cast aluminum
  - DN 350 to 600 (14 to 24"): with protective lacquering
- Measuring tube
  - DN ≤ 300 (12"): stainless steel 1.4301 (304) or 1.4306 (304L) (with Al/Zn protective coating)
  - DN ≥ 350 (14"): stainless steel 1.4301 (304) or 1.4306 (304L) (with protective lacquering)
- Electrodes: 1.4435 (316, 316L), Alloy C22, Tantalum
- Flanges (with protective lacquering)
  - EN 1092-1 (DIN2501): RSt37-2 (S235JRG2); Alloy C22; Fe 410W B
  - ANSI: A105
  - JIS: RSt37-2 (S235JRG2); HII
- Seals: to DIN EN 1514-1
- Ground disks: 1.4435 (316, 316L) or Alloy C22

Promag H

- Transmitter housing:
  - Compact housing: powder-coated die-cast aluminum
    or stainless steel field housing (1.4301 (316L))
  - Wall-mounted housing: powder-coated die-cast aluminum
  - Window material: glas or polycarbonate
- Sensor housing: stainless steel 1.4301 (304)
- Wall mounting kit: stainless steel 1.4301 (304)
- Measuring tube: stainless steel 1.4301 (304)
- Liner: PFA (USP class VI; FDA 21 CFR 177.1550: 3A)
- Electrodes:
  - Standard: 1.4435 (316, 316L)
  - Option: Alloy C22, Tantalum, Platinum
- Flange:
  - All connections stainless-steel 1.4404 (316L)
  - EN (DIN), ASME, JIS made of PVDF
  - Adhesive fitting made of PVC
- Seals
  - DN 2 to 25 (1/12 to 1"): O-ring (EPDM, Viton, Kalrez), gasket seal (EPDM*, Viton, Silicone*)
  - DN 40 to 100 (1½ to 4"): gasket seal (EPDM*, Silicone*)
    * = USP class VI; FDA 21 CFR 177.2600: 3A
- Ground rings: 1.4435 (316, 316L) (optional: Tantalum, Alloy C22)

Promag L

- Transmitter housing:
  - Compact housing: powder-coated die-cast aluminum
  - Wall-mounted housing: powder-coated die-cast aluminum
- Sensor housing
  - DN 25 to 300 (1 to 12"): powder-coated die-cast aluminum
  - DN 350 to 1200 (14 to 48"): with protective lacquering

- Measuring tube:
  - DN ≤ 300 (12"); stainless steel 1.4301 (304) or 1.4306 (304L)
  - DN ≥ 350 (14"); stainless steel 202 or 304
- Electrodes: 1.4435 (316, 316L), Alloy C22
- Flange
  - EN 1092-1 (DIN 2501): DN ≤ 300: 1.4306; 1.4307; 1.4301 (304); 1.0038 (S235JRG2)
  - EN 1092-1 (DIN 2501): DN ≥ 350: A105; 1.0038 (S235JRG2)
  - AWWA: A181/A105; 1.0425 (316L) (P265GH); 1.0044 (S275JR)
  - AS 2129: A105; 1.0345 (P235GH); 1.0425 (316L) (P265GH); 1.0038 (S235JRG2); FE 410 WB
  - AS 4087: A105; 1.0425 (316L) (P265GH); 1.0044 (S275JR)
- Seals: to DIN EN 1514-1
- Ground disks: 1.4435 (316, 316L) or Alloy C22

Promag P

- Transmitter housing:
  - Compact housing: powder-coated die-cast aluminum
  - Wall-mounted housing: powder-coated die-cast aluminum
- Sensor housing
  - DN 15 to 300 (½ to 12"): powder-coated die-cast aluminum
  - DN 350 to 2000 (14 to 84"): with protective lacquering
- Measuring tube
  - DN ≤ 300 (12"): stainless steel 1.4301 (304) or 1.4306 (304L); for flanges made of carbon steel with Al/Zn protective coating
  - DN ≥ 350 (14"): stainless steel 1.4301 (304) or 1.4306 (304L); for flanges made of carbon steel with Al/Zn protective coating
- Electrodes: 1.4435 (316, 316L), Platinum, Alloy C22, Tantalum, Titanium
- Flange
  - EN 1092-1 (DIN2501): 1.4571 (316L); RSt37-2 (S235JRG2); Alloy C22; FE 410W B (DN ≤ 300 (12") with Al/Zn protective coating; DN ≥ 350 (14") with protective lacquering)
  - ASME: A105; F316L (DN ≤ 300 (12") with Al/Zn protective coating; DN ≥ 350 (14") with protective lacquering)
  - AWWA: 1.0425
  - JIS: RSt37-2 (S235JRG2); HII; 1.0425 (316L) (DN ≤ 300 (12") with Al/Zn protective coating; DN ≥ 350 (14") with protective lacquering)
  - AS 2129
    - DN 25 (1"): A105 or RSt37-2 (S235JRG2)
    - DN 40 (1½"): A105 or St44-2 (S275JR)
  - AS 4087: A105 or St44-2 (S275JR)
- Seals: to DIN EN 1514-1
- Ground disks: 1.4435 (316, 316L) or Alloy C22

Promag W

- Transmitter housing:
  - Compact housing: powder-coated die-cast aluminum
  - Wall-mounted housing: powder-coated die-cast aluminum
- Sensor housing
  - DN 25 to 300 (1 to 12"): powder-coated die-cast aluminum
  - DN 350 to 2000 (14 to 84"): with protective lacquering

- Measuring tube
  - DN ≤ 300 (12"): stainless steel 1.4301 (304) or 1.4306 (304L)
    (for flanges made of carbon steel with Al/Zn protective coating)
  - DN ≥ 350 (14"): stainless steel 1.4301 (304) or 1.4306 (304)
    (for flanges made of carbon steel with protective lacquering)
- Electrodes: 1.4435 (316, 316L) or Alloy C22, Tantalum
- Flange
  - EN 1092-1 (DIN2501): 1.4571 (316L); RSt37-2 (S235JRG2); Alloy C22; FE 410 WB
    (DN ≤ 300 (12") with Al/Zn protective coating; DN ≥ 350 (14") with protective lacquering)
  - ASME: A105; F316L
    (DN ≤ 300 (12") with Al/Zn protective coating; DN ≥ 350 (14") with protective lacquering)
  - AWWA: 1.0425
  - JIS: RSt37-2 (S235JRG2); HII; 1.0425 (316L)
    (DN ≤ 300 (12") with Al/Zn protective coating; DN ≥ 350 (14") with protective lacquering)
  - AS 2129
    - DN 150 to 300 (6 to 12"), DN 600 (24"): A105 or RSt37-2 (S235JRG2)
    - DN 80 to 100 (3 to 4"), 350 to 500 (14 to 20"): A105 or St44-2 (S275JR)
  - AS 4087: A105 or St44-2 (S275JR)
- Seals: to DIN EN 1514-1
- Ground disks: 1.4435 (316, 316L), Alloy C22, Titanium, Tantalum

Pressure-temperature ratings

The material load diagrams (pressure-temperature graphs) for the process connections are to be found in the "Technical Information" documents of the device in question:
List of supplementary documentation → 127.

Fitted electrodes

Promag D

- 2 measuring electrodes for signal detection

Promag E/L/P/W

- 2 measuring electrodes for signal detection
- 1 EPD electrode for empty pipe detection
- 1 reference electrode for potential equalization

Promag H

- 2 measuring electrodes for signal detection
- 1 EPD electrode for empty pipe detection (apart from DN 2 to 15)

Process connections

Promag D

Wafer version → without process connections

Promag E

Flange connections:
- EN 1092-1 (DIN 2501)
  - DN ≤ 300 (12") = form A
  - DN ≥ 350 (14") = flat face
  - DN 65 PN 16 and DN 600 PN 16 only as per EN 1092-1
- ASME
- JIS

Promag H

With O-ring:
- Weld nipple DIN (EN), ISO 1127, ODT/SMS
- Flange EN (DIN), ASME, JIS
- Flange made of PVDF EN (DIN), ASME, JIS
- External thread
- Internal thread
- Hose connection
- PVC adhesive fitting

With gasket seal:
- Weld nipple DIN 11850, ODT/SMS
- Clamp ISO 2852, DIN 32676, L14 AM7
- Threaded joint DIN 11851, DIN 11864-1, ISO 2853, SMS 1145
- Flange DIN 11864-2

Promag L

Flange connection:
- EN 1092-1 (DIN 2501)
  - DN ≤ 300 (12") = form A
  - DN ≥ 350 (14") = form B
- ASME B16.5
- AWWA C207
- AS

Promag P/W

Flange connections:
- EN 1092-1 (DIN 2501)
  - DN ≤ 300 = form A
  - DN ≥ 350 = flat face
  - DN 65 PN 16 and DN 600 PN 16 only as per EN 1092-1
- ASME
- AWWA (only Promag W)
- JIS
- AS

Surface roughness

All data relate to parts in contact with fluid.

- Liner → PFA: ≤ 0.4 µm (15 µin)
- Electrodes: 0.3 to 0.5 µm (12 to 20 µin)
- Process connection made of stainless-steel (Promag H):
  - with O-ring seal: ≤ 1.6 µm (63 µin)
  - with aseptic gasket seal: ≤ 0.8 µm (31.5 µin)
  - optional: ≤ 0.38 µm (15 µin)

10.1.11 Human interface

Display elements

- Liquid crystal display: illuminated, two-line, 16 characters per line
- Custom configurations for presenting different measured-value and status variables
- 2 totalizers

Note!
At ambient temperatures below −20 (−4 °F) the readability of the display may be impaired.

Operating elements

- Local operation with three keys (⊟ ⊞ Ⓔ)
- "Quick Setup" menus for straightforward commissioning

Language groups

Language groups available for operation in different countries:
- Western Europe and America (WEA):
  English, German, Spanish, Italian, French, Dutch and Portuguese
- Eastern Europe/Scandinavia (EES):
  English, Russian, Polish, Norwegian, Finnish, Swedish and Czech
- Southeast Asia (SEA):
  English, Japanese, Indonesian

Note!
You can change the language group via the operating program "FieldCare".

Remote operation

Operation via HART protocol and Fieldtool

10.1.12 Certificates and approvals

CE mark

The measuring system is in conformity with the statutory requirements of the EC Directives. Endress+Hauser confirms successful testing of the device by affixing to it the CE mark.

C-tick mark

The measuring system meets the EMC requirements of the "Australian Communications and Media Authority (ACMA)".

Ex approval

Information about currently available Ex versions (ATEX, FM, CSA, IECEx, NEPSI etc.) can be supplied by your Endress+Hauser Sales Center on request. All explosion protection data are given in a separate documentation which is available upon request.

Sanitary compatibility

Promag D/E/L/P/W

No applicable approvals or certification

Promag H

- 3A authorization and EHEDG-certified
- Seals: in conformity with FDA (except Kalrez seals)

Drinking water approval

Promag D/L/W

- WRAS BS 6920
- ACS
- NSF 61
- KTW/W270

Promag E/H/P

No drinking water approval

Pressure Equipment Directive

Promag D/L

No pressure measuring device approval

Promag E/H/P/W

The devices can be ordered with or without a PED approval. If a device with a PED approval is required, this must be explicitly stated in the order. For devices with nominal diameters less than or equal to DN 25 (1"), this is neither possible nor necessary.

- With the PED/G1/x (x = category) marking on the sensor nameplate, Endress+Hauser confirms compliance with the "Essential Safety Requirements" specified in Annex I of the Pressure Equipment Directive 97/23/EC.
- Devices bearing this marking (PED) are suitable for the following types of medium: Media in Group 1 and 2 with a vapor pressure greater than, or smaller and equal to 0.5 bar (7.3 psi)
- Devices not bearing this marking (PED) are designed and manufactured according to good engineering practice. They meet the requirements of Art.3 Section 3 of the Pressure Equipment Directive 97/23/EC. The range of application is indicated in tables 6 to 9 in Annex II of the Pressure Equipment Directive.

Other standards and guidelines

- EN 60529
  Degrees of protection by housing (IP code).
- EN 61010-1
  Safety requirements for electrical equipment for measurement, control and laboratory use
- IEC/EN 61326
  Electromagnetic compatibility (EMC requirements)
- ASME/ISA-S82.01
  Safety Standard for Electrical and Electronic Test, Measuring, Controlling and related Equipment - General Requirements. Pollution degree 2, Installation Category II.
- CAN/CSA-C22.2 (No. 1010.1-92)
  Safety requirements for Electrical Equipment for Measurement and Control and Laboratory Use. Pollution degree 2, Installation Category I.
- NAMUR NE 21
  Electromagnetic compatibility (EMC) of industrial process and laboratory control equipment.
- NAMUR NE 43
  Standardization of the signal level for the breakdown information of digital transmitters with analog output signal.

10.1.13 Ordering information

Detailed ordering information is available from the following sources:
- In the Product Configurator on the Endress+Hauser website: www.endress.com → Select country → Instruments → Select device → Product page function: Configure this product
- From your Endress+Hauser Sales Center: www.endress.com/worldwide

Note!
Product Configurator - the tool for individual product configuration
- Up-to-the-minute configuration data
- Depending on the device: Direct input of measuring point-specific information such as measuring range or operating language
- Automatic verification of exclusion criteria
- Automatic creation of the order code and its breakdown in PDF or Excel output format
- Ability to order directly in the Endress+Hauser Online Shop

10.1.14 Accessories

Various accessories, which can be ordered separately from Endress+Hauser, are available for the transmitter and the sensor → 🖹 79.
Your Endress+Hauser service organization can provide detailed information on the specific order codes on request.

10.1.15 Documentation

- Flow measuring technology (FA00005D/06)
- Technical Information Promag 50D (TI00082D/06)
- Technical Information Promag 50E (TI01161D/06)
- Technical Information Promag 50L (TI00097D/06)
- Technical Information Promag 50/53H (TI00048D/06)
- Technical Information Promag 50/53P (TI00047D/06)
- Technical Information Promag 50/53W (TI00046D/06)
- Description of Device Functions Promag 50 HART (BA00049D/06)
- Supplementary documentation on Ex-ratings: ATEX, FM, CSA, etc.

Index

A

Accessories 79
Adapters 16
Ambient temperature range 102
Applicator (selection and configuration software) 81
Approvals 8, 125

C

Cable entry 101
Cable specifications 52
Calibration factor 7–8
CE mark 125
CE mark (Declaration of Conformity) 8
Centering sleeve
  Promag D 21
Certificates 8, 125
CIP cleaning 103
Cleaning (exterior cleaning) 78
Code entry (function matrix) 63
Commissioning
  General 73
  Two current outputs 75
Commissioning Quick Setup menu 74
Commubox FXA 195 (electrical connection) 56, 80
Communication 65
Conductivity of fluid 106
Connecting cable 19
Connection
  Check 60
  HART 55
  Remote version 47
C-tick mark 125
Current output
  Configuration (active/passive) 75

D

Declaration of Conformity (CE mark) 8
Degree of protection 59, 103
Design 110
Device description files 66
Device variable via HART protocol 66
Display
  Elements 61, 125
  Turning the display 43
Documentation 127
Drinking water approval 126
Druckgerätezulassung 126

E

Electrical connection
  Commubox FXA 191 56
  HART handheld terminal 55
Electrical connections 100
Electrodes
  EPD electrode 14
EMC (electromagnetic compatibility) 52, 103
Empty-pipe/full-pipe adjustment 76
Environment 102
Error message types 64
Error messages
  Process error (application error) 85
  System errors (device errors) 83
Europäische Druckgeräterichtlinie 126
Ex approval 125
Exterior cleaning 78

F

Field Xpert SFX100 55
FieldCare 65, 81
Fieldcheck (tester and simulator) 81
Fitted electrodes 123
Flow rate/limits 17
Function matrix
  Brief operating instructions 62
Fuse, replacing 94
FXA193 81
FXA195 80

G

Galvanic isolation 100
Ground cable
  Promag E 23
  Promag L 29
  Promag P 33
  Promag W 37
Grounding rings
  Promag H 27

H

HART
  Command classes 65
  Commands 67
  Communicator DXR 375 65
  Device description files 66
  Device status / Error messages 71
  Write protection 66
Hazardous substances 97
High-temperature version 34
HOME position (operating mode) 61

I

Incoming acceptance 10
Inlet/outlet run 15
Installation
  Promag D 20
  Promag E 23
  Promag H 26
  Promag L 29
  Promag P 33
  Promag W 37
Installation conditions
  Adapters 16
  Dimensions 12
  Down pipe 13

EPD electrode 14
Foundations, supports 16
Inlet/outlet run 15
Installation of pumps 12
Mounting location 12
Orientation 14
Partially filled pipes 13
Vibrations 15
Installing the wall-mount housing 44

L
Language groups 125
Load 100
Local display
See Display
Low flow cut off 100

M
Maintenance 78
Material 120
Maximum measured error 102
Measured variable 99
Measuring principle 99
Measuring range 99
Measuring system 99
Mechanical construction 110
Medium pressure range 106
Medium temperature range 104
Mounting bolts
Promag D 21
Mounting the sensor
See Installing the sensor

N
Nameplate specifications
Connections 8
Sensor 7
Transmitter 6
Nominal diameter and flow rate
Promag W 17

O
Operable flow range 99
Operating elements 61, 125
Operation 61
Device description files 66
FieldCare 65
Operating programs 65
Operational safety 4
Order code
Accessories 79
Sensor 8
Ordering code
Sensor 7
Transmitter 6
Output 99

P
Performance characteristics 101
Pig (cleaning) 28
Post-installation
Check 46
Potential equalization 56
Power consumption 101
Power supply 100
Power supply failure 101
Pressure Equipment Directive 126
Pressure loss
Adapters (reducers, expanders) 16
Pressure tightness 107
Pressure-temperature ratings 123
Process 104
Process connections 123
Process error messages 85
Process errors (definition) 64
Programming mode
Disable 63
Enable 63
Promag D
Centering sleeve 21
Installation 20
Mounting bolts 21
Seals 20
Tightening torques 22
Promag D mounting kit 20
Promag E
Ground cable 23
Installation 23
Seals 23
Tightening torques 24
Promag H
Cleaning with pigs 28
Grounding ring (DN 2 to 25, 1/12" to 1") 27
Installation 26
Seals 26
Weld nipple 28
Promag L
Ground cable 29
Installation 29
Seals 29
Tightening torques 30
Promag P
Ground cable 33
High-temperature version 34
Installation 33
Seals 33
Tightening torques 34
Promag W
Ground cable 37
Installation 37
Seals 37
Tightening torques 37

Q
Quick Setup 74

R
Reference operating conditions 101
Registered trademarks 9

Remote operation 125
Remote version
Connection 47
Repair 97
Repeatability 102
Replacing
Exchangeable electrode 95
Response to errors 87
Returning devices 97

S

Safety icons 5
Safety instructions 4
Sanitary compatibility 125
S-DAT (HistoROM) 77
Seals 78
Promag D 20
Promag E 23
Promag H 26
Promag L 29
Promag P 33
Promag W 37
Serial number
Sensor 7–8
Transmitter 6
Service interface FXA 193 81
Shock resistance 103
Signal on alarm 100
SIP cleaning 103
Software
Amplifier display 73
Spare parts 89
Standards, guidelines 126
Storage temperature 103
Supply voltage 100
Surface roughness 124
Switching on (measuring device) 73
System error messages 83
System errors (definition) 64

T

Technical data 99
Temperature
Ambient 102
Medium 104
Storage 103
Tightening torques
Promag D 22
Promag E 24
Promag L 30
Promag P 34
Promag W 37
Transmitter
Electrical connection 53
Installing the wall-mount housing 44
Turning the field housing (aluminum) 42
Turning the field housing (stainless steel) 42
Troubleshooting 82
Types of error (system and process errors) 64

V

Vibration resistance 103
Vibrations 15

W

Wall-mount housing, installing 44
Weight 110, 117
Wiring 47

www.addresses.endress.com

Endress+Hauser

People for Process Automation

This page is intentionally left blank

Level Pressure Flow Temperature Liquid Analysis Registration Systems Components Services Solutions

Description of Device Functions

Proline Promag 50

Electromagnetic Flow Measuring System

HART® FIELD COMMUNICATION PROTOCOL

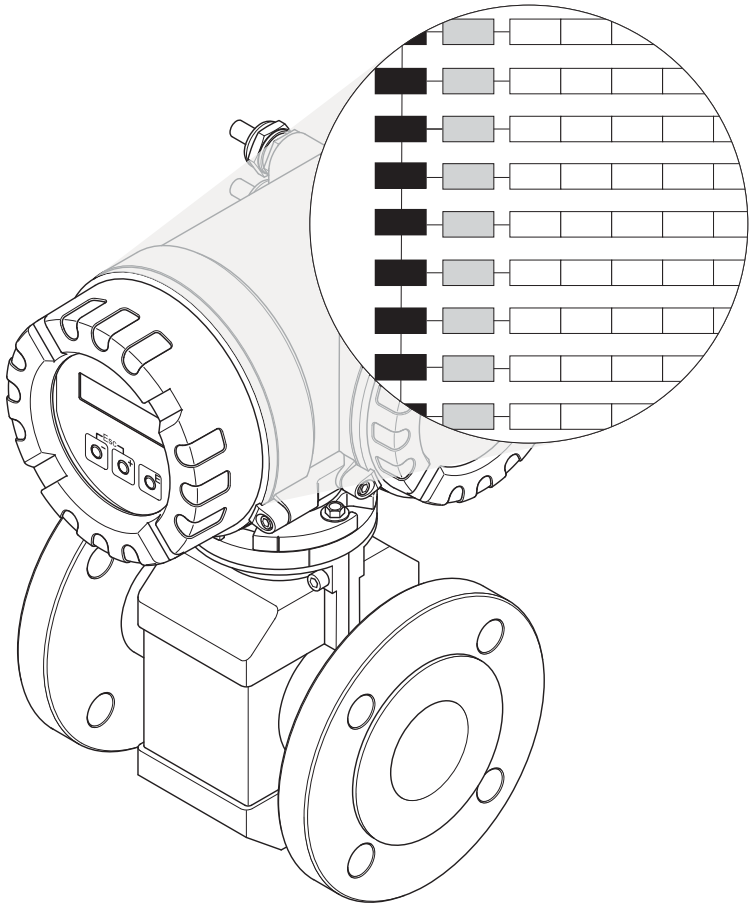

BA049D/06/en/11.09
71105948
Valid as of version:
V 2.03.XX (Device software)

Endress+Hauser
People for Process Automation

Contents

1 Function matrix Promag 50 5

1.1 The function matrix: layout and use 5
1.2 Illustration of the function matrix 6

2 Group MEASURING VALUES 7

3 Group SYSTEM UNITS 8

4 Group QUICK SETUP 10

5 Group OPERATION 11

6 Group USER INTERFACE 13

7 Group TOTALIZER 1/2 16

8 Group HANDLING TOTALIZER 18

9 Group CURRENT OUTPUT 19

10 Group PULSE/FREQUENCY OUTPUT 23

11 Group STATUS OUTPUT 34

11.1 Information on the response of the status output .. 37
11.2 Switching response of the status output 38

12 Group STATUS INPUT 40

13 Group COMMUNICATION 42

14 Group PROCESS PARAMETER 43

15 Group SYSTEM PARAMETERS 49

16 Group SENSOR DATA 52

17 Group SUPERVISION 54

18 Group SIMULATION SYSTEM 56

19 Group SENSOR VERSION 57

20 Group AMPLIFIER VERSION 57

21 Factory settings 58

21.1 SI units (not for USA and Canada) 58
21.2 US units (only for USA and Canada) 60

22 Index of key words 61

Registered trademarks

HART®
Registered trademark of the HART Communication Foundation, Austin, USA

HistoROM™, S-DAT®, FieldCare®
Registered trademarks of Endress+Hauser Flowtec AG, Reinach, CH

1 Function matrix Promag 50

1.1 The function matrix: layout and use

The function matrix is a two-level construct: the groups form one level and the groups' functions the other.
The groups are the highest-level grouping of the operating options for the measuring device.
A number of functions is assigned to each group.
You select a group in order to access the individual functions for operating and parameterizing the measuring device.
An overview of all the groups available is provided in the table of contents on Page 3 and in the graphical representation of the function matrix on Page 6.
An overview of all the functions available is provided on Page 6, complete with page references to the detailed function descriptions.
The descriptions of the individual functions start on Page 7.

Example of how to parameterize a function (in this case changing the language for the UI):

1. Enter into the function matrix (E-key).
2. Select the OPERATION group.
3. Select the LANGUAGE function, change the setting from ENGLISH to DEUTSCH with +/− and save with E (all text on the display now appears in German).
4. Exit the function matrix (ESC > 3 seconds).

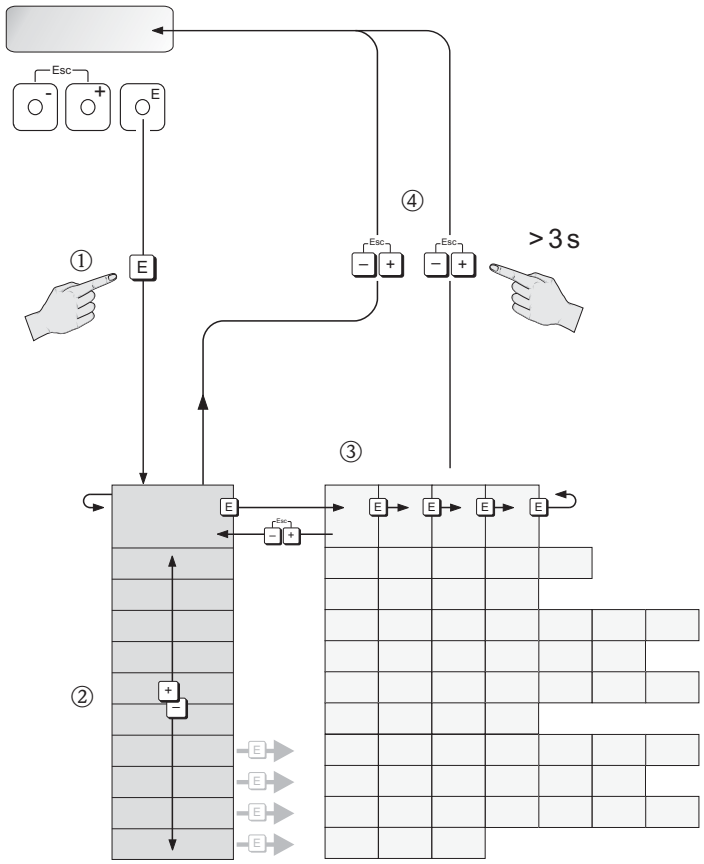

A0001142

1.2 Illustration of the function matrix

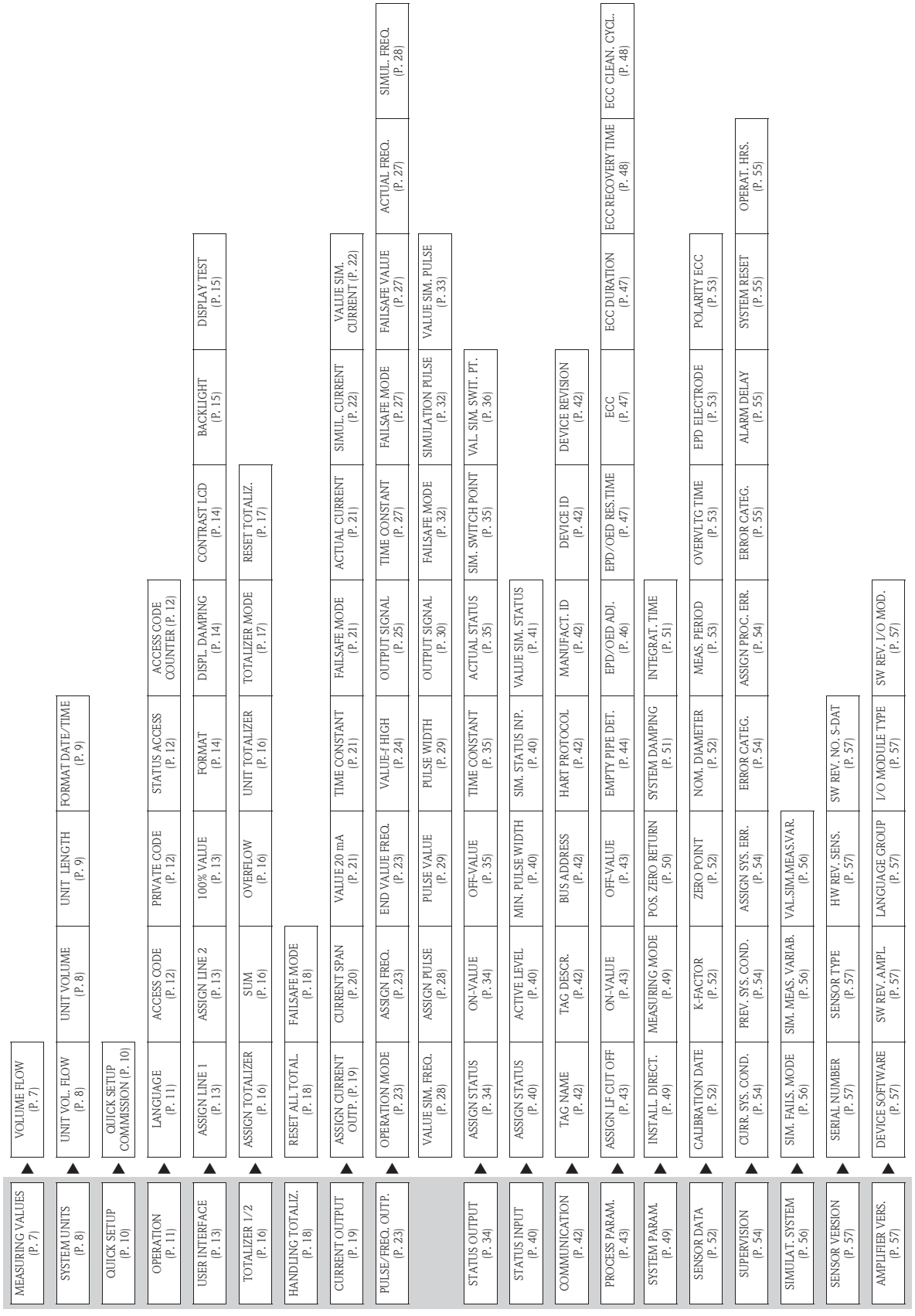

2 Group MEASURING VALUES

Function description MEASURING VALUES	
✎ Note! ■ The engineering unit of the measured variable displayed here can be set in the SYSTEM UNITS group, (see Page 8). ■ If the fluid in the pipe flows backwards, a negative sign prefixes the flow reading on the display.	
VOLUME FLOW	The volume flow currently measured appears on the display. **User interface:** 5-digit floating-point number, including unit and sign (e.g. 5.5445 dm^3/min; 1.4359 m^3/h; –731.63 gal/d; etc.)

3 Group SYSTEM UNITS

Function description SYSTEM UNITS	
Use this function group to select the unit for the measured variable.	
UNIT VOLUME FLOW	Use this function to select the unit for displaying the volume flow. The unit you select here is also valid for: ■ Current output ■ Frequency output ■ Switch points (limit value for volume flow, flow direction) ■ Low flow **Options:** Metric: Cubic centimeter → cm^3/s; cm^3/min; cm^3/h; cm^3/day Cubic decimeter → dm^3/s; dm^3/min; dm^3/h; dm^3/day Cubic meter → m^3/s; m^3/min; m^3/h; m^3/day Milliliter → ml/s; ml/min; ml/h; ml/day Liter → l/s; l/min; l/h; l/day Hectoliter → hl/s; hl/min; hl/h; hl/day Megaliter → Ml/s; Ml/min; Ml/h; Ml/day US: Cubic centimeter → cc/s; cc/min; cc/h; cc/day Acre foot → af/s; af/min; af/h; af/day Cubic foot → ft^3/s; ft^3/min; ft^3/h; ft^3/day Fluid ounce → oz f/s; oz f/min; oz f/h; oz f/day Gallon → gal/s; gal/min; gal/h; gal/day Kilo gallon → Kgal/s; Kgal/min; Kgal/h; Kgal/day Million gallon → Mgal/s; Mgal/min; Mgal/h; Mgal/day Barrel (normal fluids: 31.5 gal/bbl) → bbl/s; bbl/min; bbl/h; bbl/day Barrel (beer: 31.0 gal/bbl) → bbl/s; bbl/min; bbl/h; bbl/day Barrel (petrochemicals: 42.0 gal/bbl) → bbl/s; bbl/min; bbl/h; bbl/day Barrel (filling tanks: 55.0 gal/bbl) → bbl/s; bbl/min; bbl/h; bbl/day Imperial: Gallon → gal/s; gal/min; gal/h; gal/day Mega gallon → Mgal/s; Mgal/min; Mgal/h; Mgal/day Barrel (beer: 36.0 gal/bbl) → bbl/s; bbl/min; bbl/h; bbl/day Barrel (petrochemicals: 34.97 gal/bbl) → bbl/s; bbl/min; bbl/h; bbl/day **Factory setting:** Depends on nominal diameter and country (see Page 58 ff.).
UNIT VOLUME	Use this function to select the unit for displaying the volume. The unit you select here is also valid for: ■ Pulse weighting (e.g. m^3/p) **Options:** Metric → cm^3; dm^3; m^3; ml; l; hl; Ml Mega US → cc; af; ft^3; oz f; gal; Kgal; Mgal; bbl (normal fluids); bbl (beer); bbl (petrochemicals) → bbl (filling tanks) Imperial → gal; Mgal; bbl (beer); bbl (petrochemicals) **Factory setting:** Depends on nominal diameter and country (see Page 58 ff.). ✎ Note! The unit of the totalizers is independent of your choice here. The unit for each totalizer is selected separately for the totalizer in question.

Function description SYSTEM UNITS	
UNIT LENGTH	Use this function to select the unit for displaying the length of the nominal diameter. The unit you select here is also valid for: ■ Nominal diameter of sensor (see function NOMINAL DIAMETER on Page 48) **Options:** MILLIMETER INCH **Factory setting:** MILLIMETER (SI units: not for USA and Canada) INCH (US units: only for USA and Canada)
FORMAT DATE/TIME	Use this function to select the format for the date and the time. The unit you select here is also valid for: Displaying the current calibration date (function CALIBRATION DATE on Seite 52) **Options:** DD.MM.YY 24H MM/DD/YY 12H A/P DD.MM.YY 12H A/P MM/DD/YY 24H **Factory setting:** DD.MM.YY 24H (SI units) MM/DD/YY 12H A/P (US units)

4 Group QUICK SETUP

Function description QUICK SETUP	
QUICK SETUP COMMISSION	Use this function to start the Quick Setup menu for commissioning. **Options:** YES NO **Factory setting:** NO

Note!
The display returns to the QUICK SETUP COMMISSION cell if you press the ESC key combination during interrogation.

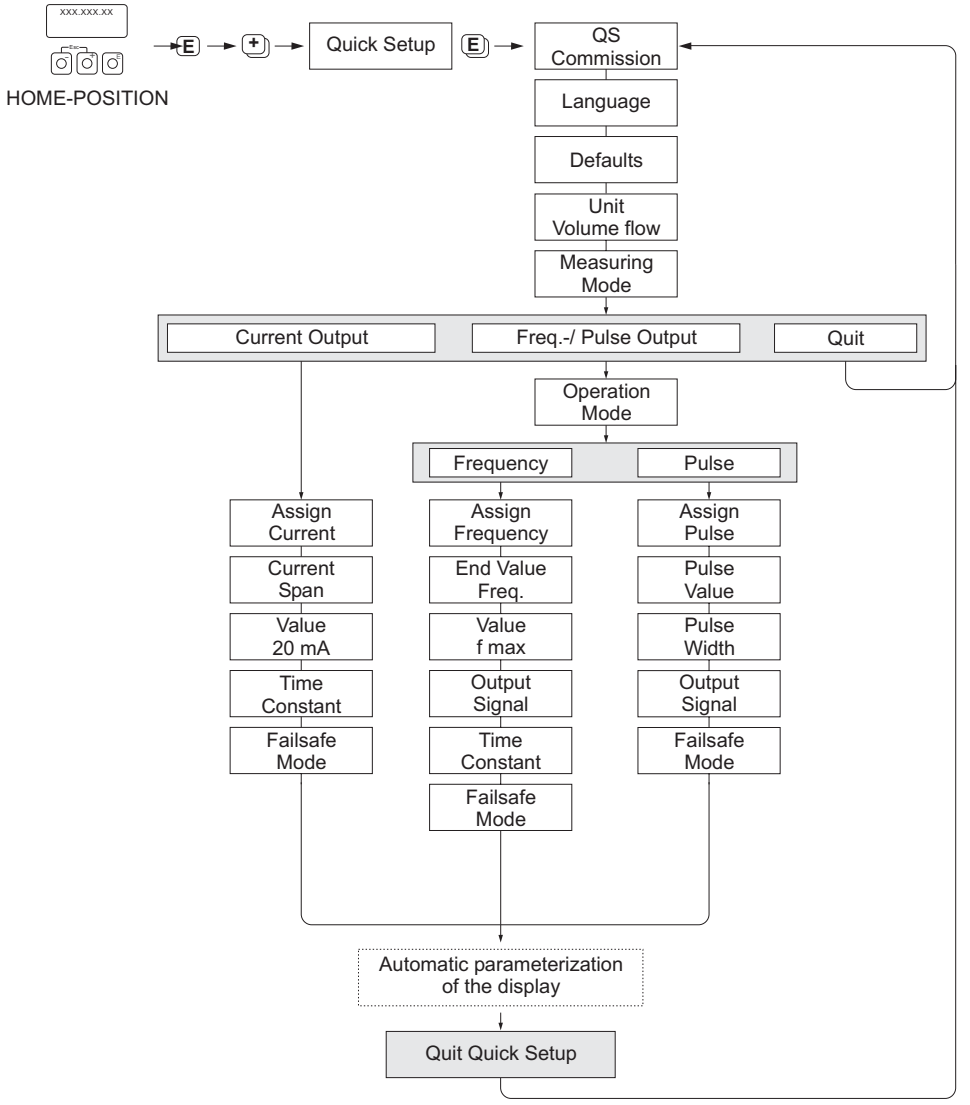

a0005413-en

5 Group OPERATION

Function description OPERATION	
LANGUAGE	Use this function to select the language for all texts, parameters and messages shown on the local display. ✎ Note! The displayed options depend on the available language group shown in the LANGUAGE GROUP function. **Options:** Language group WEST EU / USA: ENGLISH DEUTSCH FRANCAIS ESPANOL ITALIANO NEDERLANDS PORTUGUESE Language group EAST EU / SCAND: ENGLISH NORSK SVENSKA SUOMI POLISH RUSSIAN CZECH Language group ASIA: ENGLISH BAHASA INDONESIA JAPANESE (Silbenschrift) **Factory setting:** Country-dependent (see Page 58 ff.) ✎ Note! ■ If you press the ⊡+⊡- keys simultaneously at startup, the language defaults to "ENGLISH". ■ You can change the language group via the configuration program FieldCare. Please do not hesitate to contact your Endress+Hauser sales office if you have any questions.

Function description OPERATION	
ACCESS CODE	All data of the measuring system are protected against inadvertent change. Programming is disabled and the settings cannot be changed until a code is entered in this function. If you press the ⊞ keys in any function, the measuring system automatically goes to this function and the prompt to enter the code appears on the display (when programming is disabled). You can enable programming by entering your personal code, (**factory setting = 50**, see function PRIVATE CODE on Page 12) **User input:** max. 4-digit number: 0...9999 ✎ Note! ■ The programming levels are disabled if you do not press a key within 60 seconds following automatic return to the HOME position. ■ You can also disable programming in this function by entering any number (other than the defined private code). ■ The Endress+Hauser service organization can be of assistance if you mislay your personal code.
PRIVATE CODE	Use this function to enter a personal code number for enabling programming. **User input:** 0...9999 (max. 4-digit number) **Factory setting:** 50 ✎ Note! ■ Programming is always enabled with the code "0". ■ Programming has to be enabled before this code can be changed. When programming is disabled this function is not available, thus preventing others from accessing your personal code.
STATUS ACCESS	Use this function to check the access status for the function matrix. **User interface:** ACCESS CUSTOMER (parameterization possible) LOCKED (parameterization disabled)
ACCESS CODE COUNTER	Displays how often the customer code, service code or the digit "0" (code-free) has been entered to gain access to the function matrix. **Display:** max. 7-digit number: 0...9999999 **Factory setting:** 0

6 Group USER INTERFACE

Function description USER INTERFACE	
ASSIGN LINE 1	Use this function to define which display value is assigned to the main line (top line of the local display) for display during normal measuring operation. **Options:** OFF VOLUME FLOW VOLUME FLOW IN % TOTALIZER 1 TOTALIZER 2 **Factory setting:** VOLUME FLOW
ASSIGN LINE 2	Use this function to define which display value is assigned to the additional line (bottom line of the local display) for display during normal measuring operation. **Options:** OFF VOLUME FLOW VOLUME FLOW IN % VOLUME FLOW BARGRAPH IN % TOTALIZER 1 TAG NAME OPERATING/SYSTEM CONDITION FLOW DIRECTION TOTALIZER 2 **Factory setting:** TOTALIZER 1
100% VALUE	✎ Note! This function is only available if VOLUME FLOW IN % or VOLUME FLOW BARGRAPH IN % was selected in the function ASSIGN LINE 1 or ASSIGN LINE 2. Use this function to define the flow value to be shown on the display as the 100% value. **User input:** 5-digit floating-point number **Factory setting:** Depends on nominal diameter and country (see Page 58 ff.).

Function description USER INTERFACE	
FORMAT	Use this function to define the maximum number of places after the decimal point displayed for the reading in the main line. **Options:** XXXXX. – XXXX.X – XXX.XX – XX.XXX – X.XXXX **Factory setting:** X.XXXX ✎ Note! ■ Note that this setting only affects the reading as it appears on the display, it has no influence on the accuracy of the system's calculations. ■ The places after the decimal point as computed by the measuring device cannot always be displayed, depending on this setting and the engineering unit. In such instances an arrow appears on the display between the measuring value and the engineering unit (e.g. 1.2 → l/h), indicating that the measuring system is computing with more decimal places than can be shown on the display.
DISPLAY DAMPING	Use this function to enter a time constant defining how the display reacts to severely fluctuating flow variables, either very quickly (enter a low time constant) or with damping (enter a high time constant). **User input:** 0...100 seconds **Factory setting:** 3 s ✎ Note! Setting the time constant to zero seconds switches off damping.
CONTRAST LCD	Use this function to optimize display contrast to suit local operating conditions. **User input:** 10...100% **Factory setting:** 50%

Function description USER INTERFACE	
BACKLIGHT	Use this function to optimize the backlight to suit local operating conditions. **User input:** 0...100% ✎ Note! Entering the value "0" means that the backlight is "switched off". The display then no longer emits any light, i.e. the display texts can no longer be read in the dark. **Factory setting:** 50%
DISPLAY TEST	Use this function to test the operability of the local display and its pixels. **Options:** OFF ON **Factory setting:** OFF Test sequence: 1. Start the test by selecting ON. 2. All pixels of the main line and additional line are darkened for at least 0.75 seconds. 3. The main line and additional line show an "8" in each field for at least 0.75 seconds. 4. The main line and additional line show a "0" in each field for at least 0.75 seconds. 5. The main line and additional line show nothing (blank display) for at least 0.75 seconds. When the test completes the local display returns to its initial state and the setting changes to OFF.

7 Group TOTALIZER 1/2

Function description TOTALIZER 1/2	
ASSIGN TOTALIZER	Use this function to assign a measured variable (volume flow) to the totalizer. **Options:** OFF VOLUME FLOW **Factory setting:** VOLUME FLOW ✎ Note! The totalizer is reset to "0" as soon as the selection is changed.
SUM	Use this function to view the total for the totalizer measured variable aggregated since measuring commenced. The value can be positive or negative. **User interface:** max. 7-digit floating-point number, including sign and unit (e.g. 896,845.7 dm^3) ✎ Note! The totalizer response to faults is defined in the FAILSAFE MODE function (see Page 18).
OVERFLOW	Use this function to view the overflow for the totalizer aggregated since measuring commenced. Total flow quantity is represented by a floating decimal point number consisting of max. 7 digits. You can use this function to view higher numerical values (>9 999 999) as overflows. The effective quantity is thus the total of OVERFLOW plus the value returned by the SUM function. Example: Reading for 2 overflows: 2 E7 kg (= 2 000 000 dm^3) The value returned by the SUM function = 896,845.7 dm^3 Effective total quantity = 2,896,845.7 dm^3 **Display shows:** Integer with exponent, including sign and unit, e.g. 2 E7 dm^3
UNIT TOTALIZER	Use this function to define the unit for the totalizer. **Options:** Metric → cm^3; dm^3; m^3; ml; l; hl; Ml Mega US → cc; af; ft^3; oz f; gal; Kgal; Mgal; bbl (normal fluids); bbl (beer); bbl (petrochemicals); bbl (filling tanks) Imperial → gal; Mgal; bbl (beer); bbl (petrochemicals) **Factory setting:** Depends on nominal diameter and country (see Page 58 ff.).

Function description TOTALIZER 1/2	
TOTALIZER MODE	Use this function to define how the flow components are to be totalised. **Options:** BALANCE Positive and negative flow components. The positive and negative flow components are balanced. In other words, net flow in the flow direction is registered. FORWARD Positive flow components only REVERSE Negative flow components only **Factory setting:** Totalizer 1 = BALANCE Totalizer 2 = FORWARD
RESET TOTALIZER	Use this function to reset the sum and the overflow of the totalizer to "zero" (= RESET). **Options:** NO YES **Factory setting:** NO ✎ Note! If the device is equipped with a status input and if it is appropriately configured, totalizer resetting can also be triggered by a pulse.

8 Group HANDLING TOTALIZER

Function description HANDLING TOTALIZER	
RESET ALL TOTALIZERS	Use this function to reset the totals (including all overflows) of the totalizers (1...2) to "zero". **Options:** NO YES **Factory setting:** NO ✎ Note! If the device has a status input and if it is appropriately configured, a reset for the totalizer (1...2) can also be triggered by a pulse (see the ASSIGN STATUS INPUT function on Page 31).
FAILSAFE MODE	Use this function to define the totalizer response in case of fault. **Options:** STOP The totalizer is paused until the fault is rectified. ACTUAL VALUE The totalizer continues to count on the basis of the current flow measuring value. The fault is ignored. HOLD VALUE The totalizer continues to count the flow that is based on the last valid flow measuring value (before the fault occurred). **Factory setting:** STOP

9 Group CURRENT OUTPUT

Function description CURRENT OUTPUT	
ASSIGN CURRENT OUTPUT	Use this function to assign a measured variable to the current output. **Options:** OFF VOLUME FLOW **Factory setting:** VOLUME FLOW ✎ Note! If you select OFF, the only function shown in this group is the function (ASSIGN CURRENT OUTPUT).

Function description CURRENT OUTPUT	
CURRENT SPAN	Use this function to define the current span. The selection specifies the operational range and the lower and upper signal on alarm. For the current output the option HART can be defined additionally. **Options:** 0–20 mA 4–20 mA 4–20 mA HART 4–20 mA NAMUR 4–20 mA HART NAMUR 4–20 mA US 4–20 mA HART US 0–20 mA (25 mA) 4–20 mA (25 mA) 4–20 mA (25 mA) HART **Factory setting:** 4–20 mA HART NAMUR **Current span, operational range and signal on alarm level**

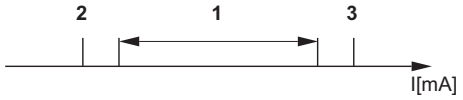

a	1	2	3
0-20 mA	0 - 20.5 mA	0	22
4-20 mA	4 - 20.5 mA	2	22
4-20 mA HART	4 - 20.5 mA	2	22
4-20 mA NAMUR	3.8 - 20.5 mA	3.5	22.6
4-20 mA HART NAMUR	3.8 - 20.5 mA	3.5	22.6
4-20 mA US	3.9 - 20.8 mA	3.75	22.6
4-20 mA HART US	3.9 - 20.8 mA	3.75	22.6
0-20 mA (25 mA)	0 - 24 mA	0	25
4-20 mA (25 mA)	4 - 24 mA	2	25
4-20 mA (25 mA) HART	4 - 24 mA	2	25

A0001222

a = Current span
1 = Operational range (measuring information)
2 = Lower signal on alarm level
3 = Upper signal on alarm level

✎ Note!
- When switching the hardware from an active (factory setting) to a passive output signal select a current span of 4–20 mA.
- If the measured value exceeds the measuring range a notice message is generated (#351...354, current span).
- In case of a fault the behaviour of the current output is according to the selected option in the function FAILSAFE MODE (see Page 21). Change the error category in the function ASSIGN SYSTEM ERROR (see Page 54) to generate a fault message instead of a notice message.

Function description CURRENT OUTPUT	
VALUE 20 mA	Use this function to assign the 20 mA current a full scale value. Positive and negative values are permissible. The required measuring range is defined by defining the VALUE 20 mA. In the SYMMETRY measuring mode, (see Page 45), the value assigned applies to both flow directions; in the STANDARD measuring mode it applies only to the flow direction selected. **User input:** 5-digit floating-point number, with sign **Factory setting:** Depends on nominal diameter and country (see Page 58 ff.). ✎ Note! ■ The appropriate unit is taken from the group SYSTEM UNITS, (see Page 8). ■ The value for 0 or 4 mA always corresponds to the zero flow (0 [unit]). This value is fixed and cannot be edited.
TIME CONSTANT	Use this function to enter a time constant defining how the current output signal reacts to severely fluctuating measured variables, either very quickly (enter a low time constant) or with damping (enter a high time constant). **User input:** fixed-point number 0.01...100.00 s **Factory setting:** 3.00 s
FAILSAFE MODE	For safety reasons it is advisable to ensure that the current output assumes a predefined state in the event of a fault. The setting you select here affects only the current output. The failsafe mode of other outputs and the totalizers is defined in the corresponding function groups. **Options:** MIN. CURRENT The current output adopts the value of the lower signal on alarm level (as defined in the function CURRENT SPAN). MAX. CURRENT The current output adopts the value of the upper signal on alarm level (as defined in the function CURRENT SPAN). HOLD VALUE (**not recommended**) Measuring value output is based on the last measuring value saved before the error occurred . ACTUAL VALUE Measured value output is based on the current flow measurement. The fault is ignored . **Factory setting:** MIN. CURRENT
ACTUAL CURRENT	Use this function to view the computed actual value of the output current. **User interface:** 0.00...25.00 mA

Function description CURRENT OUTPUT	
SIMULATION CURRENT	Use this function to activate simulation of the current output. **Options:** OFF ON **Factory setting:** OFF Note! ■ The "SIMULATION CURRENT OUTPUT" notice message indicates that simulation is active. ■ The measuring device continues to measure while simulation is in progress, i.e. the current measuring values are output correctly via the other outputs. Caution! The setting is not saved if the power supply fails.
VALUE SIMULATION CURRENT	Note! This function is not available unless the function SIMULATION CURRENT is active (= ON). Use this function to define a selectable value (e.g. 12 mA) to be output at the current output. This value is used to test downstream devices and the measuring device itself. **User input:** Floating-point number: 0.00...25.00 mA **Factory setting:** 0.00 mA Caution! The setting is not saved if the power supply fails.

10 Group PULSE/FREQUENCY OUTPUT

Function description PULSE/FREQUENCY OUTPUT	
This group is not available unless the measuring device is equipped with a pulse/frequency output.	
OPERATION MODE	Use this function to configure the output as a pulse output or frequency output. The functions available in this function group vary, depending on which option you select here. **Options:** PULSE FREQUENCY **Factory setting:** PULSE
ASSIGN FREQUENCY	✎ Note! This function is not available unless the FREQUENCY setting was selected in the function OPERATION MODE. Use this function to assign a measured variable to the frequency output. **Options:** OFF VOLUME FLOW **Factory setting:** VOLUME FLOW ✎ Note! If you select OFF, the only functions shown in this function group are the functions ASSIGN FREQUENCY and OPERATION MODE.
END VALUE FREQ.	✎ Note! This function is not available unless the FREQUENCY setting was selected in the function OPERATION MODE. Use this function to define a full scale frequency for the frequency output. You define the associated measured value of the measuring range in the function VALUE-f HIGH on Page 24. **User input:** 4-digit fixed-point number 2...1250 Hz **Factory setting:** 1000 Hz Example: ■ VALUE-f HIGH = 1000 l/h, end frequency = 1000 Hz: i.e. at a flow of 1000 l/h, a frequency of 1000 Hz is output. ■ VALUE-f HIGH = 3600 l/h, end frequency = 1000 Hz: i.e. at a flow of 3600 l/h, a frequency of 1000 Hz is output. ✎ Note! ■ In the FREQUENCY operating mode the output signal is symmetrical (on/off ratio = 1:1). At low frequencies the pulse duration is limited to a maximum of 2 seconds, i.e. the on/off ratio is no longer symmetrical. ■ The initial frequency is always 0 Hz. This value is fixed and cannot be edited.

Function description PULSE/FREQUENCY OUTPUT	
VALUE-f HIGH	✎ Note! This function is not available unless the FREQUENCY setting was selected in the function OPERATION MODE. Use this function to assign a value to the end value frequency. Positive and negative values are permissible. The required measuring range is defined by defining the VALUE-f HIGH. In the SYMMETRY measuring mode, (see Page 45), the value assigned applies to both flow directions; in the STANDARD measuring mode it applies only to the flow direction selected. **User input:** 5-digit floating-point number **Factory setting:** Depends on nominal diameter and country, [value] / [dm^3...m^3 or US-gal...US-Mgal] corresponds to the factory setting for the final value (see Page 58 ff.) . 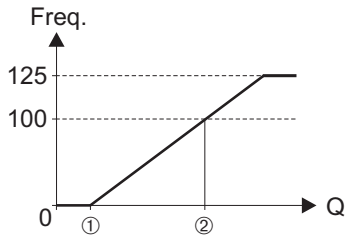 A0001279 ① = *Value-f min.* ② = *Value-f high* ✎ Note! ■ The appropriate unit is taken from the group SYSTEM UNITS, (see Page 8). ■ The value-f min. for the initial frequency always corresponds to the zero flow (0 [unit]). This value is fixed and cannot be edited.

Function description PULSE/FREQUENCY OUTPUT

OUTPUT SIGNAL

✎ Note!
Function is not available unless the FREQUENCY setting was selected in the OPERATION MODE function.

For selecting the output configuration of the frequency output.

Options:
PASSIVE - POSITIVE
PASSIVE - NEGATIVE

Factory setting: PASSIVE - POSITIVE

Explanation
- PASSIVE = power is supplied to the frequency output by means of an external power supply.

Configuring the output signal level (POSITIVE or NEGATIVE) determines the quiescent behaviour (at zero flow) of the frequency output.
The internal transistor is activated as follows:
- If POSITIVE is selected, the internal transistor is activated with a **positive** signal level.
- If NEGATIVE is selected, the internal transistor is activated with a **negative** signal level (0 V).

✎ Note!
With the passive output configuration, the output signal levels of the frequency output depend on the external circuit (see examples).

Example for passive output circuit (PASSIVE)
If PASSIVE is selected, the frequency output is configured as an open collector.

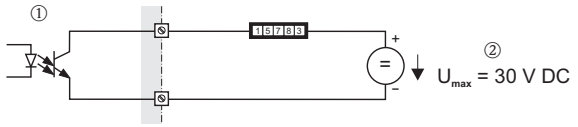

A0001225

① = *Open collector*
② = *External power supply*

✎ Note!
For continuous currents up to 25 mA (I_{max} = 250 mA / 20 ms).

Example for output configuration PASSIVE-POSITIVE:
Output configuration with an external pull-up resistance.
In the quiescent state (at zero flow), the output signal level at the terminals is 0 V.

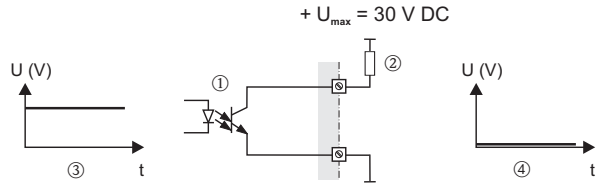

A0004687

① = *Open collector*
② = *Pull-up resistance*
③ = *Transistor activation in "POSITIVE" quiescent state (at zero flow)*
④ = *Output signal level in quiescent state (at zero flow)*

In the operating status (flow present), the output signal level changes from 0 V to a positive voltage level.

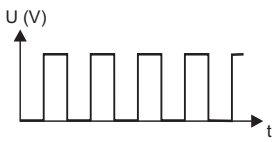

A0001975

(continued on next page)

Function description PULSE/FREQUENCY OUTPUT	
OUTPUT SIGNAL (continued)	**Example for output configuration PASSIVE-POSITIVE:** Output configuration with an external pull-down resistance. In the quiescent state (at zero flow), a positive voltage level is measured via the pull-down resistance.

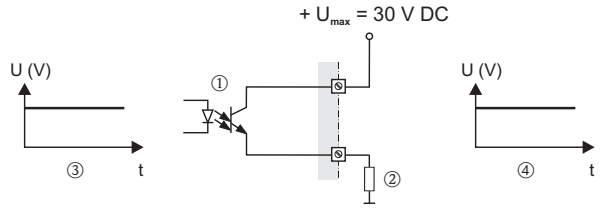

A0004689

① = *Open collector*
② = *Pull-down resistance*
③ = *Transistor activation in "POSITIVE" quiescent state (at zero flow)*
④ = *Output signal level in quiescent state (at zero flow)*

In the operating status (flow present), the output signal level changes from a positive voltage level to 0 V.

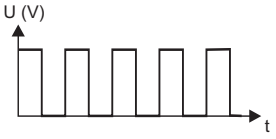

A0001981

Example for output configuration PASSIVE-NEGATIVE:
Output configuration with an external pull-up resistance.
In the quiescent state (at zero flow), the output signal level at the terminals is at a positive voltage level.

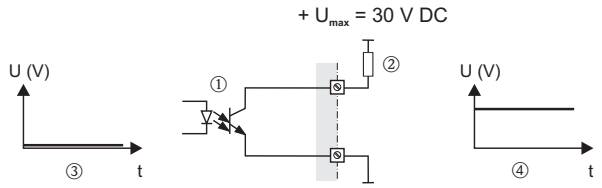

A0004690

① = *Open collector*
② = *Pull-up resistance*
③ = *Transistor activation in "NEGATIVE" quiescent state (at zero flow)*
④ = *Output signal level in quiescent state (at zero flow)*

In the operating status (flow present), the output signal level changes from a positive voltage level to 0 V.

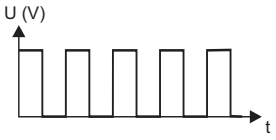

A0001981

Function description PULSE/FREQUENCY OUTPUT	
TIME CONSTANT	✎ Note! This function is not available unless the FREQUENCY setting was selected in the function OPERATION MODE. Use this function to enter a time constant defining how the frequency output signal reacts to severely fluctuating measured variables, either very quickly (enter a low time constant) or with damping (enter a high time constant). **User input:** Floating-point number 0.00...100.00 s **Factory setting:** 0.00 s
FAILSAFE MODE	✎ Note! This function is not available unless the FREQUENCY setting was selected in the function OPERATION MODE. For safety reasons it is advisable to ensure that the frequency output assumes a predefined state in the event of a fault. Use this function to define this state. The setting you select here affects only the frequency output. It has no effect on other outputs and the display (e.g. totalizers). **Options:** FALLBACK VALUE Output is 0 Hz. FAILSAFE LEVEL Output is the frequency specified in the FAILSAFE VALUE function. HOLD VALUE Measuring value output is based on the last measuring value saved before the error occurred. ACTUAL VALUE Measuring value output is based on the current flow measurement. The fault is ignored. **Factory setting:** FALLBACK VALUE
FAILSAFE VALUE	✎ Note! This function is not available unless FREQUENCY was selected in the OPERATION MODE function and FAILSAFE LEVEL was selected in the function FAILSAFE MODE. Use this function to define the frequency that the measuring device should output in the event of a fault. **User input:** max. 4-digit number: 0...1250 Hz **Factory setting:** 1250 Hz
ACTUAL FREQUENCY	✎ Note! This function is not available unless the FREQUENCY setting was selected in the function OPERATION MODE. Use this function to view the computed value of the output frequency. **User interface:** 0...1250 Hz

Function description PULSE/FREQUENCY OUTPUT	
SIMULATION FREQUENCY	✎ Note! This function is not available unless the FREQUENCY setting was selected in the function OPERATION MODE. Use this function to activate simulation of the frequency output. **Options:** OFF ON **Factory setting:** OFF ✎ Note! ■ The "SIMULATION FREQUENCY OUTPUT" notice message indicates that simulation is active. ■ The measuring device continues to measure while simulation is in progress, i.e. the current measuring values are output correctly via the other outputs. ☝ Caution! The setting is not saved if the power supply fails.
VALUE SIMULATION FREQUENCY	✎ Note! This function is not available unless FREQUENCY was selected in the OPERATION MODE function and the function VALUE SIMULATION FREQUENCY is active (= ON). Use this function to define a selectable frequency value (e.g. 500 Hz) to be output at the frequency output. This value is used to test downstream devices and the measuring device itself. **User input:** 0...1250 Hz **Factory setting:** 0 Hz ☝ Caution! The setting is not saved if the power supply fails.
ASSIGN PULSE	✎ Note! This function is not available unless the PULSE setting was selected in the OPERATION MODE function. Use this function to assign a measured variable to the pulse output. **Options:** OFF VOLUME FLOW **Factory setting:** VOLUME FLOW ✎ Note! If you select OFF, the only functions shown in this function group are the functions ASSIGN PULSE and OPERATION MODE.

Function description PULSE/FREQUENCY OUTPUT	
PULSE VALUE	✎ Note! This function is not available unless the PULSE setting was selected in the OPERATION MODE function. Use this function to define the flow at which a pulse is triggered. These pulses can be totalled by an external totalizer and in this way the total flow since measuring commenced can be registered. **User input:** 5-digit floating-point number, [unit] **Factory setting:** Depends on nominal diameter and country (see Page 58 ff.). ✎ Note! The appropriate unit is taken from the group SYSTEM UNITS (see Page 8).
PULSE WIDTH	✎ Note! This function is not available unless the PULSE setting was selected in the OPERATION MODE function. Use this function to enter the maximum pulse width of the output pulses. **User input:** 0.5...2000 ms **Factory setting:** 100 ms Pulse output is **always** with the pulse width (B) entered in this function. The intervals (P) between the individual pulses are automatically configured. However, they must at least correspond to the pulse width (B = P). 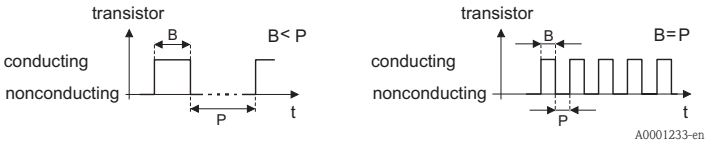 A0001233-en B = Pulse width entered (the illustration applies to positive pulses) P= Intervals between the individual pulses ✎ Note! When entering the pulse width, select a value that can still be processed by an external totalizer (e.g. mechanical totalizer, PLC, etc.). ☝ Caution! If the pulse number or frequency resulting from the pulse value entered, (see function PULSE VALUE on Page 27), and from the current flowis too large to maintain the pulse width selected (interval P is smaller than the pulse width B entered), a system error message (pulse memory) is generated after buffering/balancing time.

Function description PULSE/FREQUENCY OUTPUT

OUTPUT SIGNAL

✎ Note!
Function is not available unless the PULSE setting was selected in the OPERATION MODE function.

For selecting the output configuration of the pulse output.

Options:
PASSIVE - POSITIVE
PASSIVE - NEGATIVE

Factory setting: PASSIVE - POSITIVE

Explanation
- PASSIVE = power is supplied to the pulse output by means of an external power supply.

Configuring the output signal level (POSITIVE or NEGATIVE) determines the quiescent behaviour (at zero flow) of the pulse output.
The internal transistor is activated as follows:
- If POSITIVE is selected, the internal transistor is activated with a **positive** signal level.
- If NEGATIVE is selected, the internal transistor is activated with a **negative** signal level (0 V).

✎ Note!
With the passive output configuration, the output signal levels of the pulse output depend on the external circuit (see examples).

Example for passive output circuit (PASSIVE)
If PASSIVE is selected, the pulse output is configured as an open collector.

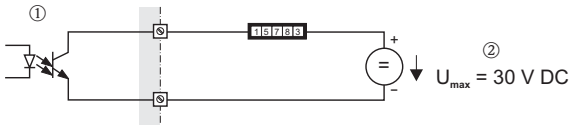

A0001225

① = *Open Collector*
② = *External power supply*

✎ Note!
For continuous currents up to 25 mA (I_{max} = 250 mA / 20 ms).

Example for output configuration PASSIVE-POSITIVE:
Output configuration with an external pull-up resistance.
In the quiescent state (at zero flow), the output signal level at the terminals is 0 V.

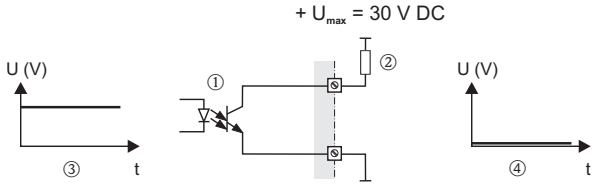

A0004687

① = *Open Collector*
② = *Pull-Up-Resistance*
③ = *Transistor activation in "POSITIVE" quiescent state (at zero flow)*
④ = *Output signal level in quiescent state (at zero flow)*

In the operating status (flow present), the output signal level changes from 0 V to a positive voltage level.

A0001975

(continued on next page)

Function description PULSE/FREQUENCY OUTPUT

OUTPUT SIGNAL
(continued)

Example for output configuration PASSIVE-POSITIVE:
Output configuration with an external pull-down resistance. In the quiescent state (at zero flow), a positive voltage level is measured via the pull-down resistance.

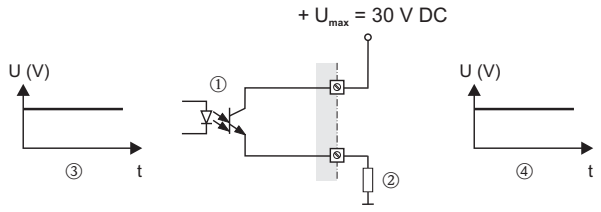

A0004689

① = *Open Collector*
② = *Pull-Down-Resistance*
③ = *Transistor activation in "POSITIVE" quiescent state (at zero flow)*
④ = *Output signal level in quiescent state (at zero flow)*

In the operating status (flow present), the output signal level changes from a positive voltage level to 0 V.

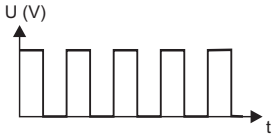

A0001981

Example for output configuration PASSIVE-NEGATIVE:
Output configuration with an external pull-up resistance. In the quiescent state (at zero flow), the output signal level at the terminals is at a positive voltage level.

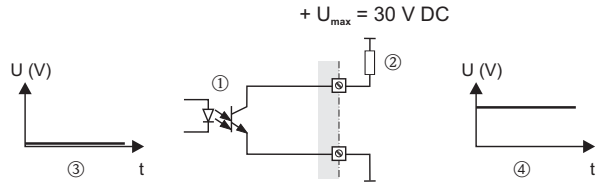

A0004690

① = *Open Collector*
② = *Pull-Up-Resistance*
③ = *Transistor activation in "NEGATIVE" quiescent state (at zero flow)*
④ = *Output signal level in quiescent state (at zero flow)*

In the operating status (flow present), the output signal level changes from a positive voltage level to 0 V.

A0001981

Function description PULSE/FREQUENCY OUTPUT	
FAILSAFE MODE	✎ Note! This function is not available unless the PULSE setting was selected in the function OPERATION MODE. For safety reasons it is advisable to ensure that the pulse output assumes a predefined state in the event of a fault. Use this function to define this state. The setting you select here affects only the pulse output. It has no effect on other outputs and the display (e.g. totalizers). **Options:** FALLBACK VALUE Output is 0 pulse. ACTUAL VALUE Measuring value output is based on the current flow measurement. The fault is ignored. **Factory setting:** FALLBACK VALUE
SIMULATION PULSE	✎ Note! This function is not available unless the PULSE option was selected in the OPERATION MODE function. Use this function to activate simulation of the pulse output. **Options:** OFF COUNTDOWN The pulses specified in the VALUE SIMULATION PULSE function are output. CONTINUOUSLY Pulses are continuously output with the pulse width specified in the PULSE WIDTH function. Simulation is started once the CONTINUOUSLY option is confirmed with the E key. ✎ Note! Simulation is started by confirming the CONTINUOUSLY option with the E key. The simulation can be switched off again via the SIMULATION PULSE function. **Factory setting:** OFF ✎ Note! ■ The notice message #631 "SIM. PULSE" indicates that simulation is active. ■ The on/off ratio is 1:1 for both types of simulation. ■ The measuring device continues to measure while simulation is in progress, i.e. the current measured values are output correctly via the other outputs. ☝ Caution! The setting is not saved if the power supply fails.

Function description PULSE/FREQUENCY OUTPUT	
VALUE SIMULATION PULSE	✎ Note! This function is not available unless the COUNTDOWN option was selected in the SIMULATION PULSE function. Use this function to specify the number of pulses (e.g. 50) which are output during the simulation. This value is used to test downstream devices and the measuring device itself. The pulses are output with the pulse width specified in the PULSE WIDTH function. The on/off ratio is 1:1. Simulation is started once the specified value is confirmed with the E key. The display remains at "0" if the specified pulses have been output. **User input:** 0...10000 **Factory setting:** 0 ✎ Note! Simulation is started by confirming the simulation value with the E key. The simulation can be switched off again via the SIMULATION PULSE function. ☝ Caution! The setting is not saved if the power supply fails.

11 Group STATUS OUTPUT

Function description STATUS OUTPUT	
This group is not available unless the measuring device is equipped with a status output.	
ASSIGN STATUS OUTPUT	Use this function to assign a switching function to the status output. **Options:** OFF ON (operation) FAULT MESSAGE NOTICE MESSAGE FAULT MESSAGE or NOTICE MESSAGE EPD or OED (Empty Pipe Detection / Open Electrode Detection, only if active) FLOW DIRECTION VOLUME FLOW LIMIT VALUE **Factory setting:** FAULT MESSAGE ✎ Note! ■ The behaviour of the status output is a normally closed behaviour, in other words the output is closed (transistor conductive) when normal, error-free measuring is in progress. ■ It is very important to read and comply with the information on the switching characteristics of the status output, (see Page 34). ■ If you select OFF, the only function shown in this function group is the function ASSIGN STATUS OUTPUT.
ON-VALUE	✎ Note! This function is not available unless LIMIT VALUE or FLOW DIRECTION was selected in the function ASSIGN STATUS OUTPUT. Use this function to assign a value to the switch-on point (status output pulls up). The value can be equal to, greater than or less than the switch-off point. Positive and negative values are permissible. **User input:** 5-digit floating-point number, [unit] **Factory setting:** 0 [unit] ✎ Note! ■ The appropriate unit is taken from the group SYSTEM UNITS, (see Page 8). ■ Only the switch-on point is available for flow direction output (no switch-off point). If you enter a value not equal to the zero flow (e.g. 5), the difference between the zero flow and the value entered corresponds to half the switchover hysteresis.

Function description STATUS OUTPUT	
OFF-VALUE	✎ Note! This function is not available unless LIMIT VALUE was selected in the function ASSIGN STATUS OUTPUT. Use this function to assign a value to the switch-off point (status output drops out). The value can be equal to, greater than or less than the switch-on point. Positive and negative values are permissible. **User input:** 5-digit floating-point number, [unit] **Factory setting:** 0 [unit] ✎ Note! ■ The appropriate unit is taken from the group SYSTEM UNITS, (see Page 8). ■ If SYMMETRY is selected in the function MEASURING MODE (Page 45) and values with different signs are entered for the switch-on and switch-off points, the notice message "INPUT RANGE EXCEEDED" appears.
TIME CONSTANT	Use this function to enter a time constant defining how the measuring signal reacts to severely fluctuating measured variables, either very quickly (enter a low time constant) or with damping (enter a high time constant). The purpose of damping, therefore, is to prevent the status output changing state continuously in response to fluctuations in flow. **User input:** fixed-point number 0.00...100.00 s **Factory setting:** 0.00 s
ACTUAL STATUS OUTPUT	Use this function to check the current status of the status output. **User interface:** NOT CONDUCTIVE CONDUCTIVE
SIMULATION SWITCH POINT	Use this function to activate simulation of the status output. **Options:** OFF ON **Factory setting:** OFF ✎ Note! ■ The "SIMULATION STATUS OUTPUT" message indicates that simulation is active. ■ The measuring device continues to measure while simulation is in progress, i.e. the current measuring values are output correctly via the other outputs. ☝ Caution! The setting is not saved if the power supply fails.

Function description STATUS OUTPUT	
VALUE SIMULATION SWITCH POINT	✎ Note! This function is not available unless the function SIMULATION SWITCH POINT is active (= ON). Use this function to define the switching response of the status output during the simulation. This value is used to test downstream devices and the measuring device itself. **Options:** NOT CONDUCTIVE CONDUCTIVE **Factory setting:** NOT CONDUCTIVE ☝ Caution! The setting is not saved if the power supply fails.

11.1 Information on the response of the status output

General
If you have configured the status output for "LIMIT VALUE" or "FLOW DIRECTION", you can configure the requisite switch points in the functions ON-VALUE and OFF-VALUE. When the measured variable in question reaches these predefined values, the status output switches as shown in the illustrations below.

Status output configured for limit value
The status output switches as soon as the measured variable undershoots or overshoots a defined switch point. Application: Monitoring flow or process-related boundary conditions.

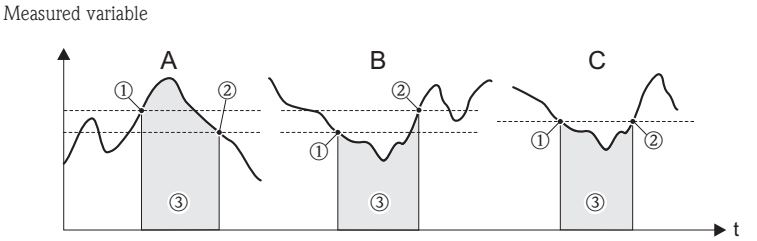

A0001235

A = Maximum safety → ① SWITCH-OFF POINT > ② SWITCH-ON POINT
B = Maximum safety → ① SWITCH-OFF POINT < ② SWITCH-ON POINT
C = Maximum safety → ① SWITCH-OFF POINT = ② SWITCH-ON POINT (this configuration is to avoid)
③ = Status output switched off (not conductive)

Status output configured for flow direction
The value entered in the function SWITCH-ON POINT defines the switch point for the positive and negative directions of flow. If, for example, the switch point entered is = 1 m^3/h, the status output switches off at –1 m^3/h (not conductive) and switches on again at +1 m^3/h (conductive).
Set the switch point to 0 if your process calls for direct switchover (no switching hysteresis). If low flow cut off is used, it is advisable to set hysteresis to a value greater than or equal to the low flow rate.

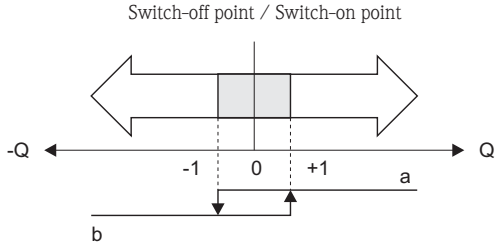

A0001236

a = Status output conductive
b = Status output not conductive

11.2 Switching response of the status output

Function	Status		Open collector response (transistor)	
ON (operation)	System in measuring mode	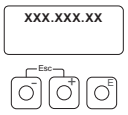 A0001052	conduc- tive	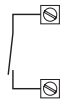 A0001237
	System not in measuring mode (power supply failed)	A0001291	not conduc- tive	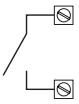 A0001238
Fault message	System OK	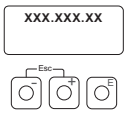 A0001052	conduc- tive	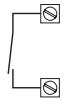 A0001237
	(System or process error) Fault → Error response of outputs/inputs and totalizer	A0001291	not conduc- tive	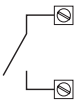 A0001238
Notice message	System OK	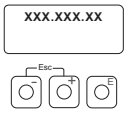 A0001052	conduc- tive	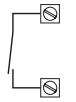 A0001237
	(System or process error) Fault → Continuation of measuring	A0001291	not conduc- tive	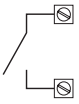 A0001238
Fault message or notice message	System OK	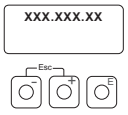 A0001052	conduc- tive	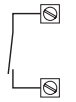 A0001237
	(System or process error) Fault → Response to error or Note → Continuation of measuring	A0001291	not conduc- tive	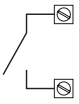 A0001238
Empty pipe detection (EPD) / Open electrode detection (OED)	Measuring tube full	A0001292	conduc- tive	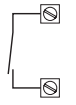 A0001237
	Measuring tube partially filled / empty measuring tube	A0001293	not conduc- tive	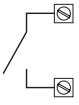 A0001238

Function	Status	Open collector response (transistor)
Flow direction	Forward A0001241	conduc- tive 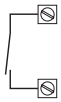 A0001237
	Reverse A0001242	not conduc- tive 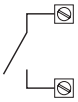 A0001238
Limit value Volume flow	Limit value not overshot or undershot A0001243	conduc- tive 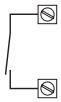 A0001237
	Limit value overshot or undershot 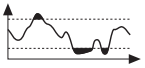 A0001244	not conduc- tive 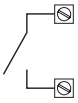 A0001238

12 Group STATUS INPUT

Function description STATUS INPUT	
This group is not available unless the measuring device is equipped with a status input.	
ASSIGN STATUS INPUT	Use this function to assign a switching function to the status input. **Options:** OFF RESET TOTALIZER 1 POSITIVE ZERO RETURN RESET TOTALIZER 2 RESET ALL TOTALIZERS **Factory setting:** OFF ✎ Note! Positive zero return is active as long as the active level is available at the status input (continuous signal). All other assignments react to a change in level (pulse) at the status input.
ACTIVE LEVEL	Use this function to define whether the assigned switch function, (see function ASSIGN STATUS INPUT) is released or sustained when the level is present (HIGH) or not present (LOW). **Options:** HIGH LOW **Factory setting:** HIGH
MINIMUM PULSE WIDTH	Use this function to define a minimum pulse width which the input pulse must achieve in order to trigger the selected switching function. **User input:** 20...100 ms **Factory setting:** 50 ms
SIMULATION STATUS INPUT	Use this function to activate simulation of the status input, i.e. to trigger the function assigned to the status input, (see function ASSIGN STATUS INPUT on Page 31). **Options:** OFF ON **Factory setting:** OFF ✎ Note! ■ The "SIMULATION STATUS INPUT" notice message indicates that simulation is active. ■ The measuring device continues to measure while simulation is in progress, i.e. the current measuring values are output correctly via the outputs. ☝ Caution! The setting is not saved if the power supply fails.

Function description STATUS INPUT	
VALUE SIMULATION STATUS INPUT	✎ Note! This function is not available unless the function SIMULATION STATUS INPUT is active (= ON). Use this function to select the level to be simulated at the status input. **Options:** HIGH LOW **Factory setting:** LOW Caution! The setting is not saved if the power supply fails.

13 Group COMMUNICATION

Function description COMMUNICATION	
TAG NAME	Use this function to enter a tag name for the measuring device. You can edit and read this tag name at the local display or via the HART protocol. **User input:** max. 8-character text, permitted characters are: A–Z, 0–9, +, –, punctuation marks **Factory setting:** "_ _ _ _ _ _ _ _" (no text)
TAG DESCRIPTION	Use this function to enter a tag description for the measuring device. You can edit and read this tag description at the local display or via the HART protocol. **User input:** max. 16-character text, permitted characters are: A–Z, 0–9, +, –, punctuation marks **Factory setting:** "_ _ _ _ _ _ _ _ _ _ _ _ _ _ _ _" (No text)
BUS ADDRESS	Use this function to define the address for the exchange of data with the HART protocol. **User input:** 0...15 **Factory setting:** 0 ✎ Note! Addresses 1...15: a constant 4 mA current is applied.
HART PROTOCOL	Use this function to display if the HART protocol is active. **User interface:** OFF = HART protocol not active ON = HART protocol active ✎ Note! The HART protocol is activated by selecting 4–20 mA HART or 4–20 mA (25 mA) HART in the function CURRENT SPAN (see Page 20).
MANUFACTURER ID	Use this function to view the manufacturer. **User interface:** – Endress+Hauser – 17 (≅ 11 hex) for Endress+Hauser
DEVICE ID	Use this function to view the device ID in hexadecimal numerical format. **User interface:** 41 (≅ 65 dez) for Promag 50
DEVICE REVISION	Use this function to view the device-specific revision of the HART command interface. **User interface:** E.g.: 5

14 Group PROCESS PARAMETER

Function description PROCESS PARAMETER	
ASSIGN LOW FLOW CUT OFF	Use this function to assign the switch point for low flow cut off. **Options:** OFF VOLUME FLOW **Factory setting:** VOLUME FLOW
ON-VALUE LOW FLOW CUT OFF	Use this function to enter the switch-on point for low flow cut off. Low flow cut off is active if the value entered is not equal to 0. The sign of the flow value is highlighted on the display to indicate that low flow cut off is active. **User input:** 5-digit floating-point number, [unit] **Factory setting:** Depends on nominal diameter and country (see Page 58 ff.). ✎ Note! The appropriate unit is taken from the group SYSTEM UNITS (see Page 8).
OFF-VALUE LOW FLOW CUT OFF	Use this function to enter the switch-off point for low flow cut off. Enter the switch-off point as a positive hysteresis value from the switch-on point. **User input:** Integer 0...100% **Factory setting:** 50% 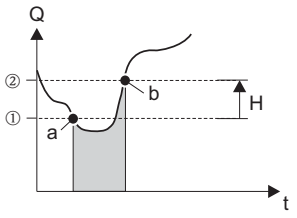 A0003882 *① = switch-on point , ② = switch-off point* *a = Low flow cut off is switched on* *b = Low flow cut off is switched off (a + a · H)* *H = Hysteresis value: 0 to 100%* ■ *= Low flow cut off active* *Q = Flow*

Function description PROCESS PARAMETER	
EMPTY PIPE DETECTION (EPD)	Flow cannot be measured correctly unless the measuring tube is full. This status can be monitored at all times with the Empty Pipe Detection function. Use this function to activate Empty Pipe Detection (EPD) or Open Electrode Detection (OED). ■ EPD = Empty Pipe Detection (with the help of an EPD electrode) ■ OED = Open Electrode Detection (empty pipe detection with the help of the measuring electrodes, if the sensor is not equipped with an EPD electrode or the orientation is not suitable for using EPD). **Options:** OFF – ON SPECIAL – OED – ON STANDARD OFF (neither EPD nor OED are active) ON SPECIAL (only for DN <400): Switching on the Empty Pipe Detection (EPD) for devices in remote version (transmitter and sensor are installed separately). OED: Switching on the Open Electrode Detection (OED). ON STANDARD: Switching on the Empty Pipe Detection (EPD) for: – Devices in compact version (transmitter and sensor form a single mechanical unit). – Applications where a facing and coating of the fluid on the measuring tube line and measuring electrode accrues. **Factory setting:** OFF ✎ Note! ■ The options ON STANDARD and ON SPECIAL are not available unless the sensor is equipped with an EPD electrode. ■ The default setting for the EPD/OED functions when the device is delivered is OFF. The functions must be activated as required. ■ The devices are calibrated at the factory with water (approx. 500 µS/cm). If the conductivity of certain fluids deviates from this reference, empty pipe/full pipe adjustment must be performed again on site (see function EPD/OED ADJUSTMENT on page 46). ■ The adjustment coefficients must be valid before you can switch on the EPD or OED. If these coefficients are not available, the function EPD/OED ADJUSTMENT is displayed (see Page 44). ■ If there are problems with the adjustment, the following error messages appear on the screen: – ADJUSTMENT FULL = EMPTY: The adjustment values for empty pipe and full pipe are identical. In such instances, empty pipe adjustment/full pipe adjustment **must** be carried out **again**. – ADJUSTMENT NOT OK: Adjustment is not possible as the fluid conductivity values are outside the permitted range. (continued on next page)

Function description PROCESS PARAMETER	
EMPTY PIPE DETECTION (EPD) (continued)	**Notes on empty pipe detection (EPD and OED)** ■ Flow cannot be measured correctly unless the measuring pipe is completely full. This status can be monitored at all times by means of the EPD/OED. ■ An empty or partially filled pipe is a process error. A default factory setting defines that a fault message is issued and that this process error has an effect on the outputs. ■ The EPD/OED process error can be output via the configurable status output. ■ Use the function ASSIGN PROCESS ERROR to define whether a notice or fault message should be triggered (see Page 54). ■ A plausibility check of the adjustment values will only be executed by activating the empty pipe detection. If an empty or full pipe adjustment is performed during the empty pipe detection is active, the empty pipe detection has to be de- and again activated, after finishing the adjustment, to start the plausibility check. **Response to partially filled pipes** If the EPD/OED is switched on and responds to a partially filled or empty pipe, the fault message "EMPTY PIPE" appears on the display. If the pipe is partially empty and the EPD/OED is **not** switched on, the response can vary in identically configured systems: ■ Flow reading fluctuates ■ Zero flow ■ Excessively high flow values **Notes on Open Electrode Detection (OED)** Open Electrode Detection (OED) functions like the Empty Pipe Detection (EPD). In contrast to the EPD where the measuring device must be equipped with a separate (optional) electrode, the OED detects partial filling by means of the two measuring electrodes which are present as standard (fluid no longer covers the measuring electrodes). Open electrode detection can also be used if: ■ the sensor is not installed in the optimal position for using EPD (optimal = installed horizontally). ■ the sensor is not equipped with an additional (optional) EPD electrode. ✎ Note! ■ Cable connection length: When mounting a remote version, please observe the maximum permissible cable length of 15 metres in order to keep the OED function. ■ OED empty pipe adjustment: To achieve the best results for the open electrode detection, it is important to have the electrodes surface as dry as possible (no liquid film) while the empty-pipe adjustment is being made. Even during normal operation, the OED function is only secured if there is no longer any liquid film present on the electrodes when the measuring pipe is empty.

Function description PROCESS PARAMETER	
EPD/OED ADJUSTMENT	Use this function to activate the EPD/OED adjustment for an empty or full measuring tube. ✎ Note! A detailed description and other helpful hints for the empty-pipe/full-pipe adjustment procedure can be found on Page 44. **Options:** OFF FULL PIPE ADJUST EMPTY PIPE ADJUST OED FULL ADJUST OED EMPTY ADJUST **Factory setting:** OFF **Procedure for EPD or OED empty-pipe / full-pipe adjustment** 1. Empty the piping. In case of an EPD adjustment, the wall of the measuring tube should be wetted with fluid for the adjustment procedure but this is not the case with an OED adjustment! 2. Start empty-pipe adjustment: Select "EMPTY PIPE ADJUST" or "OED EMPTY ADJUST" and press E to confirm. 3. After empty-pipe adjustment, fill the piping with fluid. 4. Start full-pipe adjustment: Select "FULL PIPE ADJUST" or "OED FULL ADJUST" and press E to confirm. 5. Having completed the adjustment, select the setting "OFF" and exit the function by pressing E . 6. Now select the "EMPTY PIPE DETECTION" function. Switch on Empty Pipe Detection by selecting the following settings: – EPD → Select ON STANDARD or ON SPECIAL and press E to confirm. – OED → Select OED and confirm with E . ☞ Caution! The adjustment coefficients must be valid before you can activate the EPD/OED function. If adjustment is incorrect the following messages might appear on the display: – FULL = EMPTY The adjustment values for empty pipe and full pipe are identical. In cases of this nature you **must** repeat empty-pipe or full-pipe adjustment **again**! – ADJUSTMENT NOT OK Adjustment is not possible because the fluid's conductivity is out of range.

Function description PROCESS PARAMETER	
EPD/OED RESPONSE TIME	✎ Note! This function is not available unless ON STANDARD, ON SPECIAL or OED was selected in the EMPTY PIPE DETECTION function. Use this function to enter the time span for which the criteria for an "empty" pipe have to be satisfied without interruption before a notice message or fault message is generated. The setting defined here is used by the active empty pipe detection (EPD) or open electrode detection (OED). **User input:** fixed-point number 1.0...100 s **Factory setting:** 1.0 s ✎ Note! OED detection time: The recognition of open electrodes is, in contrast to the empty pipe detection (EPD), very slow reacting (delay at least 25 seconds) and is only activated after an aditional delay from the programmed response time! We recommend in most applications to use the empty pipe detection (EPD) which is an optimal solution for detecting partly filled measuring tubes.
ECC	✎ Note! This function is not available unless the measuring device is equipped with the optional electrode cleaning function (ECC). Use this function to activate cyclical electrode cleaning. **Options:** OFF ON **Factory setting:** ON (only if the optional electrode cleaning function ECC is available) **Notes on electrode cleaning (ECC)** Conductive deposits on the electrodes and on the walls of the measuring tube (e.g. magnetite) can falsify measurement values. The Electrode Cleaning Circuitry (ECC) was developed to prevent such conductive deposits accreting in the vicinity of the electrodes. ECC functions as described above for all available electrode materials except tantalum. If tantalum is used as the electrode material, the ECC protects the electrode surface only against oxidation. ☝ Caution! If the ECC is switched off for a prolonged period in applications with conductive deposits, a layer forms inside the measuring tube and this can falsify measurement values. If the layer is allowed to accrete beyond a certain level, it might no longer be possible to remove it by switching on the ECC. If this happens the measuring tube must be cleaned and the layer removed.
ECC DURATION	✎ Note! This function is not available unless the measuring device is equipped with the optional electrode cleaning function (ECC). Use this function to specify the electrode cleaning duration. **User input:** fixed-point number 0.01...30.0 s **Factory setting:** 2.0 s

Function description PROCESS PARAMETER	
ECC RECOVERY TIME	✎ Note! This function is not available unless the measuring device is equipped with the optional electrode cleaning function (ECC). Use this function to specify the recovery time for which the last flow value measured prior to cleaning is retained. A recovery time is necessary as the signal outputs can fluctuate after electrode cleaning on account of electrochemical interference voltages. **User input:** max. 3-digit number: 1... 600 s **Factory setting:** 5 s ☝ Caution! The last value measured prior to cleaning is output for the duration of the recovery time (max. 600 s). This in turn means that the measuring system does not register changes in flow, e.g. stoppage, during this time span.
ECC CLEANING CYCLE	✎ Note! This function is not available unless the measuring device is equipped with the optional electrode cleaning function (ECC). Use this function to specify the cleaning cycle for electrode cleaning. **User input:** Integer: 30...10080 min **Factory setting:** 40 min

15 Group SYSTEM PARAMETERS

Function description SYSTEM PARAMETERS	
INSTALLATION DIRECTION SENSOR	Use this function to reverse the sign of the flow quantity, if necessary. **Options:** NORMAL (flow as indicated by the arrow) INVERSE (flow opposite to direction indicated by the arrow) **Factory setting:** NORMAL ✎ Note! Ascertain the actual direction of fluid flow with reference to the direction indicated by the arrow on the sensor (nameplate).
MEASURING MODE	Use this function to select the measuring mode for all outputs. **Options:** STANDARD SYMMETRY **Factory setting:** STANDARD The responses of the individual outputs in each of the measuring modes are described in detail on the following pages: **Current output and frequency output** STANDARD Only the flow components for the selected flow direction are totalled, (positive or negative full scale value ② = flow direction). Flow components in the opposite direction are not taken into account (suppression). Example for current output: 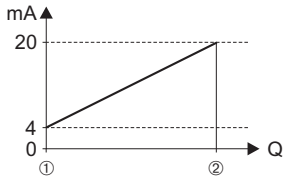 A0001248 SYMMETRY The output signals of the current and frequency outputs are independent of the direction of flow (absolute amount of the measured variable). The "VALUE 20 mA" or "VALUE-f HIGH" ③ (e.g. backflow) corresponds to the mirrored VALUE 20 mA or VALUE-f HIGH ② (e.g. flow). Positive and negative flow components are taken into account. Example for current output: 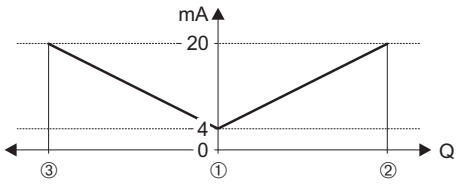 A0001249 ✎ Note! The direction of flow can be output via the configurable status output. (continued on next page)

Function description SYSTEM PARAMETERS	
MEASURING MODE (continued)	**Pulse output** STANDARD Only positive flow components are totalled. Negative components are not taken into account. SYMMETRY Positive and negative flow components are taken into account. ✎ Note! The direction of flow can be output via the configurable status output. **Status output** ✎ Note! The information is only applicable if LIMIT VALUE was selected in the function ASSIGN STATUS OUTPUT. STANDARD The status output signal switches at the defined switch points. SYMMETRY The status output signal switches at the defined switch points, irrespective of the sign. In other words, if you define a switch point with a positive sign, the status output signal switches as soon as the value is reached in the negative direction (negative sign), (see illustration). Example for the SYMMETRY measuring mode: Switch-on point: Q = 4 Switch-off point: Q = 10 ① = Status output switched on (conductive) ② = Status output switched off (not conductive) 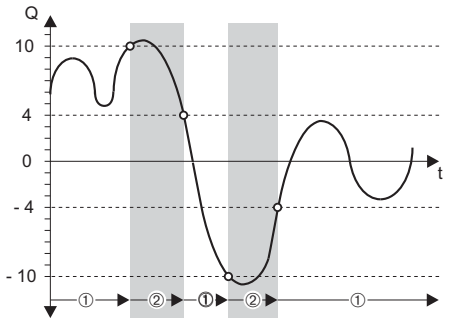 A0001247
POSITIVE ZERO RETURN	Use this function to interrupt evaluation of measured variables. This is necessary when a piping system is being cleaned, for example. This setting acts on all function and outputs of the measuring device. **Options:** OFF ON → Signal output is set to the "ZERO FLOW" value. **Factory setting:** OFF

Function description SYSTEM PARAMETERS	
SYSTEM DAMPING	Use this function to set the filter depth of the digital filter. This reduces the sensitivity of the measuring signal to interference peaks (e.g. high solids content, gas bubbles in the fluid, etc.). The system reaction time decreases with an increasing filter setting. **User input:** 0...15 **Factory setting:** 9 ✎ Note! The system damping acts on all functions and outputs of the measuring device.
INTEGRATION TIME	Use this function to set the integration time. Under normal circumstances it is not necessary to change the factory settings. **User input:** 3.3...65 ms **Factory setting:** 20 ms at 50 Hz → mains frequency (e.g. Europe) 16.7 ms at 60 Hz → mains frequency (e.g. USA) ☝ Caution! The integration time must not be selected with a greater value than the measuring period (see Page 53). ✎ Note! The integration time defines the duration of internal totaling of the induced voltage in the fluid (measured by the measuring electrode), i.e. the time in which the measuring device records the true flow (afterwards the magnetic field for the next integration is created from the opposite pole).

16 Group SENSOR DATA

Function description SENSOR DATA	
All sensor data (calibration factors, zero point and nominal diameter etc.) are set at the factory and saved on the S-DAT sensor memory chip. ☝ Caution! Under normal circumstances you should not change the following parameter settings, because changes affect numerous functions of the entire measuring facility in general and the accuracy of the measuring system in particular. For this reason, the functions described below cannot be changed even when you enter your personal code. Contact the Endress+Hauser service organization if you have any questions about these functions.	
CALIBRATION DATE	Use this function to view the current calibration date and time for the sensor. **User interface:** Calibration date and time **Factory setting:** Calibration date and time of the current calibration. ✎ Note! The calibration date and time format is defined in the FORMAT DATE TIME function, → Page 9.
K-FACTOR	Use this function to display the current calibration factor for the sensor. The calibration factor is determined and set at the factory. **User interface:** 5-digit fixed-point number: 0.5000...2.0000 **Factory setting:** Depends on nominal diameter and calibration ✎ Note! This value is also provided on the sensor nameplate.
ZERO POINT	This function shows the current zero-point correction value for the sensor. Zero-point correction is determined and set at the factory. **User interface:** max. 4-digit number: –1000...+1000 **Factory setting:** Depends on nominal diameter and calibration ✎ Note! This value is also provided on the sensor nameplate.
NOMINAL DIAMETER	This function shows the nominal diameter for the sensor. The nominal diameter depends on the size of the sensor and is set at the factory. **User interface:** 2...2000 mm or 1/12...78" **Factory setting:** Depends on the size of the sensor ✎ Note! This value is also provided on the sensor nameplate.

Function description SENSOR DATA	
MEASURING PERIOD	Use this function to set the time for a full measuring period. The duration of the measuring period is calculated from the rise time of the magnetic field, the brief recovery time, the integration time (which can be set) and the empty pipe detection time. **User input:** 0.0...1000 ms **Factory setting:** Depends on nominal diameter ✎ Note! The system checks the time entered and sets the measuring period which is actually used internally to a plausible value. If you enter 0 ms, the system automatically computes the shortest time.
OVERVOLTAGE TIME	Use this function to specify the time in which overvoltage is applied to the coil circuit in order to build up the magnetic field as fast as possible. The overvoltage time is adjusted automatically while measuring is in progress. The overvoltage time depends on the sensor type and the nominal diameter and is set at the factory. **User interface:** 4-digit floating-point number: 0.0...100.0 ms **Factory setting:** Depends on nominal diameter
EPD ELECTRODE	Use this function to check whether the sensor is equipped with an EPD electrode. **User interface:** YES NO **Factory setting:** YES → Electrode fitted as standard
POLARITY ECC	Use this function to display the actual current polarity for optional electrode cleaning (ECC). Electrode cleaning uses either a positive or negative current, depending on the electrode material. The measuring device automatically selects the correct polarity on the basis of the electrode-material data stored in the S-DAT. **User interface:** POSITIVE → for electrodes made of: 1.4435, Hastelloy C, platinum, titanium NEGATIVE → for electrodes made of: tantalum ☝ Caution! If the incorrect current is applied to the electrodes, the electrode material is destroyed.

17 Group SUPERVISION

Function description SUPERVISION	
CURRENT SYSTEM CONDITION	Use this function to check the present system status. **User interface:** "SYSTEM OK" or the fault / notice message with the highest priority.
PREVIOUS SYSTEM CONDITIONS	Use this function to view the fifteen most recent fault and notice messages since measuring last started. **User interface:** The last 15 fault/notice messages appear on the display
ASSIGN SYSTEM ERROR	Use this function to view all system errors and the associated error categories (fault message or notice message). By selecting a certain system error, its error category can be changed in the subsequent function ERROR CATEGORY. **Options:** CANCEL List of system errors ✎ Note! ■ You can exit this function as follows: select "CANCEL" and confirm with E. ■ A list of possible system errors is provided in the Operating Instructions Promag 50, BA 046D/06/en
ERROR CATEGORY	✎ Note! This function is only available if a system error has been selected in the function ASSIGN SYSTEM ERROR. Use this function to define whether a system error triggers a notice message or a fault message. If you select FAULT MESSAGES, all outputs respond to an error in accordance with their defined error response patterns. **Options:** NOTICE MESSAGES (display only) FAULT MESSAGES (outputs and display) ✎ Note! Press the E key twice to call up the ASSIGN SYSTEM ERROR function.
ASSIGN PROCESS ERROR	Use this function to view all process errors and the associated error categories (fault message or notice message). By selecting an individual process error, its error category can be changed in the subsequent function ERROR CATEGORY. **Options:** CANCEL List of process errors ✎ Note! ■ You can exit this function as follows: select "CANCEL" and confirm with E. ■ A list of possible process errors is provided in the Operating Instructions Promag 50, BA 046D/06/en

Function description SUPERVISION	
ERROR CATEGORY	✎ Note! This function is only available if a process error has been selected in the function ASSIGN PROCESS ERROR. Use this function to define whether a process error triggers a notice message or a fault message. If you select FAULT MESSAGES, all outputs respond to an error in accordance with their defined error response patterns. **Options:** NOTICE MESSAGES (display only) FAULT MESSAGES (outputs and display) ✎ Note! Press the E key twice to call up the ASSIGN PROCESS ERROR function.
ALARM DELAY	Use this function to define a time span in which the criteria for an error have to be satisfied without interruption before an error or notice message is generated. Depending on the setting and the type of error, this suppression acts on: ■ Display ■ Status output ■ Current output ■ Frequency output **User input:** 0...100 s (in steps of one second) **Factory setting:** 0 s ☝ Caution! If this function is activated error and notice messages are delayed by the time corresponding to the setting before being forwarded to the higher-order controller (process controller, etc.). It is therefore imperative to check in advance in order to make sure whether a delay of this nature could affect the safety requirements of the process. If error and notice messages cannot be suppressed, a value of 0 seconds must be entered here.
SYSTEM RESET	Use this function to perform a reset of the measuring system. **Options:** NO RESTART SYSTEM (restart without interrupting power supply) **Factory setting:** NO
OPERATION HOURS	The hours of operation of the device appear on the display. **Display:** Depends on the number of hours of operation elapsed: Hours of operation < 10 hours → display format = 0:00:00 (hr:min:sec) Hours of operation 10...10,000 hours → display format = 0000:00 (hr:min) Hours of operation > 10,000 hours → display format = 000000 (hr)
PERMANENT STORAGE	This function indicates whether permanent storage of all parameters in the EEPROM has been switched on or off. **Display:** 0 = OFF 1 = ON **Factory setting:** ON

18 Group SIMULATION SYSTEM

Function description SIMULATION SYSTEM	
SIMULATION FAILSAFE MODE	Use this function to set all inputs, outputs and the totalizer to their defined failsafe modes, in order to check whether they respond correctly. During this time, the words "SIMULATION FAILSAFE MODE" appear on the display. **Options:** ON OFF **Factory setting:** OFF
SIMULATION MEASURED VARIABLE	Use this function to set all inputs, outputs and the totalizer to their defined flow-response modes, in order to check whether they respond correctly. During this time, the words "SIMULATION MEASURAND" appear on the display. **Options:** OFF VOLUME FLOW **Factory setting:** OFF Caution! ■ The measuring device cannot be used for measuring while this simulation is in progress. ■ The setting is not saved if the power supply fails.
VALUE SIMULATION MEASURED VARIABLE	Note! This function is not available unless the SIMULATION MEASURED VARIABLE function is active (= VOLUME FLOW). Use this function to specify a selectable value (e.g. 12 m^3/s). This value is used to test downstream devices and the measuring device itself. **User input:** 5-digit floating-point number, [unit] **Factory setting:** 0 [unit] Caution! The setting is not saved if the power supply fails. Note! The appropriate unit is taken from the group SYSTEM UNITS, (see Page 8)

19 Group SENSOR VERSION

Function description SENSOR VERSION	
SERIAL NUMBER	Use this function to view the serial number of the sensor.
SENSOR TYPE	Use this function to view the sensor type.
HARDWARE REVISION NUMBER SENSOR	Use this function to view the hardware revision number of the sensor.
SOFTWARE REVISION NUMBER S-DAT	Use this function to view the software revision number of the software used to create the content of the S-DAT

20 Group AMPLIFIER VERSION

Function description AMPLIFIER VERSION	
DEVICE SOFTWARE	Displays the current device software version.
SOFTWARE REVISION NUMBER AMPLIFIER	Use this function to view the software revision number of the amplifier.
LANGUAGE GROUP	Use this function to view the language group. The following language groups can be ordered: WEST EU / USA, EAST EU / SCAND., ASIA. **Display:** available language group ✎ Note! ■ The language options of the available language group are displayed in the LANGUAGE function. ■ You can change the language group via the configuration software FieldCare. Please do not hesitate to contact your Endress+Hauser sales office if you have any questions.
I/O MODULE TYPE	Use this function to view the configuration of the I/O module complete with terminal numbers.
SOFTWARE REVISION NUMBER I/O MODULE	Use this function to view the software revision number of the I/O module.

21 Factory settings

21.1 SI units (not for USA and Canada)

Low flow, full scale value, pulse value, totalizer

Nominal diameter		Low flow		Full scale value		Pulse value		Totalizer
[mm]	[inch]	(approx. v = 0.04 m/s)		(approx. v = 2.5 m/s)		(approx. 2 pulses/s at v = 2.5 m/s)		
2	1/12"	0.01	dm³/min	0.5	dm³/min	0.005	dm³	dm³
4	5/32"	0.05	dm³/min	2	dm³/min	0.025	dm³	dm³
8	5/16"	0.1	dm³/min	8	dm³/min	0.10	dm³	dm³
15	1/2"	0.5	dm³/min	25	dm³/min	0.20	dm³	dm³
25	1"	1	dm³/min	75	dm³/min	0.50	dm³	dm³
32	1 1/4"	2	dm³/min	125	dm³/min	1.00	dm³	dm³
40	1 1/2"	3	dm³/min	200	dm³/min	1.50	dm³	dm³
50	2"	5	dm³/min	300	dm³/min	2.50	dm³	dm³
65	2 1/2"	8	dm³/min	500	dm³/min	5.00	dm³	dm³
80	3"	12	dm³/min	750	dm³/min	5.00	dm³	dm³
100	4"	20	dm³/min	1200	dm³/min	10.00	dm³	dm³
125	5"	30	dm³/min	1850	dm³/min	15.00	dm³	dm³
150	6"	2.5	m³/h	150	m³/h	0.025	m³	m³
200	8"	5.0	m³/h	300	m³/h	0.05	m³	m³
250	10"	7.5	m³/h	500	m³/h	0.05	m³	m³
300	12"	10	m³/h	750	m³/h	0.10	m³	m³
350	14"	15	m³/h	1000	m³/h	0.10	m³	m³
400	16"	20	m³/h	1200	m³/h	0.15	m³	m³
450	18"	25	m³/h	1500	m³/h	0.25	m³	m³
500	20"	30	m³/h	2000	m³/h	0.25	m³	m³
600	24"	40	m³/h	2500	m³/h	0.30	m³	m³
700	28"	50	m³/h	3500	m³/h	0.50	m³	m³
–	30"	60	m³/h	4000	m³/h	0.50	m³	m³
800	32"	75	m³/h	4500	m³/h	0.75	m³	m³
900	36"	100	m³/h	6000	m³/h	0.75	m³	m³
1000	40"	125	m³/h	7000	m³/h	1.00	m³	m³
–	42"	125	m³/h	8000	m³/h	1.00	m³	m³
1200	48"	150	m³/h	10000	m³/h	1.50	m³	m³
–	54"	200	m³/h	13000	m³/h	1.50	m³	m³
1400	–	225	m³/h	14000	m³/h	2.00	m³	m³
–	60"	250	m³/h	16000	m³/h	2.00	m³	m³
1600	–	300	m³/h	18000	m³/h	2.50	m³	m³
–	66"	325	m³/h	20500	m³/h	2.50	m³	m³
1800	72"	350	m³/h	23000	m³/h	3.00	m³	m³
–	78"	450	m³/h	28500	m³/h	3.50	m³	m³
2000	–	450	m³/h	28500	m³/h	3.50	m³	m³

Language

Country	Language
Australia	English
Austria	Deutsch
Belgium	English
Czech Republic	Czech
Denmark	English
England	English
Finland	Suomi
France	Francais
Germany	Deutsch
Hong Kong	English
Hungary	English
India	English
Indonesia	Bahasa Indonesia
Instruments International	English
Italy	Italiano
Japan	Japanese
Malaysia	English
Netherlands	Nederlands
Norway	Norsk
Poland	Polish
Portugal	Portuguese
Russia	Russian
Singapore	English
South Africa	English
Spain	Espanol
Sweden	Svenska
Switzerland	Deutsch
Thailand	English

Length

	Unit
Length	mm

21.2 US units (only for USA and Canada)

Low flow, full scale value, pulse value, totalizer

Nominal diameter		Low flow		Full scale value		Pulse value		Totalizer
[inch]	[mm]	(approx. v = 0.04 m/s)		(approx. v = 2.5 m/s)		(approx. 2 pulses/s at v = 2.5 m/s)		
1/12"	2	0.002	gal/min	0.1	gal/min	0.001	gal	gal
5/32"	4	0.008	gal/min	0.5	gal/min	0.005	gal	gal
5/16"	8	0.025	gal/min	2	gal/min	0.02	gal	gal
1/2"	15	0.10	gal/min	6	gal/min	0.05	gal	gal
1"	25	0.25	gal/min	18	gal/min	0.20	gal	gal
1 1/4"	32	0.50	gal/min	30	gal/min	0.20	gal	gal
1 1/2"	40	0.75	gal/min	50	gal/min	0.50	gal	gal
2"	50	1.25	gal/min	75	gal/min	0.50	gal	gal
2 1/2"	65	2.0	gal/min	130	gal/min	1	gal	gal
3"	80	2.5	gal/min	200	gal/min	2	gal	gal
4"	100	4.0	gal/min	300	gal/min	2	gal	gal
5"	125	7.0	gal/min	450	gal/min	5	gal	gal
6"	150	12	gal/min	600	gal/min	5	gal	gal
8"	200	15	gal/min	1200	gal/min	10	gal	gal
10"	250	30	gal/min	1500	gal/min	15	gal	gal
12"	300	45	gal/min	2400	gal/min	25	gal	gal
14"	350	60	gal/min	3600	gal/min	30	gal	gal
16"	400	60	gal/min	4800	gal/min	50	gal	gal
18"	450	90	gal/min	6000	gal/min	50	gal	gal
20"	500	120	gal/min	7500	gal/min	75	gal	gal
24"	600	180	gal/min	10500	gal/min	100	gal	gal
28"	700	210	gal/min	13500	gal/min	125	gal	gal
30"	–	270	gal/min	16500	gal/min	150	gal	gal
32"	800	300	gal/min	19500	gal/min	200	gal	gal
36"	900	360	gal/min	24000	gal/min	225	gal	gal
40"	1000	480	gal/min	30000	gal/min	250	gal	gal
42"	–	600	gal/min	33000	gal/min	250	gal	gal
48"	1200	600	gal/min	42000	gal/min	400	gal	gal
54"	–	1.3	Mgal/d	75	Mgal/d	0.0005	Mgal	Mgal
–	1400	1.3	Mgal/d	85	Mgal/d	0.0005	Mgal	Mgal
60"	–	1.3	Mgal/d	95	Mgal/d	0.0005	Mgal	Mgal
–	1600	1.7	Mgal/d	110	Mgal/d	0.0008	Mgal	Mgal
66"	–	2.2	Mgal/d	120	Mgal/d	0.0008	Mgal	Mgal
72"	1800	2.6	Mgal/d	140	Mgal/d	0.0008	Mgal	Mgal
78"	–	3.0	Mgal/d	175	Mgal/d	0.001	Mgal	Mgal
–	2000	3.0	Mgal/d	175	Mgal/d	0.001	Mgal	Mgal

Language, length

	Unit
Language	English
Length	inch

22 Index of key words

Numerics

100% Value 13

A

Access code 12
Active level (status input) 40
Actual
  Current 21
  Frequency 27
  Status output 35
Alarm delay (notice or fault messages) 55
Assign
  Current output 19
  Display line 1 13
  Display line 2 13
  Frequency 23
  Low flow cut off 43
  Process error 54
  Pulse 28
  Status input 40
  Status output 34
  System error 54
  Totalizer 16

B

Bus address 42

C

Code
  Access code 12
  Counter (Unlocking) 12
  Private code 12
Commissioning Quick Setup 10
Contrast LCD 14
Current span 20

D

Device ID 42
Device Revision 42
Device software 57
Display
  Backlight 15
  Contrast LCD 14
  Damping 14
  Format 14
  Test 15

E

ECC (electrode cleaning) 47
  Cleaning cycle 48
  Duration 47
  Polarity 53
  Recovery time 48
Empty Pipe Detection (EPD/OED)
  EPD electrode 53
  EPD/OED adjustment 46
  General information 44
  Response time 47
  Switching on/off EPD/OED 44
End value frequency 23
Error category
  Process error 55
  System error 54

F

Factory settings 58
Failsafe mode
  Current output 21
  Frequency output 27
  Pulse output 32
  Totalizer 18
Flow damping (system damping) 51
Format (display) 14
Frequency (High value) 24
Function matrix
  Layout and use 5
  Overview 6

G

Group
  Amplifier version 57
  Communication 42
  Current output 19
  Handling totalizer 18
  Measuring values 7
  Operation 11
  Process parameter 43
  Pulse/frequency output 23
  Quick Setup 10
  Sensor data 52
  Sensor version 57
  Simulation system 56
  Status input 40
  Status output 34
  Supervision 54
  System parameters 49
  System units 8
  Totalizer 16
  User interface 13

H

Hardware revision number (sensor) 57
HART Protocol 42

I

I/O module type (input/output type) 57
Installation direction sensor 49
Integration time 51

K

K-Factor 52

L

Language
  Factory settings 59, 60
  Language group (display) 57
  Selection 11

Low flow cut off
Off value 43
On value 43

M

Manufacturer ID 42
Measuring mode 49
Measuring period 53
Minimum pulse width 40

N

Nominal diameter 52

O

OED (Open electrode detection)
see Empty Pipe Detection 44
Off value
Low flow cut off 43
Status output 35
On value
Low flow cut off 43
Status output 34
Operation hours 55
Operation mode (pulse/frequency output) 23
Output signal
Frequency output 25, 26
Pulse 30, 31
Overflow (totalizer) 16
Overvoltage time 53

P

Permanent storage 55
Polarity ECC 53
Positive zero return 50
Previous system conditions 54
Pulse value 29
Pulse width 29

Q

Quick Setup commissioning 10

R

Reset
All totalizers 18
System 55
Totalizer 17

S

Sensor
Installation direction 49
K-Factor 52
Measuring period 53
Overvoltage time 53
Sensor type 57
Serial number 57
Zero point 52
Simulation
Current 22
Failsafe mode 56
Frequency 28
Measured variable 56
Pulses 32
Status input 40
Switch point 35
Software revision number
Amplifier 57
Device Software 57
I/O Module 57
S-DAT 57
Status access 12
Status output
Flow direction 37
General 37
Limit value 37
Switching response 38
Storage
permanent 55
Sum (totalizer) 16
System
Current conditions 54
Damping (flow damping) 51
Operation hours 55
Previous conditions 54
Reset 55

T

Tag
Description 42
Name 42
Test display 15
Time constant
Current output 21
Frequency output 27
Status output 35
Totalizer 16
Assign 16
Failsafe mode 18
Mode 17
Overflow 16
Reset 17
Reset all totalizers 18
Unit selection 16

U

Unit
Length 9
Totalizer 16
Volume 8
Volume flow 8

V

Value
20 mA 21
f high 24
Failsafe level 27
Value simulation
Current 22
Frequency 28
Measured variable 56
Pulse 33

Status input 41
Switch point 36
Volume flow (display) 7

Z

Zero point 52

www.endress.com/worldwide

Endress+Hauser

People for Process Automation

BA049D/06/en/11.09
71105948
FM+SGML6.0

ENDRESS + HAUSER

LIQUIPHANT M FTL51, LEVEL SWITCH (VIBRONIC)

LEFT BLANK

KA00143F/00/A6/14.17
71352535

Operating Instructions
Liquiphant M FTL50, FTL51

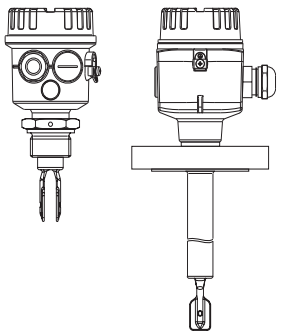

DE - Grenzschalter
EN - Point Level Switch
FR - Détecteur de niveau
ES - Detector de nivel
IT - Interruttore di livello
NL - Niveauschakelaar

Endress+Hauser
People for Process Automation

DE- Inhalt

Sicherheitshinweise	4
Behandlung	6
Geräte-Identifikation	8
Verwendung	14
Messeinrichtung	15
Einbau	19
Einstellungen	28
Lichtsignale	32
Anschluss	33
Wartung, Reinigung	54
Technische Daten	55
Zubehör	57
Fehlersuche	60
Ersatzteile	68
Reparatur	69
Ergänzende Dokumentation	73

EN -Contents

Notes on Safety	4
Handling	6
Device Identification	8
Application	14
Measuring system	15
Installation	19
Setting-up	28
Light signals	32
Connections	33
Maintenance, Cleaning	54
Technical Data	55
Accessories	57
Trouble-shooting	61
Spare parts	68
Repair	69
Supplementary Documentation	73

FR- Sommaire

Conseils de sécurité	4
Manipulation	6
Dénomination	8
Utilisation	14
Ensemble de détection de niveau	15
Montage	19
Réglage	28
Signaux lumineux	32
Raccordement	33
Entretien, Nettoyage	54
Caractéristiques techniques	55
Accessoires	57
Recherche de défauts	62
Pièces de rechange	68
Réparations	69
Documentation complémentaire	73

Achtung!
= verboten;
führt zu fehlerhaftem Betrieb oder Zerstörung.

Caution!
= forbidden;
leads to incorrect operation or destruction.

Attention!
= interdit; peut provoquer des dysfonctionnements ou la destruction.

ES - Indice

Notas sobre seguridad	5
Modo de empleo	6
Identificación del equipo	8
Aplicación	14
Sistema de medida	15
Montaje	19
Ajuste	28
Señales luminosas	32
Conexiones	33
Mantenimiento, Limpieza	54
Datos técnicos	55
Accesorios	57
Identificación de fallos	63
Repuestos	68
Reparaciones	69
Documentación suplementaria	70

IT - Indice

Note sulla sicurezza	5
Accorgimenti	6
Identificazione dello strumento	8
Applicazione	14
Sistema di misura	15
Montaggio	19
Messa in servizio	28
Segnali luminosi	32
Collegamenti elettrici	33
Manutenzione, Pulizia	54
Dati tecnici	55
Accessori	57
Individuazione e eliminazione delle anomalie	64
Ricambi	68
Riparare	69
Documentazione supplementare	70

NL- Inhoud

Veiligheidsinstructies	5
Behandeling	6
Instrument- identificatie	8
Toepassing	14
Meetopstelling	15
Inbouw	19
Instellingen	28
Lichtsignalen	32
Aansluiting	33
Onderhoud, Reiniging	54
Technische gegevens	55
Toebehoren	57
Fout zoeken	65
Reserve-onderdelen	68
Reparatie	69
Aanvullende documentatie	70

Atención!
= Prohibido; peligro de mal funcionamiento o de destrucción.

Attenzione!
= Vietato; pericolo di malfunzionamento o di distruzione.

Opgelet!
= verboden; leidt tot foutieve werking of storing.

DE- Sicherheitshinweise

Der Liquiphant M FTL50, FTL51 darf nur als Grenzschalter für Flüssigkeiten verwendet werden.
Bei unsachgemäßem Einsatz können Gefahren von ihm ausgehen.
Das Gerät darf **nur von qualifiziertem und autorisiertem Fachpersonal** unter strenger Beachtung dieser Betriebsanleitung, der einschlägigen Normen, der gesetzlichen Vorschriften und der Zertifikate (je nach Anwendung) eingebaut, angeschlossen, in Betrieb genommen und gewartet werden.
In der Gebäudeinstallation ist ein Netzschalter für das Gerät leicht erreichbar in dessen Nähe zu installieren.
Er ist als Trennvorrichtung für das Gerät zu kennzeichnen.

EN- Notes on Safety

The Liquiphant M FTL50, FTL51 is designed for point level detection in liquids.
If used incorrectly it is possible that application-related dangers may arise.
The level limit switch Liquiphant M FTL50, FTL51 may be installed, connected, commissioned, operated and maintained **by qualified and authorised personnel only**, under strict observance of these operating instructions, any relevant standards, legal requirements, and, where appropriate, the certificate.
Install an easily accessible power switch in the proximity of the device.
Mark the power switch as a disconnector for the device.

FR- Conseils de sécurité

Le Liquiphant M FTL50, FTL51 doit être exclusivement utilisé comme détecteur de niveau pour liquides.
Il peut être source de danger en cas d'utilisation non conforme aux prescriptions.
L'appareil ne doit être installé, raccordé, mise en service et entretenu **que par un personnel qualifié et autorisé**, qui tiendra compte des indications contenues dans la présente mise en service, des normes en vigueur et des certificats disponibles (selon l'application).
Installer un commutateur réseau à proximité immédiate de l'appareil, en veillant à ce qu'il soit facilement accessible.
Marquer ce commutateur comme prise de coupure de l'appareil.

ES - Notas sobre seguridad

El detector de nivel Liquiphant M FTL50, FTL51 ha sido diseñado para la detección de límite en fluidos.
Su empleo inapropiado puede resultar peligroso.
El equipo deberá ser montado, conectado, instalado y mantenido **única y exclusivamente por personal cualificado y autorizado**, bajo rigurosa observación de las presentes instrucciones de servicio, de las normativas y legislaciones vigentes, así como de los certificados (dependiendo de la aplicación).
Instalar un interruptor de fácil acceso en las proximidades del equipo.
Identificar el interruptor como desconectador del equipo.

IT - Note sulla sicurezza

Il Liquiphant M FTL50, FTL51 è particolarmente studiato per l'impiego come soglia di livello in liquidi.
Un'installazione non corretta può determinare pericolo.
Lo strumento può essere montato **solamente da personale qualificato ed autorizzato**.
La messa in esercizio e la manutenzione devono rispettare le indicazioni di collegamento, le norme e i certificati di seguito riportati.
Installare un interruttore per l'alimentazione in prossimità del dispositivo.
Marcare l'interuttore come disconnessione del dispositivo.

NL- Veiligheidsinstructies

Gebruik de Liquiphant M FTL50, FTL51 alleen als niveauschakelaar voor vloeistoffen.
Indien niet correct gebruikt kunnen gevaarlijke situaties ontstaan.
Het instrument **alleen door gekwalificeerd en geautoriseerd personeel** laten inbouwen, aansluiten, in bedrijf nemen en onderhouden.
Neem de instructies in deze Inbedrijfstellingsvoorschriften, de desbetreffende normen, de wettelijke voorschriften en eventuele certificaten in acht.
Installeer een makkelijk bereikbare voedingschakelaar in de nabijheid van het instrument.
Kenmerk de voedingschakelaar specifiek voor het instrument.

DE- Behandlung
Am Gehäuse, Flansch oder Verlängerungsrohr anfassen.

EN- Handling
Hold by housing, flange or extension tube.

FR - Manipulation
Tenir par le boîtier, la bride ou le tube prolongateur.

ES - Modo de empleo
Coger por el cabezal, brida o tubo de extensión.

IT - Accorgimenti
Afferrare la custodia, per la flangia o per il tubo di estensione.

NL- Behandeling
Vastpakken via behuizing, flens of verlengbuis.

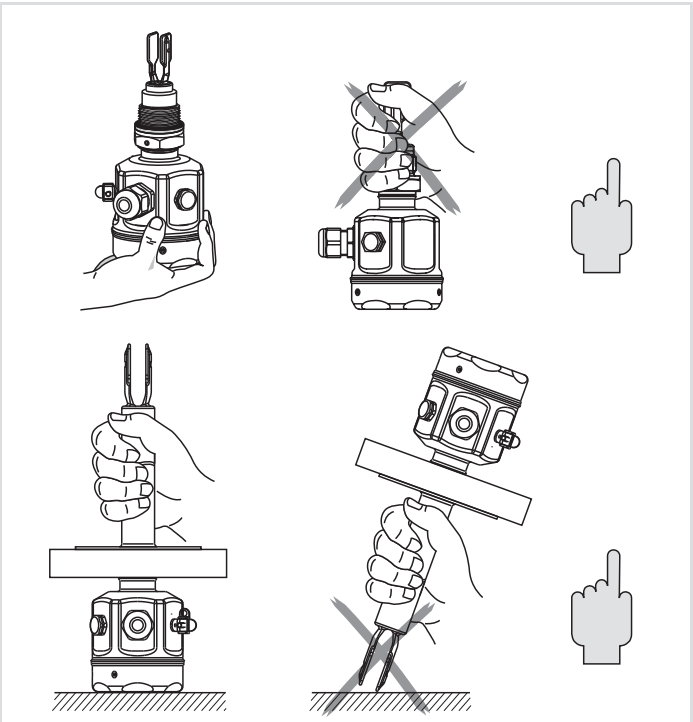

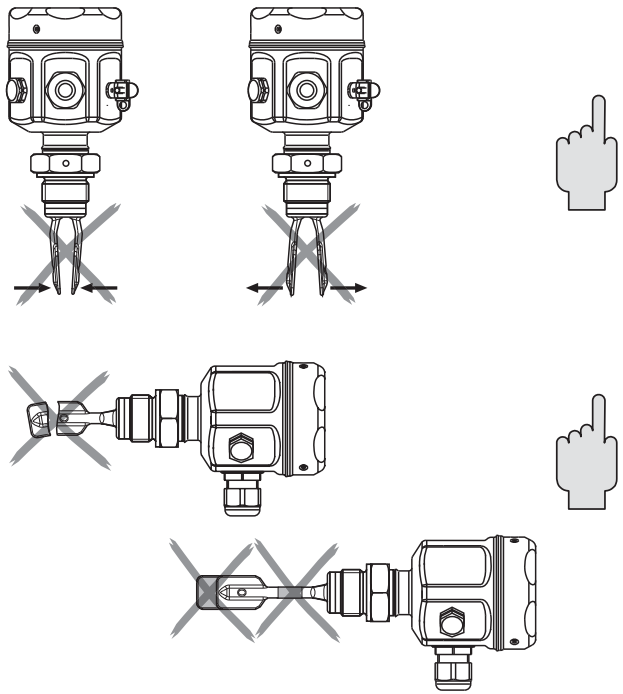

DE- **Nicht** verbiegen
Nicht kürzen
Nicht verlängern

EN- Do **not** bend
Do **not** shorten
Do **not** lengthen

FR - **Ne pas** déformer
Ne pas raccourcir
Ne pas rallonger

ES - **No** torcer
No acortar
No alargar

IT - **Non** stringere o allargare
Non accorciare o allungare
Non piegare

NL- **Niet** verbuigen
Niet inkorten
Niet verlengen

DE- Geräte-Identifikation

EN- Device Identification

FR - Dénomination

ES - Identificación del equipo

IT - Identificazione dello strumento

NL- Instrument-identificatie

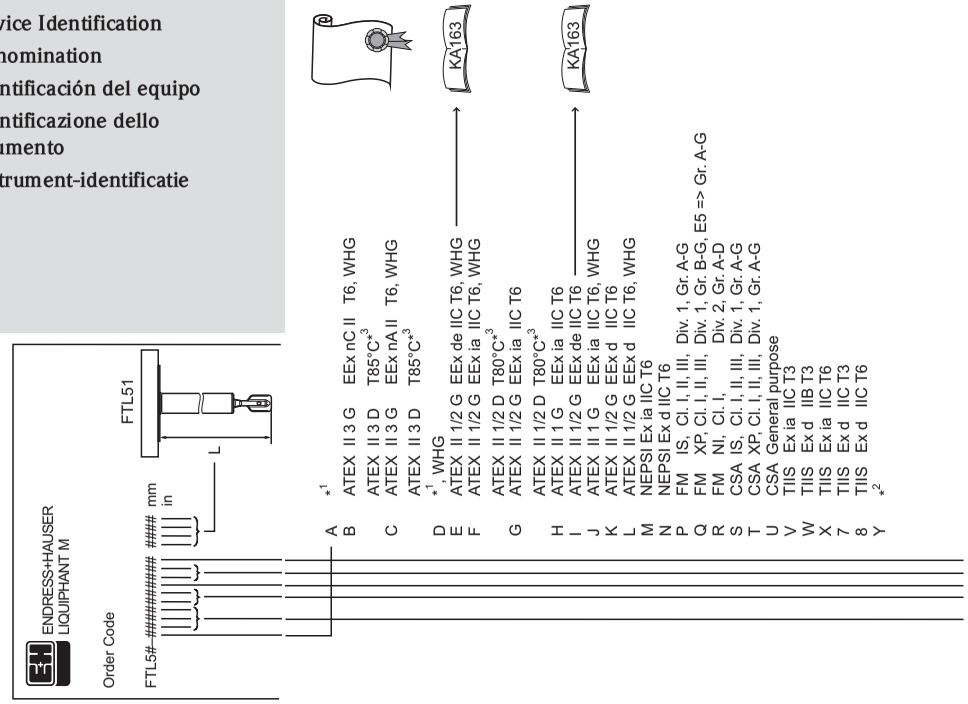

A##	Flansche / Flanges / Brides / Brida / Flangia / Flens	→ 12 13	
B##			
C##			
D##			
F##			
K##			
N##			
GE2	R ¾,	DIN 2999, 316L	max. 100 bar, 150 °C
GE5	R ¾,	DIN 2999, AlloyC4	
GE6	R ¾,	DIN 2999, AlloyC22	
GF2	R 1,	DIN 2999, 316L	
GF5	R 1,	DIN 2999, AlloyC4	
GF6	R 1,	DIN 2999, AlloyC22	
GM2	NPT ¾, ANSI,	316L	
GM5	NPT ¾, ANSI,	AlloyC4	
GM6	NPT ¾, ANSI,	AlloyC22	
GN2	NPT 1, ANSI,	316L	
GN5	NPT 1, ANSI,	AlloyC4	
GN6	NPT 1, ANSI,	AlloyC22	
GQ2	G ¾,	ISO 228, 316L	max. 100 bar, 150 °C
GQ5	G ¾,	ISO 228, AlloyC4	
GQ6	G ¾,	ISO 228, AlloyC22	
GR2	G 1,	ISO 228, 316L	
GR5	G 1,	ISO 228, AlloyC4	
GR6	G 1,	ISO 228, AlloyC22	
GW2	G 1,	ISO 228, 316L	max. 25 bar, 150 °C max. 40 bar, 100 °C
TC2	DN25-38 (1...1½"), Tri-Clamp	ISO 2852, 316L	max. 16 bar, 120 °C max. 2 bar, 150 °C
TE2	DN40-51 (2"), Tri-Clamp	ISO 2852, 316L	
YY9	*[2]		

→ 10 11

*[1] ohne / without / sans / sin / senza / zonder

*[2] andere / others / autres / otros / altri / andere

*[3] nicht gültig für PBT / not valid for PBT / non valable pour PBT / no es válido para PBT / non valido per PBT / niet geldig voor PBT

ENDRESS+HAUSER
LIQUIPHANT M

Order Code

FTL5#-########## #### mm
in

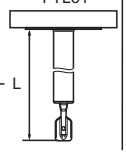

AA	*[2],		Ra < 3.2 µm/80 grit (FTL50)
BB	..... mm,	316L,	Ra < 3.2 µm/80 grit
BE	..... mm,	AlloyC4,	Ra < 3.2 µm/80 grit
CB	..... in,	316L,	Ra < 3.2 µm/80 grit
CE	..... in,	AlloyC4,	Ra < 3.2 µm/80 grit
DB	"L II",	316L,	Ra < 3.2 µm/80 grit
DE	"L II",	AlloyC4,	Ra < 3.2 µm/80 grit
IA	*[2],		+ **"T"** (FTL50)
JB	..... mm,	316L	+ **"T"**
JE	..... mm,	AlloyC4	+ **"T"**
KB	..... in,	316L	+ **"T"**
KE	..... in,	AlloyC4	+ **"T"**
LB	"L II",	316L	+ **"T"**
LE	"L II",	AlloyC4	+ **"T"**
QA	*[2],		+ **"p"** (FTL50)
RB	..... mm,	316L	+ **"p"**
RE	..... mm,	AlloyC4	+ **"p"**
SB	..... in,	316L	+ **"p"**
SE	..... in,	AlloyC4	+ **"p"**
TB	"L II",	316L	+ **"p"**
TE	"L II",	AlloyC4	+ **"p"**
YY	*[2]		

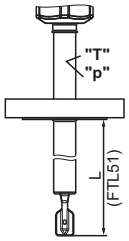

A	FEL50A, PROFIBUS PA
1	FEL51, 19…253 V AC
2	FEL52, 10… 55 V DC, PNP
4	FEL54, 19…253 V AC, 19…55 V DC, DPDT
5	FEL55, 11… 36 V DC, 8/16 mA
6	FEL56, NAMUR, L-H
7	FEL57, PFM
8	FEL58, NAMUR, H-L
9	*[2]

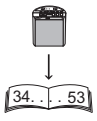

E1	F27	NEMA6P,	NPT ¾
E4	F16,	NEMA4X,	NPT ½
E5	F13/17,	NEMA4X,	NPT ¾
E6	F15,	NEMA4X,	NPT ½
F1	F27,	IP68,	G ½
F4	F16,	IP66,	G ½
F5	F13/17,	IP66,	G ½
F6	F15,	IP66,	G ½
G1	F27,	IP68,	M20
G4	F16,	IP66,	M20
G5	F13/17,	IP66,	M20
G6	F15,	IP66,	M20
N4	F16,	IP66,	M12
N5	F13/17,	IP66,	M12
N6	F15,	IP66,	M12
Y9	*2		

F16 (PBT)

F13/17 (Alu)
F27 (316L)

F15 (316L)

#3 Kompakt-Gehäuse / compact housing / boîtier compact / cabezal compacto / testa compatta / compacte behuizing → KA220

#7 Alu/sep. → KA163

A	*1
B	PVIS free
C	EN 10204 - 3.1, 316L
K	Spec. adjustment density H20
L	Spec. adjustment density H20, EN10204-3.1
N	EN 10204 - 3.1, NACE MR0175, 316L
P	100 bar (FTL51)
R	100 bar, EN 10204 - 3.1, NACE MR0175, 316L (FTL51)
S	GL/ABS marine certificate (FTL51: max. 1600 mm)
Y	*2

*1 ohne / without / sans / sin / senza / zonder

*2 andere / others / autres / otros / altri / andere

"L II" Schaltpunkt / Switchpoint / Point de commutation / Punto de conmutación / Punto di commutazione / Schakelpunt

Liquiphant II FTL 360/365, FDL 30/35

"T" Temperaturdistanzstück / Temperature spacer / Elément de refroidissement / Tramo disipador detemperatura / Distanziale per temperatura / Temperatuurreductiestuk

"p" Druckdichte Durchführung / Pressure sealed bushing / Entrée résistant à la pression / Extensión resistente a la presión / Passacavo a tenutadi pressione / Gasdichte doorvoering

DE– Flansche
EN– Flanges
FR – Brides
ES – Brida
IT – Flangia
NL– Flens

ANSI B 16.5

AA2	1½",	150 lbs, RF,	316/316L
AB2	1½",	300 lbs, RF,	316/316L (FTL51)
AC2	1½",	150 lbs, RF,	316/316L
AD2	1½",	300 lbs, RF,	316/316L (FTL51)
AE2	2",	150 lbs, RF,	316/316L
AE5	2",	150 lbs, RF,	Alloy C4 >316/316L
AE6	2",	300 lbs, RF,	Alloy C22 >316/316L
AF2	2",	300 lbs, RF,	316/316L
AG2	2",	600 lbs, RF,	316/316L (FTL51)
AJ2	2½",	300 lbs, RF,	316/316L (FTL51)
AL2	3",	150 lbs, RF,	316/316L
AM2	3",	300 lbs, RF,	316/316L (FTL51)
AN2	3",	600 lbs, RF,	316/316L (FTL51)
AP2	4",	150 lbs, RF,	316/316L
AQ2	4",	300 lbs, RF,	316/316L (FTL51)
AR2	4",	600 lbs, RF,	316/316L (FTL51)
A82	1",	150 lbs, RF,	316/316L

EN 1092-1

BA2	DN32,	PN6 A,	316L
BB2	DN32,	PN25/40 A,	316L
BC2	DN40,	PN6 A,	316L
BD2	DN40,	PN25/40 A,	316L
BE2	DN50,	PN6 A,	316L
BG2	DN50,	PN25/40 A,	316L
BH2	DN65,	PN6 A,	316L
BJ2	DN50,	PN100 A,	316L (FTL51)
BK2	DN65,	PN25/40 A,	316L
BM2	DN80,	PN10/16 A,	316L
BN2	DN80,	PN25/40 A,	316L
BQ2	DN100,	PN10/16 A,	316L
BR2	DN100,	PN25/40 A,	316L

B12	DN80,	PN100 A,	316L (FTL51)
B82	DN25,	PN25/40 A,	316L
CA2	DN32,	PN6 B1,	316L
CA5	DN32,	PN6,	AlloyC4 >316L
CA6	DN32,	PN6,	AlloyC22 >316L
CE2	DN50,	PN6 B1,	316L
CE5	DN50,	PN6,	AlloyC4 >316L
CE6	DN50,	PN6,	AlloyC22 >316L
CG2	DN50,	PN25/40 B1,	316L
CG5	DN50,	PN25/40,	AlloyC4 >316L
CG6	DN50,	PN25/40,	AlloyC22 >316L
CJ2	DN50,	PN100 B2,	316L (FTL51)
CN2	DN80,	PN25/40 B1,	316L
CN5	DN80,	PN25/40,	AlloyC4 >316L
CN6	DN80,	PN25/40,	AlloyC22 >316L
CQ2	DN100,	PN10/16 B1,	316L
CQ5	DN100,	PN10/16,	AlloyC4 >316L
CQ6	DN100,	PN10/16,	AlloyC22 >316L
C12	DN80,	PN100 B2,	316L (FTL51)
C82	DN25,	PN25/40 B1,	316L
C85	DN25,	PN25/40,	AlloyC4 >316L
C86	DN25,	PN25/40,	AlloyC22 >316L
DG2	DN50,	PN40 B1,	316L
DN2	DN80,	PN40 B1,	316L
D82	DN25,	PN40 B1,	316L
FG2	DN50,	PN40 C,	316L
NG2	DN50,	PN40 D,	316L

JIS B2220

KA2	10K 25,	RF,	316L
KC2	10K 40,	RF,	316L
KE2	10K 50,	RF,	316L
KE5	10K 50,	RF,	AlloyC4 >316L
KE6	10K 50,	RF,	AlloyC22 >316L
KL2	10K 80,	RF,	316L
KP2	10K 100,	RF,	316L

DE- Verwendung
Grenzstanddetektion in Flüssigkeiten

EN- Application
Point level detection in fluids

FR - Utilisation
Détection de niveau dans les liquids

ES - Aplicación
Detección de nivel en líquidos agua

IT - Applicazione
Controllo livello nei liquidi

NL- Toepassing
Niveaudetectie in vloeistoffen

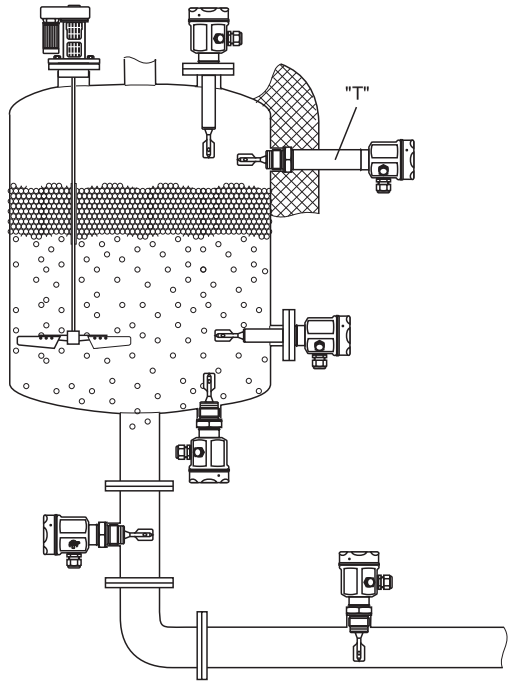

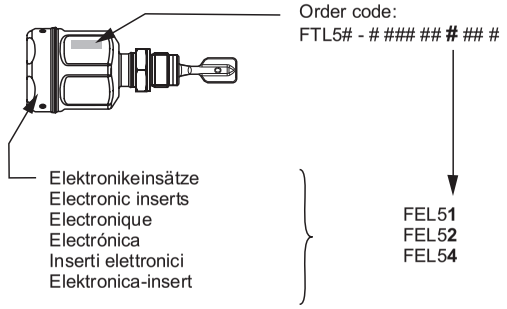

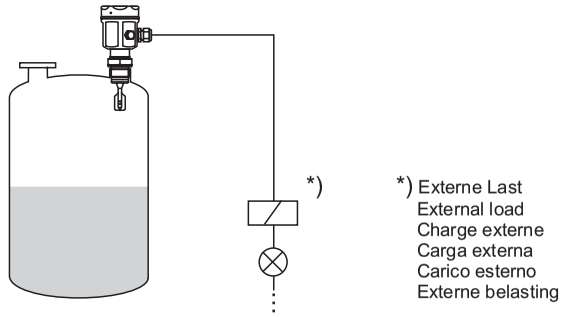

DE- Messeinrichtung
für direkten Anschluss

EN- Measuring system
for direct connection

FR- Ensemble de détection de niveau
pour raccordement direct

ES- Sistema de medida
para conexión directa

IT - Sistema di misura
per connessione diretta

NL- Meetopstelling
voor directe aansluiting

DE- Messeinrichtung
für Anschluss über Schaltgerät

EN- Measuring system
for connection via switching unit

FR - Ensemble de détection de niveau
pour raccordement via détecteur

ES - Sistema de medida
para conexión vía interruptores

IT - Sistema di misura
per connessione mediante unità di commutazione

NL- Meetopstelling
voor aansluiting aan een schakelversterker

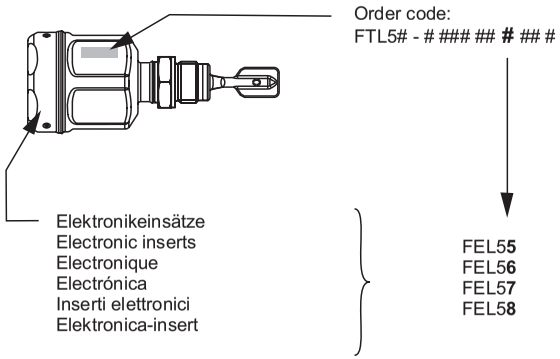

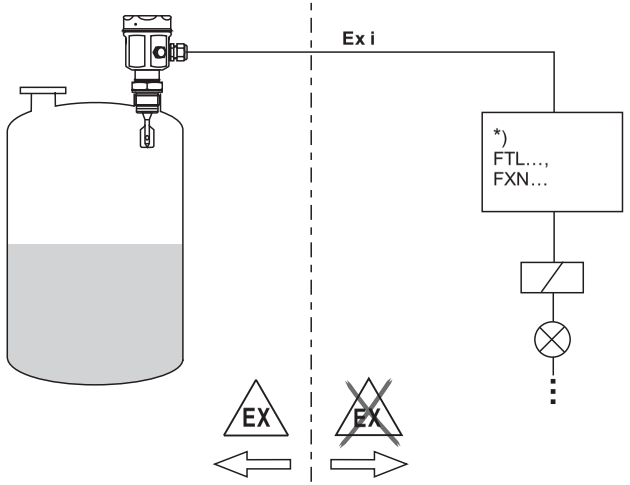

*) Schaltgerät, SPS, Trennverstärker
Switching unit, PLC, isolating amplifier
Détecteur, API, convertisseur/ séparateur
Interruptor, PLC, amplificador aislado
Unità di commutazione, PLC, barriera di separazione
Schakelversterker, PLC, scheidingsversterker

DE- Messeinrichtung
für Anschluss an PROFIBUS PA

EN- Measuring system
for connection to PROFIBUS PA

FR - Ensemble de détection de niveau
pour le raccordement à PROFIBUS PA

ES - Sistema de medida
para conexión a PROFIBUS PA

IT - Sistema di misura
per connessione a PROFIBUS PA

NL- Meetopstelling
voor aansluiting aan PROFIBUS PA

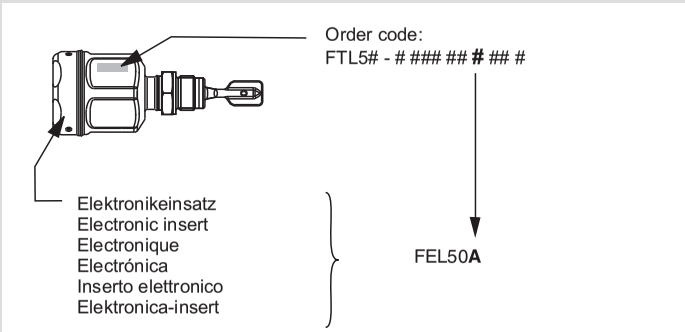

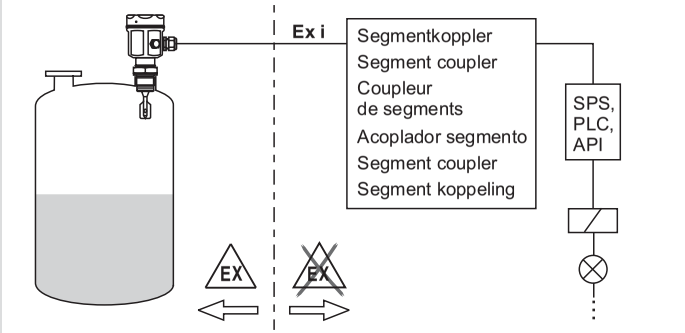

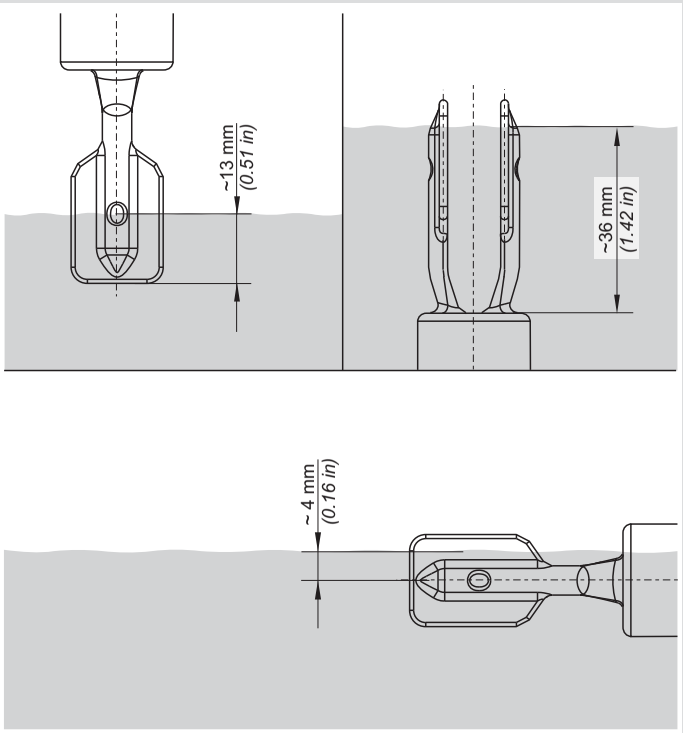

DE- Einbau
Schaltpunkt in Abhängigkeit vom Einbau

EN- Installation
Switchpoint depends on mounting position

FR- Montage
Point de commutation en fonction de l'implantation

ES - Montaje
Punto de conmutación dependiendo de la posición de montaje

IT - Montaggio
Punto di commutazione in funzione della posizione di montaggio

NL- Inbouw
Schakelpunt afhankelijk van inbouw

DE- Einbaubeispiele
in Abhängigkeit von der
Viskosität ν der Flüssigkeit

EN- Mounting examples
as a function of liquid viscosity ν

FR - Exemples d'implantation
dépendant de la viscosité ν
du liquide

ES - Ejemplos de montaje
dependiendo de la viscosidad ν
del líquido

IT - Esempi di montaggio
come funzione di viscosità ν
del liquido

NL- Inbouwvoorbeelden
afhankelijk van de viscositeit ν
van de vloeistof

ν = 0…2000 mm²/s
(ν = 0…2000 cSt)

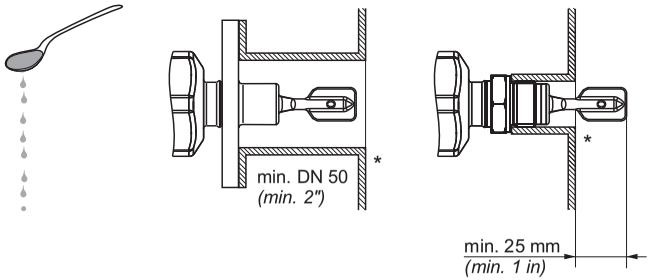

* entgraten / deburr / ébarber / libre / sbavare / ontbramen

ν = 0…10000 mm²/s
(ν = 0…10000 cSt)

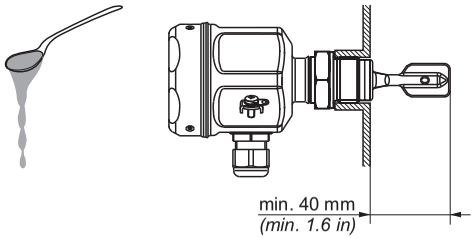

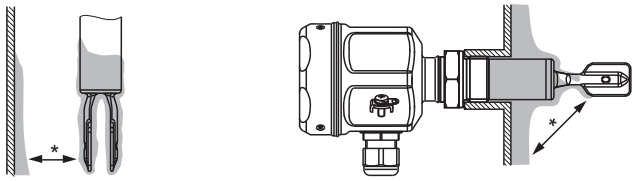

* Abstand! / Distance! / Distance! / ¡Distancia! / Distanza! / Afstand!

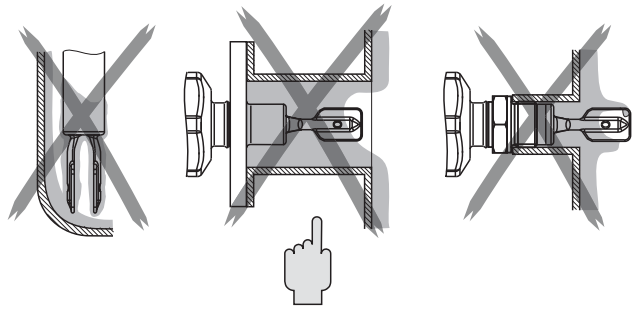

DE- Ansatzbildung berücksichtigen.
Schwinggabel darf Ansatz nicht berühren.

EN- Consider build-up.
Fork may not contact the build-up.

FR - Tenir compte du colmatage.
Fourche ne doit pas entrer en contact avec le dépôt.

ES - Tener en cuenta las adherencias.
Las horquillas no deben estar en contacto con las adherencias.

IT - Tenere conto dei depositi.
La forcella non deve entrare in contatto con i depositi.

NL- Rekening houden met aangroei.
Trilvork mag de aangroei niet aanraken.

DE- Bei dynamischer Belastung abstützen

EN- In cases of dynamic forces support

FR - En cas de contraintes dynamiques, étayer le tube

ES - En caso de cargas dinámicas altas debe ser apoyado

IT - In caso di carichi dinamici, rinforzare con un supporto meccanico

NL- Bij mechanische belasting verstevigen

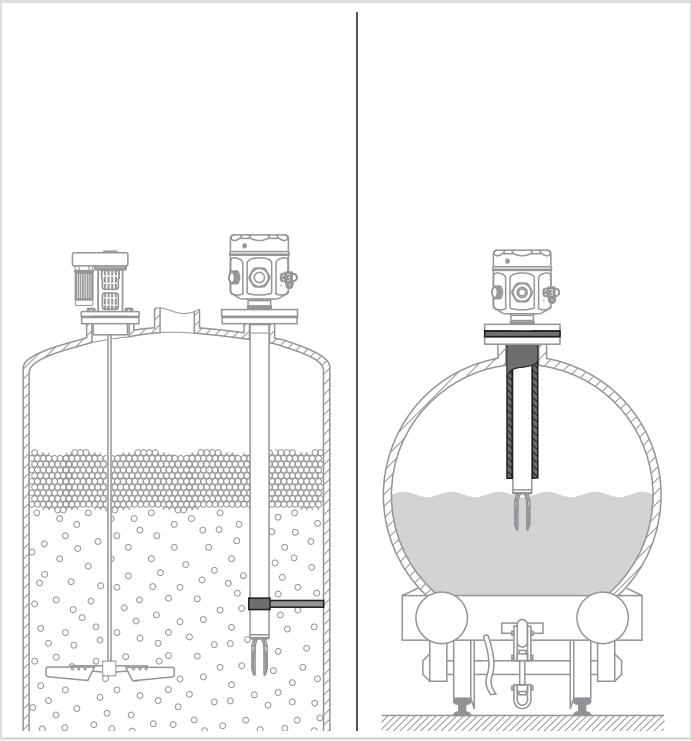

"T" = mit Temperaturdistanzstück für isolierten Tank
"T" = with temperature spacer for insulated tanks
"T" = avec élément de refroidissement pour réservoir isolé
"T" = con tramo disipador de temperatura para tanques aislados
"T" = con distanziale di temperatura per serbatoi isolati
"T" = met temperatuurreductiestuk voor geïsoleerde tanks

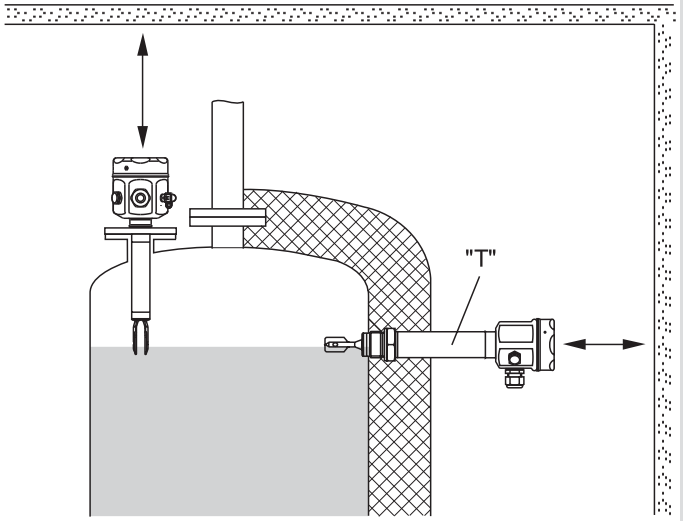

DE- Freiraum vorsehen
EN- Allow clearance
FR - Prévoir un espace libre
ES - Prever espacio
IT - Lasciare spazio per estrazione
NL- Ruimte vrijhouden

DE- Schwinggabel ausrichten:
Markierung oben oder unten

EN- Orientation of fork tines:
Marking above or below

FR - Orientation des lames vibrantes:
Repères en haut ou en bas

ES - Orientación de la horquilla:
Marca arriba o abajo

IT - Allineamento della forcella:
Marcatura in alto o in basso

NL- Vork uitrichten:
Markering boven of onder

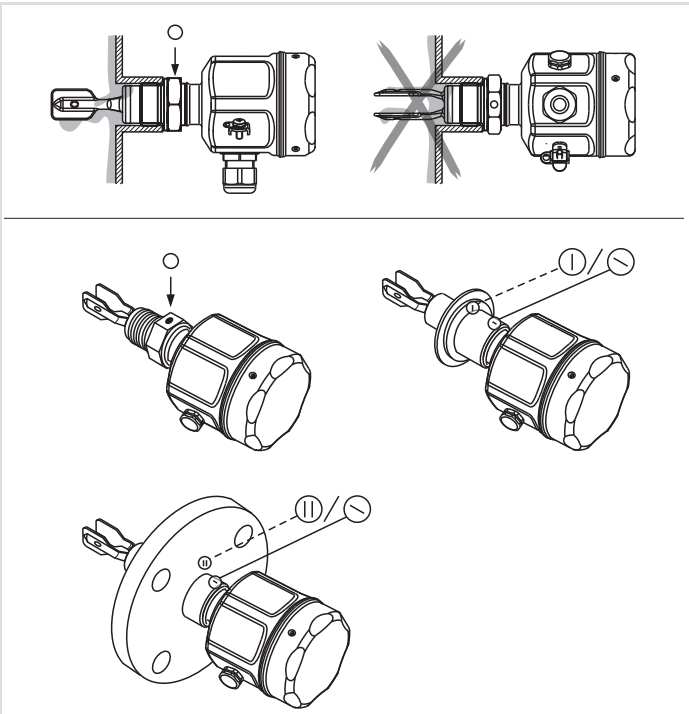

G ¾, 32 mm (1¼")*
G 1, 41 mm (1⅝")*

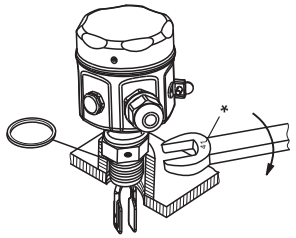

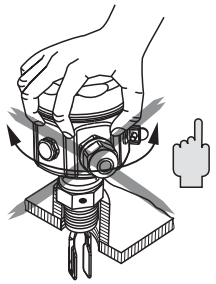

NPT ¾, R ¾, G ¾, 32 mm (1¼")*
NPT 1, R 1, G 1, 41 mm (1⅝")*

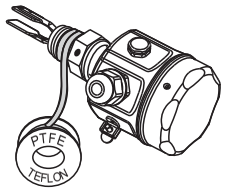

A

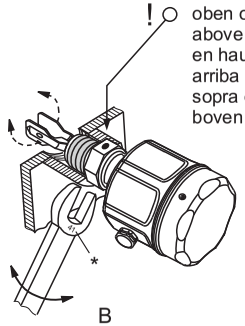

B

DE- Liquiphant einschrauben.
Nicht am Gehäuse drehen.

EN- Screw Liquiphant into process connection.
Don't use housing to turn.

FR - Visser le Liquiphant.
Ne pas se servir du boîtier.

ES - Roscar el Liquiphant a la conexión a proceso.
No girar el cabezal.

IT - Avvitare il Liquiphant all'attacco di processo.
Allo scopo **non** utilizzare la custodia.

NL- Schroef de Liquiphant in de procesaansluiting.
Draai hierbij **niet** aan de behuizing.

DE- Ausrichten in Rohrleitungen:
Markierung in Fließrichtung

EN- Orientation in pipes:
Marking in direction of flow

FR - Orientation dans une conduite:
Repère dans le sens de l'écoulement

ES - Montaje y orientación dentro de tuberías:
Marca en dirección del caudal

IT - Allineamento per montaggio in tubazioni:
Marcatura nella direzione del flusso

NL- Opstelling in leidingen:
Markering in de stroomrichting

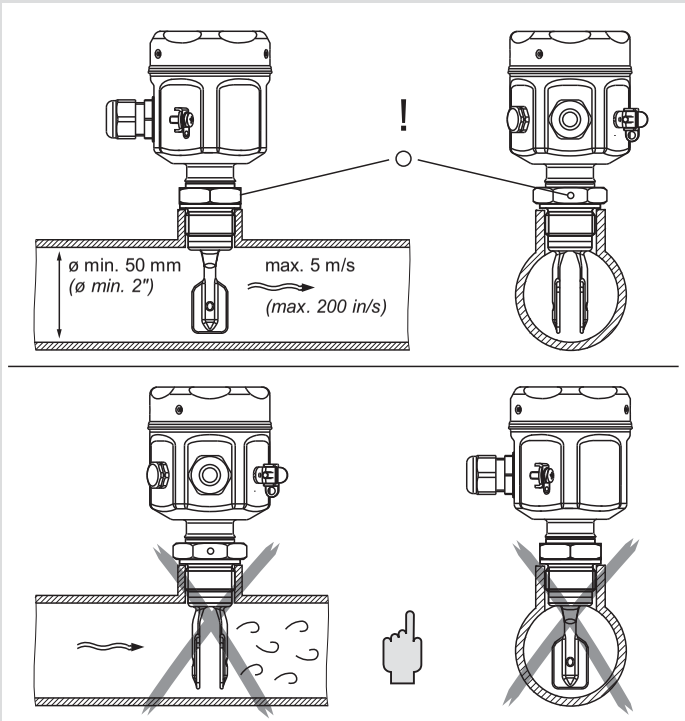

F15, F27

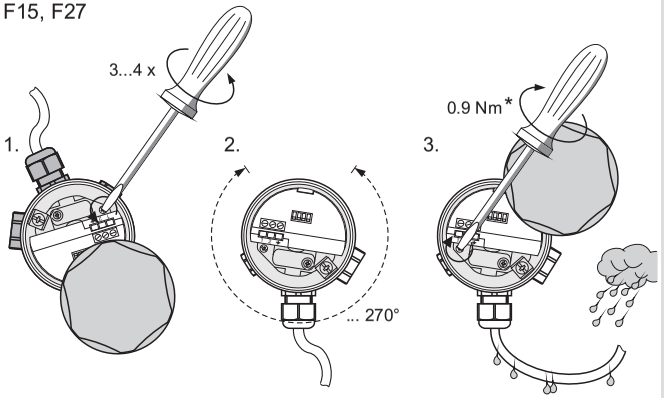

F16, F13, F17

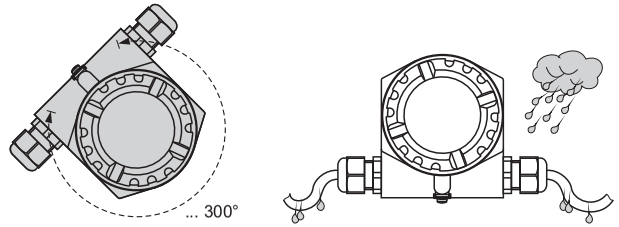

DE- Kabeleinführung ausrichten
EN- Cable gland orientation
FR - Positionnement de l'entrée de câble
ES - Ajuste del prensaestopa
IT - Posizionamento del passacavo
NL- Kabelinvoer uitrichten

* Anzugsdrehmoment /
Torque /
Couple de serrage /
Esfuerzo de torsión /
Coppia di torsione /
Aandraaimoment

DE- Einstellungen
Minimum-/Maximum-
Sicherheitsschaltung

EN- Setting-up
Minimum/maximum
fail-safe mode

FR - Réglage
Sécurité minimum/maximum

ES - Ajuste
Conmutador de seguridad
mín./máx.

IT - Messa in servizio
Selezione della modalità
di sicurezza min./max.

NL- Instellingen
Minimum/maximum
veiligheidsschakeling

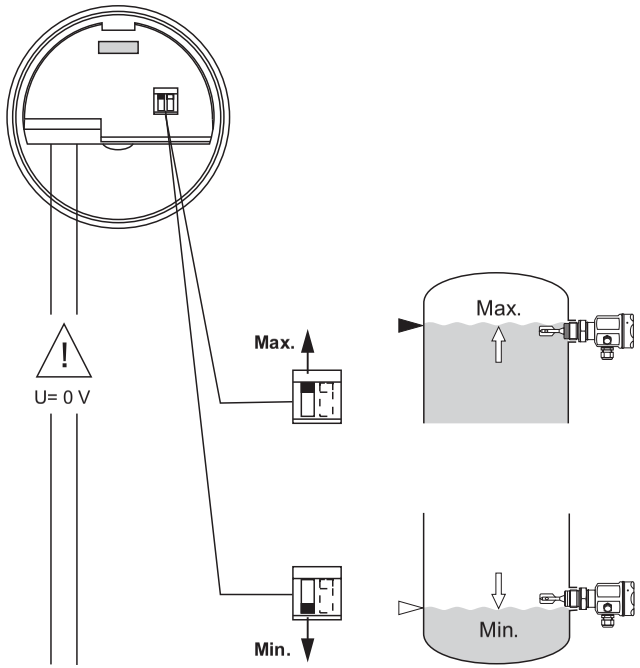

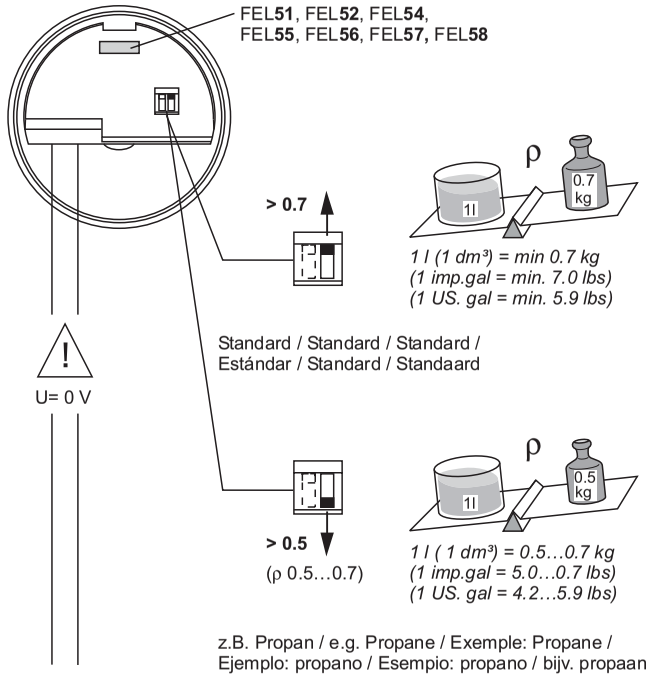

DE- Dichte der Flüssigkeit.
Dichte ρ gemessen in g/cm³
oder in kg/l.

EN- Liquid density.
Density ρ measured in g/cm³
or in kg/l.

FR - Densité du liquide.
Unité de mesure de la densité ρ :
g/cm³ ou kg/l.

ES - Densidad de líquidos.
Densidad ρ medida en g/cm³
o en kg/l.

IT - Densità del liquido.
Densità ρ misurata in g/cm³
o in kg/l.

NL- Dichtheid van de vloeistof.
Dichtheid ρ gemeten in g/cm³
of in kg/l.

DE- Selbsttest FEL57
(Funktion siehe Seite 46, 47
und Schaltgerät)

EN- Selftest FEL57
(see page 46, 47 and
switching unit for sequence)

FR - Auto-test FEL57
(voir pages 46, 47 et détecteur)

ES - Prueba automática FEL57
(ver pág. 46, 47 e interruptor
para secuencia)

IT - Prova automatica FEL57
(vds. pag. 46, 47 e
unità di commutazione)

NL- Functietest FEL57
(zie voor functie pag 46, 47
en schakelversterker)

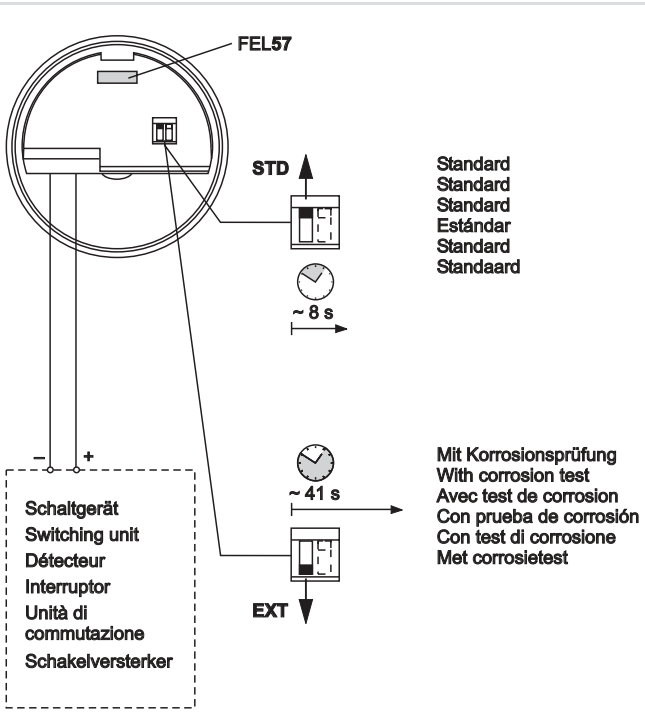

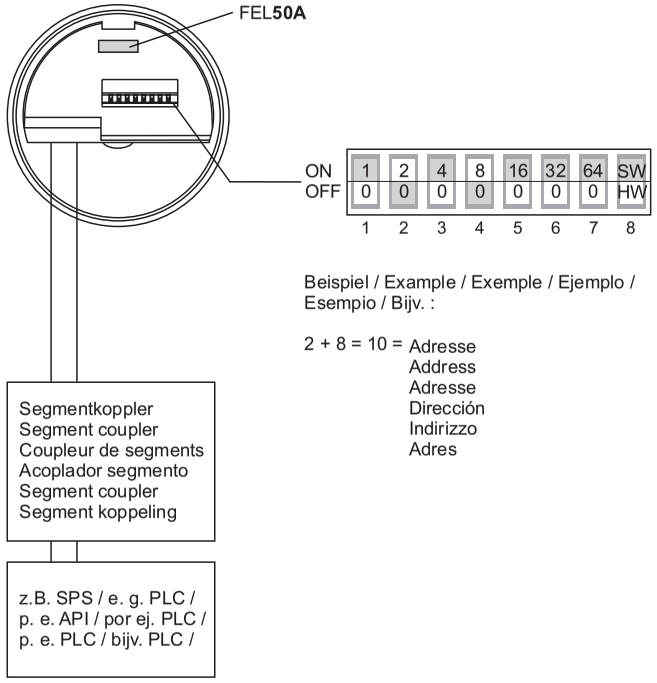

DE- Geräteadresse einstellen
(Einstellung der Parameter
siehe BA141F)

EN- Setting Device Address
(Setting the parameters,
see BA141F)

FR - Réglage de l'adresse d'appareil
(Réglage des paramètres
voir BA141F)

ES - Configuración de la dirección
del equipo
(Ver configuración parámetros
en BA141F)

IT - Impostare indirizzo del dispositivo
(Per impostazione parametri
vds. BA141F)

NL- Instrumentadres instellen
(Parameter instelling zie BA141F)

DE- Lichtsignale
EN- Light signals
FR - Signaux lumineux
ES - Señales luminosas
IT - Segnali luminosi
NL- Lichtsignalen

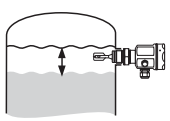

Füllstand variieren
Vary level
Varier le niveau
Nivel variable
Variare livello
Niveau variëren

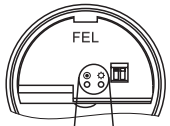

Leuchtdioden / LEDs / DEL / LEDs / LED / LED's

Betrieb / Stand-by / Fonctionnement /
Reposo / Attesa / stand-by

Schaltzustand / Switching status / Etat de commutation /
Estado conexión / Stato di commutazione / schakelstand

FEL57, FEL50A: Bedeckung / Covering / Recouvrement /
Cubierto / Copertura / bedekking

leuchtet / on / allumée / iluminado / on / aan

blinkt / flashes / clignote / parpadea / lampeggia / knippert

aus / off / éteinte / apagado / off / uit

Ausgangssignal / Output signal / Signal de sortie /
Señal de salida / Segnale uscita / uitgangssignaal

Störung / Fault / Défaut / Fallo / Guasto / storing

Nationale Normen und Vorschriften beachten!
Note national regulations!
Respecter les lois et règles locales en vigueur!
Considere reglamentaciones nacionales
Osservare le norme nazionali!
Nationale voorschriften in acht nemen!

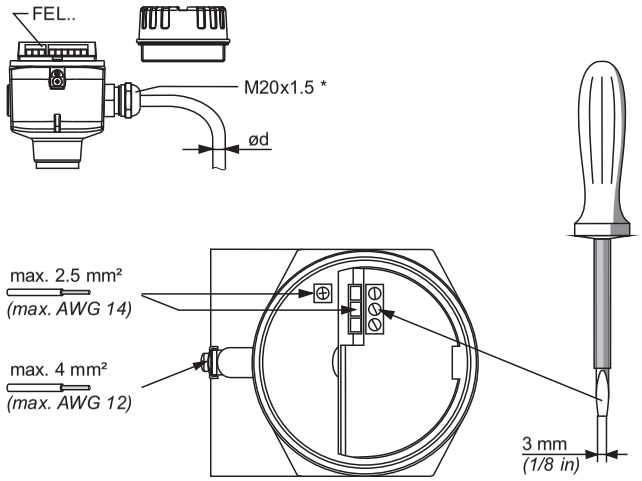

DE- Anschluss
EN- Connections
FR- Raccordement
ES - Conexiones
IT - Collegamenti elettrici
NL- Aansluiting

***Cable entry**
Nickel-plated brass:
∅d = 7...10,5 mm (0,28...0,41 in)
Plastic:
∅d = 5...10 mm (0,2...0,38 in)
Stainless steel:
∅d = 7...12 mm (0,28...0,47 in)

DE- Anschluss FEL51
Zweileiter-
Wechselstromanschluss

EN- Connections FEL51
Two-wire AC connection

FR - Raccordement FEL51
Raccordement 2 fils
courant alternatif

ES - Conexiones FEL51
Conexión a corriente alterna
a dos hilos

IT - Collegamenti elettrici FEL51
Collegamento bifilare
con corrente alternata

NL- Aansluiting FEL51
2- draads
wisselspanningsaansluiting

Zerstörung
Destruction
Destruction
Destrucción
Distruzione
Storing

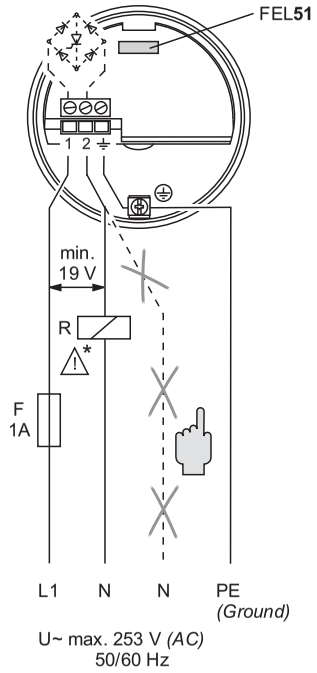

* Externe Last R **muss** angeschlossen werden

External load R **must** be connected

Charge externe R **doit** être raccordée

La carga externa R **debe** estar conectada

Il carico esterno R **deve** essere connesso

Externe belasting R **moet** aangesloten worden

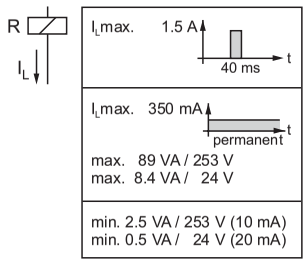

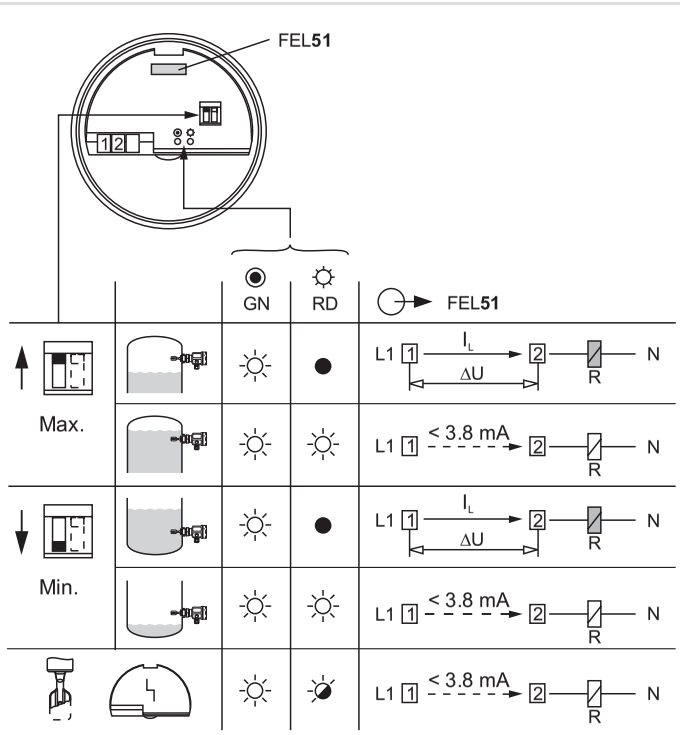

DE- Funktion FEL51
EN- Function FEL51
FR - Fonction FEL51
ES - Funcionamiento FEL51
IT - Funzione FEL51
NL- Functie FEL51

ΔU_{FEL51} max. 12 V

DE- Anschluss FEL52
Gleichstromanschluss (PNP)

EN- Connections FEL52
DC connection (PNP)

FR - Raccordement FEL52
Courant continu (PNP)

ES - Conexiones FEL52
Alimentación CC (PNP)

IT - Collegamenti elettrici FEL52
Collegamento CC (PNP)

NL- Aansluiting FEL52
Gelijkspanningsaansluiting (PNP)

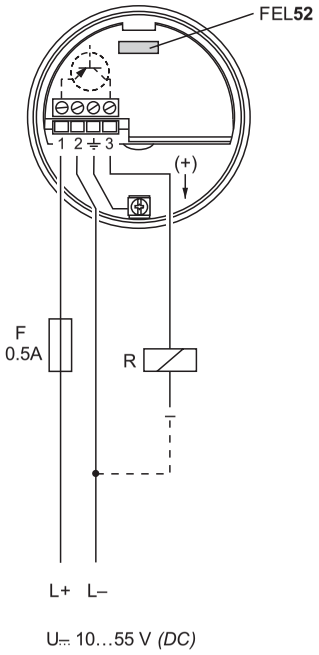

auch für DI-Module
also for DI modules
également pour des modules DI
también para módulos DI
anche per DI modules
aan de DI-module

EN 61131-2

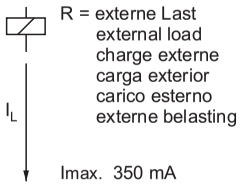

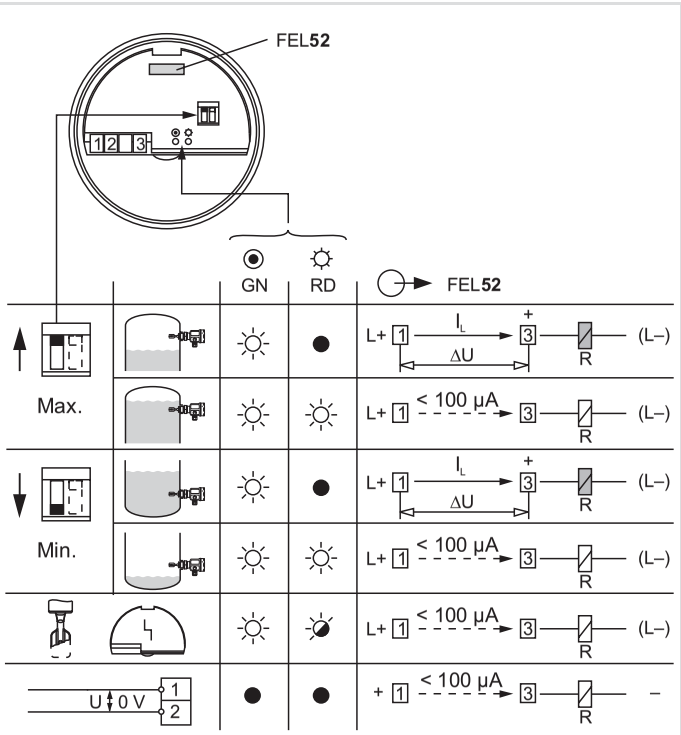

DE- Funktion FEL52
EN- Function FEL52
FR - Fonction FEL52
ES - Funcionamiento FEL52
IT - Funzione FEL52
NL- Functie FEL52

ΔU_{FEL52} max. 3 V

DE- Anschluss FEL54
Allstromanschluss
Relaisausgang

EN- Connections FEL54
Universal connection
Relay output

FR - Raccordement FEL54
Tous courants
Sorties relais

ES - Conexiones FEL54
Conexión universal
Salida por relé

IT - Collegamenti elettrici FEL54
Collegamento corrente universale
Uscita relè

NL- Aansluiting FEL54
Universele spanningsaansluiting
Relaisuitgang

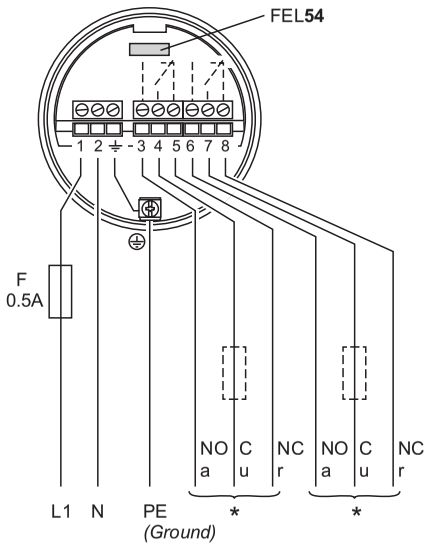

U~ 19…253 V *(AC)*

L+ L–
U⎓ 19… 55 V *(DC)*

* U~ max. 253 V, I~ max. 6 A
P~ max. 1500 VA, cos φ = 1
P~ max. 750 VA, cos φ > 0.7
I⎓ max. 6 A, U⎓ < 30 V
I⎓ max. 0.2 A, U⎓ < 125 V

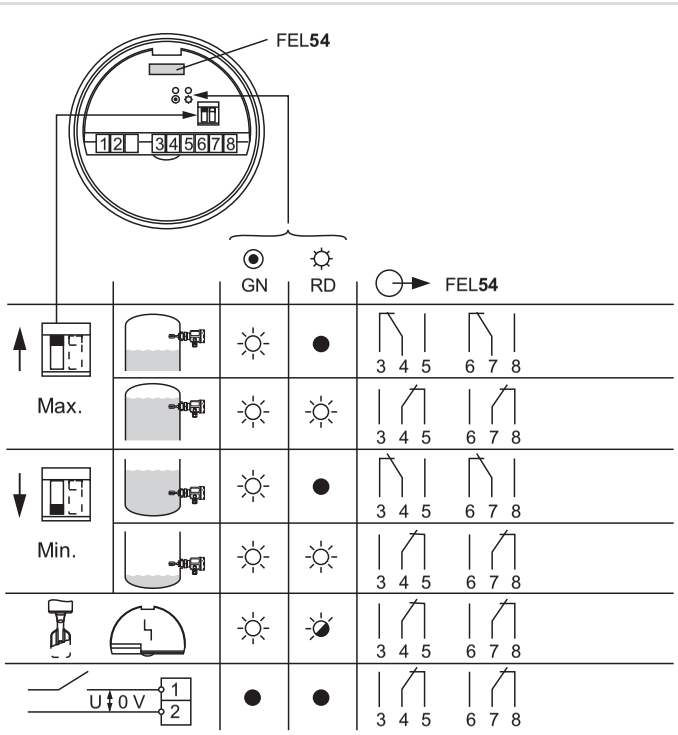

DE- Funktion FEL54
EN- Function FEL54
FR - Fonction FEL54
ES - Funcionamiento FEL54
IT - Funzione FEL54
NL- Functie FEL54

DE- Anschluss FEL55
Ausgang 8/16 mA
* In nasser Umgebung.

EN- Connections FEL55
Output 8/16 mA
* Wet location.

FR - Raccordement FEL55
Sortie 8/16 mA
* Dans les environnements humides.

ES - Conexiones FEL55
Salida 8/16 mA
* En ambientes húmedos.

IT - Collegamenti elettrici FEL55
Uscita 8/16 mA
* In ambienti umidi.

NL- Aansluiting FEL55
Uitgang 8/16 mA
* In vochtige omgevingen.

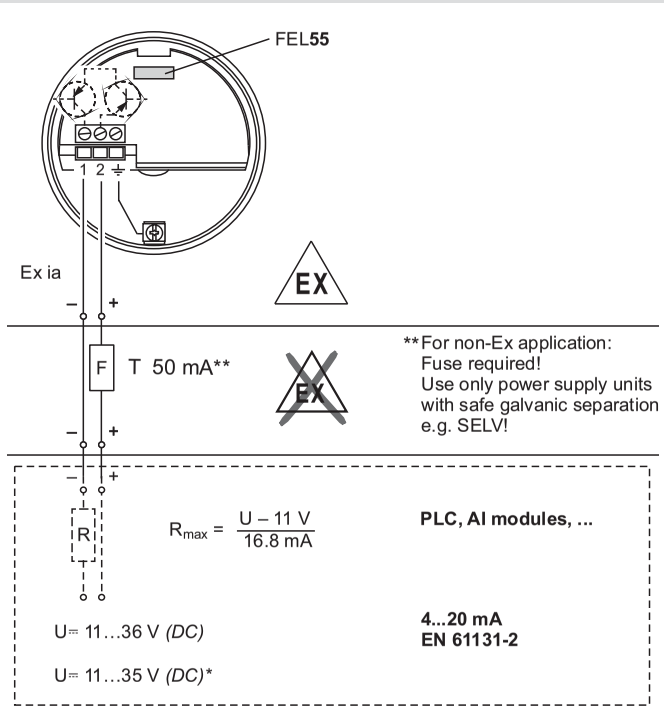

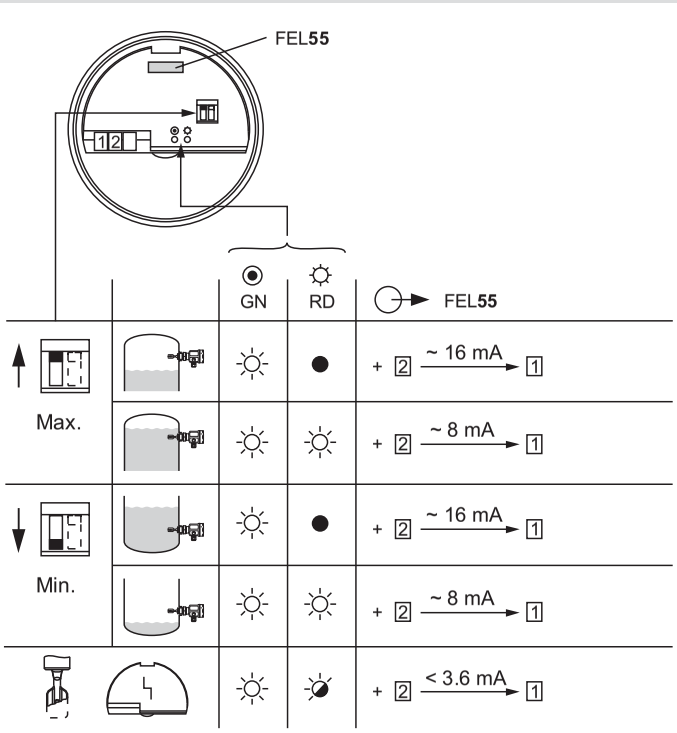

DE- Funktion FEL55
EN- Function FEL55
FR - Fonction FEL55
ES - Funcionamiento FEL55
IT - Funzione FEL55
NL- Functie FEL55

DE- Anschluss FEL56
NAMUR- Ausgang L-H
< 1,0 mA / > 2,2 mA

EN- Connections FEL56
NAMUR output L-H
< 1,0 mA / > 2,2 mA

FR - Raccordement FEL56
Sortie NAMUR L-H
< 1,0 mA / > 2,2 mA

ES - Conexiones FEL56
Salida NAMUR L-H
< 1,0 mA / > 2,2 mA

IT - Collegamenti elettrici FEL56
NAMUR uscita L-H
< 1,0 mA / > 2,2 mA

NL- Aansluiting FEL56
NAMUR uitgang L-H
< 1,0 mA / > 2,2 mA

Power supply
DC: 8.2 V +/- 20%

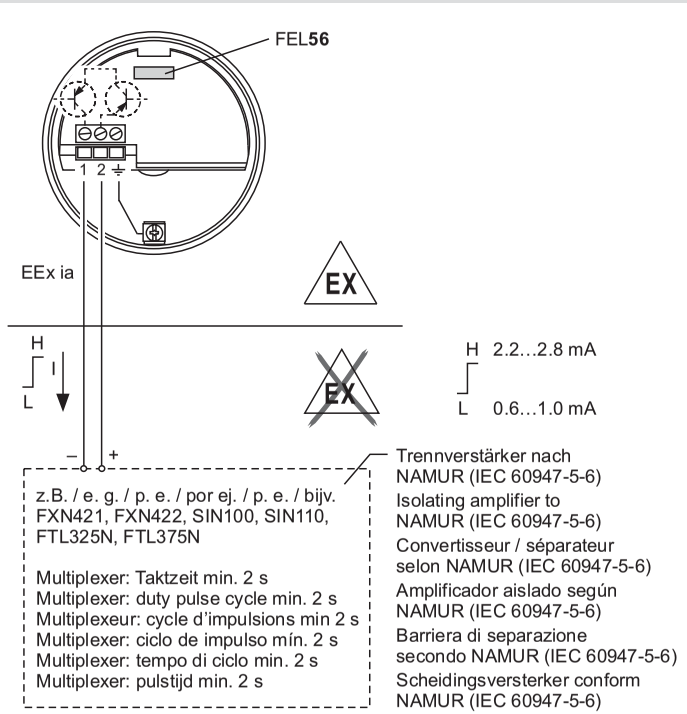

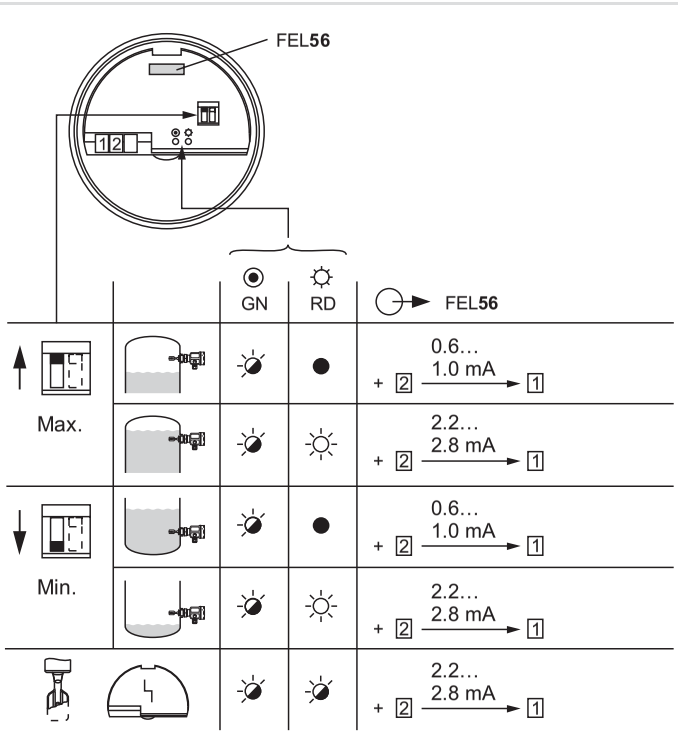

DE- Funktion FEL56
EN- Function FEL56
FR - Fonction FEL56
ES - Funcionamiento FEL56
IT - Funzione FEL56
NL- Functie FEL56

DE- Anschluss FEL57
Ausgang PFM
150 Hz / 50 Hz

EN- ConnectionsFEL 57
PFM output
150 Hz / 50 Hz

FR - Raccordement FEL57
Sortie PFM
150 Hz / 50 Hz

ES - Conexiones FEL57
Salida PFM
150 Hz / 50 Hz

IT - Collegamenti elettrici FEL57
PFM uscita
150 Hz / 50 Hz

NL- Aansluiting FEL57
PFM uitgang
150 Hz / 50 Hz

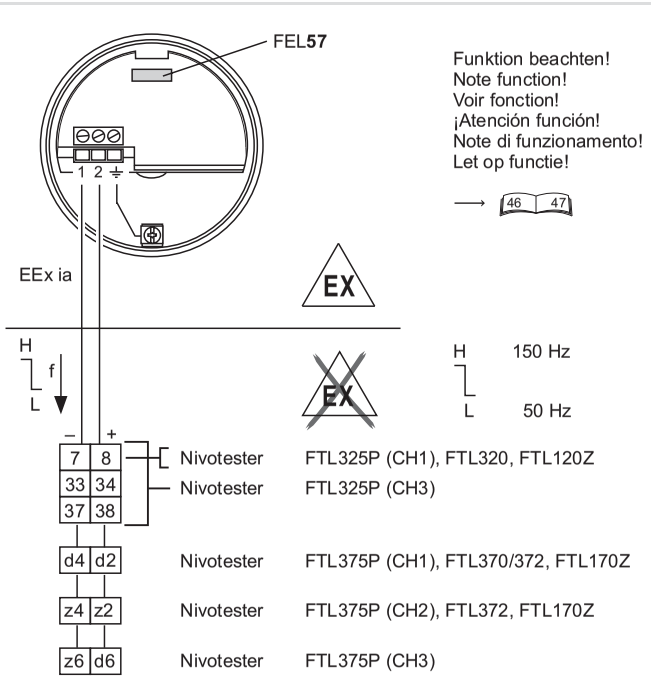

Funktion beachten!
Note function!
Voir fonction!
¡Atención función!
Note di funzionamento!
Let op functie!

→ 46 47

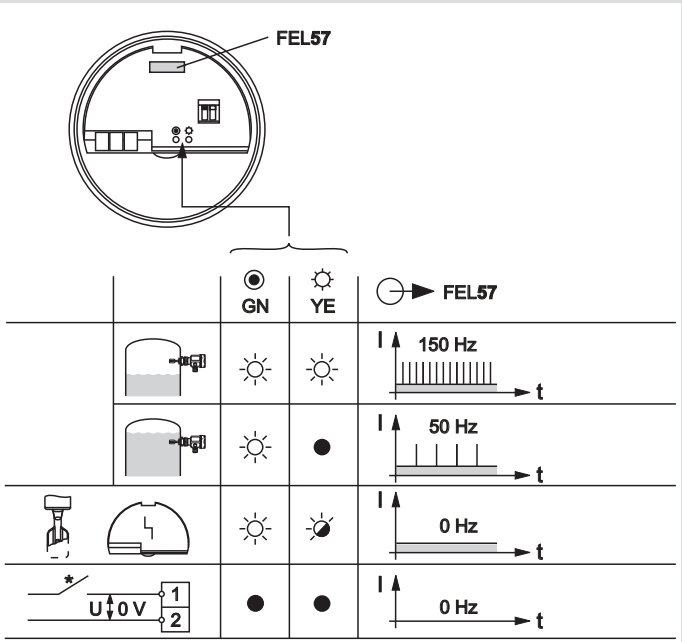

* Einschaltverhalten / Switch-on behaviour / Comportement à la mise sous tension / Comportamiento del cambio de estado / Comportamento accensione / Inschakelgedrag

DE- Funktion FEL57
EN- Function FEL57
FR - Fonction FEL57
ES - Funcionamiento FEL57
IT - Funzione FEL57
NL- Functie FEL57

DE- Einschaltverhalten
Selbsttest (STD)

EN- Switch-on behaviour
Selftest (STD)

FR - Comportement à la mise sous tension
Auto-test (STD)

ES - Comportamiento del cambio de e stado
Prueba automática (STD)

IT - Comportamento in fase di accensione
Prova automatica (STD)

NL- Inschakelgedrag
Functietest (STD)

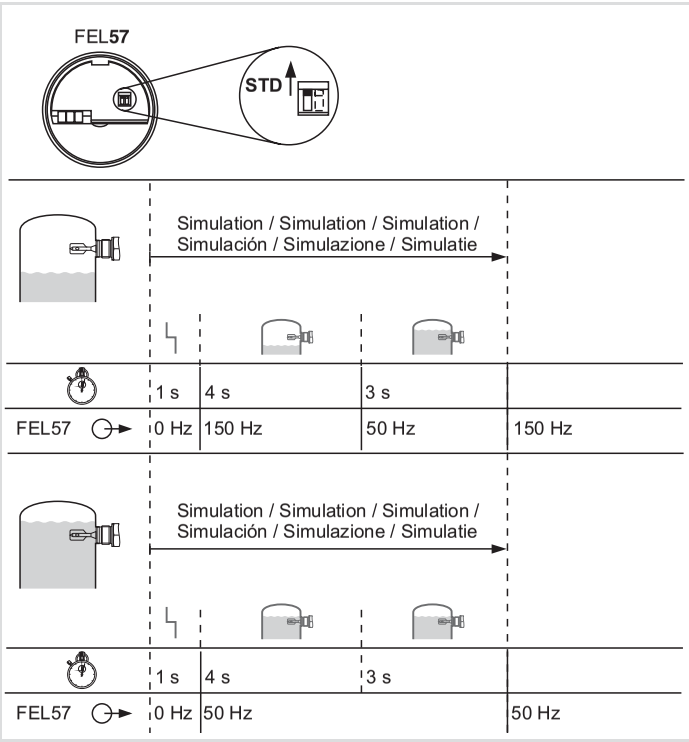

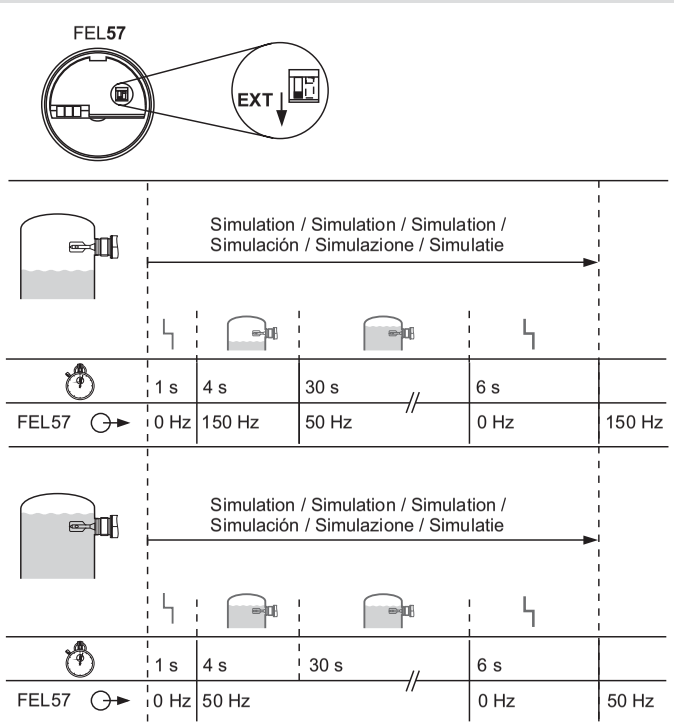

DE- Einschaltverhalten
Selbsttest (EXT)

EN- Switch-on behaviour
Selftest (EXT)

FR - Comportement à la mise sous tension
Auto-test (EXT)

ES - Comportamiento del cambio de e stado
Prueba automática (EXT)

IT - Comportamento in fase di accensione
Prova automatica (EXT)

NL- Inschakelgedrag
Functietest (EXT)

DE- Anschluss FEL50A
EN- Connections FEL50A
FR - Raccordement FEL50A
ES - Conexiones FEL50A
IT - Collegamenti elettrici FEL50A
NL- Aansluiting FEL50A

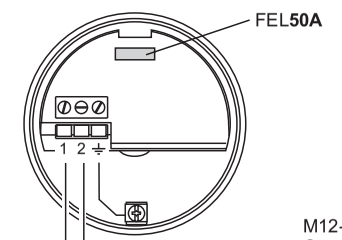

PA– PA+
U⎓ 9...32 V *(DC)*

Segmentkoppler
Segment coupler
Coupleur de segments
Acoplador segmento
Segment coupler
Segment koppeling

z.B. SPS / e. g. PLC
p. e. API / por ej. PLC
p. e. PLC / bijv. PLC

M12-Stecker / M12 Plug /
Connecteur M12 / M12 Conector /
Connettore M12 / M12 Connector

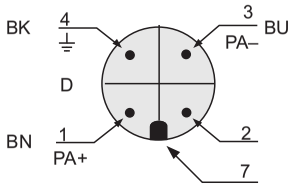

Gerätestecker am Gehäuse (male)
Device plug on housing (male)
Connecteur d'appareil sur le boîtier (mâle)
Conector del equipo en cabezal (macho)
Connettore del dispositivo (maschio)
Instrumentsteker op behuizing (male)

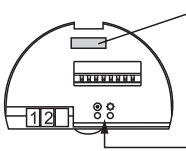

		GN	YE	FEL50A PA-Bussignal / PA Bus Signal / Signal bus PA / Señal Bus PA / Segnale bus PA / PA bussignaal
nicht invertiert not inverted non inversé no invertido non invertito niet geïnverteerd		☼	●	OUT_D = 0
		☼	☼	OUT_D = 1
invertiert inverted inversé invertido invertito geïnverteerd		☼	☼	OUT_D = 0
		☼	●	OUT_D = 1
SPS Commuwin II		☼	–	Kommunikation/ Communication/ Communication / Comunicación / Comunicazione / Communicatie
		–	☼	Status siehe BA141F Status, see BA141F Etat, voir BA141F Estado, ver BA141F Stato, vedere BA141F Status, zie BA141F
U 0 V 1 2		●	●	../..

DE- Funktion FEL50A
EN- Function FEL50A
FR - Fonction FEL50A
ES - Funcionamiento FEL50A
IT - Funzione FEL50A
NL- Functie FEL50A

DE- Anschluss FEL58
NAMUR- Ausgang H-L
> 2,2 mA / < 1,0 mA

EN- Connections FEL58
NAMUR output H-L
> 2,2 mA / < 1,0 mA

FR - Raccordement FEL58
Sortie NAMUR H-L
> 2,2 mA / < 1,0 mA

ES - Conexiones FEL58
Salida NAMUR H-L
> 2,2 mA / < 1,0 mA

IT - Collegamenti elettrici FEL58
NAMUR uscita H-L
> 2,2 mA / < 1,0 mA

NL- Aansluiting FEL58
NAMUR uitgang H-L
> 2,2 mA / < 1,0 mA

Power supply

DC: 8.2 V +/- 20%

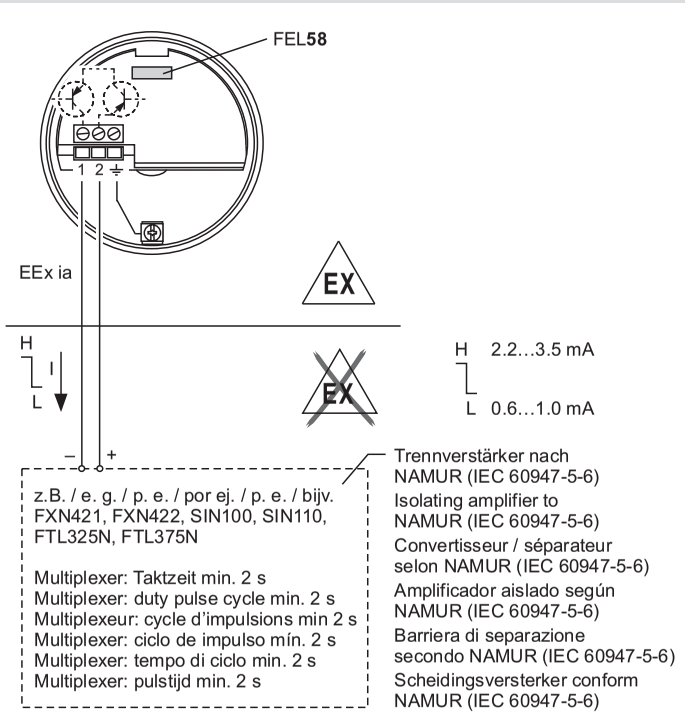

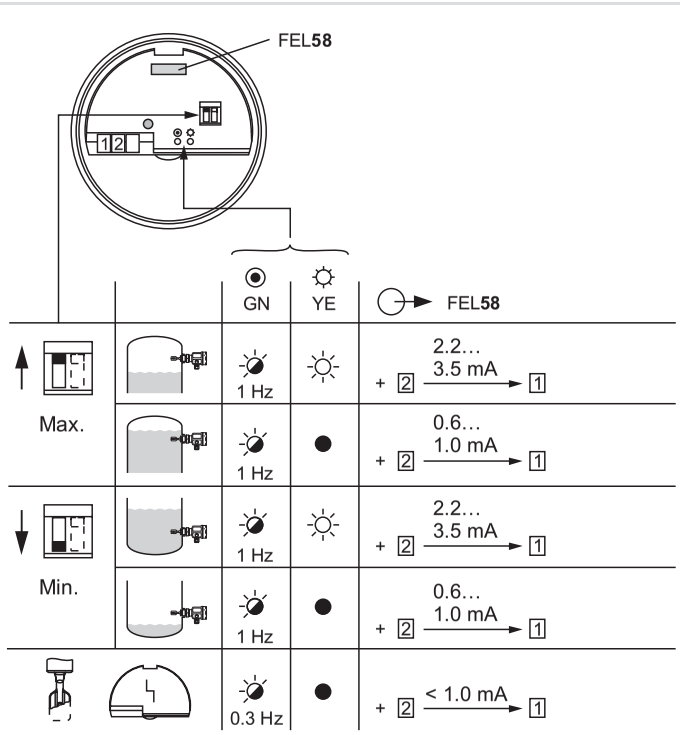

DE- Funktion FEL58
EN- Function FEL58
FR - Fonction FEL58
ES - Funcionamiento FEL58
IT - Funzione FEL58
NL- Functie FEL58

DE- Funktion Prüftaste FEL58
Sicherheitsschaltung MAX

EN- Function test button FEL58
Fail-safe mode MAX

FR - Fonction touche test FEL58
Sécurité MAX

ES - Funcionamiento
botón de prueba FEL58
Conmutador de seguridad MAX

IT - Funzione pulsante test FEL58
Selezione della modalità di
sicurezza MAX

NL- Functie testknop FEL58
Veiligheidsschakeling MAX

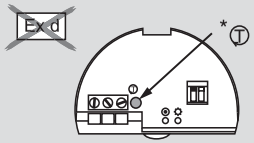

MAX + T		
1. Normaler Betrieb / Normal operation / Fonctionnement normal / Funcionamiento normal / Funzionamento normale / Normaal bedrijf	GN YE 1 Hz + 2 2.2… 3.5 mA → 1	GN YE 1 Hz + 2 0.6… 1.0 mA → 1
2. Prüftaste drücken / Press test button / Appuyer sur la touche test / Pulse el botón de prueba / Premere il pulsante test / Testknop indrukken (>3 s)	GN YE + 2 0 mA → 1	GN YE + 2 0 mA → 1
3. Prüftaste loslassen, nach ~2 s normaler Betrieb / Release the test button, after ~2 s normal operation / Relâcher la touche test, après ~2 s fonctionnement normal / Deje de presionar el botón de prueba, después de ~2 s funcionamiento normal / Rilasciare il pulsante test, dopo ~2 s funzionamento normale / De testknop loslaten, na ~2 s normaal bedrijf	GN YE 1 Hz + 2 2.2… 3.5 mA → 1	GN YE 1 Hz + 2 0.6… 1.0 mA → 1

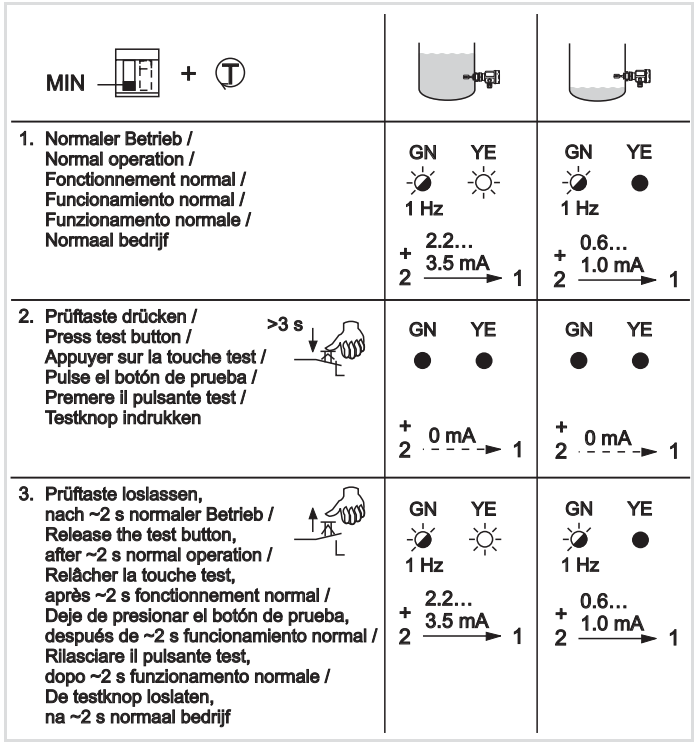

DE- Funktion Prüftaste FEL58
Sicherheitsschaltung MIN

EN- Function test button FEL58
Fail-safe mode MIN

FR - Fonction touche test FEL58
Sécurité MIN

ES - Funcionamiento
botón de prueba FEL58
Conmutador de seguridad MIN

IT - Funzione pulsante test FEL58
Selezione della modalità di
sicurezza MIN

NL- Functie testknop FEL58
Veiligheidsschakeling MIN

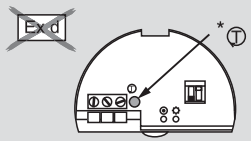

DE- Wartung, Reinigung
Anbackungen entfernen

EN- Maintenance, Cleaning
Removal of encrustation

FR - Entretien, Nettoyage
Enlever les incrustations

ES - Mantenimiento, Limpieza
Eliminación de adherencias

IT - Manutenzione, Pulizia
Rimozione dei depositi

NL- Onderhoud, Reiniging
Aangroei verwijderen

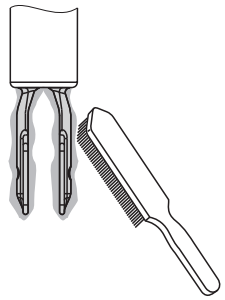

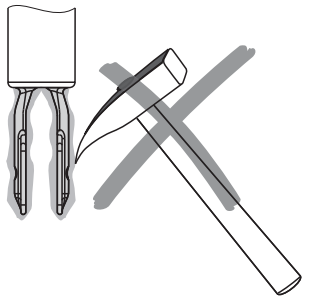

Nicht besteigen!
Don't use as a step!
Ne pas marcher
sur les lames vibrantes!
No usar como peldaño!
Non usare come scalino!
Niet op staan!

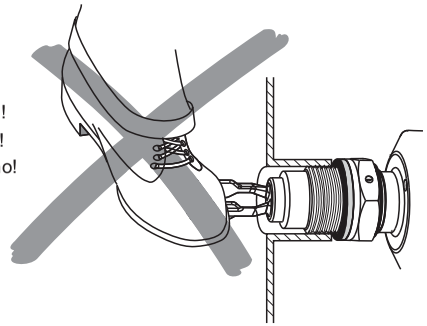

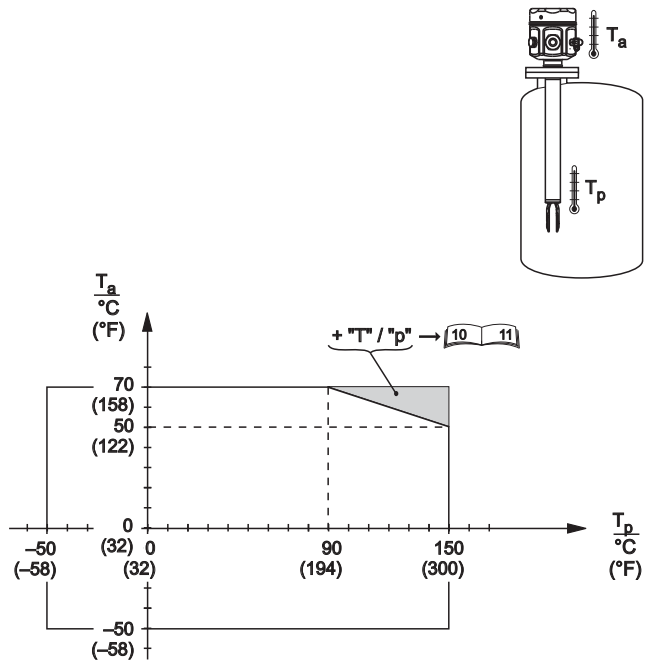

DE- Technische Daten
Umgebungstemperatur T_a
Prozesstemperatur T_p

EN- Technical Data
Ambient temperature T_a
Process temperature T_p

FR- Caractéristiques techniques
Température ambiante T_a
Température de process T_p

ES - Datos técnicos
Temperatura ambiente T_a
Temperatura del proceso T_p

IT - Dati tecnici
Temperatura ambiente T_a
Temperatura di processo T_p

NL- Technische gegevens
Omgevingstemperatuur T_a
Procestemperatuur T_p

DE- Prozessdruck p_e
Prozesstemperatur T_p

EN- Process pressure p_e
Process temperature T_p

FR - Pression de process p_e
Température de process T_p

ES - Presión del proceso p_e
Temperatura del proceso T_p

IT - Pressione di processo p_e
Temperatura di processo T_p

NL- Procesdruk p_e
Procestemperatuur T_p

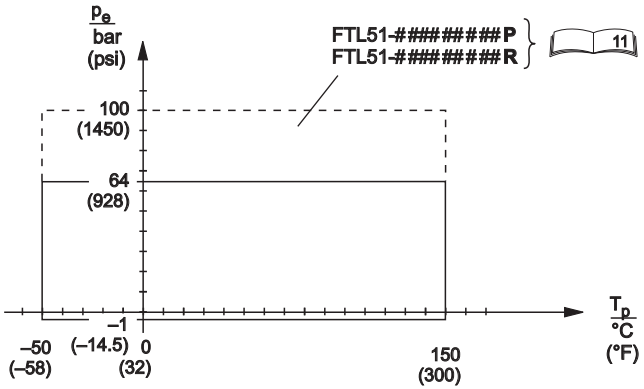

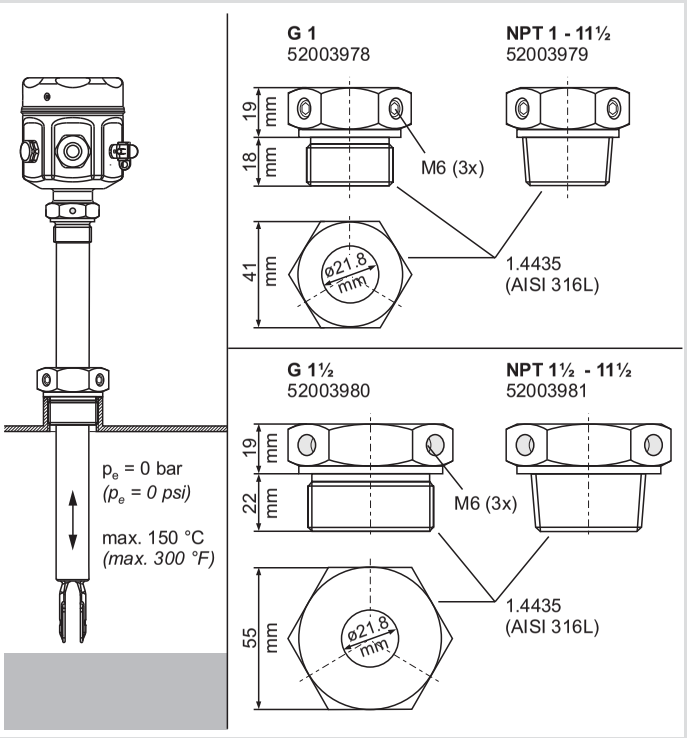

DE- Zubehör
Schiebemuffen für drucklosen Betrieb

EN- Accessories
Sliding sleeves for unpressurised operation

FR- Accessoires
Manchons coulissants pour applications sans pression

ES - Accesorios
Manguitos deslizantes para operación sin presión

IT - Accessori
Manicotto scorrevole per impieghi privi di pressione

NL- Toebehoren
Schuifmof voor drukloze toepassing

siehe / see / voir / ver / vedi / zie :
KA00151F (G 1, NPT 1)
KA00152F (G 1½, NPT 1½)

100 mm = 3. 94 in

DE- Hochdruck-Schiebemuffen

EN- High pressure sliding sleeves

FR - Manchons coulissants haute pression

ES - Manguitos deslizantes para alta presión

IT - Manicotto scorrevole per impieghi ad alta pressione

NL- Schuifmof voor toepassing onder druk

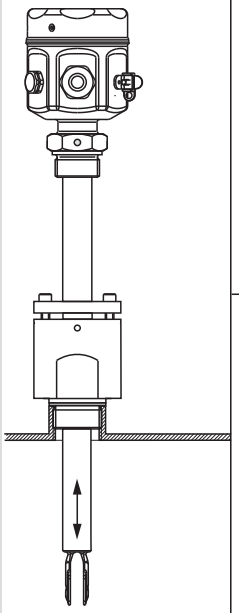

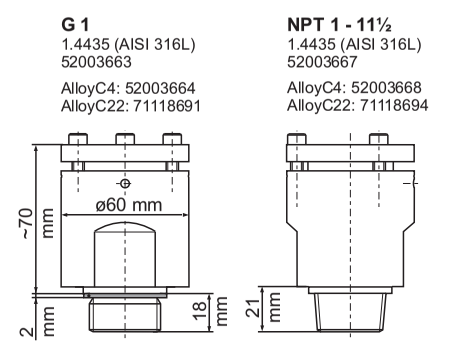

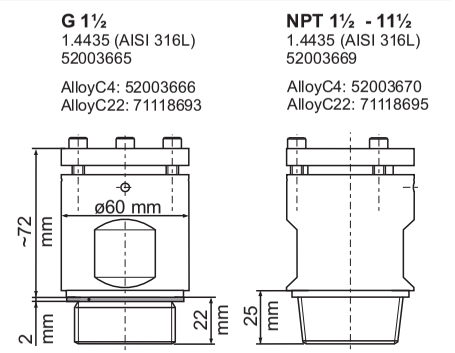

siehe / see / voir / ver / vedi / zie :
KA00153F (G 1, NPT 1)
KA00154F (G 1½, NPT 1½)

100 mm = 3. 94 in

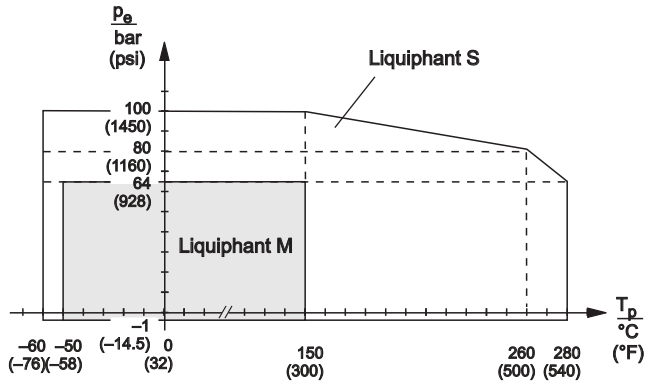

DE- Hochdruck-Schiebemuffen:
Prozessdruck p_e
Prozesstemperatur T_p

EN- High pressure sliding sleeves:
Process pressure p_e
Process temperature T_p

FR - Manchons coulissants haute pression:
Pression de process p_e
Température de process T_p

ES - Manguitos deslizantes para alta presión:
Presión del proceso p_e
Temperatura del proceso T_p

IT - Manicotto scorrevole per impieghi ad alta pressione:
Pressione di processo p_e
Temperatura di processo T_p

NL- Schuifmof voor toepassing onder druk:
Procesdruk p_e
Procestemperatuur T_p

DE- Fehlersuche

Fehlfunktion	Ursache	Maßnahme
Schaltet nicht	Versorgungsspannung fehlt	Versorgung prüfen
	Signalleitung defekt	Signalleitung prüfen
	Elektronikeinsatz defekt - FEL51 direkt an L1 und N angeschlossen	Austauschen - FEL51 immer über externe Last anschließen
	Dichte der Flüssigkeit zu gering	Am Elektronikeinsatz Dichte auf > 0,5 einstellen
	Schwinggabel verkrustet	Schwinggabel säubern
	Schwinggabel korrodiert (Anzeige am FEL: rot/gelb blinkt, FEL58: grün blinkt 0,3 Hz)	Schwinggabel komplett mit Prozessanschluss austauschen
	FEL51: Relais mit zu großem Innenwiderstand angeschlossen	Geeignetes Relais anschließen
	FEL51: Relais mit zu geringem Haltestrom angeschlossen	Widerstand parallel zum Relais anschließen
	FEL54: Kontakte verschweißt (nach einem Kurzschluss)	FEL54 austauschen; Sicherung in den Kontaktstromkreis
Schaltet falsch	Minimum-/Maximum- Sicherheitsschaltung vertauscht	Am Elektronikeinsatz Sicherheitsschaltung richtig einstellen
Fehlschaltung, sporadisch	Dichter schwerer Schaum, wilde Turbulenzen, aufgeschäumte Flüssigkeit	Liquiphant im Bypass montieren
	Extreme Funkstörung	Verbindungskabel abschirmen
	Extreme Vibrationen	Entkoppeln, dämpfen, Schwinggabel 90° drehen
	Wasser im Gehäuse	Deckel und Kabeldurchführungen fest zuschrauben
	FEL52: Ausgang überlastet	Last, (Leitungs-) Kapazität verringern
Fehlschaltung nach Netzausfall	FEL57, Verhalten beim Einschalttest (wiederkehrende Prüfung)	Schaltverhalten FEL57 beachten; Anlagensteuerung nach Netzausfall bis ca. 45 s blockieren

Fault	Reason	Remedy
Does not switch	No power	Check power
	Faulty signal line	Check signal line
	Faulty electronic insert - FEL51 connected directly to L1 and N	Exchange - always connect FEL51 via external load
	Density of liquid too low	Set density to > 0.5 at electronic insert
	Fork encrusted	Clean fork
	Fork corroded (Indication on FEL: red/yellow flashes, FEL58: green flashes 0.3 Hz)	Exchange fork and process connection
	FEL51: Internal resistance of connected relay too large	Connect suitable relay
	FEL51: Holding current of connected relay too low	Connected resistor in parallel with relay
	FEL54: Contacts welded together (after short-circuit)	Exchange FEL54; put fuse in contact circuit
Switches incorrectly	Min-/Max- fail-safe mode set wrongly	Set correct mode at electronic insert
Sporadic faulty switching	Thick heavy foam, very turbulent conditions, foaming liquid	Mount Liquiphant in bypass
	Extreme RFI	Use screened cable
	Extreme vibration	Decouple, damp, turn fork 90°
	Water in housing	Screw cover and cable gland tight
	FEL52: Output overloaded	Reduce load,(cable) capacitance
Switches incorrectly after power failure	FEL57, behaviour during switch-on test (functional test)	Observe switching behaviour of FEL57; After power failure blockplant control for up to 45 s

FR - Recherche de défauts

Défaut	Cause	Mesure
Ne commute pas	Tension d'alimentation manquante	Vérifier la tension d'alimentation
	Câble de signal défectueux	Vérifier le câble de signal
	Electronique défectueuse - FEL51 relié directement á L1 et N	Remplacer - Relier FEL51 toujours via la charge externe
	Densité du liquide trop faible	Régler la densité sur > 0,5 sur l'électronique
	Lames vibrantes encroûtées	Nettoyer les lames vibrantes
	Lames vibrantes corrodées (Sur FEL: rouge/jaune clignote, FEL58: vert clignote 0,3 Hz)	Remplacer les lames vibrantes ainsi que le raccord process
	FEL51: relais avec résistance interne trop élevée	Raccorder un relais approprié
	FEL51: relais avec courant de maintien trop faible	Raccorder une résistance en parallèle au relais
	FEL54: contacts soudés (après un court-circuit)	Remplacer FEL54; fusible dans le circuit courant
Mauvaise commutation	Sécurité min/max inversée	Régler correctement le circuit de sécurité sur l'électronique
Mauvaise commutation, sporadique	Mousse dense et lourde, fortes turbulences, liquide émulsionné	Monter le Liquiphant en bypass
	Parasites puissants	Blinder le câble de liaison
	Vibrations importantes	Découpler, amortir, tourner la fourche de 90°
	Eau dans le boîtier	Visser fermement le couvercle et les entrées de câble
	FEL52: surcharge de la sortie	Réduire la charge et la capacité (de ligne)
Mauvaise commutation après coupure	FEL57, comportement lors du test de mise sous tension (test cyclique)	Observer le comportement du FEL57 à la mise sous tension; bloquer la commande de l'installation après coupure de courant pendant max. 45 s

Fallo	Causa	Solución
No conmuta	No hay alimentación	Comprobar alimentación
	Señal defectuosa	Comprobar cable de señal
	Electrónica defectuosa - FEL51 conectada directamente a L1 y N	Cambio - Siempre conectar FEL51 vía una carga externa
	Densidad del líquido demasiado baja	Fijar densidad a > 0.5 en la electrónica
	Horquillas con adherencias	Limpiar horquillas
	Horquillas corroidas (En FEL: rojo/amarillo parpadea, FEL58: verde parpadea 0.3 Hz)	Cambiar la horquilla y la conexión a proceso
	FEL51: Relé con resistencia interna demasiado grande	Conectar un relé adecuado
	FEL51: El relé conectado retiene muy poca corriente	Resistencia conectada en paralelo con el relé
	FEL54: Contactos soldados juntos (después del corto circuito)	Cambiar FEL54; poner fusible en el circuito de contacto
Conmuta incorrectamente	El modo de fallo mín./máx. está mal ajustado	Ajustar el modo correcto en la electrónica
Fallos de conmutación esporádicos	Espuma muy densa, turbulencias, líquidos espumosos	Montar el Liquiphant en bypass
	RFI extremo	Utilizar cable apantallado
	Vibraciones extremas	Desacoplar, amortiguar y girar las horquillas 90°
	Agua en el cabezal	Roscar la cubierta y el prensaestopas firmemente
	FEL52: Salida con sobretensión	Reducir carga, capacidad (cable)
Conmuta incorrectamente después de un fallo de alimentación	FEL57, comportamiento durante la comprobación de conmutación (test de funcionamiento)	Observar el comportamiento de conmutación del FEL57; del fallo de alimentación, bloqueo del control de la planta durante 45 s aprox.

IT - Individuazione e eliminazione delle anomalie

Guasto	Motivo	Rimedio
Non commuta	Mancanza alimentazione	Controllare l'alimentazione
	Linea segnale guasta	Controllare segnale linea
	Inserto elettronico guasto - FEL51 connesso direttamente a L1 e N	Sostituire - connettere sempre FEL51 mediante carico esterno
	Densità del liquido troppo bassa	Impostare la densità a > 0,5 sull'inserto elettronico
	Forcella incrostata	Pulire la forcella
	Forcella corrosa (Sul FEL: rosso/giallo lampeggiano, FEL58: verde lampeggiano 0,3 Hz)	Sostituire la forcella e la connessione al processo
	FEL51: resistenza interna del relè connesso troppo grande	Collegare il relè adeguato
	FEL51: corrente di mantenimento del relè connesso troppo grande	Connettere resistenza in parallelo al relè
	FEL54: contatti saldati insieme (dopo il corto circuito)	Sostituire FEL54; mettere il fusibile nel circuito di contatto
Commuta non correttamente	Modalità di sicurezza min-/max- impostata in modo errato	Impostare la modalità corretta nell'inserto elettronico
Commutazione sporadicamente difettosa	Schiuma pesante e torbida condizioni molto turbolente, liquido che produce schiuma	Montare il Liquiphant nel bypass
	RFI forte	Usare cavo schermato
	Forte vibrazione	Disaccoppiare, smorzare, ruotare la forcella di 90°
	Acqua nella custodia	Avvitare correttamente il coperchio e il passacavi
	FEL52: Uscita sovraccaricata	Ridurre il carico, capacità (cavo)
Commutazione non corretta dopo la mancanza alimentazione	FEL57, comportamento durante la fase di test all'accensione (test di funzionamento)	Osservare il comportamento di commutazione del FEL57; dopo il ripristino di una mancanza di alimentazione inibire il controllo dell'impianto per 45 s

Fout	Oorzaak	Maatregel
Schakelt niet	Voeding ontbreekt	Voeding kontroleren
	Signaalleiding defect	Signalleiding kontroleren
	Insert defect - FEL51 direct op L1 en N aangesloten	Ver vangen - FEL51 altijd via een belasting aansluiten
	Dichtheid van de vloeistof te gering	Op elektronica- insert dichtheid op > 0, 5 instellen
	Trilvork te veel vervuild	Trilvork reinigen
	Trilvork gecorrodeerd (LED op FEL knippert rood/geel, FEL58: groen knippert 0,3 Hz)	Trilvork compleet met procesaansluiting vervangen
	FEL51: Relais met te groteinwendige weerstand aangesloten	Passender relais aansluiten
	FEL51: Relais met te geringe houdstroom aangesloten	Weerstand parallel aan relais aansluiten
	FEL54: Contacten verkleeft (na een kortsluiting)	FEL54 vervangen; zekering in circuit aanbrengen
Schakelt foutief	Minimum- /Maximum- fail-safe instelling verwisseld	FEL fail-safe keuze correct instellen
Sporadische foutschakeling	Dik zwaar schuim, wilde turbulentie, opgeschuimde vloeistof	Liquiphant in by-pass monteren
	Extreme RFI invloed	Verbindingskabel afschermen
	Extreme vibraties	Ontkoppelen, dempen, vork 90° draaien
	Water in de behuizing	Deksel en wartels vast aandraaien
	FEL52: uitgang overbelast	Schakelbelasting verminderen
Foutmelding	FEL57, gedrag bij inschakelen na netuitval (periodieke testfunctie)	Schakelgedrag FEL57 controleren; procesherstart na netuitval ca. 45 s blokkeren

DE- Ergänzung Fehlersuche

Ist das Schaltverhalten der Gabel ungewöhnlich, kann an PIN 4 der Diagnosebuchse die Gabelfrequenz gemessen werden.
Bei den Elektronikeinsätzen FEL51/52/54/55/56/57/58 ist dies eine sinusförmige Schwingung deren Amplitude einen Rückschluss auf den Gabelzustand zulässt.
Bei FEL50A ist aufgrund eines Rechtecksignals nur noch die Gabelfrequenzmessung möglich.

EN- Trouble- shooting Supplement

If the switching behaviour of the fork is abnormal, the fork frequency can be measured at PIN 4 of the diagnosis socket.
With electronic inserts FEL51/52/54/55/56/57/58 this is a sinusoidal vibration whose amplitude makes it possible to determine the condition of the fork.
With FEL50A, only the fork frequency measurement is possible due to a rectangular pulse signal.

FR - Additif recherche de défauts

Si la commutation de la fourche est inhabituelle, il est possible de mesurer la fréquence de cette dernière au PIN 4 de la prise diagnostic.
Pour l es électroniques FEL51/52/54/55/56/57/58 il s'agit d'une oscillation sinusoïdale dont l'amplitude permet d'évaluer l'état de la fourche.
Pour FEL50A, le signal rectangulaire ne permet qu'une mesure de la fréquence de fourche.

ES - Suplemento para la identificación de fallos

Si el comportamiento de conmutación de la horquilla es anormal, puede medir la frecuencia de la misma en el PIN 4 del interruptor de diagnosis.
Con las electrónicas FEL51/52/54/55/56/57/58 se consigue una vibración sinusoidal cuya amplitud hace posible determinar la condición de la horquilla.
Con FEL50A, sólo es posible medir la frecuencia de la horquilla debido a una señal de impulsos rectangular.

IT - Supplemento alla ricerca dei malfunzionamenti

Se le condizioni di commutazione dei rebbi non è normale la frequenza di vibrazione può essere misurata al PIN 4 del connettore per la diagnosi.
Con gli inserti elettronici FEL51/52/54/55/56/57/58 è possibile determinare la condizione dei rebbi anche tramite l'ampiezza dell'onda sinusoidale.
Con FEL50A il segnale è un onda quadra, per cui è possibile valutare solo il valore di frequenza.

NL- Bijlage problemen oplossen

Indien het schakelgedrag van de trilvork niet normaal verloopt kan de frequentie van de vork gemeten worden op pen 4 van de diagnoseconnector.
Bij de elektronica inserts van de FEL51/52/54/55/56/57/58 is dit een sinusvormige trilling waarvan de amplitude een beeld geeft van de conditie van de vork.
Bij de FEL50A is alleen de vorkfrequentie te meten als gevolg van een rechthoekig pulssignaal.

DE- Ersatzteile
Elektronikeinsätze

EN- Spare parts
Electronic inserts

FR - Pièces de rechange
Electroniques

ES - Repuestos
Electrónicas

IT - Ricambi
Inserti elettronici

NL- Reserve-onderdelen
Elektronica inserts

FEL51	52002304
FEL52	52002305
FEL54	52002306
FEL55	52002307
FEL56	52002308
FEL57	52002309
FEL58	52006454
FEL50A	52010527

Installationsregel: Bei der Installation ist zu beachten, dass elektrische Betriebsmittel (Elektronikeinsätze) die mit nichteigensicheren Stromkreisen gespeist wurden, grundsätzlich **nicht** mehr mit eigensicheren Stromkreisen zusammengeschaltet werden dürfen.

Installation specification: During installation, please keep in mind that electrical resources (electronic inserts) which are powered by non-intrinsically-safe circuits may **no** longer be interconnected with intrinsically-safe circuits.

Directive d'installation : Lors de l'installation, tenir compte du fait que les matériels électriques (électroniques) alimentés par des circuits sans sécurité intrinsèque **ne** doivent plus être connectés à des circuits à sécurité intrinsèque.

Normas de instalación: Durante la instalación, tenga en cuenta que los elementos eléctricos (electrónicas) alimentadas por circuitos no instrínsecamente seguros, **no** podrán estar interconectadas con circuitos intrínsecamente seguros.

Specifiche di installazione: Durante l'installazione è necessario tenere presente che gli impianti elettrici (inserti elettronici) alimentati da circuiti elettrici non a sicurezza intrinseca **non** possono più essere collegati con circuiti elettrici a sicurezza intrinseca.

Installatievoorschrift: Bij de installatie moet erop worden gelet, dat elektrisch materieel (elektronica-units) die via niet-intrinsiekveilige circuits worden gevoed, in principe **niet** meer met intrinsiekveilige circuits mogen worden samengeschakeld.

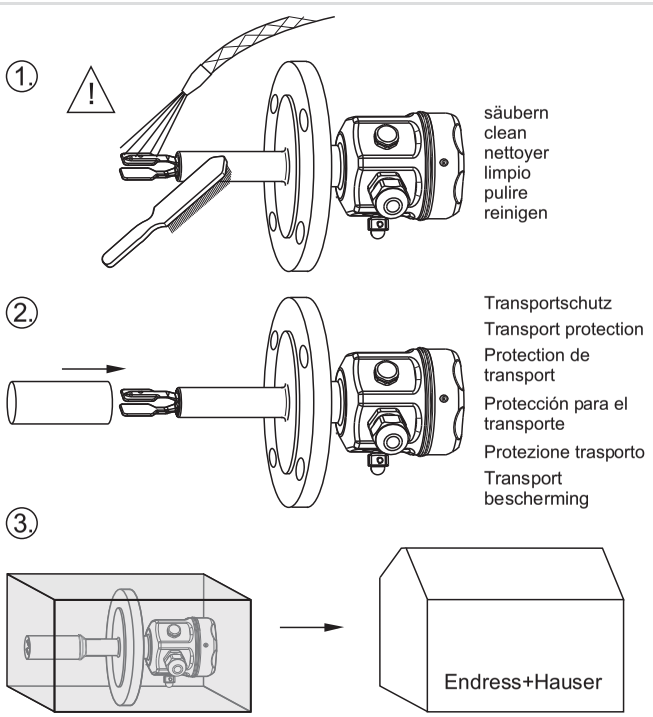

DE- Reparatur
bei Endress+Hauser

EN- Repair
at Endress+Hauser

FR- Réparations
chez Endress+Hauser

ES - Reparaciones
en Endress+Hauser

IT - Riparare
presso la Endress+Hauser

NL- Reparatie
bij Endress+Hauser

DE- Ergänzende Dokumentation

EN- Supplementary Documentation

FR - Documentation complémentaire

ES - Documentación adicional

IT - Documentazione supplementare

NL- Aanvullende documentatie

Technische Information / Technical Information / Information technique / Información técnica / Informazioni tecniche / Technische Informatie

TI328F	Liquiphant FTL50, FTL50H, FTL51, FTL51H
TI426F	Weld-in adapter, leven and pressure

Betriebsanleitung / Operating Instruction / Mise en service / Instrucciones de funcionamiento / Istruzioni operative / Inbedrijfstellingsvoorschrift

BA00141F FEL50A, PROFIBUS PA

Sicherheitshinweise / Notes on Safety / Conseils de sécurité / Notas sobre seguridad / Note sulla sicurezza / Veiligheidsinstructies

XA00031F	II 1/2 G,	Ex d	IIC/IIB
XA00063F	II 1/2 G, II 1/2 D,	Ex ia/ib	IIC/IIB
XA00064F	II 1 G,	Ex ia	IIC/IIB
XA00108F	II 1/2 G,	Ex de	IIC/IIB
XA00113F	II 1/2 G,	Ex ia/ib	IIC
XA00114F	II 1/2 G,	Ex d	IIC
XA00115F	II 1/2 G,	Ex de	IIC
XA00154F	II 1/2 G, II 1/2 D,	Ex ia/ib	IIC/IIB
XA00158F	II 1/2 G,	Ex ia/ib	IIC
XA00159F	II 1 G,	Ex ia	IIC/IIB
XA00182F	II 3 G, II 3 D,	Ex nA/nC	IIC/IIIC

www.endress.com/worldwide

Endress+Hauser

People for Process Automation

ENDRESS + HAUSER

SOLISWITCH FTE31, LEVEL LIMIT SWITCH (PADDLE TYPE)

LEFT BLANK

KA 094R/09/a3/01.09
No.: 510 00917

FTE 31

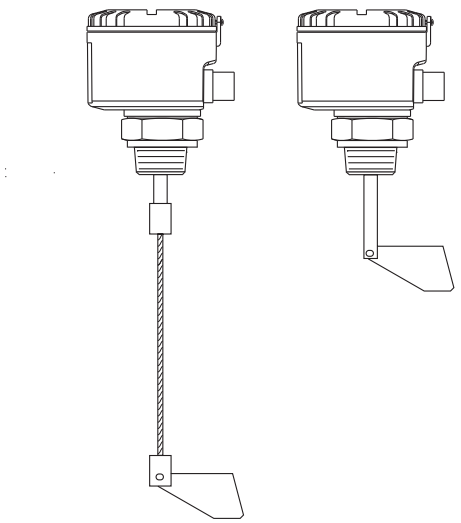

d Füllstandgrenzschalter
e Level Limit Switch
f Détecteur de niveau

Endress+Hauser
The Power of Know How

d	Inhalt	Seite
	Sicherheitshinweise	3
	Einbaubeispiele	4
	Funktion	7
	Anschluss	8
	Wartung	10
	Technische Daten	11
	Abmessungen und Werkstoffe	13
	Geräteidentifikation	14
	Ergänzende Dokumentation	16

e	Contents	Page
	Notes on safety	3
	Mounting examples	4
	Function	7
	Connection	8
	Maintenance	10
	Technical data	11
	Dimensions and materials	13
	Device identification	14
	Supplementary documentation	16

f	Sommaire	Page
	Conseils de sécurité	3
	Exemples d'implantation	4
	Fonction	7
	Raccordement	8
	Entretien	10
	Caractéristiques techniques	11
	Dimensions et matériaux	13
	Dénomination	14
	Documentation complémentaire	16

d Sicherheitshinweise

Der FTE 31 darf nur als Füllstandsgrenzschalter für spezifizierte Schüttgüter eingesetzt werden. Bei unsachgemäßem Gebrauch können Gefahren von ihm ausgehen.

Das Gerät darf nur von **qualifiziertem und autorisiertem Fachpersonal unter besonderer Beachtung dieser Betriebsanleitung**, der gesetzlichen Vorschriften und der Zertifikate (je nach Anwendung) eingebaut, angeschlossen, in Betrieb genommen und gewartet werden.

Achtung!
= verboten - führt zu fehlerhaftem Betrieb oder Zerstörung.

e Notes on safety

The FTE 31 paddle switch is a level limit switch, designed for use in fine-grained bulk solids in non-hazardous areas.
If used incorrectly it is possible that application-related dangers may arise.
The FTE 31 paddle switch may be installed, connected, commissioned, operated and maintained **by qualified and authorised personnel only,** under strict observance of these operating instructions, any relevant standards, legal requirements, and, where appropriate, the certificate.

Caution!
= forbidden - leads to incorrect operation or destruction.

f Conseils de sécurité

Le FTE 31 est un détecteur de niveau à palette rotative pour produits solides en vrac de faible granulométrie, utilisable en zones non explosibles. Il peut être source de danger en cas d´utilisation non conforme aux prescriptions. L´appareil ne doit être installé, raccordé, mis en service et maintenu **que par un personnel qualifié et autorisé,** qui tiendra compte des indications contenues dans la présente mise en service, des normes en vigueur et des certificats disponibles (selon l´application).

Attention!
= interdit - peut provoquer des dysfonctionnements ou la destruction.

d **Einbaubeispiele**
* Schutzdach

e **Mounting examples**
* Protective roof

f **Exemples d´implantation**
* Déflecteur

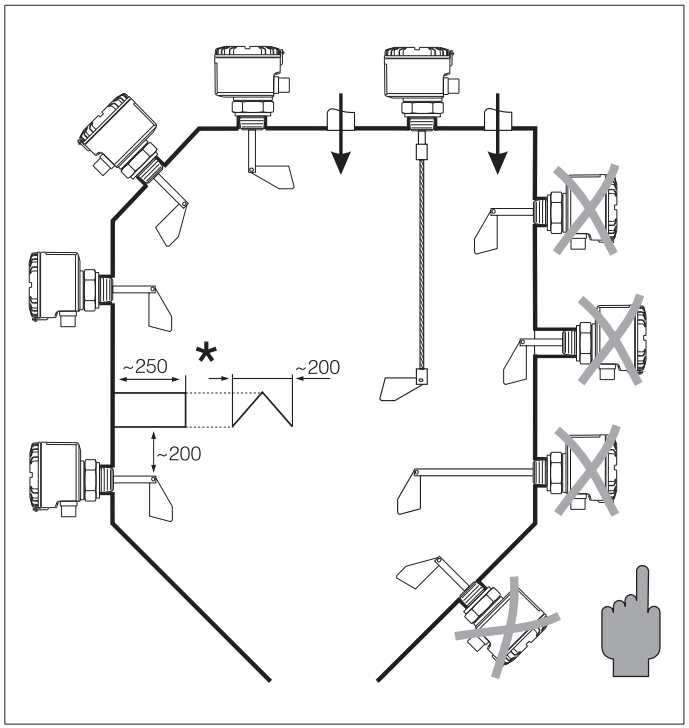

d Füllstandgrenzschalter FTE 31 einschrauben
Nicht am Gehäuse drehen!

e Screw the FTE 31 paddle switch into the process connection
Don´t use housing to turn!

f Visser le détecteur à palette rotative FTE 31
Ne pas se servir du boîtier!

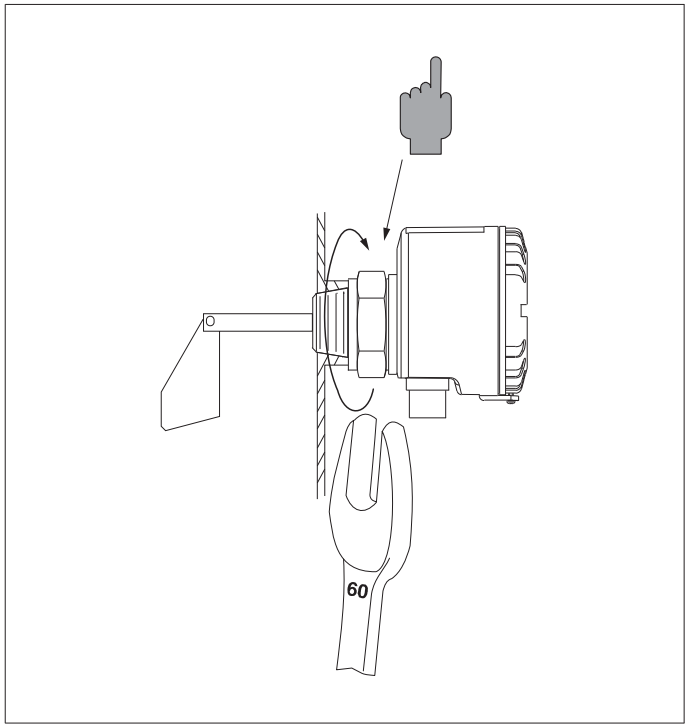

d Gehäuse in richtige Position drehen.

e Screw the housing to the correct position.

f Positionner le boîtier.

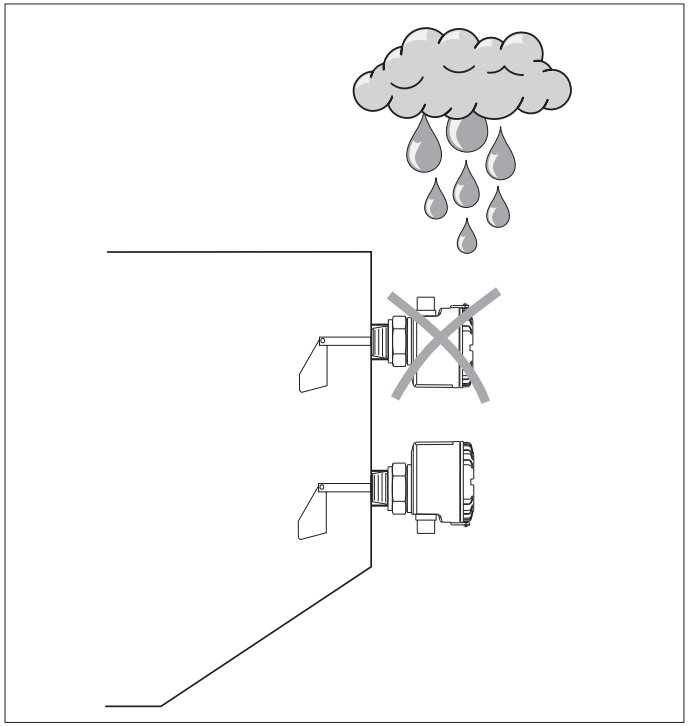

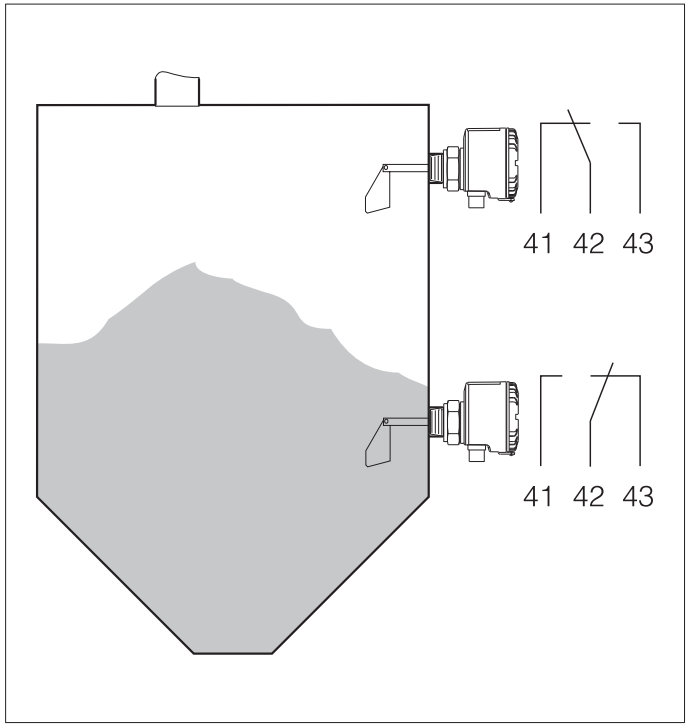

d **Funktion**

e **Function**

f **Fonction**

d **Anschluss FTE 31**

e **Connection FTE 31**

f **Raccordement FTE 31**

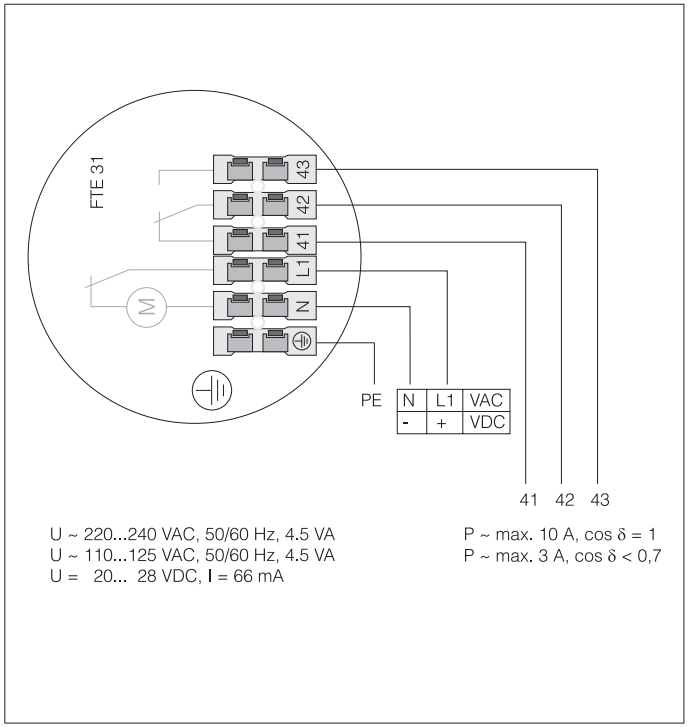

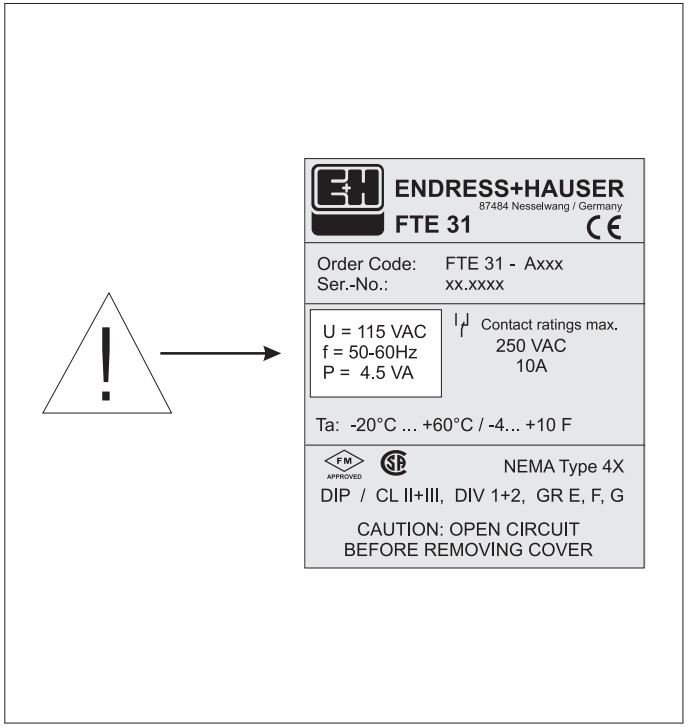

d Beachten Sie die Anschluss-spannung auf dem Typen-schild

e Take note of the power supply indicated on the legend plate

f Tenir complete de la tension indiquée sur la plaque signalétique

d **Wartung**
Anbackungen entfernen

e **Maintenance**
Build up removal

f **Entretien**
Enlever les incrustations

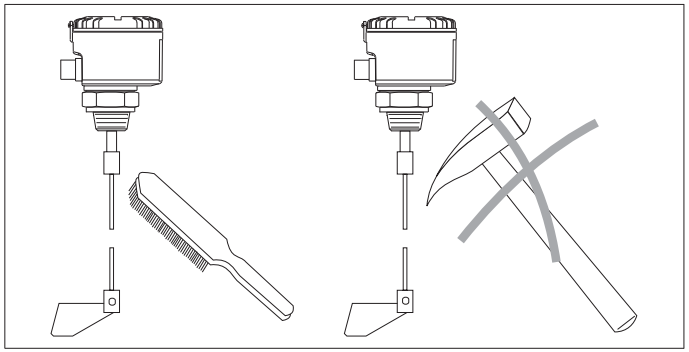

d **Nicht** besteigen!

e **Don´t** use as a step!

f **Ne pas** marcher sur les lames vibrantes!

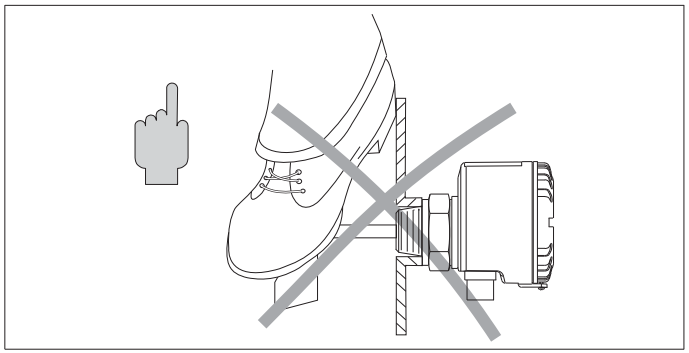

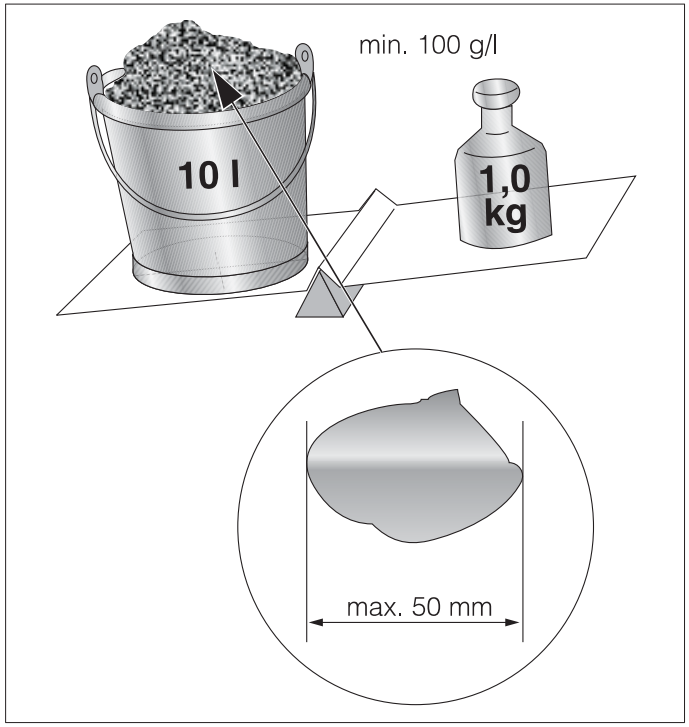

d **Technische Daten**
Schüttgröße und
Korngewicht

e **Technical data**
Solids density
and grain size in mm.

f **Caractéristiques techniques**
Densité apparente
et granulométrie en mm.

d Umgebungstemperatur T_a
Betriebstemperatur T_M
Betriebsdruck p_e

e Ambient temperature T_a
Operating temperature T_M
Operating pressure p_e

f Température ambiante T_a
Température de service T_M
Pression de service p_e

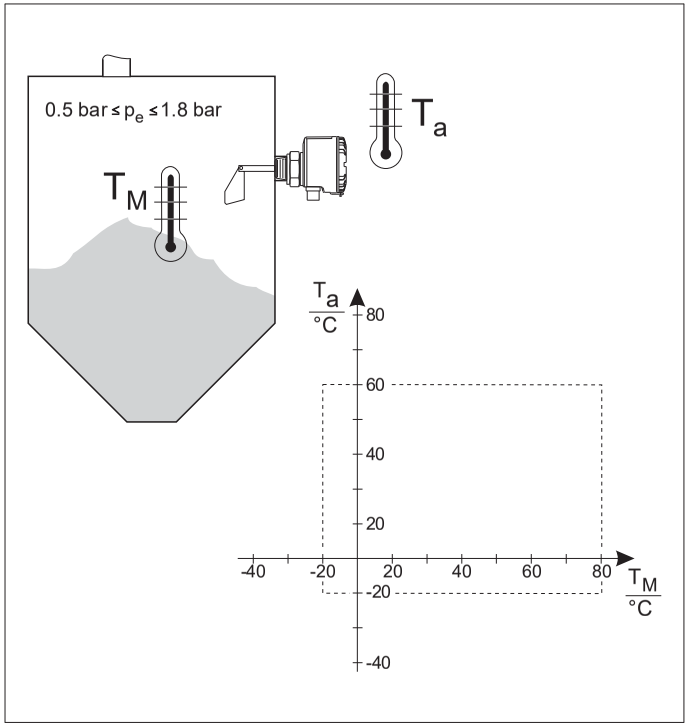

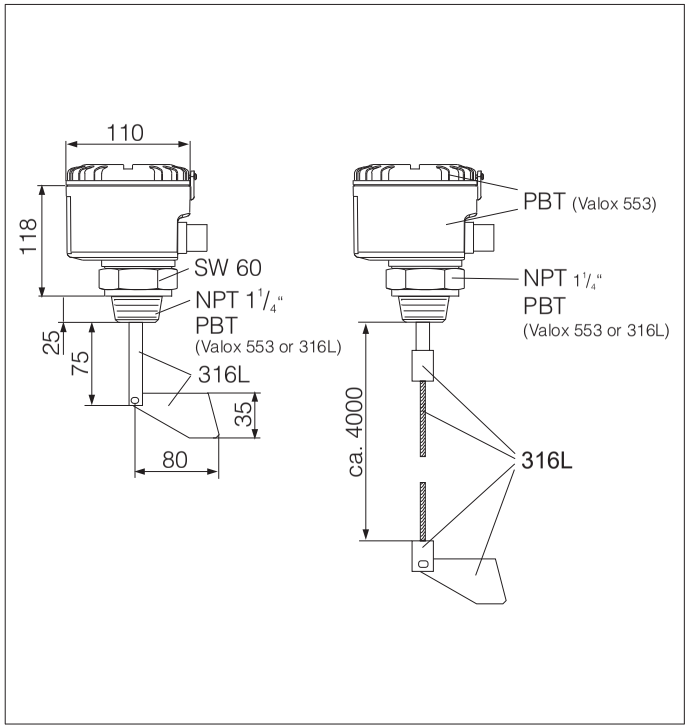

d **Abmessungen in mm und Werkstoffe**

e **Dimensions in mm and materials**

f **Dimensions en mm et matériaux**

d **Geräte Identifikation**

e **Device identification**

f **Dénomination**

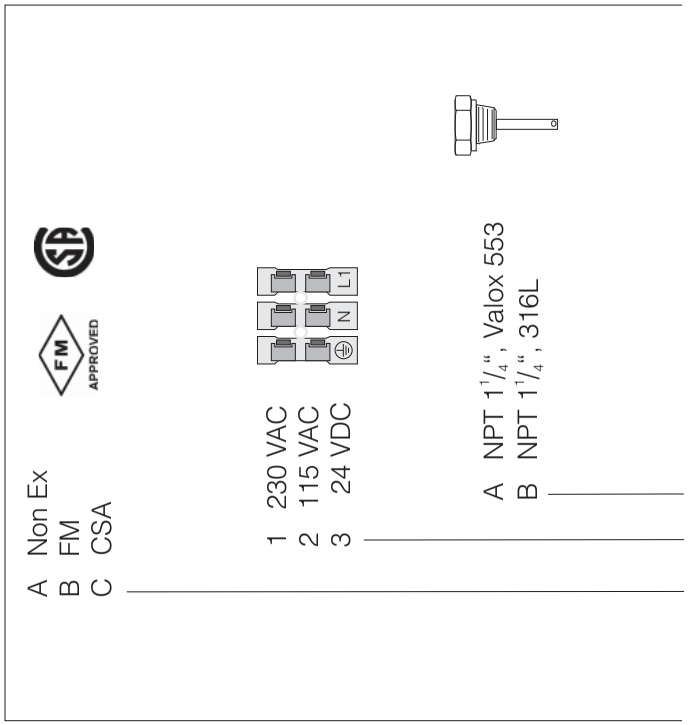

FTE31-
⇐ Order-Code
1 Standard (316L)
2 fold-down paddle (316L)
1
2
1,2/A-F = 316L
A-F
1 75 mm
2 4 m, 1.4571
A-F 100 mm - 600 mm

d **Ergänzende Dokumentation**	TI 068R/09/de	Technische Information Füllstandgrenzschalter FTE 31
e **Supplementary documentation**	TI 068R/09/en	Technical information Paddle limit switch FTE 31
f **Documentation complémentaire**		

d **Notizen:**

e **Notes:**

f **Notes:**

d	✎ **Hinweis!**	Mechanische Lebensdauer: min. 500 000 Schaltzyklen
e	✎ **Note!**	Mechanical life time: min. 500 000 switch cycles
f	✎ **Remarque !**	Durée de vie mécanique : min. 500 000 cycles de commutation
es	✎ **¡Nota!**	Vida estimada: mínimo 500 000 usos
i	✎ **Nota !**	Tempo di vita delle parti meccaniche: min. 500 000 cicli di commutazione
nl	✎ **Opmerking!**	Mechanische levensduur: min. 500 000 schakelcycli

d	**Reparatur**	Bei Austausch von Teilen nur original E+H Ersatzteile verwenden!
e	**Repairs**	When exchanging only use original E+H spare parts.
f	**Réparation**	Lors du remplacement de pièces, n'utiliser que des pièces de rechange d'origine E+H.
es	**Repuestos**	Cuando realice sustituciones utilice sólo recambios originales E+H.
i	**Riparazioni**	In caso di riparazione utilizzare solo ricambi originali E+H.
nl	**Reparatie**	Bij wisseling van onderdelen uitsluitend originele E+H service onderdelen toepassen

Austria
Endress+Hauser Ges.m.b.H.
Wien
Tel. (0222) 88056-0, Fax (0222) 88056-35

Belgium, Luxembourg
Endress+Hauser S.A./N.V.
Brussels
Tel. (02) 2480600, Fax (02) 2480553

Canada
Endress+Hauser Ltd.
Burlington, Ontario
Tel. (905) 6819292, Fax (905) 6819444

Denmark
Endress+Hauser A/S
Søborg
Tel. 70 13 11 32, Fax 70 13 21 33

Finland
Endress+Hauser Oy
Espoo
Tel. (90) 8596155, Fax (90) 8596055

France
Endress+Hauser
Huningue
Tel. 89696768, Fax 89694802

Germany
Endress+Hauser Messtechnik GmbH+Co.
Weil am Rhein
Tel. (07621) 97501, Fax (07621) 975555

Great Britain
Endress+Hauser Ltd.
Manchester
Tel. (0161) 2865000, Fax (0161) 9981841

Hong Kong
Endress+Hauser (H.K.) Ltd.
Hong Kong
Tel. 25283120, Fax 28654171

Italy
Endress+Hauser Italia S.p.A.
Cernusco s/N Milano
Tel. (02) 92106421, Fax (02) 92107153

Japan
Sakura Endress Co., Ltd.
Tokyo
Tel. (0422) 540611, Fax (0422) 550275

Malaysia
Endress+Hauser (M) Sdn. Bhd.
Petaling Jaya, Selangor Darul Ehsan
Tel. (03) 7334848, Fax (03) 7338800

Netherlands
Endress+Hauser B.V.
Naarden
Tel. (035) 6958611, Fax (035) 6958825

Norway
Endress+Hauser A/S
Lierskogen
Tel. (032) 859850, Fax (032) 859851

Singapore
Endress+Hauser (S.E.A.) Pte., Ltd.
Singapore
Tel. 5 66 82 22, Fax 5 66 68 48

South Africa
Endress+Hauser Pty. Ltd.
Sandton
Tel. (011) 4441386, Fax (011) 4441977

Spain
Endress+Hauser S.A.
Barcelona
Tel. (93) 4 80 33 66, Fax (93) 4 73 38 39

Sweden
Endress+Hauser AB
Sollentuna
Tel. (08) 626 1600, Fax (08) 6269477

Switzerland
Endress+Hauser AG
Reinach/BL 1
Tel. (061) 7157575, Fax (061) 7111650

Thailand
Endress+Hauser Ltd.
Bangkok
Tel. (2) 9 96 78 11 -20, Fax (2) 9 96 78 10

USA
Endress+Hauser Inc.
Greenwood, Indiana
Tel. (317) 535-7138, Fax (317) 535-1489

International
Endress+Hauser GmbH+Co.
Instruments International
Weil am Rhein
Tel. (07621) 97502, Fax (07621) 975345

http://www.endress.com

Endress+Hauser
The Power of Know How

KA 094R/09/a3/01.09 Mat-Nr.: 510 00917 SS/CV5

ENDRESS + HAUSER

CERABAR T PMC131, PRESSURE TRANSDUCER

LEFT BLANK

Level Pressure Flow Temperature Liquid Analysis Registration Systems Components Services Solutions

Operating Instructions

Cerabar T PMC131

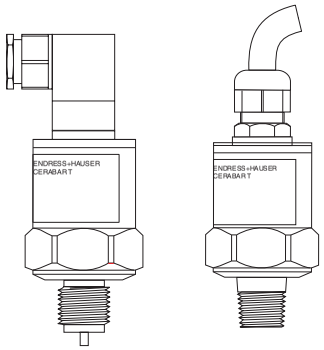

de - Drucktransducer
en - Pressure Transducer
fr - Transducteur de pression
it - Trasduttore di pressione
es - Transmisorde presión
nl - Druk-transducer

KA00085P/00/A6/13.12
71158704

Endress+Hauser
People for Process Automation

de - Inhalt

Geräte-Identifikation	4
Abmessungen	5
Montage	6
Elektrischer Anschluss	8
Technische Daten	10

en - Contents

Device Identification	4
Dimensions	5
Mounting	6
Electrical Connection	8
Technical Data	10

fr - Sommaire

Dénomination de l'appareil	4
Dimensions	5
Montage	6
Raccordement électrique	8
Caractéristiques techniques	10

de - Sicherheitshinweise

Der Cerabar T dient der Absolut- und Relativdruckmessung in Gasen, Dämpfen, Flüssigkeiten und Stäuben. Bei unsachgemäßem Einsatz können Gefahren von ihm ausgehen. Das Gerät darf nur von qualifiziertem und autorisiertem Fachpersonal unter strenger Beachtung dieser Betriebsanleitung und der Technischen Information TI00415P, der einschlägigen Normen, gesetzlichen Vorschriften und Zertifikate eingebaut, angeschlossen, in Betrieb genommen und gewartet werden.

en - Notes on Safety

The Cerabar T is designed for measuring absolute and gauge pressure of gases, vapours, liquids and dusts. If used incorrectly it is possible that application related dangers may arise.The Cerabar T may be installed, commissioned, operated and maintained by qualified and authorised personnel only, under strict observance of these operating instructions and Technical Information TI00415P, any relevant standards, legal requirements, and, where appropriate, the certificate.

fr - Conseils de sécurité

Le Cerabar T est destiné à la mesure de pression absolue et relative dans les gaz, vapeurs, liquides et poussières. Il peut être source de danger en cas d'utilisation non conforme aux prescriptions. L'appareil ne doit être installé, raccordé, mis en service et maintenu que par un personnel qualifié et autorisé, qui tiendra compte des indications contenues dans la présente mise en service et de l' Information Technique TI00415P, des normes en vigueur et des certificats disponibles (selon l'application).

es - Indice

Identificación del equipo	4
Dimensiones	5
Montaje	7
Conexiones eléctricas	8
Datos técnicos	10

it - Indice

Identificazione (strumento)	4
Dimensioni	5
Montaggio	7
Collegamento elettrico	8
Dati tecnici	10

nl - Inhoud

Instrument-identificatie	4
Afmetingen	5
Montage	7
Elektrische aansluiting	8
Omgevingscondities	10

es - Notas sobre seguridad

Cerabar T está diseñado para medir presión absoluta y relativa en gases, vapores, liquidos y sólidos pulvurulentos. Su empleo inapropiado puede resultar peligroso. El equipo deberá ser montado, conectado, instalado y mantenido única y exclusivamente por personal cualificado y autorizado, bajo rigurosa observación de las presentes instrucciones de servicio y de la Información Técnica TI00415P, de las normativas y legislaciones vigentes, así como de los certificados (dependiendo de la aplicación).

it - Note sulla sicurezza

Il Cerabar T è stato progettato per la misura della pressione assoluta e relativa di gas, vapori, liquidi e polveri. Un'installazione non corretta può determinare pericolo per le persone e le cose. Lo strumento deve essere montato collegato e messo in servizio solamente da personale qualificato ed autorizzato, nel totale rispetto delle indicazioni operative qui riportate, delle prescrizioni presenti nelle informazioni tecniche TI00415P ed in accordo a tutte le norme e legislazioni vigenti e le certificazioni utilizzate.

nl - Veiligheidsinstructies

De Cerabar T is ontworpen voor het meten absoluut en overdruk van gassen, dampen, vloeistoffen en vaste stoffen. Bij niet correct gebruik kunnen gevaarlijke situaties onstaan. Het instrument mag uitsluitend door gekwalificeerd en geautoriseerd vakpersoneel geinstalleerd, aangesloten en inbedrijf genomen worden met inachtneming van dit inbedrij-fstellingsvoorschrift, het bijbehorende Technisch Informatie blad TI00415P en de betreffende normen, de wettelijke voorschriften en eventuele certificaten in acht.

de - Geräte-Identifikation
en - Device Identification
fr - Dénomination de l'appareil
es - Identificación del equipo
it - Identificazione dello strumento
nl - Instrument-identificatie

1 = G ½A, ISO 228
1.4301 (AISI 304)

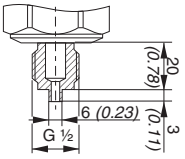

2 = ½ MNPT, ¼ FNPT,
1.4301 (AISI 304)

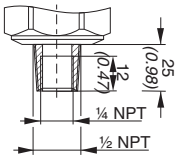

5 = G ½A, ø11 mm, ISO228
1.4301 (AISI 304)

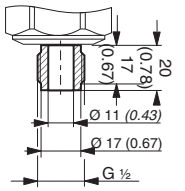

F = FKM Viton
S = FKM Viton, O_2

1 = ohne/without/sans/sin/senza/zonder
2 = Protokoll/Protocol/Protocole
S = German Lloyd

p

D10 = 0..100 mbar, 0...10 kPa
• • •
R4T = 0...500 psi a

de - Montage

- Die Funktion des Drucktransducers ist unabhängig von der Einbaulage.
- Zum Schutz des Gewindes und der Druckmembran darf die Schutzkappe am Gewindestutzen erst kurz vor dem Einbau entfernt werden.
- Der Drucktransducer ist nach den gleichen Richtlinien wie ein Manometer zu montieren. Wir empfehlen die Verwendung von Absperrhähnen und Wassersackrohren.
- Beim Einbau ist darauf zu achten, dass kein Tropfwasser in das Gehäuse eindringen kann.
- Einsatzgrenzen für Sauerstoff beachten (bei FKM Viton/O_2 gemäß BAM-Liste).
- Bei Anwendungen in explosionsfähiger Atmosphäre der Zone 2 (Zündschutzart Ex nA), Gehäuse vor Schlageinwirkung schützen.

en - Mounting

- The function of the transducer is independent of mounting orientation.
- To protect the thread and pressure diaphragm from damage, the protective cover on the threaded nozzle should be removed just before installation only.
- The pressure transducer is to be mounted like a manometer. The guidelines are identical. Isolating valves and water pocket pipes should be used.
- When installing, ensure that no water enters the housing.
- Note the application limits for oxygen (for FKM Viton/O_2 as per BAM list).
- In the event of applications in a Zone 2 explosive atmosphere (Ex nA explosion protection) protect the housing from impact.

fr - Montage

- Le fonctionnement du transducteur de pression est indépendant de son implantation.
- Afin de protéger le filetage et la membrane, ne retirer le capot de protection, placé sur le raccord fileté, qu'au moment du montage.
- Le transducteur de pression doit être monté conformément aux directives concernant les manomètres. Nous recommandons l'utilisation de robinets d'isolement et de siphons.
- Lors du montage, veiller à ce qu'il n'y ait pas d'infiltration d'eau dans le boîtier.
- Tenir compte des limites d'utilisation sur l'oxygène (pour FKP Viton/O_2 selon liste BAM).
- Les applications en atmosphère explosible de zone 2 (mode de protection antidéflagrant Ex nA), protéger le boîtier contre les chocs.

es - Montaje

- El funcionamiento del transmisor de presión es independiente de la orientación de montaje.
- No retirar la protección del casquillo roscado hasta el momento previo a su instalación para evitar dañar la rosca o el diafragma de presión.
- El transmisor de presión se deberá montar como un manómetro. El procedimiento es el mismo. Utilizar válvulas de corte y sifón.
- Durante la instalación asegurar que no entre agua en la caja.
- Observar los límites de utilización en oxígeno (para FKP Viton/O_2 según lista BAM).
- En las aplicaciones en atmósferas con riesgo de explosión de la zona 2 (tipo de protección contra ignición Ex nA) se debe proteger la carcasa contra el efecto de los impactos.

it - Montaggio

- Il funzionamento del trasduttore non dipende dalla posizione di montaggio.
- Per proteggere la filettatura e la membrana di pressione da eventuali danneggiamenti, eliminare il coperchio di protezione dell'ugello filettato solo immediatamente prima dell'installazione.
- Il trasduttore di pressione deve essere montato come un manometro. Utilizzare solo valvole di arresto e tubi separatori d'acqua.
- Durante l'installazione, assicurarsi che non entri acqua nella custodia.
- Osservare i limiti operativi per ossigeno (per FKM Viton/O_2 in accordo con lista BAM).
- Per l'utilizzo in ambienti a rischio di esplosione della zona 2 (Protezione antideflagrante Ex nA), proteggere le custodie contro gli urti.

nl - Montage

- Het functioneren van de Druk-transducer is onhafhankelijk van de montagepositie.
- Ter bescherming van de buitendraad en het membraan moet de beschermhuls pas vlak voor de montage verwijderd worden.
- De Druk-transducer moet identiek als een manometer gemonteerd worden. De richtlijnen t.a.v. gebruik van afsluitkranen, afstandsstukken en watersloten moeten worden aangehouden.
- Bij installatie ervoor zorgen dat er geen water in de behuizing kan komen, ook niet via de connector/wartel.
- Toepassingen in zuurstof bekijken (met FKM Viton/O_2 conform BAM lijst).
- Bescherm de behuizing tegen schokken bij toepassingen in explosiegevaarlijke atmosferen zone 2 (ontstekingsklasse Ex nA).

de - Elektrischer Anschluss
Stecker-Version

en - Electrical Connection
Plug version

fr - Raccordement électrique
Version connecteur

es - Conexión eléctrica
Con conector

it - Collegamento elettrico
Spina

nl - Elektrische aansluiting
Steker-versie

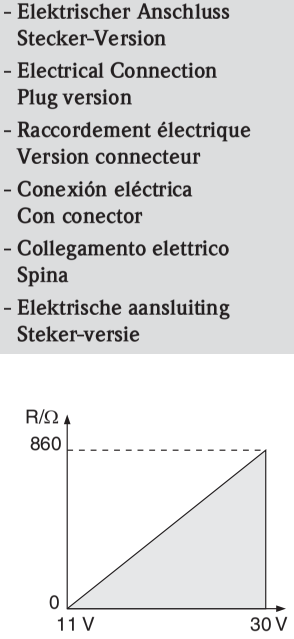

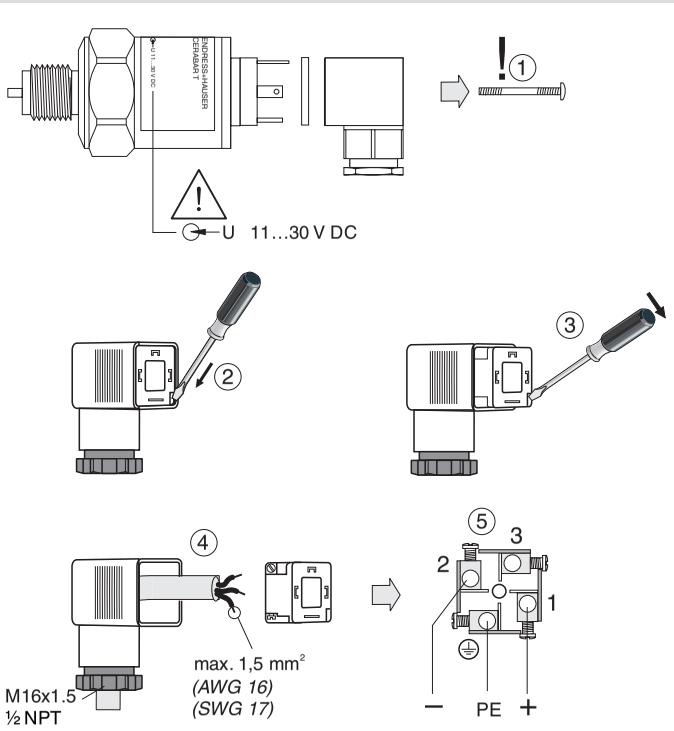

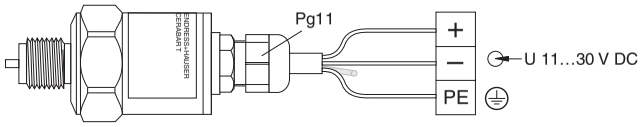

de - Referenzluft- Zuführung
Nicht verschließen! Vor Wasser schützen!

en - Reference air tube
Do not close! Protect from water!

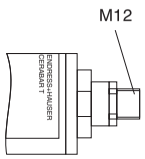

fr - Mise à l'atmosphère
Ne pas boucher! Prótéger de l'eau!

es - Tubo de compensación de presión atmosférica
No tapar! Proteger del agua!

it - Ingresso aria di riferimento
Non chiudere! Proteggere dall'acqua!

nl - Drukvereffening
Niet laten vervuilen en beschermen tegen vocht!

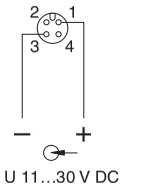

de + = rot; – = schwarz, PE = grün/gelb
en + = red; – = black, PE = green/yellow
fr + = rouge; – = noir, PE = vert/jaune
es + = rojo, – = negro, PE = verde/amarillo
it + = rosso, – = nero, PE = verde/giallo
nl + = rood; – = zwart, PE = groen/geel

de - Elektrischer Anschluß
Kabel-/Stecker-Version

en - Electrical Connection
Cable/plug version

fr - Raccordement électrique
Version câble/connecteur

es - Conexión eléctrica
Cable/conector

it - Collegamento elettrico
Cavo/spina

nl - Elektrische aansluiting
Kabel-/steker-versie

de - Einsatzbedingungen

- Umgebungstemperatur: –20…85 °C
- Lagerungstemperatur: –50…100 °C
- Meßstofftemperaturgrenze: max. 100 °C
- Meßstoffdruckgrenze: p_{max}
- Geräte mit CSA GP-Zulassung dürfen nur mit einer SELV oder Class 2 Spannungsversorgung betrieben werden.

en - Operating Conditions

- Ambient temperature range: –20…85°C
- Storage temperature range: –50…100°C
- Limiting temperature range: max. 100°C
- Limiting pressure range: p_{max}
- Devices with CSA GP approval may only be operated with a SELV or Class 2 power supply.

fr - Conditions d'utilisation

- Température ambiante: –20…85 °C
- Température de stockage: –50…100 °C
- Limite de température du produit: max. 100 °C
- Limite de pression du produit: p_{max}
- Les appareils avec agrément CSA GP ne doivent être utilisés qu'avec une tension d'alimentation SELV ou Class 2.

es - Condiciones de operación

- Rango de temperatura ambiental: –20…85 °C
- Rango de temperatura de almacenamiento: –50…100 °C
- Temperatura máxima de trabajo: máx. 100 °C
- Presión máx. de trabajo: p_{max}
- Los equipos con la certificación CSA GP sólo pueden trabajar con alimentación de clase 2 o SELV.

it - Condizioni operative

- Temperatura ambiente: –20…85 °C
- Temperatura per la conservazione in magazzino: –50…100 °C
- Temperatura limite del prodotto: max. 100 °C
- Pressione limite del prodotto: p_{max}
- Strumenti con approvazione CSA GP possono essere alimentati solo con unità tipo SELV o Classe 2

nl - Omgevingscondities

- Omgevingstemperatuur: –20…+85 °C
- Opslagtemperatuur: –50…100 °C
- Producttemp. : max. 100 °C
- max. procesdruk: p_{max}
- Instrumenten met een CSA GP certificaat mogen uitsluitend via een SELV of een klasse 2 voeding gevoed worden.

www.endress.com/worldwide

KA00085P/00/A6/13.12 71158704/CCS/FM9

71158704

ENDRESS + HAUSER

CERABAR S PMC71, PRESSURE TRANSMITTER

LEFT BLANK

Level Pressure Flow Temperature Liquid Analysis Registration Systems Components Services Solutions

Operating Instructions

Cerabar S PMC71, PMP71, PMP75

Process pressure measurement

HART COMMUNICATION PROTOCOL

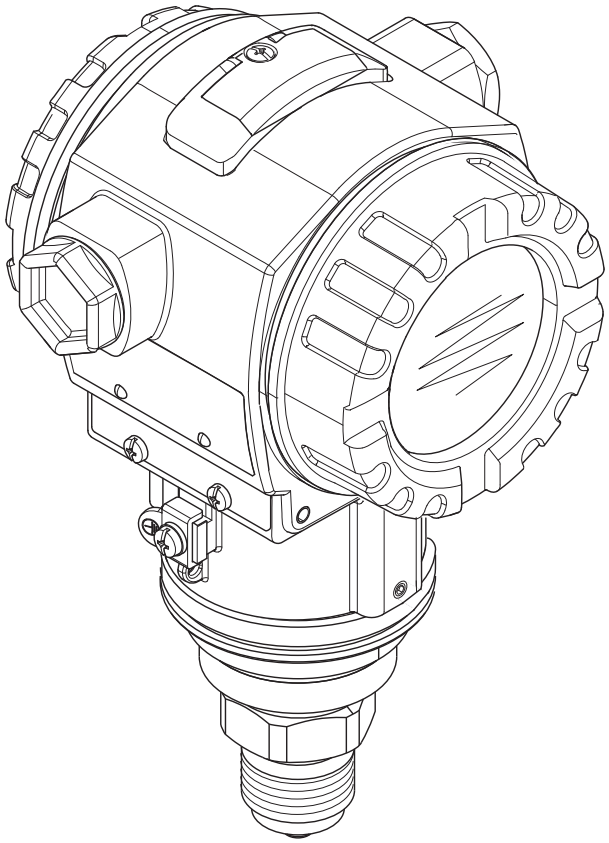

BA00271P/00/EN/18.14
71270361

valid from Software version:
02.20.zz

Endress+Hauser
People for Process Automation

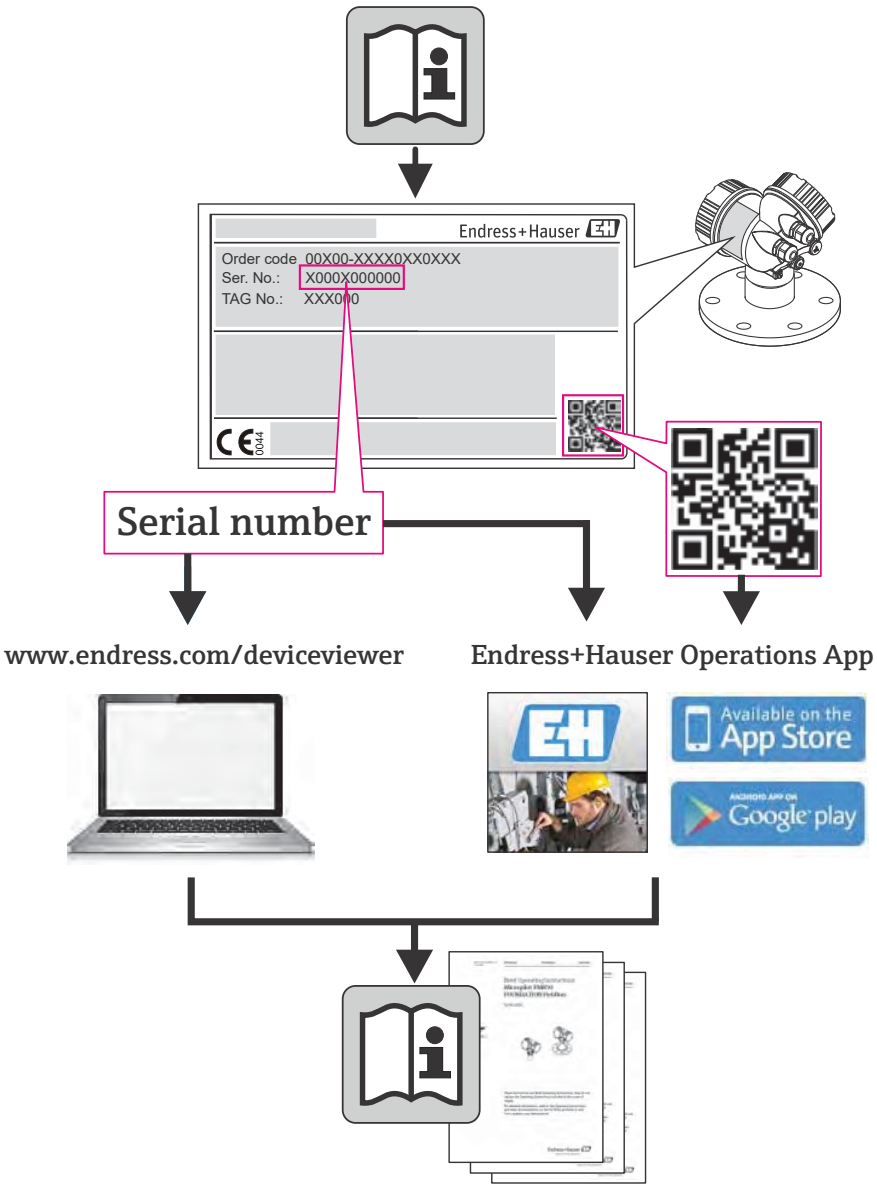
Endress+Hauser
Order code 00X00-XXXX0XX0XXX
Ser. No.: X000X000000
TAG No.: XXX000
Serial number
www.endress.com/deviceviewer
Endress+Hauser Operations App
Available on the App Store
Google play

A0023555

Table of contents

1 Safety instructions 4

1.1 Designated use 4
1.2 Installation, commissioning and operation 4
1.3 Operational safety and process safety 4
1.4 Notes on safety conventions and icons 5

2 Identification 6

2.1 Product identification 6
2.2 Device designation 6
2.3 Scope of delivery 8
2.4 Certificates and approvals 8
2.5 Registered trademarks 8

3 Installation 9

3.1 Incoming acceptance, transport, storage 9
3.2 Installation conditions 9
3.3 Installation instructions 9
3.4 Post-installation check 18

4 Wiring 19

4.1 Connecting the device 19
4.2 Connecting the measuring unit 21
4.3 Potential matching 23
4.4 Overvoltage protection (optional) 23
4.5 Post-connection check 23

5 Operation 24

5.1 On-site display (optional) 24
5.2 Operating elements 25
5.3 On-site operation – on-site display not connected 27
5.4 On-site operation – on-site display connected 30
5.5 HistoROM®/M-DAT (optional) 32
5.6 Operation via SFX100 36
5.7 Endress+Hauser operating program 36
5.8 Locking/unlocking operation 37
5.9 Factory setting (reset) 38

6 Commissioning. 40

6.1 Function check 40
6.2 Selecting language and measuring mode 40
6.3 Position adjustment 41
6.4 Pressure measurement 42
6.5 Level measurement 44

7 Maintenance. 48

7.1 Cleaning instructions 48
7.2 Exterior cleaning 48

8 Trouble-shooting 49

8.1 Messages 49
8.2 Response of outputs to errors 57
8.3 Confirming messages 59
8.4 Repair 60
8.5 Repair of Ex-certified devices 60
8.6 Spare Parts 60
8.7 Return 60
8.8 Disposal 60
8.9 Software history 61

9 Technical data 63

Index 64

1 Safety instructions

1.1 Designated use

The Cerabar S is a pressure transmitter for measuring pressure and level.

The manufacturer accepts no liability for damages resulting from incorrect use or use other than that designated.

1.2 Installation, commissioning and operation

The device has been designed to operate safely in accordance with current technical, safety and EU standards. If installed incorrectly or used for applications for which it is not intended, however, it is possible that application-related dangers may arise, e.g. product overflow due to incorrect installation or calibration. For this reason, the instrument must be installed, connected, operated and maintained according to the instructions in this manual: personnel must be authorised and suitably qualified. The manual must have been read and understood, and the instructions followed. Modifications and repairs to the device are permissible only when they are expressly approved in the manual. Pay particular attention to the technical data on the nameplate.

1.3 Operational safety and process safety

Alternative monitoring measures must be taken to ensure operational safety and process safety during configuration, testing and maintenance work on the device.

1.3.1 Hazardous areas (optional)

Devices for use in hazardous areas are fitted with an additional nameplate (→ 🖹 6). If the device is to be installed in an explosion hazardous area, then the specifications in the certificate as well as all national and local regulations must be observed. The device is accompanied by separate "Ex documentation", which is an integral part of this Operating Instructions. The installation regulations, connection values and Safety Instructions listed in this Ex document must be observed. The documentation number of the related Safety Instructions is also indicated on the additional nameplate.

- Ensure that all personnel are suitably qualified.

1.3.2 Functional Safety SIL3 (optional)

If using devices for applications with safety integrity, the Functional Safety Manual (SD00190P) must be observed thoroughly.

1.4 Notes on safety conventions and icons

In order to highlight safety-relevant or alternative operating procedures in the manual, the following conventions have been used, each indicated by a corresponding icon in the margin.

Safety conventions	
	Warning! A warning highlights actions or procedures which, if not performed correctly, will lead to personal injury, a safety hazard or destruction of the instrument.
	Caution! Caution highlights actions or procedures which, if not performed correctly, may lead to personal injury or incorrect functioning of the instrument.
	Note! A note highlights actions or procedures which, if not performed correctly, may indirectly affect operation or may lead to an instrument response which is not planned.
	Device certified for use in explosion hazardous area If the device has this symbol embossed on its nameplate, it can be installed in an explosion hazardous area or a non-explosion hazardous area, according to the approval.
	Explosion hazardous area Symbol used in drawings to indicate explosion hazardous areas. – Devices used in hazardous areas must possess an appropriate type of protection.
	Safe area (non-explosion hazardous area) Symbol used in drawings to indicate, if necessary, non-explosion hazardous areas. – Devices used in hazardous areas must possess an appropriate type of protection. Lines used in hazardous areas must meet the necessary safety-related characteristic quantities.
	Direct voltage A terminal to which or from which a direct current or voltage may be applied or supplied.
	Alternating voltage A terminal to which or from which an alternating (sine-wave) current or voltage may be applied or supplied.
	Grounded terminal A grounded terminal, which as far as the operator is concerned, is already grounded by means of an earth grounding system.
	Protective grounding (earth) terminal A terminal which must be connected to earth ground prior to making any other connection to the equipment.
	Equipotential connection (earth bonding) A connection made to the plant grounding system which may be of type e.g. neutral star or equipotential line according to national or company practice.
	Temperature resistance of the connection cables States, that the connection cables must be resistant to a temperature of at least 85 °C (185 °F).
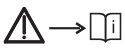	**Safety instruction** For safety instructions refer to the manual for the appropriate instrument version.

2 Identification

2.1 Product identification

The following options are available for identification of the measuring device:
- Nameplate specifications
- Order code with breakdown of the device features on the delivery note
- Enter serial numbers from nameplates in W@M Device Viewer (www.endress.com/deviceviewer): All information about the measuring device is displayed.

For an overview of the technical documentation provided, enter the serial number from the nameplates in the W@M Device Viewer (www.endress.com/deviceviewer).

2.2 Device designation

2.2.1 Nameplate

Note!
- The MWP (maximum working pressure) is specified on the nameplate. This value refers to a reference temperature of 20°C (68°F) or 100°F (38 °C) for ASME flanges.
- The pressure values permitted at higher temperatures can be found in the following standards:
  – EN 1092-1: 2001 Tab. 18 [1)]
  – ASME B 16.5a – 1998 Tab. 2-2.2 F316
  – ASME B 16.5a – 1998 Tab. 2.3.8 N10276
  – JIS B 2220
- The test pressure corresponds to the over pressure limit (OPL) of the device = MWP x 1.5 [2)].
- The Pressure Equipment Directive (EC Directive 97/23/EC) uses the abbreviation "PS". The abbreviation "PS" corresponds to the MWP (maximum working pressure) of the measuring device.

1) With regard to their temperature stability properties, the materials 1.4404 and 1.4435 are grouped under 13E0 in EN 1092-1 Tab. 18. The chemical composition of the two materials can be identical.
2) The equation does not apply for PMP71 and PMP75 with a 40 bar (600 psi) or a 100 bar (1500 psi) measuring cell.

Aluminium and stainless steel housing (T14)

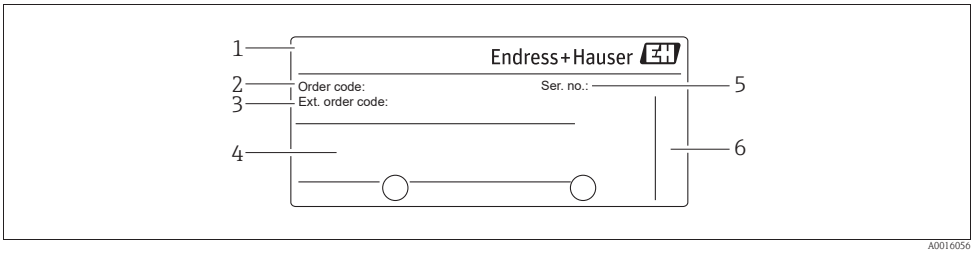

Fig. 1: Nameplate

1 Device name
2 Order code (for re-orders)
3 Extended order code (complete)
4 Technical data
5 Serial number (for identification)
6 Address of manufacturer

Devices for use in hazardous areas are fitted with an additional nameplate.

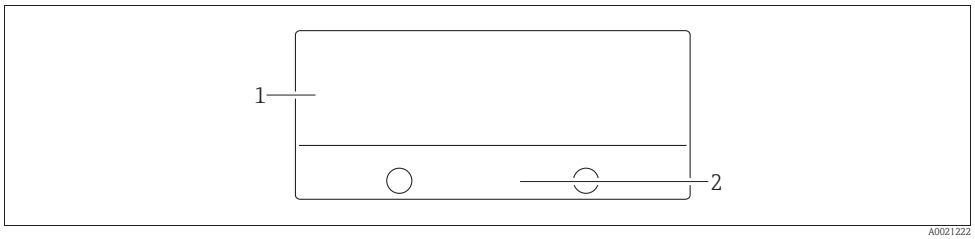

Fig. 2: Additional nameplate

1 Approval-specific information
2 Document number for safety instructions or drawing number

Devices suitable for oxygen applications or with PVDF process connection are fitted with an additional nameplate.

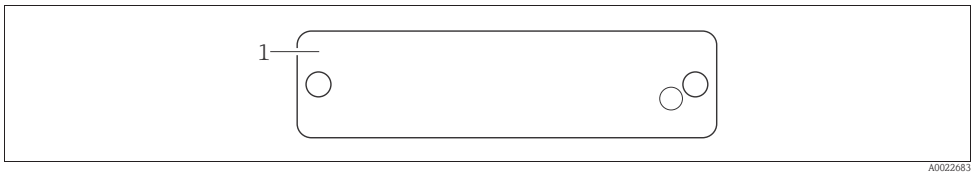

Fig. 3: Additional nameplate

1 Application limits

Hygenic stainless steel housing (T17)

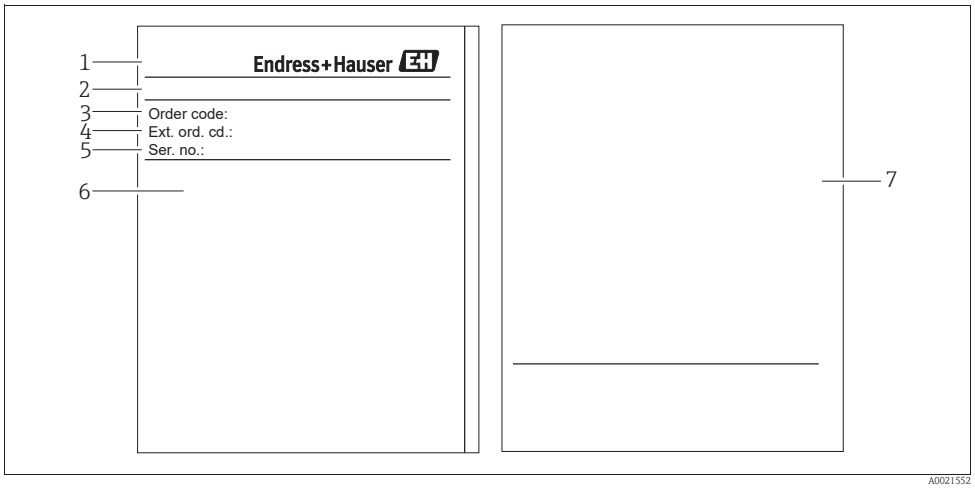

Fig. 4: Nameplate

1 Device name
2 Address of manufacturer
3 Order code (for re-orders)
4 Extended order code (complete)
5 Serial number (for identification)
6 Technical data
7 Approval-specific information and document number for safety instructions or drawing number

2.2.2 Identifying the sensor type

See parameter "Sensor Meas.Type" in Operating Instruction BA00274P.

2.3 Scope of delivery

The scope of delivery comprises:
- Cerabar S pressure transmitter
- For devices with the "HistoROM/M-DAT" option:
  CD-ROM with Endress+Hauser operating program
- Optional accessories

Documentation supplied:
- The Operating Instructions BA00271P and BA00274P are available via the Internet.
  → See: www.endress.com → Download.
- Brief Operating Instructions KA01019P
- Leporello KA00218P
- Final inspection report
- Also Safety Instructions with ATEX, IECEx and NEPSI devices
- Optional: factory calibration form, test certificates

2.4 Certificates and approvals

CE mark, declaration of conformity

The device is designed to meet state-of-the-art safety requirements, has been tested and left the factory in a condition in which it is safe to operate. The device complies with the applicable standards and regulations as listed in the EC declaration of conformity and thus complies with the statutory requirements of the EC Directives. Endress+Hauser confirms the successful testing of the device by affixing to it the CE mark.

2.5 Registered trademarks

KALREZ®, VITON®, TEFLON®
Registered trademarks of E.I. Du Pont de Nemours & Co., Wilmington, USA

TRI-CLAMP®
Registered trademark of Ladish & Co., Inc., Kenosha, USA

HART®
Registered trademark of the HART Communication Foundation, Austin, USA.

GORE-TEX®
Registered trademark of W.L. Gore & Associates, Inc., USA

3 Installation

3.1 Incoming acceptance, transport, storage

3.1.1 Incoming acceptance

- Check the packaging and the contents for damage.
- Check the shipment, make sure nothing is missing and that the scope of supply matches your order.

3.1.2 Transport

Caution!
Follow the safety instructions and transport conditions for devices of more than 18 kg (39.69 lbs). Transport the measuring device to the measuring point in its original packaging or at the process connection.

3.1.3 Storage

The device must be stored in a dry, clean area and protected against damage from impact (EN 837-2).

Storage temperature range:
- –40 °C to +90°C (–40 °F to +194°F)
- On-site display: –40 °C to +85°C (–40 °F to +185°F)
- Separate housing: –40 °C to +60°C (–40 °F to +140°F)

3.2 Installation conditions

3.2.1 Dimensions

For dimensions, please refer to "Mechanical construction" section in TI00383P.

3.3 Installation instructions

Note!
- Due to the orientation of the Cerabar S, there may be a shift in the measured value, i.e. when the container is empty, the measured value does not display zero. You may correct this zero point shift either directly on the device using the "E"-key or by remote operation. See → 📄 26, "Function of the operating elements – on-site display not connected" or
→ 📄 41, "Position adjustment".
- For PMP75, please refer to → 📄 12, "Installation instructions for devices with diaphragm seals – PMP75".
- To ensure optimal readability of the on-site display, it is possible to rotate the housing up to 380°. → 📄 18, "Rotating the housing".
- Endress+Hauser offers a mounting bracket for installing on pipes or walls. → 📄 15, "Wall and pipe-mounting (optional)".

3.3.1 Installation instructions for devices without diaphragm seals – PMP71, PMC71

Note!
- If a heated Cerabar S is cooled during the cleaning (e.g. by cold water), a vacuum develops for a short time, whereby water can penetrate the sensor through the pressure compensation (1).

If this is the case, mount the sensor with the pressure compensation (1) pointing downwards.

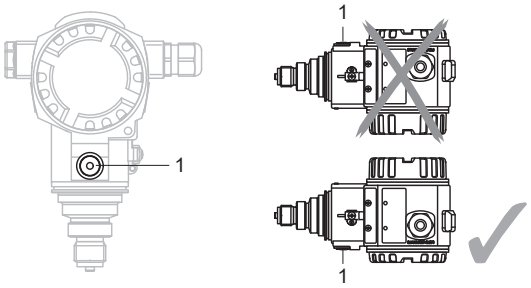

- Keep the pressure compensation and GORE-TEX® filter (1) free from contaminations and water.
- Cerabar S without diaphragm seal are mounted as per the norms for a manometer (DIN EN 837-2). We recommend the use of shut-off devices and siphons. The orientation depends on the measuring application.
- Do not clean or touch process isolating diaphragm seals with hard or pointed objects.
- The device must be installed as follows in order to comply with the cleanability requirements of the ASME-BPE (Part SD Cleanability):

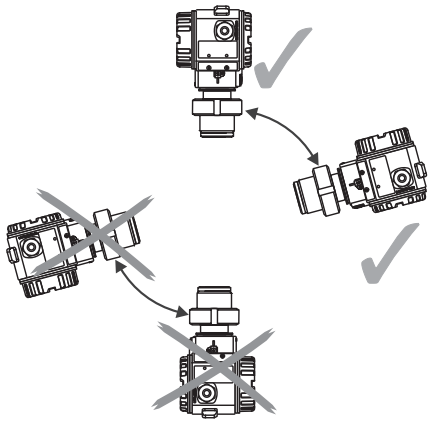

Pressure measurement in gases

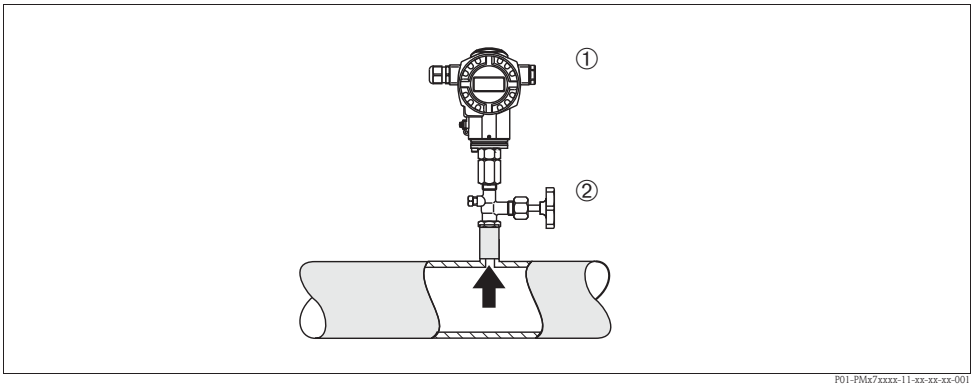

Fig. 5: Measuring arrangement for pressure measurement in gases

1 Cerabar S
2 Shut-off device

Mount Cerabar S with shut-off device above the tapping point so that any condensate can flow into the process.

Pressure measurement in steams

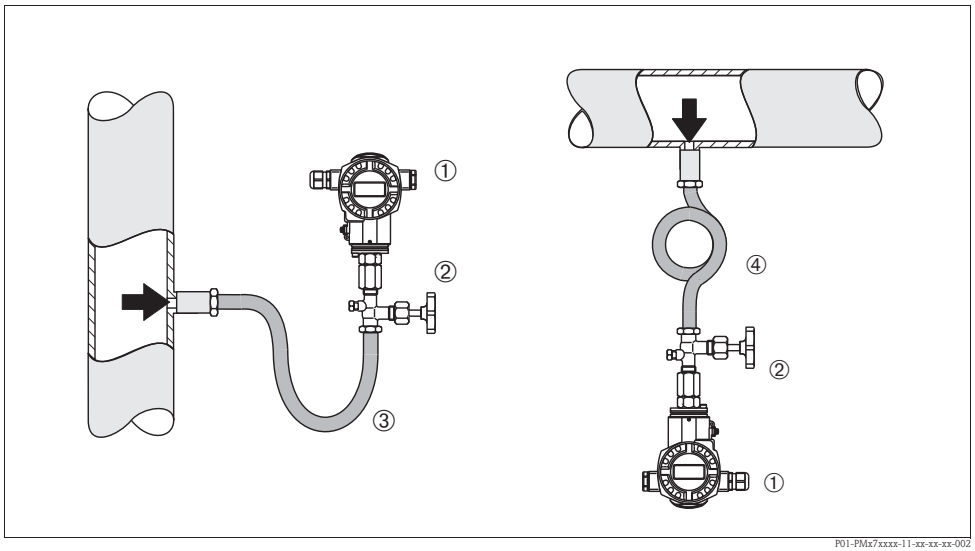

Fig. 6: Measuring arrangement for pressure measurement in steams

1 Cerabar S
2 Shut-off device
3 U-shaped siphon
4 Circular siphon

- Use siphons for pressure measurement in steam. The siphon reduces the temperature to almost ambient temperature. Preferably mount the Cerabar S with the siphon below the tapping point. Advantages:
  – defined water column only causes minimal/negligible measured errors
  – only minimal/negligible thermal effects on the device
  Mounting above the tapping point is also possible. Pay attention to the maximum permitted ambient temperature of the transmitter!
- Fill the siphon with liquid before commissioning.

Pressure measurement in liquids

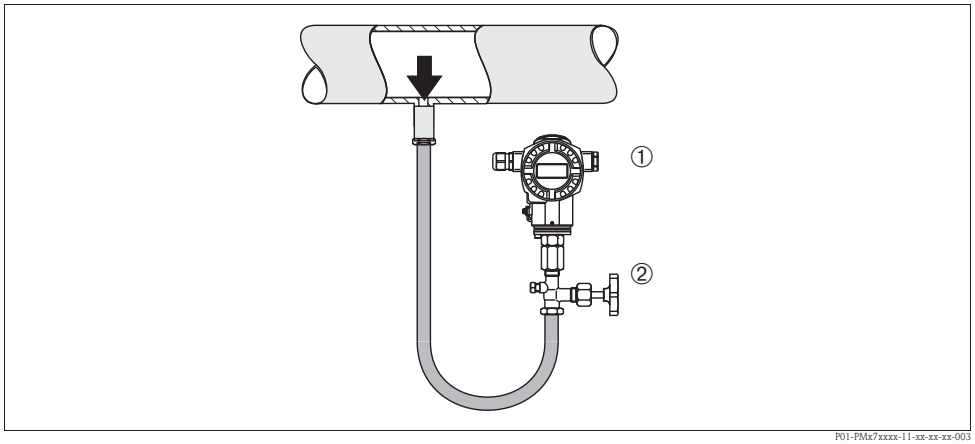

Fig. 7: Measuring arrangement for pressure measurement in liquids

1 Cerabar S
2 Shut-off device

Mount Cerabar S with shut-off device below or at the same level as the tapping point.

Level measurement

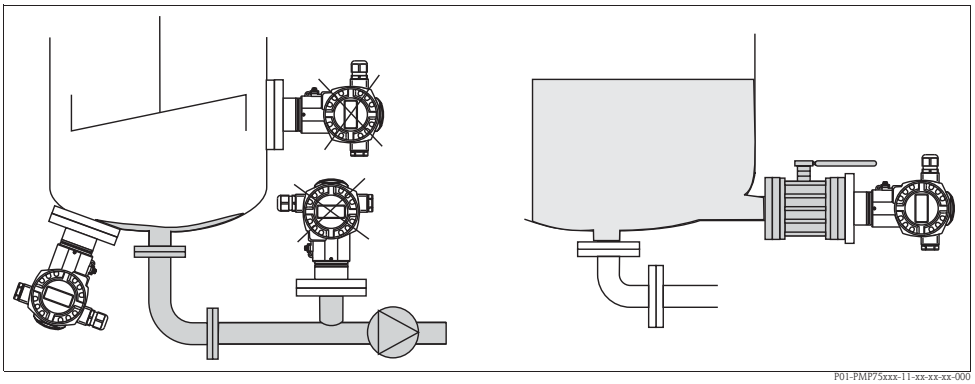

Fig. 8: Measuring arrangement for level

- Mount Cerabar S below the lowest measuring point.
- Do not mount the device at the following positions:
  In the fill flow, in the tank outlet or at a point in the container which could be affected by pressure pulses from an agitator.
- Do not mount the device in the suction area of a pump.
- The calibration and functional test can be carried out more easily if you mount the device after a shut-off device.

PVDF adapter

Note!
For instruments with PVDF adapter, a maximum torque of 7 Nm (5.16 lbf ft) is permitted.
The thread connection may become loose at high temperatures and pressures. This means that the integrity of the thread must be checked regularly and may need to be tightened using the torque given above. Teflon tape is recommended for sealing with the 1/2 NPT thread.

3.3.2 Installation instructions for devices with diaphragm seals – PMP75

Note!
- The Cerabar S with diaphragm seal is screwed in, flanged or clamped, depending on the type of diaphragm seal.
- The diaphragm seal and the pressure sensor together form a closed an calibrated system which is filled with filling fluid through a hole in the upper part. This hole is sealed and not to be opened.
- Do not clean or touch process isolating diaphragm of the diaphragm seals with hard or pointed objects.
- Do not remove the protection of the process isolating diaphragm until shortly before installation.
- When using a mounting bracket, sufficient strain relief must be ensured for the capillaries in order to prevent the capillary bending down (bending radius ≥ 100 mm (3.94 in)).
- Please note that the hydrostatic pressure of the liquid columns in the capillaries can cause zero point shift. The zero point shift can be corrected. → 41, "Position adjustment".
- Please note the application limits of the diaphragm seal filling oil as detailed in the Technical Information for Cerabar S TI00383P, Section "Planning instructions for diaphragm seal systems".

In order to obtain more precise measurement results and to avoid a defect in the device, mount the capillaries as follows:
- Vibration-free (in order to avoid additional pressure fluctuations)
- Not in the vicinity of heating or cooling lines
- Insulate if the ambient temperature is below ore above the reference temperature
- With a bending radius of ≥100 mm (3.94 in).

Vacuum application

For applications under vacuum, Endress+Hauser recommends mounting the pressure transmitter underneath the diaphragm seal. A vacuum load of the diaphragm seal caused by the presence of filling oil in the capillaries is hereby prevented.

When the pressure transmitter is mounted above the diaphragm seal, the maximum height difference H1 in accordance with the illustration below on the left must not be exceeded.
The maximum height difference is dependent on the density of the filling oil and the smallest ever pressure that is permitted to occur at the diaphragm seal (empty container), see illustration below, on the right.

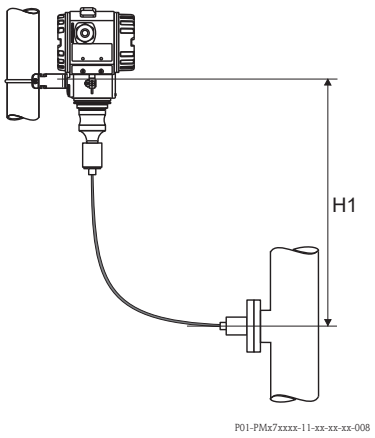

Fig. 9: Installation above the diaphragm seal

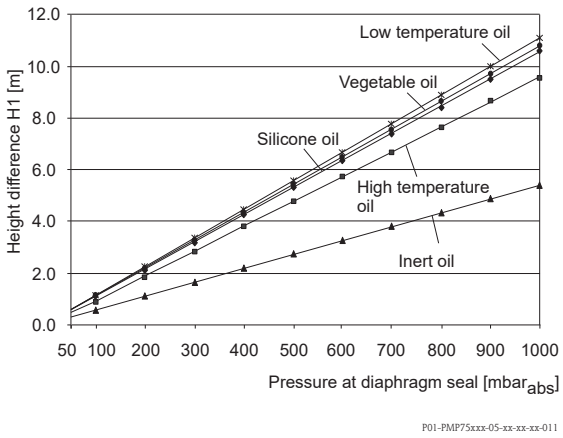

Fig. 10: Diagram of maximum installation height above the diaphragm seal for vacuum applications dependent on the pressure at the diaphragm seal

Mounting with temperature isolator

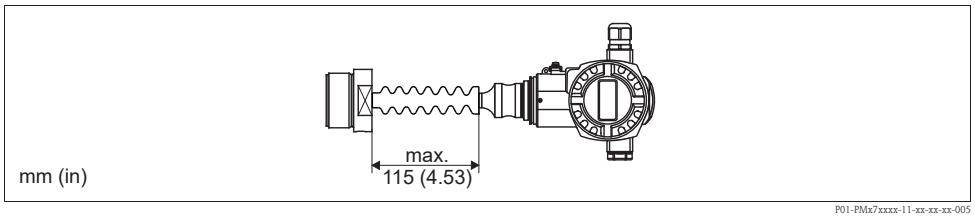

Endress+Hauser recommends the use of temperature separators in the event of constant extreme fluid temperatures which lead to the maximum permissible electronics temperature of +85 °C (+185 °F) being exceeded. To minimise the influence of rising heat, Endress+Hauser recommends the device be mounted horizontally or with the housing pointing downwards. The additional installation height also brings about a zero point shift of approx. 21 mbar (0.315 psi) due to the hydrostatic columns in the temperature isolator. You can correct this zero point shift. See also
→ 📄 26, "Function of the operating elements – on-site display not connected" or
→ 📄 41, "Position adjustment".

3.3.3 Seal for flange mounting

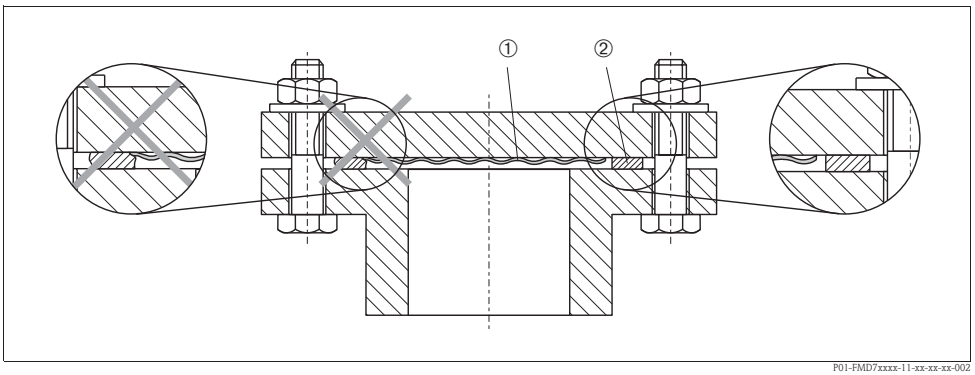

Fig. 11: Mounting the versions with flange or diaphragm seal

1 Process isolating diaphragm
2 Seal

Warning!
The seal is not allowed to press on the process isolating diaphragm as this could affect the measurement result.

3.3.4 Installation with heat insulation – PMC71 high temperature version and PMP75

The devices must only be insulated up to a certain height. The maximum permitted insulation height is labelled on the devices and applies to an insulation material with a specific heat conductivity and to the maximum permitted ambient and process temperature (see following table). The data were determined under the most critical application "quiescent air".

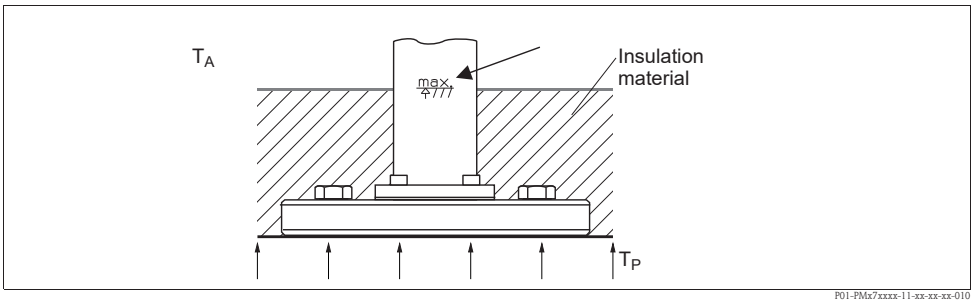

Fig. 12: Maximum insulation height, here e.g. PMC71 with flange

	PMC71	**PMP75**
Ambient temperature (T_A)	≤ 70°C (158°F)	≤ 70°C (158°F)
Process temperature (T_P)	≤ 150°C (302°F)	≤ 400°C (752°F) [1)]
Heat conductivity Insulation material	≤ 0,04 W/(m x K)	

1) Depending on the diaphragm seal filling oil used (see Technical Information TI00383P Cerabar S)

3.3.5 Wall and pipe-mounting (optional)

Endress+Hauser offers a mounting bracket for installing on pipes or walls.

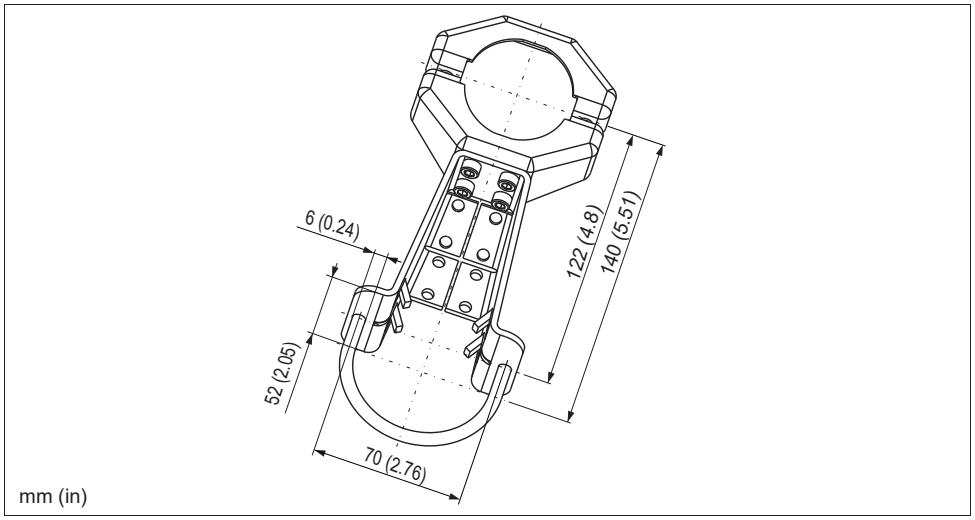

Please note the following when mounting:
- Devices with capillary lines: mount capillaries with a bending radius of ≥ 100 mm (3.94 in).
- In the case of pipe mounting, the nuts on the bracket must be tightened uniformly with a torque of at least 5 Nm (3.69 lbf ft).

3.3.6 Assembling and mounting the "separate housing" version

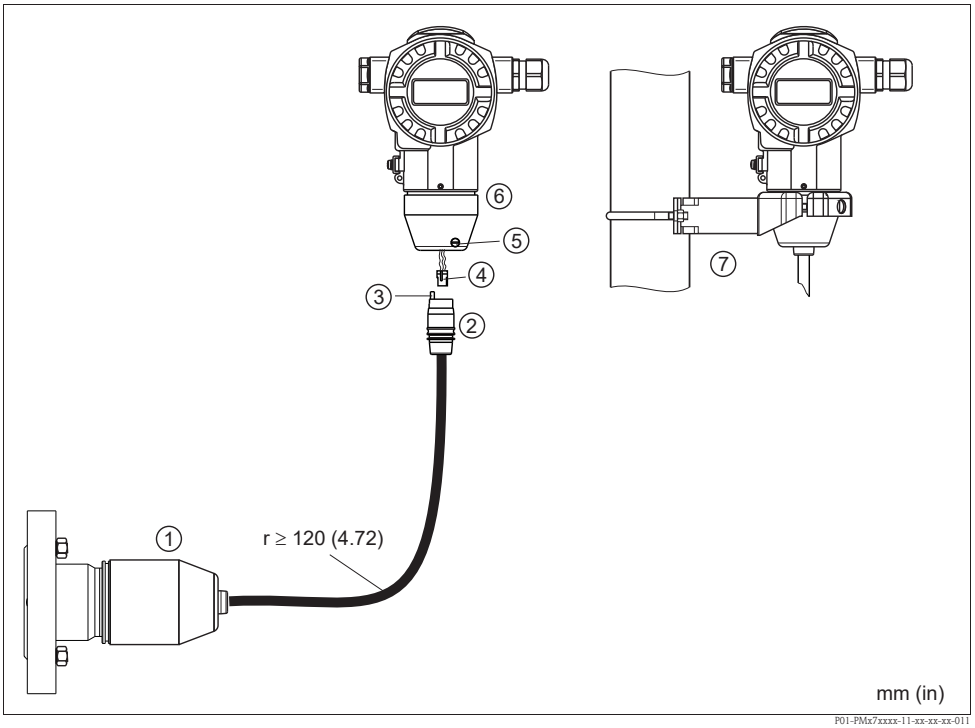

Fig. 13: "Separate housing" version

1 In the "separate housing" version, the sensor is supplied with process connection and cable fitted.
2 Cable with connection jack
3 Pressure compensation
4 Plug
5 Locking screw
6 Housing fitted with housing adapter, included
7 Mounting bracket suitable for wall and pipe mounting, included

Assembly and mounting

1. Connect plug (item 4) into the corresponding connection jack of the cable (item 2).
2. Plug the cable into the housing adapter (item 6).
3. Tighten the locking screw (item 5).
4. Mount the housing on a wall or pipe using the mounting bracket (item 7). When mounting on a pipe, tighten the nuts on the bracket uniformly with a torque of at least 5 Nm (3.69 lbf ft). Mount the cable with a bending radius (r) ≥ 120 mm (4.72 in).

3.3.7 PMP71, version prepared for diaphragm seal mount – welding recommendation

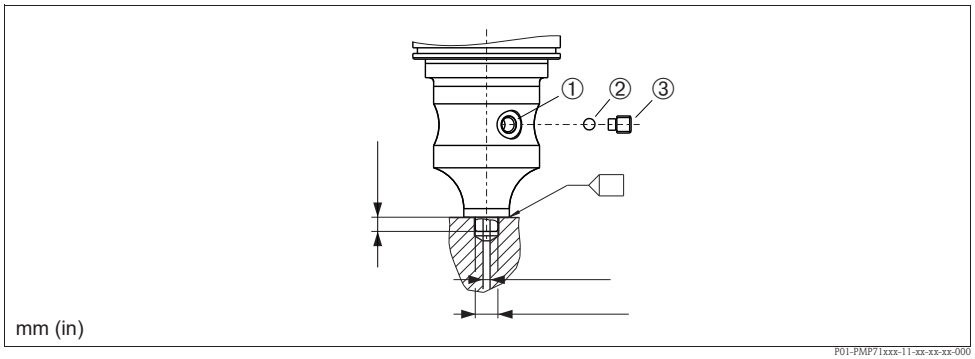

Fig. 14: Version U1: prepared for diaphragm seal mount

1 Hole for filling fluid
2 Bearing
3 Threaded pin
A1 See the following table "Welding recommendation"

Welding recommendation
For the "U1 Prepared for diaphragm seal mount" version in feature 70 "Process connection; Material" in the order code of up to including 40 bar (600 psi)-sensors, Endress+Hauser recommends welding on the diaphragm seal as follows: the total welding depth of the fillet weld is 1 mm (0.04 in) at an external diameter of 16 mm (0.63 in). Welding is performed according to the WIG method.

Consecutive seam no.	Sketch/welding groove shape, dimension as per DIN 8551	Base material matching	Welding process DIN EN ISO 24063	Welding position	Inert gas, additives
A1 for sensors ≤ 40 bar (600 psi)	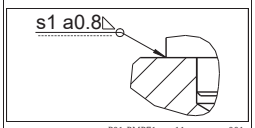 P01-PMP71xxx-11-xx-xx-xx-001	Adapter made of 316L (1.4435) to be welded to diaphragm seal made of 316L (1.4404/1.4435)	141	PB	Inert gas Ar/H 95/5 Additive: 1.4430 (ER 316L Si)

3.3.8 Rotating the housing

The housing can be rotated up to 380° by loosening the Allen screw.

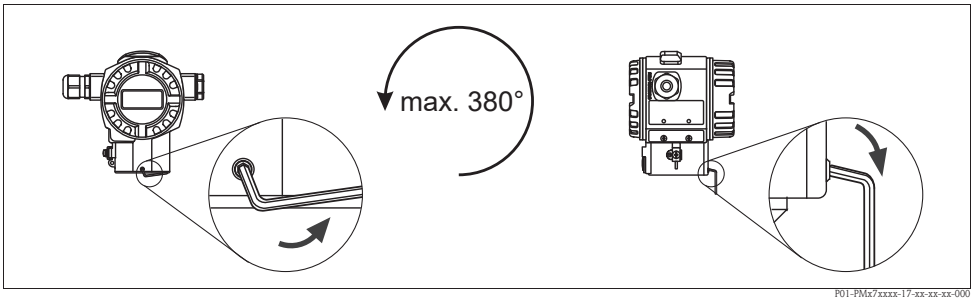

Fig. 15: Aligning the housing

– T14 housing: Loosen setscrew with a 2 mm (0.08 in) Allen key.
Hygenic T17 housing:Loosen setscrew with a 3 mm (0.12 in) Allen key.
– Rotate housing (max. up to 380°).
– Retighten setscrew with 1 Nm (0,74 lbf ft).

3.3.9 Closing the housing cover

Note!
When closing the housing cover, please ensure that the thread of the cover and housing are free from dirt, e.g. sand.If you feel any resistance when closing the cover, check the thread on both again to ensure that they are free from dirt.

Close cover on a hygenic stainless steel housing (T17)

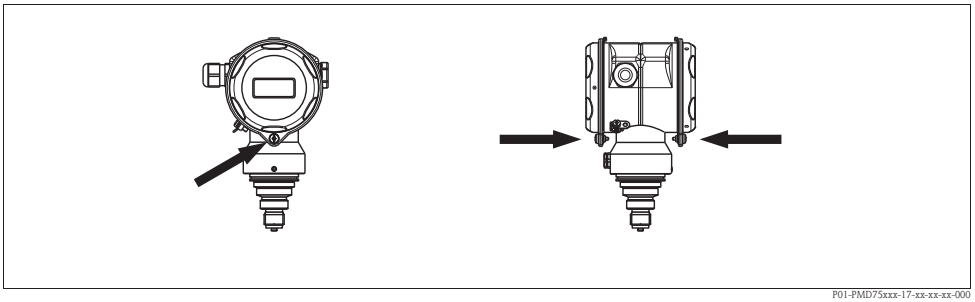

Fig. 16: Close cover

The covers for the terminal and electronics compartment are hooked into the casing and closed with a screw. These screws should be finger-tightened (2 Nm (1.48 lbf ft)) to the stop to ensure that the covers sit tightly.

3.4 Post-installation check

After installing the device, carry out the following checks:
- Are all screws firmly tightened?
- Are the housing covers screwed down tight?

4 Wiring

4.1 Connecting the device

Warning!
Risk of electric shock!
If the operating voltage is > 35 VDC: Dangerous contact voltage at terminals.
In a wet environment, do not open the cover if voltage is present.

Warning!
Limitation of electrical safety due to incorrect connection!

- Risk of electric shock and/or explosion in hazardous areas! In a wet environment, do not open the cover if voltage is present.
- When using the measuring device in hazardous areas, installation must comply with the corresponding national standards and regulations and the Safety Instructions or Installation or Control Drawings.
- Devices with integrated overvoltage protection must be earthed.
- Protective circuits against reverse polarity, HF influences and overvoltage peaks are installed.
- The supply voltage must match the supply voltage on the nameplate (→ 🖹 6, "Nameplate").
- Switch off the supply voltage before connecting the device.
- Remove housing cover of the terminal compartment.
- Guide cable through the gland. Preferably use twisted, screened two-wire cable.
- Connect device in accordance with the following diagram.
- Screw down housing cover.
- Switch on supply voltage.

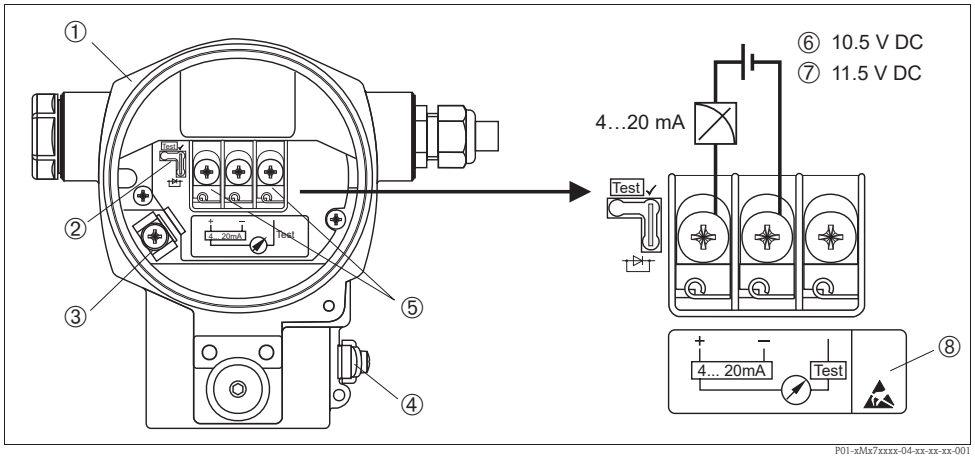

Fig. 17: Electrical connection 4 to 20 mA HART. Observe also → 🖹 21, "Supply voltage".

1 Housing
2 Jumper for 4 to 20 mA test signal.
→ 🖹 21, "Taking 4 to 20 mA test signal" part.
3 Internal earth terminal
4 External earth terminal
5 4 to 20 mA test signal between plus and test terminal
6 Minimum supply voltage = 10.5 V DC, jumper is inserted in accordance with the illustration.
7 Minimum supply voltage = 11.5 V DC, jumper is inserted in "Test" position.
8 Devices with integrated overvoltage protection are labelled OVP (overvoltage protection) here.

4.1.1 Devices with Harting plug Han7D

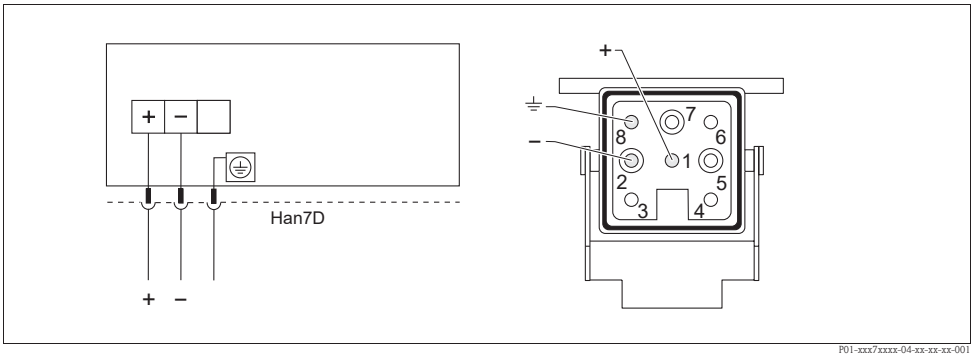

Fig. 18: Left: electrical connection for devices with Harting plug Han7D
Right: view of the plug connector at the device

4.1.2 Devices with M12 plug

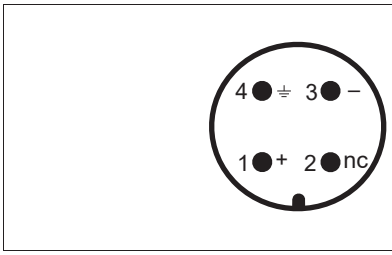

PIN	Meaning
1	signal +
2	not used
3	signal –
4	ground

4.1.3 Connecting the cable version

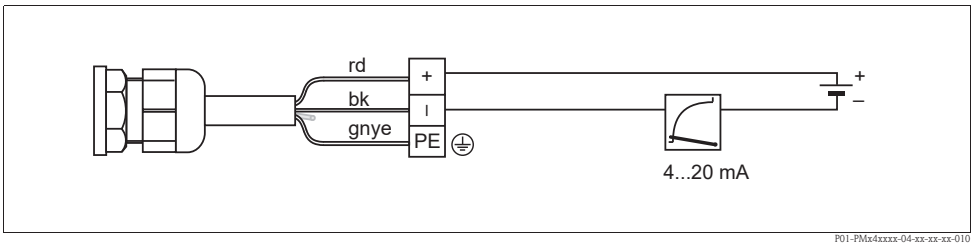

Fig. 19: rd = red, bk = black, gnye = green-yellow

4.2 Connecting the measuring unit

4.2.1 Supply voltage

Note!
- All explosion protection data are given in separate documentation which is available upon request. The Ex documentation is supplied as standard with all devices approved for use in explosion hazardous areas.
- When using the measuring device in hazardous areas, installation must comply with the corresponding national standards and regulations and the Safety Instructions or Installation or Control Drawings.

Electronic version	Jumper for 4 to 20 mA test signal in "Test" position (Delivery status)	Jumper for 4 to 20 mA test signal in "Non-Test" position
4 to 20 mA HART, for non-hazardous areas	11.5 to 45 V DC	10.5 to 45 V DC

Taking 4 to 20 mA test signal

A 4 to 20 mA signal may be measured via the positive and test terminal without interrupting the measurement. The minimum supply voltage of the device can be reduced by simply changing the position of the jumper. As a result, operation is also possible with lower voltage sources. To keep the measured error below 0.1 %, the current measuring device should display an internal resistance of $< 0.7\ \Omega$. Observe the position of the jumper in accordance with the following table.

Jumper position for test signal	Description
	– Taking 4 to 20 mA test signal via plus and test terminal: possible. (Thus, the output current can be measured without interruption via the diode.) – Delivery status – Minimum supply voltage: 11.5 V DC
	– Taking 4 to 20 mA test signal via plus and test terminal: not possible. – Minimum supply voltage: 10.5 V DC

4.2.2 Cable specification

- Endress+Hauser recommends using twisted, screened two-wire cables.
- Terminals for wire cross-sections 0.5 to 2.5 mm^2 (20 to 14 AWG)
- Cable external diameter: 5 to 9 mm (0.2 to 0.35 in)

4.2.3 Load

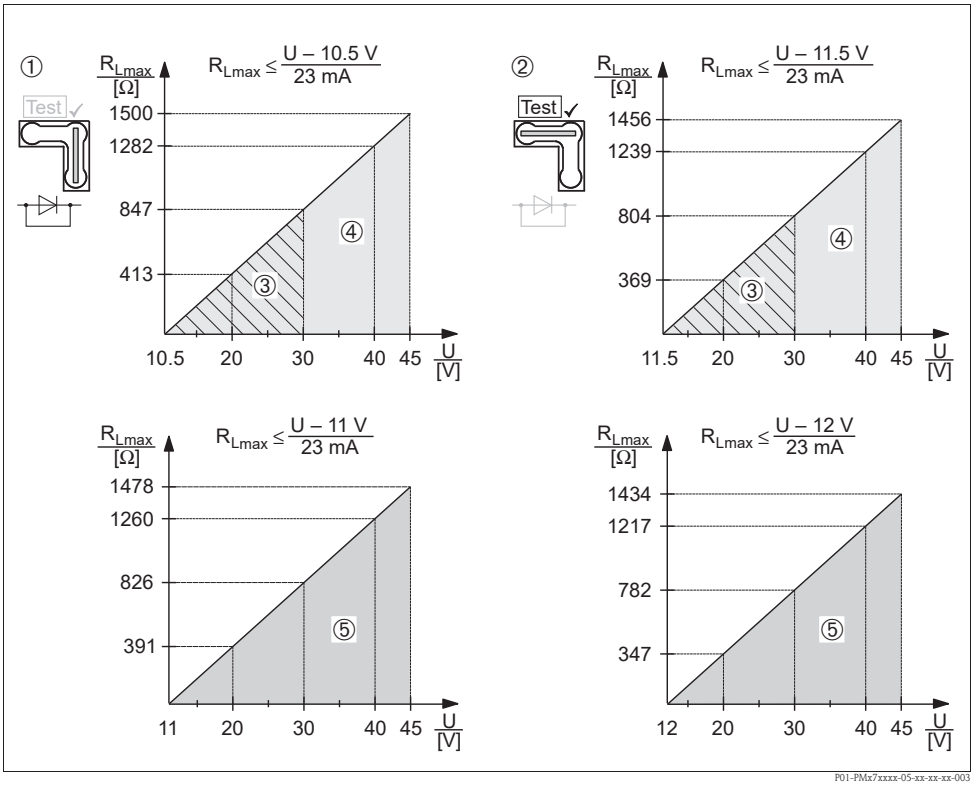

Fig. 20: Load diagram, observe the position of the jumper and the explosion protection. (→ 21, "Taking 4 to 20 mA test signal" part.)

1 Jumper for the 4 to 20 mA test signal inserted in "Non-Test" position
2 Jumper for the 4 to 20 mA test signal inserted in "Test" position
3 Supply voltage 10.5 (11.5) to 30 V DC for 1/2 G, 1 GD, 1/2 GD, FM IS , CSA IS, IECEx ia, NEPSI Ex ia
4 Supply voltage10.5 (11.5) to 45 V DC for devices for non-hazardous areas, 1/2 D, 1/3 D, 2 G Ex d, 3 G Ex nA, FM XP, FM DIP, FM NI, CSA XP and CSA Dust-Ex, NEPSI Ex d
5 Supply voltage 11 (12) to 45 V DC for PMC71, Ex d[ia], NEPSI Ex d[ia]
R_{Lmax} Maximum load resistance
U Supply voltage

Note!
When operating via a handheld terminal or via PC with an operating program, a minimum communication resistance of 250 Ω must exist within the loop.

4.2.4 Screening/potential matching

- You achieve optimum screening against disturbances if the screening is connected on both sides (in the cabinet and on the device). If you have to reckon with potential equalisation currents in the plant, only earth screening on one side, preferably at the transmitter.
- When using in hazardous areas, you must observe the applicable regulations. Separate Ex documentation with additional technical data and instructions is included with all Ex systems as standard.

4.2.5 Connecting Field Xpert SFX100

Compact, flexible and robust industry handheld terminal for remote parametrization and measured value inspection via the HART current output (4-20mA).
For details refer to Operating Instructions BA00060S/04/EN.

4.2.6 Connecting Commubox FXA195

The Commubox FXA195 connects intrinsically safe transmitters with the HART protocol to a computer's USB port. This allows remote operation of the transmitter using Endress+Hauser's FieldCare operating program. Power is supplied to the Commubox through the USB port. The Commubox is also suitable for connection to intrinsically safe circuits. → See Technical Information TI00404F for further information.

4.2.7 Connecting Commubox FXA291/ToF Adapter FXA291 for operation via FieldCare

Connecting Commubox FXA291

The Commubox FXA291 connects Endress+Hauser field instruments with CDI interface (= Endress+Hauser Common Data Interface) to the USB interface of a personal computer or a notebook. For details refer to TI00405C/07/EN.

Note!
For the device you need the "ToF Adapter FXA291" as an additional accessory.

Connecting ToF Adapter FXA291

The ToF Adapter FXA291 connects the Commubox FXA291 via the USB interface of a personal computer or a notebook to the device. For details refer to KA00271F/00/A2.

4.3 Potential matching

Ex applications: Connect all devices to the local potential matching.
Observe the applicable regulations.

4.4 Overvoltage protection (optional)

Devices showing version "M" in feature 100 "Additional options 1" or feature 110 "Additional options 2" in the order code are equipped with overvoltage protection (see also Technical Information TI00383P "Ordering information".

- Overvoltage protection:
  - Nominal functioning DC voltage: 600 V
  - Nominal discharge current: 10 kA
- Surge current check î = 20 kA as per DIN EN 60079-14: 8/20 µs satisfied
- Arrester AC current check I = 10 A satisfied

Warning!
Devices with integrated overvoltage protection must be earthed.

4.5 Post-connection check

Perform the following checks after completing electrical installation of the device:

- Does the supply voltage match the specifications on the nameplate?
- Is the device properly connected (→ 19)?
- Are all screws firmly tightened?
- Are the housing covers screwed down tight?

As soon as voltage is applied to the device, the green LED on the electronic insert lights up for a few seconds or the connected on-site display lights up.

5 Operation

Feature 20 "Output; operation" in the order code provides you with information on the operating options available to you.

Versions in the order code		Operation
A	4 to 20 mA HART; external operation, LCD	Via on-site display and 3 keys on the exterior of the device
B	4 to 20 mA HART; internal operation, LCD	Via on-site display and 3 keys on the inside of the device
C	4 to 20 mA; internal operation	Without on-site display, 3 keys on the inside of the device

5.1 On-site display (optional)

A 4-line liquid crystal display (LCD) is used for display and operation.
The on-site display shows measured values, dialog texts, fault messages and notice messages.
The display of the device can be turned in 90° steps. Depending on the installation position of the device, this makes it easy to operate the device and read the measured values.

Functions:
- 8-digit measured value display including sign and decimal point, bargraph for current display
- Simple and complete menu guidance thanks to separation of the parameters into several levels and groups
- Each parameter is given a 3-digit ID number for easy navigation
- Option for configuring the display according to individual requirements and desires, such as language, alternating display, contrast setting, display of other measured values such as sensor temperature
- Comprehensive diagnostic functions (fault and warning message, peak-hold indicators, etc.)
- Rapid and safe commissioning with the Quick Setup menus

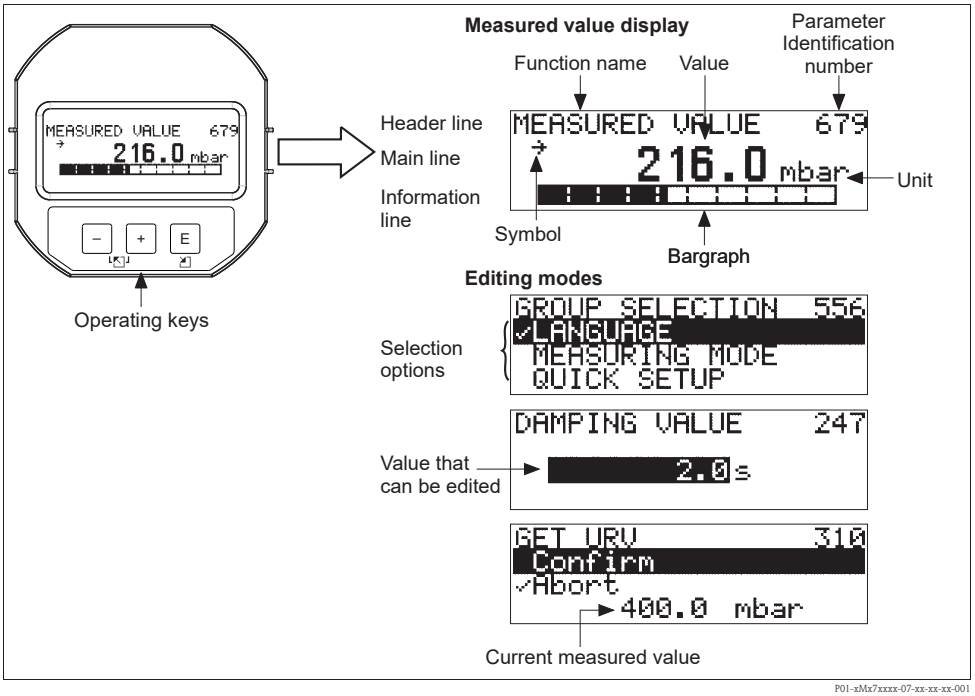

The following table illustrates the symbols that can appear on the on-site display. Four symbols can occur at one time.

Symbol	Meaning
	Alarm symbol – Symbol flashing: warning, device continues measuring. – Symbol permanently lit: error, device does not continue measuring. *Note:* The alarm symbol may overlie the tendency symbol.
	Lock symbol The operation of the device is locked. Unlock device, → 🖹 38.
	Communication symbol Data transfer via communication. *Note:* The alarm symbol may overlie the communication symbol.
	Tendency symbol (increasing) The measured value is increasing.
	Tendency symbol (decreasing) The measured value is decreasing.
	Tendency symbol (constant) The measured value has remained constant over the past few minutes.

5.2 Operating elements

5.2.1 Position of operating elements

With regard to aluminium or stainless steel housings (T14), the operating keys are located either outside the device under the protection cap or inside on the electronic insert. In hygenic stainless steel housings (T17), the operating keys are always located inside on the electronic insert.

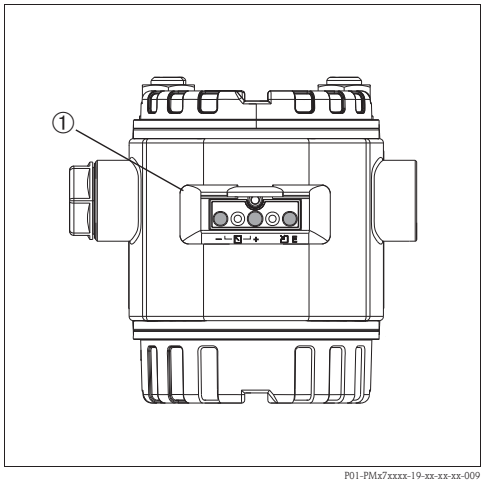

P01-PMx7xxxx-19-xx-xx-xx-009

Fig. 21: Operating keys, external

1 Operating keys on the exterior of the device under the protective flap

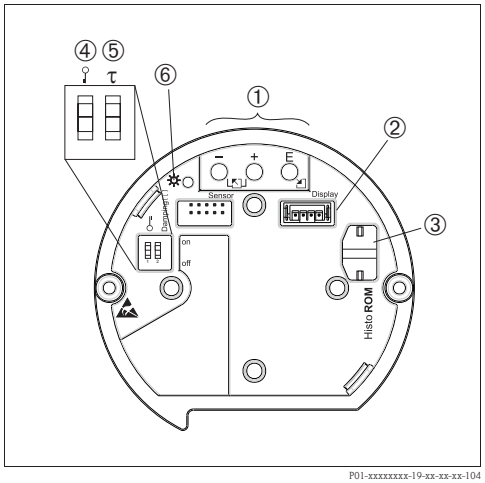

P01-xxxxxxxx-19-xx-xx-xx-104

Fig. 22: Operating keys, internal

1 Operating keys
2 Slot for optional display
3 Slot for optional HistoROM®/M-DAT
4 DIP-switch for locking/unlocking measured-value-relevant parameters
5 DIP-switch for damping on/off
6 Green LED to indicate value being accepted

5.2.2 Function of the operating elements – on-site display not connected

Press and hold the key or the key combination for at least 3 seconds to execute the corresponding function. Press the key combination for at least 6 seconds for a reset.

Operating key(s)	Meaning
–	Adopt lower range value. A reference pressure is present at the device. See also → 27, "Pressure measuring mode" or → 28, "Level measuring mode".
+	Adopt upper range value. A reference pressure is present at the device. See also → 27, "Pressure measuring mode" or → 28, "Level measuring mode".
E	Position adjustment
+ and – and E	Reset all parameters. The reset via operating keys corresponds to the software reset code 7864.
+ and E	Copy the configuration data from the optional HistoROM®/M-DAT module to the device.
– and E	Copy the configuration data from the device to the optional HistoROM®/M-DAT module.
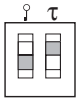 P01-xxxxxxxx-19-xx-xx-xx-057	– DIP-switch 1: for locking/unlocking measured-value-relevant parameters Factory setting: off (unlocked) – DIP-switch 2: damping on/off, Factory setting: on (damping on)

5.2.3 Function of the operating elements – on-site display connected

Operating key(s)	Meaning
+	– Navigate upwards in the picklist – Edit the numerical values and characters within a function
–	– Navigate downwards in the picklist – Edit the numerical values and characters within a function
E	– Confirm entry – Jump to the next item
+ and E	Contrast setting of on-site display: darker
– and E	Contrast setting of on-site display: brighter
+ and –	ESC functions: – Exit edit mode without saving the changed value. – You are in a menu within a function group. The first time you press the keys simultaneously, you go back a parameter within the function group. Each time you press the keys simultaneously after that, you go up a level in the menu. – You are in a menu at a selection level. Each time you press the keys simultaneously, you go up a level in the menu. *Note:* The terms function group, level and selection level are explained in → 30, "General structure of the operating menu".

5.3 On-site operation – on-site display not connected

Note!
To operate the device with a HistoROM®/M-DAT module see → 32, "HistoROM®/M-DAT (optional)".

5.3.1 Pressure measuring mode

If no on-site display is connected, the following functions are possible by means of the three keys on the electronic insert or on the exterior of the device:
- Position adjustment (zero point correction)
- Setting lower range value and upper range value
- Device reset, → 26, "Function of the operating elements – on-site display not connected".

Note!
- The operation must be unlocked. → 37, "Locking/unlocking operation".
- The device is configured for the Pressure measuring mode as standard. You can switch measuring modes by means of the MEASURING MODE parameter. → 40, "Selecting language and measuring mode".
- The pressure applied must be within the nominal pressure limits of the sensor. See information on the nameplate.

Warning!
If the measuring mode is changed, the span setting (URV) must be verified in the "Calibration" → "Basic Setup" operating menu and, if necessary, reconfigured.

Carry out position adjustment.[1)]	
Pressure is present at device.	
↓	
Press "E"-key for 3 s.	
↓	
Does the LED on the electronic insert light up briefly?	
Yes	No
↓	↓
Applied pressure for position adjustment has been accepted.	Applied pressure for position adjustment has not been accepted. Observe the input limits.

Setting lower range value.	
Desired pressure for lower range value is present at device.	
↓	
Press "–"-key for 3 s.	
↓	
Does the LED on the electronic insert light up briefly?	
Yes	No
↓	↓
Applied pressure for lower range value has been accepted.	Applied pressure for lower range value has not been accepted. Observe the input limits.

Setting upper range value.	
Desired pressure for upper range value is present at device.	
↓	
Press "+"-key for 3 s.	
↓	
Does the LED on the electronic insert light up briefly?	
Yes	No
↓	↓
Applied pressure for upper range value has been accepted.	Applied pressure for upper range value has not been accepted. Observe the input limits.

1) Observe "Warning", → 40, "Commissioning".

5.3.2 Level measuring mode

If no on-site display is connected, the following functions are possible by means of the three keys on the electronic insert or on the exterior of the device:
- Position adjustment (zero point correction)
- Set the lower and upper pressure value and assign to the lower and upper level value
- Device reset, → 📄 26, "Function of the operating elements – on-site display not connected".

Note!
- The "-" and "+"- keys only have a function in the following cases:
  – LEVEL SELECTION "Level Easy Pressure", CALIBRATION MODE "Wet"
  – LEVEL SELECTION "Level Standard", LEVEL MODE "Linear", CALIBRATION MODE "Wet"
  The keys have no function in other settings.
- The device is configured for the Pressure measuring mode as standard. You can switch measuring modes by means of the MEASURING MODE parameter. → 📄 40, "Selecting language and measuring mode".
  The following parameters are set to the following values in the factory:
  – LEVEL SELECTION: Level Easy Pressure
  – CALIBRATION MODE: Wet
  – OUTPUT UNIT or LIN. MEASURAND: %
  – EMPTY CALIB.: 0.0
  – FULL CALIB.: 100.0.
  – SET LRV: 0.0 (corresponds to 4 mA value)
  – SET URV: 100.0 (corresponds to 20 mA value)
  These parameters can only be modified by means of the on-site display or remote operation such as the FieldCare.
- The operation must be unlocked. → 📄 37, "Locking/unlocking operation".
- The pressure applied must be within the nominal pressure limits of the sensor. See information on the nameplate.
- See also → 📄 44, "Level measurement". For parameter description see Operating Instructions BA00274P.
- LEVEL SELECTION, CALIBRATION MODE, LEVEL MODE, EMPTY CALIB., FULL CALIB, SET LRV and SET URV are parameter names used for on-site display or remote operation such as FieldCare, for instance.

Warning!
If the measuring mode is changed, the span setting (URV) must be verified in the "Calibration" → "Basic Setup" operating menu and, if necessary, reconfigured.

Carry out position adjustment.[1)]		**Setting lower pressure value.**		**Setting upper pressure value.**	
Pressure is present at device.		Desired pressure for lower pressure value (EMPTY PRESSURE[2)]) is present at device.		Desired pressure for upper pressure value (FULL PRESSURE[1]) is present at device.	
↓		↓		↓	
Press "E"-key for 3 s.		Press "–"-key for 3 s.		Press "+"-key for 3 s.	
↓		↓		↓	
Does the LED on the electronic insert light up briefly?		Does the LED on the electronic insert light up briefly?		Does the LED on the electronic insert light up briefly?	
Yes	No	Yes	No	Yes	No
↓	↓	↓	↓	↓	↓
Applied pressure for position adjustment has been accepted.	Applied pressure for position adjustment has not been accepted. Observe the input limits.	The pressure present was saved as the lower pressure value (EMPTY PRESSURE[1]) and assigned to the lower level value (EMPTY CALIB.[1]).	The pressure present was not saved as the lower pressure value. Observe the input limits.	The pressure present was saved as the upper pressure value (FULL PRESSURE[1]) and assigned to the upper level value (FULL CALIB.[1]).	The pressure present was not saved as the upper pressure value. Observe the input limits.

1) Observe "Warning", → 📄 40, "Commissioning".

2) Parameter name used for the on-site display or remote operation such as the FieldCare.

5.4 On-site operation – on-site display connected

If the on-site display is connected, the three operating keys are used to navigate through the operating menu, → 📄 26, "Function of the operating elements – on-site display connected".

5.4.1 General structure of the operating menu

The menu is split into four levels. The three upper levels are used to navigate while you use the bottom level to enter numerical values, select options and save settings. The structure of the OPERATING MENU depends on the measuring mode selected, e.g. if the "Pressure" measuring mode is selected, only the functions necessary for this mode are displayed.

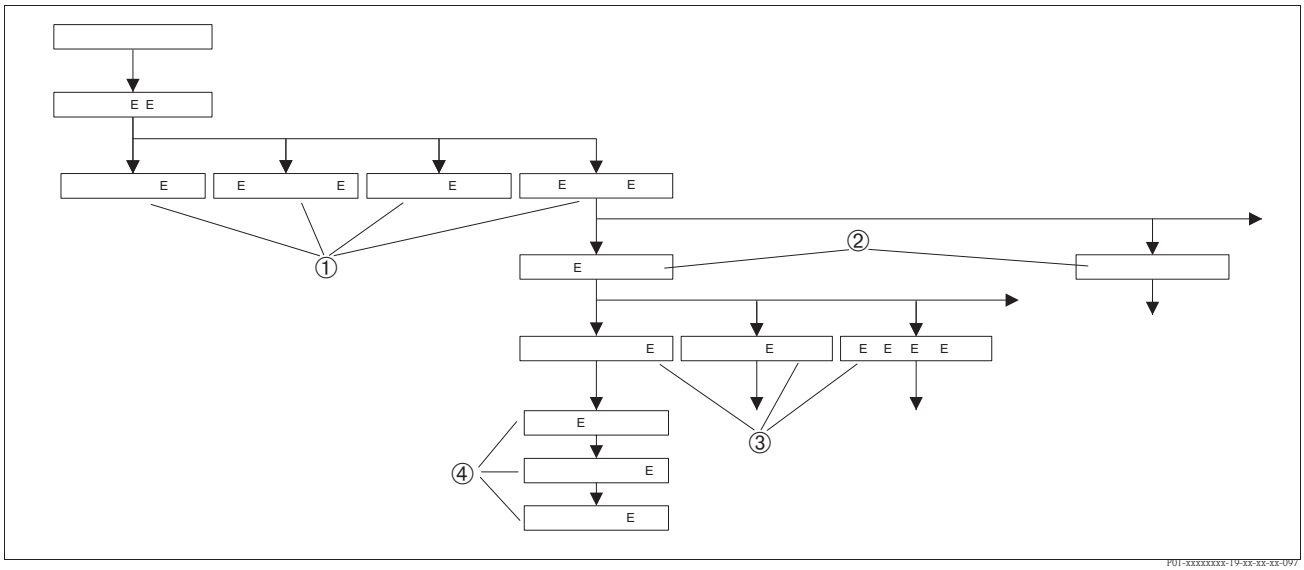

Fig. 23: Structure of the operating menu

1 1. Selection level
2 2. Selection level
3 Function groups
4 Parameter

Note!
The LANGUAGE and MEASURING MODE parameters are only displayed via the on-site display on the 1st selection level. In the digital communication, the LANGUAGE parameter is displayed in the DISPLAY group and the MEASURING MODE parameter is displayed in the QUICK SETUP menus or in the BASIC SETUP function group.

5.4.2 Selecting an option

Example: select "English" as the language of the menu.

On-site display	Operation
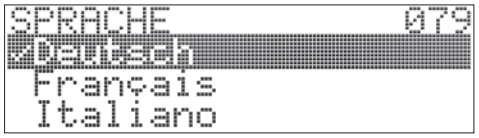 P01-xxxxxxxx-19-xx-xx-xx-017	German is selected as the language. A ✓in front of the menu text indicates the active option.
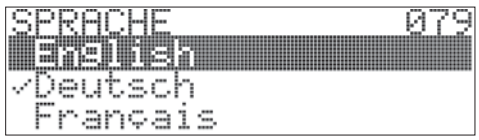 P01-xxxxxxxx-19-xx-xx-xx-033	Select English with "+" or "–".
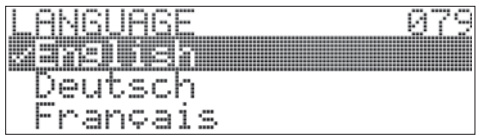 P01-xxxxxxxx-19-xx-xx-xx-034	1. Confirm your choice with "E". A ✓ in front of the menu text indicates the active option. (English is now selected as the menu language.) 2. Jump to the next item with "E".

5.4.3 Editing a value

Example: adjusting DAMPING VALUE function from 2.0 s to 30.0 s.
→ 📄 26, "Function of the operating elements – on-site display connected".

On-site display	Operation
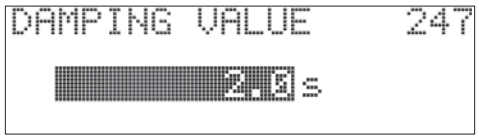 P01-xxxxxxxx-19-xx-xx-xx-023	The on-site display shows the parameter to be changed. The value highlighted in black can be changed. The "s" unit is fixed and cannot be changed.
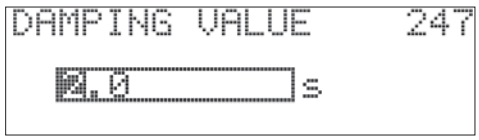 P01-xxxxxxxx-19-xx-xx-xx-027	1. Press "+" or "–" to get to the editing mode. 2. The first digit is highlighted in black.
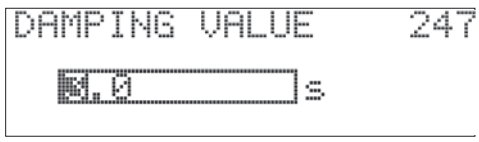 P01-xxxxxxxx-19-xx-xx-xx-028	1. Use "+" to change "2" to "3". 2. Confirm "3" with "E". The cursor jumps to the next position (highlighted in black).
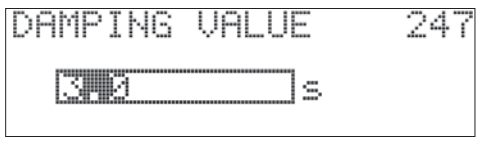 P01-xxxxxxxx-19-xx-xx-xx-029	The decimal point is highlighted in black, i.e. you can now edit it.
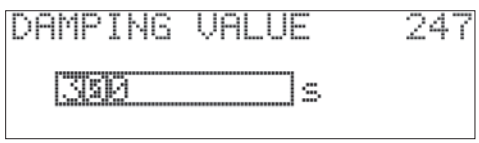 P01-xxxxxxxx-19-xx-xx-xx-030	1. Keep pressing "+" or "–" until "0" is displayed. 2. Confirm "0" with "E". The cursor jumps to the next position. ↵ is displayed and is highlighted in black. → See next graphic.

On-site display	Operation
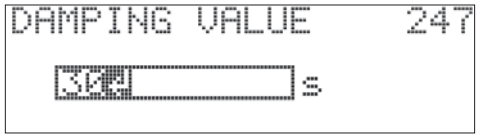 P01-xxxxxxxx-19-xx-xx-xx-031	Use "E" to save the new value and exit the editing mode. See next graphic.
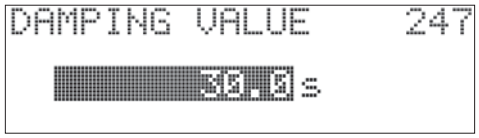 P01-xxxxxxxx-19-xx-xx-xx-032	The new value for the damping is now 30.0 s. – Jump to the next parameter with "E". – You can get back to the editing mode with "+" or "–".

5.4.4 Taking pressure applied at device as value

Example: configuring upper range value – assign 20 mA to the pressure value 400 mbar (6 psi).

On-site display	Operation
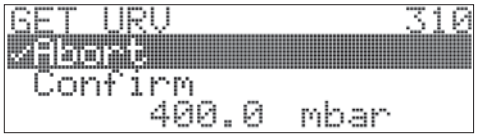 P01-xxxxxxxx-19-xx-xx-xx-035	The bottom line on the on-site display displays the pressure present, here 400 mbar (6 psi).
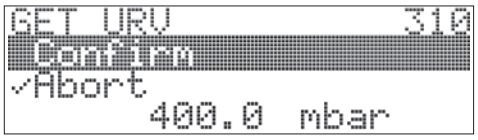 P01-xxxxxxxx-19-xx-xx-xx-036	Use "+" or "–" to switch to the "Confirm" option. The active selection is highlighted in black.
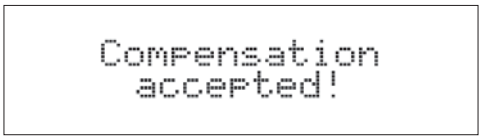 P01-xxxxxxxx-19-xx-xx-xx-037	Use "E" to assign the value (400 mbar (6 psi)) to the GET URV parameter. The device confirms the calibration and jumps back to the parameter, here GET URV (see next graphic).
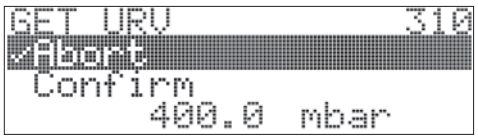 P01-xxxxxxxx-19-xx-xx-xx-035	Switch to the next parameter with "E".

5.5 HistoROM®/M-DAT (optional)

HistoROM®/M-DAT is a memory module, which is attached to the electronic insert and fulfils the following functions:

- Back-up copy of configuration data
- Copying configuration data of a transmitter into another transmitter
- Cyclic recording of pressure and sensor-temperature measured values
- Recording diverse events, such as alarms, configuration changes, counters for measuring range undershooting and exceeding for pressure and temperature, exceeding and undershooting the user limits for pressure and temperature, etc.

⚠ Warning!
Detach HistoROM®/M-DAT from the electronic insert or attach it to the insert in a deenergised state only.

Note!
- The HistoROM®/M-DAT module may be retrofitted at any time (Order No.: 52027785).
- The HistoROM data and the data in the device are analysed once a HistoROM®/M-DAT is attached to the electronic insert and power is reestablished to the device. During the analysis, the messages "W702, HistoROM data not consistent" and "W706, Configuration in HistoROM and device not identical" can occur. For measures, → 49, "Messages."

5.5.1 Copying configuration data

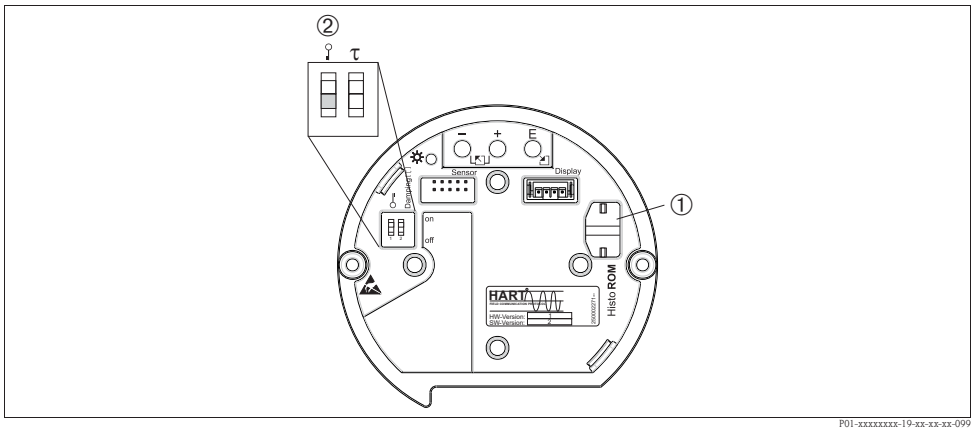

Abb. 24: Electronic insert with optional HistoROM®/M-DAT memory module

1 Optional HistoROM®/M-DAT
2 To copy configuration data from the HistoROM®/M-DAT module to a device or from a device to a HistoROM®/M-DAT, the operation must be unlocked DIP-switch 1, Position "off" ,parameter INSERT PIN NO. = 100). Observe → 37, "Locking/unlocking operation".

On-site operation – on-site display not connected

Copying configuration data from a device to a HistoROM®/M-DAT module:

Note!
The operation must be unlocked.

1. Disconnect device from supply voltage.
2. Attach the HistoROM®/M-DAT module to the electronic insert.
3. Reestablish supply voltage to the device.
4. Press "E" and "–"-keys (for at least 3 seconds) until the LED on the electronic insert lights up.
5. Wait approx. 20 seconds. Configuration data are loaded from the device to the HistoROM®/M-DAT. The device is not restarted.
6. Disconnect device from the supply voltage again.
7. Detach memory module.
8. Reestablish supply voltage to the device.

Copying configuration data from a HistoROM®/M-DAT to a device:

Note!
The operation must be unlocked.

1. Disconnect device from supply voltage.
2. Attach the HistoROM®/M-DAT module to the electronic insert. Configuration data from another device are stored in the HistoROM®/M-DAT.
3. Reestablish supply voltage to the device.
4. Press "E" und "+"-keys (for at least 3 seconds) until the LED on the electronic insert lights up.
5. Wait approx. 20 seconds. All parameters except DEVICE SERIAL No, DEVICE DESIGN., CUST. TAG NUMBER, LONG TAG NUMBER, DESCRIPTION, BUS ADDRESS, CURRENT MODE and the parameters in the POSITION ADJUSTMENT and PROCESS CONNECTION group are loaded into the device by HistoROM®/M-DAT. The device is restarted.
6. Before removing the HistoROM®/M-DAT again from the electronic insert, disconnect the device from supply voltage.

On-site operation via on-site display (optional) or remote operation

Copying configuration data from a device to a HistoROM®/M-DAT:

Note!
The operation must be unlocked.

1. Disconnect device from supply voltage.
2. Attach the HistoROM®/M-DAT module to the electronic insert.
3. Reestablish supply voltage to the device.
4. The DOWNLOAD SELECT. parameter setting has no influence on an upload from the device into HistoROM.
   (Menu path: (GROUP SELECTION →) OPERATING MENU → OPERATION)
5. Using the HistoROM CONTROL parameter select the option "Device → HistoROM" as the data transfer direction.
   (Menu path: GROUPSELECTION → OPERATING MENU → OPERATION)
6. Wait approx. 20 seconds. Configuration data are loaded from the device to the HistoROM®/M-DAT. The device is not restarted.
7. Disconnect device from the supply voltage again.
8. Detach memory module.
9. Reestablish supply voltage to the device.

Copying configuration data from a HistoROM®/M-DAT to a device:

Note!
The operation must be unlocked.

1. Disconnect device from supply voltage.
2. Attach the HistoROM®/M-DAT module to the electronic insert. Configuration data from another device are stored in the HistoROM®/M-DAT.
3. Reestablish supply voltage to the device.
4. Use the DOWNLOAD SELECT parameter to select which parameters are to be overwritten (Menu path: (GROUPS SELECTION →) OPERATING MENU → OPERATION).

   The following parameters are overwritten according to the selection:
   – **Configuration copy (factory setting):**
     all parameters except DEVICE SERIAL No., DEVICE DESIGN, CUST. TAG NUMBER, LONG TAG NUMBER, DESCRIPTION, BUS ADDRESS, CURRENT MODE and the parameters in the POSITION ADJUSTMENT, PROCESS CONNECTION, CURR. TRIM (SERVICE/SYSTEM 2), SENSOR TRIM and SENSOR DATA group.
   – **Device replacement:**
     all parameters except DEVICE SERIAL No., DEVICE DESIGN and the parameters in the POSITION ADJUSTMENT, PROCESS CONNECTION, CURR. TRIM (SERVICE/SYSTEM 2), SENSOR TRIM and SENSOR DATA group.
   – **Electronics replace**:
     all parameters except the parameters in the CURR. TRIM (SERVICE/SYSTEM 2) and SENSOR DATA group.

   Factory setting: Configuration copy
5. Using the HistoROM CONTROL parameter select the option "HistoROM → Device" as the data transfer direction.
   (Menu path: GROUP SELECTION → OPERATING MENU → OPERATION)
6. Wait approx. 20 seconds. Configuration data are loaded from the device to the HistoROM®/M-DAT. The device is restarted.
7. Before removing the HistoROM®/M-DAT again from the electronic insert, disconnect the device from supply voltage.

5.6 Operation via SFX100

Compact, flexible and robust industry handheld terminal for remote parametrization and measured value inspection via the HART current output (4-20mA).
For details refer to Operating Instructions BA00060S/04/EN.

5.7 Endress+Hauser operating program

The operating program FieldCare is an Endress+Hauser Plant Asset Management Tool based on FDT technology. You can use FieldCare to configure all your Endress+Hauser devices, as well as devices from other manufacturers that support the FDT standard. Hardware and software requirements you can find on the www.endress.com → select your country → Search: FieldCare → FieldCare → Technical Data.

FieldCare supports the following functions:
- Configuration of transmitters in online operation
- Loading and saving device data (upload/download)
- Tank linearization
- HistoROM®/M-DAT analysis
- Documentation of the measuring point

Connection options:
- HART via Fieldgate FXA520
- HART via Commubox FXA195 and USB interface of a computer
- Commubox FXA291 with ToF Adapter FXA291 via service interface

Note!
- See also → 📄 23, "Connecting Commubox FXA195".
- In the "Level Standard" measuring mode, the configuration data that were loaded with FDT upload cannot be written again (FDT download). These data are only used to document the measuring point.
- Further information on the FieldCare can be found on the Internet: http://www.endress.com → Download → Text Search: FieldCare.

5.8 Locking/unlocking operation

Once you have entered all the parameters, you can lock your entries against unauthorised and undesired access.

You have the following possibilities for locking/unlocking the operation:
- Via a DIP-switch on the electronic insert, locally on the display.
- Via the on-site display (optional)
- Via digital communication.

The -symbol on the on-site display indicates that operation is locked. Parameters which refer to how the display appears, e.g. LANGUAGE and DISPLAY CONTRAST can still be altered.

Note!
If operation is locked by means of the DIP-switch, you can only unlock operation again by means of the DIP-switch. If operation is locked by means of the on-site display or remote operation e.g. FieldCare, you can only unlock operation again by means of the on-site display or remote operation.

The table provides an overview of the locking functions:

Locking via	View/read parameter	Modify/write via[1)]		Unlocking via		
		On-site display	Remote operation	DIP-switch	On-site display	Remote operation
DIP-switch	Yes	No	No	Yes	No	No
On-site display	Yes	No	No	No	Yes	Yes
Remote operation	Yes	No	No	No	Yes	Yes

1) Parameters which refer to how the display appears, e.g. LANGUAGE and DISPLAY CONTRAST can still be altered.

5.8.1 Locking/unlocking operation locally via DIP-switch

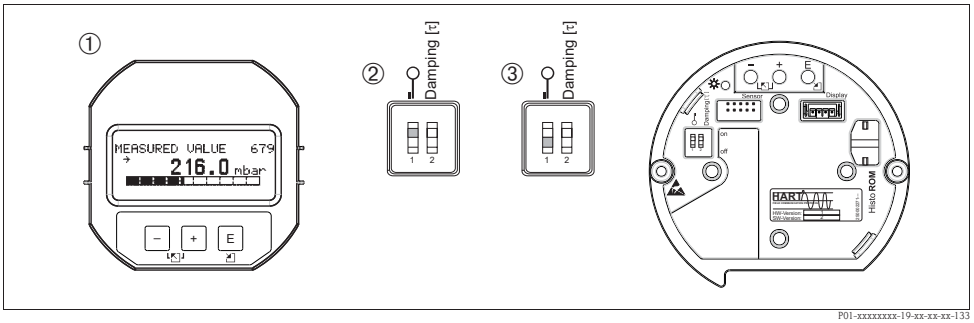

P01-xxxxxxxx-19-xx-xx-xx-133

Fig. 25: DIP-switch position "Hardware locking" on the electronic insert

1 If necessary, remove on-site display (optional)
2 DIP-switch is at "on": operation is locked.
3 DIP-switch is at "off": operation is unlocked (operation possible)

5.8.2 Locking/unlocking operation via on-site display or remote operation

	Description
Locking operation	1. Select INSERT PIN NO. parameter, Menu path: OPERATING MENU → OPERATION → INSERT PIN NO. 2. To lock operation, enter a number for this parameter between 0 to 9999 that is ≠100.
Unlocking operation	1. Select INSERT PIN NO. parameter. 2. To unlock operation, enter "100" for the parameter.

5.9 Factory setting (reset)

By entering a certain code, you can completely, or partially, reset the entries for the parameters to the factory settings. (For factory settings refer to the Operating Instructions BA00274P "Cerabar S/ Deltabar S/Deltapilot S, Description of device functions".) Enter the code by means of the ENTER RESET CODE parameter (Menu path: (GROUP SELECTION →) OPERATING MENU → OPERATING).
There are various reset codes for the device. The following table illustrates which parameters are reset by the particular reset codes. Operation must be unlocked to reset parameters (→ 37, "Locking/unlocking operation").

Note!
Any customer-specific configuration carried out by the factory is not affected by a reset (customer-specific configuration remains). If, after a reset, you wish the parameters to be reset to the factory settings, please contact Endress+Hauser Service.

Reset code	Description and effect
1846	**Display reset** – This reset resets all parameters which have to do with how the display appears (DISPLAY group). – Any simulation which may be running is ended. – The device is restarted.
62	**PowerUp reset (warm start)** – This reset resets all the parameters in the RAM. Data are read back anew from the EEPROM (processor is initialised again). – Any simulation which may be running is ended. – The device is restarted.
2710	**Measuring mode level reset** – Depending on the settings for the LEVEL MODE, LIN MEASURAND, LINdMEASURAND or COMB. MEASURAND parameters, the parameters needed for this measuring task will be reset. – Any simulation which may be running is ended. – The device is restarted. Example LEVEL MODE = linear and LIN. MEASURAND = Height ■ HEIGHT UNIT = m ■ CALIBRATION MODE = wet ■ EMPTY CALIB. = 0 ■ FULL CALIB. = Sensor end value converted to mH_2O, e.g. 4.79 mH_2O for a 400 mbar (6 psi) sensor
333	**User reset** – Affects the following parameters: – Function group POSITION ADJUSTMENT – Function group BASIC SETUP, except for the customer-specific units – Function group EXTENDED SETUP – Group OUTPUT – Function group HART DATA: CURRENT MODE, BUS ADDRESS and PREAMBLE NUMBER – Any simulation which may be running is ended. – The device is restarted.

Reset code	Description and effect
7864	**Total reset** – Affects the following parameters: – Function group POSITION ADJUSTMENT – Function group BASIC SETUP – Function group EXTENDED SETUP – Function group LINEARISATION (an existing linearisation table is erased) – Group OUTPUT – Function group PEAK HOLD INDICATOR – Function group HART DATA – All configurable messages ("Error" type) are set to factory setting. → 49, "Messages" and → 57, "Response of outputs to errors". – Function group USER LIMITS – Function group SYSTEM 2 – Any simulation which may be running is ended. – The device is restarted.
8888	**HistoROM reset** The measured value memory and event memory are cleared. During the reset, the HistoROM must be attached to the electronic insert.

6 Commissioning

Warning!
- If a pressure smaller than the minimum permitted pressure is present at the device, the messages "E120 Sensor low pressure" and "E727 Sensor pressure error – overrange" are output in succession.
- If a pressure greater than the maximum permitted pressure is present at the device, the messages "E115 Sensor overpressure" and "E727 Sensor pressure error – overrange" are output in succession.
- Messages E727, E115 and E120 are "Error"-type messages and can be configured as a "Warning" or an "Alarm". These messages are configured as "Warning" messages at the factory. This setting prevents the current output from assuming the set alarm current value for applications (e.g. cascade measurement) where the user is consciously aware of the fact that the sensor range can be exceeded
- We recommend setting messages E727, E115 and E120 to "Alarm" in the following instances:
  – The sensor range does not have to be exceeded for the measuring application.
  – Position adjustment has to be carried out that has to correct a large measured error as a result of the orientation of the device (e.g. devices with a diaphragm seal).

Note!
The device is configured for the Pressure measuring mode as standard. The measuring range and the unit in which the measured value is transmitted correspond to the specifications on the nameplate.

6.1 Function check

Carry out a post-installation and a post-connection check as per the checklist before commissioning the device.

- "Post-installation check" checklist, → 📄 18.
- "Post-connection check" checklist, → 📄 23.

6.2 Selecting language and measuring mode

6.2.1 On-site operation

The LANGUAGE and MEASURING MODE parameters are located on the top menu level.
See also → 📄 30, "General structure of the operating menu".

The following measuring modes are available:
- Pressure
- Level

6.2.2 Digital communication

The MEASURING MODE parameter is displayed in the digital communication in the QUICK SETUP menus and in the BASIC SETUP function group (OPERATING MENU → SETTINGS → BASIC SETUP).

The following measuring modes are available:
- Pressure
- Level

The LANGUAGE parameter is arranged in the DISPLAY group (OPERATING MENU → DISPLAY).
- Use the LANGUAGE parameter to select the menu language for the on-site display.
- Select the menu language for FieldCare by means of the "Language Button" in the configuration window. Select the menu language for the FieldCare frame via the "Extra" menu → "Options" → "Display" → "Language".

6.3 Position adjustment

Due to the orientation of the device, there may be a shift in the measured value, i.e. when the container is empty or partly filled, the measured value parameter does not display zero. There are three options to choose from when performing position adjustment.
(Menu path: (GROUP SELECTION →) OPERATING MENU → SETTINGS → POSITION ADJUSTMENT)

Parameter name	Description
POS. ZERO ADJUST (685) Entry	Position adjustment – the pressure difference between zero (set point) and the measured pressure need not be known. **Example:** – MEASURED VALUE = 2.2 mbar (0.032 psi) – Correct the MEASURED VALUE via the POS. ZERO ADJUST parameter with the "Confirm" option. This means that you are assigning the value 0.0 to the pressure present. – MEASURED VALUE (after pos. zero adjust) = 0.0 mbar – The current value is also corrected. The CALIB. OFFSET parameter displays the resulting pressure difference (offset) by which the MEASURED VALUE was corrected. **Factory setting:** 0.0
POS. INPUT VALUE (563) Entry	Position adjustment – the pressure difference between zero (set point) and the measured pressure need not be known. To correct the pressure difference, you need a reference measurement value (e. g. from a reference device). **Example:** – MEASURED VALUE = 0.5 mbar (0.0073 psi) – For the POS. INPUT VALUE parameter, specify the desired set point for the MEASURED VALUE, e.g. 2.0 mbar (0.029 psi). (MEASURED $VALUE_{new}$ = POS. INPUT VALUE) – MEASURED VALUE (after entry for POS. INPUT VALUE) = 2.0 mbar (0.029 psi) – The CALIB. OFFSET parameter displays the resulting pressure difference (offset) by which the MEASURED VALUE was corrected. CALIB. OFFSET = MEASURED $VALUE_{old}$ – POS. INPUT VALUE, here: CALIB. OFFSET = 0.5 mbar (0.0073 psi) – 2.0 mbar (0.029 psi) = – 1.5 mbar (0.022 psi)) – The current value is also corrected. **Factory setting:** 0.0
CALIB. OFFSET (319) Entry	Position adjustment – the pressure difference between zero (set point) and the measured pressure is known. **Example:** – MEASURED VALUE = 2.2 mbar (0.032 psi) – Via the CALIB. OFFSET parameter, enter the value by which the MEASURED VALUE should be corrected. To correct the MEASURED VALUE to 0.0 mbar, you must enter the value 2.2 here. (MEASURED $VALUE_{new}$ = MEASURED $VALUE_{old}$ – CALIB. OFFSET) – MEASURED VALUE (after entry for calib. offset) = 0.0 mbar – The current value is also corrected. **Factory setting:** 0.0

6.4 Pressure measurement

6.4.1 Information on pressure measurement

Note!

- There is a Quick Setup menu for each of the measuring modes Pressure and Level which guides you through the most important basic functions. With the setting in the MEASURING MODE parameter, you specify which Quick Setup menu should be displayed.
  → 40, "Selecting language and measuring mode".
- For a detailed description of the parameters see the Operating Instructions BA00274P "Cerabar S/Deltabar S/Deltapilot S, Description of device functions"
  – Table 6, POSITION ADJUSTMENT
  – Table 7, BASIC SETUP
  – Table 15, EXTENDED SETUP
- For pressure measurement, select the "Pressure" option by means of the MEASURING MODE parameter. The operating menu is structured appropriately.

Warning!
If the measuring mode is changed, the span setting (URV) must be verified in the "Calibration" → "Basic Setup" operating menu and, if necessary, reconfigured.

6.4.2 Quick Setup menu for Pressure measuring mode

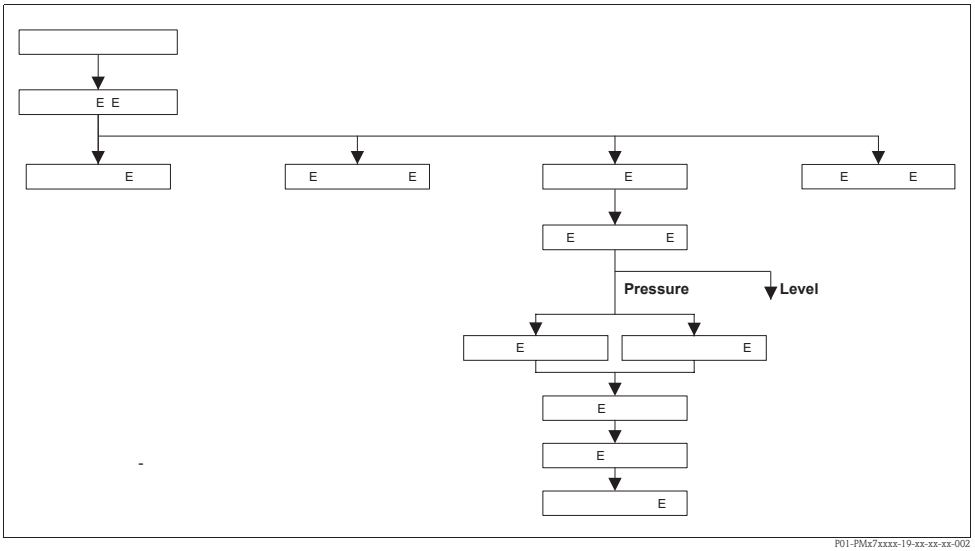

Fig. 26: Quick Setup menu for Pressure measuring mode

On-site operation
Measured value display On-site display: Switch from the measured value display to GROUP SELECTION with E.
GROUP SELECTION Select MEASURING MODE.
MEASURING MODE Select "Pressure" option.
GROUP SELECTION Select QUICK SETUP menu.

Digital communication
Measured value display Select QUICK SETUP menu.
MEASURING MODE Select "Pressure" option.

On-site operation	Digital communication
POS. ZERO ADJUST Due to orientation of the device, there may be a shift in the measured value. You correct the MEASURED VALUE via the POS. ZERO ADJUST parameter with the "Confirm" option, i. e. you assign the value 0.0 to the pressure present.	**POS. ZERO ADJUST** Due to orientation of the device, there may be a shift in the measured value. You correct the MEASURED VALUE via the POS. ZERO ADJUST parameter with the "Confirm" option, i. e. you assign the value 0.0 to the pressure present.
POS. INPUT VALUE Due to orientation of the device, there may be a shift in the measured value. For the POS. INPUT VALUE parameter, specify the desired set point for the MEASURED VALUE.	**POS. INPUT VALUE** Due to orientation of the device, there may be a shift in the measured value. For the POS. INPUT VALUE parameter, specify the desired set point for the MEASURED VALUE.
SET LRV Set the measuring range (enter 4 mA value). Specify a pressure value for the lower current value (4 mA value). A reference pressure does not have to be present at the device.	**SET LRV** Set the measuring range (enter 4 mA value). Specify a pressure value for the lower current value (4 mA value). A reference pressure does not have to be present at the device.
SET URV Set the measuring range (enter 20 mA value). Specify a pressure value for the upper current value (20 mA value). A reference pressure does not have to be present at the device.	**SET URV** Set the measuring range (enter 20 mA value). Specify a pressure value for the upper current value (20 mA value). A reference pressure does not have to be present at the device.
DAMPING TIME Enter damping time (time constant τ). The damping affects the speed at which all subsequent elements, such as the on-site display, measured value and current output react to a change in the pressure.	**DAMPING TIME** Enter damping time (time constant τ). The damping affects the speed at which all subsequent elements, such as the on-site display, measured value and current output react to a change in the pressure.

Note!
For on-site operation, see also
→ 📄 26, "Function of the operating elements – on-site display connected" and
→ 📄 30, "On-site operation – on-site display connected".

6.5 Level measurement

6.5.1 Information on level measurement

Note!

- The Pressure and Level operating modes each have a quick setup menu which guides you through the most important basic functions. → 46, "Quick Setup menu for Level measuring mode".
- Furthermore, the three level modes "Level Easy Pressure", "Level Easy Height" and "Level Standard" are available to you for level measurement. You can select from the "Linear", "Pressure linearized" and "Height linearized" level types for the "Level Standard" level mode. The table in the "Overview of level measurement" section below provides an overview of the various measuring tasks.
  - In the "Level Easy Pressure" and "Level Easy Height" level modes, the values entered are not tested as extensively as in the "Level Standard" level mode. The values entered for EMPTY CALIB./FULL CALIB., EMPTY PRESSURE/FULL PRESSURE, EMPTY HEIGHT/FULL HEIGHT and SET LRV/SET URV must have a minimum interval of 1 % for the "Level Easy Pressure" and "Level Easy Height" level modes. The value will be rejected with a warning message if the values are too close together. Further limit values are not checked; i.e. the values entered must be appropriate for the sensor and the measuring task so that the measuring device can measure correctly.
  - The "Level Easy Pressure" and "Level Easy Height" level modes encompass fewer parameters than the "Level Standard" mode and are used for quick and easy configuration of a level application.
  - Customer-specific units of fill level, volume and mass or a linearization table may only be entered in the "Level Standard" level mode.
  - Where the device is intended for use as a subsystem in a safety function (SIL), a "Device configuration with enhanced parameter security" (SAFETY CONFIRM.) is only possible for the "Level" operating mode in the "Level Easy Pressure" level mode. All parameters previously entered are checked after a password is entered. Once the "Level Easy Height" or "Level Standard" has been selected, the configuration will first have to be reset to the ex-works setting using the RESET parameter (menu path: (GROUP SELECTION →) OPERATING MENU → OPERATION) using the reset code "7864".
    For further information see the Cerabar S (SD00190P) Functional Safety Manual.
- See the Operating Instructions BA00274P "Cerabar S/Deltabar S/Deltapilot S, Description of device functions".

6.5.2 Overview of level measurement

Measuring task	LEVEL SELECTION/ LEVEL MODE	Measured variable options	Description	Comment	Measured value display
The measured variable is in direct proportion to the measured pressure. Calibration is performed by entering two pressure-level value pairs.	LEVEL SELECTION: Level Easy Pressure	Via OUTPUT UNIT parameter: %, level, volume or mass units.	– Calibration with reference pressure – wet calibration, see Operating Instructions BA00274P. – Calibration without reference pressure – dry calibration, see Operating Instructions BA00274P.	– Incorrect entries are possible – SIL mode possible – Customised units are not possible	The measured value display and the LEVEL BEFORE LIN parameter show the measured value.
The measured variable is in direct proportion to the measured pressure. Calibration is performed by entering the density and two height-level value pairs.	LEVEL SELECTION: Level Easy Height	Via OUTPUT UNIT parameter: %, level, volume or mass units.	– Calibration with reference pressure – wet calibration, see Operating Instructions BA00274P. – Calibration without reference pressure – dry calibration, see Operating Instructions BA00274P.	– Incorrect entries are possible – SIL mode not possible – Customised units are not possible	The measured value display and the LEVEL BEFORE LIN parameter show the measured value.
The measured variable is in direct proportion to the measured pressure.	LEVEL SELECTION: Level standard/ LEVEL MODE: Linear	Via LIN. MEASURAND parameter: – % (level) – Level – Volume – Mass	– Calibration with reference pressure – wet calibration, see Operating Instructions BA00274P. – Calibration without reference pressure – dry calibration, see Operating Instructions BA00274P.	– Incorrect entries are rejected by the device – SIL mode not possible – Customised level, volume and mass units are possible	The measured value display and the LEVEL BEFORE LIN parameter show the measured value.
The measured variable is not in direct proportion to the measured pressure as, for example, with containers with a conical outlet. A linearisation table must be entered for the calibration.	LEVEL SELECTION: Level standard/ LEVEL MODE: Pressure linearized	Via LINd MEASURAND parameter: – Pressure + % – Pressure + volume – Pressure + mass	– Calibration with reference pressure: semiautomatic entry of linearisation table, see Operating Instructions BA00274P. – Calibration without reference pressure: manual entry of linearisation table, see Operating Instructions BA00274P.	– Incorrect entries are rejected by the device – SIL mode not possible – Customised level, volume and mass units are possible	The measured value display and the TANK CONTENT parameter show the measured value.
– Two measured variables are required or – The container shape is given by value pairs, such as height and volume. The 1st measured variable %-height or height must be in direct proportion to the measured pressure. The 2nd measured variable volume, mass or % must not be in direct proportion to the measured pressure. A linearisation table must be entered for the 2nd measured variable. The 2nd measured variable is assigned to the 1st measured variable by means of this table.	LEVEL SELECTION: Level standard/ LEVEL MODE: Height linearized	Via COMB. MEASURAND parameter: – Height + volume – Height + mass – Height + % – %-Height + volume – %-Height + mass – %-Height + %	– Calibration with reference pressure: wet calibration and semiautomatic entry of linearisation table, see Operating Instructions BA00274P. – Calibration without reference pressure: dry calibration and manual entry of linearisation table, see Operating Instructions BA00274P.	– Incorrect entries are rejected by the device – SIL mode not possible – Customised level, volume and mass units are possible	The measured value display and the TANK CONTENT parameter show the 2nd measured value (volume, mass or %). The LEVEL BEFORE LIN parameter displays the 1st measured value (%-height or height).

6.5.3 Quick Setup menu for Level measuring mode

Note!

- Some parameters are only displayed if other parameters are appropriately configured. For example, the EMPTY CALIB. parameter is only displayed in the following cases:
  – LEVEL SELECTION "Level Easy Pressure" and CALIBRATION MODE "Wet"
  – LEVEL SELECTION "Level Standard", LEVEL MODE "Linear" and CALIBRATION MODE "WET"
  You can find the LEVEL MODE parameter in the BASIC SETTINGS function group (menu path: (GROUP SELECTION →) OPERATING MENU → SETTINGS → BASIC SETTINGS).
- The following parameters are set to the following values in the factory:
  – LEVEL SELETION: Level Easy Pressure
  – CALIBRATION MODE: Wet
  – OUTPUT UNIT or LIN. MEASURAND: %
  – EMPTY CALIB.: 0.0
  – FULL CALIB.: 100.0
  – SET LRV (BASIC SETTINGS group): 0.0 (corresponds to 4 mA value)
  – SET URV (BASIC SETTINGS group): 100.0 (corresponds to 20 mA value).
- The quick setup is suitable for simple and quick commissioning. If you wish to make more complex settings, e.g. change the unit from "%" to "m", you will have to calibrate using the BASIC SETTINGS group. See Operating Instructions BA00274P.

Warning!
If the measuring mode is changed, the span setting (URV) must be verified in the "Calibration" → "Basic Setup" operating menu and, if necessary, reconfigured.

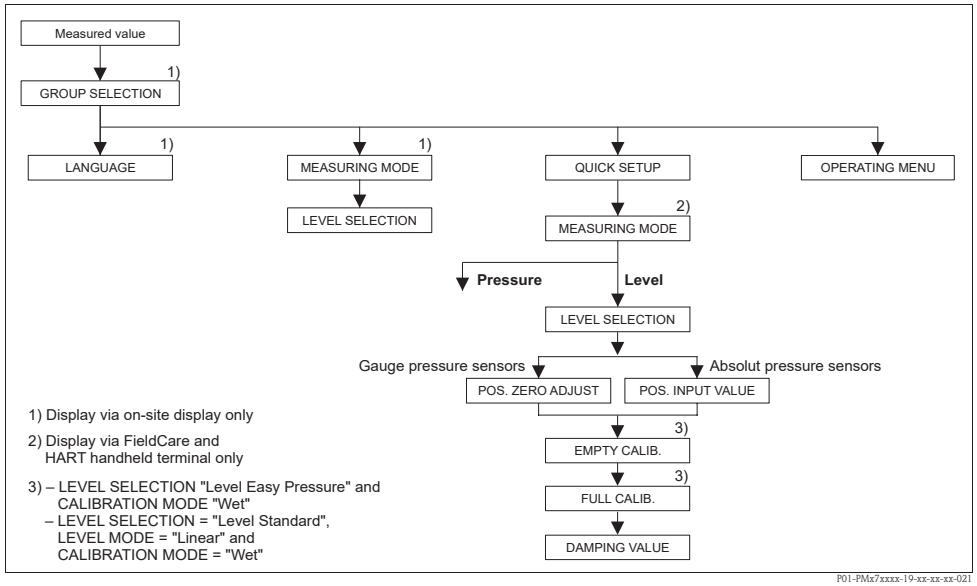

Fig. 27: Quick Setup menu for the Level measuring mode

On-site operation
Measured value display On-site display: Switch from the measured value display to GROUP SELECTION with E.
GROUP SELECTION Select MEASURING MODE.
MEASURING MODE Select "Level" option.

Digital communication
Measured value display Select QUICK SETUP menu.
MEASURING MODE Select "Level" option.

On-site operation	Digital communication
LEVEL SELECTION Select level mode. For an overview see → 45.	**LEVEL SELECTION** Select level mode. For an overview see → 45.
GROUP SELECTION Select QUICK SETUP menu.	
POS. ZERO ADJUST Due to orientation of the device, there may be a shift in the measured value. You correct the MEASURED VALUE via the POS. ZERO ADJUST parameter with the "Confirm" option, i. e. you assign the value 0.0 to the pressure present.	**POS. ZERO ADJUST** Due to orientation of the device, there may be a shift in the measured value. You correct the MEASURED VALUE via the POS. ZERO ADJUST parameter with the "Confirm" option, i. e. you assign the value 0.0 to the pressure present.
POS. INPUT VALUE Due to orientation of the device, there may be a shift in the measured value. For the POS. INPUT VALUE parameter, specify the desired set point for the MEASURED VALUE.	**POS. INPUT VALUE** Due to orientation of the device, there may be a shift in the measured value. For the POS. INPUT VALUE parameter, specify the desired set point for the MEASURED VALUE.
EMPTY CALIB. 1) Enter level for the lower calibration point. For this parameter, enter a level value which is assigned to the pressure present at the device.	**EMPTY CALIB.** 1 Enter level for the lower calibration point. For this parameter, enter a level value which is assigned to the pressure present at the device.
FULL CALIB. 1 Enter level for the upper calibration point. For this parameter, enter a level value which is assigned to the pressure present at the device.	**FULL CALIB.** 1 Enter level for the upper calibration point. For this parameter, enter a level value which is assigned to the pressure present at the device.
DAMPING TIME Enter damping time (time constant τ). The damping affects the speed at which all subsequent elements, such as the on-site display, measured value and current output react to a change in the pressure.	**DAMPING TIME** Enter damping time (time constant τ). The damping affects the speed at which all subsequent elements, such as the on-site display, measured value and current output react to a change in the pressure.

1) – LEVEL SELECTION "Level Easy Pressure" and CALIBRATION MODE "Wet"
– LEVEL SELECTION "Level Standard", LEVEL MODE "Linear" and CALIBRATION MODE "Wet"

Note!
For on-site operation, see also
→ 26, "Function of the operating elements – on-site display connected" and
→ 30, "On-site operation – on-site display connected".

7 Maintenance

Keep the pressure compensation and GORE-TEX® filter (1) free from contaminations and water.

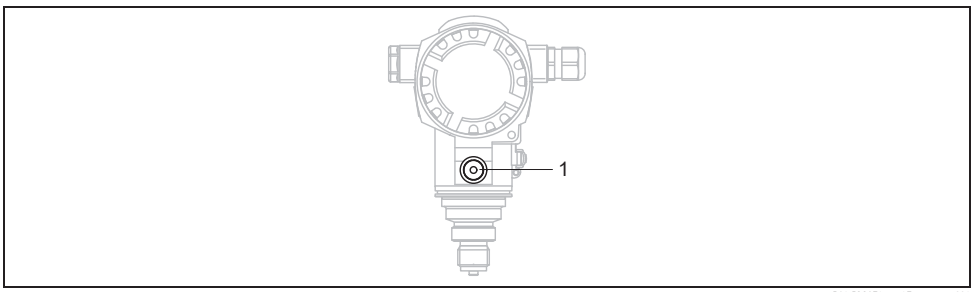

P01-PMC71xxx-17-xx-xx-xx-001

7.1 Cleaning instructions

Endress+Hauser offer flushing rings as accessories to clean process isolating diaphragms without taking the transmitters out of the process.
For further information please contact your local Endress+Hauser Sales Center.

7.1.1 PMP75

We recommend you perform CIP (cleaning in place (hot water)) before SIP (sterilization in place (steam)) for pipe diaphragm seals.
A frequent use of sterilization in place (SIP) will increase the stress on the process isolating diaphragm. Under unfavorable circumstances in the long term view we cannot exclude that a frequent temperature change could lead to a material fatigue of the process isolating diaphragm and possibly to a leakage.

7.2 Exterior cleaning

Please note the following points when cleaning the device:
- The cleaning agents used should not attack the surface and the seals.
- Mechanical damage to the process isolating diaphragm, e.g. due to pointed objects, must be avoided.
- Observe degree of protection. See therefor nameplate if necessary (→ 🖹 6).

8 Trouble-shooting

8.1 Messages

The following table lists all the possible messages that can occur.
The device differentiates between the error types "Alarm", "Warning" and "Error". You may specify whether the instrument should react as if for an "Alarm" or "Warning" for "Error" messages.
→ See "Error type/NA 64" column and Section 8.2 "Response of outputs to errors".

In addition, the "Error type/NA 64" column classifies the messages in accordance with NAMUR Recommendation NA 64:
- Break down: indicated with "B"
- Maintenance need: indicated with "C" (check request)
- Function check: indicated with "I" (in service)

Error message display on the on-site display:
- The measured value display shows the message with the highest priority. → See "Priority" column.
- The ALARM STATUS parameter shows all the messages present in descending order of priority. You can scroll through all the messages present with the −-key or +-key.

Message display via the digital communication:
The ALARM STATUS parameter shows the message with the highest priority.
See "Priority" column.

Note!
- If the device detects a defect in the on-site display during initialization, special error messages are generated. For the error messages → 57, "On-site display error messages".
- For support and further information, please contact Endress+Hauser Service.
- See also Section "Repair", "Repair of Ex-certified devices" and "Spare Parts".

Code	Error type/ NA 64	Corresponds NE 107	Message/description	Cause	Measure	Prio rity
101 (A101)	Alarm B	Failure (F)	B>Sensor electronic EEPROM error	– Electromagnetic effects are greater than specifications in the technical data. (→ 63) This message normally only appears briefly. – Sensor defect.	– Wait a few minutes. – Restart the device. Perform reset (Code 62). – Block off electromagnetic effects or eliminate source of disturbance. – Replace sensor.	17
102 (W102)	Warning C	Maintenance request (M)	C>Checksum error in EEPROM: peakhold segment	– Main electronics defect. Correct measurement can continue as long as you do not need the peak hold indicator function.	– Replace main electronics.	53
106 (W106)	Warning C	Funktion check (C)	C>Downloading - please wait	– Downloading.	– Wait for download to complete.	52
110 (A110)	Alarm B	Failure (F)	B>Checksum error in EEPROM: configuration segment	– The supply voltage is disconnected when writing. – Electromagnetic effects are greater than specifications in the technical data. (→ 63) – Main electronics defect.	– Reestablish supply voltage. Perform reset (Code 7864) if necessary. Carry out calibration again. – Block off electromagnetic effects or eliminate sources of disturbance. – Replace main electronics.	6
113 (A113)	Alarm B	Failure (F)	B>ROM failure in transmitter electronic	– Main electronics defect.	– Replace main electronics.	1

Code	Error type/ NA 64	Corresponds NE 107	Message/description	Cause	Measure	Priority
115 (E115)	Error B factory setting: Warning C	Out of specification (S)	B>Sensor overpressure	– Overpressure present. – Sensor defect.	– Reduce pressure until message disappears. – Replace sensor.	29
116 (W116)	Warning C	Maintenance request (M)	C>Download error, repeat download	– The file is defect. – During the download, the data are not correctly transmitted to the processor, e.g. because of open cable connections, spikes (ripple) on the supply voltage or electromagnetic effects.	– Use another file. – Check cable connection PC – transmitter. – Block off electromagnetic effects or eliminate sources of disturbance. – Perform reset (Code 7864) and carry out calibration again. – Repeat download.	36
120 (E120)	Error B factory setting: Warning C	Out of specification (S)	B>Sensor low pressure	– Pressure too low. – Sensor defect.	– Increase pressure until message disappears. – Replace sensor.	30
121 (A121)	Alarm B	Failure (F)	B>Checksum error in factory segment of EEPROM	– Main electronics defect.	– Replace main electronics.	5
122 (A122)	Alarm B	Failure (F)	B>Sensor not connected	– Cable connection sensor –main electronics disconnected. – Electromagnetic effects are greater than specifications in the technical data. (→ 63) – Main electronics defect. – Sensor defect.	– Check cable connection and repair if necessary. – Block off electromagnetic effects or eliminate source of disturbance. – Replace main electronics. – Replace sensor.	13
130 (A130)	Alarm B	Failure (F)	B>EEPROM is defect.	– Main electronics defect.	– Replace main electronics.	10
131 (A131)	Alarm B	Failure (F)	B>Checksum error in EEPROM: min/max segment	– Main electronics defect.	– Replace main electronics.	9
132 (A132)	Alarm B	Failure (F)	B>Checksum error in totalizer EEPROM	– Main electronics defect.	– Replace main electronics.	7
133 (A133)	Alarm B	Failure (F)	B>Checksum error in History EEPROM	– An error occurred when writing. – Main electronics defect.	– Perform reset (Code 7864) and carry out calibration again. – Replace electronics.	8
602 (W602)	Warning C	Funktion check (C)	C>Linearisation curve not monoton	– The linearisation table is not monotonic increasing or decreasing.	– Add to linearisation table or perform linearisation again.	57

Code	Error type/ NA 64	Corresponds NE 107	Message/description	Cause	Measure	Priority
604 (W604)	Warning C	Funktion check (C)	C>Linearisation table not valid. Less than 2 points or points too close	– The linearisation table consists of less than 2 points. – At least 2 points in the linearisation table are too close together. A minimum gap of 0.5 % of the distance between two points must be maintained. Spans for the "Pressure linearized" option: HYDR. PRESS MAX. – HYDR. PRESS MIN.; TANK CONTENT MAX. – TANK CONTENT MIN. Spans for the "Height linearized" option: LEVEL MAX – LEVEL MIN; TANK CONTENT MAX. – TANK CONTENT MIN.	– Add to linearisation table. If necessary, perform linearisation again. – Correct linearisation table and accept again.	58
613 (W613)	Warning I	Funktion check (C)	I>Simulation is active	– Simulation is switched on, i.e. the device is not measuring at present.	– Switch off simulation.	60
620 (E620)	Error C Factory setting: Warning C	Out of specification (S)	C>Current output out of range	The current is outside the permitted range 3.8 to 20.5 mA. – The pressure applied is outside the set measuring range (but within the sensor range). – Loose connection at sensor cable	– Check pressure applied, reconfigure measuring range if necessary (See also Operating Instructions BA00274P, chapter 4 to 6 or these Operating Instructions) – Perform reset (Code 7864) and carry out calibration again. – Wait a short period of time and tighten the connection, or avoid loose connection.	49
700 (W700)	Warning C	Maintenance request (M)	C>Last configuration not stored	– An error occurred when writing or reading configuration data or the power supply was disconnected. – Main electronics defect.	– Perform reset (Code 7864) and carry out calibration again. – Replace main electronics.	54
701 (W701)	Warning C	Funktion check (C)	C>Measuring chain config. exceeds sensor range	– The calibration carried out would result in the sensor nominal operating range being undershot or overshot.	– Carry out calibration again.	50
702 (W702)	Warning C	Maintenance request (M)	C>HistoROM data not consistent.	– Data were not written correctly to the HistoROM, e.g. if the HistoROM was detached during the writing process. – HistoROM does not have any data.	– Repeat upload. – Perform reset (Code 7864) and carry out calibration again. – Copy suitable data to the HistoROM. (See also → 33, "Copying configuration data".)	55
703 (A703)	Alarm B	Failure (F)	B>Measurement error	– Fault in the main electronics. – Main electronics defect.	– Briefly disconnect device from the power supply. – Replace main electronics.	22
704 (A704)	Alarm B	Funktion check (C)	B>Measurement error	– Fault in the main electronics. – Main electronics defect.	– Briefly disconnect device from the power supply. – Replace main electronics.	12
705 (A705)	Alarm B	Failure (F)	B>Measurement error	– Fault in the main electronics. – Main electronics defect.	– Briefly disconnect device from the power supply. – Replace main electronics.	21

Code	Error type/ NA 64	Corresponds NE 107	Message/description	Cause	Measure	Priority
706 (W706)	Warning C	Maintenance request (M)	C>Configuration in HistoROM and device not identical	– Configuration (parameters) in the HistoROM and in the device is not identical.	– Copy data from the device to the HistoROM. (See also → 33, "Copying configuration data".) – Copy data from the HistoROM to the device. (See also → 33, "Copying configuration data".) The message remains if the HistoROM and the device have different software versions. The message goes out if you copy the data from the device to the HistoROM. – Device reset codes such as 7864 do not have any effect on the HistoROM. That means that if you do a reset, the configurations in the HistoROM and in the device may not be the same.	59
707 (A707)	Alarm B	Funktion check (C)	B>X-VAL. of lin. table out of edit limits.	– At least one X-VALUE in the linearisation table is either below the value for HYDR. PRESS MIN. or MIN. LEVEL or above the value for HYDR. PRESS. MAX. or LEVEL MAX.	– Carry out calibration again. (See also Operating Instructions BA00274P, chapter 5 or these Operating Instructions)	38
710 (W710)	Warning C	Funktion check (C)	B>Set span too small. Not allowed.	– Values for calibration (e.g. lower range value and upper range value) are too close together. – The sensor was replaced and the customer-specific configuration does not suit the sensor. – Unsuitable download carried out.	– Adjust calibration to suit sensor. (See also Operating Instructions BA00274P, parameter description MINIMUM SPAN or these Operating Instructions) – Adjust calibration to suit sensor. – Replace sensor with a suitable sensor. – Check configuration and perform download again.	51
711 (A711)	Alarm B	Funktion check (C)	B>LRV or URV out of edit limits	– Lower range value and/or upper range value undershoot or overshoot the sensor range limits. – The sensor was replaced and the customer-specific configuration does not suit the sensor. – Unsuitable download carried out.	– Reconfigure lower range value and/or upper range value to suit the sensor. Pay attention to position factor. – Reconfigure lower range value and/or upper range value to suit the sensor. Pay attention to position factor. – Replace sensor with a suitable sensor. – Check configuration and perform download again.	37
713 (A713)	Alarm B	Funktion check (C)	B>100% POINT level out of edit limits	– The sensor was replaced.	– Carry out calibration again.	39
715 (E715)	Error C Factory setting: Warning C	Out of specification (S)	C>Sensor over temperature	– The temperature measured in the sensor is greater than the upper nominal temperature of the sensor. (See also Operating Instructions BA00274P, parameter description Tmax SENSOR or these Operating Instructions) – Unsuitable download carried out.	– Reduce process temperature/ ambient temperature. – Check configuration and perform download again.	32

Code	Error type/ NA 64	Corresponds NE 107	Message/description	Cause	Measure	Prio rity
716 (E716)	Error B Factory setting: Alarm B	Failure (F)	B>Process isolating diaphragm broken	– Sensor defect.	– Replace Sensor. – Reduce pressure.	24
717 (E717)	Error C Factory setting: Warning C	Out of specification (S)	C>Transmitter over temperature	– The temperature measured in the electronics is greater than the upper nominal temperature of the electronics (+88 °C (+190 °F)). – Unsuitable download carried out.	– Reduce ambient temperature. – Check configuration and perform download again.	34
718 (E718)	Error C Factory setting: Warning C	Out of specification (S)	C>Transmitter under temperature	– The temperature measured in the electronics is smaller than the lower nominal temperature of the electronics (–43 °C (-45 °F)). – Unsuitable download carried out.	– Increase ambient temperature. Insulate device if necessary. – Check configuration and perform download again.	35
719 (A719)	Alarm B	Funktion check (C)	B>Y-VAL of lin. table out of edit limits	– At least on Y-VALUE in the linearisation table is below the MIN. TANK CONTANT or above the MAX. TANK CONTENT.	– Carry out calibration again. (See also Operating Instructions BA00274P, chapter 5 or these Operating Instructions)	40
720 (E720)	Error C Factory setting: Warning C	Out of specification (S)	C>Sensor under temperature	– The temperature measured in the sensor is smaller than the lower nominal temperature of the sensor. (See also Operating Instructions BA00274P, parameter description Tmin SENSOR or Operating Instructions) – Unsuitable download carried out. – Loose connection at sensor cable	– Increase process temperature/ ambient temperature. – Check configuration and perform download again. – Wait a short period of time and tighten the connection, or avoid loose connection.	33
721 (A721)	Alarm B	Funktion check (C)	B>ZERO POSITION level out of edit limits	– LEVEL MIN or LEVEL MAX has been changed.	– Perform reset (Code 2710) and carry out calibration again.	41
722 (A722)	Alarm B	Funktion check (C)	B>EMPTY CALIB. or FULL CALIB. out of edit limits	– LEVEL MIN or LEVEL MAX has been changed.	– Perform reset (Code 2710) and carry out calibration again.	42
723 (A723)	Alarm B	Funktion check (C)	B>MAX. FLOW out of edit limits	– FLOW-MEAS. TYPE has been changed.	– Carry out calibration again.	43
725 (A725)	Alarm B	Failure (F)	B>Sensor connection error, cycle disturbance	– Electromagnetic effects are greater than specifications in the technical data. (→ See Section 9.) – Setscrew loose. – Sensor or main electronics defect.	– Block off electromagnetic effects or eliminate source of disturbance. – Retighten setscrew with 1 Nm (0,74 lbf ft) (see Chap. 3.3.8). – Replace sensor or main electronics.	25

Code	Error type/ NA 64	Corresponds NE 107	Message/description	Cause	Measure	Prio rity
726 (E726)	Error C Factory setting: Warning C	Out of specification (S)	C>Sensor temperature error - overrange	– Electromagnetic effects are greater than specifications in the technical data. (→ 63) – Process temperature is outside permitted range. – Sensor defect.	– Block off electromagnetic effects or eliminate source of disturbance. – Check temperature present, reduce or increase if necessary. – If the process temperature is within the permitted range, replace sensor.	31
727 (E727)	Error C Factory setting: Warning C	Out of specification (S)	C>Sensor pressure error - overrange	– Electromagnetic effects are greater than specifications in the technical data. (→ 63) – Pressure is outside permitted range. – Sensor defect.	– Block off electromagnetic effects or eliminate source of disturbance. – Check pressure present, reduce or increase if necessary. – If the pressure is within the permitted range, replace sensor.	28
728 (A728)	Alarm B	Failure (F)	B>RAM error	– Fault in the main electronics. – Main electronics defect.	– Briefly disconnect device from the power supply. – Replace main electronics.	2
729 (A729)	Alarm B	Failure (F)	B>RAM error	– Fault in the main electronics. – Main electronics defect.	– Briefly disconnect device from the power supply. – Replace main electronics.	3
730 (E730)	Error C Factory setting: Warning C	Out of specification (S)	C>LRV user limits exceeded	– Pressure measured value has undershot the value specified for the Pmin ALARM WINDOW parameter. – Loose connection at sensor cable	– Check system/pressure measured value. – Change value for Pmin ALARM WINDOW if necessary. (See also Operating Instructions BA00274P, parameter description Pmin ALARM WINDOW or these Operating Instructions) – Wait a short period of time and tighten the connection, or avoid loose connection.	46
731 (E731)	Error C Factory setting: Warning C	Out of specification (S)	C>URV user limits exceeded	– Pressure measured value has overshot the value specified for the Pmax ALARM WINDOW parameter.	– Check system/pressure measured value. – Change value for Pmax ALARM WINDOW if necessary. (See also Operating Instructions BA00274P, parameter description Pmax ALARM WINDOW or these Operating Instructions)	45
		Out of specification (S)		– Loose connection at sensor cable	– Wait a short period of time and tighten the connection, or avoid loose connection.	
732 (E732)	Error C Factory setting: Warning C		C>LRV Temp. User limits exceeded	– Temperature measured value has undershot the value specified for the Tmin ALARM WINDOW parameter.	– Check system/temperature measured value. – Change value for Tmin ALARM WINDOW if necessary. (See also Operating Instructions BA00274P, parameter description Tmin ALARM WINDOW or these Operating Instructions)	48
733 (E733)	Error C Factory setting: Warning C	Out of specification (S)	C>URV Temp. User limits exceeded	– Temperature measured value has overshot the value specified for the Tmax ALARM WINDOW parameter.	– Check system/temperature measured value. – Change value for Tmax ALARM WINDOW if necessary. (See also Operating Instructions BA00274P, parameter description Tmax ALARM WINDOW or these Operating Instructions)	47

Code	Error type/ NA 64	Corresponds NE 107	Message/description	Cause	Measure	Prio rity
736 (A736)	Alarm B	Failure (F)	B>RAM error	– Fault in the main electronics. – Main electronics defect.	– Briefly disconnect device from the power supply. – Replace main electronics.	4
737 (A737)	Alarm B	Failure (F)	B>Measurement error	– Fault in the main electronics. – Main electronics defect.	– Briefly disconnect device from the power supply. – Replace main electronics.	20
738 (A738)	Alarm B	Failure (F)	B>Measurement error	– Fault in the main electronics. – Main electronics defect.	– Briefly disconnect device from the power supply. – Replace main electronics.	19
739 (A739)	Alarm B	Failure (F)	B>Measurement error	– Fault in the main electronics. – Main electronics defect.	– Briefly disconnect device from the power supply. – Replace main electronics.	23
740 (E740)	Error C Factory setting: Warning C	Maintenance request (M)	C>Calculation overflow, bad configuration, hardware defect	– Level measuring mode: the measured pressure has undershot the value for HYDR. PRESS. MIN. or overshot the value for HYDR. PRESS MAX. – Level measuring mode: The measured level did not reach the LEVEL MIN value or exceeded the LEVEL MAX value. – Flow measuring mode: the measured pressure has undershot the value for MAX. PRESS FLOW.	– Check configuration and carry out calibration again if necessary. – Select a device with a suitable measuring range. – Check configuration and carry out calibration again if necessary. (See also Operating Instructions BA00274P, parameter description LEVEL MIN. these Operating Instructions) – Check configuration and carry out calibration again if necessary. – Select a device with a suitable measuring range.	27
741 (A741)	Alarm B	Funktion check (C)	B>TANK HEIGHT out of edit limits	– LEVEL MIN or LEVEL MAX has been changed.	– Perform reset (Code 2710) and carry out calibration again.	44
742 (A742)	Alarm B	Failure (F)	B>Sensor connection error (upload)	– Electromagnetic effects are greater than specifications in the technical data. (→ 63) This message normally only appears briefly. – Cable connection sensor –main electronics disconnected. – Sensor defect.	– Wait a few minutes. – Perform reset (Code 7864) and carry out calibration again. – Check cable connection and repair if necessary. – Replace sensor.	18
743 (E743)	Alarm B	Failure (F)	B>Electronic PCB error during initialisation	– This message normally only appears briefly. – Main electronics defect.	– Wait a few minutes. – Restart the device. Perform reset (Code 62). – Replace main electronics.	14
744 (A744)	Alarm B	Failure (F)	B>Main electronic PCB error	– Electromagnetic effects are greater than specifications in the technical data. (→ 63) – Main electronics defect.	– Restart the device. Perform reset (Code 62). – Block off electromagnetic effects or eliminate source of disturbance. – Replace main electronics.	11
745 (W745)	Warning C	Maintenance request (M)	C>Sensor data unknown	– Sensor does not suit the device (electronic sensor nameplate). Device continues measuring.	– Replace sensor with a suitable sensor.	56

Code	Error type/ NA 64	Corresponds NE 107	Message/description	Cause	Measure	Priority
746 (W746)	Warning C	Funktion check (C)	C>Sensor connection error - initialising	– Electromagnetic effects are greater than specifications in the technical data. (→ 63) This message normally only appears briefly. – Overpressure or low pressure present.	– Wait a few minutes. – Restart the device. Perform reset (Code 7864). – Block off electromagnetic effects or eliminate source of disturbance. – Reduce or increase pressure.	26
747 (A747)	Alarm B	Failure (F)	B>Sensor software not compatible to electronics	– Sensor does not suit the device (electronic sensor nameplate).	– Replace sensor with a suitable sensor.	16
748 (A748)	Alarm B	Failure (F)	B>Memory failure in signal processor	– Electromagnetic effects are greater than specifications in the technical data. (→ 63) – Main electronics defect.	– Block off electromagnetic effects or eliminate source of disturbance. – Replace main electronics.	15

8.1.1 On-site display error messages

If the device detects a defect in the on-site display during initialization, the following error messages can be displayed:

Message	Measure
Initialization, VU Electr. Defect A110	Exchange on-site display.
Initialization, VU Electr. Defect A114	
Initialization, VU Electr. Defect A281	
Initialization, VU Checksum Err. A110	
Initialization, VU Checksum Err. A112	
Initialization, VU Checksum Err. A171	

8.2 Response of outputs to errors

The device differentiates between the error types Alarm, Warning and Error.
See the following table and → 📄 49, "Messages".

Output	A (Alarm)	W (Warning)	E (Error: Alarm/Warning)
Current output	Assumes the value specified via the OUTPUT FAIL MODE[1)], ALT. CURR. OUTPUT[1] and SET MAX. ALARM[1] parameter. See also the following section "Configuring current output for an alarm".	Device continues measuring.	For this error, you can enter whether the device should react as in the event of an alarm or as in the event of a warning. See corresponding "Alarm" or "Warning" column. (See also Operating Instructions BA00274P, parameter description SELECT ALARM TYPE or these Operating Instructions)
Bargraph (on-site display)	The bargraph adopts the value defined by the OUTPUT FAIL MODE [1] parameter.	The bargraph adopts the value which corresponds to the current value.	See this table, "Alarm" or "Warning" column, depending on selection.
On-site display	– The measured value and message are displayed alternately – Measured value display: ↯ -symbol is permanently displayed. Message display – 3-digit number such as A122 and description	– The measured value and message are displayed alternately – Measured value display: ↯ -symbol flashes. Message display: – 3-digit number such as W613 and description	– The measured value and message are displayed alternately – Measured value display: see corresponding "Alarm" or "Warning" column Message display: – 3-digit number such as E731 and description
Remote operation (digital communication)	In the case of an alarm, the ALARM STATUS[2)] parameter displays a 3-digit number such as 122 for "Sensor not connected".	In the case of a warning, the ALARM STATUS[2] parameter displays a 3-digit number such as 613 for "Simulation is active".	In the case of an error, the ALARM STATUS[2] parameter displays a 3-digit number such as 731 for "URV user limits exceeded".

1) Menu path: (GROUP SELECTION →) OPERATING MENU → OUTPUT

2) Menu path: (GROUP SELECTION →) OPERATING MENU → MESSAGES

8.2.1 Configuring current output for an alarm

You can configure the current output for the event of an alarm by means of the OUTPUT FAIL MODE, ALT. CURR. OUTPUT and SET MAX. ALARM parameters. These parameters are displayed in the OUTPUT group (menu path: (GROUP SELECTION →) OPERATING MENU → OUTPUT).

In the event of an alarm, the current and the bargraph assume the value entered with the OUTPUT FAIL MODE parameter.

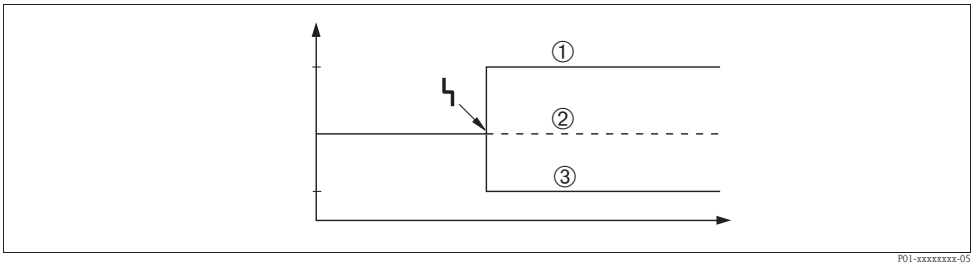

Fig. 28: Current output in the event of an alarm

Options:
1 Max. alarm (110%): can be set between 21 to 23 mA via the SET MAX. ALARM parameter
2 Hold meas. value: last measured value is kept
3 Min. alarm (–10%): 3.6 mA

Factory setting:
- OUTPUT FAIL MODE: Max. Alarm (110%)
- SET MAX. ALARM: 22 mA

Use the ALT. CURR. OUTPUT parameter to set the current output value for the error messages E 120 "Sensor low pressure" and E 115 "Sensor overpressure". You have the following options:
- Normal: the current output assumes the value set via the OUTPUT FAIL MODE and SET MAX. ALARM parameters.
- Special
  – Lower sensor limit undershot (E 120 "Sensor low pressure"): 3.6 mA
  – Upper sensor limit overshot (E 115 "Sensor overpressure") overshot: current output assumes the value set via the SET MAX ALARM parameter.

  Attention : when using the case "special", the behavior is limited to an over/underpressure in a range LRL -10% up to LRL -30% and URL +10% up to URL +30%.

Factory setting:
ALT. CURR. OUTPUT: normal

8.3 Confirming messages

Depending on the settings for the ALARM DISPL. TIME and ACK. ALARM MODE parameters, the following measures should be taken to clear a message:

Settings [1]	**Measures**
– ALARM DISPL. TIME = 0 s – ACK. ALARM MODE = off	– Rectify cause of the message (→ 📄 49).
– ALARM DISPL. TIME > 0 s – ACK. ALARM MODE = off	– Rectify cause of the message (→ 📄 49). – Wait for the alarm display time to elapse.
– ALARM DISPL. TIME = 0 s – ACK. ALARM MODE = on	– Rectify cause of the message (→ 📄 49). – Confirm message using ACK. ALARM parameter.
– ALARM DISPL. TIME > 0 s – ACK. ALARM MODE = on	– Rectify cause of the message (→ 📄 49). – Confirm message using ACK. ALARM parameter. – Wait for the alarm display time to elapse. If a message appears and the alarm display time elapses before the message has been acknowledged, the message will be cleared once it has been acknowledged.

1) Menu path for ALARM DISPL. TIME and ACK. ALARM MODE: (GROUP SELECTION →) OPERATING MENU → DIAGNOSTICS → MESSAGES

If the on-site display displays a message, you can suppress it with the E-key.
If there are several messages, the on-site display shows the message which has the highest priority (→ 📄 49). Once you have suppressed this message using the E-key, the message with the next highest priority is displayed. You can use the E-key to suppress each message, one after the other. The ALARM STATUS parameter continues to display all the messages present.

8.4 Repair

The Endress+Hauser repairs concept provides for measuring devices to have a modular design and also the customer may carry out repairs (→ 60, "Spare Parts").

Note!
- For certified devices, please consult Chapter "Repair of Ex-certified devices".
- For more information on service and spare parts contact the Endress+Hauser Service. See www.endress.com/worldwide.

8.5 Repair of Ex-certified devices

Warning!
When repairing Ex-certified devices, please note the following:
- Only specialist personnel or Endress+Hauser may undertake repairs of certified devices.
- Relevant standards, national hazardous area regulations and Safety Instructions and Certificates must be observed.
- Only genuine Endress+Hauser spare parts may be used.
- When ordering spare parts, please check the device designation on the nameplate. Identical parts may only be used as replacements.
- Electronic inserts or sensors already in use in a standard instrument may not be used as spare parts for a certified device.
- Carry out repairs according to the instructions. After repairs, the device must fulfil the requirements of the specified individual tests.
- A certified device may only be converted into another certified variant by Endress+Hauser.
- All repairs and modifications must be documented.

8.6 Spare Parts

- Some replaceable measuring device components are identified by means of a spare part nameplate. This contains information about the spare part.
- All the spare parts for the measuring device along with the order code are listed In the W@M Device Viewer (www.endress.com/deviceviewer) and can be ordered. If available, users can also download the associated Installation Instructions.

Note!
Measuring device serial number:
- Located on the device and spare part nameplate.
- Can be read out via the "DEVICE SERIAL No" parameter in the "TRANSMITTER DATA" submenu.

8.7 Return

The measuring device must be returned if repairs or a factory calibration are required, or if the wrong measuring device has been ordered or delivered. According to legal regulations, Endress+Hauser, as a ISO-certified company, is required to follow certain procedures when handling returned products that are in contact with process fluids.
To ensure swift, safe and professional device returns, please read the return procedures and conditions on the Endress+Hauser website at www.services.endress.com/return-material.

8.8 Disposal

When disposing, separate and recycle the device components based on the materials.

8.9 Software history

Date	Software version	Changes software	Documentation	
			Operating Instructions	Description of Instrument Functions
11.2003	01.00.zz	Original software. Compatible with: – ToF Tool Field Tool Package, version 1.04.00 or higher – Commuwin II version 2.08.-1, Update G or higher – HART Communicator 375 with Device Rev.: 10, DD Rev.: 1	BA271P/00/EN/10.03 52020517	—
06.2004	02.00.zz	– Number of parameters in the Quick Setup menus has been reduced. – On-site operation: LANGUAGE and MEASURING MODE parameters have been moved to the top level. – New SAFETY CONFIRM. group implemented for SIL. → See also SD00190P Safety Manual Cerabar S. – MEASURING MODE "Level", LEVEL MODE "Linear": AREA UNIT and TANK SECTION parameters have been replaced with the TANK VOLUME and TANK HEIGHT parameters. – Function of the UNIT FLOW parameter has been split across four parameters. – Function of the SIMULATED VALUE parameter has been split across six parameters. – SENSOR TRIM and CURRENT TRIM groups have been removed. – Sensor adapt reset, code 1209 and sensor calibration reset, code 2509 have been removed. – Quick Setup menus are available via ToF Tool. Compatible with: – ToF Tool Field Tool Package version 2.00.00 or higher – Commuwin II version 2.08.-1, Update > G – HART Communicator 375/475 with Device Rev.: 20, DD Rev.: 1	BA271P/00/EN/05.04 52022795	BA274P/00/EN/05.04 52021469
06.2005	02.01.zz	– Operating keys also integrated on the optional on-site display. – Chinese and Japanese are available as the menu language on request. Compatible with: – ToF Tool Field Tool Package version 3.00.00 or higher – FieldCare version 2.01.00, DTM Library version 2.06.00, DTM: Deltabar S/MD7x/V02.00 V 1.4.98.74* – HART Communicator 375/475 with Device Rev.: 20, DD Rev.: 1* * Menu languages Chinese and Japanese not selectable	BA271P/00/EN/06.05 71000115 BA271P/00/EN/11.05 71009589	BA274P/00/EN/05.04 52021469 BA274P/00/EN/05.04 52021469

Date	Software version	Changes software	Documentation	
			Operating Instructions	**Description of Instrument Functions**
06.2006	02.10.zz	– New "Level Easy Pressure" and "Level Easy Height" level modes implemented. New LEVEL SELECTION parameter implemented. – OPERATION group with DOWNLOAD SELECT parameter extended. – SAFETY CONFIRM group extended for the "Level" operating mode in the "Level Easy Pressure" level selection. → See also SD00190P Safety Manual Cerabar S. – Factory setting for the "Error" messages redefined. – Chinese and Japanese included as menu languages by default. Compatible with: – ToF Tool Field Tool Package version 4.0 – FieldCare version 2.02.00 – HART Communicator 375/475 with Device Rev.: 21, DD Rev.: 1	BA271P/00/EN/07.06 71027246	BA274P/00/EN/07.06 71027249
			BA271P/00/EN/08.06 71027246	BA274P/00/EN/07.06 71027249
			BA271P/00/EN/10.07 71043296	BA274P/00/EN/07.07 71061022
			BA271P/00/EN/12.07 71043296	BA274P/00/EN/07.07 71061022
			BA271P/00/EN/05.08 71071770	BA274P/00/EN/05.08 71071855
			BA271P/00/EN/08.08 71077544	BA274P/00/EN/05.08 71071855
			BA271P/00/EN/06.09 71095434	BA274P/00/EN/06.09 71095452
			BA271P/00/EN/05.10 71111792	BA274P/00/EN/05.10 71118244
			BA00271P/00/EN/13.11 71139779	BA00274P/00/EN/13.11 71139795
			BA00271P/00/EN/14.12 71161896	BA00274P/00/EN/13.11 71139795
01.2013	02.11.zz	"Russian" is included as a menu language by default. The menu language "Nederlands" is no longer supported.	BA00271P/00/EN/15.13 71204567	BA00274P/00/EN/14.13 71204628
			BA00271P/00/EN/16.14 71254295	BA00274P/00/EN/15.14 71254474
06.2014	02.20.zz	HART7 protocole revision has been implemented.	BA00271P/00/EN/17.14 71260306	BA00274P/00/EN/16.14 71260321
			BA00271P/00/EN/18.14 71270361	BA00274P/00/EN/17.14 71270402

9 Technical data

For technical data, please refer to TI00383P.

Index

Numerics
4...20 mA test signal 21

A
Alarm messages 49

C
Cable specification 21
Commubox FXA195 anschließen 23
Connecting Commubox FXA291 23
Connecting ToF Adapter FXA291 23

D
Diaphragm seals, installation instructions 12
Diaphragm seals, vacuum application 13
Display 24

E
Electrical connection 19
Error messages 49

F
Factory setting 38
FieldCare 36

H
Hazardous areas 4
Heat insulation 14
HistoROM/M-DAT 32

I
Incoming acceptance 9
Installation instructions for devices with diaphragm seals . . 12
Installation instructions for devices without diaphragm seals 9

L
Language, selection 40
Level measurement 44–45
Level measurement, Quick Setup menu 46
Load 22
Locking operation 37

M
Measuring arrangement for level measurement 12
Measuring arrangement for pressure measurement . . . 10–11
Measuring mode, selection 40

N
Nameplate 6

O
On-site display 24
Operating elements, function, with on-site display 26
Operating elements, position 25
Operating keys, function, without on-site display 26
Operating keys, position 25
Operating menu 30
Overvoltage protection 23

P
Pipe mounting 15
Position adjustment 41
Potential matching 22–23
Pressure measurement 42
Pressure measurement, Quick Setup menu 42

Q
Quick Setup menu level 46
Quick Setup menu pressure 42

R
Repair 60
Repair of Ex-certified devices 60
Reset 38
Returning devices 60
Rotating the housing 18

S
Scope of delivery 8
Screening 22
Separate housing, assemble and mount 16
Service Interface FXA291 23
SIL3 4
Software history 61
Spare Parts 60
Storage 9
Supply voltage 21

T
Temperature isolator, installation instructions 13
Trouble-shooting 49

U
Unlocking operation 37

W
Wall mounting 15
Warnings 49
Welding recommendation 17

www.endress.com/worldwide

Endress+Hauser

People for Process Automation

BA00271P/00/EN/18.14
71270361
CCS/FM+SGML 9

7127 3 1

Level Pressure Flow Temperature Liquid Analysis Registration Systems Components Services Solutions

Operating Instructions – Description of Instrument Functions

Cerabar S PMC71, PMP71/75
Deltabar S FMD77, FMD78, PMD75
Deltapilot S FMB70

Process pressure / Differential pressure, Flow / Hydrostatic

HART COMMUNICATION PROTOCOL

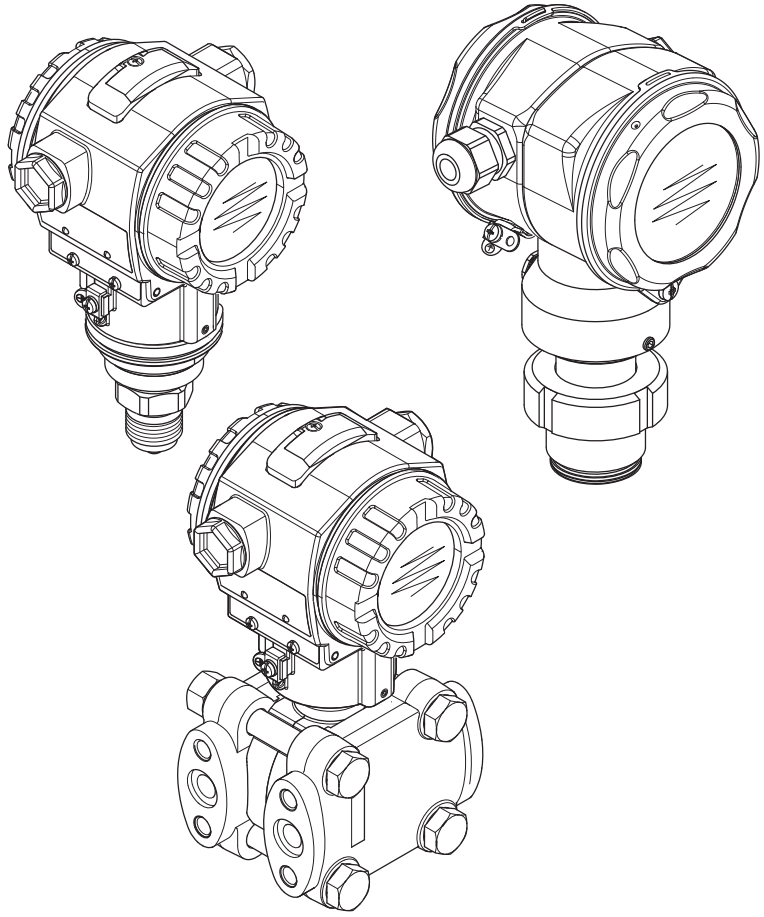

BA00274P/00/EN/17.14
71270402

valid from Software version:
02.20.zz

Endress+Hauser
People for Process Automation

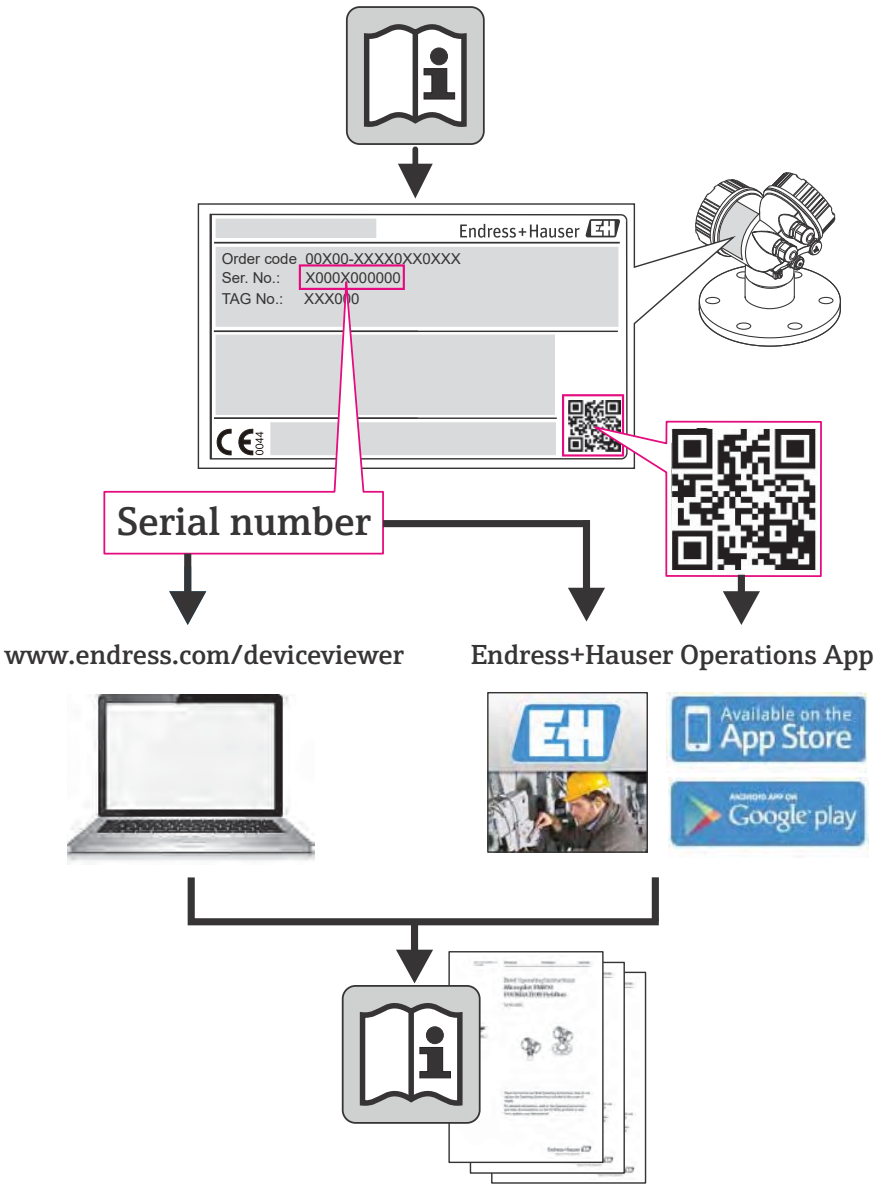
Endress+Hauser
Order code 00X00-XXXX0XX0XXX
Ser. No.: X000X000000
TAG No.: XXX000
Serial number
www.endress.com/deviceviewer
Endress+Hauser Operations App
Available on the App Store
Google play

A0023555

Table of contents

1 Notes on use 4

1.1 Finding parameter description using ID numbers . . . 4
1.2 Finding function group using graphic representation 4
1.3 Finding parameter description using parameter names (index) 4

2 Finding parameter description using ID numbers 5

3 Graphic representation of function groups 10

4 Pressure measurement. 11

4.1 Calibration with reference pressure 11
4.2 Calibration without reference pressure 12

5 Level measurement 14

5.1 Overview of level measurement 14
5.2 "Level Easy Pressure" level selection 15
5.3 "Level Easy Height" level selection 19
5.4 "Level Standard" level selection, "Linear" level type 24
5.5 "Level Standard" level selection, "Pressure Linearized" level type 28
5.6 "Level Standard" level selection, "Height Linearized" level type 33

6 Flow measurement. 40

6.1 Calibration 40
6.2 Totalizers 43

7 Description of parameters 44

8 Trouble-shooting 132

8.1 Messages 132
8.2 Response of outputs to errors 141
8.3 Confirming messages 142

9 Appendix 142

9.1 Operating menu for on-site display, Digital communication 142

Index 151

1 Notes on use

Section 7 describes all the parameters in order of how they appear in the menu. Sections 4 to 6 provide typical examples of configuration.

Sections 1.1 to 1.3 describe ways of finding a certain parameter description more easily.

1.1 Finding parameter description using ID numbers

Each parameter is shown on the on-site display with a unique identification number (ID). Section 2 lists all the parameters in numerical order. The page reference/link takes you to the parameter in question.
In the Operating program, additional parameters and, to an extent, other parameters are displayed. These parameters are not listed in Section 2. You can find these parameters by means of the index.
→ See also Section 1.3.

1.2 Finding function group using graphic representation

All the function groups are shown in table form in Section 3. The page reference/link takes you to the function group in question. In Section 7, all the parameters of a function group are compiled in a table.

1.3 Finding parameter description using parameter names (index)

The index lists all the parameters in alphabetical order. The page reference/link takes you to the parameter in question.

2 Finding parameter description using ID numbers

ID number	Parameter name	Description, see page
001	DENSITY UNIT – Level Selection "Level Easy Pressure"	64 or 97
003	HEIGHT UNIT	64
004	FULL CALIB. – QUICK SETUP	51
004	FULL CALIB. – Level Selection "Level Easy Pressure"	61
004	FULL CALIB. – Level Selection "Level Easy Height"	65
005	FULL PRESSURE	61
006	FULL HEIGHT	66
007	ADJUST DENSITY – Level Selection "Level Easy Height"	64 or 97
008	CALIBRATION MODE – Level Selection "Level Easy Pressure"	60
008	CALIBRATION MODE – Level Selection "Level Easy Height"	64
009	EMPTY HEIGHT	65
010	EMPTY CALIB. – QUICK SETUP	50
010	EMPTY CALIB. – Level Selection "Level Easy Pressure"	60 or 61
010	EMPTY CALIB. – Level Selection "Level Easy Height"	65
011	EMPTY PRESSURE	61
012	SET URV – Level Selection "Level Easy Pressure"	61
012	SET URV – Level Selection "Level Easy Height"	66
013	SET LRV – Level Selection "Level Easy Pressure"	61
013	SET LRV – Level Selection "Level Easy Height"	66
014	DOWNLOAD SELECT	126
015	FULL PRESSURE	See [1)]
016	EMPTY PRESSURE	See [1]
017	FULL CALIB.	See [1]
018	EMPTY CALIB.	See [1]
020	LEVEL SELECTION	46
021	SET LRV	See [1]
022	SET URV	See [1]
023	OUTPUT UNIT – Level Selection "Level Easy Pressure"	60
023	OUTPUT UNIT – Level Selection "Level Easy Height"	64
025	PROCESS DENSITY – Level Selection "Level Easy Pressure"	97
036	PREAMBLE NUMBER	115
042	CURR. TRIM 20mA	131
043	OFFSET 4mA TRIM	131
044	OFFSET 20mA TRIM	131
045	CURR. TRIM 4mA	131
046	ALARM STATUS	128
047	ENTER RESET CODE	126
048	INSERT PIN No	126
050	LEVEL BEFORE LIN	123
055	CUST. TAG NUMBER	117
060	PRESS. ENG. UNIT	56, 59, 63, 67 or 92
075	CUSTOMER UNIT P	56, 59, 63, 68 or 92
079	LANGUAGE	44
245	SET LRV – "Pressure" measuring mode	48 or 56
246	SET URV – "Pressure" measuring mode	48 or 57
247	DAMPING VALUE	48, 51, 53, 57, 61, 66, 77, 81, 90 or 95
250	SENSOR SER. No.	119
251	Pmin SENS. DAMAGE	120
252	Pmax SENS. DAMAGE	120
254	OUTPUT CURRENT	111
264	SOFTWARE VERSION	117
266	HARDWARE REV.	117
270	SIM. CURRENT	128
271	HART MESSAGE	116
272	ADDITIONAL INFO.	117
301	PRESSURE – "Pressure" measuring mode	122
	PRESSURE – "Level" measuring mode	122
	PRESSURE – "Flow" measuring mode	123
305	LONG TAG NUMBER	117

1) See Safety Manual SD00189P for Deltabar S, SD00190P for Cerabar S and SD00213P for Deltapilot S.

ID number	Parameter name	Description, see page
309	GET LRV	57
310	GET URV	57
311	MAX. FLOW	52 or 95
313	UNIT VOLUME – "Linear" level type	71 or 75
	UNIT VOLUME – "Pressure Linearized" level type	79
	UNIT VOLUME – "Height Linearized" level type	84
314	EMPTY CALIB. – QUICK SETUP	50
	EMPTY CALIB. – "Linear" level type	73
	EMPTY CALIB. – "Height Linearized" level type	87
315	FULL CALIB. – QUICK SETUP	51
	FULL CALIB. – "Pressure Linearized" level type	74
	FULL CALIB. – "Height Linearized" level type	87
316	ADJUST DENSITY – "Linear" level type	74
	ADJUST DENSITY – "Height Linearized" level type	88
	ADJUST DENSITY– "Level" extended setup	97
317	CUST. UNIT FACT. P	56, 68 or 93
318	TEMP. ENG. UNIT – "Pressure" measuring mode	96
	TEMP. ENG. UNIT – "Level" measuring mode	97
	TEMP. ENG. UNIT – "Flow" measuring mode	99
319	CALIB. OFFSET	54
323	SET. L. FL. CUT-OFF	99
329	FACT. U. U. TOTAL. 1	108
330	FACT. U. U. TOTAL. 2	109
331	RESET TOTALIZER1	109
332	Pmin ALARM WINDOW	130
333	Pmax ALARM WINDOW	130
334	Tmin ALARM WINDOW	130
335	Tmax ALARM WINDOW	130
336	ALARM DELAY	129
339	DISPLAY CONTRAST	111
342	SET MAX. ALARM	113
343	SET MIN. CURRENT	113
345	BUS ADDRESS	115
350	DEVICE DESIGN.	117
351	DEVICE TYPE, Deltabar S	115
352	CONFIG RECORDER	117
354	DEVICE SERIAL No	117
357	PCB TEMPERATURE	117
358	ALLOWED MIN. TEMP	117
359	ALLOWED MAX. TEMP	117
360	MAT. PROC. CONN. +	118
361	MAT. PROC. CONN. -	118
362	SEAL TYPE	118
363	DIP STATUS	117
365	MAT. MEMBRANE	120
366	FILLING FLUID	120
367	SENSOR TEMP.	122 or 123
368	Tmin SENSOR	120
369	Tmax SENSOR	120
370	TANK CONTENT	123
375	SUPPRESSED FLOW	123
378	MEAS. VAL. TREND	122 or 123
380	COUNTER:P > Pmax	124
382	RESET PEAKHOLD	125
383	MAX. MEAS. PRESS.	124
386	ELECTR. SERIAL No	117
388	OUTPUT FAIL MODE	112
389	MEASURING MODE	45
390	LINEAR/SQROOT	113
391	UNIT FLOW	93
392	CALIBRATION MODE – "Linear" level type	73
	CALIBRATION MODE – "Height Linearized" level type	87
397	LIN. EDIT MODE	101
398	TOTALIZER 1 UNIT – "Volume p. cond." flow type	108
399	TOTALIZER 2 UNIT – "Volume p. cond." flow type	109
400	NEG. FLOW TOT. 1	108
401	ACK. ALARM MODE	128

ID number	Parameter name	Description, see page
404	COUNTER:T > Tmax	124
409	OPERATING HOURS	126
413	SIMULATION MODE	127
414	SIM. PRESSURE	127
416	NEG. FLOW TOT. 2	109
419	MENU DESCRIPTOR	110
423	ALTERNATE DATA	110
432	MANUFACTOR ID	116
434	CORRECTED PRESS. – "Pressure" measuring mode	122
	CORRECTED PRESS. – "Level" measuring mode	122
	CORRECTED PRESS. – "Flow" measuring mode	123
442	LOW FLOW CUT-OFF	99
467	COUNTER:P < Pmin	124
469	MIN. MEAS. PRESS.	124
471	MAX. MEAS. TEMP.	124
472	COUNTER:T < Tmin	124
474	MIN. MEAS. TEMP.	124
476	SIM. ERROR NO.	128
480	ALARM DISPL. TIME	129
481	HART DATE	116
482	PROC. CONN. TYPE	118
484	PRESS. SENS LOLIM	119
485	PRESS. SENS HILIM	119
487	SENS H/WARE REV	120
488	PCB COUNT:T > Tmax	124
490	PCB MAX. TEMP.	124
492	PCB COUNT:T < Tmin	124
494	PCB MIN. TEMP.	124
500	ACK. ALARM	129
052	CURRENT MODE	115
549	MEASURING TABLE (display)	103
549	EDITOR TABLE, LINE-NUMB (enter values)	102
550	EDITOR TABLE, X-VAL. (enter values)	102
551	EDITOR TABLE, Y-VAL. (enter values)	102, 102
563	POS. INPUT VALUE	48, 50 or 54
564	LAST DIAG. CODE	128
570	Pmax PROC. CONN.	117
571	MASS FLOW UNIT	94
581	SENSOR MEAS.TYPE	120
584	SENSOR PRESSURE – "Pressure" measuring mode	122
	SENSOR PRESSURE – "Level" measuring mode	122
	SENSOR PRESSURE – "Flow" measuring mode	123
585	HART VERSION	114
591	MINIMUM SPAN	119
595	SELECT ALARMTYPE	129
597	ALT. CURR. OUTPUT	113
600	SELECT ALARMTYPE	129
603	RESET ALL ALARMS	129
607	CUST. UNIT FACT. V – "Linear" level type	72
	CUST. UNIT FACT. V – "Pressure Linearized" level type	79
	CUST. UNIT FACT. V – "Height Linearized" level type	85
608	CUSTOMER UNIT V – "Linear" level type	71
	CUSTOMER UNIT V – "Pressure Linearized" level type	79
	CUSTOMER UNIT V – "Height Linearized" level type	85
609	CUST. UNIT FACT. F	95
610	CUSTOMER UNIT F	94
627	TOT. 1 USER UNIT	108
628	TOT. 2 USER UNIT	109
634	MAX PRESS. FLOW	53 or 95
637	SET LRV – "Flow" extended setup	99
638	SET URV – "Flow" extended setup	100
639	SIM.FLOW VALUE	127
640	FLOW-MEAS. TYPE	93
652	TOTALIZER 1	124
655	TOTAL. 1 OVERFLOW	124
657	TOTALIZER 2	124
658	TOTAL. 2 OVERFLOW	124
660	STD. FLOW UNIT	94

661	NORM FLOW UNIT	93

ID number	Parameter name	Description, see page
662	TOTALIZER 1 UNIT – "Mass" flow type	108
663	TOTALIZER 2 UNIT – "Mass" flow type	109
664	TOTALIZER 1 UNIT – "Gas. std. conditions" flow type	108
665	TOTALIZER 2 UNIT – "Gas. std. conditions" flow type	109
666	TOTALIZER 1 UNIT – "Gas. norm conditions" flow type	108
667	TOTALIZER 2 UNIT – "Gas. norm conditions" flow type	109
679	MEASURED VALUE – "Pressure"	121
	MEASURED VALUE – "Level"	122
	MEASURED VALUE – "Flow"	123
685	POS. ZERO ADJUST	48, 50, 52 or 54
688	MAIN DATA FORMAT	110
694	CURR. CHARACT. – "Pressure"	112
695	CURR. CHARACT. – "Flow"	112
696	CURR. CHARACT. – "Height"	112
699	DEVICE REVISION	115
703	CUST. UNIT FACT. M – "Linear" level type	73
	CUST. UNIT FACT. M – "Pressure Linearized" level type	80
	CUST. UNIT FACT. M – "Height Linearized" level type	86
704	CUSTOMER UNIT M – "Linear" level type	72
	CUSTOMER UNIT M – "Pressure Linearized" level type	80
	CUSTOMER UNIT M – "Height Linearized" level type	86
705	CUST. UNIT FACT. H – "Linear" level type	71 or 76
	CUST. UNIT FACT. H – "Height Linearized" level type	84 or 89
706	CUSTOMER UNIT H – "Linear" level type	70 or 76
	CUSTOMER UNIT H – "Height Linearized" level type	84 or 89
708	HEIGHT UNIT – "Linear" level type	70 or 76
	HEIGHT UNIT – "Height Linearized" level type	83 or 88
709	MASS UNIT – "Linear" level type	72
	MASS UNIT – "Pressure Linearized" level type	80
	MASS UNIT – "Height Linearized" level type	85
710	EMPTY PRESSURE – "Linear" level type	74
	EMPTY PRESSURE – "Height Linearized" level type	87
711	FULL PRESSURE – "Linear" level type	74
	FULL PRESSURE – "Height Linearized" level type	87
712	LEVEL MAX	86
713	TANK CONTENT MAX	101
714	SIM. LEVEL	127
715	SIM. TANK CONT.	128
717	MEASURING TABLE (selection)	103
718	LEVEL MODE	68
719	SET LRV – "Level" basic setup	77
720	SET URV – "Level" basic setup	77
755	LEVEL MIN	86
759	TANK CONTENT MIN	101
760	ASSIGN CURRENT	113
761	HYDR. PRESS MAX.	81
762	SET LRV – "Level" extended setup	98
763	SET URV – "Level" extended setup	98
764	CURR. CHARACT. – "Tank content"	112
770	EDITOR TABLE (continue entry)	103
775	HYDR. PRESS MIN.	80
802	DEVICE TYPE, Cerabar S	115
804	LIN. MEASURAND	70
805	LINd. MEASURAND	79
806	COMB. MEASURAND	83
808	TABLE SELECTION	101
809	EDITOR TABLE (select table)	102
810	ADJUSTED DENSITY – "Linear" level type	74
	ADJUSTED DENSITY – "Height Linearized" level type	87
811	PROCESS DENSITY	97
812	DENSITY UNIT – "Linear" level type	74
	DENSITY UNIT – "Height Linearized" level type	88
813	100 % POINT – "Linear" level type	77
	100 % POINT – "Height Linearized" level type	89

ID number	Parameter name	Description, see page
814	ZERO POSITION – "Linear" level type ZERO POSITION – "Height Linearized" level type	77 90
815	TANK DESCRIPTION	103
831	HistoROM AVAIL.	126
832	HistoROM CONTROL	127
836	SAFETY LOCKSTATE SAFETY LOCK	See [1)]
838	SAFETY PASSWORD	See [1]
840	DIGIT SETS	111
841	DIGIT SETS	See [1]
844	ACK. ALARM MODE	See [1]
845	MEASURING MODE	See [1]
847	CALIB. OFFSET	See [1]
848	MAX. FLOW	See [1]
849	MAX PRESS. FLOW	See [1]
850	LOW FLOW CUT-OFF	See [1]
851	SET. L. FL. CUT-OFF	See [1]
852	SET LRV	See [1]
853	SET URV	See [1]
854	LINEAR/SQROOT.	See [1]
855	DAMPING VALUE	See [1]
856	CONF. PASSWORD	See [1]
858	TANK VOLUME	75
859	TANK HEIGHT	76
875	CURRENT OUTPUT	See [1]

1) See Safety Manual SD00189P for Deltabar S, SD00190P for Cerabar S and SD00213P for Deltapilot S.

3 Graphic representation of function groups

Note!
The "Flow" measuring mode is only available for the Deltabar S differential pressure transmitter. The groups marked with "*" are only displayed for Deltabar S.

1st selection level	2nd selection level (groups)	Function groups	Description, see page
LANGUAGE	LANGUAGE (079)		→ 44
MEASURING MODE	MEASURING MODE (389)		→ 45
QUICK SETUP pressure			→ 47
QUICK SETUP level			→ 49
QUICK SETUP flow*			→ 52
OPERATING MENU (555)	→ SETTINGS (557)	→ POSITION ADJUSTMENT	→ 53
		→ BASIC SETUP pressure	→ 55
		→ BASIC SETUP level, "Level Easy Pressure"	→ 58
		→ BASIC SETUP level, "Level Easy Height"	→ 62
		→ BASIC SETUP level, "Level Easy Standard"	→ 67
		→ BASIC SETUP flow*	→ 91
		→ EXTENDED SETUP pressure	→ 96
		→ EXTENDED SETUP level	→ 96
		→ EXTENDED SETUP flow*	→ 98
		→ LINEARISATION – on-site display	→ 100
		→ LINEARISATION – Digital communication	→ 104
		→ TOTALIZER SETUP *	→ 107
	→ SAFETY CONFIRM.		→ See [1]
	→ DISPLAY (558)		→ 110
	→ OUTPUT (559)		→ 111
	→ TRANSMITTER INFO (560)	→ HART DATA	→ 114
		→ TRANSMITTER DATA	→ 117
		→ PROCESS CONNECTION	→ 117
		→ SENSOR DATA	→ 119
	→ PROCESSINFO (561)	→ PROCESS VALUES pressure	→ 121
		→ PROCESS VALUES level	→ 122
		→ PROCESS VALUES flow*	→ 123
		→ PEAK HOLD INDICATOR	→ 124
	→ OPERATING		→ 126
	→ DIAGNOSTICS (562)	→ SIMULATION	→ 127
		→ MESSAGES	→ 128
		→ USER LIMITS	→ 130
	→ SERVICE (561)	→ SYSTEM 2	→ 131

1) See Safety Manual SD00189P for Deltabar S, SD00190P for Cerabar S and for SD00213P Deltapilot S.

4 Pressure measurement

4.1 Calibration with reference pressure

Example:
In this example, a device with a 500 mbar (7.5 psi) sensor is configured for the 0...+300 mbar (4.5 psi)measuring range, i.e. 0 mbar and 300 mbar (4.5 psi) are assigned to the 4 mA value and 20 mA value respectively.

Prerequisite:
- The pressure values 0 mbar and 300 mbar (4.5 psi) can be specified. The device is already installed, for example.

Note!
- See also Operating Instructions Deltabar S (BA00270P), Section 6.6 "Differential pressure measurement", Cerabar S (BA00271P), Section 6.4 "Pressure measurement" or Deltapilot S (BA00332P), Section 6.5 "Pressure measurement".
- For a description of the parameters mentioned, see
  - Page 45, Table 2: MEASURING MODE
  - Page 53, Table 6: POSITION ADJUSTMENT
  - Page 55, Table 7: BASIC SETUP.
- For a description of further relevant parameters, see
  - Page 96, Table 15: EXTENDED SETUP
  - Page 121, Table 25: PROCESS VALUES.

Warning!
If the measuring mode is changed, the span setting (URV) must be verified in the "Calibration" → "Basic Setup" operating menu and, if necessary, reconfigured.

	Description	
1	Deltabar S: before configuring the device for your application, the pressure piping must be cleaned and filled with fluid. See Operating Instructions BA00270P, Section 6.6.	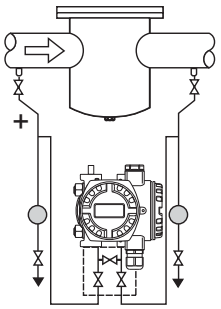 P01-PMD75xxx-19-xx-xx-xx-000 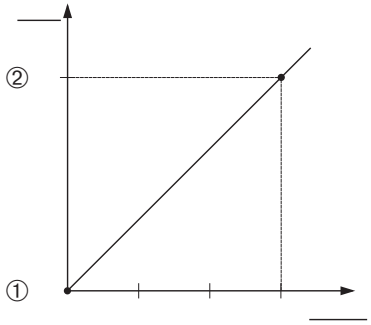 P01-xxxxxxxx-05-xx-xx-xx-010 *Fig. 1: Calibration with reference pressure* *1 See table, step 6.* *2 See table, step 7.*
2	Carry out position adjustment if necessary. See Page 53, Table 6: POSITION ADJUSTMENT.	
3	If necessary, select the "Pressure" measuring mode via the MEASURING MODE parameter. On-site display: Menu path: GROUP SELECTION → MEASURING MODE Digital communication: Menu path: OPERATING MENU → SETTINGS → BASIC SETUP → MEASURING MODE	
4	On-site display: Select BASIC SETUP function group. Menu path: GROUP SELECTION → OPERATING MENU → SETTINGS → BASIC SETUP	
5	Select a pressure unit via the PRESS. ENG. UNIT parameter, here mbar for example.	
6	The pressure for the lower range value (4 mA value) is present at the device, here 0 mbar for example.	
	Select GET LRV parameter.	
	Confirm value present. The pressure value present is assigned to the lower current value (4 mA).	
7	The pressure for the upper range value (20 mA value) is present at the device, here 300 mbar (4.5 psi) for example.	
	Select GET URV parameter.	
	Confirm value present. The pressure value present is assigned to the upper current value (20 mA).	
8	Result: The measuring range is set for 0...+300 mbar (4.5 psi).	

Note!
- You can also specify a customer-specific unit. See parameter description for PRESS. ENG. UNIT (→ Page 56).

4.2 Calibration without reference pressure

Example:
In this example, a device with a 400 mbar (6 psi) sensor is configured for the 0...+300 mbar (4.5 psi) measuring range, i.e. 0 mbar and 300 mbar (4.5 psi) are assigned to the 4 mA value and 20 mA value respectively.

Prerequisite:
- This is a theoretical calibration, i.e. the pressure values for the lower range and upper range value are known.

Note!
- See also Operating Instructions Deltabar S (BA00270P), Section 6.6 "Differential pressure measurement", Cerabar S (BA00271P), Section 6.4 "Pressure measurement" or Deltapilot S (BA00332P), Section 6.5 "Pressure measurement".
- Due to the orientation of the device, there may be a shift in the measured value, i.e. when the container is empty or partly filled, the MEASURED VALUE parameter does not display zero. → To perform a position adjustment see also Page 53, Table 6: Position adjustment.
- For a description of the parameters mentioned, see
  – Page 45, Table 2: MEASURING MODE
  – Page 53, Table 6: POSITION ADJUSTMENT
  – Page 55, Table 7: BASIC SETUP.
- For a description of further relevant parameters, see
  – Page 96, Table 15: EXTENDED SETUP
  – Page 121, Table 27: PROCESS VALUES.

Warning!
If the measuring mode is changed, the span setting (URV) must be verified in the "Calibration" → "Basic Setup" operating menu and, if necessary, reconfigured.

	Description
1	If necessary, select the "Pressure" measuring mode via the MEASURING MODE parameter. On-site display: Menu path: GROUP SELECTION → MEASURING MODE Digital communication: Menu path: OPERATING MENU → SETTINGS → BASIC SETUP → MEASURING MODE
2	On-site display: Select BASIC SETUP function group. Menu path: GROUP SELECTION → OPERATING MENU → SETTINGS → BASIC SETUP
3	Select a pressure unit via the PRESS. ENG. UNIT parameter, here mbar for example.
4	Select SET LRV parameter.
	Enter value, here 0 mbar, for the SET LRV parameter and confirm. This pressure value is assigned to the lower current value (4 mA).
5	Select SET URV parameter.
	Enter value, here 300 mbar (4.5 psi), for the SET URV parameter and confirm. This pressure value is assigned to the upper current value (20 mA).
6	Result: The measuring range is set for 0...+300 mbar (4.5 psi).

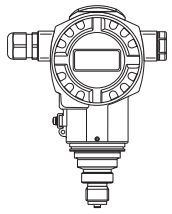

P01-PMP71xxx-19-xx-xx-xx-000

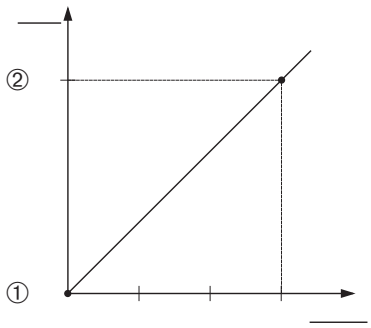

P01-xxxxxxxx-05-xx-xx-xx-010

Fig. 2: Calibration without reference pressure

1 See table, step 4.
2 See table, step 5.

Note!
- You can also perform calibration without reference pressure by means of the QUICK SETUP menu. → See Page 47 ff, Table 3: QUICK SETUP menu.
- You can also specify a customer-specific unit. See parameter description for PRESS. ENG. UNIT (→ Page 56).

5 Level measurement

5.1 Overview of level measurement

Measuring task	LEVEL SELECTION/ LEVEL MODE	Measured variable options	Description	Comment	Measured value display
The measured variable is in direct proportion to the measured pressure. Calibration is performed by entering two pressure-level value pairs.	LEVEL SELECTION: Level Easy Pressure	Via OUTPUT UNIT parameter: %, level, volume or mass units.	– Calibration with reference pressure – wet calibration, see Page 15, Section 5.2.1 – Calibration without reference pressure – dry calibration, see Page 17, Section 5.2.2	– Incorrect entries are possible – SIL mode possible – Customised units are not possible	The measured value display and the LEVEL BEFORE LIN parameter show the measured value.
The measured variable is in direct proportion to the measured pressure. Calibration is performed by entering the density and two height-level value pairs.	LEVEL SELECTION: Level Easy Height	Via OUTPUT UNIT parameter: %, level, volume or mass units.	– Calibration with reference pressure – wet calibration, see Page 19, Section 5.3.1 – Calibration without reference pressure – dry calibration, see Page 22, Section 5.3.2	– Incorrect entries are possible – SIL mode not possible – Customised units are not possible	The measured value display and the LEVEL BEFORE LIN parameter show the measured value.
The measured variable is in direct proportion to the measured pressure.	LEVEL SELECTION: Level standard/ LEVEL MODE: Linear	Via LIN. MEASURAND parameter: – % (Level) – Level – Volume – Mass	– Calibration with reference pressure – wet calibration, see Page 24, Section 5.4.1 – Calibration without reference pressure – dry calibration, see Page 26, Section 5.4.2	– Incorrect entries are rejected by the device – SIL mode not possible – Customised level, volume and mass units are possible	The measured value display and the LEVEL BEFORE LIN parameter show the measured value.
The measured variable is not in direct proportion to the measured pressure as, for example, with containers with a conical outlet. A linearisation table must be entered for the calibration.	LEVEL SELECTION: Level standard/ LEVEL MODE: Pressure Linearized	Via LINd MEASURAND parameter: – Pressure + % – Pressure + Volume – Pressure + Mass	– Calibration with reference pressure: semiautomatic entry of linearisation table, see Page 28, Section 5.5.1 – Calibration without reference pressure: manual entry of linearisation table, see Page 31, Section 5.5.2	– Incorrect entries are rejected by the device – SIL mode not possible – Customised level, volume and mass units are possible	The measured value display and the TANK CONTENT parameter show the measured value.
– Two measured variables are required or – The container shape is given by value pairs, such as height and volume. The 1st measured variable %-height or height must be in direct proportion to the measured pressure. The 2nd measured variable volume, mass or % must not be in direct proportion to the measured pressure. A linearisation table must be entered for the 2nd measured variable. The 2nd measured variable is assigned to the 1st measured variable by means of this table.	LEVEL SELECTION: Level standard/ LEVEL MODE: Height Linearized	Via COMB. MEASURAND parameter: – Height + Volume – Height + Mass – Height + % – %-Height + Volume – %-Height + Mass – %-Height + %	– Calibration with reference pressure: wet calibration and semiautomatic entry of linearisation table, see Page 33, Section 5.6.1 – Calibration without reference pressure: dry calibration and manual entry of linearisation table, see Page 37, Section 5.6.2	– Incorrect entries are rejected by the device – SIL mode not possible – Customised level, volume and mass units are possible	The measured value display and the TANK CONTENT parameter show the 2nd measured value (volume, mass or %). The LEVEL BEFORE LIN parameter displays the 1st measured value (%-height or height).

5.2 "Level Easy Pressure" level selection

5.2.1 Calibration with reference pressure – wet calibration

Example:
In this example, the level in a tank should be measured in m. The maximum level is 3 m (9.8 ft). The pressure range is set to 0 to 300 mbar (4.5 psi).

Prerequisite:
- The measured variable is in direct proportion to the pressure.
- The tank can be filled or emptied.

Note!
- See also Operating Instructions for Deltabar S (BA00270P) or Cerabar S (BA00271P), Section 6.5 "Level measurement" or Deltapilot S (BA00332P), Section 6.4 "Level measurement".
- The values entered for EMPTY CALIB./FULL CALIB. and SET LRV/SET URV must have a minimum interval of 1% for the "Level Easy Pressure" level mode. The value will be rejected with a warning message if the values are too close together. Further limit values are not checked; i.e. the values entered must be appropriate for the sensor and the measuring task so that the measuring device can measure correctly.
- For a description of the parameters mentioned, see
  – Page 45, Table 2: MEASURING MODE
  – Page 53, Table 6: POSITION ADJUSTMENT
  – Page 58, Table 8: LEVEL SELECTION "Level Easy Pressure"
- For a description of further relevant parameters, see
  – Page 96, Table 16: EXTENDED SETUP
  – Page 122, Table 28: PROCESS VALUES.

Warning!
If the measuring mode is changed, the span setting (URV) must be verified in the "Calibration" → "Basic Setup" operating menu and, if necessary, reconfigured.

	Description
1	Deltabar S: Before you configure the device for your application, the pressure piping must be cleaned and filled with medium. See Operating Instructions BA00270P, Section 6.5.1
2	Carry out position adjustment if necessary. See Page 53, Table 6: POSITION ADJUSTMENT.
3	If necessary, select the "Level" measuring mode via the MEASURING MODE parameter. On-site display: Menu path: GROUP SELECTION → MEASURING MODE Digital communication: Menu path: OPERATING MENU → SETTINGS → BASIC SETUP→ MEASURING MODE
4	If necessary, select "Level Easy Pressure" level mode using the LEVEL SELECTION parameter. On-site display: Menu path: GROUP SELECTION → MEASURING MODE "Level" → LEVEL SELECTION Digital communication: Menu path: OPERATING MENU → SETTINGS → BASIC SETUP → MEASURING MODE "Level" → LEVEL SELECTION

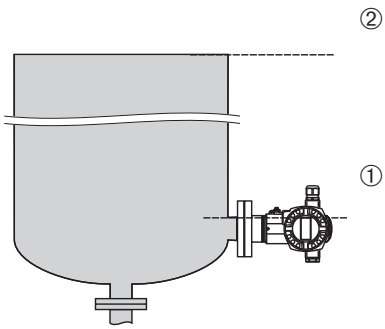

Fig. 3: Calibration with reference pressure – wet calibration

1 See Table, Step 9.
2 See Table, Step 10.

	Description
5	On-site display: Select BASIC SETUP function group. Menu path: GROUP SELECTION → OPERATING MENU → SETTINGS → BASIC SETUP
6	Select a pressure unit via the PRESS. ENG. UNIT parameter, here mbar for example.
7	Select a level unit via the OUTPUT UNIT parameter, here m for example.
8	Select the "Wet" option by means of the CALIBRATION MODE parameter.
9	Hydrostatic pressure for the lower calibration point is present at the device, here 0 mbar for example.
	Select EMPTY CALIB. parameter.
	Enter the level value, here 0 m for example. Confirm the value to assign the pressure value present to the lower level value. ✎ Note! To accept the value displayed you must first switch to the Edit mode (see the "Editing values" section) and then press the "E" button to save the value.
10	Hydrostatic pressure for the upper calibration point is present at the device, here 300 mbar (4.5 psi) for example.
	Select FULL CALIB. parameter.
	Enter the level value, here 3 m (9.8 ft) for example. Confirm the value to assign the pressure value present to the upper level value. ✎ Note! To accept the value displayed you must first switch to the Edit mode (see the "Editing values" section) and then press the "E" button to save the value.
11	Set the value for the lower current value (4 mA) by means of the SET LRV parameter.
12	Set the value for the upper current value (20 mA) by means of the SET URV parameter.
13	Result: The measuring range is set for 0 to 3 m (9.8 ft).

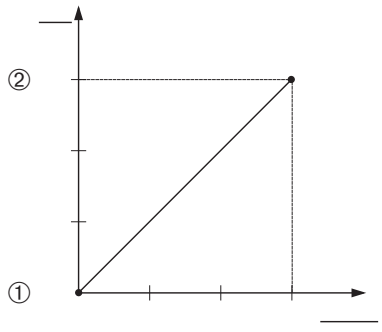

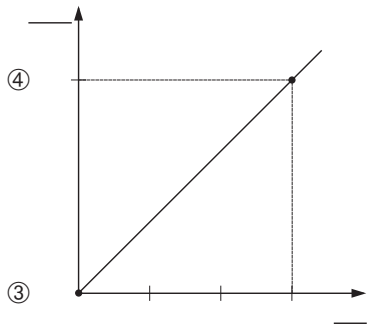

Fig. 4: Calibration with reference pressure – wet calibration

1 See Table, Step 9.
2 See Table, Step 10.
3 See Table, Step 11.
4 See Table, Step 12.

✎ Note!

1. You can also perform calibration with reference pressure by means of the QUICK SETUP menu. → See Page 49 ff, Table 4: QUICK SETUP menu.
2. For this level mode, the measured variables %, level, volume and mass are available. → See also parameter description for OUTPUT UNIT, Page 60.
3. For operation using the on-site display, the parameters EMPTY CALIB. (→ Page 61) and FULL CALIB. (→ Page 61) also show the respective pressure present at the device. For operation using Digital communication, the pressure present at the device is displayed in the PROCESS VALUES group (menu path: OPERATING MENU→ PROCESSINFO → PROCESS VALUES).

5.2.2 Calibration without reference pressure – dry calibration

Example:
In this example, the volume in a tank should be measured in litres.The maximum volume of 1000 litres (264 US gal) corresponds to a pressure of 450 mbar (6.75 psi). The minimum volume of 0 litres corresponds to a pressure of 50 mbar (0.75 psi), as the device is mounted below the level lower range value. The device is mounted below the level lower range value.

Prerequisite:
- The measured variable is in direct proportion to the pressure.
- This is a theoretical calibration i.e. the pressure and volume values for the lower and upper calibration point must be known.

Note!
- See also Operating Instructions for Deltabar S (BA00270P) or Cerabar S (BA00271P), Section 6.5 "Level measurement" or Deltapilot S (BA00332P), Section 6.4 "Level measurement".
- The values entered for EMPTY CALIB./FULL CALIB. and SET LRV/SET URV must have a minimum interval of 1% for the "Level Easy Pressure" level mode. The value will be rejected with a warning message if the values are too close together. Further limit values are not checked; i.e. the values entered must be appropriate for the sensor and the measuring task so that the measuring device can measure correctly.
- Due to the orientation of the device, there may be a shift in the measured value, i.e. when the container is empty or partly filled, the MEASURED VALUE parameter does not display zero. → To perform a position adjustment see also Page 53, Table 6: Position adjustment.
- For a description of the parameters mentioned, see
  – Page 45, Table 2: MEASURING MODE
  – Page 58, Table 8: LEVEL SELECTION "Level Easy Pressure"
- For a description of further relevant parameters, see
  – Page 96, Table 16: EXTENDED SETUP
  – Page 122, Table 28: PROCESS VALUES.

Warning!
If the measuring mode is changed, the span setting (URV) must be verified in the "Calibration" → "Basic Setup" operating menu and, if necessary, reconfigured.

	Description
1	Select the "Level" measuring mode via the MEASURING MODE parameter. On-site display: Menu path: GROUP SELECTION → MEASURING MODE Digital communication: Menu path: OPERATING MENU → SETTINGS → BASIC SETUP→ MEASURING MODE
2	If necessary, select "Level Easy Pressure" level mode using the LEVEL SELECTION parameter. On-site display: Menu path: GROUP SELECTION → MEASURING MODE "Level" → LEVEL SELECTION Digital communication: Menu path: OPERATING MENU → SETTINGS → BASIC SETUP → MEASURING MODE "Level" → LEVEL SELECTION
3	On-site display: Select BASIC SETUP function group. Menu path: GROUP SELECTION → OPERATING MENU → SETTINGS → BASIC SETUP

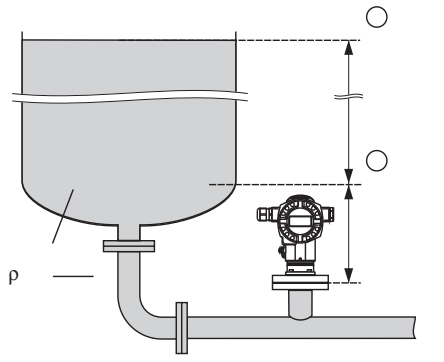

Fig. 5: Calibration without reference pressure – dry calibration

1 See Table, Steps 7 and 8.
2 See Table, Steps 9 and 10.

	Description
4	Select a pressure unit via the PRESS. ENG. UNIT parameter, here mbar for example.
5	Select a volume unit via the OUTPUT UNIT parameter, here l (litres) for example..
6	Select the "Dry" option by means of the CALIBRATION MODE parameter.
7	Enter the volume value for the lower calibration point via the EMPTY CALIB. parameter, here 0 l for example.
8	Enter the pressure value for the lower calibration point via the EMPTY PRESSURE parameter, here 50 mbar (0.75 psi) for example.
9	Enter the volume value for the upper calibration point via the FULL CALIB. parameter, here 1000 l (264 gal) for example.
10	Enter the pressure value for the upper calibration point via the FULL PRESSURE parameter, here 450 mbar (6.75 psi) for example.
11	Set the value for the lower current value (4 mA) by means of the SET LRV parameter.
12	Set the value for the upper current value (20 mA) by means of the SET URV parameter.
13	Result: The measuring range is set for 0 to 1000 l (264 gal).

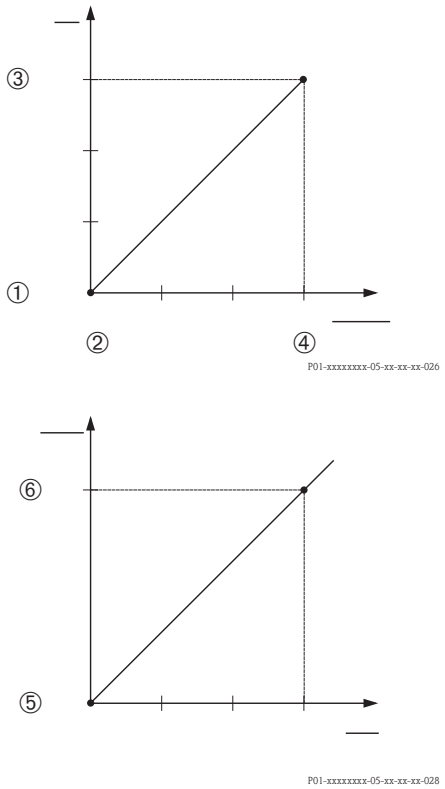

Fig. 6: Calibration with reference pressure – wet calibration

1 See Table, Step 7.
2 See Table, Step 8.
3 See Table, Step 9.
4 See Table, Step 10.
5 See Table, Step 11.
6 See Table, Step 12.

Note!

1. For this level mode, the measured variables %, level, volume and mass are available. → See also parameter description for OUTPUT UNIT, Page 60.

5.3 "Level Easy Height" level selection

5.3.1 Calibration with reference pressure – wet calibration

Example:
In this example, the volume in a tank should be measured in litres. The maximum volume of 1000 litres (264 US gal) corresponds to a level of 4.5 m (15 ft). The minimum volume of 0 litres corresponds to a level of 0.5 m (1.6 ft), as the device is mounted below the level lower range value. The density of the medium is 1 kg/dm^3.

Prerequisite:
- The measured variable is in direct proportion to the pressure.
- The tank can be filled or emptied.

Note!
- See also Operating Instructions for Deltabar S (BA00270P) or Cerabar S (BA00271P), Section 6.5 "Level measurement" or Deltapilot S (BA00332P), Section 6.4 "Level measurement".
- The values entered for EMPTY CALIB./FULL CALIB., EMPTY PRESSURE/FULL PRESSURE, EMPTY HEIGHT/FULL HEIGHT and SET LRV/SET URV must have a minimum interval of 1% for the "Level Easy Height" level mode. The value will be rejected with a warning message if the values are too close together. Further limit values are not checked; i.e. the values entered must be appropriate for the sensor and the measuring task so that the measuring device can measure correctly.
- For a description of the parameters mentioned, see
  – Page 45, Table 2: MEASURING MODE
  – Page 53, Table 6: POSITION ADJUSTMENT
  – Page 62, Table 9: LEVEL SELECTION "Level Easy Height"
- For a description of further relevant parameters, see
  – Page 96, Table 16: EXTENDED SETUP
  – Page 122, Table 28: PROCESS VALUES.

Warning!
If the measuring mode is changed, the span setting (URV) must be verified in the "Calibration" → "Basic Setup" operating menu and, if necessary, reconfigured.

	Description
1	Deltabar S: Before you configure the device for your application, the pressure piping must be cleaned and filled with medium. See Operating Instructions BA00270P, Section 6.5.1
2	Carry out position adjustment if necessary. See Page 53, Table 6: POSITION ADJUSTMENT.
3	Select the "Level" measuring mode via the MEASURING MODE parameter. On-site display: Menu path: GROUP SELECTION → MEASURING MODE Digital communication: Menu path: OPERATING MENU → SETTINGS → BASIC SETUP→ MEASURING MODE
4	If necessary, select the "Level Easy Height" level mode using the LEVEL SELECTION parameter. On-site display: Menu path: GROUP SELECTION → MEASURING MODE "Level" → LEVEL SELECTION Digital communication: Menu path: OPERATING MENU → SETTINGS → BASIC SETUP → MEASURING MODE "Level" → LEVEL SELECTION
5	On-site display: Select BASIC SETUP function group. Menu path: GROUP SELECTION → OPERATING MENU → SETTINGS → BASIC SETUP

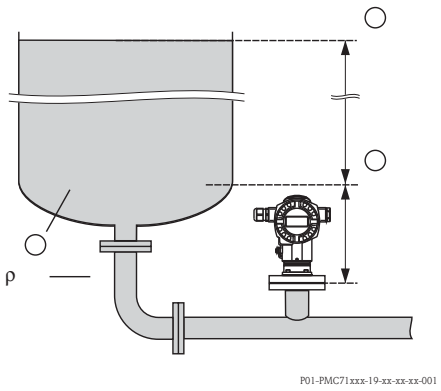

Fig. 7: Calibration with reference pressure – wet calibration

1 See Table, Steps 10 and 11.
2 See Table, Step 12.
3 See Table, Step 13.

	Description
6	Select a pressure unit via the PRESS. ENG. UNIT parameter, here mbar for example.
7	Select a volume unit via the OUTPUT UNIT parameter, here l (litres) for example..
8	Select a height unit via the HEIGHT UNIT parameter, here m for example.
9	Select the "Wet" option via the CALIBRATION MODE parameter.
10	Select a density unit via the DENSITY UNIT parameter, here kg/dm^3 for example.
11	Enter the density of the fluid using the ADJUST DENSITY parameter, here kg/dm^3 for example.
12	Enter the volume value for the lower calibration point via the EMPTY CALIB. parameter, here 0 l for example. (The currently measured hydrostatic pressure is displayed as height, here 0.5 m (1.6 ft) for example.) Note! To accept the value displayed you must first switch to the Edit mode (see the "Editing values" section) and then press the "E" button to save the value.
13	Enter the volume value for the upper calibration point via the FULL CALIB. parameter, here 1000 l (264 US gal) for example. (The currently measured hydrostatic pressure is displayed as height, here 4.5 m (15 ft) for example.) Note! To accept the value displayed you must first switch to the Edit mode (see the "Editing values" section) and then press the "E" button to save the value.
14	Set the value for the lower current value (4 mA) by means of the SET LRV parameter.
15	Set the value for the upper current value (20 mA) by means of the SET URV parameter.
16	Result: The measuring range is set for 0 to 1000 l (264 US gal).

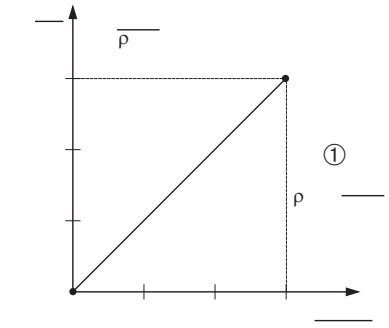

P01-xxxxxxxx-05-xx-xx-xx-029

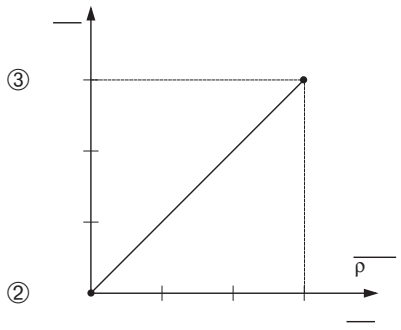

P01-xxxxxxxx-05-xx-xx-xx-030

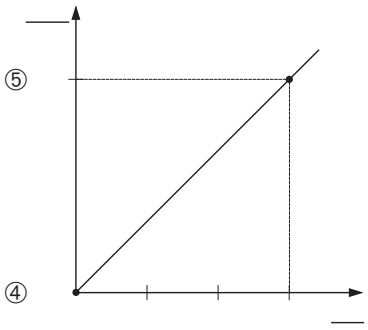

P01-xxxxxxxx-05-xx-xx-xx-031

Fig. 8: Calibration with reference pressure – wet calibration

1 See Table, Steps 10 and 11.
2 See Table, Step 12.
3 See Table, Step 13.
4 See Table, Step 14.
5 See Table, Step 15.

Note!

1. For this level mode, the measured variables %, level, volume and mass are available. → See also parameter description for OUTPUT UNIT, Page 64.

5.3.2 Calibration without reference pressure – dry calibration

Example:
In this example, the volume in a tank should be measured in litres. The maximum volume is 1000 l (264 US gal), and the maximum height is 4.5 m (15 ft). The minimum volume of 0 litres corresponds to a level of 0.5 m (1.6 ft), as the device is mounted below the level lower range value. The density of the fluid is 1 kg/dm^3.

Prerequisite:
- The measured variable is in direct proportion to the pressure.
- This is a theoretical calibration i.e. the height and volume values for the lower and upper calibration point must be known.

Note!
- See also Operating Instructions for Deltabar S (BA00270P) or Cerabar S (BA00271P), Section 6.5 "Level measurement" or Deltapilot S (BA00332P), Section 6.4 "Level measurement".
- The values entered for EMPTY CALIB./FULL CALIB., EMPTY PRESSURE/FULL PRESSURE, EMPTY HEIGHT/FULL HEIGHT and SET LRV/SET URV must have a minimum interval of 1% for the "Level Easy Height" level mode. The value will be rejected with a warning message if the values are too close together. Further limit values are not checked; i.e. the values entered must be appropriate for the sensor and the measuring task so that the measuring device can measure correctly.
- Due to the orientation of the device, there may be a shift in the measured value, i.e. when the container is empty or partly filled, the MEASURED VALUE parameter does not display zero. → To perform a position adjustment see also Page , Table 6: Position adjustment.
- For a description of the parameters mentioned, see
  – Page 45, Table 2: MEASURING MODE
  – Page 62, Table 9: LEVEL SELECTION "Level Easy Height"
- For a description of further relevant parameters, see
  – Page 96, Table 16: EXTENDED SETUP
  – Page 122, Table 28: PROCESS VALUES.

Warning!
If the measuring mode is changed, the span setting (URV) must be verified in the "Calibration" → "Basic Setup" operating menu and, if necessary, reconfigured.

	Description
1	Select the "Level" measuring mode via the MEASURING MODE parameter. On-site display: Menu path: GROUP SELECTION → MEASURING MODE Digital communication: Menu path: OPERATING MENU → SETTINGS → BASIC SETUP→ MEASURING MODE
2	If necessary, select "Level Easy Height" level mode using the LEVEL SELECTION parameter. On-site display: Menu path: GROUP SELECTION → MEASURING MODE "Level" → LEVEL SELECTION Digital communication: Menu path: OPERATING MENU → SETTINGS → BASIC SETUP → MEASURING MODE "Level" → LEVEL SELECTION
3	On-site display: Select BASIC SETUP function group. Menu path: GROUP SELECTION → OPERATING MENU → SETTINGS → BASIC SETUP

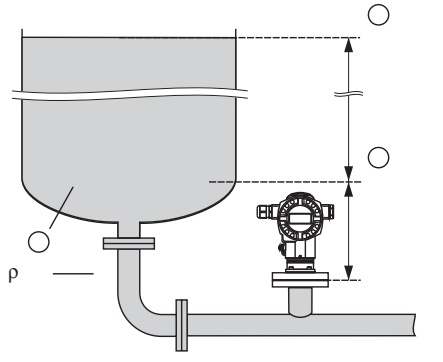

Fig. 9: Calibration without reference pressure – dry calibration

1 See Table, Steps 8 and 9.
2 See Table, Steps 10 and 11.
3 See Table, Steps 12 and 13.

	Description
4	Select a pressure unit via the PRESS. ENG. UNIT parameter, here mbar for example.
5	Select a volume unit via the OUTPUT UNIT parameter, here l (litres) for example.
6	Select a height unit via the HEIGHT UNIT parameter, here m for example.
7	Select the "Dry" option via the CALIBRATION MODE parameter.
8	Select a density unit via the DENSITY UNIT parameter, here kg/dm^3 for example.
9	Enter the density of the fluid using the ADJUST DENSITY parameter, here kg/dm^3 for example.
10	Enter the volume value for the lower calibration point via the EMPTY CALIB. parameter, here 0 l for example.
11	Enter the height value for the lower calibration point via the EMPTY HEIGHT parameter, here 0.5 m (1.6 ft) for example.
12	Enter the volume value for the upper calibration point via the FULL CALIB. parameter, here 1000 l (litres) (264 US gal) for example.
13	Enter the height value for the upper calibration point via the FULL HEIGHT parameter, here 4.5 m (15 ft) for example.
14	Set the value for the lower current value (4 mA) by means of the SET LRV parameter.
15	Set the value for the upper current value (20 mA) by means of the SET URV parameter.
16	Result: The measuring range is set for 0 to 1000 l (litres) (264 US gal).

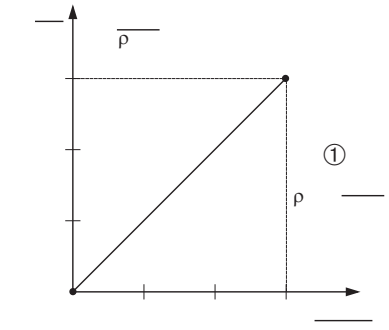

P01-xxxxxxxx-05-xx-xx-xx-029

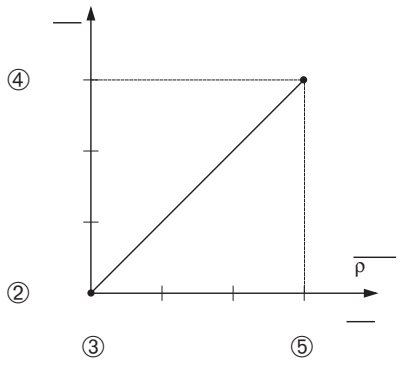

P01-xxxxxxxx-05-xx-xx-xx-032

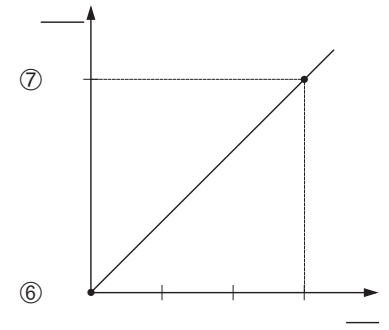

P01-xxxxxxxx-05-xx-xx-xx-033

Fig. 10: Calibration with reference pressure – wet calibration

1 See Table, Steps 8 and 9.
2 See Table, Step 10.
3 See Table, Step 11.
4 See Table, Step 12.
5 See Table, Step 13.
6 See Table, Step 14.
7 See Table, Step 15.

Note!

1. For this level mode, the measured variables %, level, volume and mass are available. → See also parameter description for OUTPUT UNIT, Page 64.

5.4 "Level Standard" level selection, "Linear" level type

5.4.1 Calibration with reference pressure – wet calibration

Example:
In this example, the level in a tank should be measured in m. The maximum level is 3 m (9.8 ft). The pressure range is set to 0 to 300 mbar (4.5 psi).

Prerequisite:
- The measured variable is in direct proportion to the pressure.
- The tank can be filled or emptied.

Note!
- See also Operating Instructions for Deltabar S (BA00270P) or Cerabar S (BA00271P), Section 6.5 "Level measurement" or Deltapilot S (BA00332P), Section 6.4 "Level measurement".
- For a description of the parameters mentioned, see
  – Page 45, Table 2: MEASURING MODE
  – Page 53, Table 6: POSITION ADJUSTMENT
  – Page 67, Table 10: BASIC SETUP
  – Page 70, Table 11: BASIC SETUP – "Linear" level type.
- For a description of further relevant parameters, see
  – Page 96, Table 16: EXTENDED SETUP
  – Page 122, Table 28: PROCESS VALUES.

Warning!
If the measuring mode is changed, the span setting (URV) must be verified in the "Calibration" → "Basic Setup" operating menu and, if necessary, reconfigured.

	Description
1	Deltabar S: before configuring the device for your application, the pressure piping must be cleaned and the device filled with fluid. See Operating Instructions BA00270P, Section 6.5.1
2	Carry out position adjustment if necessary. See Page 53, Table 6: POSITION ADJUSTMENT.
3	If necessary, select the "Level" measuring mode via the MEASURING MODE parameter. On-site display: Menu path: GROUP SELECTION → MEASURING MODE Digital communication: Menu path: OPERATING MENU → SETTINGS → BASIC SETUP → MEASURING MODE
4	If necessary, select "Level Standard" level mode using the LEVEL SELECTION parameter. On-site display: Menu path: GROUP SELECTION → MEASURING MODE "Level" → LEVEL SELECTION Digital communication: Menu path: OPERATING MENU → SETTINGS → BASIC SETUP → MEASURING MODE "Level" → LEVEL SELECTION

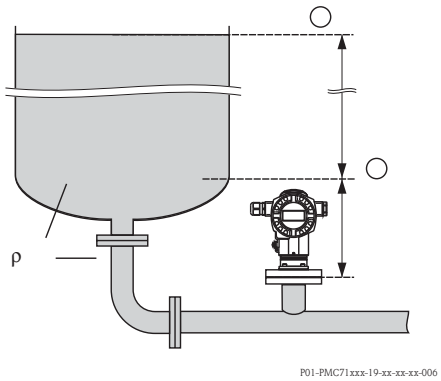

Fig. 11: Calibration with reference pressure – wet calibration

1 See table, step 11.
2 See table, step 12.

	Description
5	On-site display: Select BASIC SETUP function group. Menu path: GROUP SELECTION → OPERATING MENU → SETTINGS → BASIC SETUP
6	Select a pressure unit via the PRESS. ENG. UNIT parameter, here mbar for example.
7	Select the "Linear" option by means of the LEVEL MODE parameter.
8	Select the "Level" option by means of the LIN. MEASURAND parameter.
9	Select a level unit via the HEIGHT UNIT parameter, here m for example.
10	Select the "Wet" option by means of the CALIBRATION MODE parameter.
11	The pressure for the lower calibration point is present at the device, here 0 mbar for example.
	Select EMPTY CALIB. parameter.
	Enter the level value, here 0 m for example. Confirm the value to assign the pressure value present to the lower level value.
12	The pressure for the upper calibration point is present at the device, here 450 mbar (6.75 psi) for example.
	Select FULL CALIB. parameter.
	Enter the level value, here 3 m (9.8 ft) for example. Confirm the value to assign the pressure value present to the upper level value.
13	Set the value for the lower current value (4 mA) by means of the SET LRV parameter.
14	Set the value for the upper current value (20 mA) by means of the SET URV parameter.
15	Result: The measuring range is set for 0...3 m (9.8 ft).

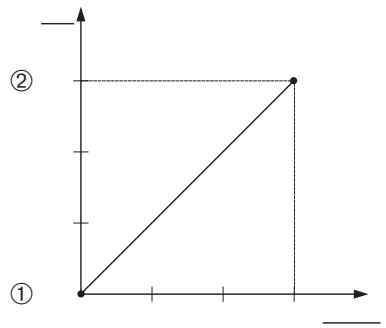

P01-xxxxxxxx-05-xx-xx-xx-034

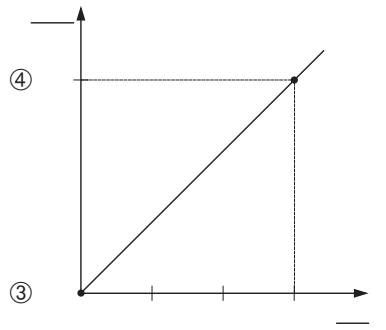

P01-xxxxxxxx-05-xx-xx-xx-014

Fig. 12: Calibration with reference pressure – wet calibration

1 See table, step 11.
2 See table, step 12.
3 See table, step 13.
4 See table, step 14.

Note!

1. You can also perform calibration with reference pressure by means of the QUICK SETUP menu. → See Page 49 ff, Table 4: QUICK SETUP menu.
2. You can also specify customer-specific units. See parameter description for PRESS. ENG. UNIT (→ Page 67), HEIGHT UNIT (→ Page 70), UNIT VOLUME (→ Page 71) and MASS UNIT (→ Page 72).
3. For this level type, the measured variables %, level, volume and mass are available. → See Page 70 ff.
4. The EMPTY PRESSURE (→ Page 74) and FULL PRESSURE (→ Page 74) parameters display the pressure values belonging to the EMPTY CALIB. and FULL CALIB. parameters.

5.4.2 Calibration without reference pressure – dry calibration

Example:
In this example, the volume in a tank should be measured in m^3. The maximum volume is 5 m^3 and the maximum height 4 m (13 ft). The density of the fluid is 1 kg/dm^3. The device is mounted below the level lower range value.

Prerequisite:
- The measured variable is in direct proportion to the pressure.
- This is a theoretical calibration, i.e. the tank volume, tank height and density of the fluid are known.

Note!
- See also Operating Instructions for Deltabar S (BA00270P) or Cerabar S (BA00271P), Section 6.5 "Level measurement" or Deltapilot S (BA00332P), Section 6.4 "Level measurement".
- Due to the orientation of the device, there may be a shift in the measured value, i.e. when the container is empty or partly filled, the MEASURED VALUE parameter does not display zero. → To perform a position adjustment see also Page , Table 6: Position adjustment.
- For a description of the parameters mentioned, see
  – Page 45, Table 2: MEASURING MODE
  – Page 67, Table 10: BASIC SETUP
  – Page 70, Table 11: BASIC SETUP – "Linear" level type.
- For a description of further relevant parameters, see
  – Page 96, Table 16: EXTENDED SETUP
  – Page 122, Table 26: PROCESS VALUES.

Warning!
If the measuring mode is changed, the span setting (URV) must be verified in the "Calibration" → "Basic Setup" operating menu and, if necessary, reconfigured.

	Description
1	Select the "Level" measuring mode via the MEASURING MODE parameter. On-site display: Menu path: GROUP SELECTION → MEASURING MODE Digital communication: Menu path: OPERATING MENU → SETTINGS → BASIC SETUP → MEASURING MODE
2	If necessary, select "Level Standard" level mode using the LEVEL SELECTION parameter. On-site display: Menu path: GROUP SELECTION → MEASURING MODE "Level" → LEVEL SELECTION Digital communication: Menu path: OPERATING MENU → SETTINGS → BASIC SETUP → MEASURING MODE "Level" → LEVEL SELECTION
3	On-site display: Select BASIC SETUP function group. Menu path: GROUP SELECTION → OPERATING MENU → SETTINGS → BASIC SETUP

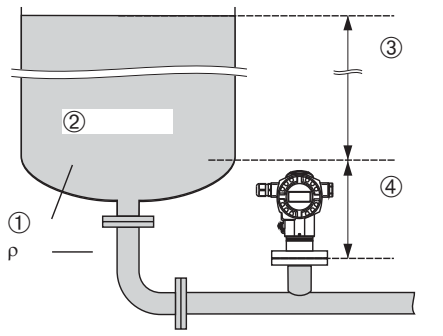

Fig. 13: Calibration without reference pressure – dry calibration

1 See table, step 9.
2 See table, step 10.
3 See table, step 11.
4 See table, step 12.

	Description
4	Select a pressure unit via the PRESS. ENG. UNIT parameter, here mbar for example.
5	Select the "Linear" option by means of the LEVEL MODE parameter.
6	Select the "Volume" option by means of the LIN. MEASURAND parameter.
7	Select a volume unit via the UNIT VOLUME parameter, here m^3 for example.
8	Select the "Dry" option by means of the CALIBRATION MODE parameter. See also the following note, point 3.
9	Enter the value for density via the ADJUST DENSITY parameter, here 1 kg/dm^3 for example.
10	Enter the tank volume via the TANK VOLUME parameter, here 5 m^3 for example.
11	Enter the tank height via the TANK HEIGHT parameter, here 4 m (13 ft) for example.
12	Enter the level offset via the ZERO POSITION parameter, here –0.5 m (-1,6 ft) for example.
13	Set the value for the lower current value (4 mA) by means of the SET LRV parameter.
14	Set the value for the upper current value (20 mA) by means of the SET URV parameter.
15	Result: The measuring range is set for 0...5 m^3.

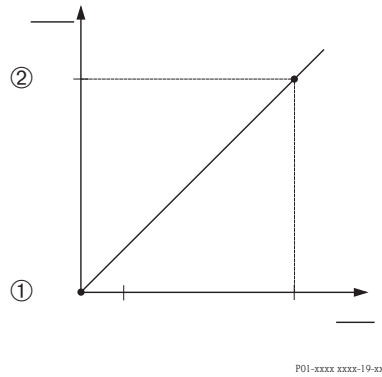

Fig. 14: Current output calibration

5 See table, step 13.
6 See table, step 14.

Note!

1. For this level type, the measured variables %, level, volume and mass are available.
→ See Page 70 ff.
2. You can also specify customer-specific units. See parameter description for PRESS. ENG. UNIT (→ Page 67), HEIGHT UNIT (→ Page 70), UNIT VOLUME (→ Page 71) and MASS UNIT (→ Page 72).
3. A level value is assigned to the lower and upper current value by means of the SET LRV (→ Page 77) and SET URV (→ Page 77) parameters respectively. Once you have selected the "Dry" calibration mode, the error message A711 "LRV or URV out of edit limits" can appear. The error message goes out as soon as level values which are within the editing limits are entered for the SET LRV and SET URV parameters.
By means of the ENTER RESET CODE parameter (→ Page 126), you can use the code 2710 to automatically set the SET LRV and SET URV parameters to level values which are within the editing limits.

5.5 "Level Standard" level selection, "Pressure Linearized" level type

5.5.1 Semiautomatic entry of the linearisation table

Example:
In this example, the volume in a tank with a conical outlet should be measured in m^3.

Prerequisite:
- The tank can be filled. The linearisation characteristic must rise continuously.
- A minimum gap of 0.5 % of the distance between two points must be maintained. Spans for the "Pressure linearized" option: HYDR. PRESS MAX. – HYDR. PRESS MIN.; TANK CONTENT MAX. – TANK CONTENT MIN. Spans for the "Height linearized" option: LEVEL MAX – LEVEL MIN; TANK CONTENT MAX. – TANK CONTENT MIN.

Note!
- See also Operating Instructions for Deltabar S (BA00270P) or Cerabar S (BA00271P), Section 6.5 "Level measurement" or Deltapilot S (BA00332P), Section 6.4 "Level measurement".
- For a description of the parameters mentioned, see
  – Page 45, Table 2: MEASURING MODE
  – Page 53, Table 6: POSITION ADJUSTMENT
  – Page 67, Table 10: BASIC SETUP
  – Page 78, Table 11: BASIC SETUP – "Pressure Linearized" level type
  – Page 100, Table 18: LINEARISATION – on-site operation
  – Page 104, Table 19: LINEARISATION – Digital communication.
- For a description of further relevant parameters, see
  – Page 96, Table 16: EXTENDED SETUP
  – Page 122, Table 26: PROCESS VALUES.

Warning!
If the measuring mode is changed, the span setting (URV) must be verified in the "Calibration" → "Basic Setup" operating menu and, if necessary, reconfigured.

	Description	
1	Deltabar S: before configuring the device for your application, the pressure piping must be cleaned and filled with fluid. See Operating Instructions BA00270P, Section 6.5.1.	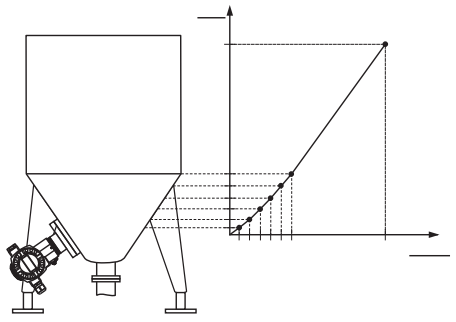 P01-PMP75xxx-19-xx-xx-xx-002
2	Carry out position adjustment if necessary. See Page 53, Table 6: POSITION ADJUSTMENT.	
	Carry out basic setup:	
3	If necessary, select the "Level" measuring mode via the MEASURING MODE parameter. On-site display: Menu path: GROUP SELECTION → MEASURING MODE Digital communication: Menu path: OPERATING MENU → SETTINGS → BASIC SETUP → MEASURING MODE	
4	If necessary, select "Level Standard" level mode using the LEVEL SELECTION parameter. On-site display: Menu path: GROUP SELECTION → MEASURING MODE "Level" → LEVEL SELECTION Digital communication: Menu path: OPERATING MENU → SETTINGS → BASIC SETUP → MEASURING MODE "Level" → LEVEL SELECTION	

	Description	
5	On-site display: Select BASIC SETUP function group. Menu path: GROUP SELECTION → OPERATING MENU → SETTINGS → BASIC SETUP	
6	Select a pressure unit via the PRESS. ENG. UNIT parameter, here mbar for example.	
7	Select the "Pressure Linearized" option by means of the LEVEL MODE parameter. See also the following note, point 3.	
8	Select the "Volume" option by means of the LINd. MEASURAND parameter.	
9	Select a volume unit via the UNIT VOLUME parameter, here m^3 for example.	
10	Select HYDR. PRESS MIN. parameter.	
	Enter the minimum hydrostatic pressure to be expected, here 0 mbar for example.	
11	Select HYDR. PRESS MAX .	
	Enter the maximum hydrostatic pressure to be expected.	
	Carry out linearisation:	
12	Change the function group: Menu path: (GROUP SELECTION →) OPERATING MENU → SETTINGS → LINEARISATION	
13	Select TANK CONTENT MIN parameter.	
	Specify the minimum tank contents to be expected, here 0 m^3 for example.	
14	Select TANK CONTENT MAX parameter.	
	Specify the maximum tank contents to be expected, here 3.5 m^3 for example.	
15	On-site display: Select the "Editor table" option by means of the TABLE SELECTION parameter.	
16	Select the "Semiautomatic" option by means of the LIN. EDIT MODE parameter.	
17	Select the "New table" option by means of the EDITOR TABLE parameter.	

	Description	
18	Enter linearisation table (min. 2 points, max. 32 points).	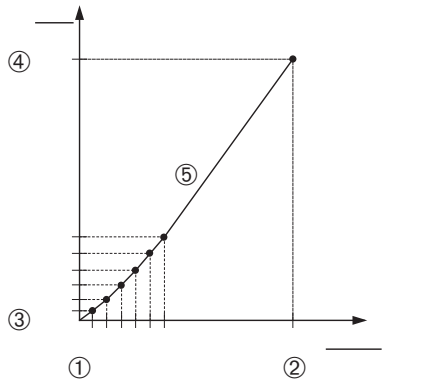
	Fill the tank to the height of the 1st point.	
	LINE-NUMB: confirm value displayed.	
	X-VAL.: the hydrostatic pressure present is displayed. On-site display, Digital communication: The X-VAL. displayed is saved by confirming the Y-value. See following line, Y-VAL. HART handheld terminal: Confirm X-VAL. displayed.	
	Y-VAL.: enter the volume value, here 0 m^3 for example, and confirm the value.	
19	On-site display: If you want to enter another point for the linearisation table, select the "Next point" option and enter the point as described in step 18. If you want to finish entering the values and activate the linearisation table, select the "Accept input table" option. Digital communication: You can enter further points for the linearisation table as explained in step 18. Once all the points have been entered, the table must be activated by means of the TAB. ACTIVATE parameter.	
19	Result: The linearisation table has been entered.	

P01-xxxxxxxx-05-xx-xx-xx-015

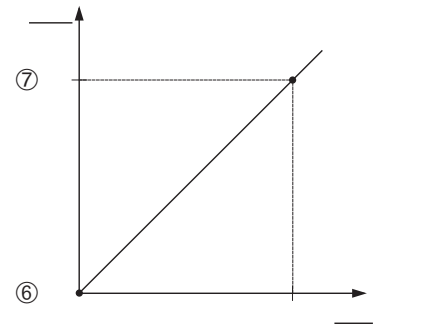

P01-xxxxxxxx-05-xx-xx-xx-016

Fig. 15: Semiautomatic entry of the linearisation table

1 See table, step 10.
2 See table, step 11.
3 See table, step 13.
4 See table, step 14.
5 See table, steps 15 – 19.
6 See the following note, point 4.
7 See the following note, point 4

Note!

1. For this level type, the measured variables %, volume and mass are available.
→ See Page 78 ff.
2. You can also specify customer-specific units. See parameter description for PRESS. ENG. UNIT (→ Page 67), HEIGHT UNIT (→ Page 79), UNIT VOLUME (→ Page 79) and MASS UNIT (→ Page 80).

3. Once you have selected the "Pressure Linearized" level type, the warning message "W710 Set span too small. Not allowed." can appear. At this stage the linearisation table already consists of two points as standard. It could be the case that the 2nd value, and thus the highest X-VAL. of the linearisation table, is smaller than the minimum span permitted (→ MINIMUM SPAN, Page 119). The message goes out as soon as the highest X-VAL. is larger than the minimum span.
4. A level value is assigned to both the lower and upper current value with the SET LRV (→ Page 98) and SET URV (→ Page 98) parameters. If you enter values for TANK CONTENT MIN (→ Page 101 or 104) and TANK CONTENT MAX (→ Page 101 or 105), the SET LRV and SET URV parameters are also changed. If you want to assign values other than those for TANK CONTENT MIN and TANK CONTENT MAX to the lower and upper current values, the desired values must be entered for SET LRV and SET URV.

5.5.2 Manual entry of the linearisation table

Example:
In this example, the volume in a tank with a conical outlet should be measured in m^3.

Prerequisite:
- This is a theoretical calibration, i.e. the points for the linearisation table are known.
- A minimum gap of 0.5 % of the distance between two points must be maintained. Spans for the "Pressure linearized" option: HYDR. PRESS MAX. – HYDR. PRESS MIN.; TANK CONTENT MAX. – TANK CONTENT MIN. Spans for the "Height linearized" option: LEVEL MAX – LEVEL MIN; TANK CONTENT MAX. – TANK CONTENT MIN.

Note!
- See also Operating Instructions for Deltabar S (BA00270P) or Cerabar S (BA00271P), Section 6.5 "Level measurement" or Deltapilot S (BA00332P), Section 6.4 "Level measurement".
- For a description of the parameters mentioned, see
  – Page 45, Table 2: MEASURING MODE
  – Page 53, Table 6: POSITION ADJUSTMENT
  – Page 67, Table 10: BASIC SETUP
  – Page 78, Table 12: BASIC SETUP – "Pressure Linearized" level type
  – Page 100, Table 18: LINEARISATION – on-site operation
  – Page 104, Table 19: LINEARISATION – Digital communication.
- For a description of further relevant parameters, see
  – Page 96, Table 16: EXTENDED SETUP
  – Page 122, Table 28: PROCESS VALUES.

Warning!
If the measuring mode is changed, the span setting (URV) must be verified in the "Calibration" → "Basic Setup" operating menu and, if necessary, reconfigured.

	Description	
1	Perform basic setup as per Section 5.3.1, steps 2 to 10.	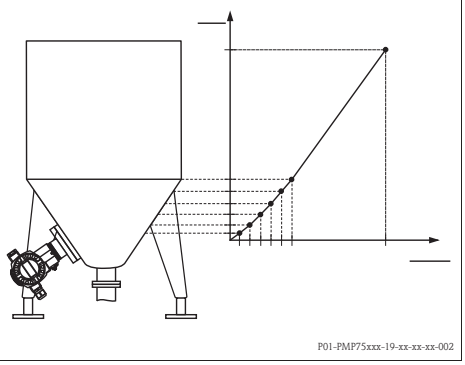 P01-PMP75xxx-19-xx-xx-xx-002
	Carry out linearisation:	
2	Change the function group: Menu path: (GROUP SELECTION →) OPERATING MENU → SETTINGS → LINEARISATION	
3	Select TANK CONTENT MIN parameter .	
	Specify the minimum tank contents to be expected, here 0 m^3 for example.	
4	Select TANK CONTENT MAX parameter .	
	Specify the maximum tank contents to be expected, here 3.5 m^3 for example.	

	Description	
5	On-site display: Select the "Editor table" option by means of the TABLE SELECTION parameter.	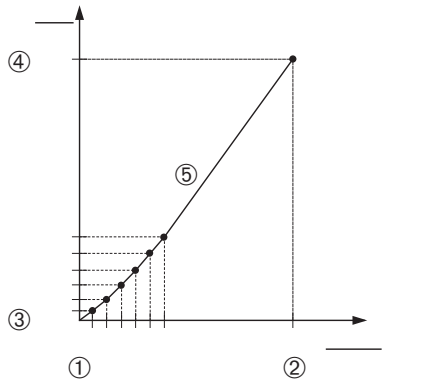 P01-xxxxxxxx-05-xx-xx-xx-015 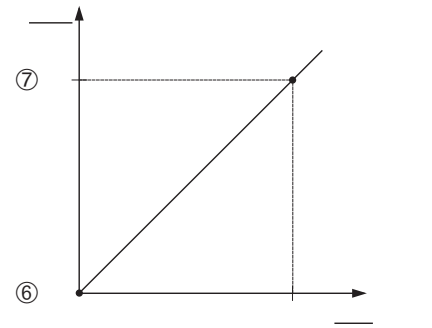 P01-xxxxxxxx-05-xx-xx-xx-016
6	Select the "Manual" option by means of the LIN. EDIT MODE parameter.	
7	Select the "New table" option by means of the EDITOR TABLE parameter.	
8	Enter linearisation table (min. 2 points, max. 32 points).	
	LINE-NUMB: confirm value displayed.	
	X-VAL.: enter the pressure value and confirm.	
	Y-VAL.: enter the volume value, here 0 m^3 for example, and confirm.	
9	On-site display If you want to enter another point for the linearisation table, select the "Next point" option and enter the point as described in step 8. If you want to finish entering the values and activate the linearisation table, select the "Accept input table" option. Digital communication: You can enter further points for the linearisation table as explained in step 8. Once all the points have been entered, the table must be activated by means of the TAB. ACTIVATE parameter.	
10	Result: The linearisation table has been entered.	

Fig. 16: Manual entry of the linearisation table

1 See Section 5.3.1, table, step 9.
2 See Section 5.3.1, table, step 10.
3 See table, step 3.
4 See table, step 4.
5 See table, steps 5 – 9.
6 See the following note, point 4.
7 See the following note, point 4.

Note!

1. For this level type, the measured variables %, volume and mass are available.
→ See Page 78 ff.
2. You can also specify customer-specific units. See parameter description for PRESS. ENG. UNIT (→ Page 67), HEIGHT UNIT (→ Page 79), UNIT VOLUME (→ Page 79) and MASS UNIT (→ Page 80).
3. Once you have selected the "Pressure Linearized" level type, the warning message "W710 Set span too small. Not allowed." can appear. At this stage the linearisation table already consists of two points as standard. It could be the case that the 2nd value, and thus the highest X-VAL. of the linearisation table, is smaller than the minimum span permitted (→ MINIMUM SPAN, Page 119). The message goes out as soon as the highest X-VAL. is larger than the minimum span.
4. A level value is assigned to both the lower and upper current value with the SET LRV (→ Page 98) and SET URV (→ Page 98) parameters. If you enter values for TANK CONTENT MIN (→ Page 101 or 104) and TANK CONTENT MAX (→ Page 101 or 105), the SET LRV and SET URV parameters are also changed. If you want to assign values other than those for TANK CONTENT MIN and TANK CONTENT MAX to the lower and upper current values, the desired values must be entered for SET LRV and SET URV.

5.6 "Level Standard" level selection, "Height Linearized" level type

5.6.1 Wet calibration and semiautomatic entry of the linearisation table

Example:
In this example, the height and the volume should be measured at the same time.

Prerequisite:
- The tank can be filled. The linearisation characteristic must rise continuously.
- A minimum gap of 0.5 % of the distance between two points must be maintained. Spans for the "Pressure linearized" option: HYDR. PRESS MAX. – HYDR. PRESS MIN.; TANK CONTENT MAX. – TANK CONTENT MIN. Spans for the "Height linearized" option: LEVEL MAX – LEVEL MIN; TANK CONTENT MAX. – TANK CONTENT MIN.

Note!
- See also Operating Instructions for Deltabar S (BA00270P) or Cerabar S (BA00271P), Section 6.5 "Level measurement" or Deltapilot S (BA00332P), Section 6.4 "Level measurement".
- For a description of the parameters mentioned, see
  – Page 45, Table 2: MEASURING MODE
  – Page 53, Table 6: POSITION ADJUSTMENT
  – Page 67, Table 10: BASIC SETUP
  – Page 83, Table 13: BASIC SETUP – "Height Linearized" level type
  – Page 100, Table 18: LINEARISATION – on-site operation
  – Page 104, Table 19: LINEARISATION – Digital communication.
- For a description of further parameters, see
  – Page 96, Table 16: EXTENDED SETUP
  – Page 122, Table 28: PROCESS VALUES.

Warning!
If the measuring mode is changed, the span setting (URV) must be verified in the "Calibration" → "Basic Setup" operating menu and, if necessary, reconfigured.

	Description	
1	Deltabar S: before configuring the device for your application, the pressure piping must be cleaned and filled with fluid. See Operating Instructions BA00270P, Section 6.5.1	
2	Carry out position adjustment if necessary. See Page 53, Table 6: POSITION ADJUSTMENT.	
	Perform calibration for the 1st measured variable:	
3	If necessary, select the "Level" measuring mode via the MEASURING MODE parameter. On-site display: Menu path: GROUP SELECTION → MEASURING MODE Digital communication: Menu path: OPERATING MENU → SETTINGS → BASIC SETUP → MEASURING MODE	
4	If necessary, select "Level Standard" level mode using the LEVEL SELECTION parameter. On-site display: Menu path: GROUP SELECTION → MEASURING MODE "Level" → LEVEL SELECTION Digital communication: Menu path: OPERATING MENU → SETTINGS → BASIC SETUP → MEASURING MODE "Level" → LEVEL SELECTION	

	Description
5	On-site display: Select BASIC SETUP function group. Menu path: GROUP SELECTION →OPERATING MENU → SETTINGS → BASIC SETUP
6	Select a pressure unit via the PRESS. ENG. UNIT parameter, here mbar for example.
7	Select the "Height Linearized" option by means of the LEVEL MODE parameter.
8	Select the "Height + Volume" option by means of the COMB. MEASURAND parameter.
9	Select the unit for the 1st measured value via the HEIGHT UNIT parameter, here m for example.
10	Select the unit for the 2nd measured variable via the UNIT VOLUME parameter, here m3 for example.
11	Select LEVEL MIN parameter.
	Enter the minimum level to be expected, here 0 m for example.
12	Select LEVEL MAX parameter.
	Enter the maximum level to be expected, here 3 m (9.8 ft) for example.
13	Select the "Wet" option via the CALIBRATION MODE parameter (calibration mode for the 1st measured variable).
14	The pressure for the lower calibration point is present at the device, here 0 mbar for example.
	Select EMPTY CALIB. parameter.
	Enter the level value, here 0 m for example. Confirm the value to assign the pressure value present to the lower level value.
15	The pressure for the upper calibration point is present at the device, here 300 mbar (4.5 psi) for example.
	Select FULL CALIB. parameter.
	Enter the level value, here 3 m (9.8 ft) for example. Confirm the value to assign the pressure value present to the upper level value.
16	Result: The calibration for the 1st measured variable is carried out.

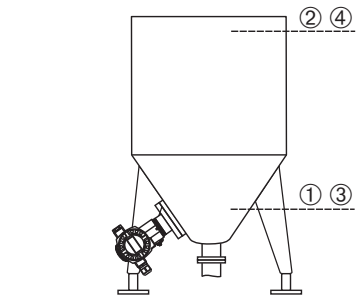

P01-PMP75xxx-19-xx-xx-xx-004

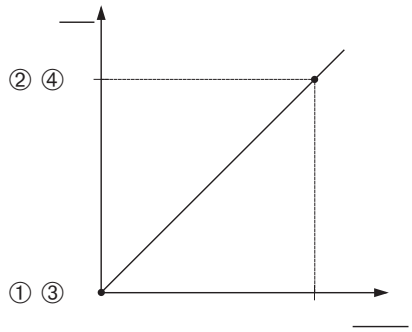

P01-xxxxxxxx-05-xx-xx-xx-017

Fig. 17: Calibrating the 1st measured variable

1 See table, step 11.
2 See table, step 12.
3 See table, step 14.
4 See Table, step 15.

	Description
	Perform linearisation (calibration for the 2nd measured variable)
17	Change the function group. Menu path: (GROUP SELECTION →) OPERATING MENU → SETTINGS → LINEARISATION
18	Select TANK CONTENT MIN parameter.
	Specify the minimum tank contents to be expected, here 0 m^3 for example.
19	Select TANK CONTENT MAX parameter.
	Specify the maximum tank contents to be expected, here 5 m^3 for example.
20	On-site display: Select the "Editor table" option by means of the TABLE SELECTION parameter.
21	Select the "Semiautomatic" option by means of the LIN. EDIT MODE parameter.
22	Select the "New table" option by means of the EDITOR TABLE parameter.
23	Enter linearisation table (min. 2 points, max. 32 points).
	Fill the tank to the height of the 1st point.
	LINE-NUMB: confirm value displayed.
	X-VAL.: the hydrostatic pressure present is measured and converted to the corresponding level and displayed. On-site display, Digital communication: The X-VAL. displayed is saved by confirming the Y-value. See following line, Y-VAL. HART handheld terminal: Confirm X-VAL. displayed.
	Y-VAL.: enter the volume value, here 0 m^3 for example, and confirm the value.
24	On-site display If you want to enter another point for the linearisation table, select the "Next point" option and enter the point as described in step 23. If you want to finish entering the values and activate the linearisation table, select the "Accept input table" option. Digital communication: You can enter further points for the linearisation table as explained in step 23. Once all the points have been entered, the table must be activated by means of the TAB. ACTIVATE parameter.
25	Result: – The linearisation table has been entered. – The measured value display and the TANK CONTENT parameter display the 2nd measured value (here the volume). – The LEVEL BEFORE LIN parameter displays the 1st measured value (here the height). See also the following note, point 5.

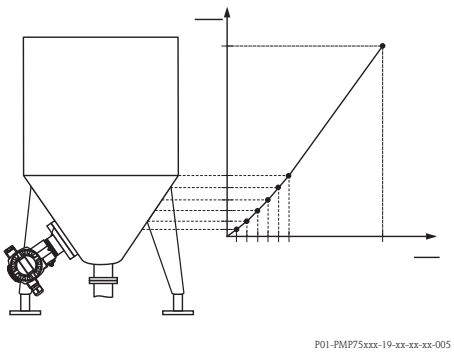

P01-PMP75xxx-19-xx-xx-xx-005

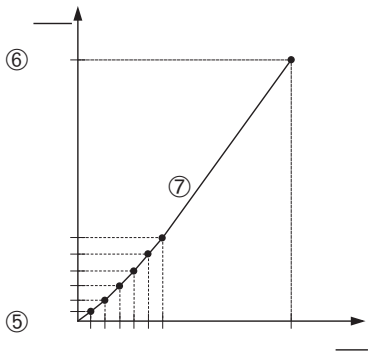

P01-xxxxxxxx-05-xx-xx-xx-018

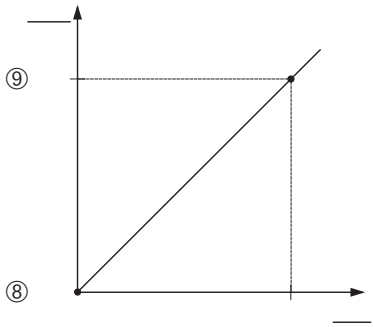

P01-xxxxxxxx-05-xx-xx-xx-019

Fig. 18: Calibrating the 2nd measured variable

5 See table, step 18.
6 See table, step 19.
7 See table, steps 20 – 24.
8 See the following note, point 4.
9 See the following note, point 4.

Note!

1. For this level type, the measured variables "Height + %", "Height + Volume", "Height + Mass", "%-Height + %", "%-Height + Volume" and "%-Height + Mass" are available. → See Page 79 ff.
2. You can also specify customer-specific units. See parameter description for PRESS. ENG. UNIT (→ Page 67), HEIGHT UNIT (→ Page 83), UNIT VOLUME (→ Page 84) and MASS UNIT (→ Page 85).
3. Once you have selected the "Pressure Linearized" level type, the warning message "W710 Set span too small. Not allowed." can appear. At this stage the linearisation table already consists of two points as standard. It could be the case that the 2nd value, and thus the highest X-VAL. of the linearisation table, is smaller than the minimum span permitted (→ MINIMUM SPAN, Page 119). The message goes out as soon as the highest X-VAL. is larger than the minimum span.
4. A level value is assigned to both the lower and upper current value with the SET LRV (→ Page 98) and SET URV (→ Page 98) parameters.
   You can use the ASSIGN CURRENT parameter (→ Page 113) to specify whether the current output should depict the 1st or 2nd measured variable. Depending on the setting of the ASSIGN CURRENT parameter, enter the following values for SET LRV and SET URV:
   – ASSIGN CURRENT = tank content (factory setting) ⇒ %-value, volume value or mass value
   – ASSIGNMENT = height ⇒ level value

   The following applies for the setting ASSIGN CURRENT "Tank content":
   If you enter values for TANK CONTENT MIN (→ Page 101 or 104) and TANK CONTENT MAX (→ Page 101 or 105), the SET LRV and SET URV parameters are also changed. If you want to assign values other than those for TANK CONTENT MIN and TANK CONTENT MAX to the lower and upper current values, the desired values must be entered for SET LRV and SET URV.

   The following applies for the setting ASSIGN CURRENT "Height":
   If you enter values for LEVEL MIN (→ Page 86) and LEVEL MAX (→ Page 86), the SET LRV and SET URV parameters are also changed. If you want to assign values other than those for LEVEL MIN and LEVEL MAX to the lower and upper current values, the desired values must be entered for SET LRV and SET URV.

5. You can use the MENU DESCRIPTOR parameter (→ Page 110) to specify which measured value should be displayed on the on-site display.

5.6.2 Dry calibration and manual entry of the linearisation table

Example:
In this example, the height and the volume should be measured at the same time.

Prerequisite:
- This is a theoretical calibration, i.e. the points for the linearisation table are known.
- A minimum gap of 0.5 % of the distance between two points must be maintained. Spans for the "Pressure linearized" option: HYDR. PRESS MAX. – HYDR. PRESS MIN.; TANK CONTENT MAX. – TANK CONTENT MIN. Spans for the "Height linearized" option: LEVEL MAX – LEVEL MIN; TANK CONTENT MAX. – TANK CONTENT MIN.

Note!
- See also Operating Instructions for Deltabar S (BA00270P) or Cerabar S (BA00271P), Section 6.5 "Level measurement" or Deltapilot S (BA00332P), Section 6.4 "Level measurement".
- For a description of the parameters mentioned, see
  – Page 45, Table 2: MEASURING MODE
  – Page 67, Table 10: BASIC SETUP
  – Page 83, Table 12: BASIC SETUP – "Height Linearized" level type
  – Page 100, Table 18: LINEARISATION – on-site operation
  – Page 104, Table 19: LINEARISATION – Digital communication.
- For a description of further parameters, see
  – Page 96, Table 16: EXTENDED SETUP
  – Page 122, Table 28: PROCESS VALUES.

Warning!
If the measuring mode is changed, the span setting (URV) must be verified in the "Calibration" → "Basic Setup" operating menu and, if necessary, reconfigured.

	Description	
	Perform calibration for the 1st measured variable:	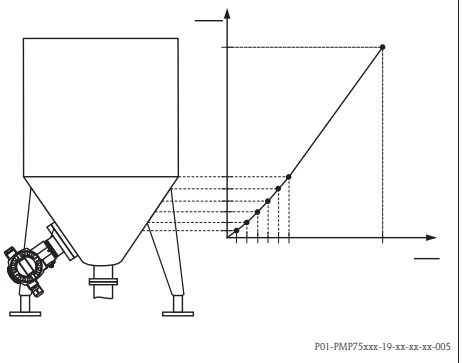 P01-PMP75xxx-19-xx-xx-xx-005
1	Perform calibration as per Section 5.4.1, steps 3 to 12.	
2	Select the "Dry" option via the CALIBRATION MODE parameter (calibration mode for the 1st measured variable).	
3	Enter the density of the fluid via the ADJUST DENSITY parameter, here 1 kg/dm^3 for example.	
4	If necessary, enter a level offset via the ZERO POSITION parameter, here 0 m for example.	
5	Result: The calibration for the 1st measured variable is carried out.	

	Description
	Perform linearisation (calibration for the 2nd measured variable)
6	Change the function group. Menu path: (GROUP SELECTION →) OPERATING MENU → SETTINGS → LINEARISATION
7	Select TANK CONTENT MIN parameter.
	Specify the minimum tank contents to be expected, here 0 m^3 for example.
8	Select TANK CONTENT MAX parameter.
	Specify the maximum tank contents to be expected, here 5 m^3 for example.
9	On-site display: Select the "Editor table" option by means of the TABLE SELECTION parameter.
10	Select the "Manual" option by means of the LIN. EDIT MODE parameter.
11	Select the "New table" option by means of the EDITOR TABLE parameter.
12	Enter linearisation table (min. 2 points, max. 32 points).
	LINE-NUMB: confirm value displayed.
	X-VAL.: enter the height value and confirm.
	Y-VAL.: enter the volume value, here 0 m^3 for example, and confirm.
13	On-site display If you want to enter another point for the linearisation table, select the "Next point" option and enter the point as described in step 12. If you want to finish entering the values and activate the linearisation table, select the "Accept input table" option. Digital communication: You can enter further points for the linearisation table as explained in step 12. Once all the points have been entered, the table must be activated by means of the TAB. ACTIVATE parameter.
14	Result: – The linearisation table has been entered. – The measured value display and the TANK CONTENT parameter display the 2nd measured value (here the volume). – The LEVEL BEFORE LIN parameter displays the 1st measured value (here the height). See also the following note, point 5.

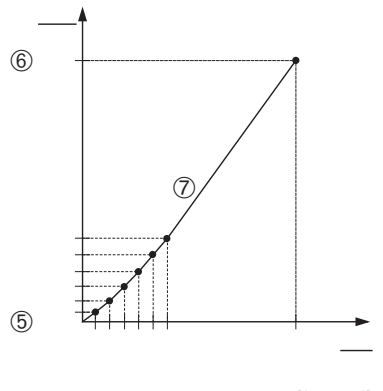

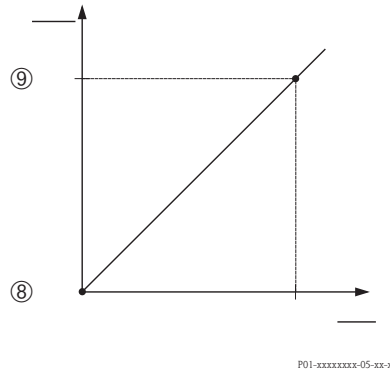

Fig. 19: Calibrating the 2nd measured variable

5 See table, step 7.
6 See table, step 8.
7 See table, steps 9 – 13.
8 See the following note, point 4.
9 See the following note, point 4.

Note!

1. For this level type, the measured variables "Height + %", "Height + Volume", "Height + Mass", "%-Height + %", "%-Height + Volume" and "%-Height + Mass" are available. → See Page 79 ff.
2. You can also specify customer-specific units. See parameter description for PRESS. ENG. UNIT (→ Page 67), HEIGHT UNIT (→ Page 83), UNIT VOLUME (→ Page 84) and MASS UNIT (→ Page 85).
3. Once you have selected the "Pressure Linearized" level type, the warning message "W710 Set span too small. Not allowed." can appear. At this stage the linearisation table already consists of two points as standard. It could be the case that the 2nd value, and thus the highest X-VAL. of the linearisation table, is smaller than the minimum span permitted (→ MINIMUM SPAN, Page 119). The message goes out as soon as the highest X-VAL. is larger than the minimum span.

4. A level value is assigned to both the lower and upper current value with the SET LRV (→ Page 98) and SET URV (→ Page 98) parameters.
   You can use the ASSIGN CURRENT parameter (→ Page 113) to specify whether the current output should depict the 1st or 2nd measured variable. Depending on the setting of the ASSIGN CURRENT parameter, enter the following values for SET LRV and SET URV:
   – ASSIGN CURRENT = tank content (factory setting) ⇒ %- value, volume value or mass value
   – ASSIGNMENT = height ⇒ level value

   The following applies for the setting ASSIGN CURRENT "Tank content":
   If you enter values for TANK CONTENT MIN (→ Page 101 or 104) and TANK CONTENT MAX (→ Page 101 or 105), the SET LRV and SET URV parameters are also changed. If you want to assign values other than those for TANK CONTENT MIN and TANK CONTENT MAX to the lower and upper current values, the desired values must be entered for SET LRV and SET URV.

   The following applies for the setting ASSIGN CURRENT "Height":
   If you enter values for LEVEL MIN (→ Page 86) and LEVEL MAX (→ Page 86), the SET LRV and SET URV parameters are also changed. If you want to assign values other than those for LEVEL MIN and LEVEL MAX to the lower and upper current values, the desired values must be entered for SET LRV and SET URV.

5. You can use the MENU DESCRIPTOR parameter (→ Page 110) to specify which measured value should be displayed on the on-site display.

6 Flow measurement

6.1 Calibration

Example:
In this example, a volume flow should be measured in m^3/s.

Note!
- The "Flow measurement" measuring mode is only available for the Deltabar S differential pressure transmitter.
- See also Operating Instructions BA00270P Deltabar S, Section 6.4 "Flow measurement".
- For a description of the parameters mentioned, see
  - Page 45, Table 2: MEASURING MODE
  - Page 53, Table 6: POSITION ADJUSTMENT
  - Page 91 ff, Table 12: BASIC SETUP
  - Page 98 ff, Table 15: EXTENDED SETUP.
- For a description of further parameters, see
  - Page 98, Table 15: EXTENDED SETUP
  - Page 123, Table 29: PROCESS VALUES.

Warning!
If the measuring mode is changed, the span setting (URV) must be verified in the "Calibration" → "Basic Setup" operating menu and, if necessary, reconfigured.

	Description
1	Before configuring the device for your application, the pressure piping must be cleaned and the device filled with fluid. See Operating Instructions BA00270P, Section 6.4.1.
2	Carry out position adjustment if necessary. See Page 53, Table 6: POSITION ADJUSTMENT.
3	If necessary, select the "Flow" measuring mode via the MEASURING MODE parameter. On-site display: Menu path: GROUP SELECTION → MEASURING MODE Digital communication: Menu path: OPERATING MENU → SETTINGS → BASIC SETUP → MEASURING MODE
4	On-site display: Select BASIC SETUP function group. Menu path: GROUP SELECTION → OPERATING MENU → SETTINGS → BASIC SETUP
5	Select a pressure unit via the PRESS. ENG. UNIT parameter, here mbar for example.
6	Select the "Volume p. cond." option by means of the FLOW-MEAS. TYPE parameter.
7	Select a flow unit via the UNIT FLOW parameter, here m^3/h for example.
8	Select MAX. FLOW parameter.
	Enter the maximum flow value of the primary element, here 6000 m^3/h for example. See also layout sheet of primary element.
9	Select MAX PRESS. FLOW parameter.
	Enter the maximum pressure, here 400 mbar (6 psi) for example. See also layout sheet of primary element.
10	Result: The device is configured for flow measurement.

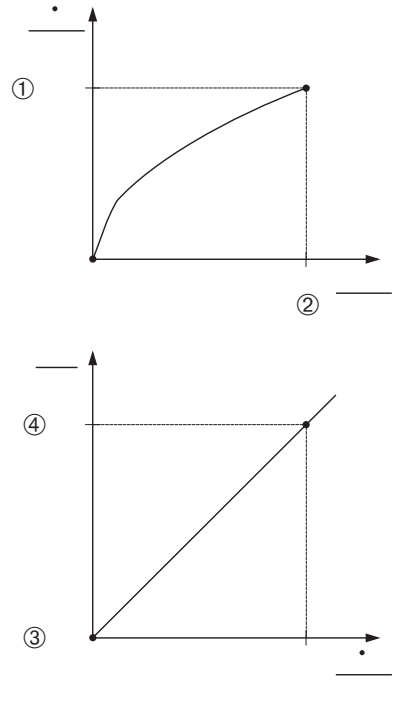

Fig. 20: Flow measurement calibration

1 See table, step 8.
2 See table, step 9.
3 See the following note, point 4.
4 See the following note, point 4.

Note!

1. You can also perform calibration by means of the QUICK SETUP menu. → See Page 52 ff, Table 5: QUICK SETUP menu.
2. Using the FLOW-MEAS. TYPE parameter, you can choose between the following flow types:
   – Volume p. cond. (volume under operating conditions)
   – Gas norm. cond. (norm volume under norm conditions in Europe: 1013.25 mbar and 273.15 K (0°C))
   – Gas std. cond. (standard volume under standard conditions in USA: 1013.25 mbar (14.7 psi) and 288. 15 K (15°C/59°F))
   – Mass
3. Depending on the flow type selected, you can choose between various units. You can also specify a customer-specific unit.
   See parameter description for PRESS. ENG. UNIT (→ Page 92), UNIT FLOW (→ Page 93), NORM FLOW UNIT (→ Page 93), STD. FLOW UNIT (→ Page 94) and MASS FLOW UNIT (→ Page 94).
4. A flow value or a pressure value is assigned to both the lower and upper current value with the SET LRV (→ Page 99) and SET URV (→ Page 100) parameters.

You can use the LINEAR/SQROOT parameter (→ Page 113) to specify whether the current output should depict the linear pressure signal or the Flow (square root) flow signal. Depending on the setting of the LINEAR/SQROOT parameter, enter the following values for SET LRV and SET URV:
– LINEAR/SQROOT = Flow (square root) (factory setting) ⇒ flow value
– LINEAR/SQROOT = Differential pres. ⇒ pressure value

The following applies for the setting LINEAR/SQROOT "Flow (square root)":
As per the factory settings, the lower current value is set to equal zero and the upper current value is set to the MAX. FLOW value. If you enter a value for MAX. FLOW, the SET URV parameter is also changed. If you want to assign values other than zero and MAX. FLOW to the lower and upper current values, the desired values must be entered for SET LRV and SET URV.

The following applies for the setting LINEAR/SQROOT "Differential pres.":
As per the factory settings, the lower current value is set to equal zero and the upper current value is set to the MAX. PRESS. FLOW value. If you enter a value for MAX PRESS. FLOW, the SET URV parameter is also changed. If you want to assign values other than zero and MAX PRESS. FLOW to the lower and upper current values, the desired values must be entered for SET LRV and SET URV.

5. In the lower measuring range, small flow quantities (creepages) can lead to large measured value fluctuations. You can activate low flow cut-off via the LOW FLOW CUT-OFF parameter (→ Page 99).

6.2 Totalizers

Example:
In this example, the volume flow should be totalised and displayed in the unit m^3E^3. Negative flows should be added to the flow rate.

Note!
- For a description of the parameters mentioned, see
  - Page 107 ff, Table 18: TOTALIZER SETUP
  - Page 123 ff, Table 29: PROCESS VALUES
- Totalizer 1 can be reset. Totalizer 2 cannot be reset.

	Description
1	Calibrate the device as per Section 6.1.
2	Change the function group: (GROUP SELECTION →) OPERATING MENU → SETTINGS → TOTALIZER SETUP
3	Select a flow unit via the TOTALIZER 1 UNIT parameter, here m^3 E^3 for example.
4	Use the NEG. FLOW TOT. 1 parameter to specify the totalising mode for negative flows, here the "Positive" option for example.
5	Reset totalizer 1 to zero via the RESET TOTALIZER parameter.
6	Result: The TOTALIZER 1 and TOTAL. 1 OVERFLOW parameters display the totalised volume flow.

Note!
- You can also specify a customer-specific unit. → See parameter description for TOTALIZER 1 UNIT (→ Page 108) and TOTALIZER 2 UNIT (→ Page 109).
- The TOTALIZER 1 and TOTAL. 1 OVERFLOW parameters display the totalised flow value of the first totalizer. The TOTALIZER 2 and TOTAL. 2 OVERFLOW parameters display the totalised flow value of the second totalizer. → See Page 123 ff, PROCESS VALUES function group.
- You can use the MENU DESCRIPTOR parameter (→ Page 110) to specify which measured value should be displayed on the on-site display.

7 Description of parameters

Note!

- The following tables list all the parameters as per the menu structure. Each table corresponds to a function group in the menu tree. The overall menu structure is illustrated in Section 9.1.
- The menu structure for on-site operation and the digital communication are slightly different. The differences mainly affect the MEASURING MODE and LANGUAGE parameters and the LINEARISATION function group.
- In the operating program or HART handheld terminal, additional parameters are displayed. These parameters are marked accordingly.
- The menu path is indicated in the header of each table. You can use this path to get to the parameters in question.
- The menu has a different structure depending on the measuring mode selected. This means that some function groups are only displayed for one measuring mode, e.g. the "LINEARISATION" function group for the "Level" measuring mode. If certain requirements have to be met for a function group, these are listed in the first row of the table.
- Some parameters are only displayed if other parameters are appropriately configured. For example, the EMPTY CALIB. parameter is not displayed in the Quick Setup menu ("Level" measuring mode) unless the "Linear" option was selected for the LEVEL MODE parameter and the "Wet" option was selected for the CALIBRATION MODE parameter. There is a comment in the parameter description here stating: Note: prerequisite: LEVEL MODE = Linear and CALIBRATION MODE = Wet.
- Parameter names are written in upper case in the text.
- In the "Parameter name" column, the unique identification number (ID) of the parameter is indicated in brackets. This ID only appears on the on-site display.

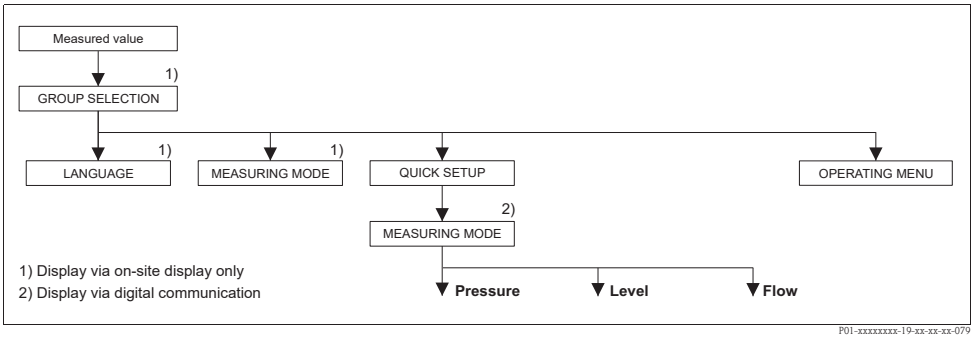

Fig. 21: 1st selection level in menu, LANGUAGE (→ see Page 44, Table 1) and MEASURING MODE (→ see Page 45, Table 2)

Table 1: GROUP SELECTION → LANGUAGE – on-site operation	
Parameter name	**Description**
LANGUAGE (079) Selection	Select the menu language for the on-site display. Note! ■ In the operating program and in the HART handheld terminal, the LANGUAGE parameter is arranged in the DISPLAY function group. ■ Select the menu language for FieldCare via the "Options" menu → "Settings" → "Language" tab → "Tool language" field. **Factory setting:** English

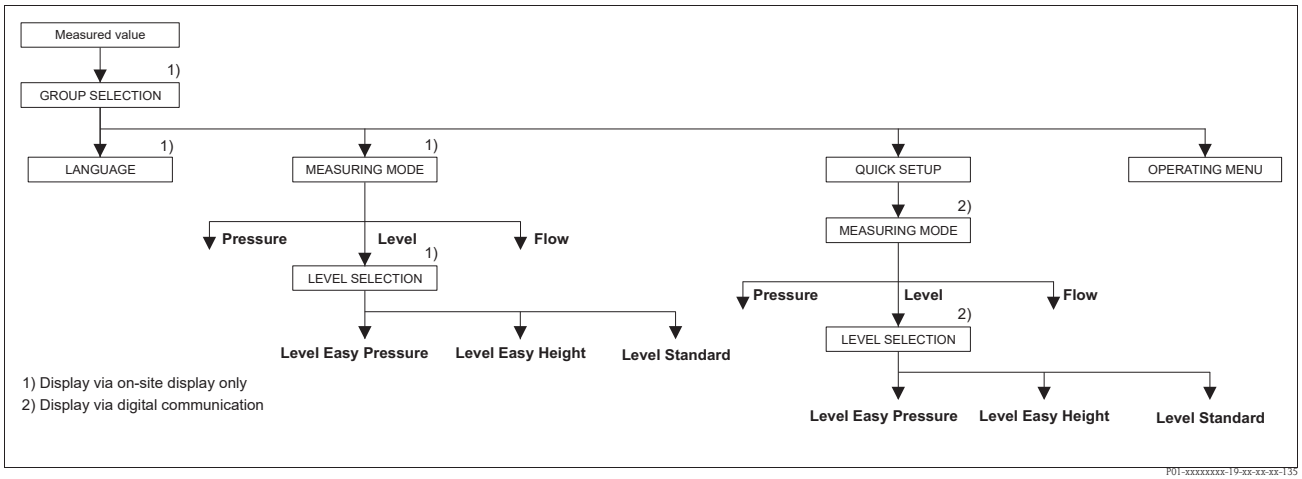

Fig. 22: "Level" measuring mode, LEVEL SELECTION parameter

Table 2: GROUP SELECTION → MEASURING MODE – on-site operation	
Parameter name	**Description**
MEASURING MODE (389) Selection	Select the measuring mode. The operating menu is structured according to the selected measuring mode. Note! ■ The MEASURING MODE parameter is displayed in the operating program and in the HART handheld terminal in the QUICK SETUP menus and in the BASIC SETUP function group (OPERATING MENU → SETTINGS → BASIC SETUP). Warning! If the measuring mode is changed, the span setting (URV) must be verified in the "Calibration" → "Basic Setup" operating menu and, if necessary, reconfigured. **Options:** ■ Pressure ■ Level ■ Deltabar S: Flow **Factory setting:** ■ Cerabar S and Deltabar S: Pressure ■ Deltapilot S: Level

Table 2: GROUP SELECTION → MEASURING MODE – on-site operation	
Parameter name	**Description**
LEVEL SELECTION (020) Options	Select level mode. **Prerequisite:** ■ MEASURING MODE = Level ✎ Note! ■ In the "Level Easy Pressure" and "Level Easy Height" level modes, the values entered are not tested as extensively as in the "Level Standard" level mode. The values entered for EMPTY CALIB./FULL CALIB., EMPTY PRESSURE/FULL PRESSURE, EMPTY HEIGHT/FULL HEIGHT and SET LRV/SET URV must have a minimum interval of 1% for the "Level Easy Pressure" and "Level Easy Height" level modes. The value will be rejected with a warning message if the values are too close together. Further limit values are not checked; i.e. the values entered must be appropriate for the sensor and the measuring task so that the measuring device can measure correctly. → For an overview of the different level modes and types, see Page 14, Section 5.1 "Overview of level measurement". ■ The "Level Easy Pressure" and "Level Easy Height" level modes encompass fewer parameters than the "Level Standard" mode and are used for quick and easy configuration of a level application. ■ Customer-specific units of fill level, volume and mass or a linearization table may only be entered in the "Level Standard" level mode. ■ Where the device is intended for use as a subsystem in a safety function (SIL), a "Device configuration with enhanced parameter security" (SAFETY CONFIRM.) is only possible for the "Level" operating mode in the "Level Easy Pressure" level mode. All parameters previously entered are checked after a password is entered. Once the "Level Easy Height" or "Level Standard" has been selected, the configuration will first have to be reset to the ex-works setting using the RESET parameter (menu path: (GROUP SELECTION →) OPERATING MENU → OPERATION) using the reset code "7864". → For additional information, see the Safety Manual for Deltabar S (SD00189), Cerabar S (SD00190) or Deltapilot S (SD00213P). **Options:** ■ Level Easy Pressure Specify two pressure-level value pairs for this level mode. The pressure measured value is converted directly to the unit which is selected via the OUTPUT UNIT parameter (→ Page 60). Two calibration modes, "Wet" and "Dry", are available. – Wet calibration takes place by filling and emptying the container. In the case of two different levels, the level, volume, mass or percentage value entered is assigned to the pressure measured at this point in time. – Dry calibration is a theoretical calibration. For this calibration, specify two pressure-level value pairs via the EMPTY CALIB., EMPTY PRESSURE, FULL CALIB. and FULL PRESSURE parameters. → Parameter descriptions see Page 61 ff. ■ Level Easy Height For this level mode, specify a height unit, density and two height-level value pairs. The pressure measured value is converted to a height value using the density entered and the height unit. Two calibration modes, "Wet" and "Dry", are available. – Wet calibration takes place by filling and emptying the container. In the case of two different levels, the level, volume, mass or percentage value entered is assigned to the converted height value. – Dry calibration is a theoretical calibration. For this calibration, specify two height-level value pairs via the EMPTY CALIB., EMPTY HEIGHT, FULL CALIB. and FULL HEIGHT parameters. → Parameter descriptions see Page 65 ff. ■ Level standard Once you have selected this level mode, you can use the LEVEL MODE parameter (→ Page 68) to choose between "Linear", "Pressure Linearized" and "Height Linearized". **Factory setting:** Level Easy Pressure
→ For LEVEL SELECTION = "Level Easy Pressure" see Page 58, Table 8. → For LEVEL SELECTION = "Level Easy Height" see Page 62, Table 9. → For LEVEL SELECTION = "Level standard" see Page 67, Table 10.	

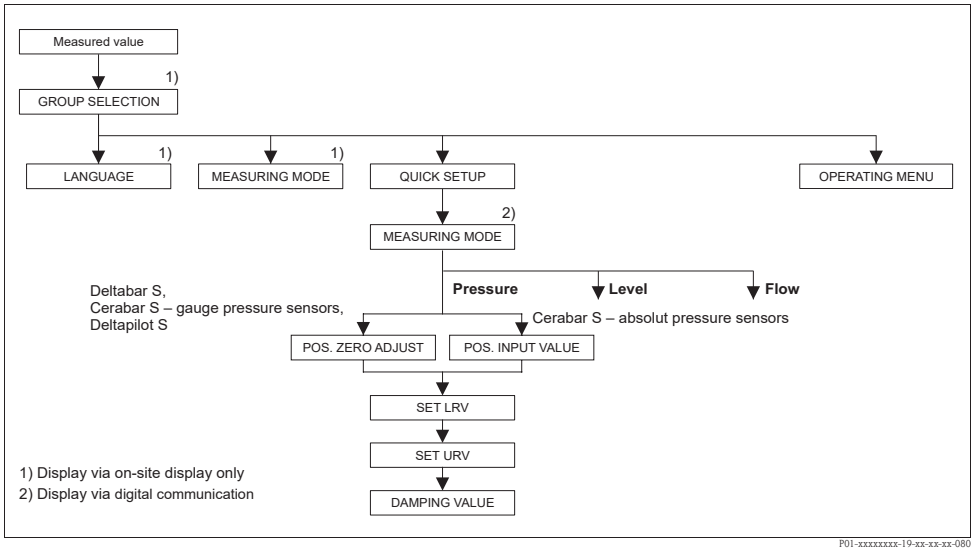

Fig. 23: Quick Setup menu for the "Pressure" measuring mode

Table 3: (GROUP SELECTION →) QUICK SETUP "Pressure"	
Parameter name	**Description**
This menu displays the most important parameters for the "Pressure" measuring mode. **Prerequisite:** ■ MEASURING MODE = Pressure (→ see also Page 45). **Note:** See also – Page 55 ff, Table 7: BASIC SETUP – Page 96, Table 15: EXTENDED SETUP – Page 121 ff, Table 27: PROCESS VALUES – Page 11 ff, Section 4 "Pressure measurement".	
MEASURING MODE Selection	Select the measuring mode. The operating menu is structured according to the selected measuring mode. ⚠ Warning! If the measuring mode is changed, the span setting (URV) must be verified in the "Calibration" → "Basic Setup" operating menu and, if necessary, reconfigured. **Prerequisite:** ■ Digital communication **Options:** ■ Pressure ■ Level ■ Deltabar S: Flow **Factory setting:** ■ Cerabar S and Deltabar S: Pressure ■ Deltapilot S: Level

Table 3: (GROUP SELECTION →) QUICK SETUP "Pressure"	
Parameter name	**Description**
POS. ZERO ADJUST (685) Entry	Position adjustment – the pressure difference between zero (set point) and the measured pressure need not be known. Due to the orientation of the device, there may be a shift in the measured value, i.e. for example, when the container is empty or partly filled, the MEASURED VALUE parameter does not display zero. **Example:** – MEASURED VALUE = 2.2 mbar (0.033 psi) – Correct the MEASURED VALUE via the POS. ZERO ADJUST parameter with the "Confirm" option. This means that you are assigning the value 0.0 to the pressure present. – MEASURED VALUE (after pos. zero adjust) = 0.0 mbar – The current value is also corrected. The CALIB. OFFSET parameter displays the resulting pressure difference (offset) by which the MEASURED VALUE was corrected. **Prerequisite:** ■ This parameter is displayed for Deltabar S, Cerabar S with gauge pressure sensor and Deltapilot S. **Options:** ■ Abort ■ Confirm **Factory setting:** 0.0
POS. INPUT VALUE (563) Entry	Position adjustment – the pressure difference between zero (set point) and the measured pressure need not be known. To correct the pressure difference, you need a reference measurement value (e. g. from a reference device). Due to the orientation of the device, there may be a shift in the measured value, i.e. for example, when the container is empty or partly filled, the MEASURED VALUE parameter does not display zero or the desired value. **Example:** – MEASURED VALUE = 0.5 mbar (0.0075 psi) – For the POS. INPUT VALUE parameter, specify the desired set point for the MEASURED VALUE, e.g. 2 mbar. (MEASURED VALUE$_{new}$ = POS. INPUT VALUE) – MEASURED VALUE (after entry for POS. INPUT VALUE) = 2.0 mbar (0.03 psi) – The CALIB. OFFSET parameter displays the resulting pressure difference (offset) by which the MEASURED VALUE was corrected. CALIB. OFFSET = MEASURED VALUE $_{old}$ – POS. INPUT VALUE, here: CALIB. OFFSET = 0.5 mbar (0.0075 psi) – 2.0 mbar (0.03 psi) = – 1.5 mbar (0.0225 psi)) – The current value is also corrected. **Prerequisite:** ■ This parameter is displayed for Cerabar S with absolute pressure sensors. **Factory setting:** 0.0
SET LRV (245) Entry	Set lower range value – without reference pressure. Enter pressure value for the lower current value (4 mA). **Factory setting:** 0.0 or as per order specifications
SET URV (246) Entry	Set upper range value – without reference pressure. Enter pressure value for the upper current value (20 mA). **Factory setting:** High sensor limit (→ see PRESS. SENS HILIM, Page 119) or as per order specifications
DAMPING VALUE (247) Entry	Enter damping time (time constant τ). The damping affects the speed at which all subsequent elements, such as the on-site display, measured value and current output react to a change in the pressure. **Input range:** 0.0...999.0 s **Factory setting:** 2.0 s or as per order specifications

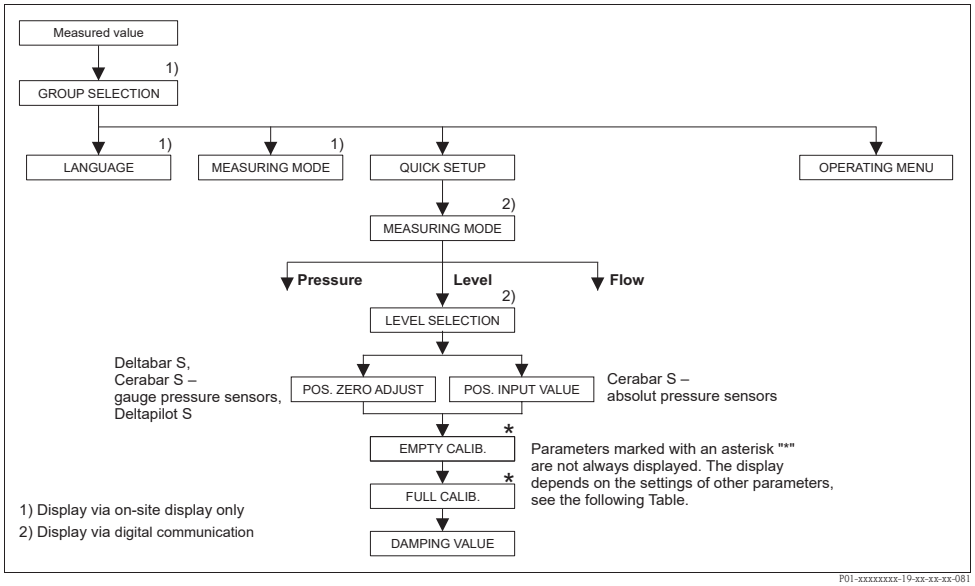

Fig. 24: Quick Setup menu for the "Level" measuring mode

Table 4: (GROUP SELECTION →) QUICK SETUP "Level"	
Parameter name	**Description**
This menu displays the most important parameters for the "Level" measuring mode. **Prerequisite**: ■ MEASURING MODE = Level (→ see also Page 45). **Note:** See also – Page 67 ff, Tables 10 to 13: BASIC SETUP – Page 96 ff, Table 16: EXTENDED SETUP – Page 100 ff, Table 18: LINEARISATION – on-site operation – Page 104 ff, Table 19: LINEARISATION – Digital communication – Page 122 ff, Table 28: PROCESS VALUES – Page 14 ff, Section 5 "Level measurement".	
MEASURING MODE Selection	Select the measuring mode. The operating menu is structured according to the selected measuring mode. ⚠ Warning! If the measuring mode is changed, the span setting (URV) must be verified in the "Calibration" → "Basic Setup" operating menu and, if necessary, reconfigured. **Prerequisite:** ■ Digital communication **Options**: ■ Pressure ■ Level ■ Deltabar S: Flow **Factory setting:** ■ Cerabar S and Deltabar S: Pressure ■ Deltapilot S: Level
LEVEL SELECTION (020) Options	Select level mode. → Parameter description, see Page 46. **Factory setting:** Level Easy Pressure

Table 4: (GROUP SELECTION →) QUICK SETUP "Level"	
Parameter name	**Description**
POS. ZERO ADJUST (685) Entry	Position adjustment – the pressure difference between zero (set point) and the measured pressure need not be known. Due to the orientation of the device, there may be a shift in the measured value, i.e. when the container is empty or partly filled, the MEASURED VALUE parameter does not display zero. **Example:** – MEASURED VALUE = 2.2 mbar (0.033 psi) – Correct the MEASURED VALUE via the POS. ZERO ADJUST parameter with the "Confirm" option. This means that you are assigning the value 0.0 to the pressure present. – MEASURED VALUE (after pos. zero adjust) = 0.0 mbar – The current value is also corrected. The CALIB. OFFSET parameter displays the resulting pressure difference (offset) by which the MEASURED VALUE was corrected. **Prerequisite:** ■ This parameter is displayed for Deltabar S, Cerabar S with gauge pressure sensor and Deltapilot S. **Options:** ■ Abort ■ Confirm **Factory setting:** 0.0
POS. INPUT VALUE (563) Entry	Position adjustment – the pressure difference between zero (set point) and the measured pressure need not be known. To correct the pressure difference, you need a reference measurement value (e. g. from a reference device). Due to the orientation of the device, there may be a shift in the measured value, i.e. when the container is empty or partly filled, the MEASURED VALUE parameter does not display zero or the desired value. **Example:** – MEASURED VALUE = 0.5 mbar (0.0075 psi) – For the POS. INPUT VALUE parameter, specify the desired set point for the MEASURED VALUE, e.g. 2.0 mbar (0.03 psi). (MEASURED VALUE $_{new}$ = POS. INPUT VALUE) – MEASURED VALUE (after entry for POS. INPUT VALUE) = 2.0 mbar (0.03 psi) – The CALIB. OFFSET parameter displays the resulting pressure difference (offset) by which the MEASURED VALUE was corrected. CALIB. OFFSET = MEASURED VALUE$_{old}$ – POS. INPUT VALUE, here: CALIB. OFFSET = 0.5 mbar (0.0075 psi) – 2.0 mbar (0.03 psi) = – 1.5 mbar (0.0225 psi)) – The current value is also corrected. **Prerequisite:** ■ This parameter is displayed for Cerabar S with absolute pressure sensors. **Factory setting:** 0.0
EMPTY CALIB. (314)/(010) Entry	Enter level value for the lower calibration point (container empty). The container is either empty or part full. By entering a value for this parameter, you are assigning a level value to the pressure present at the device. **Prerequisite:** ■ LEVEL SELECTION = Level Easy Pressure (→ see also Page 46), CALIBRATION MODE = Wet (→ see also Page 60) ■ LEVEL SELECTION = Level Standard (→ see also Page), LEVEL MODE = Linear (→ see also Page 68), CALIBRATION MODE = Wet (→ see also Page 73) ✎ Note! For this parameter, the on-site display shows the level value to be entered and the pressure present at the device. In order for the level value to be saved together with the pressure present at the device, the entry field for the level value must first be activated using the "+"- or "–" key before confirming with the "E" key. This applies also if the level value is to remain unchanged. **Factory setting:** 0.0

Table 4: (GROUP SELECTION →) QUICK SETUP "Level"	
Parameter name	**Description**
FULL CALIB. (315)/(004) Entry	Enter level value for the upper calibration point (container full). The container is either completely or almost full. By entering a value for this parameter, you are assigning a level value to the pressure present at the device. **Prerequisite:** ■ LEVEL SELECTION = Level Easy Pressure (→ see also Page 46), CALIBRATION MODE = Wet (→ see also Page 60) ■ LEVEL SELECTION = Level Standard, LEVEL MODE = Linear (→ see also Page 68), CALIBRATION MODE = Wet (→ see also Page 73) ✎ Note! For this parameter, the on-site display shows the level value to be entered and the pressure present at the device. In order for the level value to be saved together with the pressure present at the device, the entry field for the level value must first be activated using the "+"- or "–" key before confirming with the "E" key. This applies also if the level value is to remain unchanged. **Factory setting:** 100.0
DAMPING VALUE (247) Entry	Enter damping time (time constant τ). The damping affects the speed at which all subsequent elements, such as the on-site display, measured value and current output react to a change in the pressure. **Input range:** 0.0...999.0 s **Factory setting:** 2.0 s or as per order specifications

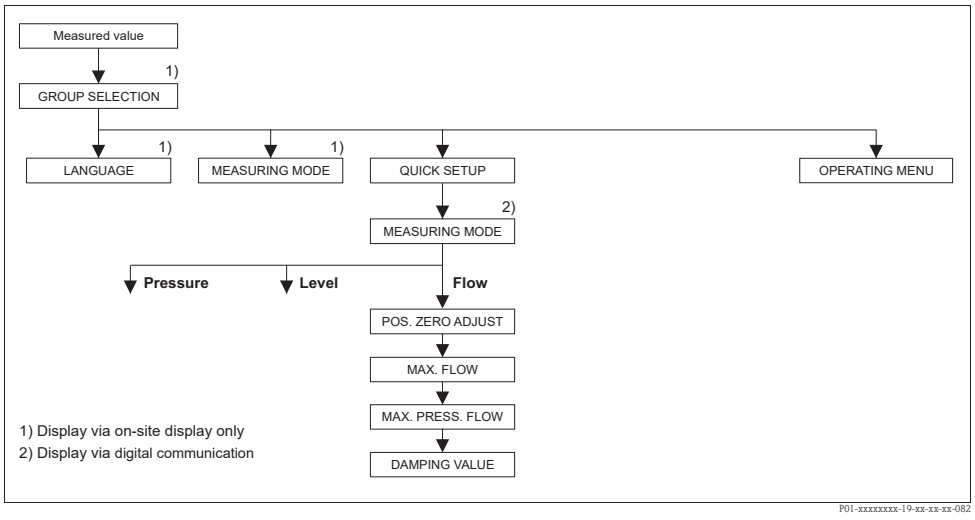

Fig. 25: Quick Setup menu, "Flow" measuring mode

Table 5: (GROUP SELECTION →) QUICK SETUP "Flow"	
Parameter name	**Description**
This menu displays the most important parameters for the "Flow" measuring mode. **Prerequisite**: ■ Deltabar S differential pressure transmitter ■ MEASURING MODE = Flow (→ see also Page 45). **Note:** See also – Page 91, Table 14: BASIC SETUP – Page 98, Table 17: EXTENDED SETUP – Page 107, Table 20: TOTALIZER SETUP – Page 40 ff, Section 6 "Flow measurement".	
MEASURING MODE Selection	Select the measuring mode. The operating menu is structured according to the selected measuring mode. ⚠ Warning! If the measuring mode is changed, the span setting (URV) must be verified in the "Calibration" → "Basic Setup" operating menu and, if necessary, reconfigured. **Prerequisites:** ■ Digital communication **Options**: ■ Pressure ■ Level ■ Deltabar S: Flow **Factory setting:** ■ Cerabar S and Deltabar S: Pressure ■ Deltapilot S: Level
POS. ZERO ADJUST (685) Entry	Position adjustment – the pressure difference between zero (set point) and the measured pressure need not be known. (A reference pressure is present at the device.) Due to the orientation of the device, there may be a shift in the measured value, i.e. when the container is empty or partly filled, the MEASURED VALUE parameter does not display zero. **Example:** – MEASURED VALUE = 2.2 mbar (0,033 psi) – Correct the MEASURED VALUE via the POS. ZERO ADJUST parameter with the "Confirm" option. This means that you are assigning the value 0.0 to the pressure present. – MEASURED VALUE (after pos. zero adjust) = 0.0 mbar – The current value is also corrected. The CALIB. OFFSET parameter displays the resulting pressure difference (offset) by which the MEASURED VALUE was corrected. **Selection:** ■ Abort ■ Confirm **Factory setting:** 0.0
MAX. FLOW (311) Entry	Enter maximum flow of primary element. See also layout sheet of primary element. The maximum flow is assigned to the maximum pressure which you enter via MAX PRESS. FLOW. ✎ Note! Use the LINEAR/SQROOT parameter (→ Page 113) to specify the current signal for the "Flow" measuring mode. The following applies for the "Flow (square root)" setting: If you enter a new value for MAX. FLOW, the value for SET URV is also changed. Use SET URV to assign a flow to the upper current value. If you want to assign the upper current value a value other than that for MAX. FLOW, you must enter the desired value for SET URV. (→ SET URV, Page 100). **Factory setting:** 1.0

Table 5: (GROUP SELECTION →) QUICK SETUP "Flow"	
Parameter name	**Description**
MAX PRESS. FLOW (634) Entry	Enter maximum pressure of primary element. → See layout sheet of primary element. This value is assigned to the maximum flow value (→ see MAX. FLOW). ✎ Note! Use the LINEAR/SQROOT parameter (→ Page 113) to specify the current signal for the "Flow" measuring mode. The following applies for the "Differential pres." setting: If you enter a new value for MAX PRESS. FLOW, the value for SET URV is also changed. Use SET URV to assign a pressure value to the upper current value. If you want to assign the upper current value a value other than that for MAX PRESS. FLOW, you must enter the desired value for SET URV. (→ SET URV, Page 100). **Factory setting:** High sensor limit (→ See PRESS. SENS HILIM, Page 119)
DAMPING VALUE (247) Entry	Enter damping time (time constant τ). The damping affects the speed at which all subsequent elements, such as the on-site display, measured value and current output react to a change in the pressure. **Input range:** 0.0...999.0 s **Factory setting:** 2.0 s or as per order specifications

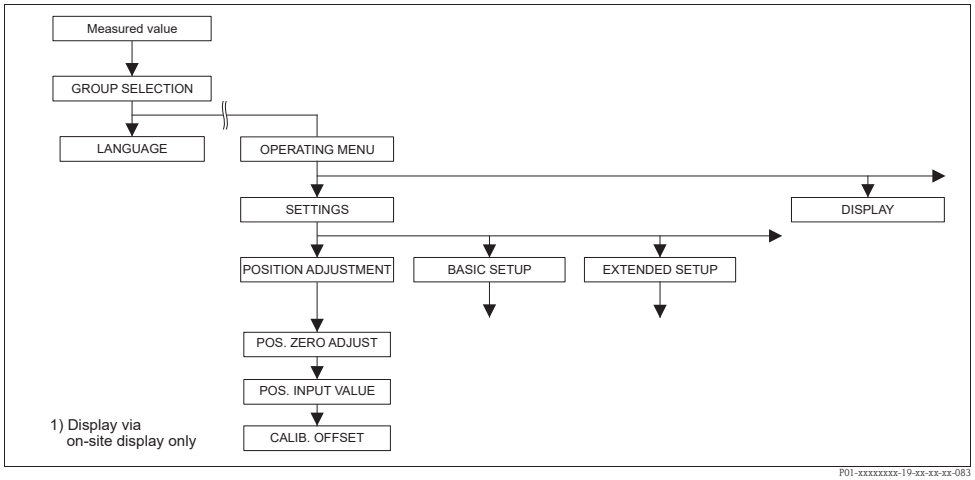

Fig. 26: POSITION ADJUSTMENT function group

Table 6: (GROUP SELECTION →) OPERATING MENU → SETTINGS → POSITION ADJUSTMENT	
Parameter name	**Description**
Due to the orientation of the device, there may be a shift in the measured value, i.e. when the container is empty or partly filled, the measured value does not display zero. Deltabar S and Cerabar S offer three different ways of performing a position adjustment. Recommendation: ■ The pressure difference between zero (set point) and the measured pressure need not be known. – POS. ZERO ADJUST: Deltabar S or Cerabar S with gauge pressure sensor or Deltapilot S. – POS. INPUT VALUE: Cerabar S with absolute pressure sensor. ■ The pressure difference between zero (set point) and the measured pressure is known. – CALIB. OFFSET: Deltabar S, Cerabar S with gauge pressure sensor, Cerabar S with absolute pressure sensor or Deltapilot S.	

Table 6: (GROUP SELECTION →) OPERATING MENU → SETTINGS → POSITION ADJUSTMENT	
Parameter name	**Description**
POS. ZERO ADJUST (685) Entry	Position adjustment – the pressure difference between zero (set point) and the measured pressure need not be known. **Example:** – MEASURED VALUE = 2.2 mbar (0.033 psi) – Correct the MEASURED VALUE via the POS. ZERO ADJUST parameter with the "Confirm" option. This means that you are assigning the value 0.0 to the pressure present. – MEASURED VALUE (after pos. zero adjust) = 0.0 mbar – The current value is also corrected. The CALIB. OFFSET parameter displays the resulting pressure difference (offset) by which the MEASURED VALUE was corrected. **Selection:** ■ Abort ■ Confirm **Factory setting:** 0.0
POS. INPUT VALUE (563) Entry	Position adjustment – the pressure difference between zero (set point) and the measured pressure need not be known. To correct the pressure difference, you need a reference measurement value (e. g. from a reference device). **Example:** – MEASURED VALUE = 0.5 mbar (0.0075 psi) – For the POS. INPUT VALUE parameter, specify the desired set point for the MEASURED VALUE, e.g. 2.0 mbar (0.03 psi). (MEASURED $VALUE_{new}$ = POS. INPUT VALUE) – MEASURED VALUE (after entry for POS. INPUT VALUE) = 2.0 mbar (0.03 psi) – The CALIB. OFFSET parameter displays the resulting pressure difference (offset) by which the MEASURED VALUE was corrected. CALIB. OFFSET = MEASURED $VALUE_{old}$ – POS. INPUT VALUE, here: CALIB. OFFSET = 0.5 mbar (0.0075 psi) – 2.0 mbar (0.03 psi) = – 1.5 mbar (0.0225 psi)) – The current value is also corrected. **Factory setting:** 0.0
CALIB. OFFSET (319) Entry	Position adjustment - the pressure difference between zero (set point) and the measured pressure is known. **Example:** – MEASURED VALUE = 2.2 mbar (0.033 psi) – Via the CALIB. OFFSET parameter, enter the value by which the MEASURED VALUE should be corrected. To correct the MEASURED VALUE to 0.0 mbar, you must enter the value 2.2 here. (MEASURED $VALUE_{new}$ = MEASURED $VALUE_{old}$ – CALIB. OFFSET) – MEASURED VALUE (after entry for calib. offset) = 0.0 mbar – The current value is also corrected. **Factory setting:** 0.0

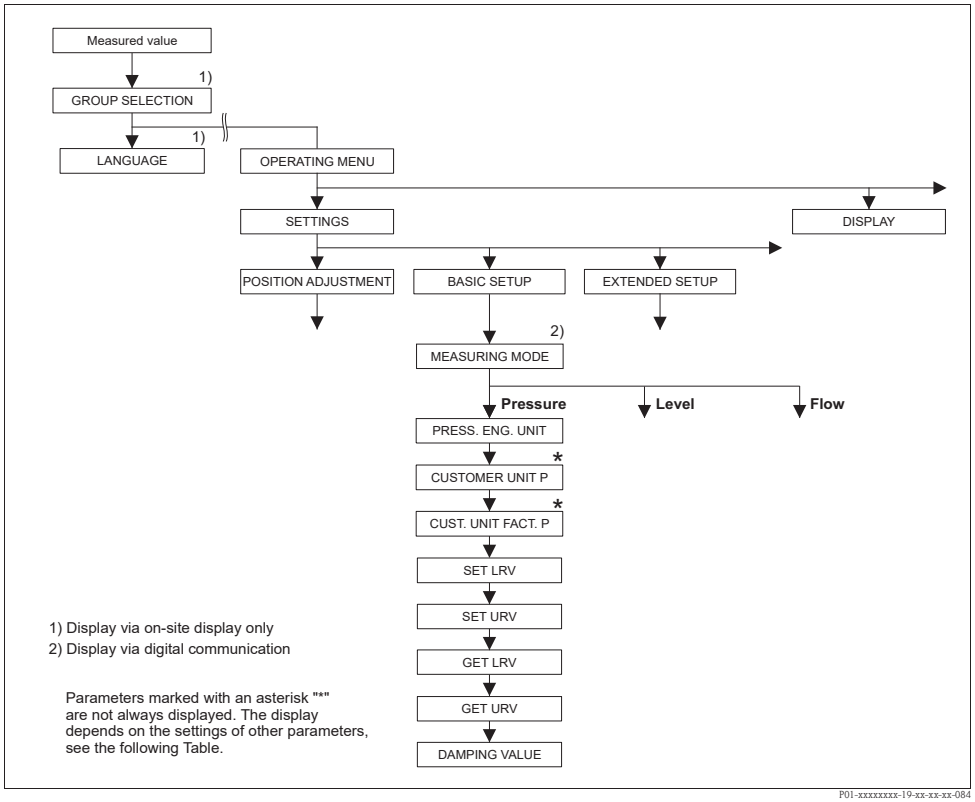

Fig. 27: BASIC SETUP function group for the "Pressure" measuring mode

Table 7: (GROUP SELECTION →) OPERATING MENU → SETTINGS → BASIC SETUP "Pressure"	
Parameter name	**Description**
Prerequisite: ■ MEASURING MODE = Pressure (→ see also Page 45). **Note:** See also – Page 47, Table 3: QUICK SETUP – Page 96, Table 15: EXTENDED SETUP – Page 121 ff, Table 27: PROCESS VALUES – Page 11 ff, Section 4 "Pressure measurement".	
MEASURING MODE Selection	Select the measuring mode. The operating menu is structured according to the selected measuring mode. ⚠ Warning! If the measuring mode is changed, the span setting (URV) must be verified in the "Calibration" → "Basic Setup" operating menu and, if necessary, reconfigured. **Prerequisite:** ■ Digital communication **Options:** ■ Pressure ■ Level ■ Deltabar S: Flow **Factory setting:** ■ Cerabar S and Deltabar S: Pressure ■ Deltapilot S: Level

Table 7: (GROUP SELECTION →) OPERATING MENU → SETTINGS → BASIC SETUP "Pressure"	
Parameter name	**Description**
PRESS. ENG. UNIT (060) Selection	Select pressure unit. If a new pressure unit is selected, all pressure-specific parameters are converted and displayed with the new unit. **Options:** ■ mbar, bar ■ mmH2O, mH2O, inH2O, ftH2O [1)] ■ Pa, hPa, kPa, MPa ■ psi ■ mmHg, inHg [2)] ■ Torr ■ g/cm^2, kg/cm^2 ■ lb/ft^2 ■ atm ■ gf/cm^2, kgf/cm^2 ■ User unit, → See also the following parameter description for CUSTOMER UNIT P and CUST. UNIT FACT. P. 1) The conversion factor of the pressure units refers to a reference temperature of 4 °C (39.2 °F). 2) The conversion factor of the pressure units refers to a reference temperature of 0 °C (32 °F). **Factory setting:** Depends on the sensor nominal measuring range mbar or bar or as per order specifications
CUSTOMER UNIT P (075) Entry	Enter text (unit) for customer-specific pressure unit. You can enter a maximum of eight alphanumeric characters here. → See also CUST. UNIT FACT. P. **Prerequisite:** ■ PRESS. ENG. UNIT = User unit Note! Only the first five characters are shown on the on-site display. For example, if "crates" is specified as the customer-specific unit, "crate" is displayed. If the unit contains a slash, up to eight characters can be shown on the on-site display. The maximum number of characters in the counter is again limited to five. For example, if "crates/m2" is specified as the customer-specific unit, "crate/m2" is displayed. In the FieldCare, all eight characters are displayed. In the HART handheld terminal, the customer-specific unit is only displayed in the CUSTOMER UNIT P parameter. The measured value is displayed with the additional text "User Unit". **Factory setting:** – – – – – – – –
CUST. UNIT FACT. P (317) Entry	Enter conversion factor for a customer-specific pressure unit. The conversion factor must be entered in relation to the SI unit "Pa". → See also CUSTOMER UNIT P. **Prerequisite:** ■ PRESS. ENG. UNIT = User unit **Example:** – You want the measured value to be displayed in "PU" (PU: packing unit). – MEASURED VALUE =10000 Pa ≙ 1 PU – Entry CUSTOMER UNIT P: PU – Entry CUST. UNIT FACT. P: 0.0001 – Result: MEASURED VALUE = 1 PU **Factory setting:** 1.0
SET LRV (245) Entry	Set lower range value – without reference pressure. Enter pressure value for the lower current value (4 mA). **Factory setting:** 0.0 or as per order specifications

Table 7: (GROUP SELECTION →) OPERATING MENU → SETTINGS → BASIC SETUP "Pressure"	
Parameter name	**Description**
SET URV (246) Entry	Set upper range value – without reference pressure. Enter pressure value for the upper current value (20 mA). **Factory setting:** High sensor limit (→ See PRESS. SENS HILIM, Page 119)
GET LRV (309) Entry	Set lower range value – reference pressure is present at device. The pressure for the lower current value (4 mA) is present at device. With the "Confirm" option, you assign the lower current value to the pressure value present. On-site display: the pressure value present is displayed in the bottom line. **Options:** ■ Abort ■ Confirm
GET URV (310) Entry	Set upper range value – reference pressure is present at device. The pressure for the upper current value (20 mA) is present at device. With the "Confirm" option, you assign the upper current value to the pressure value present. On-site display: the pressure value present is displayed in the bottom line. **Options:** ■ Abort ■ Confirm
DAMPING VALUE (247) Entry	Enter damping time (time constant τ). The damping affects the speed at which all subsequent elements, such as the on-site display, measured value and current output react to a change in the pressure. **Input range:** 0.0...999.0 s **Factory setting:** 2.0 s or as per order specifications

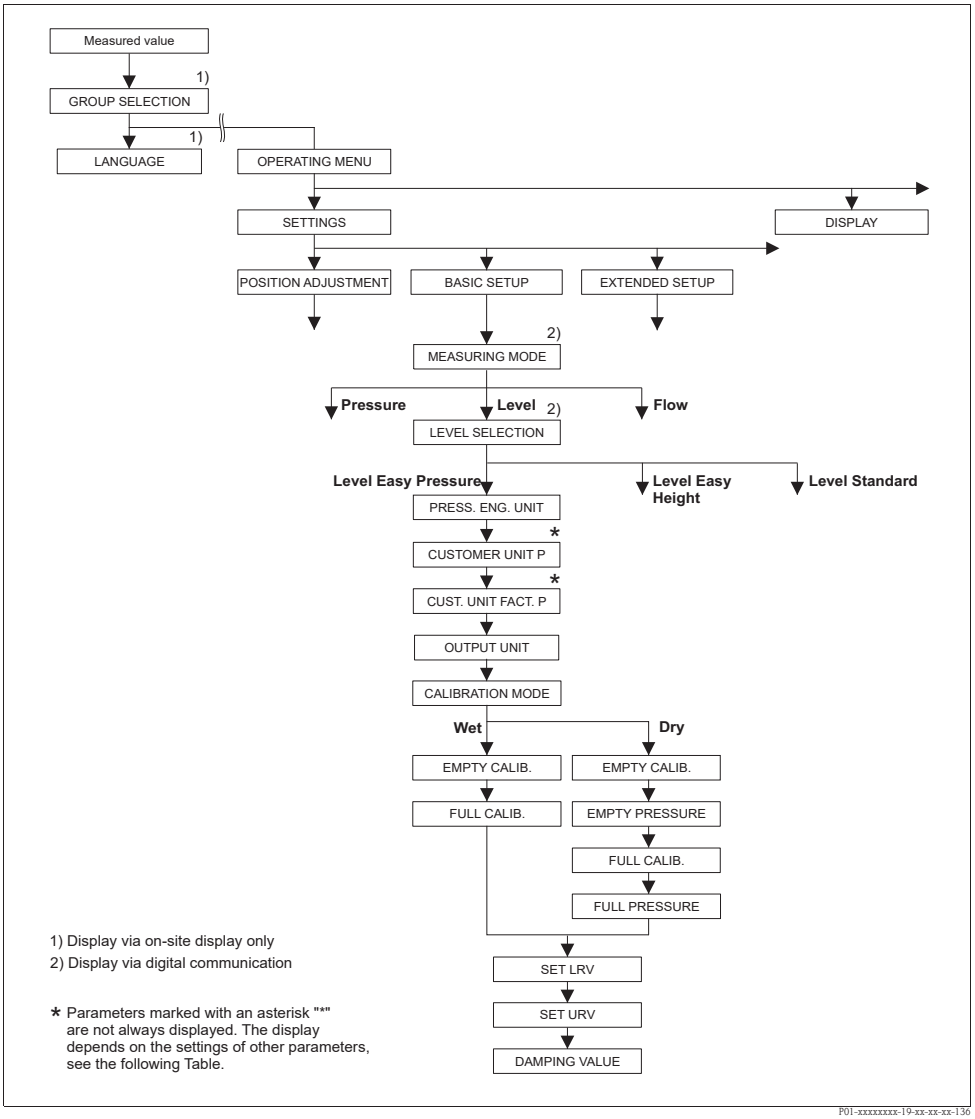

Fig. 28: BASIC SETUP function group for the "Level" measuring mode and "Level Easy Pressure" level selection

Table 8: (GROUP SELECTION→) OPERATING MENU → SETTINGS → BASIC SETUP "Level", LEVEL SELECTION "Level Easy Pressure"

The following parameters are displayed if you have selected the "Level Easy Pressure" option for the LEVEL SELECTION parameter. Specify two pressure-level value pairs for this level mode. Two calibration modes, "Wet" and "Dry", are available.

Prerequisite:

- MEASURING MODE = Level (→ see also Page 45.)
- LEVEL SELECTION = Level Easy Pressure (→ See also Page 46.)

Table 8: (GROUP SELECTION→) OPERATING MENU → SETTINGS → BASIC SETUP "Level", LEVEL SELECTION "Level Easy Pressure"	
PRESS. ENG. UNIT (060) Selection	Select pressure unit. If a new pressure unit is selected, all pressure-specific parameters are converted and displayed with the new unit. **Options:** ■ mbar, bar ■ mmH2O, mH2O, inH2O, ftH2O [1)] ■ Pa, hPa, kPa, MPa ■ psi ■ mmHg, inHg [2)] ■ Torr ■ g/cm^2, kg/cm^2 ■ lb/ft^2 ■ atm ■ gf/cm^2, kgf/cm^2 ■ User unit, → See also the following parameter description for CUSTOMER UNIT P and CUST. UNIT FACT. P. 1) The conversion factor of the pressure units refers to a reference temperature of 4 °C (39.2 °F). 2) The conversion factor of the pressure units refers to a reference temperature of 0 °C (32 °F). **Factory setting:** Depends on the sensor nominal measuring range mbar or bar or as per order specifications
CUSTOMER UNIT P (075) Entry	Enter text (unit) for customer-specific pressure unit. You can enter a maximum of eight alphanumeric characters here. → See also CUST. UNIT FACT. P. **Prerequisite:** ■ PRESS. ENG. UNIT = User unit ✎ Note! Only the first five characters are shown on the on-site display. For example, if "crates" is specified as the customer-specific unit, "crate" is displayed. If the unit contains a slash, up to eight characters can be shown on the on-site display. The maximum number of characters in the counter is again limited to five. For example, if "crates/m2" is specified as the customer-specific unit, "crate/m2" is displayed. In the FieldCare, all eight characters are displayed. In the HART handheld terminal, the customer-specific unit is only displayed in the CUSTOMER UNIT P parameter. The measured value is displayed with the additional text "User Unit". **Factory setting:** – – – – – – – –
CUST. UNIT FACT. P (317) Entry	Enter conversion factor for a customer-specific pressure unit. The conversion factor must be entered in relation to the SI unit "Pa". → See also CUSTOMER UNIT P. **Prerequisite:** ■ PRESS. ENG. UNIT = User unit **Example:** – You want the measured value to be displayed in "PU" (PU: packing unit). – MEASURED VALUE =10000 Pa ≙ 1 PU – Entry CUSTOMER UNIT P: PU – Entry CUST. UNIT FACT. P: 0.0001 – Result: MEASURED VALUE = 1 PU **Factory setting:** 1.0

Table 8: (GROUP SELECTION→) OPERATING MENU → SETTINGS → BASIC SETUP "Level", LEVEL SELECTION "Level Easy Pressure"	
OUTPUT UNIT (023) Selection	Select unit for measured value display and MEASURED VALUE parameter (→ Page 122). ✎ Note! The selected unit is used only to describe the measured value. This means that when selecting a new output unit, the measured value is not converted. Example: ■ current measured value: 0.3 ft ■ new output unit: m ■ new measured value: 0.3 m (9.8 ft) **Options** ■ % ■ mm, cm, dm, m ■ ft, inch ■ cm^3, dm^3, m^3,m^3 E^3 ■ l, hl ■ ft^3, ft^3 E^3 ■ gal, bbl, Igal ■ g, kg, t ■ lb, ton, oz **Factory setting:** %
CALIBRATION MODE (008) Selection	Select calibration mode. **Options:** ■ Wet Wet calibration takes place by filling and emptying the container. In the case of two different levels, the level, volume, mass or percentage value entered is assigned to the pressure measured at this point in time. (→ See also this table, parameter descriptions for EMPTY CALIB. and FULL CALIB.) ■ Dry Dry calibration is a theoretical calibration. For this calibration, specify two pressure-level value pairs via the following parameters: EMPTY CALIB., EMPTY PRESSURE, FULL CALIB. and FULL PRESSURE. **Factory setting:** Wet
EMPTY CALIB. (010) Entry	Enter level, volume, mass or percentage value for the lower calibration point (container empty). The container is either empty or part full. By entering a value for this parameter, you assign a level, volume, mass or percentage value to the pressure present at the device. The unit is selected via the OUTPUT UNIT parameter (→ Page 60). **Prerequisite:** ■ CALIBRATION MODE = Wet ✎ Note! For this parameter, the on-site display shows the level value to be entered and the pressure present at the device. In order for the level value to be saved together with the pressure present at the device, the entry field for the level value must first be activated using the "+"- or "–" key before confirming with the "E" key. This applies also if the level value is to remain unchanged. **Factory setting:** 0.0
FULL CALIB. (004) Entry	Enter height, volume or mass value for the upper calibration point (container full). The container is either completely or almost full. By entering a value for this parameter, you assign a height, volume or mass value to the pressure present at the device. The unit is selected via the OUTPUT UNIT parameter (→ Page 60). **Prerequisite:** ■ CALIBRATION MODE = Wet ✎ Note! For this parameter, the on-site display shows the level value to be entered and the pressure present at the device. In order for the level value to be saved together with the pressure present at the device, the entry field for the level value must first be activated using the "+"- or "–" key before confirming with the "E" key. This applies also if the level value is to remain unchanged. **Factory setting:** 100.0

Table 8: (GROUP SELECTION→) OPERATING MENU → SETTINGS → BASIC SETUP "Level", LEVEL SELECTION "Level Easy Pressure"	
EMPTY CALIB. (010) Entry	Enter level, volume, mass or percentage value for the lower calibration point (container empty). The values entered for the EMPTY CALIB. and EMPTY PRESSURE parameters form the pressure-level value pair for the lower calibration point. The unit is selected via the OUTPUT UNIT parameter (→ Page 60). **Prerequisite:** ■ CALIBRATION MODE = Dry **Factory setting:** 0.0
EMPTY PRESSURE (011) Entry	Enter pressure value for the lower calibration point (container empty). → See also EMPTY CALIB. **Prerequisite:** ■ CALIBRATION MODE = Dry **Factory setting:** 0.0
FULL CALIB. (004) Entry	Enter height, volume, mass or percentage value for the upper calibration point (container full). The values entered for the FULL CALIB. and FULL PRESSURE parameters form the pressure-level value pair for the upper calibration point. The unit is selected via the OUTPUT UNIT parameter (→ Page 60). **Prerequisite:** ■ CALIBRATION MODE = Dry **Factory setting:** 100.0
FULL PRESSURE (005) Entry	Enter pressure value for the upper calibration point (container full). → See also FULL CALIB. **Prerequisite:** ■ CALIBRATION MODE = Dry **Factory setting:** 100.0
SET LRV (013) Entry	Enter value for the lower current value (4 mA). The unit is selected via the OUTPUT UNIT parameter (→ Page 60). **Factory setting:** 0.0
SET URV (012) Entry	Enter value for the upper current value (20 mA). The unit is selected via the OUTPUT UNIT parameter (→ Page 60). **Factory setting:** 100.0
DAMPING VALUE (247) Entry	Enter damping time (time constant τ). The damping affects the speed at which all subsequent elements, such as the on-site display, measured value and current output react to a change in the pressure. **Input range:** 0.0 to 999.0 s **Factory setting:** 2.0 s or as per order specifications

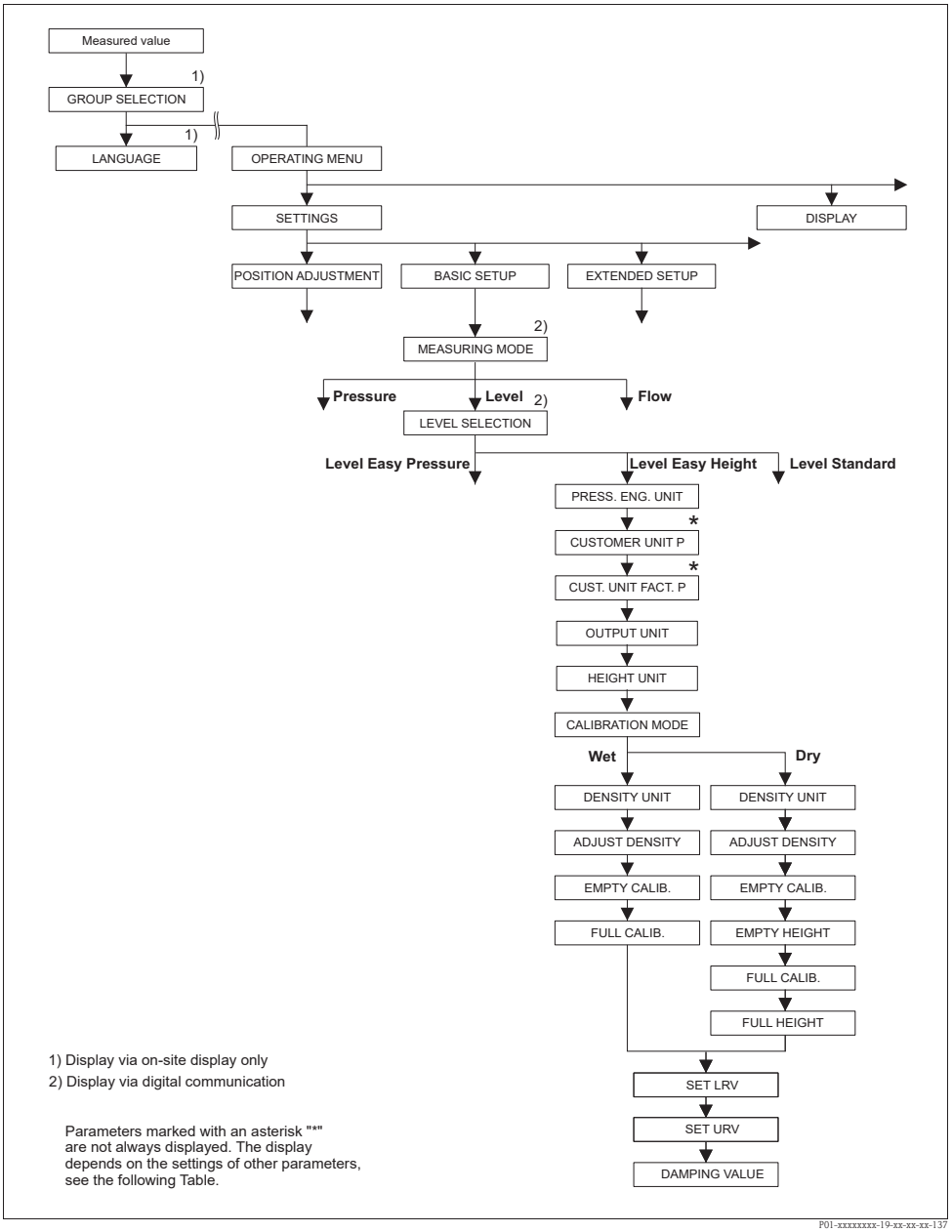

Fig. 29: BASIC SETUP function group for "Level" measuring mode and "Level Easy Height" level selection

Table 9: (GROUP SELECTION→) OPERATING MENU → SETTINGS → BASIC SETUP "Level", LEVEL SELECTION "Level Easy Height"

The following parameters are displayed if you have selected the "Level Easy Height" option for the LEVEL SELECTION parameter. For this level mode, specify a height unit, density and two height-level value pairs. The pressure measured value is converted to a height value using the density entered and the height. Two calibration modes, "Wet" and "Dry", are available.

Prerequisite:

- MEASURING MODE = Level (→ see also Page 45.)
- LEVEL SELECTION = Level Easy Height (→ See also Page 46.)

Table 9: (GROUP SELECTION→) OPERATING MENU → SETTINGS → BASIC SETUP "Level", LEVEL SELECTION "Level Easy Height"	
PRESS. ENG. UNIT (060) Options	Select pressure unit. If a new pressure unit is selected, all pressure-specific parameters are converted and displayed with the new unit. **Options:** ■ mbar, bar ■ mmH2O, mH2O, inH2O, ftH2O [1] ■ Pa, hPa, kPa, MPa ■ psi ■ mmHg, inHg [2] ■ Torr ■ g/cm^2, kg/cm^2 ■ lb/ft^2 ■ atm ■ gf/cm^2, kgf/cm^2 ■ User unit, → See also the following parameter description for CUSTOMER UNIT P and CUST. UNIT FACT. P. 1) The conversion factor of the pressure units refers to a reference temperature of 4 °C (39.2 °F). 2) The conversion factor of the pressure units refers to a reference temperature of 0 °C (32 °F). **Factory setting:** Depends on the sensor nominal measuring range mbar or bar or as per order specifications
CUSTOMER UNIT P (075) Entry	Enter text (unit) for customised pressure unit. You can enter a maximum of eight alphanumeric characters here. → See also CUST. UNIT FACT. P. **Prerequisite:** ■ PRESS. ENG. UNIT = User unit ✎ Note! Only the first five characters are shown on the on-site display. For example, if "crates" is specified as the customer-specific unit, "crate" is displayed. If the unit contains a slash, up to eight characters can be shown on the on-site display. The maximum number of characters in the counter is again limited to five. For example, if "crates/m2" is specified as the customer-specific unit, "crate/m2" is displayed. In the FieldCare, all eight characters are displayed. In the HART handheld terminal, the customised unit is displayed only in the CUSTOMER UNIT P parameter. The measured value is displayed with the additional text "User Unit". **Factory setting:** – – – – – – – –
CUST. UNIT FACT. P (317) Entry	Enter conversion factor for a customer-specific pressure unit. The conversion factor must be entered in relation to the SI unit "Pa". → See also CUSTOMER UNIT P. **Prerequisite:** ■ PRESS. ENG. UNIT = User unit **Example:** – You want the measured value to be displayed in "PU" (PU: packing unit). – MEASURED VALUE =10000 Pa ≙ 1 PU – Entry CUSTOMER UNIT P: PU – Entry CUST. UNIT FACT. P: 0.0001 – Result: MEASURED VALUE = 1 PU **Factory setting:** 1.0

Table 9: (GROUP SELECTION→) OPERATING MENU → SETTINGS → BASIC SETUP "Level", LEVEL SELECTION "Level Easy Height"	
OUTPUT UNIT (023) Options	Select unit for measured value display and MEASURED VALUE parameter (→ Page 122). ✎ Note! The selected unit is used only to describe the measured value. This means that when selecting a new output unit, the measured value is not converted. Example: ■ current measured value: 0.3 ft ■ new output unit: m ■ new measured value: 0.3 m (9.8 ft) **Options:** ■ % ■ mm, cm, dm, m ■ ft, inch ■ cm^3, dm^3, m^3,m^3 E^3 ■ l, hl ■ ft^3, ft^3 E^3 ■ gal, bbl, Igal ■ g, kg, t ■ lb, ton, oz **Factory setting:** %
HEIGHT UNIT (003) Options	Select height unit. The measured pressure is converted to the chosen height unit using the DENSITY UNIT and ADJUST DENSITY parameters. **Options:** ■ mm ■ cm ■ dm ■ m ■ inch ■ ft **Factory setting:** m
CALIBRATION MODE (008) Options	Select calibration mode. **Options:** ■ Wet Wet calibration takes place by filling and emptying the container. The measured pressure is converted to the chosen height unit using the HEIGHT UNIT, DENSITY UNIT and ADJUST DENSITY parameters. In the case of two different levels, the level, volume, mass or percentage value entered is assigned to the converted height value. ■ Dry Dry calibration is a theoretical calibration. For this calibration, specify two height-level value pairs via the EMPTY CALIB., EMPTY HEIGHT, FULL CALIB. and FULL HEIGHT parameters. **Factory setting:** Dry
DENSITY UNIT (001) Options	Select density unit. The measured pressure is converted to a height using the HEIGHT UNIT, DENSITY UNIT and ADJUST DENSITY parameters. **Options:** ■ g/cm^3 ■ kg/dm^3 ■ kg/m^3 ■ US lb/in^3 ■ US lb/ft^3 **Factory setting:** kg/dm^3
ADJUST DENSITY (007) Entry	Enter density of fluid. The measured pressure is converted to a height using the HEIGHT UNIT, DENSITY UNIT and ADJUST DENSITY parameters. **Factory setting:** 1.0

Table 9: (GROUP SELECTION→) OPERATING MENU → SETTINGS → BASIC SETUP "Level", LEVEL SELECTION "Level Easy Height"	
EMPTY CALIB. (010) Entry	Enter level, volume, mass or percentage value for the lower calibration point (container empty). The container is either empty or part full. The measured pressure is converted to a height value using the HEIGHT UNIT, DENSITY UNIT and ADJUST DENSITY parameters and displayed. Using the parameter EMPTY CALIB., you assign a level, volume, mass or percentage value to the height value. The unit is selected via the OUTPUT UNIT parameter (→ Page 64). **Prerequisite:** ■ CALIBRATION MODE = Wet ✎ Note! For this parameter, the on-site display shows the level value to be entered and the pressure present at the device. In order for the level value to be saved together with the pressure present at the device, the entry field for the level value must first be activated using the "+"- or "–" key before confirming with the "E" key. This applies also if the level value is to remain unchanged. **Factory setting:** 0.0
FULL CALIB. (004) Entry	Enter level, volume, mass or percentage value for the upper calibration point (container full). The container is either completely or almost full. Using the parameters HEIGHT UNIT, DENSITY UNIT and ADJUST DENSITY, the measured pressure is converted to a height value and displayed. Using the parameter FULL CALIB., you assign a level, volume, mass or percentage value to the height value. The unit is selected via the OUTPUT UNIT parameter (→ Page 64). **Prerequisite:** ■ CALIBRATION MODE = Wet ✎ Note! For this parameter, the on-site display shows the level value to be entered and the pressure present at the device. In order for the level value to be saved together with the pressure present at the device, the entry field for the level value must first be activated using the "+"- or "–" key before confirming with the "E" key. This applies also if the level value is to remain unchanged. **Factory setting:** 100.0
EMPTY CALIB. (010) Entry	Enter level, volume, mass or percentage value for the lower calibration point (container empty). The values entered for the EMPTY CALIB. and EMPTY HEIGHT parameters form the height-level value pair for the lower calibration point. The unit is selected via the OUTPUT UNIT parameter (→ Page 64). **Prerequisite:** ■ CALIBRATION MODE = Dry **Factory setting:** 0.0
EMPTY HEIGHT (009) Entry	Height value for the lower calibration point (container empty). The unit is selected via the HEIGHT UNIT parameter (→ Page 64). → See also EMPTY CALIB. **Prerequisite:** ■ CALIBRATION MODE = Dry **Factory setting:** Upper range limit (URL) coverted to an height unit
FULL CALIB. (004) Entry	Enter level, volume, mass or percentage value for the upper calibration point (container full). The values entered for the FULL CALIB. and FULL HEIGHT parameters form the height-level value pair for the upper calibration point. The unit is selected via the OUTPUT UNIT parameter (→ Page 64). **Prerequisite:** ■ CALIBRATION MODE = Dry **Factory setting:** 100.0

Table 9: (GROUP SELECTION→) OPERATING MENU → SETTINGS → BASIC SETUP "Level", LEVEL SELECTION "Level Easy Height"	
FULL HEIGHT (006) Entry	Enter height value for the upper calibration point (container full). The unit is selected via the HEIGHT UNIT parameter (→ Page 64). → See also FULL CALIB. **Prerequisite:** ▪ CALIBRATION MODE = Dry **Factory setting:** 0.0
SET LRV (013) Entry	Enter level, volume, mass or percentage value for the lower current value (4 mA). The unit is selected via the OUTPUT UNIT parameter (→ Page 64). **Factory setting:** 0.0
SET URV (012) Entry	Enter level, volume, mass or percentage value for the upper current value (20 mA). The unit is selected via the OUTPUT UNIT parameter (→ Page 64). **Factory setting:** 100.0
DAMPING VALUE (247) Entry	Enter damping time (time constant τ). The damping affects the speed at which all subsequent elements, such as the on-site display, measured value and current output react to a change in the pressure. **Input range:** 0.0 to 999.0 s **Factory setting:** 2.0 s or as per order specifications

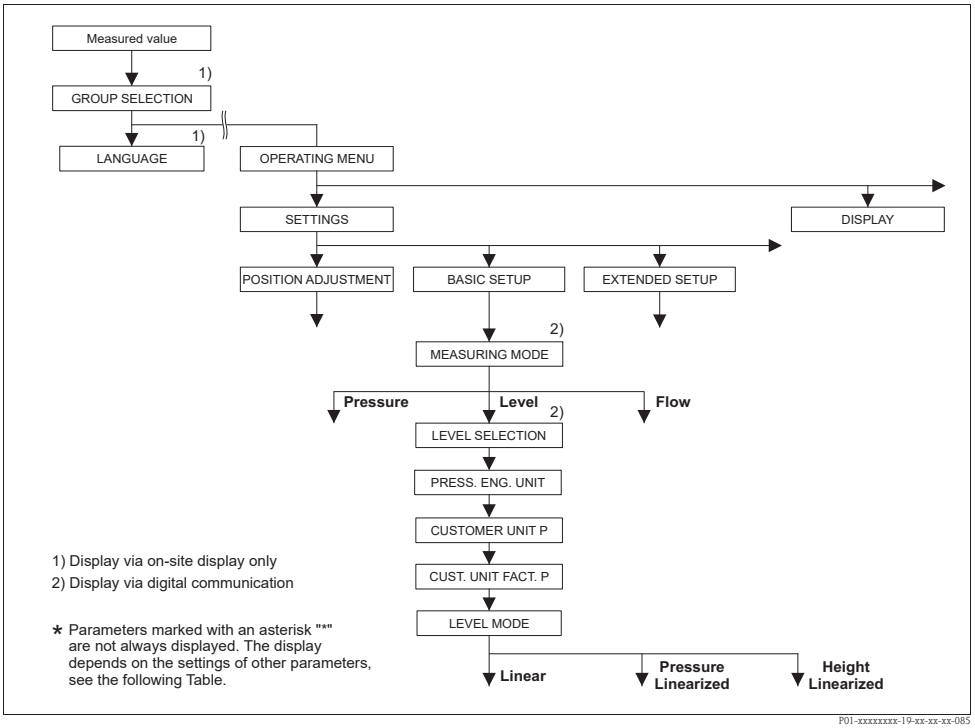

Fig. 30: BASIC SETUP function group for the "Level" measuring mode, depending on the setting for the LEVEL MODE parameter
→ See Page 69, Fig. 31 for LEVEL MODE = Linear,
→ See Page 78, Fig. 33 for LEVEL MODE = Pressure Linearized,
→ See Page 82, Fig. 34 for LEVEL MODE = Height Linearized

Table 10: (GROUP SELECTION →) OPERATING MENU → SETTINGS → BASIC SETUP "Level"	
Parameter name	**Description**
Prerequisite: ■ MEASURING MODE = level (→ see also Page 45). **Note:** See also – Page 70 ff, Tables 11 to 13: BASIC SETUP – contd. – Page 96 ff, Table 16: EXTENDED SETUP – Page 100 ff, Table 18: LINEARISATION – on-site operation – Page 104 ff, Table 19: LINEARISATION – Digital communication – Page 122 ff, Table 28: PROCESS VALUES – Page 14 ff, Section 5 "Level measurement".	
MEASURING MODE Selection	Select the measuring mode. The operating menu is structured according to the selected measuring mode. ⚠ Warning! If the measuring mode is changed, the span setting (URV) must be verified in the "Calibration" → "Basic Setup" operating menu and, if necessary, reconfigured. **Prerequisite:** ■ Digital communication **Options**: ■ Pressure ■ Level ■ Deltabar S: Flow **Factory setting:** Pressure
PRESS. ENG. UNIT (060) Selection	Select pressure unit. If a new pressure unit is selected, all pressure-specific parameters are converted and displayed with the new unit. **Options:** ■ mbar, bar ■ mmH2O, mH2O, inH2O, ftH2O [1)] ■ Pa, hPa, kPa, MPa ■ psi ■ mmHg, inHg [2)] ■ Torr ■ g/cm^2, kg/cm^2 ■ lb/ft^2 ■ atm ■ gf/cm^2, kgf/cm^2 ■ User unit, → See also the following parameter description for CUSTOMER UNIT P and CUST. UNIT FACT. P. 1) The conversion factor of the pressure units refers to a reference temperature of 4 °C (39.2 °F). 2) The conversion factor of the pressure units refers to a reference temperature of 0 °C (32 °F). **Factory setting:** Depends on the sensor nominal measuring range mbar or bar or as per order specifications

Table 10: (GROUP SELECTION →) OPERATING MENU → SETTINGS → BASIC SETUP "Level"	
Parameter name	**Description**
CUSTOMER UNIT P (075) Entry	Enter text (unit) for customer-specific pressure unit. You can enter a maximum of eight alphanumeric characters here. → See also CUST. UNIT FACT. P. **Prerequisite:** ■ PRESS. ENG. UNIT = User unit ✎ Note! Only the first five characters are shown on the on-site display. For example, if "crates" is specified as the customer-specific unit, "crate" is displayed. If the unit contains a slash, up to eight characters can be shown on the on-site display. The maximum number of characters in the counter is again limited to five. For example, if "crates/m2" is specified as the customer-specific unit, "crate/m2" is displayed. In the FieldCare, all eight characters are displayed. In the HART handheld terminal, the customer-specific unit is only displayed in the CUSTOMER UNIT P parameter. The measured value is displayed with the additional text "User Unit". **Factory setting:** _ _ _ _ _ _ _ _
CUST. UNIT FACT. P (317) Entry	Enter conversion factor for a customer-specific pressure unit. The conversion factor must be entered in relation to the SI unit "Pa". → See also CUSTOMER UNIT P. **Prerequisite:** ■ PRESS. ENG. UNIT = User unit **Example:** – You want the measured value to be displayed in "PU" (PU: packing unit). – MEASURED VALUE =10000 Pa ≙ 1 PU – Entry CUSTOMER UNIT P: PU – Entry CUST. UNIT FACT. P: 0.0001 – Result: MEASURED VALUE = 1 PU **Factory setting:** 1.0
LEVEL MODE (718) Selection	Select level type. **Options:** ■ Linear: the measured variable (level, volume, mass or %) is in direct proportion to the measured pressure. → See also Page 70 ff, Table 9. ■ Pressure Linearized: the measured variable (volume, mass or %) is not in direct proportion to the measured pressure such as in the case of containers with a conical outlet. For the calibration, enter a linearisation table with at least 2 and not more than 32 points. → See also Page 78 ff, Table 10. ■ Height Linearized: select this level type if you require two measured variables or if the container shape is given with value pairs, e.g. height and volume. The following combinations are possible: – Height + Volume – Height + Mass – Height + % – %-Height + Volume – %-Height + Mass – %-Height + % Perform two calibrations for this level type. First for the measured variable height or %-height like for the "Linear" option and then for the measured variable volume, mass or % like for the "Pressure Linearized" option. → See also Page 83 ff, Table 11. **Factory setting:** Linear
→ For LEVEL MODE = Linear, see Page 70, Table 9. → For LEVEL MODE = Pressure Linearized, see Page 78, Table 10. → For LEVEL MODE = Height Linearized, see Page 83, Table 11.	

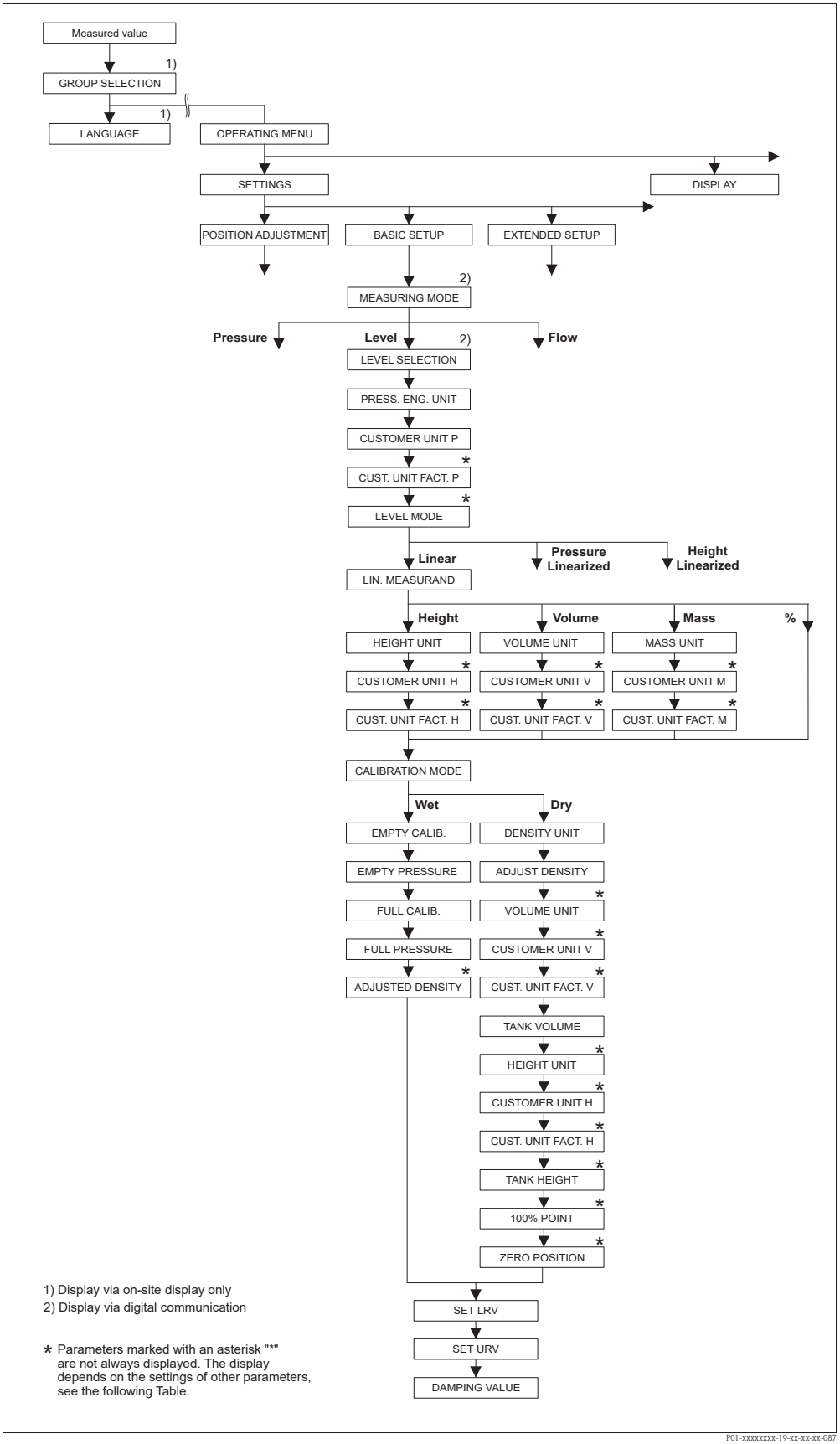

Fig. 31: BASIC SETUP function group for the "Level" measuring mode and "Linear" level type

Table 11: (GROUP SELECTION →) OPERATING MENU → SETTINGS → BASIC SETUP "Level", LEVEL MODE "Linear"	
Parameter name	**Description**
The following parameters are displayed if you selected the "Linear" option for the LEVEL MODE parameter. For this level type, the measured variable (level, volume, mass or %) is in direct proportion to the measured pressure. **Prerequisite**: ■ MEASURING MODE = Level (→ see also Page 45). ■ LEVEL SELECTION = Level Standard (→ see also Page 46). ■ LEVEL MODE = Linear (→ see also Page 68). **Note:** See also – Page 67 ff, Table 10: BASIC SETUP – general – Page 96 ff, Table 16: EXTENDED SETUP – Page 122 ff, Table 28: PROCESS VALUES – Page 14 ff, Section 5 "Level measurement".	
LIN. MEASURAND (804) Selection	Select measured variable. **Options:** ■ Level ■ Volume ■ Mass ■ % (Level) **Factory setting:** % (Level)
HEIGHT UNIT (708) Selection	Select level unit. **Prerequisite:** ■ LIN. MEASURAND = Level **Options:** ■ mm ■ cm ■ dm ■ m ■ inch ■ ft ■ User unit, → see also the following parameter description for CUSTOMER UNIT H and CUST. UNIT FACT. H. **Factory setting:** m
CUSTOMER UNIT H (706) Entry	Enter text (unit) for customer-specific level unit. You can enter a maximum of eight alphanumeric characters here. → See also CUST. UNIT FACT. H. **Prerequisite:** ■ LIN. MEASURAND = Level, HEIGHT UNIT = User unit ✎ Note! Only the first five characters are shown on the on-site display. For example, if "crates" is specified as the customer-specific unit, "crate" is displayed. If the unit contains a slash, up to eight characters can be shown on the on-site display. The maximum number of characters in the counter is again limited to five. For example, if "crates/m2" is specified as the customer-specific unit, "crate/m2" is displayed. In the FieldCare, all eight characters are displayed. In the HART handheld terminal, the customer-specific unit is only displayed in the CUSTOMER UNIT H parameter. The measured value is displayed with the additional text "User Unit". **Factory setting:** _ _ _ _ _ _ _ _

Table 11: (GROUP SELECTION →) OPERATING MENU → SETTINGS → BASIC SETUP "Level", LEVEL MODE "Linear"	
Parameter name	**Description**
CUST. UNIT FACT. H (705) Entry	Enter conversion factor for a customer-specific level unit. The conversion factor must be entered in relation to the SI unit "m". → See also CUSTOMER UNIT H. **Prerequisite:** ■ LIN. MEASURAND = Level, HEIGHT UNIT = User unit **Example:** – You want the measured value to be displayed in "PU" (PU: packing unit). – MEASURED VALUE = 0.5 m (1.6 ft) ≙ 1 PU – Entry CUSTOMER UNIT H: PU – Entry CUST. UNIT FACT. H: 2 – Result: MEASURED VALUE = 1 PU **Factory setting:** 1.0
UNIT VOLUME (313) Selection	Select volume unit. **Prerequisite:** ■ LIN. MEASURAND = Volume **Options:** ■ l ■ hl ■ cm^3 ■ dm^3 ■ m^3 ■ m^3 E^3 ■ ft ■ ft^3 E^3 ■ gal ■ Igal ■ bbl ■ User unit, → see also the following parameter description for CUSTOMER UNIT V and CUST. UNIT FACT. V. **Factory setting:** m^3
CUSTOMER UNIT V (608) Entry	Enter text (unit) for customer-specific volume unit. You can enter a maximum of eight alphanumeric characters here. → See also CUST. UNIT FACT. V **Prerequisite:** ■ LIN. MEASURAND = Volume, UNIT VOLUME = User unit ✎ Note! Only the first five characters are shown on the on-site display. For example, if "crates" is specified as the customer-specific unit, "crate" is displayed. If the unit contains a slash, up to eight characters can be shown on the on-site display. The maximum number of characters in the counter is again limited to five. For example, if "crates/m2" is specified as the customer-specific unit, "crate/m2" is displayed. In the FieldCare, all eight characters are displayed. In the HART handheld terminal, the customer-specific unit is only displayed in the CUSTOMER UNIT H parameter. The measured value is displayed with the additional text "User Unit". **Factory setting:** – – – – – – – –

Table 11: (GROUP SELECTION →) OPERATING MENU → SETTINGS → BASIC SETUP "Level", LEVEL MODE "Linear"	
Parameter name	**Description**
CUST. UNIT FACT. V (607) Entry	Enter conversion factor for a customer-specific volume unit. The conversion factor must be entered in relation to the SI unit "m^3". → See also CUSTOMER UNIT V. **Prerequisite:** ■ LIN. MEASURAND = Volume, UNIT VOLUME = User unit **Example:** – You want the measured value to be displayed in "buckets". – MEASURED VALUE = 0.01 m3 ≙ 1 bucket – Entry CUSTOMER UNIT V: bucket – Entry CUST. UNIT FACT. V: 100 – Result: MEASURED VALUE = 1 bucket **Factory setting:** 1.0
MASS UNIT (709) Selection	Select mass unit. **Prerequisite:** ■ LIN. MEASURAND = Mass **Options:** ■ g ■ kg ■ t ■ oz ■ lb ■ ton ■ User unit, → see also the following parameter description for CUSTOMER UNIT M and CUST. UNIT FACT. M. **Factory setting:** kg
CUSTOMER UNIT M (704) Entry	Enter text (unit) for customer-specific mass unit. You can enter a maximum of eight alphanumeric characters here. → See also CUST. UNIT FACT. M. **Prerequisite:** ■ LIN. MEASURAND = Mass, MASS UNIT = User unit ✎ Note! Only the first five characters are shown on the on-site display. For example, if "crates" is specified as the customer-specific unit, "crate" is displayed. If the unit contains a slash, up to eight characters can be shown on the on-site display. The maximum number of characters in the counter is again limited to five. For example, if "crates/m2" is specified as the customer-specific unit, "crate/m2" is displayed. In the FieldCare, all eight characters are displayed. In the HART handheld terminal, the customer-specific unit is only displayed in the CUSTOMER UNIT M parameter. The measured value is displayed with the additional text "User Unit". **Factory setting:** – – – – – – – –

Table 11: (GROUP SELECTION →) OPERATING MENU → SETTINGS → BASIC SETUP "Level", LEVEL MODE "Linear"	
Parameter name	**Description**
CUST. UNIT FACT. M (703) Entry	Enter conversion factor for a customer-specific mass unit. The conversion factor must be entered in relation to the SI unit "kg". → See also CUSTOMER UNIT M. **Prerequisite:** ■ LIN. MEASURAND = Mass, MASS UNIT = User unit **Example:** – You want the measured value to be displayed in "buckets". – MEASURED VALUE = 10 kg ≙ 1 bucket – Entry CUSTOMER UNIT M: bucket – Entry CUST. UNIT FACT. M: 0.1 – Result: MEASURED VALUE = 1 bucket **Factory setting:** 1.0
CALIBRATION MODE (392) Selection	Select calibration mode. **Options:** ■ Wet Wet calibration takes place by filling and emptying the container. This calibration mode requires two pressure-level value pairs to be entered. In the case of two different levels, the level value is entered and the pressure measured at this moment is assigned to the level value. → See also the following parameter description for EMPTY CALIB., EMPTY PRESSURE, FULL CALIB. and FULL PRESSURE. ■ Dry Dry calibration is a theoretical calibration which you can carry out even if the device is not mounted or the container is empty. – For the "Level" measured variable, the density of the fluid (→ see Page 74, ADJUST DENSITY) must be entered. – For the "Volume" measured variable, the density of the fluid and the tank volume and tank height must be entered (→ see Page 74, ADJUST DENSITY, TANK VOLUME and TANK HEIGHT). – For the "Mass" measured variable, the tank volume and the tank height must be entered (→ see Page 75, TANK VOLUME and TANK HEIGHT). The density must also be entered in the case of a zero point shift (level offset) (→ see Page 74, ADJUST DENSITY). – For the "%" measured variable, the density of the fluid must be entered and a level assigned to the 100 % point (→ see Page 74 and 77, ADJUST DENSITY and 100% POINT). If the measurement should not start at the mounting location of the device, a level offset must be entered (→ see Page 77, ZERO POSITION). ✎ Note! LIN. MEASURAND: "% (Level)", "Mass" and "Volume": If the change to dry calibration is made after a wet calibration, the density must be entered correctly using the ADJUST DENSITY and DENSITY PROCESS parameter before changing the calibration mode. → See also Page 97. **Factory setting:** Wet
EMPTY CALIB. (314) Entry	Enter level value for the lower calibration point (container empty). The container is either empty or part full. By entering a value for this parameter, you are assigning a level value to the pressure present at the device. → See also EMPTY PRESSURE. **Prerequisite:** ■ CALIBRATION MODE = Wet ✎ Note! For this parameter, the on-site display shows the level value to be entered and the pressure present at the device. In order for the level value to be saved together with the pressure present at the device, the entry field for the level value must first be activated using the "+"- or "–" key before confirming with the "E" key. This applies also if the level value is to remain unchanged. **Factory setting:** 0.0

Table 11: (GROUP SELECTION →) OPERATING MENU → SETTINGS → BASIC SETUP "Level", LEVEL MODE "Linear"	
Parameter name	**Description**
EMPTY PRESSURE (710) Display	Displays the pressure value for the lower calibration point (container empty). → See also EMPTY CALIB. **Prerequisite:** ■ CALIBRATION MODE = Wet **Factory setting:** 0.0
FULL CALIB. (315) Entry	Enter level value for the upper calibration point (container full). The container is either completely or almost full. By entering a value for this parameter, you are assigning a level value to the pressure present at the device. → See also FULL PRESSURE. **Prerequisite:** ■ CALIBRATION MODE = Wet ✎ Note! For this parameter, the on-site display shows the level value to be entered and the pressure present at the device. In order for the level value to be saved together with the pressure present at the device, the entry field for the level value must first be activated using the "+"- or "–" key before confirming with the "E" key. This applies also if the level value is to remain unchanged. **Factory setting:** 100.0
FULL PRESSURE (711) Display	Displays the pressure value for the upper calibration point (container full). → See also FULL CALIB. **Prerequisite:** ■ CALIBRATION MODE = Wet **Factory setting:** High sensor limit (→ see PRESS. SENS HILIM, Page 119)
ADJUSTED DENSITY (810) Display	Displays the density calculated from the upper and lower level point. **Prerequisite:** ■ CALIBRATION MODE = Wet, LIN. MEASURAND = Level
DENSITY UNIT (812) Selection	Select density unit. **Prerequisite:** ■ LIN. MEASURAND = Level, CALIBRATION MODE = Dry ■ LIN. MEASURAND = % (Level), CALIBRATION MODE = Dry ■ LIN. MEASURAND = Volume, CALIBRATION MODE = Dry ■ LIN. MEASURAND = Mass, CALIBRATION MODE = Dry **Options:** ■ g/cm^3 ■ kg/dm^3 ■ kg/m^3 ■ US lb/in^3 ■ US lb/ft^3 **Factory setting:** kg/dm^3
ADJUST DENSITY (316) Entry	Enter density of fluid. **Prerequisite:** ■ LIN. MEASURAND = Level, CALIBRATION MODE = Dry ■ LIN. MEASURAND = % (Level), CALIBRATION MODE = Dry ■ LIN. MEASURAND = Volume, CALIBRATION MODE = Dry ■ LIN. MEASURAND = Mass, CALIBRATION MODE = Dry **Factory setting:** 1000.0

Table 11: (GROUP SELECTION →) OPERATING MENU → SETTINGS → BASIC SETUP "Level", LEVEL MODE "Linear"	
Parameter name	**Description**
UNIT VOLUME (313) Selection	Select volume unit. **Prerequisite:** ■ LIN. MEASURAND = Volume **Options:** ■ l ■ hl ■ cm^3 ■ dm^3 ■ m^3 ■ m^3 E^3 ■ ft ■ ft^3 E^3 ■ gal ■ Igal ■ bbl ■ User unit, → see also the following parameter description for CUSTOMER UNIT V and CUST. UNIT FACT. V. **Factory setting:** m^3
CUSTOMER UNIT V (608) Entry	Enter text (unit) for customer-specific volume unit. You can enter a maximum of eight alphanumeric characters here. → See also CUST. UNIT FACT. V **Prerequisite:** ■ LIN. MEASURAND = Volume, UNIT VOLUME = User unit ✎ Note! Only the first five characters are shown on the on-site display. For example, if "crates" is specified as the customer-specific unit, "crate" is displayed. If the unit contains a slash, up to eight characters can be shown on the on-site display. The maximum number of characters in the counter is again limited to five. For example, if "crates/m2" is specified as the customer-specific unit, "crate/m2" is displayed. In the FieldCare, all eight characters are displayed. In the HART handheld terminal, the customer-specific unit is only displayed in the CUSTOMER UNIT H parameter. The measured value is displayed with the additional text "User Unit". **Factory setting:** – – – – – – – –
CUST. UNIT FACT. V (607) Entry	Enter conversion factor for a customer-specific volume unit. The conversion factor must be entered in relation to the SI unit "m^3". → See also CUSTOMER UNIT V. **Prerequisite:** ■ LIN. MEASURAND = Volume, UNIT VOLUME = User unit **Example:** – You want the measured value to be displayed in "buckets". – MEASURED VALUE = 0.01 m3 ≙ 1 bucket – Entry CUSTOMER UNIT V: bucket – Entry CUST. UNIT FACT. V: 100 – Result: MEASURED VALUE = 1 bucket **Factory setting:** 1.0
TANK VOLUME (858) Entry	Enter tank volume. **Prerequisite:** ■ LIN. MEASURAND = Volume, CALIBRATION MODE = Dry ■ LIN. MEASURAND = Mass, CALIBRATION MODE = Dry **Factory setting:** 1.0 m^3

Table 11: (GROUP SELECTION →) OPERATING MENU → SETTINGS → BASIC SETUP "Level", LEVEL MODE "Linear"	
Parameter name	**Description**
HEIGHT UNIT (708) Selection	Select level unit. **Prerequisite:** ■ LIN. MEASURAND = % (Level), CALIBRATION MODE = Dry **Options:** ■ mm ■ dm ■ cm ■ m ■ inch ■ ft ■ User unit, → see also the following parameter description for CUSTOMER UNIT H and CUST. UNIT FACT. H. **Factory setting:** m
CUSTOMER UNIT H (706) Entry	Enter text (unit) for customer-specific level unit. You can enter a maximum of eight alphanumeric characters here. → See also CUST. UNIT FACT. H. **Prerequisite:** ■ LIN. MEASURAND = % (Level), CALIBRATION MODE = Dry, HEIGHT UNIT = User unit ✎ Note! Only the first five characters are shown on the on-site display. For example, if "crates" is specified as the customer-specific unit, "crate" is displayed. If the unit contains a slash, up to eight characters can be shown on the on-site display. The maximum number of characters in the counter is again limited to five. For example, if "crates/m2" is specified as the customer-specific unit, "crate/m2" is displayed. In the FieldCare, all eight characters are displayed. In the HART handheld terminal, the customer-specific unit is only displayed in the CUSTOMER UNIT H parameter. The measured value is displayed with the additional text "User Unit". **Factory setting:** – – – – – – – –
CUST. UNIT FACT. H (705) Entry	Enter conversion factor for a customer-specific level unit. The conversion factor must be entered in relation to the SI unit "m". → See also CUSTOMER UNIT H. **Prerequisite:** ■ LIN. MEASURAND = % (Level), CALIBRATION MODE = Dry, HEIGHT UNIT = User unit **Example:** – You want the measured value to be displayed in "PU" (PU: packing unit). – MEASURED VALUE = 0.5 m (1.6 ft) ≙ 1 PU – Entry CUSTOMER UNIT H: PU – Entry CUST. UNIT FACT. H: 2 – Result: MEASURED VALUE = 1 PU **Factory setting:** 1.0
TANK HEIGHT (859) Entry	Enter tank height. **Prerequisite:** ■ LIN. MEASURAND = Volume, CALIBRATION MODE = Dry ■ LIN. MEASURAND = Mass, CALIBRATION MODE = Dry **Factory setting:** 1.0 m

Table 11: (GROUP SELECTION →) OPERATING MENU → SETTINGS → BASIC SETUP "Level", LEVEL MODE "Linear"	
Parameter name	**Description**
100% POINT (813) Entry	Enter level value for 100% point. **Prerequisite:** ■ LIN. MEASURAND = % (Level), CALIBRATION MODE = Dry **Example:** – The 100 %-point should correspond to 4 m (13 ft). – Select the "m" unit via the HEIGHT UNIT parameter. – Enter the value "4" for this parameter (100% POINT). **Factory setting:** 1.0
ZERO POSITION (814) Entry	Enter value for level offset. If the measurement should not start at the mounting location of the device, e.g. for containers with a sump, carry out zero point shift (level offset). **Prerequisite:** ■ CALIBRATION MODE = Dry **Factory setting:** 0.0 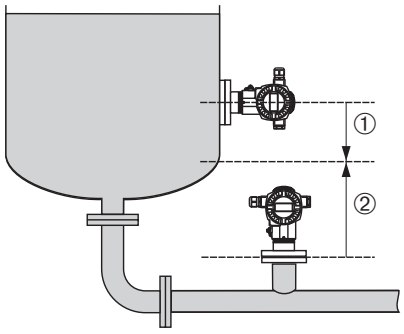 P01-PMP75xxx-19-xx-xx-xx-001 *Fig. 32: Zero point shift* *1 Device is mounted above the level lower range value: a positive value has to be entered for ZERO POSITION.* *2 Device is mounted below the level lower range value: a negative value has to be entered for ZERO POSITION.*
SET LRV (719) Entry	Enter level value for the lower current value (4 mA). **Factory setting:** 0.0
SET URV (720) Entry	Enter level value for the upper current value (20 mA). **Factory setting:** 100.0
DAMPING VALUE (247) Entry	Enter damping time (time constant τ). The damping affects the speed at which all subsequent elements, such as the on-site display, measured value and current output react to a change in the pressure. **Input range:** 0.0...999.0 s **Factory setting:** 2.0 s or as per order specifications

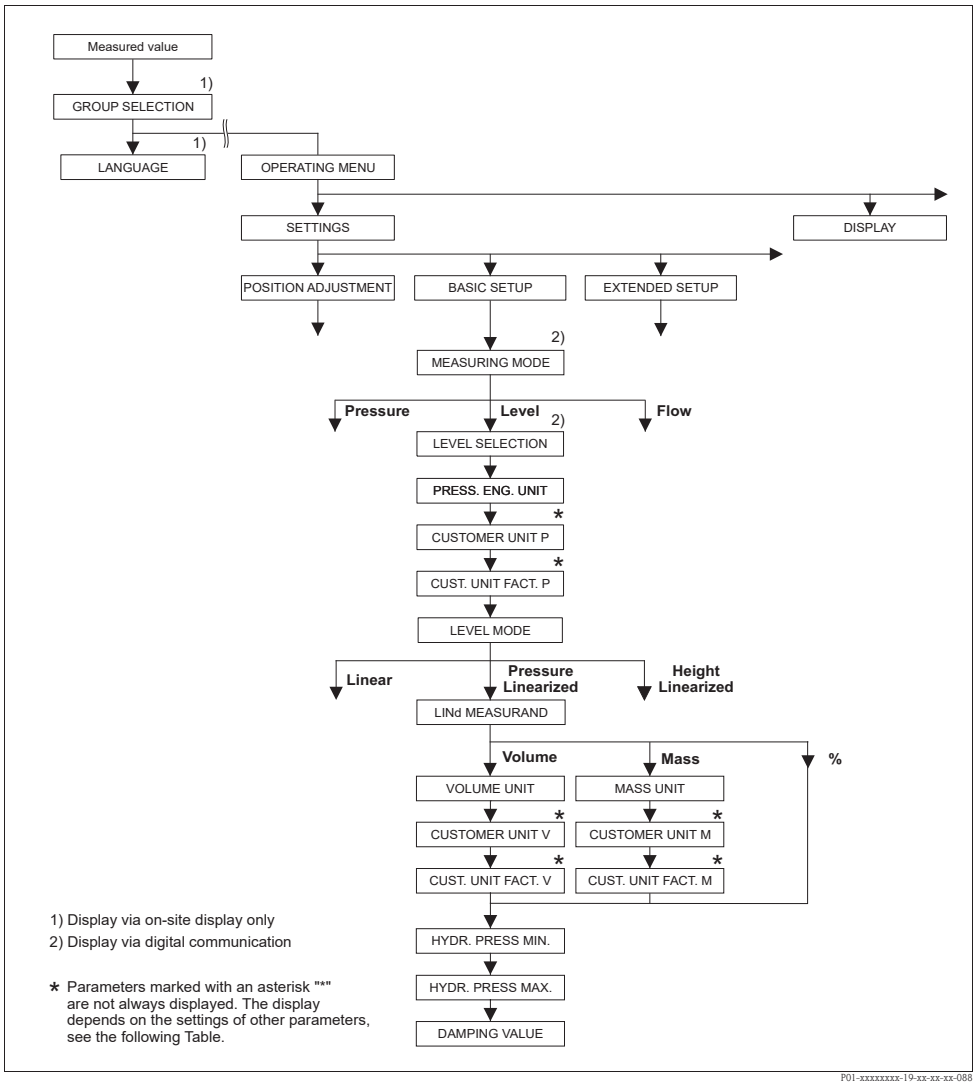

Fig. 33: BASIC SETUP function group for the "Level" measuring mode and the "Pressure Linearized" level type, continue calibration with LINEARISATION function group
→ See Page 100 ff for on-site operation and Page 104 ff for operation with digital communication.

Table 12: (GROUP SELECTION →) OPERATING MENU → SETTINGS → BASIC SETUP "Level", LEVEL MODE "Pressure Linearized"

Parameter name	Description
The following parameters are displayed if you selected the "Pressure Linearized" option for the LEVEL MODE parameter. For this level type, the measured variable (volume, mass or %) is not in direct proportion to the measured pressure. For the calibration, enter a linearisation table with at least 2 and not more than 32 points. **Prerequisite**: ■ MEASURING MODE = Level (→ see also Page 45). ■ LEVEL SELECTION = Level Standard (→ see also Page 46). ■ LEVEL MODE = Pressure Linearized (→ see also Page 68). **Note:** See also – Page 67 ff, Table 10: BASIC SETUP – general – Page 96 ff, Table 16: EXTENDED SETUP – Page 100 ff, Table 18: LINEARISATION – on-site operation – Page 104 ff, Table 19: LINEARISATION – Digital communication – Page 122 ff, Table 28: PROCESS VALUES – Page 14 ff, Section 5 "Level measurement".	

Table 12: (GROUP SELECTION →) OPERATING MENU → SETTINGS → BASIC SETUP "Level", LEVEL MODE "Pressure Linearized"	
Parameter name	**Description**
LINd. MEASURAND (805) Selection	Select measured variable. **Options:** ■ Pressure and Volume ■ Pressure and Mass ■ Pressure and % **Factory setting:** Pressure and %
UNIT VOLUME (313) Selection	Select volume unit. **Prerequisite:** ■ LINd. MEASURAND = Pressure and Volume **Options:** ■ l ■ hl ■ cm^3 ■ dm^3 ■ m^3 ■ m^3 E^3 ■ ft ■ ft^3 E^3 ■ gal ■ Igal ■ bbl ■ User unit, → see also the following parameter description for CUSTOMER UNIT V and CUST. UNIT FACT. V. **Factory setting:** m^3
CUSTOMER UNIT V (608) Entry	Enter text (unit) for customer-specific volume unit. You can enter a maximum of eight alphanumeric characters here. → See also CUST. UNIT FACT. V **Prerequisite:** ■ LINd. MEASURAND = Pressure and Volume, UNIT VOLUME = User unit ✎ Note! Only the first five characters are shown on the on-site display. For example, if "crates" is specified as the customer-specific unit, "crate" is displayed. If the unit contains a slash, up to eight characters can be shown on the on-site display. The maximum number of characters in the counter is again limited to five. For example, if "crates/m2" is specified as the customer-specific unit, "crate/m2" is displayed. In the FieldCare, all eight characters are displayed. In the HART handheld terminal, the customer-specific unit is only displayed in the CUSTOMER UNIT V parameter. The measured value is displayed with the additional text "User Unit". **Factory setting:** – – – – – – – –
CUST. UNIT FACT. V (607) Entry	Enter conversion factor for a customer-specific volume unit. The conversion factor must be entered in relation to the SI unit "m^3". → See also CUSTOMER UNIT V. **Prerequisite:** ■ LINd. MEASURAND = Pressure and Volume, UNIT VOLUME = User unit **Example:** – You want the measured value to be displayed in "buckets". – MEASURED VALUE = 0.01 m3 ≙ 1 bucket – Entry CUSTOMER UNIT V: bucket – Entry CUST. UNIT FACT. V: 100 – Result: MEASURED VALUE = 1 bucket **Factory setting:** 1.0

Table 12: (GROUP SELECTION →) OPERATING MENU → SETTINGS → BASIC SETUP "Level", LEVEL MODE "Pressure Linearized"	
Parameter name	**Description**
MASS UNIT (709) Selection	Select mass unit. **Prerequisite:** ■ LINd. MEASURAND = Pressure and Mass **Options:** ■ g ■ kg ■ t ■ oz ■ lb ■ ton ■ User unit, → see also the following parameter description for CUSTOMER UNIT M and CUST. UNIT FACT. M. **Factory setting:** kg
CUSTOMER UNIT M (704) Entry	Enter text (unit) for customer-specific mass unit. You can enter a maximum of eight alphanumeric characters here. → See also CUST. UNIT FACT. M. **Prerequisite:** ■ LINd. MEASURAND = Pressure and Mass, MASS UNIT = User unit ✎ Note! Only the first five characters are shown on the on-site display. For example, if "crates" is specified as the customer-specific unit, "crate" is displayed. If the unit contains a slash, up to eight characters can be shown on the on-site display. The maximum number of characters in the counter is again limited to five. For example, if "crates/m2" is specified as the customer-specific unit, "crate/m2" is displayed. In the FieldCare, all eight characters are displayed. In the HART handheld terminal, the customer-specific unit is only displayed in the CUSTOMER UNIT M parameter. The measured value is displayed with the additional text "User Unit". **Factory setting:** _ _ _ _ _ _ _ _
CUST. UNIT FACT. M (703) Entry	Enter conversion factor for a customer-specific mass unit. The conversion factor must be entered in relation to the SI unit "kg". → See also CUSTOMER UNIT M. **Prerequisite:** ■ LINd. MEASURAND = Pressure and Mass, MASS UNIT = User unit **Example:** – You want the measured value to be displayed in "buckets". – MEASURED VALUE = 10 kg ≙ 1 bucket – Entry CUSTOMER UNIT M: bucket – Entry CUST. UNIT FACT. M: 0.1 – Result: MEASURED VALUE = 1 bucket **Factory setting:** 1.0
HYDR. PRESS MIN. (775) Entry	Enter the minimum hydrostatic pressure to be expected. The input limits for the calibration (editing limits) are derived from the value entered. The closer the value entered corresponds to the minimum hydrostatic pressure to be expected, the more accurate the measurement result. **Factory setting:** 0.0

Table 12: (GROUP SELECTION →) OPERATING MENU → SETTINGS → BASIC SETUP "Level", LEVEL MODE "Pressure Linearized"	
Parameter name	**Description**
HYDR. PRESS MAX. (761) Entry	Enter the maximum hydrostatic pressure to be expected. The input limits for the calibration (editing limits) are derived from the value entered. The closer the value entered corresponds to the maximum hydrostatic pressure to be expected, the more accurate the measurement result. **Factory setting:** High sensor limit (→ See PRESS. SENS HILIM, Page 119)
DAMPING VALUE (247) Entry	Enter damping time (time constant τ). The damping affects the speed at which all subsequent elements, such as the on-site display, measured value and current output react to a change in the pressure. **Input range:** 0.0...999.0 s **Factory setting:** 2.0 s or as per order specifications

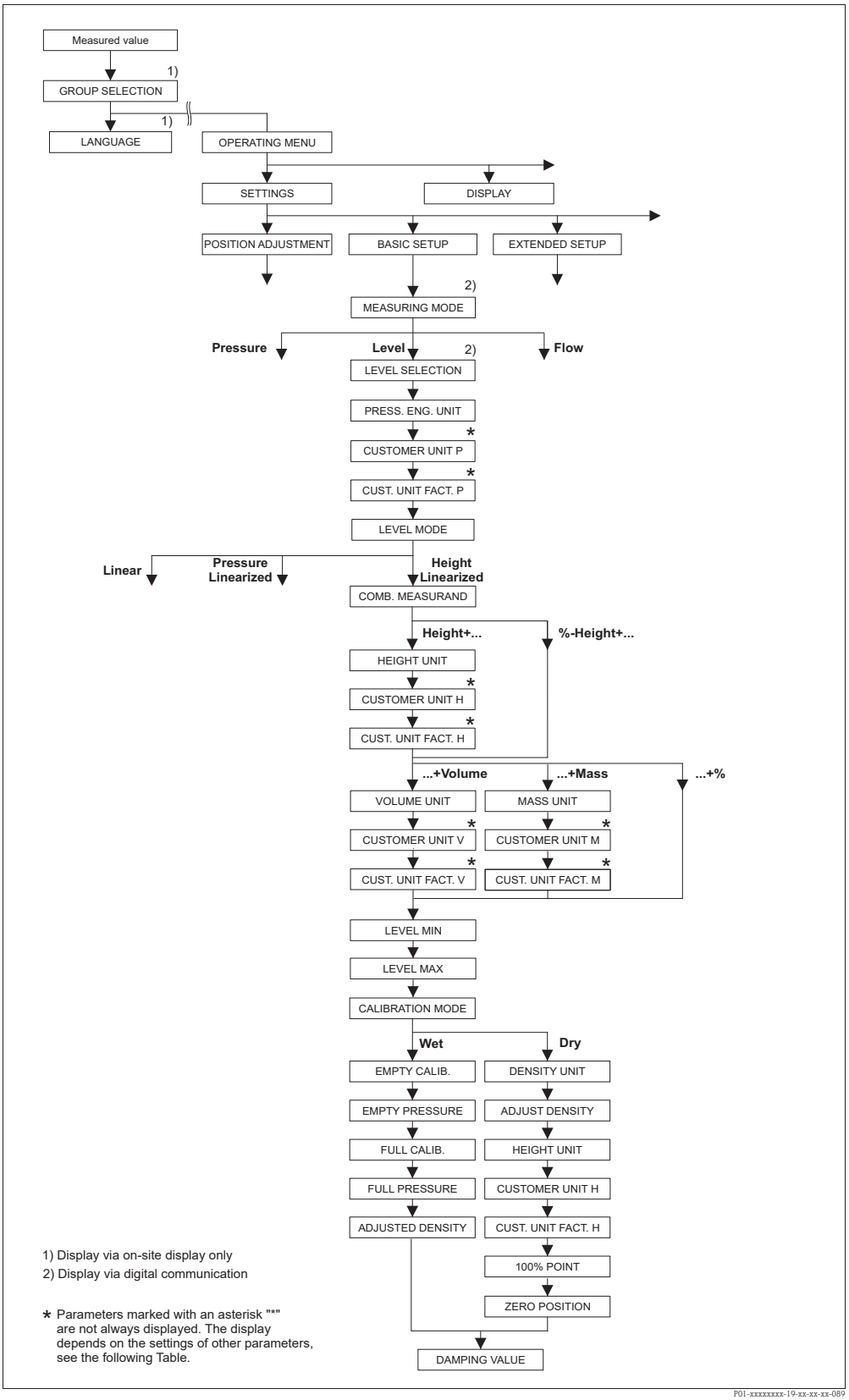

Fig. 34: BASIC SETUP function group for the "Level" measuring mode and the "Height Linearized" level type, continue calibration with LINEARISATION function group → See Page 100 ff for on-site operation and Page 104 ff for operation with digital communication.

Table 13: (GROUP SELECTION →) OPERATING MENU → SETTINGS → BASIC SETUP "Level", LEVEL MODE "Height Linearized"	
Parameter name	**Description**
The following parameters are displayed if you selected the "Height Linearized" option for the LEVEL MODE parameter. Select this level type if you require two measured variables or if the container shape is given with value pairs, e.g. height and volume. The following combinations are possible: ■ Height + Volume ■ Height + Mass ■ Height + % ■ %-Height + Volume ■ %-Height + Mass ■ %-Height + % The 1st measured variable (%-Height or Height) must be in direct proportion to the measured pressure. The 2nd measured variable (Volume, Mass or %) must not be in direct proportion. A linearisation table must be entered for the 2nd measured variable. The 2nd measured variable is assigned to the 1st measured variable by means of this table. **Prerequisite**: ■ MEASURING MODE = Level (→ see also Page 45). ■ LEVEL SELECTION = Level Standard (→ see also Page 46). ■ LEVEL MODE = Height Linearized (→ see also Page 68). **Note:** See also – Page 67 ff, Table 10: BASIC SETUP – general – Page 96 ff, Table 16: EXTENDED SETUP – Page 100 ff, Table 18: LINEARISATION – on-site operation – Page 104 ff, Table 19: LINEARISATION – Digital communication – Page 122 ff, Table 28: PROCESS VALUES – Page 14 ff, Section 5 "Level measurement".	
COMB. MEASURAND (806) Selection	Select measured variable. **Options:** ■ Height and Volume ■ Height and Mass ■ Height and % ■ %-Height and Volume ■ %-Height and Mass ■ %-Height and % **Factory setting:** %-Height and %
HEIGHT UNIT (708) Selection	Select level unit for the 1st measured variable. **Prerequisite:** ■ COMB. MEASURAND = Height and Volume, Height and Mass or Height and % **Options:** ■ mm ■ dm ■ cm ■ m ■ inch ■ ft ■ User unit, → see also the following parameter description for CUSTOMER UNIT H and CUST. UNIT FACT. H. **Factory setting:** m

Table 13: (GROUP SELECTION →) OPERATING MENU → SETTINGS → BASIC SETUP "Level", LEVEL MODE "Height Linearized"	
Parameter name	**Description**
CUSTOMER UNIT H (706) Entry	Enter text (unit) for customer-specific level unit. You can enter a maximum of eight alphanumeric characters here. → See also CUST. UNIT FACT. H. **Prerequisite:** ■ COMB. MEASURAND = Height and Volume, HEIGHT UNIT = User unit ■ COMB. MEASURAND = Height and Mass, HEIGHT UNIT = User unit ■ COMB. MEASURAND = Height and %, HEIGHT UNIT = User unit ✎ Note! Only the first five characters are shown on the on-site display. For example, if "crates" is specified as the customer-specific unit, "crate" is displayed. If the unit contains a slash, up to eight characters can be shown on the on-site display. The maximum number of characters in the counter is again limited to five. For example, if "crates/m2" is specified as the customer-specific unit, "crate/m2" is displayed. In the FieldCare, all eight characters are displayed. In the HART handheld terminal, the customer-specific unit is only displayed in the CUSTOMER UNIT H parameter. The measured value is displayed with the additional text "User Unit". **Factory setting:** – – – – – – – –
CUST. UNIT FACT. H (705) Entry	Enter conversion factor for a customer-specific level unit. The conversion factor must be entered in relation to the SI unit "m". → See also CUSTOMER UNIT H. **Prerequisite:** ■ COMB. MEASURAND = Height and Volume, HEIGHT UNIT = User unit ■ COMB. MEASURAND = Height and Mass, HEIGHT UNIT = User unit ■ COMB. MEASURAND = Height and %, HEIGHT UNIT = User unit **Example:** – You want the measured value to be displayed in "PU" (PU: packing unit). – MEASURED VALUE = 0.5 m (1,6 ft) ≙ 1 PU – Entry CUSTOMER UNIT H: PU – Entry CUST. UNIT FACT. H: 2 – Result: MEASURED VALUE = 1 PU **Factory setting:** 1.0
UNIT VOLUME (313) Selection	Select the volume unit for the 2nd measured value. **Prerequisite:** ■ COMB. MEASURAND = Height and Volume or %-Height and Volume **Options:** ■ l ■ hl ■ cm^3 ■ dm^3 ■ m^3 ■ m^3 E^3 ■ ft ■ ft^3 E^3 ■ gal ■ Igal ■ bbl ■ User unit, → see also the following parameter description for CUSTOMER UNIT V and CUST. UNIT FACT. V. **Factory setting:** m^3

Table 13: (GROUP SELECTION →) OPERATING MENU → SETTINGS → BASIC SETUP "Level", LEVEL MODE "Height Linearized"	
Parameter name	**Description**
CUSTOMER UNIT V (608) Entry	Enter text (unit) for customer-specific volume unit. You can enter a maximum of eight alphanumeric characters here. → See also CUST. UNIT FACT. V **Prerequisite:** ■ COMB. MEASURAND = Height and Volume, HEIGHT UNIT = User unit ■ COMB. MEASURAND = %-Height and Volume, HEIGHT UNIT = User unit ✎ Note! Only the first five characters are shown on the on-site display. For example, if "crates" is specified as the customer-specific unit, "crate" is displayed. If the unit contains a slash, up to eight characters can be shown on the on-site display. The maximum number of characters in the counter is again limited to five. For example, if "crates/m2" is specified as the customer-specific unit, "crate/m2" is displayed. In the FieldCare, all eight characters are displayed. In the HART handheld terminal, the customer-specific unit is only displayed in the CUSTOMER UNIT V parameter. The measured value is displayed with the additional text "User Unit". **Factory setting:** – – – – – – – –
CUST. UNIT FACT. V (607) Entry	Enter conversion factor for a customer-specific volume unit. The conversion factor must be entered in relation to the SI unit "m^3". → See also CUSTOMER UNIT V. **Prerequisite:** ■ COMB. MEASURAND = Height and Volume, HEIGHT UNIT = User unit ■ COMB. MEASURAND = %-Height and Volume, HEIGHT UNIT = User unit **Example:** – You want the measured value to be displayed in "buckets". – MEASURED VALUE = 0.01 m3 ≙ 1 bucket – Entry CUSTOMER UNIT V: bucket – Entry CUST. UNIT FACT. V: 100 – Result: MEASURED VALUE = 1 bucket **Factory setting:** 1.0
MASS UNIT (709) Selection	Select the mass unit for the 2nd measured value. **Prerequisite:** ■ COMB. MEASURAND = Height and Mass or %-Height and Mass **Options:** ■ g ■ kg ■ t ■ oz ■ lb ■ ton ■ User unit, → see also the following parameter description for CUSTOMER UNIT M and CUST. UNIT FACT. M. **Factory setting:** kg

Table 13: (GROUP SELECTION →) OPERATING MENU → SETTINGS → BASIC SETUP "Level", LEVEL MODE "Height Linearized"	
Parameter name	**Description**
CUSTOMER UNIT M (704) Entry	Enter text (unit) for customer-specific mass unit. You can enter a maximum of eight alphanumeric characters here. → See also CUST. UNIT FACT. M. **Prerequisite:** ■ COMB. MEASURAND = Height and Mass, MASS UNIT = User unit ■ COMB. MEASURAND = %-Height and Mass, MASS UNIT = User unit ✎ Note! Only the first five characters are shown on the on-site display. For example, if "crates" is specified as the customer-specific unit, "crate" is displayed. If the unit contains a slash, up to eight characters can be shown on the on-site display. The maximum number of characters in the counter is again limited to five. For example, if "crates/m2" is specified as the customer-specific unit, "crate/m2" is displayed. In the FieldCare, all eight characters are displayed. In the HART handheld terminal, the customer-specific unit is only displayed in the CUSTOMER UNIT M parameter. The measured value is displayed with the additional text "User Unit". **Factory setting:** – – – – – – – –
CUST. UNIT FACT. M (703) Entry	Enter conversion factor for a customer-specific mass unit. The conversion factor must be entered in relation to the SI unit "kg". → See also CUSTOMER UNIT M. **Prerequisite:** ■ COMB. MEASURAND = Height and Mass, MASS UNIT = User unit ■ COMB. MEASURAND = %-Height and Mass, MASS UNIT = User unit **Example:** – You want the measured value to be displayed in "buckets". – MEASURED VALUE = 10 kg ≙ 1 bucket – Entry CUSTOMER UNIT M: bucket – Entry CUST. UNIT FACT. M: 0.1 – Result: MEASURED VALUE = 1 bucket **Factory setting:** 1.0
LEVEL MIN (755) Entry	Enter the minimum level to be expected. The input limits for the calibration (editing limits) are derived from the value entered. The closer the value entered corresponds to the minimum level to be expected, the more accurate the measurement result. ✎ Note! ■ The following applies for the setting LEVEL MODE "Height Linearized" and ASSIGN CURRENT "Linear": If you enter a new value for LEVEL MIN, the value for SET LRV is also changed. Use SET LRV to assign a height to the lower current value. If you want to assign the lower current value a value other than that for LEVEL MIN, you must enter the desired value for SET LRV. (→ SET LRV, Page 98 and ASSIGN CURRENT, Page 113) **Factory setting:** 0.0
LEVEL MAX (712) Entry	Enter the maximum level to be expected. The input limits for the calibration (editing limits) are derived from the value entered. The closer the value entered corresponds to the maximum level to be expected, the more accurate the measurement result. ✎ Note! ■ The following applies for the setting LEVEL MODE "Height Linearized" and ASSIGN CURRENT "Linear": If you enter a new value for LEVEL MAX, the value for SET URV is also changed. Use SET URV to assign a height to the upper current value. If you want to assign the upper current value a value other than that for LEVEL MAX, you must enter the desired value for SET URV. (→ SET URV, Page 98 and ASSIGN CURRENT, Page 113) **Factory setting:** 100.0

Table 13: (GROUP SELECTION →) OPERATING MENU → SETTINGS → BASIC SETUP "Level", LEVEL MODE "Height Linearized"	
Parameter name	**Description**
CALIBRATION MODE (392) Selection	Select the calibration mode for the calibration of the 1st measured variable. **Options:** ■ Wet Wet calibration takes place by filling the container. This calibration mode requires two pressure-level value pairs to be entered. In the case of two different levels, the level value is entered and the pressure measured at this moment is assigned to the level value. → See also the following parameter description for EMPTY CALIB., EMPTY PRESSURE, FULL CALIB. and FULL PRESSURE. ■ Dry Dry calibration is a theoretical calibration which you can carry out even if the device is not mounted or the container is empty. – For the "Level" measured variable, the density of the fluid (→ see Page 88, ADJUST DENSITY) must be entered. – For the "%" measured variable, the density of the fluid must be entered and a level assigned to the 100 % point (→ see Page 88, ADJUST DENSITY and 100% POINT). If the measurement should not start at the mounting location of the device, a level offset must be entered (→ see Page 90, ZERO POSITION). ✎ Note! If the change to dry calibration is made after a wet calibration, the density must be entered correctly using the ADJUST DENSITY and DENSITY PROCESS parameter before changing the calibration mode. → See also Page 97. **Factory setting:** Wet
EMPTY CALIB. (314) Entry	Enter level value for the lower calibration point (container empty). The container is either empty or part full. By entering a value for this parameter, you are assigning a level value to the pressure present at the device. → See also EMPTY PRESSURE. **Prerequisite:** ■ CALIBRATION MODE = Wet **Factory setting:** 0.0
EMPTY PRESSURE (710) Display	Displays the pressure value for the lower calibration point (container empty). → See also EMPTY CALIB. **Prerequisite:** ■ CALIBRATION MODE = Wet
FULL CALIB. (315) Entry	Enter level value for the upper calibration point (container full). The container is either completely or almost full. By entering a value for this parameter, you are assigning a level value to the pressure present at the device. → See also FULL PRESSURE. **Prerequisite:** ■ CALIBRATION MODE = Wet **Factory setting:** 100.0
FULL PRESSURE (711) Display	Displays the pressure value for the upper calibration point (container full). → See also FULL CALIB. **Prerequisite:** ■ CALIBRATION MODE = Wet **Factory setting:** High sensor limit (→ see PRESS. SENS HILIM, Page 119)
ADJUSTED DENSITY (810) Display	Displays the density calculated from the upper and lower level point. **Prerequisite:** ■ COMB. MEASURAND = Height and Volume, CALIBRATION MODE = Wet ■ COMB. MEASURAND = Height and Mass, CALIBRATION MODE = Wet ■ COMB. MEASURAND = Height and %, CALIBRATION MODE = Wet

Table 13: (GROUP SELECTION →) OPERATING MENU → SETTINGS → BASIC SETUP "Level", LEVEL MODE "Height Linearized"	
Parameter name	**Description**
DENSITY UNIT (812) Selection	Select density unit. **Prerequisite:** ■ COMB. MEASURAND = %-Height and %, CALIBRATION MODE = Dry ■ COMB. MEASURAND = %-Height and Volume, CALIBRATION MODE = Dry ■ COMB. MEASURAND = %-Height and Mass, CALIBRATION MODE = Dry ■ COMB. MEASURAND = Height and %, CALIBRATION MODE = Dry ■ COMB. MEASURAND = Height and Volume, CALIBRATION MODE = Dry ■ COMB. MEASURAND = Height and Mass, CALIBRATION MODE = Dry **Options:** ■ g/cm^3 ■ kg/dm^3 ■ kg/m^3 ■ US lb/in^3 ■ US lb/ft^3 **Factory setting:** kg/dm^3
ADJUST DENSITY (316) Entry	Enter density of fluid. **Prerequisite:** ■ COMB. MEASURAND = %-Height and %, CALIBRATION MODE = Dry ■ COMB. MEASURAND = %-Height and Volume, CALIBRATION MODE = Dry ■ COMB. MEASURAND = %-Height and Mass, CALIBRATION MODE = Dry ■ COMB. MEASURAND = Height and %, CALIBRATION MODE = Dry ■ COMB. MEASURAND = Height and Volume, CALIBRATION MODE = Dry ■ COMB. MEASURAND = Height and Mass, CALIBRATION MODE = Dry **Factory setting:** 1.0
HEIGHT UNIT (708) Selection	Select level unit. **Prerequisite:** ■ COMB. MEASURAND = %-Height and Volume, CALIBRATION MODE = Dry ■ COMB. MEASURAND = %-Height and Mass, CALIBRATION MODE = Dry ■ COMB. MEASURAND = %-Height + %, CALIBRATION MODE = Dry **Options:** ■ mm ■ dm ■ cm ■ m ■ inch ■ ft ■ User unit, → see also the following parameter description for CUSTOMER UNIT H and CUST. UNIT FACT. H. **Factory setting:** m

Table 13: (GROUP SELECTION →) OPERATING MENU → SETTINGS → BASIC SETUP "Level", LEVEL MODE "Height Linearized"	
Parameter name	**Description**
CUSTOMER UNIT H (706) Entry	Enter text (unit) for customer-specific level unit. You can enter a maximum of eight alphanumeric characters here. → See also CUST. UNIT FACT. H. **Prerequisite:** ■ COMB. MEASURAND = %-Height and Volume, CALIBRATION MODE = Dry, HEIGHT UNIT = User unit ■ COMB. MEASURAND = %-Height and Mass, CALIBRATION MODE = Dry, HEIGHT UNIT = User unit ■ COMB. MEASURAND = %-Height and %, CALIBRATION MODE = Dry, HEIGHT UNIT = User unit ✎ Note! Only the first five characters are shown on the on-site display. For example, if "crates" is specified as the customer-specific unit, "crate" is displayed. If the unit contains a slash, up to eight characters can be shown on the on-site display. The maximum number of characters in the counter is again limited to five. For example, if "crates/m2" is specified as the customer-specific unit, "crate/m2" is displayed. In the FieldCare, all eight characters are displayed. In the HART handheld terminal, the customer-specific unit is only displayed in the CUSTOMER UNIT H parameter. The measured value is displayed with the additional text "User Unit". **Factory setting:** – – – – – – – –
CUST. UNIT FACT. H (705) Entry	Enter conversion factor for a customer-specific level unit. The conversion factor must be entered in relation to the SI unit "m". → See also CUSTOMER UNIT H. **Prerequisite:** ■ COMB. MEASURAND = %-Height and Volume, CALIBRATION MODE = Dry, HEIGHT UNIT = User unit ■ COMB. MEASURAND = %-Height and Mass, CALIBRATION MODE = Dry, HEIGHT UNIT = User unit ■ COMB. MEASURAND = %-Height and %, CALIBRATION MODE = Dry, HEIGHT UNIT = User unit **Example:** – You want the measured value to be displayed in "PU" (PU: packing unit). – MEASURED VALUE = 0.5 m (1.6 ft) ≙ 1 PU – Entry CUSTOMER UNIT H: PU – Entry CUST. UNIT FACT. H: 2 – Result: MEASURED VALUE = 1 PU **Factory setting:** 1.0
100% POINT (813) Entry	Enter level value for 100% point. **Prerequisite:** ■ COMB. MEASURAND = %-Height and Volume, CALIBRATION MODE = Dry ■ COMB. MEASURAND = %-Height and Mass, CALIBRATION MODE = Dry ■ COMB. MEASURAND = %-Height + %, CALIBRATION MODE = Dry **Example:** – The 100 %-point should correspond to 4 m (13 ft). – Select the "m" unit via the HEIGHT UNIT parameter. – Enter the value "4" for this parameter (100% POINT). **Factory setting:** 1.0

Table 13: (GROUP SELECTION →) OPERATING MENU → SETTINGS → BASIC SETUP "Level", LEVEL MODE "Height Linearized"	
Parameter name	**Description**
ZERO POSITION (814) Entry	Enter value for level offset. If the measurement should not start at the mounting location of the device, e.g. for containers with a sump, carry out zero point shift (level offset). **Prerequisite:** ■ CALIBRATION MODE = Dry 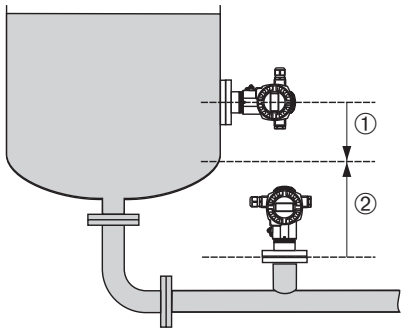 P01-PMP75xxx-19-xx-xx-xx-001 *Fig. 35: Zero point shift* *1 Device is mounted above the level lower range value: a positive value has to be entered for ZERO POSITION.* *2 Device is mounted below the level lower range value: a negative value has to be entered for ZERO POSITION.* **Factory setting:** 0.0
DAMPING VALUE (247) Entry	Enter damping time (time constant τ). The damping affects the speed at which all subsequent elements, such as the on-site display, measured value and current output react to a change in the pressure. **Input range:** 0.0...999.0 s **Factory setting:** 2.0 s or as per order specifications

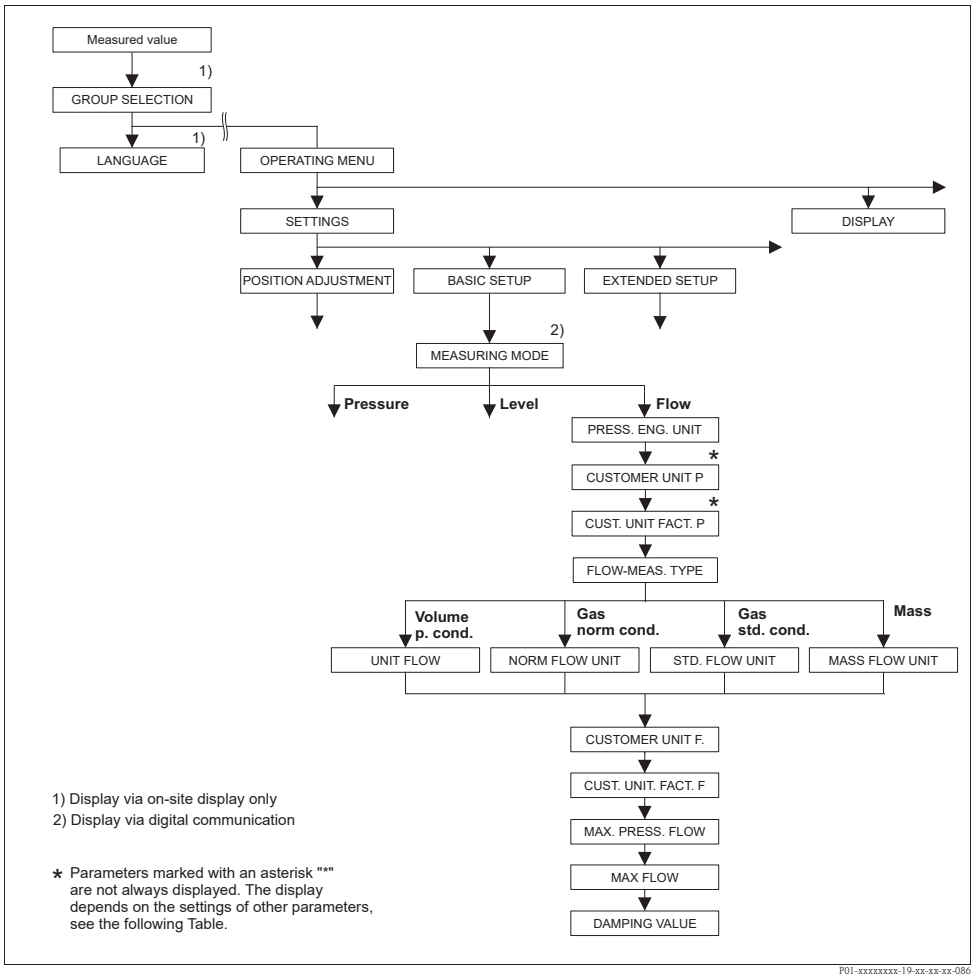

Fig. 36: BASIC SETUP function group for the "Flow" measuring mode

Table 14: (GROUP SELECTION →) OPERATING MENU → SETTINGS → BASIC SETUP "Flow"	
Parameter name	**Description**
Prerequisite: ■ MEASURING MODE = Flow (→ see also Page 45). **Note:** See also – Page 52, Table 5: QUICK SETUP – Page 98, Table 15: EXTENDED SETUP – Page 107, Table 18: TOTALIZER SETUP – Page 123, Table 27: PROCESS VALUES. – Page 40 ff, Section 6 "Flow measurement".	

Table 14: (GROUP SELECTION →) OPERATING MENU → SETTINGS → BASIC SETUP "Flow"	
Parameter name	**Description**
MEASURING MODE Selection	Select the measuring mode. The operating menu is structured according to the selected measuring mode. ⚠ Warning! If the measuring mode is changed, the span setting (URV) must be verified in the "Calibration" → "Basic Setup" operating menu and, if necessary, reconfigured. **Prerequisite:** ■ Digital communication **Options:** ■ Pressure ■ Level ■ Deltabar S: Flow **Factory setting:** ■ Cerabar S and Deltabar S: Pressure ■ Deltapilot S: Level
PRESS. ENG. UNIT (060) Selection	Select pressure unit. If a new pressure unit is selected, all pressure-specific parameters are converted and displayed with the new unit. **Options:** ■ mbar, bar ■ mmH2O, mH2O, inH2O, ftH2O [1)] ■ Pa, hPa, kPa, MPa ■ psi ■ mmHg, inHg [2)] ■ Torr ■ g/cm^2, kg/cm^2 ■ lb/ft^2 ■ atm ■ gf/cm^2, kgf/cm^2 ■ User unit, → See also the following parameter description for CUSTOMER UNIT P and CUST. UNIT FACT. P. 1) The conversion factor of the pressure units refers to a reference temperature of 4 °C (39.2 °F). 2) The conversion factor of the pressure units refers to a reference temperature of 0 °C (32 °F). **Factory setting:** Depends on the sensor nominal measuring range mbar or bar or as per order specifications
CUSTOMER UNIT P (075) Entry	Enter text (unit) for customer-specific pressure unit. You can enter a maximum of eight alphanumeric characters here. → See also CUST. UNIT FACT. P. **Prerequisite:** ■ PRESS. ENG. UNIT = User unit ✎ Note! Only the first five characters are shown on the on-site display. For example, if "crates" is specified as the customer-specific unit, "crate" is displayed. If the unit contains a slash, up to eight characters can be shown on the on-site display. The maximum number of characters in the counter is again limited to five. For example, if "crates/m2" is specified as the customer-specific unit, "crate/m2" is displayed. In the FieldCare, all eight characters are displayed. In the HART handheld terminal, the customer-specific unit is only displayed in the CUSTOMER UNIT P parameter. The measured value is displayed with the additional text "User Unit". **Factory setting:** – – – – – – – –

Table 14: (GROUP SELECTION →) OPERATING MENU → SETTINGS → BASIC SETUP "Flow"	
Parameter name	**Description**
CUST. UNIT FACT. P (317) Entry	Enter conversion factor for a customer-specific pressure unit. The conversion factor must be entered in relation to the SI unit "Pa". → See also CUSTOMER UNIT P. **Prerequisite:** ■ PRESS. ENG. UNIT = User unit **Example:** – You want the measured value to be displayed in "PU" (PU: packing unit). – MEASURED VALUE =10000 Pa ≙ 1 PU – Entry CUSTOMER UNIT P: PU – Entry CUST. UNIT FACT. P: 0.0001 – Result: MEASURED VALUE = 1 PU **Factory setting:** 1.0
FLOW-MEAS. TYPE (640) Selection	Select the flow type. **Options:** ■ Volume p. cond. (volume under operating conditions) ■ Gas norm. cond. (norm volume under norm conditions in Europe: 1013.25 mbar and 273.15 K (0°C)) ■ Gas std. cond. (standard volume under standard conditions in USA: 1013.25 mbar (14.7 psi) and 288.15 K (15°C/59°F)) ■ Mass (mass under operating conditions) **Factory setting:** Volume p. cond.
UNIT FLOW (391) Selection	Select volume flow unit. When a new flow unit is selected, all flow-specific parameters are converted and displayed with the new unit within a flow mode (FLOW-MEAS. TYPE). When the flow mode is changed, conversion is not possible. **Prerequisite:** ■ FLOW-MEAS. TYPE = Volume p. cond. **Options:** ■ m3/s, m3/min, m3/h, m3/day ■ l/s, l/min, l/h ■ hl/s, hl/min, hl/day ■ ft3/s, ft3/min, ft3/h, ft3/day ■ ACFS, ACFM, ACFH, ACFD ■ ozf/s, ozf/min ■ US Gal/s, US Gal/min, US Gal/h, US Gal/day ■ Imp. Gal/s, Imp. Gal/min, Imp. Gal/h ■ bbl/s, bbl/min, bbl/h, bbl/day ■ User unit, → see also this table, parameter description for CUSTOMER UNIT F and CUST. UNIT FACT. F **Factory setting:** m^3/s
NORM FLOW UNIT (661) Selection	Select norm volume flow unit. When a new flow unit is selected, all flow-specific parameters are converted and displayed with the new unit within a flow mode (FLOW-MEAS. TYPE). When the flow mode is changed, conversion is not possible. **Prerequisite:** ■ FLOW-MEAS. TYPE = Gas norm conditions **Options:** ■ Nm3/s, Nm3/min, Nm3/h, Nm3/day ■ User unit, → see also this table, parameter description for CUSTOMER UNIT F and CUST. UNIT FACT. F **Factory setting:** Nm^3/s

Table 14: (GROUP SELECTION →) OPERATING MENU → SETTINGS → BASIC SETUP "Flow"	
Parameter name	**Description**
STD. FLOW UNIT (660) Selection	Select standard volume flow unit. When a new flow unit is selected, all flow-specific parameters are converted and displayed with the new unit within a flow mode (FLOW-MEAS. TYPE). When the flow mode is changed, conversion is not possible. **Prerequisite:** ■ FLOW-MEAS. TYPE = Gas std. conditions **Options:** ■ Sm3/s, Sm3/min, Sm3/h, Sm3/day ■ SCFS, SCFM, SCFH, SCFD ■ User unit, → see also this table, parameter description for CUSTOMER UNIT F and CUST. UNIT FACT. F **Factory setting:** Sm^3/s
MASS FLOW UNIT (571) Selection	Select mass flow unit. When a new flow unit is selected, all flow-specific parameters are converted and displayed with the new unit within a flow mode (FLOW-MEAS. TYPE). When the flow mode is changed, conversion is not possible. **Prerequisite:** ■ FLOW-MEAS. TYPE = Mass **Options:** ■ g/s, kg/s, kg/min, kg/min, kg/h ■ t/s, t/min, t/h, t/day ■ oz/s, oz/min ■ lb/s, lb/min, lb/h ■ ton/s, ton/min, ton/h, ton/day ■ User unit, → see also the following parameter description for CUSTOMER UNIT F and CUST. UNIT FACT. F **Factory setting:** kg/s
CUSTOMER UNIT F (610) Entry	Enter text (unit) for customer-specific flow unit. You can enter a maximum of eight alphanumeric characters here. → See also CUST. UNIT FACT. F. **Prerequisite:** ■ UNIT FLOW = User unit ■ NORM FLOW UNIT = User unit ■ STD. FLOW UNIT = User unit ■ MASS FLOW UNIT = User unit ✎ Note! Only the first five characters are shown on the on-site display. For example, if "crates" is specified as the customer-specific unit, "crate" is displayed. If the unit contains a slash, up to eight characters can be shown on the on-site display. The maximum number of characters in the counter is again limited to five. For example, if "crates/m2" is specified as the customer-specific unit, "crate/m2" is displayed. In the FieldCare, all eight characters are displayed. In the HART handheld terminal, the customer-specific unit is only displayed in the CUSTOMER UNIT F parameter. The measured value is displayed with the additional text "User Unit". **Factory setting:** _ _ _ _ _ _ _ _

Table 14: (GROUP SELECTION →) OPERATING MENU → SETTINGS → BASIC SETUP "Flow"	
Parameter name	**Description**
CUST. UNIT FACT. F (609) Entry	Enter conversion factor for a customer-specific flow unit. The conversion factor must be entered in relation to an appropriate SI unit, e.g. m^3/s for the "Volume p. cond." flow mode. → See also CUSTOMER UNIT F. **Prerequisite:** ■ UNIT FLOW = User unit ■ NORM FLOW UNIT = User unit ■ STD. FLOW UNIT = User unit ■ MASS FLOW UNIT = User unit **Example:** – You want the measured value to be displayed in "bucket/h". – MEASURED VALUE =0.01 m3/s ≙ 3600 bucket/h – Entry CUSTOMER UNIT F: bucket/h – Entry CUST. UNIT FACT. F: 360000 – Result: MEASURED VALUE = 3600 bucket/h **Factory setting:** 1.0
MAX. FLOW (311) Entry	Enter maximum flow of primary element. → See also layout sheet of primary element. The maximum flow is assigned to the maximum pressure which you enter via MAX PRESS. FLOW. ✎ Note! Use the LINEAR/SQROOT parameter (→ Page 113) to specify the current signal for the "Flow" measuring mode. The following applies for the "Flow (square root)" setting: If you enter a new value for MAX. FLOW, the value for SET URV is also changed. Use SET URV to assign a flow to the upper current value. If you want to assign the upper current value a value other than that for MAX. FLOW, you must enter the desired value for SET URV. (→ SET URV, Page 100). **Factory setting:** 1.0
MAX PRESS. FLOW (634) Entry	Enter maximum pressure of primary element. → See layout sheet of primary element. This value is assigned to the maximum flow value (→ see MAX. FLOW). ✎ Note! Use the LINEAR/SQROOT parameter (→ Page 113) to specify the current signal for the "Flow" measuring mode. The following applies for the "Differential pres." setting: If you enter a new value for MAX PRESS. FLOW, the value for SET URV is also changed. Use SET URV to assign a pressure value to the upper current value. If you want to assign the upper current value a value other than that for MAX PRESS. FLOW, you must enter the desired value for SET URV. (→ SET URV, Page 100). **Factory setting:** High sensor limit (→ see PRESS. SENS HILIM, Page 119)
DAMPING VALUE (247) Entry	Enter damping time (time constant τ). The damping affects the speed at which all subsequent elements, such as the on-site display, measured value and current output react to a change in the pressure. **Input range:** 0.0...999.0 s **Factory setting:** 2.0 s or as per order specifications

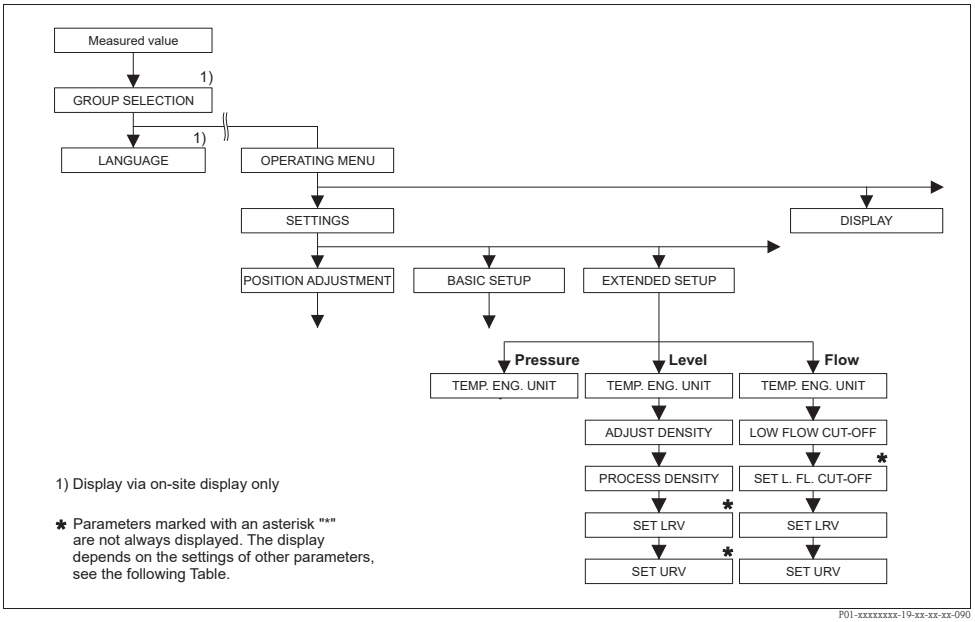

Fig. 37: EXTENDED SETUP function group
→ For the "Pressure" measuring mode, see Page 96, Table 15
→ For the "Level" measuring mode, see Page 96, Table 16
→ For the "Flow" measuring mode, see Page 98, Table 17

Table 15: (GROUP SELECTION →) OPERATING MENU → SETTINGS → EXTENDED SETUP "Pressure"	
Parameter name	**Description**
Prerequisite: ■ MEASURING MODE = Pressure (→ see also Page 45). **Note:** ■ See also Page 11 ff, Section 4 "Pressure measurement".	
TEMP. ENG. UNIT (318) Selection	Select the unit for the temperature measured values. → See also PCB TEMPERATURE (Page 117) and SENSOR TEMP. (Page 122). **Options:** ■ °C ■ °F ■ K ■ R **Factory setting:** °C

Table 16: (GROUP SELECTION →) OPERATING MENU → SETTINGS → EXTENDED SETUP "Level"	
Parameter name	**Description**
Prerequisite: ■ MEASURING MODE = Level (→ see also Page 45). **Note:** ■ See also Page 14 ff, Section 5 "Level measurement".	

Table 16: (GROUP SELECTION →) OPERATING MENU → SETTINGS → EXTENDED SETUP "Level"	
Parameter name	**Description**
TEMP. ENG. UNIT (318) Selection	Select the unit for the temperature measured values. → See also PCB TEMPERATURE (Page 117) and SENSOR TEMP. (Page 122). **Options:** ■ °C ■ °F ■ K ■ R **Factory setting:** °C
DENSITY UNIT (001)/(812) Options	Select density unit. **Options:** ■ g/cm^3 ■ kg/dm^3 ■ kg/m^3 ■ US lb/in^3 ■ US lb/ft^3 **Factory setting:** kg/dm^3
ADJUST DENSITY (007)/(316) Entry	Enter density of fluid. ✎ Note! LIN. MEASURAND: "% (Level)", "Mass" and "Volume" and MEASUAND KOMB.: If a change to dry calibration is made after a wet calibration using the CALIBRATION MODE parameter (→ Page 73 or 87), the density for this parameter must be entered correctly before changing the calibration mode. In the event that the pressure falls with increasing levels (LIN. MEASURED: Volume), such as in the case of a residual volume measurement, a negative value shall be entered for this parameter. **Factory setting:** 1.0
PROCESS DENSITY (025)/(811) Entry	Enter a new density value for density correction. The calibration was carried out with the medium water, for example. Now the container is to be used for another fluid with another density. The calibration is corrected appropriately by entering the new density value in the PROCESS DENSITY parameter. ✎ Note! LIN. MEASURAND: "% (Level)", "Mass" and "Volume" and MEASUAND KOMB.: If a change to dry calibration is made after a wet calibration using the CALIBRATION MODE parameter (→ Page 73 or 87), the density for this parameter must be entered correctly before changing the calibration mode. In the event that the pressure falls with increasing levels (LIN. MEASURED: Volume), such as in the case of a residual volume measurement, a negative value shall be entered for this parameter. **Factory setting:** 1.0

Table 16: (GROUP SELECTION →) OPERATING MENU → SETTINGS → EXTENDED SETUP "Level"	
Parameter name	**Description**
SET LRV (762) Entry	Enter value for the lower current value (4 mA). **Prerequisite:** ■ LEVEL MODE = Pressure Linearized or Height Linearized ✎ Note! ■ For the LEVEL MODE "Height Linearized", you can use the ASSIGN CURRENT parameter (→ Page 113) to specify whether the current output should depict the 1st or 2nd measured variable (height or tank content). Depending on the setting of the ASSIGN CURRENT parameter, enter the following value for SET LRV: – ASSIGN CURRENT = tank content (factory setting) ⇒ %- value, volume value or mass value – ASSIGN CURRENT = height ⇒ level value The following applies for the LEVEL MODE "Pressure Linearized" or LEVEL MODE "Height Linearized" + ASSIGN CURRENT "Tank content": ■ If you enter a new value for TANK CONTENT MIN, the value for SET LRV is also changed. If you want to assign the lower current value a value other than that for TANK CONTENT MIN, you must enter the desired value for SET LRV. (→ TANK CONTENT MIN, Page 101 or 104.) The following applies for the LEVEL MODE "Height Linearized" + ASSIGN CURRENT "Height": ■ If you enter a new value for LEVEL MIN, the value for SET LRV is also changed. If you want to assign the lower current value a value other than that for LEVEL MIN, you must enter the desired value for SET LRV. (→ LEVEL MIN, Page 86.) **Factory setting:** 0.0
SET URV (763) Entry	Enter value for the upper current value (20 mA). **Prerequisite:** ■ LEVEL MODE = Pressure Linearized or Height Linearized ✎ Note! ■ For the LEVEL MODE "Height Linearized", you can use the ASSIGN CURRENT parameter (→ Page 113) to specify whether the current output should depict the 1st or 2nd measured variable (height or tank content). Depending on the setting of the ASSIGN CURRENT parameter, enter the following value for SET URV: – ASSIGN CURRENT = tank content (factory setting) ⇒ %- value, volume value or mass value – ASSIGN CURRENT = height ⇒ level value The following applies for the LEVEL MODE "Pressure Linearized" or LEVEL MODE "Height Linearized" + ASSIGN CURRENT "Tank content": ■ If you enter a new value for TANK CONTENT MAX, the value for SET URV is also changed. If you want to assign the upper current value a value other than that for TANK CONTENT MAX, you must enter the desired value for SET URV. (→ TANK CONTENT MAX, Page 101 or 105.) The following applies for the LEVEL MODE "Height Linearized" + ASSIGN CURRENT "Height": ■ If you enter a new value for LEVEL MAX, the value for SET URV is also changed. If you want to assign the lower current value a value other than that for LEVEL MAX, you must enter the desired value for SET URV. (→ LEVEL MAX, Page 86.) **Factory setting:** 100.0

Table 17: (GROUP SELECTION →) OPERATING MENU → SETTINGS → EXTENDED SETUP "Flow"	
Parameter name	**Description**
Prerequisite: ■ MEASURING MODE = Flow (→ see also Page 45). **Note:** ■ See also Page 40 ff, Section 6 "Flow measurement".	

Table 17: (GROUP SELECTION →) OPERATING MENU → SETTINGS → EXTENDED SETUP "Flow"	
Parameter name	**Description**
TEMP. ENG. UNIT (318) Selection	Select the unit for the temperature measured value. → See also PCB TEMPERATURE (Page 117) and SENSOR TEMP. (Page 123). **Options:** ■ °C ■ °F ■ K ■ R **Factory setting:** °C
LOW FLOW CUT-OFF (442) Selection	Switches "low flow cut-off" function on and off. In the lower measuring range, small flow quantities (creepages) can lead to large measured value fluctuations. Switching on this function stops these flow quantities from being recorded. → See also SET. L. FL. CUT-OFF. **Options:** ■ Off ■ On **Factory setting:** Off
SET. L. FL. CUT-OFF (323) Entry	Enter switch-off point of low flow cut-off. The hysteresis between the switch-on point and the switch-off point is always 1 % of the end flow value. → See also LOW FLOW CUT-OFF. **Prerequisite:** ■ LOW FLOW CUT-OFF = on **Input range:** Switch-off point: 0...50 % of end flow value (→ MAX. FLOW). 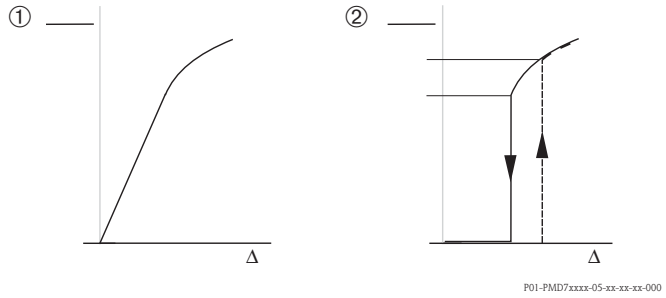 P01-PMD7xxxx-05-xx-xx-xx-000 **Factory setting:** 5 % (of end flow value)
SET LRV (637) Entry	Depending on the setting in the LINEAR/SQROOT parameter (→ Page 113), enter a flow value or a pressure value for the lower current value (4 mA) here. ■ LINEAR/SQROOT = Flow (square root) (factory setting) ⇒ flow value ■ LINEAR/SQROOT = Differential pres. ⇒ pressure value **Factory setting:** 0

Table 17: (GROUP SELECTION →) OPERATING MENU → SETTINGS → EXTENDED SETUP "Flow"	
Parameter name	**Description**
SET URV (638) Entry	Depending on the setting in the LINEAR/SQROOT parameter (→ Page 113), enter a flow value or a pressure value for the upper current value (20 mA) here. ■ LINEAR/SQROOT = Flow (square root) (factory setting) ⇒ flow value ■ LINEAR/SQROOT = Differential pres. ⇒ pressure value The following applies for the setting LINEAR/SQROOT "Flow (square root)": ■ If you enter a new value for MAX. FLOW, the value for SET URV is also changed. If you want to assign the upper current value a value other than that for MAX. FLOW, you must enter the desired value for SET URV. (→ MAX. FLOW, Page 95). The following applies for the setting LINEAR/SQROOT "Differential pres.": ■ If you enter a new value for MAX PRESS. FLOW, the SET URV value is also changed. If you want to assign the upper current value a value other than that for MAX PRESS. FLOW, you must enter the desired value for SET URV. (→ MAX PRESS. FLOW, Page 95). **Factory setting:** MAX. FLOW

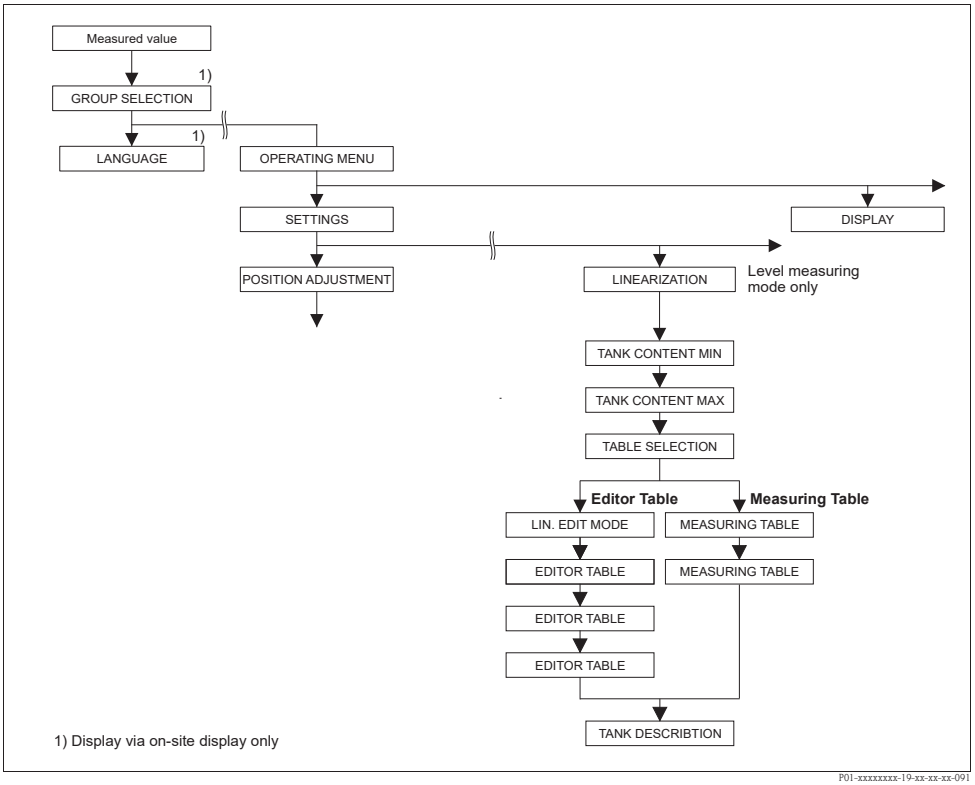

Fig. 38: LINEARISATION function group for on-site operation

Table 18: (GROUP SELECTION →) OPERATING MENU → SETTINGS → LINEARISATION – on-site operation	
Parameter name	**Description**
Prerequisite: ■ MEASURING MODE = Level (→ see also Page 45). ■ LEVEL MODE = Pressure Linearized or Height Linearized (→ see also Page 68). **Note:** – See also Page 14 ff, Section 5 "Level measurement".	

Table 18: (GROUP SELECTION →) OPERATING MENU → SETTINGS → LINEARISATION – on-site operation	
Parameter name	**Description**
TANK CONTENT MIN (759) Entry	Enter the minimum tank contents to be expected. The input limits for the calibration (editing limits) are derived from the value entered. The closer the value entered corresponds to the minimum tank content to be expected, the more accurate the measurement result. ✎ Note! ■ If you enter a new value for TANK CONTENT MIN, the value for SET LRV is also changed. Use SET LRV to assign a %-value, volume value or mass value to the lower current value. If you want to assign the lower current value a value other than that for TANK CONTENT MIN, you must enter the desired value for SET LRV. (→ SET LRV, Page 98). ■ For the setting LEVEL MODE "Height Linearized" and ASSIGN CURRENT "Linear", the TANK CONTENT MIN parameter does not affect the SET LRV parameter. (→ SET LRV, Page 98 and ASSIGN CURRENT, Page 113) **Factory setting:** 0.0
TANK CONTENT MAX (713) Entry	Enter the maximum tank contents to be expected. The input limits for the subsequent calibration (editing limits) are derived from the value entered. The closer the value entered corresponds to the maximum tank content to be expected, the more accurate the measurement result. ✎ Note! ■ If you enter a new value for TANK CONTENT MAX, the value for SET URV is also changed. Use SET URV to assign a %-value, volume value or mass value to the upper current value. If you want to assign the upper current value a value other than that for TANK CONTENT MAX, you must enter the desired value for SET URV. (→ SET URV, Page 98.) ■ For the setting LEVEL MODE "Height Linearized" and ASSIGN CURRENT "Linear", the TANK CONTENT MAX parameter does not affect the SET URV parameter. (→ SET URV, Page 98 and ASSIGN CURRENT, Page 113) **Factory setting:** 100.0
TABLE SELECTION (808) Selection	Select table. The device works with a measuring and an editor table. The measuring table is used to calculate the measured value. To make sure measuring also runs properly when entering a new table, there is another table, the editor table, for entering new values. **Options:** ■ View meas. table ■ Editor table **Factory setting:** View meas. table
LIN. EDIT MODE (397) Selection	Select the entry mode for the linearisation table. **Prerequisite:** ■ TABLE SELECTION = Editor table **Options:** ■ Manual: the container neither has to be filled nor emptied for this entry mode. Enter the value pairs for the linearisation table. ■ Semiautomatic: the container is filled or emptied in stages in this entry mode. The device automatically records the hydrostatic pressure. The associated volume, mass or %-value is entered. **Factory setting:** Manual

Table 18: (GROUP SELECTION →) OPERATING MENU → SETTINGS → LINEARISATION – on-site operation	
Parameter name	**Description**
EDITOR TABLE (809) Selection	Select table. **Prerequisite:** ■ TABLE SELECTION = editor table **Options:** ■ New table: enter new linearisation table. ■ Edit measure table: The measuring table is loaded as an editor table so that changes can be made. → See also TAB. SELECTION ■ Continue edit: Edit an editor table that already exists. → See also TABLE EDITOR (770) **Factory setting:** New table
EDITOR TABLE Entry ("Semiautomatic" edit mode) – LINE-NUMB (549) – Y-VAL. (551)	Enter table in the "Semiautomatic" editing mode. A linearisation table must have at least 2 points and may not have more than 32 points. A point consists of LINE-NUMB, X-VAL. and Y-VAL. For this editing mode, the container is filled or emptied in stages. **Example:** Enter point for LEVEL MODE = Pressure Linearized – LINE-NUMB: confirm value displayed. – Y-VAL.: depending on the setting in the LINd. MEASURAND parameter, enter the volume, mass or % value. – X-VAL.: the hydrostatic pressure present is displayed and saved by confirming the Y-value. **Example:** Enter point for LEVEL MODE = Height Linearized – LINE-NUMB: confirm value displayed. – Y-VAL.: depending on the setting in the COMB. MEASURAND parameter, enter the volume, mass or % value. – X-VAL.: the hydrostatic pressure present is measured. Depending on the setting in the COMB. MEASURAND parameter, the measured pressure is converted to a level unit or a % and displayed. The value is saved by confirming the Y-value. **Factory setting:** LINE-NUMB = 1, X-VAL. = 0.0, Y-VAL. = 0.0
EDITOR TABLE Entry ("manual" edit mode) – LINE-NUMB (549) – Y-VAL. (551) – X-VAL. (550)	Enter table in the "manual" editing mode. A linearisation table must have at least 2 points and may not have more than 32 points. A point consists of a line number, X-value and Y-value. The container neither has to be filled nor emptied for this editing mode. **Example:** Enter point for LEVEL MODE = Pressure Linearized – LINE-NUMB: confirm value displayed. – X-VAL.: enter pressure value. – Y-VAL.: depending on the setting in the LINd. MEASURAND parameter, enter the related volume, mass or % value. **Example:** Enter point for LEVEL MODE = Height Linearized – LINE-NUMB: confirm value displayed. – X-VAL.: the hydrostatic pressure present is measured. Depending on the setting in the COMB. MEASURAND parameter, enter a level value or % value. – Y-VAL.: depending on the setting in the COMB. MEASURAND parameter, enter the related volume, mass or % value. **Factory setting:** LINE-NUMB = 1, X-VAL. = 0.0, Y-VAL. = 0.0

Table 18: (GROUP SELECTION →) OPERATING MENU → SETTINGS → LINEARISATION – on-site operation	
Parameter name	**Description**
EDITOR TABLE (770) Options	Select the function for the editor table. **Options:** ■ Next point: enter next point. ■ Last input point: jump back to previous point to correct a mistake for example. ■ Accept input table: save editor table as measuring table. This overwrites the old measuring table. ■ Abort: save values entered up to this point for the editor table and display next parameter. The editor table is not activated as a measuring table. ■ Insert point: see example below. ■ Delete point: the current point is deleted. See example below. **Example:** Add point, in this case between the 4th and 5th point for example – Select point 5 via the EDITOR TABLE/LINE NUMB parameter. – Confirm current X and Y values with Enter. – Using the TABLE EDITOR (770) parameter, select the option "Insert point". – Point 5 is displayed for the TABLE EDITOR/LINE NUMB parameter. New values for the X-VAL and Y-VAL parameters. **Example:** delete point, in this case the 5th point for example – Select point 5 via the EDITOR TABLE/LINE NUMB parameter. – Using the TABLE EDITOR (770) parameter, select the option "Delete point". – The 5th point is deleted. All of the following points are pushed up one number i.e. following deletion, the 6th point becomes Point 5. **Factory setting:** Next point
MEASURING TABLE (549) Display	A point of the linearisation table saved (measuring table) appears on the display The parameter first displays the first point of the linearisation table. By entering a line number, you can directly display the corresponding point in the linearisation table.
MEASURING TABLE (717) Selection	Select the function for the measuring table. **Options:** ■ Next point: view next point of the measuring table. ■ Last input point: view previous point of the measuring table. ■ Abort: cancel measuring table display. Display next parameter. **Factory setting:** Next point
TANK DESCRIPTION (815) Entry	Enter tank description. (max. 32 alphanumeric characters) **Factory setting:** _

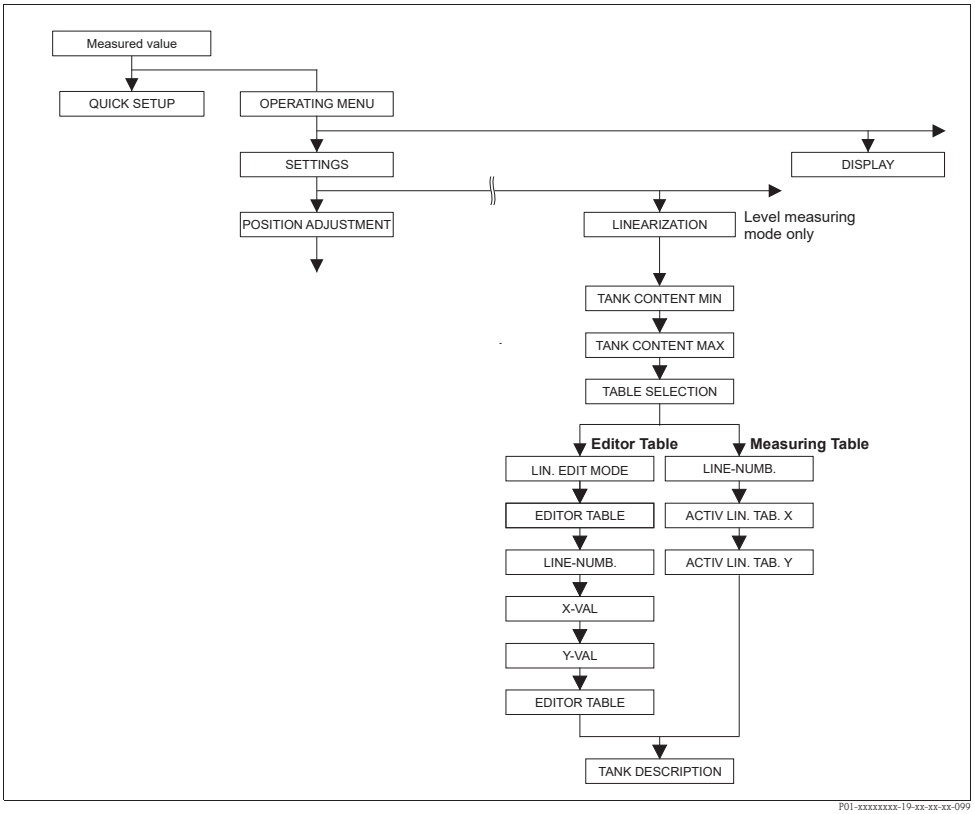

Fig. 39: LINEARISATION function group for digital communication

Table 19: (GROUP SELECTION →) OPERATING MENU → SETTINGS → LINEARISATION – Digital communication	
Parameter name	**Description**
Prerequisite: ■ MEASURING MODE = Level (→ see also Page 45). ■ LEVEL MODE = Pressure Linearized or Height Linearized (→ see also Page 68). **Note:** – See also Page 14 ff, Section 5 "Level measurement".	
TANK CONTENT MIN Entry	Enter the minimum tank contents to be expected. The input limits for the calibration (editing limits) are derived from the value entered. The closer the value entered corresponds to the minimum tank content to be expected, the more accurate the measurement result. ✎ Note! ■ If you enter a new value for TANK CONTENT MIN, the value for SET LRV is also changed. Use SET LRV to assign a %-value, volume value or mass value to the lower current value. If you want to assign the lower current value a value other than that for TANK CONTENT MIN, you must enter the desired value for SET LRV. (→ SET LRV, Page 98). ■ For the setting LEVEL MODE "Height Linearized" and ASSIGN CURRENT "Linear", the TANK CONTENT MIN parameter does not affect the SET LRV parameter. (→ SET LRV, Page 98 and ASSIGN CURRENT, Page 113) **Factory setting:** 0.0

Table 19: (GROUP SELECTION →) OPERATING MENU → SETTINGS → LINEARISATION – Digital communication	
Parameter name	**Description**
TANK CONTENT MAX Entry	Enter the maximum tank contents to be expected. The input limits for the subsequent calibration (editing limits) are derived from the value entered. The closer the value entered corresponds to the maximum tank content to be expected, the more accurate the measurement result. ✎ Note! ■ If you enter a new value for TANK CONTENT MAX, the value for SET URV is also changed. Use SET URV to assign a %-value, volume value or mass value to the upper current value. If you want to assign the upper current value a value other than that for TANK CONTENT MAX, you must enter the desired value for SET URV. (→ SET URV, Page 98.) ■ For the setting LEVEL MODE "Height Linearized" and ASSIGN CURRENT "Linear", the TANK CONTENT MAX parameter does not affect the SET URV parameter. (→ SET URV, Page 98 and ASSIGN CURRENT, Page 113) **Factory setting:** 100.0
TABLE SELECTION Selection	Select table. The device works with a measuring and an editor table. The measuring table is used to calculate the measured value. To make sure measuring also runs properly when entering a new table, there is another table, the editor table, for entering new values. **Options:** ■ View meas. table ■ Editor table **Factory setting:** View meas. table
LIN. EDIT MODE Selection	Select the entry mode for the linearisation table. **Prerequisite:** ■ TABLE SELECTION = Editor table **Options:** ■ Manual: The container neither has to be filled nor emptied for this entry mode. Enter the value pairs for the linearisation table. ■ Semiautomatic: the container is filled or emptied in stages in this entry mode. The device automatically records the hydrostatic pressure. The associated volume, mass or %-value is entered. **Factory setting:** Manual
EDITOR TABLE Selection	Select table. **Prerequisite:** ■ TABLE SELECTION = Editor table **Options:** ■ New table: Enter new linearisation table. ■ View meas. table: View saved linearisation table and change points if necessary. ■ Continue edit: Edit a linearisation table that already exists. ✎ Note! Operating program: ■ If you select the "View meas. table" option, the saved measuring table is loaded in the operating priogram. Use the "Lin.-Tab." window to view the entire table, change values if necessary and write the modified table to the device. ■ If you change a value via the X-VAL. or Y-VAL. parameters, the table in the "Lin.-Tab." window is not updated. To view the table saved in the device, this table must first be read out of the device. **Factory setting:** New table

Table 19: (GROUP SELECTION →) OPERATING MENU → SETTINGS → LINEARISATION – Digital communication	
Parameter name	**Description**
LINE-NUMB Entry	Enter the line number for the linearisation table. A linearisation table must have at least 2 points and may not have more than 32 points. ■ TABLE SELECTION = View meas. table Via this parameter you can select the point of the linearisation table which should be displayed. ■ TABLE SELECTION = Editor table Enter a point via the LINE-NUMB, X-VAL. and Y-VAL. parameters. → See also this table, parameter description for LIN. EDIT MODE, X-VAL. ("Manual" entry mode), X-VAL. ("Semiautomatic" entry mode) and Y-VAL. ✎ Note! In the operating program, you can enter a complete linearisation table in one go via the "Lin.-Tab." window.
X-VAL. ("Manual" entry mode) Entry	Enter the pressure value for the linearisation table. → See also LIN. EDIT MODE, LINE-NUMB and Y-VAL. **Prerequisite:** ■ TABLE SELECTION = Editor table
X-VAL. ("Semiautomatic" entry mode) Display	In the "Semiautomatic" entry mode, the container is filled or emptied in stages. The X-VAL. displays the measured hydrostatic pressure. **Prerequisite:** ■ TABLE SELECTION = Editor table **Operating program** The X-VAL. is saved by confirming the Y-value. **HART Handheld** Confirm X-VAL. displayed. → See also LIN. EDIT MODE, LINE-NUMB and Y-VAL.
Y-VAL. Entry	Enter the volume, mass or %-value belonging to the X-VAL. for the linearisation table. **Prerequisite:** ■ TABLE SELECTION = Editor table Depending on the setting in the LINd. MEASURAND or COMB. MEASURAND parameters, enter a volume, mass or %-value here. → See also this table, parameter description for LIN. EDIT MODE, LINE-NUMB, X-VAL. ("Manual" entry mode), X-VAL. ("Semiautomatic" entry mode).
EDITOR TABLE Options	Select the function for the editor table. **Prerequisite:** ■ TABLE SELECTION = Editor table **Options:** ■ Next point: without function ■ Last input point: without function ■ Accept input table: save editor table as measuring table. This overwrites the old measuring table. ■ Abort: save values entered up to this point for the editor table and display next parameter. The editor table is not activated as a measuring table. ■ Insert point: see example below. ■ Delete point: the current point is deleted. See example below. **Example:** Add point, in this case between the 4th and 5th point for example – Select point 5 via the LINE NUMB parameter. – Using the TABLE EDITOR parameter, select the option "Insert point". – Point 5 is displayed for the LINE NUMB parameter. New values for the X-VAL and Y-VAL parameters. **Example:** delete point, in this case the 5th point for example – Select point 5 via the LINE NUMB parameter. – Using the TABLE EDITOR parameter, select the option "Delete point". – The 5th point is deleted. All of the following points are pushed up one number i.e. following deletion, the 6th point becomes Point 5. **Factory setting:** Next point

Table 19: (GROUP SELECTION →) OPERATING MENU → SETTINGS → LINEARISATION – Digital communication	
Parameter name	**Description**
ACTIV LIN. TAB. X Display	An X-value of the linearisation table already saved appears on the display You can select a point of the linearisation table via the LINE-NUMB parameter. **Prerequisite:** ■ TABLE SELECTION = View meas. table ✎ Note! In the operating program, you can view the entire saved table in the "Tables" window.
ACTIV LIN. TAB. Y Display	A Y-value of the linearisation table already saved appears on the display You can select a point of the linearisation table via the LINE-NUMB parameter. **Prerequisite:** ■ TABLE SELECTION = View meas. table ✎ Note! In the operating program, you can view the entire saved table in the "Tables" window.
TANK DESCRIPTION Entry	Enter tank description. (max. 32 alphanumeric characters) **Factory setting:** _

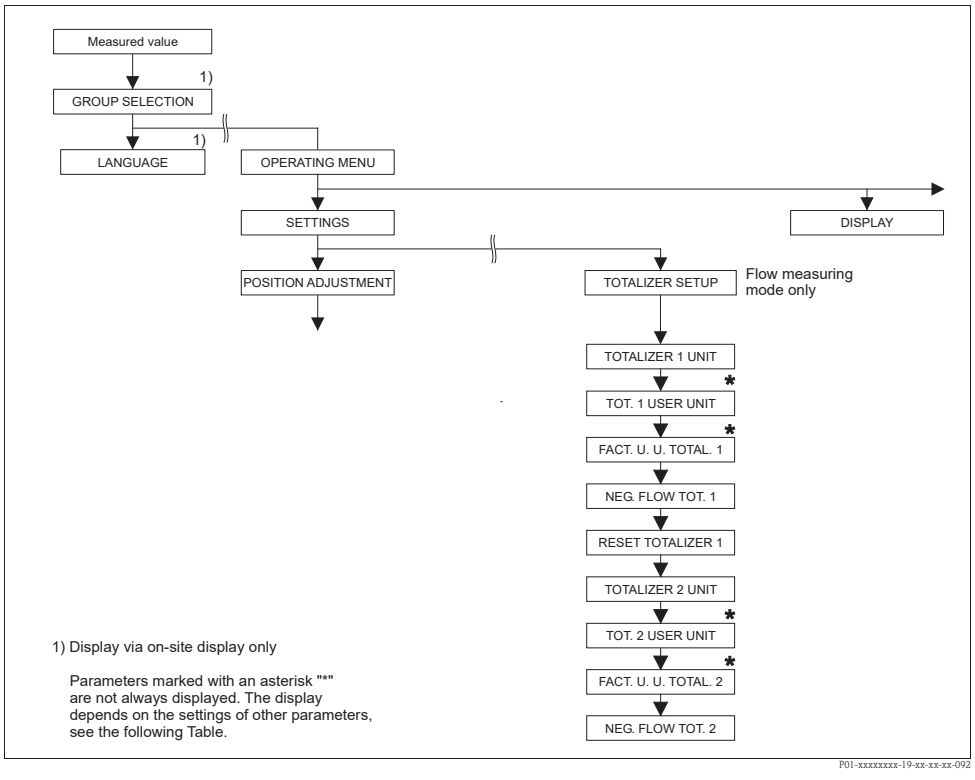

Fig. 40: TOTALIZER SETUP function group

Table 20: (GROUP SELECTION →) OPERATING MENU → SETTINGS → TOTALIZER SETUP	
Parameter name	**Description**
Prerequisite: ■ MEASURING MODE = Flow (→ see also Page 45). **Note:** ■ See also Page 40 ff, Section 6 "Flow measurement".	

Table 20: (GROUP SELECTION →) OPERATING MENU → SETTINGS → TOTALIZER SETUP	
Parameter name	**Description**
TOTALIZER 1 UNIT (398), (666), (664), (662) Selection	Select unit for totalizer 1. Depending on the setting in the FLOW-MEAS. TYPE parameter (→ Page 93) this parameter offers a list of volume, norm volume, standard volume and mass units. When a new volume or mass unit is selected, totalizer-specific parameters are converted and displayed with the new unit within a unit group. When the flow mode is changed, the totalizer value is not converted. The 3-digit ID number on the on-site display depends on the FLOW-MEAS. TYPE selected: – (398): FLOW-MEAS. TYPE "Volume p. cond." – (662): FLOW-MEAS. TYPE "Mass" – (664): FLOW-MEAS. TYPE "Gas. std. cond." – (666): FLOW-MEAS. TYPE "Gas. norm conditions" **Factory setting:** m^3
TOT. 1 USER UNIT (627) Entry	Enter text (unit) for customer-specific unit for totalizer 1. You can enter a maximum of eight alphanumeric characters here. → See also FACT. U. U. TOTAL. 1. **Prerequisite:** ■ TOTALIZER 1 UNIT = User unit Note! Only the first five characters are shown on the on-site display. For example, if "crates" is specified as the customer-specific unit, "crate" is displayed. If the unit contains a slash, up to eight characters can be shown on the on-site display. The maximum number of characters in the counter is again limited to five. For example, if "crates/m2" is specified as the customer-specific unit, "crate/m2" is displayed. In the FieldCare, all eight characters are displayed. In the HART handheld terminal, the customer-specific unit is only displayed in the TOT. 1 USER UNIT parameter. The measured value is displayed with the additional text "User Unit". **Factory setting:** – – – – – – – –
FACT. U. U. TOTAL. 1 (329) Entry	Enter conversion factor for a customer-specific unit for totalizer 1. The conversion factor must be entered in relation to an appropriate SI unit, e.g. m^3 for the "Volume p. cond." FLOW-MEAS. TYPE. → See also TOT. 1 USER UNIT. **Prerequisite:** ■ TOTALIZER 1 UNIT = User unit **Example:** You want the measured value to be displayed in "buckets". – MEASURED VALUE =1 m3 ≙ 100 buckets – Entry TOT. 1 USER UNIT: bucket – Entry FACT. U. U. TOTAL. 1: 100 – Result: MEASURED VALUE = 100 buckets **Factory setting:** 1.0
NEG. FLOW TOT. 1 (400) Selection	Specify way of counting negative flows for totalizer 1. 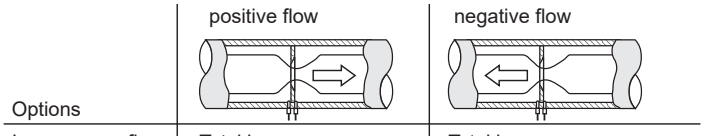 Options / Inc. on. neg. flow: Total increases / Total increases Dec. on neg. flow: Total increases / Total decreases Stop on neg. flow: Total increases / Total remains constant P01-xMD7xxxx-16-xx-xx-xx-003 **Factory setting:** Inc. on neg. flow

Table 20: (GROUP SELECTION →) OPERATING MENU → SETTINGS → TOTALIZER SETUP	
Parameter name	**Description**
RESET TOTALIZER1 (331) Selection	You reset totalizer 1 to zero with this parameter. **Options:** ■ Abort (do not reset) ■ Reset **Factory setting:** Abort
TOTALIZER 2 UNIT (399), (663), (665), (667) Selection	Select unit for totalizer 2. → See also TOTAL 1. ENG. UNIT. The 3-digit ID number on the on-site display depends on the FLOW-MEAS. TYPE selected: – (399): FLOW-MEAS. TYPE "Volume p. cond." – (663): FLOW-MEAS. TYPE "Mass" – (665): FLOW-MEAS. TYPE "Gas. std. cond." – (667): FLOW-MEAS. TYPE "Gas. norm conditions" **Factory setting:** m^3
TOT. 2 USER UNIT (628) Entry	Enter text (unit) for customer-specific unit for totalizer 2. → See also TOT. 1 USER UNIT. **Prerequisite:** ■ TOTALIZER 2 UNIT = User unit **Factory setting:** _ _ _ _ _ _ _ _
FACT. U. U. TOTAL. 2 (330) Selection	Enter conversion factor for a customer-specific unit for totalizer 2. → See also FACT. U. U. TOTAL. 1. **Prerequisite:** ■ TOTALIZER 2 UNIT = User unit **Factory setting:** 1.0
NEG. FLOW TOT. 2 (416) Selection	Specify way of counting negative flows for totalizer 2. → See NEG. FLOW TOT. 1. **Factory setting:** Positive

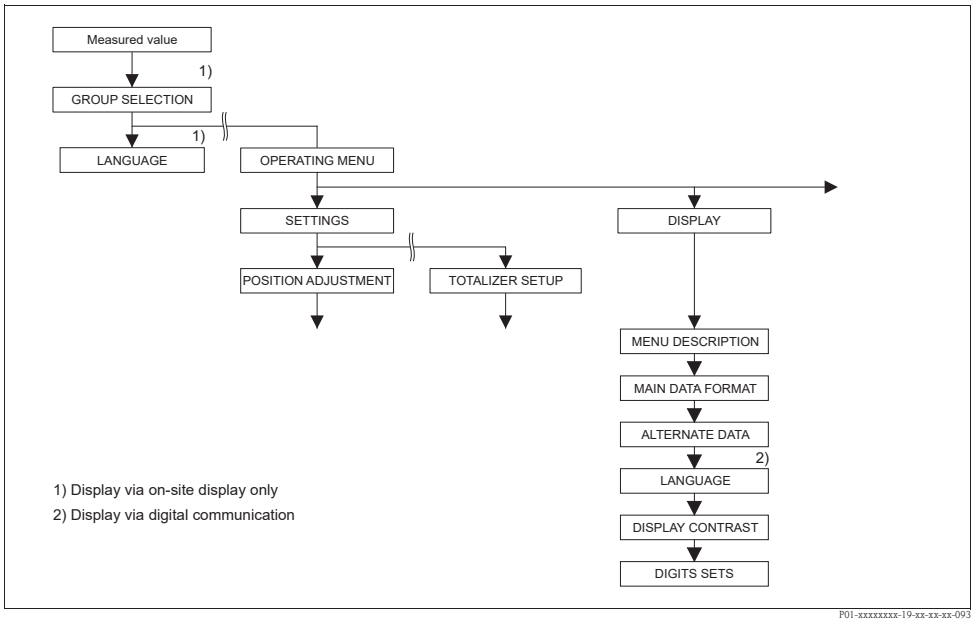

Fig. 41: DISPLAY group

Table 21: (GROUP SELECTION →) OPERATING MENU → DISPLAY	
Parameter name	**Description**
MENU DESCRIPTOR (419) Selection	Specify contents for the main line of the on-site display in the measuring mode. → See also Operating Instructions BA00270P (Deltabar S), BA00271P (Cerabar S) or BA00332P (Deltapilot S), Section 5.1 "On-site display". **Options:** ■ Main measured value (PV) ■ Main measured value (%) ■ Pressure ■ Flow ■ Level ■ Tank content ■ Current ■ Temperature ■ Error number ■ Totalizer 1 ■ Totalizer 2 The selection depends on the measuring mode chosen. **Factory setting:** Main measured value (PV)
MAIN DATA FORMAT (688) Selection	Specifies the number of places after the decimal point for the value displayed in the main line. → See also Operating Instructions BA00270P (Deltabar S), BA00271P (Cerabar S) or (BA00332P) Deltapilot S, Section 5.1 "On-site display". **Options:** ■ Auto ■ x.x ■ x.xx ■ x.xxx ■ x.xxxx ■ x.xxxxx **Factory setting:** Auto
ALTERNATE DATA (423) Selection	Switch on "Alternating display" mode. In this display mode, the on-site display alternates between the following measured values depending on the measuring mode selected. – Pressure: Main measured value (PV), Pressure, Temperature and Current – Level Standard: Main measured value (PV), Pressure, Level, Tank content, Temperature and Current – Level Easy: Main measured value (PV), Pressure, Temperature and Current – Flow: Main measured value (PV), Pressure, Flow, Temperature, Current, Totalizer 1 and Totalizer 2 **Options:** ■ Off ■ On **Factory setting:** Off
LANGUAGE Selection	Select the menu language for the on-site display. ✎ Note! ■ For on-site operation, the LANGUAGE parameter is arranged directly under GROUP SELECTION (menu path: GROUP SELECTION → LANGUAGE, see also Page 44). ■ Select the menu language for FieldCare via the "Options" menu → "Settings" → "Language" tab → "Tool language" field. **Factory setting**: English

Table 21: (GROUP SELECTION →) OPERATING MENU → DISPLAY	
Parameter name	**Description**
DISPLAY CONTRAST (339) Entry	Adjust contrast of on-site display. You specify the contrast of the display with a number. Changes are only accepted as single steps, i.e. to change the value from "8" to "4", you need to save four times. You can also adjust the contrast of the display by means of the keys on the electronic insert or at the device. → See also Operating Instructions BA00270P (Deltabar S), BA00271P (Cerabar S) or BA00332P (Deltapilot S), Section 5.2.3 "Function of operating keys". **Input range:** 4...13, 4: contrast weaker (brighter), 13: contrast stronger (darker). **Factory setting:** 8
DIGITS SETS (840) Display	This parameter is used to check the correct display of characters and digits on the user interface. If the characters and digits are displayed correctly, this parameter displays the string "0123456789.-".

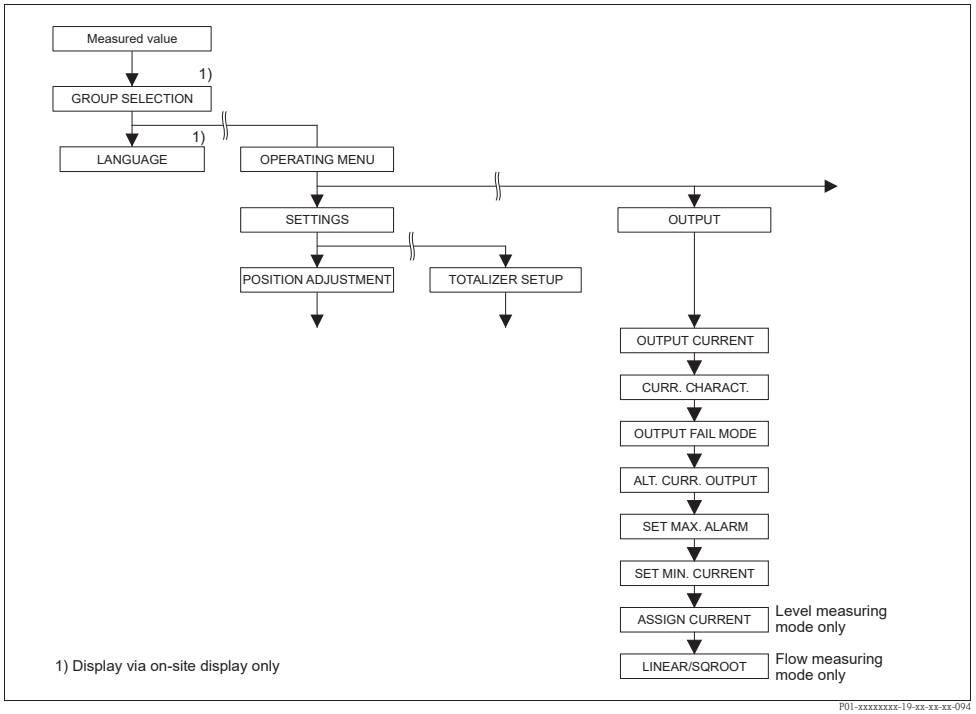

Fig. 42: OUTPUT group

Table 22: (GROUP SELECTION →) OPERATING MENU → OUTPUT	
Parameter name	**Description**
OUTPUT CURRENT (254) Display	Displays the current current value.

Table 22: (GROUP SELECTION →) OPERATING MENU → OUTPUT	
Parameter name	**Description**
CURR. CHARACT. (694), (695), (696), (764) Selection	Select curve of current output. **Options:** 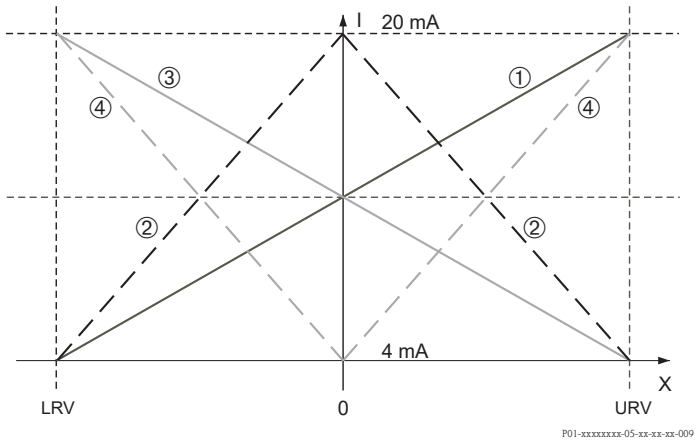 *Fig. 43: Illustration of current output curves* *1 Linear: lower range value = 4 mA, upper range value = 20 mA* *2 Bi-linear: lower range value = 4 mA, centre or zero = 20 mA, upper range value = 4 mA* *3 Linear inverse: lower range value = 20 mA, upper range value = 4 mA* *4 Bi-linear inverse: lower range value = 20 mA, centre or zero = 4 mA, upper range value = 20 mA* *LRV Lower range value* *URV Upper range value* *I Current* *X Measured value (Pressure/Level/Flow)* *The "CURR. CHARACT." function refers to the operating mode previously selected.* The 3-digit ID number on the on-site display depends on the MEASURING MODE selected: – (694): MEASURING MODE "Pressure" or MEASURING MODE "Flow" with the setting for LINEAR/SQROOT "Differential pres. – (695): MEASURING MODE "Flow" with the setting LINEAR/SQROOT "Flow (square root)" – (696): MEASURING MODE "Level", LEVEL MODE "Linear" or "Pressure Linearized" and LEVEL MODE "Height Linearized" with the setting for ASSIGN CURRENT "Level" – (764): MEASURING MODE "Level", LEVEL MODE "Height Linearized" with the setting for ASSIGN CURRENT "Tank content" **Factory setting:** Linear
OUTPUT FAIL MODE (388) Entry	Select the current value in the event of an alarm. In the event of an alarm, the current and the bargraph assume the current value specified with this parameter. **Options:** ■ Max. alarm (110%): can be set between 21...23 mA ■ Hold meas. value: last measured value is kept. ■ Min. alarm (–10%): 3.6 mA → See also this table SET MAX. ALARM and Operating Instructions BA00270P (Deltabar S), BA00271P (Cerabar S) or BA00332P (Deltapilot S), Section 8.2.1. "Setting current output for alarm". **Factory setting:** Max. alarm 110% (22 mA)

Table 22: (GROUP SELECTION →) OPERATING MENU → OUTPUT	
Parameter name	**Description**
ALT. CURR. OUTPUT (597) Selection	Set current output if sensor limits undershot or overshot. **Options:** ■ Normal: the current output assumes the value set via the OUTPUT FAIL MODE and SET MAX. ALARM parameters. ■ Special: – Lower sensor limit undershot (E120): Current output = 3.6 mA – Upper sensor limit overshot (E115): current output assumes the value set via the SET MAX. ALARM parameter. Attention : when using the case "special", the behavior is limited to an over/ underpressure in a range LRL -10%, URL +10%. **Factory setting:** Normal
SET MAX. ALARM (342) Entry	Enter current value for maximum alarm current. → See also OUTPUT FAIL MODE. **Input range:** 21...23 mA **Factory setting:** 22 mA
SET MIN. CURRENT (343) Entry	Enter lower current limit. Some switching units sometimes do not accept currents less than 4.0 mA. **Options:** ■ 3.8 mA ■ 4.0 mA **Factory setting:** 3.8 mA
ASSIGN CURRENT (760) Selection	Specify current signal for the "Level" measuring mode. See also SET LRV (→ Page 98) and SET URV (→ Page 98). **Prerequisite:** ■ MEASURING MODE = Level, LEVEL MODE = Height Linearized **Options:** ■ Height ■ Tank content **Factory setting:** Tank content
LINEAR/SQROOT (390) Selection	Specify current signal for the "Flow" measuring mode. See also SET LRV (→ Page 99) and SET URV (→ Page 100). **Prerequisite:** ■ MEASURING MODE = Flow **Options:** ■ Differential pres.: the linear pressure signal is used for the current output. ■ Flow (square root): the root flow signal is used for the current output. The "Flow (square root)" current signal is indicated on the on-site display with a root symbol. **Factory setting:** Flow (square root)

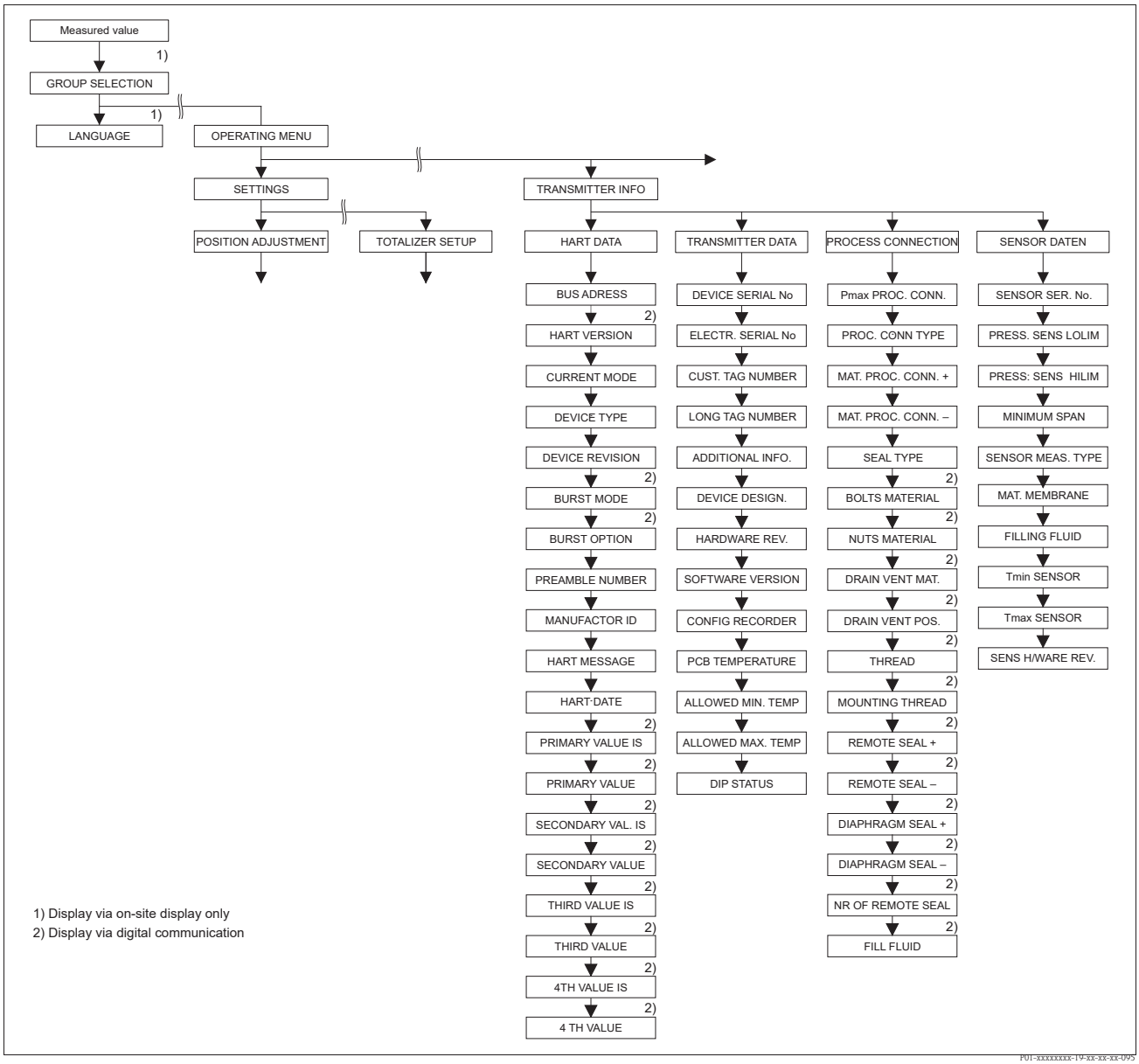

Fig. 44: TRANSMITTER INFO group
→ For the HART DATA function group, see Page 114, Table 23
→ For the TRANSMITTER DATA function group, see Page 117, Table 24
→ For the PROCESS CONNECTION function group, see Page 117, Table 25
→ For the SENSOR DATA function group, see Page 119, Table 26

Table 23: (GROUP SELECTION →) OPERATING MENU → TRANSMITTER INFO → HART DATA	
Parameter name	**Description**
HART VERSION (585) Display	Displays the HART Version.

Table 23: (GROUP SELECTION →) OPERATING MENU → TRANSMITTER INFO → HART DATA	
Parameter name	**Description**
CURRENT MODE (052) Selection	Set the current mode for HART communication. **Selection via on-site display and FieldCare:** ■ Signaling Measured value transmission by the current value ■ Fixed Fixed current 4.0 mA (multidrop mode) (Measured value transmission only via HART digital communication) **Factory setting:** Signaling **Selection via HART Handheld Terminal:** ■ enabled Measured value transmission by the current value ■ disabled Fixed current 4.0 mA (multidrop mode) (Measured value transmission only via HART digital communication) **Factory setting:** enabled
BUS ADDRESS (345) Entry	Enter the address for the exchange of data with the HART protocol. (HART 5.0: range 0 to 15, wherein if the address = 0 this produces the "Signaling" setting; HART 6.0/7.0: range 0 to 63) **Factory setting:** 0
DEVICE TYPE (351) Display	Displays the device type in decimal numerical format, here Deltabar S: 23 The extended device type is a composition of the manufacturer number (17) and the device type (23). **Prerequisite:** ■ Deltabar S differential pressure transmitter
DEVICE TYPE (802) Display	Displays the device type in decimal numerical format, here Cerabar S: 24 The extended device type is a composition of the manufacturer number (17) and the device type (24). **Prerequisite:** ■ Pressure transmitter Cerabar S
DEVICE TYPE (002) Display	Displays the device type in decimal numerical format, here Deltapilot S: 26 The extended device type is a composition of the manufacturer number (17) and the device type (26). **Prerequisite:** ■ Pressure transmitter Deltapilot S
DEVICE REVISION (699) Display	Displays the device revision
BURST MODE Selection	Switches "Burst Mode" function on and off. **Selection:** ■ On ■ Off **Prerequisite:** ■ Digital communication
BURST OPTION Entry	Use this parameter to specify which command is sent to the master. **Voraussetzung:** ■ Digital communication **Factory setting:** 3 (HART commando 3)
PREAMBLE NUMBER (036) Entry	Enter the number of preambles in the HART protocol. (Synchronisation of the modem modules along a transmission path, each modem module could "swallow" a byte – at least 2 bytes must arrive.) **Input range:** 2...20 **Factory setting:** 5

Table 23: (GROUP SELECTION →) OPERATING MENU → TRANSMITTER INFO → HART DATA	
Parameter name	**Description**
MANUFACTOR ID (432) Display	Displays the manufacturer number in a decimal numerical format. Here: 17 Endress+Hauser
HART MESSAGE (271) Entry	Enter message (max. 32 alphanumeric characters). On command from the master, this message is sent via the HART protocol. **Factory setting:** _ or as per order specifications
HART DATE (481) Entry	Enter the date of the last configuration change. **Factory setting:** DD.MM.YY (date of final test)
PRIMARY VALUE IS Display	This parameter displays the following measured value depending on the measuring mode selected: – Measuring mode "Pressure": PRESSURE – "Level" measuring mode, "Linear" or "Pressure Linearized" level type: LEVEL BEFORE LIN – Measuring mode "Level", level type "Height Linearized": TANK CONTENT – Measuring mode "Flow": SUPPRESSED FLOW → See also PRIMARY VALUE. **Prerequisite:** ■ Digital communication
PRIMARY VALUE Display	Displays the primary value. → See also PRIMARY VALUE IS. **Prerequisite:** ■ Digital communication
SECONDARY VAL. IS	Select second process value. You can choose between the following process values depending on the measuring mode selected: – PRESSURE – CORRECTED PRESS. – SENSOR PRESSURE – SENSOR TEMP. – PCB TEMPERATURE – SUPPRESSED FLOW – TOTALIZER 1 – TOTALIZER 2 – LEVEL BEFORE LIN – TANK CONTENT **Prerequisite:** ■ Digital communication
SECONDARY VALUE	Display second process value. → See also SECONDARY VAL. IS. **Prerequisite:** ■ Digital communication
THIRD VALUE IS	Select third process value. → See also SECONDARY VAL. IS. **Prerequisite:** ■ Digital communication
THIRD VALUE	Display third process value. → See also SECONDARY VAL. IS. **Prerequisite:** ■ Digital communication
4TH VALUE IS	Select fourth process value. → See also SECONDARY VAL. IS. **Prerequisite:** ■ Digital communication
4TH VALUE	Display fourth process value. → See also SECONDARY VAL. IS. **Prerequisite:** ■ Digital communication

Table 24: (GROUP SELECTION →) OPERATING MENU → TRANSMITTER INFO → TRANSMITTER DATA	
Parameter name	**Description**
DEVICE SERIAL No (354) Display	Displays the serial number of the device (11 alphanumeric characters).
ELECTR. SERIAL No (386) Display	Displays the serial number of the main electronics (11 alphanumeric characters).
CUST. TAG NUMBER (055) Entry	Enter TAG number (max. 8 alphanumeric characters). **Factory setting:** _ _ _ _ _ _ _ _ or as per order specifications
LONG TAG NUMBER (305) Entry	Enter TAG number (max. 32 alphanumeric characters). **Factory setting:** _ or as per order specifications
ADDITIONAL INFO. (272) Entry	Enter tag description (max. 16 alphanumeric characters). **Factory setting:** _ _ _ _ _ _ _ _ _ _ _ _ _ _ _ _ or as per order specifications
DEVICE DESIGN. (350) Display	Displays the device designation and order code.
HARDWARE REV. (266) Display	Displays the revision number of the main electronics e.g.: V02.00
SOFTWARE VERSION (264) Display	Displays the software version e.g.: V02.10
CONFIG RECORDER (352) Display	Displays the configuration counter. This counter is increased by one with each change to a parameter or group. The counter counts to 65535 and then starts again at zero. Changes in the parameters of the DISPLAY function group do not increase the counter.
PCB TEMPERATURE (357) Display	Displays the measured temperature of the main electronics.
ALLOWED MIN. TEMP (358) Display	Displays the lower temperature limit of the main electronics.
ALLOWED MAX. TEMP (359) Display	Displays the upper temperature limit of the main electronics.
DIP STATUS (363) Display	Displays the status of DIP switch 1 on the electronic insert. You can lock or unlock parameters relevant to the measured value with DIP switch 1. If operation is locked by means of the INSERT PIN No. parameter, you can only unlock operation again by means of this parameter. (→ INSERT PIN NO, see Page 126.) → See also Operating Instructions BA00270P (Deltabar S), BA00271P (Cerabar S) or BA00332P (Deltapilot S), Section 5.9 "Locking/unlocking operation". **Display:** ■ On (locking switched on) ■ Off (locking switched off) **Factory setting:** Off (locking switched off)

Table 25: (GROUP SELECTION →) OPERATING MENU → TRANSMITTER INFO → PROCESS CONNECTION	
Parameter name	**Description**
Pmax PROC. CONN. (570) Entry	For entering and displaying the maximum permitted pressure of the process connection. **Factory setting:** In accordance with nameplate data (→ see also Operating Instructions BA00270P (Deltabar S), BA00271P (Cerabar S) or BA00332P (Deltapilot S), Section 2.1.1 nameplate)

Table 25: (GROUP SELECTION →) OPERATING MENU → TRANSMITTER INFO → PROCESS CONNECTION	
Parameter name	**Description**
PROC. CONN. TYPE (482) Selection	For selecting and displaying the process connection type. **Options:** ■ Not used ■ Unknown ■ Special ■ Oval flange ■ Thread female ■ Thread male ■ Flange ■ Remote seal
MAT. PROC. CONN. + (360) Selection	For selecting and displaying the material of the process connection (P+). → See also parameter description for MAT. PROC. CONN. - **Options:** ■ Not used ■ Unknown ■ Special ■ Steel ■ 304 st. steel ■ 316 st. steel ■ Alloy C ■ Monel ■ Tantalum ■ Titanium ■ PTFE (Teflon) ■ 316L st. steel ■ PVC ■ Inconel ■ PVDF ■ ECTFE **Factory setting:** As per order specifications
MAT. PROC. CONN. - (361) Selection	For selecting and displaying the material of the process connection (P–). → See also parameter description for MAT. PROC. CONN. + **Prerequisite:** ■ Deltabar S differential pressure transmitter
SEAL TYPE (362) Selection	For selecting and displaying the material of the process seal. **Options:** ■ Not used ■ Unknown ■ Special ■ FKM Viton ■ NBR ■ EPDM ■ Urethane ■ IIR ■ Kalrez ■ FKM Viton oxyg ■ CR ■ MVQ ■ PTFE glass ■ PTFE graphite ■ PTFE oxygen ■ Copper ■ Copper f. oxygen **Factory setting:** As per order specifications
BOLTS MATERIAL	For selecting and displaying the material of the bolts. **Prerequisite:** ■ Digital communication

Table 25: (GROUP SELECTION →) OPERATING MENU → TRANSMITTER INFO → PROCESS CONNECTION	
Parameter name	**Description**
NUTS MATERIAL	For selecting and displaying the material of the nuts. **Prerequisite:** ■ Digital communication
DRAIN VENT MAT.	For selecting and displaying the material of the vent valves. **Prerequisite:** ■ Digital communication
DRAIN VENT POS.	For selecting and displaying the position of the vent valves. **Prerequisite:** ■ Digital communication
THREAD	For selecting and displaying the process connection thread. **Prerequisite:** ■ Digital communication
MOUNTING THREAD	For selecting and displaying the ways of securing the device. **Prerequisite:** ■ Digital communication
REMOTE SEAL +	For selecting and displaying the diaphragm seal type on the positive side. **Prerequisite:** ■ Digital communication
REMOTE SEAL –	For selecting and displaying the diaphragm seal type on the negative side. **Prerequisite:** ■ Digital communication
DIAPHRAG. MAT. +	For selecting and displaying the material of the process isolating diaphragm on the positive side. **Prerequisite:** ■ Digital communication
DIAPHRAG. MAT. –	For selecting and displaying the material of the process isolating diaphragm on the negative side. **Prerequisite:** ■ Digital communication
NR OF REMOTE SEAL	For selecting and displaying the number of diaphragm seals. **Prerequisite:** ■ Digital communication
FILL FLUID	For selecting and displaying the diaphragm seal fill fluid. **Prerequisite:** ■ Digital communication

Table 26: (GROUP SELECTION →) OPERATING MENU → TRANSMITTER INFO → SENSOR DATA (all measuring modes)	
Parameter name	**Description**
SENSOR SER. No. (250) Display	Displays the serial number of the sensor (11 alphanumeric characters).
PRESS. SENS LOLIM (484) Display	Displays the lower measuring limit of the sensor.
PRESS. SENS HILIM (485) Display	Displays the upper measuring limit of the sensor.
MINIMUM SPAN (591) Display	Displays the smallest possible span.

Table 26: (GROUP SELECTION →) OPERATING MENU → TRANSMITTER INFO → SENSOR DATA (all measuring modes)	
Parameter name	**Description**
SENSOR MEAS.TYPE (581) Display	Displays the sensor type. ■ Deltabar S = differential ■ Cerabar S with gauge pressure sensor = relative ■ Cerabar S with absolute pressure sensor = absolute ■ Deltapilot S = relative
Pmin SENS. DAMAGE (251) Display	Displays the minimum permissible absolute pressure of the sensor (vacuum-proofing).
Pmax SENS. DAMAGE (252) Display	Displays the maximum permissible absolute pressure of the sensor (overpressure-proofing).
MAT. MEMBRANE (365) Display	Displays the material of the process isolating diaphragm. **Factory setting:** As per version in the order code → For Deltabar S, see Technical Information TI00382P, for Cerabar S, see Technical Information TI00383P or for Deltapilot S, see Technical Information TI00416P, "Ordering information" section.
FILLING FLUID (366) Display	Displays the filling fluid.
Tmin SENSOR (368) Display	Displays the lower nominal temperature limit of the sensor.
Tmax SENSOR (369) Display	Displays the upper nominal temperature limit of the sensor.
SENS H/WARE REV (487) Display	Displays the revision number of the sensor hardware. e.g.: 1

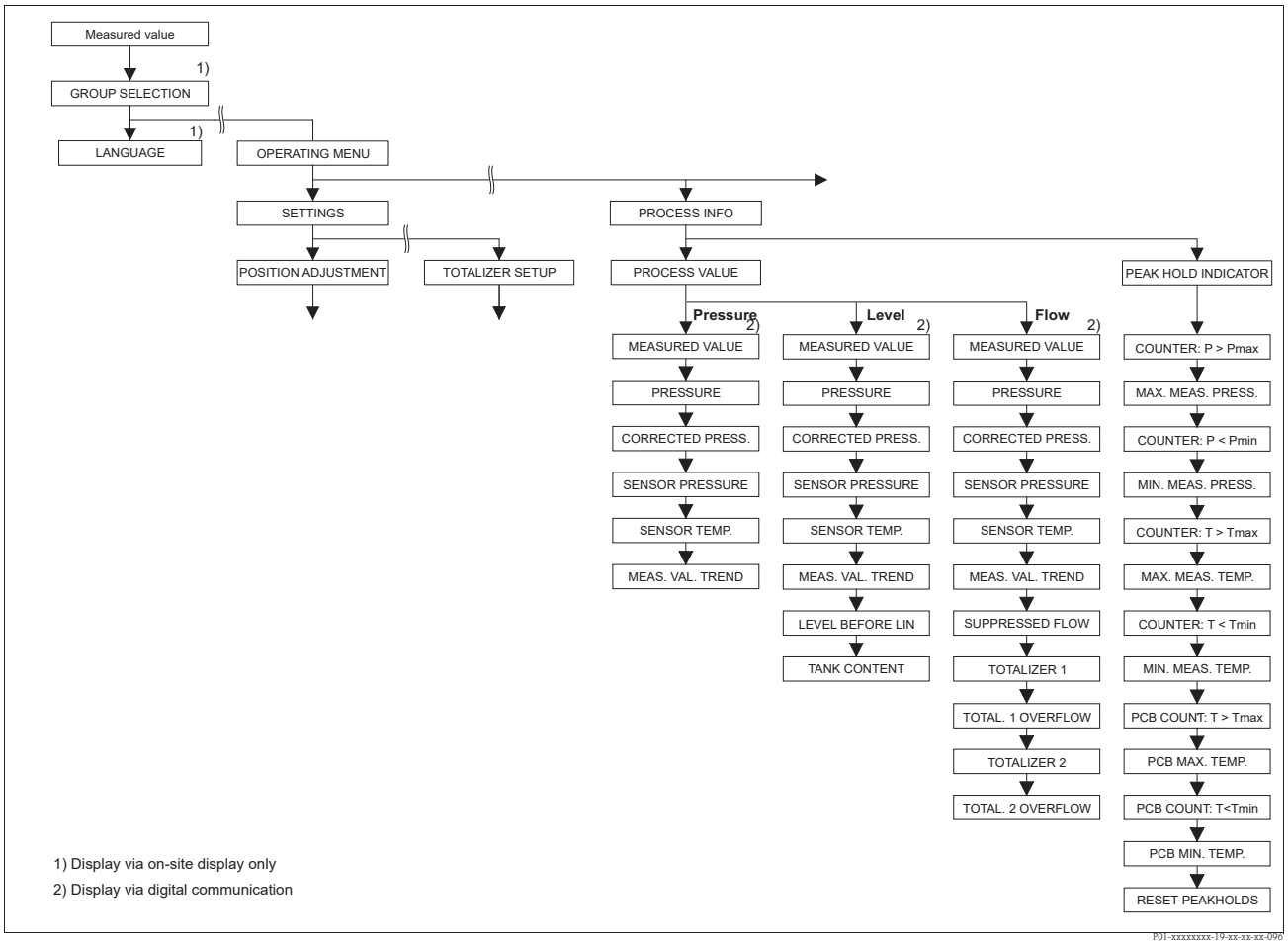

Fig. 45: PROCESSINFO group
→ For the PROCESS VALUES function group, "Pressure" measuring mode, see Page 121, Table 27
→ For the PROCESS VALUES function group, "Level" measuring mode, see Page 122, Table 28
→ For the PROCESS VALUES function group, "Flow" measuring mode, see Page 123, Table 29
→ For the PEAK HOLD INDICATOR function group, see Page 124, Table 30

Table 27: (GROUP SELECTION →) OPERATING MENU → PROCESSINFO → PROCESS VALUES "Pressure"	
Parameter name	**Description**
Prerequisite: ■ MEASURING MODE = pressure (→ see also Page 45).	
MEASURED VALUE (679)	Displays the measured value In the "Pressure" measuring mode, this value corresponds to the PRESSURE parameter. **Prerequisite:** ■ Digital communication **On-site operation:** ■ For on-site operation, the MEASURED VALUE parameter is displayed on the 1st level.

Table 27: (GROUP SELECTION →) OPERATING MENU → PROCESSINFO → PROCESS VALUES "Pressure"	
Parameter name	**Description**
PRESSURE (301) Display	Displays the measured pressure after sensor recalibration, position adjustment and damping. This value corresponds to the MEASURED VALUE parameter in the "Pressure" measuring mode. 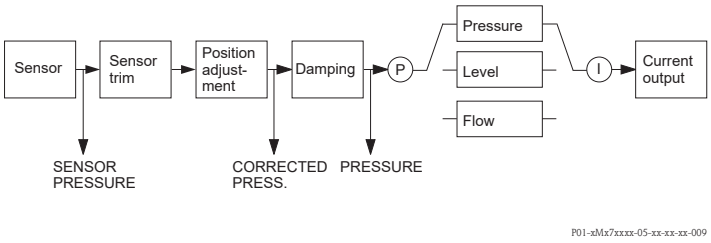 P01-xMx7xxxx-05-xx-xx-xx-009
CORRECTED PRESS. (434) Display	Displays the measured pressure after sensor trim and position adjustment and before damping. → See also PRESSURE diagram.
SENSOR PRESSURE (584) Display	Displays the measured pressure before sensor trim, position adjustment and damping. → See also PRESSURE diagram.
SENSOR TEMP. (367) Display	Displays the temperature currently measured in the sensor. This temperature can deviate from the process temperature.
MEAS. VAL. TREND (378) Display	Displays the trend of the pressure measured value. Possibilities: increasing, decreasing, constant

Table 28: (GROUP SELECTION →) OPERATING MENU → PROCESSINFO → PROCESS VALUES "Level"	
Parameter name	**Description**
Prerequisite: ■ MEASURING MODE = Level (→ see also Page 45).	
MEASURED VALUE (679)	Displays the measured value In the "Level" measuring mode with "Linear" or "Pressure Linearized" level type, this value corresponds to the LEVEL BEFORE LIN parameter In the "Level" measuring mode with "Height Linearized" level type, this value corresponds to the TANK CONTENT parameter. **Prerequisite:** ■ Digital communication **On-site operation:** ■ For on-site operation, the MEASURED VALUE parameter is displayed on the 1st level.
PRESSURE (301) Display	Displays the measured pressure after sensor recalibration, position adjustment and damping. This value corresponds to the MEASURED VALUE parameter in the "Pressure" measuring mode. 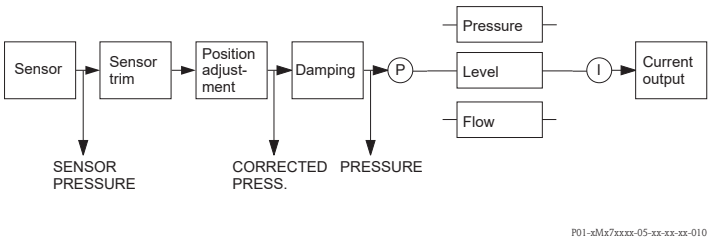 P01-xMx7xxxx-05-xx-xx-xx-010
CORRECTED PRESS. (434) Display	Displays the measured pressure after sensor trim and position adjustment and before damping. → See also PRESSURE diagram.
SENSOR PRESSURE (584) Display	Displays the measured pressure before sensor trim, position adjustment and damping. → See also PRESSURE diagram.
SENSOR TEMP. (367) Display	Displays the temperature currently measured in the sensor. This temperature can deviate from the process temperature.

Table 28: (GROUP SELECTION →) OPERATING MENU → PROCESSINFO → PROCESS VALUES "Level"	
Parameter name	**Description**
MEAS. VAL. TREND (378) Display	Displays the trend of the pressure measured value. Possibilities: increasing, decreasing, constant
LEVEL BEFORE LIN (050) Display	Displays the level value prior to linearisation. **Prerequisite:** ■ LEVEL MODE = Linear or Height Linearized Depending on the setting for the LIN. MEASURAND or COMB. MEASURAND parameter, this parameter displays the current level in % or in a unit of level.
TANK CONTENT (370) Display	Displays the level value after linearisation. **Prerequisite:** ■ LEVEL MODE = Pressure Linearized or Height Linearized Depending on the settings for the LINd. MEASURAND or COMB. MEASURAND parameter, the current tank content is displayed in % or in a unit of volume or mass. This value corresponds to the MEASURED VALUE.

Table 29: (GROUP SELECTION →) OPERATING MENU → PROCESSINFO → PROCESS VALUES "Flow"	
Parameter name	**Description**
Prerequisite: ■ MEASURING MODE = Flow (→ see also Page 45).	
MEASURED VALUE (679)	Displays the measured value In the "Flow" measuring mode, this value corresponds to the SUPPRESSED FLOW parameter. **Prerequisite:** ■ Digital communication **On-site operation:** ■ For on-site operation, the MEASURED VALUE parameter is displayed on the 1st level.
PRESSURE (301) Display	Displays the measured pressure after sensor recalibration, position adjustment and damping. This value corresponds to the MEASURED VALUE parameter in the "Pressure" measuring mode. 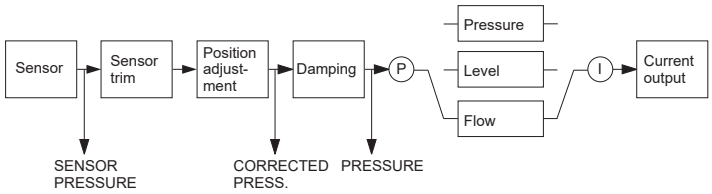 P01-xMx7xxxx-05-xx-xx-xx-011
CORRECTED PRESS. (434) Display	Displays the measured pressure after sensor trim and position adjustment and before damping. → See also PRESSURE diagram.
SENSOR PRESSURE (584) Display	Displays the measured pressure before sensor trim, position adjustment and damping. → See also PRESSURE diagram.
SENSOR TEMP. (367) Display	Displays the temperature currently measured in the sensor. This temperature can deviate from the process temperature.
MEAS. VAL. TREND (378) Display	Displays the trend of the pressure measured value. Possibilities: increasing, decreasing, constant
SUPPRESSED FLOW (375) Display	Displays the current flow. Depending on the flow mode selected (→ FLOW-MEAS. TYPE), a volume flow, mass flow, standard volume flow or corrected volume flow is displayed.

Table 29: (GROUP SELECTION →) OPERATING MENU → PROCESSINFO → PROCESS VALUES "Flow"	
Parameter name	**Description**
TOTALIZER 1 (652) Display	Displays the total flow value of totalizer 1. You can reset the value with the RESET TOTALIZER 1 parameter. The TOTAL. 1 OVERFLOW parameter displays the overflow. **Example:** The value 123456789 m^3 is displayed as follows: – TOTALIZER 1: 3456789 m^3 – TOTAL. 1 OVERFLOW: 12 E7
TOTAL. 1 OVERFLOW (655) Display	Displays the overflow value of totalizer 1. → See also TOTALIZER 1.
TOTALIZER 2 (657) Display	Displays the total flow value of totalizer 2. You cannot reset totalizer 2. The TOTAL. 2 OVERFLOW parameter displays the overflow. → See also example for TOTALIZER 1.
TOTAL. 2 OVERFLOW (658) Display	Displays the overflow value of totalizer 2. → See also TOTALIZER 2 and example for TOTALIZER 1.

Table 30: (GROUP SELECTION →) OPERATING MENU → PROCESSINFO → PEAK HOLD INDICATOR	
Parameter name	**Description**
COUNTER:P > Pmax (380) Display	Displays the overpressure counter of the sensor The limit value is: upper nominal pressure limit of sensor + 10 % of upper nominal pressure limit of sensor. You can reset this counter by means of the RESET PEAKHOLD parameter.
MAX. MEAS. PRESS. (383) Display	Displays the largest measured pressure value (peak hold indicator). You can reset this indicator by means of the RESET PEAKHOLD parameter.
COUNTER P < Pmin (467) Display	Displays the vacuum pressure counter of the sensor The limit value is: lower nominal pressure limit of sensor – 10 % of upper nominal pressure limit of sensor. You can reset this counter by means of the RESET PEAKHOLD parameter.
MIN. MEAS. PRESS. (469) Display	Displays the smallest measured pressure value (peak hold indicator). You can reset this indicator by means of the RESET PEAKHOLD parameter.
COUNTER:T > Tmax (404) Display	Displays the number of times the specified temperature range of the sensor has been overshot. You can reset this counter by means of the RESET PEAKHOLD parameter.
MAX. MEAS. TEMP. (471) Display	Displays the largest measured temperature in the sensor (peak hold indicator). You can reset this indicator by means of the RESET PEAKHOLD parameter.
COUNTER:T < Tmin (472) Display	Displays the number of times the specified temperature range of the sensor has been undershot. You can reset this counter by means of the RESET PEAKHOLD parameter.
MIN. MEAS. TEMP. (474) Display	Displays the smallest measured temperature in the sensor (peak hold indicator). You can reset this indicator by means of the RESET PEAKHOLD parameter.
PCB COUNT:T > Tmax (488) Display	Displays the number of times the specified temperature range of the electronics has been overshot.
PCB MAX. TEMP. (490) Display	Displays the largest electronics temperature measured.
PCB COUNT:T < Tmin (492) Display	Displays the number of times the specified temperature range of the electronics has been undershot.
PCB MIN. TEMP. (494) Display	Displays the smallest electronics temperature measured.

Table 30: (GROUP SELECTION →) OPERATING MENU → PROCESSINFO → PEAK HOLD INDICATOR	
Parameter name	**Description**
RESET PEAKHOLD (382) Selection	This parameter lists all the peak hold indicator parameters that can be reset. You can select the peak hold indicators you want to reset. **Options:** ■ None ■ Max. pressure ■ Min. pressure ■ Pmax history ■ Pmin history ■ Max. temp. ■ Min. temp. ■ Tmax history ■ Tmin history ■ Reset all **Factory setting:** None

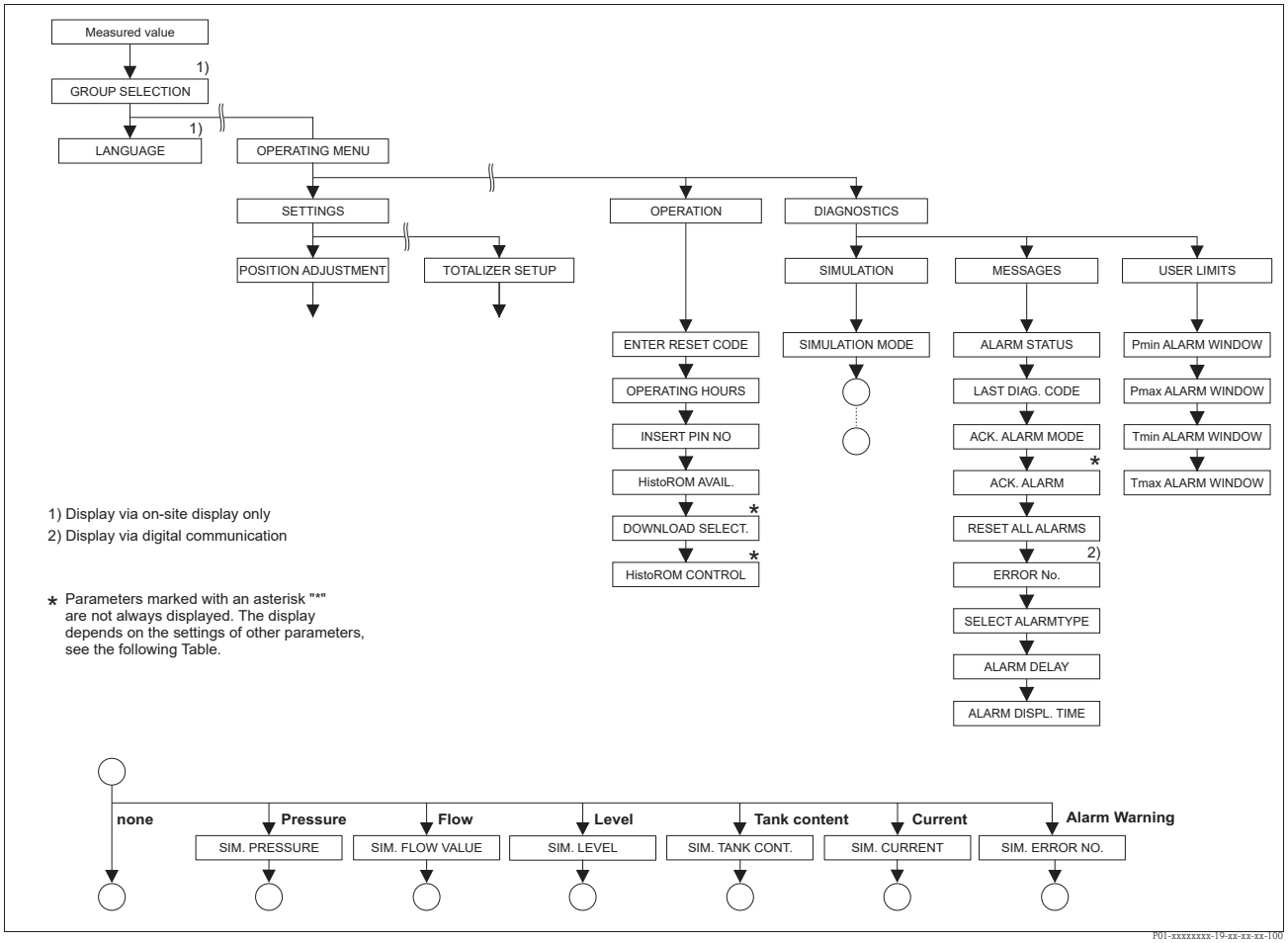

Fig. 46: OPERATING and DIAGNOSTICS group
→ For the OPERATING group, see Page 126, Table 31
→ For the SIMULATION function group, see Page 127, Table 32
→ For the MESSAGES function group, see Page 128, Table 33
→ For the USER LIMITS function group, see Page 130, Table 34

Table 31: (GROUP SELECTION →) OPERATING MENU → OPERATING	
Parameter name	**Description**
ENTER RESET CODE (047) Entry	Reset parameters completely or partially to factory values or delivery status. → See also Operating Instructions BA00270P (Deltabar S), BA00271P (Cerabar S) or BA00332P (Deltapilot S), Section 5.10 "Factory setting" (reset). **Factory setting:** 0
OPERATING HOURS (409) Display	Displays the hours of operation. This parameter cannot be reset.
INSERT PIN NO (048) Entry	For entering a code to lock or unlock operation. Note! ■ The -symbol on the on-site display indicates that operation is locked. Parameters which refer to how the display appears, e.g. LANGUAGE and DISPLAY CONTRAST can still be altered. ■ If operation is locked by means of the DIP-switch, you can only unlock operation again by means of the DIP-switch. If operation is locked by means of the on-site display or remote operation e.g. FieldCare, you can unlock operation again by means of the on-site display or using remote operation. → See also Operating Instructions BA00270P (Deltabar S), BA00271P (Cerabar S) or BA00332P (Deltapilot S), Section 5.9 "Locking/unlocking operation". **Options:** ■ Lock: enter a number between 0...9999 which is ≠100. ■ Unlock: enter the number 100. **Factory setting:** 100
HistoROM AVAIL. (831) Display	Indicates whether the optional HistoROM®/M-DAT memory module is connected to the electronic insert. → See also Operating Instructions BA00270P (Deltabar S), BA00271P (Cerabar S) or BA00332P (Deltapilot S), Section 5.5 "HistoROM®/M-DAT (optional)". **Options:** ■ Yes (HistoROM®/M-DAT is attached to the electronic insert) ■ No (HistoROM®/M-DAT is not attached to the electronic insert)
DOWNLOAD SELECT (014) Options	Select download function from HistoROM to device. The selection has no effect on an upload from the device to the HistoROM. **Prerequisite:** ■ A HistoROM®/M-DAT is attached to the electronic insert (HistoROM AVAIL. = yes) **Options:** ■ Configuration copy: For this option, all parameters apart from the DEVICE SERIAL No, DEVICE DESIGN., CUST. TAG NUMBER, LONG TAG NUMBER, ADDITIONAL INFO., BUS ADDRESS, CURRENT MODE and the parameters of the POSITION ADJUSTMENT and PROCESS CONNECTION group are overwritten. ■ Device replacement: With this option, all parameters except for DEVICE SERIAL No, DEVICE DESIGN. and the parameters of the POSITION ADJUSTMENT and PROCESS CONNECTION group are overwritten. ■ Electronics replace: With this option, all parameters except for the parameters of the POSITION ADJUSTMENT group are overwritten. **Factory setting:** Copy config. (if HistoROM®/M-DAT is attached to the electronic insert)

Table 31: (GROUP SELECTION →) OPERATING MENU → OPERATING	
Parameter name	**Description**
HistoROM CONTROL (832) Selection	For selecting the direction for copying the data. → See also Operating Instructions BA00270P (Deltabar S), BA00271P (Cerabar S) or BA00332P (Deltapilot S), Section 5.5. "HistoROM®/M-DAT (optional)". **Prerequisite:** ■ A HistoROM®/M-DAT is attached to the electronic insert (HistoROM AVAIL. = yes) **Options:** ■ Abort ■ HistoROM → Device ■ Device → HistoROM **Factory setting:** Abort (if HistoROM®/M-DAT is connected to the electronic insert)

Table 32: (GROUP SELECTION →) OPERATING MENU → DIAGNOSTICS → SIMULATION	
Parameter name	**Description**
SIMULATION MODE (413) Selection	Switch on simulation and select simulation type. Any simulation running is switched off if the measuring mode or level type is changed. **Options**: ■ None ■ Pressure, → see also this table parameter description for SIM. PRESSURE ■ Flow (only differential pressure transmitter), → see also this table parameter description for SIM. FLOW VALUE ■ Level, → see also this table parameter description for SIM. LEVEL ■ Tank content, → see also this table parameter description for SIM. TANK CONT. ■ Current, → see also this table parameter description for SIM. CURRENT Note: The "Flow" measuring mode has to be selected in the LINEAR/SQROOT parameter to ensure the current output corresponds to the simulated flow value. ■ Alarm/warning, , → see also this table parameter description for SIM. ERROR NO. 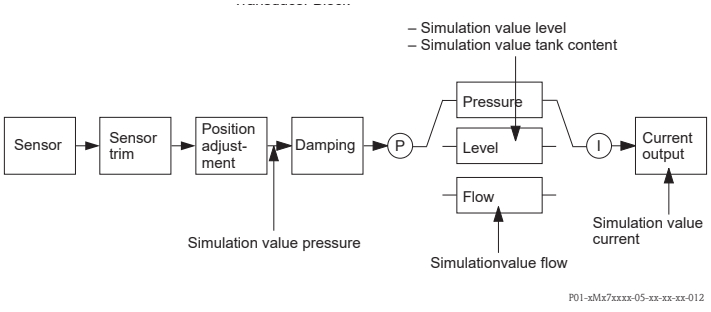 **Factory setting:** None
SIM. PRESSURE (414) Entry	Enter simulation value. → See also SIMULATION MODE. **Prerequisite:** ■ SIMULATION MODE = Pressure **Factory setting:** Current pressure measured value
SIM. FLOW VALUE (639) Entry	Enter simulation value. → See also SIMULATION MODE. **Prerequisite:** ■ MEASURING MODE = Pressure and SIMULATION MODE = Flow ■ MEASURING MODE = Flow and SIMULATION MODE = Flow

Table 32: (GROUP SELECTION →) OPERATING MENU → DIAGNOSTICS → SIMULATION	
Parameter name	**Description**
SIM. LEVEL (714) Entry	Enter simulation value. → See also SIMULATION MODE. **Prerequisite:** ■ MEASURING MODE = Level and SIMULATION MODE = Level
SIM. TANK CONT. (715) Entry	Enter simulation value. → See also SIMULATION MODE. **Prerequisites:** ■ MEASURING MODE = Level, LEVEL MODE = Pressure Linearized and SIMULATION MODE = Tank content ■ MEASURING MODE = Level, LEVEL MODE = Height Linearized and SIMULATION MODE = Tank content
SIM. CURRENT (270) Entry	Enter simulation value. → See also SIMULATION MODE. **Prerequisite:** ■ SIMULATION MODE = Current value **Factory setting:** Current current value
SIM. ERROR NO. (476) Entry	⚠ Warning! The SIMULATION parameter overwrites fault states (alarm/warning) that are actually present. When the simulation is ended, the fault states (alarm/warning) still persist but are no longer displayed! When the device is restarted it returns to its fault state. Enter message number. → See also SIMULATION MODE. → See also these Operating Instructions, Section 8.1 "Messages", "Code" table column. **Prerequisite:** ■ SIMULATION MODE = Alarm/Warning **Factory setting:** 613 (simulation active)

Table 33: (GROUP SELECTION →) OPERATING MENU → DIAGNOSTICS → MESSAGES	
Parameter name	**Description**
ALARM STATUS (046) Display	Displays the current messages present. → See also these Operating Instructions, Section 8.1. "Messages" and Section 8.3 "Confirming messages". **On-site display** ■ The measured value display shows the message with the highest priority. ■ The ALARM STATUS parameter shows all the messages in descending order of priority. You can scroll through all the messages present with the ⊞ or ⊟ key. **Operating program** ■ The "Status" field and the ALARM STATUS parameter show the message with the highest priority.
LAST DIAG. CODE (564) Display	Displays the last messages that occurred and were eliminated. ✎ Note! ■ On-site display: you can scroll through the last 15 messages with the ⊞ or ⊟ key. ■ Digital communication: the last message appears on the display. ■ Use the RESET ALL ALARMS parameter to delete the messages listed in the LAST DIAG. CODE parameter.
ACK. ALARM MODE (401) Selection	Switch on acknowledge alarm mode. → See also ACK. ALARM. **Options:** ■ On ■ Off **Factory setting:** Off

Table 33: (GROUP SELECTION →) OPERATING MENU → DIAGNOSTICS → MESSAGES	
Parameter name	**Description**
ACK. ALARM (500) Selection	Acknowledge alarm. **Prerequisite:** ■ ACK. ALARM MODE = on **Options:** ■ Abort ■ Confirm The cause of the alarm must be eliminated, the message must be acknowledged via the ACK. ALARM parameter and, where applicable, the ALARM DISPL. TIME (→ Page 129) has to have elapsed before the device starts measuring again following an alarm. → See also these Operating Instructions, Section 8.3 "Confirming messages". **Factory setting:** Abort
RESET ALL ALARMS (603) Selection	Use this parameter to reset all the messages of the LAST DIAG. CODE parameter. **Options:** ■ Abort ■ Confirm **Factory setting:** Abort
ERROR No. Entry	For "Error"-type messages, you can decide whether the device should behave as in the event of an alarm (A) or as in the event of a warning (W). Enter the corresponding message number for this parameter. → See also SELECT ALARMTYPE. → See also these Operating Instructions, Section 8.1 "Messages" and Section 8.2 "Response of outputs to errors". **Prerequisite:** ■ Digital communication
SELECT ALARMTYPE (595) – Entry (600) – Selection	For "Error"-type messages, you can decide whether the device should behave as in the event of an alarm (A) or as in the event of a warning (W). → See also ERROR No. → See also these Operating Instructions, Section 8.2 "Response of outputs to errors". **Options**: ■ Alarm (A): output current assumes a defined value. ■ Warning (W): device continues measuring **On-site operation:** 1. Enter the corresponding message number for ERROR No. field. 2. Select "Alarm" or "Warning" option. **Digital communication:** 1. Enter the corresponding message number via the ERROR No. parameter. 2. Use the SELECT ALARMTYPE parameter to select the "Alarm" or "Warning" option.
ALARM DELAY (336) Entry	Enter alarm response time for all "Error" messages. Note! There is no alarm if the cause of the error is eliminated within the alarm delay time. **Input range:** 0...100 s **Factory setting:** 0.0 s
ALARM DISPL. TIME (480) Entry	Enter alarm display time for all "Error" messages. Once the cause of the error is rectified, the alarm display time starts running. Note! The following applies if the setting for ACK. ALARM MODE = on: If an alarm appears and the alarm display time elapses before the alarm has been acknowledged, the message will be cleared once it has been acknowledged. → See also these Operating Instructions, Section 8.3 "Confirming messages". **Input range:** 0...999.9 s **Factory setting:** 0.0 s

Table 34: (GROUP SELECTION →) OPERATING MENU → DIAGNOSTICS → USER LIMITS	
Parameter name	**Description**
Pmin ALARM WINDOW (332) Entry	Customer-specific process monitoring – enter lower pressure limit. You can use the SELECT ALARMTYPE parameter to enter how the device responds if the operating pressure undershoots the specified value. → See also these Operating Instructions, Section 8.1 "Messages", table, Code E730 and Section 8.2. "Response of outputs to errors". **Factory setting:** Low sensor limit ■1.1 (→ For the low sensor limit, see PRESS. SENS LOLIM.)
Pmax ALARM WINDOW (333) Entry	Customer-specific process monitoring – enter upper pressure limit. You can use the SELECT ALARMTYPE parameter to enter how the device responds if the operating pressure undershoots the specified value. → See also these Operating Instructions, Section 8.1 "Messages", table, Code E731 and Section 8.2. "Response of outputs to errors". **Factory setting:** High sensor limit ■1.1 (→ For the high sensor limit, see PRESS. SENS HILIM.)
Tmin ALARM WINDOW (334) Entry	Customer-specific process monitoring – enter lower temperature limit. You can use the SELECT ALARMTYPE parameter to enter how the device responds if the operating pressure undershoots the specified value. → See also these Operating Instructions, Section 8.1 "Messages", table, Code E732 and Section 8.2. "Response of outputs to errors". **Factory setting:** Lower sensor temperature application limit – 10 K (→ For the lower temperature application limit, see Tmin SENSOR)
Tmax ALARM WINDOW (335) Entry	Customer-specific process monitoring – enter upper temperature limit. You can use the SELECT ALARMTYPE parameter to enter how the device responds if the operating pressure undershoots the specified value. → See also these Operating Instructions, Section 8.1 "Messages", table, Code E733 and Section 8.2. "Response of outputs to errors". **Factory setting:** Upper sensor temperature application limit +10 K (→ For the upper temperature application limit, see Tmax SENSOR)

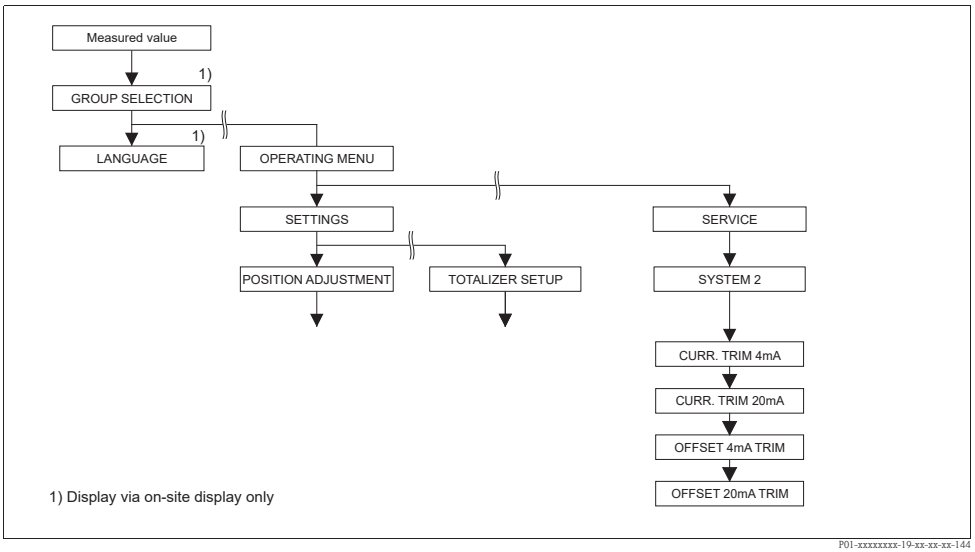

Fig. 47: SYSTEM 2 group

Table 35: (GROUP SELECTION →) OPERATING MENU → SERVICE → SYSTEM 2	
Parametername	**Beschreibung**
CURR. TRIM 4mA (045) Entry	Enter current value for the lower point (4 mA) of the current output trim line. You can adapt the current output to the transmission conditions with this parameter and CURR. TRIM 20mA. Perform current trim for the lower point as follows: 1. Select SIMULATION group. (Menu path: (GROUP SELECTION) → OPERATING MENU → DIAGNOSTICS → SIMULATION) 2. Select option "Current" via SIMULATION parameter. 3. Enter "4 mA" for SIM. CURRENT parameter. 4. Select SYSTEM 2 group. (Menu path: (GROUP SELECTION) → OPERATING MENU → SERVICE) 5. Enter the current value measured with the switching unit for the CURR. TRIM 4mA parameter. **Input range:** Measured current ±0.2 mA **Factory setting:** 4 mA
CURR. TRIM 20mA (042) Entry	Enter current value for the upper point (20 mA) of the current output trim line. You can adapt the current output to the transmission conditions with this parameter and CURR. TRIM 4mA. Perform current trim for the upper point as follows: 1. Select SIMULATION group. (Menu path: (GROUP SELECTION) → OPERATING MENU → DIAGNOSTICS → SIMULATION) 2. Select option "Current" via SIMULATION parameter. 3. Enter "20 mA" for SIM. CURRENT parameter. 4. Select SYSTEM 2 group. (Menu path: (GROUP SELECTION) → OPERATING MENU → SERVICE) 5. Enter the current value measured with the switching unit for the CURR. TRIM 20mA parameter. **Input range:** Measured current ±0.2 mA **Factory setting:** 20 mA
OFFSET 4mA TRIM (043) Display	Displays the difference between 4 mA and the value entered for the CURRENT TRIM 4mA parameter. **Factory setting:** 0
OFFSET 20mA TRIM (044) Display	Displays the difference between 20 mA and the value entered for the CURRENT TRIM 20mA parameter. **Factory setting:** 0

8 Trouble-shooting

8.1 Messages

The following table lists all the possible messages that can occur.
The device differentiates between the error types "Alarm", "Warning" and "Error". You may specify whether the instrument should react as if for an "Alarm" or "Warning" for "Error" messages.
→ See "Error type/NA 64" column and parameter descriptions for ERROR No. and SELECT ALARMTYPE (→ Page 129).

In addition, the "Error type/NA 64" column classifies the messages in accordance with NAMUR Recommendation NA 64:
- Break down: indicated with "B"
- Maintenance need: indicated with "C" (check request)
- Function check: indicated with "I" (in service)

Error message display on the on-site display:
- The measured value display shows the message with the highest priority. → See "Priority" column.
- The ALARM STATUS (→ Page 128) parameter shows all the messages present in descending order of priority. You can scroll through all the messages present with the ⊟-key or ⊞-key.

Message display via the digital communication:
- The ALARM STATUS (→ Page 128) parameter shows the message with the highest priority. → See "Priority" column.

Note!
- If the device detects a defect in the on-site display during initialization, special error messages are generated. → For the error messages, see Page 139, Section 8.1.1 "On-site display error messages".
- For support and further information, please contact Endress+Hauser Service.
- → See also Section 8.4, 8.5 and 8.6.

Code	Error type/ NA 64	Corresponds NE 107	Message/description	Cause	Measure	Prio rity
101 (A101)	Alarm B	Failure (F)	B>Sensor electronic EEPROM error	– Electromagnetic effects are greater than specifications in the technical data. → See Technical Information TI00382P (Deltabar S), TI00383P (Cerabar S) or TI00416P (Deltapilot S). This message normally only appears briefly. – Sensor defect.	– Wait a few minutes. – Restart the device. Perform reset (Code 62). – Block off electromagnetic effects or eliminate source of disturbance. – Replace sensor.	17
102 (W102)	Warning C	Maintenance request (M)	C>Checksum error in EEPROM: peakhold segment	– Main electronics defect. Correct measurement can continue as long as you do not need the peak hold indicator function.	– Replace main electronics.	53
106 (W106)	Warning C	Funktion check (C)	C>Downloading - please wait	– Downloading.	– Wait for download to complete.	52

Code	Error type/ NA 64	Corresponds NE 107	Message/description	Cause	Measure	Prio rity
110 (A110)	Alarm B	Failure (F)	B>Checksum error in EEPROM: configuration segment	– The supply voltage is disconnected when writing. – Electromagnetic effects are greater than specifications in the technical data. → See Technical Information TI00382P (Deltabar S), TI00383P (Cerabar S) or TI00416P (Deltapilot S). – Main electronics defect.	– Reestablish supply voltage. Perform reset (Code 7864) if necessary. Carry out calibration again. – Block off electromagnetic effects or eliminate sources of disturbance. – Replace main electronics.	6
113 (A113)	Alarm B	Failure (F)	B>ROM failure in transmitter electronic	– Main electronics defect.	– Replace main electronics.	1
115 (E115)	Error B factory setting: Warning C	Out of specification (S)	B>Sensor overpressure	– Overpressure present. – Sensor defect.	– Reduce pressure until message disappears. – Replace sensor.	29
116 (W116)	Warning C	Maintenance request (M)	C>Download error, repeat download	– The file is defect. – During the download, the data are not correctly transmitted to the processor, e.g. because of open cable connections, spikes (ripple) on the supply voltage or electromagnetic effects.	– Use another file. – Check cable connection PC – transmitter. – Block off electromagnetic effects or eliminate sources of disturbance. – Perform reset (Code 7864) and carry out calibration again. – Repeat download.	36
120 (E120)	Error B factory setting: Warning C	Out of specification (S)	B>Sensor low pressure	– Pressure too low. – Sensor defect.	– Increase pressure until message disappears. – Replace sensor.	30
121 (A121)	Alarm B	Failure (F)	B>Checksum error in factory segment of EEPROM	– Main electronics defect.	– Replace main electronics.	5
122 (A122)	Alarm B	Failure (F)	B>Sensor not connected	– Cable connection sensor –main electronics disconnected. – Electromagnetic effects are greater than specifications in the technical data. → See Technical Information TI00382P (Deltabar S), TI00383P (Cerabar S) or TI00416P (Deltapilot S). – Main electronics defect. – Sensor defect.	– Check cable connection and repair if necessary. – Block off electromagnetic effects or eliminate source of disturbance. – Replace main electronics. – Replace sensor.	13
130 (A130)	Alarm B	Failure (F)	B>EEPROM is defect.	– Main electronics defect.	– Replace main electronics.	10
131 (A131)	Alarm B	Failure (F)	B>Checksum error in EEPROM: min/max segment	– Main electronics defect.	– Replace main electronics.	9
132 (A132)	Alarm B	Failure (F)	B>Checksum error in totalizer EEPROM	– Main electronics defect.	– Replace main electronics.	7
133 (A133)	Alarm B	Failure (F)	B>Checksum error in History EEPROM	– An error occurred when writing. – Main electronics defect.	– Perform reset (Code 7864) and carry out calibration again. – Replace electronics.	8
602 (W602)	Warning C	Funktion check (C)	C>Linearisation curve not monotone	– The linearisation table is not monotonic increasing or decreasing.	– Add to linearisation table or perform linearisation again.	57

Code	Error type/ NA 64	Corresponds NE 107	Message/description	Cause	Measure	Prio rity
604 (W604)	Warning C	Funktion check (C)	C>Linearisation table not valid. Less than 2 points or points too close	✎ Note! From software version "02.10.xx" onwards, there is no min. span for the Y-points.		
				– The linearisation table consists of less than 2 points.	– Add to linearisation table. If necessary, perform linearisation again.	58
				– At least 2 points in the linearisation table are too close together. A minimum gap of 0.5 % of the distance between two points must be maintained. Spans for the "Pressure linearized" option: HYDR. PRESS MAX. – HYDR. PRESS MIN.; TANK CONTENT MAX. – TANK CONTENT MIN. Spans for the "Height linearized" option: LEVEL MAX – LEVEL MIN; TANK CONTENT MAX. – TANK CONTENT MIN.	– Correct linearisation table and accept again.	
613 (W613)	Warning I	Funktion check (C)	I>Simulation is active	– Simulation is switched on, i.e. the device is not measuring at present.	– Switch off simulation.	60
620 (E620)	Error C Factory setting: Warning C	Out of specification (S)	C>Current output out of range	The current is outside the permitted range 3.8 to 20.5 mA. – The pressure applied is outside the set measuring range (but within the sensor range).	– Check pressure applied, reconfigure measuring range if necessary (→ See also these Operating Instructions, chapter 4 to 6.) – Perform reset (Code 7864) and carry out calibration again.	49
				– Loose connection at sensor cable	– Wait a short period of time and tighten the connection, or avoid loose connection.	
700 (W700)	Warning C	Maintenance request (M)	C>Last configuration not stored	– An error occurred when writing or reading configuration data or the power supply was disconnected.	– Perform reset (Code 7864) and carry out calibration again.	54
				– Main electronics defect.	– Replace main electronics.	
701 (W701)	Warning C	Funktion check (C)	C>Measuring chain config. exceeds sensor range	– The calibration carried out would result in the sensor nominal operating range being undershot or overshot.	– Carry out calibration again.	50
702 (W702)	Warning C	Maintenance request (M)	C>HistoROM data not consistent.	– Data were not written correctly to the HistoROM, e.g. if the HistoROM was detached during the writing process.	– Repeat upload. – Perform reset (Code 7864) and carry out calibration again.	55
				– HistoROM does not have any data.	– Copy suitable data to the HistoROM. (→ See also Operating Instructions BA00270P (Deltabar S), BA00271P (Cerabar S) or BA00332P (Deltapilot S), Section 5.5.1 "Copying configuration data".)	
703 (A703)	Alarm B	Failure (F)	B>Measurement error	– Fault in the main electronics.	– Briefly disconnect device from the power supply.	22
				– Main electronics defect.	– Replace main electronics.	

Code	Error type/ NA 64	Corresponds NE 107	Message/description	Cause	Measure	Prio rity
704 (A704)	Alarm B	Funktion check (C)	B>Measurement error	– Fault in the main electronics. – Main electronics defect.	– Briefly disconnect device from the power supply. – Replace main electronics.	12
705 (A705)	Alarm B	Failure (F)	B>Measurement error	– Fault in the main electronics. – Main electronics defect.	– Briefly disconnect device from the power supply. – Replace main electronics.	21
706 (W706)	Warning C	Maintenance request (M)	C>Configuration in HistoROM and device not identical	– Configuration (parameters) in the HistoROM and in the device is not identical.	– Copy data from the device to the HistoROM. – Copy data from the HistoROM to the device. The message remains if the HistoROM and the device have different software versions. The message goes out if you copy the data from the device to the HistoROM. – Device reset codes such as 7864 do not have any effect on the HistoROM. That means that if you do a reset, the configurations in the HistoROM and in the device may not be the same. → See also Operating Instructions BA00270P (Deltabar S), BA00271P (Cerabar S), BA00332P (Deltapilot S) Section 5.5.1 "Copying configuration data".	59
707 (A707)	Alarm B	Funktion check (C)	B>X-VAL. of lin. table out of edit limits.	– At least one X-VALUE in the linearisation table is either below the value for HYDR. PRESS MIN. or MIN. LEVEL or above the value for HYDR. PRESS. MAX. or LEVEL MAX.	– Carry out calibration again. (→ See also these Operating Instructions, chapter 5.)	38
710 (W710)	Warning C	Funktion check (C)	B>Set span too small. Not allowed.	– Values for calibration (e.g. lower range value and upper range value) are too close together. – The sensor was replaced and the customer-specific configuration does not suit the sensor. – Unsuitable download carried out.	– Adjust calibration to suit sensor. (→ See also Page 119, parameter description MINIMUM SPAN.) – Adjust calibration to suit sensor. – Replace sensor with a suitable sensor. – Check configuration and perform download again.	51
711 (A711)	Alarm B	Funktion check (C)	B>LRV or URV out of edit limits	– Lower range value and/or upper range value undershoot or overshoot the sensor range limits. – The sensor was replaced and the customer-specific configuration does not suit the sensor. – Unsuitable download carried out.	– Reconfigure lower range value and/or upper range value to suit the sensor. Pay attention to position factor. – Reconfigure lower range value and/or upper range value to suit the sensor. Pay attention to position factor. – Replace sensor with a suitable sensor. – Check configuration and perform download again.	37
713 (A713)	Alarm B	Funktion check (C)	B>100% POINT level out of edit limits	– The sensor was replaced.	– Carry out calibration again.	39

Code	Error type/ NA 64	Corresponds NE 107	Message/description	Cause	Measure	Prio rity
715 (E715)	Error C Factory setting: Warning C	Out of specification (S)	C>Sensor over temperature	– The temperature measured in the sensor is greater than the upper nominal temperature of the sensor. (→ See also Page 120, parameter description Tmax SENSOR.) – Unsuitable download carried out.	– Reduce process temperature/ ambient temperature. – Check configuration and perform download again.	32
716 (E716)	Error B Factory setting: Alarm B	Failure (F)	B>Process isolating diaphragm broken	– Sensor defect.	– Replace sensor. – Reduce pressure.	24
717 (E717)	Error C Factory setting: Warning C	Out of specification (S)	C>Transmitter over temperature	– The temperature measured in the electronics is greater than the upper nominal temperature of the electronics (+88 °C). – Unsuitable download carried out.	– Reduce ambient temperature. – Check configuration and perform download again.	34
718 (E718)	Error C Factory setting: Warning C	Out of specification (S)	C>Transmitter under temperature	– The temperature measured in the electronics is smaller than the lower nominal temperature of the electronics (–43 °C). – Unsuitable download carried out.	– Increase ambient temperature. Insulate device if necessary. – Check configuration and perform download again.	35
719 (A719)	Alarm B	Funktion check (C)	B>Y-VAL of lin. table out of edit limits	– At least on Y-VALUE in the linearisation table is below the MIN. TANK CONTANT or above the MAX. TANK CONTENT.	– Carry out calibration again. (→ See also Operating Instructions BA00274P, chapter 5 or these Operating Instructions, Page 2.)	40
720 (E720)	Error C Factory setting: Warning C	Out of specification (S)	C>Sensor under temperature	– The temperature measured in the sensor is smaller than the lower nominal temperature of the sensor. (→ See also Page 120, parameter description Tmin SENSOR.) – Unsuitable download carried out. – Loose connection at sensor cable	– Increase process temperature/ ambient temperature. – Check configuration and perform download again. – Wait a short period of time and tighten the connection, or avoid loose connection.	33
721 (A721)	Alarm B	Funktion check (C)	B>ZERO POSITION level out of edit limits	– LEVEL MIN or LEVEL MAX has been changed.	– Perform reset (Code 2710) and carry out calibration again.	41
722 (A722)	Alarm B	Funktion check (C)	B>EMPTY CALIB. or FULL CALIB. out of edit limits	– LEVEL MIN or LEVEL MAX has been changed.	– Perform reset (Code 2710) and carry out calibration again.	42
723 (A723)	Alarm B	Funktion check (C)	B>MAX. FLOW out of edit limits	– FLOW-MEAS. TYPE has been changed.	– Carry out calibration again.	43

Code	Error type/ NA 64	Corresponds NE 107	Message/description	Cause	Measure	Prio rity
725 (A725)	Alarm B	Failure (F)	B>Sensor connection error, cycle disturbance	– Electromagnetic effects are greater than specifications in the technical data. → See Technical Information TI00382P (Deltabar S), TI00383P (Cerabar S) or TI00416P (Deltapilot S). – Setscrew loose. – Sensor or main electronics defect.	– Block off electromagnetic effects or eliminate source of disturbance. – Retighten setscrew with 1 Nm (0,74 lbf ft) (see chapter "Rotating the housing" in BA00270P (Deltabar S), BA00271P (Cerabar S), BA00332P (Deltapilot S). – Replace sensor or main electronics.	25
726 (E726)	Error C Factory setting: Warning C	Out of specification (S)	C>Sensor temperature error - overrange	– Electromagnetic effects are greater than specifications in the technical data. → See Technical Information TI00382P (Deltabar S), TI00383P (Cerabar S) or TI00416P (Deltapilot S). – Process temperature is outside permitted range. – Sensor defect.	– Block off electromagnetic effects or eliminate source of disturbance. – Check temperature present, reduce or increase if necessary. – If the process temperature is within the permitted range, replace sensor.	31
727 (E727)	Error C Factory setting: Warning C	Out of specification (S)	C>Sensor pressure error - overrange	– Electromagnetic effects are greater than specifications in the technical data. → See Technical Information TI00382P (Deltabar S), TI00383P (Cerabar S) or TI00416P (Deltapilot S). – Pressure is outside permitted range. – Sensor defect.	– Block off electromagnetic effects or eliminate source of disturbance. – Check pressure present, reduce or increase if necessary. – If the pressure is within the permitted range, replace sensor.	28
728 (A728)	Alarm B	Failure (F)	B>RAM error	– Fault in the main electronics. – Main electronics defect.	– Briefly disconnect device from the power supply. – Replace main electronics.	2
729 (A729)	Alarm B	Failure (F)	B>RAM error	– Fault in the main electronics. – Main electronics defect.	– Briefly disconnect device from the power supply. – Replace main electronics.	3
730 (E730)	Error C Factory setting: Warning C	Out of specification (S)	C>LRV user limits exceeded	– Pressure measured value has undershot the value specified for the Pmin ALARM WINDOW parameter. – Loose connection at sensor cable	– Check system/pressure measured value. – Change value for Pmin ALARM WINDOW if necessary. (→ See also Page 130, parameter description Pmin ALARM WINDOW.) – Wait a short period of time and tighten the connection, or avoid loose connection.	46

Code	Error type/ NA 64	Corresponds NE 107	Message/description	Cause	Measure	Prio rity
731 (E731)	Error C Factory setting: Warning C	Out of specification (S)	C>URV user limits exceeded	– Pressure measured value has overshot the value specified for the Pmax ALARM WINDOW parameter.	– Check system/pressure measured value. – Change value for Pmax ALARM WINDOW if necessary. (→ See also Page 130, parameter description Pmax ALARM WINDOW.)	45
		Out of specification (S)		– Loose connection at sensor cable	– Wait a short period of time and tighten the connection, or avoid loose connection.	
732 (E732)	Error C Factory setting: Warning C		C>LRV Temp. User limits exceeded	– Temperature measured value has undershot the value specified for the Tmin ALARM WINDOW parameter.	– Check system/temperature measured value. – Change value for Tmin ALARM WINDOW if necessary. (→ See also Page 130, parameter description Tmin ALARM WINDOW.)	48
733 (E733)	Error C Factory setting: Warning C	Out of specification (S)	C>URV Temp. User limits exceeded	– Temperature measured value has overshot the value specified for the Tmax ALARM WINDOW parameter.	– Check system/temperature measured value. – Change value for Tmax ALARM WINDOW if necessary. (→ See also Page 130, parameter description Tmax ALARM WINDOW.)	47
736 (A736)	Alarm B	Failure (F)	B>RAM error	– Fault in the main electronics. – Main electronics defect.	– Briefly disconnect device from the power supply. – Replace main electronics.	4
737 (A737)	Alarm B	Failure (F)	B>Measurement error	– Fault in the main electronics. – Main electronics defect.	– Briefly disconnect device from the power supply. – Replace main electronics.	20
738 (A738)	Alarm B	Failure (F)	B>Measurement error	– Fault in the main electronics. – Main electronics defect.	– Briefly disconnect device from the power supply. – Replace main electronics.	19
739 (A739)	Alarm B	Failure (F)	B>Measurement error	– Fault in the main electronics. – Main electronics defect.	– Briefly disconnect device from the power supply. – Replace main electronics.	23
740 (E740)	Error C Factory setting: Warning C	Maintenance request (M)	C>Calculation overflow, bad configuration	– Level measuring mode: the measured pressure has undershot the value for HYDR. PRESS. MIN. or overshot the value for HYDR. PRESS MAX. – Level measuring mode: The measured level did not reach the LEVEL MIN value or exceeded the LEVEL MAX value. – Flow measuring mode: the measured pressure has undershot the value for MAX. PRESS FLOW.	– Check configuration and carry out calibration again if necessary. – Select a device with a suitable measuring range. – Check configuration and carry out calibration again if necessary. (→ See also parameter description LEVEL MIN., Page 86.) – Check configuration and carry out calibration again if necessary. – Select a device with a suitable measuring range.	27
741 (A741)	Alarm B	Funktion check (C)	B>TANK HEIGHT out of edit limits	– LEVEL MIN or LEVEL MAX has been changed.	– Perform reset (Code 2710) and carry out calibration again.	44

Code	Error type/ NA 64	Corresponds NE 107	Message/description	Cause	Measure	Prio rity
742 (A742)	Alarm B	Failure (F)	B>Sensor connection error (upload)	– Electromagnetic effects are greater than specifications in the technical data. → See Technical Information TI00382P (Deltabar S), TI00383P (Cerabar S) or TI00416P (Deltapilot S). This message normally only appears briefly. – Cable connection sensor – main electronics disconnected. – Sensor defect.	– Wait a few minutes. – Perform reset (Code 7864) and carry out calibration again. – Check cable connection and repair if necessary. – Replace sensor.	18
743 (E743)	Alarm B	Failure (F)	B>Electronic PCB error during initialisation	– This message normally only appears briefly. – Main electronics defect.	– Wait a few minutes. – Restart the device. Perform reset (Code 62). – Replace main electronics.	14
744 (A744)	Alarm B	Failure (F)	B>Main electronic PCB error	– Electromagnetic effects are greater than specifications in the technical data. → See Technical Information TI00382P (Deltabar S), TI00383P (Cerabar S) or TI00416P (Deltapilot S). – Main electronics defect.	– Restart the device. Perform reset (Code 62). – Block off electromagnetic effects or eliminate source of disturbance. – Replace main electronics.	11
745 (W745)	Warning C	Maintenance request (M)	C>Sensor data unknown	– Sensor does not suit the device (electronic sensor nameplate). Device continues measuring.	– Replace sensor with a suitable sensor.	56
746 (W746)	Warning C	Funktion check (C)	C>Sensor connection error - initialising	– Electromagnetic effects are greater than specifications in the technical data. This message normally only appears briefly. → See Technical Information TI00382P (Deltabar S), TI00383P (Cerabar S) or TI00416P (Deltapilot S). – Overpressure or low pressure present.	– Wait a few minutes. – Restart the device. Perform reset (Code 7864). – Block off electromagnetic effects or eliminate source of disturbance. – Reduce or increase pressure.	26
747 (A747)	Alarm B	Failure (F)	B>Sensor software not compatible to electronics	– Sensor does not suit the device (electronic sensor nameplate).	– Replace sensor with a suitable sensor.	16
748 (A748)	Alarm B	Failure (F)	B>Memory failure in signal processor	– Electromagnetic effects are greater than specifications in the technical data. → See Technical Information TI00382P (Deltabar S), TI00383P (Cerabar S) or TI00416P (Deltapilot S). – Main electronics defect.	– Block off electromagnetic effects or eliminate source of disturbance. – Replace main electronics.	15

8.1.1 On-site display error messages

If the device detects a defect in the on-site display during initialization, the following error messages can be displayed:

Message	Measure
Initialization, VU Electr. Defect A110	Exchange on-site display.
Initialization, VU Electr. Defect A114	
Initialization, VU Electr. Defect A281	
Initialization, VU Checksum Err. A110	
Initialization, VU Checksum Err. A112	
Initialization, VU Checksum Err. A171	

8.2 Response of outputs to errors

The device differentiates between the error types Alarm, Warning and Error.
→ See also Section 8.1 "Messages" und Page 111 ff, Table 20: OUTPUT and Page 111 ff, Table 31: MESSAGES the following table and Page 132, Section 8.1 "Messages".

Output	**A (Alarm)**	**W (Warning)**	**E (Error: Alarm/Warning)**
Current output	Assumes the value specified via the OUTPUT FAIL MODE[1)], ALT. CURR. OUTPUT[1] and SET MAX. ALARM[1] parameter. → See also the following section "Configuring current output for an alarm".	Device continues measuring.	For this error, you can enter whether the device should react as in the event of an alarm or as in the event of a warning. See corresponding "Alarm" or "Warning" column. (→ See also these Operating Instructions, parameter description SELECT ALARM TYPE.)
Bargraph (on-site display)	The bargraph adopts the value defined by the OUTPUT FAIL MODE [1] parameter.	The bargraph adopts the value which corresponds to the current value.	→ See this table, column "Alarm" or "Warning".
On-site display	– The measured value and message are displayed alternately – Measured value display: ↯ -symbol is permanently displayed. Message display – 3-digit number such as A122 and description	– The measured value and message are displayed alternately – Measured value display: ↯ -symbol flashes. Message display: – 3-digit number such as W613 and description	– The measured value and message are displayed alternately – Measured value display: see corresponding "Alarm" or "Warning" column Message display: – 3-digit number such as E731 and description
Remote operation (Digital communication)	In the case of an alarm, the ALARM STATUS[2)] parameter displays a 3-digit number such as 122 for "Sensor not connected".	In the case of a warning, the ALARM STATUS[2] parameter displays a 3-digit number such as 613 for "Simulation is active".	In the case of an error, the ALARM STATUS[2] parameter displays a 3-digit number such as 731 for "URV user limits exceeded".

1) Menu path: (GROUP SELECTION →) OPERATING MENU → OUTPUT

2) Menu path: (GROUP SELECTION →) OPERATING MENU → MESSAGES

8.3 Confirming messages

Depending on the settings for the ALARM DISPL. TIME (→ Page 129) and ACK. ALARM MODE (→ Page 128) parameters, the following measures should be taken to clear a message:

Settings [1]	Measures
– ALARM DISPL. TIME = 0 s – ACK. ALARM MODE = off	– Rectify cause of the message (see also Section 8.1).
– ALARM DISPL. TIME > 0 s – ACK. ALARM MODE = off	– Rectify cause of the message (see also Section 8.1). – Wait for the alarm display time to elapse.
– ALARM DISPL. TIME = 0 s – ACK. ALARM MODE = on	– Rectify cause of the message (see also Section 8.1). – Confirm message using ACK. ALARM parameter.
– ALARM DISPL. TIME > 0 s – ACK. ALARM MODE = on	– Rectify cause of the message (see also Section 8.1). – Confirm message using ACK. ALARM parameter. – Wait for the alarm display time to elapse. If a message appears and the alarm display time elapses before the message has been acknowledged, the message will be cleared once it has been acknowledged.

1) Menu path for ALARM DISPL. TIME and ACK. ALARM MODE: (GROUP SELECTION →) OPERATING MENU → DIAGNOSTICS → MESSAGES

If the on-site display displays a message, you can delete it with the E-key.
If there are several messages, the on-site display shows the message which has the highest priority (see also Section 8.1). Once you have deleted this message using the E-key, the message with the next highest priority is displayed. You can use the E-key to delete each message, one after the other. The ALARM STATUS parameter continues to display all the messages present.

9 Appendix

9.1 Operating menu for on-site display, Digital communication

Note!
- The entire menu is depicted on the following pages.
- The menu has a different structure depending on the measuring mode selected. This means that some function groups are only displayed for one measuring mode, e.g. "LINEARISATION" function group for the Level measuring mode (Menu path: (GROUP SELECTION →) OPERATING MENU → SETTINGS → BASIC SETUP).
- In addition, there are also parameters that are only displayed if other parameters are appropriately configured. For example the Customer Unit P parameter is only displayed if the "User unit" option was selected for the PRESS. ENG. UNIT parameter. These parameters are indicated with a "*".
- For a description of the parameters, please refer to chapter 7 "Description of parameters". The exact dependency of individual parameters on one another is explained here.

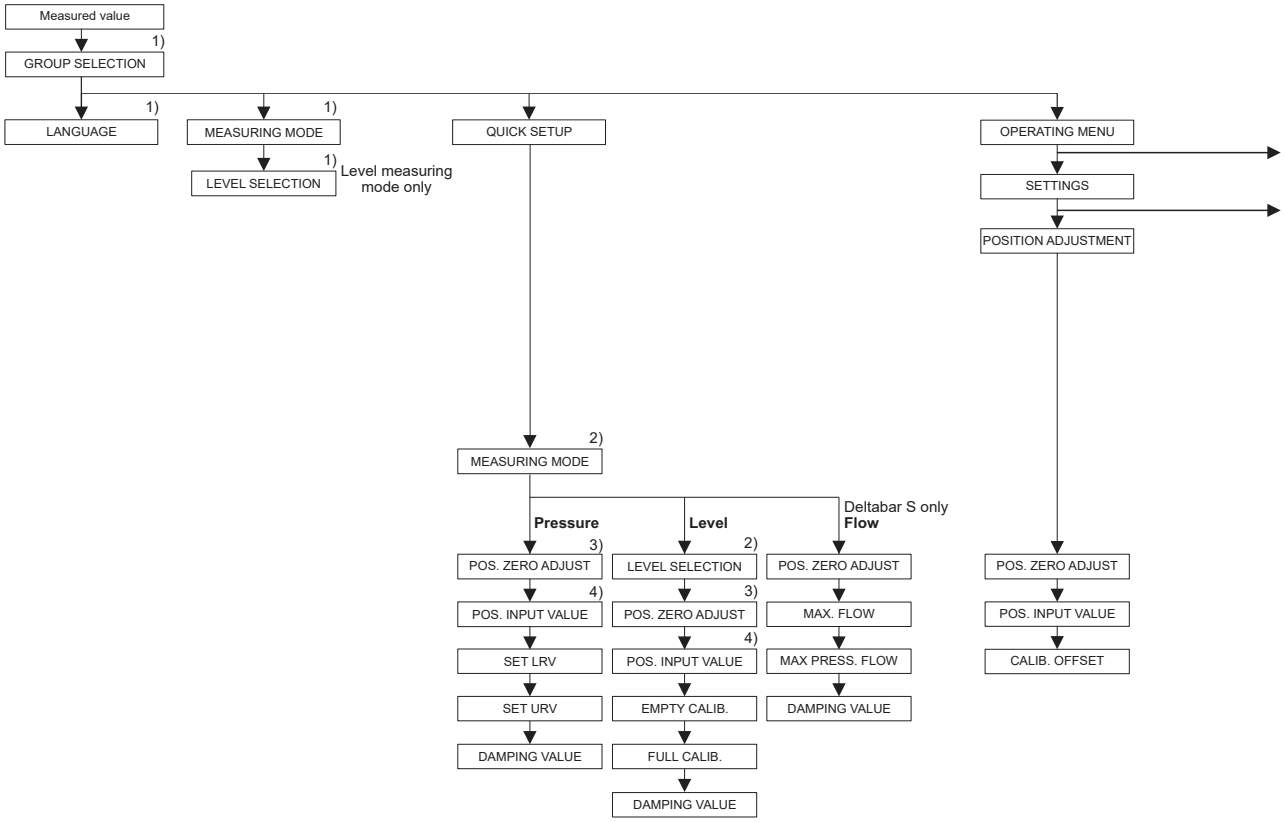

1) Display via on-site display only

2) Display via digital communication

3) Cerabar S with gauge pressure sensor, Deltabar S or Deltapilot S

4) Cerabar S with absolut pressure sensor

There are parameters that are only displayed if other parameters are appropriately configured.
For example the CUSTOMER UNIT P parameter is only displayed if the "User unit" option was selected for the PRESS. ENG. UNIT parameter.
These parameters are indicated with a "*".

P01-xxxxxxxx-19-xx-xx-xx-138

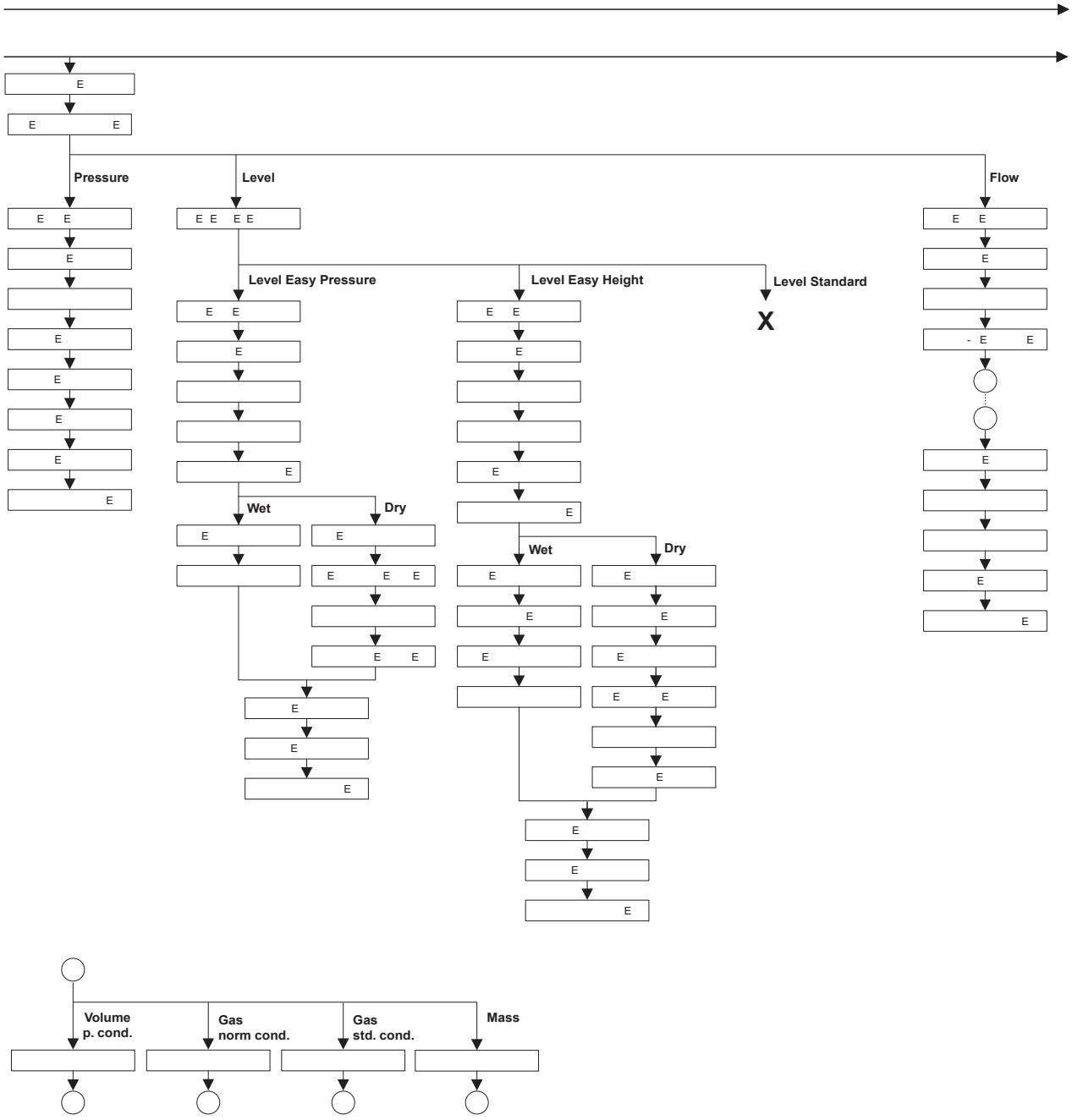

digital communication

E

E E

P01-xxxxxxxx-19-xx-xx-xx-139

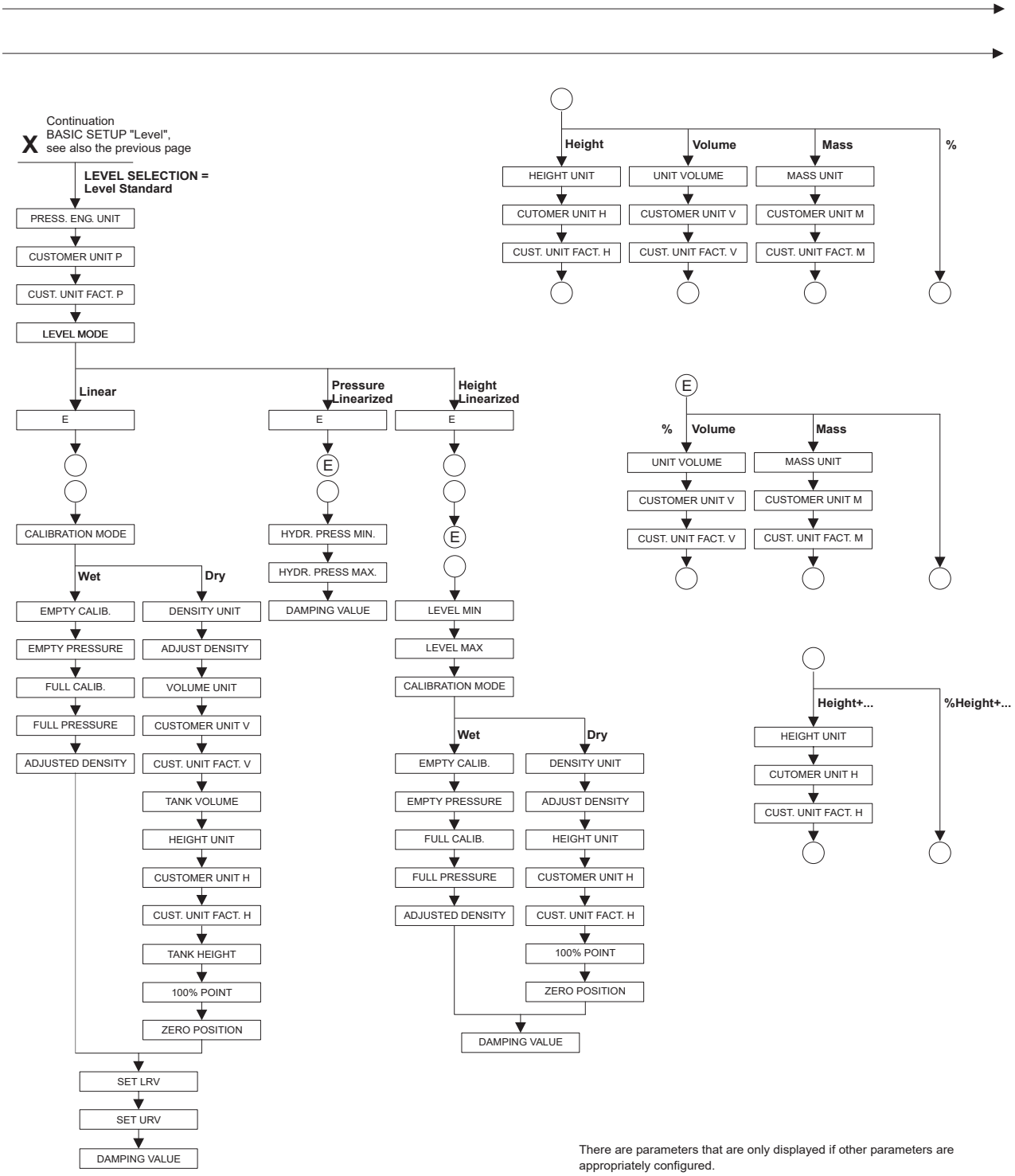

There are parameters that are only displayed if other parameters are appropriately configured.
For example the CUST. UNIT FACT. H parameter is only displayed if the "User unit" option was selected for the HEIGHT UNIT parameter. These parameters are indicated with a "*".

P01-xxxxxxxx-19-xx-xx-xx-140

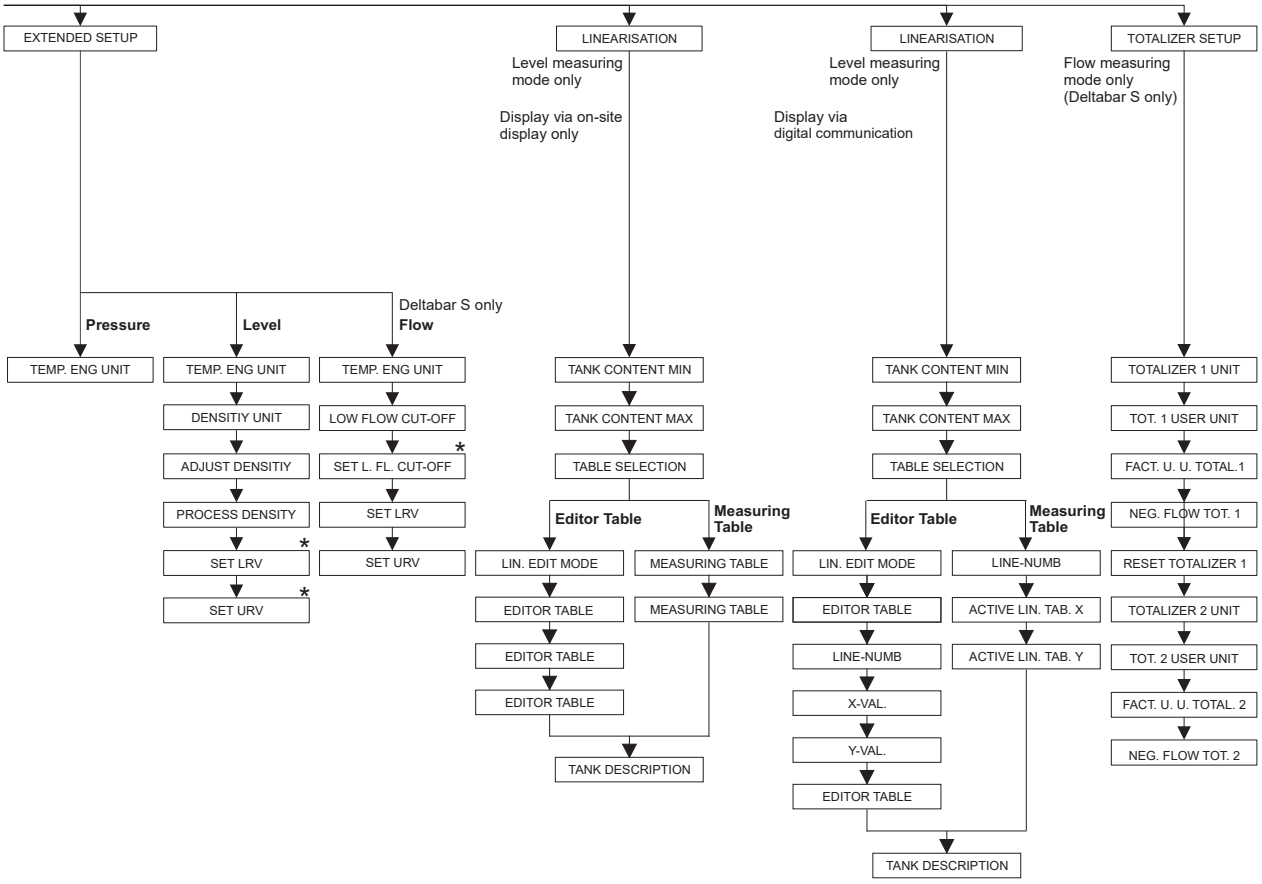

There are parameters that are only displayed if other parameters are appropriately configured.
For example the TOT. 1 USER UNIT parameter is only displayed if the "User unit" option was selected for the TOTALIZER 1 UNIT parameter.
These parameters are indicated with a "*".

P01-xxxxxxxx-19-xx-xx-xx-101

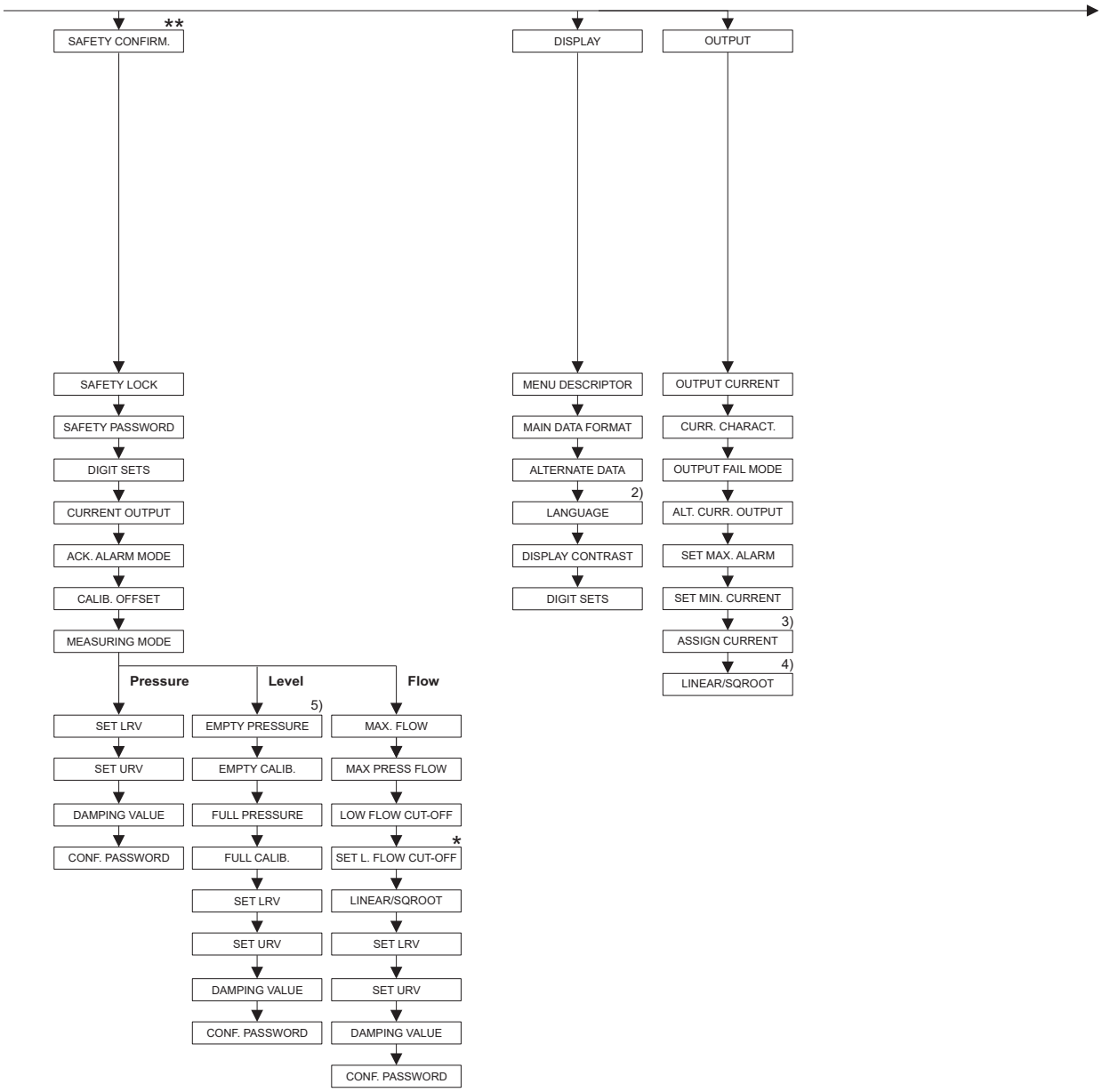

2) Display via digital communication

3) Level measuring mode only

4) Flow measuring mode only

5) only LEVEL SELECTION = Level Easy Pressure

There are parameters that are only displayed if other parameters are appropriately configured.
These parameters are indicated with a "*".

** See Safety Manual SD190P for Cerabar S, SD189P for Deltabar S or SD213P for Deltapilot S.

P01-xxxxxxxx-19-xx-xx-xx-141

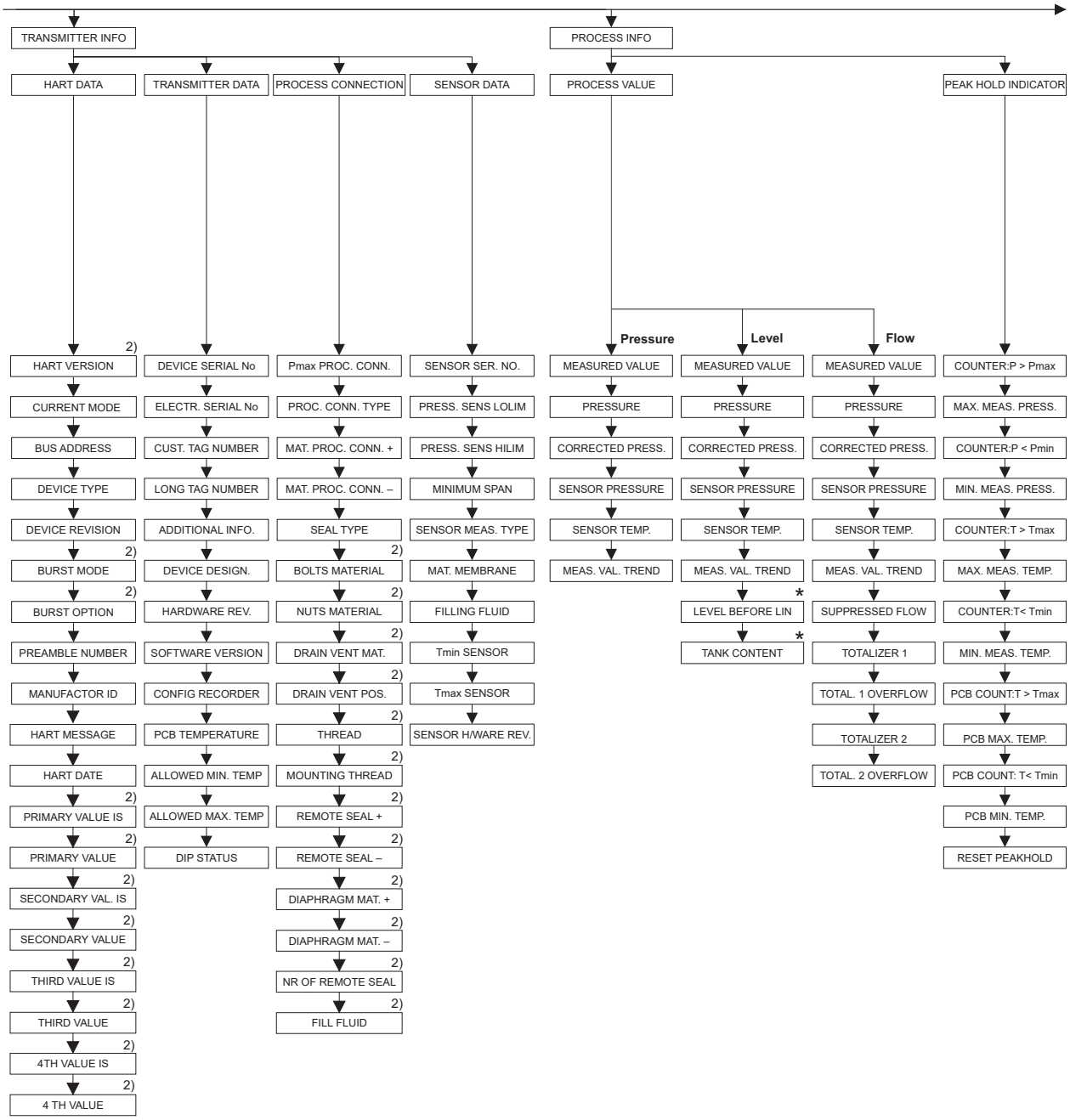

2) Display via digital communication

* There are parameters that are only displayed if other parameters are appropriately configured.
These parameters are indicated with a "*".

P01-xxxxxxxx-19-xx-xx-xx-142

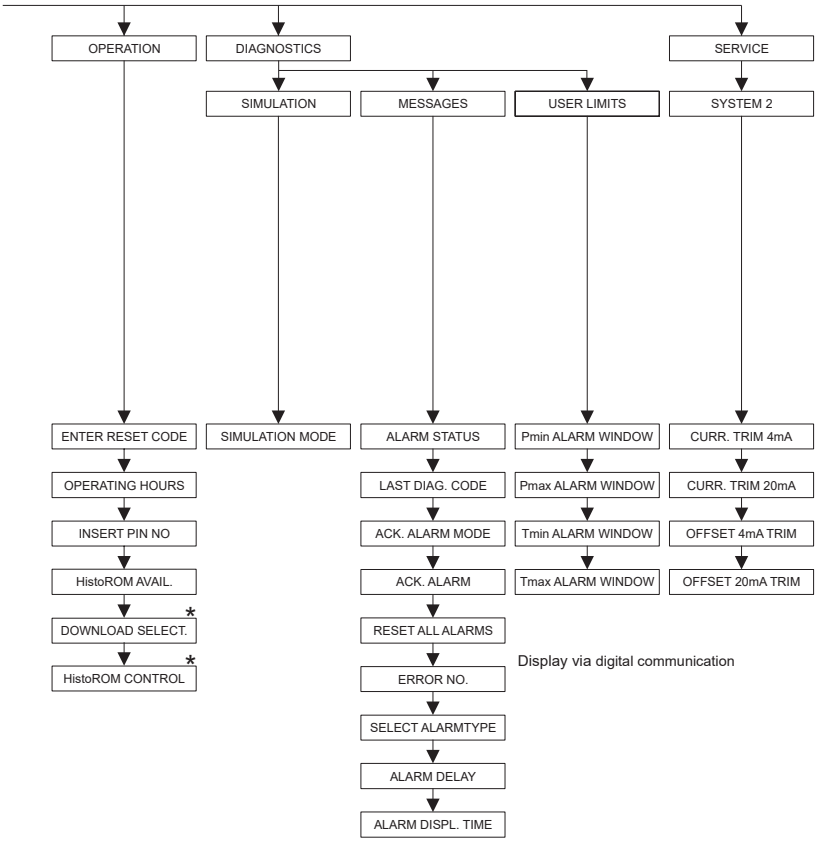

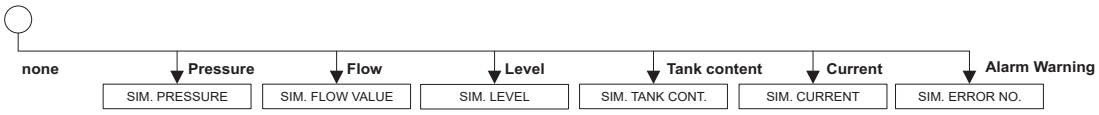

* There are parameters that are only displayed if other parameters are appropriately configured.
These parameters are indicated with a "*".

P01-xxxxxxxx-19-xx-xx-xx-143

Index

Numerics

100% POINT (813), "Height linearized" level type 89
100% POINT (813), "Linear" level type 77
4TH VALUE 116
4TH VALUE IS 116

A

ACK. ALARM (500) 129
ACK. ALARM MODE (401) 128
ACK. ALARM MODE (844), "Safety confirm." group 9
ACTIV LIN. TAB. X. 107
ACTIV LIN. TAB. Y. 107
ADDITIONAL INFO. (272) 117
ADJUST DENSITY (007), "Level Easy Height" level selection . 64
ADJUST DENSITY (007)/(316), "Level" extended setup . . 97
ADJUST DENSITY (316), "Height linearized" level type . . . 88
ADJUST DENSITY (316), "Linear" level type 74
ADJUSTED DENSITY (810), "Height linearized" level type. 87
ADJUSTED DENSITY (810), "Linear" level type 74
ALARM DELAY (336) 129
ALARM DISPL. TIME (480) 129
ALARM STATUS (046) 128
ALLOWED MAX. TEMP (359) 117
ALLOWED MIN. TEMP (358). 117
ALT. CURR. OUTPUT (597) 113
ALTERNATE DATA (423) 110
ASSIGN CURRENT (760) 113

B

BOLTS MATERIAL 118
BURST MODE 115
BURST OPTION 115
BUS ADDRESS (345). 115

C

CALIB. OFFSET (319) 54
CALIB. OFFSET (847), "Safety confirm." group 9
CALIBRATION MODE (008), "Level Easy Height" level selection. 64
CALIBRATION MODE (008), "Level Easy Pressure" level selection. 60
CALIBRATION MODE (392), "Height linearized" level type 87
CALIBRATION MODE (392), "Linear" level type 73
COMB. MEASURAND (806). 83
CONF. PASSWORD (856). 9
CONFIG RECORDER (352) 117
CORRECTED PRESS. (434), "Flow" measuring mode. . . . 123
CORRECTED PRESS. (434), "Level" measuring mode . . . 122
CORRECTED PRESS. (434), "Pressure" measuring mode . 122
COUNTER P > Pmax (380). 124
COUNTER P Pmin (467). 124
COUNTER T > Tmax (404) 124
COUNTER T Tmin (472) 124
CURR. CHARACT. (694), (695), (696), (764) 112
CURR. TRIM 20mA (042). 131
CURR. TRIM 4mA (045). 131
CURRENT MODE (052) 115
CURRENT OUTPUT (875) 9
CUST. TAG NUMBER (055) 117
CUST. UNIT FACT. F (609). 95
CUST. UNIT FACT. H (705), "Height linearized" level type 84, 89
CUST. UNIT FACT. H (705), "Linear" level type 71, 76
CUST. UNIT FACT. M (703), "Height linearized" level type 86
CUST. UNIT FACT. M (703), "Linear" level type 73
CUST. UNIT FACT. M (703), "Pressure linearized" level type. 80
CUST. UNIT FACT. P (317) 56, 59, 63, 68, 93
CUST. UNIT FACT. V (607), "Height linearized" level type 85
CUST. UNIT FACT. V (607), "Linear" level type. 72, 75
CUST. UNIT FACT. V (607), "Pressure linearized" level type . 79
CUSTOMER UNIT F (610) 94
CUSTOMER UNIT H (706), "Height linearized" level type 84, 89
CUSTOMER UNIT H (706), "Linear" level type 70, 76
CUSTOMER UNIT M (704), "Height linearized" level type. 86
CUSTOMER UNIT M (704), "Linear" level type 72
CUSTOMER UNIT M (704), "Pressure linearized" level type . 80
CUSTOMER UNIT P (075) 56, 59, 63, 68, 92
CUSTOMER UNIT V (608), "Height linearized" level type . 85
CUSTOMER UNIT V (608), "Linear" level type 71, 75
CUSTOMER UNIT V (608), "Pressure linearized" level type 79

D

DAMPING VALUE (247) 48, 51, 53, 57, 61, 66, 77, 81, 90, 95
DAMPING VALUE (855), "Safety confirm." group 9
DENSITY UNIT (001), "Level Easy Height" level selection . 64
DENSITY UNIT (001)/(812), "Level" extended setup. 97
DENSITY UNIT (812), "Height linearized" level type 88
DENSITY UNIT (812), "Linear" level type 74
DEVICE DESIGN. (350) 117
DEVICE REVISION (699) 115
DEVICE SERIAL No (354). 117
DEVICE TYPE (002), Deltapilot S 115
DEVICE TYPE (351), Deltabar S 115
DEVICE TYPE (802), Cerabar S. 115
DIAPHRAG. MAT. - 119
DIAPHRAG. MAT. + ... 119
DIGIT SETS (841) 9
DIGITS SETS (840) 111
DIP STATUS (363) 117
DISPLAY CONTRAST (339) 111
DOWNLOAD SELECT (014). 126
DRAIN VENT MAT. 119
DRAIN VENT POS. 119

E

EDITOR TABLE (770), on-site operation 103
EDITOR TABLE (809), on-site operation 102
EDITOR TABLE, digital communication. 105–106
ELECTR. SERIAL No (386) 117

EMPTY CALIB. (010), "Level Easy Height" level selection . 65
EMPTY CALIB. (010), "Level Easy Pressure" level selection . . 60–61
EMPTY CALIB. (314), "Height linearized" level type 87
EMPTY CALIB. (314), "Linear" level type 73
EMPTY CALIB. (314)/(010), QUICK SETUP 50
EMPTY HEIGHT. (009), "Level Easy Height" level selection 65
EMPTY PRESSURE (011), "Level Easy Pressure" level selection 61
EMPTY PRESSURE (710), "Height linearized" level type. . . 87
EMPTY PRESSURE (710), "Linear" level type. 74
ENTER RESET CODE (047) 126
ERROR No. 129

F

FACT. U. U. TOTAL. 1 (329) 108
FACT. U. U. TOTAL. 2 (330) 109
FILL FLUID. 119
FILLING FLUID (366) 120
FLOW-MEAS. TYPE (640). 93
FULL CALIB. (004), "Level Easy Height" level selection . . . 65
FULL CALIB. (004), "Level Easy Pressure" level selection. 60–61
FULL CALIB. (315), "Height linearized" level type 87
FULL CALIB. (315), "Linear" level type 74
FULL CALIB. (315)/(004), QUICK SETUP 51
FULL HEIGHT (006), "Level Easy Height" level selection . . 66
FULL PRESSURE (005), "Level Easy Pressure" level selection . 61
FULL PRESSURE (711), "Height linearized" level type 87
FULL PRESSURE (711), "Linear" level type 74

G

GET LRV (309), "Pressure" measuring mode 57
GET URV (310), "Pressure" measuring mode 57

H

HARDWARE REV. (266) 117
HART DATE (481) 116
HART MESSAGE (271) 116
HART VERSION (585). 114
HEIGHT UNIT (011), "Level Easy Height" level selection . . 64
HEIGHT UNIT (708), "Height linearized" level type. . . 83, 88
HEIGHT UNIT (708), "Linear" level type 70, 76
HistoROM AVAIL. (831) 126
HistoROM CONTROL (832) 127
HYDR. PRESS MAX. (761) 81
HYDR. PRESS MIN. (775) 80

I

INSERT PIN NO (048) 126

L

LANGUAGE (079) 44
LANGUAGE, display group 110
LAST DIAG. CODE (564) 128
LEVEL BEFORE LIN (050). 123
LEVEL MAX (712) 86
LEVEL MIN (755) 86
LEVEL MODE (718) 68
LEVEL SELECTION (020). 46, 49
LIN. EDIT MODE (397), on-site operation 101
LIN. EDIT MODE, digital communication. 105
LIN. MEASURAND (804) 70
LINd. MEASURAND (805) 79
LINEAR/SQROOT (390) 113
LINEAR/SQROOT (854), "Safety confirm." group 9
LINE-NUMB (549), on-site operation 102
LINE-NUMB, digital communication. 106
LONG TAG NUMBER (305). 117
LOW FLOW CUT-OFF (442) 99
LOW FLOW CUT-OFF (850), "Safety confirm." group 9

M

MAIN DATA FORMAT (688) 110
MANUFACTOR ID (432) 116
MASS FLOW UNIT (571) 94
MASS UNIT (709), "Height linearized" level type 85
MASS UNIT (709), "Linear" level type. 72
MASS UNIT (709), "Pressure linearized" level type 80
MAT. MEMBRANE (365) 120
MAT. PROC. CONN. - (361) 118
MAT. PROC. CONN. + (360). 118
MAX PRESS. FLOW (634) 53, 95
MAX PRESS. FLOW (849), "Safety confirm." group 9
MAX. FLOW (311). 52, 95
MAX. FLOW (848), "Safety confirm." group 9
MAX. MEAS. PRESS. (383). 124
MAX. MEAS. TEMP. (471). 124
MEAS. VAL. TREND (378) 122–123
MEASURED VALUE, "Flow" measuring mode. 123
MEASURED VALUE, "Level" measuring mode 122
MEASURED VALUE, "Pressure" measuring mode 121
MEASURING MODE (389), on-site display. 45
MEASURING MODE (845), "Safety confirm" group 9
MEASURING MODE, digital communication . 47, 49, 52, 55, 67, 92
MEASURING TABLE (549). 103
MEASURING TABLE (717). 103
MENU DESCRIPTOR (419) 110
MIN. MEAS. PRESS. (469) 124
MIN. MEAS. TEMP. (474) 124
MINIMUM SPAN (591) 119
MOUNTING THREAD 119

N

NEG. FLOW TOT. 1 (400) 108
NEG. FLOW TOT. 2 (416) 109
NORM FLOW UNIT (661) 93
NR OF REMOTE SE 119
NUTS MATERIAL 119

O

OFFSET 20mA TRIM (044) 131
OFFSET 4mA TRIM (043) 131
OPERATING HOURS (409) 126
OUTPUT CURRENT (254) 111
OUTPUT FAIL MODE (388). 112
OUTPUT UNIT (023), "Level Easy Height" level selection . 64
OUTPUT UNIT (023), "Level Easy Pressure" level selection 60

P

PASSWORD (836) 9
PCB COUNT
T Tmin (492) 124
PCB COUNT T 124
PCB COUNT T > Tmax (488) 124
PCB MAX. TEMP. (490) 124
PCB MIN. TEMP. (494) 124
PCB TEMPERATURE (357) 117
Pmax ALARM WINDOW (333) 130
Pmax PROC. CONN. (570) 117
Pmax SENS. DAMAGE (252) 120
Pmin ALARM WINDOW (332) 130
Pmin SENS. DAMAGE (251) 120
POS. INPUT VALUE (563) 48, 50, 54
POS. ZERO ADJUST (685) 48, 50, 52, 54
PREAMBLE NUMBER (036) 115
PRESS. ENG. UNIT (060) 56, 59, 63, 67, 92
PRESS. SENS HILIM (485) 119
PRESS. SENS LOLIM (484) 119
PRESSURE (301), "Flow" measuring mode 123
PRESSURE (301), "Level" measuring mode 122
PRESSURE, "Pressure" measuring mode 122
PRIMARY VALUE 116
PRIMARY VALUE IS 116
PROC. CONN. TYPE (482) 118
PROCESS DENSITY (025)/(811) 97

Q

Quick Setup "Flow" menu 52
Quick Setup "Level" menu 49
Quick Setup "Pressure" menu 47

R

REMOTE SEAL - 119
REMOTE SEAL + ... 119
RESET ALL ALARMS (603) 129
RESET PEAKHOLD (382) 125
RESET TOTALIZER1 (331) 109

S

SAFETY LOCK (836) 9
SAFETY LOCKSTATE (836) 9
SEAL TYPE (362) 118
SECONDARY VAL. IS 116
SECONDARY VALUE 116
SELECT ALARMTYPE (595), (600) 129
SENS H/WARE REV (487) 120
SENSOR MEAS.TYPE (581) 120
SENSOR PRESSURE (584), "Pressure" measuring mode . . 122
SENSOR PRESSURE (584), "Safety confirm." group 123
SENSOR SER. No. (250) 119
SENSOR TEMP. (367) 122–123
SET LRV (013), "Level Easy Height" level selection 66
SET LRV (013), "Level Easy Pressure" level selection 61
SET LRV (245), "Pressure" measuring mode 48, 56
SET LRV (637), "Flow" extended setup 99
SET LRV (719), "Level" basic setup 77
SET LRV (762), "Level" extended setup 98
SET LRV (852), "Safety confirm." group 9
SET MAX. ALARM (342) 113
SET MIN. CURRENT (343) 113
SET URV (012), "Level Easy Height" level selection 66
SET URV (012), "Level Easy Pressure" level selection 61
SET URV (246), "Pressure" measuring mode 48, 57
SET URV (638), "Flow" extended setup 100
SET URV (720), "Level" basic setup 77
SET URV (763), "Level" extended setup 98
SET URV (853), "Safety confirm." group 9
SET. L. FL. CUT-OFF (323) 99
SET. L. FL. CUT-OFF (851), "Safety confirm." group 9
SIM. CURRENT (270) 128
SIM. ERROR NO. (476) 128
SIM. LEVEL (714) 128
SIM. PRESSURE (414) 127
SIM. TANK CONT. (715) 128
SIM.FLOW VALUE (639) 127
SIMULATION MODE (413) 127
SOFTWARE VERSION (264) 117
STD. FLOW UNIT (660) 94
SUPPRESSED FLOW (375) 123

T

TABLE SELECTION (808), on-site operation 101
TABLE SELECTION, digital communication 105
TANK CONTENT (370) 123
TANK CONTENT MAX (713) 101, 105
TANK CONTENT MIN (759) 101, 104
TANK DESCRIPTION (815) 103, 107
TANK HEIGHT (859) 76
TANK VOLUME (858) 75
TEMP. ENG. UNIT (318), "Flow" measuring mode 99
TEMP. ENG. UNIT (318), "Level" measuring mode 97
TEMP. ENG. UNIT (318), "Pressure" measuring mode 96
THIRD VALUE 116
THIRD VALUE IS 116
THREAD 119
Tmax ALARM WINDOW (335) 130
Tmax SENSOR (369) 120
Tmin ALARM WINDOW (334) 130
Tmin SENSOR (368) 120
TOT. 1 USER UNIT (627) 108
TOT. 2 USER UNIT (628) 109
TOTAL. 1 OVERFLOW (655) 124
TOTAL. 2 OVERFLOW (658) 124
TOTALIZER 1 (652) 124
TOTALIZER 1 UNIT (398), (662), (664), (666) 108
TOTALIZER 2 (657) 124
TOTALIZER 2 UNIT (399), (663), (665), (667) 109

U

UNIT FLOW (391) 93
UNIT VOLUME (313), "Height linearized" level type 84
UNIT VOLUME (313), "Linear" level type 71, 75
UNIT VOLUME (313), "Pressure linearized" level type 79

X

X-VAL. (550), on-site operation 102
X-VAL., digital communication 106

Y

Y-VAL. (551), on-site operation 102
Y-VAL., digital communication 106

Z

ZERO POSITION (814), "Height linearized" level type 90
ZERO POSITION (814), "Linear" level type 77

www.endress.com/worldwide

Endress+Hauser

People for Process Automation

BA00274P/00/EN/17.14
71270402
CCS/FM+SGML 9

ENVIREQUIP

SERIES EVG/EVGX, MIXERS

LEFT BLANK

ENVIREQUIP **(Division 6445772 Canada Inc)**
MIX-TECH DYNAMIC MIXERS
490, Bord du Lac - Suite 2
Dorval, Quebec, Canada H9S 2A8 ***mobile:*** 514.386.1043
710 Cotton Mill Road ***tel:*** 613.703.7930
Cornwall, Ontario, Canada K6H 7L3 ***Cell:*** 514.349.3116
e-mail: envirequip@cogeco.ca
internet: http://www.envirequip.com

INSTRUCTION & OPERATING MANUAL

ENVIREQUIP - MIX-TECH MIXERS

SEE SECTION FOR AGITATOR / GEAR REDUCER DESIGN: (at end of Manual)

EVG	**(Parallel Shafts with Hollow Output Shafts & Tapered Roller Bearings)**
EVGX	**(Parallel Shafts with Hollow Output Shafts & High Capacity Upper Cylindrical & Lower (2) - Row Spherical Roller Bearings**
EHG	**(Worm drives for Small Top Entry & Portable Mixers with Hollow Output Shafts)**
EHGB	**Helical / Bevel gearing with Hollow Output Shafts & Tapered Roller Bearings)**
EVGFS	**Helical in-line gears with Solid Output Shaft Tapered Roller or Spherical Roller Bearings - Refer to Nord Installation & Operation Manual**

NOTE: For Units with Solid Output Shafts, Refer to the Nord Manual

Env-IOM.EngJuly.2015.wpd

ENVIREQUIP / MIX-TECH MIXERS - INDEX I.O.M.

– For mixer(s) installed in OPEN TANKS -

– See Section for Mechanical seals & Packing (Stuffing boxes) at end of I.O.M. PAGE (S)

PAGE / DRAWING		MIX-TECH MIXER (SECTION)	Rev 0
SECTION	1	INSPECTION	1
SECTION	2	INSTALLATION	1, 2, 3 & 4
SECTION	3	MIXER ASSEMBLY	4
SECTION	4	MOTORS	5 & 6
SECTION	5	PEDESTALS: SHAFT & GEAR REDUCER REMOVAL	6 & 7
SECTION	6	SHAFTS, IMPELLERS & COUPLINGS Note: Shaft & Gear Reducer Removal - Section/Page 7	7, 8 & 9
SECTION	7	GEAR DRIVE MAINTENANCE	9, 10 & 11
SECTION	8	BOLTS	11 & 12
SECTION	9	OPERATION	12
SECTION	10	MOTOR REMOVAL & INSTALLATION	13
SECTION	11	TROUBLE-SHOOTING / MIXER PERFORMANCE	13 & 14
SECTION	12	WARRANTY	15
PAGE		USEFUL CONVERSIONS	16
PAGE		MAINTENANCE LOG	19
PAGES		IMPELLER BLADE INSTALLATION	A, B C & D

NORD	BIM 1020	I.O.M. PARALLEL SHAFT REDUCERS	(pdf)
NORD	DM 006	DIS-ASSEMBLY MANUAL SK6282 to SK11282 for DOUBLE reduction)	(pdf)
NORD	DM 007	as above but for TRIPPLE reduction drives.	(pdf)
PARTS LIST(S)	(to suit)		(Pdf)

E N V I R E Q U I P **(Division 6445772 Canada Inc)** **Page 1**
MIX-TECH DYNAMIC MIXERS
490 Bord du Lac - Suite 2, ***toll free:*** 1.866.819.6123
Dorval, QC, Canada H9S 2A8 ***mobile:*** 514.386.1043
RR1, (21494 Little Russia Rd), ***tel:*** 613.874.2616
Glen Robertson, ON, CanadaK0B 1H0 ***fax:*** 613.874.2629
e-mail: envireqp@glen-net.ca
internet: http://www.envirequip.com

INSTALLATION & OPERATION MANUAL
MIX-TECH MIXERS

S E C T I O N 1 - INSPECTION

- Make sure that all mixer parts have been removed from the crate(s) before discarding.
- Each mixer should be carefully checked for any possible shipping damage. Any shipping damage should be reported to the TRANSPORT COMPANY immediately.
- Check the paint and make any necessary touch-ups.

S E C T I O N 2 - INSTALLATION

- Most mixer problems can be avoided by following proper installation and operation instructions. The following is a list of hints to help insure proper installation and therefore satisfactory mixer service.
- Please read all appropriate instruction manuals prior to proceeding with the installation of the mixers.

C AU T I O N

- Lock-out the motor starter if any person is in the tank.
- Remove wick from the breather vent plug.
- DO NOT Paint breather / vent plug

MOST COMMON PROBLEMS: Mixer Shaft(s) not vertical; Impeller going through liquid level

- Make sure the impeller blades have been installed onto the hubs in the proper position with regards Rotation and Direction of flow. Please also note that the impellers blades are installed with the hubs ears always backing the blade into the flow. Also be sure that the leading edge and not the trailing edge is presented into the flow and that the angle at the impeller tip (angle of attack) from the horizontal is closer to 15° rather than to 75°.

C A U T I O N

- If the angle of attack (at the impeller tip is closer to 75°, either an incorrect hub in combination with the correct impeller blade (OR VICE VERSA) has been incorrectly assembled to make an incorrect matching of possible hub and blade combinations. For help in determining what the correct combination should be, Please refer to the mixer nameplate that will have the Rotation and direction of thrust written. Once you know the combination, refer to the pictorial guide of impeller / hub installation positions A, B, C or D.

- Depending on whether the concave or the convex surface is facing the fluid, if the angle of attach at the impeller is closer to 75°, the HP drawn will be 2 to 3 times greater than what it should be. This could result in overloading the motor and damaging the mixer.

- Make sure that the impeller blades are installed in the correct position for the required rotation. e.g. if the impeller blades are installed up-side-down, the pumping capacity will be reduced by about 65%. Check the mixer nameplate for the flow direction and install the impeller blades to suit.

C A U T I O N

POTENTIALLY DAMAGING SITUATIONS FOR MIXERS

- Prolonged operation of the mixer (impeller) at the liquid interface causes increased stress on the shaft & impeller for which the system was not designed to accommodate. Damage could result.
- Installations where there is a large hydraulic flow (or Velocity) in the mixer reservoir. : Make sure that if should such a flow is present, that the flow is baffled or dispersed over a larger area (as opposed to directed flow via a pipe), or that the flow be re-directed away form the impeller/shaft assembly, or is introduced evenly e.g via a weir. If this cannot be done, this external hydraulic flow will exert additional un-designed for stress loads and deflection on the mixer shaft and impeller which could result in component failure.

C A U T I O N

- Before permanently wiring the motor, check for the correct rotation of the low speed shaft. Normal is Clock-wise looking down from the top of the tank, although the reverse may also be required. Please check mixer nameplate for other instructions. (e.g. Letters A, B, C or D)

- Read and follow the instructions of all tags and nameplates before operating.
- Check the mixer full load motor amperage and voltage before operating any mixer.
- It is recommended that the mixer impeller be rotated by hand in order to check for smooth operation. **N.B**: For crown & worm drives, remove the fan cover and rotate the fan manually.
- Always operate the mixer in a fluid which had a specific gravity and viscosity less than or equal to the design specific gravity and viscosity.
- Do not dump the contents of large bags of chemicals directly onto the rotating mixer impeller(s); but add the contents into the reservoir gradually. This will also promote better mixing.
- Before starting the mixer, make sure the impeller is not buried in solids or a "set-up" fluid Note: If solids have settled-out, then dilute or jog the mixer clockwise then counterclockwise
- Please check that there is no directed flow from an external source at the impeller or shaft unless the mixer was specifically designed to accommodate these additional stress loads, as mixers could be damaged.
- During START-UP, please listen for unusual noises and check for excessive vibration.
- Check the temperature of the motor and gear reducer. The temperature should not exceed 180º F. (82ºC) If they are too hot, please stop the operation of the mixer and contact MIX-TECH immediately.
- Measure the motor amperage. The measured amperage must be less than the nameplate rating nameplate value. If the amps are over, please check the rotational speed of the gear reducer/mixer output shaft. Place a piece of tape onto the shaft (or use an RPM counter if available, and count the number of revolutions for a period of e.g. 10 seconds using your watch second hand. Multiply the result by (6) for 60 Hz operation and this will provide you with the rotational speed of the mixer. Check Rotation, & impeller blade installation to be sure they are correct. If the power draw remains high, please check with MIX-TECH

Note: - Record the full load motor amperage (FLA) and measure them every (3) months.
- Some motor amperage readings are poor indicators at low loads

C A U T I O N:

- **DO NOT STAY IN THE TANK DURING MIXER ROTATION**
- Never use the mixer impeller as a foot stand or support for body weight - as such actions could damage the mixer as well as result in serious bodily injury.

- As with any rotating equipment, in order to avoid injury, extreme care should be taken to avoid contacting the rotating parts including not connecting the motors to the electrical power source until the mixer is completely assembled. Then, vacate the tank prior to operating the mixer.

- Before making field changes of motor horsepower, mixer speed, shaft length, impeller diameter or width, etc. be sure to consult with ENVIREQUIP, MIX TECH DIVISION.

- After any plant electrical work has been done, check that the mixer(s) rotation(s) are correct as power lines may have been reversed**.**

S E C T I O N 3 - MIXER ASSEMBLY: - Closed tanks are Flange Mounted

- Open tank models usually are mounted on a steel structure. Level the drive as closely as possible. This assures that the shaft will turn in a true vertical position. Incorrect mounting is often a cause of mechanical difficulty with a mixer. Unless specified on the mixer assembly drawing, the mixer extension shaft is designed to run in a true vertical position. Never angle or side mount the mixers.

- While operating, there is random fluid motion in the vessel that exerts great forces on the extension shaft of the mixer. The mixer accommodates these forces since they are transmitted directly to the support mounting(s). Therefore, the mounting system must be rigid. It must support the static mixer weight as well as live mixer reactions that result from Torque and Bending Moment. It is not enough to design the support system for acceptable levels of stress. It must be rigid enough to take care of Start-up torque load (2.5 times the Torque), and preclude large deflections that may result in mixer vibration.

- When designing the support structure to accommodate bending moments, be sure that the structure is sufficiently rigid so that the mixer extension shaft will not move more than 1/32" per (10) feet (0.8 m per 3.05 meters) of shaft length due to deflection of the support structure.

- After the gear drive (with the motor already flange mounted onto the drive) has been properly installed, the mixer extension shaft should be installed into the gear drive's hollow output shaft (quill shaft) and fastened in the quill shaft with the thrust plate and secured in position with the threaded bolt provided - use Locktite Blue (or equivalent), or in the case of an output shaft coupling, bolt the mating flanges together.

- Mixer blades over 20" in diameter are generally bolted to a welded hub. Check the welds on the hub on your yearly overall inspection.

- These mixers are supplied with the finest electric motors available. They are manufactured by a nationally known manufacturer, (e.g. NORD, WEG, Brook etc). Under normal operating conditions, within specified temperatures, proper installation and maintenance, these motors are guaranteed to deliver rated output.

- In order to get top performance from any electric motor, be sure that there is plenty of air circulation and a minimum of obstructions. On fan cooled motors, be sure not to choke off the suction inlets, also be sure to check the allowable temperature that's indicated on the motor nameplate. Don't decrease the service life of a motor by operating it at excessively high ambient temperature.

- In order to avoid damage to the motor during temporary overloads, jams, etc. be sure that correctly sized overload protection is provided. Starter overload heater elements can be sized from the full load current of the motor as shown on the motor nameplate. It is advisable to consult a supplier of motor control equipment when selecting thermal overload heaters.

- Before the motor is permanently wired, check to be sure that the output shaft rotation is correct (Normally clockwise looking down from the mixer drive, but sometimes counterclockwise depending on the process requirements)

C A U T I O N:

- Make sure to check rotation of the mixer before it is operated. To reverse the rotation of standard 3 phrase electric motors, simply switch any two power leads.

M O T O R S P E C I F I C A T I O N S: 1800 RPM - (4) pole

- NORD motors carry the CE mark in accordance with the Low Voltage Directive
- NORD motors are designed to operate at elevations up to 1000 m (3300 ft) above sea level

Altitude:		
up to 1000 m	= 100% output	Ambient Temp = 40° C
Above 1000 up to 2000 m	= 92% output	Ambient Temp.= 32° C
Above 2000 up to 3000 m	= 83% output	Ambient Temp = 24° C
Above 3000 up to 4000 m	= 74% output	Ambient Temp = 16° C

- NORD motors are designed to operate with a maximum ambient temperature of 40° C (104°F) - for higher temperatures, motors have to be de-rated or an upgraded insulation used.

Ambient Temperature:	(104°F)
	40° C = 100%
	45° C = 95%
	50° C = 89%
	55° C = 83%
	60° C = 67%
	70° C = 64%

EXAMPLE: A motor designed for an output of 100 HP to operate in the mining area of Bolivia (altitude 4000 m above sea level). **NOTE**: 1000 meters = 3281 Feet
Output reduction: the maximum allowable output of the motor would be 74% (74 HP)

Ambient temperature limit: the motor may operate at its rated output of 100 HP provided that the ambient temperature does not exceed 16° C

Note: You can operate over 3300 feet, but you have to de-rate the motor

– Voltages: Canada 575/3/60,TEFC; USA 460/3/60, TEFC; Europe 400/3/50, IP55 ; Australia 415/3/50

– **Tolerances Voltage & Frequency**: ± 10% based on rated voltage; Line frequency tolerance ± 5%. Combined **MAXIMUM** variation in voltage and frequency ± 10%

-- MG1 Part 31 suitable for inverter service

– Insulation Class is Class F (non organic)

-- High-efficiency design for motors 1 HP and up

– Service Factor 1.15

– The Standard Nord motor fan is a non-sparking

– Each Nord motor uses a terminal block

– Integral Nord motor (unless Nema motor with "C" flange)

S E C T I O N 5 - Pedestals: Shaft & Gearbox Removal - EVG SERIES

• Series EVG standard design of the dry-well pedestal and shaft catcher is one where the flinger (for the dry well) and the shaft catcher are one-in-the-same part serving both purposes.

SHAFT REMOVAL AND / OR TO REMOVE THE GEAR REDUCER:- **See assembly dwg**

i) Lock-out electrical power to the electric motor.

ii) If the electrical wiring is not long enough to allow removal of the gear reducer, dis-connect the motor wiring.

iii) Remove the safety cover located on top of the gear reducer exposing the bolt (# 3) and top plate (# 4) which holds the shaft (# 12).

iv) Slowly remove the top bolt.(# 3).

v) As the bolt is loosened, the shaft and impeller assembly will be lowered a distance of about 0.125" (3.175 mm).

vi) After the bolt has been loosened sufficiently, the flinger (# 8) will come into contact with the Pedestal to the inner support pipe (# 11) and stop there.

vii) Remove the bolts holding together the Adaptor plate Reducer to Pedestal top plate (# 7).

viii) Lift-off the complete gear reducer unit the gearbox clears the shaft.

ix) Inside of the Pedestal (# 10), you can now see the flinger (#8) which rests on the Collar / Clamp (2) Bolts / Shaft catcher (# 9).

x) Prior to un-doing the set screws on the collar / Clamp, make preparation to handle the shaft which will now fall through the dry well (# 11) and into the tank.

xi) Once the shaft is secured loosen the set screws on the Flinger assembly or Clamp bolts (# 9).

xii) **To Reinstall the shaft** (et al) follow the above procedure in Reverse.

Note: In older designs, the flinger was welded-onto the shaft. In that case, the shaft can only be removed vertically through the top of the Pedestal.

C A U T I O N:

- Prior to loosening the (3) set screws on the flinger/shaft-catcher, please ensure that there is some means of holding the shaft in-place (if no Clamp supplied, use (2) pieces of wood 4" x 4" or 6" x 6" with tightening bolts to hold the shaft in place via friction) IF NOT, THE SHAFT WILL DROP INTO THE TANK possible causing damage to the equipment or vessel and bodily injury. Shafts are often of sufficient weight to cause serious bodily injury or even death were it not properly secured.

- You may want to install a plastic hose in the pedestal so that you can monitor if the gear reducer is losing oil and collecting in the dry-well pedestal.

A Split Collar is used to prevent the shaft from accidentally falling from the gear reducer:

NOTE: On older Series EVG, there may not be a Split Ring but rather a flinger that rests on the dry well seal to hold the shaft in-place

– (i) Insert eye-bolt in top centre of the impeller shaft.
(ii) Slowly lift up the complete impeller shaft assembly a distance of 6 mm (0.25").
(iii) Remove the split collar that rests against the top of the quill shaft of the gearbox.
(iv) Slowly lower the complete shaft/impeller assembly a distance of 10 to 12 mm (0.375"to 0.50".
(v) At this point, the flinger/clamp ass'y will come into contact with the pedestal top inner support pipe/Dry-well
(vi) Remove bolts.
(vii) Lift off the complete gear reducer until the gearbox clears the shaft and eye-bolt.
(viii) The reinstall the gear drive, follow the above procedure in reverse

---

S E C T I O N 5 - SHAFTS, IMPELLERS & FLANGED COUPLINGS

SHAFT - STRAIGHTNESS:

- When shipped, the mixer extension shaft was straight to within 0.003" per foot (0.25 mm per meter) of shaft length for mixers equipped with centre-less ground shafts (Special Order/ uncommonly used). If the shaft does not appear to be damaged, but the run-out is greater than the above standard, the shafting supplied may have been "smooth-turn" (more commonly used), which might not be dimensionally
the same over the entire length of the shaft. This is probably still acceptable. In such cases, or where it might be difficult to obtain an accurate shaft run-out value, we may apply another rule: 0.25 to 0.50% of the impeller diameter = the maximum shaft run-out at the bottom of the shaft. e.g:

50" diameter impeller	0.14 to 0.28"
100" diameter impeller	0.26 to 0.53"
150"diameter impeller	0.40 to 0.67"

S E C T I O N 5 - SHAFTS, IMPELLERS & FLANGED COUPLINGS

- Flanges are used as shaft couplings when shaft extensions exceed approx 12'-0" (3.65 m) Ensure that the bolts are tightened and that a product like Never Seize (or equivalent) is used. Refer to the table (in this manual) for torque tightening values

  Recheck bolt tightness after 1500 hours (or (3 months)

These couplings are welded onto the shafts with (4 to 6) gussets and are not removable.

C A U T I O N:

- Handle the shaft carefully to be sure that it is not bent.

- After the shaft has been installed, check it for straightness. Storage and handling may have resulted in a bend. To check it, an indicator is placed at the end of the shaft, and the high speed shaft is then rotated by hand. Runout of the total shaft should not be greater than the above \references values. If the runout is greater than the above values, the shaft can be re-straightened in the field. To re-straighten the shaft, follow this procedure:

- Where the maximum, positive readout is found, place the indicator on that side of the shaft.

- Heat the shaft at a point of 180° from the indicator, (and just below the first in-tank coupling if applicable), apply heat just below the mounting nozzle.

- The shaft will grow toward the indicator as heat is applied to it. However, DO NOT permit the surface temperature to go over 500° F (260° C). Use Tempilstics or equivalent

- The shaft will straighten since it will draw more than it grows.

- After each heating process, rotate the shaft and recheck until the straightness is within tolerance to meet the allowable tolerance

- To install any impeller, simply slide the impeller hub onto the extension shaft above the shaft keyway. Install Hook type (Gib) key into the keyway making sure that the pin is inserted into the

  correct hole for proper impeller location. Lower the hub (with or without blades bolted-on) down onto the key. Tighten set screw. Bolt -on blades if not already done.

NOTE: All MIX-TECH Portable mixers operate at least 35% below the 1st Critical speed or harmonic frequency - There is no danger of "hitting-on" or approaching the 1st Critical speed - (Unless specifically mentioned otherwise)

- Please refer to the specific manufacturer's installation and operating manual.
- Correct lubrication practices are essential to long life and satisfactory performance of a gear drive. Be sure to use the right lubricants as recommended. With proper lubrication

maintenance, the gear drive will carry its rated design load and provide years of satisfactory operation.

SECTION 6 - SHAFTS, IMPELLERS & COUPLINGS

IMPELLERS

- Make sure that the impeller blades have been installed onto the hubs in the proper position with regard Rotation and Direction of flow. Please also note that the impellers blades are installed with the hubs ears always backing the blade into the flow. Also be sure that the leading edge and not the trailing edge is presented into the flow and that the angle at the impeller tip (angle of attack) from the horizontal is closer to 15° rather than to 75°.

CAUTION

- If the angle of attack (at the impeller tip is closer to 75°, either an incorrect hub in combination with the correct impeller blade (OR VICE VERSA) has been incorrectly assembled to make an incorrect matching of possible hub and blade combinations. For help in determining what the correct combination should be, please refer to the mixer nameplate that will have the Rotation and direction of thrust written. Once you know the combination, refer to the pictorial guide of impeller / hub installation positions A, B, C or D.

- Depending on whether the concave or the convex surface is facing the fluid, if the angle of attach at the impeller is closer to 75°, the HP drawn will be 2 to 3 times greater than what it should be. This could result in overloading the motor and damaging the mixer.

- Make sure that the impeller blades are installed in the correct position for the required rotation. e.g. if the impeller blades are installed up-side-down, the pumping capacity will be reduced by about 65%. Check the mixer nameplate for the flow direction and install the blades to suit.

SECTION 7 - GEAR DRIVE MAINTENANCE

CAUTION:

- By following instructions, many premature gear and bearing failures can be avoided.

- Keeping a maintenance log is highly recommended.

- Lubricant used in the gear case must be free of dirt, metal particles and other contaminants. Use only new oil. Strain the oil if there is any possibility that it contains contaminants.

- To equalize pressure inside and outside the gear case, a breather vrnt is installed on top of the unit. This breather normally requires no maintenance, and must not be blocked. Check hole for free breathing.

PORTABLE MIXERS:

Lubrication For PORTABLE MIXERS (**Series "EHG"**), the Crown & worm gear reducers are filled for life (20,000 hours or (4) years) with synthetic oil

C A U T I O N:

- For shipment, the gear-case is drained of oil (EXCEPT FOR NORD drives) - Be sure to fill the gear case with the proper lubricant to the proper level. Install breather. DO NOT OVERFILL - N.B: if the reducer is already filled, (as is the case with NORD drives), Do not forget to install the breather(s) or the seals may fail.

- **RECOMMENDED LUBRICANTS FOR NORD HELICAL GEARING**:
  These Nord Gear reducers are factory-filled with Shell Omala 220 mineral oil or with Chevron ISO FM 220 food grade oil (if required), or equivalent:
  or with Shell Omala 220 regular mineral oil fill when the mixer is provided with a dry well seal unless otherwise specified:

  N.B: A reducer previously filled with Shell Omala 220 mineral can be drained (as much as practical to achieve), and Chevron ISO FM 220 substituted without any harmful chemical reactions or reduction to the lubricating quality of the new (or old) oil.

- Please note that the gear reducers for MIX-TECH'S "EVG" series are Nord Parallel shaft drives. The top output bearing is grease packed although there is not grease nipple. Please remove the seal and re-pack the bearing with grease. (please refer to NORD instruction attached)

- The output shaft seals are "Quadrilip" having (2) discrete grease filled pockets

---

S E C T I O N 7 - GEAR DRIVE MAINTENANCE FOR SERIES EVG & EVGX parallel Shaft design gear reducers:

- **RECOMMENDED OIL CHANGE INTERVALS IN NORD IOM: -**
  Synthetic lubricants should be changed every 20,000 service hours or (4) years;
  Mineral oils should be changed every 10,000 service hours or after (2) years. See gear reducer service manual (IOM).

C A U T I O N:

Units should be checked out periodically for increased noise, surface temperature, vibration, shaft

movement, and amperage draw. Units with inspection covers should not be operated with the inspection covers removed.

PROCEDURE FOR RE-GREASING THE UPPER OUTPUT BEARING equipped with Tapered roller bearing option:

- Remove upper output shaft seal(s).
- Inspect bearing cavity for presence of grease. The bearing cavity should be packed to approximately 1/3 full with grease.
- If required, inject grease into the taper roller bearing until the cavity is filled to 1/3. A Needle Nozzle is generally required on the grease gun, because the shim(s) partially cover the access to the bearing cavity**.**
- Install new upper output seals**.**

Note: The other bearings in these gearboxes are open and are submerged in oil.

The recommended interval for changing the gearbox oil is every 10,000 hours of operation.

- The standard ambient temperature selected is 15 to 125° F (9 to 52° C) for the gear reducer**.**
- Some Gear reducers are equipped with bulls-eye oil level indicators**, others have a plug.**

S E C T I O N 8 - BOLTS

- Impeller blades & other in-tank fasteners are supplied as standard with lock-washers.

C A U T I O N:

- Extreme care should be taken to see that locking devices are properly installed and to be sure that the bolts/studs are properly tightened and lubricated.

It is recommended that all in-tank fasteners (and all other bolts), be rechecked for tightness after the first 1500 hours of operation and subsequently, at each scheduled shut-down and that a suitable lubricant be used e.g. Never seize or equivalent.

RECOMMENDED BOLT TORQUE VALUES:

BOLT SIZE	TIGHTENING TORQUE (Foot Pounds)		
½" - 13	50	1.25" - 7	580
5/8" - 11	100	7/8" - 9	190
3/4" - 10	190	1.50" - 6	1000
1" - 8	290		

NOTE: Tighten all bolts as specified. Lubricate all fasteners with an anti-seize product. If no lubrication is used when tightening the bolts as specified, multiply the table values by 1.3

GEAR REDUCER & MOUNTING PLATE BOLTS:

These bolts are also subject to high loads and should be properly torqued to prevent bolt stretch and/or reducer wobble. For situations with large reducers or long shafts with large reducers, use additional care to make sure that these bolts are installed and torqued properly

This "Turn of the nut Method" can be summed up in one sentence: "Turn the Nut ½ to 2/3 turns beyond the snug tight position, "this applies to any bolt of any size. However, fasteners should be clean, rust free and lightly oiled.

In cases where the nut is not accessible, the bolt may be turned ½ to 3/4 turn beyond snug tight.

LEVER ARM SYSTEM	Bolt size	Lever Arm
	1/4 - 3/8"	6" handle
	7/16" - 5/8"	12" handle
	3/4" - 1.125"	24" handle
	1.25" and over	36" handle

Note: This lever arm system should be used with or without lock-washers. If lock-washers show sign of splitting or fatigue, they must be replaced

S E C T I O N 9 - OPERATION

- The mixers that you have purchased have been designed to accommodate all the loads that will be encountered in the normal course of operation.

C A U T I O N:

- Care must be taken to avoid prolonged operation of the mixer impeller(s) at liquid interface. These mixers were not designed to operate under those severe conditions and could become damaged.

S E C T I O N 10 - MOTOR REMOVAL & INSTALLATION OF MOTORS:

- For Nema "C " Flanged motors (not integral motors)
  The motors supplied have been installed onto the reducers. In the event of motor maintenance, remove the bolts which hold the gear reducer's Nema "C" flange adaptor to the motor's "C" face. Remove the coupling half and service the standard NEMA motor as required. INSTALLATION: reverse the procedure. Please refer to **"COUPLING ENCLOSED"** cross sectional drawing which shows the mounting distance 1 13/16" (46.03 mm). Note that the coupling is keyed onto the motor shaft (key provided).

- In the case of NORD integral motors, remove the bolts. The motor can then be removed exposing the high speed pinion gear mounted on the motor shaft. The motor can then be serviced as required.

S E C T I O N 11 - TROUBLE-SHOOTING / MIXER PERFORMANCE

- **PERFORMANCE**: If you find that the mixer is not performing according to your expectations, one of the things that directly affects mixer performance is Baffles (or lack thereof)

Note: Also check that the impeller blades are in the correct configuration A, B, C or D, that the correct blades are matched to the correct hubs and that the rotation is correct.(Please refer to Section 6 Pages 7, 8 & 9 for more information.

N.B: Baffles always help any mixer application by providing the means to convert rotational motion into to top-to-bottom- pumping/mixing.

- If the viscosity of the fluid is over 25,000 cp, then baffles are not necessary.

- If the vessel is rectangular in shape, baffles may not be necessary.

- In circular or square vessels, the use of baffles is mandatory.

- OTHER METHODS of achieving top-to-bottom motion without using baffles:
  - Off-centering the mixer by 20% (uses the vessel as a baffle)
  - Angle mounting (into a quadrant)- often seen on Portable mixers. If you want to angle-mount a larger mixer, please check to be sure that the shaft was designed to accept these additional stress loads.

- **OIL LEAK(S)** problems with Nord Gear reducers: In order to be able to address the

- **OIL LEAK(S)** For Series EVG supplied with a flinger / shaft Catcher & dry well seal:

NOTE: For Series **EVGX**, There is an oil overflow plastic pipe indicating oil leak>

- If one of the (2) output oil seals were to fail (very rare), then the oil would migrate down the output shaft, and be pumped by the flinger into the moat surrounding the dry well pipe. Any such leak would be contained by our sealed pedestal. (access to it is by a plug). Any other oil leak will be visible on the outside of the gear reducer

SYMPTOM	REASON(S)	SOLUTION
Oil leak on the reducer	Vent plug not installed Vent plug painted over Vent plug failure	Clean up oil and remove the vent plug If this stops the leak, change the vent plug
Oil leak on top of the reducer	Motor and/or top bolts not tightened	Use Teflon tape and tighten bolts
Oil leak on top of reducer	Too much oil in the reducer will be forced out of the vent	Check oil level and adjust to site glass
Oil leak on end plate	Bolts loose	Tighten bolts
Oil leak on top of the reducer	Gasket between motor and the reducer failed	Replace gasket and silicone dealant
Sign of oil on the reducer	Drain pipe & valve damaged	Use Teflon tape /sealant to try to reseal
Oil leaking on reducers with "C" flanged motor(s)	if the vent was not installed, plugged or faulty, the oil presure in the reducer might have exceeded 2 psi causing the input oil seal to "blow-out"	Change the input oil seal

- **NOISE**: Under normal circumstances, Mix-Tech mixers operate quietly and without vibration. If there is a metal-on-metal noise, check to see if the top bolt # 3 is properly tightened to the shaft. If the bolt is not, the shaft will lower than it should be and the flinger/shaft catcher may be touching the dry well pipe

- **HEAT**: Check the temperature of the Reducer and motor. If hot, check the oil level.

NOTE: On Series EVG & EVGX, an oil expansion chamber is supplied to minimize problems with over-filling of oil into the gearcase

- These mixers should provide long and satisfactory service. Only the finest materials were employed in their manufacture. However, if any defects in materials or workmanship occur, the defective part(s) must be returned to ENVIREQUIP (div 6335772 Canada Inc), **MIX TECH Division**, freight prepaid. ENVIREQUIP reserves the right to repair or replace, at its discretion, any part that proves to have been defective in materials or workmanship.

- ENVIREQUIP is not responsible for the warranties on components purchased, e.g. motors, but will endeavour to help to obtain resolution of any problem(s) with any of our sub-supplier(s) as regards their warranties.

- ENVIREQUIP specifically excludes any liability as to loss of production, improper use of the equipment, abuse, any other liability expressed or implied that exceed the limited warranty given as applies to the equipment being free of defects in materials and/or workmanship.

- ENVIREQUIP's warranty is for (2) years against defects in materials or workmanship and also includes a process warranty.

- This Process warranty only applies to the actual conditions that were specified at the time of bidding.

- Please refer to the terms and conditions as well as to the warranty for complete details.

CONVERSION FACTORS

1 inch	=	25.4 mm
1 kilogram	=	2.205 lbs
1 U.S. gallon	=	3.785 litres
U.S. gallons x 0.2642	=	litres
1 m^3	=	264.2 U.S. gal
1 ft^3	=	7.481 usg
1 ft^3 of water	=	62.4 lbs
1 foot	=	0.3048 meters
1 psi	=	6.895 Kpa
1 Kpa	=	0.145 psi
1 K Cal	=	3.967 BTU
1 HP	=	0.7457 kW
1 kW	=	1.341 HP
1 Bar	=	14.5 psi
1 kg /m^2	=	14.22 psi
1 Newton	=	0.2248 pounds (force)
1 lb in	=	0.1129 Newton-meter (Nm) force
1 lb in	=	1.1519 kg-cm
1 kg/cm^2	=	14.23 psi

MAINTENANCE LOG

TASK	BY: DATE:				Signed
CHECK OIL					
CHANGE OIL					
CHECK PEDESTAL for OIL LEAKAGE					
CHECK FOR HEAT					
CHECK FOR NOISE					
CHECK FOR VIBRATION					
CHECK BOLT TIGHTNESS: Top bolt & Pedestal bolts Base bolts Clamp Coupling Hub & blades Reducer end cover bolts					
CHECK MOTOR AMPERAGE					
CHECK ROTATION AFTER ELECTRICAL WORK					
OTHER					

LEFT BLANK

MANUFACTURER INSTALLATION OPERATION AND MAINTENANCE MANUAL

AMARUQ WTP – NUNAVUT

VEOLIA PROJECT: 5000 218 009

FLOWROX

SERIES PVE, PINCH VALVE

LEFT BLANK

PVPVE-190911-EN

Installation, operation, and maintenance instructions for Flowrox valves Open Valve (PV) & Enclosed Valve (PVE)

NOTE	These instructions must be read carefully and understood prior to the installation, use, and servicing of this product.

FLOWROX OY
P.O. Box 338
FI-53101 Lappeenranta, Finland
Tel. +358 (0)201 113 311, fax +358 (0)201 113 300
E-mail: sales@flowrox.com
Web: www.flowrox.com

TABLE OF CONTENTS

1 GENERAL 1
1.1 General safety instructions for PV & PVE valves 1

2 INTRODUCTION TO DEVICE 2
2.1 Intended use 2
2.2 Construction of device 2
2.2.1 Open body valve PV 3
2.2.2 Enclosed body valve PVE 3
2.3 Valve function 4

3 TRANSPORTATION, STORAGE AND LIFTING 5
3.1 Receiving 5
3.2 Storing 5
3.3 Lifting 5

4 INSTALLATION 6
4.1 Open body model (PV) 6
4.2 Enclosed body model (PVE) 7
4.3 Both models (PV and PVE) 7

5 OPERATION 8
5.1 First use 8
5.2 During operation 8

6 MAINTENANCE 9
6.1 Schedule 9
6.2 Changing the valve sleeve 9
6.2.1 Changing the valve sleeve in open model valve (PV) 9
6.2.2 Changing valve sleeve with enclosed model valve PVE 10
6.3 Adjusting the valve 11
6.4 Troubleshooting 13

7 TECHNICAL DATA 14
7.1 Model and spare part codes 14
7.1.1 Valve model selection 14
7.1.2 Sleeve model selection 15
7.1.3 Sleeve materials for Flowrox valves 15

8 APPENDIXES 18
8.1 APPENDIX A: PV- Open Body Assembled 18
8.2 APPENDIX B: PVE-Enclosed Body Assembled 19

1 GENERAL

1.1 General safety instructions for PV & PVE valves

In this manual, the following symbols are used to highlight the parts requiring particular attention:

SYMBOL	DESCRIPTION
	Risk to personal safety: Neglecting the safety measures can cause serious personal injury or death.
	Electrical safety: Neglecting the safety measures can cause serious personal injury or death.
	Machinery or environmental risk: Incorrect maintenance or operation of the product can harm the environment or the product.
	Read the operation and maintenance instructions: Read and understand the operation and maintenance instructions before using the product.

2 INTRODUCTION TO DEVICE

2.1 Intended use

Open type PV.
The open body is available in diameters starting from 80mm.
The open body construction is designed for applications with:

- Low pressures
- Low temperatures
- Non-hazardous media

The open body construction is light and simple, which makes it easy to access for service. The open body also tolerates misalignment and vibration.

Enclosed type PVE.
The valve sleeve is covered by the body housing and thus protected from the environmental impacts and sunlight.

- Body construction prevents leakage of flowing media to the environment
- The valve body can be equipped with a gauge indicating pressure changes inside the body

2.2 Construction of device

Flowrox valves are made of three main components:

- flanged valve sleeve
- valve body, either open PV or enclosed PVE
- actuator and actuator control components, if applicable

The valve sleeve is the only part of the valve which is in contact with the medium flowing in the pipeline.
All valve bodies are flange ended. The standard flange drillings can be made to meet all standards (e.g. DIN, ANSI, BS, AS, JIS).
The face to face dimensions of Flowrox valves are according to ANSI/ISA 75.10.02:

- 165 mm for valves DN25…DN65
- 2 ½ times the nominal diameter for valves DN80 and bigger

2.2.1 Open body valve PV

In the open body model the body and the actuator are connected only to one of the end flanges (Fig. 1.). The construction allows a slight deviation in the pipe angle and the valve can act as a vibration absorber.

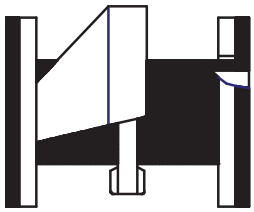

Fig. 1.

	Note that in case of a sleeve breakage, the flowing liquid will leak to the environment.

2.2.2 Enclosed body valve PVE

The body of the enclosed model prevents leakage of flowing media to the environment (Fig. 2.). The lower part of the body has a plug, which can be opened to check for sleeve failure.

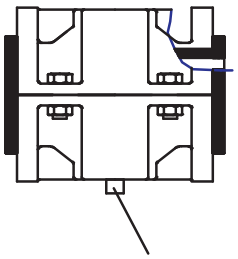

Fig. 2. plug

	In case of a sleeve failure, slight leakage will occur through the bushings. If you open the plug for checking, be careful as the medium may flow out.

	Changing the sleeve at appropriate intervals prevents leakages.

2.3 Valve function

DANGER	When the valve closes the actuator moves. Do not put tools or parts of your body between the moving valve parts. Note the injury risks (see drawings 3A and 3B).

Note the dangerous places (see drawings 3A and 3B)! When the pinch valve closes, two pinch bars, moved by the actuator, squeeze the sleeve, closing on the center line. As the valve is fully closed, the actuator has raised one half of the valve diameter. The actuator raises in both models (PV and PVE) 0.5 x valve nominal diameter (measure X). In the open model the space between the pinch bars, the space between the upper pinch bar and fixing plate of the actuator and the space below the lower pinch bar.	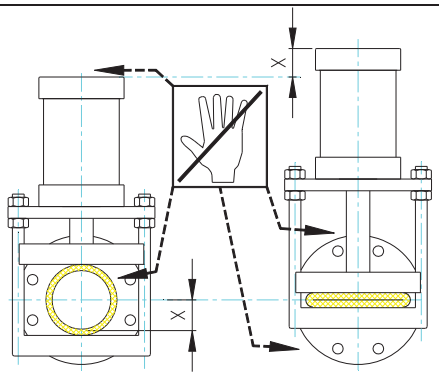
	Fig. 3A - PV open model
In the enclosed model the space between the valve body and the fixing plate of the actuator and the ends of the guide bars of lower pinch bar below the valve body.	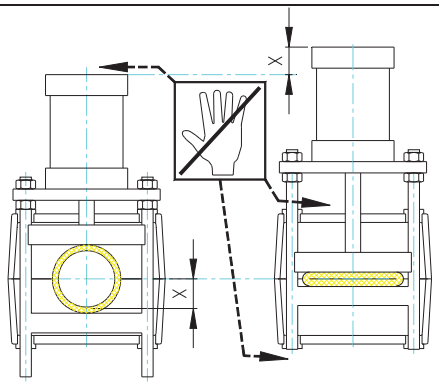
	Fig. 3B - PVE enclosed model

Regarding the actuators, follow the instructions of the manufacturer.

NOTE	Note the possible remote control of automatic valves and turn it off before starting maintenance.

3 TRANSPORTATION, STORAGE AND LIFTING

3.1 Receiving

Check the condition of the valve package on arrival. If it shows signs of transport damage, check the operation of the valve carefully. Normally, a visual inspection of the valve is sufficient. However, if valve has been damaged during transport, contact your nearest Flowrox sales office immediately.

3.2 Storage

The sleeves must be stored as follows:

- The storing temperature should not exceed +25°C, preferably below +15°C but not under +5 °C. Keep the storage temperature as constant as possible.
- Store the sleeves in a dry place. Prevent water from condensing on sleeve surfaces.
- Avoid ultraviolet light. Protect the sleeves against straight sunlight. Use warehouse instead of storing outside.
- Remove all equipment generating ozone from the room where sleeves are stored. Minimize the store room ventilation.
- Store sleeves so that they are free from tension. Sleeves should be stored in vertical position on smooth support. Do not store sleeves one on top of another.
- Keep the sleeves off the chemical effect of solutions, semi-solids, impurities and solvent vapours during storing.
- Try to keep the storing time of sleeves as short as possible. Always use first the material which has been longest in stock.

3.3 Lifting

When lifting the valve, fasten the ropes to the valve body or around it. Note the center of gravity and support the valve to avoid it turning around. In some models the center of gravity is located towards the actuator.

4 INSTALLATION

4.1 Open body model (PV)

The sleeve has not been designed to withstand axial forces. The pipes must therefore be supported properly so that neither tension nor compression is caused. Use cross-tightening for flange bolts. Do not overtighten bolts.

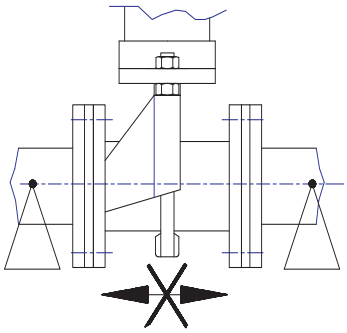

Fig. 4.

Make sure that no inappropriate items get between the pinch bars and the sleeve.

If possible, protect the sleeve from direct sunlight. Direct sunlight and UV light deteriorate certain rubber qualities; this must also be considered during normal use.

A lengthwise angle deviation of max. 5º in the pipe is allowed (Fig. 5).

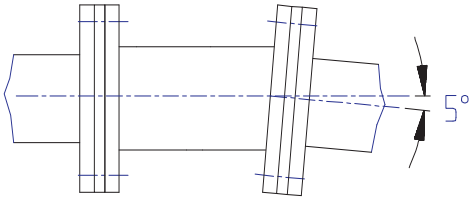

Fig. 5.

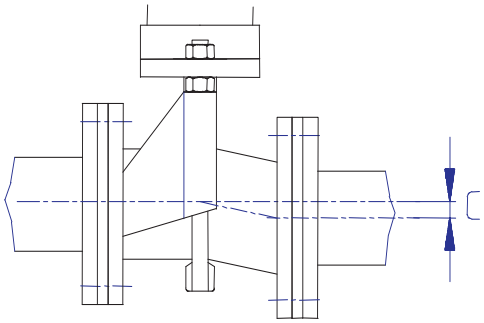

Fig. 6.

Deviation in the center line of the pipe (C), (Fig. 6):

PV 80...100	max. 5 mm
PV 125...250	max.10 mm
PV 300...500	max. 15 mm
PV 550...1000	max. 20 mm

4.2 Enclosed body model (PVE)

Make sure that no inappropriate items get between the valve body and the actuator.

4.3 Both models (PV and PVE)

The valve nominal size means the inner diameter of the sleeve. The pipe inner diameter should match this diameter as closely as possible. Whenever possible, install the actuator in a vertical position. Valve can be assembled either way in terms of flow direction.

If you have to install the actuator horizontally, it has to be supported to ensure the operation, especially if the actuator is heavy. Install a sliding surface under the actuator (Fig 7).

The support can be fixed on the wall (1), on the floor (2) or the pipeline (3).

The valve can be installed in either way depending on the flow direction.

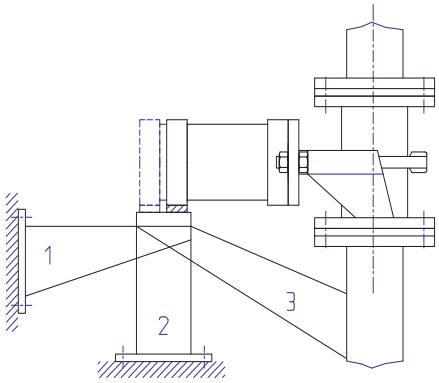

Fig. 7.

When installing the valve to the pipeline, it has to be in the open position. Tighten the flange bolts smoothly crosswise

	Do not fasten actuator or any part of it to the support.

5 OPERATION

5.1 First use

Flowrox valves are normally delivered fully assembled and ready to use. Check the condition of the valve visually.
After installation to the pipeline, check that all connections are leak-proof.

5.2 During operation

During the operation the valve does not normally require any maintenance. The sleeve change is described in 6.2.

To ensure smooth operation, it is recommended to change the valve sleeve regularly.

Regarding the actuators, follow the instructions of the manufacturer.

	Note the valve functions, see 2.3.

6 MAINTENANCE

6.1 Schedule

The sleeve is the only part of the valve which is in contact with the medium flowing in the pipeline. With regular sleeve changing, the likelihood of malfunctions in the process decreases. Wear resistance of the sleeve depends on the circumstances of the process and may vary a lot.
If there is a flow through closed valve or leakage through bushings (PVE) or through damaged sleeve (PV), change the sleeve immediately.

	PVE: In case of a sleeve failure, slight leakage can occur through bushings. PV: In case of a sleeve breakage, the flowing liquid will leak into the environment.

6.2 Changing the valve sleeve

	Control the valve functions (see 2.3) and follow the instructions for adjusting of valve (6.3) to prevent accidents and to ensure the correct operation of the valve.

6.2.1 Changing the valve sleeve in open model valve (PV)

See appendix A. Open the valve and detach it from the pipeline. If the valve is equipped with opening tags, loosen the fixing screws (8 pcs) at the pinch bars and pull out the opening tags (Fig. 8).

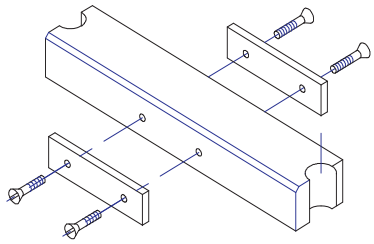

Fig. 8.

Remove the broken sleeve by bending the rubber flange of the sleeve and by wrenching it e.g. with a pry bar / bending iron.

Put in the new sleeve by pressing the rubber flange on the opposite sides together, pushing its edge as far as possible through the steel flange and wrenching the rest of the sleeve through the flange e.g. with a pry bar / bending iron (see Fig. 9).

NOTE	The rubber flange of the sleeve allows bending. Do not damage the sleeve with a sharp tool.

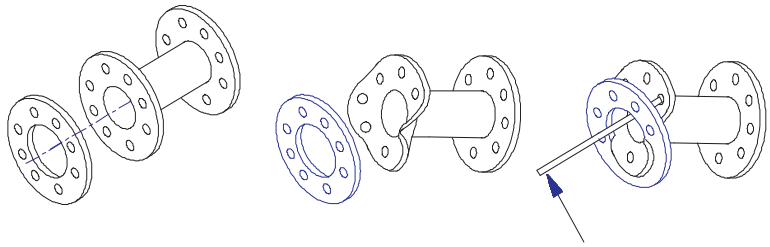

Fig. 9.

After putting in the new sleeve, fix the opening tags to the pinch bars. The excessive length of the tags can be cut away. Adjust the pinch bars before installing to the pipeline.

NOTE	At sleeve change, it is always important to check and adjust the position of the pinch bars. See 6.3.

6.2.2 Changing valve sleeve with enclosed model valve PVE

See appendix B. (Part numbers refer to drawing number 410006 in appendix A). Open the valve and detach it from the pipeline. Open the bolts (6.) between the valve body halves and detach the lower part of the body. If the valve has opening tags, detach them (16.) from upper (2.) and lower pinch bars (3.), 8 pcs screws (Fig.8). Take out the damaged sleeve and put in a new one. If the sleeve is stiff, detach the lower pinch bar. Remember to fix the opening tags if applicable. Check the body sealing (15.) between the body halves and the condition of the bushings (4.). A worn sealing and/or worn bushings may cause leakage to the environment in the event of a sleeve breakage. Assemble the valve and adjust the pinch bars before installing the valve to the pipeline.

NOTE	At sleeve change, it is always important to check and adjust the position of the pinch bars. See 6.3.

6.3 Adjusting the valve

After every sleeve change, the closing of the valve has to be checked and adjusted. A wrong adjustment may shorten the lifetime of the sleeve and cause leakage from the valve when the actuator is in the closed position.

	Control the valve functions (see 2.3). Do not put tools or parts of your body between the moving valve parts.

Before reinstallation of the valve into the pipeline:

- Close the valve by using the actuator. Adjust the pinch bars parallel to each other with the nuts, which are on both sides of actuator fixing plate (Fig.10, nuts 1 and 2), so that from one end of the sleeve an even, narrow light strip (appr. 0.5 mm) is shown on the whole squeezed point of the sleeve or symmetrically on both sides (Fig. 10.1).
- Tighten both nuts (1) equally so, that the strip of light disappears.
- Unscrew the lower nuts (Fig. 10.2, nut 2) X mm from the attachment plate (see the dimension X in the table, Fig. 11).
- When the nuts (Fig. 10.3, nut 1) on the upper side of the attachment plate are tightened, the lower pinch bar rises and causes a sufficient squeeze on the sleeve to close the flow against the pressure in the pipeline. After this has been done, open the valve and it is ready to be installed to the pipeline.

If the valve is hand wheel operated, it is enough to check that the pinch bars are parallel and the light slit is shown (Fig. 10.1). A sufficient squeeze is achieved by turning the hand wheel 1/3...3/4 rounds after the valve feels tight: if the pressure in the pipeline is 1 bar - appr. 1/3 of a hand wheel rotation; PN 10 bar - appr. 1/2 of a hand wheel rotation; PN 25 bar - appr. 3/4 of a hand wheel rotation. If the valve is supplied with a reduction gear, the number of rotations is multiplied by the gear ratio.

A. Attachment plate
B. Upper pinch bar
C. Sleeve
D. Lower pinch bar

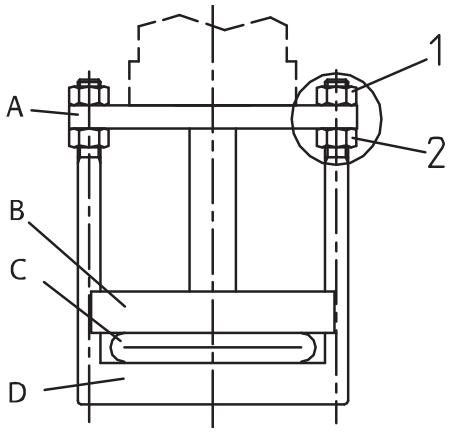

Fig. 10.

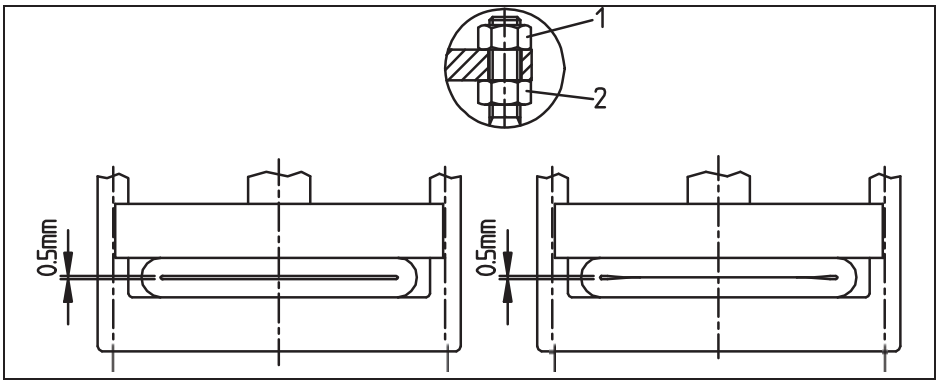

Fig. 10.1.

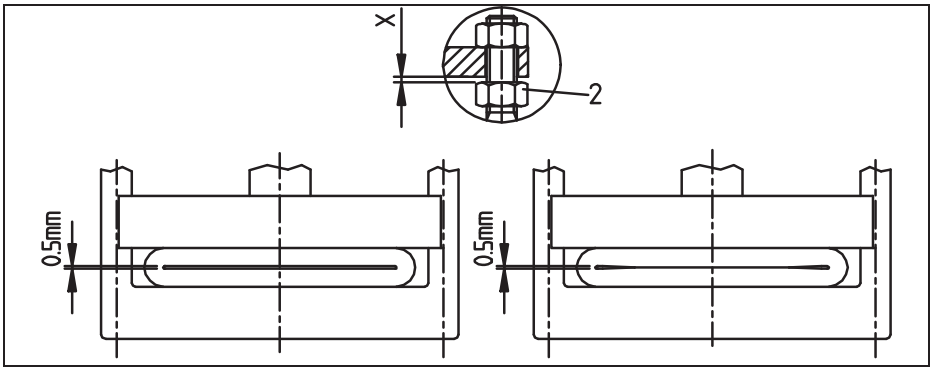

Fig. 10.2.

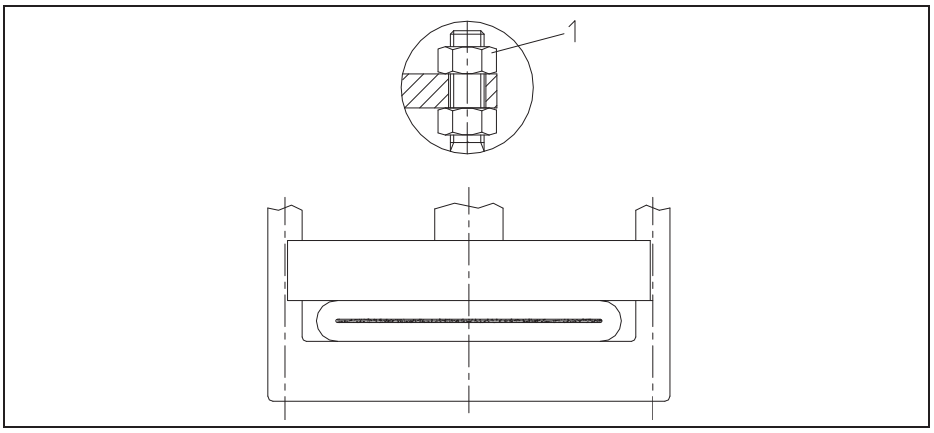

Fig. 10.3.

DIMENSION X [mm]

VALVE SIZE (mm)	PRESSURE CLASS (Bar)		
	1	6...10	16...25
25...100	1.5	2.5	3.5
125...250	2.0	3.0	4.0
300...500	3.0	4.0	
550...	4.0		

Fig. 11.

6.4 Troubleshooting

PROBLEM	POSSIBLE REASON	ACTION
Valve leaks into the environment.	1. Sleeve breakage. 2. End flanges loosely tightened.	1. Change and make adjustment of sleeve 2. Tighten the flange end screws
Leakage or flow through the valve when valve should be closed.	Sleeve breakage.	(models PVE, PVS): check by the plug - change and make adjustment of sleeve
	Sleeve is not closed with sufficient squeeze.	Manual valves - turn the hand wheel more tight. Pneum. and hydr. actuators - check the supply pressure for cylinder; if the pressure is too low, the sufficient squeeze for the sleeve cannot be reached. Check the compactness of the cylinder seals.
	Wrong adjustment of the sleeve.	Make the adjustment
Shorter lifetime of the sleeve than before.	Sleeve is not closed with sufficient squeeze.	Manual valves - turn the hand wheel more tight. Pneum. and hydr. actuators - check the supply pressure for cylinder; if the pressure is too low, the sufficient squeeze for the sleeve cannot be reached. Check the compactness of the cylinder sealings.
	Wrong adjustment of the sleeve.	Make the adjustment.
	1. Pneum. valves: wrong adjustment of the end cushioning in front end-block of cylinder. 2. Wrong adjustment of the pneum. spring.	1. End cushioning in front end-block of cylinder should be fully open. 2. Check adjustment of pneumatic spring .
	Changes in customer process e.g. * composition of medium / temperature * flow capacity	Check the best rubber qualityl with FLOWROX. Select another valve size with FLOWROX (particularly valves with positioners).
Sleeve is flapping and/or flow capacity is not sufficient.	Vacuum or pressure shocks in pipeline, rubber has hardened and does not open totally.	Check that the opening tags are fixed.

In case you cannot find the solution to your problem in the above table, please turn to the nearest Flowrox representative. The serial number and type identification of the valve in question will help getting the prompt answer.

7 TECHNICAL DATA

7.1 Model and spare part codes

7.1.1 Valve model selection

PVE	100	AK	10	-	2	0	3	L	R
TYPE	**SIZE (DN)**	**ACTUATOR**	**PRESSURE CLASSES (PN)**	-	**FLANGE DRILLINGS**	**BODY MATERIAL**	**SHAPE OF FLANGE**	**OPENING TAGS**	**AUXILIARIES**
PV = open PVE = enclosed PVS = sealed PVE/S = enclosed/sealed	25-1000	M=handwheel A=pneumatic AB=with manual override AK=with el.pneum. positioner AN=with pneum. positioner AU=with pneum. spring AV=with mech. spring H=hydraulic HP=with hydraulic positioner E=electro mechanical EO=electric for control	1= 1bar 6= 6 bar 10= 10 bar 16= 16 bar 25= 25 bar 40= 40bar 64= 64 bar 100 =100bar		1 = - 2 = DIN PN 10 3 = DIN PN 16 4 = DIN PN 25 5 = DIN PN 40 6 = ANSI 150 7 = ANSI 300 8 = BS TABLE D 9A = AS TABLE D 9B = AS TABLE E 9C = JIS 10 9D = JIS 16 Other on request	0 = Cast iron / Welded steel 1 = - 2 = AISI 316 3 = aluminium 4 = other 5 = plastic	types 1 - 4 Determined by the valve manufacturer	L = opening tags	Q = quick exhaust valve R= inductive limits S= magnetic proximity limits T= mechan. limits Z= solenoid valve X = must be specified

7.1.2 Sleeve model selection

SBRT	10	100	/	250	/	3	L	2
SLEEVE MATERIALS	**PRESSURE CLASSES (PN)**	**SLEEVE INNER DIA (mm)**		**SLEEVE LENGTH (mm)**		**SHAPE OF FLANGE**	**OPENING TAGS**	**FLANGE DRILLINGS**
SBRT = styrene butadiene EPDM=ethylene propylene CR = chloroprene CSM = chloro-sulphone-ethene FPM = fluorine rubber HNBR = hydrogenated nitrile IIR = butyl NBR = nitrile NBRF = nitrile foodstuff quality NR = natural rubber NRF = natural rubber foodstuff quality PU = polyurethane _/PU = PU-coating inside the sleeve _/M = Flowrox SensoMate sleeve _/VAC = Vacuum sleeve	1= 1bar 6= 6 bar 10= 10 bar 16= 16 bar 25= 25 bar 40= 40bar 64= 64 bar 100 =100bar	25-1000		Depend on the sleeve inner diameter according to ANSI/ISA 75.10.02:		type 1 - 4 Determined by the valve manufacturer (depending on the valve diameter / pressure class)	L = yes	1 = - 2 = DIN PN 10 3 = DIN PN 16 4 = DIN PN 25 5 = DIN PN 40 6 = ANSI 150 7 = ANSI 300 8 = BS TABLE D 9A = AS TABLE D 9B = AS TABLE E 9C = JIS 10 9D = JIS 16 X = Other, must be specified
In spare sleeve orders, please use 4- or 5- figure code marked on the sleeve.								

7.1.3 Sleeve materials for Flowrox valves

STANDARD SLEEVE MATERIALS FOR FLOWROX VALVES

RUBBER QUALITY	APPLICATION EXAMPLES	TEMPERATURE RANGE	TYPICAL MEDIA
SBRT Styrene Butadiene, Flowrox Blend	Heavy wearing High cycle frequency	-40°C - +110°C	Abrasive materials Diluted acid, alkali and chemical applications
EPDM Ethylene Propylene	Chemical applications • Applicable to 75% of all industrial chemical applications	-40°C - +120°C	Concentrated and oxidizing chemicals

OTHER SLEEVE MATERIAL OPTIONS

RUBBER QUALITY	APPLICATION EXAMPLES	TEMPERATURE RANGE	TYPICAL MEDIA
NBR Nitrile Rubber	Applications involving oils, fats and hydrocarbons	-30°C - +100°C	Oils, Fats, Fuels Hydrocarbon, Lubricants
NR Natural Rubber	High wear applications	-40°C - +75°C	Abrasive materials Diluted acids, alkali and chemicals
HNBR Hydrogenated Nitrile	High temperature Applications	-30°C - +160°C	Oils, Fats, Fuels Hydrocarbon, Lubricants
NRF Natural Rubber Foodstuff Quality White inner lining	Foodstuff applications Fulfils FDA (Food and Drug Administration) requirements	-40°C - +75°C	Media used in food and other CIP (clean-in-place) processes Alcohols
NBRF Nitrile Rubber White inner lining	Applications involving fatty foodstuff Fulfils FDA (Food and Drug Administration) requirements	-30°C - +100°C	Vegetable and animal oils and fats
EPDM/B Ethylene Propylene, Flowrox Blend	Pulp and paper industry's green liquor applications	-40°C - +100°C	Green liquor Alkaline and extraneous matter in green liquor processes
CR Chloroprene Rubber	Special-purpose chemical applications • Resilient to ozone and averse weather	-40°C - +100°C	Chemicals, Acids Several solvents Aliphatic oils Fats, Lubricants
FPM Fluorine Rubber (Viton®)	Special-purpose chemical applications • Resilient to ozone and averse weather	-20°C +120°C	Chemicals Aliphatic oils Aromatic and halogenated hydrocarbon
CSM Chloro-sulphone-ethylene (Hypalon®)	Special-purpose chemical applications • Resilient to ozone and averse weather	-40°C - +100°C	Chemicals, Acids Several solvents Aliphatic oils Fats, Lubricants
IIR Butyl	Special-purpose chemical applications • Impermeable to gas	-40°C - +100°C	Concentrated and acidic chemicals Vegetable oils
PU Polyurethane • With PU lining or solid PU	Abrasive media applications	-10°C - +80°C	Abrasive materials Diluted chemicals Hydrocarbons Oils, Lubricants

For more information on sleeve materials for Flowrox valves, contact your nearest Flowrox representative.

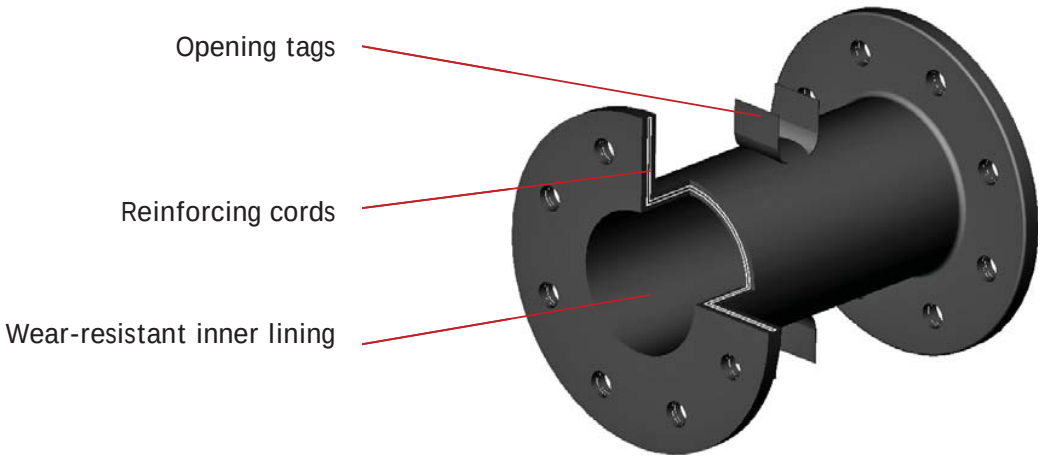
Opening tags
Reinforcing cords
Wear-resistant inner lining

8 APPENDIXES

8.1 APPENDIX A: PV- Open Body Assembled

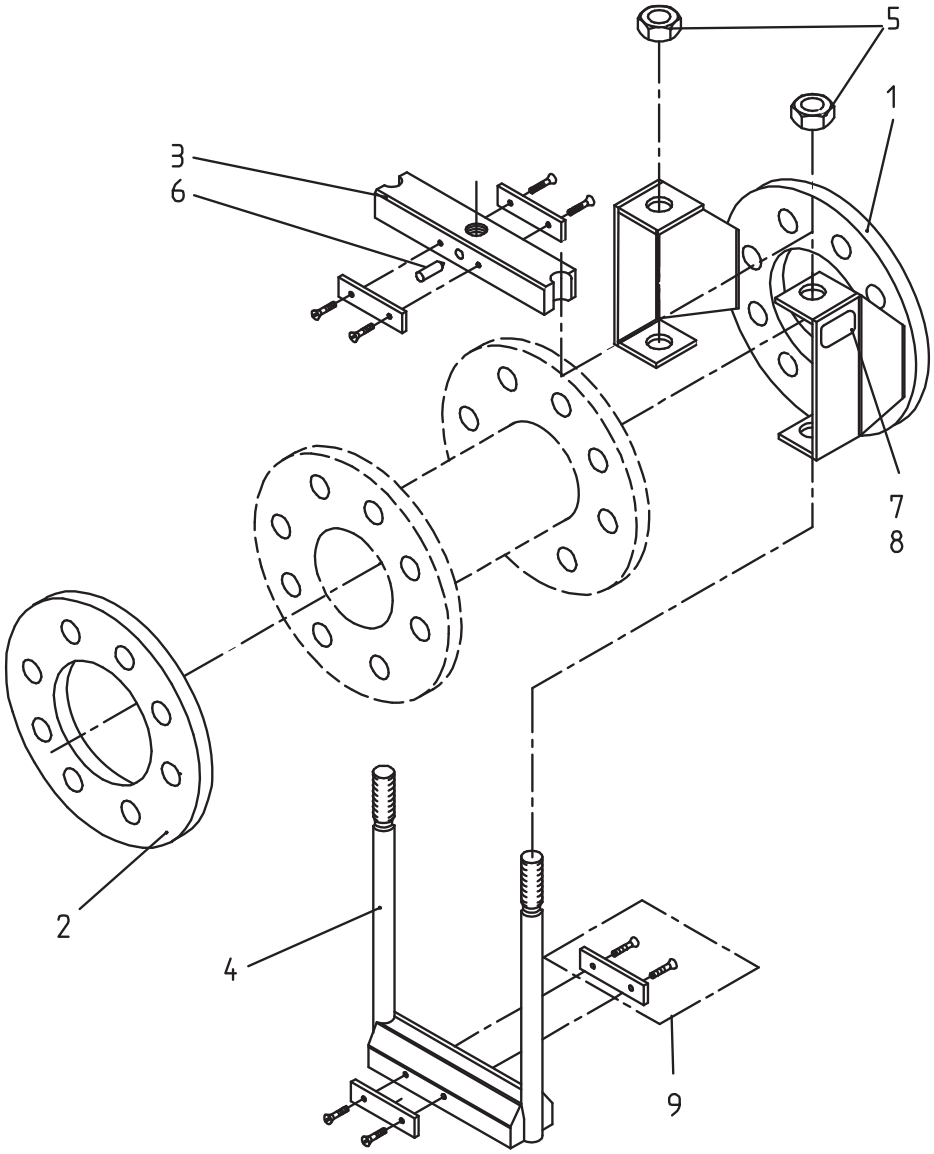

FLOWROX

PV-OPEN BODY ASSEMBLED

Dwg. no. 410158b

1. Valve body
2. Flange
3. Upper pinch bar
4. Lower pinch bar
5. Hex. nut
6. Allen screw
7. Valve plate
8. Drive screw
9. Fix. parts for opening tags

8.2 APPENDIX B: PVE-Enclosed Body Assembled

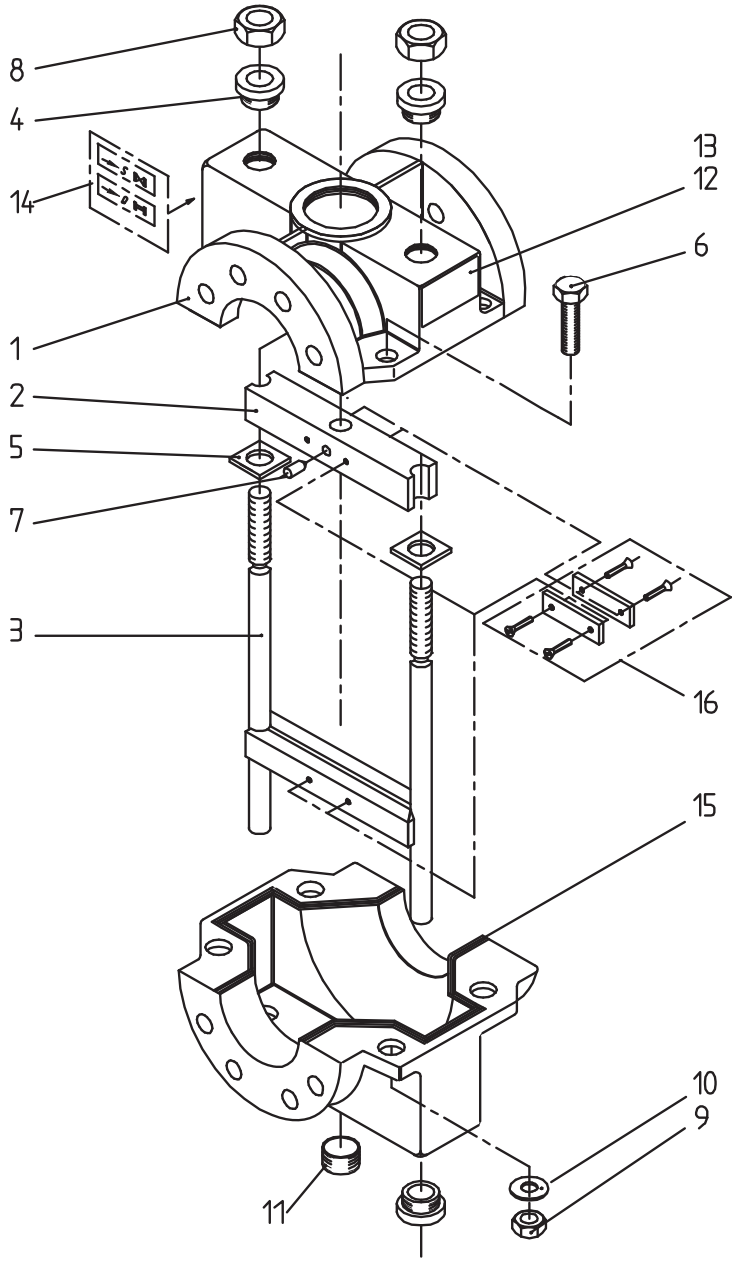

FLOWROX

PVE- ENCLOSED BODY ASSEMBLED

Dwg. no. 410006a

1. Valve body
2. Upper pinch bar
3. Lower pinch bar
4. RCH-bushing
5. Guide
6. Hex screw
7. Allen screw
8. Hex nut
9. Hex nut
10. Washer
11. Plug
12. Valve plate
13. Drive screw
14. Sticker open-closed
15. Sealing
16. Fix. parts for opening tags

LEFT BLANK

FLSMIDTH KREBS

MODEL U10-GMAX-9.5 SQIN, HYDROCYCLONE

LEFT BLANK

FLSmidth
5505 W Gillette Rd • Tucson, AZ 85743-9501 • USA
Tel +1 520 744 8200 • Fax +1 520 744 8300
www.flsmidth.com

INSTALLATION, OPERATION AND MAINTENANCE MANUAL

4 MODEL U10-GMAX-3037 KREBS® CYCLONES
SERIAL NUMBERS: g169408U – g169411U
EQUIPMENT TAG NUMBERS: C2-011, C2-012, C2-021, C2-022

FOR
VEOLIA WATER TECHNOLOGIES OF CANADA
PO NUMBER: 18000759 HD 05000
PROJECT NUMBER: 5000218009

This page is intentionally left blank

FLSMIDTH KREBS
URETHANE IOM

GENERAL

FLSmidth Krebs Cyclones are the result of an intensive research and development program initiated in 1950. Each unit represents a product of advanced design, careful engineering, quality materials and the finest workmanship.

The information in the following pages is directed toward a better understanding of cyclone principles and operation, so that the potential for every FLSmidth Krebs Cyclone is realized.

FLSmidth Krebs engineers cyclone installations by studying the operating data and customer objectives. The cyclone selections are based on the large amount of operating data accumulated by our staff of engineers and our continuing research. When data is not available or is incomplete, studies in our laboratory and pilot plant are recommended. The pilot plant is equipped for complete, full-scale cyclone classification studies. Predictable performances resulting from these studies have been proven in numerous subsequent field installations. An important part of this service is the analysis of the test results by our staff of metallurgical and chemical engineers as related to the overall plant operation.

You are invited to avail yourself of these facilities and services for the study of your classification problems.

Cyclone Identification

FLSmidth Krebs cyclones are designated by Model Numbers, Serial Numbers, size and style. This information is stamped on an identification plate.

Permanent records for this cyclone are kept by the serial number; therefore, the serial number must be used with all correspondence and spare parts orders.

Receiving Instructions

Smaller FLSmidth Krebs Urethane Cyclones are crated and shipped completely assembled. Larger units are generally shipped dismantled as two pieces in order to reduce the size of the shipping crate. When removing the cyclone from the shipping crate, care should be taken to account for all of the parts. This can be checked against the packing slip.

Storage Requirements

FLSmidth Krebs Cyclones, any items with elastomer or polymer components, and auxiliary equipment such as valves, should always be stored:

- out of direct sunlight;
- away from heat and;
- protected from extreme weather conditions.

The preferred storage area will be a cool, well-ventilated building.

If outside storage is mandatory, the equipment should be totally covered over with heavy, opaque, plastic weather covering. It is essential that the plastic be opaque so as to cut out direct sunlight. In addition, a light color opaque material is desirable, to avoid heat build-up under the covering.

The covering should be spread over the equipment with allowance for underside ventilation to avoid excessive heat build-up and moisture condensation. Elevating the equipment a minimum of 2 inches above ground level should ensure adequate ventilation and prevention of moisture condensation.

The polyurethane employed in the manufacture of the cyclones is adversely affected by heat. However, if stored exactly as described above, ambient temperatures of less than 120°F (preferably less than 100°F) can be maintained.

The equipment will not be damaged by freezing conditions as long as it is kept dry. If below freezing conditions are involved, care should be taken when handling to avoid damage to urethane components as they become brittle at very low temperatures.

Installation

Cyclone Mounting

Each cyclone should be securely mounted on a soundly constructed frame so that stresses on the overflow/underflow piping are minimized.

During assembly, care must be taken such that the urethane flanges are not stressed. Assemble the inlet flange to its mating piping without over torqueing to the point of urethane deformation. Follow the same procedure for the overflow connection and lastly the cyclone mounting plate. Do not force the urethane cyclone into an unnatural position.

Sump

Correct design of the pump sump is probably the most important factor in establishing an efficient cyclone operation.

Conversion of flow and velocity to kinetic energy in a cyclone is derived from the energy supplied from the pump. Each adjustment of the cyclone variables will influence the pumping to some degree. This will be discussed in the section entitled “Operation”. A constant volume to the cyclone is important. Momentary fluctuations are generally the result of entrained air in the slurry.

A constant level in the sump is critical, but by no means an indication that the cyclone is receiving a constant and uniform volume of feed. If the needle of the cyclone inlet pressure gauge fluctuates rapidly, it is a definite indication that there is entrained air in the pump discharge slurry. To correct this problem, the entering stream should be prevented from carrying entrapped air to the suction of the pump. This can be done by mounting a sloping plate in the sump, well below the normal level of the slurry. An annular opening between the plate and the edges of the sump of about one inch around its entire periphery will generally be sufficient to allow the total volume of slurry to pass from the upper compartment to the lower section.

It is permissible to return part or the entire overflow product to the sump to maintain a constant level. It should be noted that the greater the slime content of the feed slurry to a cyclone, the more difficult it becomes to make a given separation. The use of recycled overflow product should be handled with caution, as there is always a danger of recirculating an excess quantity and consequently increasing the slime content of the feed slurry.

Where water is available and the overflow product is an important consideration, fresh water should

be added to the feed as a means of volume control.

The overflow product should discharge to atmosphere as close to the cyclone as possible. If the overflow pipe is carried directly to an elevation below the inlet of the cyclone, a siphoning action can be created. This will cause coarser particles to be carried to the cyclone overflow product.

The underflow discharge should be open for visual inspection, as it is important to be able to observe the characteristics of this flow. The underflow should be maintained with a 20-30 degree spray discharge. A “rope” discharge is an indication that there is excess crowding of solids at the apex orifice. This will cause coarse oversize solids to be carried into the overflow product.

Both the overflow and underflow should be available for sampling.

Pumping

Pumping to a cyclone, or battery of cyclones, must be carefully engineered to the job both as to size and type of the pump, and to size and length of the pipe line. Wear results in a much higher pump maintenance cost than cyclone maintenance cost.

Wear on a pump varies approximately proportionately to the cube of the velocity. In order to minimize the pump speed and pump maintenance, the cyclone should be as near to the pump as possible. A certain inlet pressure at the cyclone will be required, so there is also a power saving by having the static and friction head as low as possible.

If adequate pressure is available in the cyclone feed line, a pump may not be required.

Piping

When designing cyclone piping, the most important consideration is to establish a velocity that will prevent particle segregation in the pipe line, and at the same time hold the velocity to a minimum to reduce wear, which increases rapidly with increase in velocity.

With a large majority of installations for pumping slurries, the velocity range falls between a low of 5 ft/s and a high of 15 ft/s.

Major factors in determining the optimum velocity in a pipeline are:

- particle size
- angularity of the coarser fractions
- specific gravity of solids
- slimes content
- pulp density
- viscosity

Multiple Installations

FLSmidth Krebs has the ability to design and fabricate cyclone manifolds as per the project

requirements, with various styles including: radial, “spider”, and inline.

A radial manifold system assures an even feed distribution to each cyclone. The take-offs should be equally spaced around the perimeter of the central distribution pot. The overflow and underflow launders must be properly sized to allow for collection and distribution of the streams.

An inline manifold system can be used if the feed is very dilute and not subject to segregating in the system. An inline system is generally easier to design and build than a radial system and consequently is less expensive. However, an inline system does not assure equal feed to each cyclone.

Operation

The FLSmidth Krebs Urethane Cyclones are chemical resistant in some cases. The maximum recommended operating temperature is 140 °F. Available sizes include: ½" up to 15" diameter.

The primary consideration in selecting the proper size and design of cyclone is the classification objective, not the capacity. The proper relationship between the inlet orifice size, the vortex finder diameter, and the apex diameter is engineered by the staff of FLSmidth Krebs for each specific classification objective.

There is seldom any necessity for changing the size of these orifices unless the classification objectives or plant operating conditions are altered.

Numerous factors influence the operation of a cyclone. Following is a brief discussion of some factors influencing cyclone operation (which the operator is normally able to control while the cyclone is operating).

Feed Dilution

Feed dilution is the most effective control available. The use of additional dilution water will always result in a finer and sharper separation. The dilution water can also be adjusted to maintain a constant level in the sump, although the operator must be aware of the potential change in the separation. For very dilute feeds, the change in the separation will be minimal.

Pressure Management

Pressure drop across the cyclone is the pressure differential between the cyclone inlet and overflow. When the cyclone discharges to atmosphere, a condition we usually recommend, the inlet pressure (gauge reading) is equal to the pressure drop.

The pressure drop is merely an indication of the energy required to force a given volume through the cyclone fitted with a certain combination of orifices. It is not an indication of a developed force-pattern or throughput, except as related to that one particular set of operating conditions. Excessive pressure results in high pump operating and maintenance costs and should be avoided. We generally do not recommend pressure drops above 40 psi.

In general, the higher the pressure drop, the greater the throughput capacity of the cyclone. A higher pressure drop will also produce a finer separation.

Cyclone Orifices

The following describes the effect the various orifices have on the cyclone performance. Changing

the orifice requires shutting down the system.

Inlet Orifice

The main function of the inlet orifice is to provide a smooth flow pattern at the point of entry into the cyclone. All FLSmidth Krebs Cyclones are designed with an involute entry that pre-orients the solids prior to reaching the tangential point of contact with the cylinder wall. This minimizes turbulence and allows FLSmidth Krebs Cyclones to produce finer and sharper separations.

An increase in the inlet area will increase the capacity of the cyclone. It will also coarsen the separation slightly. All of FLSmidth Krebs Urethane Cyclones, four inches and smaller in diameter, have fixed inlet areas. For larger diameter urethane cyclones, various inlet head sizes are available for each size cyclone. If a different inlet area is required, the complete inlet head can be replaced as the inlet area is integral to the part.

Vortex Finder

The vortex finder has the greatest impact on the operating results of all the orifices. The vortex finder size has a major effect on the cyclone capacity at a fixed pressure drop and also affects the cyclone separation significantly.

The larger the vortex finder diameter, the greater the cyclone capacity at a given pressure drop. A larger diameter vortex finder will also coarsen the cyclone separation and send a larger proportion of solids to the overflow. Various vortex finder sizes are available and the entire part can be replaced.

Apex Orifice

The main function of the apex orifice is to discharge the coarse solids in such a manner that the maximum underflow density and smoothness of discharge are obtained. The apex should be large enough to produce a 20-30 degree conical-shaped discharge, but should not be used to control the cyclone separation. The apex should never be so small that a “rope” discharge exists. A “rope” discharge is an indication that the apex is not allowing all of the coarse solids to exit out the underflow and consequently some are being forced out the cyclone overflow.

Both fixed and manually adjustable apexes are available on FLSmidth Krebs Urethane Cyclones, although fixed apexes are more common. Various apex sizes are available and the entire part can be easily replaced to optimize the underflow solids.

Maintenance

It is important to maintain smooth surfaces on the interior of the cyclone. If possible, the cyclones should be inspected on a regular basis. When the interior surfaces become worn or uneven, the part should be replaced. After experience has been gained in operating the cyclones under given conditions, a regular maintenance schedule can be determined.

Once the apex opens more than 10% of its original size, it should be replaced. Once worn, these urethane parts are 'disposable'.

Please note that for urethane cyclones, the entire part (i.e. cone section, vortex finder, and apex) can be replaced. This is opposed to the replaceable elastomer or ceramic liners used by standard cyclones with steel housing.

The FLSmidth Krebs Urethane cyclones are very lightweight which makes maintenance easier. For cyclone sizes 6" and smaller, the cone sections are generally connected by SS clamps for ease of connection by operators.

FLSmidth Krebs Urethane Cyclones are available in various materials of construction which include:

- Urethane (RU)
- Food-grade Urethane (RT90)
- High-Temp. Urethane (RI)
- Ultrane (RW)*
- Royal Cast (RC)*
- Natural Gum Rubber (apex liner and adjustable apex only)

*Multi-component urethane used for gMAX cyclone sizes 10" and larger

**Other urethane materials are available upon special request

Common Problems and Solutions

Problem 1:

There are very coarse solids in the cyclone overflow.

Solution:

This is normally an indication that the apex is too small and coarse solids are being forced to the cyclone overflow. The apex diameter should be increased until a constant 30 degree cone angle is obtained on the discharge. Certain styles of the urethane fixed apexes can be cut to increase the diameter. An adjustable apex will have to be replaced with a larger one if it is in the full open position.

Another possible solution is to reduce the pressure drop by reducing the flow to the cyclone or by operating additional cyclones (for multiple installations).

Problem 2:

The cyclone pressure drop fluctuates wildly.

Solution:

This is an indication that a constant level in the sump is not being maintained or that air is entrained in the slurry. If the pump is pumping more feed volume than is going to the slump, the sump level will go down. Eventually the pump will cavitate and the pressure drop across the cyclone will be very erratic. Slowing the pump down or increasing the dilution water to the sump will maintain a constant sump level.

Air usually enters the pump suction because the feed to the sump is pointing directly down into the pump suction. Change the feed so that it angles against a side wall of the sump or install a baffle plate as described in the installation section.

Problem 3:

The separation is not fine enough.

Solution:

Increase the dilution water to the feed. If the feed is already dilute or if diluting the feed is not possible, increase the cyclone pressure drop. This will require speeding up the pump and installing a smaller diameter vortex finder. If the separation is still not fine enough, smaller diameter cyclones will probably be required.

Problem 4:

The underflow is too dilute.

Solution:

This is an indication that the apex is too large. Decrease the apex diameter until a 30 degree cone discharge is obtained. Do not decrease the apex diameter to the point of “roping” the discharge. The adjustable apexes can be decreased by tightening the worm

driven clamp. The fixed apexes will have to be replaced with a smaller size.

If smaller apexes are not readily available, another option is to increase the pressure drop by increasing the flow to the cyclone or by operating fewer cyclones (for multiple installations).

Calculations

TONNAGE:

1) Solids: $TPH = GPM\ SLURRY \times S.G\ SLURRY \times \%\ SOLIDS$

Slurry: $\frac{TPH\ SOLIDS}{\%\ SOLIDS}$

2) PULP SPECIFIC GRAVITY:

S.G. PULP =

$$\frac{100 \times S.G.\ SOLIDS \times S.G.\ LIQUID}{100 \times S.G.\ SOLIDS - \%\ SOLIDS\ (S.G.\ SOLIDS - S.G.\ LIQUID)}$$

3) PERCENT SOLIDS IN PULP

$$\% = \frac{TPH\ SOLIDS}{TPH\ SLURRY} \times 100$$

4) GALLONS PER MINUTE:

$$GPM\ SLURRY = \frac{TPH\ SOLIDS \times 4}{S.G.\ SLURRY \times \%\ SOLIDS}$$

5) $$\%\ SOLIDS\ BY\ VOLUME = \frac{\%\ SOLIDS\ BY\ WEIGHT \times S.G.\ PULP}{S.G.\ SOLIDS}$$

6) $$\frac{GPM}{ONE\ TPH\ SOLIDS} = \frac{4}{\%\ SOLIDS \times S.G.\ PULP}$$

FASTENER REQUIREMENTS				
CONNECTION	DESCRIPTION	SIZE	LENGTH	QTY
1, 4 TO 6, 7	HEX BOLT & NUT	1/2-13	2 3/4"	8
7, 8 TO 10, 11	HEX BOLT & NUT	1/2-13	3"	4
	WASHER	1/2		24

FASTENER NOTES:

1. ALL BOLTS AND NUTS, TO BE SAE IMPERIAL 304 STAINLESS STEEL. (OTHER GRADE/PLATING CAN BE OFFERED)
2. NUTS SUPPLIED TO BE FINISH NUTS.
3. WASHERS TO BE USED ON ALL SLOTTED HOLES.
4. PLEASE NOTIFY CUSTOMER SERVICES OF ANY DEVIATION IN THIS LIST.
5. NO PAYMENT FOR CUSTOMER MODIFICATIONS, BACK CHARGES, OR ANY OTHER CHANGES WILL BE ACCEPTED, UNLESS PREVIOUSLY AUTHORIZED BY FLSmidth KREBS.
6. QUANTITIES SHOWN ARE FOR THE ASSEMBLY OF ONE CYCLONE.

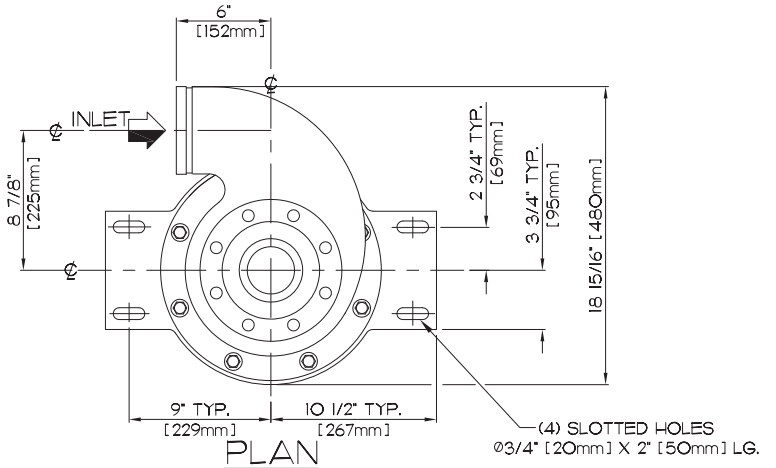

PLAN
(VICTAULICS NOT SHOWN)

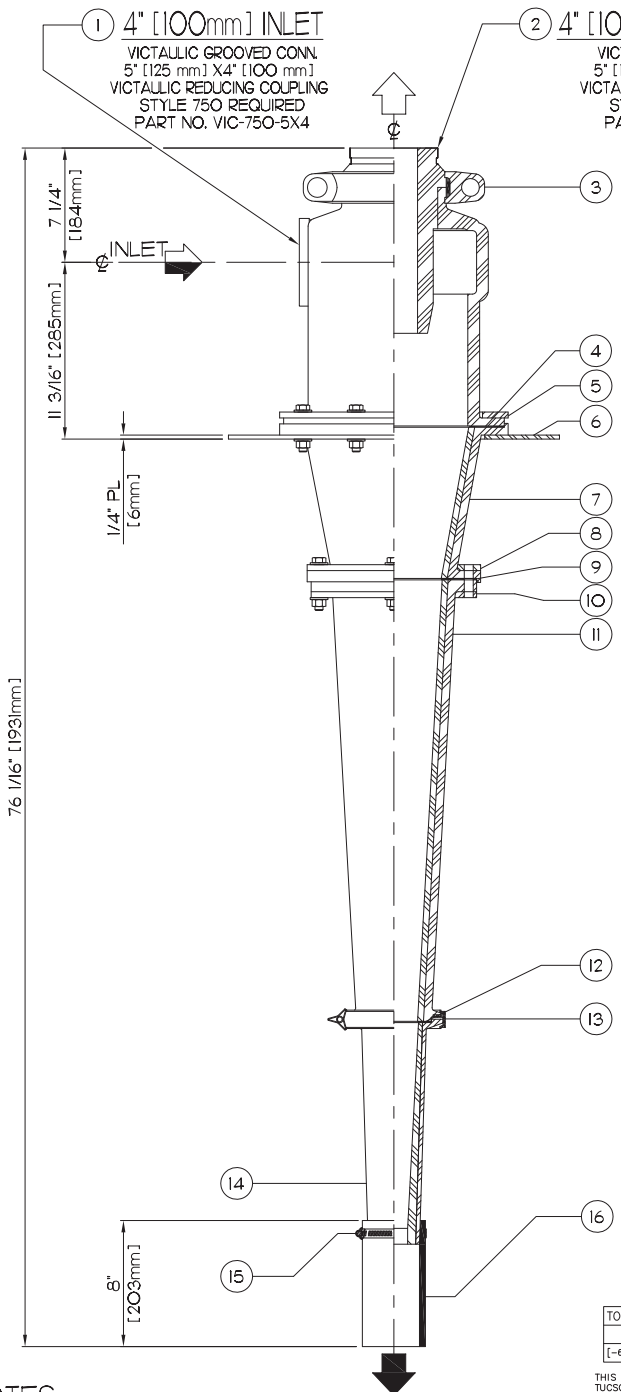

VEOLIA WATER TECHNOLOGIES OF CANADA
PROJECT NO: 5000218009 / SERIAL NO: GI69408U - GI6941IU

PART No : U10-GI69408

ITEM No.	PART NUMBER	DESCRIPTION
1.	C2293-RU-9.5	INLET HEAD WITH 4" VICTAULIC INLET CONNECTION, . 9.5 SQUARE INCH INLET NOZZLE ORIFICE SIZE, URETHANE.
2.	C2294-RU-3	VORTEX FINDER, 3" SIZE, URETHANE.
3.	VIC-75-6	VICTAULIC COUPLING, 6" SIZE, STEEL.
4.	G7-1004-RN	GASKET, NEOPRENE.
5.	C2176-ST	BACKING PLATE HALF RING, STEEL. (2=SET)
6.	C2175-ST-MF	BACKING PLATE / MOUNTING PLATE, STEEL.
7.	G65-209560-RCS	CONE SECTION, ROYAL CAST / ULTRANE II.
8.	C1846-ST	BACKING FLANGE HALF RING, STEEL. 2 = SET.
9.	G7-1005-RN	GASKET, NEOPRENE.
10.	G63-066130A-ST	BACKING FLANGE, STEEL.
11.	G65-066130-RCS	CONE SECTION, ROYAL CAST / ULTRANE II.
12.	G7-1006-RN	GASKET, NEOPRENE.
13.	C7712-SS	CLAMP WITH HAND WHEEL, STAINLESS STEEL.
14.	G85-30ARCS-1.75	APEX, 1.75" SIZE, ROYAL CAST / ULTRANE II.
15.	C7728-SS	CLAMP, STAINLESS STEEL.
16.	C8135R-RS-8	SPLASH SKIRT, 3.25" I.D. X 8" LONG, ULTRANE II.

TAG NO.
C2-011
C2-012
C2-021
C2-022

FINAL CERTIFICATION

CERTIFIED FOR Veolia Water Technologies of Canada
P.O. No. 18000759 HD 05000
S.O. No. 0219283
BY _____ DATE 31-August-2018
5505 WEST GILLETTE ROAD
TUCSON, ARIZONA 85743
PHONE: (520) 744-8200 FAX: (520) 744-8300
FLSmidth

NOTES:

1. PAINT: EN-SPEC-4-3041 (FOR STEEL PARTS ONLY)
2. BARE WEIGHT: 65# [30kg]

TOLERANCE SCHEDULE: UNLESS OTHERWISE SPECIFIED.		
-24"=±1/4"	+24" thru 100"=±1/2"	+100"=±1"
[-600mm = ±6mm]	[+600mm thru 2500mm = ±12mm]	[+2500mm = ±25mm]

THIS DRAWING IS THE EXCLUSIVE PROPERTY OF FLSMIDTH KREBS, TUCSON, ARIZONA, AND CONTAINS INFORMATION WHICH IS PROPRIETARY TO FLSMIDTH KREBS. IT IS NOT TO BE COPIED OR DUPLICATED IN ANY MANNER, OR USED IN CONNECTION WITH THE MANUFACTURE AND/OR SALE OF ANY APPARATUS OR PARTS THEREOF, OR DISSEMINATED TO ANY THIRD PARTY WITHOUT THE PRIOR WRITTEN CONSENT OF FLSMIDTH KREBS. ANY AUTHORIZED REPRODUCTION OF THIS DRAWING, OR ANY PORTION THEREOF, SHALL INCLUDE THIS NOTICE.

REVISION
Rev. By: 6

FLSmidth KREBS
5505 WEST GILLETTE ROAD
TUCSON, AZ 85743
www.krebs.com

Rev. Date:	Scale:	Dwn. By:	Date Drawn:	Appvd. By:	Sheet:
04/27/2018	— — —	ISN	04-27-18	GS ADG	1 OF 1

Appvd. By: 0

GENERAL PARTS ARRANGMENT
KREBS CYCLONE MODEL U10-gMAX-3037
WITH FIXED APEX ASSEMBLY NO. G85-30A
(SO: 0219283)

C © FLSmidth KREBS 2018 DWG. NO. S3037-G169408U

This page is intentionally left blank

Krebs Cyclone
Model No.: U10-gMAX

CAPACITY CURVE
No.: U10-gMAX-950-601

9.50 SQ. IN. INLET ORIFICE

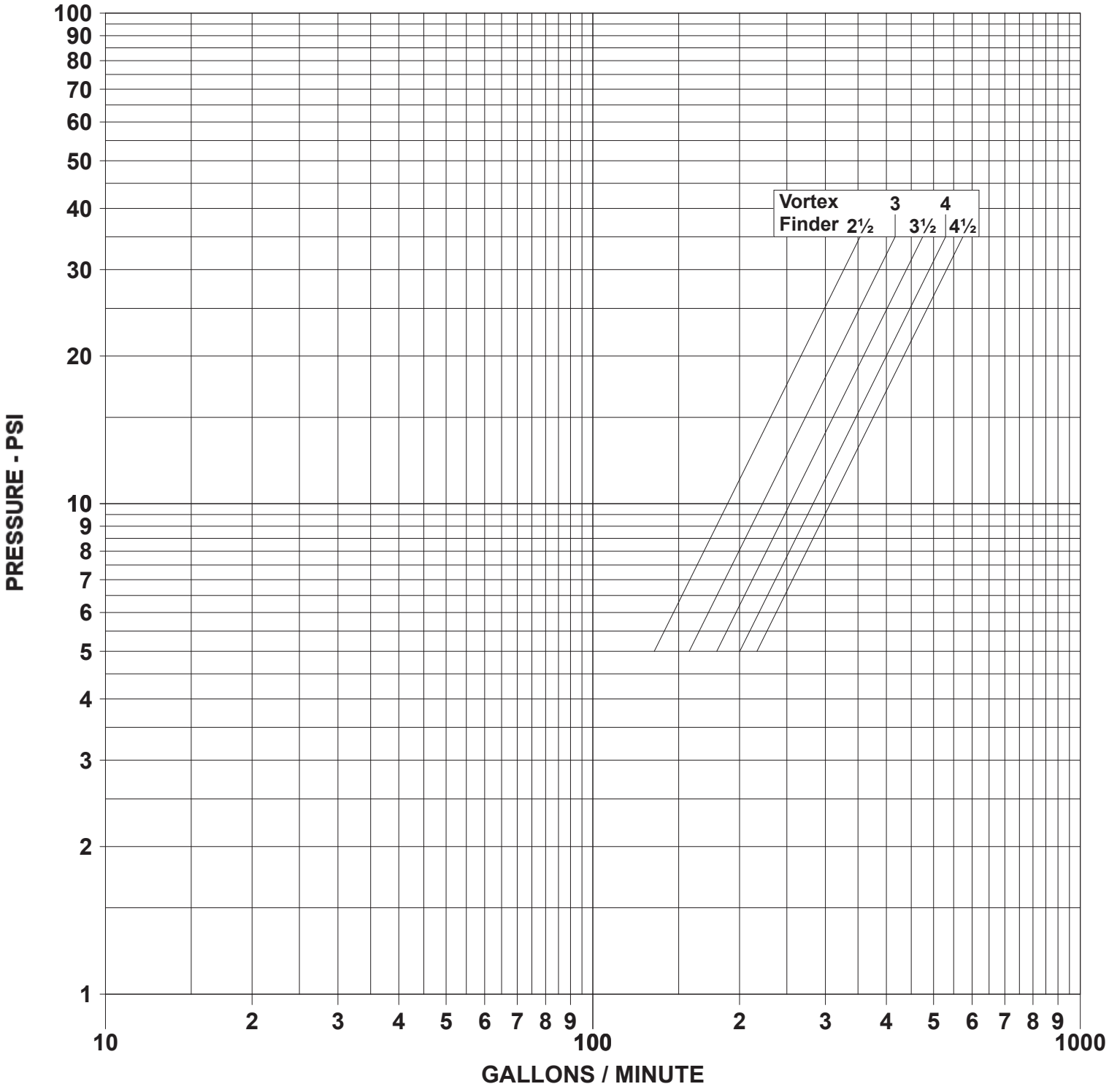

CAPACITY IS BASED ON WATER AT AMBIENT TEMPERATURE AND APEX DIAMETER EQUAL TO ONE HALF THE VORTEX FINDER DIAMETER, AND MAY VARY AT DIFFERENT RATIOS

This sheet is the property of Krebs Engineers, Tucson Arizona, and is loaned under the express condition that it is not to be used in any manner directly or indirectly detrimental to Krebs Engineers

KREBS ENGINEERS
5505 West Gillette Road
Tucson, AZ 85743
TEL: (520) 744-8200
FAX: (520) 744-8300
e-mail: www.krebs.com

LEFT BLANK

FLYGT

ENM-10, LEVEL SWITCH

LEFT BLANK

Installation, Operation
and Maintenace Manual

ENM 10

FLYGT
a xylem brand

Table of Contents

Introduction and Safety....2
Introduction....2
Safety....2
Safety terminology and symbols....2
User safety and health....3
Product warranty....3

Product Description....5
Introduction....5
Process description....5
Material....6
Cable lengths....6
Electrical data....6
Electrical data for Ex-approved installation....7
Approvals....7
Ex-approvals....7

Mechanical Installation....8
Precautions....8
General....8

Electrical Installation....9
Precautions....9
Wiring diagrams....9
Connection for audible or visible alarm....10
Ex-installation....11

Maintenance....12
General....12

Introduction and Safety

Introduction

CAUTION:

- Read this manual carefully before installing and using the product. Improper use of the product can cause personal injury and damage to property, and may void the warranty.
- Observe accident prevention regulations in force.
- Save this manual for future reference, and keep it readily available at the location of the unit.

Purpose of this manual

The purpose of this manual is to provide the necessary information for:

- Installation
- Operation
- Maintenance

Safety

Precautions

WARNING:

- The operator must be aware of safety precautions to prevent physical injury.
- You must observe the instructions contained in this manual. Failure to do so could result in physical injury, damage, or delays.
- Before starting work on the unit, make sure that the unit and the control panel are isolated from the power supply and cannot be energized. This applies to the control circuit as well.[R]
- A certified electrician must supervise all electrical work. Comply with all local codes and regulations. [R]

Safety terminology and symbols

About safety messages

It is extremely important that you read, understand, and follow the safety messages and regulations carefully before handling the product. They are published to help prevent these hazards:

- Personal accidents and health problems
- Damage to the product
- Product malfunction

Hazard levels

Hazard level	Indication
DANGER:	A hazardous situation which, if not avoided, will result in death or serious injury

Hazard level	Indication
WARNING:	A hazardous situation which, if not avoided, could result in death or serious injury
CAUTION:	A hazardous situation which, if not avoided, could result in minor or moderate injury
NOTICE:	• A potential situation which, if not avoided, could result in undesirable conditions • A practice not related to personal injury

Electrical hazards

Electrical hazards are indicated by the following specific symbol. This symbol warns for presence of a dangerous voltage.

Electrical Hazard:

User safety and health

Introduction

All government regulations, local health and safety directives must be observed.

Prevent danger due to electricity

All danger due to electricity must be avoided. Electrical connections must always be carried out in compliance with the following:

- The standard connections shown in the product documentation that is delivered together with the product
- All international, national, state, and local regulations. (For details, consult the regulations of your local electricity supplier.)

For more information about requirements, see sections dealing specifically with electrical connections.

Product warranty

Coverage

Xylem undertakes to remedy faults in products from Xylem under these conditions:

- The fault is due to defects in design, materials, or workmanship.
- The fault is reported to a Xylem representative within the warranty period.
- The product is used only under the conditions described in this manual.
- All service and repair work is done by qualified and authorized personnel. All modifications must be done by qualified technicians.
- Genuine Xylem parts are used.

Limitations

The warranty does not cover faults caused by these situations:

- Deficient maintenance
- Improper installation
- Modifications or changes to the product and installation made without consulting Xylem

- Incorrectly executed repair work
- Normal wear and tear

Xylem assumes no liability for these situations:

- Bodily injury
- Material damage
- Economic loss

Warranty claim

Xylem products are high quality products with expected reliable operation and long life. However, should the need arise for a warranty claim, then contact your Xylem representative.

Qualification of personnel

All work on the product should be carried out by certified electricians or Xylem authorized mechanics.

Xylem disclaims all responsibility for work done by untrained, unauthorized personnel.

Support

Xylem only supports products that have been tested and approved. Xylem does not support unapproved equipment.

Product Description

Introduction

Product description

The ENM-10 is the simplest possible method for level control. A mechanical switch in a plastic casing, freely suspended at the desired height from its own cable. When the liquid level reaches the regulator, the casing will tilt and the mechanical switch will close or break the circuit, thereby starting or stopping a pump or actuating an alarm device. No wear, no maintenance. In sewage pumping stations, for ground water and drainage pumping – in fact, for most level control applications – the ENM-10 is the ideal solution.

Liquid density

The product is available in different versions for different liquid densities.

Temperature limit

The regulator can withstand up to 60°C (140°F).

Manual coverage

This manual is applicable to the following versions:

- Standard version Blue casing of ENM-10
- EX-version Black casing of ENM-10.

Available languages

For manuals in other languages, visit *tpi.xyleminc.com*

Process description

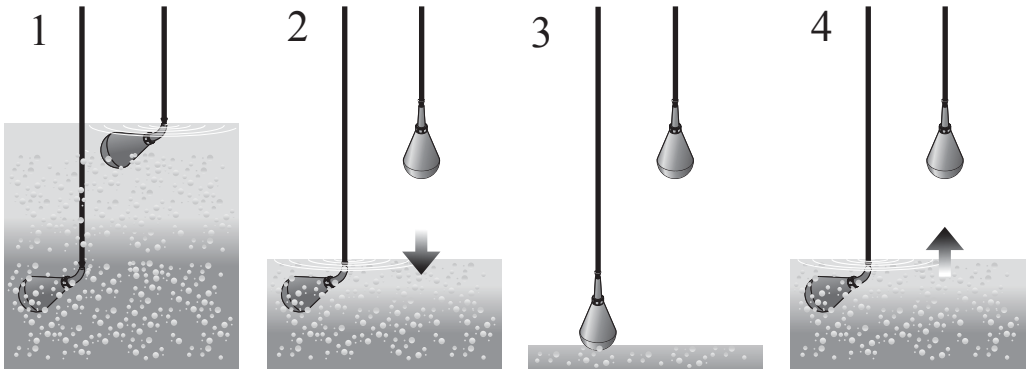

WS004996A

1. When the pumped media reaches a predetermined level, the upper level regulator tips over to horizontal position and the pump starts to drain the basin.
2. The basin is drained of fluid.
3. The pump stops when the lower level regulator returns to the vertical position.
4. The basin fills up again. The process restarts.

Material

Standard version

Part	Material
Regulator casing	Polypropylene
Cable sheath	PVC or Nitrile/PVC rubber compound

The plastic components are welded and screwed together. Adhesive is never used. Impurities and deposits will not adhere to the smooth casing.

EX-version

The version for Ex-applications has a black casing, made conductive by adding carbon to the polypropylene.

Cable lengths

For liquids with specific density between 0.95 and 1.10 g/cm^3, the following cables are available:

Version	Lengths m (ft)
Standard	• 6 m (20 ft) • 13 (42) • 20 (65) • 30 (100) • 50 (167)
Ex-version	• 6 m (20 ft) • 13 (42) • 20 (65) Nitrile/PVC rubber cable

Electrical data

Country	Electrical data
Canada	5 A, 250 V, DC 10 A, 250 V, AC
Denmark	10 A, 250 V, AC
Switzerland	6 A, 250 V, AC
Sweden	10 A, 230 V, AC Resistive load 3 A, 250 V, AC Inductive load 5 A, 30 V, DC Resistive load *1 mA, 5 V, DC, Gold Contact

* Part no: 594 79 19 and 594 79 20

Micro switch

The level regulator contains a micro switch, max rated 250 VAC/10 A.

Low-voltage supply

In many cases, local codes require that the regulator is connected to a low-voltage supply, even though it is approved for a higher voltage.

It is recommended that the regulator is connected to a low-voltage supply, 48 V or 24 V, and a protective transformer.

Electrical data for Ex-approved installation

Description	Data
Maximum input voltage, U_i	30 V
Maximum input current, I_i	100 mA
Maximum input power, P_i	1.2 W
Depth of immersion	Max 20 m

For cable

Description	Data
Maximum internal capacitance, C_i:	1.8 nF
Maximum internal inductance, L_i:	10 µH

Installation

There are special rules that apply to installation in an explosive atmosphere. Intrinsically safe circuits are normally required: Ex i. Use a EX-safety barrier, for example, Prod. No. 84 01 07.

Approvals

CE, CSA, SEMKO, NEMKO, DEMKO, EX

LVD approval according to EN61058

CSA approval: Cert No. 1330172

Cl.I Zone 0, Gr. IIC;

CL.I Div.1 Gr A, B, C and D

Cl.II Gr. E, F and G

Cl.III when installed to the certified Intrinsically Safe relay, Ex ia, rated for the locations per submitter control drawing and installation manual.

Ex-approvals

IECEx ia IIC T4 Ga: -20°C<Ta<60°C

IECEx NEMKO 09.008

ATEX II 1G ia IIC T4

NEMKO 10ATEX 1082

Applied standards

- EN 60079-0:2009/IEC 60079-0:2007
- EN 60079-11:2007/IEC 60079-0:2006
- EN 60079-26:2007/IEC 60079-26:2006

Intrinsically safe circuits are required for the automatic control system.

Use a Ex-safety barrier: For example, Prod. No. 84 01 07

0080

Mechanical Installation

Precautions

CAUTION:

- Read this manual carefully before installing and using the product. Improper use of the product can cause personal injury and damage to property, and may void the warranty.
- The operator must be aware of safety precautions to prevent physical injury.

General

To conform to local regulations, the regulators are normally connected through a transformer to a low-tension control circuit.

Make sure that two regulators are used, one for starting and one for stopping.

If an alarm is required at a given level, then connect a third regulator.

Identical regulators can be used for all functions.

Make sure that the cables do not become tangled during the installation.

The regulator cables must hang freely from each other.

Electrical Installation

Precautions

WARNING:

- Before starting work on the unit, make sure that the unit and the control panel are isolated from the power supply and cannot be energized. This applies to the control circuit as well.[R]
- There is a risk of electrical shock or explosion if the electrical connections are not correctly carried out or if there is fault or damage on the product. [R]
- A certified electrician must supervise all electrical work. Comply with all local codes and regulations. [R]
- All electrical equipment must be grounded (earthed). Make sure that the ground (earth) lead is correctly connected by testing it. [R]
- Make sure that all unused conductors are insulated. [R]

Wiring diagrams

Empty the sump

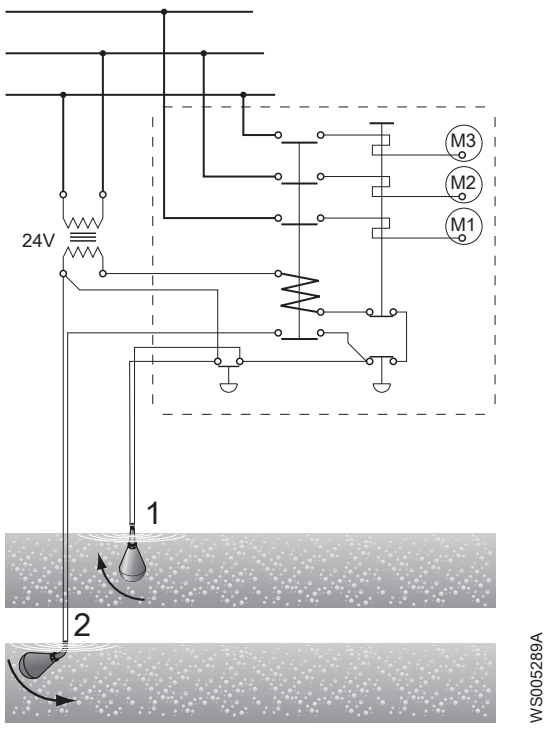

1. Start
2. Stop

Fill the tank

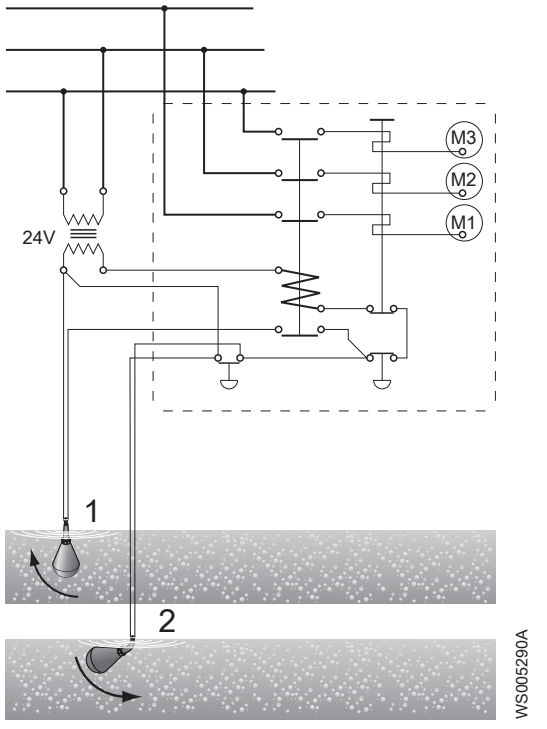

1. Stop
2. Start

Connection table

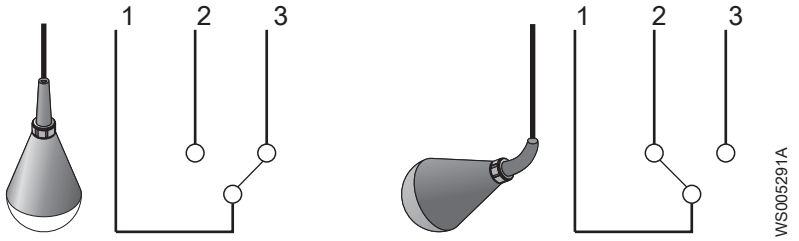

Cable	Connections to empty a sump	Connections to fill a tank
1	X	X
2	X	Insulate
3	Insulate	X

Color code

Cable	1	2	3
Color	EU: Grey US: Red	Black	EU: Brown US: White

Connection for audible or visible alarm

Wiring diagrams

Alarm low level	Alarm high level
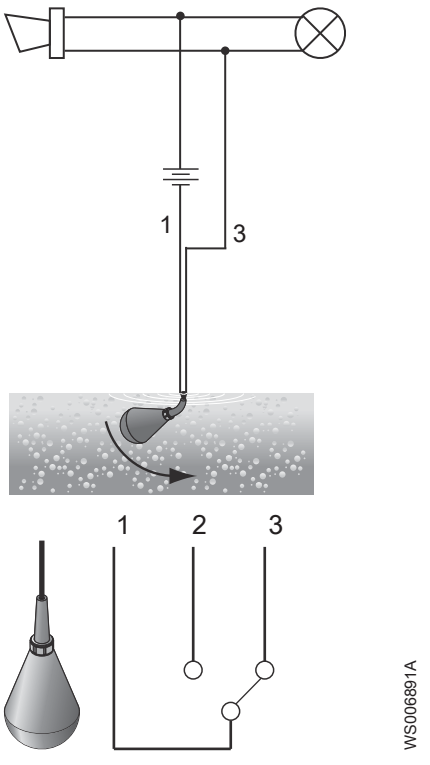	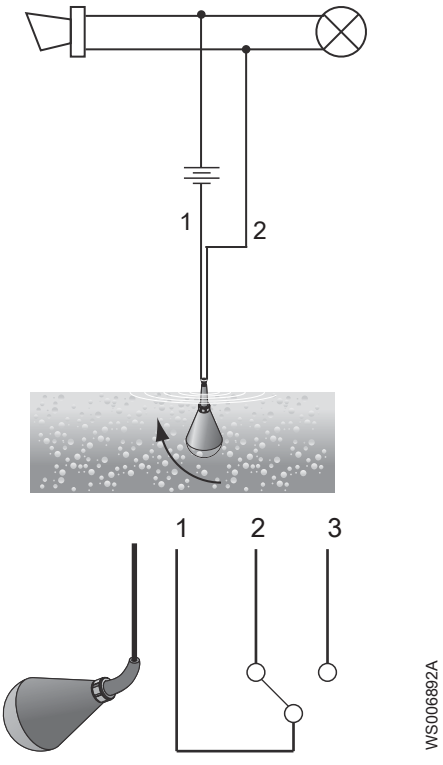

Description of position

Cable	1	2	3
Alarm high level	X	X	Insulate
Alarm low level	X	Insulate	X

Color code

Cable	1	2	3
Color	EU: Grey US: Red	Black	EU: Brown US: White

Ex-installation

EX-safety barrier

Intrinsically safe circuits are required for the automatic control system. EX-safety barrier (Prod. No. 84 01 07) must be installed.

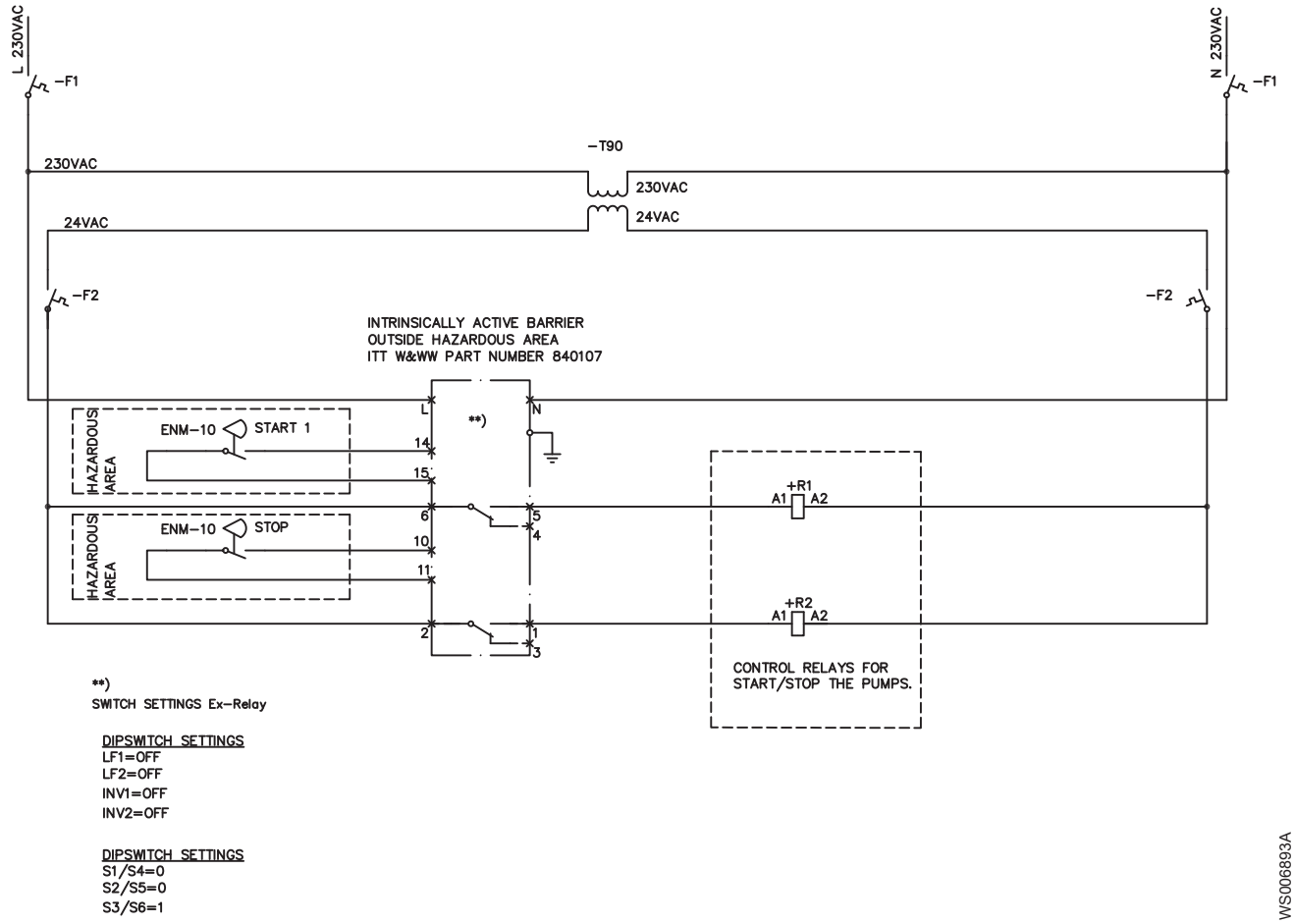

Maintenance

General

To ensure its continual operation:

- Clean the product, especially when fat/grease covers the plastic surface
- Make an occular inspection of the regulator. Make sure neither cable, protective sleeve or plastic casing show any signs of damage.
- A damaged regulator cannot be repaired in any way, due to the hermetic encapsulation. If the product is found to be damaged, replace it with a new one

EX-istallations

Make absolutely sure that the Ex-barrier is operating correctly.

- The LED changes when the switch is toggled.

Xylem |'zīləm|

1) The tissue in plants that brings water upward from the roots
2) A leading global water technology company

We're 12,500 people unified in a common purpose: creating innovative solutions to meet our world's water needs. Developing new technologies that will improve the way water is used, conserved, and re-used in the future is central to our work. We move, treat, analyze, and return water to the environment, and we help people use water efficiently, in their homes, buildings, factories and farms. In more than 150 countries, we have strong, long-standing relationships with customers who know us for our powerful combination of leading product brands and applications expertise, backed by a legacy of innovation.

For more information on how Xylem can help you, go to xyleminc.com

Refer to www.xylemwatersolutions.com/contacts/ for contact details of your local sales and service representative.

xylem
Let's Solve Water

Xylem Water Solutions
Manufacturing AB
361 80 Emmaboda
Sweden
Tel: +46 471 24 70 00
Fax: +46 471 24 74 01
http://tpi.xyleminc.com

Visit our Web site for the latest version of this document and more information

The original instruction is in English. All non-English instructions are translations of the original instruction.

© 2013 Xylem Inc

899751_4.0_en.US_2014-05_IOM.ENM10

GRUNDFOS

DDA SERIES, DOSING PUMP

LEFT BLANK

SMART Digital - DDA

up to 30 l/h

Installation and operating instructions

be
think
innovate

GRUNDFOS

English (GB) Installation and operating instructions

Original installation and operating instructions.

CONTENTS

		Page
1.	**Safety instructions**	**3**
1.1	Symbols used in this document	3
1.2	Qualification and training of personnel	3
1.3	Safety instructions for the operator/user	3
1.4	Safety of the system in the event of a failure in the dosing pump	3
1.5	Dosing chemicals	4
1.6	Diaphragm breakage	4
2.	**General information**	**5**
2.1	Applications	5
2.2	Improper operating methods	5
2.3	Symbols on the pump	6
2.4	Warranty	6
2.5	Nameplate	6
2.6	Type key	7
2.7	Product overview	8
3.	**Technical data / Dimensions**	**9**
3.1	Technical data	9
3.2	Dimensions	11
4.	**Assembly and installation**	**12**
4.1	Pump assembly	12
4.1.1	Requirements	12
4.1.2	Align and install mounting plate	12
4.1.3	Engage pump in mounting plate	12
4.1.4	Adjusting control cube position	12
4.2	Hydraulic connection	13
4.3	Electrical connection	14
5.	**Startup**	**16**
5.1	Setting the menu language	16
5.2	Deaerating the pump	17
5.3	Calibrating the pump	17
6.	**Operation**	**19**
6.1	Control elements	19
6.2	Display and symbols	19
6.2.1	Navigation	19
6.2.2	Operating states	19
6.2.3	Sleep mode (energy-saving mode)	19
6.2.4	Overview of display symbols	20
6.3	Main menus	21
6.3.1	Operation	21
6.3.2	Info	21
6.3.3	Alarm	21
6.3.4	Setup	21
6.4	Operation modes	22
6.4.1	Manual	22
6.4.2	Pulse	22
6.4.3	Analog 0/4-20 mA	23
6.4.4	Batch (pulse-based)	24
6.4.5	Dosing timer cycle	25
6.4.6	Dosing timer week	25
6.5	Analog output	26
6.6	SlowMode	27
6.7	FlowControl	28
6.8	Pressure monitoring	29
6.8.1	Pressure setting ranges	29
6.8.2	Calibration of pressure sensor	29
6.9	Flow measurement	30
6.10	AutoFlowAdapt	30
6.11	Auto deaeration	30
6.12	Key lock	30
6.12.1	Temporary deactivation	30
6.12.2	Deactivation	30
6.13	Display Setup	31
6.13.1	Units	31
6.13.2	Additional display	31
6.14	Time+date	31
6.15	Bus communication	32
6.15.1	GENIbus communication	32
6.15.2	Possible industrial bus types	32
6.15.3	Activate communication	32
6.15.4	Setting the bus address	32
6.15.5	Characteristics of bus communication	33
6.15.6	Deactivate communication	33
6.15.7	Communication faults	33
6.16	Inputs/Outputs	34
6.16.1	Relay outputs	34
6.16.2	External stop	35
6.16.3	Empty and Low level signals	35
6.17	Basic settings	35
7.	**Service**	**36**
7.1	Regular maintenance	36
7.2	Cleaning	36
7.3	Service system	36
7.4	Perform service	37
7.4.1	Dosing head overview	37
7.4.2	Dismantling the diaphragm and valves	37
7.4.3	Reassembling the diaphragm and valves	38
7.5	Resetting the service system	38
7.6	Diaphragm breakage	38
7.6.1	Dismantling in case of diaphragm breakage	39
7.6.2	Dosing liquid in the pump housing	39
7.7	Repairs	39
8.	**Faults**	**40**
8.1	List of faults	41
8.1.1	Faults with error message	41
8.1.2	General faults	42
9.	**Disposal**	**43**

Warning

Prior to installation, read these installation and operating instructions. Installation and operation must comply with local regulations and accepted codes of good practice.

1. Safety instructions

These installation and operating instructions contain general instructions that must be observed during installation, operation and maintenance of the pump. It must therefore be read by the installation engineer and the relevant qualified operator prior to installation and start-up, and must be available at the installation location at all times.

1.1 Symbols used in this document

Warning

If these safety instructions are not observed, it may result in personal injury.

Caution ***If these safety instructions are not observed, it may result in malfunction or damage to the equipment.***

Note ***Notes or instructions that make the job easier and ensure safe operation.***

1.2 Qualification and training of personnel

The personnel responsible for the installation, operation and service must be appropriately qualified for these tasks. Areas of responsibility, levels of authority and the supervision of the personnel must be precisely defined by the operator. If necessary, the personnel must be trained appropriately.

Risks of not observing the safety instructions

Non-observance of the safety instructions may have dangerous consequences for the personnel, the environment and the pump and may result in the loss of any claims for damages.

It may lead to the following hazards:

- Personal injury from exposure to electrical, mechanical and chemical influences.
- Damage to the environment and personal injury from leakage of harmful substances.

1.3 Safety instructions for the operator/user

The safety instructions described in these instructions, existing national regulations on health protection, environmental protection and for accident prevention and any internal working, operating and safety regulations of the operator must be observed.

Information attached to the pump must be observed.

Leakages of dangerous substances must be disposed of in a way that is not harmful to the personnel or the environment.

Damage caused by electrical energy must be prevented, see the regulations of the local electricity supply company.

Caution ***Before any work to the pump, the pump must be in the "Stop" operating state or be disconnected from the power supply. The system must be pressureless!***

Note ***The mains plug is the separator separating the pump from the mains.***

Only original accessories and original spare parts should be used. Using other parts can result in exemption from liability for any resulting consequences.

1.4 Safety of the system in the event of a failure in the dosing pump

The dosing pump was designed according to the latest technologies and is carefully manufactured and tested.

If it fails regardless of this, the safety of the overall system must be ensured. Use the relevant monitoring and control functions for this.

Caution ***Make sure that any chemicals that are released from the pump or any damaged lines do not cause damage to system parts and buildings.***

The installation of leak monitoring solutions and drip trays is recommended.

1.5 Dosing chemicals

Warning

Before switching the supply voltage back on, the dosing lines must be connected in such a way that any chemicals in the dosing head cannot spray out and put people at risk.

The dosing medium is pressurised and can be harmful to health and the environment.

Warning

When working with chemicals, the accident prevention regulations applicable at the installation site should be applied (e.g. wearing protective clothing).

Observe the chemical manufacturer's safety data sheets and safety instructions when handling chemicals!

Caution ***A deaeration hose, which is routed into a container, e.g. a drip tray, must be connected to the deaeration valve.***

Caution ***The dosing medium must be in liquid aggregate state!***

Observe the freezing and boiling points of the dosing medium!

The resistance of the parts that come into contact with the dosing medium, such as the dosing head, valve ball, gaskets and lines, depends on the medium, media temperature and operating pressure.

Caution ***Ensure that parts in contact with the dosing media are resistant to the dosing medium under operating conditions, see data booklet!***

Should you have any questions regarding the material resistance and suitability of the pump for specific dosing media, please contact Grundfos.

1.6 Diaphragm breakage

If the diaphragm leaks or is broken, dosing liquid escapes from the drain opening (fig. 41, pos. 11) on the dosing head. Observe section *7.6 Diaphragm breakage*.

Warning

Danger of explosion, if dosing liquid has entered the pump housing!

Operation with damaged diaphragm can lead to dosing liquid entering the pump housing.

In case of diaphragm breakage, immediately separate the pump from the power supply!

Make sure the pump cannot be put back into operation by accident!

Dismantle the dosing head without connecting the pump to the power supply and make sure no dosing liquid has entered the pump housing. Proceed as described in section 7.6.1 Dismantling in case of diaphragm breakage.

To avoid any danger resulting from diaphragm breakage, observe the following:

- Perform regular maintenance. See section *7.1 Regular maintenance*.
- Never operate the pump with blocked or soiled drain opening.
  - If the drain opening is blocked or soiled, proceed as described in section *7.6.1 Dismantling in case of diaphragm breakage*.
- Never attach a hose to the drain opening. If a hose is attached to the drain opening, it is impossible to recognise escaping dosing liquid.
- Take suitable precautions to prevent harm to health and damage to property from escaping dosing liquid.
- Never operate the pump with damaged or loose dosing head screws.

2. General information

The DDA dosing pump is a self-priming diaphragm pump. It consists of a housing with stepper motor and electronics, a dosing head with diaphragm and valves and the control cube.

Excellent dosing features of the pump:

- Optimal intake even with degassing media, as the pump always works at full suction stroke volume.
- Continuous dosing, as the medium is sucked up with a short suction stroke, regardless of the current dosing flow, and dosed with the longest possible dosing stroke.

2.1 Applications

The pump is suitable for liquid, non-abrasive, non-flammable and non-combustible media strictly in accordance with the instructions in these installation and operating instructions.

Areas of application

- Drinking water treatment
- Wastewater treatment
- Swimming pool water treatment
- Boiler water treatment
- CIP (Clean-In-Place)
- Cooling water treatment
- Process water treatment
- Wash plants
- Chemical industry
- Ultrafiltration processes and reverse osmosis
- Irrigation
- Paper and pulp industry
- Food and beverage industries

2.2 Improper operating methods

The operational safety of the pump is only guaranteed if it is used in accordance with section *2.1 Applications*.

Warning

Other applications or the operation of pumps in ambient and operating conditions, which are not approved, are considered improper and are not permitted. Grundfos cannot be held liable for any damage resulting from incorrect use.

Warning

The pump is NOT approved for operation in potentially explosive areas!

Warning

A sunscreen is required for outdoor installation!

Caution

Frequent disengagement from the mains voltage, e.g. via a relay, can result in damage to the pump electronics and in the breakdown of the pump. The dosing accuracy is also reduced as a result of internal start procedures.

Do not control the pump via the mains voltage for dosing purposes!

Only use the "External stop" function to start and stop the pump!

2.3 Symbols on the pump

Symbol	Description
	Indication of universally dangerous spot.
	In case of emergency and prior to all maintenance work and repairs, take the mains plug out of the mains supply!
	The device complies with electrical safety class II.
	Connection for deaeration hose at dosing head. If the deaeration hose is not correctly connected, danger will arise due to possible leakage of dosing liquid!

2.4 Warranty

A guarantee claim in accordance with our general terms of sale and delivery is only valid if the following requirements are fulfilled:

- The pump is used in accordance with the information within this manual.
- The pump is not dismantled or incorrectly handled.
- The maintenance is carried out by authorised and qualified personnel.

2.5 Nameplate

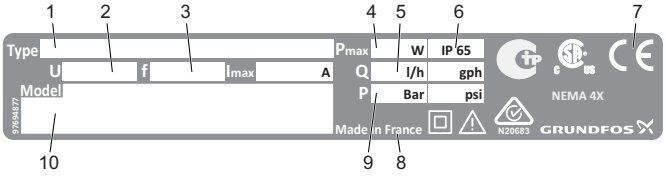

TM04 8144 4313

Fig. 1 Nameplate

Pos.	Description	Pos.	Description
1	Type designation	6	Enclosure class
2	Voltage	7	Mark of approval, CE mark, etc.
3	Frequency	8	Country of origin
4	Power consumption	9	Max. operating pressure
5	Max. dosing flow	10	Model

2.6 Type key

The type key is used to identify the precise pump and is not used for configuration purposes.

Code	Example	DDA	7.5-	16	AR-	PP/	V/	C-	F-	3	1	U2U2	F	G
	Pump type													
	Max. flow [l/h]													
	Max. pressure [bar]													
	Control variant													
AR	Standard													
FC	AR with FlowControl													
FCM	FC with integrated flow measurement													
	Dosing head material													
PP	Polypropylene													
PVC	PVC (polyvinyl chloride, only up to 10 bar)													
PV	PVDF (polyvinylidene fluoride)													
SS	Stainless steel DIN 1.4401													
	Gasket material													
E	EPDM													
V	FKM													
T	PTFE													
	Valve ball material													
C	Ceramic													
SS	Stainless steel DIN 1.4401													
	Control cube position													
F	Front-mounted (can be changed to the right or left)													
	Voltage													
3	1 x 100-240 V, 50/60 Hz													
	Valve type													
1	Standard													
2	Spring-loaded (HV version)													
	Suction/discharge side connection													
U2U2	Hose, 4/6 mm, 6/9 mm, 6/12 mm, 9/12 mm													
U7U7	Hose 0.17" x 1/4"; 1/4" x 3/8"; 3/8" x 1/2"													
AA	Threaded Rp 1/4", female (stainless steel)													
VV	Threaded 1/4" NPT, female (stainless steel)													
XX	No connection													
	Installation set*													
I001	Hose, 4/6 mm (up to 7.5 l/h, 13 bar)													
I002	Hose, 9/12 mm (up to 60 l/h, 9 bar)													
I003	Hose, 0.17" x 1/4" (up to 7.5 l/h, 13 bar)													
I004	Hose, 3/8" x 1/2" (up to 60 l/h, 10 bar)													
	Mains plug													
F	EU													
B	USA, Canada													
G	UK													
I	Australia, New Zealand, Taiwan													
E	Switzerland													
J	Japan													
L	Argentina													
	Design													
G	Grundfos													

* including: 2 pump connections, foot valve, injection unit, 6 m PE discharge hose, 2 m PVC suction hose, 2 m PVC deaeration hose (4/6 mm)

2.7 Product overview

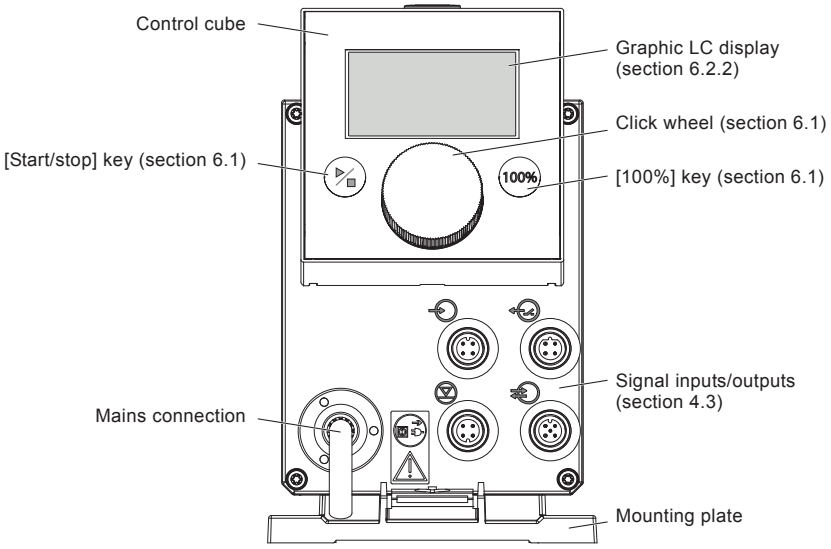

Fig. 2 Front view of the pump

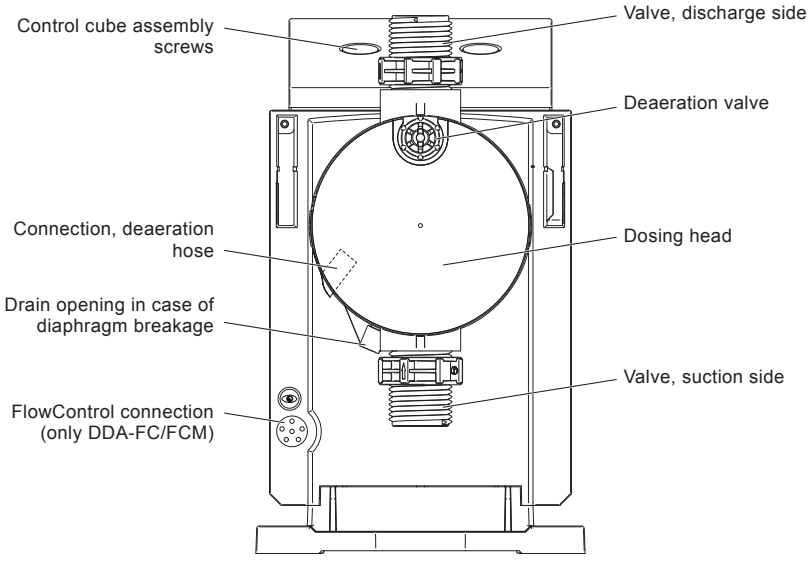

Fig. 3 Rear view of the pump

3. Technical data / Dimensions

3.1 Technical data

Data			7.5-16	12-10	17-7	30-4
Mechanical data	Turndown ratio (setting range)	[1:X]	3000	1000	1000	1000
	Max. dosing capacity	[l/h]	7.5	12.0	17.0	30.0
		[gph]	2.0	3.1	4.5	8.0
	Max. dosing capacity with SlowMode 50 %	[l/h]	3.75	6.00	8.50	15.00
		[gph]	1.00	1.55	2.25	4.00
	Max. dosing capacity with SlowMode 25 %	[l/h]	1.88	3.00	4.25	7.50
		[gph]	0.50	0.78	1.13	2.00
	Min. dosing capacity	[l/h]	0.0025	0.0120	0.0170	0.0300
		[gph]	0.0007	0.0031	0.0045	0.0080
	Max. operating pressure[6)]	[bar]	16	10	7	4
		[psi]	230	150	100	60
	Max. stroke frequency[1)]	[strokes/ min]	190	155	205	180
	Stroke volume	[ml]	0.74	1.45	1.55	3.10
	Accuracy of repeatability	[%]	± 1			
	Max. suction lift during operation[2)]	[m]	6			
	Max. suction lift when priming with wet valves[2)]	[m]	2	3	3	2
	Min. pressure difference between suction and discharge side	[bar]	1 (FC and FCM: 2)			
	Max. inlet pressure, suction side	[bar]	2			
	Max. viscosity in SlowMode 25 % with spring-loaded valves[3)]	[mPas] (= cP)	2500	2500	2000	1500
	Max. viscosity in SlowMode 50 % with spring-loaded valves[3)]	[mPas] (= cP)	1800	1300	1300	600
	Max. viscosity without SlowMode with spring-loaded valves[3)]	[mPas] (= cP)	600	500	500	200
	Max. viscosity without spring-loaded valves[3)]	[mPas] (= cP)	50	300	300	150
	Min. internal hose/pipe diameter suction/discharge side[2), 4)]	[mm]	4	6	6	9
	Min. internal hose/pipe diameter suction/discharge side (high viscosity)[4)]	[mm]	9			
	Min./Max. liquid temperature	[°C]	-10/45			
	Min./Max. ambient temperature	[°C]	0/45			
	Min./Max. storage temperature	[°C]	-20/70			
	Max. relative humidity (non-condensing)	[%]	96			
	Max. altitude above sea level	[m]	2000			

Data			7.5-16	12-10	17-7	30-4
Electrical data	Voltage	[V]	100-240 V, - 10 %/+ 10 %, 50/60 Hz			
	Length of mains cable	[m]	1.5			
	Max. inrush current for 2 ms (100 V)	[A]	8			
	Max. inrush current for 2 ms (230 V)	[A]	25			
	Max. power consumption P_1	[W]	24[5)]			
	Enclosure class		IP65, Nema 4X			
	Electrical safety class		II			
	Pollution degree		2			
Signal input	Max. load for level input		12 V, 5 mA			
	Max. load for pulse input		12 V, 5 mA			
	Max. load for External stop input		12 V, 5 mA			
	Min. pulse length	[ms]	5			
	Max. pulse frequency	[Hz]	100			
	Impedance at 0/4-20 mA analog input	[Ω]	15			
	Accuracy of analog input (full-scale value)	[%]	± 1.5			
	Min. resolution of analog input	[mA]	0.05			
	Max. resistance in level/pulse circuit	[Ω]	1000			
Signal output	Max. ohmic load on relay output	[A]	0.5			
	Max. voltage on relay/analog output	[V]	30 VDC/30 VAC			
	Impedance at 0/4-20 mA analog output	[Ω]	500			
	Accuracy of analog output (full-scale value)	[%]	± 1.5			
	Min. resolution of analog output	[mA]	0.02			
Weight/size	Weight (PVC, PP, PVDF)	[kg]	2.4	2.4		2.6
	Weight (stainless steel)	[kg]	3.2	3.2		4.0
	Diaphragm diameter	[mm]	44	50		74
Sound pressure	Max. sound pressure level	[dB(A)]	60			
Approvals			CE, CB, CSA-US, NSF61, GOST/TR, C-Tick			

1) The maximum stroke frequency varies depending on calibration

2) Data is based on measurements with water

3) Maximum suction lift: 1 m, dosing capacity reduced (approx. 30 %)

4) Length of suction line: 1.5 m, length of discharge line: 10 m (at max. viscosity)

5) With E-Box

6) PVC (polyvinyl chloride), only up to 10 bar

3.2 Dimensions

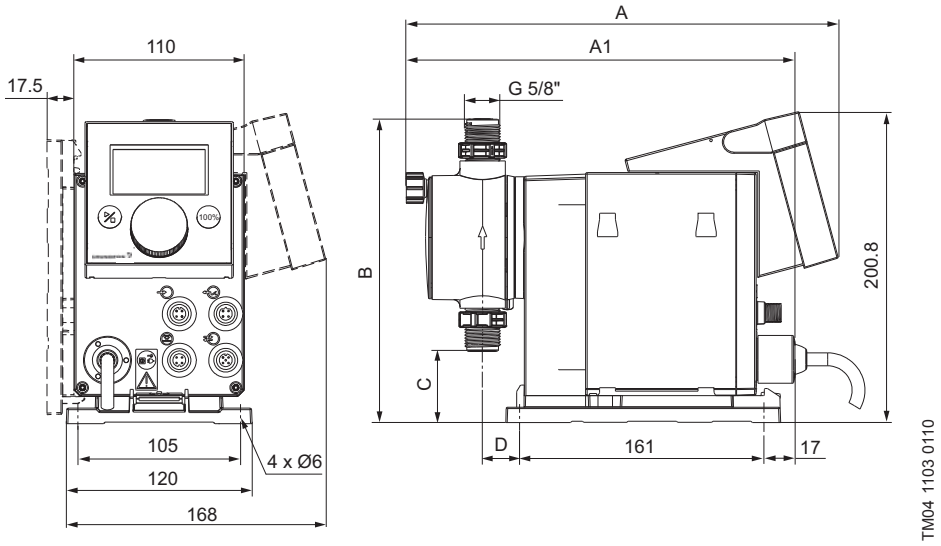

Fig. 4 Dimensional sketch

Pump type	A [mm]	A1 [mm]	B [mm]	C [mm]	D [mm]
DDA 7.5-16	280	251	196	46.5	24
DDA 12-10/17-7	280	251	200.5	39.5	24
DDA 30-4	295	267	204.5	35.5	38.5

4. Assembly and installation

For use in Australia:

Installation of this product must comply with AS/NZS3500!

Note

Certificate of suitability number: CS9431

C-tick number: N20683

4.1 Pump assembly

Warning

Install the pump in such a way that the plug can easily be reached by the operator during operation! This will enable the operator to separate the pump from the mains quickly in case of emergency!

The pump is delivered with a mounting plate. The mounting plate can be mounted vertically e.g. on a wall or horizontally e.g. on a tank. It takes just a few quick steps to firmly secure the pump to the mounting plate by means of a slot mechanism.

The pump can easily be released from the mounting plate for maintenance.

4.1.1 Requirements

- The mounting surface must be stable and must not vibrate.
- Dosing must flow upwards vertically.

4.1.2 Align and install mounting plate

- **Vertical installation**: Mounting plate slot mechanism must be above.
- **Horizontal installation**: Mounting plate slot mechanism must be opposite the dosing head.
- The mounting plate can be used as a drill template, please see fig. 4 for drill hole distances.

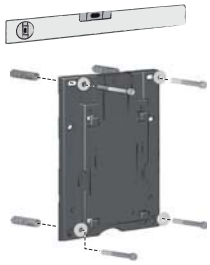

TM04 1162 0110

Fig. 5 Locate mounting plate

Warning

Make sure that you do not damage any cables and lines during installation!

1. Indicate drill holes.
2. Drill holes.
3. Secure mounting plate using four screws, diameter 5 mm, to the wall, on the bracket or the tank.

4.1.3 Engage pump in mounting plate

1. Attach the pump to the mounting plate support clamps and slide under slight pressure until it engages.

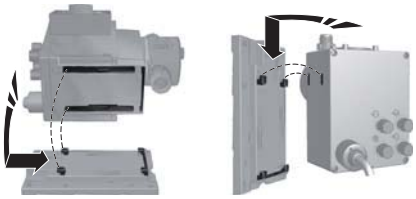

TM04 1159 0110

Fig. 6 Engaging the pump

4.1.4 Adjusting control cube position

The control cube is fitted to the front of the pump on delivery. It can be turned by 90 ° so that the user can select to operate the pump from the right or left side.

Caution

The enclosure class (IP65/Nema 4X) and shock protection are only guaranteed if the control cube is installed correctly!

Caution

Pump must be disconnected from the power supply!

1. Carefully remove both protective caps on the control cube using a thin screwdriver.
2. Loosen screws.
3. Carefully lift off control cube only so far from the pump housing that no tensile stress is produced on the flat band cable.
4. Turn control cube by 90 ° and re-attach.
   – Make sure the O-ring is secure.
5. Tighten screws slightly and attach protective caps.

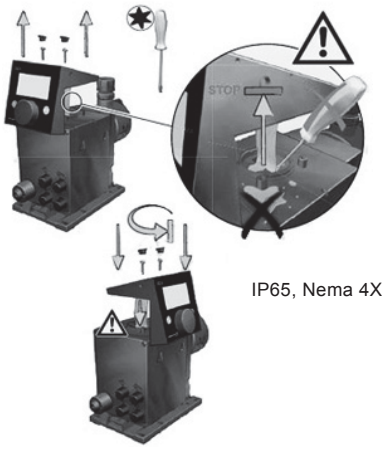

IP65, Nema 4X

TM04 1182 0110

Fig. 7 Adjusting control cube

4.2 Hydraulic connection

Warning

Risk of chemical burns!

Wear protective clothing (gloves and goggles) when working on the dosing head, connections or lines!

The dosing head may contain water from the factory check!

Caution ***When dosing media which should not come into contact with water, another medium must be dosed beforehand!***

Caution ***Faultless function can only be guaranteed in conjunction with lines supplied by Grundfos!***

Caution ***The lines used must comply with the pressure limits as per section 3.1 Technical data!***

Important information on installation

- Observe suction lift and line diameter, see section *3.1 Technical data*.
- Shorten hoses at right angles.
- Ensure that there are no loops or kinks in the hoses.
- Keep suction line as short as possible.
- Route suction line up towards the suction valve.
- Installing a filter in the suction line protects the entire installation against dirt and reduces the risk of leakage.
- Only control variant FC/FCM: For discharge quantities < 1 l/h we recommend the use of an additional spring-loaded valve (approx. 3 bar) on the discharge side for the safe generation of the necessary differential pressure.

Hose connection procedure

1. Push union nut and tensioning ring across hose.
2. Push cone part fully into hose, see fig. 8.
3. Attach cone part with hose to corresponding pump valve.
4. Tighten union nut manually.
   – Do not use tools!
5. Tighten up union nuts after 2-5 operating hours if using PTFE gaskets!
6. Attach deaeration hose to the corresponding connection (see fig. 3) and run into a container or a collecting tray.

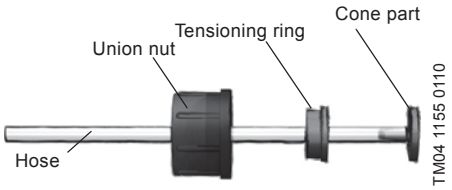

Fig. 8 Hydraulic connection

Note ***Pressure differential between suction and discharge side must be at least 1 bar/14.5 psi!***

Caution ***Tighten the dosing head screws with a torque wrench once before commissioning and again after 2-5 operating hours at 4 Nm.***

Installation example

The pump offers various installation options. In the picture below, the pump is installed in conjunction with a suction line, level switch and multifunction valve on a Grundfos tank.

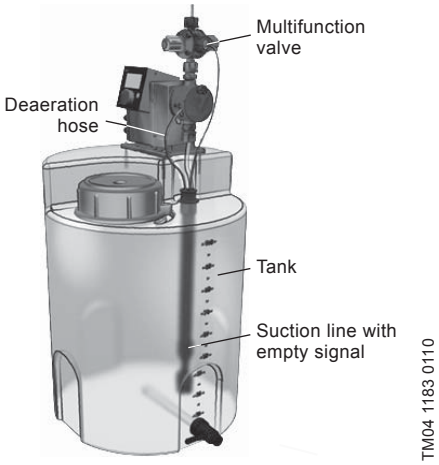

Fig. 9 Installation example

4.3 Electrical connection

Warning

The enclosure class (IP65/Nema 4X) is only guaranteed if plugs or protective caps are correctly installed!

Warning

The pump can start automatically when the mains voltage is switched on!

Do not manipulate mains plug or cable!

Note

The mains plug is the separator separating the pump from the mains.

The rated voltage of the pump, see section 2.5 Nameplate, must conform to local conditions.

Signal connections

Warning

Electric circuits of external devices connected to the pump inputs must be separated from dangerous voltage by means of double or reinforced insulation!

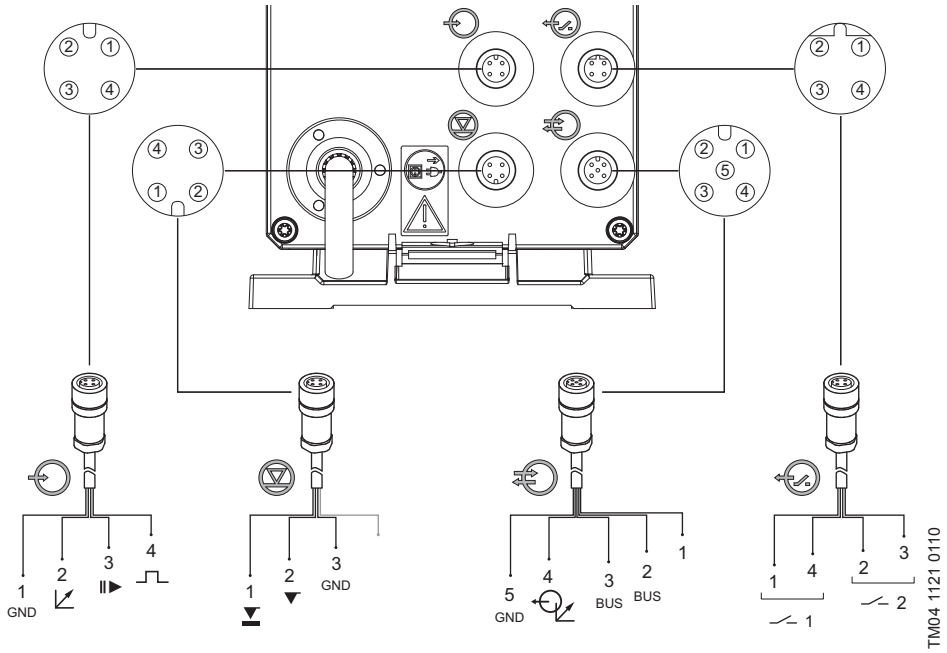

Fig. 10 Wiring diagram of the electrical connections

Analog, External stop and pulse input

Function	Pins				Plug type
	1/brown	2/white	3/blue	4/black	
Analog	GND/(-) mA	(+) mA			mA signal
External stop	GND		X		Pulse
Pulse	GND			X	Pulse

Level signals: Empty signal and Low-level signal

Function	Pins				Plug type
	1	2	3	4	
Low-level signal	X		GND		Pulse
Empty signal		X	GND		Pulse

GENIbus, Analog output

Caution ***Danger of damage to the product due to short circuit! Pin 1 supplies 30 VDC. Never short-circuit pin 1 with any of the other pins!***

Function	Pins					Plug type
	1/brown	2/white	3/blue	4/black	5/yellow/ green	
GENIbus	+30 V	GENI bus TXD	GENI bus RXD		GND	Bus
Analog output				(+) mA	GND/(-) mA	mA signal

Relay outputs

Function	Pins				Plug type
	1/brown	2/white	3/blue	4/black	
Relay 1	X			X	Pulse
Relay 2		X	X		Pulse

FlowControl signal connection

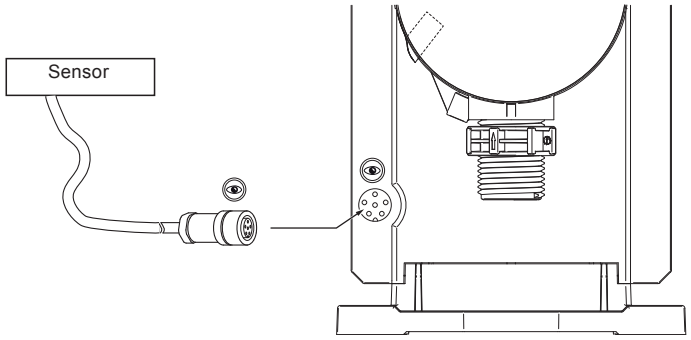

TM04 1158 0110

Fig. 11 FlowControl signal connection

5. Startup

5.1 Setting the menu language

For description of control elements, see section 6.

1. Turn click wheel to highlight the cog symbol.

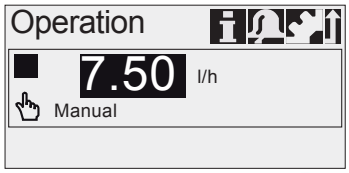

2. Press the click wheel to open the "Setup" menu.

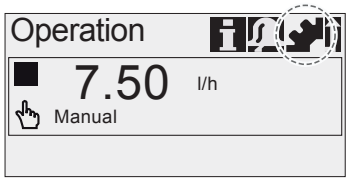

3. Turn the click wheel to highlight the "Language" menu.

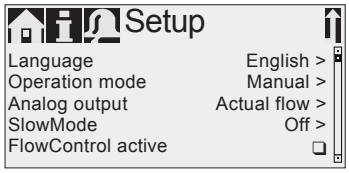

4. Press the click wheel to open the "Language" menu.

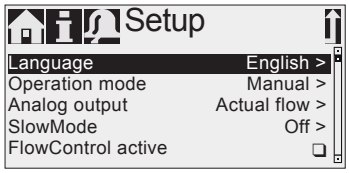

5. Turn the click wheel to highlight the desired language.

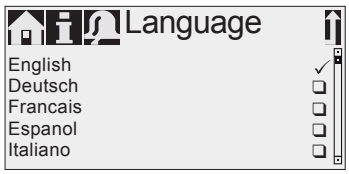

6. Press the click wheel to select the highlighted language.

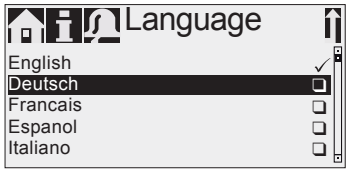

7. Press the click wheel again to confirm the "Confirm settings?" prompt and apply the setting.

TM04 1184 1110

Fig. 12 Set menu language

5.2 Deaerating the pump

Warning

The deaeration hose must be connected correctly and inserted into a suitable tank!

1. Open deaeration valve by approximately half a turn.
2. Press and hold down the [100%] key (deaeration key) until liquid flows continuously without any bubbles from the deaeration hose.
3. Close deaeration valve.

Note

Press the [100%] key and simultaneously turn the click wheel clockwise to increase the duration of the process to up to 300 seconds. After setting the seconds, do not press the key any longer.

5.3 Calibrating the pump

The pump is calibrated in the factory for media with a viscosity similar to water at maximum pump backpressure (see section *3.1 Technical data*).

If the pump is operated with a backpressure that deviates or if dosing a medium whose viscosity deviates, the pump must be calibrated.

For pumps with FCM control variant, it is not necessary to calibrate the pump if there is deviating or fluctuating backpressure as long as the "AutoFlowAdapt" function has been enabled (see section *6.10 AutoFlowAdapt*).

Requirements

- The hydraulics and electrics of the pump are connected (see section *4. Assembly and installation*).
- The pump is integrated into the dosing process under operating conditions.
- The dosing head and suction hose are filled with dosing medium.
- The pump has been deaerated.

Calibration process - example for DDA 7.5-16

1. Fill a measuring beaker with dosing medium. Recommended filling volumes V_1:
   – DDA 7.5-16: 0.3 l
   – DDA 12-10: 0.5 l
   – DDA 17-7: 1.0 l
   – DDA 30-4: 1.5 l

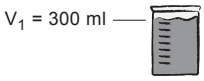

2. Read off and note down the fill volume V_1 (e.g. 300 ml).
3. Place the suction hose in the measuring beaker.

4. Start the calibration process in the "Setup > Calibration" menu.

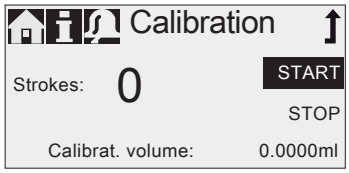

5. The pump executes 200 dosing strokes and displays the factory calibration value (e.g. 125 ml).

6. Remove the suction hose from the measuring beaker and check the remaining volume V_2 (e.g. 170 ml).

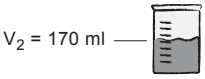

7. From V_1 and V_2, calculate the actual dosed volume $V_d = V_1 - V_2$ (e.g. 300 ml - 170 ml = 130 ml).

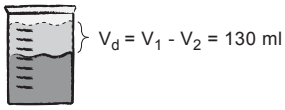

8. Set and apply V_d in the calibration menu.

• The pump is calibrated.

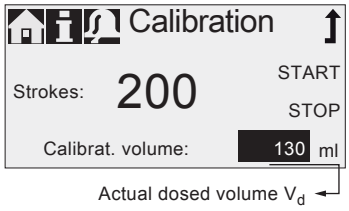

TM04 1154 1110

6. Operation

6.1 Control elements

The pump control panel includes a display and the following control elements.

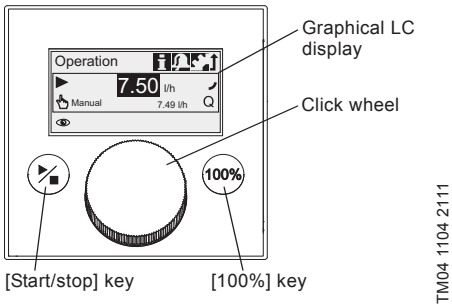

Fig. 13 Control panel

Keys

Key	Function
[Start/stop] key	Starting and stopping the pump.
[100%] key	The pump doses at maximum flow regardless of the operation mode.

Click wheel

The click wheel is used to navigate through the menus, select settings and confirm them.

Turning the click wheel clockwise moves the cursor clockwise in increments in the display. Turning the click wheel counter-clockwise moves the cursor counter-clockwise.

6.2 Display and symbols

6.2.1 Navigation

In the "Info", "Alarm" and "Setup" main menus, the options and submenus are displayed in the rows below. Use the "Back" symbol to return to the higher menu level. The scroll bar at the right edge of the display indicates that there are further menu items which are not shown.

The active symbol (current cursor position) flashes. Press the click wheel to confirm your selection and open the next menu level. The active main menu is displayed as text, the other main menus are displayed as symbols. The position of the cursor is highlighted in black in the sub-menus.

When you position the cursor on a value and press the click wheel, a value is selected. Turning the click wheel clockwise increases the value, turning the click wheel counter-clockwise reduces the value. When you now press the click wheel, the cursor will be released again.

6.2.2 Operating states

The operating state of the pump is indicated by a symbol and display colour.

Display	Fault	Operating state		
White	-	Stop ■	Standby ❙❙	
Green	-			Running ▶
Yellow	Warning	Stop ■	Standby ❙❙	Running ▶
Red	Alarm	Stop ■	Standby ❙❙	

6.2.3 Sleep mode (energy-saving mode)

If in the "Operation" main menu the pump is not operated for 30 seconds, the header disappears. After two minutes, the display brightness is reduced.

If in any other menu the pump is not operated for two minutes, the display switches back to the "Operation" main menu and the display brightness is reduced. This state will be cancelled when the pump is operated or a fault occurs.

6.2.4 Overview of display symbols

The following display symbols may appear in the menus.

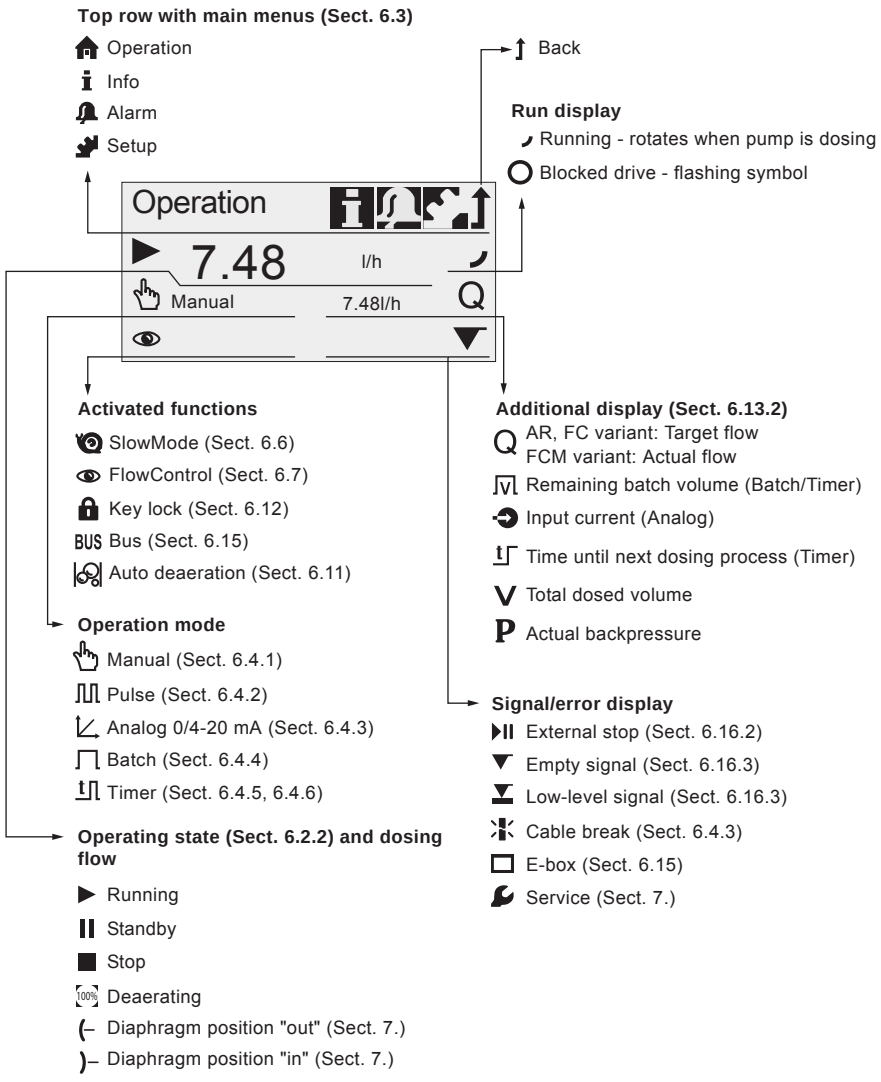

Fig. 14 Overview of display symbols

TM04 1161 1710

6.3 Main menus

The main menus are displayed as symbols at the top of the display. The currently active main menu is displayed as text.

6.3.1 Operation

Status information such as the dosing flow, selected operation mode and operating state is displayed in the "Operation" main menu.

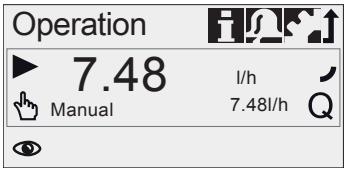

TM04 1157 2011

6.3.2 Info

You can find the date, time and information about the active dosing process, various counters, product data and the service system status in the "Info" main menu. The information can be accessed during operation.

The service system can also be reset from here.

TM04 1106 1010

Counters

The "Info > Counters" menu contains the following counters:

Counters	Resettable
Volume Total dosed volume [l] or US gallons	Yes
Operating hours Accumulated operating hours (pump switched on) [h]	No
Motor runtime Accumulated motor runtime [h]	No
Strokes Accumulated number of dosing strokes	No
Power on/off Accumulated frequency of switching mains voltage on	No

6.3.3 Alarm

You can view errors in the "Alarm" main menu.

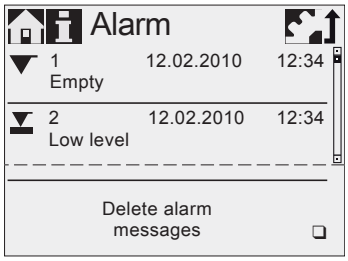

TM04 1109 1010

Up to 10 warnings and alarms, together with their date, time and cause, are listed in chronological order. If the list is full, the oldest entry will be overwritten, see section *8. Faults*.

6.3.4 Setup

The "Setup" main menu contains menus for pump configuration. These menus are described in the following sections.

Note

Check all pump settings after any change in the "Setup" menu.

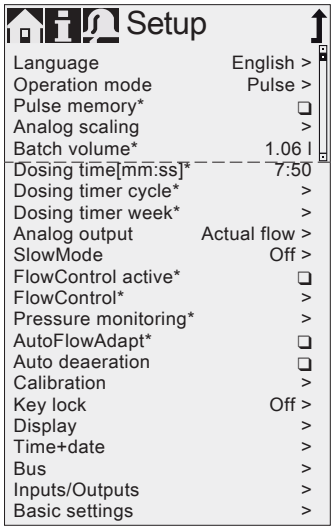

TM04 1110 1010

* These submenus are only displayed for specific default settings and control variants.
The contents of the "Setup" menu also vary depending on the operation mode.

6.4 Operation modes

Six different operation modes can be set in the "Setup > Operation mode" menu.

- Manual, see section 6.4.1
- Pulse, see section 6.4.2
- Analog 0-20mA, see section 6.4.3
  Analog 4-20mA, see section 6.4.3
- Batch (pulse-based), see section 6.4.4
- Dosing timer cycle, see section 6.4.5
- Dosing timer week, see section 6.4.6

6.4.1 Manual

In this operation mode, the pump constantly doses the dosing flow set with the click wheel. The dosing flow is set in l/h or ml/h in the "Operation" menu. The pump automatically switches between the units. Alternatively, the display can be reset to US units (gph). See section *6.13 Display Setup*.

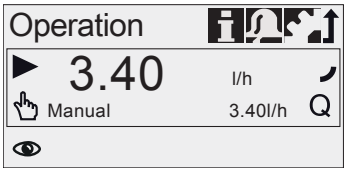

TM04 1125 1110

Fig. 15 Manual mode

The setting range depends on the pump type:

Type	Setting range*	
	[l/h]	[gph]
DDA 7.5-16	0.0025 - 7.5	0.0007 - 2.0
DDA 12-10	0.012 - 12	0.0031 - 3.1
DDA 17-7	0.017 - 17	0.0045 - 4.5
DDA 30-4	0.03 - 30	0.0080 - 8.0

* When the "SlowMode" function is active, the maximum dosing flow is reduced, see section *3.1 Technical data*.

6.4.2 Pulse

In this operation mode, the pump doses the set dosing volume for each incoming (potential-free) pulse, e.g. from a water meter. The pump automatically calculates the optimum stroke frequency for dosing the set volume per pulse.

The calculation is based on:

- the frequency of external pulses
- the set dosing volume/pulse.

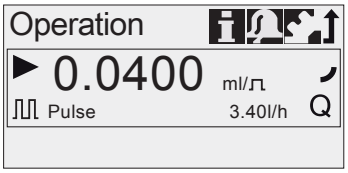

TM04 1126 1110

Fig. 16 Pulse mode

The dosing volume per pulse is set in ml/pulse in the "Operation" menu using the click wheel. The setting range for the dosing volume depends on the pump type:

Type	Setting range [ml/pulse]
DDA 7.5-16	0.0015 - 14.9
DDA 12-10	0.0029 - 29.0
DDA 17-7	0.0031 - 31.0
DDA 30-4	0.0062 - 62.0

The frequency of incoming pulses is multiplied by the set dosing volume. If the pump receives more pulses than it can process at the maximum dosing flow, it runs at the maximum stroke frequency in continuous operation. Excess pulses will be ignored if the memory function is not enabled.

Memory function

When the "Setup > Pulse memory" function is enabled, up to 65,000 unprocessed pulses can be saved for subsequent processing.

Warning

Subsequent processing of saved pulses can cause local increase in concentration!

The contents of the memory will be deleted by:

- Switching off the power supply
- Changing the operation mode
- Interruption (e.g. alarm, External stop).

6.4.3 Analog 0/4-20 mA

In this operation mode, the pump doses according to the external analog signal.
The dosing volume is proportional to the signal input value in mA.

Operation mode	Input value [mA]	Dosing flow [%]
4-20 mA	≤ 4.1	0
	≥ 19.8	100
0-20 mA	≤ 0.1	0
	≥ 19.8	100

If the input value in operation mode 4-20 mA falls below 2 mA, an alarm is displayed and the pump stops. A cable break or signal transmitter error has occurred. The "Cable break" symbol is displayed in the "Signal and error display" area of the display.

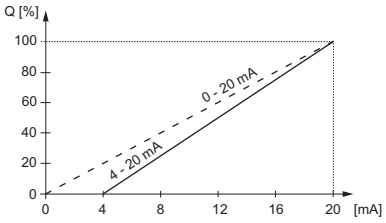

TM04 1120 2010

Fig. 17 Analog scaling

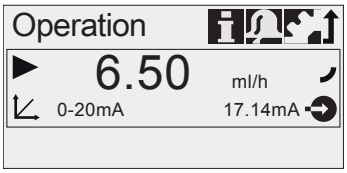

TM04 1127 1110

Fig. 18 Analog operation mode

Set analog scaling

Analog scaling refers to the assignment of the current input value to the dosing flow.

Changes of analog scaling affect also the analog output signal. See section *6.5 Analog output*.

Analog scaling passes through the two reference points (I_1/Q_1) and (I_2/Q_2), which are set in the "Setup > Analog scaling" menu. The dosing flow is controlled according to this setting.

Example 1 (DDA 7.5-16)

Analog scaling with positive gradient:

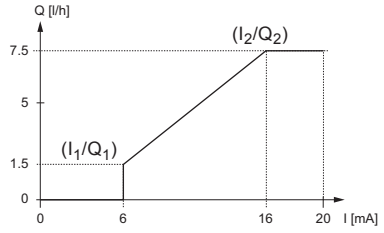

TM04 1160 2010

Fig. 19 Analog scaling with pos. gradient

In example 1, the reference points I_1 = 6 mA, Q_1 = 1.5 l/h and I_2 = 16 mA, Q_2 = 7.5 l/h have been set.

From 0 to 6 mA analog scaling is described by a line that passes through Q = 0 l/h, between 6 mA and 16 mA it rises proportionally from 1.5 l/h to 7.5 l/h and from 16 mA onwards it passes through Q = 7.5 l/h.

Example 2 (DDA 7.5-16)

Analog scaling with negative gradient (Operation mode 0-20 mA):

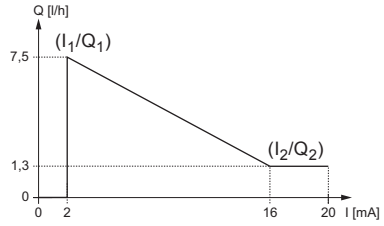

TM04 1101 2010

Fig. 20 Analog scaling with neg. gradient

In example 2, the reference points I_1 = 2 mA, Q_1 = 7.5 l/h and I_2 = 16 mA, Q_2 = 1.3 l/h have been set.

From 0 to 2 mA analog scaling is described by a line that passes through Q = 0 l/h, between 2 mA and 16 mA it drops proportionally from 7.5 l/h to 1.3 l/h and from 16 mA onwards it passes through Q_2 = 1.3 l/h.

Set analog scaling in the "Operation" menu

Analog scaling can also be modified after a security prompt directly in the "Operation" menu. This is how the dosing flow is directly modified for the current flow input value.

Caution ***Please observe that changes also have a direct effect on point I_2/Q_2 (see fig. 21)!***

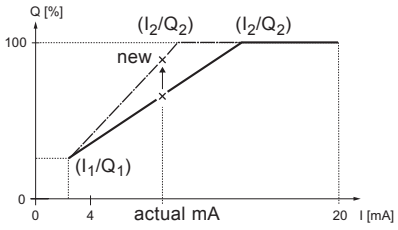

Fig. 21 Set analog scaling ("Operation" menu)

6.4.4 Batch (pulse-based)

In this operation mode, the pump doses the set batch volume in the set dosing time (t_1). A batch is dosed with each incoming pulse.

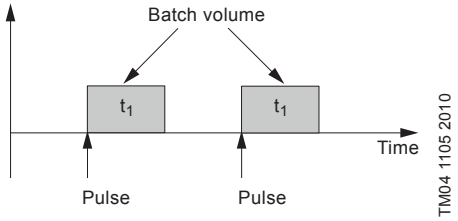

Fig. 22 Batch (pulse-based)

The setting range depends on the pump type:

Type	Setting range per batch		
	from [ml]	to [l]	Resolution* [ml]
DDA 7.5-16	0.74	999	0.0925
DDA 12-10	1.45	999	0.1813
DDA 17-7	1.55	999	0.1938
DDA 30-4	3.10	999	0.3875

* Thanks to the digital motor control, dosing quantities with a resolution of up to 1/8 of the dosing stroke volume can be dosed.

The batch volume (e.g. 75 ml) is set in the "Setup > Batch volume" menu. The minimum dosing time required for this (e.g. 36 seconds) is displayed and can be increased.

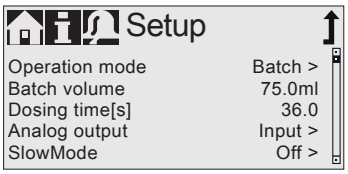

Fig. 23 Batch mode

Signals received during a batch process or an interruption (e.g. alarm, External stop) will be ignored. If the pump is restarted following an interruption, the next batch volume is dosed on the next incoming pulse.

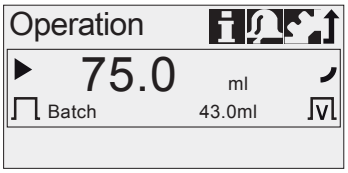

Fig. 24 Batch mode

In the "Operation" menu, the total batch volume (e.g. 75 ml) and the remaining batch volume still to be dosed (e.g. 43 ml) are shown in the display.

6.4.5 Dosing timer cycle

In this operation mode, the pump doses the set batch volume in regular cycles.
Dosing starts when the pump is started after a singular start delay. The setting range for the batch volume corresponds to the values in section *6.4.4 Batch (pulse-based)*.

Warning

When time or date is changed in "Time+date" menu, timer dosing and timer relay output functions (Relay 2) are stopped!

Timer dosing and timer relay output functions must be restarted manually!

Changing time or date can cause increase or decrease in concentration!

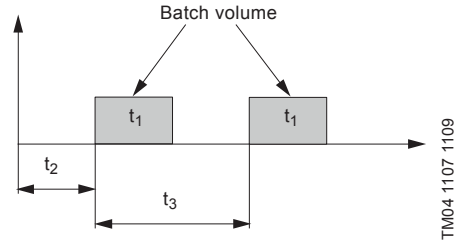

Fig. 25 Dosing timer cycle diagram

t_1	Dosing time
t_2	Start delay
t_3	Cycle time

In the event of an interruption (e.g. interruption of the mains voltage, External stop), the dosing will be stopped while the time continues running.
After suspending the interruption, the pump will continue to dose according to the actual timeline position.

The following settings are required in the "Setup > Dosing timer cycle" menu:

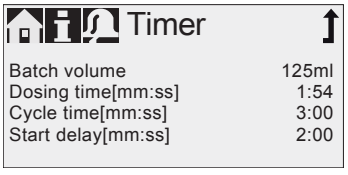

Fig. 26 Dosing timer cycle

The batch volume to be dosed (e.g. 125 ml) is set in the "Setup > Dosing timer cycle" menu. The dosing time required for this (e.g. 1:54) is displayed and can be changed.

The total batch volume (e.g. 125 ml) and the remaining batch volume still to be dosed are displayed in the "Operation" menu. During breaks in dosing, the time until the next dosing process (e.g. 1:21) is displayed.

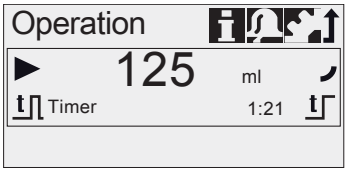

Fig. 27 Dosing timer cycle

6.4.6 Dosing timer week

In this operation mode, up to 16 dosing procedures are defined for a week.
These dosing procedures may take place regularly on one or several week days. The setting range for the batch volume corresponds to the values in section *6.4.4 Batch (pulse-based)*.

Warning

When time or date is changed in "Time+date" menu, timer dosing and timer relay output functions (Relay 2) are stopped!

Timer dosing and timer relay output functions must be restarted manually!

Changing time or date can cause increase or decrease in concentration!

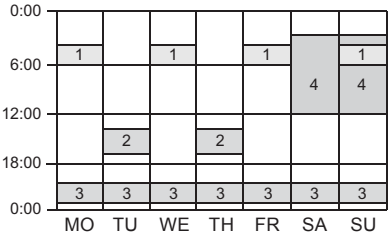

Fig. 28 Example for Dosing timer week function

Note

If several procedures overlap, the process with the higher dosing flow has priority!

In the event of an interruption (e.g. disconnection of the mains voltage, External stop), the dosing is stopped while the time continues running.
After suspending the interruption, the pump continues to dose according to the actual timeline position.

The following settings are required in the "Setup > Dosing timer week" menu for each dosing procedure:

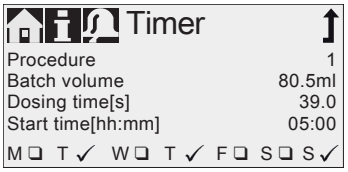

TM04 1138 1110

Fig. 29 Setting the timer

The batch volume (e.g. 80.5 ml) is set in the "Setup > Dosing timer week" menu. The dosing time required for this (e.g. 39.0) is displayed and can be changed.

In the "Operation" menu, the total batch volume (e.g. 80.5 ml) and the remaining batch volume to be dosed is displayed. During breaks in dosing, the time (e.g. 43:32) until the next dosing is displayed.

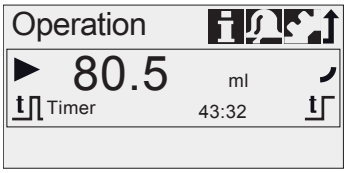

TM04 1136 1110

Fig. 30 Weekly timer dosing (break in dosing)

6.5 Analog output

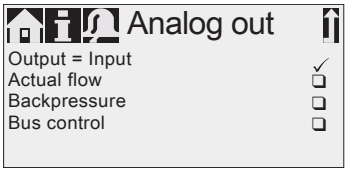

TM04 1153 1110

Fig. 31 Configure analog output

The analog output of the pump is parametrised in the "Setup > Analog output" menu. The following settings are possible:

Setting	Description of output signal	Variant FCM	FC	AR
Output = Input	Analog feedback signal (not for master-slave application). The analog input signal is mapped 1:1 to the analog output.	X	X	X
Actual flow**	Current actual flow • 0/4 mA = 0 % • 20 mA = 100 % see section *6.9 Flow measurement*	X	X*	X*
Backpressure	Backpressure, measured in the dosing head • 0/4 mA = 0 bar • 20 mA = Max. operating pressure see section *6.8 Pressure monitoring*	X	X	
Bus control	Enabled by command in Bus control, see section *6.15 Bus communication*	X	X	X

* Output signal is based on motor speed and pump status (target flow).

** Signal has same analog scaling as the current analog input signal. See *6.4.3 Analog 0/4-20 mA*.

Wiring diagram see section *4.3 Electrical connection*.

Note

In all operation modes, the analog output has a range of 4-20 mA. Exception: Operation mode 0-20 mA. Here, the analog output range is 0-20 mA.

6.6 SlowMode

When the "SlowMode" function is enabled, the pump slows down the suction stroke. The function is enabled in the "Setup > SlowMode" menu and is used to prevent cavitation in the following cases:

- for dosing media with a high viscosity
- for degassing dosing media
- for long suction lines
- for large suction lift.

In the "Setup > SlowMode" menu, the speed of the suction stroke can be reduced to 50 % or 25 %.

Caution ***Enabling the 'SlowMode' function reduces the maximum dosing flow of the pump to the set percentage value!***

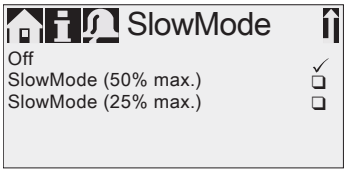

TM04 1153 1110

Fig. 32 SlowMode menu

6.7 FlowControl

Applies to DDA-FC/FCM control variant.

This function is used to monitor the dosing process. Although the pump is running, various influences e.g. air bubbles, can cause a reduced flow or even stop the dosing process. In order to guarantee optimum process safety, the enabled "FlowControl" function directly detects and indicates the following errors and deviations:

- Overpressure
- Damaged discharge line
- Air in the dosing chamber
- Cavitation
- Suction valve leakage > 70 %
- Discharge valve leakage > 70 %.

The occurrence of a fault is indicated by the "eye" symbol flashing. The faults are displayed in the "Alarm" menu (see section *8. Faults*).

FlowControl works with a maintenance-free sensor in the dosing head. During the dosing process, the sensor measures the current pressure and continuously sends the measured value to the microprocessor in the pump. An internal indicator diagram is created from the current measured values and the current diaphragm position (stroke length). Causes for deviations can be identified immediately by aligning the current indicator diagram with a calculated optimum indicator diagram. Air bubbles in the dosing head reduce e.g. the discharge phase and consequently the stroke volume (see fig. 33).

Requirements for a correct indicator diagram are:

- FlowControl function is active
- pressure difference between suction and discharge side is > 2 bar
- No interruption/pause in discharge stroke
- Pressure sensor and cable are functioning properly
- No leakage > 50 % in suction or discharge valve

If one of these requirements is not met, the indicator diagram cannot be evaluated.

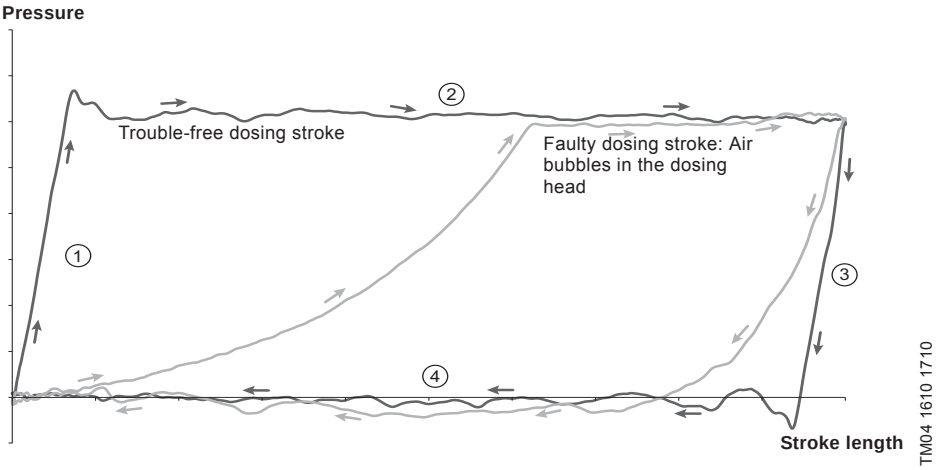

Fig. 33 Indicator diagram

1	Compression phase
2	Discharge phase
3	Expansion phase
4	Suction phase

Setting FlowControl

The "FlowControl" function is set using the two parameters "Sensitivity" and "Delay" in the "Setup > FlowControl" menu.

Sensitivity

In "Sensitivity" the deviation in stroke volume, which will result in an error message, is set in percent.

Sensitivity	Deviation
low	approx. 70 %
medium	approx. 50 %
high	approx. 30 %

Delay

The "Delay" parameter is used to define the time period until an error message is generated: "short", "medium" or "long". The delay depends on the set dosing flow and therefore cannot be measured in strokes or time.

Air bubbles

The "FlowControl" function identifies air bubbles > 60 % of the stroke volume. After switching to "Air bubble" warning status, the pump adapts the stroke frequency to approximately 30-40 % of max. stroke frequency, and starts a special motor drive strategy. The adaptation of the stroke frequency allows the air bubbles to rise from suction to discharge valve. Due to the special motor drive strategy the air bubbles are displaced from the dosing head into the discharge line.

If the air bubbles have not been eliminated after a maximum of 60 strokes, the pump returns to the normal motor drive strategy.

6.8 Pressure monitoring

Applies to DDA-FC/FCM control variant.

A pressure sensor monitors the pressure in the dosing head. If the pressure during the discharge phase falls below 2 bar, a warning is generated (pump continues running). If in the "Setup > Pressure monitoring" menu the function "Min. pressure alarm" is activated, an alarm is generated and the pump is stopped.

If the pressure exceeds the "Max. pressure" set in the "Setup > Pressure monitoring" menu, the pump is shut down, enters the standby state and indicates an alarm.

Caution ***The pump restarts automatically once the backpressure falls below the set "Max. pressure"!***

6.8.1 Pressure setting ranges

Type	Fixed min. pressure [bar]	Adjustable max. pressure [bar]
DDA 7.5-16	< 2	3-17
DDA 12-10	< 2	3-11
DDA 17-7	< 2	3-8
DDA 30-4	< 2	3-5

Warning

Install a pressure-relief valve in the pressure line to provide protection against impermissibly high pressure!

Caution ***The pressure measured in the dosing head is slightly higher than the actual system pressure.***

Therefore the "Max. pressure " should be set at least 0.5 bar higher than the system pressure.

6.8.2 Calibration of pressure sensor

The pressure sensor is calibrated in the factory. As a rule, it does not need to be re-calibrated. If specific circumstances (e.g. pressure sensor exchange, extreme air pressure values at the location of the pump) necessitate a calibration, the sensor can be calibrated as follows:

1. Set pump to "Stop" operating state.
2. Make system pressureless and flush.
3. Dismantle suction line and suction valve.

Warning

Calibrating when the suction valve is installed produces incorrect calibration and can cause personal injuries and damage to property!

Only carry out a calibration if this is technically required!

4. Proceed as described below to calibrate:

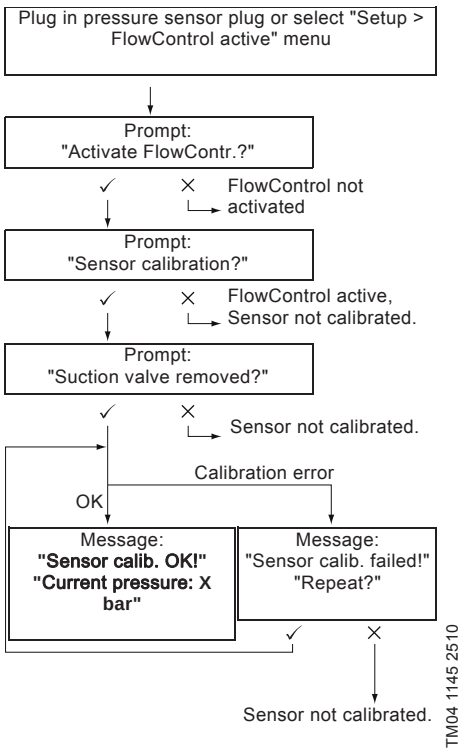

If a calibration is not successfully possible, check plug connections, cable and sensor and replace defective parts where necessary.

6.9 Flow measurement

Applies to DDA-FCM control variant.

The pump accurately measures the actual flow and displays it. Via the 0/4-20 mA analog output, the actual flow signal can easily be integrated into an external process control without additional measuring equipment (see section *6.5 Analog output*).

The flow measurement is based on the indicator diagram as described in section *6.7 FlowControl*. The accumulated length of the discharge phase multiplied by the stroke frequency produces the displayed actual flow. Faults e.g. air bubbles or backpressure that is too low result in a smaller or larger actual flow. When the "AutoFlowAdapt" function is activated (see section *6.10 AutoFlowAdapt*), the pump compensates for these influences by correction of the stroke frequency.

Note

Strokes which cannot be analysed (partial strokes, pressure differential which is too low) are provisionally calculated based on the setpoint value and displayed.

6.10 AutoFlowAdapt

Applies to DDA-FCM control variant.

The "AutoFlowAdapt" function is activated in the "Setup" menu. It detects changes in various parameters and responds accordingly in order to keep the set target flow constant.

Note

Dosing accuracy is increased when "AutoFlowAdapt" is activated.

This function processes information from the pressure sensor in the dosing head. Errors detected by the sensor are processed by the software. The pump responds immediately regardless of the operation mode by adjusting the stroke frequency or where necessary compensating for the deviations with a corresponding indicator diagram.

If the target flow cannot be achieved by the adjustments, a warning is issued.

"AutoFlowAdapt" operates on the basis of the following functions:

- FlowControl: malfunctions are identified (see section *6.7 FlowControl*).
- Pressure monitoring: pressure fluctuations are identified (see section *6.8 Pressure monitoring*).
- Flow measurement: deviations from the target flow are identified (see section *6.9 Flow measurement*).

Example of "AutoFlowAdapt"

Pressure fluctuations

The dosing volume decreases as backpressure increases and conversely the dosing volume increases as the backpressure decreases.

The "AutoFlowAdapt" function identifies pressure fluctuations and responds by adjusting the stroke frequency. The actual flow is thus maintained at a constant level.

6.11 Auto deaeration

Dosing degassing media can result in air pockets in the dosing head during breaks in dosing. This can result in no medium being dosed when restarting the pump. The "Setup > Auto deaeration" function performs pump deaeration automatically at regular intervals.
Software-controlled diaphragm movements encourage any bubbles to rise and gather at the discharge valve so that they can be removed on the next dosing stroke.

The function works:

- when the pump is not in the "Stop" operating state
- during breaks in dosing (e.g. External stop, no incoming pulses, etc.).

Note

The diaphragm movements can displace small volumes into the discharge line. When dosing strongly degassing media, this is however virtually impossible.

6.12 Key lock

The key lock is set in the "Setup > Key lock" menu by entering a four-digit code. It protects the pump by preventing changes to settings. Two levels of key lock can be selected:

Level	Description
Settings	All settings can only be changed by entering the lock code. The [Start/stop] key and the [100%] key are not locked.
Settings + keys	The [Start/stop] key and the [100%] key and all settings are locked.

It is still possible to navigate in the "Alarm" and "Info" main menu and reset alarms.

6.12.1 Temporary deactivation

If the "Key lock" function is activated but settings need to be modified, the keys can be unlocked temporarily by entering the deactivation code. If the code is not entered within 10 seconds, the display automatically switches to the "Operation" main menu. The key lock remains active.

6.12.2 Deactivation

The key lock can be deactivated in the "Setup > Key lock" menu via the "Off" menu point. The key lock is deactivated after the general code "2583" or a pre-defined custom code has been entered.

6.13 Display Setup

Use the following settings in the "Setup > Display" menu to adjust the display properties:

- Units (metric/US)
- Display contrast
- Additional display.

6.13.1 Units

Metric units (litres/millilitres/bar) or US units (US gallons/PSI) can be selected. According to the operation mode and menu, the following units of measurement are displayed:

Operation mode / function	Metric units	US units
Manual control	ml/h or l/h	gph
Pulse control	ml/⊓	ml/⊓
0/4-20 mA Analog control	ml/h or l/h	gph
Batch (pulse- or timer-controlled)	ml or l	gal
Calibration	ml	ml
Volume counter	l	gal
Pressure monitoring	bar	psi

6.13.2 Additional display

The additional display provides additional information about the current pump status. The value is shown in the display with the corresponding symbol.

In "Manual" mode the "Actual flow" information can be displayed with Q = 1.28 l/h (see fig. 34).

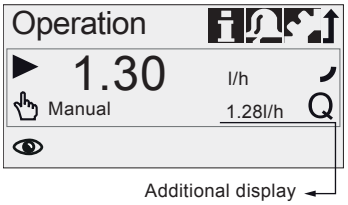

Fig. 34 Display with additional display

The additional display can be set as follows:

Setting	Description
Default display	Depending on the operation mode:
	Q Actual flow (Manual/Pulse)[1), 2)]
	Q Target flow (Pulse)
	Input current (analog)
	Remaining batch volume (Batch, Timer)
	Period until next dosing (Timer)
Dosed volume	V Dosed vol. since last reset (see *Counters* on page 21)
Actual flow	Q Current actual flow[1)]
Backpressure	P Current backpressure in the dosing head[3)]

1) only DDA-FCM control variant

2) only if indicator diagram can be evaluated (see *6.7 FlowControl*)

3) only DDA-FCM/FC control variant

6.14 Time+date

The time and date can be set in the "Setup > Time+date" menu.

Warning

When time or date is changed in "Time+date" menu, timer dosing and timer relay output functions (Relay 2) are stopped!

Timer dosing and timer relay output functions must be restarted manually!

Changing time or date can cause increase or decrease in concentration!

Caution ***The conversion between summer and winter time does not take place automatically!***

6.15 Bus communication

BUS

The bus communication enables remote monitoring and setting of the pump via a fieldbus system.

Further manuals, functional profiles and support files (e.g. GSD-files) are available on the CD delivered with the interface hardware and on www.grundfos.com.

6.15.1 GENIbus communication

The pump is supplied with an integrated module for GENIbus communication. The pump identifies the bus control after connecting to the corresponding signal input. The "Activate communication?" prompt is displayed. After confirmation, the corresponding symbol appears in the "Activated functions" area in the "Operation" menu.

In the "Setup > Bus" menu the GENIbus address can be set from 32 to 231 and bus control can be deactivated.

TM04 1139 2410

Fig. 35 Bus menu

Caution ***The maximum cable length for GENIbus connection is 3 m and must not be exceeded!***

6.15.2 Possible industrial bus types

The pump can be integrated into several networks using the additional E-box (Extension-Box).

Bus type	Interface hardware	Retrofitting possible for pump software
Profibus® DP	E-Box 150	V2.0 and higher
Modbus RTU	E-Box 200	V2.5 and higher

The pump can also be connected to a Grundfos CIU unit (CIU = Communication Interface Unit) equipped with one of the following CIM modules (CIM = Communication Interface Module):

- CIM150 Profibus
- CIM200 Modbus
- CIM270 GRM
- CIM500 Ethernet

For internal communication between the E-Box/CIU and the dosing pump, GENIbus is used.

Caution ***The maximum cable length for GENIbus connection is 3 m and must not be exceeded!***

Caution ***Prior to installation and start-up, read the documentation delivered with the E-Box or CIU unit!***

6.15.3 Activate communication

1. Set the pump to operating state "Stop" with the [Start/stop] key.
2. Switch off the power supply of the pump.
3. Install and connect the E-Box/CIU as described in the respective separate installation and operating instructions.
4. Switch on the power supply of the pump.

The "Activate communication?" prompt is displayed.

After confirmation, the "Bus" symbol appears in the "Activated functions" area of the "Operation" menu, no matter if the prompt was accepted or refused.

If the prompt has been accepted, the bus control function is activated. If the prompt has been refused, bus control function can be activated in "Setup > Bus" menu.

TM04 1139 2410

Fig. 36 Example of submenu for Profibus®

6.15.4 Setting the bus address

1. Enter "Setup > Bus" menu and set desired bus address:

Bus type	Address range
Profibus® DP	0 - 126
Modbus RTU	1 - 247

2. The pump needs to be restarted to initialise the new bus address. Switch off the power supply of the pump and wait for approximately 20 seconds.
3. Switch on the power supply of the pump.

The pump is initialised with the new bus address.

6.15.5 Characteristics of bus communication

To start and stop the pump via bus, it needs to be in operating state "Running". When the pump is remotely stopped from bus, the "External stop" symbol is displayed and the pump switches to operating state "Standby".

While bus control function is activated, the "Setup" menu only shows the "Bus" and "Key lock" submenus. The other main menus, the "External stop" function and the keys are still available.

All operation modes (see section *6.4 Operation modes*) can still be used when bus control is activated. This allows to use the bus control only for monitoring and setting the pump. In this case the respective "BusWatchDog" (see funtional profile on E-Box/CIU product CD) should be deactivated in bus control, because otherwise faults in communication can stop the pump.

Note

To change any settings manually, the bus control function must be deactivated temporarily.

The analog output can not be used while the pump is bus-controlled as both functions use the same electrical connection. See section *4.3 Electrical connection*.

6.15.6 Deactivate communication

Warning

After deactivating the bus control function, the pump can start automatically!

Before deactivating the bus control function, set the pump to operating state "Stop"!

Bus control function can be deactivated in the "Setup > Bus" menu. After deactivation all submenus in "Setup" menu are available.

The "Bus" symbol in the display disappears at next restart of the pump, after the E-Box/CIU plug was disconnected.

Caution

After disconnecting any plug, always refit protective cap!

6.15.7 Communication faults

Faults are only detected, if the respective "BusWatchDog" (see functional profile on E-Box/CIU product CD) is activated.

Warning

After a communication fault is repaired, the pump can start automatically, depending on current bus control and pump settings!

Before repairing any fault, set the pump to operating state "Stop"!

In case of bus communication faults (e.g. communication cable break), the pump stops dosing and switches to operating state "Standby" approximately 10 seconds after the fault was detected. An alarm is triggered, detailing the cause of the fault. See section *8. Faults*.

6.16 Inputs/Outputs

In the "Setup > Inputs/Outputs" menu, you can configure the two outputs "Relay 1+Relay 2" and the signal inputs "External stop", "Empty signal" and "Low-level signal".

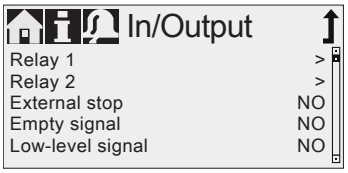

TM04 1152 1110

Fig. 37 Inputs/Outputs menu

Warning

When time or date is changed in "Time+date" menu, timer dosing and timer relay output functions (Relay 2) are stopped!

Timer dosing and timer relay output functions must be restarted manually!

Changing time or date can cause increase or decrease in concentration!

6.16.1 Relay outputs

The pump can switch two external signals using installed relays. The relays are switched by potential-free pulses. The connection diagram of the relays is shown in section *4.3 Electrical connection*. Both relays can be allocated with the following signals:

Relay 1 signal	Relay 2 signal	Description
Alarm*	Alarm	Display red, pump stopped (e.g. empty signal, etc.)
Warning*	Warning	Display yellow, pump is running (e.g. low-level signal, etc.)
Stroke signal	Stroke signal	Each full stroke
Pump dosing	Pump dosing*	Pump running and dosing
Pulse input**	Pulse input**	Each incoming pulse from pulse input
Bus control	Bus control	Activated by a command in the bus communication
	Timer Cycle	See following sections
	Timer Week	See following sections
Contact type		
NO*	NO*	Normally open contact
NC	NC	Normally closed contact

* Factory setting

** The correct transmission of incoming pulses can only be guaranteed up to a pulse frequency of 5 Hz.

Timer Cycle (Relay 2)

For the "Relay 2 > Timer Cycle" function, set the following parameters:

- On (t_1)
- Start delay (t_2)
- Cycle time (t_3)

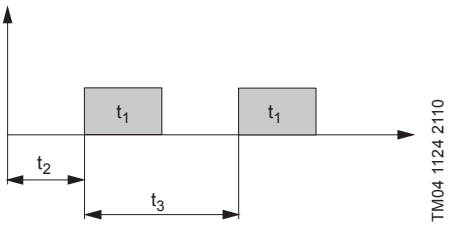

Fig. 38 Diagram

Timer Week (Relay 2)

This function saves up to 16 relay on-times for a week. The following settings can be made for each relay switching operation in the "Relay 2 > Timer Week" menu:

- Procedure (No.)
- On time (duration)
- Start time
- Weekdays.

6.16.2 External stop

The pump can be stopped via an external pulse, e.g. from a control room. When activating the external stop pulse, the pump switches from the operating state "Running" into the operating state "Standby". The corresponding symbol appears in the "Signal/error display" area of the display.

Caution

Frequent disengagement from the mains voltage, e.g. via a relay, can result in damage to the pump electronics and in the breakdown of the pump. The dosing accuracy is also reduced as a result of internal start procedures.

Do not control the pump via the mains voltage for dosing purposes!

Only use the "External stop" function to start and stop the pump!

The contact type is factory-set to normally open contact (NO). In the "Setup > Inputs/Outputs > External stop" menu, the setting can be changed to normally closed contact (NC).

6.16.3 Empty and Low level signals

In order to monitor the filling level in the tank, a dual-level sensor can be connected to the pump. The pump responds to the signals as follows:

Sensor signal	Pump status
Low level	• Display is yellow • Flashes • Pump continues running
Empty	• Display is red • Flashes • Pump stops

Caution

When the tank is filled up again, the pump restarts automatically!

Both signal inputs are allocated to the normally open contact (NO) in the factory. They can be re-allocated in the "Setup > Inputs/Outputs" menu to normally closed contact (NC).

6.17 Basic settings

All settings can be reset to the settings default upon delivery in the "Setup > Basic settings" menu.

Selecting "Save customer settings" saves the current configuration to the memory. This can then be activated using "Load customer settings".

The memory always contains the previously saved configuration. Older memory data is overwritten.

7. Service

In order to ensure a long service life and dosing accuracy, wearing parts such as diaphragms and valves must be regularly checked for signs of wear. Where necessary, replace worn parts with original spare parts made from suitable materials.

Should you have any questions, please contact your service partner.

Warning

Maintenance work must only be carried out by qualified staff.

7.1 Regular maintenance

Interval	Task
Daily	Check, if liquid leaks from the drain opening (fig. 41, pos. 11) and if the drain opening is blocked or soiled. If so, follow the instructions given in section *7.6 Diaphragm breakage*.
	Check, if liquid leaks from the dosing head or valves. If necessary, tighten dosing head screws with a torque wrench at 4 Nm. If necessary, tighten valves and cap nuts, or perform service (see *7.4 Perform service*).
	Check, if a service requirement is present at the pump display. If so, follow the instructions given in section *7.3 Service system*.
Weekly	Clean all pump surfaces with a dry and clean cloth.
Every 3 months	Check dosing head screws. If necessary, tighten dosing head screws with a torque wrench at 4 Nm. Replace damaged screws immediately.

7.2 Cleaning

If necessary, clean all pump surfaces with a dry and clean cloth.

7.3 Service system

According to the motor runtime or after a defined period of operation, service requirements will appear. Service requirements appear regardless of the current operating state of the pump and do not affect the dosing process.

Service requirement	Motor runtime [h]*	Time interval [months]*
Service soon!	7500	23
Service now!	8000	24

* Since the last service system reset

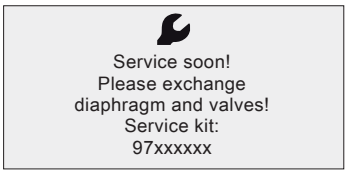

TM04 1131 1110

Fig. 39 Service soon!

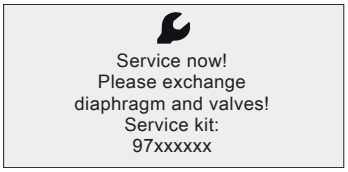

TM04 1131 1110

Fig. 40 Service now!

Caution ***For media which result in increased wear, the service interval must be shortened.***

The service requirement signals when the replacement of wearing parts is due and displays the number of the service kit. Press the click wheel to temporarily hide the service prompt.

When the "Service now!" message appears (displayed daily), the pump must be serviced immediately. The symbol appears in the "Operation" menu.

The number of the service kit required is also displayed in the "Info" menu.

7.4 Perform service

Only spare parts and accessories from Grundfos should be used for maintenance. The usage of non-original spare parts and accessories renders any liability for resulting damages null and void.

Further information about carrying out maintenance can be found in the service kit catalogue on our homepage. See www.grundfos.com.

Warning

Risk of chemical burns!

When dosing dangerous media, observe the corresponding precautions in the safety data sheets!

Wear protective clothing (gloves and goggles) when working on the dosing head, connections or lines!

Do not allow any chemicals to leak from the pump. Collect and dispose of all chemicals correctly!

Caution

Before any work to the pump, the pump must be in the "Stop" operating state or be disconnected from the power supply. The system must be pressureless!

7.4.1 Dosing head overview

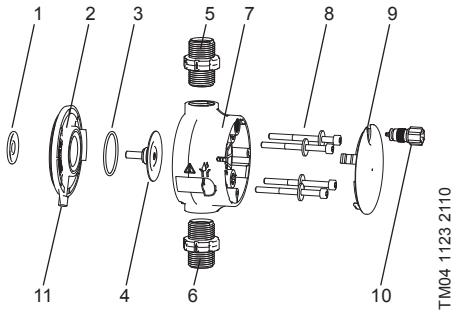

Fig. 41 Changing the diaphragm and valves

1	Safety diaphragm
2	Flange
3	O-ring
4	Diaphragm
5	Valve on discharge side
6	Valve on suction side
7	Dosing head
8	Screws with discs
9	Cover
10	Deaeration valve
11	Drain opening

7.4.2 Dismantling the diaphragm and valves

Warning

Danger of explosion, if dosing liquid has entered the pump housing!

If the diaphragm is possibly damaged, don't connect the pump to the power supply! Proceed as described in section 7.6 Diaphragm breakage!

This section refers to fig. 41.

1. Make system pressureless.
2. Empty dosing head before maintenance and flush it if necessary.
3. Set pump to "Stop" ■ operating state using the [Start/stop] key.
4. Press the [Start/stop] and [100%] keys at the same time to put the diaphragm into "out" position.
   – Symbol (– must be displayed (see fig. 14).
5. Take suitable steps to ensure that the returning liquid is safely collected.
6. Dismantle suction, pressure and deaeration hose.
7. Dismantle valves on suction and discharge side (5, 6).
8. Remove the cover (9).
9. Loosen screws (8) on the dosing head (7) and remove with discs.
10. Remove the dosing head (7).
11. Unscrew diaphragm (4) counter-clockwise and remove with flange (2).
12. Make sure the drain opening (11) is not blocked or soiled. Clean if necessary.
13. Check the safety diaphragm (1) for wear and damage. Replace if necessary.

If nothing indicates that dosing liquid has entered the pump housing, go on as described in section *7.4.3 Reassembling the diaphragm and valves*. Otherwise proceed as described in section *7.6.2 Dosing liquid in the pump housing*.

7.4.3 Reassembling the diaphragm and valves

The pump must only be reassembled, if nothing indicates that dosing liquid has entered the pump housing. Otherwise proceed as described in section *7.6.2 Dosing liquid in the pump housing*.

This section refers to fig. 41.

1. Attach flange (2) correctly and screw on new diaphragm (4) clockwise.
   – Make sure that the O-ring (3) is seated correctly!
2. Press the [Start/stop] and [100%] keys at the same time to put the diaphragm into "in" position.
   – Symbol **)–** must be displayed (see fig. 14).
3. Attach the dosing head (7).
4. Install screws with discs (8) and cross-tighten with a torque wrench.
   – Torque: 4 Nm.
5. Attach the cover (9).
6. Install new valves (5, 6).
   – Do not interchange valves and pay attention to direction of arrow.
7. Connect suction, pressure and deaeration hose (see section *4.2 Hydraulic connection*)
8. Press the [Start/stop] key to leave the service mode.

Caution

Tighten the dosing head screws with a torque wrench once before commissioning and again after 2-5 operating hours at 4 Nm.

9. Deaerate dosing pump (see section *5.2 Deaerating the pump*).
10. Please observe the notes on commissioning in section *5. Startup*!

7.5 Resetting the service system

After performing the service, the service system must be reset using the "Info > Reset service system" function.

7.6 Diaphragm breakage

If the diaphragm leaks or is broken, dosing liquid escapes from the drain opening (fig. 41, pos. 11) on the dosing head.

In case of diaphragm breakage, the safety diaphragm (fig. 41, pos. 1) protects the pump housing against ingress of dosing liquid.

When dosing crystallising liquids the drain opening can be blocked by crystallisation. If the pump is not taken out of operation immediately, a pressure can build up between the diaphragm (fig. 41, pos. 4) and the safety diaphragm in the flange (fig. 41, pos. 2). The pressure can press dosing liquid through the safety diaphragm into the pump housing.

Most dosing liquids don't cause any danger when entering the pump housing. However a view liquids can cause a chemical reaction with inner parts of the pump. In the worst case, this reaction can produce explosive gases in the pump housing.

Warning

Danger of explosion, if dosing liquid has entered the pump housing!

Operation with damaged diaphragm can lead to dosing liquid entering the pump housing.

In case of diaphragm breakage, immediately separate the pump from the power supply!

Make sure the pump cannot be put back into operation by accident!

Dismantle the dosing head without connecting the pump to the power supply and make sure no dosing liquid has entered the pump housing. Proceed as described in section 7.6.1 Dismantling in case of diaphragm breakage.

To avoid any danger resulting from diaphragm breakage, observe the following:

- Perform regular maintenance. See section *7.1 Regular maintenance*.
- Never operate the pump with blocked or soiled drain opening.
  – If the drain opening is blocked or soiled, proceed as described in section *7.6.1 Dismantling in case of diaphragm breakage*.
- Never attach a hose to the drain opening. If a hose is attached to the drain opening, it is impossible to recognise escaping dosing liquid.
- Take suitable precautions to prevent harm to health and damage to property from escaping dosing liquid.
- Never operate the pump with damaged or loose dosing head screws.

7.6.1 Dismantling in case of diaphragm breakage

Warning

Danger of explosion, if dosing liquid has entered the pump housing!

Do not connect the pump to the power supply!

This section refers to fig. 41.

1. Make system pressureless.
2. Empty dosing head before maintenance and flush it if necessary.
3. Take suitable steps to ensure that the returning liquid is safely collected.
4. Dismantle suction, pressure and deaeration hose.
5. Remove the cover (9).
6. Loosen screws (8) on the dosing head (7) and remove with discs.
7. Remove the dosing head (7).
8. Unscrew diaphragm (4) counter-clockwise and remove with flange (2).
9. Make sure the drain opening (11) is not blocked or soiled. Clean if necessary.
10. Check the safety diaphragm (1) for wear and damage. Replace if necessary.

If nothing indicates that dosing liquid has entered the pump housing, go on as described in section *7.4.3 Reassembling the diaphragm and valves*. Otherwise proceed as described in section *7.6.2 Dosing liquid in the pump housing*.

7.6.2 Dosing liquid in the pump housing

Warning

Danger of explosion!

Immediately separate the pump from the power supply!

Make sure the pump cannot be put back into operation by accident!

If dosing liquid has entered the pump housing:

- Send the pump to Grundfos for repair, following the instructions given in section *7.7 Repairs*.
- If a repair isn't economically reasonable, dispose of the pump observing the information in section *9. Disposal*.

7.7 Repairs

Warning

The pump housing must only be opened by personnel authorised by Grundfos!

Repairs must only be carried out by authorised and qualified personnel!

Switch off the pump and disconnect it from the voltage supply before carrying out maintenance work and repairs!

After consulting Grundfos, please send the pump, together with the safety declaration completed by a specialist, to Grundfos. The safety declaration can be found at the end of these instructions. It must be copied, completed and attached to the pump.

The pump must be cleaned prior to dispatch!

Caution ***If dosing liquid has possibly entered the pump housing, state that explicitly in the safety declaration! Observe section 7.6 Diaphragm breakage.***

If the above requirements are not met, Grundfos may refuse to accept delivery of the pump. The shipping costs will be charged to the sender.

8. Faults

In the event of faults in the dosing pump, a warning or an alarm is triggered.
The corresponding fault symbol flashes in the "Operation" menu, see section *8.1 List of faults*.
The cursor jumps to the "Alarm" main menu symbol. Press the click wheel to open the "Alarm" menu and, where necessary, faults to be acknowledged will be acknowledged.

A yellow display indicates a warning and the pump continues running.

A red display indicates an alarm and the pump is stopped.

The last 10 faults are stored in the "Alarm" main menu. When a new fault occurs, the oldest fault is deleted.

The two most recent faults are shown in the display, you can scroll through all the other faults. The time and cause of the fault are displayed.

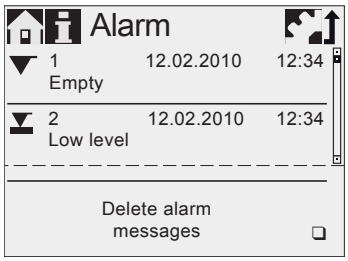

TM04 1109 1010

The list of faults can be deleted at the end of the list.

If there is a service requirement, this appears when the "Alarm" menu is opened. Press the click wheel to temporarily close the service prompt (see section *7.3 Service system*).

8.1 List of faults

8.1.1 Faults with error message

Display in the "Alarm" menu		Possible cause	Possible remedy
▼	Empty (Alarm)	• Dosing medium tank empty	• Fill tank. • Check contact setting (NO/NC).
⧗	Low level (Warning)	• Dosing medium tank almost empty	
	Overpressure (Alarm)	• Discharge valve blocked • Isolating valve in discharge line closed • Pressure peaks due to high viscosity • Max. pressure set too low (see section *6.8 Pressure monitoring*)	• Replace valve if necessary (see section *7.4 Perform service*). • Check flow direction of valves (arrow) and correct if necessary. • Open the isolating valve (on the discharge side). • Enlarge diameter of discharge line. • Change pressure setting (see section *6.8 Pressure monitoring*).
	Low backpressure (Warning/alarm*)	• Faulty diaphragm • Broken discharge line • Pressure differential between suction and discharge side too low • Leakage in the pressure loading valve at Q < 1 l/h • Deaeration valve open	• Change the diaphragm (see section *7.4 Perform service*). • Check discharge line and repair if necessary. • Install additional spring-loaded valve (approx. 3 bar) on the discharge side. • Close the deaeration valve.
	Air bubble (Warning)	• Broken/leaky suction line • Strongly degassing medium • Tank dosing medium empty	• Check suction line and repair if necessary. • Provide positive inlet pressure (place dosing medium tank above the pump). • Enable "SlowMode" (see section *6.6 SlowMode*). • Fill tank.
👁	Cavitation (Warning)	• Blocked/constricted/squeezed suction line • Blocked/constricted suction valve • Suction lift too high • Viscosity too high	• Enable "SlowMode" (see section *6.6 SlowMode*). • Reduce suction lift. • Increase suction hose diameter. • Check suction line and open isolating valve if necessary.
	Suct. valve leak (Warning)	• Leaky/dirty suction valve • Deaeration valve open	• Check valve and tighten it up. • Flush system. • Replace valve if necessary (see section *7.4 Perform service*). • Check O-ring position. • Install filter in suction line. • Close the deaeration valve.
	Disch. valve leak (Warning)	• Leaky/dirty discharge valve • Leakage in the pressure loading valve • Deaeration valve open	• Check valve and tighten it up. • Flush system. • Replace valve if necessary (see section *7.4 Perform service*). • Check O-ring position. • Install screen in suction line. • Close the deaeration valve. • Install spring-loaded valve on the discharge side.
	Flow deviation (Warning)	• Considerable deviation between target and actual flow • Pump not or incorrectly calibrated	• Check installation. • Calibrate the pump (see section *5.3 Calibrating the pump*).

Display in the "Alarm" menu	Possible cause	Possible remedy
Pressure sensor (Warning)	• Broken "FlowControl" cable (see fig. 11) • Sensor defect • Pressure sensor not correctly calibrated.	• Check plug connection. • Change sensor if necessary. • Calibrate pressure sensor correctly (see section *6.8.2 Calibration of pressure sensor*).
Motor blocked (Alarm)	• Backpressure greater than nominal pressure • Damage to gears	• Reduce backpressure. • Arrange for repair of gears, if necessary.
BUS Bus error (Alarm)	• Fieldbus communication error	• Check cables for correct specification and damage; replace if necessary. • Check cable routing and shielding; correct if necessary.
E-Box (Alarm)	• E-Box connection error • Faulty E-Box	• Check plug connection. • Replace E-Box if necessary.
Cable break (Alarm)	• Defect in analog cable 4-20 mA (input current < 2 mA)	• Check cable/plug connections and replace, if necessary. • Check signal transmitter.
Service now (Warning)	• Time interval for service expired	• Perform service (see section *7.4 Perform service*).

* Depending on setting

8.1.2 General faults

Fault	Possible cause	Possible remedy
Dosing flow too high	Inlet pressure greater than backpressure	Install additional spring-loaded valve (approx. 3 bar) on the discharge side.
		Increase pressure differential.
	Incorrect calibration	Calibrate the pump (see section *5.3 Calibrating the pump*).
No dosing flow or dosing flow too low	Air in dosing head	Deaerate the pump.
	Faulty diaphragm	Change the diaphragm (see section *7.4 Perform service*).
	Leakage/fracture in lines	Check and repair lines.
	Valves leaking or blocked	Check and clean valves.
	Valves installed incorrectly	Check that the arrow on the valve housing is pointing in the direction of flow. Check whether all O-rings are installed correctly.
	Blocked suction line	Clean suction line/install filter.
	Suction lift too high	Reduce suction lift.
		Install priming aid.
		Enable "SlowMode" (see section *6.6 SlowMode*).
	Viscosity too high	Enable "SlowMode" (see section *6.6 SlowMode*).
		Use hose with larger diameter.
		Install spring-loaded valve on the discharge side.
	Faulty calibration	Calibrate the pump (see section *5.3 Calibrating the pump*).
	Deaeration valve open	Close the deaeration valve.

Fault	Possible cause	Possible remedy
Irregular dosing	Valves leaking or blocked	Tighten up valves, replace valves if necessary (see section *7.4 Perform service*).
	Backpressure fluctuations	Keep backpressure constant.
		Activate "AutoFlowAdapt" (only DDA-FCM).
Liquid escaping from the drain opening on the flange	Faulty diaphragm	Immediately separate the pump from the power supply! Observe section *7. Service* and especially section *7.6 Diaphragm breakage*.
Liquid escaping	Dosing head screws not tightened	Tighten up screws (see section *4.2 Hydraulic connection*).
	Valves not tightened	Tighten up valves/union nuts (see section *4.2 Hydraulic connection*).
Pump not sucking in	Suction lift too high	Reduce suction lift; if necessary, provide positive inlet pressure.
	Backpressure too high	Open the deaeration valve.
	Soiled valves	Flush system, replace valves if necessary (see section *7.4 Perform service*).

9. Disposal

This product or parts of it must be disposed of in an environmentally sound way.
Use appropriate waste collection services.
If this is not possible, contact the nearest Grundfos company or service workshop.

Subject to alterations.

Safety declaration

Please copy, fill in and sign this sheet and attach it to the pump returned for service.

Note ***Fill in this document using English or German language.***

Product type (nameplate) _____

Model number (nameplate) _____

Dosing medium _____

Fault description

Please make a circle around the damaged parts.
In the case of an electrical or functional fault, please mark the cabinet.

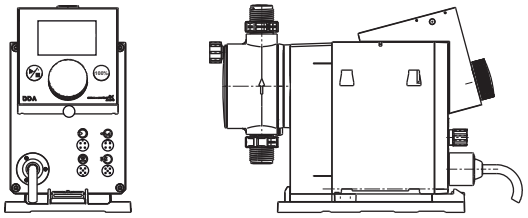

TM04 1185 1110

Please describe the error/cause of the error in brief.

☐ Dosing liquid has possibly entered the pump housing.
The pump must not be connected to the power supply! Danger of explosion!

We hereby declare that the pump has been cleaned and is completely free from chemical, biological and radioactive substances.

_____
Date and signature

_____
Company stamp

Declaration of conformity

GB: EC declaration of conformity
We, Grundfos, declare under our sole responsibility that the products DDA, DDC and DDE, to which this declaration relates, are in conformity with these Council directives on the approximation of the laws of the EC member states:

BG: ЕС декларация за съответствие
Ние, фирма Grundfos, заявяваме с пълна отговорност, че продуктите DDA, DDC и DDE, за които се отнася настоящата декларация, отговарят на следните указания на Съвета за уеднаквяване на правните разпоредби на държавите членки на ЕС:

CZ: ES prohlášení o shodě
My firma Grundfos prohlašujeme na svou plnou odpovědnost, že výrobky DDA, DDC a DDE, na něž se toto prohlášení vztahuje, jsou v souladu s ustanoveními směrnice Rady pro sblížení právních předpisů členských států Evropského společenství v oblastech:

DK: EF-overensstemmelseserklæring
Vi, Grundfos, erklærer under ansvar at produkterne DDA, DDC og DDE som denne erklæring omhandler, er i overensstemmelse med disse af Rådets direktiver om indbyrdes tilnærmelse til EF-medlemsstaternes lovgivning:

DE: EG-Konformitätserklärung
Wir, Grundfos, erklären in alleiniger Verantwortung, dass die Produkte DDA, DDC und DDE, auf die sich diese Erklärung bezieht, mit den folgenden Richtlinien des Rates zur Angleichung der Rechtsvorschriften der EU-Mitgliedsstaaten übereinstimmen:

EE: EL vastavusdeklaratsioon
Meie, Grundfos, deklareerime enda ainuvastutusel, et tooted DDA, DDC ja DDE, mille kohta käesolev juhend käib, on vastavuses EÜ Nõukogu direktiividega EMÜ liikmesriikide seaduste ühitamise kohta, mis käsitlevad:

GR: Δήλωση συμμόρφωσης ΕΟ
Εμείς, η Grundfos, δηλώνουμε με αποκλειστικά δική μας ευθύνη ότι τα προϊόντα DDA, DDC και DDE στα οποία αναφέρεται η παρούσα δήλωση, συμμορφώνονται με τις εξής Οδηγίες του Συμβουλίου περί προσέγγισης των νομοθεσιών των κρατών μελών της ΕΕ:

ES: Declaración CE de conformidad
Nosotros, Grundfos, declaramos bajo nuestra entera responsabilidad que los productos DDA, DDC y DDE, a los cuales se refiere esta declaración, están conformes con las Directivas del Consejo en la aproximación de las leyes de las Estados Miembros del EM:

FR: Déclaration de conformité CE
Nous, Grundfos, déclarons sous notre seule responsabilité, que les produits DDA, DDC et DDE, auxquels se réfère cette déclaration, sont conformes aux Directives du Conseil concernant le rapprochement des législations des Etats membres CE relatives aux normes énoncées ci-dessous:

HR: EZ izjava o usklađenosti
Mi, Grundfos, izjavljujemo pod vlastitom odgovornošću da je proizvod DDA, DDC i DDE, na koji se ova izjava odnosi, u skladu s direktivama ovog Vijeća o usklađivanju zakona država članica EU:

IT: Dichiarazione di conformità CE
Grundfos dichiara sotto la sua esclusiva responsabilità che i prodotti DDA, DDC e DDE, ai quali si riferisce questa dichiarazione, sono conformi alle seguenti direttive del Consiglio riguardanti il riavvicinamento delle legislazioni degli Stati membri CE:

LV: EK atbilstības deklarācija
Sabiedrība GRUNDFOS ar pilnu atbildību dara zināmu, ka produkti DDA, DDC un DDE, uz kuriem attiecas šis paziņojums, atbilst šādām Padomes direktīvām par tuvināšanos EK dalībvalstu likumdošanas normām:

LT: EB atitikties deklaracija
Mes, Grundfos, su visa atsakomybe pareiškiame, kad gaminiai DDA, DDC ir DDE, kuriems skirta ši deklaracija, atitinka šias Tarybos Direktyvas dėl Europos Ekonominės Bendrijos šalių narių įstatymų suderinimo:

HU: EK megfelelőségi nyilatkozat
Mi, a Grundfos, egyedüli felelősséggel kijelentjük, hogy a DDA, DDC és DDC termékek, amelyekre jelen nyilatkozik vonatkozik, megfelelnek az Európai Unió tagállamainak jogi irányelveit összehangoló tanács alábbi előírásainak:

NL: EC overeenkomstigheidsverklaring
Wij, Grundfos, verklaren geheel onder eigen verantwoordelijkheid dat de producten DDA, DDC en DDE waarop deze verklaring betrekking heeft, in overeenstemming zijn met de Richtlijnen van de Raad in zake de onderlinge aanpassing van de wetgeving van de EG Lidstaten betreffende:

NO: EU samsvarserklæring
Vi, Grundfos, erklærer på eget ansvar at produktene DDA, DDC og DDE, som denne erklæringen gjelder, er i samsvar med disse rådsdirektivene slik de omtrentlig samsvarer med lovene for EU-medlemlandene:

UA: Декларація відповідності ЄС
Компанія Grundfos заявляє про свою виключну відповідальність за те, що продукти DDA, DDC та DDE, на які поширюється дана декларація, відповідають таким рекомендаціям Ради з уніфікації правових норм країн - членів ЄС:

PL: Deklaracja zgodności WE
My, Grundfos, oświadczamy z pełną odpowiedzialnością, że nasze wyroby DDA, DDC oraz DDE, których deklaracja niniejsza dotyczy, są zgodne z następującymi wytycznymi Rady d/s ujednolicenia przepisów prawnych krajów członkowskich WE:

PT: Declaração de conformidade CE
A Grundfos declara sob sua única responsabilidade que os produtos DDA, DDC e DDE, aos quais diz respeito esta declaração, estão em conformidade com as seguintes Directivas do Conselho sobre a aproximação das legislações dos Estados Membros da CE:

RU: Декларация о соответствии ЕС
Мы, компания Grundfos, со всей ответственностью заявляем, что изделия DDA, DDC и DDE, к которым относится настоящая декларация, соответствуют следующим Директивам Совета Евросоюза об унификации законодательных предписаний стран-членов ЕС:

RO: Declaraţie de conformitate CE
Noi, Grundfos, declarăm pe propria răspundere că produsele DDA, DDC şi DDE, la care se referă această declaraţie, sunt în conformitate cu aceste Directive de Consiliu asupra armonizării legilor Statelor Membre CE:

SK: Prehlásenie o konformite ES
My firma Grundfos prehlasujeme na svoju plnú zodpovednosť, že výrobky DDA, DDC a DDE, na ktoré sa toto prehlásenie vzťahuje, sú v súlade s ustanovením smernice Rady pre zblíženie právnych predpisov členských štátov Európskeho spoločenstva v oblastiach:

SI: ES izjava o skladnosti
V Grundfosu s polno odgovornostjo izjavljamo, da so naši izdelki DDA, DDC in DDE, na katere se ta izjava nanaša, v skladu z naslednjimi direktivami Sveta o približevanju zakonodaje za izenačevanje pravnih predpisov držav članic ES:

RS: EC deklaracija o usaglašenosti
Mi, Grundfos, izjavljujemo pod vlastitom odgovornošću da je proizvod DDA, DDC i DDE, na koji se ova izjava odnosi, u skladu sa direktivama Saveta za usklađivanje zakona država članica EU:

FI: EY-vaatimustenmukaisuusvakuutus

Me, Grundfos, vakuutamme omalla vastuullamme, että tuotteet DDA, DDC ja DDE, joita tämä vakuutus koskee, ovat EY:n jäsenvaltioiden lainsäädännön yhdenmukaistamiseen tähtäävien Euroopan neuvoston direktiivien vaatimusten mukaisia seuraavasti:

SE: EG-försäkran om överensstämmelse

Vi, Grundfos, försäkrar under ansvar att produkterna DDA, DDC och DDE, som omfattas av denna försäkran, är i överensstämmelse med rådets direktiv om inbördes närmande till EU-medlemsstaternas lagstiftning, avseende:

TR: EC uygunluk bildirgesi

Grundfos olarak bu beyannameye konu olan DDA, DDC ve DDE ürünlerinin, AB Üyesi Ülkelerin kanunlarını birbirine yaklaştırma üzerine Konsey Direktifleriyle uyumlu olduğunun yalnızca bizim sorumluluğumuz altında olduğunu beyan ederiz:

CN: EC 产品合格声明书

我们格兰富在我们的全权责任下声明，产品 DDA, DDC 和 DDE，即该合格证所指之产品，符合欧共体使其成员国法律趋于一致的以下欧共理事会指令：

JP: EC 適合宣言

Grundfos は、その責任の下に、DDA, DDC 製品および DDE 製品が EC 加盟諸国の法規に関連する、以下の評議会指令に適合していることを宣言します：

KO: EC 적합성 선언

Grundfos 에서는 자사의 단독 책임에 따라 이 선언과 관련된 DDA, DDC 및 DDE 제품이 EC 회원국 법률에 기반한 다음 이사회 지침을 준수함을 선언합니다 :

– Machinery Directive (2006/42/EC).
  Standards used: EN 809: 1998, DIN EN ISO 12100:2010.
– Low Voltage Directive (2006/95/EC).
  Standard used: EN 61010-1: 2001 (second edition).
– EMC Directive (2004/108/EC).
  Standards used: EN 61326-1: 2006,
  EN 61000-3-2: 2006+A1: 2009+A2: 2009, EN 61000-3-3: 2008.

This EC declaration of conformity is only valid when published as part of the Grundfos installation and operating instructions.

Pfinztal, 1 December 2014

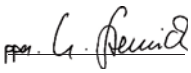

Ulrich Stemick
Technical Director
Grundfos Water Treatment GmbH
Reetzstr. 85, D-76327 Pfinztal, Germany

Person authorised to compile technical file and
empowered to sign the EC declaration of conformity.

This page is intentionally left blank

This page is intentionally left blank

This page is intentionally left blank

Argentina
Bombas GRUNDFOS de Argentina S.A.
Ruta Panamericana km. 37.500 Centro Industrial Garin
1619 - Garin Pcia. de B.A.
Phone: +54-3327 414 444
Telefax: +54-3327 411 111

Australia
GRUNDFOS Pumps Pty. Ltd.
P.O. Box 2040
Regency Park
South Australia 5942
Phone: +61-8-8461-4611
Telefax: +61-8-8340 0155

Austria
GRUNDFOS Pumpen Vertrieb Ges.m.b.H.
Grundfosstraße 2
A-5082 Grödig/Salzburg
Tel.: +43-6246-883-0
Telefax: +43-6246-883-30

Belgium
N.V. GRUNDFOS Bellux S.A.
Boomsesteenweg 81-83
B-2630 Aartselaar
Tél.: +32-3-870 7300
Télécopie: +32-3-870 7301

Belarus
Представительство ГРУНДФОС в Минске
220125, Минск
ул. Шафарнянская, 11, оф. 56
Тел.: +7 (375 17) 286 39 72, 286 39 73
Факс: +7 (375 17) 286 39 71
E-mail: minsk@grundfos.com

Bosnia/Herzegovina
GRUNDFOS Sarajevo
Trg Heroja 16,
BiH-71000 Sarajevo
Phone: +387 33 713 290
Telefax: +387 33 659 079
e-mail: grundfos@bih.net.ba

Brazil
BOMBAS GRUNDFOS DO BRASIL
Av. Humberto de Alencar Castelo Branco, 630
CEP 09850 - 300
São Bernardo do Campo - SP
Phone: +55-11 4393 5533
Telefax: +55-11 4343 5015

Bulgaria
Grundfos Bulgaria EOOD
Slatina District
Iztochna Tangenta street no. 100
BG - 1592 Sofia
Tel. +359 2 49 22 200
Fax. +359 2 49 22 201
email: bulgaria@grundfos.bg

Canada
GRUNDFOS Canada Inc.
2941 Brighton Road
Oakville, Ontario
L6H 6C9
Phone: +1-905 829 9533
Telefax: +1-905 829 9512

China
Grundfos Alldos
Dosing & Disinfection
ALLDOS (Shanghai) Water Technology Co. Ltd.
West Unit, 1 Floor, No. 2 Building (T 4-2)
278 Jinhu Road, Jin Qiao Export Processing Zone
Pudong New Area
Shanghai, 201206
Phone: +86 21 5055 1012
Telefax: +86 21 5032 0596
E-mail: grundfosalldos-CN@grundfos.com

China
GRUNDFOS Pumps (Shanghai) Co. Ltd.
50/F Maxdo Centre No. 8 Xing Yi Rd.
Hongqiao Development Zone
Shanghai 200336
PRC
Phone: +86-21 6122 5222
Telefax: +86-21 6122 5333

Croatia
GRUNDFOS CROATIA d.o.o.
Cebini 37, Buzin
HR-10010 Zagreb
Phone: +385 1 6595 400
Telefax: +385 1 6595 499
www.hr.grundfos.com

Czech Republic
GRUNDFOS s.r.o.
Čapkovského 21
779 00 Olomouc
Phone: +420-585-716 111
Telefax: +420-585-716 299

Denmark
GRUNDFOS DK A/S
Martin Bachs Vej 3
DK-8850 Bjerringbro
Tlf.: +45-87 50 50 50
Telefax: +45-87 50 51 51
E-mail: info_GDK@grundfos.com
www.grundfos.com/DK

Estonia
GRUNDFOS Pumps Eesti OÜ
Peterburi tee 92G
11415 Tallinn
Tel: + 372 606 1690
Fax: + 372 606 1691

Finland
OY GRUNDFOS Pumput AB
Mestarintie 11
FIN-01730 Vantaa
Phone: +358-(0)207 889 900
Telefax: +358-(0)207 889 550

France
Pompes GRUNDFOS Distribution S.A.
Parc d'Activités de Chesnes
57, rue de Malacombe
F-38290 St. Quentin Fallavier (Lyon)
Tél.: +33-4 74 82 15 15
Télécopie: +33-4 74 94 10 51

Germany
GRUNDFOS Water Treatment GmbH
Reetzstraße 85
D-76327 Pfinztal (Söllingen)
Tel.: +49 7240 61-0
Telefax: +49 7240 61-177
E-mail: gwt@grundfos.com

Germany
GRUNDFOS GMBH
Schlüterstr. 33
40699 Erkrath
Tel.: +49-(0) 211 929 69-0
Telefax: +49-(0) 211 929 69-3799
E-mail: infoservice@grundfos.de
Service in Deutschland:
E-mail: kundendienst@grundfos.de

Greece
GRUNDFOS Hellas A.E.B.E.
20th km. Athinon-Markopoulou Av.
P.O. Box 71
GR-19002 Peania
Phone: +0030-210-66 83 400
Telefax: +0030-210-66 46 273

Hong Kong
GRUNDFOS Pumps (Hong Kong) Ltd.
Unit 1, Ground floor
Siu Wai Industrial Centre
29-33 Wing Hong Street &
68 King Lam Street, Cheung Sha Wan
Kowloon
Phone: +852-27861706 / 27861741
Telefax: +852-27858664

Hungary
GRUNDFOS Hungária Kft.
Park u. 8
H-2045 Törökbálint,
Phone: +36-23 511 110
Telefax: +36-23 511 111

India
GRUNDFOS Pumps India Private Limited
118 Old Mahabalipuram Road
Thoraipakkam
Chennai 600 097
Phone: +91-44 4596 6800

Indonesia
PT GRUNDFOS Pompa
Jl. Rawa Sumur III, Blok III / CC-1
Kawasan Industri, Pulogadung
Jakarta 13930
Phone: +62-21-460 6909
Telefax: +62-21-460 6910 / 460 6901

Ireland
GRUNDFOS (Ireland) Ltd.
Unit A, Merrywell Business Park
Ballymount Road Lower
Dublin 12
Phone: +353-1-4089 800
Telefax: +353-1-4089 830

Italy
GRUNDFOS Pompe Italia S.r.l.
Via Gran Sasso 4
I-20060 Truccazzano (Milano)
Tel.: +39-02-95838112
Telefax: +39-02-95309290 / 95838461

Japan
GRUNDFOS Pumps K.K.
Gotanda Metalion Bldg. 5F,
5-21-15, Higashi-gotanda
Shiagawa-ku, Tokyo,
141-0022 Japan
Phone: +81 35 448 1391
Telefax: +81 35 448 9619

Korea
GRUNDFOS Pumps Korea Ltd.
6th Floor, Aju Building 679-5
Yeoksam-dong, Kangnam-ku, 135-916
Seoul, Korea
Phone: +82-2-5317 600
Telefax: +82-2-5633 725

Latvia
SIA GRUNDFOS Pumps Latvia
Deglava biznesa centrs
Augusta Deglava ielā 60, LV-1035, Rīga,
Tālr.: + 371 714 9640, 7 149 641
Fakss: + 371 914 9646

Lithuania
GRUNDFOS Pumps UAB
Smolensko g. 6
LT-03201 Vilnius
Tel: + 370 52 395 430
Fax: + 370 52 395 431

Malaysia
GRUNDFOS Pumps Sdn. Bhd.
7 Jalan Peguam U1/25
Glenmarie Industrial Park
40150 Shah Alam
Selangor
Phone: +60-3-5569 2922
Telefax: +60-3-5569 2866

Mexico
Bombas GRUNDFOS de México S.A. de C.V.
Boulevard TLC No. 15
Parque Industrial Stiva Aeropuerto
Apodaca, N.L. 66600
Phone: +52-81-8144 4000
Telefax: +52-81-8144 4010

Netherlands
GRUNDFOS Netherlands
Veluwezoom 35
1326 AE Almere
Postbus 22015
1302 CA ALMERE
Tel.: +31-88-478 6336
Telefax: +31-88-478 6332
E-mail: info_gnl@grundfos.com

New Zealand
GRUNDFOS Pumps NZ Ltd.
17 Beatrice Tinsley Crescent
North Harbour Industrial Estate
Albany, Auckland
Phone: +64-9-415 3240
Telefax: +64-9-415 3250

Norway
GRUNDFOS Pumper A/S
Strømsveien 344
Postboks 235, Leirdal
N-1011 Oslo
Tlf.: +47-22 90 47 00
Telefax: +47-22 32 21 50

Poland
GRUNDFOS Pompy Sp. z o.o.
ul. Klonowa 23
Baranowo k. Poznania
PL-62-081 Przeźmierowo
Tel: (+48-61) 650 13 00
Fax: (+48-61) 650 13 50

Portugal
Bombas GRUNDFOS Portugal, S.A.
Rua Calvet de Magalhães, 241
Apartado 1079
P-2770-153 Paço de Arcos
Tel.: +351-21-440 76 00
Telefax: +351-21-440 76 90

Romania
GRUNDFOS Pompe România SRL
Bd. Biruintei, nr 103
Pantelimon county Ilfov
Phone: +40 21 200 4100
Telefax: +40 21 200 4101
E-mail: romania@grundfos.ro

Russia
ООО Грундфос
Россия, 109544 Москва, ул. Школьная 39
Тел. (+7) 495 737 30 00, 564 88 00
Факс (+7) 495 737 75 36, 564 88 11
E-mail grundfos.moscow@grundfos.com

Serbia
GRUNDFOS Predstavništvo Beograd
Dr. Milutina Ivkovića 2a/29
YU-11000 Beograd
Phone: +381 11 26 47 877 / 11 26 47 496
Telefax: +381 11 26 48 340

Singapore
GRUNDFOS (Singapore) Pte. Ltd.
25 Jalan Tukang
Singapore 619264
Phone: +65-6681 9688
Telefax: +65-6681 9689

Slovakia
GRUNDFOS s.r.o.
Prievozská 4D
821 09 BRATISLAVA
Phona: +421 2 5020 1426
sk.grundfos.com

Slovenia
GRUNDFOS d.o.o.
Šlandrova 8b, SI-1231 Ljubljana-Črnuče
Phone: +386 1 568 0610
Telefax: +386 1 568 0619
E-mail: slovenia@grundfos.si

South Africa
Grundfos (PTY) Ltd.
Corner Mountjoy and George Allen Roads
Wilbart Ext. 2
Bedfordview 2008
Phone: (+27) 11 579 4800
Fax: (+27) 11 455 6066
E-mail: lsmart@grundfos.com

Spain
Bombas GRUNDFOS España S.A.
Camino de la Fuentecilla, s/n
E-28110 Algete (Madrid)
Tel.: +34-91-848 8800
Telefax: +34-91-628 0465

Sweden
GRUNDFOS AB
(Box 333) Lunnagårdsgatan 6
431 24 Mölndal
Tel.: +46 31 332 23 000
Telefax: +46 31-331 94 60

Switzerland
GRUNDFOS ALLDOS International AG
Schönmattstraße 4
CH-4153 Reinach
Tel.: +41-61-717 5555
Telefax: +41-61-717 5500
E-mail: grundfosalldos-CH@grundfos.com

Switzerland
GRUNDFOS Pumpen AG
Bruggacherstrasse 10
CH-8117 Fällanden/ZH
Tel.: +41-44-806 8111
Telefax: +41-44-806 8115

Taiwan
GRUNDFOS Pumps (Taiwan) Ltd.
7 Floor, 219 Min-Chuan Road
Taichung, Taiwan, R.O.C.
Phone: +886-4-2305 0868
Telefax: +886-4-2305 0878

Thailand
GRUNDFOS (Thailand) Ltd.
92 Chaloem Phrakiat Rama 9 Road,
Dokmai, Pravej, Bangkok 10250
Phone: +66-2-725 8999
Telefax: +66-2-725 8998

Turkey
GRUNDFOS POMPA San. ve Tic. Ltd. Sti.
Gebze Organize Sanayi Bölgesi
Ihsan dede Caddesi,
2. yol 200. Sokak No. 204
41490 Gebze/ Kocaeli
Phone: +90 - 262-679 7979
Telefax: +90 - 262-679 7905
E-mail: satis@grundfos.com

Ukraine
Бізнес Центр Європа
Столичне шосе, 103
м. Київ, 03131, Україна
Телефон: (+38 044) 237 04 00
Факс.: (+38 044) 237 04 01
E-mail: ukraine@grundfos.com

United Arab Emirates
GRUNDFOS Gulf Distribution
P.O. Box 16768
Jebel Ali Free Zone
Dubai
Phone: +971-4- 8815 166
Telefax: +971-4-8815 136

United Kingdom
GRUNDFOS Pumps Ltd.
Grovebury Road
Leighton Buzzard/Beds. LU7 4TL
Phone: +44-1525-850000
Telefax: +44-1525-850011

U.S.A.
GRUNDFOS Pumps Corporation
17100 West 118th Terrace
Olathe, Kansas 66061
Phone: +1-913-227-3400
Telefax: +1-913-227-3500

Uzbekistan
Grundfos Tashkent, Uzbekistan The Representative Office of Grundfos Kazakhstan in Uzbekistan
38a, Oybek street, Tashkent
Телефон: (+998) 71 150 3290 / 71 150 3291
Факс: (+998) 71 150 3292

Addresses revised 21.05.2014

be think innovate

The name Grundfos, the Grundfos logo, and **be think innovate** are registered trademarks owned by Grundfos Holding A/S or Grundfos A/S, Denmark. All rights reserved worldwide.

© Copyright Grundfos Holding A/S

95724708 1114

ECM: 1146320

www.grundfos.com

GRUNDFOS

GRUNDFOS

CRN SERIES, MULTI-STAGE CENTRIFUGAL PUMP

LEFT BLANK

CR, CRI, CRN, CRT

Installation and operating instructions

be
think
innovate

GRUNDFOS

Table of contents

English (US)
Installation and operating instructions 3

Original installation and operating instructions.

CONTENTS

		Page
1.	**Limited warranty**	**4**
2.	**Symbols used in this document**	**4**
3.	**Introduction**	**4**
4.	**Shipment inspection**	**5**
4.1	Lifting instructions	5
4.2	Ensure you have the right pump	5
4.3	Checking the condition of the pump	5
4.4	Electrical requirements	5
5.	**Identification**	**6**
5.1	Nameplate data	6
5.2	Type keys	6
6.	**Applications**	**9**
7.	**Operating conditions**	**9**
7.1	Ambient temperature and altitude	9
7.2	Liquid temperatures	9
7.3	Minimum inlet pressures	9
7.4	Maximum inlet pressures	10
7.5	Maximum operating pressures	11
8.	**Installation**	**12**
8.1	Pump location	12
8.2	Foundation	12
8.3	Pump mounting	13
8.4	Suction pipe	13
8.5	Discharge pipe	13
8.6	Bypass	14
8.7	Flange forces and torques	14
8.8	Minimum continuous duty flow rates [gpm]	15
8.9	Check valves	16
8.10	Temperature rise	16
8.11	Electrical connection	16
8.12	Motors	16
8.13	Position of terminal box	16
8.14	Field wiring	16
8.15	Motor protection	17
9.	**Commissioning**	**17**
9.1	Priming	17
9.2	Startup	18
10.	**Operation**	**18**
10.1	Operating parameters	18
10.2	Pump cycling	18
10.3	Boiler feed installations	18
10.4	Frost protection	18
11.	**Maintaining the pump**	**18**
12.	**Maintaining the motor**	**19**
12.1	Motor inspection	19
12.2	Motor lubrication	19
12.3	Recommended lubricant	19
12.4	Lubricating chart (for motors with grease zerks)	19
12.5	Lubricating procedure	20
13.	**Replacing the motor**	**20**
13.1	Disassembly	20
13.2	Assembly	20
14.	**Parts list**	**23**
14.1	Spare parts	23
15.	**Preliminary electrical tests**	**23**
15.1	Supply voltage	23
15.2	Current	24
15.3	Insulation resistance	24
16.	**Startup of pump with air-cooled top (Cool-Top®)**	**25**
17.	**Diagnosing specific problems**	**26**
18.	**Worksheet for three-phase motors**	**29**
19.	**Disposal**	**29**

Warning

Prior to installation, read these installation and operating instructions. Installation and operation must comply with local regulations and accepted codes of good practice.

Warning

Electrical work: All electrical work should be performed by a qualified electrician in accordance with the latest edition of national, state, and local codes and regulations.

Warning

Shock Hazard: A faulty motor or wiring can cause electrical shock that could be fatal, whether touched directly or conducted through standing water. For this reason, proper grounding of the pump to the power supply's grounding terminal is required for safe installation and operation. In all installations, the above-ground metal plumbing should be connected to the power supply ground as described in Article 250-80 of the National Electrical Code.

1. Limited warranty

Products manufactured by GRUNDFOS PUMPS CORPORATION (Grundfos) are warranted to the original user only to be free of defects in material and workmanship for a period of 24 months from date of installation, but not more than 30 months from date of manufacture. Grundfos' liability under this warranty shall be limited to repairing or replacing at Grundfos' option, without charge, F.O.B. Grundfos' factory or authorized service station, any product of Grundfos' manufacture. Grundfos will not be liable for any costs of removal, installation, transportation, or any other charges which may arise in connection with a warranty claim. Products which are sold but not manufactured by Grundfos are subject to the warranty provided by the manufacturer of said products and not by Grundfos' warranty. Grundfos will not be liable for damage or wear to products caused by abnormal operating conditions, accident, abuse, misuse, unauthorized alteration or repair, or if the product was not installed in accordance with Grundfos' printed installation and operating instructions.

To obtain service under this warranty, the defective product must be returned to the distributor or dealer of Grundfos' products from which it was purchased together with proof of purchase and installation date, failure date, and supporting installation data. Unless otherwise provided, the distributor or dealer will contact Grundfos or an authorized service station for instructions.
Any defective product to be returned to Grundfos or a service station must be sent freight prepaid; documentation supporting the warranty claim and/or a Return Material Authorization must be included if so instructed.

GRUNDFOS WILL NOT BE LIABLE FOR ANY INCIDENTAL OR CONSEQUENTIAL DAMAGES, LOSSES, OR EXPENSES ARISING FROM INSTALLATION, USE, OR ANY OTHER CAUSES. THERE ARE NO EXPRESS OR IMPLIED WARRANTIES, INCLUDING MERCHANTABILITY OR FITNESS FOR A PARTICULAR PURPOSE, WHICH EXTEND BEYOND THOSE WARRANTIES DESCRIBED OR REFERRED TO ABOVE.

Some jurisdictions do not allow the exclusion or limitation of incidental or consequential damages and some jurisdictions do not allow limit actions on how long implied warranties may last. Therefore, the above limitations or exclusions may not apply to you. This warranty gives you specific legal rights and you may also have other rights which vary from jurisdiction to jurisdiction.

2. Symbols used in this document

Warning

If these safety instructions are not observed, it may result in personal injury.

Warning

If these instructions are not observed, it may lead to electric shock with consequent risk of serious personal injury or death.

Caution ***If these safety instructions are not observed, it may result in malfunction or damage to the equipment.***

Note ***Notes or instructions that make the job easier and ensure safe operation.***

3. Introduction

The CR range is based on the inline multistage centrifugal pump first pioneered by Grundfos. CR is available in four basic materials and over one million configurations. CR is suitable for pumping water and water-like liquids in industry, petrochemical plants, water treatment plants, commercial buildings, and many other applications. Some of the outstanding characteristics of CR are:

- superior efficiency
- reliability
- easy maintenance
- compact size and small footprint
- quiet operation.

4. Shipment inspection

Examine the components carefully to make sure no damage has occurred to the pump during shipment. Ensure that the pump is NOT dropped or mishandled.

4.1 Lifting instructions

Caution ***Do not use the lifting eyes of the motor for lifting the entire pump and motor assembly.***

Lift pump assembly with lifting straps that pass through the motor stool. Ensure that the load is not applied to the pump shaft.

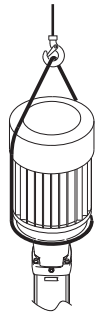

TM04 0339 0608

Fig. 1 Correct lifting of a CR pump

4.2 Ensure you have the right pump

Check the pump nameplate to make sure that it is the one you ordered.

- **CR:** Centrifugal pump; all parts in contact with the pumped liquid are made of standard cast iron and AISI 304 stainless steel
- **CRI:** Centrifugal pump; all parts in contact with the pumped liquid are made of AISI 304 stainless steel
- **CRN:** Centrifugal pump; all parts in contact with the pumped liquid are made of AISI 316 stainless steel
- **CRT:** Centrifugal pump; all parts in contact with the pumped liquid are made of titanium
- **CRE:** Centrifugal pump with a Grundfos MLE variable frequency drive motor.

4.3 Checking the condition of the pump

The packing in which your pump arrived is specially designed for your pump to prevent damage during shipment. As a precaution, leave the pump in the packing until you are ready to install it. Examine the pump for any damage that may have occurred during shipping. Examine any other parts of the shipment as well for any visible damage.

Note ***If the shipment consists of a complete unit (motor attached to pump end), the position of the coupling connecting the pump shaft to the motor shaft is set to factory specifications.***
No adjustment is required. If the shipment is a pump end without motor, follow the adjustment procedures in section 13. Replacing the motor.

Pump without motor (CR, CRI, CRN 1s, 1, 3, 5, 10, 15, and 20 only):

If you purchased a pump end without motor, the shaft seal has been set from factory. Do not loosen the three set screws on the shaft seal when attaching the motor.

Pump without motor (CR, CRN 32, 45, 64, 90, 120, and 150 only):

If you purchased a pump end without motor, you must install the shaft seal. The shaft seal is protected in its own box inside the pump packing crate. To protect the shaft and bearings during shipment, a transport protector is used. Remove the transport protector prior to installation of the shaft seal. Read the seal installation instructions which are included in the pump packing.

4.4 Electrical requirements

Warning

Electrical work: All electrical work should be performed by a qualified electrician in accordance with the current national, state, and local codes and regulations.

Warning

Shock hazard: A faulty motor or faulty wiring can cause electric shock that could be fatal, whether the motor is touched directly or the current is conducted through standing water. For this reason, safe installation and operation require proper grounding of the pump to the power supply ground (earth) terminal.

In all installations, connect the above-ground metal plumbing to the power supply ground terminal as described in Article 250-80 of the National Electrical Code.

Verify the power supply to make sure that the voltage, phases and frequency match those of the pump. The proper operating voltage and other electrical information appear on the motor nameplate. These motors are designed to run on - 10 %/+ 10 % of the rated nameplate voltage. For dual-voltage motors, the motor should be internally connected to operate on the voltage closest to the 10 % rating, i.e., a 208 V motor should be wired according to the 208 V wiring diagram. The wiring diagram can be found on either a plate attached to the motor or on a label inside the terminal box cover.

Caution ***Do not operate the pump if voltage variations are greater than - 10 % /+ 10 %.***

5. Identification

5.1 Nameplate data

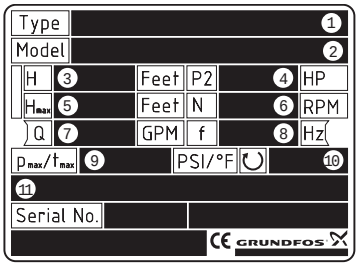

1. Type designation
2. Model, material number, production number
3. Head in feet at rated flow
4. Rated motor hp
5. Head at zero flow
6. Rated rpm
7. Rated flow
8. Rated frequency
9. Maximum pressure and maximum liquid temperature
10. Direction of rotation
11. Production country

TM04 3895 2609

Fig. 1 Example of nameplate CR, CRI, CRN, CRT

Specification of the model line in nameplates:

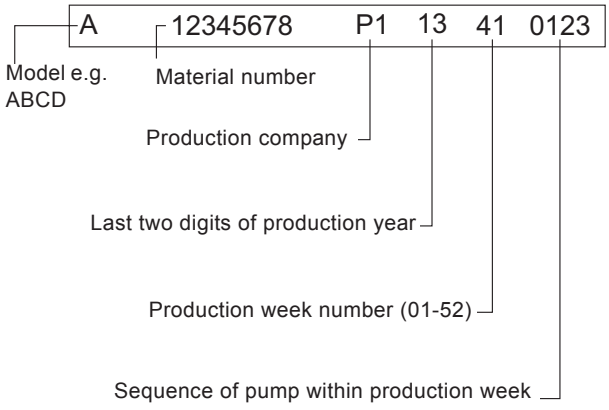

TM04 3904 3913

Fig. 2 Key to model line in nameplates

5.2 Type keys

5.2.1 CR, CRI, CRN 1s, 1, 3, 5, 10, 15, and 20

Example	CR 3-	10	A	FG	A	E	HQQE
Type range: CR, CRI, CRN							
Rated flow rate in [m^3/h] (x 5 gpm)							
Number of impellers							
Code for pump version							
Code for pipe connection							
Code for materials							
Code for rubber parts							
Code for shaft seal							

5.2.2 CR, CRN 32, 45, 64, 90, 120, and 150

Example	CR 32-	2-	1	A	G	A	E	KUBE
Pump range: CR, CRN								
Rated flow rate in [m^3/h] (x 5 gpm)								
Number of impellers								
Number of reduced-diameter impellers								
Code for pump version								
Code for pipe connection								
Code for materials								
Code for rubber parts								
Code for shaft seal								

5.2.3 CRT 2, 4, 8, and 16

Example	CRT	16-	30	/2	A	G	A	AUUE
Pump range: CRT								
Rated flow rate in [m^3/h] (x 5gpm)								
Number of stages x 10								
Code for impellers (used only if the pump has fewer impellers than stages)								
Code for pump version								
Code for pipe connection								
Code for materials								
Code for shaft seal and rubber parts								

5.2.4 Codes

Example		A	-G	-A	-E	-H	QQ	E
Pump version								
A	Basic version[1)]							
B	Oversize motor							
E	Certificate/approval							
F	CR pump for high temperatures (air-cooled top assembly)							
H	Horizontal version							
HS	High-pressure pump with high-speed MLE motor							
I	Different pressure rating							
J	Pump with different max. speed							
K	Pump with low NPSH							
M	Magnetic drive							
N	Fitted with sensor							
P	Undersize motor							
R	Horizontal version with bearing bracket							
SF	High-pressure pump							
T	Oversize motor (two flange sizes bigger)							
U	NEMA version[1)]							
X	Special version[2)]							
Pipe connection								
A	Oval flange, Rp thread							
B	Oval flange, NPT thread							
CA	FlexiClamp (CRI(E), CRN(E) 1, 3, 5, 10, 15, 20)							
CX	Triclamp (CRI(E), CRN(E) 1, 3, 5, 10, 15, 20)							
F	DIN flange							
G	ANSI flange							
J	JIS flange							
N	Changed diameter of ports							
P	PJE coupling							
X	Special version							
Materials								
A	Basic version							
D	Carbon-graphite filled PTFE (bearings)							
G	Wetted parts, AISI 316							
GI	All parts stainless steel, wetted parts, AISI 316							
I	Wetted parts, AISI 304							
II	All parts stainless steel, wetted parts, AISI 304							
K	Bronze (bearings)							
S	SiC bearings + PTFE neck rings							
X	Special version							
Code for rubber parts								
E	EPDM							
F	FXM							
K	FFKM							
V	FKM							

Example		A	-G	-A	-E	-H	QQ	E
Shaft seal								
A	O-ring seal with fixed driver							
B	Rubber bellows seal							
E	Cartridge seal with O-ring							
H	Balanced cartridge seal with O-ring							
K	Metal bellows cartridge seal							
O	Double seal, back-to-back							
P	Double seal, tandem							
X	Special version							
B	Carbon, synthetic resin-impregnated							
H	Cemented tungsten carbide, embedded (hybrid)							
Q	Silicon carbide							
U	Cemented tungsten carbide							
X	Other ceramics							
E	EPDM							
F	FXM							
K	FFKM							
V	FKM							

1) In August 2003 the NEMA version pump code was discontinued for all material numbers created by Grundfos manufacturing companies in North America. The NEMA version pump code will still remain in effect for existing material numbers. NEMA version pumps built in North America after this change will have either an A or a U as the pump version code depending on the date the material number was created.

2) If a pump incorporates more than two pump versions, the code for the pump version is X. X also indicates special pump versions not listed above.

6. Applications

Compare the pump's nameplate data or its performance curve with the application in which you plan to install it. Make sure the application falls within the following limits.

Type	Application/liquid
CR	Hot and chilled water, boiler feed, condensate return, glycols and solar thermal liquids.
CRI/CRN	Deionized, demineralized and distilled water. Brackish water and other liquids unsuitable for contact with iron or copper alloys. (Consult manufacturer for specific liquid compatibilities.)
CRN-SF	High-pressure washdown, reverse osmosis or other high-pressure applications.
CRT	Salt water, chloride based liquids and liquids approved for titanium.

7. Operating conditions

7.1 Ambient temperature and altitude

If the ambient temperature exceeds the maximum temperature limits of the pump or the pump is installed at an altitude exceeding the altitude values in the chart below, the motor must not be fully loaded due to the risk of overheating.

Overheating may result from excessive ambient temperatures or the low density and consequently low cooling effect of the air at high altitudes. In such cases, it may be necessary to use a motor with a higher rated output (P_2).

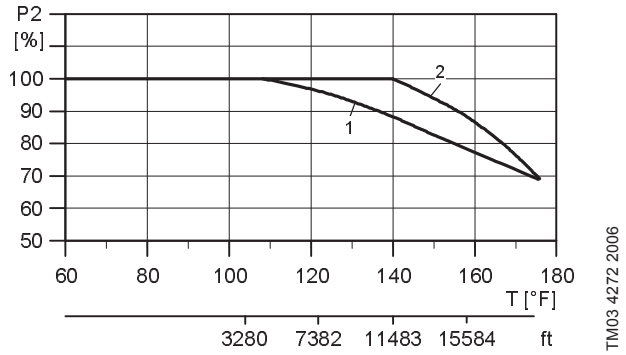

Fig. 3 Relationship between motor output (P_2) and ambient temperature/altitude

Legend

Pos.	Description
1	NEMA standard-efficiency motors
2	NEMA premium-efficiency motors

Example: From fig. 3 it appears that P_2 must be reduced to 88 % when a pump with a NEMA premium-efficiency ML motor is installed 15,584 feet above sea level. At an ambient temperature of 167 °F, P_2 of a standard-efficiency motor must be reduced to 74 % of rated output.

In cases where both the maximum temperature and the maximum altitude are exceeded, the derating factors must be multiplied. Example: 0.89 x 0.89 = 0.79.

7.2 Liquid temperatures

Pump	Liquid temperature
CR, CRI, CRN 1s, 3, 5, 10, 15, and 20	-4 - +248 °F (-20 - +120 °C)
CR, CRN 32, 45, 64, and 90*	-22 - +248 °F (-30 - +120 °C)
CR, CRN 120 and 150* (up to 60 hp)	-22 - +248 °F (-30 - +120 °C)
CR, CRN 120 and 150 (75 and 100 hp)	32-248 °F (0-120 °C)
CRT 2, 4, 8, 16	-4 - +248 °F (-20 - +120 °C)
CRN-SF	-4 - +221 °F (-15 - +105 °C)
Pumps with Cool-Top™	up to 356 °F (180 °C)

All motors are designed for continuous duty in 104 °F (40 °C) ambient air conditions. For higher ambient temperature conditions, consult Grundfos.

* We recommend xUBE shaft seals for temperatures above 200 °F. Pumps with KUHE hybrid shaft seals can only operate up to 200 °F (90 °C). Pumps with xUUE shaft seals can be operated down to -40 °F (-40 °C). ("x" is the seal type).

7.3 Minimum inlet pressures

All CR, CRI, CRN	NPSHR + 2 feet
CRN-SF	29 psi (2 bar)

7.4 Maximum inlet pressures

Pump type	Stages		Max. [psi (bar)]
	60 Hz	50 Hz	
CR, CRI, CRN 1s	2-27	2-36	145 (10)
CR, CRI, CRN 1	2-25	2-36	145 (10)
	27		217 (15)
CR, CRI, CRN 3	2-17	2-29	145 (10)
	19-25	31-36	217 (15)
CR, CRI, CRN 5	2-9	3-16	145 (10)
	10-24	18-36	217 (15)
CR, CRI, CRN 10	1-5	1-6	116 (8)
	6-17	7-22	145 (10)
CR, CRI, CRN 15	1-2	1-3	116 (8)
	3-12	4-17	145 (10)
CR, CRI, CRN 20	1	1-3	116 (8)
	2-10	4-17	145 (10)
CR, CRN 32	1-1 - 2	1-1 - 4	58 (4)
	3-2 - 6	5-2 - 10	145 (10)
	7-2 - 11-2	11-14	217 (15)
CR, CRN 45	1-1 - 1	1-1 - 2	58 (4)
	2-2 - 3	3-2 - 5	145 (10)
	4-2 - 8-1	6-2 - 13-2	217 (15)
CR, CRN 64	1-1	1-1 - 2-2	58 (4)
	1 - 2-1	2-1 - 4-2	145 (10)
	2 - 5-2	4-1 - 8-1	217 (15)
CR, CRN 90		1-1 - 1	58 (4)
	1-1 - 1	2-2 - 3-2	145 (10)
	2-2 - 4-1	3-6	217 (15)
CR, CRN 120	1-1 - 1	1 - 2-1	145 (10)
	2-2 - 3	2 - 5-1	217 (15)
	4-1 - 5-1	6-1 - 7	290 (20)
CR, CRN 150	1-1	1-1 - 1	145 (10)
	1-2	2-1 - 4-1	217 (15)
	3-2 - 4-2	5-2 - 6	290 (20)
CRT 2	2-6	2-11	145 (10)
	7-18	13-26	217 (15)
CRT 4	1-7	1-12	145 (10)
	8-16	14-22	217 (15)
CRT 8	1-16	1-20	145 (10)
CRT 16	2-10	2-16	145 (10)
CRN-SF	all	all	72 (5)*
			362 (25)**

* While pump is off or during start-up.

** During operation.

7.5 Maximum operating pressures

250 °F (194 °F for CRN-SF)

Pump type/ connection	Stages		Max. [psi (bar)]
	60 Hz	50 Hz	
CR, CRI, CRN 1s			
Oval flange	1-17	1-23	232 (16)
FGJ, PJE	1-27	1-36	362 (25)
CR, CRI, CRN 1			
Oval flange	1-17	1-23	232 (16)
FGJ, PJE	1-27	1-36	362 (25)
CR, CRI, CRN 3			
Oval flange	1-17	1-23	232 (16)
FGJ, PJE	1-27	1-36	362 (25)
CR, CRI, CRN 5			
Oval flange	1-16	1-22	232 (16)
FGJ, PJE	1-24	1-36	362 (25)
CR, CRI 10			
Oval flange CR	1-6		145 (10)
Oval flange, CRI	1-10	1-16	232 (16)
FGJ, GJ, PJE	1-10	1-16	232 (16)
FGJ, GJ, PJE	12-17	17-22	362 (25)
CRN 10			
All	1-17	1-22	362 (25)
CR, CRI 15			
Oval flange	1-5	1-7	145 (10)
FGJ, GJ, PJE	1-8	1-10	232 (16)
FGJ, GJ, PJE	9-12	12-17	362 (25)
CRN 15			
All	1-12	1-17	362 (25)
CR, CRI 20			
Oval flange	1-5	1-7	145 (10)
FGJ, GJ, PJE	1-7	1-10	232 (16)
FGJ, GJ, PJE	8-10	12-17	362 (25)
CRN 20			
All	1-10	1-17	362 (25)
CR, CRN 32			
	1-1 - 5	1-1 - 7	232 (16)
	6-2 - 11-2	8-2 - 14	435 (30)
CR, CRN 45			
	1-1 - 4-2	1-1 - 5	232 (16)
	4-2 - 8-1	6-2 - 13-2	435 (30)
CR, CRN 64			
	1-1 - 3	1-1 - 5	232 (16)
	4-2 - 5-2	6-2 - 8-1	435 (30)
CR, CRN 90			
	1-1 - 3	1-1 - 4	232 (16)
	4-2 - 4-1	5-2 - 6	435 (30)
CR, CRN 120			
	1-1 - 3		232 (16)
	4-2 - 5-2	1-1 - 5-2	435 (30)
CR, CRN 150			
	1-1 - 3		232 (16)
	4-1 - 4-2	1-1 - 4-2	435 (30)
CRT 2	2-18	2-26	305 (21)
CRT 4	1-16	1-22	305 (21)
CRT 8	1-8	1-12	232 (16)
	10-16	14-20	362 (25)
CRT 16	1-8	1-8	232 (16)
	10-12	10-16	362 (25)

Consult Grundfos in case of other operating conditions.

8. Installation

Warning

Do not turn on the power supply until the pump is properly installed.

8.1 Pump location

Locate the pump in a dry, well-ventilated, frost-free area which is not subject to extreme variation in temperature.

Make sure the pump is mounted at least 6 inches (150 mm) clear of any obstruction or hot surfaces.

The motor requires an adequate air supply to prevent overheating and adequate vertical space to remove the motor for repair.

In open systems requiring suction lift, locate the pump as close to the liquid source as possible to reduce friction loss in pipes.

8.2 Foundation

Use concrete or similar foundation material to provide a secure, stable mounting base for the pump.

See table below for bolt hole center line dimensions for the various pump types.

Secure the pump to the foundation using all four bolts and shim pump base to assure the pump is vertical and all four pads on the base are properly supported (uneven surfaces can result in pump base breakage when mounting bolts are tightened).

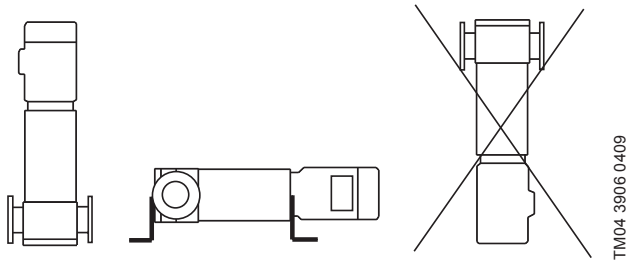

Fig. 4 Pump position

The pump can be installed vertically or horizontally. See fig. 4.

Ensure that an adequate supply of cool air reaches the motor cooling fan. The motor must never fall below the horizontal plane.

Arrows on the pump base show the direction of flow of liquid through the pump.

To minimize possible noise from the pump, it is advisable to fit expansion joints on either side of the pump and anti-vibration mountings between the foundation and the pump.

Note ***Make sure the vent plug is located in the uppermost position.***

Fit isolating valves on either side of the pump to avoid draining the system if the pump needs to be cleaned, repaired or replaced.

Base and bolt hole center line dimensions

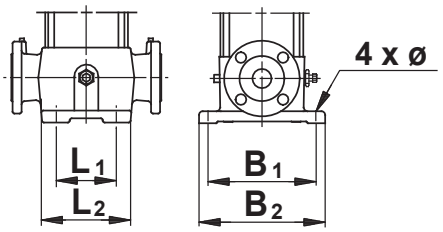

Pump type	L1		L2		B1		B2		ø	
	[inches]	[mm]	[inches]	[mm]	[inches]	[mm]	[inches]	[mm]	[inches]	[mm]
CR 1s, 1, 3, 5	3 15/16	100	5 11/16	145	7 1/16	180	8 11/16	220	1/2	13
CRI, CRN 1s 1, 3, 5 CRT 2, 4	3 15/16	100	5 7/8	150	7 1/16	180	8 11/16	220	1/2	13
CR 10, 15, 20	5 1/8	130	6 15/16	176	8 7/16	215	10 1/16	256	9/16	13.5
CRN 10, 15, 20 CRT 8, 16	5 1/8	130	7 7/8	200	8 7/16	215	9 3/4	248	1/2	13
CR 32	6 11/16	170	8 3/4	223	9 7/16	240	11 3/4	298	9/16	14
CRN 32	6 11/16	170	8 7/8	226	9 7/16	240	11 3/4	298	9/16	14
CR 45, 64	7 1/2	190	9 3/4	248	10 1/2	266	13 1/16	331	9/16	14
CRN 45, 64	7 1/2	190	9 7/8	251	10 1/2	266	13 1/16	331	9/16	14
CR, CRN 90	7 13/16	199	10 1/4	261	11	280	13 11/16	348	9/16	14
CR, CRN 120, 150	10 13/16	275	13 9/16	344	14 15/16	380	18 9/16	472	11/16	18

8.3 Pump mounting

Warning

CR, CRI, CRN pumps are shipped with covered suction and discharge ports. Remove the covers before the pipes are connected to the pump.

8.3.1 Recommended installation torques

Pump type	Recommended foundation torque [ft-lbs]	Recommended flange torque [ft-lbs]
CR, CRI, CRN 1s/1/3/ 5 and CRT 2/4	30	37-44
CR, CRI, CRN 10/15/ 20 and CRT 8/16	37	44-52
CR, CRN 32/45/64/90/ 120/150	52	52-59

8.4 Suction pipe

The suction pipe should be adequately sized and run as straight and short as possible to keep friction losses to a minimum (minimum of four pipe diameters straight run prior to the suction flange). Avoid using unnecessary fittings, valves or accessory items. Use butterfly valves in the suction line only when it is necessary to isolate a pump because of a flooded suction condition. This would occur if the water source is above the pump. See fig. 5 and fig. 6. Flush piping prior to pump installation to remove loose debris.

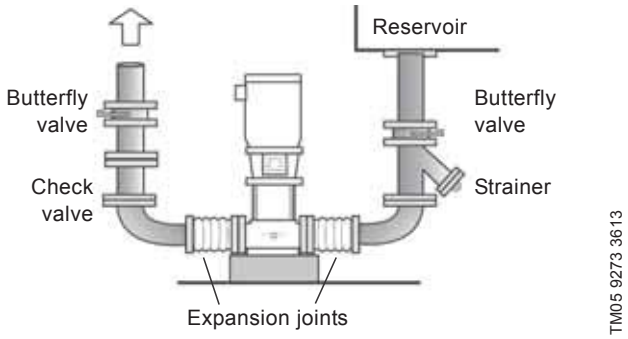

Fig. 5 Flooded suction

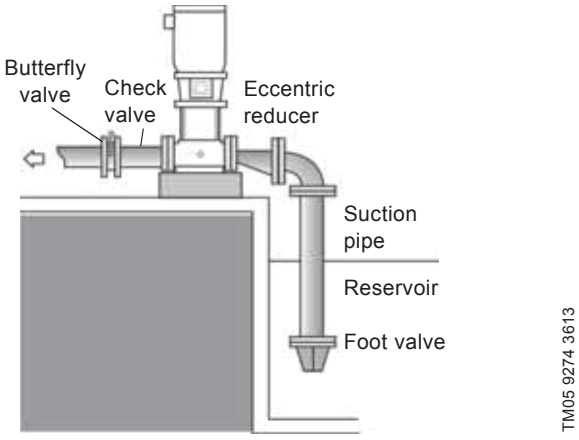

Fig. 6 Suction lift*

* The suction pipe should have a fitting on it for priming. CRN-SF pumps cannot be used for suction lift.

8.4.1 Suction pipe sizes

The following recommended suction pipe sizes are the smallest sizes which should be used with any specific CR pump type.

Verify the suction pipe size in each installation to ensure that good pipe practices are being observed and excess friction losses are not encountered.

High temperatures may require larger diameter pipes to reduce friction and improve NPHSA.

Pump type	Min. suction pipe size	
CR, CRI, CRN 1s, 1, 3; CRT 2	1"	Nominal diameter acc. to ANSI schedule 40
CR, CRI, CRN 5; CRT 4	1 - 1/4"	Nominal diameter acc. to ANSI schedule 40
CR, CRI, CRN 10, 15, 20; CRT 8, 16	2"	Nominal diameter acc. to ANSI schedule 40
CR, CRN 32	2 - 1/2"	Nominal diameter acc. to ANSI schedule 40
CR, CRN 45	3"	Nominal diameter acc. to ANSI schedule 40
CR, CRN64, 90	4"	Nominal diameter acc. to ANSI schedule 40
CR, CRN 120, 150	5"	Nominal diameter acc. to ANSI schedule 40

8.5 Discharge pipe

We suggest to install a check valve and a isolating valve in the discharge pipe.

Pipe, valves and fittings should be at least the same diameter as the discharge pipe or sized in accordance with good piping practices to reduce excessive flow velocities and friction losses in pipes.

Caution ***The pressure rating of pipes, valves and fittings must be equal to or greater than the maximum system pressure.***

Before installing the pump, pressure check the discharge piping to at least the maximum pressure the pump is capable of generating or as required by codes or local regulations.

Whenever possible, avoid high pressure-loss fittings, such as elbows or branch tees directly on either side of the pump. The piping should be adequately supported to reduce thermal and mechanical stresses on the pump.

According to good installation practices, clean the system thoroughly and flush it of all foreign materials and sediment prior to pump installation. Furthermore, never install the pump at the lowest point of the system due to the natural accumulation of dirt and sediment. If there is excessive sediment or suspended particles, we recommend that a strainer or filter is used. Grundfos recommends that pressure gauges are installed on suction and discharge flanges or in pipes to monitor pump and system performance.

Warning

To avoid problems with water hammer, do not use quick-closing valves in CRN-SF applications.

8.6 Bypass

Install a bypass in the discharge pipe if there is any risk that the pump may operate against a closed valve in the discharge line. Flow through the pump is required to ensure that adequate cooling and lubrication of the pump is maintained.
See *7.3 Minimum inlet pressures* for minimum flow rates.

Elbows should be at least 12" from the bypass opening to prevent erosion.

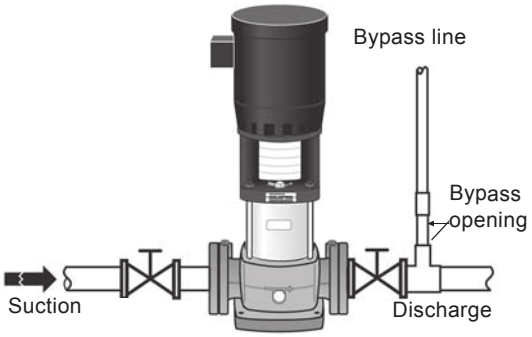

TM04 3926 3613

Fig. 7 Recommended bypass arrangement

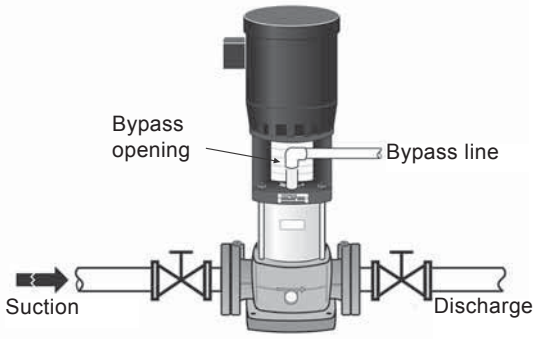

TM04 3909 3613

Fig. 8 Optional bypass arrangement

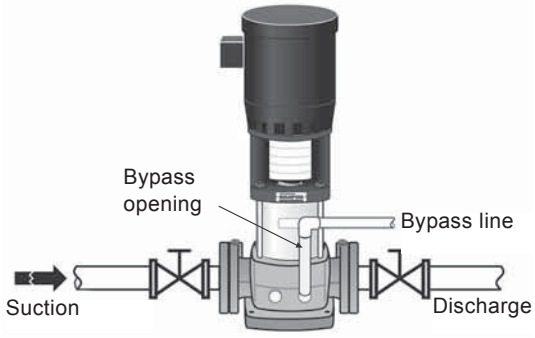

TM04 3924 0409

Fig. 9 Optional bypass arrangement for CR, CRN 32, 45, 64 and CR 90, 120 and 150 only

8.7 Flange forces and torques

If not all loads reach the maximum permissible value stated in the tables after fig. 10, one of these values may exceed the normal limit. Contact Grundfos for further information.

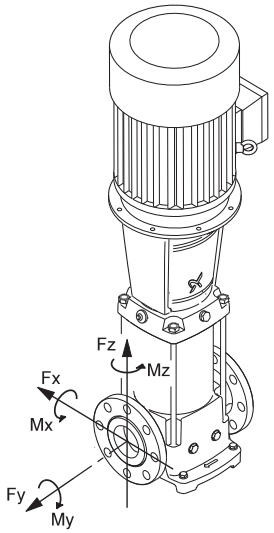

Y-direction: Direction of chamber stack
Z-direction: 90 ° from inlet/outlet
X-direction: Inlet/outlet

TM04 0346 1613

Fig. 10 Flange forces and torques

Flange	CR, CRI, CRN	Force [F]		
		Y-direction [lb]	Z-direction [lb]	X-direction [lb]
1 1/4"	1s to 5	171	263	175
2"	10, 15 and 20	303	371	337
2 1/2"	32	382	466	422
3"	45	461	562	506
4"	64 and 90	607	753	674
5", 6"	120 and 150	607	753	674

Flange	CR, CRI, CRN	Torque [M]		
		Y-direction [ft-lb]	Z-direction [ft-lb]	X-direction [ft-lb]
1 1/4"	1s to 5	605	715	900
2"	10, 15 and 20	738	848	1,033
2 1/2"	32	793	904	1,106
3"	45	848	959	1,180
4"	64 and 90	922	1,069	1,291
5", 6"	120 and 150	922	1,069	1,291

8.8 Minimum continuous duty flow rates [gpm]

Pump type	min. °F to 176 °F (min. °C to 80 °C)	at 210 °F (at 99 °C)	at 248 °F (at 120 °C)	at 356 °F (at 180 °C)
CR, CRI, CRN 1s	0.5	0.7	1.2	1.2*
CR, CRI, CRN 1	0.9	1.3	2.3	2.3*
CR, CRI, CRN 3	1.6	2.4	4.0	4.0*
CR, CRI, CRN 5	3.0	4.5	7.5	7.5*
CR, CRI, CRN 10	5.5	8.3	14	14*
CR, CRI, CRN 15	9.5	14	24	24*
CR, CRI, CRN 20	11	17	28	28*
CR, CRN 32	14	21	35	35*
CR, CRN 45	22	33	55	55*
CR, CRN 64	34	51	85	85*
CR, CRN 90	44	66	110	110*
CR, CRN 120	60	90	N/A	N/A
CR, CRN 150	75	115	N/A	N/A
CRT 2	1.3	2.0	3.3	N/A
CRT 4	3.0	4.5	7.5	N/A
CRT 8	4.0	6.0	10	N/A
CRT 16	8.0	12	20	N/A

* Grundfos Cool-Top® is only available in the following pump types:

Pump type	CR 1s	CR 1	CR 3	CR 5	CR 10	CR 15	CR 20	CR 32	CR 45	CR 64	CR 90
Standard (CR)								●	●	●	●
I version (CRI)	●	●	●	●	●	●	●				
N version (CRN)	●	●	●	●	●	●	●	●	●	●	●

8.9 Check valves

A check valve may be required on the discharge side of the pump to prevent the pump inlet pressure from being exceeded.

When a pump with no check valve is stopped because there is no demand on the system (all valves are closed), the high system pressure on the discharge side of the pump will "find" its way back to the inlet of the pump.

This is especially critical for CRN-SF applications because of the very high discharge pressures involved. As a result, most CRN-SF installations require a check valve on the discharge piping.

8.10 Temperature rise

It may sometimes be necessary to stop the flow through a pump during operation.

When the flow is stopped, the power to the pump is transferred to the pumped liquid as heat, causing a temperature rise in the liquid.

The result is risk of overheating and consequent damage to the pump. The risk depends on the temperature of the pumped liquid and for how long the pump is operating without flow. See the following temperature rise table.

Pump type	Time for temperature rise of 18 °F (10 °C)	
	Seconds	Minutes
CR 1s, 1, 3	210	3.5
CR 5	240	4.0
CR 10	210	3.5
CR 15	150	2.5
CR 20	120	2.0
CR 32, 45, 64, 90, 120, 150	60	1.0

Conditions/reservations

The listed times are subject to the following conditions/ reservations:

- No exchange of heat with the surroundings.
- The pumped liquid is water with a specific heat capacity of 1.0 $^{Btu}/_{lb.}$ °F (4.18 $^{kJ}/_{kg}$ °C).
- Pump parts (chambers, impellers and shaft) have the same heat capacity as water.
- The water in the base and the pump head is not included.

These reservations should give sufficient safety margin against excessive temperature rise.

The maximum temperature must not exceed the pump maximum temperature rating.

8.11 Electrical connection

Warning

The safe operation of this pump requires that it is grounded in accordance with the National Electrical Code and local codes and regulations. Connect the ground conductor to the grounding screw in the terminal box and then to the ACCEPTABLE grounding point. All electrical work must be performed by a qualified electrician in accordance with the latest edition of the National Electrical Code and local codes and regulations.

8.12 Motors

Grundfos CR pumps are supplied with heavy-duty, 2-pole (3600 rpm), ODP (open drip-proof) or TEFC (totally enclosed fan cooled), NEMA C frame motors selected to our rigid specifications.

Motors with other enclosure types and for other voltages and frequencies are available on a special-order basis.

CRN-SF pumps are supplied with an IEC (metric) type motor with a reverse thrust bearing.

If you replace the pump, but keep a motor previously used on another CR pump, be sure to read *12. Maintaining the motor* for proper adjustment of the coupling height.

8.13 Position of terminal box

The motor terminal box can be turned to any of four positions in steps of 90 °.

To rotate the terminal box, remove the four bolts securing the motor to the pump but do not remove the coupling. Turn the motor to the desired position; replace and securely tighten the four bolts. See fig. 11.

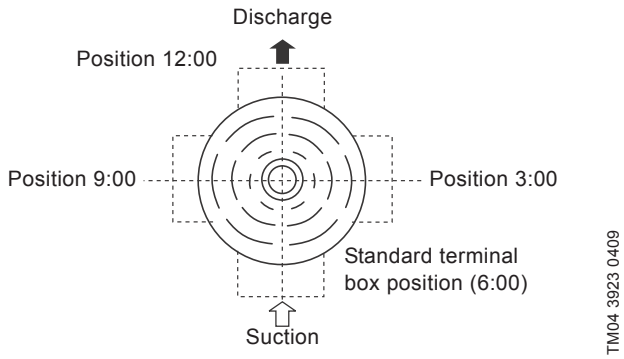

Fig. 11 Motor terminal box positions (top view)

8.14 Field wiring

Lead sizes should be based on the current carrying properties of conductors required by the latest edition of the National Electrical Code or local regulations. Direct-on-line (DOL) starting is approved due to the extremely short run-up time of the motor and the low moment of inertia of the pump and motor. If DOL starting is not acceptable and reduced starting current is required, use an auto transformer, resistance starter or soft starter. We suggest to use a fused disconnect for each pump in case standby pumps are installed.

8.15 Motor protection

8.15.1 Single-phase motors

All CR pumps with single phase motors, except 10 hp, are equipped with multi-voltage, squirrel cage induction motors which include built-in thermal protection.

8.15.2 Three-phase motors

CR pumps with three-phase motors must be used with the proper size and type of motor-protective circuit breaker to ensure the motor is protected against damage from low voltage, phase failure, current unbalance and overloads.

Use a properly sized circuit breaker with manual reset and ambient-temperature compensated extra-quick trip in all three phases. The overload protection should be set and adjusted to the full-load current rating of the motor. Under no circumstances should the overload protection be set to a higher value than the full-load current shown on the motor nameplate. This will void the warranty.

Set overload protection for auto transformers and resistance starters in accordance with the recommendations of the manufacturer.

Three-phase MLE motors (CRE-pumps) require only fuses as circuit breaker. They do not require a motor-protective circuit breaker. Check for phase unbalance (worksheet is provided. See section *18. Worksheet for three-phase motors*).

Caution ***Standard allowable phase unbalance is 5 %.***

8.15.3 CRN-SF

The CRN-SF is typically operated in series with a feed pump. Because the maximum allowable inlet pressure of the CRN-SF increases from 73 psi (when pump is off and during start-up) to 365 psi (during operation), use a control device to start the CRN-SF pump one second before the feed pump starts. Similarly, the CRN-SF must stop one second after the feed pump stops. See CRN-SF start-up timeline below.

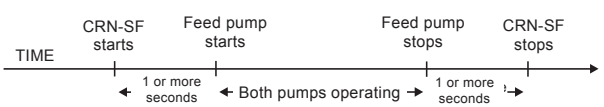

Fig. 12 CRN-SF start-up

9. Commissioning

9.1 Priming

To prime the pump in a closed system or an open system where the water source is above the pump, close the pump isolating valve(s) and open the priming plug on the pump head. See fig. 13, fig. 14, and fig. 15.

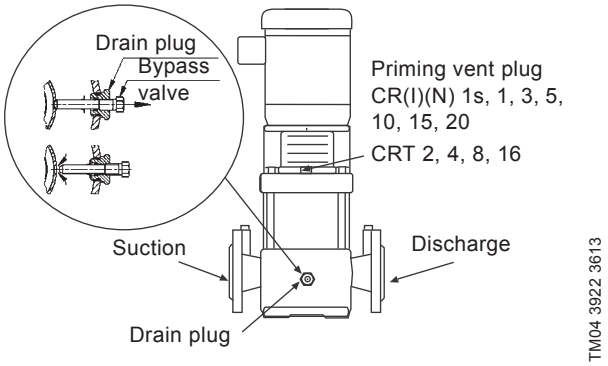

Fig. 13 Position of plugs and bypass valve

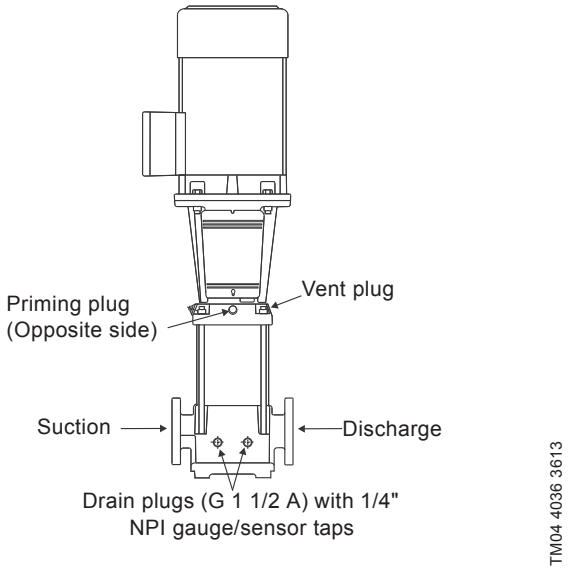

Fig. 14 Position of plugs CR, CRN 32, 45, 64, 90, 120, 150

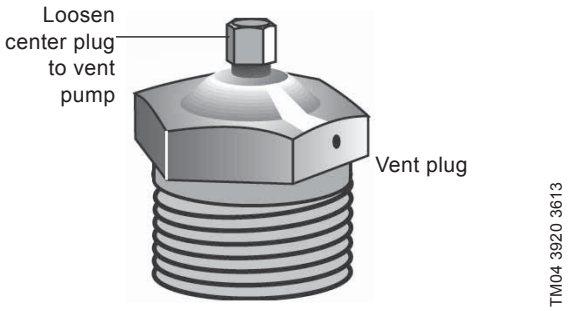

Fig. 15 Vent plug

In open systems where the water level is below the pump inlet, the suction pipe and pump must be filled with liquid and vented before starting the pump.

1. Close the discharge isolating valve and remove the priming plug.
2. Pour water through the priming hole until the suction pipe and pump are completely filled with liquid. If the suction pipe does not slope downwards away from the pump, the air must be purged while priming the pump.
3. Replace the priming plug and tighten securely.

9.2 Startup

1. Gradually open the isolating valve in the suction line until a steady stream of airless water runs out of the priming hole.
2. Close the plug and tighten securely.
3. Completely open the isolating valves.

For pumps with Cool-Top®, see section *16. Startup of pump with air-cooled top (Cool-Top®)*.

Follow these steps:

1. Switch off the power supply.
2. Check to make sure the pump has been filled and vented.
3. Remove the coupling guard and rotate the pump shaft by hand to make sure it turns freely.
4. Verify that the electrical connections are in accordance with the wiring diagram on the motor.
5. Switch on the power and observe the direction of rotation. When viewed from above, the pump should rotate counter-clockwise (clockwise for CRN-SF).
6. To reverse the direction of rotation, first switch off the power supply.
7. On three-phase motors, interchange any two phases of the power supply.
   On single-phase motors, see wiring diagram on the nameplate. Change wiring as required.
8. Switch on the power again and check for proper direction of rotation. Once direction of rotation has been verified, switch off the power again. Do not attempt to reinstall the coupling guards while the motor is on. Replace the coupling guard if the direction of rotation is correct. When the guards are in place, the power can be switched on again.

Note

For CR, CRI, CRN 1s to 5 it is advisable to open the bypass valve during start-up. See fig. 13. The bypass valve connects the suction and discharge sides of the pump, thus making the filling procedure easier. Close the bypass valve when operation is stable.

Caution

Motors should not be run unloaded or uncoupled from the pump at any time; damage to the motor bearings will occur.

Do not start the pump before priming or venting the pump. See fig. 15. Never let the pump run dry.

10. Operation

10.1 Operating parameters

CR multi-stage centrifugal pumps installed in accordance with these instructions and sized for correct performance will operate efficiently and provide years of service. The pumps are water-lubricated and do not require any external lubrication or inspection. The motors may require periodic lubrication as described in section *12. Maintaining the motor*.

Under no circumstances should the pump be operated for any prolonged periods of time without flow through the pump. This can result in motor and pump damage due to overheating. A properly sized relief valve should be installed to allow sufficient liquid to circulate through the pump to provide adequate cooling and lubrication of the pump bearings and seals.

10.2 Pump cycling

Pump cycling should be checked to ensure the pump is not starting more often than the following max. starts per hour:

Grundfos ML motors:

- 200 times per hour on 1/3 to 5 hp models
- 100 times per hour on 7 1/2 to 15 hp models
- 40 times per hour on 20 to 30 hp models.

Baldor motors:

- 20 times per hour on 1/3 to 5 hp models
- 15 times per hour on 7 1/2 to 15 hp models
- 10 times per hour on 20 to 100 hp models.

Rapid cycling is a major cause of premature motor failure due to overheating of the motor. If necessary, adjust controller to reduce the frequency of starts and stops.

10.3 Boiler feed installations

If the pump is used as a boiler feed pump, make sure the pump is capable of supplying sufficient water throughout its entire evaporation and pressure ranges. Where modulating control valves are used, a bypass around the pump must be installed to ensure pump lubrication. See section *7.3 Minimum inlet pressures*.

10.4 Frost protection

If the pump is installed in an area where frost could occur, the pump and system should be drained during freezing temperatures to avoid damage. To drain the pump, close the isolating valves, remove the priming plug and drain plug at the base of the pump. Do not refit the plugs until the pump is to be used again. Always replace the drain plug with the original or an exact replacement. Do not replace with a standard plug. Internal recirculation will occur, reducing the output pressure and flow.

11. Maintaining the pump

Depending on the conditions and operating time, make the following checks at regular intervals:

- Check that the pump meets the required performance and is operating smoothly and quietly.
- Check that there are no leaks, particularly at the shaft seal.
- Check that the motor is not overheating.
- Remove and clean all strainers or filters in the system.
- Check that the tripping function of the motor overload protection works.
- Check the operation of all controls.
- If the pump is not operated for unusually long periods, maintain the pump in accordance with these instructions. In addition, if the pump is not drained, the pump shaft should be manually rotated or run for short periods of time at monthly intervals.
- In severe-duty applications, pump life may be extended by performing one of the following actions:
  - Drain the pump after each use.
  - Flush the pump with water or other liquid that is compatible with the pump materials and process liquid.
  - Disassemble the pump and thoroughly rinse or wash components in contact with the pumped liquid with water or other liquid that is compatible with the pump materials and process liquid.

If the pump fails to operate or there is a loss of performance, see to *section 17. Diagnosing specific problems*.

12. Maintaining the motor

Warning

Before starting work on the motor, make sure that all power supplies to the motor have been switched off and that they cannot be accidentally switched on. Electric shock can cause serious or fatal injury. Only qualified personnel should attempt installation, operation, and maintenance of this equipment.

12.1 Motor inspection

Inspect the motor approximately every 500 hours of operation or every three months, whichever occurs first. Keep the motor clean and the ventilation openings clear.

Go through the following steps during each inspection:

1. Check that the motor is clean. Check that the interior and exterior of the motor are free of dirt, oil, grease, water, etc. Oily residue, paper, pulp, textile lint, etc. can accumulate and block motor ventilation. If the motor is not properly ventilated, overheating can occur and cause early motor failure.
2. Use an ohmmeter periodically to ensure that the winding insulation is OK. Record the ohmmeter readings, and immediately investigate any significant drop in insulation resistance.
3. Check all electrical connections to be sure that they are tightened securely.

12.2 Motor lubrication

Electric motors are pre-lubricated from factory and do not require additional lubrication at start-up. Motors without external grease zerks have sealed bearings that cannot be re-lubricated.
Motors with grease zerks should only be lubricated with approved types of grease. Do not over-grease the bearings. Over-greasing will cause increased bearing heat and can result in bearing or motor failure. Do not mix oil-based grease and silicon grease in motor bearings.

Bearing grease will lose its lubricating ability over time.
The lubricating ability of a grease depends primarily on the type of grease, the size of the bearings, the speed at which the bearings operate and the severity of the operating conditions.

Good results can be obtained if the following recommendations are used in your maintenance program. It should also be noted that multistage pumps, pumps running to the left of the performance curve, and certain pump ranges may have higher thrust loads. Pumps with high thrust loads should be greased according to the next service interval level.

Warning

The grease outlet plug MUST be removed before adding new grease.

12.3 Recommended lubricant

Severity of duty	Ambient temperature (max.)	Environment	Approved types of grease
Standard	104 °F (40 °C)	Clean, little corrosion	Grundfos ML motors are greased for life, or the grease type will be stated on the nameplate. Baldor motors are greased with Polyrex EM (Exxon Mobile).
Severe	122 °F (50 °C)	Moderate dirt, corrosion	
Extreme	> 122 °F (50 °C) or class H insulation	Severe dirt, abrasive dust, corrosion	

12.4 Lubricating chart (for motors with grease zerks)

New motors that have been stored for a year or more should be regreased according to the following table:

NEMA (IEC) frame size	Service intervals [hours]			Weight of grease [oz (grams)]	Volume of grease [in^3 (teaspoons)]
	Standard duty	Severe duty	Extreme duty		
Up to and incl. 210 (132)	5500	2750	550	0.30 (8.4)	0.6 (2)
Over 210 up to and incl. 280 (180)	3600	1800	360	0.61 (17.4)	1.2 (3.9)
Over 280 up to and incl. 360 (225)	2200	1100	220	0.81 (23.1)	1.5 (5.2)
Over 360 (225)	2200	1100	220	2.12 (60.0)	4.1 (13.4)

12.5 Lubricating procedure

Caution

Keep grease free from dirt to avoid damage to motor bearings. If the environment is extremely dirty, contact Grundfos, the motor manufacturer, or an authorized service center for additional information.

Do not mix dissimilar types of grease.

1. Clean all grease zerks. If the motor does not have grease zerks, the bearing is sealed and cannot be greased externally.
2. If the motor is equipped with a grease outlet plug, remove it. This will allow the old grease to be displaced by the new grease. If the motor is stopped, add the recommended amount of grease. If the motor is to be lubricated while running, add a slightly greater quantity of grease.
3. Add grease SLOWLY taking approximately one minute until new grease appears at the shaft hole in the flange or grease outlet plug. Never add more than 1 1/2 times the amount of grease shown in the lubricating chart.

Note

If new grease does not appear at the shaft hole or grease outlet, the outlet passage may be blocked. Contact Grundfos service center or certified motor shop.

4. Let motors equipped with a grease outlet plug run for 20 minutes before replacing the plug.

13. Replacing the motor

Caution

Motors used on CR pumps are specifically selected to our rigid specifications. Replacement motors must be of the same frame size, should be equipped with the same or better bearings and have the same service factor. Failure to follow these recommendations may result in premature motor failure.

If the motor is damaged due to bearing failure, burning or electrical failure, observe the following instructions as to how to remove the motor and how to mount the replacement motor.

Warning

Before starting work on the motor, make sure that the mains switch has been switched off. It must be ensured that the power supply cannot be accidentally switched on.

13.1 Disassembly

Proceed as follows:

1. Disconnect the power supply leads from the motor. Remove the coupling guards.

Note

For CR 1s, 1, 3, 5, 10, 15, and 20: Do not loosen the three hexagon socket head cap screws securing the shaft seal.

2. Use the proper metric hexagon key to loosen the four cap screws in the coupling. Remove coupling halves completely. On CR 1s-CR 20, the shaft pin can be left in the pump shaft. CR, CRN 32, 45, 64, 90, 120, and 150 do not have a shaft pin.
3. Use the correct size spanner to loosen and remove the four mounting bolts joining motor and pump.
4. Lift the motor straight up until the shaft has cleared the motor stool.

13.2 Assembly

Proceed as follows:

1. Remove key from motor shaft, if present, and discard.
2. Thoroughly clean the surfaces of the motor and pump mounting flanges. The motor and shaft must be clean of all oil or grease and other contaminants where the coupling attaches. Place the motor on top of the pump.
3. Turn the terminal box to the desired position by rotating the motor.
4. Insert the four mounting bolts, then tighten diagonally and evenly:
   – for 3/8" bolts (1/2 - 2 hp), torque = 17 ft-lb
   – for 1/2" bolts (3 - 40 hp), torque = 30 ft-lb
   – for 5/8" bolts (50 - 100 hp), torque = 59 ft-lb
   – follow instructions for particular pump model in sections *13.2.2 CR 1s, 1, 3, and 5* to *13.2.5 CR, CRN 32, 45, 64, 90, 120, and 150*.

13.2.1 Torque specifications

Torque specifications for CR, CRI, CRN 1s, 1, 3, 5, 10, 15, and 20 CRT 2, 4, 8, and 16

Coupling screw size	Minimum torque
M6	10 ft-lb
M8	23 ft-lb
M10	46 ft-lb

13.2.2 CR 1s, 1, 3, and 5

1. Insert shaft pin into shaft hole.
2. Mount the coupling halves onto shaft and shaft pin.
3. Fit the coupling screws and leave loose. Check that the gaps on either side of the coupling are even and that the motor shaft keyway is centered in the coupling half as shown in fig. 16.
4. Tighten the screws to the correct torque. See section *13.2.1 Torque specifications*.

13.2.3 CR 10, 15 and 20

1. Insert shaft pin into shaft hole.
2. Insert plastic shaft seal spacer beneath shaft seal collar.
3. Mount the coupling halves onto shaft and shaft pin.
4. Fit the coupling screws and leave loose. Check that the gaps on either side of the coupling are even and that the motor shaft keyway is centered in the coupling half as shown in fig. 16.
5. Tighten the screws to the correct torque. See section *13.2.1 Torque specifications*.
6. Remove plastic shaft seal spacer and hang it on inside of coupling guard.

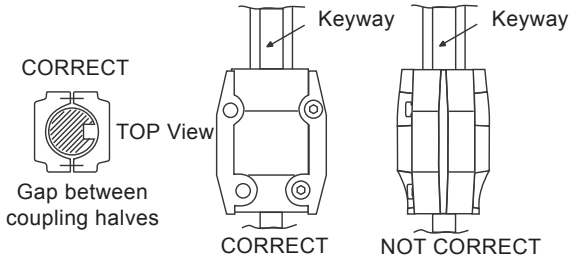

Fig. 16 Coupling adjustment all CR, CRI, CRN, CRT

13.2.4 CRT 2, 4, 8 and 16

1. Mount coupling halves. Make sure the shaft pin is located in the pump shaft.
2. Put the cap screws loosely back into the coupling halves.
3. Using a large screwdriver, raise the pump shaft by placing the tip of the screwdriver under the coupling and carefully raising the coupling to its highest point. See fig. 17.

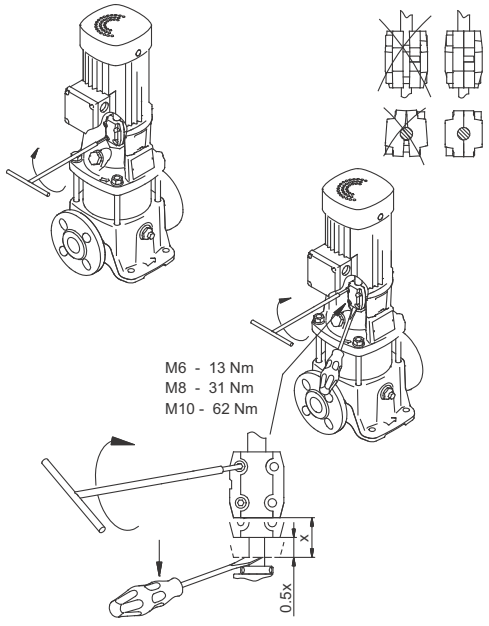

Fig. 17 Coupling adjustment CRT 2, 4, 8, and 16

Note ***The shaft can only be raised approximately 0.20 inches (5 mm).***

4. Now lower the shaft halfway back the distance you just raised it and tighten the coupling screws (finger tight) while keeping the coupling gap equal on both sides. When the screws are tight enough to keep the coupling in place, then cross-tighten the screws.
   - Note the clearance below the coupling.
   - Raise the coupling as far as it will go.
   - Lower it halfway back down (1/2 the distance you just raised it).
   - Tighten screws (see torque specifications).

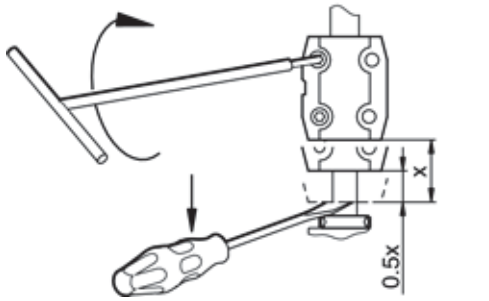

Fig. 18 Coupling adjustment clearance CRT 2, 4, 8, and 16

13.2.5 CR, CRN 32, 45, 64, 90, 120, and 150

1. Make sure pump shaft is all the way down. Tighten the set screws on the mechanical shaft seal.
2. Place the plastic adjusting fork under the cartridge seal collar. See fig. 19.

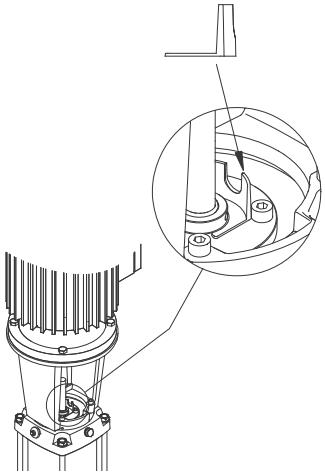

Fig. 19 Coupling adjustment CR, CRN 32, 45, 64, 90, 120, and 150

3. Fit the coupling on the shaft so that the top of the pump shaft is flush with the bottom of the coupling chamber. See fig. 20.

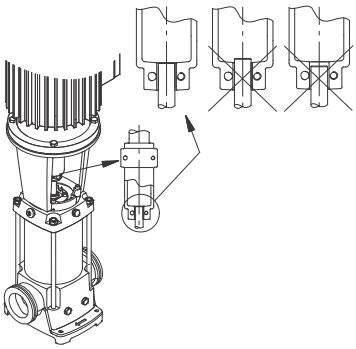

Fig. 20 Coupling adjustment, CR, CRN 32, 45, 64, 90, 120, and 150

Caution ***To avoid damaging the coupling halves, ensure that the motor shaft keyway is centered in the coupling half as shown in fig. 16.***

4. Lubricate the coupling screws with an anti-seize, lubricating compound. Tighten the coupling screws (finger tight) while keeping the coupling gap equal on both sides and the motor shaft keyway centered in the coupling half as shown in fig. 16. When the screws are tight enough to keep the coupling in place, then cross-tighten the screws.
5. Tighten coupling screws to 62 ft-lbs (75 and 100 hp motors to 74 ft-lbs). Remove the adjusting fork from under the cartridge seal collar and replace it to the storage location. See fig. 21.

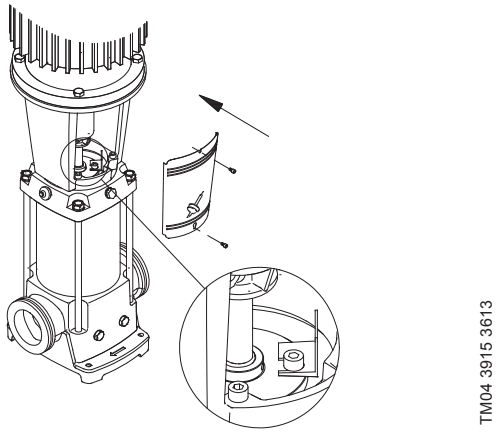

Fig. 21 Adjusting fork storage CR, CRN 32, 45, 64, 90, 120, and 150

6. Check to see that the gaps between the coupling halves are equal. Loosen and readjust, if necessary.
7. Make sure the pump shaft can be rotated by hand. If the shaft cannot be rotated or it jams, disassemble and check for misalignment.
8. Prime the pump.
9. Follow the wiring diagram on the motor label for the correct motor wiring combination which matches your supply voltage. Once this has been confirmed, reconnect the power supply leads to the motor.
10. Check the direction of rotation by bump-starting the motor. Direction of rotation must be left to right (counter-clockwise) when looking directly at the coupling.
11. Switch off the power, then mount the coupling guards. When the coupling guards have been mounted, the power can be switched on again.

14. Parts list

Grundfos offers an extensive parts list for each CR pump model. A parts list typically covers the following items:

- a diagram of pump parts which we recommend to have on hand for future maintenance
- a list of prepacked service kits covering the pump components most likely to be exposed to wear over time
- complete chamber stacks needed to replace the rotating assembly of each model.

These parts lists are available separately from the Grundfos literature warehouse or as a set with extensive service instructions in the Grundfos CR Service Manuals.

TM05 9272 3613

Fig. 22 Prepacked chamber stack kits

TM04 3916 1609

Fig. 23 Prepacked flange kits

14.1 Spare parts

Grundfos offers an extensive list of spare parts for CR pumps. For a current list of these parts, see Grundfos All Product Spare Parts/Service Kits Price List, part number L-SK-SL-002.

15. Preliminary electrical tests

Warning

When working with electrical circuits, use caution to avoid electrical shock. It is recommended that rubber gloves and boots be worn, and metal terminal boxes and motors are grounded before any work is done. For your protection, always disconnect the pump from its power source before handling.

15.1 Supply voltage

15.1.1 How to measure the supply voltage

Use a voltmeter (set to the proper scale) to measure the voltage at the pump terminal box or starter. On single-phase units, measure between power leads L1 and L2 (or L1 and N for 115 volt units). On three-phase units, measure between:

– Power leads L1 and L2
– Power leads L2 and L3
– Power leads L3 and L1.

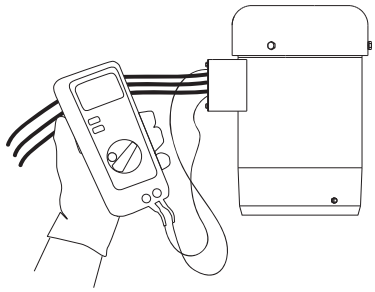

TM04 3911 2609

Fig. 24 Measuring supply voltage

15.1.2 Meaning of supply voltage measurement

When the motor is under load, the voltage should be within + 10 %/- 10 % of the nameplate voltage. Larger voltage variation may cause winding damage. Large variations in the voltage indicate a poor electrical supply and the pump should not be operated until these variations have been corrected. If the voltage constantly remains high or low, the motor should be changed to the correct supply voltage.

15.2 Current

15.2.1 How to measure the current

Use an ammeter (set on the proper scale) to measure the current on each power lead at the terminal box or starter. See the motor nameplate for amp draw information. Current should be measured when the pump is operating at constant discharge pressure.

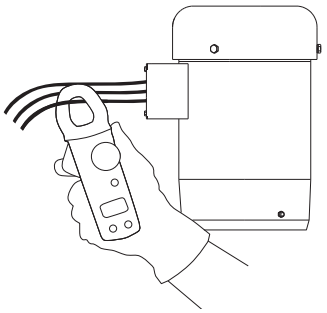

TM04 3908 2609

Fig. 25 Measuring current

15.2.2 Meaning of current measurement

If the amp draw exceeds the listed service factor amps (SFA) or if the current unbalance is greater than 5 % between each leg on three-phase units, check for the following faults:

Fault	Remedy
Burned contacts in the motor-protective circuit breaker.	Replace contacts.
Loose terminals in motor-protective circuit breaker or terminal box or possibly defective lead.	Tighten terminals or replace lead.
Too high or too low supply voltage.	Reestablish correct supply voltage.
Motor windings are short-circuited or grounded. (Check winding and insulation resistances).	Remove cause of short circuit or grounding.
Pump is damaged causing motor overload.	Replace defective pump parts.

15.3 Insulation resistance

15.3.1 How to measure the insulation resistance

Turn off power and disconnect the supply power leads in the pump terminal box. Using an ohmmeter or megohmmeter, set the scale selector to R x 100K and zero-adjust the meter.
Measure and record the resistance between each of the terminals and ground.

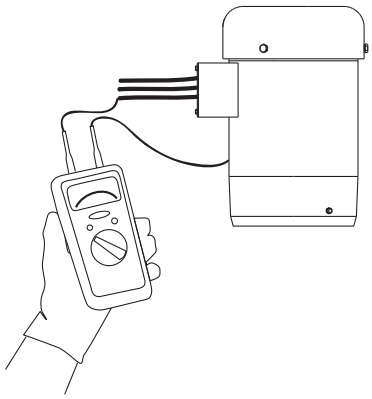

TM04 3907 2609

Fig. 26 Measuring insulation resistance

15.3.2 Meaning of insulation resistance measurement

Motors of all hp, voltage, phase and cycle duties have the same value of insulation resistance. Resistance values for new motors must exceed 1,000,000 ohms. If they do not, the motor should be repaired or replaced.

16. Startup of pump with air-cooled top (Cool-Top®)

Caution ***Do not start the pump until it has been filled with liquid and vented.***

Warning

Pay attention to the direction of the vent hole and ensure that the escaping liquid does not cause injury to persons or damage to the motor or other components. In hot-liquid installations, pay special attention to the risk of injury caused by scalding hot liquid. We recommend you to connect a drain pipe to the 1/2" air vent in order to lead the hot water/steam to a safe place.

Step		Action
1	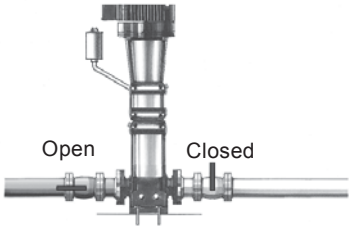 TM02 4151 5001	The air-cooled top should only be started up with cold liquid. Close the isolating valve on the discharge side and open the isolating valve on the suction side of the pump.
2	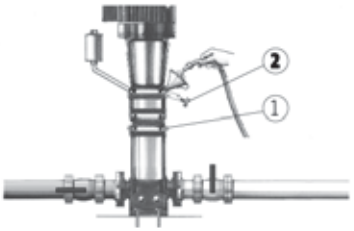 TM02 4153 1503	Remove the priming plug from the air-cooled chamber (pos. 2) and slowly fill the chamber with liquid. When the chamber is completely filled with liquid, replace the priming plug and tighten securely.
3	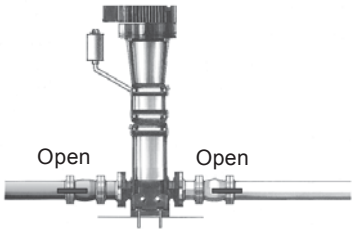 TM02 5907 1503	Open the isolating valve on the discharge side of the pump. The valve may have to be partially closed when the pump is started if there is no counter pressure (i.e. boiler not up to pressure).
4	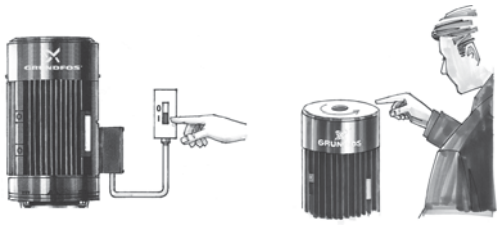 TM01 1406 3702 - TM01 1405 4497	Start the pump and check the direction of rotation. See the correct direction of rotation of the pump on the motor fan cover. If the direction of rotation is wrong, interchange any two of the incoming power supply leads. After 3 to 5 minutes, the air vent has been filled with liquid. Note ***During start-up of a cold pump with hot liquid, it is normal that a few drops of liquid are leaking from the sleeve.***

17. Diagnosing specific problems

Warning

Before removing the terminal box cover and before removing/dismantling the pump, make sure that the power supply has been switched off and that it cannot be accidentally switched on.

Problem	Possible cause	Remedy
1. The pump does not run.	a) No power to motor.	Check voltage to motor terminal box. If no voltage to motor, check starter panel for tripped circuits and reset circuits.
	b) Fuses blown or circuit breaker tripped.	Turn off power and remove fuses. Check for continuity with ohmmeter. Replace blown fuses or reset circuit breaker. If new fuses blow or circuit breaker trips, the electrical installation, motor and wires must be checked.
	c) Motor starter overload protection burned or tripped out.	Check for voltage on line and load side of starter. Replace or reset burned motor protection. Inspect starter for other damage. If protection trips again, check the supply voltage and starter holding coil.
	d) Starter does not energize.	Energize control circuit and check for voltage to the holding coil. If no voltage, check control circuit fuses. If voltage, check holding coil for short circuits. Replace bad coil.
	e) Defective control devices.	Check that all safety and pressure switches function correctly. Inspect contacts in control devices. Replace worn or defective parts or control devices.
	f) Motor is defective.	Turn off power and disconnect wiring. Measure the lead-to-lead resistances with ohmmeter (RX-1). Measure lead-to-ground values with ohmmeter (RX-100K). Record measured values. If an open or grounded winding is found, remove motor and repair or replace it.
	g) Defective capacitor (single-phase motors).	Turn off power and discharge capacitor. Check with ohmmeter (RX-100K). When the meter is connected to the capacitor, the needle should jump towards 0 ohms and slowly drift back to infinity (h). Replace capacitor if defective.
	h) Pump is blocked or seized.	Turn off power and manually rotate pump shaft. If shaft does not rotate easily, check coupling setting and adjust as necessary. If shaft rotation is still tight, remove pump and inspect. Disassemble and repair the pump.

Problem	Possible cause	Remedy
2. The pump runs but at reduced performance or does not deliver water.	a) Wrong direction of rotation.	Check wiring for proper connections. Correct wiring.
	b) Pump is not primed or is air-bound.	Turn pump off, close isolation valve(s) and remove priming plug. Check liquid level. Refill the pump, replace plug and start the pump. Long suction lines must be filled before starting the pump.
	c) Strainers, check or foot valves are clogged.	Remove strainer, screen or check valve and inspect. Clean and replace. Reprime pump.
	d) Suction lift too large.	Install compound pressure gauge at the suction side of the pump. Start pump and compare reading to performance data. Reduce suction lift by lowering pump, increase suction line size or removing high friction loss devices.
	e) Suction and/or discharge pipes leaking. (Pump spins backwards when turned off)	Air in suction pipe. Suction pipe, valves and fittings must be airtight. Repair any leaks and retighten all loose fittings.
	f) Pump worn.	Install pressure gauge, start pump, gradually close the discharge valve and read pressure at shutoff. Convert measured pressure (in psi) to head (in feet): (Measured psi x 2.31 ft/psi = ___ ft). Refer to the specific pump curve for shutoff head for that pump model. If head is close to curve, pump is probably OK. If not, remove pump and inspect.
	g) Pump impeller or guide vane is clogged.	Disassemble and inspect pump passageways. Remove any foreign materials found.
	h) Incorrect drain plug installed.	If the proper drain plug is replaced with a standard plug, water will recirculate internally. Replace with proper plug.
	i) Improper coupling setting.	Check/reset the coupling. See page 18.
3. Pump cycles too much	a) Pressure switch is not properly adjusted or is defective.	Check that pressure switch is set and functions correctly. Check voltage across closed contacts. Readjust switch or replace if defective.
	b) Level control is not properly adjusted or is defective.	Check that level control is set and functions correctly. Readjust setting (refer to level control manufacturer's data). Replace if defective.
	c) Insufficient air charging or leaking tank or piping.	Pump air into tank or diaphragm chamber. Check diaphragm for leaks. Check tank and piping for leaks with soap and water solution. Check air-to-water volume. Repair as necessary.
	d) Tank is too small.	Check tank size and air volume in tank. Tank volume should be approximately 10 gallons for each gpm of pump performance. The normal air volume is 2/3 of the total tank volume at the pump cut-in pressure. Replace tank with one of correct size.
	e) Pump is oversized.	Install pressure gauges on or near pump suction and discharge ports. Start and run pump under normal conditions, record gauge readings. Convert psi to feet (Measured psi x 2.31 ft/psi = ____ ft) Refer to the specific pump curve for that model, ensure that total head is sufficient to limit pump delivery within its design flow range. Throttle pump discharge flow if necessary.

Problem	Possible cause	Remedy
4. Fuses blow or circuit breakers or overload relays trip	a) Tank is too small.	Check voltage at starter panel and motor. If voltage varies more than - 10 %/+ 10 %, contact power company. Check wire sizing.
	b) Motor overload protection set too low.	Cycle pump and measure amperage. Increase size of overload protection or adjust trip setting to maximum motor nameplate (full load) current.
	c) Three-phased current is imbalanced.	Check current draw on each lead to the motor. Must be within - 5 %/+ 5 %. If not, check motor and wiring. Rotating all leads may eliminate this problem.
	d) Motor short-circuited or grounded.	Turn off power and disconnect wiring. Measure the lead-to-lead resistance with an ohmmeter (RX-1). Measure lead-to-ground values with an ohmmeter (RX-100K) or a megaohmmeter. Record values. If an open or grounded winding is found, remove the motor, repair and/or replace.
	e) Wiring or connections are faulty.	Check proper wiring and loose terminals. Tighten loose terminals. Replace damaged wires.
	f) Pump is blocked or seized.	Turn off power and manually rotate pump shaft. If shaft does not rotate easily, check coupling setting and adjust as necessary. If shaft rotation is still tight, remove pump and inspect. Disassemble and repair the pump.
	g) Defective capacitor (single-phase motors).	Turn off power and discharge capacitor. Check with ohmmeter (RX-100K). When the meter is connected to the capacitor, the needle should jump towards 0 ohms and slowly drift back to infinity (∞). Replace capacitor if defective.
	h) Motor overload protection devices at higher ambient temperature than motor.	Use a thermometer to check the ambient temperature near overload protection devices and motor. Record these values. If ambient temperature at motor is lower than at overload protection devices, especially where temperature at overload protection devices is above 104 °F (40 °C), replace standard protection devices with ambient-compensated protection devices.

18. Worksheet for three-phase motors

Below is a worksheet for calculating current unbalance on a three-phase hookup. Use the calculations below as a guide.

Note

Current unbalance should not exceed 5 % at service factor load or 10 % at rated input load. If the unbalance cannot be corrected by rolling the leads, the source of the unbalance must be located and corrected. If, on the three possible hookups, the leg farthest from the average stays on the same power lead, most of the unbalance is coming from the power source. However, if the reading farthest from the averages moves with the same motor lead, the primary source of unbalance is on the "motor side" of the starter. In this instance, consider if the cause can be a damaged cable, an untight cable splice, a poor connection, or a faulty motor winding.

Explanation and examples	
Here is an example of current readings at maximum pump loads on each leg of a three-wire hookup. You must make calculations for all three hookups. To begin, add up all three readings for hookup numbers 1, 2, and 3.	**Hookup 1** T1 = 51 amps T2 = 46 amps T3 = 53 amps TOTAL = 150
Divide the total by three to obtain the average.	**Hookup 1** 50 amps 3 | 150 amps
Calculate the greatest current difference from the average.	**Hookup 1** 50 amps — 46 amps 4 amps
Divide this difference by the average to obtain the percentage of the unbalance. In this case, the current unbalance for **Hookup 1** is 8 %.	**Hookup 1** .08 or 8 % 50 | 4.00 amps

Blank worksheet

Hookup 1	Hookup 2	Hookup 3
L_1 to T_1 = ___ amps	L_1 to T_3 = ___ amps	L_1 to T_2 = ___ amps
L_2 to T_2 = ___ amps	L_2 to T_1 = ___ amps	L_2 to T_3 = ___ amps
L_3 to T_3 = ___ amps	L_3 to T_2 = ___ amps	L_3 to T_1 = ___ amps
TOTAL = ___ amps	TOTAL = ___ amps	TOTAL = ___ amps

Hookup 1	Hookup 2	Hookup 3
___ amps	___ amps	___ amps
3 | ___ amps	3 | ___ amps	3 | ___ amps

Hookup 1	Hookup 2	Hookup 3
___ amps	___ amps	___ amps
___ amps	___ amps	___ amps
___ amps	___ amps	___ amps

Hookup 1	Hookup 2	Hookup 3
___ or ___ %	___ or ___ %	___ or ___ %
___ | ___ amps	___ | ___ amps	___ | ___ amps

19. Disposal

This product or parts of it must be disposed of in an environmentally sound way:

1. Use the public or private waste collection service.
2. If this is not possible, contact the nearest Grundfos company or service workshop.

Subject to alterations.

Grundfos Kansas City
17100 West 118th Terrace
Olathe, Kansas 66061
Phone: +1-913-227-3400
Fax: +1-913-227-3500

www.grundfos.us

Grundfos Canada
2941 Brighton Road
Oakville, Ontario L6H 6C9 Canada
Phone: +1-905 829 9533
Fax: +1-905 829 9512

www.grundfos.ca

Grundfos México
Boulevard TLC No. 15
Parque Industrial Stiva Aeropuerto
C.P. 66600 Apodaca, N.L. Mexico
Phone: +011-52-81-8144 4000
Fax: +011-52-81-8144 4010

www.grundfos.mx

© Copyright Grundfos Holding A/S

The name Grundfos, the Grundfos logo, and **be think innovate** are registered trademarks owned by Grundfos Holding A/S or Grundfos A/S, Denmark. All rights reserved worldwide.

L-CR-TL-001

98419736 0114
ECM: 1122180

LEFT BLANK

HACH

MODEL SOLITAX SC, TURBIDITY SENSOR

LEFT BLANK

DOC023.54.03232

SOLITAX sc

User Manual

12/2009, Edition 4A

© HACH Company, 2006–2009. All rights reserved. Printed in Germany.

This page is intentionally left blank

Table of Contents

Section 1 Specifications 5

Section 2 General Information 7
2.1 Safety Information 7
2.1.1 Use of Hazard Information 7
2.1.2 Precautionary Labels 7
2.2 Sensor Overview 8
2.3 Measuring Principle 8
2.4 Handling 8

Section 3 Installation 9
3.1 Unpacking the Instrument 9
3.1.1 Function Check 9
3.2 Sensor Installation 10
3.3 Pipe Installation 11
3.4 Connecting sensor cable 13

Section 4 Operations 15
4.1 Use of an sc controller 15
4.2 Sensor Setup 15
4.3 Sensor Data Logging 15
4.4 Sensor Diagnostics Menu for pH and ORP 15
4.5 Sensor Setup Menu 15
4.6 Calibration 16
4.6.1 Setting the Outmode 17
4.6.2 Calibration for Turbidity 17
4.6.2.1 Calculating the Factor 17
4.6.3 Calibration for Suspended Solids 18
4.6.3.1 For Single Point (Factor) Calibration 18
4.6.3.2 Multi-point Calibration 18

Section 5 Maintenance 19
5.1 Maintenance Schedule 19
5.2 Cleaning the Sensor Measuring Windows 19
5.3 Replacing the Wiper 20

Section 6 Troubleshooting 21
6.1 Error Codes 21
6.2 Warnings 21

Section 7 Replacement Parts and Accessories 23
7.1 Immersion Sensors 23
7.2 Insertion Sensors 23
7.3 Replacement Parts 23

Section 8 Contact Information 25

Section 9 Limited warranty 27

Appendix A Modbus Register Information 29

Section 1 Specifications

Specifications are subject to change without notice.

Measuring Technique	Infrared Duo scattered light technique for color-independent turbidity measurement Turbidity in accordance with DIN EN 27027 / TS equivalent DIN 38414
Measuring Range	t-line turbidity: 0.001–4000 FNU/NTU ts-line, inline turbidity: 0.001–4000 FNU/NTU; TSS content: 0.001 mg/L–50 g/L hs-line, highline turbidity: 0.001–4000 FNU/NTU; TSS content: 0.001 mg/L–500 g/L TSS
Reproducibility	Turbidity < 1 %, Total Suspended Solids (TSS) < 3 %
Measuring Accuracy	Turbidity up to 1000 FNU/NTU: without calibration < 5 % of the measured value ± 0.01 FNU/NTU with calibration < 1 % of the measured value ± 0.01 FNU/NTU
Technique variation coefficient	1 % in accordance with DIN 38402
Response Time	1 s ≤ T90 ≤ 300 s (adjustable)
Calibration	Zero point permanently set from the factory, gradient once for the TS content
Cable Length	10 m (33 ft), max. 100 m (328 ft) with extension cable
Ambient Temperature	0 to +40 °C (32 to 104 °F)
Pressure Range	Stainless steel: ≤ 6 bar or ≤ 60 m (87 psi) PVC: ≤ 1 bar or ≤ 10 m (14,5 psi)
Flow Velocity	Max. 3 m/s (the presence of air bubbles affects the measurement)
Materials	Optics carrier and sleeve: stainless steel 1.4571 or PVC black
	Wiper shaft: stainless steel 1.4104
	Wiper arm: stainless steel 1.4581
	Wiper rubber: silicone rubber (standard) Optional: Viton[1] (LZX578)
	Windows and light guide: quartz glass
	O-rings (optics carrier, wiper, windows): NBR (acrylonitrile butadiene rubber)
	Housing seals: NBR 70
	Sensor connecting cable (hard-wired): 1 cable pair AWG 22 / 12 V DC twisted, 1 cable pair AWG 24 / data twisted, common cable screen, Semoflex (PUR)
	Sensor connection plug (hard-wired): type M12 enclosure rating IP 67
	Threaded cable fitting: stainless steel 1.4305
Inspection interval	On request 1/year service contract with guarantee extension to 5 years
Dimensions	Tank probe: D x L 60 mm x 200 mm (2 x 8 in.) Probe for pipe installation: D x L 60 mm x 315 mm (2 x 12.4 in.) (Pipe installation fitting: DN 65 / PN 16 DIN 2633; < 5 bar (73 psi); for pipes from DN 80) Distance sensor - wall (floor): TS > 10 cm (4 in.), turbidity > 50 cm (20 in.)
Weight	Tank probe: approx. 1.8 kg (63 oz) (t-line: approx. 0.6 kg (21 oz)) Probe for pipe installation: approx. 2.4 kg (85 oz) Pipe installation fitting: approx. 2.7 kg (95 oz) (without probe) Pipe installation safety fitting:approx. 18 kg (40 lb) (without probe)
User Maintenance	1 h / month, typical
Certifications	CE

[1] Viton® is a registered trademark of E.I. DuPont de Nemours + Co.

Figure 1 Sensor Dimensions

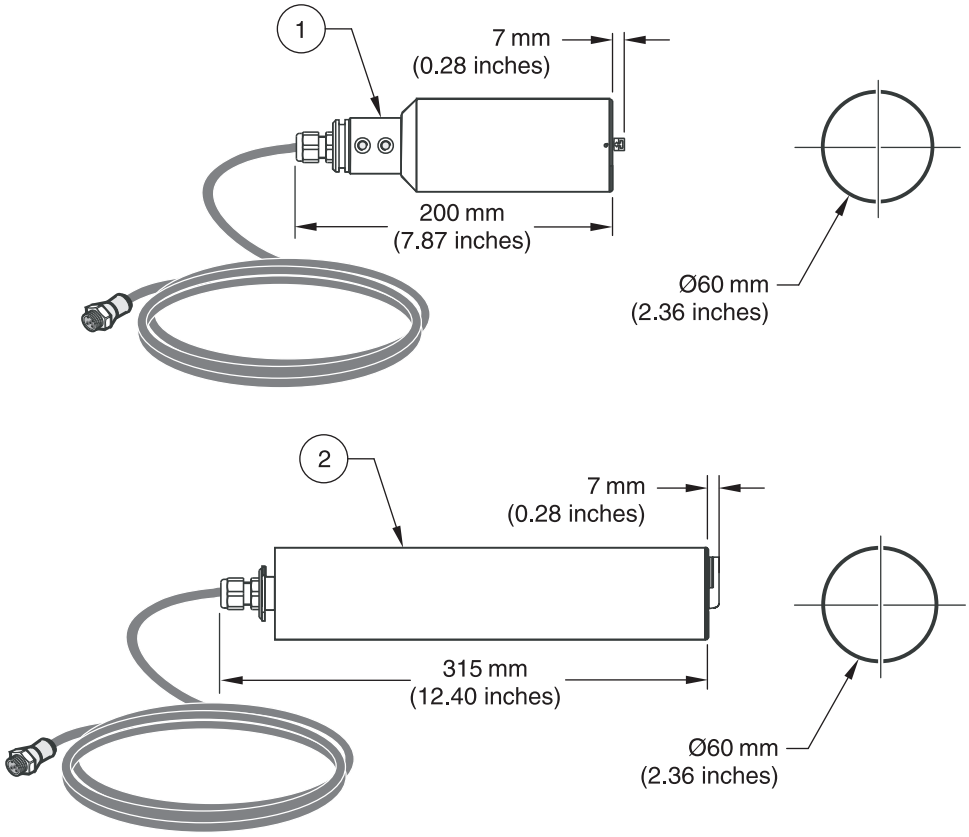

1.	SOLITAX sc models t-line, ts-line, and hs-line for immersion in open tanks
2.	SOLITAX sc models inline and highline sensors for insertion in pipes

Section 2 General Information

2.1 Safety Information

Please read this entire manual before unpacking, setting up, or operating this equipment. Pay attention to all danger and caution statements. Failure to do so could result in serious injury to the operator or damage to the equipment.

Make sure that the protection provided by this equipment is not impaired, do not use or install this equipment in any manner other than that specified in this manual.

2.1.1 Use of Hazard Information

DANGER
Indicates a potentially or imminently hazardous situation which, if not avoided, will result in death or serious injury.

CAUTION
Indicates a potentially hazardous situation that may result in minor or moderate injury.

Important Note: *Information that requires special emphasis.*

Note: *Information that supplements points in the main text.*

2.1.2 Precautionary Labels

Read all labels and tags attached to the instrument. Personal injury or damage to the instrument could occur if not observed

	This symbol, if noted on the instrument, references the instruction manual for operation and/or safety information.
	This symbol indicates that a risk of electrical shock and/or electrocution exists.
	Electrical equipment marked with this symbol may not be disposed of in European public disposal systems after 12 August of 2005. In conformity with European local and national regulations (EU Directive 2002/96/EC), European electrical equipment users must now return old or end-of life equipment to the Producer for disposal at no charge to the user. ***Note:*** *For return for recycling, please contact the equipment producer or supplier for instructions on how to return end-of-life equipment, producer-supplied electrical accessories, and all auxiliary items for proper disposal.*

2.2 Sensor Overview

Note: *All sensors are also available without wipers for special applications.*

t-line: 0.001–4000 FNU/NTU

High-resolution turbidity probe made of plastic for the outlets of sewage treatment plants and bodies of water.

ts-line: 0.001–4000 FNU/NTU; 0.001 mg/L–50.0 g/L

High-precision turbidity and solids probe made of stainless steel or plastic for color-independent measurement of fine turbidities and sludges.

hs-line: 0.001–4000 FNU/NTU; 0.001 mg/L–500.0 g/L

High-precision turbidity and solids probe made of stainless steel or plastic for color-independent measurement of highly concentrated sludges.

inline: 0.001–4000 FNU/NTU; 0.001 mg/L–50.0 g/L

High-precision pipe installation probe for turbidity and solids made of stainless steel for color-independent measurement of fine turbidities and sludges.

highline: 0.001–4000 FNU/NTU; 0.001 mg/L–500.0 g/L

High-precision pipe installation probe for turbidity and suspended solids made of stainless steel for color-independent measurement of highly concentrated sludges.

Figure 2 Solitax sc Sensors

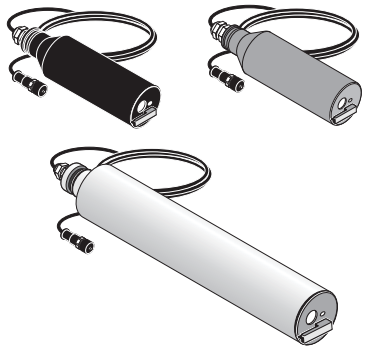

2.3 Measuring Principle

The measuring principle is based on a combined infrared absorption scattered light technique that measures the lowest turbidity values in accordance with DIN EN 27027 just as precisely and continuously as high sludge content. Using this method, the light scattered sideways by the turbidity particles is measured over an angle of 90°.

2.4 Handling

The sensor contains high-quality optical and electronic assemblies. Make sure the sensor is not subjected to any hard mechanical knocks. There are no customer-serviceable items inside the sensor.

Section 3 Installation

DANGER
Only qualified personnel should conduct the tasks described in this section of the manual.

3.1 Unpacking the Instrument

Figure 3 Items Supplied with SensorI

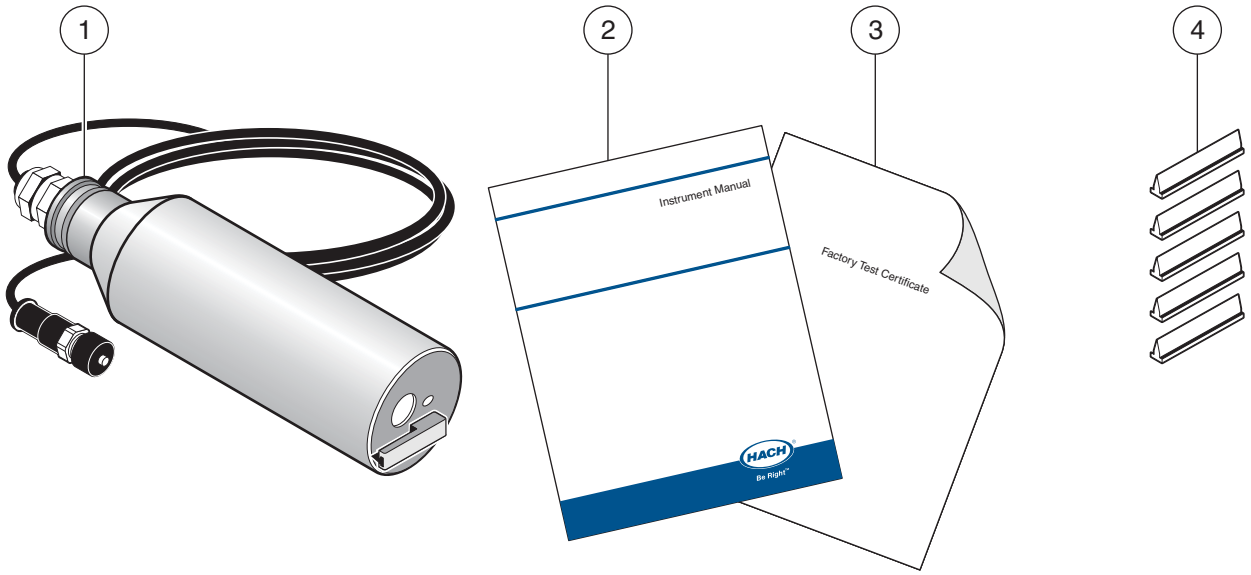

1.	SOLITAX sc Sensor	**3.**	Factory Test Certificate
2.	User Manual	**4.**	Wiper Set (for 5 changes) LZX050

3.1.1 Function Check

After unpacking, both components should be checked for any transport damage and a short function check performed prior to installation.

To perform a function check, connect the sensor to the display unit and power the unit. Shortly after the unit is plugged in, the display is activated and the instrument switches to the measurement display. Measured values taken in air is meaningless.

If no messages appear in the lower part of the display, the function check is then complete.

3.2 Sensor Installation

Figure 4 on page 10 illustrates the installation overview for Solitax sc Models t-line, ts-line, and hs-line for immersion in open tanks.

The maximum distance from the mounting surface to the sensor without the use of an extension tube is 1.5 m (4.9 ft). When that distance exceeds 1.5 m (4.9 ft), one of the following extension tubes is required and can be ordered separately:

- 1.0 m (3.28 ft) extension pipe LZY413
- 1.8 m (5.90 ft) extension pipe LZY414

To ensure a suitable measuring position, install the probe to the following conditions:

- The probe optical window must have a ground clearance of at least 30 cm (11.8 in.).
- Install the probe with the optical window facing (downstream) in the direction of the flow to minimize the risk of fouling.
- Avoid installation sites where air bubbles are inconsistent. If this not possible, try moving the probe slightly or adjusting its alignment to minimize the bubble effect.
- Protect the probe against the oncoming flow of large objects, such as branches or ice and against flow surges.
- Avoid installing the probe with the optical window facing into direct light or facing a highly-reflective surface.

Figure 4 Sensor Installation Overview

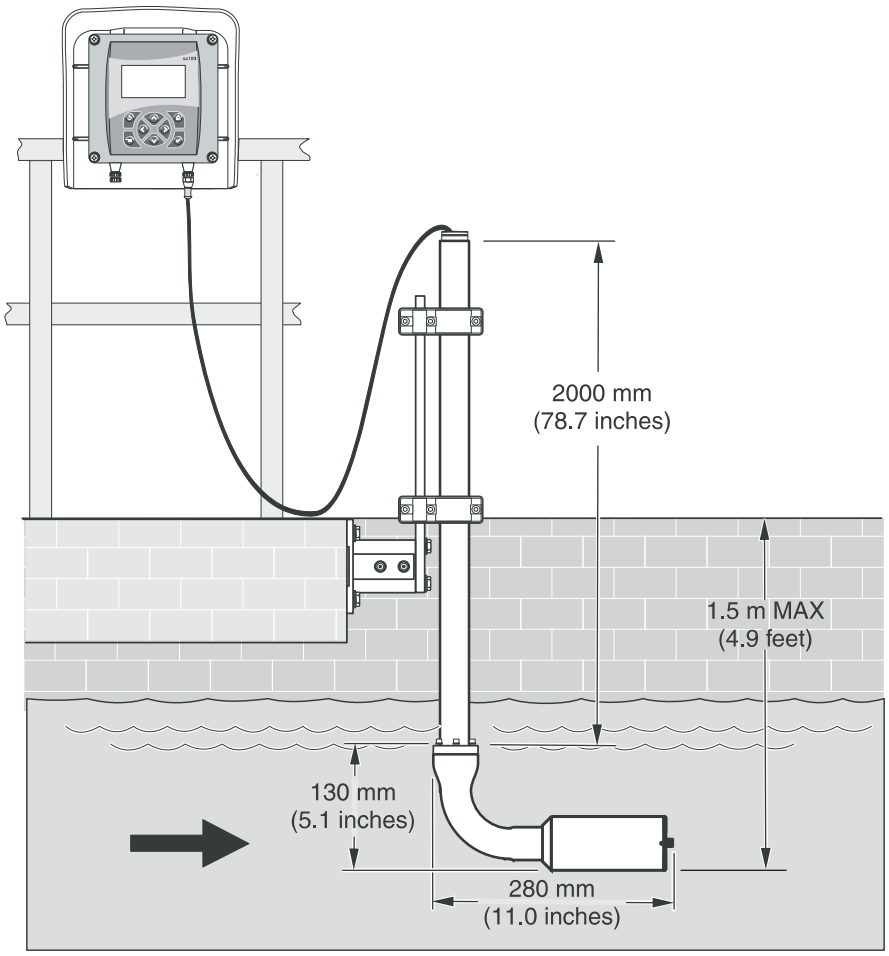

3.3 Pipe Installation

- Install the sensor in an up-flow pipe section for best results. Do not mount the sensor in a down-flow pipe section.
- Mounting in a horizontal pipe section is acceptable if the sensor is fully immersed at all times. Usually, mounting 90 degrees from the top of the pipe guarantees full immersion. Do not mount on the top or bottom of a horizontal pipe section.
- Install the sensor in a pipe that is equal to or greater than 4 inches in diameter.
- Install the sensor at least 1.5 m (5 ft.) or three times the pipe diameter (whichever is greater) downstream of pumps, valves, or pipe elbows.
- Install the sensor on the discharge side of a pump, if possible, with a dilution or flush valve installed on the suction side of the pump.
- If the sensor is to be used to measure sludge with significant amounts of debris, install it after a sludge grinding pump or after a pump with a grinding/comminuting unit in front of it.
- Install the sensor within 7.8 m (25 ft.) of the controller with the standard probe cable. Optional cable extensions can be added for a maximum combined distance of 100 meters (330 ft.).
- If the flange cannot be welded to the pipe due to incompatibility of materials between the stud and the pipe, it is recommended that a stainless steel pipe section be fabricated. Weld the flange onto the stainless steel pipe section and attach the stainless steel section as a segment of the process pipe.

Figure 5 Proper Positioning for Insertion into Pipe

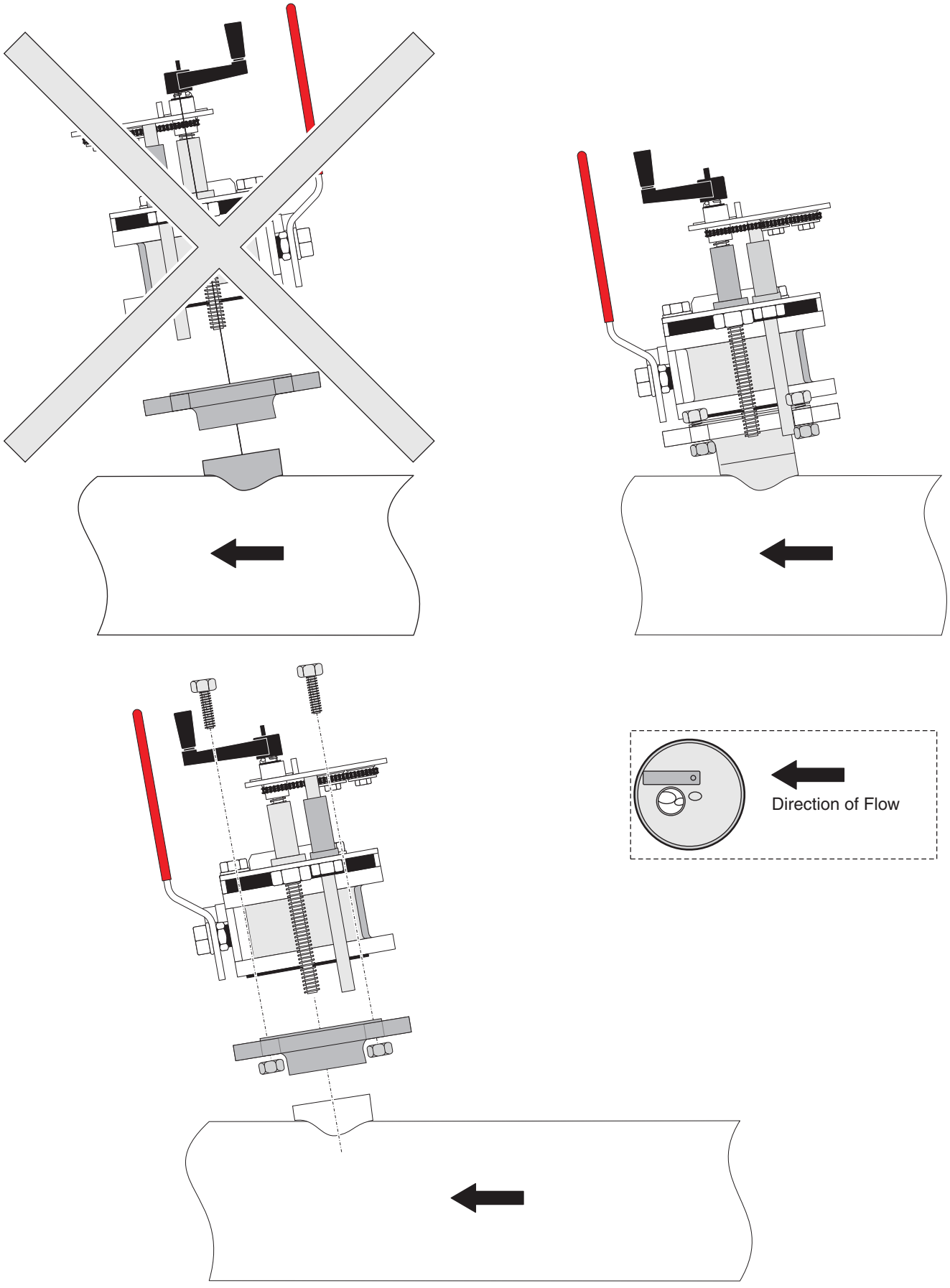

3.4 Connecting sensor cable

CAUTION
Always lay cables and hoses so they do not pose a trip hazard and are not bent.

1. Unscrew the protective cap on the controller socket and retain it.
2. Pay attention to the guide in the plug and push the plug into the socket.
3. Tighten the nuts.

Connector cables are available in various lengths (refer to Section 7 Replacement Parts and Accessories on page 23). Maximum overall cable length: 50 m (165 ft).

Figure 6 Connection of the sensor plug to the controller

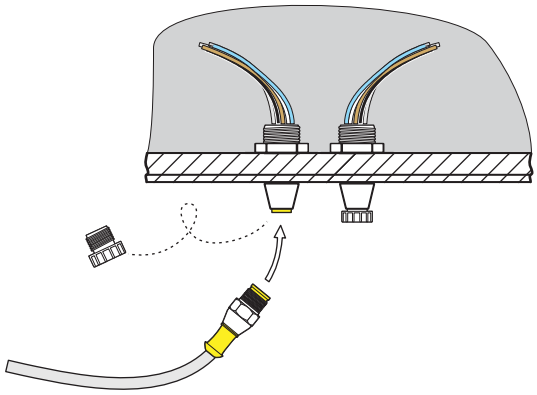

Figure 7 Sensor connector pin assignment

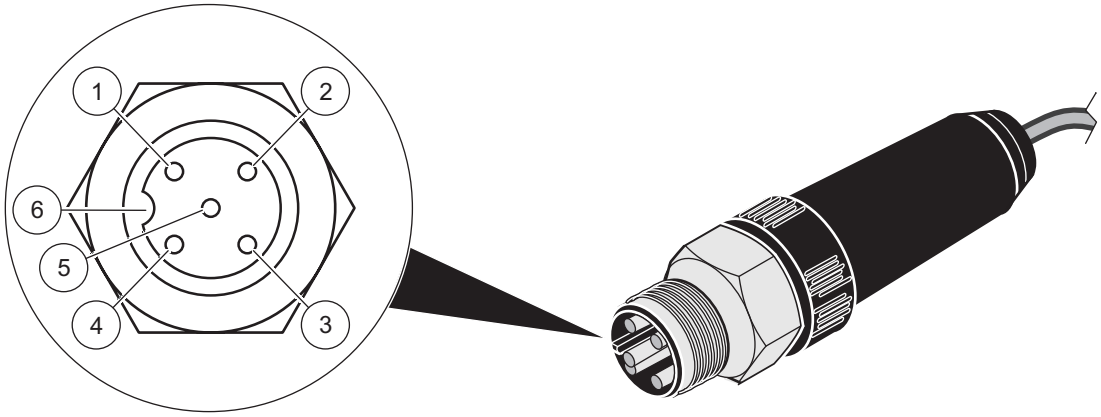

Number	Description	Cable colour (Standard-Cable)
1	+12 VDC	brown
2	Ground	black
3	Data (+)	blue
4	Data (–)	white
5	Screen	Screen (grey)
6	Notch	–

Section 4 Operations

4.1 Use of an sc controller

Before using the sensor in combination with an sc controller, refer to the controller user manual for navigation information.

4.2 Sensor Setup

When a sensor is initially installed, the serial number of the sensor will be displayed as the sensor name. To change the sensor name refer to the following instructions:

1. Select Main Menu.
2. From the Main Menu, select SENSOR SETUP and confirm.
3. Highlight the appropriate sensor if more than one sensor is attached and confirm.
4. Select CONFIGURE and confirm.
5. Select EDIT NAME and edit the name. Confirm or cancel to return to the Sensor Setup menu.

4.3 Sensor Data Logging

A data memory and event memory per sensor are available via the sc controller. While measured data are saved in the data memory at stipulated intervals, the event memory collects numerous events such as configuration changes, alarms and warning conditions. Both the data memory and the event memory can be read out in CSV format. For information on how you can download the data, please see the controller manual.

4.4 Sensor Diagnostics Menu for pH and ORP

SELECT SENSOR (if more than one sensor is attached)

STATUS	
ERROR LIST	See section 6.1 on page 21.
WARNING LIST	See section 6.2 on page 21..

4.5 Sensor Setup Menu

SELECT SENSOR (if more than one sensor is attached)

WIPE	
Initiates a wiping action on the sensor window.	
CALIBRATE	
SET OUTMODE	Select the behavior of the outputs during calibration for zero point setting (Hold, Active, Transfer, Selection). Hold maintains the last reading prior to going into the menu. Active transmits the current level readings, corrected with previous calibration data until new data is entered. Set Transfer transmits the value designated during the system setup
SENSOR MEASURE	Displays the current, uncorrected measured value.
CONFIGURE	Select the calibration type and follow the calibration steps for 2 point, 3 point, 4 point, and 5 point calibration.
FACTOR/2 POINTS/ 3 POINTS/4 POINTS/ 5 POINTS	Display depends on the selection in configuration.
SET CAL DEFAULT	Return the instrument to the default calibration settings.

4.5 Sensor Setup Menu (continued)

CONFIGURE		
	EDIT NAME	Enter up to a 10-digit name in any combination of symbols and alpha or numeric characters.
	SET PARAMETER	This setting configures the Solitax to measure turbidity or suspended solids. The Solitax cannot simultaneously measure both. Choose “TRB” for turbidity measurements, or “TS” for suspended solids measurement. This selection determines which units may be selected in the “Meas Units” menu.
	MEAS UNITS	Choose from the displayed units. TRB (FNU, EBC, TE/F, NTU); TS (mg/L, g/L, ppm, %) Default: FNU If TRB was selected in set parameter, select “NTU” (commonly used in the U.S.), FNU, EBC, or TE/F. If TS was selected, choose mg/L, g/L, ppm, or %. Press enter to choose the selection. If the units selected result in a reading that exceeds 4 digits, the display will only show dashes. For example, if mg/L were selected, and the measurement was 10,500 mg/L, the display will show dashes until the reading drops to 9999 or lower.
	CLEAN INTERVAL	Select the cleaning interval (1, 5, 15 or 30 minutes; 1, 4, or 12 hours; 1, 3, 7 days) Default: 12 hours This is the interval between wiper cleaning of the sensor window. It is recommended to start with a setting of 30 minutes. This time may be adjusted according to the application. If readings continue to be accurate, try a longer interval. If not, shorten the interval.
	RESPONSE TIME	This is a damping function. While the Solitax takes readings continually, it will average them together over the period of the response time. Once the response time has elapsed, the displayed reading, 4-20 outputs, and alarm status are updated. (0 to 300 seconds) Default: 3 seconds
	LOGGER INTERVAL	This is the datalog interval, with options from 1–15 minutes. Values logged are the average of the all readings during the previous logging interval. The controller will hold approximately 360 days of readings for one sensor at 15 minute intervals, or 24 days at 1 minute intervals (and proportional in between). Default:10 minutes
	SET DEFAULTS	Resets all user-editable options to the factory-defaults.
TEST/MAIN		
	PROBE INFO	Displays the sensor type, entered name of the sensor (Default: sensor serial number), the sensor serial number, the software version number, and the sensor driver version number.
	PROFILE	Select Profile Counter to display the number of wipes made (from 20000 backwards). Select Reset Config to manually reset the profile counter.
	COUNTER	Shows the number of hours or cycles left for operating hours, test/maint, gasket, and the motor.
	TEST/MAIN	WIPE—Initiates the wiping action of the wiper.
		SIGNALS—displays the signal outputs for the device.
		OUTPUT MODE—Select the behavior of the instrument outputs (Hold, Active, Transfer, Selection)
		DEFAULT SETUP—Resets all user-editable options to the factory defaults.

4.6 Calibration

There are two calibration techniques; depending on whether turbidity or suspended solid is required (refer to section 4.6.2 or section 4.6.3 on page 18). Before calibration, determine the behavior of the 4–20 outputs and alarm relays while the user is in the CALIBRATE menu (refer to section 4.6.1).

4.6.1 Setting the Outmode

1. From the Main Menu, select SENSOR SETUP and press confirm.
2. Select the appropriate sensor if more than one is attached and confirm.
3. Select CALIBRATE and press confirm.
4. Select SET OUTMODE. Select the available Out Mode (Active, Hold, Transfer) and confirm.

4.6.2 Calibration for Turbidity

Turbidity calibration requires the use of a Turbidity Standard Solution. The manufacturer recommends the 800 NTU Turbidity Standard Solution (part of the calibration kit No. 57330-00). A zero-point calibration using deionized water is also recommended.

1. From the Main Menu, select SENSOR SETUP and press confirm.
2. Select the appropriate sensor if more than one is attached and confirm.
3. Select CALIBRATE and press confirm.
4. Select SENSOR MEASURE and confirm.
5. Place the sensor in the calibration cylinder with deionized water, mounting it with the supplied clamp. The tip of the probe should be approximately 1-inch below the surface of the water. Record the reading from the sensor measure display.
6. Select OFFSET. Multiply the reading obtained in step 5 and enter the value.
7. Select SENSOR MEASURE.
8. Rinse the outside of the StablCal® 800 NTU standard with water to remove any dust or debris adhering to the surface of the bottle. Gently invert both StablCal standard bottles a minimum of 50 times. Remove the lid and seal from each bottle. Slowly (to avoid creating bubbles) pour the contents of the bottles into the calibration cylinder. Immediately place the tip of the probe into the positioning bracket in the calibration cylinder. The tip of the probe should be approximately 1-inch below the surface standard. Allow the reading to become stable on the SENSOR MEASURE screen. Record the value (measured value). Calculate the factor. Refer to section 4.6.2.1.
9. Select FACTOR to display the corrected measurement.

4.6.2.1 Calculating the Factor

$$\text{New Factor} = \frac{\text{800 NTU Standard}}{\text{measured value}}$$

For example, if a sample measures 750 NTU using the sensor and the standard is 800 NTU, the new factor would be calculated as follows:

$$\text{New Factor} = \frac{\text{800 NTU}}{\text{750 NTU}} = 1.07$$

4.6.3 Calibration for Suspended Solids

Suspended solids calibration requires calibration to the actual sample. This optimizes the compensation for the particle size and shape typical at a measuring site. It is best performed by mounting the sensor as usual for normal measurement, and then grab samples collected and evaluated by laboratory methods. While a single point calibration is usually sufficient to provide accuracy, the SOLITAX does offer the ability to calibrate with up to 5 calibration points.

1. From the Main Menu, select SENSOR SETUP and press confirm.
2. Select the appropriate sensor if more than one is attached and confirm.
3. Select CALIBRATE and press confirm.
4. Select CONFIGURE and confirm.
5. Select the number of points desired for calibration (the unit with linearly interpolate values between calibration points). Select Factor for a single point calibration.
6. Mount the sensor as is during normal operation. Alternatively, place the sensor in the calibration cylinder (or a container with dark, non-reflective walls) 2 inches of clearance from the probe face with the probe face submerged by 1 inch or more.
7. Select SENSOR MEASURE and record the reading.
8. Immediately take a grab sample. Determine the total suspended solids using a gravimetric method such as Method 2540 D in *Standards Methods for the Examination of Water and WasteWater.*
9. Calculate the new factor. Refer to section 4.6.3.1 for single point (Factor) calibration. Refer section 4.6.3.2 on page 18 for multiple point calibrations.
10. Select FACTOR and press confirm. The corrected measurement should be displayed.

4.6.3.1 For Single Point (Factor) Calibration

Calculate the new factor:

$$\text{New Factor} = \frac{\text{Determined gravimetric value}}{\text{measured value}}$$

For example, if a sample measures 2.3 g/L using the SS sensor and the gravimetric value was 2.0 g/L, the new factor would be calculated as follows:

$$\text{New Factor} = \frac{2.0\ \text{g/L}}{2.3\ \text{g/L}} = 0.87$$

4.6.3.2 Multi-point Calibration

1. Repeat steps 6–8 in section 4.6.3 on page 18 at different times to obtain different measurements.
2. From the CONFIGURE menu, select the appropriate calibration point menu.
3. Enter the pairs of values for each reading, the target value being the laboratory determined value, and the actual value being the reading that the SOLITAX produced in step 5. The pairs should be entered in order from lowest values to highest.

Section 5 Maintenance

DANGER
Only qualified personnel should conduct the tasks described in this section of the manual.

Proper maintenance of the measuring windows in the sensor is critical for accurate measurements. The measuring windows should be checked monthly for soiling and the wiper checked for wear.

Important Note: *The seals must be replaced every 2 years by the Service Department. If the seals are not changed regularly, water may enter the probe head and seriously damage the instrument.*

5.1 Maintenance Schedule

Maintenance Task	**Duration**
Visual inspection	monthly
Check calibration	monthly *(depending on the ambient conditions)*
Inspection	six months (counter)
Seal change	every 2 years (counter)
Change wiper and reset counter	as per counter (20000 cycles)

5.2 Cleaning the Sensor Measuring Windows

CAUTION
Always were
- ***Safety glasses,***
- ***Gloves and***
- ***Overal***

handling hydrochloric acid and observe safety regulations.

The measuring windows are made of quartz glass. If necessary, they can be cleaned with a cleaning agent and a cloth.

5.3 Replacing the Wiper

The life of the wiper is dependent on the number of cleaning actions performed and the type of deposits to be removed. The life of the wiper varies. The wipers supplied with the instrument should last for approximately one year.

1. From the Main Menu, select SENSOR SETUP and press confirm.
2. Select the appropriate sensor if more than one is attached and confirm.
3. Select TEST/MAINT and press confirm.
4. Select PROFILE and confirm. Change the wiper, see section 5.3 on page 20.
5. Select RESET CONFIG and confirm.
6. Select MAN. RESET ARE YOU SURE? and confirm.

Figure 8 Wiper Replacement

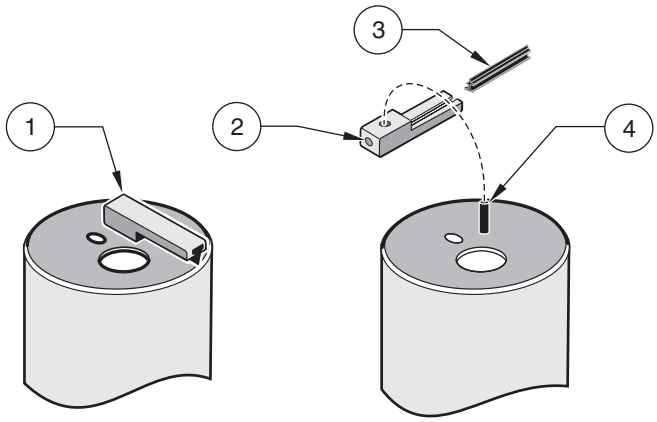

1. Wiper arm	**3.** Wiper
2. M4 hex socket head bolt	**4.** Wiper axle

Section 6 Troubleshooting

6.1 Error Codes

In the case of an error, the indication of the measured value flashes on the display and all the contacts and current outputs allocated to this sensor are placed on hold. The following conditions will result in flashing measured values:

- Data transmission between controller and sensor interrupted

On the Main menu open the SENSOR DIAG menu using **ENTER** and determine the cause of the fault.

Table 1 Error Messages

Error Displayed	Cause	Solution
POS. UNKNOWN	Wiper position unknown	Open the TEST/MAINT menu and trigger the ”WIPE” function, if the problem persists contact the manufacturer's customer service
LED FAULTY	Faulty LED	Contact customer service
MOIST	Moisture value > 10	Remove the sensor immediately and store in a dry place, contact customer service
CAL. DATA	Factory calibration data lost	Contact customer service

6.2 Warnings

A warning results in a flashing warning icon on the right of the display, all menus, contacts and outputs remain unaffected and continue to work normally. On the Main menu open the SENSOR DIAG menu using **ENTER** and determine the cause of the warning.

A warning may be used to trigger a relay and users can set warning levels to define the severity of the warning.

Table 2 Warnings

Warning Displayed	Cause	Solution
WARNING	Cause	Action
REPLACE WIPER	Counter elapsed	Replace wiper, reset counter
TEST/MAINT	Counter elapsed	Contact customer service
GASKET	Counter elapsed	Contact customer service

Section 7 Replacement Parts and Accessories

7.1 Immersion Sensors[1]

Description	Catalog Number
Turbidity, t-line sc, PVC with wiper (0.001 to 4000 NTU)	LXV423.99.10000
Turbidity, t-line sc, PVC without wiper (0.001 to 4000 NTU)	LXV423.99.12000
Turbidity and Suspended Solids, ts-line sc, PVC with wiper (0.001 to 4000 NTU, 0.001 mg/L to 50 g/L)	LXV423.99.10100
Turbidity and Suspended Solids, ts-line sc, PVC without wiper (0.001 to 4000 NTU, 0.001 mg/L to 50 g/L)	LXV423.99.12100
Turbidity and Suspended Solids, ts-line sc, stainless steel with wiper (0.001 to 4000 NTU, 0.001 mg/L to 50 g/L)	LXV423.99.00100
Turbidity and Suspended Solids, ts-line sc, stainless steel without wiper (0.001 to 4000 NTU, 0.001 mg/L to 50 g/L)	LXV423.99.02100
Turbidity and Suspended Solids, hs-line sc, PVC with wiper (0.001 to 4000 NTU, 0.001 mg/L to 500 g/L)	LXV423.99.10200
Turbidity and Suspended Solids, hs-line sc, PVC without wiper (0.001 to 4000 NTU, 0.001 mg/L to 500 g/L)	LXV423.99.12200
Turbidity and Suspended Solids, hs-line sc, stainless steel with wiper (0.001 to 4000 NTU, 0.001 mg/L to 500 g/L)	LXV423.99.00200
Turbidity and Suspended Solids, hs-line sc, stainless steel without wiper (0.001 to 4000 NTU, 0.001 mg/L to 500 g/L)	LXV423.99.02200

[1] All sensors come with the sensor, replacement wipers, and manual.

7.2 Insertion Sensors[1]

Description	Catalog Number
Turbidity and Suspended Solids, inline sc, stainless steel with wiper (0.001 to 4000 NTU, 0.001 mg/L to 50 g/L)	LXV424.99.00100
Turbidity and Suspended Solids, inline sc, stainless steel without wiper (0.001 to 4000 NTU, 0.001 mg/L to 50 g/L)	LXV424.99.02100
Turbidity and Suspended Solids, highline sc, stainless steel with wiper (0.001 to 4000 NTU, 0.001 mg/L to 500 g/L)	LXV424.99.00200
Turbidity and Suspended Solids, highline sc, stainless steel without wiper (0.001 to 4000 NTU, 0.001 mg/L to 500 g/L)	LXV424.99.02200

[1] All sensors come with the sensor, replacement wipers, and manual.

7.3 Replacement Parts

Description	Catalog Number
Set of wipers (for 5 changes) made of silicone for normal applications	LZX050
Set of wipers (for 5 changes) made of Viton for e. g. media containing oil	LZX578
SOLITAX sc User Manual, english	DOC023.54.03232
Extension cable, 5 m (16.4 ft)	LZX848
Extension cable, 10 m (33 ft)	LZX849
Extension cable, 15 m (50 ft)	LZX850
Extension cable, 20 m (65 ft)	LZX851
Extension cable, 30 m (100 ft)	LZX852
Extension cable, 50 m (165 ft)	LZX853

7.3 Replacement Parts (continued)

Description	Catalog Number
Extension pipe, 1,0 m (3.28 ft)	LZY413
Extension pipe, 1,8 m (5.90 ft)	LZY414
Installation kit, fixed-point (for t-line, ts-line, and hs-line immersion sensors)	LZX414.00.10000
Consisting of:	
Base	ATS010
Mounting plate	HPL061
Holding clamp (2×)	LZX200
Assembly pipe 2 m	BRO075
HS small parts set	LZX416
Installation kit with straight adapter	LZX414.00.20000
Kit, screws and seals for sensor adapters	LZX417
Miscellaneous hardware for probe installation kit	LZX416
Second fastening point, includes: bracket, sensor pipe stand, sensor pipe stand bracket, screws, and grommet)	LZX456
Sensor fixed-point mounting kit: Sensor pipe bracket	ATS010
Sensor pipe stand bracket	LZX200
L-bracket	ATS011
Adapter, Sensor 90° elbow	AHA034
Ball valve for insertion probes without adapting flange	LZX337
Welded flange made of C-steel for the pipe installation fitting	LZX703
Welded flange made of stainless steel for pipe installation safety fitting	LZX660

Section 8 Contact Information

HACH Company
World Headquarters
P.O. Box 389
Loveland, Colorado
80539-0389 U.S.A.
Tel (800) 227-HACH
(800) -227-4224
(U.S.A. only)
Fax (970) 669-2932
orders@hach.com
www.hach.com

Repair Service in the United States:
HACH Company
Ames Service
100 Dayton Avenue
Ames, Iowa 50010
Tel (800) 227-4224
(U.S.A. only)
Fax (515) 232-3835

Repair Service in Canada:
Hach Sales & Service
Canada Ltd.
1313 Border Street, Unit 34
Winnipeg, Manitoba
R3H 0X4
Tel (800) 665-7635
(Canada only)
Tel (204) 632-5598
Fax (204) 694-5134
canada@hach.com

Repair Service in Latin America, the Caribbean, the Far East, Indian Subcontinent, Africa, Europe, or the Middle East:
Hach Company World Headquarters,
P.O. Box 389
Loveland, Colorado,
80539-0389 U.S.A.
Tel +001 (970) 669-3050
Fax +001 (970) 669-2932
intl@hach.com

HACH LANGE GMBH
Willstätterstraße 11
D-40549 Düsseldorf
Tel. +49 (0)2 11 52 88-320
Fax +49 (0)2 11 52 88-210
info@hach-lange.de
www.hach-lange.de

HACH LANGE LTD
Pacific Way
Salford
GB-Manchester, M50 1DL
Tel. +44 (0)161 872 14 87
Fax +44 (0)161 848 73 24
info@hach-lange.co.uk
www.hach-lange.co.uk

HACH LANGE LTD
Unit 1, Chestnut Road
Western Industrial Estate
IRL-Dublin 12
Tel. +353(0)1 46 02 5 22
Fax +353(0)1 4 50 93 37
info@hach-lange.ie
www.hach-lange.ie

HACH LANGE GMBH
Hütteldorferstr. 299/Top 6
A-1140 Wien
Tel. +43 (0)1 9 12 16 92
Fax +43 (0)1 9 12 16 92-99
info@hach-lange.at
www.hach-lange.at

HACH LANGE
Rorschacherstrasse 30 a
CH-9424 Rheineck
Tel. +41 (0)71 886 91 11
Fax +41 (0)71 886 91 66
info@hach-lange.ch
www.hach-lange.ch

HACH LANGE FRANCE S.A.S.
8, mail Barthélémy Thimonnier
Lognes
F-77437 Marne-La-Vallée
cedex 2
Tél. +33 (0)8 20 20 14 14
Fax +33 (0)1 69 67 34 99
info@hach-lange.fr
www.hach-lange.fr

HACH LANGE SA
Motstraat 54
B-2800 Mechelen
Tél. +32 (0)15 42 35 00
Fax +32 (0)15 41 61 20
info@hach-lange.be
www.hach-lange.be

DR. LANGE NEDERLAND B.V.
Laan van Westroijen 2a
NL-4003 AZ Tiel
Tel. +31(0)344 63 11 30
Fax +31(0)344 63 11 50
info@hach-lange.nl
www.hach-lange.nl

HACH LANGE APS
Åkandevej 21
DK-2700 Brønshøj
Tel. +45 36 77 29 11
Fax +45 36 77 49 11
info@hach-lange.dk
www.hach-lange.dk

HACH LANGE AB
Vinthundsvägen 159A
SE-128 62 Sköndal
Tel. +46 (0)8 7 98 05 00
Fax +46 (0)8 7 98 05 30
info@hach-lange.se
www.hach-lange.se

HACH LANGE S.R.L.
Via Riccione, 14
I-20156 Milano
Tel. +39 02 39 23 14-1
Fax +39 02 39 23 14-39
info@hach-lange.it
www.hach-lange.it

HACH LANGE S.L.U.
Edif. Arteaga Centrum
C/Larrauri, 1C- 2ª Pl.
E-48160 Derio/Vizcaya
Tel. +34 94 657 33 88
Fax +34 94 657 33 97
info@hach-lange.es
www.hach-lange.es

HACH LANGE LDA
Av. do Forte nº8
Fracção M
P-2790-072 Carnaxide
Tel. +351 214 253 420
Fax +351 214 253 429
info@hach-lange.pt
www.hach-lange.pt

HACH LANGE SP.ZO.O.
ul. Opolska 143 a
PL-52-013 Wrocław
Tel. +48 (0)71 342 10-83
Fax +48 (0)71 342 10-79
info@hach-lange.pl
www.hach-lange.pl

HACH LANGE S.R.O.
Lešanská 2a/1176
CZ-141 00 Praha 4
Tel. +420 272 12 45 45
Fax +420 272 12 45 46
info@hach-lange.cz
www.hach-lange.cz

HACH LANGE S.R.O.
Roľnícka 21
SK-831 07 Bratislava –
Vajnory
Tel. +421 (0)2 4820 9091
Fax +421 (0)2 4820 9093
info@hach-lange.sk
www.hach-lange.sk

HACH LANGE KFT.
Vöröskereszt utca. 8-10.
H-1222 Budapest XXII. ker.
Tel. +36 (06)1 225 7783
Fax +36 (06)1 225 7784
info@hach-lange.hu
www.hach-lange.hu

HACH LANGE S.R.L.
Str. Căminului nr. 3
Sector 2
RO-021741 Bucureşti
Tel. +40 (0) 21 205 30 03
Fax +40 (0) 21 205 30 17
info@hach-lange.ro
www.hach-lange.ro

HACH LANGE
8, Kr. Sarafov str.
BG-1164 Sofia
Tel. +359 (0)2 963 44 54
Fax +359 (0)2 866 15 26
info@hach-lange.bg
www.hach-lange.bg

HACH LANGE SU ANALİZ SİSTEMLERİ LTD.ŞTİ.
Hilal Mah. 75. Sokak
Arman Plaza No: 9/A
TR-06550 Çankaya/ANKARA
Tel. +90 (0)312 440 98 98
Fax +90 (0)312 442 11 01
bilgi@hach-lange.com.tr
www.hach-lange.com.tr

HACH LANGE D.O.O.
Fajfarjeva 15
SI-1230 Domžale
Tel. +386 (0)59 051 000
Fax +386 (0)59 051 010
info@hach-lange.si
www.hach-lange.si

HACH LANGE E.Π.E.
Αυλίδος 27
GR-115 27 Αθήνα
Τηλ. +30 210 7777038
Fax +30 210 7777976
info@hach-lange.gr
www.hach-lange.gr

HACH LANGE E.P.E.
27, Avlidos str
GR-115 27 Athens
Tel. +30 210 7777038
Fax +30 210 7777976
info@hach-lange.gr
www.hach-lange.gr

HACH LANGE D.O.O.
Ivana Severa bb
42 000 Varaždin
Tel. +385 (0) 42 305 086
Fax +385 (0) 42 305 087
info@hach-lange.hr
www.hach-lange.hr

HACH LANGE MAROC SARLAU
Villa 14 – Rue 2 Casa Plaisance
Quartier Racine Extension
MA-Casablanca 20000
Tél. +212 (0)522 97 95 75
Fax +212 (0)522 36 89 34
info-maroc@hach-lange.com
www.hach-lange.ma

Section 9 Limited warranty

Hach Company warrants its products to the original purchaser against any defects that are due to faulty material or workmanship for a period of one year from date of shipment unless otherwise noted in the product manual.

In the event that a defect is discovered during the warranty period, Hach Company agrees that, at its option, it will repair or replace the defective product or refund the purchase price excluding original shipping and handling charges. Any product repaired or replaced under this warranty will be warranted only for the remainder of the original product warranty period.

This warranty does not apply to consumable products such as chemical reagents; or consumable components of a product, such as, but not limited to, lamps and tubing.

Contact Hach Company or your distributor to initiate warranty support. Products may not be returned without authorization from Hach Company.

Limitations

This warranty does not cover:

- Damage caused by acts of God, natural disaster, labor unrest, acts of war (declared or undeclared), terrorism, civil strife or acts of any governmental jurisdiction
- Damage caused by misuse, neglect, accident or improper application or installation
- Damage caused by any repair or attempted repair not authorized by Hach Company
- Any product not used in accordance with the instructions furnished by Hach Company
- Freight charges to return merchandise to Hach Company
- Freight charges on expedited or express shipment of warranted parts or product
- Travel fees associated with on-site warranty repair

This warranty contains the sole express warranty made by Hach Company in connection with its products. All implied warranties, including without limitation, the warranties of merchantability and fitness for a particular purpose, are expressly disclaimed.

Some states within the United States do not allow the disclaimer of implied warranties and if this is true in your state the above limitation may not apply to you. This warranty gives you specific rights, and you may also have other rights that vary from state to state.

This warranty constitutes the final, complete, and exclusive statement of warranty terms and no person is authorized to make any other warranties or representations on behalf of Hach Company.

Limitation of Remedies

The remedies of repair, replacement or refund of purchase price as stated above are the exclusive remedies for the breach of this warranty. On the basis of strict liability or under any other legal theory, in no event shall Hach Company be liable for any incidental or consequential damages of any kind for breach of warranty or negligence.

Appendix A Modbus Register Information

Table 3 Sensor Modbus Registers

Group Name	Tag Name	Register	Data Type#	Length	R/W	Description
Measurements	TurbidityFNU	40001	Float	2	R	Turbidity FNU
Measurements	TurbidityEBC	40003	Float	2	R	Turbidity EBC
Measurements	SolidsMGL	40005	Float	2	R	Solids mg/L
Measurements	SolidsGL	40007	Float	2	R	Solids g/L
Measurements	SolidsPR	40009	Float	2	R	Solids %
—	Reserved	40011	Unsigned Integer	1	R	Reserved
Base	Parameter	40012	Unsigned Integer	1	R/W	Parameter
Base	UnitTRB	40013	Unsigned Integer	1	R/W	Unit Turbidity
Base	UnitTS	40014	Unsigned Integer	1	R/W	Units Solids
Calibration	OffsetTRB	40015	Float	2	R/W	Turbdity Offset
Calibration	FactorTRB	40017	Float	2	R/W	Turbidity Factor
Calibration	FactorTS	40019	Float	2	R/W	Solids Factor
Data	Wiperstate	40021	Unsigned Integer	1	R/W	Wiper register
Setup	ResponseInterval	40022	Unsigned Integer	1	R/W	Response time
Setup	CleaningInterval	40023	Unsigned Integer	1	R/W	Wiper interval
Setup	LogInterval	40024	Unsigned Integer	1	R/W	Logger interval
Setup	Outputmodekal	40025	Unsigned Integer	1	R/W	Output when calibrate
Setup	Outputmodesrv	40026	Unsigned Integer	1	R/W	Output when service
Setup	Location	40027	String	8	R/W	Edited name
Setup	ProfilCounter	40035	Unsigned Integer	1	R/W	Profi counter
Data	SerienNummer	40036	String	6	R	Serial number
Calibration	DateUserCal	40042	Date	2	R	Date of manufacturing calibration
Calibration	DateUserCalTURB	40044	Date	2	R	Date of calibration turbidity
Calibration	DateUserCalSOLID	40046	Date	2	R	Date of calibration solid
Data	VersionAppl	40048	Float	2	R	Version application
Data	VersionBoot	40050	Float	2	R	Version Bootlader
Data	VersionStruct	40052	Unsigned Integer	1	R	Version structure probedriver
Data	VersionContent	40053	Unsigned Integer	1	R	Version register probedriver
Data	VersionFirmware	40054	Unsigned Integer	1	R	Version firmware probedriver
Data	FormatMinFNU	40055	Float	2	R	Minimum turbidity FNU
Data	FormatMaxFNU	40057	Float	2	R	Maximum turbidity FNU
Data	FormatMinEBC	40059	Float	2	R	Minimum turbidity EBC
Data	FormatMaxEBC	40061	Float	2	R	Maximum turbidity EBC
Data	FormatMinGL	40063	Float	2	R	Minimum solids g/L
Data	FormatMaxGL	40065	Float	2	R	Maximum solids g/L
Data	FormatMinMGL	40067	Float	2	R	Minimum solids mg/L
Data	FormatMaxMGL	40069	Float	2	R	Maximum mg/L
Data	FormatMinPR	40071	Float	2	R	Minimum solids %
Data	FormatMaxPR	40073	Float	2	R	Maximum solids %
Data	SignalsLED	40075	Unsigned Integer	1	R	Signal LED
Data	SignalsMoist	40076	Unsigned Integer	1	R	Signal moist

LZX337
LZX660
LZX661
LZY630.00.10000
LZY630.00.11000
LZY630.00.12000

DOC273.99.90204/6A

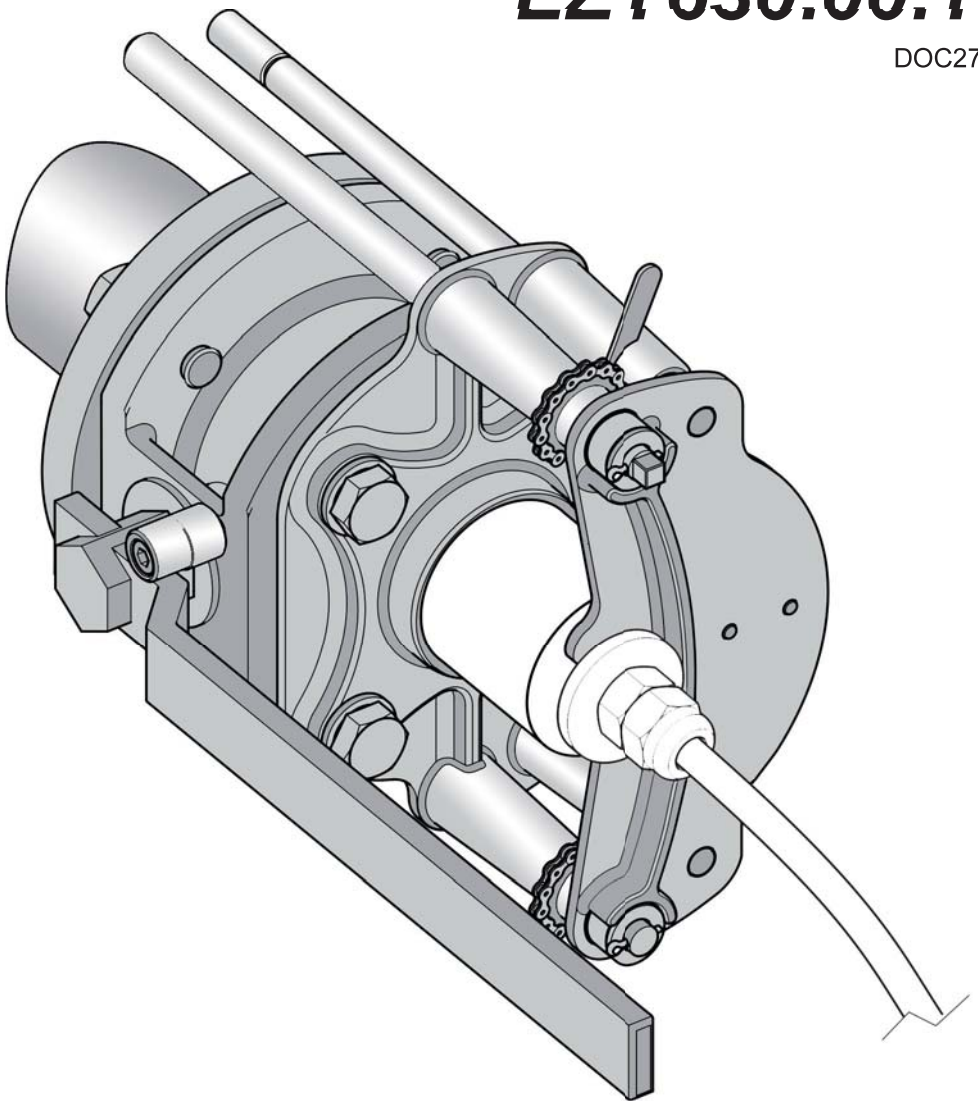

BG Преди инсталацията/монтажа на продукта, прочетете внимателно всички инструкции за инсталация и ги спазвайте по време на инсталирането. Инсталацията трябва да се извършва от квалифициран специалист в съответствие с местните разпоредби за безопасност. Погрижете се избраното място на инсталацията да гарантира безопасна инсталация и експлоатация. Продуктът е предназначен единствено за придържане/прикрепване на измервателните сензори/продукти на HACH/HACH LANGE. Всяко друго приложение може да носи риск за потребителя. Работите по поддръжката и ремонта трябва да се извършват изключително от оторизирания отдел за обслужване на клиенти. Могат да се използват само оригинални резервни части и препоръчани от производителя принадлежности. Всякакви изменения по продукта водят до анулиране на всички отговорности от страна на производителя. Неспазването на инструкциите за употреба или използването на продукта за цели, различни от тези, за които е предназначен, може да доведе до сериозно нараняване на потребителя и/или повреда на оборудването. Работата по заваряване, трябва да бъде извършвана само от квалифицирани заварчици съгласно DIN/EN 287 или от сертифицирани фирми по EN 3834-2.

CS Při instalaci/montáži produktu si pečlivě přečtěte všechny pokyny k instalaci a v průběhu instalace tyto pokyny dodržujte. Instalaci musí provádět kvalifikovaný odborník v souladu s místními bezpečnostními předpisy. Pečlivě vyberte umístění pro instalaci, které zajistí bezpečnou instalaci a provoz. Produkt je určen pouze k upevnění/přichycení měřicích snímačů/produktů HACH/HACH LANGE. Jakékoli jiné použití může znamenat riziko pro uživatele. Údržbu a opravy smí provádět výhradně autorizované oddělení zákaznických služeb. Je dovoleno používat pouze originální náhradní díly a příslušenství doporučené výrobcem. Jakékoli změny provedené na produktu způsobí neplatnost veškerých záruk. Nedodržení těchto pokynů nebo používání produktu pro jiný účel než pro který je určen může způsobit uživateli vážné zranění anebo poškodit zařízení. Potřebné svářečské práce musí být provedeny kvalifikovaným svářečem výhradně podle DIN/EN 287 nebo dodavatelem v souladu s EN 3834-2.

DA Før du installerer/monterer produktet, skal du læse alle installationsinstruktionerne grundigt og følge dem under installeringen. Installationen skal udføres af en kvalificeret ekspert i overensstemmelse med alle lokale sikkerhedsbestemmelser. Vælg sikker og betjeningsvenligt placering til installationen. Produktet er kun beregnet til at holde/fastgøre HACH/HACH LANGE-målesensorer/-produkter. Enhver anden form for brug kan medføre skadesrisiko for brugeren. Vedligeholdelse og reparation bør kun udføres af en autoriseret kundeserviceafdeling. Der må kun anvendes originale reservedele og tilbehør, der er anbefalet af producenten. Alle ændringer af produktet ophæver garantien. Hvis du ikke følger disse instruktioner eller bruger produktet til et andet formål, end det er beregnet til, kan der forekomme alvorlige personskader og/eller skader på udstyret. Svejsearbejde må kun udføres af DIN/EN 287 kvalificerede svejsere, eller EN 3834-2 certificerede firmaer.

DE Die Montageanleitung ist vor der Installation/Montage des Produktes sorgfältig und vollständig zu lesen und zu befolgen. Die Installation muss von einer Fachkraft (qualifiziertes Personal) unter Einhaltung aller lokal gültigen Sicherheitsvorschriften erfolgen. Der Montageort ist so zu wählen, dass eine sichere Installation und der sichere Betrieb gewährleistet ist. Die Verwendung des Produktes ist ausschließlich zum Halten/Befestigen von HACH/HACH LANGE Messsonden/Produkten vorgesehen. Jede andere Benutzung ist mit Risiken für den Benutzer verbunden. Wartungs- und Reparaturarbeiten sollten nur vom autorisierten Kundendienst durchgeführt werden. Es dürfen nur vom Hersteller empfohlene Originalersatz- und Zubehörteile verwendet werden. Änderungen am Produkt haben den Verlust jeglicher Haftungsansprüche zur Folge. Nichtbeachtung dieser Anweisungen oder eine andere Verwendung des Produktes kann schwerwiegende Verletzungen der Anwender oder Beschädigung am Gerät zur Folge haben. Die notwendigen Schweißarbeiten dürfen ausschließlich von entsprechend DIN/EN 287 qualifizierten Schweißern durchgeführt werden, oder von Fachfirmen entsprechend EN 3834-2.

EL Πριν από την εγκατάσταση/τοποθέτηση του προϊόντος, διαβάστε προσεκτικά και ακολουθήστε όλες τις οδηγίες εγκατάστασης κατά την εγκατάσταση. Η εγκατάσταση πρέπει να πραγματοποιηθεί από κατάλληλα εκπαιδευμένο τεχνικό και σύμφωνα με όλους τους τοπικούς κανονισμούς ασφάλειας. Επιλέξτε μια θέση τοποθέτησης που θα διασφαλίσει την ασφαλή εγκατάσταση και λειτουργία. Το προϊόν προορίζεται αποκλειστικά για τη στήριξη/σύνδεση των αισθητήρων μέτρησης/προϊόντων HACH/HACH LANGE. Οποιαδήποτε άλλη χρήση ενδέχεται να ενέχει κινδύνους για τον χρήστη. Οι εργασίες συντήρησης και επισκευής θα πρέπει να εκτελούνται αποκλειστικά από το εξουσιοδοτημένο τμήμα εξυπηρέτησης πελατών. Επιτρέπεται η χρήση μόνον των γνήσιων ανταλλακτικών και των αξεσουάρ που συνιστά ο κατασκευαστής. Οποιεσδήποτε αλλαγές στο προϊόν ακυρώνουν την ευθύνη της εταιρείας. Σε περίπτωση που δεν τηρηθούν αυτές τις οδηγίες ή χρησιμοποιηθεί το προϊόν για διαφορετικό σκοπό από αυτόν που προορίζεται, ενδέχεται να προκληθεί σοβαρός τραυματισμός στον χειριστή και/ή βλάβη στον εξοπλισμό. Οι απαιτούμενες εργασίες συγκόλλησης θα πρέπει να διεξαχθούν από εξειδικευμένο προσωπικό σύμφωνα με DIN / EN287 ή από κατασκευαστικές εταιρείες σύμφωνα με DIN 3834-2.

EN Before installing/mounting the product, read all the installation instructions carefully and follow the instructions during installation. Installation must be carried out by a qualified expert in accordance with all local safety regulations. Take care to choose an installation location that will ensure safe installation and operation. The product is intended solely for holding/attaching HACH/HACH LANGE measuring sensors/products. Any other use may involve risks for the user. Maintenance and repair work should be carried out exclusively by the authorized customer service department. Only original replacement and accessory parts recommended by the manufacturer may be used. Any changes made to the product will nullify all liability. Failure to follow these instructions or use of the product for a purpose other than that for which it was intended may result in serious injury to the user and/or damage to the equipment. The required welding work must be performed exclusively in accordance with DIN / EN 287 qualified welders, or from contractors in accordance with EN 3834-2.

ES Antes de instalar o fijar el producto, lea con atención todas las instrucciones de instalación y sígalas durante el montaje. La instalación debe llevarla a cabo un experto cualificado, de acuerdo con las normas de seguridad locales. Elija una ubicación para la instalación que garantice que ésta y el funcionamiento del producto sean seguros. El producto sólo está diseñado para sujetar o fijar sensores o productos de medición de HACH/HACH LANGE. Cualquier otro uso puede conllevar riesgos para el usuario. El trabajo de mantenimiento y reparación sólo debe llevarse a cabo por el departamento de atención al cliente autorizado. Sólo deben utilizarse las piezas de repuesto recomendadas por el fabricante. Cualquier cambio que se realice en el producto anulará toda responsabilidad. Si no se siguen estas instrucciones o si se utiliza el producto para un uso distinto del uso para el que fue diseñado, el usuario puede sufrir heridas graves y/o se puede dañar el equipo. Los trabajos de soldadura requeridos deben ser realizados exclusivamente por soldadores cualificados según DIN / EN 287, o por contratistas de acuerdo a EN 3834-2.

FI Ennen kuin asennat/kiinnität tuotteen, lue kaikki asennusohjeet huolellisesti ja noudata niitä. Tuotteen saa asentaa vain valtuutettu henkilö, ja asennuksessa on noudatettava kaikkia paikallisia turvallisuusmääräyksiä. Asenna tuote sellaiseen paikkaan, johon asentaminen on turvallista ja jossa tuote toimii oikein. Tuote on tarkoitettu ainoastaan HACH/HACH LANGE -mittausanturien/-tuotteiden ripustamiseen/kiinnittämiseen. Muunlainen käyttö voi aiheuttaa vaaratilanteita käyttäjälle. Huolto- ja korjaustyöt saa tehdä vain valtuutettu asiakaspalveluosasto. Tuotteessa saa käyttää vain valmistajan suosittelemia alkuperäisiä varaja lisäosia. Tuotteeseen tehdyt muutokset mitätöivät kaikki vastuut. Jos näitä ohjeita ei noudateta tai jos tuotetta käytetään johonkin muuhun kuin sen varsinaiseen käyttötarkoitukseen, käyttäjälle voi aiheutua vakavia vammoja ja/tai laite voi vaurioitua. Vain DIN / EN 287 mukaan hyväksytyt hitsaajat tai EN 3834-2 mukaiset urakoitsijat saavat tehdä vaaditut hitsaustyöt.

FR Avant l'installation/le montage du produit, lisez attentivement toutes les instructions d'installation et suivez-les au cours de l'installation. L'installation doit être réalisée par un expert qualifié conformément à toutes les réglementations de sécurité locales. Veillez à choisir un emplacement permettant d'assurer une installation et un fonctionnement en toute sécurité. Ce produit est uniquement destiné à maintenir/fixer des capteurs/équipements de mesure HACH LANGE. Toute autre utilisation entraînerait un risque pour l'utilisateur. Seul le service clientèle agréé est autorisé à effectuer les travaux de maintenance et de réparation. Seuls les pièces de rechange et les accessoires d'origine recommandés par le fabricant doivent être utilisés. La modification du produit annule toute responsabilité. Le non-respect de ces instructions ou l'utilisation de ce produit à des fins autres que celles auxquelles il est destiné risqueraient de gravement blesser l'utilisateur et/ou d'endommager le matériel. Le travail de soudure requis doit être réalisé exclusivement par des soudeurs qualifiés en conformité avec DIN / EN 287, ou par prestataires conformément à EN 3834-2.

HR Prije instalacije/postavljanja uređaja, pažljivo pročitajte sve upute za montažu i pratite ih tijekom postupka instalacije. Instalaciju mora provesti kvalificirani stručnjak u skladu s lokalnim sigurnosnim propisima. Brižljivo odaberite mjesto instalacije na kojem će se postavljanje uređaja i njegovo korištenje odvijati u sigurnim uvjetima. Uređaj je namijenjen isključivo za držanje/pričvršćivanje HACH/HACH LANGE mjernih senzora/uređaja. Upotreba uređaja u druge svrhe može predstavljati rizik za korisnika. Održavanje i popravke smije provoditi isključivo ovlašteni servisni odjel. Mogu se upotrebljavati samo originalni rezervni i dodatni dijelovi koje je preporučio proizvođač. Bilo kakve izmjene izvršene na uređaju poništit će njegovu pouzdanost. Nepoštivanje ovih uputa ili upotreba uređaja za svrhe za koje nije namijenjen mogu dovesti do ozbiljnih ozljeda osoba koje se njime koriste i/ili štete na opremi. Potreban posao za zavarivanje mora biti izveden prema DIN / EN 287 od strane kvalificiranih varioca ili izvođača radova prema EN 3834-2.

HU A termék üzembe helyezése/rögzítése előtt tekintse át a vonatkozó utasításokat, és tartsa is be azokat. Az üzembe helyezést kizárólag szakember végezheti, a hatályos biztonsági előírásoknak megfelelően. A telepítéshez biztonságos üzemet szavatoló helyet válasszon. A termék kizárólag HACH/HACH LANGE mérőberendezések és készülékek rögzítésére szolgál. Az ettől eltérő bármilyen használat kockázattal jár. A karbantartást és egyéb javításokat kizárólag az arra feljogosított ügyfélszolgálati részleg végezheti el. Csak a gyártó által ajánlott cserealkatrészek használhatóak. A terméken végzett bármilyen módosítás a felelősség kizárását vonja maga után. Az utasítások be nem tartása, a termék megadott felhasználási területtől eltérő célra való alkalmazása a kezelő súlyos sérülését és/vagy a berendezés károsodását okozhatja. A szükséges hegesztési munkákat csak DIN/EN 287 bizonyítvánnyal rendelkező hegesztő szakember, vagy EN 3834-2 minősítéssel rendelkező szakcég végezheti.

IT Prima di installare/montare il prodotto, leggere le istruzioni sull'installazione e attenersi scrupolosamente ad esse durante l'installazione. L'installazione deve essere eseguita da personale qualificato in base alle norme di sicurezza locali. Scegliere con cura il punto di installazione per un'installazione corretta e un funzionamento sicuro. Il prodotto è adatto esclusivamente per il sostegno/collegamento di prodotti/sensori di misura HACH/HACH LANGE. Qualsiasi altro utilizzo può provocare lesioni all'utente. La manutenzione e gli interventi di riparazione devono essere eseguiti esclusivamente dal reparto assistenza clienti. Il produttore consiglia di sostituire gli accessori solo con ricambi originali. Qualsiasi modifica apportata al prodotto prevede l'esclusione da qualsiasi responsabilità. La mancata osservanza della procedura di installazione o l'utilizzo inappropriato del prodotto possono provocare serie lesioni all'utente e/o danni all'apparecchiatura. Il lavoro di saldatura richiesto deve essere effettuato esclusivamente in accordo alla direttiva DIN / EN 287 da saldatori qualificati o da costruttori in accordo a EN 3834-2.

JA 製品を取り付ける前にすべての設置手順をよく読み、手順に従って設置してください。 設置は地域の安全基準に従い、資格のある担当者が行ってください。 設置場所は、安全に取り付けて操作できる場所を選んでください。 本製品は、HACH/HACH LANGE 測定センサー/製品の保持および接続専用です。 その他の用途には、ユーザーの責任において使用してください。 メンテナンスおよび修理は、認定されたカスタマー・サービス部門のみが実施できます。 交換部品および付属品には、メーカー推奨の純正品のみを使用してください。 製品を改変した場合、保証は無効になります。 手順に従わなかった場合、または製品を用途外に使用した場合は、重傷を負ったり、装置が破損することがあります。 ウェルディングはDIN/EN287に基づいて認定された作業者あるいはEN3834-2に基づく受託業者が実施する。

KO 본 제품을 설치하거나 장착하기 전에 모든 설치 지침을 충분히 검토하고 설치 시 반드시 해당 지침을 따르십시오. 설치는 숙련된 기술자가 지역의 모든 관련 안전 규정을 준수하여 수행해야 합니다. 설치 및 작동 시 안전한 장소를 신중하게 고르십시오. 본 제품은 HACH/HACH LANGE 측정 센서 또는 측정 제품을 지지하거나 연결하는 용도로만 사용됩니다. 그 외 다른 용도로 사용 시 작업자가 위험할 수 있습니다. 유지 관리 및 보수 작업은 공인된 고객 서비스 부서에서 전적으로 담당해야 합니다. 제조사가 승인한 교체용 부품 및 주변 장치만 사용 가능합니다. 제품 변경으로 인한 책임은 지지 않습니다. 이러한 지침에 어긋나거나 원래 제품의 용도와 다른 목적으로 사용할 경우 작업자에게 심각한 부상이 일어나거나 장비가 손상될 수 있습니다. 용접 작업이 필요한 경우에는 반드시 DIN/EN 287 자격을 가진 용접공이나 EN3834-2에 상응한 사람에 의해서 반드시 수행되어져야 합니다.

NL Lees vóór montage van het product alle montage-instructies grondig door en volg de instructies tijdens de montage op. Montage dient te worden uitgevoerd door een gekwalificeerde persoon en in overeenstemming met alle plaatselijke veiligheidsvoorschriften. Kies een montagelocatie die een veilige montage en werking garandeert. Het product is uitsluitend bedoeld voor opname/bevestiging van meetsensoren/-producten van HACH/HACH LANGE. Elk ander gebruik kan gevaren voor de gebruiker met zich meebrengen. Onderhoud en reparatie mogen uitsluitend worden uitgevoerd door de geautoriseerde afdeling klantenservice. Er mogen alleen originele, door de fabrikant aanbevolen reservedelen en accessoires worden gebruikt. Bij elke aanpassing van het product vervalt de aansprakelijkheid. Als u deze instructies niet opvolgt of als u het product voor een ander doel gebruikt dan waarvoor het is bedoeld, kan dit leiden tot ernstig letsel van de gebruiker en/of beschadiging van de apparatuur. Het benodigde laswerk mag uitsluitend uitgevoerd worden door DIN/EN287 gekwalificeerde lassers, of door EN3834-2 gecertificeerde installateurs.

PL Przed zainstalowaniem/zamontowaniem produktu, uważnie przeczytać wszystkie instrukcje i postępować zgodnie z ich zaleceniami podczas instalacji. Instalacja powinna zostać wykonana przez specjalistę o odpowiednich kwalifikacjach, zgodnie ze wszystkimi obowiązującymi lokalnie przepisami bezpieczeństwa. Wybrać takie miejsce instalacji, które zapewni bezpieczeństwo podczas instalacji i użytkowania. Produkt jest przeznaczony wyłącznie do zamocowania/zawieszenia czujników/mierników firmy HACH/HACH LANGE. Jakiekolwiek inne zastosowanie niesie ze sobą ryzyko dla użytkownika. Konserwacje i naprawy powinny być przeprowadzane wyłącznie przez upoważniony personel działu serwisowego klienta. Wolno używać tylko oryginalnych części zamiennych i części wyposażenia zalecanych przez producenta. Jakiekolwiek modyfikacje w budowie i działaniu produktu oznaczają wygaśnięcie

gwarancji i wykluczają wszelką odpowiedzialność producenta. Nieprzestrzeganie tych instrukcji lub używanie produktu do celów innych niż wynika z opisu jego przeznaczenia, może być przyczyną poważnych wypadków z udziałem użytkownika i/lub uszkodzenia sprzętu. Wymagane prace spawalnicze muszą być wykonane zgodnie z normą DIN / EN 287 przez wykfalifikowany personel lub przez firmy pośredniczące zgodnie z EN3834-2.

PT Antes de instalar/montar o produto, leia atentamente as instruções de instalação e siga-as durante a instalação. A instalação deve ser efectuada por um profissional qualificado em conformidade com todas as regulamentações locais de segurança. Escolha cuidadosamente o local de instalação de modo a assegurar uma operação e instalação com segurança. Este produto foi concebido apenas para segurar/fixar sensores/produtos para medições da HACH/HACH LANGE. Qualquer outro tipo de utilização pode implicar riscos para o utilizador. O trabalho de manutenção e reparação deve ser efectuado única e exclusivamente pelo departamento de assistência ao cliente devidamente autorizado. Apenas podem ser utilizados acessórios e peças de substituição originais recomendados pelo fabricante. Qualquer alteração feita ao produto anula qualquer responsabilidade da nossa parte. O não cumprimento das instruções ou a utilização do produto para outros fins que não aqueles para que o produto foi concebido pode resultar em ferimentos graves e/ou danos no equipamento. O trabalho de soldadura exigido deverá ser executado exclusivamente por soldadores qualificados de acordo com a norma DIN /EN 287, ou por empreiteiros em conformidade com a norma EN 3834-2.

RO Înainte de instalarea/montarea produsului, citiți cu atenție toate instrucțiunile de instalare și urmați instrucțiunile în timpul instalării. Instalarea trebuie realizată de un expert calificat în conformitate cu toate reglementările locale pentru siguranță. Aveți grijă să alegeți o locație de instalare care să asigure instalarea și funcționarea în siguranță. Produsul este destinat exclusiv pentru menținerea/atașarea senzorilor/produselor de măsurare HACH/HACH LANGE. Utilizarea în alte scopuri poate implica riscuri pentru utilizator. Întreținerea și lucrările de reparație trebuie realizate exclusiv de departamentul de service autorizat pentru clienți. Pot fi utilizate numai piesele de schimb și accesoriile originale recomandate de producător. Orice modificare adusă produsului va duce la anularea oricărei răspunderi. Nerespectarea acestor instrucțiuni sau utilizarea produsului în alte scopuri decât în cele destinate pot duce la accidente grave pentru utilizator și/sau defectarea echipamentului. Lucrările de sudură necesare trebuie să fie efectuate exclusiv de sudori calificați în conformitate cu DIN / EN 287 , sau de contractori în conformitate cu EN 3834-2.

RU Перед установкой/монтажом изделия необходимо внимательно прочитать инструкции по установке и строго следовать им во время выполнения работ. Установка должна быть выполнена квалифицированным специалистом с соблюдением действующих правил по технике безопасности. Выбирая место для установки, необходимо учитывать требования по безопасности при монтаже и эксплуатации изделий. Данное изделие предназначено только для крепления измерительных датчиков/приборов компании HACH/HACH LANGE. Любое другое применение может представлять опасность для пользователя. Работы по ремонту и техобслуживанию должны выполняться исключительно специалистами уполномоченной сервисной организации. С изделием могут использоваться только запчасти и принадлежности, рекомендуемые изготовителем. Любые изменения, внесенные в конструкцию изделия, приведут к отмене гарантии поставщика. Несоблюдение требований инструкций или использование изделия не по назначению могут стать причиной серьезных травм для людей и/или повреждения оборудования. Необходимые сварочные работы должны проводиться только сварщиками, квалифицированными в соответствии с DIN / EN 287, или подрядчиками в соответствии с DIN 3834-2.

SK Pred inštaláciou/upevnením produktu si pozorne prečítajte všetky pokyny k inštalácii a počas inštalácie ich dodržujte. Inštaláciu musí vykonať kvalifikovaný expert v súlade so všetkými miestnymi bezpečnostnými nariadeniami. Uistite sa, že si vyberiete miesto inštalácie, ktoré zaručí bezpečnú inštaláciu a prevádzku. Produkt je určený výlučne pre uchytenie/upevnenie meracích snímačov/produktov HACH/HACH LANGE. Akékoľvek iné použitie môže zahŕňať riziká pre používateľa. Údržbu a opravy by malo vykonávať výlučne autorizované oddelenie služieb pre zákazníkov. Môžu sa použiť len originálne náhradné diely a príslušenstvo, ktoré odporúča výrobca. Akékoľvek zmeny vykonané na produkte spôsobia neplatnosť všetkej zodpovednosti. Nedodržanie týchto pokynov alebo používanie produktu na iný než určený účel môže spôsobiť vážne zranenie používateľa alebo poškodenie zariadenia. Požadované zváračské práce musia byť vykonané výhradene v súlade s DIN/EN 287 kvalifikovanými zváračmi, alebo dodávateľmi v súlade s EN 3834-2.

SL Pred namestitvijo/postavitvijo izdelka natančno preberite vsa navodila za namestitev in jih med nameščanjem upoštevajte. Namestitev mora izvesti usposobljen strokovnjak v skladu z vsemi lokalnimi varnostnimi predpisi. Za namestitev izberite mesto, ki zagotavlja varno namestitev in uporabo. Izdelek je namenjen izključno za namestitev/pritrditev merilnih senzorjev/izdelkov HACH/HACH LANGE. Vsakršna drugačna uporaba lahko predstavlja nevarnost za uporabnika. Vzdrževanje in popravilo lahko izvaja izključno osebje pooblaščenega servisnega oddelka. Uporabljate lahko samo originalne nadomestne dele in dodatno opremo, ki jih priporoča proizvajalec. Spremembe izdelka razveljavijo vsakršno odgovornost. Če teh navodil ne upoštevate ali izdelek uporabljate v neprimeren namen, lahko pride do hudih poškodb uporabnika in/ali poškodovanja opreme. Zahtevana dela varenja lahko izvajajo izključno usposobljeni varilci v skladu z DIN/EN 287 ali izvajalci v skladu z EN 3834-2.

SR Pre instalacije/montaže uređaja pažljivo pročitajte sva uputstva za montažu i pratite ih tokom postupka montaže. Instalaciju mora provesti kvalifikovani stručnjak u skladu sa lokalnim propisima o bezbednosti. Brižljivo odaberite mesto instalacije na kom će se montaža uređaja i korišćenje odvijati u bezbednim uslovima. Uređaj je namenjen isključivo za držanje/pričvršćivanje HACH/HACH LANGE mernih senzora/uređaja. Upotreba uređaja u druge svrhe može da predstavlja rizik po korisnika. Održavanje i opravke sme da provodi isključivo ovlašćeni serviser. Kod zamene i opravaka smeju da se koriste samo originalni rezervni i dodatni delovi koje je preporučio proizvođač. Bilo kakve izmene izvršene na uređaju poništiće njegovu pouzdanost. Nepridržavanje uputstava ili upotreba uređaja u svrhe za koje nije namenjen mogu dovesti do ozbiljnih povreda ljudi koji ga koriste i/ili štete na opremi. Neophodni radovi zavarivanja treba da budu izvršeni od strane zavarivača u skladu sa DIN / EN 287 ili od ugovorenog izvođača radova u skladu sa EN 3834-2.

SV Läs alla installationsanvisningar noggrant innan du installerar/monterar produkten och följ anvisningarna under installationen. Installationen måste utföras av en kvalificerad expert i enlighet med alla lokala säkerhetsföreskrifter. Se till att välja en installationsplats som garanterar säker installation och drift. Produkten är endast ämnad för att hålla/fästa mätsensorer/-produkter från HACH/HACH LANGE. Annan användning kan medföra risker för användaren. Underhålls- och reparationsarbeten ska uteslutande utföras av den auktoriserade kundserviceavdelningen. Endast originalreservdelar och -tillbehör som rekommenderas av tillverkaren ska användas. Om någon ändring görs på produkten upphävs tillverkarens ansvar. Det kan det medföra allvarliga skador för användaren eller skador på utrustningen om du inte följer anvisningarna eller om du använder produkten i installationer den inte är avsedd för. Svetsarbeten skall uteslutande utföras av svetsare kvalificerade enligt DIN/EN 287, eller av entreprenör enligt EN3834-2.

TR Ürünün montajını yapmadan önce, tüm montaj talimatlarını dikkatlice okuyun ve kurulum sırasında talimatları mutlaka takip edin. Montaj, kalifiye bir uzman tarafından tüm yerel güvenlik düzenlemelerine uygun şekilde yapılmalıdır. Ürünü, montaj ve kullanımın güvenli olacağı bir yere monte edin. Ürün sadece HACH/HACH LANGE ölçüm sensörlerini/ ürünlerini, tutmak/takmak için tasarlanmıştır. Başka amaçlarla kullanılması, kullanıcı için tehlikeler doğurabilir. Bakım ve onarım sadece yetkili müşteri hizmetleridepartmanı tarafından gerçekleştirilmelidir. Sadece üretici tarafından önerilen orijinal yedek parça ve aksesuarlar kullanılmalıdır. Ürüne yapılan her türlü değişiklik, tüm sorumluluğu ortadan kaldırır. Bu talimatlara uyulmaması veya ürünün üretim amacından başka bir amaçla kullanılması sonucunda kullanıcı ciddi şekilde yaralanabilir ve/veya ürün zarar görebilir. Gerekli kaynak işi yalnızca kalifiye kaynakçılar tarafından DIN / EN 287'ye göre yapılmalıdır, veya müteahhitler tarafından EN 3834-2'ye göre yapılmalıdır.

ZH 在安装/固定产品之前，请仔细阅读所有安装说明，并在安装过程中遵守这些说明。 必须由合格的专家完成安装，并遵守当地的所有安全法规。仔细选择安装地点，确保安全地安装和操作。 本产品只能用于固定/连接 HACH/HACH LANGE 测量传感器/产品。 用于其他用途可能会给用户带来危险。 维护和修理工作应由经授权的客户服务部门完成。 只能使用正宗替换件和制造商推荐的附件。 对本产品进行任何更改均可能导致所有担保失效。不遵守这些说明，或者将本产品用于其它用途，可能会对用户造成严重伤害和/或设备损坏。所需的焊接工作必须要根据DIN/EN 287，由合格的焊接工人单独执行，或者根据EN 3834-2由承包人执行。

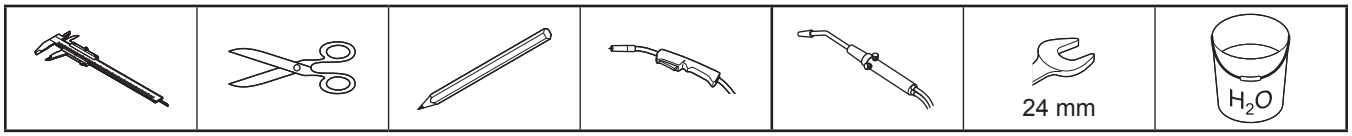

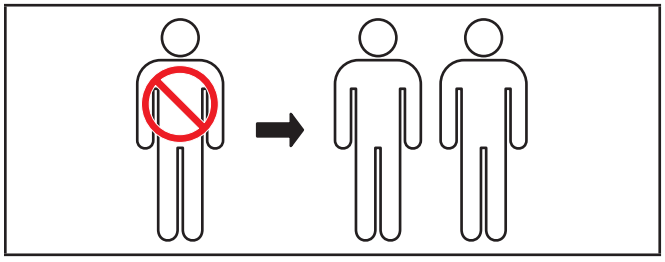

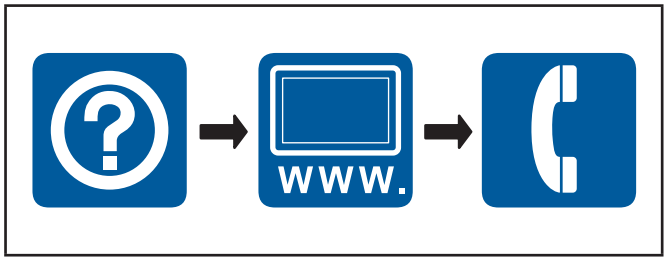

LZX337	SOLITAX inline sc SOLITAX highline sc	**A1**		**A2**	LZY441	**A3**	M16x45mm A4 ISO4017	**A4**	LZY462	**A5**	DOC273.99.03911	**A6**	LZV678	
		1x		1x		4x		1x		1x		1x		

LZX660	SS 316Ti/ 1.4571 DN65/PN16 DIN 2633	**B1**	DN65	**B2**	DOC273.99.03911	**B3**	DN65	
		1x		1x		1x		

LZX661	C-steel / 1.0037 DN65/PN16 DIN 2633	**B1**	DN65	**B2**	DOC273.99.03911	**B3**	DN65	
		1x		1x		1x		

LZY630.00.12000	TSS inline sc	**A1**		**A2**	LZY441	**A3**	M16x45mm A4 ISO4017	**A4**	LZY462	**A5**	DOC273.99.03911	**A6**	LZV678	
		1x		1x		4x		1x		1x		1x		

TSS
inline sc

LZY630.00.10000

LZY630.00.12000		**A1**		**A2**	LZY441	**A3**	M16x45mm A4 ISO4017	**A4**	LZY462	**A5**	DOC273.99.03911	**A6**	LZV678	
		1x		1x		4x		1x		1x		1x	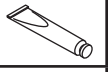	
LZX660	SS 316Ti/ 1.4571 DN65/PN16 DIN 2633	**B1**	DN65	**B2**	DOC273.99.03911	**B3**	DN65							
		1x		1x		1x								

TSS
inline sc

LZY630.00.11000

LZY630.00.12000		**A1**		**A2**	LZY441	**A3**	M16x45mm A4 ISO4017	**A4**	LZY462	**A5**	DOC273.99.03911	**A6**	LZV678	
		1x		1x		4x		1x		1x		1x		
LZX661	C-steel / 1.0037 DN65/PN16 DIN 2633	**B1**	DN65	**B2**	DOC273.99.03911	**B3**	DN65							
		1x		1x		1x								

1

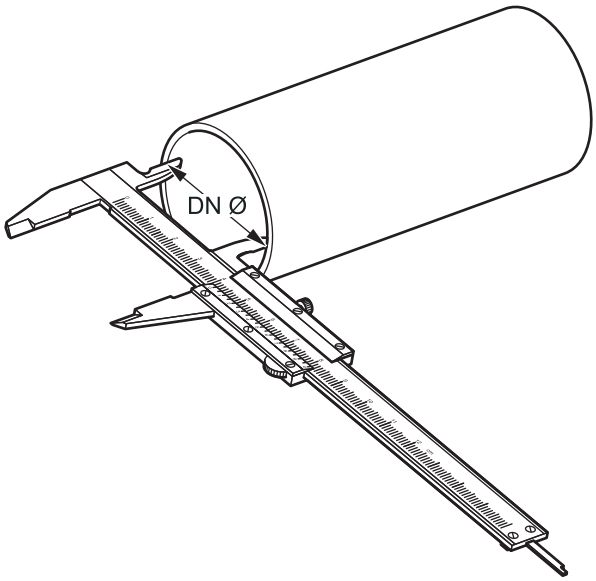

2

A5

DN Ø =

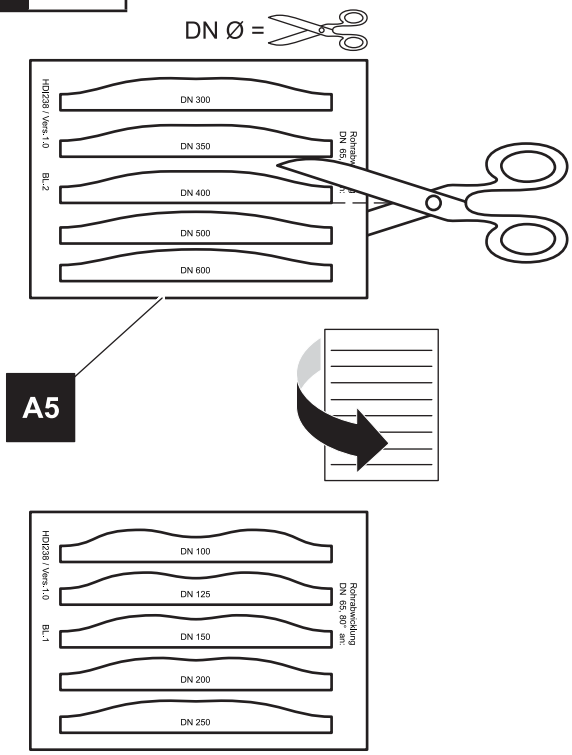

3

B3

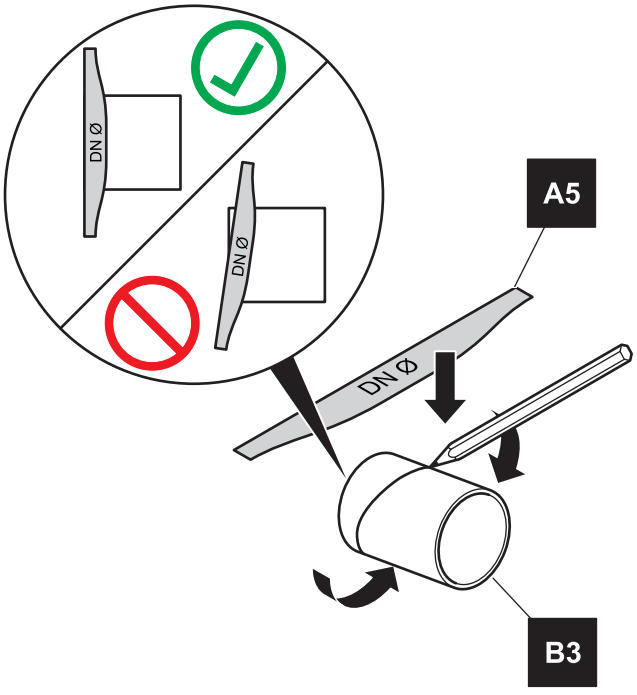

4

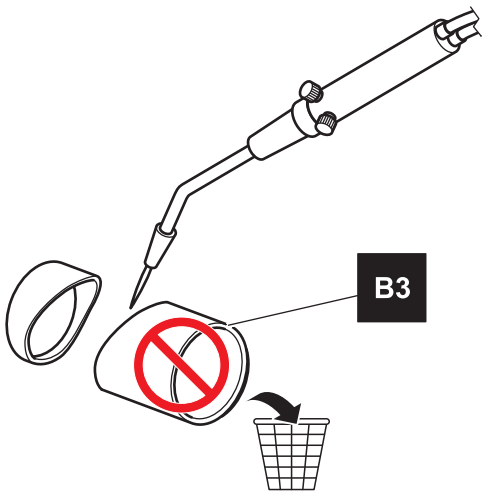

5

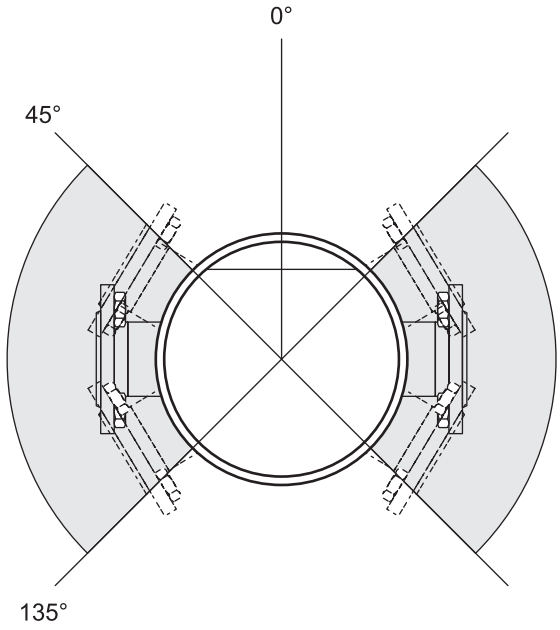

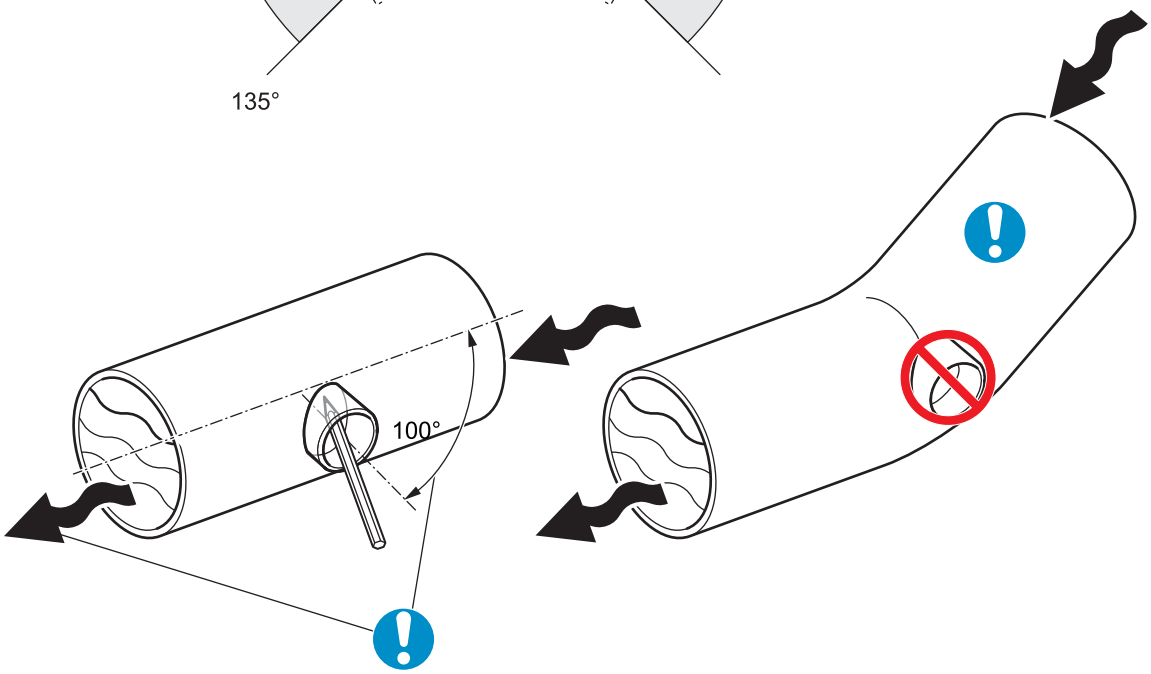

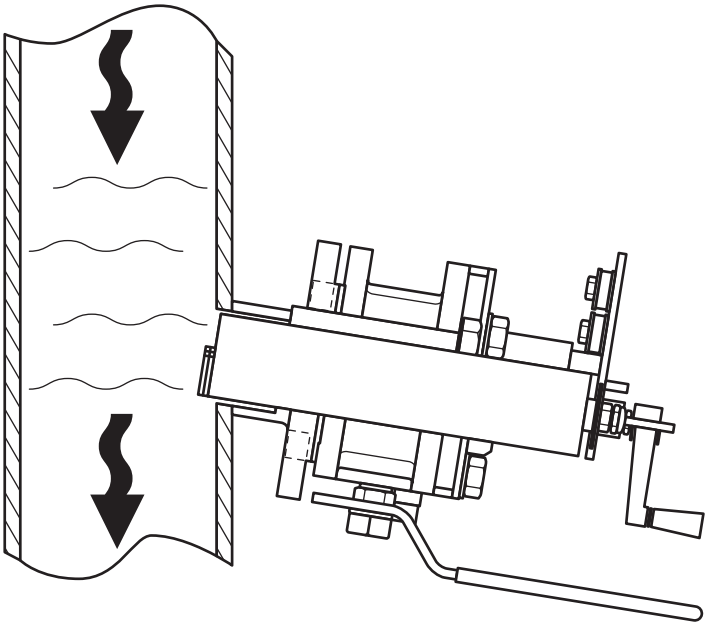

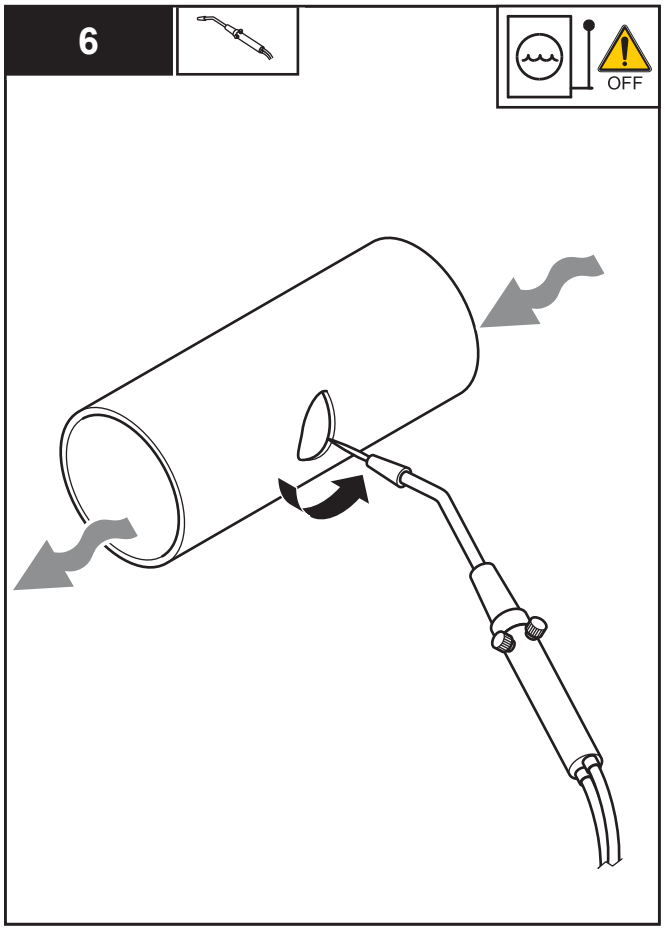
6
OFF

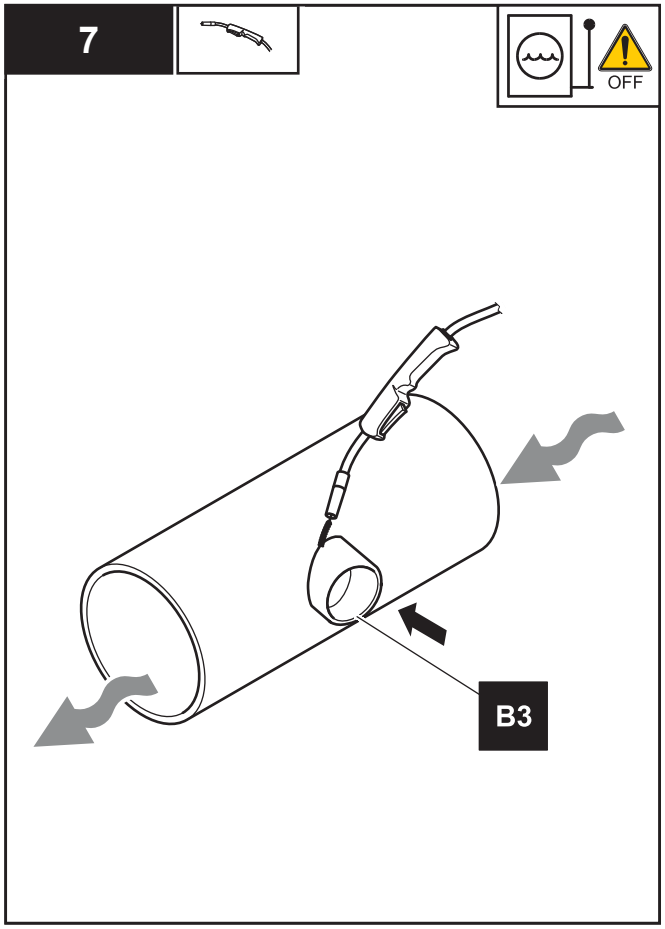
7
OFF
B3

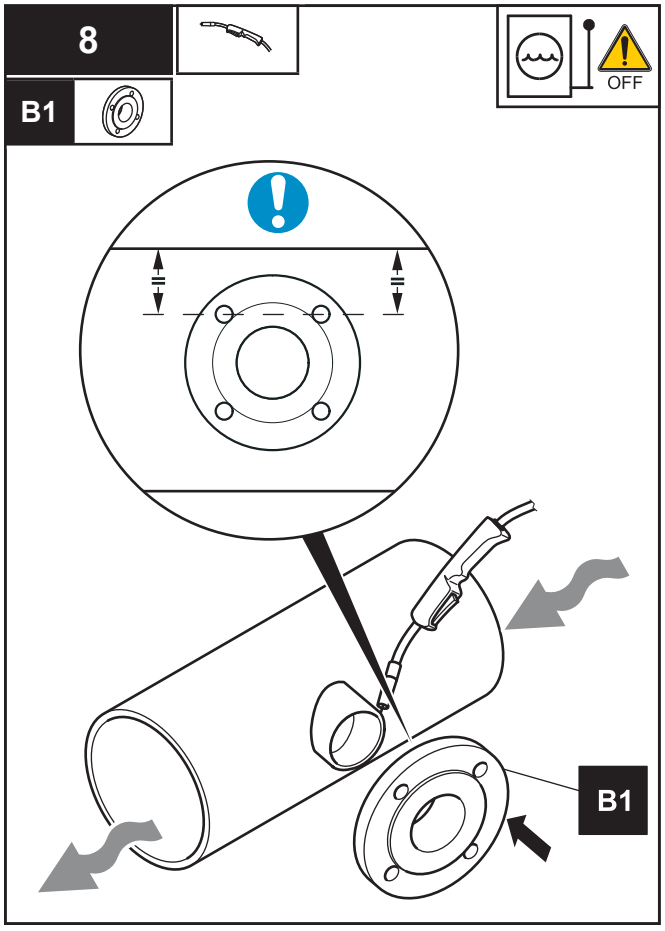
8
B1
OFF
B1

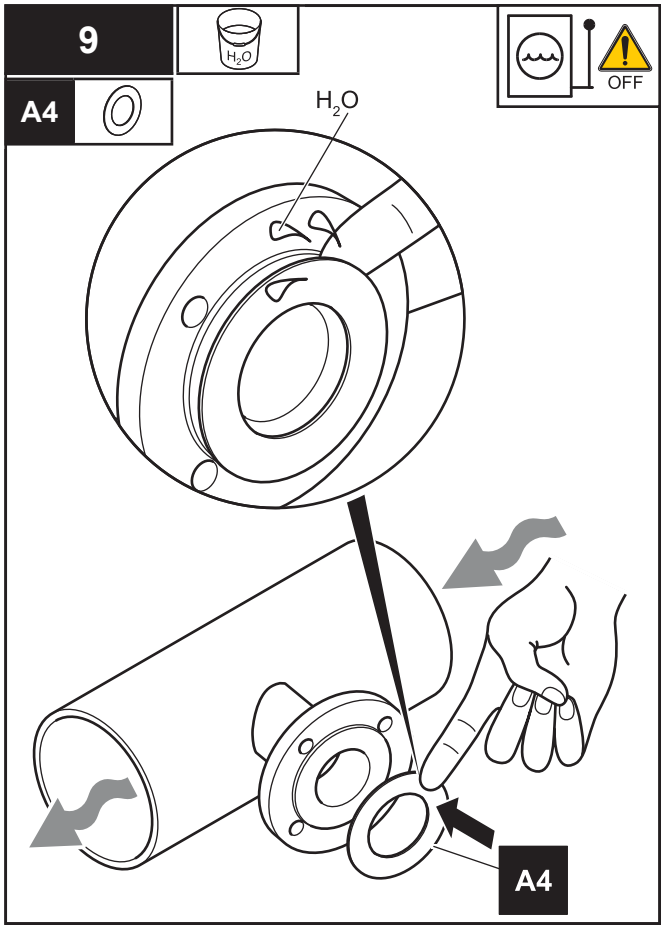
9
A4
H_2O
OFF
A4

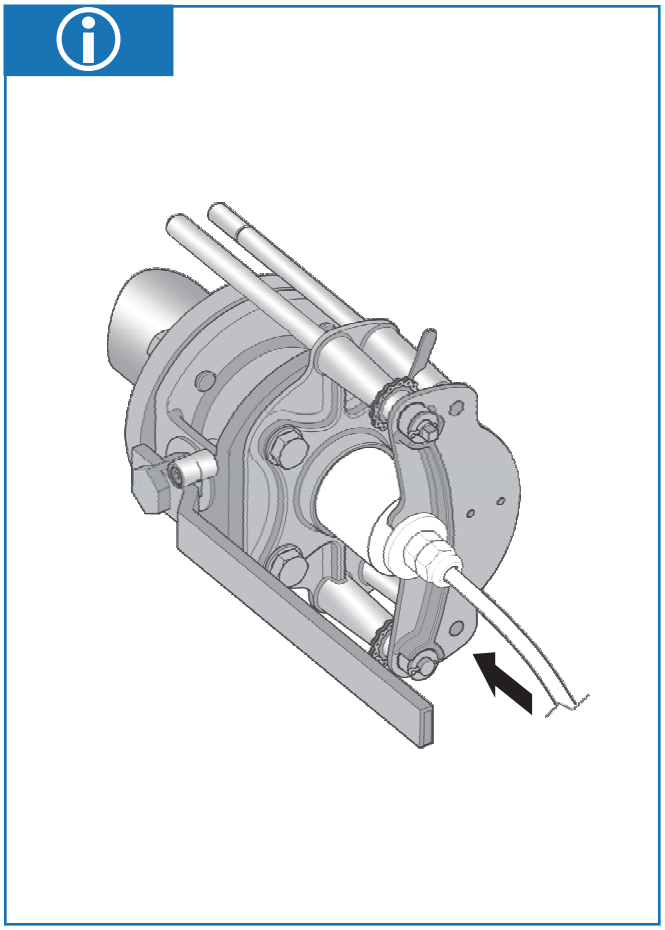

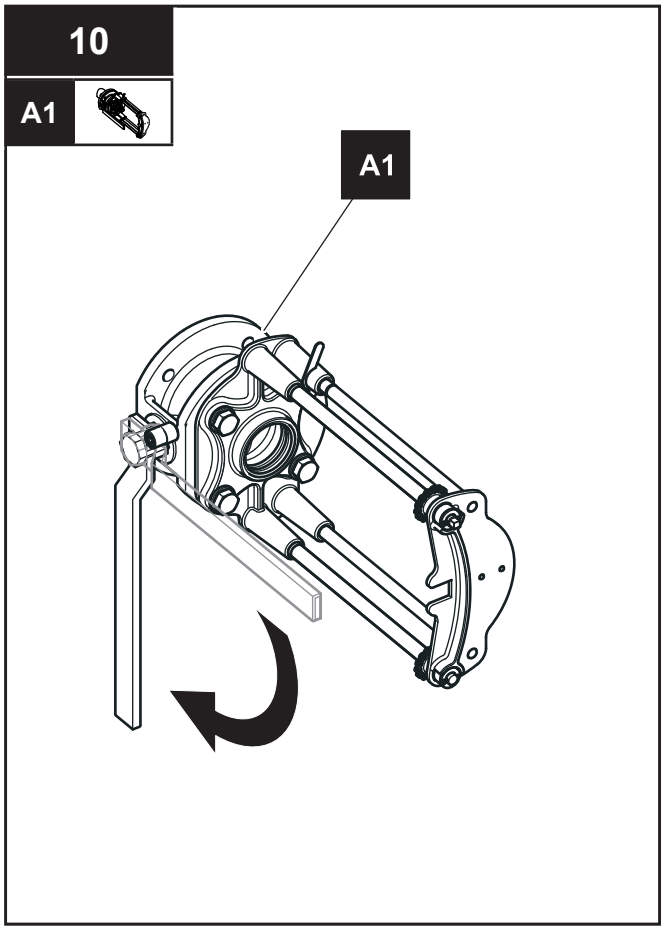
10
A1
A1

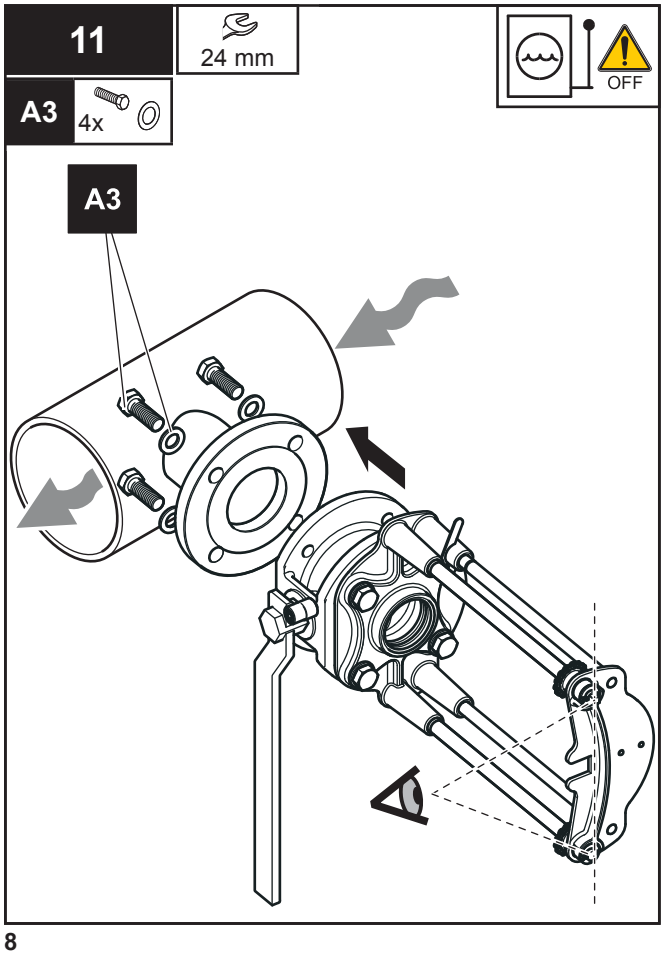
11
24 mm
OFF
A3
4x
A3

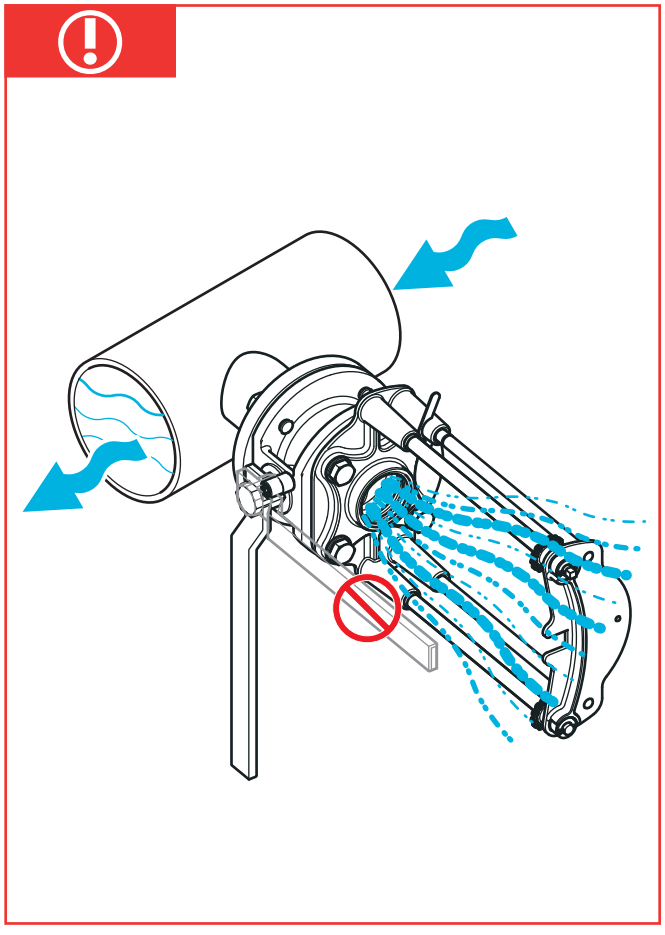

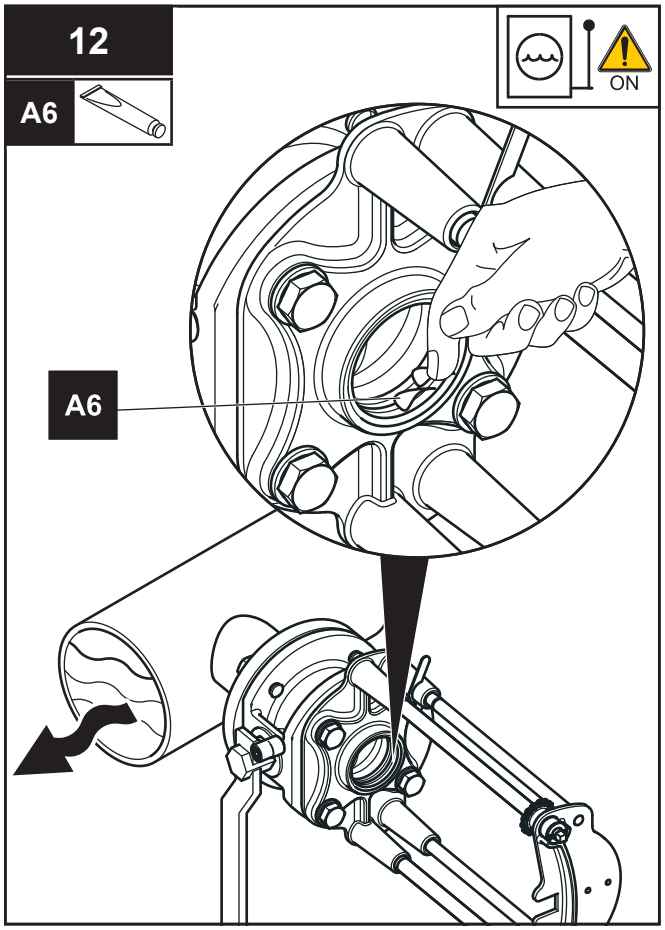
12
A6
ON
A6

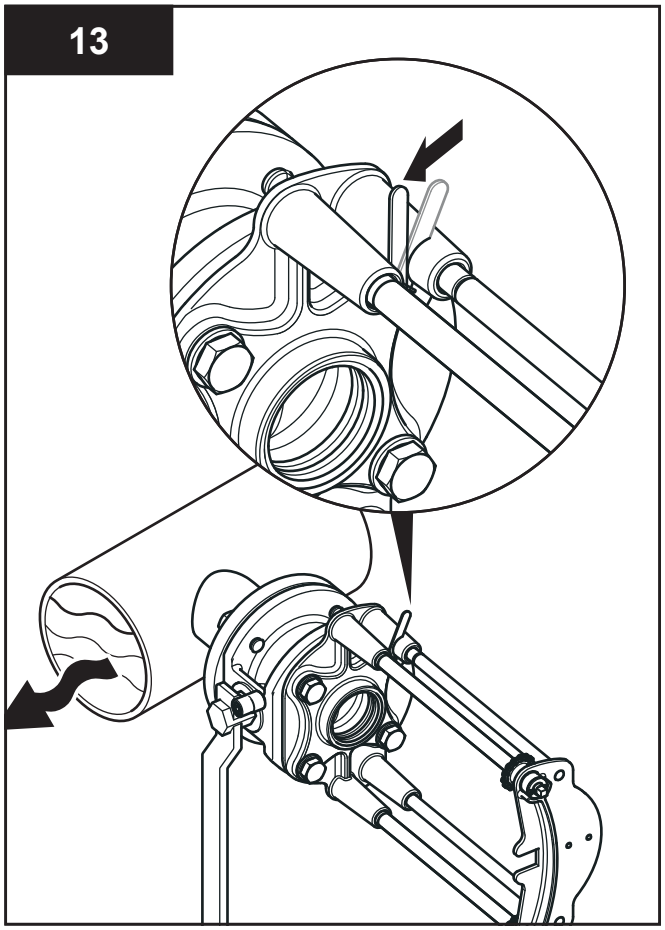
13

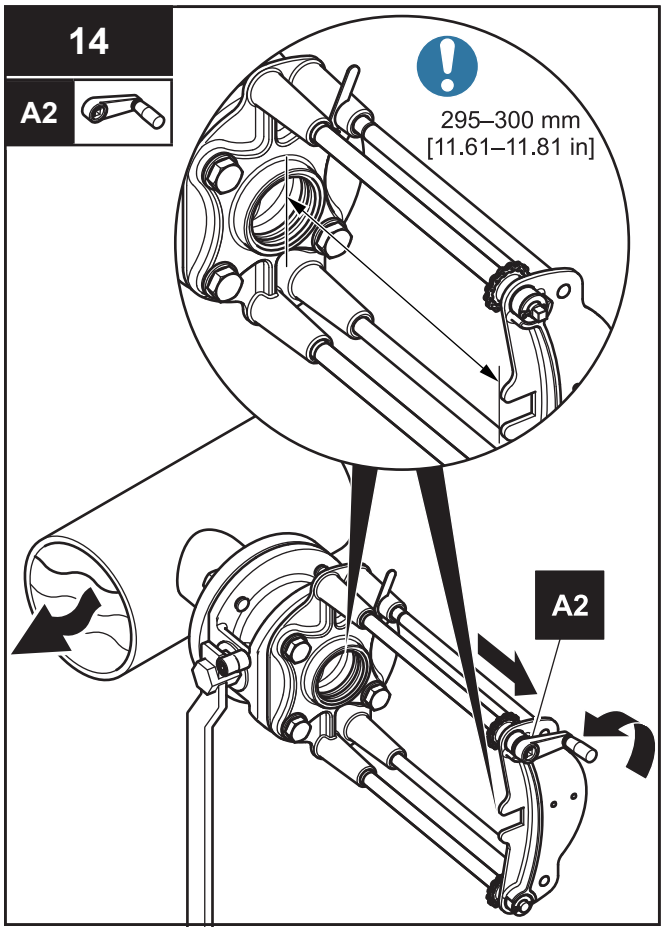
14
A2
295–300 mm
[11.61–11.81 in]
A2

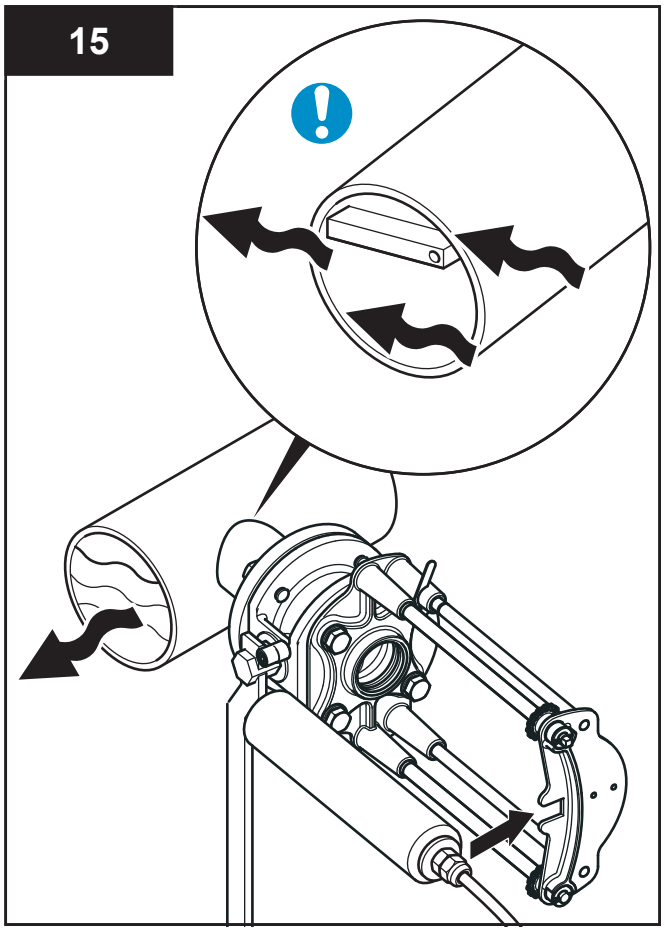
15

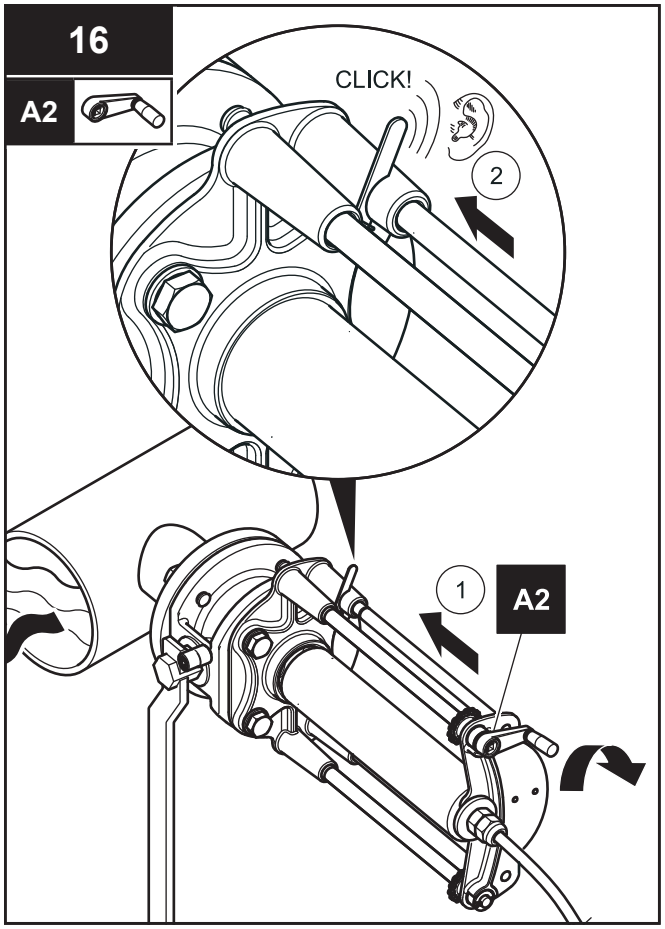
16
A2
CLICK!
2
1
A2

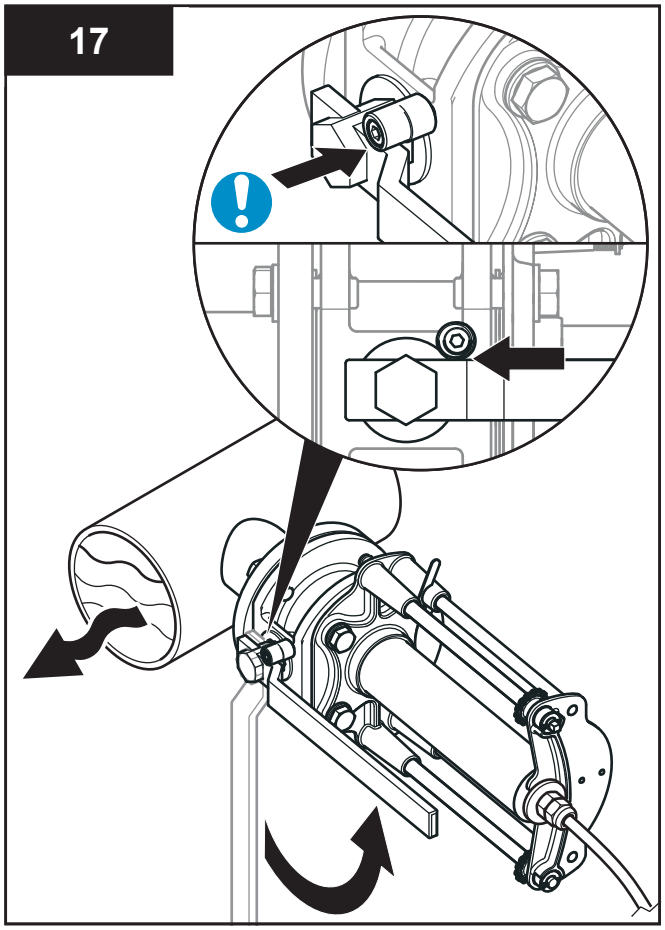
17

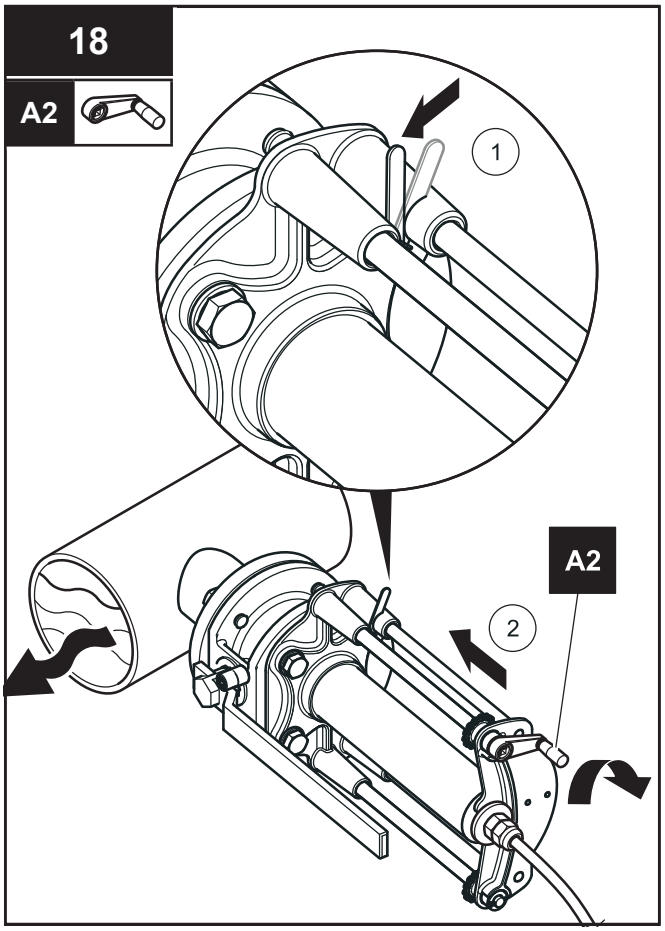
18
A2
1
A2
2

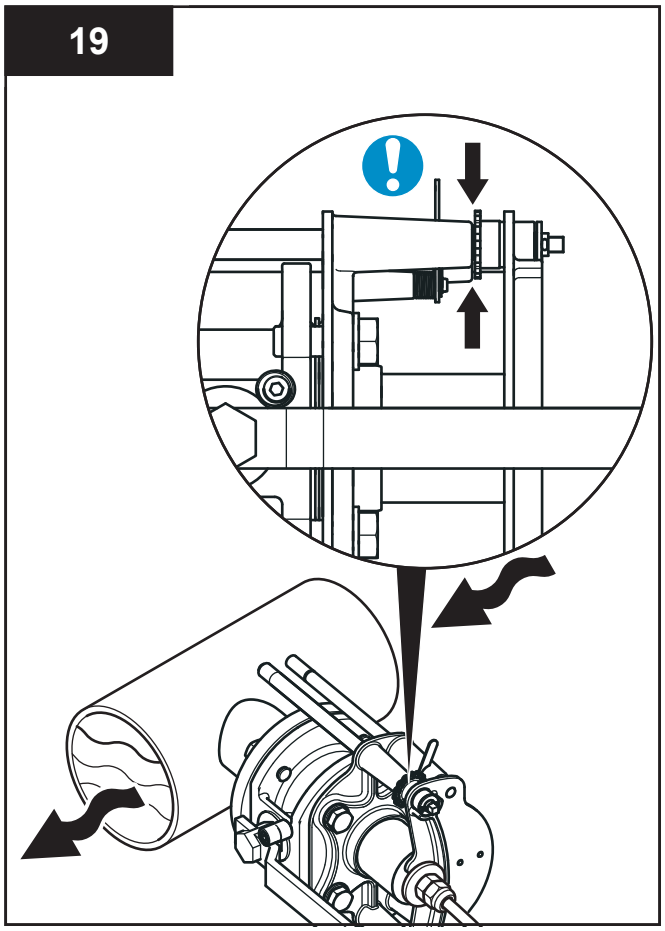
19

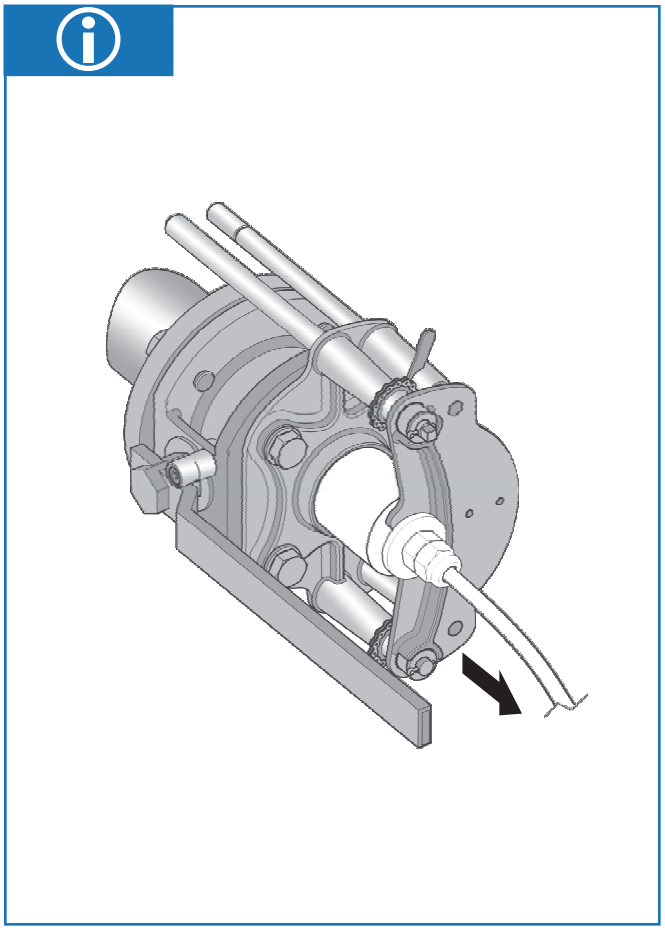

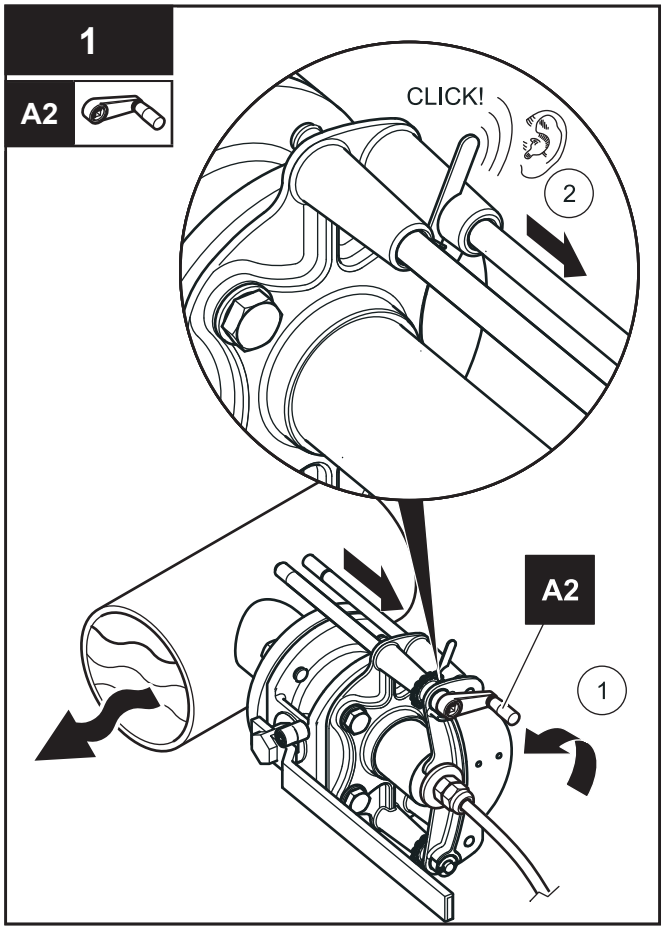
1
A2
CLICK!
2
A2
1

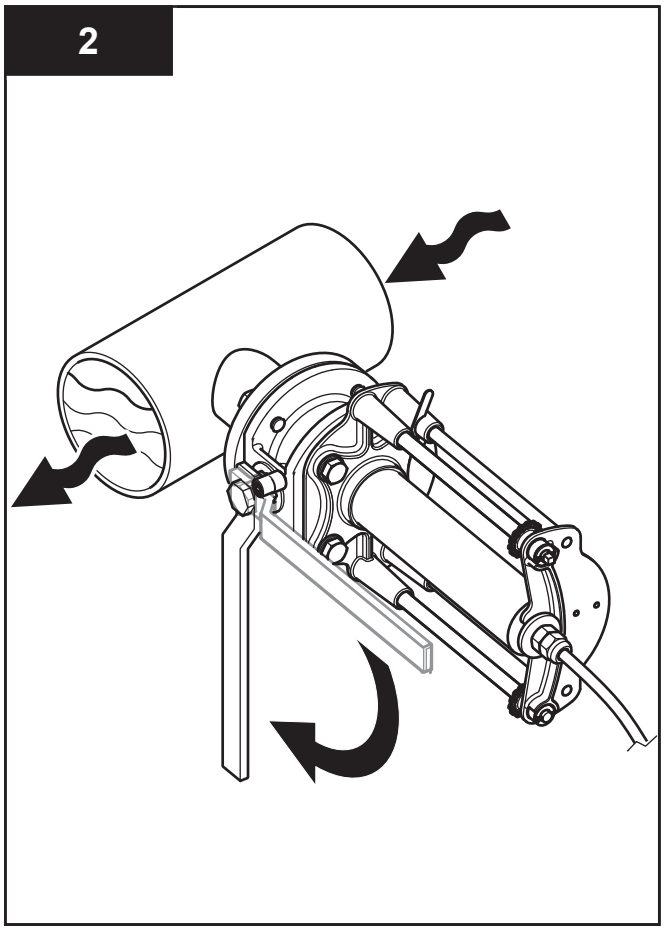
2

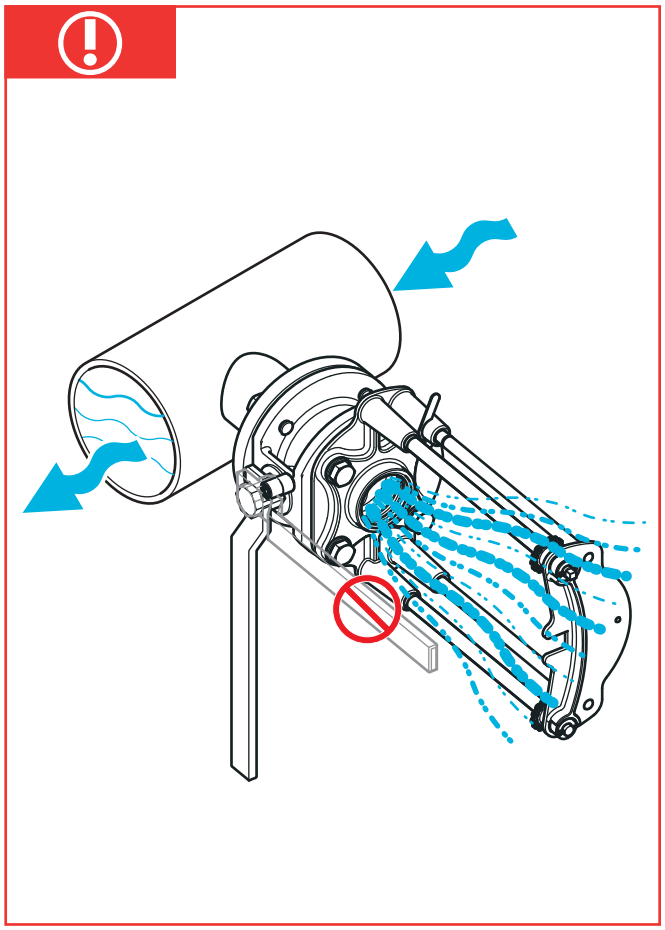

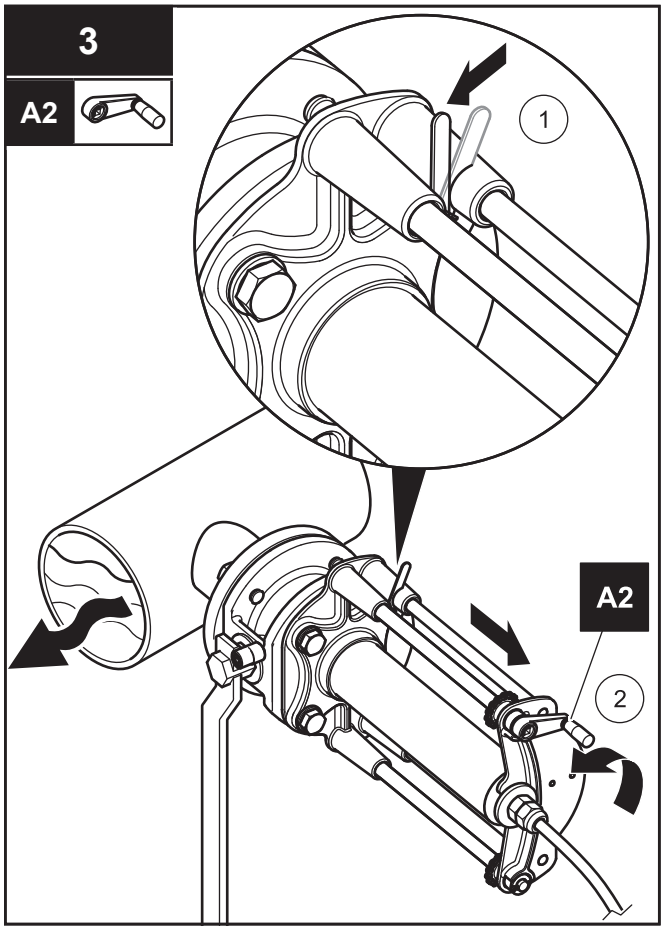
3
A2
1
A2
2

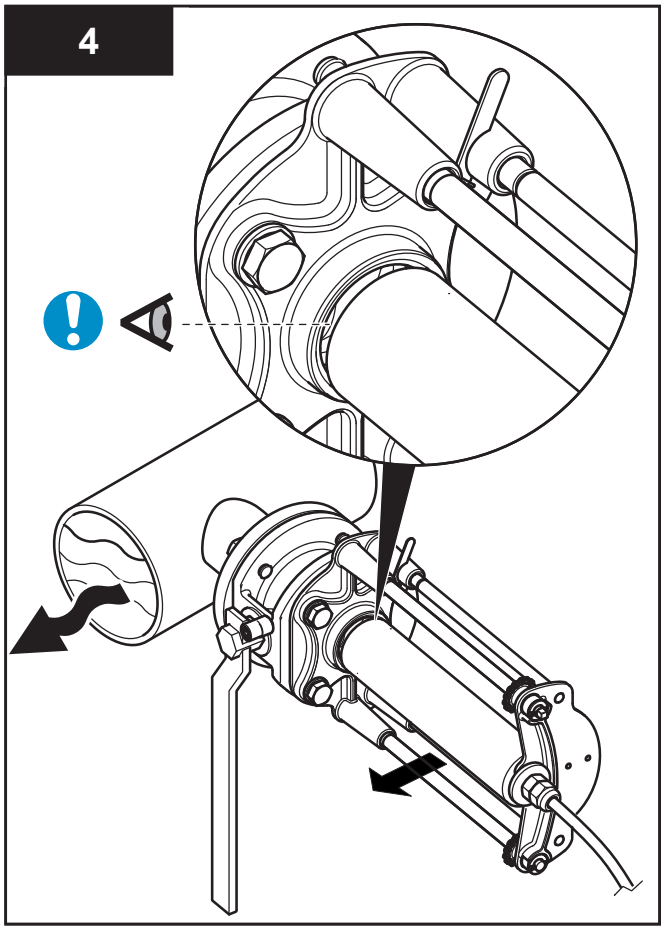
4

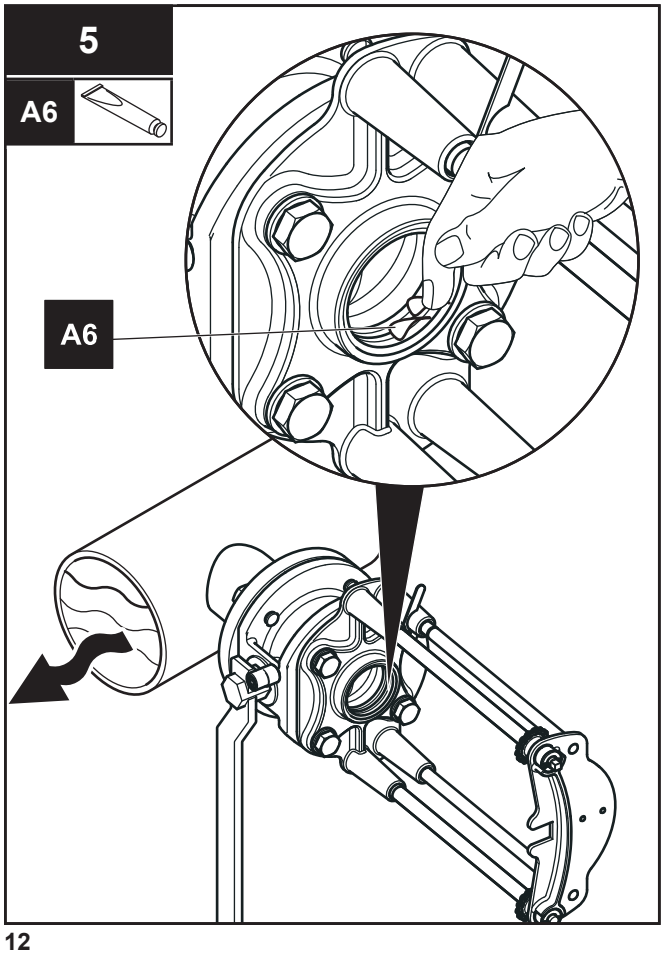
5
A6
A6

HACH Company
World Headquarters
P.O. Box 389
Loveland, Colorado
80539-0389 U.S.A.
Tel (800) 227-HACH
(800) -227-4224
(U.S.A. only)
Fax (970) 669-2932
orders@hach.com
www.hach.com

Repair Service in the United States:
HACH Company
Ames Service
100 Dayton Avenue
Ames, Iowa 50010
Tel (800) 227-4224
(U.S.A. only)
Fax (515) 232-3835

Repair Service in Canada:
Hach Sales & Service
Canada Ltd.
1313 Border Street, Unit 34
Winnipeg, Manitoba
R3H 0X4
Tel (800) 665-7635
(Canada only)
Tel (204) 632-5598
Fax (204) 694-5134
canada@hach.com

Repair Service in Latin America, the Caribbean, the Far East, Indian Subcontinent, Africa, Europe, or the Middle East:
Hach Company World Headquarters,
P.O. Box 389
Loveland, Colorado,
80539-0389 U.S.A.
Tel +001 (970) 669-3050
Fax +001 (970) 669-2932
intl@hach.com

HACH LANGE GMBH
Willstätterstraße 11
D-40549 Düsseldorf
Tel. +49 (0)2 11 52 88-320
Fax +49 (0)2 11 52 88-210
info@hach-lange.de
www.hach-lange.de

HACH LANGE LTD
Pacific Way
Salford
GB-Manchester, M50 1DL
Tel. +44 (0)161 872 14 87
Fax +44 (0)161 848 73 24
info@hach-lange.co.uk
www.hach-lange.co.uk

HACH LANGE LTD
Unit 1, Chestnut Road
Western Industrial Estate
IRL-Dublin 12
Tel. +353(0)1 46 02 5 22
Fax +353(0)1 4 50 93 37
info@hach-lange.ie
www.hach-lange.ie

HACH LANGE GMBH
Hütteldorferstr. 299/Top 6
A-1140 Wien
Tel. +43 (0)1 9 12 16 92
Fax +43 (0)1 9 12 16 92-99
info@hach-lange.at
www.hach-lange.at

HACH LANGE GMBH
Rorschacherstrasse 30 a
CH-9424 Rheineck
Tel. +41 (0)848 55 66 99
Fax +41 (0)71 886 91 66
info@hach-lange.ch
www.hach-lange.ch

HACH LANGE FRANCE S.A.S.
8, mail Barthélémy Thimonnier
Lognes
F-77437 Marne-La-Vallée
cedex 2
Tél. +33 (0)8 20 20 14 14
Fax +33 (0)1 69 67 34 99
info@hach-lange.fr
www.hach-lange.fr

HACH LANGE NV/SA
Motstraat 54
B-2800 Mechelen
Tél. +32 (0)15 42 35 00
Fax +32 (0)15 41 61 20
info@hach-lange.be
www.hach-lange.be

DR. LANGE NEDERLAND B.V.
Laan van Westroijen 2a
NL-4003 AZ Tiel
Tel. +31(0)344 63 11 30
Fax +31(0)344 63 11 50
info@hach-lange.nl
www.hach-lange.nl

HACH LANGE APS
Åkandevej 21
DK-2700 Brønshøj
Tel. +45 36 77 29 11
Fax +45 36 77 49 11
info@hach-lange.dk
www.hach-lange.dk

HACH LANGE AB
Vinthundsvägen 159A
SE-128 62 Sköndal
Tel. +46 (0)8 7 98 05 00
Fax +46 (0)8 7 98 05 30
info@hach-lange.se
www.hach-lange.se

HACH LANGE S.R.L.
Via Rossini, 1/A
I-20020 Lainate (MI)
Tel. +39 02 93 575 400
Fax +39 02 93 575 401
info@hach-lange.it
www.hach-lange.it

HACH LANGE S.L.U.
Edificio Seminario
C/Larrauri, 1C- 2ª Pl.
E-48160 Derio/Vizcaya
Tel. +34 94 657 33 88
Fax +34 94 657 33 97
info@hach-lange.es
www.hach-lange.es

HACH LANGE LDA
Av. do Forte nº8
Fracção M
P-2790-072 Carnaxide
Tel. +351 214 253 420
Fax +351 214 253 429
info@hach-lange.pt
www.hach-lange.pt

HACH LANGE SP.ZO.O.
ul. Krakowska 119
PL-50-428 Wrocław
Tel. +48 801 022 442
Zamówienia: +48 717 177 707
Doradztwo: +48 717 177 777
Fax +48 717 177 778
info@hach-lange.pl
www.hach-lange.pl

HACH LANGE S.R.O.
Zastrčená 1278/8
CZ-141 00 Praha 4 - Chodov
Tel. +420 272 12 45 45
Fax +420 272 12 45 46
info@hach-lange.cz
www.hach-lange.cz

HACH LANGE S.R.O.
Roľnícka 21
SK-831 07 Bratislava – Vajnory
Tel. +421 (0)2 4820 9091
Fax +421 (0)2 4820 9093
info@hach-lange.sk
www.hach-lange.sk

HACH LANGE KFT.
Vöröskereszt utca. 8-10.
H-1222 Budapest XXII. ker.
Tel. +36 (06)1 225 7783
Fax +36 (06)1 225 7784
info@hach-lange.hu
www.hach-lange.hu

HACH LANGE S.R.L.
Str. Căminului nr. 3
et. 1, ap. 1, Sector 2
RO-021741 Bucureşti
Tel. +40 (0) 21 205 30 03
Fax +40 (0) 21 205 30 17
info@hach-lange.ro
www.hach-lange.ro

HACH LANGE
8, Kr. Sarafov str.
BG-1164 Sofia
Tel. +359 (0)2 963 44 54
Fax +359 (0)2 866 15 26
info@hach-lange.bg
www.hach-lange.bg

HACH LANGE SU ANALİZ SİSTEMLERİ LTD.ŞTİ.
Ilkbahar mah. Galip Erdem
Cad. 616 Sok. No:9
TR-Oran-Çankaya/ANKARA
Tel. +90312 490 83 00
Fax +90312 491 99 03
bilgi@hach-lange.com.tr
www.hach-lange.com.tr

HACH LANGE D.O.O.
Fajfarjeva 15
SI-1230 Domžale
Tel. +386 (0)59 051 000
Fax +386 (0)59 051 010
info@hach-lange.si
www.hach-lange.si

HACH LANGE E.Π.E.
Αυλίδος 27
GR-115 27 Αθήνα
Τηλ. +30 210 7777038
Fax +30 210 7777976
info@hach-lange.gr
www.hach-lange.gr

HACH LANGE D.O.O.
Ivana Severa bb
HR-42 000 Varaždin
Tel. +385 (0) 42 305 086
Fax +385 (0) 42 305 087
info@hach-lange.hr
www.hach-lange.hr

HACH LANGE MAROC SARLAU
Villa 14 – Rue 2 Casa Plaisance
Quartier Racine Extension
MA-Casablanca 20000
Tél. +212 (0)522 97 95 75
Fax +212 (0)522 36 89 34
info-maroc@hach-lange.com
www.hach-lange.ma

HACH LANGE OOO
Finlyandsky prospekt, 4A
B. Zentrum “Petrovsky fort”, R.803
RU-194044, Sankt-Petersburg
Tel. +7 (812) 458 56 00
Fax. +7 (812) 458 56 00
info.russia@hach-lange.com
www.hach-lange.com

© HACH Company/HACH LANGE GmbH, 2012. All rights reserved. Printed in Germany.

Edition 08/2012 6A sk

HACH

MODEL SC200, UNIVERSAL CONTROLLER

LEFT BLANK

DOC023.53.80040

sc200 Controller

07/2016, Edition 8

User Manual

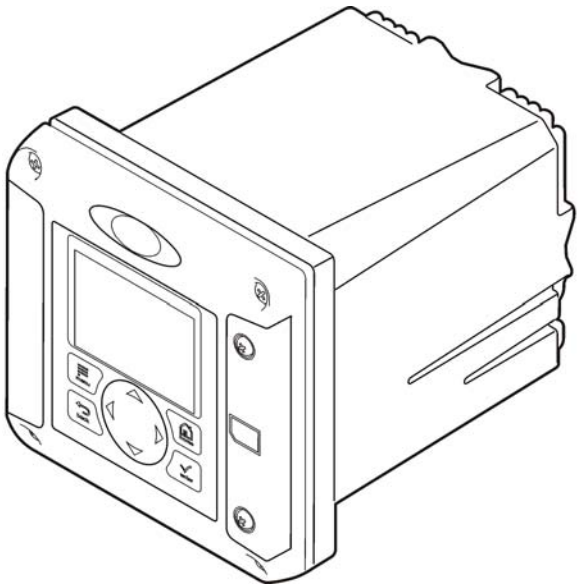

Table of Contents

Specifications 3

General information 3

- Safety information 4
  - Use of hazard information 4
  - Precautionary labels 4
  - Certification 4
- Product overview 5
  - Sensors and sensor modules 6
  - Relays outputs and signals 6
  - Device scans 6
  - Controller enclosure 6
  - Controller mounting options 6

Installation 7

- Mounting components and dimensions 7
- Controller mounting 8
- High-voltage barrier 11
- Electrostatic discharge (ESD) considerations 11
- Wiring overview 12
- Wiring for power 12
- Alarms and relays 15
- Wiring relays 15
- Analog output connections 17
- Discrete input wiring connections 18
- Connect a digital sc sensor 20
- Connect the optional digital communication output 21
- Install a Secure Digital (SD) memory card 21

User interface and navigation 22

- User interface 22
- Display 22
  - Additional display formats 23
  - Graphical display 23

System startup 24

- Set the language, date and time for the first time 24
- Controller configuration information 24

Advanced operation 25

- Security setup 25
  - Enable or disable the passcode 25
  - Edit the passcode 25
  - Protect features 26
- Configure a 4-20 mA input module 26
- Configure a 4-20 mA output module 27
- Configure the controller analog outputs 27
  - Logarithmic output mode 29
  - Bilinear output mode 29
- Configure relays 30

Table of Contents

Display setup 39
Update the date and time 40
Set the datalog mode and interval 40
Set up a calculation 40
Set up the discrete inputs 41
Update the display language 42
Using the secure digital memory (SD) card 42
Updating software 42
Saving data and event logs with SD cards 43
Access data and event log files on the SD card 43
Firmware updates with SD cards 44
Backup settings to an SD card 44
Restore settings to the controller 44
Transfer settings to another device 45
Using the service port 45
Using DataCom 45

Maintenance 46
Cleaning the controller 46
Fuse replacement 46
Battery replacement 46

Troubleshooting 46
Test and Maintenance menu 48
Warning and error conditions 49

Device scan information 50

Replacement parts and accessories 50

Specifications

Specifications are subject to change without notice.

Specification	Details
Component description	Microprocessor-controlled and menu-driven controller that operates the sensor and displays measured values.
Operating temperature	-20 to 60 ºC (-4 to 140 ºF); 95% relative humidity, non-condensing with sensor load <7 W; -20 to 50 ºC (-4 to 104 ºF) with sensor load <28 W
Storage temperature	-20 to 70 ºC (-4 to 158 ºF); 95% relative humidity, non-condensing
Enclosure[1]	NEMA 4X/IP66 metal enclosure with a corrosion-resistant finish
Power requirements	**AC powered controller:** 100-240 VAC ±10%, 50/60 Hz; Power 50 VA with 7 W sensor/network module load, 100 VA with 28 W sensor/network module load (optional Modbus, RS232/RS485, Profibus DPV1 or HART network connection).
	24 VDC powered controller: 24 VDC—15%, + 20%; Power 15 W with 7 W sensor/network module load, 40 W with 28 W sensor/network module load (optional Modbus, RS232/RS485, Profibus DPV1 or HART network connection).
Altitude requirements	Standard 2000 m (6562 ft) ASL (Above Sea Level)
Pollution degree/Installation category	Polution Degree 2; Installation Category II
Outputs	Two analog (0-20 mA or 4-20 mA) outputs. Each analog output can be assigned to represent a measured parameter such as pH, temperature, flow or calculated values. Optional module supplies three additional analog outputs (5 total).
Relays	Four SPDT, user-configured contacts, rated 250 VAC, 5 Amp resistive maximum for the AC powered controller and 24 VDC, 5A resistive maximum for the DC powered controller. Relays are designed for connection to AC Mains circuits (i.e., whenever the controller is operated with 115 - 240 VAC power) or DC circuits (i.e., whenever the controller is operated with 24 VDC power).
Dimensions	½ DIN—144 x 144 x 180.9 mm (5.7 x 5.7 x 7.12 in.)
Weight	1.7 kg (3.75 lb)
Compliance information[2]	CE approved (with all sensor types). Listed for use in general locations to UL and CSA safety standards by ETL (with all sensor types). Certain AC mains powered models are listed for use in general safety locations to UL and CSA safety standards by Underwriters Laboratories (with all sensor types).
Digital communication	Optional Modbus, RS232/RS485, Profibus DPV1 or HART network connection for data transmission
Data logging	Secure Digital Card (32 GB maximum) or special RS232 cable connector for data logging and performing software updates. The controller will keep approximately 20,000 data points per sensor.
Warranty	2 years

General information

In no event will the manufacturer be liable for direct, indirect, special, incidental or consequential damages resulting from any defect or omission in this manual. The manufacturer reserves the right to

[1] Units that have the Underwriters Laboratories (UL) certification are intended for indoor use only and do not have a NEMA 4X/IP66 rating.

[2] DC powered units are not listed by UL.

make changes in this manual and the products it describes at any time, without notice or obligation. Revised editions are found on the manufacturer's website.

Safety information

NOTICE

The manufacturer is not responsible for any damages due to misapplication or misuse of this product including, without limitation, direct, incidental and consequential damages, and disclaims such damages to the full extent permitted under applicable law. The user is solely responsible to identify critical application risks and install appropriate mechanisms to protect processes during a possible equipment malfunction.

Please read this entire manual before unpacking, setting up or operating this equipment. Pay attention to all danger and caution statements. Failure to do so could result in serious injury to the operator or damage to the equipment.

Make sure that the protection provided by this equipment is not impaired. Do not use or install this equipment in any manner other than that specified in this manual.

Use of hazard information

⚠ DANGER

Indicates a potentially or imminently hazardous situation which, if not avoided, will result in death or serious injury.

⚠ WARNING

Indicates a potentially or imminently hazardous situation which, if not avoided, could result in death or serious injury.

⚠ CAUTION

Indicates a potentially hazardous situation that may result in minor or moderate injury.

NOTICE

Indicates a situation which, if not avoided, may cause damage to the instrument. Information that requires special emphasis.

Precautionary labels

Read all labels and tags attached to the instrument. Personal injury or damage to the instrument could occur if not observed. A symbol on the instrument is referenced in the manual with a precautionary statement.

	This symbol, if noted on the instrument, references the instruction manual for operation and/or safety information.
	This symbol indicates that a risk of electrical shock and/or electrocution exists.
	This symbol indicates the presence of devices sensitive to Electro-static Discharge (ESD) and indicates that care must be taken to prevent damage with the equipment.
	Electrical equipment marked with this symbol may not be disposed of in European domestic or public disposal systems. Return old or end-of-life equipment to the manufacturer for disposal at no charge to the user.

Certification

Canadian Radio Interference-Causing Equipment Regulation, IECS-003, Class A:

Supporting test records reside with the manufacturer.

This Class A digital apparatus meets all requirements of the Canadian Interference-Causing Equipment Regulations.

Cet appareil numérique de classe A répond à toutes les exigences de la réglementation canadienne sur les équipements provoquant des interférences.

FCC Part 15, Class "A" Limits

Supporting test records reside with the manufacturer. The device complies with Part 15 of the FCC Rules. Operation is subject to the following conditions:

1. The equipment may not cause harmful interference.
2. The equipment must accept any interference received, including interference that may cause undesired operation.

Changes or modifications to this equipment not expressly approved by the party responsible for compliance could void the user's authority to operate the equipment. This equipment has been tested and found to comply with the limits for a Class A digital device, pursuant to Part 15 of the FCC rules. These limits are designed to provide reasonable protection against harmful interference when the equipment is operated in a commercial environment. This equipment generates, uses and can radiate radio frequency energy and, if not installed and used in accordance with the instruction manual, may cause harmful interference to radio communications. Operation of this equipment in a residential area is likely to cause harmful interference, in which case the user will be required to correct the interference at their expense. The following techniques can be used to reduce interference problems:

1. Disconnect the equipment from its power source to verify that it is or is not the source of the interference.
2. If the equipment is connected to the same outlet as the device experiencing interference, connect the equipment to a different outlet.
3. Move the equipment away from the device receiving the interference.
4. Reposition the receiving antenna for the device receiving the interference.
5. Try combinations of the above.

Product overview

The controller displays sensor measurements and other data, can transmit analog and digital signals, and can interact with and control other devices through outputs and relays. Outputs, relays, sensors and sensor modules are configured and calibrated through the user interface on the front of the controller.

Figure 1 shows the product components. Components may vary according to controller configuration. Contact the manufacturer if parts are damaged or missing.

Figure 1 System components

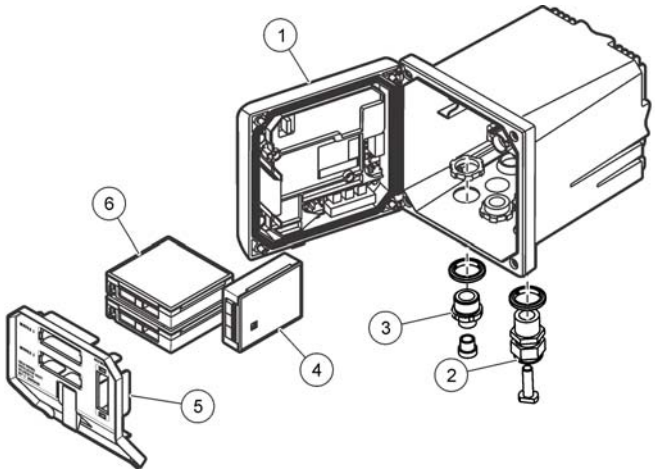

1 Controller	**4** Network module (optional)
2 Strain relief assembly (optional depending on controller version)	**5** High-voltage barrier
3 Digital connection fitting (optional depending on controller version)	**6** Sensor modules (optional)

Sensors and sensor modules

The controller accepts up to a maximum of two sensor modules or two digital sensors (depending on the controller configuration), along with one communication module. A single digital sensor and a single sensor module can be installed in combination. A variety of sensors can be wired to the sensor modules. Sensor wiring information is given in the specific sensor manuals and in the user instructions for specific modules.

Relays outputs and signals

The controller has four configurable relay switches and two analog outputs. An optional analog output module can increase the number of analog outputs to five.

Device scans

With two exceptions, the controller automatically scans for connected devices without user input when it is powered on. The first exception is when the controller is powered on for the first time before initial use. The second exception is after the controller configuration settings have been set to their default values and the controller is powered on. In both cases, the controller first displays the language, date and time edit screens. After the language, date and time entries are accepted, the controller performs a device scan. Refer to Connect a digital sc sensor on page 20 for instructions about how to scan for devices when the controller is already powered on.

Controller enclosure

The controller enclosure is NEMA 4X/IP66-rated and has a corrosion-resistant finish designed to withstand corrosive environmental constituents such as salt spray and hydrogen sulfide. Protection against environmental damage is strongly recommended for outdoor use.
Note: *Units that have the Underwriters Laboratories (UL) certification are intended for indoor use only and do not have a NEMA 4X/IP66 rating.*

Controller mounting options

The controller can be mounted to a panel, to a wall or to a vertical or horizontal pipe. A neoprene sealing gasket is included and can be used to reduce vibration. The gasket can be used as a template for panel mounting before the inner gasket component is separated.

Installation

Mounting components and dimensions

⚠ CAUTION

Personal injury hazard. Only qualified personnel should conduct the tasks described in this section of the manual.

The controller can be installed on a surface, panel or pipe (horizontal or vertical). For mounting options and instructions, refer to Figure 2, Figure 3 on page 8, Figure 4 on page 9, Figure 5 on page 10 and Figure 6 on page 11.

For horizontal pipe mounts, the mounting feet (Figure 2) must be attached to the mounting bracket in a vertical position.

For both horizontal and vertical pipe mounts, attach the mounting bracket to the controller as shown in Figure 5 on page 10.

Figure 2 Mounting components

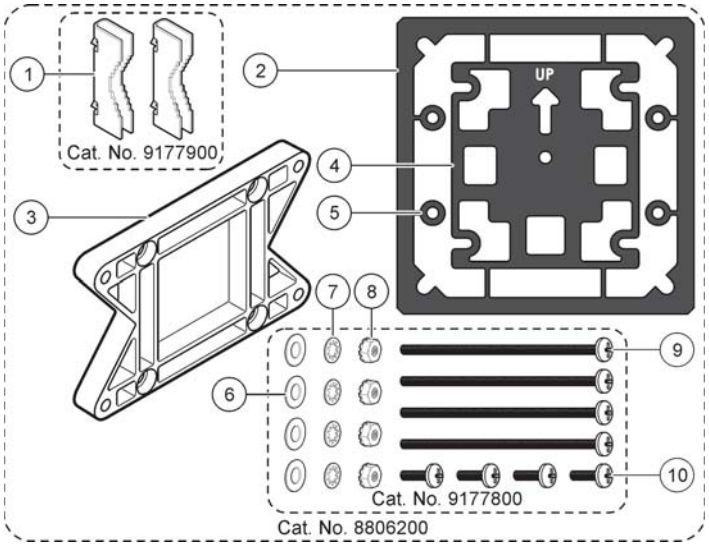

1	Mounting foot (2x)	**6**	Flat washer, ¼-inch ID (4x)
2	Sealing gasket for panel mount, Neoprene	**7**	Lock washer, ¼-inch ID (4x)
3	Bracket for wall and pipe mounting	**8**	M5 x 0.8 Keps hexnut (4x)
4	Vibration isolation gasket for pipe mount	**9**	Pan head screws, M5 x 0.8 x 100mm (4x) (Used for variable diameter pipe mount installations)
5	Vibration isolation washer for pipe mount (4x)	**10**	Pan head screws, M5 x 0.8 x 15 mm (4x)

Note: *A bracket for panel mounting is available as an optional accessory.*

Controller mounting

Figure 3 Surface mounting dimensions

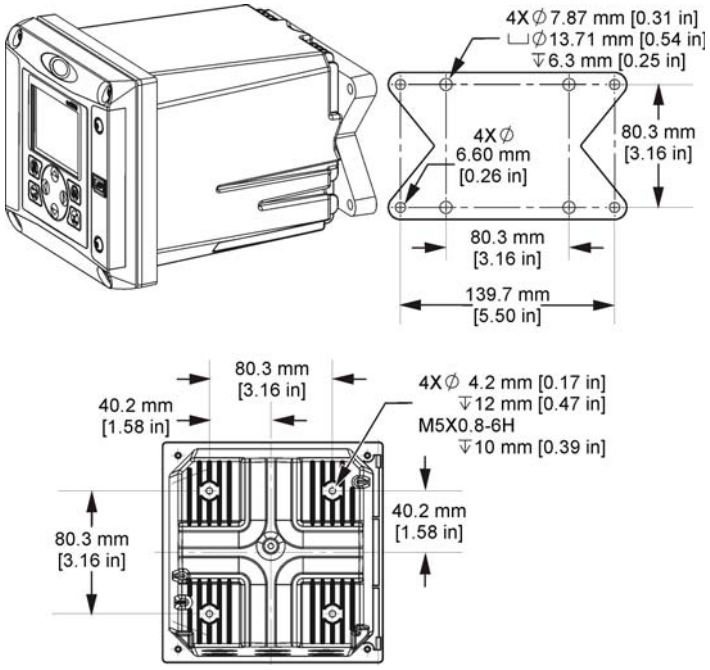

Figure 4 Panel mounting dimensions

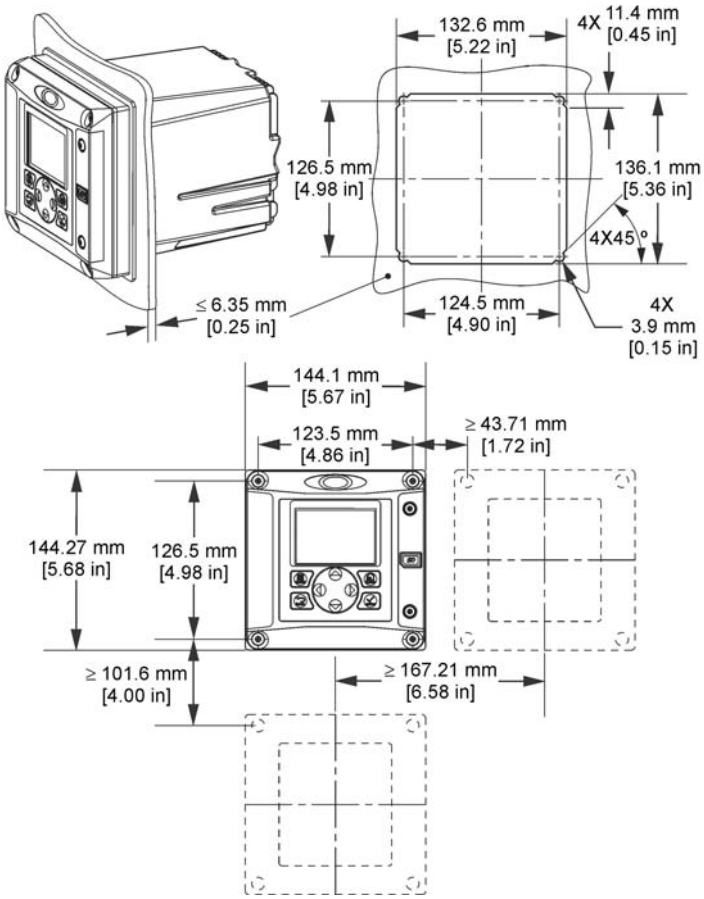

Note: *If using the bracket (optional) for panel mounting, push the controller through the hole in the panel and then slide the bracket over the controller on the back side of the panel. Use the four 15 mm pan head screws (supplied) to attach the bracket to the controller and secure the controller to the panel.*

Figure 5 Pipe mounting (vertical pipe)

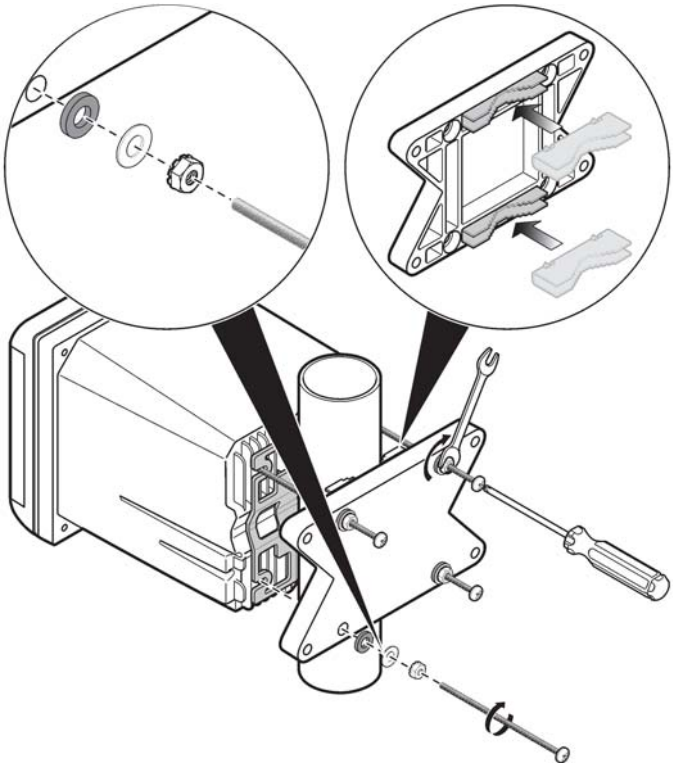

Figure 6 Top and bottom views

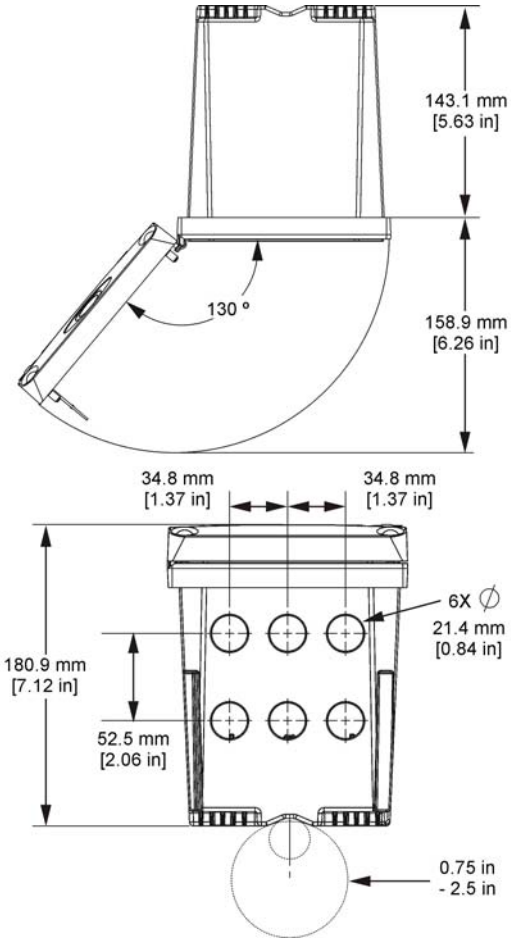

High-voltage barrier

High-voltage wiring for the controller is located behind the high-voltage barrier in the controller enclosure. The barrier must remain in place except when installing modules or when a qualified installation technician is wiring for power, alarms, outputs or relays. Do not remove the barrier while power is applied to the controller.

Electrostatic discharge (ESD) considerations

NOTICE	
	Potential Instrument Damage. Delicate internal electronic components can be damaged by static electricity, resulting in degraded performance or eventual failure.

Refer to the steps in this procedure to prevent ESD damage to the instrument:

- Touch an earth-grounded metal surface such as the chassis of an instrument, a metal conduit or pipe to discharge static electricity from the body.

- Avoid excessive movement. Transport static-sensitive components in anti-static containers or packages.
- Wear a wrist strap connected by a wire to earth ground.
- Work in a static-safe area with anti-static floor pads and work bench pads.

Wiring overview

Figure 7 shows an overview of the wiring connections inside the controller with the high voltage barrier removed. The left side of the figure shows the back side of the controller cover.
Note: *Remove connector caps from the connectors before module installation.*

Figure 7 Wiring connections overview

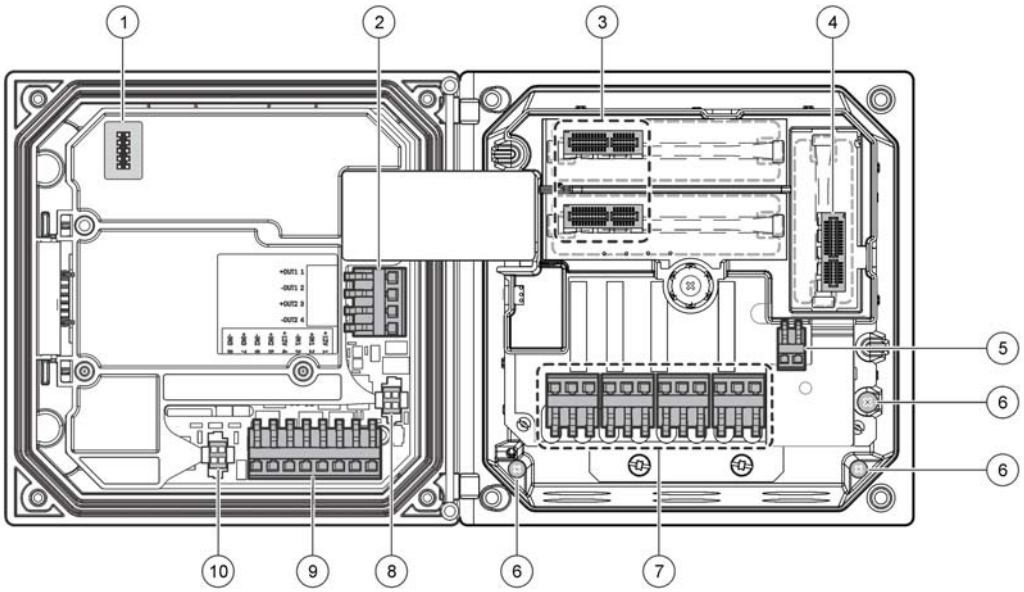

1 Service cable connection	**5** AC and DC power connector[3]	**9** Discrete input wiring connector[3]
2 4-20 mA output[3]	**6** Ground terminals	**10** Digital sensor connector[3]
3 Sensor module connector	**7** Relay connections[3]	
4 Communication module connector (e.g., Modbus, Profibus, HART, optional 4-20 mA module, etc.)	**8** Digital sensor connector[3]	

Wiring for power

⚠ WARNING

Potential Electrocution Hazard. Always disconnect power to the instrument when making electrical connections.

[3] Terminals can be removed for improved access.

⚠WARNING

Potential Electrocution Hazard. If this equipment is used outdoors or in potentially wet locations, a **Ground Fault Interrupt** device must be used for connecting the equipment to its mains power source.

⚠DANGER

Electrocution Hazard. Do not connect AC power to a 24 VDC powered model.

⚠WARNING

Potential Electrocution Hazard. A protective earth (PE) ground connection is required for both 100-240 VAC and 24 VDC wiring applications. Failure to connect a good PE ground connection can result in shock hazards and poor performance due to electromagnetic interferences. ALWAYS connect a good PE ground to the controller terminal.

NOTICE

Install the device in a location and position that gives easy access to the disconnect device and its operation.

The controller can be purchased as either a 100-240 VAC powered model or a 24 VDC powered model. Follow the appropriate wiring instructions for the purchased model.

The controller can be wired for line power by hard-wiring in conduit or wiring to a power cord. Regardless of the wire used, the connections are made at the same terminals. A local disconnect designed to meet local electrical code is required and must be identified for all types of installation. In hard-wired applications, the power and safety ground service drops for the instrument must be 18 to 12 AWG.

Notes:

- The voltage barrier must be removed before making any electrical connections. After making all connections, replace the voltage barrier before closing the controller cover.
- A sealing type strain relief and a power cord less than 3 meters (10 feet) in length with three 18-gauge conductors (including a safety ground wire) can be used to maintain the NEMA 4X/IP66 environmental rating.
- Controllers can be ordered with AC power cords pre-installed. Additional power cords may also be ordered.
- The DC power source that supplies power to the 24 VDC powered controller must maintain voltage regulation within the specified 24 VDC-15% +20% voltage limits. The DC power source must also provide adequate protection against surges and line transients.

Wiring procedure

Refer to the illustrated steps that follow and Table 1 or Table 2 to wire the controller for power. Insert each wire into the appropriate terminal until the insulation is seated against the connector with no bare wire exposed. Tug gently after insertion to make sure that there is a secure connection. Seal any unused openings in the controller box with conduit opening sealing plugs.

Table 1 AC power wiring information (AC powered models only)

Terminal	Description	Color—North America	Color—EU
1	Hot (L1)	Black	Brown
2	Neutral (N)	White	Blue
—	Protective Earth (PE) Ground lug	Green	Green with yellow stripe

Table 2 DC power wiring information (DC powered models only)

Terminal	Description	Color—North America	Color—EU
1	+24 VDC	Red	Red
2	24 VDC return	Black	Black
—	Protective Earth (PE) Ground lug	Green	Green with yellow stripe

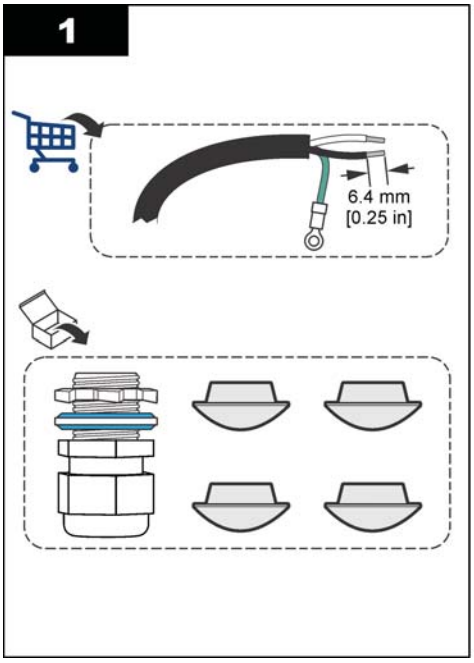

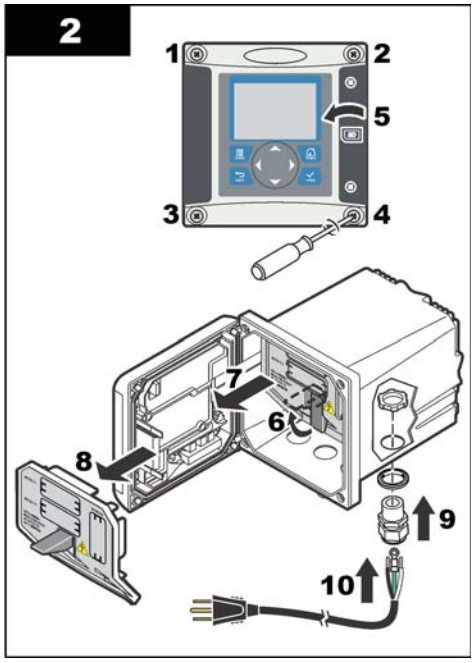

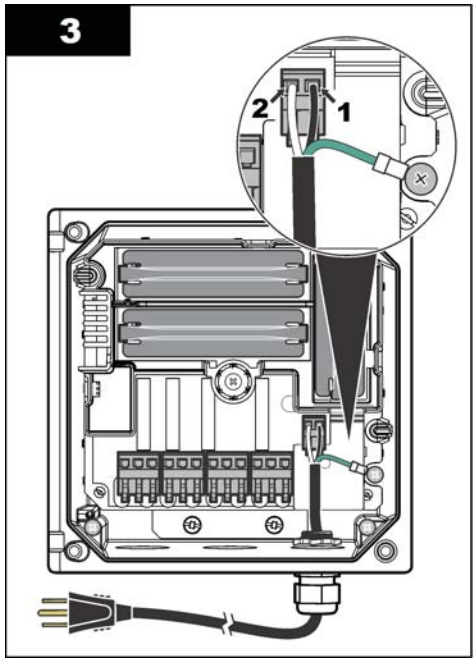

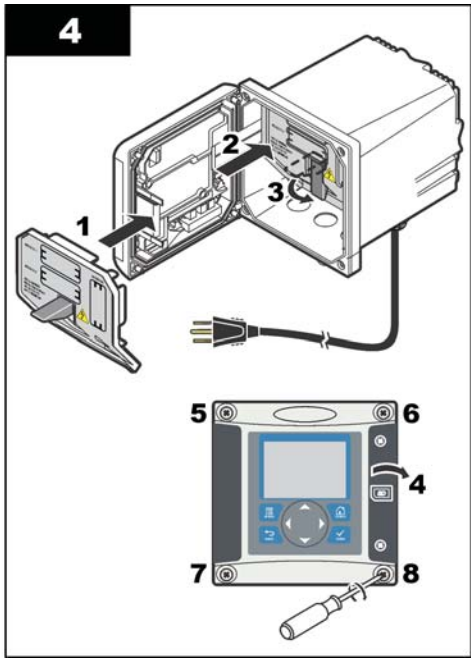

Alarms and relays

The controller is equipped with four unpowered, single pole relays rated 100-250 VAC, 50/60 Hz, 5 amp resistive maximum. Contacts are rated 250 VAC, 5 amp resistive maximum for the AC powered controller and 24 VDC, 5A resistive maximum for the DC powered controller. The relays are not rated for inductive loads.

Wiring relays

⚠ WARNING
Potential Electrocution Hazard. Always disconnect power to the instrument when making electrical connections.

⚠ WARNING
Potential fire hazard. The relay contacts are rated 5A and are not fused. External loads connected to the relays must have current limiting devices provided to limit current to < 5 A.

⚠ WARNING
Potential fire hazard. Do not daisy-chain the common relay connections or jumper wire from the mains power connection inside the instrument.

⚠ WARNING
Potential electrocution hazard. In order to maintain the NEMA/IP environmental ratings of the enclosure, use only conduit fittings and cable glands rated for at least NEMA 4X/IP66 to route cables in to the instrument.

AC line (100—250 V) powered controllers

The wiring compartment is not designed for voltage connections in excess of 250 VAC.

24 VDC powered controllers

⚠ WARNING

Potential electrocution hazard. AC mains powered controllers (115 V–230 V) are designed for relay connections to AC mains circuits (i.e., voltages greater than 16 V-RMS, 22.6 V-PEAK or 35 VDC).

⚠ WARNING

Potential electrocution hazard. 24 V powered controllers are designed for relay connections to low voltage circuits (i.e., voltages less than 16 V-RMS, 22.6 V-PEAK or 35 VDC).

The 24 VDC controller relays are designed for the connection to low voltage circuits (i.e., voltages less than 30 V-RMS, 42.2 V-PEAK or 60 VDC). The wiring compartment is not designed for voltage connections above these levels.

The relay connector accepts 18–12 AWG wire (as determined by load application). Wire gauge less than 18 AWG is not recommended.

The Normally Open (NO) and Common (COM) relay contacts will be connected when an alarm or other condition is active. The Normally Closed (NC) and Common relay contacts will be connected when an alarm or other condition is inactive (unless the Fail Safe is set to Yes) or when power is removed from the controller.

Most relay connections use either the NO and COM terminals or the NC and COM terminals. The numbered installation steps show connection to the NO and COM terminals.

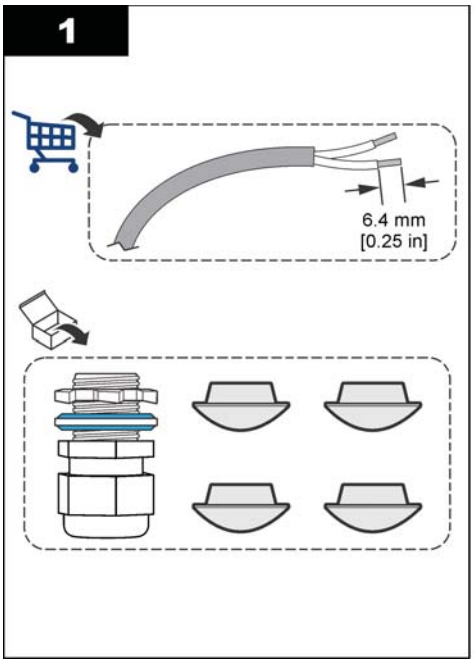

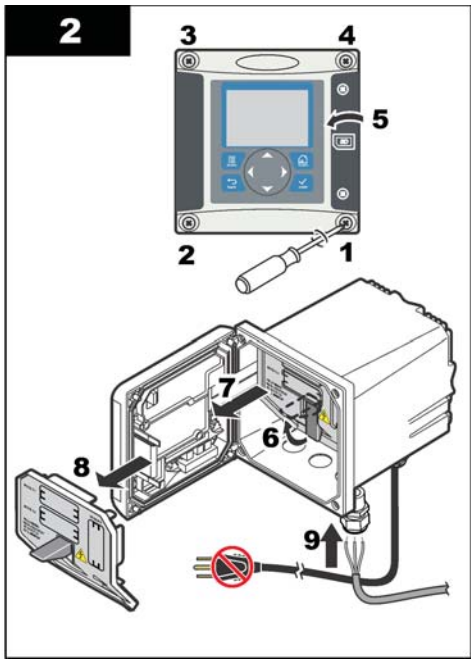

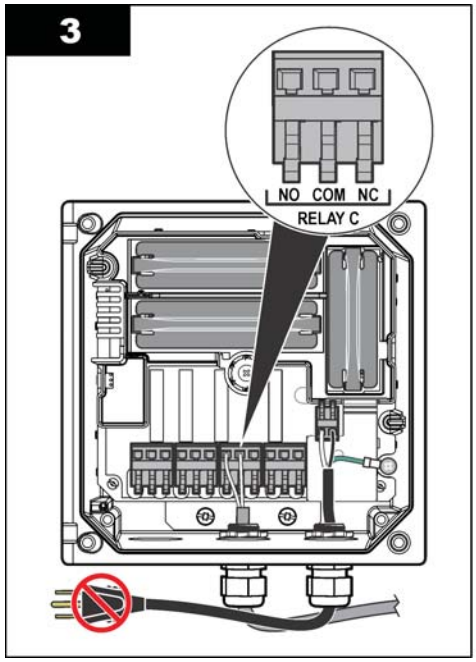

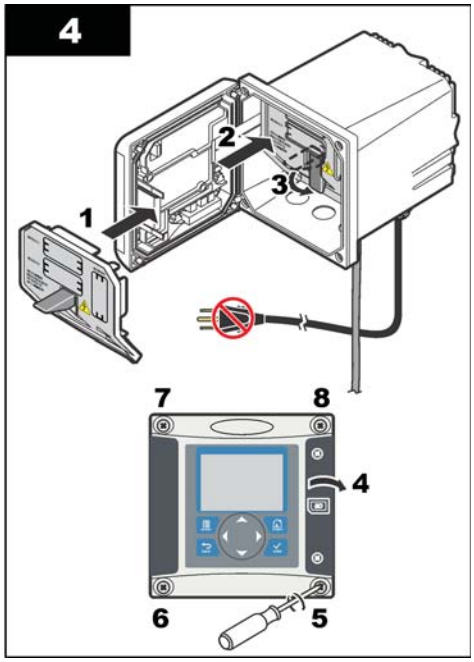

Analog output connections

⚠WARNING

Potential Electrocution Hazard. Always disconnect power to the instrument when making electrical connections.

⚠WARNING

Potential electrocution hazard. In order to maintain the NEMA/IP environmental ratings of the enclosure, use only conduit fittings and cable glands rated for at least NEMA 4X/IP66 to route cables in to the instrument.

Two isolated analog outputs (1 and 2) are provided (Figure 8). Such outputs are commonly used for analog signaling or to control other external devices.

Make wiring connections to the controller as shown in Figure 8 and Table 3.
Note: *Figure 8 shows the back of the controller cover and not the inside of the main controller compartment.*

Table 3 Output connections

Recorder wires	Circuit board position
Output 2–	4
Output 2+	3
Output 1–	2
Output 1+	1

1. Open the controller cover.
2. Feed the wires through the strain relief.
3. Adjust the wire as necessary and tighten the strain relief.

4. Make connections with twisted-pair shielded wire and connect the shield at the controlled component end or at the control loop end.
   - Do not connect the shield at both ends of the cable.
   - Use of non-shielded cable may result in radio frequency emission or susceptibility levels higher than allowed.
   - Maximum loop resistance is 500 ohm.
5. Close the controller cover and tighten the cover screws.
6. Configure outputs in the controller.

Figure 8 Analog output connections

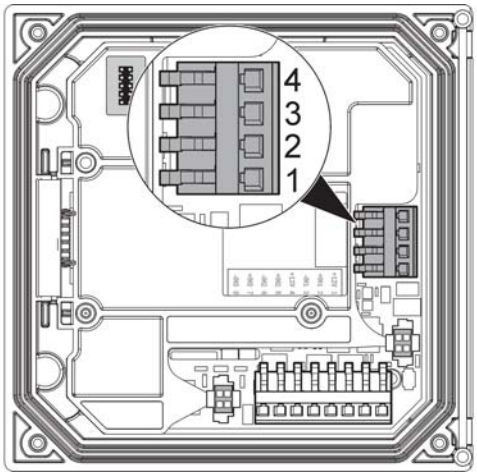

Discrete input wiring connections

⚠ WARNING
Potential Electrocution Hazard. Always disconnect power to the instrument when making electrical connections.

⚠ WARNING
Potential electrocution hazard. In order to maintain the NEMA/IP environmental ratings of the enclosure, use only conduit fittings and cable glands rated for at least NEMA 4X/IP66 to route cables in to the instrument.

Three discrete inputs are provided for switch closure inputs or logic level voltage inputs. Make wiring connections and configure jumper settings to the controller as shown in Figure 9, Table 4 and Figure 10.

Note: Figure 9 *shows the back of the controller cover and not the inside of the main controller compartment.*

Figure 9 Discrete input wiring connections

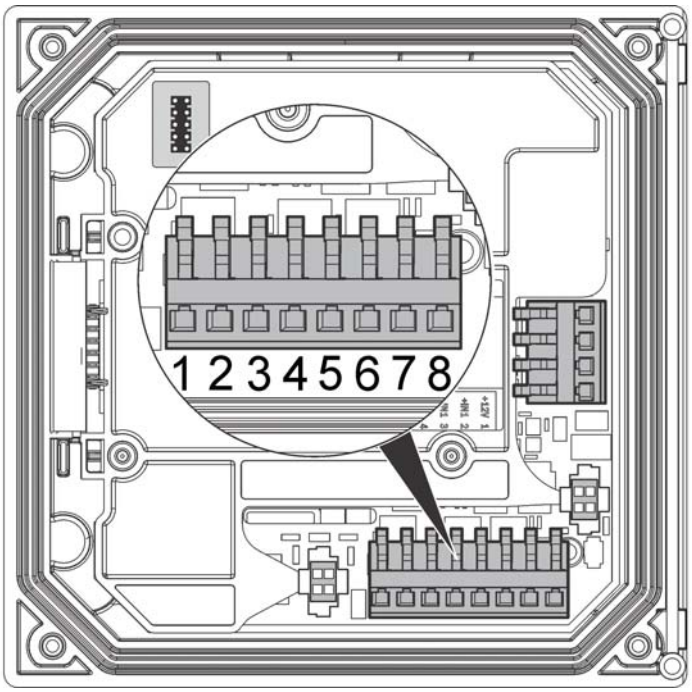

Table 4 Input connections

Discrete inputs	Connector position - Switch input	Connector position - Voltage input
Input 1+	3	2
Input 1-	2	3
Input 2+	6	5
Input 2-	5	6
Input 3+	8	7
Input 3-	7	8

Figure 10 Jumper settings

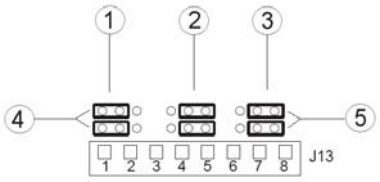

1 Input 1 configuration jumpers	**4** Jumpers positioned to the left for switch inputs
2 Input 2 configuration jumpers	**5** Jumpers positioned to the right for voltage inputs
3 Input 3 configuration jumpers	

1. Open the controller cover.
2. Feed the wires through the cable gland.
3. Adjust the wire as necessary and tighten the cable gland.
4. The jumpers are positioned immediately behind the connector. Remove the connector for improved access to the jumpers and configure the jumper settings according to the type of input as shown in Figure 10.
5. Close the controller cover and tighten the cover screws.
6. Configure inputs in the controller.

Note: *In* ***switch input*** *mode the controller supplies 12 volts to the switch and is not isolated from the controller. In* ***voltage input*** *mode the inputs are isolated from the controller (user input voltage from 0 to 30 volts).*

Connect a digital sc sensor

Note: *To connect an analog sensor, refer to the instructions supplied in the module or sensor manual.*

A digital sc sensor can be connected to the controller using the keyed quick-connect fitting (Figure 11). A digital sensor can be connected with the controller powered on or off.

When a sensor is connected with the controller powered on, the controller does not automatically perform a device scan. To make the controller perform a device scan, navigate to the Test/Maintenance menu and select Scan Devices. If a new device is found, the controller performs the installation process without further user action.

When a sensor is connected with the controller powered off, the controller will perform a device scan when it is powered on again. If a new device is found, the controller performs the installation process without further user action.

Retain the connector cap to seal the connector opening in case the sensor must be removed.

Figure 11 Digital sensor quick connect

1.

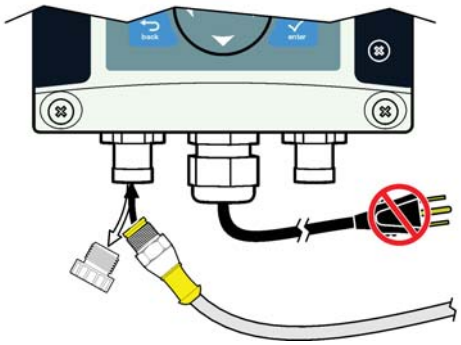

Connect the optional digital communication output

The manufacturer supports Modbus RS485, Modbus RS232, Profibus DPV1 and HART communication protocols. The optional digital output module is installed in the location indicated by item 4 in Figure 7 on page 12. Refer to the instructions supplied with the network module for more details.

For information about Modbus registers, go to http://www.de.hach.com or http://www.hach.com and search *Modbus registers* or go to any sc200 product page.

Install a Secure Digital (SD) memory card

For instructions on how to install an SD card in the controller, refer to Figure 12. Information on how to use the SD memory card can be found in Using the secure digital memory (SD) card on page 42.

To remove an SD card, push down on the edge of the card and release, then pull the card up and out of the slot. After the card is removed, close the slot cover and tighten the cover screws.

Figure 12 SD card installation

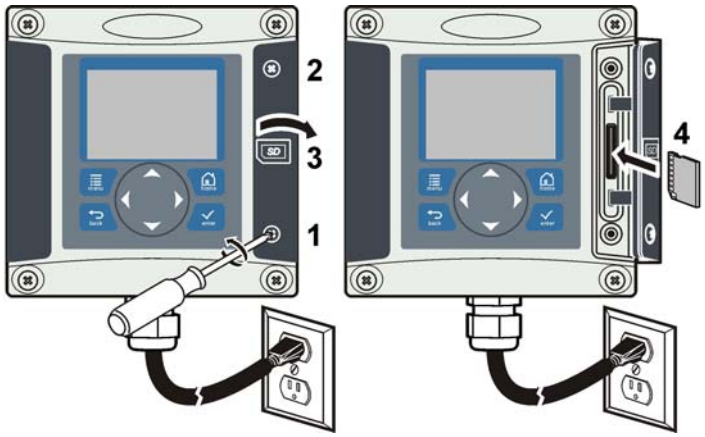

User interface and navigation

User interface

The keypad has four menu keys and four directional keys as shown in Figure 13.

Figure 13 Keypad and front panel overview

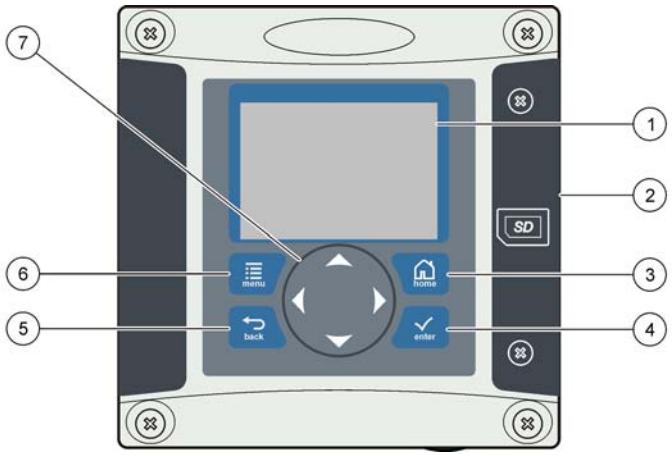

1 Instrument display	**5** **BACK** key. Moves back one level in the menu structure.
2 Cover for secure digital memory card slot	**6** **MENU** key. Moves to the Settings Menu from other screens and submenus.
3 **HOME** key. Moves to the Main Measurement screen from other screens and submenus.	**7** Directional keys. Used to navigate through the menus, change settings, and increment or decrement digits.
4 **ENTER** key. Accepts input values, updates, or displayed menu options.	

Inputs and outputs are set up and configured through the front panel using the keypad and display screen. This user interface is used to set up and configure inputs and outputs, create log information and calculated values, and calibrate sensors. The SD interface can be used to save logs and update software.

Display

Figure 14 shows an example of the main measurement screen with a DO sensor connected to the controller.

The front panel display screen shows sensor measurement data, calibration and configuration settings, errors, warnings and other information.

Figure 14 Example of Main Measurement screen

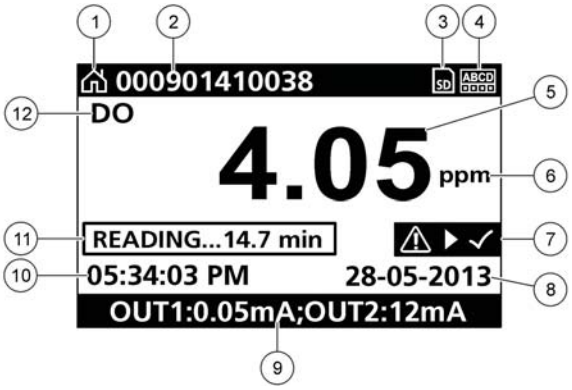

1 Home screen icon	**7** Warning status bar
2 Sensor name	**8** Date
3 SD Memory card icon	**9** Analog output values
4 Relay status indicator	**10** Time
5 Measurement value	**11** Progress bar
6 Measurement unit	**12** Measurement parameter

Table 5 Icon descriptions

Icon	Description
Home screen	The icon may vary depending on the screen or menu being displayed. For example, if an SD card is installed, an SD card icon appears here when the user is in the SD Card Setup menu.
SD memory card	This icon appears only if an SD card is in the reader slot. When a user is in the SD Card Setup menu, this icon appears in the upper left corner.
Warning	A warning icon consists of an exclamation point within a triangle. Warning icons appear on the right of the main display below the measurement value. Push the **ENTER** key then select the device to view any problems associated with that device. The warning icon will no longer be displayed once all problems have been corrected or acknowledged.
Error	An error icon consists of an exclamation point within a circle. When an error occurs, the error icon and the measurement screen flash alternately in the main display. To view errors, push the **MENU** key and select **Diagnostics**. Then select the device to view any problems associated with that device.

Additional display formats

- From the Main Measurement screen push the **UP** and **DOWN** arrow keys to switch between measurement parameters
- From the Main Measurement screen push the **RIGHT** arrow key to switch to a split display of up to 4 measurement parameters. Push the **RIGHT** arrow key to include additional measurements. Push the **LEFT** arrow key as needed to return to the Main Measurement screen
- From the Main Measurement screen push the **LEFT** arrow key to switch to the graphical display (see Graphical display on page 23 to define the parameters). Push the **UP** and **DOWN** arrow keys to switch measurement graphs

Graphical display

The graph shows concentration and temperature measurements for each channel in use. The graph supplies easy monitoring of trends and shows changes in the process.

1. From the graphical display screen use the up and down arrow keys to select a graph and push the **HOME** key.
2. Select an option:

Option	Description
MEASUREMENT VALUE	Set the measurement value for the selected channel. Select between Auto Scale and Manually Scale. For manual scaling enter the minimum and maximum measurement values
DATE & TIME RANGE	Select the date and time range from the available options

System startup

When initially powered up, the Language, Date Format and Date/Time screens appear in order. After these options are set, the controller performs a device scan and displays the message **Scanning for devices. Please wait...** If a new device is found, the controller performs an installation process before displaying a main measurement screen.

If the scan finds previously installed devices without configuration changes, the main measurement screen of the device in the number one position appears immediately after the scan is complete.

If a device has been removed from the controller or is not found during the next power-cycled or menu-driven scan, the controller displays a **Device missing** message and prompts to delete the missing device.

If no sensor is connected to an installed analog module, the controller will indicate an error. If devices are connected but not found by the controller, refer to Troubleshooting on page 46.

Set the language, date and time for the first time

The controller displays the language, date and time edit screens when the controller is powered on for the first time, and when it is powered on after the configuration settings have been set to their default values.
After the language, date and time options are set for the first time, update the options as necessary through the sc200 setup menu.

1. In the Language screen, highlight a language in the options list and push the **ENTER** key. English is the default language for the controller.
   The selected language is saved. The Date Format screen appears.
2. In the Date Format screen, highlight a format and push the **ENTER** key.
   The date and time format is saved. Next, the Date /Time screen appears.
3. In the Date/Time screen, push the **RIGHT** or **LEFT** arrow keys to highlight a field, then push the **UP** and **DOWN** arrow keys to update the value in the field. Update the other fields as necessary.
4. Push the **ENTER** key.
   The changes are saved and the controller performs a start-up scan for devices. If connected devices are found, the controller displays the main measurement screen for the device in the number one position. If the controller fails to find connected devices, refer to Troubleshooting on page 46.

Controller configuration information

General information about configuration options is listed in the table.

1. To navigate to the menu options, from the Settings Menu, select sc200 Setup.

Option	Description
Security setup	Sets the passcode preferences (refer to Security setup on page 25)
Output setup	Configures the controller analog outputs (refer to Configure the controller analog outputs on page 27)

Option	Description
Relay setup	Configures the controller relays (refer to Configure relays on page 30)
Display setup	Configures the controller display (refer to Display setup on page 39)
Set Date/Time	Sets the controller time and date (refer to Update the date and time on page 40)
Datalog setup	Configures data logging options. Available only if Calculation has been setup. At least one sensor must be attached to enter a calculation (refer to Set the datalog mode and interval on page 40)
Manage Data	Select the device from the list of installed components to view the data or event log
Error Hold Mode	**Hold Outputs**—Holds outputs at last known value when controller loses communication with the sensor. **Transfer Outputs**—Switches to transfer mode when controller loses communication with the sensor. Outputs transfer to a pre-defined value.
Calculation	Configures the controller math function (refer to Set up a calculation on page 40)
sc200 Information	**S/W VER:**—Displays the current version of controller software **Bootloader VER:**—Displays the current Bootloader version. The Bootloader is a file that loads the main operating system for the controller **S/N:**—Displays the controller serial number **Version:**—Displays the current version of controller hardware
Discrete Input Setup	Configures three discrete input channels (refer to Set up the discrete inputs on page 41)
Language	Assigns the language used in the controller (refer to Update the display language on page 42)

2. Select an option and push **ENTER** to activate the menu item.

Advanced operation

Security setup

Enable or disable the passcode

By default the passcode option is disabled and all configuration settings and calibrations can be changed. When the passcode function is enabled, access to Sensor calibration and Test/Maint menus requires a passcode.
To enable the passcode:

1. From the Settings Menu, select sc200 Setup and push the **ENTER** key.
2. Select Security Setup and push the **ENTER** key.
3. Select Set Passcode and push the **ENTER** key.
4. Select Disabled or Enabled and push the **ENTER** key.
   The passcode is enabled.
5. Push the **BACK** key to return to the sc200 Setup Menu, or push the **MENU** key to return to the Settings Menu.

Edit the passcode

The passcode is factory set to SC200. The Edit Passcode menu option appears in the Security Setup menu only after the passcode feature is enabled and a valid passcode has been entered.
A passcode consists of up to six upper or lower-case alpha, numeric and special characters. Passcodes are case-sensitive.

To edit the passcode:

1. Make sure the passcode is enabled. Refer to Enable or disable the passcode on page 25 for information on how to enable the passcode.
2. From the Settings menu, select Security Setup and push **ENTER**.
3. Use the arrow keys to enter the current valid passcode and push **ENTER**.
   The Edit Passcode option appears in the Security Setup menu.
4. Select Edit Pass Code and push **ENTER**.
   The Edit Pass Code screen appears.
5. Use the arrow keys to edit the passcode and push **ENTER**.
   The new passcode is saved and the Security Setup menu appears.
   Note: *All menus stay accessible until the* ***HOME*** *key is pushed or the controller is restarted.*
6. Push the **HOME** key or perform a controller restart.
   The new passcode settings are saved, and the new passcode is required to enter the Security Setup, Datalog Setup and Test/Maint menus.

Protect features

This option is only displayed if an analyzer or sensor that supports this feature is connected to the controller. Security categories are displayed that are defined by the connected analyzer or sensor. The user can then enable or disable password protection against individual menu options within these categories.

Configure a 4-20 mA input module

An analog module must be installed in the controller.

1. Determine what output the connected device is using (0-20 mA or 4-20 mA). This information will be used to set the scale.
2. Determine what the 20 mA value is equal to (e.g, 100 psi).
3. Determine what the low end (0 or 4 mA) value is equal to (e.g., 10 psi). This information will be used to set the display range.
4. From the Settings Menu, select Sensor Setup.
5. Select Configure.
6. Update the options.
   a. Highlight an option and push **ENTER**.
   b. Make a selection or update the entries.
   c. Push **ENTER** to save the changes.

Option	Description
Edit name	Edits the module name
Edit units	Edits the measurement units
Edit parameter	Edits the parameter name
Display range **For the 0-20 mA scale:** • **Set the 20 mA value** • **Set the 0 mA value** **For the 4-20 mA scale:** • **Set the 20 mA value** • **Set the 4 mA value**	Sets the values used for the selected scale (0-20 mA or 4-20 mA)

Option	Description
Signal average	Sets how often signals are averaged. Higher values produce a smoother signal but increase the time it takes for a signal to respond to a change in the process value.
Set resolution— **X.XXX, XX.XX, XXX.X, XXXX**	Sets the number of decimal places used in the display.
Select scale— **4-20 mA or 0-20 mA**	Sets scale used for the 4-20 mA input
Data log interval—5 sec, 30 sec, 1 min, 2 min, 5 min, 10 min, 15 min, 30 min, 60 min	Sets how often data is logged to the internal controller memory.
Reset defaults—Push ENTER to reset configuration settings or push the BACK key to cancel.	Resets configuration settings to the default values.

For additional information, refer to the *sc200 4–20 Analog Input Module User Manual*.

Configure a 4-20 mA output module

The Network Setup option appears in the Settings Menu only if an analog output module or other network module such as Modbus or Profibus is installed in the controller.

Outputs for analog output modules are set at 4-20 mA. Outputs can be assigned to represent a measured parameter such as pH, temperature, flow or calculated values.

1. From the Settings menu, select Network Setup.
2. Select Edit Name and enter a name for the module. Push **ENTER** to save the name.
3. Select an output (A, B, C, D) and push **ENTER**.
   a. Highlight an option and push **ENTER**.
   b. Make a selection from the list or update the entries.
   c. Push **ENTER** to save the changes.

Option	Description
Select Source	Selects the output to configure—None, sensor 1 name, sensor 2 name, calculation (if set up). For sensor output, Select Parameter sets the measurement options. When the measurement is autorange, Set Range sets the range.
Set Low Value	Sets the 4 mA value (default: 0.000). (Range and units depend on sensor)
Set High Value	Sets the 20 mA value (default: 1.000). (Range and units depend on sensor)
Set Transfer	Sets the transfer value. Range 3.0 to 25.0 mA (default 4.000).
Set Filter	Sets a time-average filter value of 0 (default) to 120 seconds.

For additional information, refer to the *sc200 4-20 Output Module User Manual*.

Configure the controller analog outputs

The controller analog outputs can be assigned to represent the measured parameter or secondary measurements such as temperature and calculations. To configure the options, highlight a menu option, push **ENTER** and select an option or update the entries. Push **ENTER** after an option is selected or the entries are updated.

1. From the Settings menu, select sc200 Setup.
2. Select Output Setup.
3. Select Output 1 or Output 2.

4. Choose Select Source and select a source from the list. Typically the source is one of the sensors attached to the system. If an analog input card is installed, the analog input may be used as a source.
5. From the Output Setup menu, choose Select Parameter and choose an option from the list. Parameters will vary depending on the type of sensors installed.
6. From the Output Setup menu, select Set Function and choose a function. Further setup options will vary depending on which function is chosen.

Option	Description
Linear	Signal is linearly dependent on the process value
PID	Signal works as a PID (Proportional, Integral, Derivative) controller
Logarithmic	Signal is represented logarithmically within the process variable range
Bilinear	Signal is represented as two linear segments within the process variable range

7. From the Output Setup menu, select Activation. Use the information in the table below the chosen function to configure the options.
8. If Transfer is or will be selected as the Error Hold Mode, or if the Transfer will be used during calibration or other functions within the sensor menu, select Set Transfer from the Output Setup menu and enter the transfer value.
9. From the Output Setup menu, select Set Filter and enter the filter value.
10. From the Output Setup menu, select Scale and choose the scale (0-20 mA or 4-20 mA).

- **Linear**

Option	Description
Set low value	Sets the low endpoint of the process variable range
Set high value	Sets the high endpoint of the process variable range

- **PID**

Option	Description
Set mode (Auto or Manual)	Auto—the signal is automatically controlled by the algorithm within the analyzer using proportional, integral, and derivative inputs. Manual—the signal is controlled by the user through manual adjustment of the % change value. This option is shown as Manual Output after the manual set mode is selected.
Phase (Direct or Reverse)	The direction in which the signal responds to process change. Direct—signal increases as the process increases. Reverse—signal increases as process decreases.
Set setpoint	Creates a desired control point of process
Prop band	A function of the difference between the measured signal and the desired setpoint.
Integral	The period of time from the injection point of a reagent to contact with the measuring device.
Derivative	Used to compensate for the 2nd order effects of the process. The majority of applications can be controlled without the use of the derivative setting.
Transit time	Stops all PID control for a selected period of time as the sample travels from the control pump to the measurement sensor.

- **Logarithmic**

Option	Description
Set 50% value	Sets the value corresponding to 50% of the process variable range.
Set high value	Sets the upper value of the process variable range.

- **Bilinear**

Option	Description
Set low value	Sets the low endpoint value of the process variable range.
Set high value	Sets the high endpoint value of the process variable range.
Set knee point value	Sets the value at which the process variable range divides into another linear segment.
Set knee point current	Sets the value of the current at the knee point value.

Logarithmic output mode

Figure 15 shows in graph form the operation of the logarithmic output mode.

Figure 15 Logarithmic output

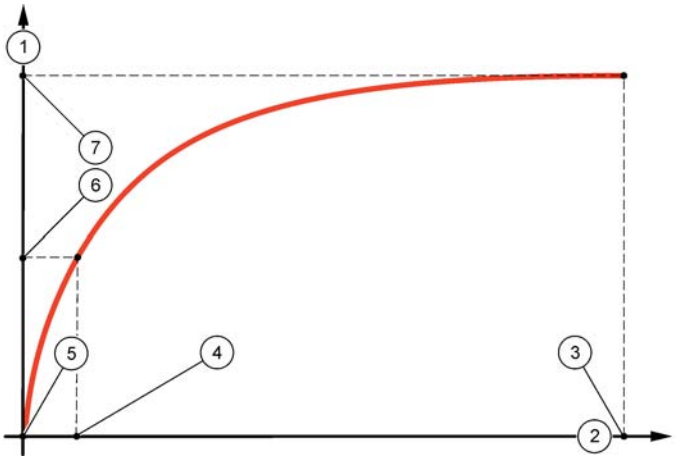

1 Output current axis	**5** Minimum output current (0-4 mA)
2 Source value axis	**6** 50% output current
3 High value	**7** Maximum output current (20 mA)
4 50% value	

Bilinear output mode

Figure 16 shows in graph form the operation of the bilinear output mode.

Figure 16 Bilinear output

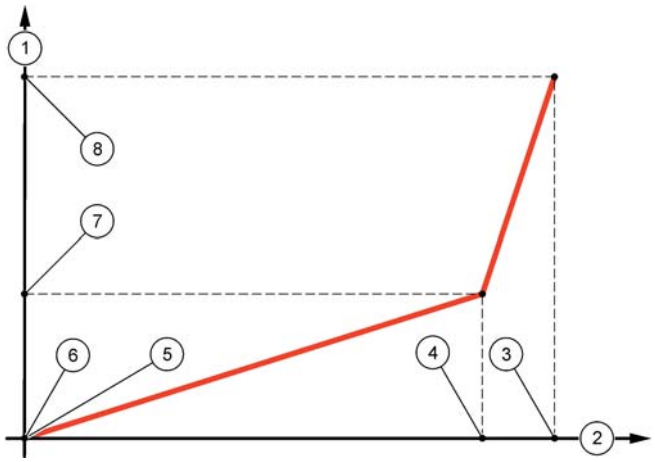

1	Output current axis	**5**	Low value
2	Source value axis	**6**	Minimum output current (0-4 mA)
3	High value	**7**	Knee point current
4	Knee point value	**8**	Maximum output current (20 mA)

Configure relays

The Normally Open (NO) and Common (COM) relay contacts will be connected when an alarm or other condition is active. The Normally Closed (NC) and Common relay contacts will be connected when an alarm or other condition is inactive (unless the Fail Safe is set to Yes), or when power is removed from the controller. To select a menu option, highlight the option and push **ENTER**.

1. From the sc200 Setup menu, select Relay Setup.
2. Select a relay from the list.
3. From the Relay Setup menu, choose Select Source and push **ENTER**. Normally, a source is one of the sensors attached to the system, but the controller can also function as a source. If an analog input module is installed, the source may be the analog input.
4. From the Relay Setup menu, select Set Parameter and choose from the list of parameters. The list of parameter options will vary with the type of attached sensor.
5. From the Relay Setup menu, select Set Function and choose from the list. Further setup will depend on the function chosen.

Option	Description
Scheduler Function (available if the controller is selected as the relay source)	Relay switches at certain times independently of any process value
Alarm Function	Relay activates when upper or lower alarm value is exceeded
Feeder Control Function	Relay indicates if a process value exceeds or falls below a setpoint
Event Control Function	Relay toggles if a process value reaches an upper or lower limit
Pulse Width Modulation (PWM) Control Function	Relay uses a Pulse Width Modulation control depending on a process value

Option	Description
Frequency control	Relay switches with a frequency depending on a process value
Warning	Relay indicates warning and error conditions in probes

6. From the Relay Setup menu, select Set Transfer and choose Active or Inactive.
7. From the Relay Setup menu, select Fail Safe and choose Yes or No.
8. From the Relay Setup menu, select Activation.
   The activation options for the selected function appear. Use the information in the table below each function to update the options.
9. Test the relay function to make sure it is properly energizing the connected device. To do relay testing, go to the Setting menu, then select **Test/Maint>Test Relay**.

- **Scheduler Function (refer to Figure 17)**

Option	Description
Hold outputs	Holds outputs in the present ON or OFF state
Run days	Sets the weekday(s) that the relay operates. Options: Sunday, Monday, Tuesday., Wednesday, Thursday, Friday, Saturday
Start time	Sets the start time.
Interval	Sets the time between activation cycles (Default value: 5 min).
Duration	Sets the period of time the relay is energized (Default value: 30 sec).
Off delay	Sets the time for additional hold/output time after the relay has been turned off.

Figure 17 Scheduler function

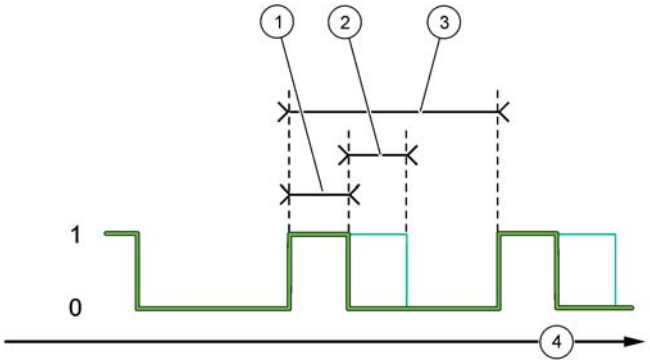

1 Duration	**3** Interval
2 OFF delay	**4** Time (x-axis)

- **Alarm Function (refer to Figure 18)**

Option	Description
Low alarm	Sets the value where the relay will turn on in response to decreasing measured value. For example, if the low alarm is set for 1.0 and the measured value drops to 0.9, the relay activates.
High alarm	Sets the value where the relay will turn on in response to increasing measured value. For example, if the high alarm is set for 1.0 and the measured value increases to 1.1, the relay activates.

Option	Description
Low deadband	Sets the range where the relay remains on after the measured value increases above the low alarm value. For example, if the low alarm is set for 1.0 and the low deadband is set for 0.5, the relay remains on between 1.0 and 1.5. Default is 5% of the range.
High deadband	Sets the range where the relay remains on after the measured value decreases below the high alarm value. For example, if the high alarm is set for 4.0 and the high deadband is set for 0.5, the relay remains on between 3.5 and 4.0. Default is 5% of the range.
Off delay	Sets a time (0-300 seconds) to delay the relay from normally turning off (Default: 0 seconds).
On delay	Sets a delay time for the relay to turn on (Default: 0 seconds).

Figure 18 Alarm function

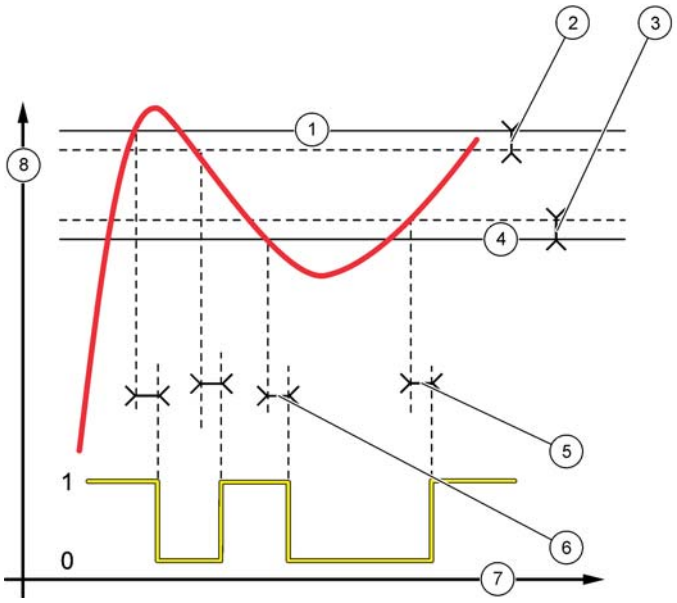

1 High alarm	**5** ON delay
2 High deadband	**6** OFF delay
3 Low deadband	**7** Time (x-axis)
4 Low alarm	**8** Source (y-axis)

- **Feeder Control Function (refer to Figure 19 and Figure 20)**

Option	Description
Phase	Defines the relay status if the process value exceeds the setpoint. High (default)—turns the relay on when the process value exceeds the setpoint. Low—turns the relay on when the process value falls below the setpoint.
Set setpoint	Sets the process value at which the relay toggles. The default value is different for each sensor.
Deadband	Sets the area for an amount of change necessary after the relay setpoint is reached in order to satisfy a condition.

Option	Description
Overfeed timer	Sets a time period for de-activating an active relay if the process setpoint cannot be reached. Once an overfeed alarm is present, it must be manually reset.
Off delay	Sets a delay time for the relay to turn off (default: 0 seconds).
On delay	Sets a delay time for the relay to turn on (default: 0 seconds).

Figure 19 Feeder control function

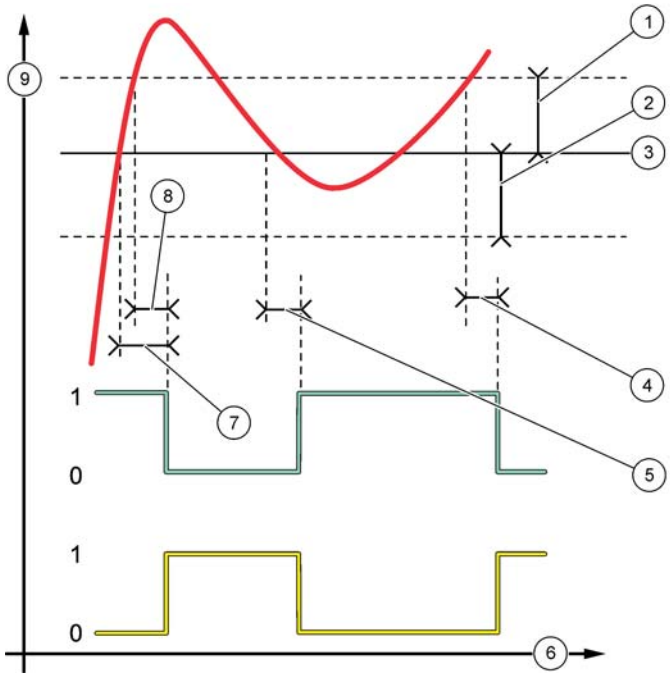

1 Deadband (Phase = Low)	**6** Time (x-axis)
2 Deadband (Phase = High)	**7** ON delay (phase set high)
3 Setpoint	**8** OFF delay (phase set low)
4 OFF delay (phase set high)	**9** Source (y-axis)
5 ON delay (phase set low)	

Figure 20 Feeder control function (Phase low, Overfeed timer)

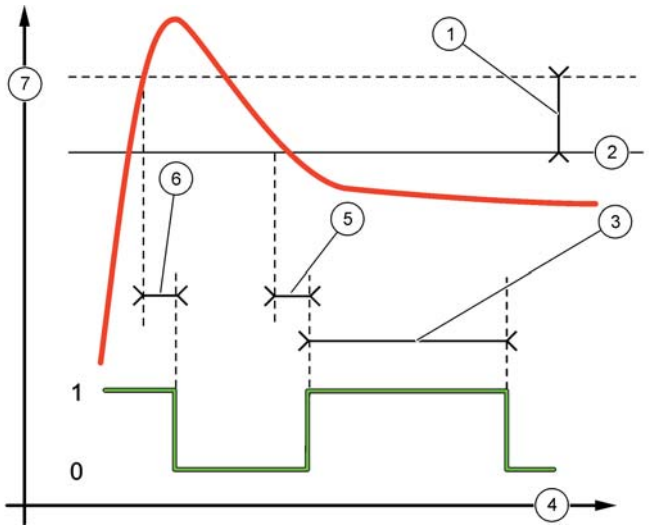

1 Deadband	**5** ON delay
2 Setpoint	**6** OFF delay
3 Overfeed timer	**7** Source (y-axis)
4 Time (x-axis)	

- **Event Control Function (refer to Figure 21, Figure 22 and Figure 23)**

Option	Description
Set setpoint	Sets the value where the relay will turn on.
Deadband	Sets a hysteresis so the relay will not swing unregulated when the process value converges to the setpoint.
OnMax timer	Sets the maximum time the relay can stay on independent from the measured value (default: + 0 min).
OffMax timer	Sets the maximum time the relay can stay off independent from the measured value (default: + 0 min).
OnMin timer	Sets the minimum time the relay can stay on independent from the measured value (default: + 0 min).
OffMin timer	Sets the minimum time the relay can stay off independent from the measured value (default: + 0 min).

Figure 21 Event control function (no delay)

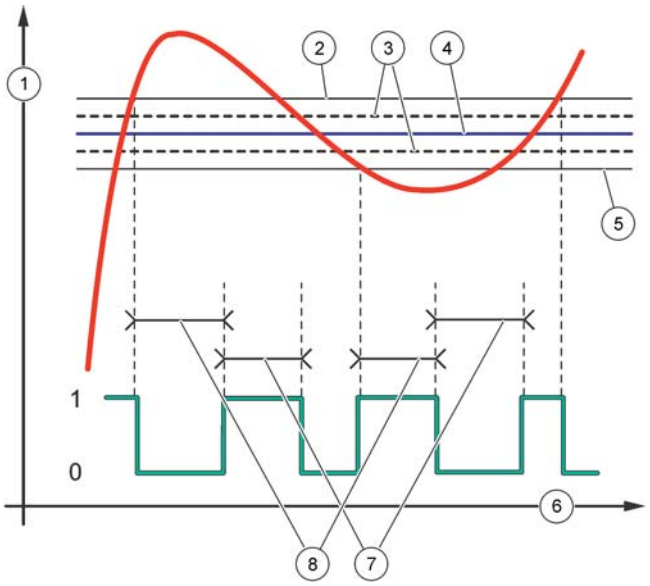

1 Source (y-axis)	**5** Low alarm
2 High alarm	**6** Time (x-axis)
3 Deadband	**7** OnMax-time
4 Setpoint	**8** OffMax-time

Figure 22 Event control function (OnMin timer, OffMin timer)

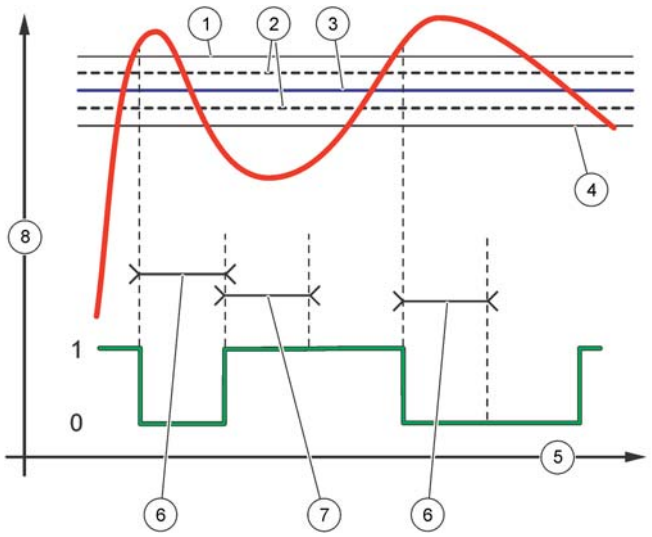

1 High alarm	**5** Time (x-axis)
2 Deadband	**6** OffMin timer
3 Setpoint	**7** OnMin timer
4 Low alarm	**8** Source (y-axis)

Figure 23 Event control function (ON/OFF delay)

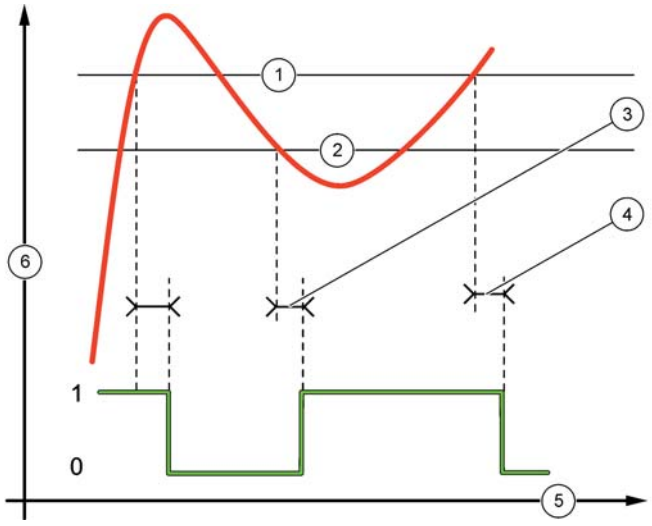

1 High alarm	**4** OFF delay
2 Low alarm	**5** Time (x-axis)
3 ON delay	**6** Source (y-axis)

- **Pulse Width Modulation Control Function (refer to Figure 24)**

Option	Description
Set mode	Auto—the relay output works as a PID controller. Manual—the signal is controlled by the user through manual adjustment of the % change value. This option is shown as Manual Output after the manual set mode is selected.
Phase	Reverses the leading sign of the control deviation for the PID controller (default: Reverse). The phase selects whether the relay will operate at the first part of a cycle (direct phase) or the second part (reverse phase).
Set setpoint	Creates a setpoint value.
Dead zone	The range above and below the setpoint. In this set range, the PID controller does not take action to change the Pulse Width Modulation On/Off Ratio output signal until the limits of the dead zone are reached.
Period	Sets the cycle duration of the PWM output signal (default: 5 seconds).
Min width	Sets the minimum PWM ratio (default: 1.0 second).
Max width	Sets the maximum PWM ratio (default: 4.0 seconds).
Prop band	Sets the proportional part of the PID controller. The proportional part of the controller supplies an output signal which is linearly dependent to the control deviation. The proportional part reacts on any changes at the input but starts to oscillate easily if the value is set high. The proportional part cannot completely compensate for disturbances.
Integral	Sets the integral part of the PID controller (default: 000 minutes). The integration part of the controller supplies an output signal. The output signal increases linearly if the control deviation is constant. The integration part responds slower than the proportional part and can completely compensate disturbances. The higher the integration part, the slower it responds. If the integration part is set too low, it starts to oscillate.

Figure 24 Pulse Width Modulation function (linear mode)

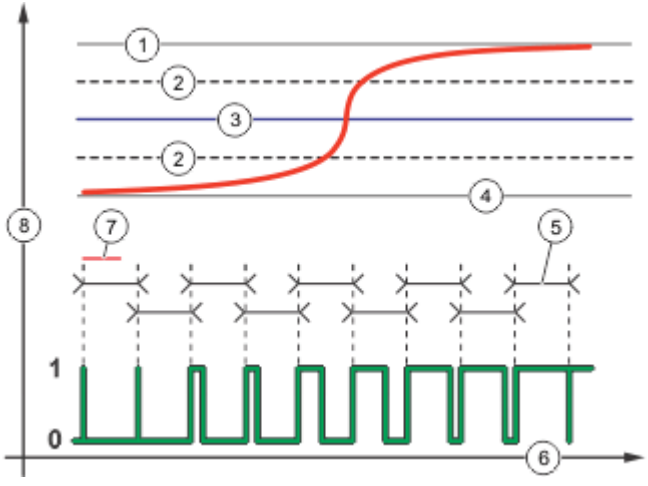

1 High alarm	**5** Period
2 Deadband	**6** Time (x-axis)
3 Setpoint	**7** Phase
4 Low alarm	**8** Selected source (y-axis)

- **Frequency Control Function (refer to Figure 25)**

Option	Description
Set mode	Auto—The relay works as a PID controller. Manual—the signal is controlled by the user through manual adjustment of the % change value. This option is shown as Manual Output after the manual set mode is selected.
Phase	Reverses the leading sign of the control deviation for the PID controller (default: Reverse). The phase selects whether the relay will operate at the first part of a cycle (direct phase) or the second part (reverse phase).
Set setpoint	Sets the process value which is controlled by the PID controller.
Dead zone	In this set range, the PID controller does not take action to change the output frequency until within the limits of the dead zone.
Pulse width	Sets the cycle duration (0-600 seconds) of the PWM output signal. (default: 0.5 seconds) The cycle duration is equal to the duty cycle of the output signal.
Minimum pulses	Sets the minimum number of pulses per minute at which the relay can operate. Range: 0.001–4.000 (default: 1.000)
Maximum pulses	Sets the maximum number of pulses per minute at which the relay can operate. Range: 0.001–60.000 (default: 04.000). This value cannot be set lower than Minimum Pulses value.
Prop band	Sets the proportional part of the PID controller. The proportional part of the controller supplies an output signal which is linearly dependent to the control deviation. The proportional part reacts on any changes at the input but starts to oscillate easily if the value is set high. The proportional part cannot fully compensate for disturbances.
Integral	Sets the derivative part of the PID controller (default: 000 minutes). The integration part of the controller generates an output signal. The output signal increases linearly if the control deviation is constant. The integration part responds slower than the proportional part and can fully compensate disturbances. The higher the integration part, the slower it responds. If the integration part is set too low, it starts to oscillate.

Figure 25 Frequency control function

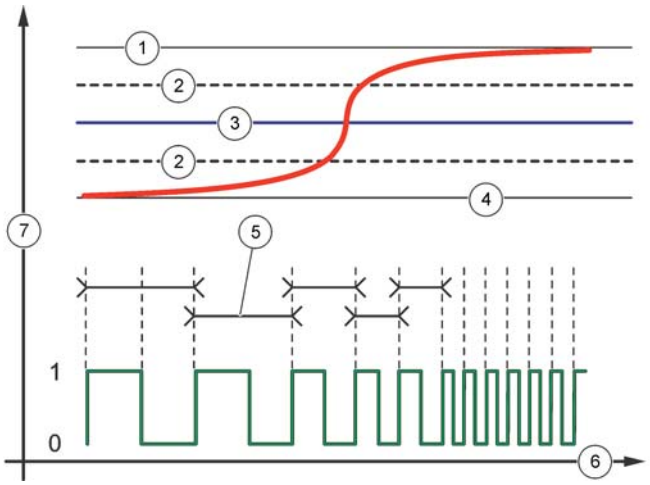

1	High limit	**5**	Cycle duration
2	Deadband	**6**	Time (x-axis)
3	Setpoint	**7**	Selected source (y-axis)
4	Low limit		

- **Warning Function**

Option	Description
Warning	Sets the level for warning activation. Refer to the sensor manual for the numbers for individual warning messages.

Display setup

Configures the controller display.

1. From the Settings menu, select sc200 Setup and push **ENTER**.
2. Select Display Setup and push **ENTER**.

Option	Description
Adjust Order	View and modify the measurement display order. • **See Current Order**—View the current display order • **Add Measurements**—Add selected measurements to the display • **Remove Measurements**—Remove selected measurements from the display • **Reorder List**—Select one or more measurements and change their order in the display • **See Default Order**—View the default display order • **Set to Default**—Set the display order to the default configuration ***Note:*** *Some of the above will not be available if no adjustment is possible for that option (e.g.* ***Reorder List*** *and* ***Remove Measurements*** *will not be available if only one measurement is selected for display).*
Display Contrast	Adjust the contrast to a value between the minimum of +1 and the maximum of +9
Edit Name	Assigns a name to the controller

Update the date and time

1. From the Settings menu, select sc200 Setup and push **ENTER**.
2. Select Set Date/Time and push **ENTER**.
3. Select Date Format from the Set Date/Time screen and push **ENTER**.
4. Select a format and push **ENTER**.
5. Select Date/Time from the Set Date/Time screen and push **ENTER**.
6. Update the entries.
   a. Use the right and left arrow keys to highlight a field.
   b. Use the up and down arrow keys to change the values in the field and push **ENTER**.
   c. At the end of the date field, push the right arrow to wrap down to the time fields.
   d. Use the up and down and arrow keys to update the time fields.
7. Push **ENTER** to save the changes.
   The controller returns to the Set Date/Time menu.

Set the datalog mode and interval

Datalog Setup is available if a calculation has been set up.

1. From the Settings menu, select sc200 Setup and push **ENTER**.
2. Select Datalog Setup and push **ENTER**.
3. Select Set Mode and push **ENTER**.
4. Select an option (Snap Shot, Average, Maximum, Minimum) and push **ENTER**.
5. From the Datalog Setup menu, select Set Interval and push **ENTER**.
6. Select an interval from the list and push **ENTER**.

Set up a calculation

1. From the Settings menu, select sc200 Setup and push **ENTER**.
2. Select Calculation and push **ENTER**. Select a menu option and choose from the displayed list or update the entry. Refer to the table below for more information about each option.

Option	Description
Set variable X	Selects the sensor for the x variable
Set parameter X	Selects the sensor measurement for the x variable
Set variable Y	Selects the sensor for the y variable
Set parameter Y	Selects the sensor measurement for the y variable
Set formula	Select the math function to implement: • **None**—Disables the math function • **X-Y**—Subtraction function • **X+Y**—Addition function • **X/Y**—Division function • **[X/Y]%**—Percentage function • **[X+Y]/2**—Average function • **[X*Y]**—Multiplication function • **[X-Y]%/X**—Difference function
Display format	Selects the number of digits and decimal points

Option	Description
Set units	Selects the units for the calculated reading
Set parameter	Selects the parameter for the calculated reading

3. Push **ENTER** to save the selection or setting and return to the Calculation menu.

Set up the discrete inputs

Use these inputs to switch closure inputs or logic level voltage inputs.

1. Press the **MENU** key.
2. Select sc200 Setup and push **ENTER**.
3. Select Discrete Input Setup and push **ENTER**.
4. Select the desired channel (Input 1, Input 2 or Input 3) and push **ENTER**.
5. Select a control logic option and push **ENTER**.

Option	Description
Disable	This channel is disabled and not used.
On/High	This channel is active when either the switch input is On (or closed), or the logic level voltage input is at a High level.
Off/Low	This channel is active when either the switch input is Off (or opened), or the logic level voltage input is at a Low level.

6. Select a warning option and push **ENTER**.

Option	Description
Off	An active discrete input does not trigger a device warning.
On	An active discrete input triggers a device warning.

7. Select an output mode option and push **ENTER**.

Option	Description
Active	Output level continues to represent operating conditions.
Hold	Output level is held static.
Transfer	Output level moves to a pre-configured value.

8. Select the sensors that will have their outputs (analog and relay) affected when one of the discrete inputs becomes active. Push **ENTER**.
9. Use the arrows to select the On Delay value (the duration time delay between the discrete input activation and the configured response of the controller). Push **ENTER**.
10. Use the arrows to select the Off Delay value (the duration time delay between the discrete input de-activation and the configured response of the controller). Push **ENTER**.
11. Repeat steps 4–10 for each desired channel.
12. If a discrete input needs to be changed after initially set up:
    a. Repeat steps 1–4 and an Input Settings menu appears with the following options:
       - Control Logic
       - Set Warning
       - Output Mode
       - On Delay
       - Off Delay
    b. Select the desired option and push **ENTER**.

c. Make the desired changes and push **ENTER** to save the changes and return to the Inputs Setting menu.

Update the display language

The display language can be changed through the Setup menu.

1. From the Settings Menu, select sc200 Setup and push **ENTER**.
2. Select Language and push **ENTER**.
   The list of language options appears. English is the default language for the controller.
3. Highlight the language to be used for the controller and push **ENTER**.
   The selected language is saved and is used for the controller display. The display returns to the sc200 Setup menu.

Using the secure digital memory (SD) card

An SD card must be installed in the controller.

- The SD card can be used to update software and firmware and to download event and data logs. If the SD card is installed while the controller is in the Settings Menu, push the **HOME** key and then the **MENU** key to verify the option is visible. The SD icon will also be visible in the upper status bar of the main measurement screen when a card is installed.
- Data log files on the SD card are available in XML and binary formats.
- DataCom is used to convert files from binary to CSV format. Refer to the DataCom manual for more information on how to use the application. For a copy of the DataCom manual, software updates or other downloadable resources, go to http://www.de.hach.com or http://www.hach.com. Search *DataCom* or go to any sc200 product page.

Updating software

Notes:

- The controller does not automatically transfer information to or from an SD card.
- When the SD card is put in multiple controllers, each controller has a separate set of folders in the SD card memory. To make sure software updates are in the correct folder for the controller in use, it is best to use a separate dedicated SD card for each controller.

1. From the Settings Menu, select SD Card Setup and push the **ENTER** key.
2. Select Upgrade Software and push the **ENTER** key.

   Note: *If the Upgrade Software option does not appear, do the steps in* Firmware updates with SD cards on page 44.
3. Select a device from the list and push the **ENTER** key. The list of options includes the controller and all connected devices that have software placed in the appropriate folder on the SD card.
4. If more than one version of the upgrade software is available, select the version with the highest number and push the **ENTER** key.
5. Push the **ENTER** key to begin the software transfer.
   The display will show "Transferring files. Please wait..." The percentage of completion appears in the bottom left corner of the display. The upgrade cannot be halted once it has begun.

   - When the transfer is successful, the display will show "Transfer complete" along with a prompt to push **ENTER** to restart the controller or to push the **BACK** key and exit to the SD Card Setup menu. Controller updates take effect when the controller is restarted. A restart is not necessary for sensor updates.
   - If the transfer is unsuccessful, the display will show "Transfer failed" and an error message. Press the **ENTER** key to acknowledge the warning and exit out of the menu. Error messages are different for each sensor. Refer to the applicable sensor manual.

Saving data and event logs with SD cards

Notes:

- Data and event logs can be downloaded to an SD card and viewed with any device capable of reading an SD card.
- Data logs store the measurement data at selected intervals in a packed binary format (.flg file).
- Event logs store a variety of events that occur on the devices such as configuration changes, alarms and warning conditions. Event logs are set up during the sensor or module configuration process. Event logs are stored in a CSV format.

1. From the Settings Menu, select SD Card Setup and push the **ENTER** key.
2. Select Save Logs and push the **ENTER** key.
3. If more than one device appears on the screen, all devices are selected by default. To deselect an item, highlight the selection and push the left arrow key. Select the devices from which logs will be saved and push the **ENTER** key.
4. Select the time period from which logs are to be saved.

Option	Description
Last Day	All logs from the last full 24 hours, starting from 12:00 a.m., and any additional time remaining on the current day
Last Week	All logs from the last full week (7 days) starting from 12:00 a.m., and any additional time remaining on the current day
Last Month	All logs from the last full month (30 days) starting from 12:00 a.m., and any additional time remaining on the current day
All	Save all logs in memory
New	All logs that are new since the last time logs were saved to the SD card

5. Push the **ENTER** key to confirm the choice, and push the **ENTER** key again to begin the file transfers.
6. Allow time for the files to transfer. The display will show Transferring files. Please wait... and the percentage of files transferred.
   If the transfer is successful, the display will show "Transfer complete." If the transfer is not successful, the display will show "Transfer failed."
7. Do one of the following:
   a. Push the **ENTER** key to exit back to the SD Card Setup menu.
   b. Push the **HOME** key to return to the measurement screen.
   c. Push the **BACK** keys to return to the Settings Menu.

Access data and event log files on the SD card

A PC with an SD Card reader device or USB adapter is necessary to view the event and data logs kept on the SD Card. Excel 2003 or higher (for XML files) or the Data Com application (for binary flg files) is necessary to open the event and data logs.
Data logs have the following structure: Device Name, Device Serial Number, Device Identification, Data Log, Time Stamp.

Event logs have the following structure: Device Name, Device Serial Number, Device Identification, Event Log, Time Stamp.

To view data or event log files stored on the SD card:

1. Attach the card reader device to the PC (if necessary) and install the SD card that contains the files in the reader device.
2. In the SD card directory, open the HACH folder.
3. Select the Logs folder.
4. Select a device folder.

The event and data log files in the folder are shown.

5. To view XML data log files:
   a. Make sure the HachDatalog.xsl style sheet exists in the device folder.
   b. Open the Excel application.
   c. Go to File, Open.
   d. Select the data log file.
   e. In the Import XML dialog box, select **Open the file with the following style sheet applied** and select **HachDatalog.xml**.
   f. Click OK to view the data.
6. To view binary data log (.flg) files:
   a. Make sure the device driver (.flg.drv) file exists in the device folder.
   b. Open Data Com.
   c. In the File Viewer section, click Open.
   d. Select the data log file.
   The data log file is shown in the box and a comma separated values (csv) file with the same file name is created. This csv file can be opened in Excel.

Firmware updates with SD cards

The latest firmware updates can be placed on an SD card. The SD card can then be used to update the controller or device firmware.

A PC and a USB card reader or other device capable of reading an SD card are necessary.

1. Find the zip file at http://www.hach-lange.com or http://www.hach.com and copy it to the PC.
2. Extract file(s) from the zip folder and save them to the SD card.
3. Remove the SD card and update the controller and device firmware. Refer to Updating software on page 42.

Backup settings to an SD card

Saves the configuration of a device to the SD card.

1. Push the **MENU** key.
2. Select SD Card Setup and push **ENTER**.
3. Select Manage Configuration and push **ENTER**.
4. Select Backup Settings and push **ENTER**.
5. Select the devices to be backed up. All devices are selected by default. To deselect an item, highlight the selection and push the left arrow key. Push **ENTER** to begin the file transfers. If backup files already exist on the SD card, a confirmation window appears. Select the devices again and push **ENTER**. Wait for the "Transfer complete" message.
6. Push **ENTER** again to return to the Manage Configuration menu.

Restore settings to the controller

This menu selection only appears if a (serial number-specific) backup file for the controller or one of the sensors connected to it exists on the SD Card. This menu selection loads the configuration of a specific device from the SD card to the same device (serial number-controlled function).

1. Push the **MENU** key.
2. Select SD Card Setup and push **ENTER**.
3. Select Manage Configuration and push **ENTER**.
4. Select Restore Settings and push **ENTER**.
5. Select the device that will be restored. All devices are selected by default. To deselect an item, highlight the selection and push the left arrow key. Push **ENTER** to begin the file transfers.

6. When the transfer is complete, push **ENTER**.
7. To have the settings take effect immediately, restart the controller. Push the **BACK** key to exit the Manage Configuration menu.

Transfer settings to another device

All device settings including calibration, sensor name, selected temperature and measurement units and data logging settings are transferred.

1. Push the **MENU** key.
2. Select SD Card Setup and push **ENTER**.
3. Select Manage Configuration and push **ENTER**.
4. Select Transfer Settings and push **ENTER**. Two options appear:
   - Retrieve Settings
   - Copy Settings
5. To retrieve settings from the controller (or a device connected to it) and put the settings on the SD card:
   a. Select Retrieve Settings and push **ENTER**.
   b. Select the devices that contain the information to be transferred. All devices are selected by default. To deselect an item, highlight the selection and push the left arrow key. Push **ENTER** to begin the file transfers. Wait for the "Transfer complete" message.
   c. If files already exist on the SD card, a confirmation window appears. Select the devices again and push **ENTER**. Wait for the "Transfer complete" message.
   d. Push **ENTER** to return to the Manage Configuration menu.
6. To copy settings from the SD card to a controller (or a device connected to it):
   a. Select Transfer Settings and push **ENTER**.
   b. Select Copy Settings and push **ENTER**.
   c. Select the devices on the SD card. All devices are selected by default. To deselect an item, highlight the selection and push the left arrow key. Push **ENTER** to begin the file transfers.
7. When the transfer is complete, push **ENTER** to restart the connected devices.
8. Push **ENTER** to restart the controller or push **BACK** to return to the Manage Configuration menu.

Using the service port

The service port is used to download data files from the controller and install new versions of controller and sensor firmware. To download data and update software, use the service port in combination with DataCom and a service cable (LZX887).

Using DataCom

When using the service port, it is necessary to use DataCom. DataCom is a PC Application Utility that downloads data log and event log files from the controller and installed sensors. Files are downloaded from the controller through the controller service port or they can be placed on a Secure Digital Memory (SD) card installed in the controller. In addition, DataCom is used to upload software for the controller and sensors. The DataCom application must be installed on a PC to read the files.

Refer to the DataCom manual for more information on how to use the application. The DataCom manual, software updates and other downloadable resources are available at http://www.de.hach.com or http://www.hach.com on any sc200 product page.

Maintenance

⚠ DANGER

Multiple hazards. Only qualified personnel must conduct the tasks described in this section of the document.

Cleaning the controller

⚠ DANGER

Always remove power from the controller before performing maintenance activities.

Note: *Never use flammable or corrosive solvents to clean any part of the controller. Use of these solvents may degrade the environmental protection of the unit and may void the warranty.*

1. Make sure the controller cover is securely closed.
2. Wipe the controller exterior with a cloth dampened with water, or with a mixture of water and mild detergent.

Fuse replacement

Fuses are not user-serviceable items. The need for fuse replacement in controllers indicates severe technical failure and is therefore considered to be a service activity. If a blown fuse is suspected, contact Technical Support.

Battery replacement

The lithium ion backup battery is not user replaceable. Contact technical support for replacement.

Troubleshooting

Problem	Resolution
No current output	Verify current output configuration.
	Test current output signal using the Test/Maintenance submenu. Input a current value and verify the output signal at the controller connections.
	Contact Technical Support.
Incorrect current output	Verify current output configuration.
	Test current output signal using the Test/Maintenance submenu. Input a current value and verify the output signal at the controller connections. If the output is incorrect, perform an output calibration.

Problem	Resolution
No relay activation	Make sure relay connections are secure.
	If using an external power source, make sure the relay wiring is correct.
	Make sure the relay configuration is correct.
	Test the relay activation through the Test/Maintenance menu. The relay should energize and de-energize as selected.
	Make sure the controller is not in calibration mode and that the relay is not being held.
	Reset the Overfeed Timer to make sure the timer has not expired.
Secure Digital Memory (SD) card not recognized by the controller	Make sure the SD card is properly oriented. The copper traces should face toward the controller display.
	Make sure the SD card is fully seated in the slot and the spring lock is engaged.
	Make sure the SD card is properly formatted with a Fat 32 format. The MMC format is not supported. Follow the instructions of the card manufacturer to format the SD card on a PC.
	Make sure the card is not larger than 32 GB.
	Make sure an SD card is being used. Other types of cards (such as xSD, micro SD, mini SD) will not work properly.
Information not saving, or not saving properly to the SD card.	Make sure the SD card is properly formatted with the FAT 32 format. The MMC format is not supported. Follow the instructions of the card manufacturer to format the SD card on a PC.
	If the SD card has previously been in use, format the card with the Fat 32 format, install the card in the controller, and try downloading files.
	Try a different SD card.
SD card full	Read the SD card with a PC or other card reader device. Save important files and then delete some or all of the files on the SD card.
Controller cannot find software updates on the SD card.	Make sure an appropriate folder is created by installing the SD card in the controller. An update folder will automatically be created.
	Install the SD card on a PC and make sure the software files are located in the appropriate update folder.
	If the same SD card is used with multiple controllers, each controller will have a separate folder on the system. Make sure the software updates are in the folder dedicated to the controller in use.
Display is lit but shows no characters or characters are faint or blurry.	Adjust the display contrast
	Make sure protective film has been removed from display.
	Clean the outside of the controller, including the display screen.

Problem	Resolution
Controller will not power up, or powers up intermittently	Make sure the AC power connections are properly terminated in the controller.
	Make sure the power strip, line power, wall plug are all properly plugged in.
	Contact Technical Support
Network or sensor module not recognized	Make sure the module is properly installed.
	Make sure the module selector switch is set to the proper number.
	Remove sensor module and install the module into the second analog slot. Apply power to the controller and allow the controller to perform a device scan.
	Contact Technical Support.
Sensor not recognized ***Note:*** *Example of possible display message: *****	If the sensor is an analog sensor and a corresponding module is installed in the controller, refer to the instructions supplied with the Network or Sensor Module.
	Make sure the digital connector wiring harness is seated on the inside of the door assembly and that the wiring harness is not damaged.
	If the digital sensor is connected to the controller with a digital termination box, user supplied junction box, digital extension cables, or a user-supplied extension cable, connect the sensor directly to the controller and perform a device scan. If the controller recognizes the sensor, check that all the wiring in the junction boxes or extension cables is correct.
	Make sure that only two sensors are installed in the controller. Although two analog module ports are available, if a digital sensor and two analog modules are installed, only two of the three devices will be seen by the controller.
	Contact Technical Support
Device Missing error message appears	Perform a Device Scan from the Test/Maintenance menu.
	Power cycle the controller

Test and Maintenance menu

1. From the Settings Menu, select Test/Maint and push **ENTER**.

Option	Description
Scan devices	Performs a scan for active and missing devices.
Output cal • **Output 1** • **Output 2**	Lets the user calibrate the 4–20 mA outputs with a 250 ohm resistor in series to the mA output terminals. The settings for each output are adjusted until the correct value (4 mA or 20 mA) is supplied. Calibrate 4 mA output (Min: 0 Max: 25000) Calibrate 20 mA output (Min: 35000 Max: 65533)
Hold outputs	Sets the value the controller sends to an external system for a defined period of time. After the time period, the instrument goes back to reporting real time values. Set activation—Launch or release Set Outmode—Hold Outputs (default) or Transfer Outputs Set Channels—All (default) or select from hardware list

Option	Description
Test output • **Output 1** • **Output 2**	Lets the user select a mA value that is sent by the controller for verification. Min: 0 mA (default +04.00) Max: 25.00 mA
Status	View status of all modules, sensors and relays.
Test relay—A, B, C, D	Energize or De-energize the selected relay
Overfeed reset	Resets the Overfeed Timer.
Reset default config	Resets the controller configuration settings to the default values (language, date and time, relay function and data output function).
Restart sc200	Performs a controller restart
Simulation (only displays if sensors or modules are connected)	After the sim value is entered, the controller outputs this value as if it was the value sent from the sensor. The simulation stops after the user exits the screen. Source- • <Module 1> • <Module 2> (Footer displays current source selection) Parameter—Source measurement type (footer displays current source selection) Sim value—Use arrow keys to change value (footer displays current source selection)
Modbus stats	Displays Error and Good count stats for selected port. • Sensor port 1, 2, 3 or 4 • Network port • Service port • Clear stats
System data	Displays the current system current, temperature and voltage data.

Warning and error conditions

Follow the steps below to acknowledge controller warnings.

1. From the Settings menu, select Diagnostics and push **ENTER**.
2. Select the device (controller, sensor, network card) with the warning or error and push **ENTER**.
3. Select the warning, error or event list and push **ENTER**.
4. Select Yes and push **ENTER** to acknowledge the warning.
   Note: *Errors cannot be acknowledged.*
5. For more information on a specific warning, error or event, refer to the device manual.

Device scan information

Display message	Action
Installing device...please wait	The controller has found a new device. No action is necessary. The controller automatically performs an installation process for the new device and displays the main measurement screen of the device installed in the number one position.
Device missing <device id>	A previously installed device has been removed from the controller or is not detected. • Push the **Enter** key to continue. • Push the left arrow key to select or de-select a missing device. • Push the **Enter** key to delete the missing device. The controller will display the main measurement screen for the device in the number one position. ***Note:*** *This message also displays when a device is missing and a new device has been installed. After the missing device is deleted, the controller automatically installs the new device and displays Installing device...please wait. The controller then displays the main measurement screen for the device installed in the number one position.*

Replacement parts and accessories

Note: *Product and Article numbers may vary for some selling regions. Contact the appropriate distributor or refer to the company website for contact information.*

Description	Item number
4 GB Secure Digital Memory (SD) card	9218100
Connector kit for digital sensor	9201000
Controller installation kit	8806200
DataCom cable	LZX887
Mounting bracket inserts	9177900
Plug, conduit opening (set of 3)	5868700
Power cord kit, with strain relief, 125 VAC, U.S.-style plug	9202900
Power cord kit, with strain relief, 230 VAC, European-style plug	9203000
Screw driver	6134300
SD card reader	9218200
SD card cover kit for sc200 controller	9200900
Screws for controller installation kit	9177800
Cord grip kit (1)	9178000
Sealing washer for cord grip assembly	1033814
UV protection screen	8809200
Weather and sun shield w/ UV protection screen	9220600
Sensor and communication modules	
Conductivity module	9013000

Description	Item number
Flow module	9012700
4-20 mA input module	9012800
pH and DO module	9012900
4-20 mA output module	9334600
HART network module kit	9328100
Modbus network module	9013200
Profibus network module	9173900
Profibus M12 connector kit	9178500
Profibus M12 socket (hard wire to quick connector adapter)	9178200
Profibus M12 T-splitter	9178400

HACH COMPANY World Headquarters
P.O. Box 389, Loveland, CO 80539-0389 U.S.A.
Tel. (970) 669-3050
(800) 227-4224 (U.S.A. only)
Fax (970) 669-2932
orders@hach.com
www.hach.com

HACH LANGE GMBH
Willstätterstraße 11
D-40549 Düsseldorf, Germany
Tel. +49 (0) 2 11 52 88-320
Fax +49 (0) 2 11 52 88-210
info-de@hach.com
www.de.hach.com

HACH LANGE Sàrl
6, route de Compois
1222 Vésenaz
SWITZERLAND
Tel. +41 22 594 6400
Fax +41 22 594 6499

© Hach Company/Hach Lange GmbH, 2011-2014, 2016.
All rights reserved. Printed in U.S.A.

DOC023.97.80194

HART® Module

11/2013, Edition 4

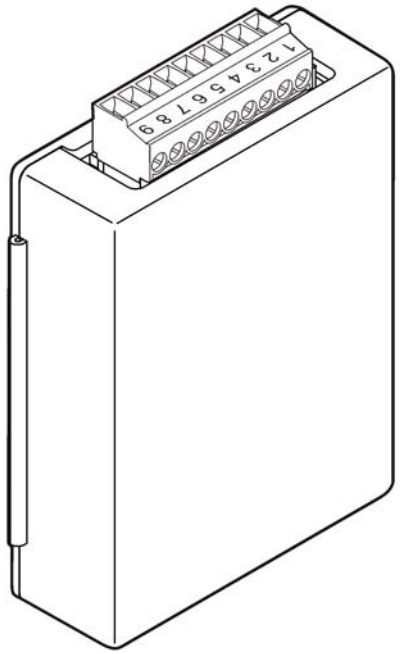

User Manual

English 3

Specifications

Specifications are subject to change without notice.

Specification	Details
Minimum current	3 mA
Maximum current	23 mA
Linearity	± 0.05% of span
HART receive impedance	Rx ≥ 200 KΩ; Cx = 4 pF
Internal module loop power	15 VDC
Lift-off voltage	13.3 VDC
External loop power over temperature	30 VDC maximum
Loop resistance (HART communications)	Internal module loop power: 250–350 Ω; 18–24 VDC power supply: 250–500 Ω; 24–30 VDC power supply: 250–976 Ω
Loop resistance (non-HART communications)	Internal module loop power: 0–350 Ω; 12–24 VDC power supply: 0–250 Ω; 24–30 VDC power supply: 250–976 Ω
HART burst mode	Not supported
HART protocol revision	7.2
Certification	Class I, Division 2 Groups A, B, C, D and Class I, Zone 2 Group IIC, T4 Hazardous and Ordinary Locations

General information

In no event will the manufacturer be liable for direct, indirect, special, incidental or consequential damages resulting from any defect or omission in this manual. The manufacturer reserves the right to make changes in this manual and the products it describes at any time, without notice or obligation. Revised editions are found on the manufacturer's website.

Safety information

NOTICE

The manufacturer is not responsible for any damages due to misapplication or misuse of this product including, without limitation, direct, incidental and consequential damages, and disclaims such damages to the full extent permitted under applicable law. The user is solely responsible to identify critical application risks and install appropriate mechanisms to protect processes during a possible equipment malfunction.

Please read this entire manual before unpacking, setting up or operating this equipment. Pay attention to all danger and caution statements. Failure to do so could result in serious injury to the operator or damage to the equipment.

Make sure that the protection provided by this equipment is not impaired. Do not use or install this equipment in any manner other than that specified in this manual.

Use of hazard information

⚠ DANGER

Indicates a potentially or imminently hazardous situation which, if not avoided, will result in death or serious injury.

⚠ WARNING

Indicates a potentially or imminently hazardous situation which, if not avoided, could result in death or serious injury.

⚠ CAUTION

Indicates a potentially hazardous situation that may result in minor or moderate injury.

NOTICE

Indicates a situation which, if not avoided, may cause damage to the instrument. Information that requires special emphasis.

Precautionary labels

Read all labels and tags attached to the instrument. Personal injury or damage to the instrument could occur if not observed. A symbol on the instrument is referenced in the manual with a precautionary statement.

	This symbol, if noted on the instrument, references the instruction manual for operation and/or safety information.
	This symbol indicates that a risk of electrical shock and/or electrocution exists.
	This symbol indicates the presence of devices sensitive to Electro-static Discharge (ESD) and indicates that care must be taken to prevent damage with the equipment.
	Electrical equipment marked with this symbol may not be disposed of in European public disposal systems after 12 August of 2005. In conformity with European local and national regulations (EU Directive 2002/96/EC), European electrical equipment users must now return old or end-of-life equipment to the Producer for disposal at no charge to the user.

Product overview

The HART module enables HART digital communication and gives two HART connections to the controller. HART communication is an industrial standard bidirectional digital communication over 4-20 mA analog current loops. The module connects to the network card connector inside the controller.

Three isolated analog outputs (output A – output C) are provided. Such outputs are commonly used for analog signaling or to control other external devices. Each output can be active through the use of internal module power or external/loop power (requires an external VDC power supply). When configured for HART communication, an external power supply is recommended. For maximum loop resistance versus voltage information, refer to Figure 1.

Figure 1 Loop load limitations

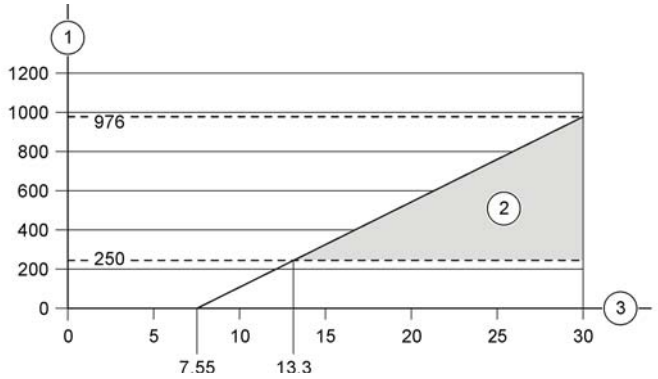

1 Loop load resistance (ohms)	**3** Supply voltage (DC)
2 HART operating region	

Circuit diagrams for HART communication

For HART communication, refer to Figure 2, Figure 3, Table 1, Figure 4, Figure 5 and Table 2.

Figure 2 HART voltage circuit - externally/loop powered

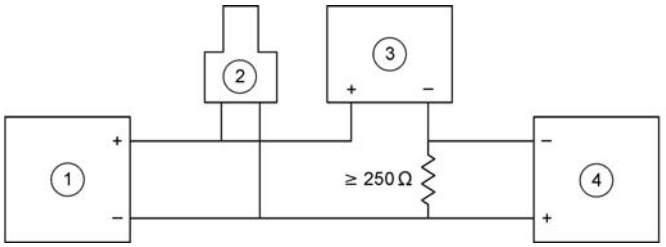

1 HART module	**3** External power supply
2 Hand-held terminal (Secondary communication device)	**4** External device (Recorder/data acquisition system)

Figure 3 HART current circuit - externally/loop powered

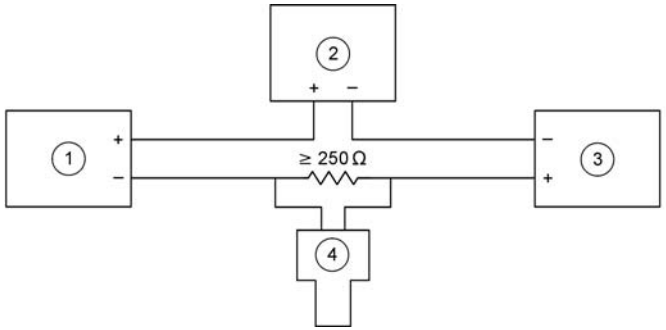

1 HART module	**3** External device (Recorder/data acquisition system)
2 External power supply	**4** Hand-held terminal (Secondary communication device)

Table 1 Recommended resistance values for externally/loop powered HART circuits

Power supply voltage	Loop resistance
18–24 VDC	250–500 Ω
24–30 VDC	250–976 Ω

Figure 4 HART voltage circuit - active module powered

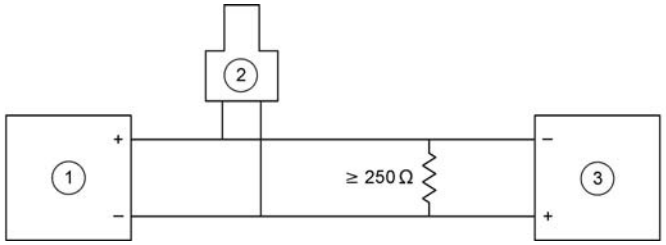

1 HART module	**3** External device (Recorder/data acquisition system)
2 Hand-held terminal (Secondary communication device)	

Figure 5 HART current circuit - active module powered

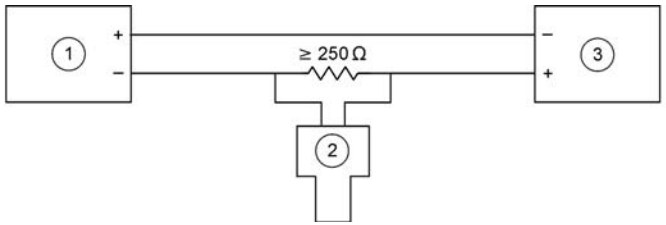

1 HART module	**3** External device (Recorder/data acquisition system)
2 Hand-held terminal (Secondary communication device)	

Table 2 Resistance values for active module powered HART circuits

Loop resistance
250–350 Ω

Circuit diagrams for non-HART communication

Figure 6, Table 3, Figure 7 and Table 4 are not recommended for HART communication.

Figure 6 4-20 mA circuit - active module powered

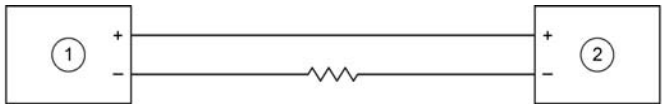

1 HART module	**2** External device (Recorder/data acquisition system)

Table 3 Resistance values for active module powered 4-20 mA circuit

Power supply voltage	Loop resistance
15 VDC	0–350 Ω

Figure 7 4-20 mA circuit - externally/loop powered

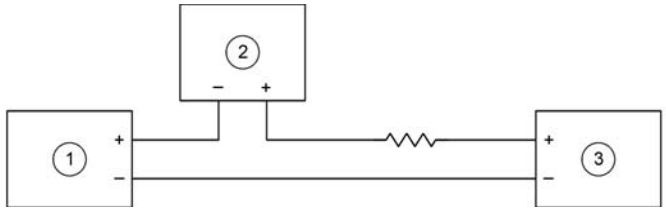

1 HART module	**3** External power supply
2 External device (Recorder/data acquisition system)	

Table 4 Recommended resistance values for externally/loop powered 4-20 mA circuit

Power supply voltage	Loop resistance
12–24 VDC	0–250 Ω
24–30 VDC	250–976 Ω

Wiring tables

Table 5 is recommended for HART communication.

Table 5 Wiring information for externally/loop powered outputs

Output	Connection	Connector pin number
Output C	(–) IN	1
Output C	(+) IN	2
—	—	3
Output B	(–) IN	4
Output B	(+) IN	5
—	—	6
Output A	(–) IN	7
Output A	(+) IN	8
—	—	9

Table 6 is not recommended for HART communication.

Table 6 Wiring information for module powered active outputs

Output	Connection	Connector pin number
Output C	(+) OUT	1
—	—	2
Output C	(–) OUT	3

Table 6 Wiring information for module powered active outputs (continued)

Output	Connection	Connector pin number
Output B[1]	(+) OUT	4
—	—	5
Output B[1]	(–) OUT	6
Output A[1]	(+) OUT	7
—	—	8
Output A[1]	(–) OUT	9

[1] This connection method is not recommended for HART communication.

Installation

⚠ DANGER

Explosion Hazard. For the module installation in classified hazardous locations, refer to the controller user manual for safety instructions.

⚠ DANGER

Electrocution Hazard. Always remove power from the instrument before making any electrical connections.

⚠ WARNING

Potential Electrocution Hazard. Only qualified personnel should conduct the tasks described in this section of the manual.

NOTICE

Potential Instrument Damage. Delicate internal electronic components can be damaged by static electricity, resulting in degraded performance or eventual failure.

To install the module and connect the outputs, refer to Wiring tables on page 7 and the illustrated steps that follow.

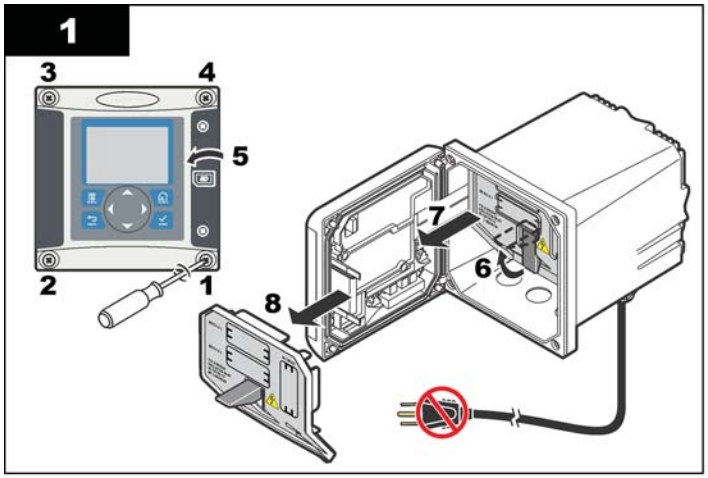
1
3
4
5
2
1
7
6
8

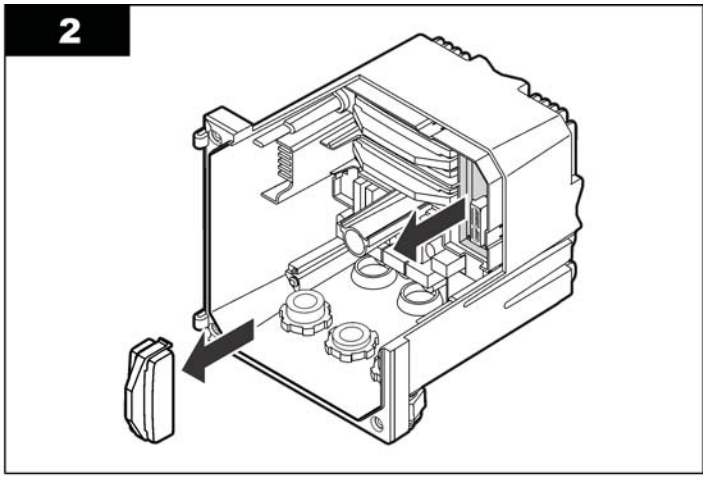
2

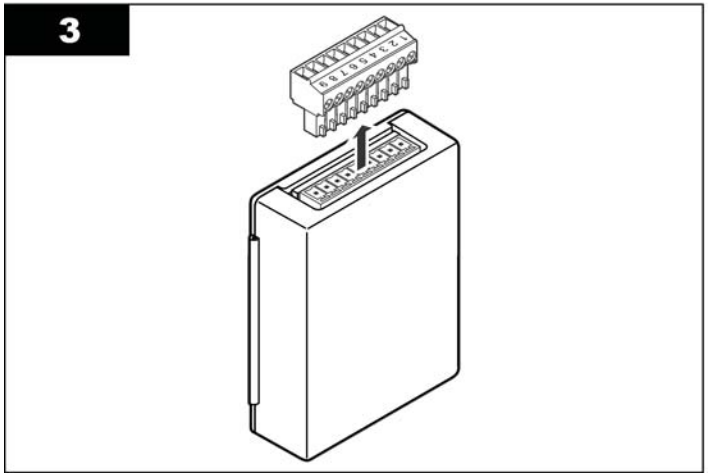
3

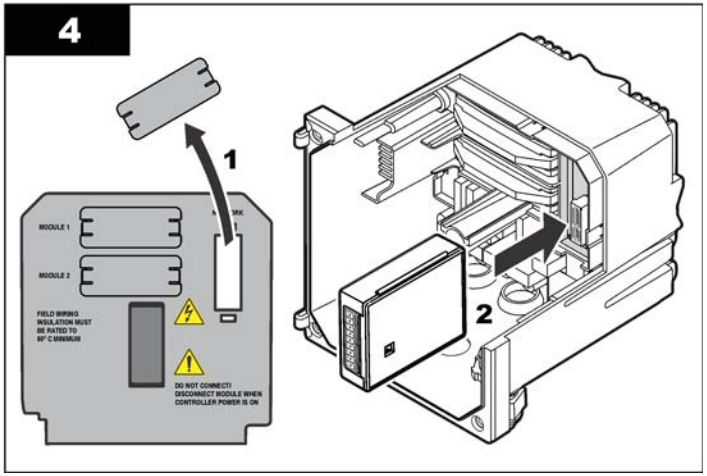
4
1
MODULE 1
MODULE 2
FIELD WIRING
INSULATION MUST
BE RATED TO
DO NOT CONNECT/
DISCONNECT MODULE WHEN
CONTROLLER POWER IS ON
2

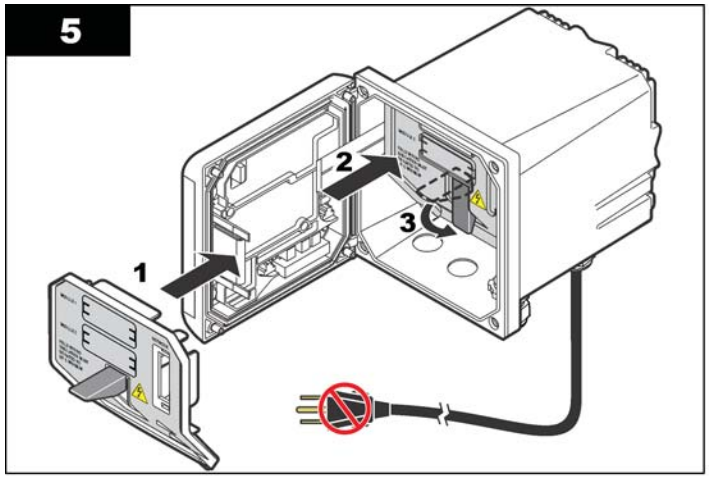
5
1
2
3

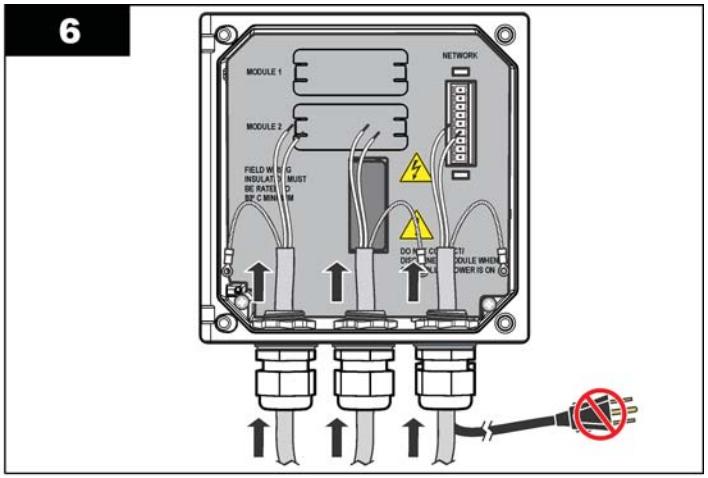
6
NETWORK
MODULE 1
MODULE 2

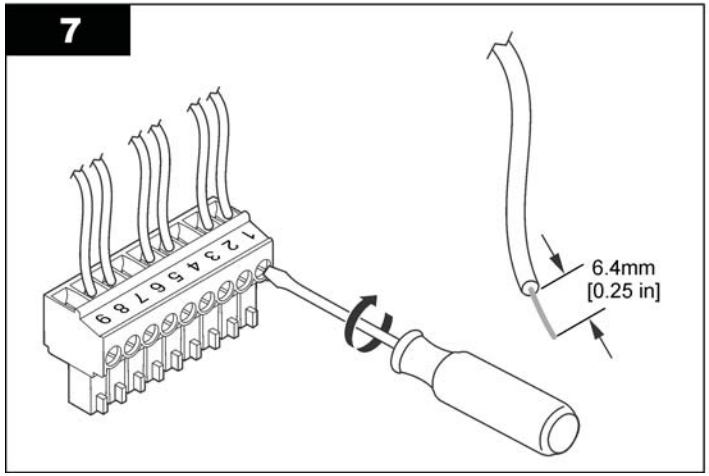
7
1 2 3 4 5 6 7 8 9
6.4mm
[0.25 in]

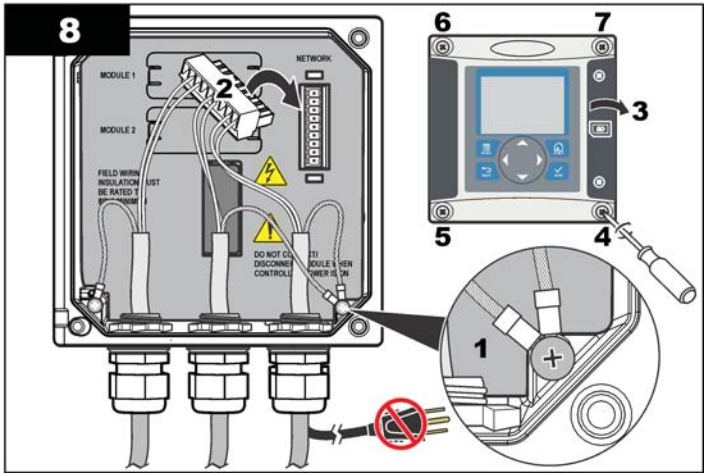
8
NETWORK
MODULE 1
MODULE 2
2
6
7
3
5
4
1

Operation

Configure a HART module

The Network Setup option appears in the Settings Menu only if a HART module or other network module such as Modbus, Profibus or 4-20 mA is installed in the controller.

The range on the HART module is set at 4-20 mA. Each of the outputs can be assigned to represent a measured parameter from a sensor that is connected to the controller such as pH, temperature, flow or calculated values.

1. From the Settings menu, select Network Setup.
2. Select Edit Name and enter a name for the module. Push **ENTER** to save the name.
3. Select an output (A, B, C) and push **ENTER**.

   Note: *Only outputs A and B can be configured for HART communications.*

   a. Highlight an option and push **ENTER**.
   b. Make a selection from the list or update the entries.
   c. Push **ENTER** to save the changes.

Option	Description
Select Source	Selects the sensor to be represented on the selected output —None, sensor 1 name, sensor 2 name, calculation (if set up). For sensor output, Select Parameter sets the measurement options. When the measurement is autorange, Set Range sets the range.
Set Low Value	Sets the measured value from the sensor to be represented by a 4 mA signal (default: 0.000). (Range and units depend on sensor)
Set High Value	Sets the measured value from the sensor to be represented by a 20 mA signal (default: 1.000). (Range and units depend on sensor)
Set Transfer	Sets the transfer value. Range 3.0 to 23.0 mA (default 4.000). If a device malfunction is detected, the output goes to the user-selected transfer value. ***Note:*** *In addition, the transfer value can be set during a sensor calibration or maintenance (Diag/Test>Hold Outputs).*
Set Filter	Sets a time-average filter value of 0 (default) to 120 seconds.
Set HART Address	Sets the HART address for the selected output channel. Range 0 to 63.

Diagnostics and tests menu

1. From the Settings menu, select **Network Setup>Diag/Test**.
2. Select an option and push **ENTER** to perform the function or view the data.

Option	Description
Output Cal	Calibrates the low (4 mA) and high (20 mA) values for each of the three 4-20 mA outputs (A, B, C). Adjust the DAC counts until a connected multimeter reads the applicable output value. The default DAC counts are: • Output A—2807 for 4 mA, 14046 for 20 mA • Output B—2797 for 4 mA, 14109 for 20 mA • Output C—2641 for 4 mA, 13294 for 20 mA
Hold output	Sets the hold output options to Hold, Transfer or Release for each of the three 4-20 mA outputs (A, B, C).
Test output	Drives selected output to a simulated value.
Status	Displays the output value.
Error hold mode	Selects the behavior of the output in an error condition.

Option	Description
Module information	Displays information about the installed module. • Software version • Bootloader version • Serial Number
Default Setup	Sets the configuration to factory defaults.

Troubleshooting

For general problems with HART module communications, try the corrective actions listed below. If the problem continues or other problems occur, contact technical support.

- Make sure the connections between the module and the HART host are correct.
- Make sure the loop supply is live.
- Make sure the HART host is set to the correct device address.
- Check the module network setup for the selected channel. Make sure that the installed device is mapped to the selected channel. Make sure the SET LOW VALUE and the SET HIGH VALUE are within the range of the selected source.
- If the HART output from the HART host cannot be trimmed or fixed, make sure the sensor does not have an error that makes the controller hold or transfer the output at a fixed value.

HACH COMPANY World Headquarters
P.O. Box 389, Loveland, CO 80539-0389 U.S.A.
Tel. (970) 669-3050
(800) 227-4224 (U.S.A. only)
Fax (970) 669-2932
orders@hach.com
www.hach.com

HACH LANGE GMBH
Willstätterstraße 11
D-40549 Düsseldorf, Germany
Tel. +49 (0) 2 11 52 88-320
Fax +49 (0) 2 11 52 88-210
info@hach-lange.de
www.hach-lange.de

HACH LANGE Sàrl
6, route de Compois
1222 Vésenaz
SWITZERLAND
Tel. +41 22 594 6400
Fax +41 22 594 6499

© Hach Company/Hach Lange GmbH, 2011-2013. All rights reserved. Printed in U.S.A.

DOC023.97.80192

Active 4-20 mA Output Module

05/2013, Edition 2

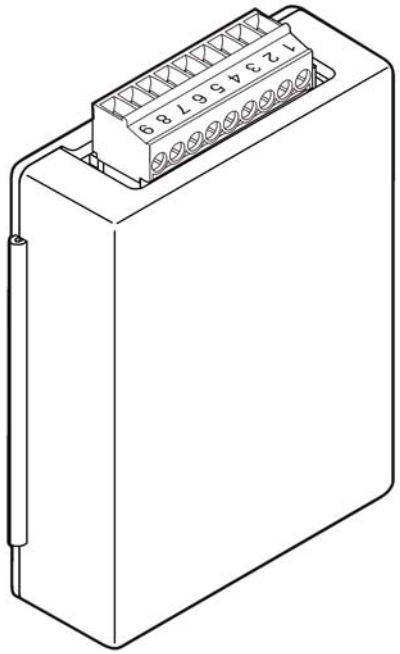

User Manual

English 3

General Information

In no event will the manufacturer be liable for direct, indirect, special, incidental or consequential damages resulting from any defect or omission in this manual. The manufacturer reserves the right to make changes in this manual and the products it describes at any time, without notice or obligation. Revised editions are found on the manufacturer's website.

Safety information

Please read this entire manual before unpacking, setting up or operating this equipment. Pay attention to all danger and caution statements. Failure to do so could result in serious injury to the operator or damage to the equipment.

Make sure that the protection provided by this equipment is not impaired, do not use or install this equipment in any manner other than that specified in this manual.

Use of hazard information

⚠ DANGER

Indicates a potentially or imminently hazardous situation which, if not avoided, will result in death or serious injury.

⚠ WARNING

Indicates a potentially or imminently hazardous situation which, if not avoided, could result in death or serious injury.

⚠ CAUTION

Indicates a potentially hazardous situation that may result in minor or moderate injury.

NOTICE

Indicates a situation which, if not avoided, may cause damage to the instrument. Information that requires special emphasis.

Precautionary labels

Read all labels and tags attached to the instrument. Personal injury or damage to the instrument could occur if not observed. A symbol on the instrument is referenced in the manual with a precautionary statement.

	This symbol, if noted on the instrument, references the instruction manual for operation and/or safety information.
	This symbol, when noted on a product enclosure or barrier, indicates that a risk of electrical shock and/or electrocution exists.
	Delicate internal electronic components can be damaged by static electricity, resulting in degraded performance or eventual failure.
	Electrical equipment marked with this symbol may not be disposed of in European public disposal systems after 12 August of 2005. In conformity with European local and national regulations (EU Directive 2002/98/EC), European electrical equipment users must now return old or end-of-life equipment to the Producer for disposal at no charge to the user. ***Note:*** *For return for recycling, please contact the equipment producer or supplier for instructions on how to return end-of-life equipment, producer-supplied electrical accessories, and all auxillary items for proper disposal.*

Overview of the 4-20 mA output module

The 4-20 mA output module gives three additional 4-20 mA output connections to a controller. The module connects to the network card connector inside the controller.

Installation

⚠WARNING

Potential Electrocution Hazard. Always disconnect power to the instrument when making electrical connections.

⚠WARNING

Potential Electrocution Hazard. Only qualified personnel should conduct the tasks described in this section of the manual.

NOTICE

Potential Instrument Damage. Delicate internal electronic components can be damaged by static electricity, resulting in degraded performance or eventual failure.

Three isolated analog outputs (output 1–output 3) are provided. Such outputs are commonly used for analog signaling or to control other external devices. Each output is loop powered and requires a customer supplied 12 to 24 VDC power supply or the use of internal module power. To install the module and connect the outputs, refer to the Illustrated steps and either Table 1 or Table 2.

Table 1 Wiring information for module powered

Output	Connection	Connector pin number
Output C	(+) IN	1
—	—	2
Output C	(–) IN	3
Output B	(+) IN	4
—	—	5
Output B	(–) IN	6
Output A	(+) IN	7
—	—	8
Output A	(–) IN	9

Table 2 Wiring information for external customer powered

Output	Connection	Connector pin number
Output C	(–) IN	1
Output C	(+) IN	2
—	—	3
Output B	(–) IN	4
Output B	(+) IN	5
—	—	6
Output A	(–) IN	7
Output A	(+) IN	8

Table 2 Wiring information for external customer powered (continued)

Output	Connection	Connector pin number
—	—	9

1. Disconnect controller power.
2. Open the controller cover.
3. Feed the twisted-pair shielded wire through the strain relief.
4. Adjust the wire as necessary and tighten the strain relief.
5. Connect the shield at the power supply side. The power supply positive polarity connects to the (+) terminal, and the negative polarity connects to the (-) terminal (Figure 1 or Figure 2).
   - Do not connect the shield at both ends of the cable.
   - Use only shielded cable to minimize radio frequency emissions and susceptibility.
   - External loop resistance may be required (Table 3 or Table 4).
6. Close the controller cover and tighten the cover screws.
7. Connect controller power.
8. Configure outputs in the controller.

Figure 1 Wiring diagram for external customer powered

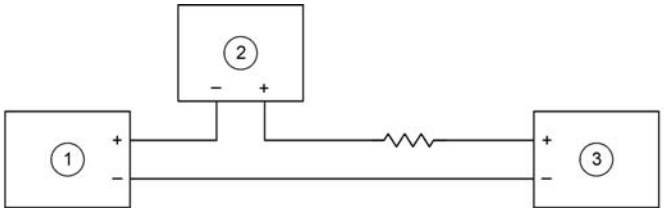

1 4–20 mA output module	**3** Customer power supply
2 External device (Recorder/data acquisition system)	

Table 3 Resistance values for external customer powered

Power supply voltage	Loop minimal resistance	Loop maximal resistance
12–18 VDC	0 Ω	250 Ω typical
18–24 VDC	250 Ω	500 Ω typical

Figure 2 Wiring diagram for module powered

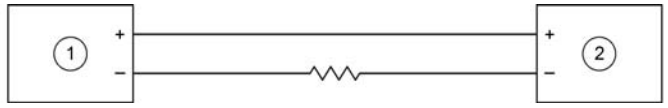

1 4–20 mA output module	**2** External device (HART master)

Table 4 Resistance values for module powered

Power supply voltage	Loop minimal resistance	Loop maximal resistance
15 VDC	0 Ω	350 Ω typical

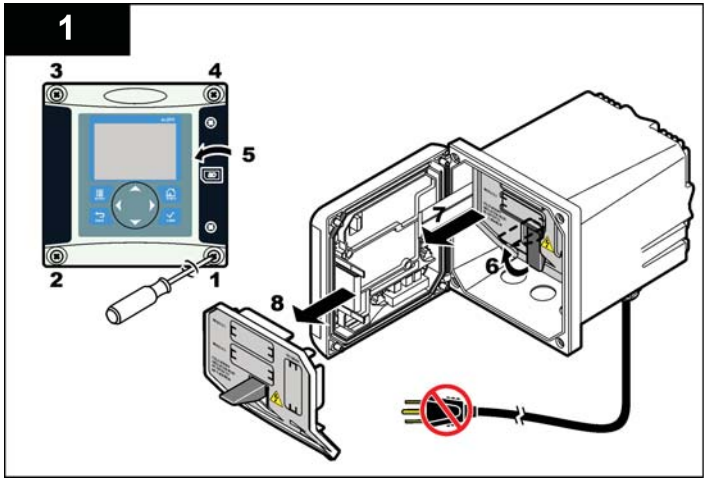
1
3
4
5
2
1
8
7
6

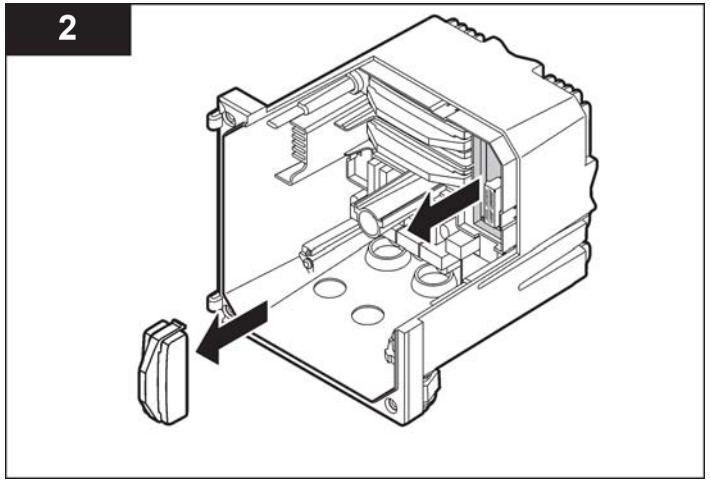
2

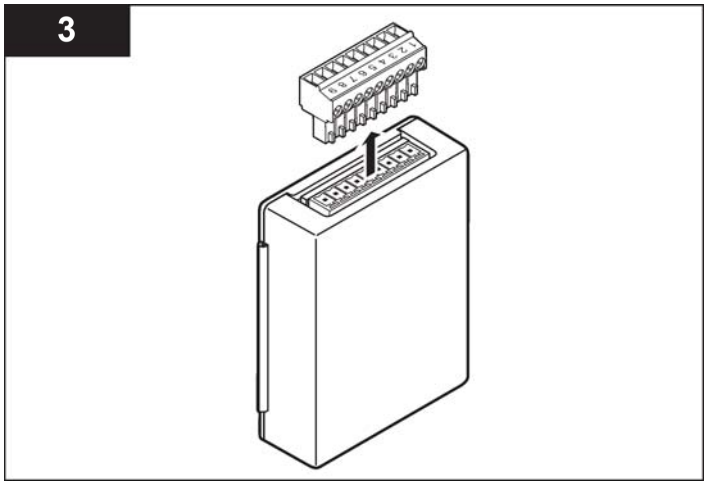
3

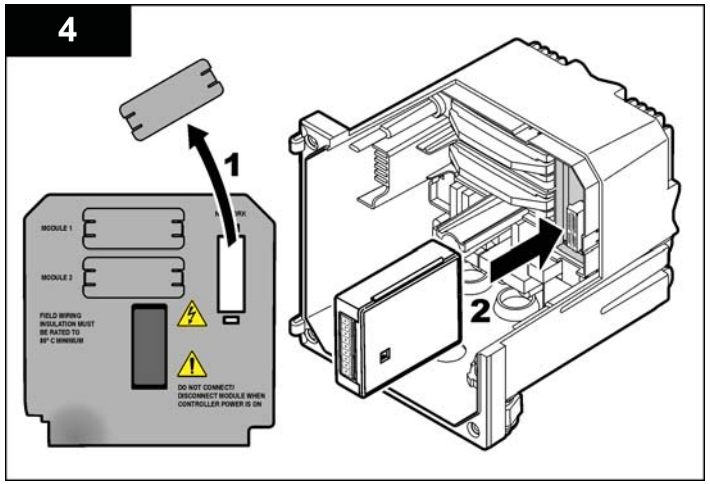
4
1
2
MODULE 1
MODULE 2
FIELD WIRING INSULATION MUST BE RATED TO 90° C MINIMUM
DO NOT CONNECT/ DISCONNECT MODULE WHEN CONTROLLER POWER IS ON

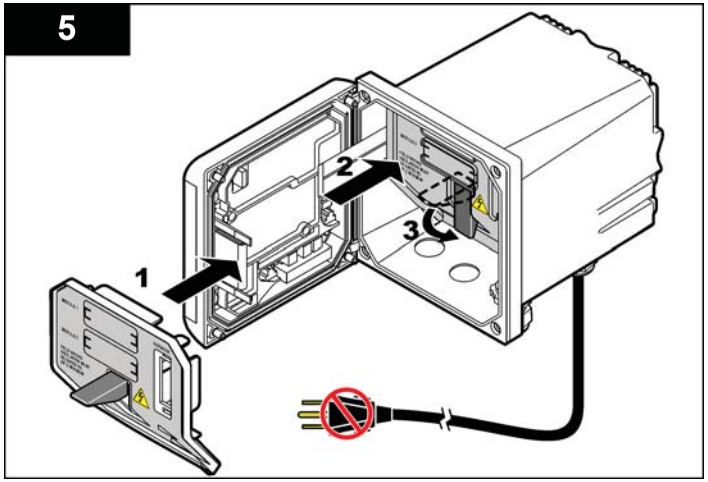
5
1
2
3

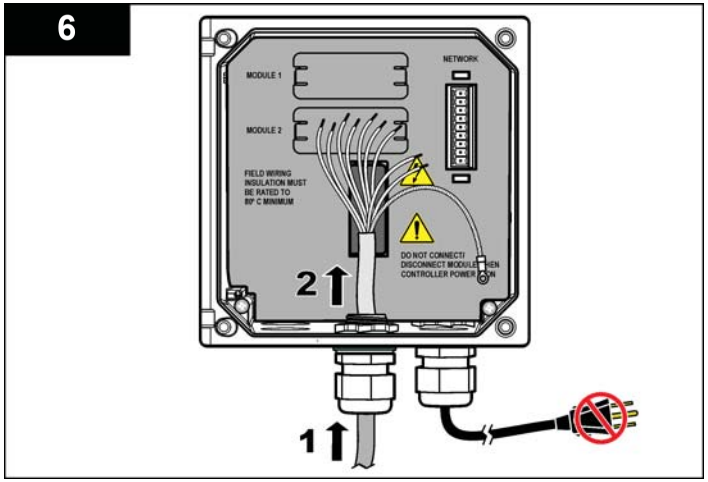
6
MODULE 1
MODULE 2
NETWORK
FIELD WIRING
INSULATION MUST
BE RATED TO
80° C MINIMUM
DO NOT CONNECT/
DISCONNECT MODULE WHEN
CONTROLLER POWER IS ON
2
1

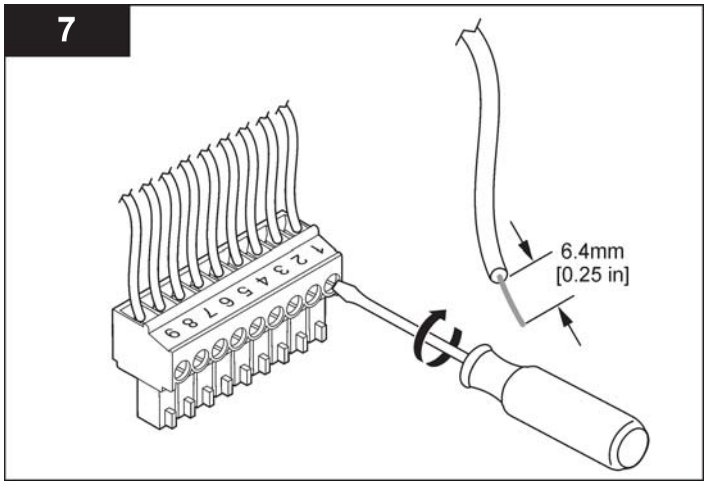
7
1 2 3 4 5 6 7 8 9
6.4mm
[0.25 in]

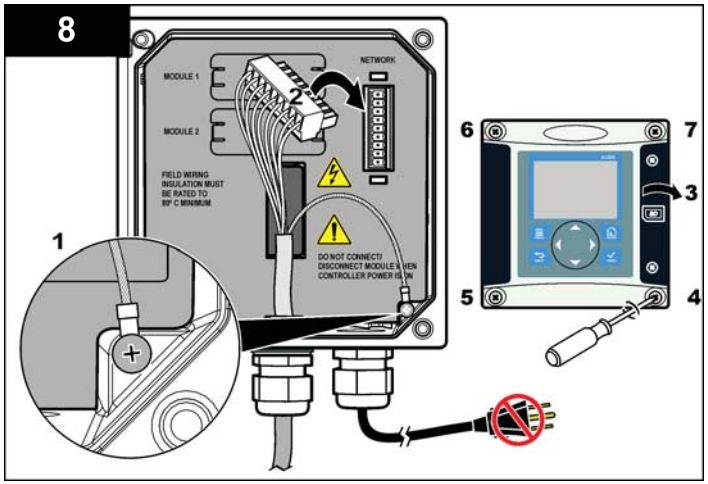
8
MODULE 1
MODULE 2
NETWORK
FIELD WIRING
INSULATION MUST
BE RATED TO
80° C MINIMUM
DO NOT CONNECT/
DISCONNECT MODULE WHEN
CONTROLLER POWER IS ON
1
2
3
4
5
6
7

Operation

Configure a 4-20 mA output module

The Network Setup option appears in the Settings Menu only if an analog output module or other network module such as Modbus or Profibus is installed in the controller.

Outputs for analog output modules are set at 4-20 mA. Outputs can be assigned to represent a measured parameter such as pH, temperature, flow or calculated values.

1. From the Settings menu, select Network Setup.
2. Select Edit Name and enter a name for the module. Push **ENTER** to save the name.
3. Select an output (A, B, C) and push **ENTER**.
   a. Highlight an option and push **ENTER**.
   b. Make a selection from the list or update the entries.
   c. Push **ENTER** to save the changes.

Option	Description
Select Source	Selects the output to configure—None, sensor 1 name, sensor 2 name, calculation (if set up). For sensor output, Select Parameter sets the measurement options. When the measurement is autorange, Set Range sets the range.
Set Low Value	Sets the 4 mA value (default: 0.000). (Range and units depend on sensor)
Set High Value	Sets the 20 mA value (default: 1.000). (Range and units depend on sensor)
Set Transfer	Sets the transfer value. Range 3.0 to 23.0 mA (default 4.000).
Set Filter	Sets a time-average filter value of 0 (default) to 120 seconds.

Diagnostics and tests menu

1. From the Settings menu, select Diagnostics and Tests.
2. Select an option and push **ENTER** to perform the function or view the data.

Option	Description
Output Cal	Calibrates the low (4 mA) and high (20 mA) values for each of the three 4-20 mA outputs (A, B, C).
Hold output	Sets the hold output options to Hold, Transfer or Release for each of the three 4-20 mA outputs (A, B, C).
Test output	Drives selected output to a known value.
Status	Displays the output value.
Error hold mode	Selects what to do on error condition.
Module information	Displays information about the installed module. • Software version • Bootloader version • Serial Number
Default Setup	Sets the configuration to factory defaults.

Modbus registers

A list of Modbus registers is available for network communication. Refer to www.hach.com or www.hach-lange.com for more information.

HACH COMPANY World Headquarters
P.O. Box 389, Loveland, CO 80539-0389 U.S.A.
Tel. (970) 669-3050
(800) 227-4224 (U.S.A. only)
Fax (970) 669-2932
orders@hach.com
www.hach.com

HACH LANGE GMBH
Willstätterstraße 11
D-40549 Düsseldorf, Germany
Tel. +49 (0) 2 11 52 88-320
Fax +49 (0) 2 11 52 88-210
info@hach-lange.de
www.hach-lange.de

HACH LANGE Sàrl
6, route de Compois
1222 Vésenaz
SWITZERLAND
Tel. +41 22 594 6400
Fax +41 22 594 6499

© Hach Company, 2011-2013. All rights reserved. Printed in U.S.A.

LEFT BLANK

HACH

MODEL DPD1R1, pH SENSOR
MODEL DRD1R5, ORP SENSOR

LEFT BLANK

Catalog Number 6120218

pHD sc Digital Differential pH/ORP Sensors

USER MANUAL

April 2009, Edition 5

©Hach Company, 2004–2009. All rights reserved.
eac/te/dp

Table of Contents

Section 1 Specifications 5

Section 2 General Information 7
2.1 Safety Information 7
2.1.1 Use of Hazard Information 7
2.1.2 Precautionary Labels 7
2.2 General Sensor Information 7
2.2.1 Sensor Body Styles 8
2.3 The Digital Gateway 10
2.4 Operating Precaution 10

Section 3 Installation 11
3.1 Connecting/Wiring the Sensor to the sc100 Controller 11
3.1.1 Connecting the sc Sensor to a sc100 Controller in a Non-hazardous Location 11
3.1.1.1 Attaching a sc Sensor with a Quick-connect Fitting 11
3.1.1.2 Hard-wiring a sc Sensor to the Controller 12
3.1.2 Connecting the sc Sensor to a sc100 Controller in a Hazardous Location 13
3.1.2.1 Attaching a sc Sensor with a Quick-connect Fitting in a Hazardous Location 14
3.2 Connecting the Sensor to the sc1000 14
3.2.1 Connecting the Sensor using the Quick-connect Fittings 14
3.3 Using the Digital Gateway 14
3.3.1 Wiring the Digital Gateway 15
3.3.2 Mounting the Digital Gateway 17
3.4 Installing the Sensor in the Sample Stream 18

Section 4 User Interface and Navigation 21
4.1 Using the sc100 Controller 21
4.1.1 Controller Display Features 22
4.1.2 Important Key Presses 22
4.2 Using the sc1000 Controller 23
4.2.1 Display Features 23
4.2.1.1 Using the Pop-up Toolbar 23
4.2.1.2 Using the Menu Windows 23
4.2.1.3 Navigating the Menu Windows 24

Section 5 Operation 27
5.1 Sensor Setup 27
5.2 Sensor Data Logging 27
5.3 Sensor Diagnostics Menu for pH and ORP Menu 27
5.4 pH Sensor Setup Menu 27
5.5 ORP Sensor Setup Menu 29
5.6 pH Calibration 30
5.6.1 Two Point Automatic Calibration 30
5.6.2 One Point Manual Calibration 30
5.6.3 Two Point Manual Calibration 31
5.7 ORP Calibration 31
5.8 Concurrent Calibration of Two Sensors for pH and ORP 32
5.9 Adjusting the Temperature 32

Section 6 Maintenance 33
6.1 Maintenance Schedule 33
6.2 Cleaning the Sensor 34

6.2.1 Replacing the Standard Cell Solution and Salt Bridge 35

Section 7 Troubleshooting 37
7.1 Error Codes 37
7.2 Warnings 37
7.3 Troubleshooting the pH Sensor 38
7.3.1 Troubleshooting a pH Sensor without Integral Digital Electronics 38
7.3.2 Troubleshooting the pH Sensor with Integral Digital Electronics 39
7.4 Checking ORP Sensor Operation 40
7.4.1 Troubleshooting the ORP Sensor without Integral Digital Electronics 40
7.4.2 Troubleshooting the ORP Sensor with Integral Digital Electronics 40

Section 8 Replacement Parts and Accessories 41
8.1 Replacement Items, Accessories, and Reagent and Standards 41

Section 9 How to Order 43

Section 10 Repair Service 44

Section 11 Limited Warranty 45

Section 12 Compliance Information 47

Appendix A General pH Information 49
A.1 pH Measurement Theory 49
A.2 PID Controller Basics 49

Appendix B Modbus Register Information 53

Section 1 Specifications

Specifications are subject to change without notice.

Table 1 Differential pH and ORP Sensor Specifications

Specification Category	pH Sensors[1]	Stainless Steel pH Sensor	ORP Sensors[2]
Wetted Materials	PEEK®[3] or Ryton®[4] (PVDF) body, salt bridge of matching material with Kynar®[5] junction, glass process electrode, titanium ground electrode, and Viton®[6] O-ring seals (pH sensor with optional HF-resistant glass process electrode has 316 stainless steel ground electrode, and perfluoroelastomer wetted O-rings; for other wetted O-ring materials consult the manufacturer)	Immersion mounting only, 316 SS Stainless Steel body with Ryton® (PVDF) ends and salt bridge.	PEEK® or Ryton® (PVDF) body, salt bridge of matching material with Kynar® junction, glass and platinum (or glass and gold) process electrode, titanium ground electrode, and Viton® O-ring seals
Operating Temperature Range	–5 to 70 °C (23 to 158 °F) for sensor with integral digital electronics –5 to 105 °C (23 to 221 °F) for analog sensor with digital gateway	0 to 50 °C (32 to 122 °F) for sensor with integral digital electronics	–5 to 70 °C (23 to 158 °F) for sensor with integral digital electronics –5 to 105 °C (23 to 221 °F) for analog sensor with digital gateway
Pressure/Temperature Limits (without mounting hardware)	6.9 bar at 105 °C (100 psi at 221 °F) for analog with gateway 6.9 bar at 70 °C (100 psi at 158 °F)	N/A (immersion only)	6.9 bar at 70 °C (100 psi at 158 °F) 6.9 bar at 105 °C (100 psi at 221 °F) for analog with gateway
Maximum Flow Rate	3 m (10 ft) per second	3 m (10 ft) per second	3 m (10 ft) per second
Built-in Temperature Element	NTC 300 ohm thermistor for automatic temperature compensation and analyzer temperature readout	NTC 300 ohm thermistor for automatic temperature compensation and analyzer temperature readout	NTC 300 ohm thermistor for analyzer temperature readout only — not for automatic temperature compensation
Stability	0.03 pH per 24 hours, non-cumulative	0.03 pH per 24 hours, non-cumulative	2 mV per 24 hours, non-cumulative
Maximum Transmission Distance	1000 m (3280 ft) with termination box	1000 m (3280 ft) with termination box	1000 m (3280 ft) with termination box
Sensor Cable (integral)	Digital: PUR (polyurethane) 4-conductor with one shield, rated to 105 °C (221 °F), 10 m (33 ft) standard length Analog: Five-conductor (plus two isolated shields) cable with XLPE (cross-linked polyethylene) jacket; rated to 150 °C (302 °F); 6 m (20 ft) standard length	Digital: PUR (polyurethane) 4-conductor with one shield, rated to 105 °C (221 °F), 10 m (33 ft) standard length	Digital: PUR (polyurethane) 4-conductor with one shield, rated to 105 °C (221 °F), 10 m (33 ft) standard length Analog: Five-conductor (plus two isolated shields) cable with XLPE (cross-linked polyethylene) jacket; rated to 150 °C (302 °F); 6 m (20 ft) standard length
Components	Corrosion-resistant materials, fully-immersible probe with 10 m (30 ft) cable	Corrosion-resistant materials, fully-immersible probe with 10 m (30 ft) cable	Corrosion-resistant materials, fully-immersible probe with 10 m (30 ft) cable
Measuring Range	–2.0 to 14.0 pH or –2.00 to 14.00 pH	–2.0 to 14.0 pH or –2.00 to 14.00 pH	–1500 to +1500 mV
Probe Storage Temperature	4 to 70 °C (40 to 158 °F); 0 to 95% relative humidity, non-condensing	4 to 70 °C (40 to 158 °F); 0 to 95% relative humidity, non-condensing	4 to 70 °C (40 to 158 °F); 0 to 95% relative humidity, non-condensing

Table 1 Differential pH and ORP Sensor Specifications (continued)

Specification Category	pH Sensors[1]	Stainless Steel pH Sensor	ORP Sensors[2]
Temperature Compensation	Automatic from –10 to 105 °C (14.0 to 221 °F) with selection for NTC 300 ohm thermistor, Pt 1000 ohm RTD, or Pt 100 ohm RTD temperature element, or manually fixed at a user-entered temperature; additional selectable temperature correction factors (ammonia, morpholine, or user-defined pH/°C linear slope) available for pure water automatic compensation from 0.0 to 50 °C (32 to 122 °F)	Automatic from –10 to 105 °C (14.0 to 221 °F) with selection for NTC 300 ohm thermistor, Pt 1000 ohm RTD, or Pt 100 ohm RTD temperature element, or manually fixed at a user-entered temperature; additional selectable temperature correction factors (ammonia, morpholine, or user-defined pH/°C linear slope) available for pure water automatic compensation from 0.0 to 50 °C (32 to 122 °F)	N/A
Measurement Accuracy	±0.02 pH	±0.02 pH	±5 mV
Temperature Accuracy	±0.5 °C (0.9 °F)	±0.5 °C (0.9 °F)	±0.5 °C (0.9 °F)
Repeatability	±0.05 pH	±0.05 pH	±2mV
Sensitivity	±0.01 pH	±0.01 pH	±0.5 mV
Calibration Methods	Two point automatic, one point automatic, two point manual, one point manual.	Two point automatic, one point automatic, two point manual, one point manual.	one point manual
Maximum Probe Immersion Depth/ Pressure	Submersible to 107 m (350 ft)/1050 kPa (150 psi)	Immersion only	Submersible to 107 m (350 ft)/1050 kPa (150 psi)
Sensor Interface	Modbus	Modbus	Modbus
Probe Cable Length	6 m (20 ft) + 7.7 m (25 ft) interconnect cable extension for analog sensor with digital gateway 10 m (31 ft) for sensor with integral digital electronics	6 m (20 ft) + 7.7 m (25 ft) interconnect cable extension for analog sensor with digital gateway 10 m (31 ft) for sensor with integral digital electronics	6 m (20 ft) + 7.7 m (25 ft) interconnect cable extension for analog sensor with digital gateway 10 m (31 ft) for sensor with integral digital electronics
Probe Weight	316 g (11 oz)	870 g (31 oz)	316 g (11 oz)
Probe Dimensions	See Figure 2 on page 9 through Figure 3 on page 9.	See Figure 4 on page 9.	See Figure 2 on page 9 through Figure 3 on page 9.

[1] Most pH applications are in the 2.5 to 12.5 pH range. The pHD™ Differential pH sensor with the wide-range glass process electrode performs exceptionally well in this range. Some industrial applications require accurate measurement and control below 2 or above 12 pH. In these special cases, please contact the manufacturer for further details.

[2] For best ORP measuring results in solutions containing zinc, cyanide, cadmium or nickel, the manufacturer recommends using the pHD™ ORP sensor equipped with a gold electrode.

[3] PEEK® is a registered trademark of ICI Americas, Inc.

[4] Ryton® is a registered trademark of Phillips 66 Co.

[5] Kynar® is a registered trademark of Pennwalt Corp.

[6] Viton® is a registered trademark of E.I. DuPont de Nemours + Co.

Table 2 Digital Gateway Specifications

Weight	145 g (5 oz)
Dimensions	17.5 x 3.4 cm (7 x 1 3/8 in.)
Operating Temperature	–20 to 60 °C (–4 to 140°F)

Section 2 General Information

2.1 Safety Information

Please read this entire manual before unpacking, setting up, or operating this equipment. Pay attention to all danger and caution statements. Failure to do so could result in serious injury to the operator or damage to the equipment.

To ensure that the protection provided by this equipment is not impaired, do not use or install this equipment in any manner other than that specified in this manual.

This product is acceptable for use in a Hazardous Location when used with an sc100 Controller and installed per Control Drawing 58600-78 as described in the sc100 Controller Manual, Cat. No. 5860018.

2.1.1 Use of Hazard Information

DANGER
Indicates a potentially or imminently hazardous situation which, if not avoided, could result in death or serious injury.

CAUTION
Indicates a potentially hazardous situation that may result in minor or moderate injury.

Important Note: *Information that requires special emphasis.*

Note: *Information that supplements points in the main text.*

2.1.2 Precautionary Labels

Read all labels and tags attached to the instrument. Personal injury or damage to the instrument could occur if not observed.

	This symbol, if noted on the instrument, references the instruction manual for operation and/or safety information.
	This symbol, when noted on a product enclosure or barrier, indicates that a risk of electrical shock and/or electrocution exists.
	This symbol, if noted on the product, indicates the need for protective eye wear.
	This symbol, when noted on the product, identifies the location of the connection for Protective Earth (ground).
	This symbol, when noted on the product, identifies the location of a fuse or current limiting device.

2.2 General Sensor Information

Optional equipment, such as mounting hardware for the probe, is supplied with instructions for all user installation tasks. Several mounting options are available, allowing the probe to be adapted for use in many different applications.

The electronics of the sensor are encapsulated in a PEEK® or Ryton® body. The pH sensor has an integral NTC 300 ohm thermistor to automatically compensate pH readings for temperature changes. ORP sensors have a fixed temperature value of 25 °C/300 ohm (the ORP measurement is not temperature dependent).

2.2.1 Sensor Body Styles

pHD™ Differential pH and ORP sensors are available in three body styles:

- **Convertible Body Style** — has 1-inch NPT threads at both ends of the body for mounting in any of the following configurations:
  - into a standard 1-inch NPT pipe tee
  - into a pipe adapter for union mounting with a standard 1-½ inch pipe tee
  - onto the end of a pipe for immersion into a vessel

Note: *The convertible style sensor can also be retrofitted into existing installations for 1-½ inch LCP, Ryton, and epoxy sensors.*

- **Insertion Body Style** — similar to the convertible sensor except that its 1-inch NPT threads are only on the cable end for mounting into a flow cell or the pipe adapter of a ball valve hardware assembly. This hardware enables the sensor to be inserted into or retracted from the process without stopping the process flow.
- **Sanitary Body Style** — features a built-in 2-inch flange for mounting into a 2-inch sanitary tee. Included with the sanitary-style sensor is a special cap and EDPM compound gasket for use with the sanitary hardware.

In addition, all probes are available with or without integral digital electronics. For applications with extreme temperatures, the sensor without integral digital electronics can be combined with the digital gateway.

Figure 1 Convertible Style Sensor Dimensions

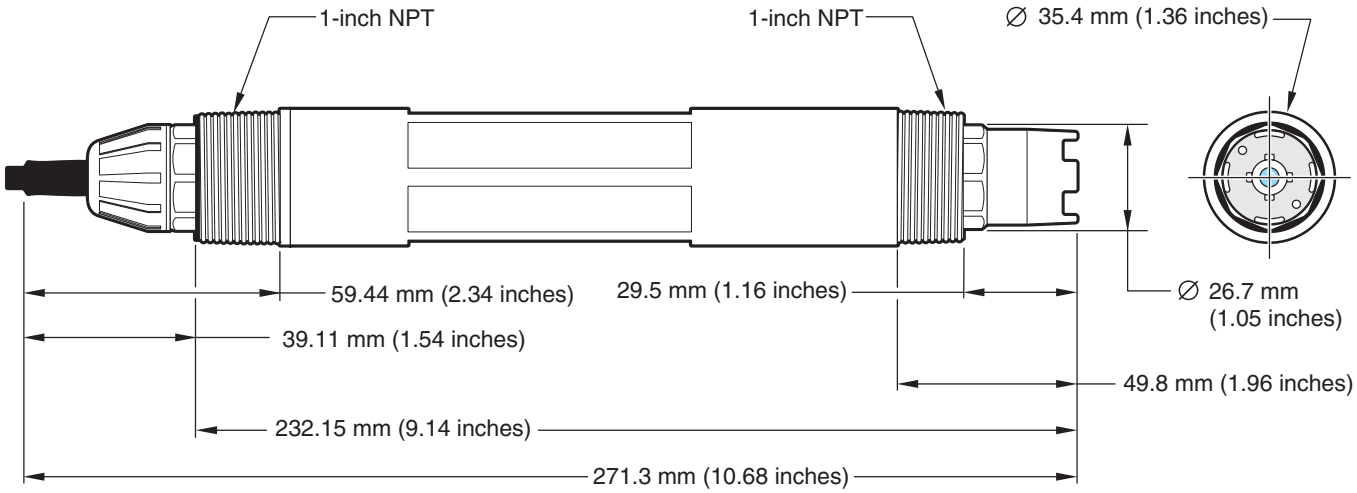

Figure 2 Insertion Style Sensor Dimensions

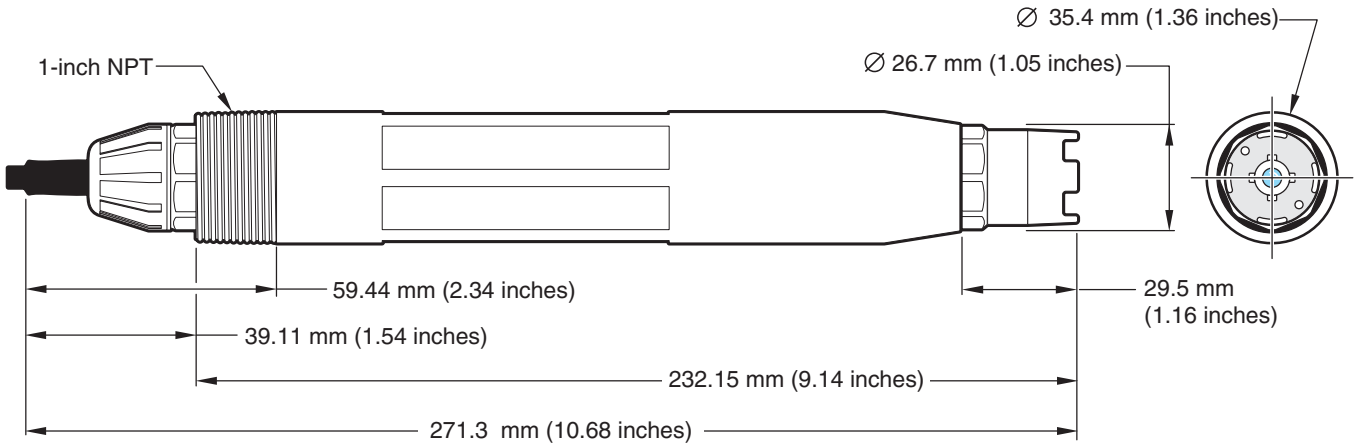

Figure 3 Sanitary Style Sensor Dimensions

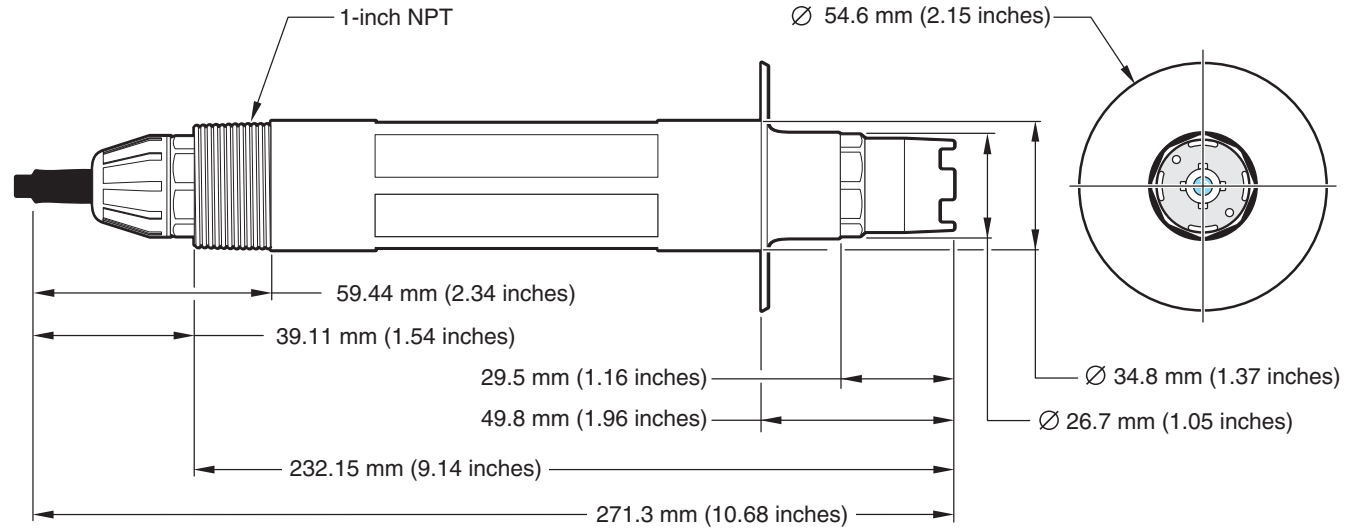

Figure 4 Stainless Steel Style Sensor (DPS1 and DRS5) Dimensions

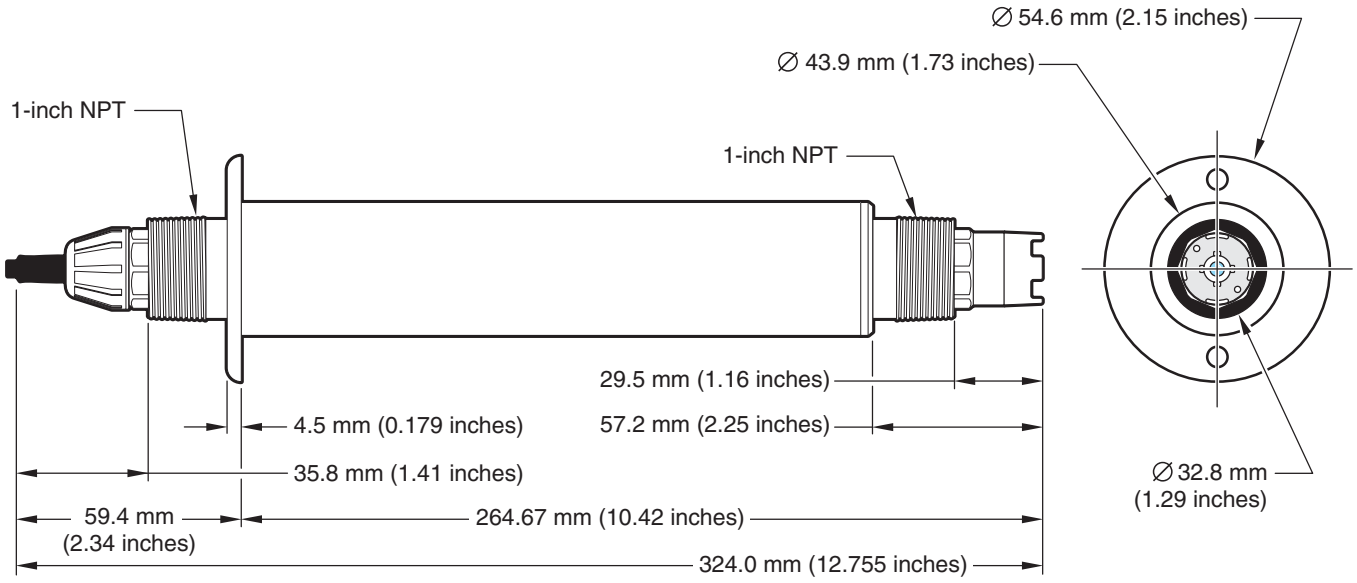

2.3 The Digital Gateway

The digital gateway was developed to provide a means to use existing analog sensors with the new digital controllers. The gateway contains all the necessary software to interface with the controller and output a digital signal. Extension cables are required for connection from the digital gateway to the digital controller. See Replacement Parts and Accessories on page 41.

2.4 Operating Precaution

CAUTION
If the pH process electrode breaks, handle the sensor very carefully to prevent injury.

Before placing the pH or ORP sensor into operation, remove the protective cap to expose the process electrode and salt bridge. Save the protective cap for future use.

For short-term storage (when sensor is out of the process for more than one hour) fill the protective cap with pH 4 buffer or DI water and place the cap back on the sensor. Keeping the process electrode and salt bridge moist will avoid slow response when the sensor is placed back in operation.

For extended storage, repeat the short-term storage procedure every 2 to 4 weeks, depending on the surrounding environmental conditions. See Specifications on page 5 for temperature storage limits.

The process electrode at the tip of the pH sensor has a glass bulb, which can be broken. Do not subject it to abrupt impact or other mechanical abuse.

The gold or platinum process electrode at the ORP sensor tip has a glass shank (hidden by the salt bridge) which can break. Do not subject this electrode to impact or other mechanical abuse.

DANGER
Only qualified personnel should conduct the tasks described in this section of the manual.

DANGER
Seul un technicien qualifié peut effectuer les tâches d'installation décrites dans cette section du manuel.

3.1 Connecting/Wiring the Sensor to the sc100 Controller

DANGER
The sc100 and certain versions of the sensor are suitable for use in Class 1, Division 2, Groups A, B, C, D Hazardous Locations . See Control Drawing 58600-78 in the sc100 Controller Manual, Cat. No. 58600-18 for acceptable sensor versions and installation requirements.

DANGER
Le sc100 et certaines versions du capteur peuvent être utilisés dans des endroits dangereux de la Classe 1, Division 2, Groupes A, B, C, D. Reportez-vous au schéma de contrôle 58600-78 du Manuel du contrôleur sc100, Réf. 58600-18 pour connaître les versions des capteurs admises et les conditions d'installation.

3.1.1 Connecting the sc Sensor to a sc100 Controller in a Non-hazardous Location

3.1.1.1 Attaching a sc Sensor with a Quick-connect Fitting

Important Note: *The standard quick-connect fitting is NOT suitable for Class 1, Division 2 Hazardous Location installations without the connector lock installed, see section 3.1.2 on page 13 for more information.*

The sensor has a keyed quick-connect fitting for easy attachment to the controller (Figure 5). Retain the connector cap to seal the connector opening when the sensor is removed. Extension cables may be purchased to extend the sensor cable length. If the total cable length exceeds 100 m (300 ft), a termination box must be installed. See Replacement Parts and Accessories on page 41.

Figure 5 Attaching the Sensor using the Quick-connect Fitting

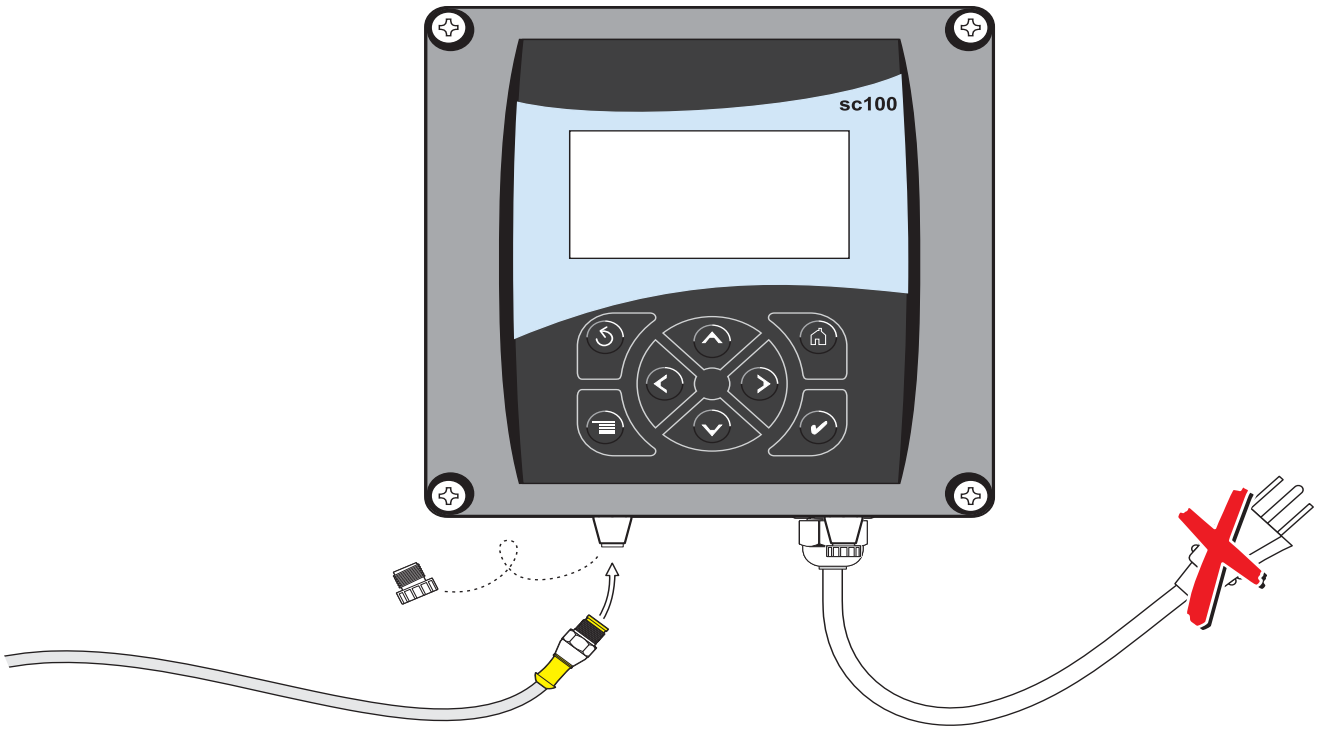

3.1.1.2 Hard-wiring a sc Sensor to the Controller

Important Note: *Hard-wiring the sensor to the sc100 is not an approved method for Class I, Division 2 Hazardous Locations.*

1. Disconnect power to the controller if powered.
2. Open the controller cover.
3. Disconnect and remove the existing wires between the quick-connect and terminal strip J5, see Figure 5 on page 12.
4. Remove the quick-connect fitting and wires and install the threaded plug on the opening to maintain the environmental rating.
5. Cut the connector from the sensor cable.
6. Strip the insulation on the cable back 1-inch. Strip ¼-inch of each individual wire end.
7. Pass the cable through conduit and a conduit hub or a strain relief fitting (Cat.No.16664) and an available access hole in the controller enclosure. Tighten the fitting.

Note: *Use of strain relief fitting other than Cat. No. 16664 may result in a hazard. Use only the recommended strain relief fitting.*

8. Reinstall the plug on the sensor access opening to maintain the environmental rating.
9. Wire as shown in Table 3 and Figure 6.
10. Close and secure the cover.

Table 3 Wiring the Sensor at Terminal Block J5

Terminal Number	Terminal Designation	Wire Color
1	Data (+)	Blue
2	Data (–)	White
3	Service Request	No Connection
4	+12 V dc	Brown
5	Circuit Common	Black
6	Shield	Shield (grey wire in existing quick disconnect fitting)

Figure 6 Hard-wiring the sensor

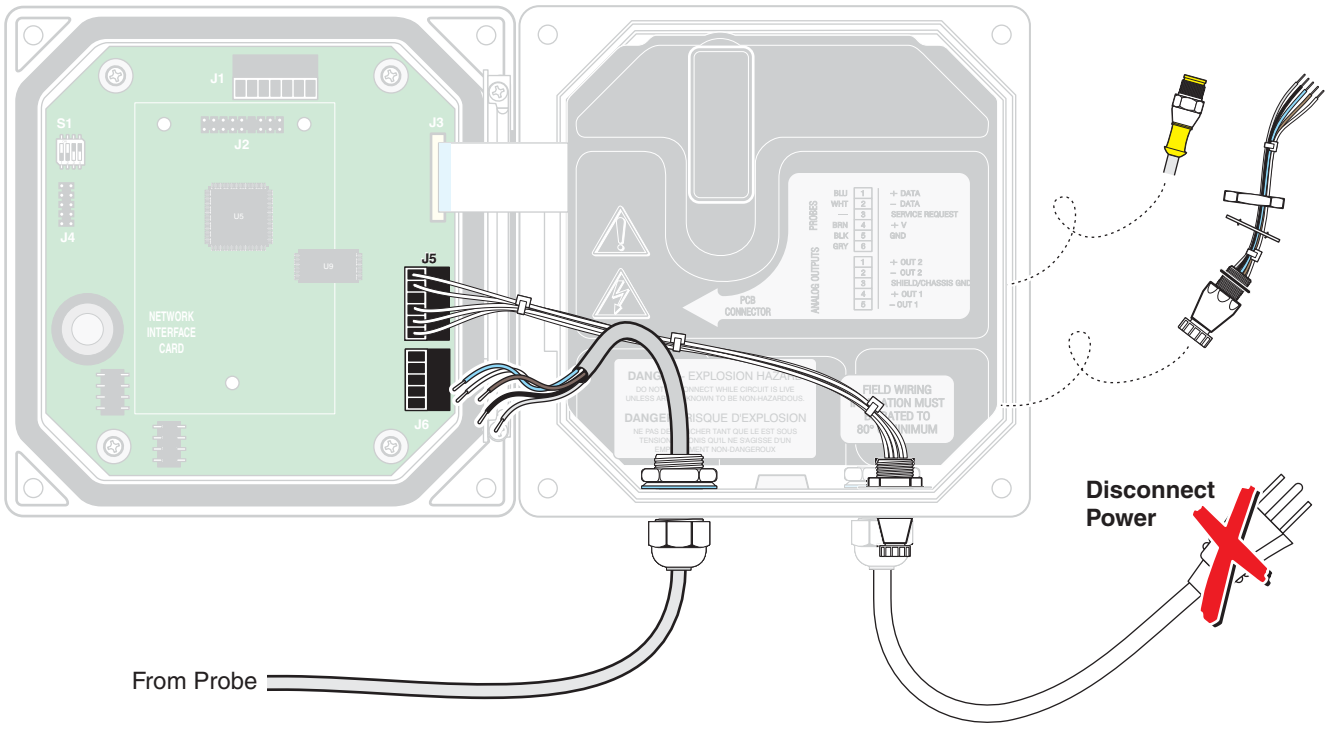

3.1.2 Connecting the sc Sensor to a sc100 Controller in a Hazardous Location

DANGER
The sc100 and certain versions of the sensor are suitable for use in Class 1, Division 2, Groups A, B, C, D Hazardous Locations. See Control Drawing 58600-78 in the sc100 Controller Manual, Cat. No. 58600-18 for acceptable sensor versions and installation requirements.

DANGER
Le sc100 et certaines versions du capteur peuvent être utilisés dans des endroits dangereux de la Classe 1, Division 2, Groupes A, B, C, D. Reportez-vous au schéma de contrôle 58600-78 du Manuel du contrôleur sc100, Réf. 58600-18 pour connaître les versions des capteurs admises et les conditions d'installation.

DANGER
Explosion hazard. Do not connect or disconnect equipment unless power has been switched off or the area is known to be non-hazardous.

DANGER
Risque d'explosion. Couper le courant ou s'assurer que l'emplacement est designe non dangereux avant de replacer le aucon composant.

3.1.2.1 Attaching a sc Sensor with a Quick-connect Fitting in a Hazardous Location

The sensor cable is supplied with a keyed quick-connect fitting for easy attachment to the controller, see Figure 5. For hazardous locations, a connector safety lock (Cat. No. 6139900) **must** be installed. Retain the connector cap to seal the connector opening in case the sensor must be removed.

1. Remove the connector cap from sc100 controller. Retain the connector cap to seal the connector opening in case the sensor must be removed.

2. Connect the sensor connector to the plug on the sc100.

3. Install a connector safety lock (Figure 7). Align the lock over the connector and squeeze the two halves together to lock. To remove the connector safety lock by inserting a small flat-bladed screwdriver into the locking groove. Pivot the screwdriver away from the groove and separate the two halves (Figure 7).

Figure 7 Installing the Connector Safety Lock

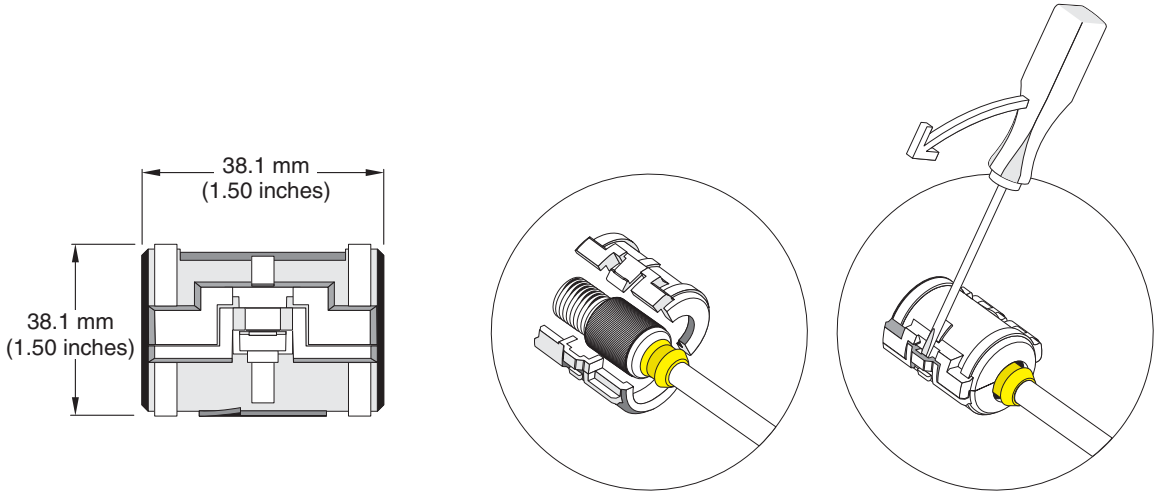

3.2 Connecting the Sensor to the sc1000

3.2.1 Connecting the Sensor using the Quick-connect Fittings

1. Unscrew the connector cap from the controller. Retain the connector cap to seal the connector opening in case the sensor must be removed.

2. Push the connector into the socket.

3. Hand-tighten the union nut.

Note: *Do not use the middle connection for the sensors as this is reserved for the display module.*

3.3 Using the Digital Gateway

The digital gateway is designed to provide a digital interface to the controller. The non-sensor end is wired to the sc100 or sc1000 controller in a non-hazardous location as

shown in section 3.1.1 on page 11. The non-sensor end is wired to the sc100 controller in a hazardous location as shown in section 3.1.2 on page 13.

3.3.1 Wiring the Digital Gateway

DANGER
The sc100 and certain versions of the sensor are suitable for use in Class 1, Division 2, Groups A, B, C, D Hazardous Locations . See Control Drawing 58600-78 in the sc100 Controller Manual, Cat. No. 58600-18 for acceptable sensor versions and installation requirements.

DANGER
Le sc100 et certaines versions du capteur peuvent être utilisés dans des endroits dangereux de la Classe 1, Division 2, Groupes A, B, C, D. Reportez-vous au schéma de contrôle 58600-78 du Manuel du contrôleur sc100, Réf. 58600-18 pour connaître les versions des capteurs admises et les conditions d'installation.

DANGER
Explosion hazard. Do not connect or disconnect equipment unless power has been switched off or the area is known to be non-hazardous.

DANGER
Risque d'explosion. Couper le courant ou s'assurer que l'emplacement est designe non dangereux avant de replacer le aucon composant.

1. Route the cable from the sensor through the strain relief in the digital gateway then properly terminate the wire ends (see Figure 8).

Note: *Do not tighten the strain relief until the digital gateway is wired and the two halves are threaded securely together.*

2. Insert the wires as shown in Table 4 and Figure 9.
3. Make sure the O-ring is properly installed between the two halves of the digital gateway and thread the two halves together. Hand tighten.
4. Tighten the strain relief to secure the sensor cable.
5. Connect the digital gateway to the controller.
   - sc100 Non-Hazardous Location Instructions—section 3.1.1 on page 11.
   - sc100 Hazardous Location Instructions—section 3.1.2 on page 13g
   - sc1000 Connection Instructions—Refer to section 3.2 on page 14.

Figure 8 Proper Wire Preparation and Insertion

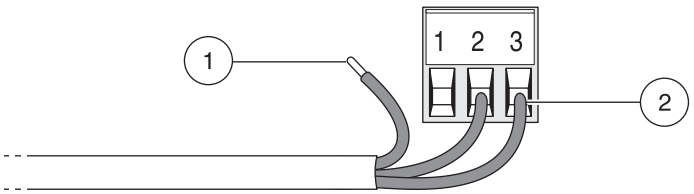

1. Strip ¼-inch of insulation.	**1.** Seat insulation against connector with no bare wire exposed.

Figure 9 Wiring and Assembling the Digital Gateway

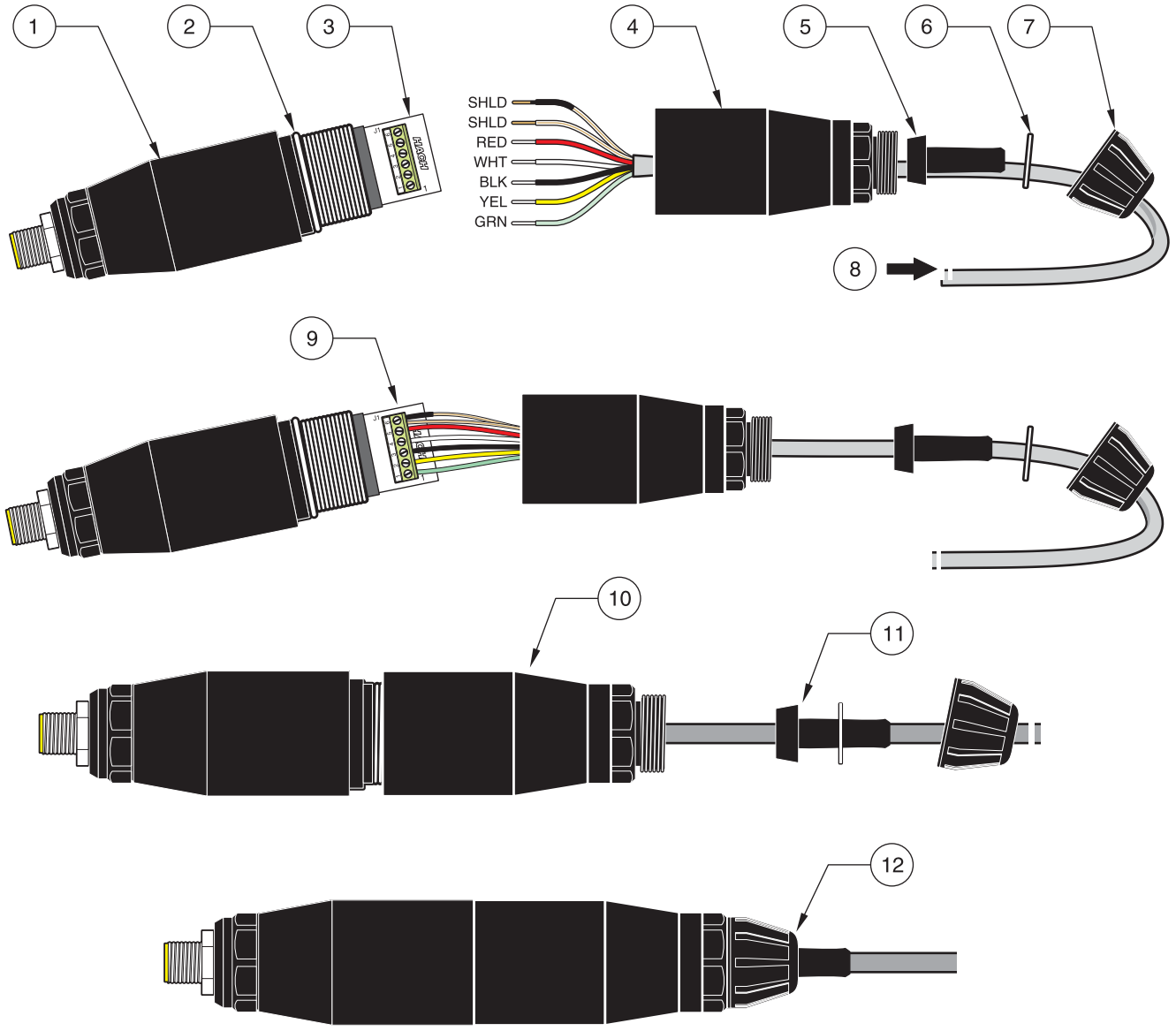

1.	Digital gateway front	**7.**	Cord grip
2.	O-ring	**8.**	From sensor
3.	Sensor wire connector	**9.**	Insert wires into connector according to Table 4. Use the included 2 mm screwdriver (Cat. No. 6134300) to secure connections.
4.	Digital gateway back	**10.**	Screw back of digital gateway onto front.
5.	Cable bushing	**11.**	Push cable bushing and anti-rotation washer into back.
6.	Anti-rotation washer	**12.**	Fasten cord grip securely. Assembly is complete.

Table 4 Wiring the Digital Gateway (Cat. No. 6120500)

Sensor (wire color)	Sensor Signal	Digital Gateway J1
Green	Ref	J1-1
Yellow	Temp +	J1-2
Black	Temp –	J1-3
White	VI	J1-4
Red	Active	J1-5
Clear	Shield	J1-6
Clear w/shrink wrap	Shield	J1-6

3.3.2 Mounting the Digital Gateway

The digital gateway is supplied with a mounting clip for mounting to a wall or other flat surface. See Figure 10 for dimensions. Use an appropriate fastener to secure it to the wall, see Figure 11. After the sensor is wired to the digital gateway and the two halves are threaded together, place the mounting clip over the center of the digital gateway and squeeze the clip together to secure.

Figure 10 Digital Gateway Dimensions

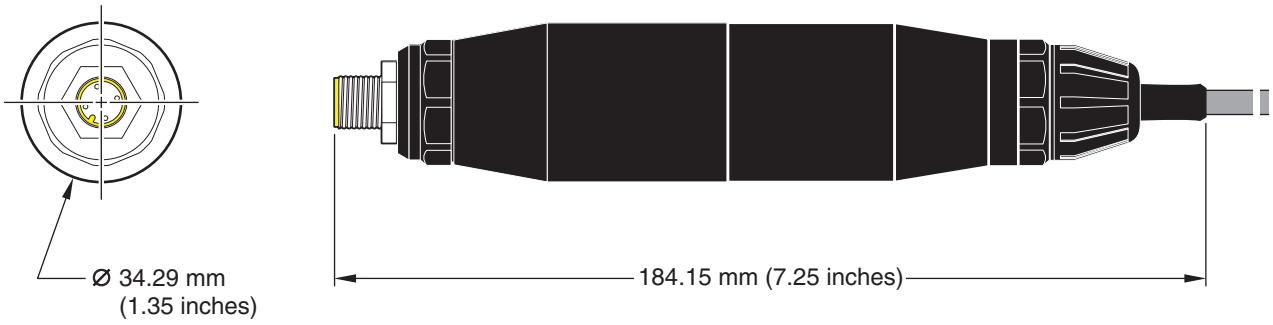

Figure 11 Mounting the Digital Gateway

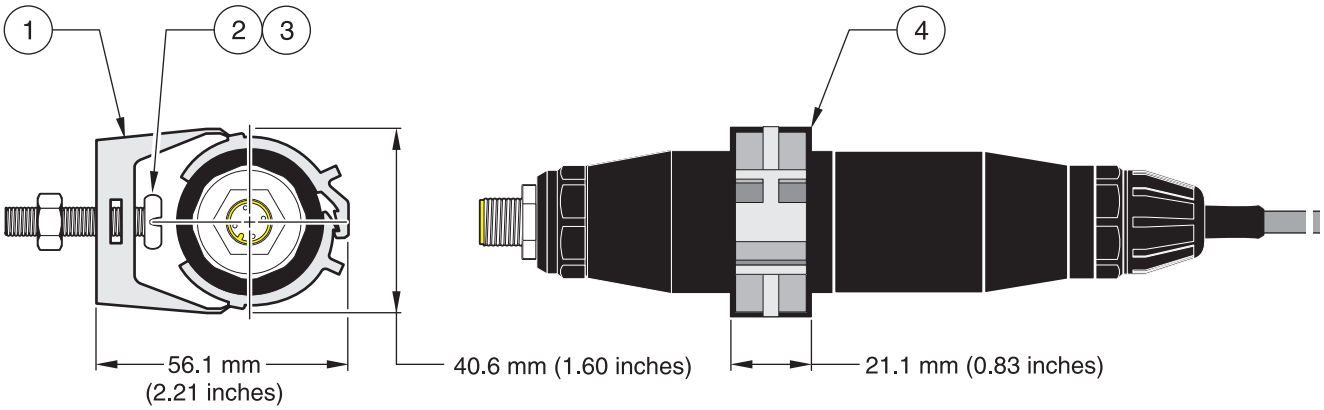

1. Mounting Clip	**14.** Hex Nut, ¼-28
13. Screw, pan head, ¼-28 x 1.25-in.	**15.** Mount clip, insert digital gateway, squeeze clip closed.

3.4 Installing the Sensor in the Sample Stream

Figure 12 Sensor Installation Examples

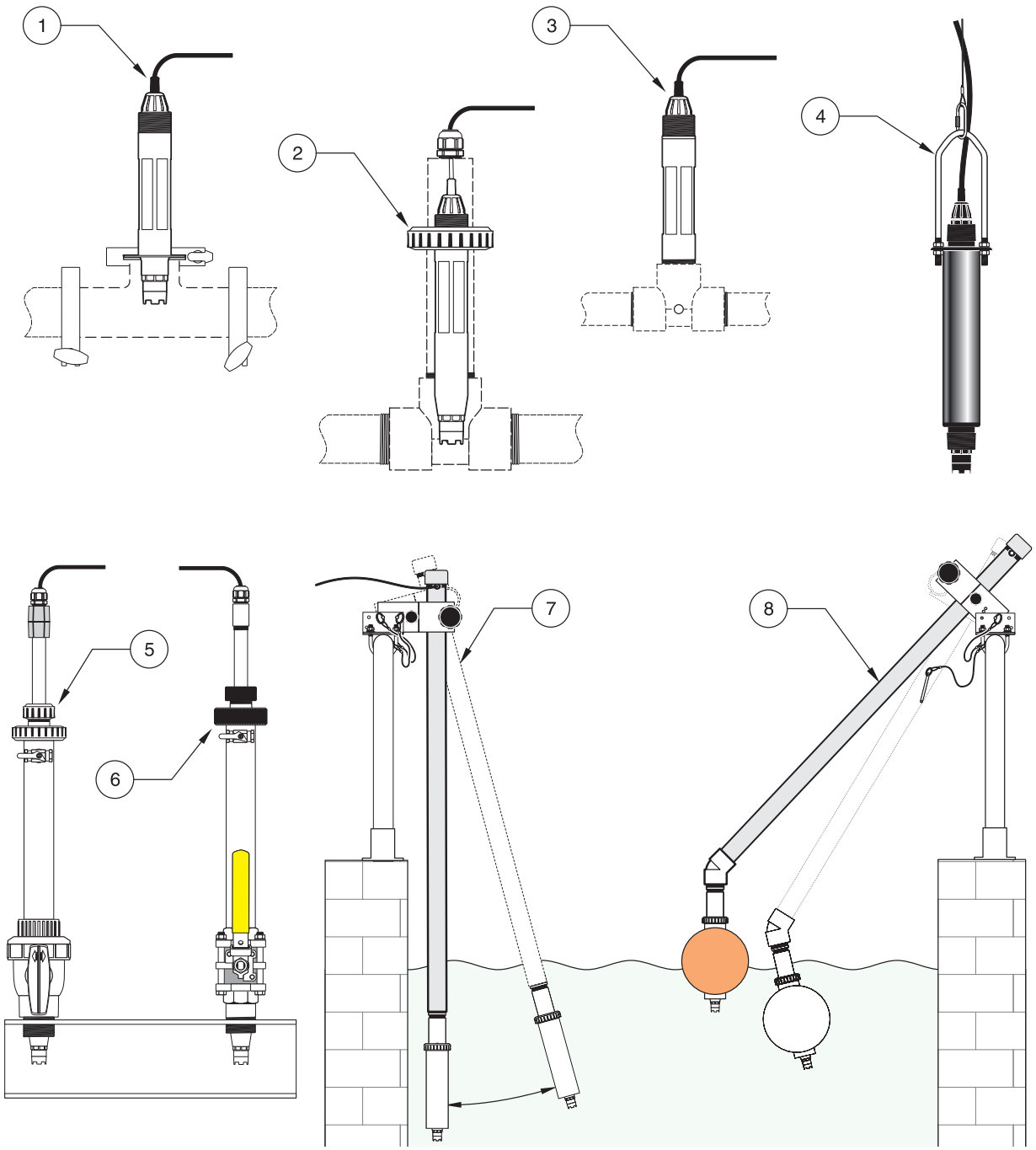

1. Sanitary mount	**19.** PVC Insertion mount
16. Union mount	**20.** Stainless steel insertion mount
17. Flow-through mount	**21.** Immersion mount
18. Hanging stainless steel sensor with the bale	**22.** Immersion mount, ball float

- Install the sensor so the sample contacts is representative of the entire process.
- Mount the sensor at least 508 mm (20 in) from the aeration basin wall, and immerse it at least 508 mm (20 in) into the process.

- Install the sensor using the instructions supplied with the installation apparatus. See Figure 12 for suggested mounting configurations.
- Sensor must be mounted at least 15º above horizontal. See Figure 13.

Figure 13 Sensor Mounting Angle

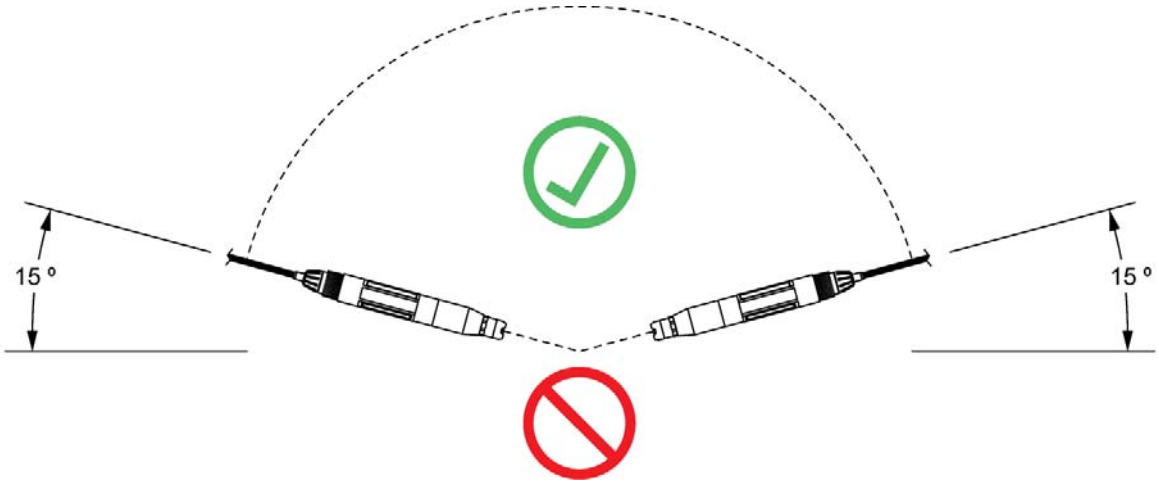

4.1 Using the sc100 Controller

The front of the controller is shown in Figure 14. The keypad consists of the eight keys described in Table 5.

Figure 14 Front of the Controller

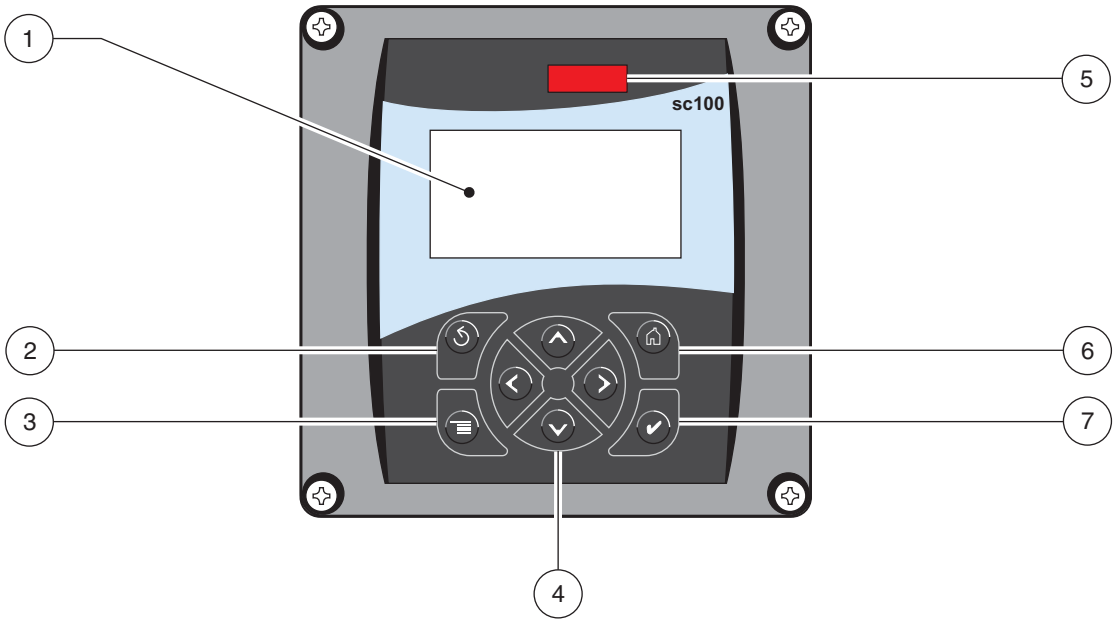

1. Instrument display	**26.** IrDA window
23. BACK key	**27. HOME** key
24. MENU key	**28. ENTER** key
25. RIGHT, **LEFT**, **UP**, and **DOWN** keys	

Table 5 Controller Key Functions/Features

Number	Key	Function
2	back	Moves back one level in the menu structure.
3	menu	Moves to the main menu from other menus. This key is not active in menus where a selection or other input must be made.
4		Navigates through the menus, changes settings, and increments and decrements digits.
5	home	Moves to the Main Measurement screen from any other screen. This key is not active in menus where a selection or other input must be made.
6	enter	Accepts an input value, updates, or accepts displayed menu options.

4.1.1 Controller Display Features

When a sensor is connected and the controller is in measurement mode, the controller display will show the current conductivity reading plus the sample temperature.

The display will flash on startup, when a sensor error has occurred, when the hold outputs function has been activated, and when a sensor is being calibrated.

An active system warning will cause the warning icon (a triangle with an exclamation point inside) to be displayed on the right side of the display.

Figure 15 Display

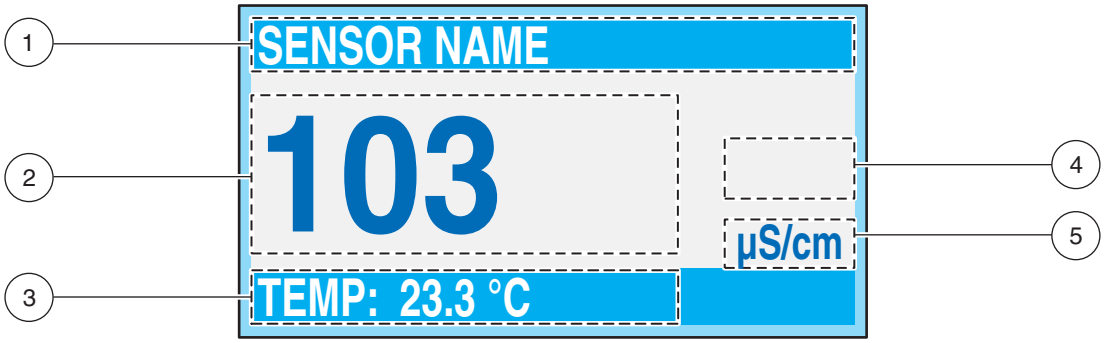

1. Status bar. Indicates the sensor name and status of relays. The relay letter is displayed when the relay is energized.	**30.** Secondary measurement
	31. Warning icon area
29. Main measurement	**32.** Measurement units (µS, mS, S, mohm, TDS)

4.1.2 Important Key Presses

- Press the **HOME** key then the **RIGHT** or **LEFT** key to display two readings when two sensors are connected. Continue to press the **RIGHT** or **LEFT** key to toggle through the available display options as shown below.

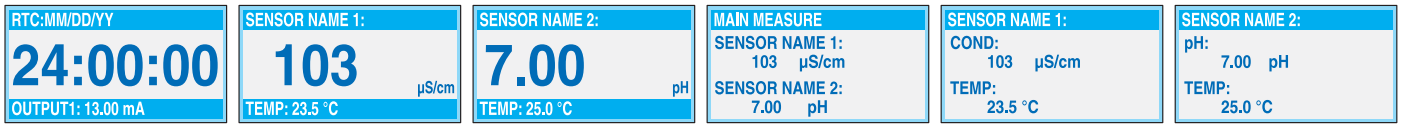

- Press the **UP** and **DOWN** keys to toggle the status bar at the bottom of the measurement display to display the secondary measurement (temperature) and output information.

- When in Menu mode, an arrow may appear on the right side of the display to indicate that more menus are available. Press the **UP** or **DOWN** key (corresponding to the arrow direction) to display additional menus.

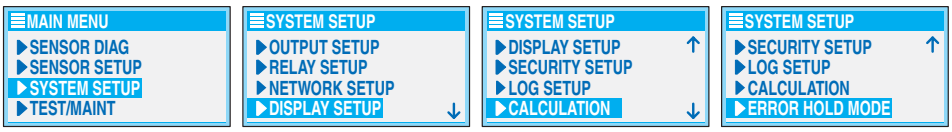

4.2 Using the sc1000 Controller

The sc1000 is a touch screen application. Use your finger to touch keys and menu commands. In normal operation the touch screen displays the measured values for the sensors selected.

4.2.1 Display Features

4.2.1.1 Using the Pop-up Toolbar

The pop-up toolbar provides access to the controller and sensor settings. The toolbar is normally hidden from view. To view the toolbar, touch the bottom-left of the screen.

Figure 16 Pop-up Toolbar Functions

	MAIN MENU–displays the Main Menu Structure
	UP Arrow–scrolls up to the previous displayed value.
	Displays one value.
	Displays two values at the same time.
	Displays four values at the same time.
	LIST–displays the list of connected devices and sensors.
	DOWN Arrow–scrolls down to the next displayed value.

4.2.1.2 Using the Menu Windows

If the Menu button (from the pop-up toolbar) is selected, the Main Menu screen is opened. The Main Menu screen allows the user to view the sensor status, configure the sensor setup, system setup, and perform diagnostics.

The menu structure may vary depending on the configuration of the system.

Figure 17 Main Menu

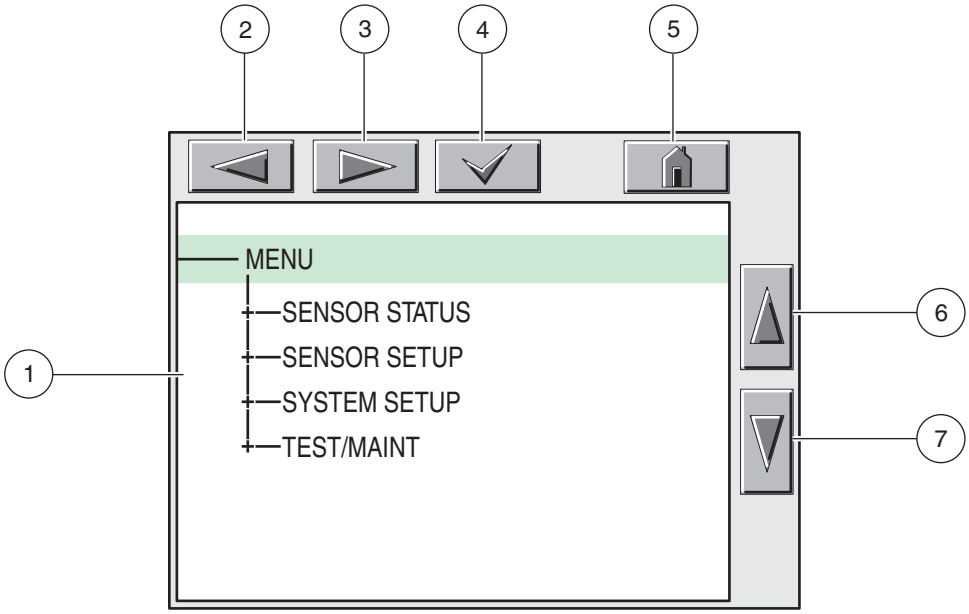

1.	Display Area
33.	**BACK**
34.	**FORWARD**
35.	**ENTER**–confirms the entry or selection.
36.	**HOME**–changes to the display of measured values. The pop-up toolbar cannot open from the menu window. To view the Main Menu from this display, touch the Home button and then the bottom of the screen.
37.	**UP**–scrolls up
38.	**DOWN**–scrolls down

4.2.1.3 Navigating the Menu Windows

To view a menu item, touch the menu item or use the **UP** and **DOWN** keys to highlight the item. The menu item remains highlighted for approximately 4 seconds after it is selected. To view the highlighted command, select the area to the left of the menu item or select the **ENTER** button.

A "**+**" next to a menu command indicates there is a submenu. Touch the "+" to view the submenu. An "**i**" next to a menu command indicates it is information only.

If a menu item is editable, highlight the item and touch the far-left part of the menu item until it is highlighted and press **ENTER** or double-tap the highlighted item. A keypad will be displayed to change an entry (Figure 19 on page 25) or a list box will be displayed (Figure 20 on page 26).

Messages are displayed in the message window (Figure 21 on page 26).

If an entry is incorrect, repeat the entry with the correct values. If the entry is outside the working range, a correction to the entry is made automatically.

Figure 18 Changing a Menu Item

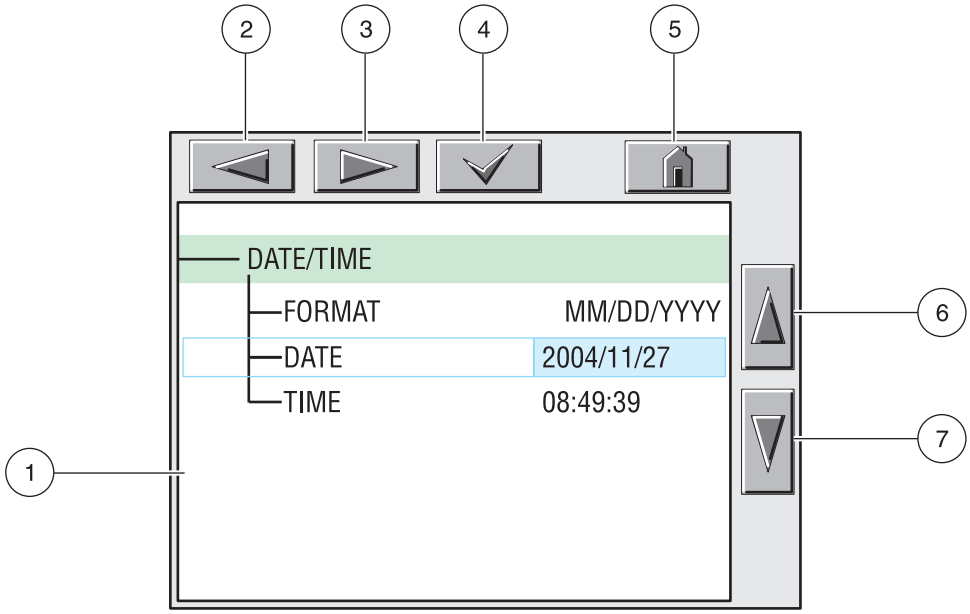

1. Display Area	**42.** **HOME**–changes to the display of measured values.
39. **BACK**	**43.** **UP**–scrolls up
40. **FORWARD**	**44.** **DOWN**–scrolls down
41. **ENTER**–confirms the entry or selection.	

Figure 19 Keypad

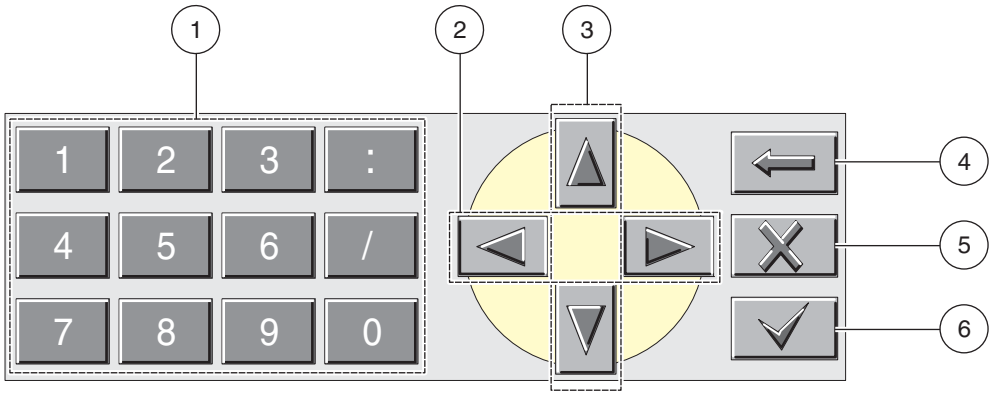

1. Enters numbers or the character as shown on the button.	
45. Moves the cursor one position to the left or to the right.	
46. Increase/Decrease a number or letter at the cursor position. Keep the button pressed to change the numbers/characters continuously.	
47. Deletes the character to the left of the cursor.	
48. **CANCEL**–cancels the entry.	
49. **ENTER**–confirms the entry or selection.	

Figure 20 List Box

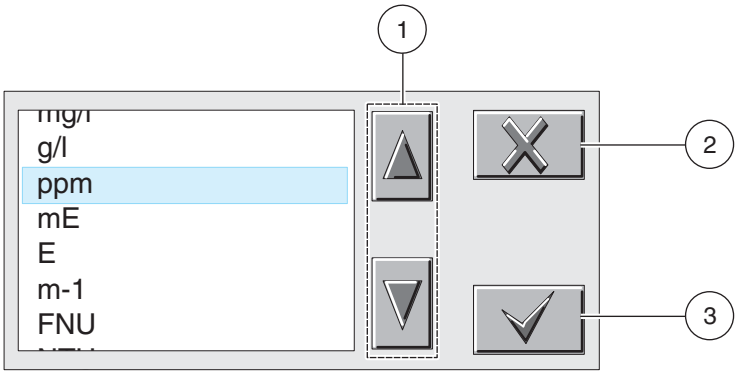

1.	Scrolls up or down
50.	**CANCEL**–cancels and entry.
51.	**ENTER**–confirms a selection.

Figure 21 Message window

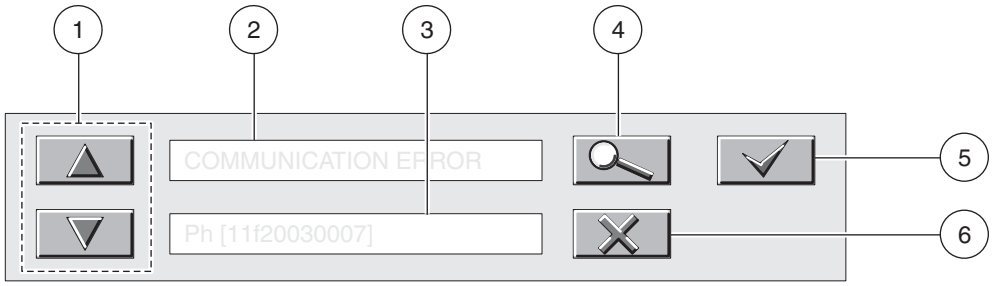

1.	Scrolls up or down.
52.	Displays the messages or warnings.
53.	Displays details on the selected entry.
54.	This button changes back to the previous display.
55.	**ENTER**–confirms an entry.
56.	**CANCEL**–cancels an entry.

Section 5 Operation

5.1 Sensor Setup

When a sensor is initially installed, the serial number of the sensor will be displayed as the sensor name. To change the sensor name refer to the following instructions:

1. Select Main Menu.
2. From the Main Menu, select SENSOR SETUP and confirm.
3. Highlight the appropriate sensor if more than one sensor is attached and confirm.
4. Select CONFIGURE and confirm.
5. Select EDIT NAME and edit the name. Confirm or cancel to return to the Sensor Setup menu.

5.2 Sensor Data Logging

The sc controller provides one data log and one event log for each sensor. The data log stores the measurement data at selected intervals. The event log stores a variety of events that occur on the devices such as configuration changes, alarms, warning conditions, etc. The data log and the event log can be read out in a CSV format. For downloading the logs please refer to the controller user manual.

5.3 Sensor Diagnostics Menu for pH and ORP Menu

SELECT SENSOR (if more than one sensor is attached)

STATUS	
ERROR LIST	See section 7.1 on page 37.
WARNING LIST	See section 7.2 on page 37.

5.4 pH Sensor Setup Menu

SELECT SENSOR (if more than one sensor is attached)

CALIBRATE	
1-POINT AUTO	Calibration with a single buffer — normally pH 7.
2-POINT AUTO	Calibration with two buffers — normally pH 7 and pH 4 or 10.
1-POINT MANUAL	Calibration against a single known sample.
2-POINT MANUAL	Calibration against two samples, both with a known pH.
TEMP ADJUST	Adjust the displayed temperature by up to ± 15 °C.
DEFAULT SETUP	Restores the system to the original factory calibration.

5.4 pH Sensor Setup Menu (continued)

CONFIGURE	
EDIT NAME	Enter a 10-digit name in any combination of symbols and alpha or numeric characters.
SELECT MEASURE	Select the appropriate measurement units to display.
DISPLAY FORMAT	Select the measurement resolution (xx.xx pH or xx.x pH).
TEMP UNITS	Choose from the displayed options (°C or °F).
LOG SETUP	Choose SENSOR INTERVAL to set the sensor log interval or select TEMP INTERVAL to set the temperature log interval.
REJECT FREQUENCY	Choose 50 or 60 Hz depending on the power line frequency for optimal noise rejection. Default is 60 Hz.
FILTER	Select 0–60 second signal averaging time.
TEMP ELEMENT	Select type of temperature element from the displayed choices.
SELECT BUFFER	Select the buffer type (standard 4, 7, 10 or DIN 19267) from the displayed choices.
PURE H20 COMP	Allows the user to specify that ammonia, morpholine, or other user-defined electrolyte is being used in the application, allowing a temperature-dependent linear slope factor to be applied to the measured pH.
CAL DAYS	Number of days since the last calibration. Default notification at 60 days.
SENSOR DAYS	Number of days the sensor has been in operation. Default notification at 365 days.
DEFAULT SETUP	Resets all user-editable options to their factory-defaults.
DIAG/TEST	
PROBE INFO	Display the sensor type, entered name of the sensor (Default: sensor serial number.), the sensor serial number, the software version number, and the sensor driver version number.
CAL DATA	Displays the pH slope and the date of the last calibration
SIGNAL	SENSOR SIGNAL: Displays the sensor output in mV SENSOR ADC COUNTS: Displays the sensor ADC counts TEMP ADC COUNTS: Displays raw data for temperature ADC counts. ADC counts are comparable to A/D counts and are for sensor electronic diagnostic purposes only. ELECTRODE STATE: Identifies the state of the electrode (good or bad) depending on whether the impedance is within preset limits. ACTIVE ELECT: Displays the impedance (Mohms) of the active electrode if Imped Status is set to Enabled. REF. ELECTRODE: Displays the impedance (Mohms) of the reference electrode if Imped Status is set to Enabled. IMPED STATUS: Sensor diagnostic. Choose Enabled or Disabled.
COUNTERS	SENSOR DAYS: displays the cumulative days the sensor has been in use. RESET SENSOR: Allows the sensor counter to be reset to zero. ELECTRODE DAYS: Cumulative days the electrode has been in use.

5.5 ORP Sensor Setup Menu

SELECT SENSOR (if more than one sensor is attached)

CALIBRATE	
1-POINT MANUAL	Calibration against a single known sample.
TEMP ADJUST	Adjust the displayed temperature by up to ± 15 °C.
DEFAULT SETUP	Restores the system to the original factory calibration.
CONFIGURE	
EDIT NAME	Enter up to a 10-digit name in any combination of symbols and alpha or numeric characters. Press **ENTER** when the entry is complete. The name will be displayed on the status line with the measurement value.
SELECT SENSOR	Choose from the displayed sensor type (pH or ORP).
TEMP UNITS	Choose from the displayed options (°C or °F).
LOG SETUP	Choose SENSOR INTERVAL to set the sensor log interval or select TEMP INTERVAL to set the temperature log interval.
AC FREQUENCY	Choose 50 or 60 Hz depending on the power line frequency for optimal noise rejection. Default is 60 Hz.
FILTER	Select 0–60 second signal averaging time.
TEMP ELEMENT	Select type of temperature element from the displayed choices.
SELECT BUFFER	Select the buffer type (standard 4, 7, 10 or DIN 19267) from the displayed choices.
PURE H20 COMP	Allows the user to specify that ammonia, morpholine, or other user-defined electrolyte is being used in the application, allowing a temperature-dependent linear slope factor to be applied to the measured pH.
CAL DAYS	Number of days since the last calibration. Default notification at 60 days.
SENSOR DAYS	Number of days the sensor has been in operation. Default notification at 365 days.
IMPED LIMITS	Set min/max electrode sensor impedance limits.
DEFAULT SETUP	Resets all user-editable options to their factory-defaults.
DIAG/TEST	
PROBE INFO	Display the sensor type, entered name of the sensor (Default: sensor serial number.), the sensor serial number, the software version number, and the sensor driver version number.
CAL DATA	Displays the pH slope and the date of the last calibration
SIGNAL	SENSOR SIGNAL: displays the sensor output in mV SENSOR ADC COUNTS: displays the sensor ADC counts TEMP ADC COUNTS: shows raw data for temperature ADC counts. ADC counts are comparable to A/D counts and are for sensor electronic diagnostic purposes only. ELECTRODE STATE: Identifies the state of the electrode (good or bad) depending on whether the impedance is within preset limits. ACTIVE ELECT: Shows the impedance (Mohms) of the active electrode if Imped Status is set to Enabled. REF. ELECTRODE: Shows the impedance (Mohms) of the reference electrode if Imped Status is set to Enabled. IMPED STATUS: Sensor diagnostic. Choose Enabled or Disabled.
COUNTERS	SENSOR DAYS: displays the cumulative days the sensor has been in use. RESET SENSOR: allows the sensor counter to be reset to zero. ELECTRODE DAYS: Cumulative days the electrode has been in use.

5.6 pH Calibration

The manufacturer offers one and two point automatic and manual calibrations for pH. An automatic calibration identifies the buffer table corresponding to the chosen buffer and automatically calibrates the probe after it stabilizes. A manual calibration is performed by placing the pH sensor in any buffer or sample with a known value and then entering that known value into the controller.

The value of the sample used in the manual calibration may be determined by laboratory analysis or comparison reading.

1. From the Main Menu, select SENSOR SETUP and confirm.
2. Select the appropriate sensor if more than one is attached and confirm.
3. Select CALIBRATE and confirm.
4. Select 1 POINT AUTO. Select the available Output Mode (Active, Hold, or Transfer) and confirm.
5. Move the clean probe to buffer and confirm to continue.
6. Confirm when stable. A screen will display 1 Point Auto Complete and the slope (XX.X mV/pH).
7. Return the probe to process.

5.6.1 Two Point Automatic Calibration

1. From the Main Menu, select SENSOR SETUP and confirm.
2. Select the appropriate sensor if more than one is attached and confirm.
3. Select CALIBRATE and confirm.
4. Select 2 POINT AUTO. Select the available Output Mode (Active, Hold, or Transfer) and confirm.
5. Move the clean probe to Buffer 1 and confirm.
6. Confirm when stable.
7. Move the clean probe to Buffer 2 and confirm.
8. Confirm when stable. A screen will display 2 Point Calibration Complete and the slope (XX.X mV/pH).
9. Return the probe to process.

5.6.2 One Point Manual Calibration

1. From the Main Menu, select SENSOR SETUP and confirm.
2. Select the appropriate sensor if more than one is attached and confirm.
3. Select CALIBRATE and confirm.

4. Select 1 POINT MANUAL. Select the available Output Mode (Active, Hold, or Transfer) and confirm.

5. Move the clean probe to solution and confirm to continue.

6. Confirm when stable. Edit the solution value and confirm.

7. Confirm when stable. A screen will display 1 Point Manual Complete and the slope (XX.X mV/pH).

8. Return the probe to process.

5.6.3 Two Point Manual Calibration

1. From the Main Menu, select SENSOR SETUP and confirm.

2. Select the appropriate sensor if more than one is attached and confirm.

3. Select CALIBRATE and confirm.

4. Select 2 POINT MANUAL CAL. Select the available Output Mode (Active, Hold, or Transfer) and confirm.

5. Move the clean probe to Solution 1 and confirm.

6. Confirm when stable. Edit the solution value and confirm.

7. Move probe to solution 1 and confirm.

8. Confirm when stable. Edit the solution value and confirm.

9. A screen will display 2 Point Manual Cal Complete and the slope (XX.X mV/pH).

10. Return the probe to process.

5.7 ORP Calibration

The manufacturer offers a one point manual calibration for ORP. The value of the sample used in the manual calibration may be determined by laboratory analysis or comparison reading.

1. From the Main Menu, select SENSOR SETUP and confirm.

2. Select the appropriate sensor if more than one is attached and confirm.

3. Select CALIBRATE and confirm.

4. Select 1 POINT MANUAL CAL. Select the available Output Mode (Active, Hold, or Transfer) and confirm.

5. Move the clean probe to Solution and confirm.

6. Confirm when stable. Edit the solution value and confirm.

7. A screen will display 1 Point Manual Complete and the slope (XX.X mV).

8. Return the probe to process.

5.8 Concurrent Calibration of Two Sensors for pH and ORP

1. Begin a calibration on the first sensor and continue until “Wait to Stabilize” is displayed.

2. Select LEAVE and confirm. The display will return to the main measurement screen. The reading for the sensor currently being calibrated will flash.

3. Begin the calibration for the second sensor and continue until “Wait to Stabilize” is displayed.

4. Select LEAVE and confirm. The display will return to the main measurement screen and the reading for both sensors will flash. The calibration for both sensors are now running in the background.

5. To return to the calibration of either sensor select SENSOR SETUP from the Main Menu and confirm. Select the appropriate sensor and confirm.

6. The calibration in progress will be displayed. Continue with the calibration.

5.9 Adjusting the Temperature

View or change the temperature using the steps below.

1. From the Main Menu, select SENSOR SETUP and confirm.

2. Select the appropriate sensor if more than one is attached and confirm.

3. Select CALIBRATE and confirm.

4. Select TEMP ADJUST and confirm.

5. Select MEASURED TEMP and confirm.

6. The temperature will be displayed. Edit the temperature and confirm.

DANGER
Only qualified personnel should conduct the tasks described in this section of the manual.

DANGER
Seul un technicien qualifié peut effectuer les tâches d'installation décrites dans cette section du manuel.

DANGER
Explosion hazard. Do not connect or disconnect equipment unless power has been switched off or the area is known to be non-hazardous.

DANGER
Risque d'explosion. Couper le courant ou s'assurer que l'emplacement est designe non dangereux avant de replacer le aucon composant.

DANGER
Explosion hazard. Substitution of components may impair suitability for Class 1, Division 2.

DANGER
Risque d'explosion. La substitution de composants peut rendre ce materiel inacceptable pour les emplacements de Classe 1, Division 2..

6.1 Maintenance Schedule

Maintenance Task	90 days	Annually
Clean the sensor[1]	x	
Inspect sensor for damage	x	
Replace Salt Bridge and fill solution[2]		x
Calibrate Sensor (as required by regulatory agency)	**Per the schedule mandated by your regulatory agency.**	

[1] Cleaning frequency is application dependent. More or less frequent cleaning will be appropriate in some applications.
[2] Salt bridge replacement frequency is application dependent. More or less frequent replacement will be appropriate in some applications

6.2 Cleaning the Sensor

CAUTION
Before cleaning with acid, determine if the chemical reaction between the acid and the sample will create a hazardous chemical reaction. (For example, do not put a sensor that is used in a cyanide bath directly into a strong acid for cleaning because this chemical combination may produce poisonous cyanide gas.)

1. Clean the exterior of the sensor with a stream of water. If debris remains remove loose contaminate buildup by carefully wiping the entire measuring end of the sensor (process electrode, concentric metal ground electrode, and salt bridge) with a soft clean cloth. Rinse the sensor with clean, warm water.

2. Prepare a mild soap solution of warm water and dish detergent or other non-abrasive soap that does not contain lanolin such as laboratory glass cleaner.

Note: *Lanolin will coat the glass process electrode and can adversely affect sensor performance.*

3. Soak the sensor for 2 to 3 minutes in the soap solution.

4. Use a small soft bristle brush (such as a toothbrush) and scrub the entire measuring end of the sensor, thoroughly cleaning the electrode and salt bridge surfaces. If surface deposits cannot be removed by detergent solution cleaning, use muriatic acid (or other dilute acid) to dissolve them. The acid should be as dilute as possible. Experience will determine which acid to use and the appropriate dilution ratio. Some stubborn coatings may require a different cleaning agent. For assistance, contact Technical and Customer Service (U.S.A. only) on page 43.

DANGER
Acids are hazardous. Always wear appropriate eye protection and clothing in accordance with material safety data sheet recommendations.

5. Soak the entire measuring end of the sensor in dilute acid for no more than 5 minutes. Rinse the sensor with clean, warm water then place the sensor back into the mild soap solution for 2 to 3 minutes to neutralize any remaining acid.

6. Remove the sensor from the soap solution, and rinse the sensor again in clean, warm water.

7. After cleaning, always calibrate the measurement system.

6.2.1 Replacing the Standard Cell Solution and Salt Bridge

If calibration cannot be attained, rejuvenate the sensor by replacing its standard cell solution and salt bridge as shown in Figure 22. If calibration is still not possible, refer to Section 7 on page 37.

1. To remove the salt bridge, hold the sensor upright (electrode at top), and use pliers or a similar tool to turn it counterclockwise. Take care not to damage the protruding process electrode. Properly discard the old salt bridge.

2. Replace the standard cell solution in the sensor reservoir.

   a. Pour out the aged solution, and thoroughly flush the reservoir with standard cell solution.

   b. Fill the reservoir to the bottom of the salt bridge mating threads with fresh standard cell solution (Cat. No. 25M1A1025-115).

3. Carefully thread the new salt bridge clockwise until it is finger-tight and the bottom surface of the salt bridge is in full contact with the top surface of the sensor body. Tighten the salt bridge another ½ turn with the wrench or tool.

Figure 22 Replacing Standard Cell Solution and Salt Bridge

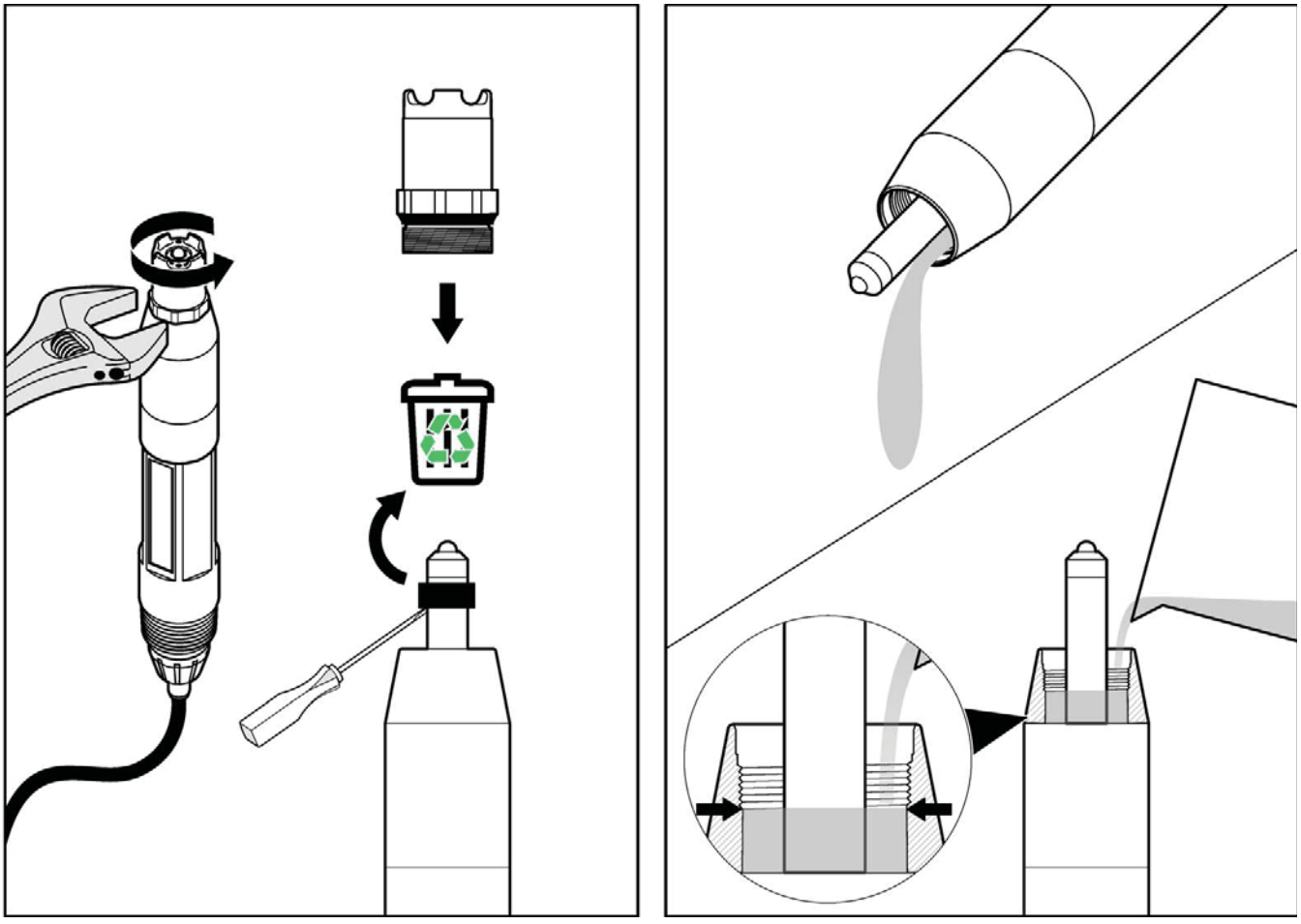

Section 7 Troubleshooting

7.1 Error Codes

When a sensor is experiencing an error condition, the sensor reading on the measurement screen will flash and all relays and analog outputs associated with the sensor will be held. The following conditions will cause the sensor reading to flash:

- Sensor calibration
- Relay timer washing cycle
- Loss of communication

Highlight the Sensor Diag menu and press **ENTER**. Highlight Errors and press **ENTER** to determine the cause of the error.

Errors are defined in Table 6.

Table 6 Error Codes

Displayed Error	Definition	Resolution
ADC FAILURE	System measurement fails	Contact Technical Consulting Services.

7.2 Warnings

A sensor warning will leave all menus, relays, and outputs functioning normally, but will cause a warning icon to flash on the right side of the display. Highlight the Sensor Diag menu and press **ENTER** to determine the cause of the warning.

A warning may be used to trigger a relay and users can set warning levels to define the severity of the warning. Errors are defined in Table 7.

Table 7 Warning Codes

Displayed Warning	Definition	Resolution
PROBE OUT RANGE	Measured pH/ORP exceeds the expected value range.	Contact Technical Consulting Services.
TEMP OUT RANGE	Measured temperature exceeds the expected value range.	Contact Technical Consulting Services.
FLASH FAILURE	System flash memory write has failed.	Contact Technical Consulting Services.
ACTIVE. ELEC	Standard electrode is not performing within the required specifications.	Contact Technical Consulting Services.
REF. ELECTRODE	Reference electrode is not performing within the required specifications.	Contact Technical Consulting Services.
CAL REQUIRED	60 days has elapsed since the last calibration	Perform a calibration.
REPLACE SENSOR	One year has elapsed since the sensor has been installed.	Clean the sensor and replace the salt bridge and standard cell solution (see section 6.2 on page 34 and section 6.2.1 on page 35). Reset the counter in the SENSOR SETUP>CONFIGURE> SENSOR DAYS menu. If necessary, replace the sensor.

7.3 Troubleshooting the pH Sensor

Clean the sensor using the procedure described in section 6.2 on page 34. If the measuring system cannot be calibrated after cleaning, replace the standard cell solution and salt bridge (see section 6.2.1 on page 35) and try calibrating again. If the measuring system still cannot be calibrated, check the sensor operation.

Some simple tests using the sc100 or a multimeter and two pH buffers will determine if the pH sensor is operating properly. The use of pH 7 and pH 4 buffers is preferred but pH 10 can be used in place of pH 4 if it more closely covers the measurement range of interest.

Determine if the sensor has integral digital electronics or uses an external digital gateway. If the sensor uses a digital gateway, it will be hard-wired to the gateway through terminal connections inside the digital gateway enclosure. If the sensor uses the digital gateway and therefore does not have integral digital electronics, proceed with section 7.3.1. If the sensor has integral digital electronics, move to section 7.3.2 on page 39.

7.3.1 Troubleshooting a pH Sensor without Integral Digital Electronics

1. Disconnect the red, green, yellow, and black sensor wires from the digital gateway.

2. Place the sensor in a pH 7 buffer. Before continuing, allow the temperatures of the sensor and buffer to equalize to approximately 25 °C (70 °F).

3. Verify that the sensor temperature element (300 ohm thermistor) is operating properly by measuring the resistance between the yellow and black wires. The reading should be between 250 and 350 ohms at approximately 25 °C (70 °F).

4. Reconnect the yellow and black wires.

5. Connect the multimeter (+) lead to the red wire and (–) lead to the green wire. With the sensor in the pH 7 buffer, measure the dc millivolts. The sensor offset reading should be within the factory-specified limits of –50 and +50 mV. If it is, record the millivolt value reading and continue with step 6. If the reading is outside these limits, discontinue this test and contact Technical Support.

6. With the multimeter still connected, rinse the sensor with water and place it in either pH 4 or pH 10 buffer. Allow the temperatures of the sensor and buffer to equalize to approximately 25 °C (70 °F) then measure the sensor span reading as shown in Table 8 and Table 9 on page 39.

Span Reading in pH 4 Buffer
With the sensor in pH 4 buffer, the sensor span reading should be at least +160 mV more than the offset reading taken in step 5.

Table 8 Typical Span Reading Examples (pH 4 buffer)

Offset Reading (in pH 7 buffer)	Span Reading (in pH 4 buffer)
–50 mV	+110 mV
–25 mV	+135 mV
0 mV	+160 mV
+25 mV	+185 mV
+50 mV	+210 mV

Span Reading in pH 10 Buffer
With the sensor in pH 10 buffer, the sensor span reading should be at least –160 mV less than the noted offset reading taken in step 5.

Table 9 Typical Span Reading Examples (pH 10 buffer)

Offset Reading (in pH 7 buffer)	Span Reading (in pH 10 buffer)
–50 mV	–210 mV
–25 mV	–185 mV
0 mV	–160 mV
+25 mV	–135 mV
+50 mV	–110 mV

If the span reading is at least +160 mV more than or –160 mV less than the offset reading in pH 4 or pH 10, respectively, the sensor is within factory-specified limits. If not, contact Technical Support.

7.3.2 Troubleshooting the pH Sensor with Integral Digital Electronics

1. Place the sensor in pH 7 buffer and allow the buffer and sensor to reach temperature equilibrium. This can be verified by monitoring the sensor temperature value for a stable temperature measurement. This value is shown on the sc100 display when it is in measurement mode.

2. From the Sensor Setup Menu on the sc100, highlight “Diag/Test” and press **ENTER**.

3. Highlight “Sensor Signal” and press **ENTER**. This sensor offset reading should be within factory-specified limits of –50 and +50 mV. If it is, write down this millivolt value reading and perform step 4. If the reading is outside these limits, discontinue this test and contact Technical Support.

4. Rinse the sensor and place it in pH 4 or 10 buffer and allow the buffer and sensor to reach temperature equilibrium. This can be verified by monitoring the sensor temperature value for a stable temperature measurement. This value is located on the sc100 display when it is in measurement mode.

5. From the Sensor Setup Menu on the sc100, highlight “Diag/Test” and press **ENTER**.

6. Highlight “Sensor Signal” and press **ENTER**. Then measure the sensor span value.

Span Reading in pH 4 Buffer
With the sensor in pH 4 buffer, the sensor span reading should be at least +160 mV more than the offset reading as shown in Table 10 and Table 11.

Table 10 Typical Span Reading Examples (pH 4 buffer)

Offset Reading (in pH 7 buffer)	Span Reading (in pH 4 buffer)
–50 mV	+110 mV
–25 mV	+135 mV
0 mV	+160 mV
+25 mV	+185 mV
+50 mV	+210 mV

Span Reading in pH 10 Buffer
With the sensor in pH 10 buffer, the sensor span reading should be at least –160 mV less than the noted offset reading taken in step 6. Examples of typical readings:

Table 11 Typical Span Reading Examples (pH 10 buffer)

Offset Reading (in pH 7 buffer)	Span Reading (in pH 10 buffer)
–50 mV	–210 mV
–25 mV	–185 mV
0 mV	–160 mV
+25 mV	–135 mV
+50 mV	–110 mV

7. If the span reading is at least +160 mV more than or –160 mV less than the offset reading in pH 4 or pH 10, respectively, the sensor is within factory-specified limits. If not, contact Technical Support.

7.4 Checking ORP Sensor Operation

Simple tests using the sc100 or a multimeter and a 200 mV reference solution can determine if the ORP sensor is operating properly. Determine if the sensor has integral digital electronics or uses an external digital gateway. If the sensor uses a digital gateway, it will be hard-wired to the digital gateway through terminal connections within the digital gateway enclosure. If the sensor uses a digital gateway proceed with section 7.4.1. If the sensor has integral digital electronics, move to section 7.4.2 on page 40.

7.4.1 Troubleshooting the ORP Sensor without Integral Digital Electronics

1. Disconnect the red, green, yellow, and black sensor wires from the digital gateway.

2. Place the sensor in a 200 mV reference solution and allow the temperature of the sensor and reference solution to equalize to approximately 25 °C (70 °F).

3. Verify that the sensor temperature element (300 ohm thermistor) is operating by measuring the resistance between the yellow and black wires. The reading should be between 250 and 350 ohms at approximately 25 °C (70 °F).

4. Reconnect the yellow and black wires.

5. Connect the multimeter (+) lead to the red wire and (–) lead to the green wire. With the sensor in the 200 mV reference solution, measure the dc millivolts. The reading should be between 160 and 240 mV. If the reading is outside these limits, contact Technical Support.

7.4.2 Troubleshooting the ORP Sensor with Integral Digital Electronics

1. Place the sensor in 200 mV reference solution and allow the buffer and sensor to reach temperature equilibrium. This can be verified by monitoring the sensor temperature value for a stable temperature measurement. This value is located on the sc100 display when it is in measurement mode.

2. From the Sensor Setup Menu on the sc100, highlight “Diag/Test” and press **ENTER**. Highlight “Sensor Signal” and press **ENTER**. The reading should be between 160 and 240 mV. If the reading is outside these limits, contact Customer Service.

Section 8 Replacement Parts and Accessories

8.1 Replacement Items, Accessories, and Reagent and Standards

Item Description	QTY	Catalog Number
Air blast cleaning system, 115 V, includes Kynar® (PVDF) washer head with 7.6 m (25 ft) tubing and quick connect fitting, and a compressor in a NEMA 4X enclosure	each	1000A3335-005
Air blast cleaning system, 230 V, includes Kynar® (PVDF) washer head with 7.6 m (25 ft) tubing and quick connect fitting, and a compressor in a NEMA 4X enclosure	each	1000A3335-006
Air/Water blast cleaning head	each	1000A3335-004
Buffer, pH 7	500 mL (1 pint)	2283549
Buffer, pH 4	500 mL (1 pint)	2283449
Buffer, pH 10	500 mL (1 pint)	2283649
Buffer, pH 7	1 gallon	2283556
Buffer, pH 4	1 gallon	2283456
Buffer, pH 10	1 gallon	2283656
Buffer, pH 7	500 mL (1 pint)	2283549
Cable, interconnect, unterminated ends, specify length in whole feet	each	1W1100
Cable, sensor extension, 1 m (3 ft)	each	6122400
Cable, sensor extension, 7.7 m (25 ft)	each	5796000
Cable, sensor extension, 15 m (50 ft)	each	5796100
Cable, sensor extension, 31 m (100 ft)	each	5796200
Connector Cable	each	6139900
Instruction manual, Differential pH System, English	each	6120218
Plug, sealing, conduit opening	each	5868700
O-ring, Viton	each	5H1304
O-ring, EPDM	each	5H1306
O-ring, Perflouro	each	5H1096-019
ORP Standard Solution, 200 mV	500 mL (1 pint)	25M2A1001-115
ORP Standard Solution, 600 mV	500 mL (1 pint)	25M2A1002-115
ORP Standard Solution, 200 mV	1 gallon	25M2A1001-123
ORP Standard Solution, 600 mV	1 gallon	25M2A1002-123
Salt Bridge, PEEK® Body, PVDF outer junction	each	SB-P1SV
Salt Bridge Ryton® Body, PVDF outer junction	each	SB-R1SV
Standard Cell Solution	each	25M1A1025-115
Strain relief, Heyco	each	16664

Section 9 How to Order

U.S.A. Customers

By Telephone:
6:30 a.m. to 5:00 p.m. MST
Monday through Friday
(800) 227-HACH (800-227-4224)

By Fax:
(970) 669-2932

By Mail:
Hach Company
P.O. Box 389
Loveland, Colorado 80539-0389 U.S.A.
Ordering information by e-mail: orders@hach.com

Information Required

- Hach account number (if available)
- Your name and phone number
- Purchase order number
- Brief description or model number
- Billing address
- Shipping address
- Catalog number
- Quantity

International Customers

Hach maintains a worldwide network of dealers and distributors. To locate the representative nearest you, send an e-mail to: intl@hach.com or contact:

Hach Company World Headquarters; Loveland, Colorado, U.S.A.
Telephone: (970) 669-3050; Fax: (970) 669-2932

Technical and Customer Service (U.S.A. only)

Hach Technical and Customer Service Department personnel are eager to answer questions about our products and their use. Specialists in analytical methods, they are happy to put their talents to work for you.

Call 1-800-227-4224 or e-mail techhelp@hach.com

Section 10 Repair Service

Authorization must be obtained from Hach Company before sending any items for repair. Please contact the Hach Service Center serving your location.

In the United States:
Hach Company
Ames Service
100 Dayton Avenue
Ames, Iowa 50010
(800) 227-4224 (U.S.A. only)
FAX: (515) 232-3835

In Canada:
Hach Sales & Service Canada Ltd.
1313 Border Street, Unit 34
Winnipeg, Manitoba
R3H 0X4
(800) 665-7635 (Canada only)
Telephone: (204) 632-5598
FAX: (204) 694-5134
E-mail: canada@hach.com

**In Latin America, the Caribbean, the Far East,
Indian Subcontinent, Africa, Europe, or the Middle East:**
Hach Company World Headquarters,
P.O. Box 389
Loveland, Colorado, 80539-0389 U.S.A.
Telephone: (970) 669-3050
FAX: (970) 669-2932
E-mail: intl@hach.com

Section 11 Limited Warranty

Hach Company warrants its products to the original purchaser against any defects that are due to faulty material or workmanship for a period of one year from date of shipment unless otherwise noted in the product manual.

In the event that a defect is discovered during the warranty period, Hach Company agrees that, at its option, it will repair or replace the defective product or refund the purchase price excluding original shipping and handling charges. Any product repaired or replaced under this warranty will be warranted only for the remainder of the original product warranty period.

This warranty does not apply to consumable products such as chemical reagents; or consumable components of a product, such as, but not limited to, lamps and tubing.

Contact Hach Company or your distributor to initiate warranty support. Products may not be returned without authorization from Hach Company.

Limitations

This warranty does not cover:

- Damage caused by acts of God, natural disaster, labor unrest, acts of war (declared or undeclared), terrorism, civil strife or acts of any governmental jurisdiction
- Damage caused by misuse, neglect, accident or improper application or installation
- Damage caused by any repair or attempted repair not authorized by Hach Company
- Any product not used in accordance with the instructions furnished by Hach Company
- Freight charges to return merchandise to Hach Company
- Freight charges on expedited or express shipment of warranted parts or product
- Travel fees associated with on-site warranty repair

This warranty contains the sole express warranty made by Hach Company in connection with its products. All implied warranties, including without limitation, the warranties of merchantability and fitness for a particular purpose, are expressly disclaimed.

Some states within the United States do not allow the disclaimer of implied warranties and if this is true in your state the above limitation may not apply to you. This warranty gives you specific rights, and you may also have other rights that vary from state to state.

This warranty constitutes the final, complete, and exclusive statement of warranty terms and no person is authorized to make any other warranties or representations on behalf of Hach Company.

Limitation of Remedies

The remedies of repair, replacement or refund of purchase price as stated above are the exclusive remedies for the breach of this warranty. On the basis of strict liability or under any other legal theory, in no event shall Hach Company be liable for any incidental or consequential damages of any kind for breach of warranty or negligence.

Section 12 Compliance Information

Hach Co. certifies this instrument was tested thoroughly, inspected and found to meet its published specifications when it was shipped from the factory.

The Model sc100/sc1000 Controller with Differential pH/ORP sensor has been tested and is certified as indicated to the following instrumentation standards:

Product Safety

UL 61010A-1 (ETL Listing # 65454)
CSA C22.2 No. 1010.1 (ETLc Certification # 65454)
Certified by Hach Co. to EN 61010-1 Amds. 1 & 2 (IEC1010-1) per 73/23/EEC, supporting test records by Intertek Testing Services.

Immunity

This equipment was tested for industrial level EMC per:

EN 61326 (EMC Requirements for Electrical Equipment for Measurement, Control and Laboratory Use) **per 89/336/EEC EMC:** Supporting test records by Hach Company, certified compliance by Hach Company.

Standards include:

IEC 1000-4-2:1995 (EN 61000-4-2:1995) Electrostatic Discharge Immunity (Criteria B)
IEC 1000-4-3:1995 (EN 61000-4-3:1996) Radiated RF Electromagnetic Field Immunity (Criteria A)
IEC 1000-4-4:1995 (EN 61000-4-4:1995) Electrical Fast Transients/Burst (Criteria B)
IEC 1000-4-5:1995 (EN 61000-4-5:1995) Surge (Criteria B)
IEC 1000-4-6:1996 (EN 61000-4-6:1996) Conducted Disturbances Induced by RF Fields (Criteria A)
IEC 1000-4-11:1994 (EN 61000-4-11:1994) Voltage Dip/Short Interruptions (Criteria B)

Additional Immunity Standard/s include:

ENV 50204:1996 Radiated Electromagnetic Field from Digital Telephones (Criteria A)

Emissions

This equipment was tested for Radio Frequency Emissions as follows:

Per **89/336/EEC** EMC: **EN 61326:1998** (Electrical Equipment for measurement, control and laboratory use—EMC requirements) Class “A” emission limits. Supporting test records by Hewlett Packard, Fort Collins, Colorado Hardware Test Center (A2LA # 0905-01) and certified compliance by Hach Company.

Standards include:

EN 61000-3-2 Harmonic Disturbances Caused by Electrical Equipment
EN 61000-3-3 Voltage Fluctuation (Flicker) Disturbances Caused by Electrical Equipment

Additional Emissions Standard/s include:

EN 55011 (CISPR 11), Class “A” emission limits

Canadian Interference-causing Equipment Regulation, IECS-003, Class A

Supporting test records by Hewlett Packard, Fort Collins, Colorado Hardware Test Center (A2LA # 0905-01) and certified compliance by Hach Company.

This Class A digital apparatus meets all requirements of the Canadian Interference-causing Equipment Regulations.
Cet appareil numèrique de la classe A respecte toutes les exigences du Rëglement sur le matÈriel brouilleur du Canada.

FCC PART 15, Class “A” Limits

Supporting test records by Hewlett Packard, Fort Collins, Colorado Hardware Test Center (A2LA # 0905-01) and certified compliance by Hach Company.

This device complies with Part 15 of the FCC Rules. Operation is subject to the following two conditions:

(1) this device may not cause harmful interference, and (2) this device must accept any interference received, including interference that may cause undesired operation.

Changes or modifications to this unit not expressly approved by the party responsible for compliance could void the user's authority to operate the equipment.

This equipment has been tested and found to comply with the limits for a Class A digital device, pursuant to Part 15 of the FCC Rules. These limits are designed to provide reasonable protection against harmful interference when the equipment is operated in a commercial environment. This equipment generates, uses, and can radiate radio frequency energy and, if not installed and used in accordance with the instruction manual, may cause harmful interference to radio communications. Operation of this equipment in a residential area is likely to cause harmful interference, in which case the user will be required to correct the interference at his own expense. The following techniques of reducing the interference problems are applied easily.

1. Disconnect the Controller from its power source to verify that it is or is not the source of the interference.

2. If the Controller is connected into the same outlet as the device with which it is interfering, try another outlet.

3. Move the Controller away from the device receiving the interference.

4. Reposition the receiving antenna for the device receiving the interference.

5. Try combinations of the above.

Appendix A General pH Information

A.1 pH Measurement Theory

pH is the negative logarithm of the hydrogen ion activity and a measure of the acidity or alkalinity of a solution.

$$pH = -\log A[H+]$$

pH is normally measured using a glass electrode and a reference electrode.

The glass electrode acts as a transducer, converting chemical energy (the hydrogen ion activity) into an electrical energy (measured in millivolts). The reaction is balanced and the electrical circuit is completed by the flow of ions from the reference solution to the solution under test.

The electrode and reference solution together develop a voltage (emf) whose magnitude depends on the type of reference electrode, the internal construction of the glass electrode, the pH of the solution and the temperature of the solution. This voltage is expressed by the Nernst Equation:

$$E = E_o - (2.3\ RT/F) \times \log A[H+]$$
$$E = E_o - (\text{slope}) \times \log A[H+]$$

where:

E = the emf of the cell

E_o = the zero potential (isopotential) of the system. It depends on the internal construction of the glass and reference electrodes.

R = gas constant

T = temperature in Kelvin

A[H+] = activity of the hydrogen ion (assumed to be equivalent to the concentration of hydrogen ions)

F = Faraday constant

For every unit change in pH (or decade change in ion concentration) the emf of the electrode pair changes by 59.16 mV at 25 °C. This value is known as the Nernstian Slope of the electrode.

The pH electrode pair is calibrated using solutions of known and constant hydrogen ion concentration, called buffer solutions. The buffer solutions are used to calibrate both the electrode isopotential and slope.

A.2 PID Controller Basics

A pH control loop operates as follows: The pH meter measures the value of the pH in the effluent, and, if the pH is different from the setpoint, the controller actuates the reagent pump (or valve) that adds reagent to a mixing tank. The added reagent adjusts the pH value of the process.

The physical layout of the loop, the sizing of the pump (valve), type of mixing tank, and location of the pH electrodes all have a major impact on the ultimate performance of the loop, after the controller is tuned for optimal performance. The largest single performance factor is the delay time around the loop. This includes the response time of the

electrode/meter, time required to deliver the reagent to the process water, time required for the reagent to mix with and react with the process water, and the time required to deliver the completely mixed water to the electrode. If the delay times are too long or the mixing is not complete, the control will be poor regardless of how well the controller is tuned.

The Process pH Meter uses a PID (proportional, integral (reset), derivative (rate) control) control algorithm. Each of the instrument settings along with their effects on the control loop, are described below.

Mode
Manual: The manual output is specified in percent of full-scale PID output (4–20 mA) and is commonly used for testing the output device.

Auto: Allows the process to be controlled automatically using information specified in the Phase, Setpoint, Proportional Band, Integral, and Derivative menus as follows:

Phase
Direct: The control output action will cause the process value to increase.

Reverse: The control output action will cause the process value to decrease.

Setpoint
The setpoint is defined as the desired process value in pH

Proportional Band
The proportional band is the range in pH from the setpoint value where the controller provides proportional control. For example, the desired setpoint for the process is pH 7.0 and the process requires that a reagent must be added to the process water to bring it up to pH 7.0. If the proportional band is set to pH 1.0, the controller will provide proportional output control over the range of pH 6.0 to 8.0. When the process is at pH 6.0, the controller will provide a 100% control output level (assuming that Phase is set to Direct). When the process is at pH 7.0, the proportional control will provide a 0% control output level. When the process is at pH 6.5 the proportional control will provide a 50% output. The output action is equal to the difference between the setpoint and the process value, divided by the proportional band value.

Integral
The integral value is used to reduce the steady state error, between the process value and the setpoint, to zero. For example, assume a process can be manually controlled at a level of pH 8.0 by sending a 35% control output level to a reagent pump. Now, say that the system is set up for the controller to provide proportional only control, with the controller setpoint set to pH 8.0 and the proportional band set to pH 1.0. Note that the nearer the process gets to the pH 8.0 setpoint, the lower the control output level is. In fact, when the process is at pH 8.0, the output level will be 0%. Since the process requires that the pump be operated at 35% for the process to reach pH 8.0, its apparent that proportional-only control will never quite reach the desired setpoint of pH 8.0. This is where the integral control comes in.

Integral control can be thought of as adding up the output action from the proportional control over time. For example, the proportional control output reaches a steady state level of 5%. If the integral time is set to five minutes, the integral action of the controller will add an additional 5% to the controller output level over a 5-minute interval. The integral action is additive, so for every 5-minute interval an additional 5% is added to the controller's output level. This will allow the controller to bring the process to the desired setpoint level. Note that the longer the integral time setting, the longer it takes for the

integral action to affect the process. The integral control action is disabled by setting it to zero. Note that the integral time is in minutes.

Derivative
Derivative control is used to adjust the control output level based upon the rate at which the process value is approaching or passing the setpoint. Derivative control action would be used in cases where the process value can rapidly ramp up and overshoot the setpoint. The derivative setting is in minutes. The output action of the derivative control is equal to the rate of change of the process (in pH units per minute) times the derivative time, divided by the proportional band, times negative one. For example, if the process pH is changing at a rate of pH 0.20 per minute, the derivative time is set to 3.0 minutes, the proportional band is set to pH 0.80, and the action is “direct” the derivative control output action will be approximately equal to: (–0.20 pH/minute X 3.0 minute) /0.80 pH = –75%.

During calibration, the analog outputs can remain active, be held, or be transferred to a preset mA value.

Appendix B Modbus Register Information

Table 12 Sensor Modbus Registers

Group Name	Tag Name	Register #	Data Type	Length	R/W	Description
Tags	SensorMeasTag	40001	Integer	1	R	Sensor measurement tag
Measurements	pHMeas	40002	Float	2	R	pH /ORP measurement
Tags	TempMeasTag	40004	Integer	1	R	Temperature measurement tag
Measurements	TempDegCMeas	40005	Float	2	R	Temperature measurement
Configuration	SensorName	40007	String	6	R/W	Sensor name
Tags	FuncCode	40013	Integer	1	R/W	Function code tag
Tags	NextState	40014	Integer	1	R/W	Next state tag
Configuration	MeasType	40015	Integer	1	R/W	Measurement type-pH or ORP
Configuration	TempUnits	40016	Integer	1	R/W	Temperature units-C or F
Configuration	pHFormat	40017	Integer	1	R/W	pH display format
Configuration	TaggedPhFormat	40018	Long	2	R	pH display tagged format
Configuration	Filter	40020	Integer	1	R/W	Sensor filter
Configuration	TempElementType	40021	Integer	1	R/W	Temperature element type
Tags	TempUserValueTag	40022	Integer	1	R	Temperature user value tag
Configuration	TempUserDegCValue	40023	Float	2	R/W	Temperature user value
Configuration	pHBuffer	40025	Integer	1	R/W	pH buffer type
Configuration	PureWaterCompType	40026	Integer	1	R/W	Pure H_2O compensation type
Configuration	PureWaterCompUser	40027	Float	2	R/W	Pure H_2O compensation user val
Calibration	OutputMode	40029	Integer	1	R/W	Output mode
Calibration	CalLeave	40030	Integer	1	R/W	Cal leave mode
Calibration	CalAbort	40031	Integer	1	R/W	Cal abort mode
Tags	CalEditValueTag	40032	Integer	1	R	Cal edit value tag
Calibration	CalEditPhValue	40033	Float	2	R/W	Cal edit value
Diagnostics	pHSlope	40035	Float	2	R	pH slope
Diagnostics	SoftwareVersion	40037	String	6	R	Software version
Diagnostics	SerialNumber	40043	String	6	R	Serial number
Diagnostics	pHOffset	40049	Float	2	R	pH offset
Diagnostics	OrpOffset	40051	Float	2	R	Orp offset
Calibration	CalCode	40053	Integer	1	R	Cal code
Configuration	SensorLogInterval	40054	Integer	1	R/W	Sensor data log interval
Configuration	TempLogInterval	40055	Integer	1	R/W	Temperature data log interval
Diagnostics	pHmV	40056	Float	2	R	pH mV
Diagnostics	ProdDate	40058	Date	2	R/W	Production date
Diagnostics	StdElectrode	40060	Float	2	R	Standard electrode impedance
Diagnostics	RefElectrode	40062	Float	2	R	Reference electrode impedance
Diagnostics	LastCalDate	40064	Date	2	R	Last calibration date
Diagnostics	SensorDays	40066	Integer	1	R	Sensor running days
Diagnostics	ElectrodeDays	40067	Integer	1	R	Electrode running days
Diagnostics	ElectrodeStatus	40068	Integer	1	R	Electrode status
Diagnostics	SensorType	40069	Integer	1	R	Sensor type
Configuration	RejectFrequency	40070	Integer	1	R/W	Reject frequency
Diagnostics	DeviceDriver	40071	String	5	R	Device driver
Configuration	CalWarningDays	40076	Integer	1	R/W	Calibration warning days
Configuration	SensorWarningDays	40077	Integer	1	R/W	Sensor warning days

Index

B

Buttons
- List box 25
- Toolbar 23

C

Compliance Information 47

Components
- System 14

D

Derivative 50

Derivative (Rate) Control 50

Display 22

E

Entries
- Incorrect 24

Error Codes 37

I

Integral 50

Integral (Reset) 50

K

Key
- Functions 21

L

List box 25

M

Maintenance Schedule 33

Menu command
- Marking 23, 24

Menu windows 23

N

Normal operation 23

P

Parts
- Replacement 41

PID control
- Proportional 50

Proportional 50

Proportional Band 50

S

Safety Information 7

Sensor Cable
- Connecting 11
- Wiring 11

Specifications 5

T

Toolbar 23

W

Warnings 37

Warranty 45

HAPMAN

VACUUM CONVEYOR SYSTEM

LEFT BLANK

HAPMAN
Ideas that move.
Gen
a MGlobal company

VEOLIA WATER TECHNOLOGIES CANADA INC.

JOB# H17116

PO# 18000905 HD 05000

Installation, Operation and Maintenance Manual

Performantee
Designed for results – guaranteed.

Global Headquarters
6002 East N Avenue
Kalamazoo, MI 49048, USA
(800) 427-6260
sales@hapman.com
www.hapman.com

This page is intentionally left blank

REV.	REVISION DESCRIPTION	DATE	BY
A	REMOVED 2" COLLAR ON CONE	5/17/18	JD

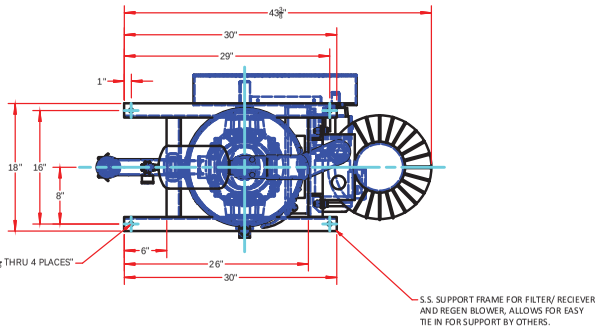

NOTES:
(1) PURCHASE ORDER NUMBER: 18000905 HD 05000
(2) MATERIAL CONVEYED: POTASSIUM PERMANGANATE
PARTICLE SIZE: POWDER
BULK DENSITY: 94 LBS/ CU FT
MOISTURE CONTENT: DRY
TEMPERATURE: AMBIENT
FLOWABILITY: FREE
ABRASIVENESS: MILDLY
MATERIAL CHARACTERISTICS: X
CAPACITY REQUIREMENTS: 77 Kgs/DAY
(3) MATERIAL CONTACT SURFACES: STAINLESS STEEL
(4) HAPMAN STANDARD GRADE FINISH SPECIFICATION #40-108, REV "C"
(5) SUPPORT AND INSTALLATION LABOR FURNISHED BY OTHER.
(6) MOTOR 575v/3PH/60HZ

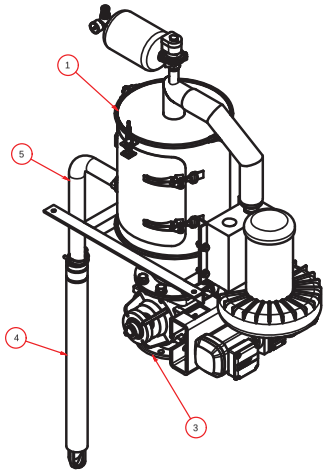

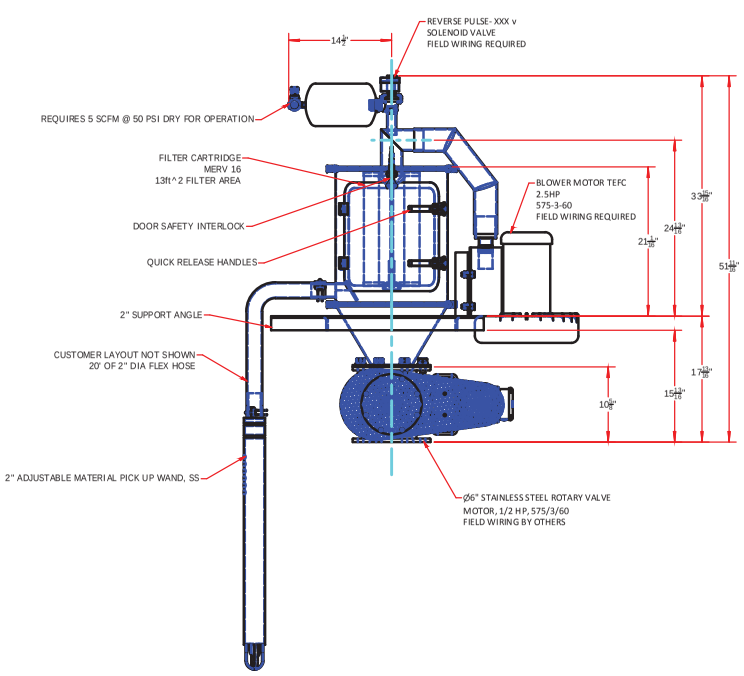

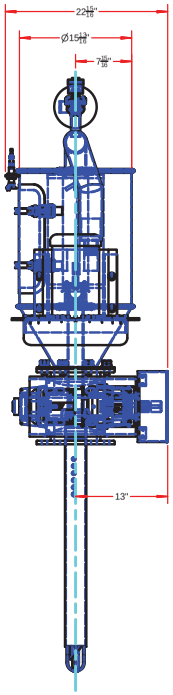

CONTROLS, FILTER PULSE TIMER & MOTOR STARTER BY OTHERS

APPROVAL DRAWING

☐ APPROVED WITH NO CHANGES
☐ APPROVED AS NOTED
☐ RESUBMIT WITH CHANGES NOTED

BY _____ DATE _____

TITLE _____

THE EQUIPMENT SHOWN ON THIS DRAWING WILL BE RELEASED FOR FABRICATION UPON RECEIPT OF THIS SIGNED APPROVAL DRAWING AT HAPMAN. PLEASE VERIFY THE ACCURACY OF THE DIMENSIONAL AND APPLICATION INFORMATION PRIOR TO SIGNING. CHANGES TO THE DESIGN AFTER APPROVAL WILL RESULT IN SCHEDULE DELAYS AND REQUIRE A PURCHASE ORDER PRICE CHANGE.

REV.	SUF.	ITEM NO.	DRAWING / PART NO.	DESCRIPTION	ITEM QTY
	AA	1	H1711 6AA D00	16" FILTER/RECEIVER HOUSING, SS	1
	AB	3	H1711 6AB L00	6" DIA. DISCHARGE ROTARY VALVE, SS	1
	AC	4	H1711 6AC D00	INLET WAND ASS'Y, 2", SS	1
	AD	5	H1171 6AD D00	FLEXIBLE CONVEY LINE AND SS HOSE CLAMPS, 2" DIA. X 240" LG.	1

UNLESS OTHERWISE SPECIFIED
DIMENSIONS ARE ENGLISH (FEET AND/OR INCHES)
TOLERANCES

DECIMALS	INCHES	FEET	ANGLES
.X ± .030" .XX ± .015" .XXX ± .005"	X/X" = ± 1/16"	.X'-X" = ± 1/4" UP TO 20 FEET .X'-X" = 1/2" OVER 20 FEET	- ± .1°

DO NOT SCALE DRAWING | REMOVE ALL SHARP EDGES

HAPMAN
Ideas that move
5944 E. N AVE. KALAMAZOO, MICHIGAN 49048
PHONE (269) 343-1675 FAX (269) 349-2477

DATE: 5/14/2018 | JOB NO.: | DRAWN: jbouchard
SCALE: | H1711600 | WEIGHT: N/A

VACUUM CONVEYING SYSTEM

CUSTOMER: VEOLIA WATER TECHNOLOGIES CANADA INC.

SHEET 1 OF 1 | DRAWING NO.: H1711600-D00 | A

This page is intentionally left blank

HAPMAN
Ideas that move

Vacuum Conveyor

Installation, Operation and Maintenance Manual

©2013 HP9000

www.hapman.com

All owners and operators should read this manual and/or be instructed on safe operating and maintenance procedures before attempting to uncrate, install, operate, adjust or service this equipment

Following are symbols used in this manual along with a description of their meanings:

DANGER
Indicates an imminently hazardous situation which, if not avoided, will result in death or severe injury.

WARNING
Indicates a potentially hazardous situation which, if not avoided, will result in death or severe injury

CAUTION
Indicates a potentially hazardous situation which, if not avoided, may result in minor/moderate injury and/or damage to equipment.

HAPMAN

MiniVac™ PNEUMATIC CONVEYOR

Table of Contents

Definition of Warning Symbols 2

Major Feature Index 4

1.0 Warranty 4

2.0 Safety Instructions 5

3.0 General Description and Installation 6

4.0 Hapman Pneumatic Conveyor Equipment 7

Major Components of the Filter/Receiver -

Discharge Gate 8

Solenoid Cabinet 8

Rotary Discharge Valve 8

5.0 Material Feed Devices 9

5.1 Flooded Well Inlet 10

5.2 Rotary Inlet Valve 10

5.3 Manual Pick Up Wand 10

6.0 Blower Packages

6.1 Regenerative 10

6.2 Positive Displacement 10

7.0 Electronic Control Systems 11

8.0 Installation Instructions 14

9.0 General Maintenance 14

9.1 Weekly 10

9.2 Monthly 10

10.0 Replacement Parts

For Filter Receiver with Rotary Discharge Valve 15

For Filter Receiver with Discharge Gate 16

Major Features Index

1. Filter Plenum
2. Material Inlet
3. Cartridge Filter
4. Solenoid Cabinet (If Required)
5. Cam Latch
6. Removable Top Cover (Lid Assembly)
7. Pulse Air Reservoir
8. Quick Disconnect
9. Vacuum Breaker (If Required)
10. Regenerative Blower
11. 80 PSI (Dry) Air Connection
12. Discharge Gate
13. Rotary Valve

NOTE: The marker numerical designations listed in this illustration are for reference purposes only within this manual.

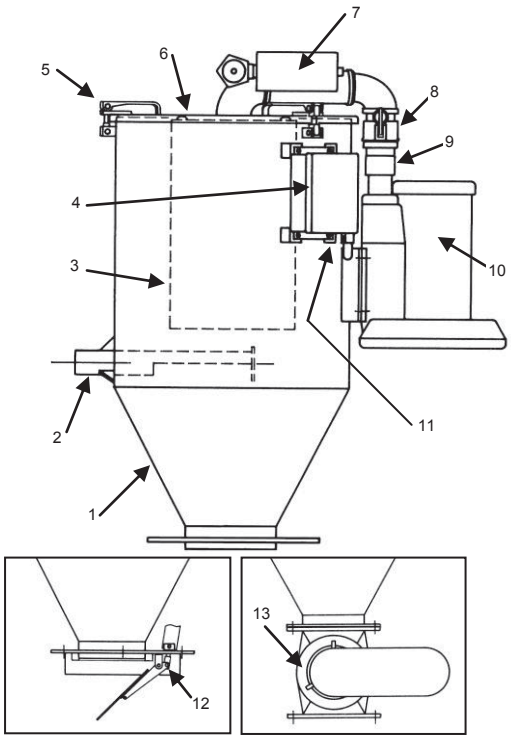

1.0 Warranty

Equipment manufactured by Hapman is warranted to be free of defective material and workmanship under the use and service quoted for a period of one year after date of shipment. This warranty is void if serviced by anyone other than Hapman service personnel.

Hapman agrees to replace or repair any defective parts it has manufactured as covered under this warranty. F.O.B. our plant, subject to inspection of the part in question by Hapman's personnel. No article may be returned to Hapman without Hapman's written consent.

Parts supplied but not manufactured by Hapman are subject to the warranties extended to Hapman by its suppliers. Hapman's liability is limited to such adjustment as the respective manufacturer makes to the seller.

In no event shall Hapman be liable for costs incurred due to equipment malfunction such as consequential damages, lost production or the expenses or losses incurred due to geographical location or fault of the product, difficulty of access to the product as installed, or time urgency on the part of the user and/or buyer of the equipment.

NOTICE:
While all information in this manual has been checked for accuracy, changes in design or specifications may occur at any time in HAPMAN's continuing program of product improvement. HAPMAN cannot assume responsibility for errors in the production of this manual, or for unsafe operating practice of those employing HAPMAN equipment.

WARNING

BEFORE INSTALLING, OPERATING OR MAINTAINING ANY EQUIPMENT, THE CONTENTS OF THIS MANUAL SHOULD BE THOROUGHLY REVIEWED AND UNDERSTOOD.

Statements and instructions set forth herein are based upon the best information and practices known to HAPMAN, but this may not be construed to suggest that every conceivable safety precaution is contained herein. As a matter of practicality, HAPMAN cannot guarantee that actions in accordance with such statements and instructions will result in the complete elimination of all hazards and thus assumes no liability for accidents which may occur.

For further information regarding installation, operation and maintenance please contact the factory service department.

HAPMAN Customer Service
5944 East N Avenue, Kalamazoo, MI 49048-2321 (US/Can): 800.427.6260
Phone: 269.343.1675, Fax: 269.382.8266 E-mail: service@hapman.com

2.0 Safety Instructions

⚠ CAUTION

All Hapman furnished equipment must be installed, operated and maintained in accordance with service instructions. Failure to follow these instructions may result in serious personal injury or property damage.

2.1 Once the pneumatic conveyor (sometimes referred to as the MiniVac™) has been properly positioned in the desired location, it must be securely fastened (anchored) to approved structural supporting beams or equipment before connecting the electric and air utilities.

2.2 Installation, operation and maintenance of electrical machinery must be performed only by qualified, trained and experienced personnel. Make sure that the motor and conveyor body is effectively grounded in accordance with OSHA safety and health standards, the National Electric Code and local codes.

2.3 Avoid physical contact in and around the pneumatically operated discharge gate because it can cause injury to the operator when it closes. The gate can severely pinch fingers and hands when it is activated.

2.4 Likewise, when a rotary valve is used for controlled discharge of product, it too can present a significant “pinch-point” hazard.

2.5 Keep clothing, hair, hands and other body parts away from the rotary valve and receiving pickup wand when the unit is operational.

2.6 Do not manually override or electrically bypass any protective device.

2.7 Periodically inspect the bolts and welds of the frame to ensure their continued integrity and tightness.

⚠ WARNING

2.8 Do not attempt to open, work on, clean, service, remove any protective cover, guard, or maintenance panel on the pneumatic conveyor until the **POWER IS TURNED OFF AND LOCKED OUT.**

2.9 Use extreme care and caution when handling combustible dusts, powders, and vapors because such conditions can introduce a potential fire/explosive hazard which may be caused by sparks (electrical, electrostatic, metal against metal) in the filter receiver or transport pipe.

Pneumatic filter receivers do not contain extinguishing or suppression equipment.

Should combustible dusts or explosive vapors be introduced to the conveyed material, consult NFPA (National Fire Prevention Association) guideline for recommended explosion relief (vent) devices and/or fire extinguishing equipment. Hapman conveyor equipment hoppers, filter/receivers and dust collectors do not contain explosion relief vents, except on special order.

2.10 Any equipment which is used in the processing or transporting of explosive materials in hazardous environments requires an evaluation on the part of the user and operator or proper and adequate equipment enclosures. Do not use your equipment in hazardous environments unless it has been properly equipped for the hazard.

2.11 Protective gloves, breathing masks, and other protective clothing required for the material being conveyed must be worn when using the pickup wand and when changing the cartridge filter to prevent over exposure to the material.

2.12 It is ultimately the operator's responsibility to implement the above-listed precautions and ensure proper use of the equipment. Keep these instructions and list of warnings with your machines at all times. **WORK SAFELY AT ALL TIMES**.

3.0 General Description and Installation

Designed for in-plant handling of most dry solids and powders, Hapman Mini-Vacuum conveyors deliver high performance, ultra-compact size, and cost effectiveness. Operating under negative pressure, or "vacuum"; material is drawn directly into the conveying line by airflow via pick up nozzle or hopper. Product loss and dusting is minimal as accidental leakage is drawn inward, providing maximum safety in handling toxic products.

The Hapman Mini-Vacuum system is particularly adaptable to providing material pick up from single or multiple hoppers, or open containers and delivering to one discharge point. Material laden air is transported through the line by induced air flow created by a positive-displacement blower or regenerative centrifugal fan. Material/air separation and discharge is accomplished by Hapman's compact receiver unit. The Hapman receiver provides highly-efficient final filtration through application of cartridge-type filtration technology.

Available in both standard and custom arrangements, each Hapman pneumatic conveyor system is designed for your specific application. The success of your conveyor installation will be dependent on understanding the operation of each component and its operation.

Please review the following guidelines when installing your pneumatic conveyor system. In addition, carefully review specific construction drawings that have been prepared by Hapman engineers for your applications.

TYPICAL SYSTEM COMPONENTS
Figure 7

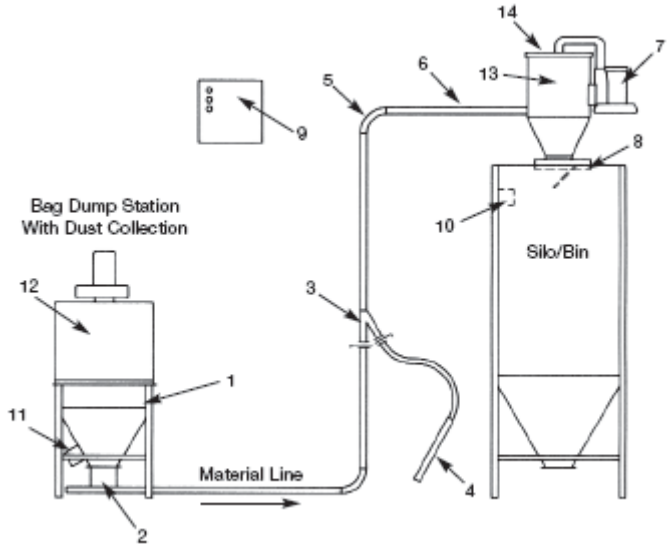

1. Air Intake
2. Self-Feeding Material Intake
3. Y Branch
4. Pick-Up Wand
5. Elbow
6. Transport Pipe
7. Regenerative Blower
8. Discharge Gate
9. Control Panel
10. High Level Sensor-Silo
11. Low Level Probe-Material Inlet
12. Bag Dump Station
13. Filter Receiver
14. Receiver Lid

4.0 Hapman Pneumatic Conveyor Equipment

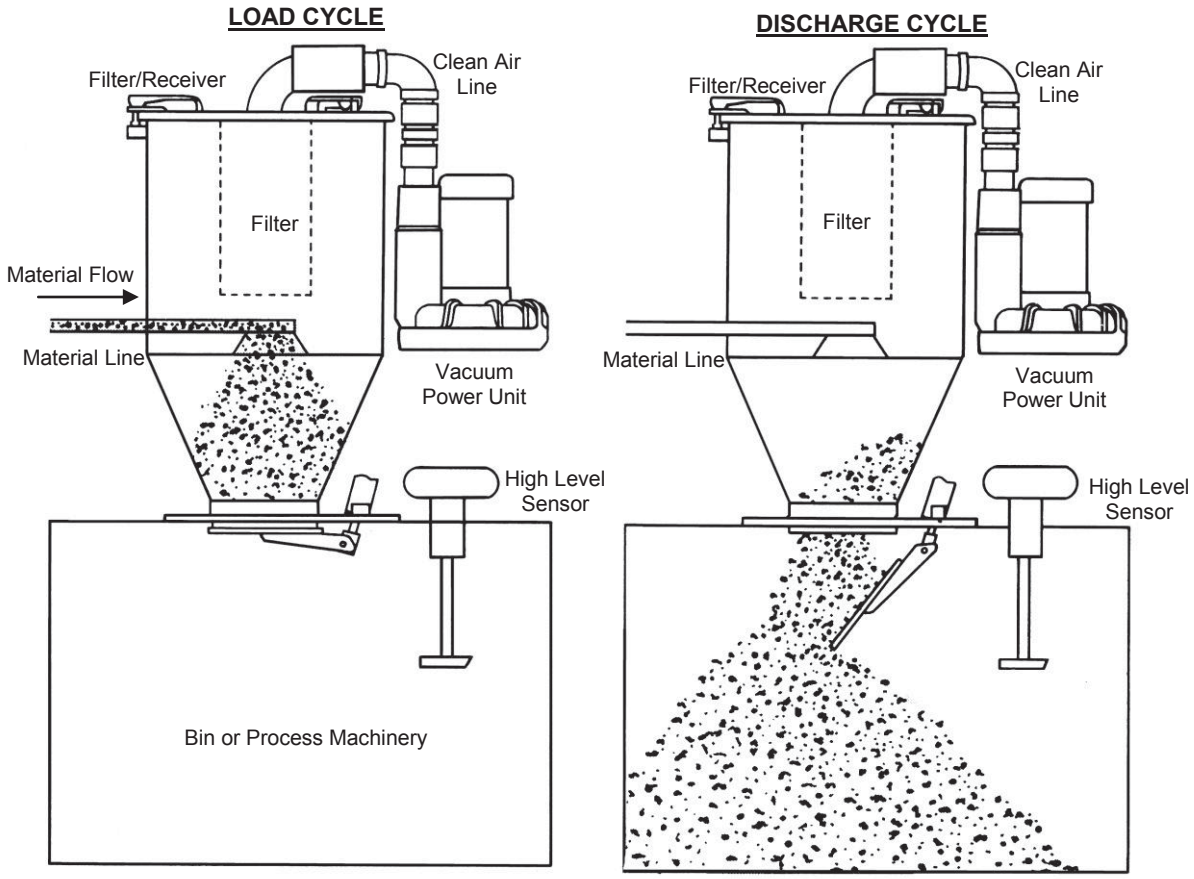

Hapman's miniature filter receiver units provide efficient separation and collection of air-borne solids that have been introduced into the conveying system. The air/material mixture enters the receiver plenum chamber and immediately begins to decelerate. Larger particles quickly fall from the air stream and collect in the receiver. Smaller particles remain entrained in the air flow, migrating upward and collecting on the filter media. The filtered air passes up through the receiver "lid" and continues to the vacuum blower inlet.

Collected dust begins to densify on the filter membrane. A solid state timer periodically energizes a solenoid operated air valve resulting in a burst of compressed air directed into the inside of the cartridge filter. The compressed air expands inside the filter and provides a momentary reverse air flow across the filter membrane. This dislodges the collected dust which falls into the receiver. The filter is now clean and resumes collecting dust from the conveying air stream.

NOTE: The filter cartridge, when reversed pulsed, may contain a significant amount of the material being conveyed. This material accumulates within the filter pleats and on end-caps. It is normal for the cartridge to look "dirty" as the material buildup densifies. This buildup of densified conveyed material actually aids in the air/material separation. The Hapman MiniVac™ receiver includes a side access door for filter access and ease of cleaning. See Major Features Index on Page 4.

Note: When preparing to clean the filter receiver, use extreme care when removing the filter from the filter receiver. Do not rest the filter cartridge on the edge of the receiver housing. The cartridge's delicate filter membrane will be damaged by the exposed receiver housing edge.

4.1 Major Components of Filter/Receiver Unit Include:

Discharge Gate

Standard filter receivers are equipped with a cylinder operated "dump" gate to periodically empty the filter plenum of collected material.

During normal operation, the discharge gate is in the closed position, sealing the receiver chamber. Once closed, a vacuum develops inside the receiver causing the material/air to flow through the transport line. At the beginning of the cycle, a solid state timer (located in the operators control station) energizes. This timer is adjustable; however, the factory setting is 4 seconds.

When the timer de-energizes, two events simultaneously occur. First, the vacuum breaker valve (located on blower inlet) opens and relieves the vacuum from the receiver chamber. In the absence of vacuum, material ceases to flow through the transport line. Next, the discharge gate is signaled to open allowing collected material to discharge from the receiver. After 4 seconds, the discharge gate is signaled to close and prepare for the next conveying cycle. The vacuum breaker valve is held open by a delay timer for a short time period to allow the dump gate to fully close. When the delay timer de-energizes, the vacuum breaker valve is closed and the convey cycle is repeated.

Solenoid Cabinet (Dump Gate model only)

The discharge gate and vacuum breaker valve are cylinder operated and controlled via electrically operated solenoids (110VAC). These solenoids, as well as the filter cleaning pilot solenoid, are mounted and wired inside a NEMA 4 enclosure mounted to the filter/receiver housing. Field wiring and compressed air connections are furnished for ease of installation.

NOTE: Solenoids are equipped with flow control fittings to control the Speed of the cylinder operated discharge gate.

Rotary Discharge Valve

An optional rotary discharge valve may be installed in lieu of a cylinder operated dump valve. This effectively increases the net conveyor capacity by eliminating the delay period necessary for dump gate discharge. The application of a rotary valve is usually limited to fine, free-flowing materials.

The rotary discharge valve provides an airlock seal between the interior of the filter/receiver chamber (under vacuum) and the discharge chute or hopper vessel (ambient pressure).

Rotary valves are normally supplied with 1/2 HP gear motor arrangement including shear-pin overload.

5.0 Material Feed Devices

5.1 Flooded Well Inlet

The Hapman flooded well inlet provides a controllable means of introducing most free-flowing solids into the conveying air stream. The inlet is attached to the discharge of material supply hoppers and can be fitted with a cylinder or manually operated shut-off gate to allow several feed points to be arranged on a single vacuum conveyor line.

Figure 11

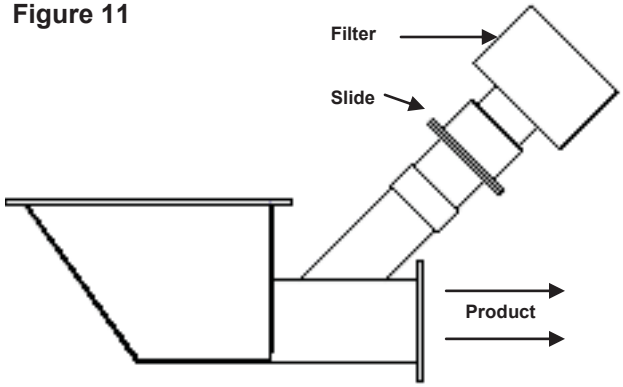

Its design directs material to the bottom of the pneumatic conveyor line where it is swept away by the conveying air stream. Volumetric feeding is achieved by the natural angle of repose of the material. Adjustable flow rates are achieved by a movable slide. See Figure 11.

5.2 Rotary Inlet Valve (Figure 12)

Rotary valves are often utilized to provide more positive feed control into pneumatic conveyors. This type of valve more readily controls fluid material and prevents surging or flooding the conveyor line. See Figure 12.

5.3 Manual Pickup Wand (Figure 13)

Material can be unloaded from open containers using a hand-held pick-up lance or wand. The wand is constructed of concentric steel tubes which maintain infeed air flow when the wand top is buried deep into the material container. The wand can be adjusted to provide optimum material-to-air ratios to increase or decrease conveying rates as required. See Figure 13.

Figure 12
ROTARY INLET VALVE

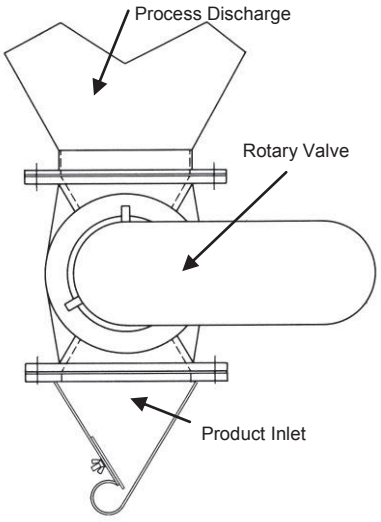

Figure 13
PICKUP WAND

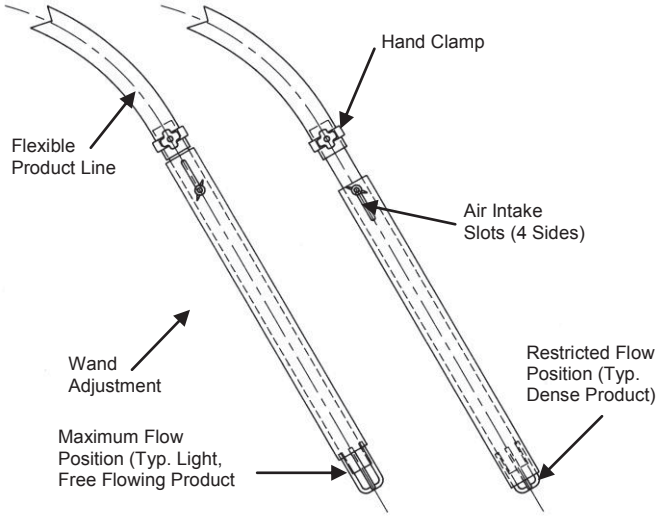

6.0 Blower Packages

6.1 Regenerative

The regenerative blower utilizes a motor driven impeller that draws in air from the inlet port and then by centrifugal force, accelerates the air out through the discharge.

The regenerative blower works in principle by utilizing an annular shaped housing that turns air back to the base of the following blades where it is again hurled outward. Each regeneration imparts additional pressure to the air until it reaches the discharge where air is then diverted out of the blower.

Each blower is assembled as an integral part of the pneumatic receiver. A quick disconnect-cam/lever type coupling is furnished on the blower inlet. This coupling allows the vacuum line-top cover assembly to be easily removed for inspection of the filter cartridge. See Figure 14.

Figure 14

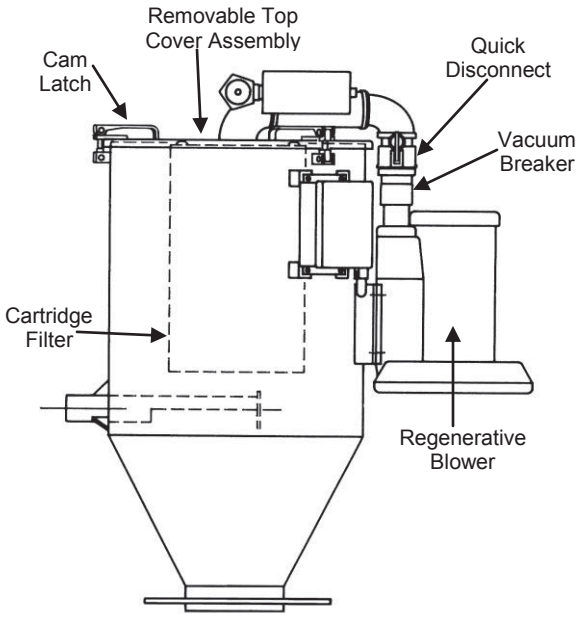

NOTE: Blower motor must be wired for clockwise rotation and should be verified before running the unit.

6.2 Positive Displacement

A positive displacement system utilizes a rotary blower that is either belt driven or direct coupled to the drive motor. The blower has two impellers rotating in opposite directions. As each impeller lobe passes the blower inlet, air is trapped and routed around the case and to the blower outlet.

Positive displacement blower systems are normally furnished with inlet and discharge silencers and a foam lined enclosure that will effectively dampen the noise level. A spring loaded vacuum relief valve is furnished in the clean air-vacuum line. The relief valve is factory set at a predetermined value.

The blower system may also be furnished with an auxiliary air inlet valve (manual ball valve). This valve can be used to bleed air into the clean air side of the receiver thus reducing both vacuum and system capacity.

A positive displacement blower system is normally located remote from the pneumatic receiver. Clean air-vacuum piping is furnished either in random lengths or cut to length as dictated by job requirements. A quick disconnect cam/lever type coupling is furnished at the filter receiver-top cover assembly. This coupling allows the vacuum line-top cover to be easily removed for inspection of the filter cartridge. See Figure 16.

Figure 16
POSITIVE DISPLACEMENT SYSTEM

1. Inlet Silencer
2. Auxiliary Air Inlet Valve
3. Vacuum Relief Valve
4. Positive Displacement Blower
5. Discharge Silencer
6. Drive Motor
7. V-Belt

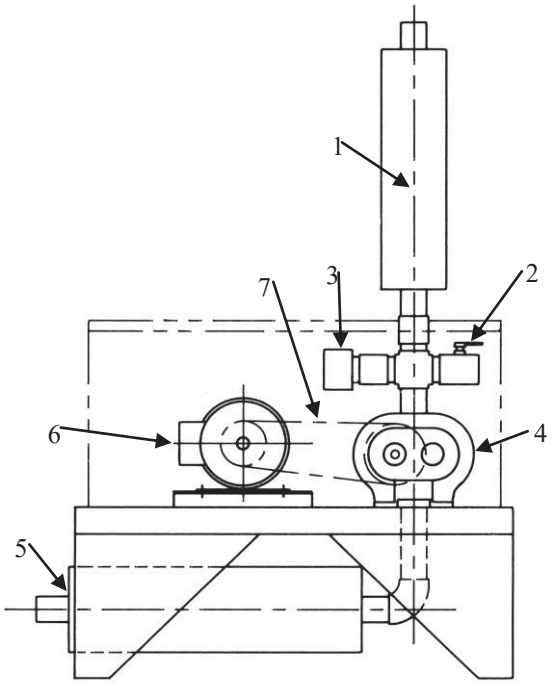

7.0 Electronic Control Systems (Figure 17)

Inlet Rotary Timer:
Delays the starting of the inlet rotary valve after the pneumatic conveyor has started.
Typical setting = 5 seconds

Conveyor Delay Timer:
Delays the starting of the conveyor if a rotary valve is located on the discharge
Typical setting = 3 Seconds

Fill Timer:
When a dump gate is purchased this timer is used to set the fill time in between dumps.
Typical setting = 30 seconds

Dump Timer:
When a dump gate is purchased this timer is used to set the dump duration time.
Typical setting = 4 seconds

Vacuum Break Timer:
Used to set the amount of time the vacuum is vented to atmosphere.
Typical setting is 2 seconds longer then dump timer setting.

Pulse#1 on Timer:
Sets the duration of time an air pulse is delivered to clean filter#1.
Typical setting = 0.5 seconds

Pulse#1 off Timer:
Sets the amount of off time between each pulse for filter#1.
Typical setting = 30 seconds

Pulse#2 on Timer:
Sets the duration of time an air pulse is delivered to clean filter#2.
Typical setting = 0.5 seconds

Pulse#2 off Timer:
Sets the amount of off time between each pulse for filter#2.
Typical setting = 30 seconds

Pulse#3 on Timer:
Sets the duration of time an air pulse is delivered to clean filter#3.
Typical setting = 0.5 seconds

Pulse#3 off Timer:
Sets the amount of off time between each pulse for filter#3.
Typical setting = 30 seconds

Pulse#4 on Timer:
Sets the duration of time an air pulse is delivered to clean filter#4.
Typical setting = 0.5 seconds

Pulse#4 off Timer:
Sets the amount of off time between each pulse for filter#4.
Typical setting = 30 seconds

High level discharge Timer:
This timer is used when there is a high level sensor located at the discharge and when product falls below the high level this timer will start and once expired will restart the pneumatic conveyor
Typical setting = varies per receiver.

Discharge off delay Timer:
When a discharge rotary valve is purchased this timer is used to set the amount of time the discharge rotary valve continues to run after the pneumatic conveyor shuts off allowing the receiver to be emptied
Typical setting = 5 seconds

Clean out Timer:
When a dump gate is purchased this timer is used to clean out the pneumatic conveyors pipes in between dumping the product. This timer is only needed when there is long vertical drops.
Typical setting = 5 seconds.

Note:
Depending on options purchased only some of these 1imers will be visible when shipped to the end user.

How to enter values into a Timer:
When the auto mode is showing press right arrow to first Timer then press the 0 key until desired digit then enter correct value. If there is a Timer that you do not want to adjust then just press the enter key then the right arrow.

Isolate and lock power source prior to inspecting control panel wiring. Inspect control panel wiring for tightness

FIGURE 17
PNEUMATIC RECEIVER PLC FLOW DIAGRAM

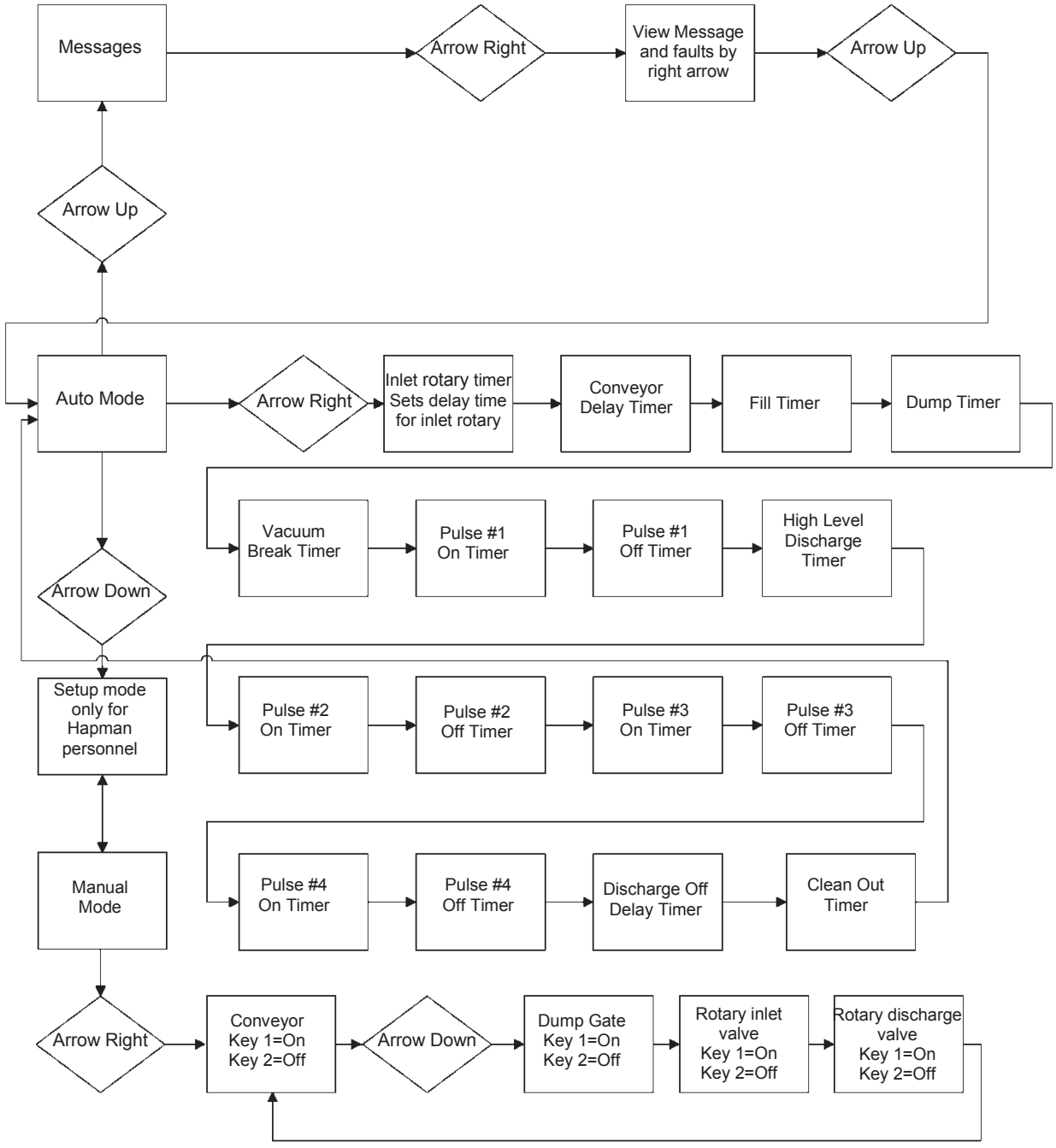

8.0 Installation Instructions

8.1 Refer to Hapman general arrangement drawings when installing air-handling piping. The material handling capacity of your conveyor system has been calculated based upon a pre-determined number of straight lengths and bends of piping. Deviations or additions to the layout may impact the performance and capacity of the conveyor system. Piping runs should be kept in a horizontal and vertical axis at all times. Avoid sloped routing (upward or downward).

8.2 Inspect your equipment for loosening and breakage that may occur during shipment.
a. Inspect compressed air connections on the filter/receiver for tightness.
b. Check the tightness of the cartridge filter in the filter/receiver chamber.

8.3 Compressed air requirements:
a. Install 1/2" (minimum) air supply line to filter/receiver unit.
b. Compressed air should be 60-80 PSI; the filter/receiver will consume 2-3 SCFM of air (per unit maximum).

NOTE: Install regulator should plant air exceed 90 PSI.

c. Compressed air should be free from water, oil and solids. Oil will eventually plug the filter media and solids may cause solenoid malfunctions.

NOTE: Install a mist eliminator if the plant air quality is poor.

d. If pneumatic conveyor is installed outdoors or in unheated areas, the compressed air must be dried to appropriate dew point to prevent air lines from freezing.

8.4 Control System:

Isolate and lock power source prior to inspecting control panel wiring. Inspect control panel wiring for tightness. Verify timer settings (see illustrations for correct settings), and reinsert timers and relays that may have loosened during shipment.

8.5 Motor-Driven Devices: Check for correct rotation as indicated by the "rotation" arrow on housings of vacuum blower, fan or rotary valve.

8.6 Re-inspect conveyor piping for tightness, rigidly and leaks. Be sure that all piping connections have static grounding straps correctly installed.

8.7 Adjust, if necessary, flow control valves controlling speed of cylinder operated discharge gate. Gate should not slam open or closed.

8.8 Check lubrication levels, motor driven devices such as gearboxes and positive displacement blowers. Follow suggested lubrication inspection and replenishment according to manufacturer's instructions.

9.0 General Maintenance

An air conveying system that has been properly engineered, checked out, and adjusted for start-up is subject to little trouble. A regular maintenance schedule will help prevent malfunctions.

9.1 Weekly

1. Inspect blower discharge air for presence of dust, indicating filter failure.
2. Inspect compressed air line filter/oil separators for accumulation of oil, water and debris.
3. Check for smooth operation of air operated devices such as slide gates, discharge gates and vacuum breakers.

9.2 Monthly

1. Remove receiver lid and inspect for cartridge filter wear and excessive product buildup on filter media.
   Remove excess product buildup as necessary.
2. Check lubrication levels of positive displacement blower and gear boxes.
   Consult Appendix for further lubrication information.
3. Inspect conveyor piping for leaks and wear.
4. Energize pulse timer circuit (with blower off) and observe operation of the filter cleaning mechanism.

10.0 Replacement Parts for Receiver with Rotary Discharge Valve

When calling or writing for replacement parts, please reference the equipment serial number embossed on the Hapman nameplate affixed to equipment. See back of this manual for phone number and address of Hapman Service.

Hapman Filter Receivers – Rotary Discharge Valve Model "R"					
Item No.	Description	Model			
		16R/20R/24R	30R	36R	42R
1	Blower Assembly	1	1	1	1
2	Filter Cartridge	1	2	3	4
3	Pulse Air Valve	1	2	3	4
4	Rotary Valve	1	1	1	1
5	Solenoid NC 2-Way (Pulse)	1	2	3	4

NOTE: For Replacement Parts and Service for the Filter Receiver Discharge Gate See Page 18

Figure 27
PARTS DIAGRAM FILTER RECEIVER WITH ROTARY DISCHARGE VALVE

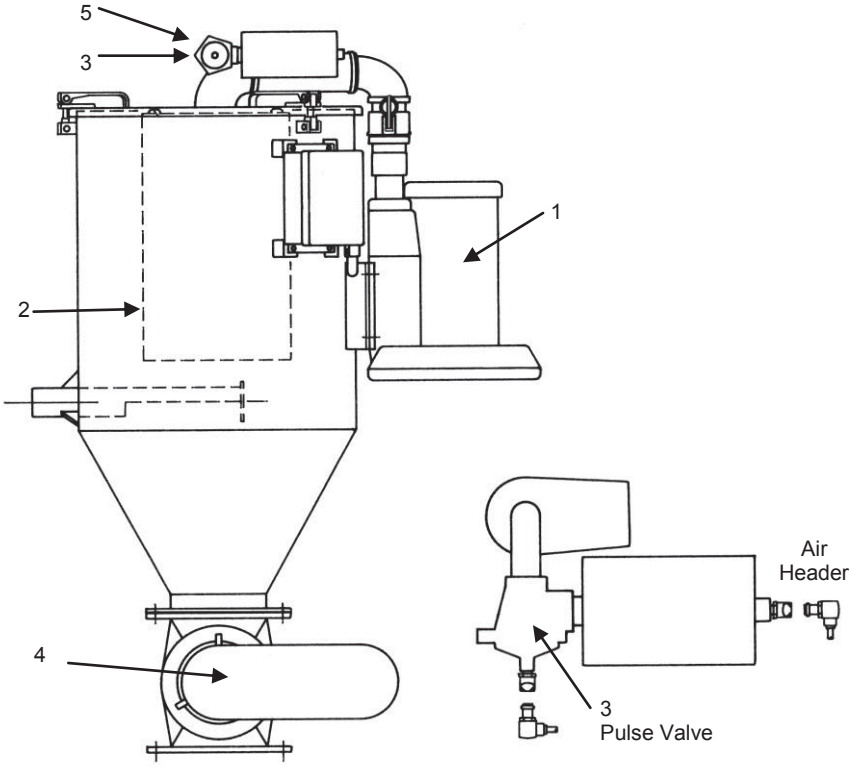

Replacem

When calling or writing for replacement parts, please reference the equipment serial number embossed on the Hapman nameplate affixed to equipment. See back of this manual for phone number and address of Hapman Service.

Hapman Filter Receivers –Discharge Gate Model "D"					
Item No.	Description	Model			
		16D / 20D / 24D	30D	36D	42D
1	Blower Assembly	1	1	1	1
2	Filter Cartridge	1	2	3	4
3	Pulse Air Valve	1	2	3	4
4	Discharge Gate Cylinder	1	1	1	1
5	Vacuum Breaker Cylinder	1	1	1	1
6	Solenoid NC 3-Way (Dump gate, vacuum break)	3	3	3	3
7	Solenoid NC 2-Way (Pulse)	1	2	3	4
8	Discharge Gate	1	1	1	1

Note:
For Replacement Parts and Service for the Filter Receiver Rotary Discharge Valve See Page 17

Figure 28 - PARTS DIAGRAM FILTER RECEIVER WITH DISCHARGE GATE

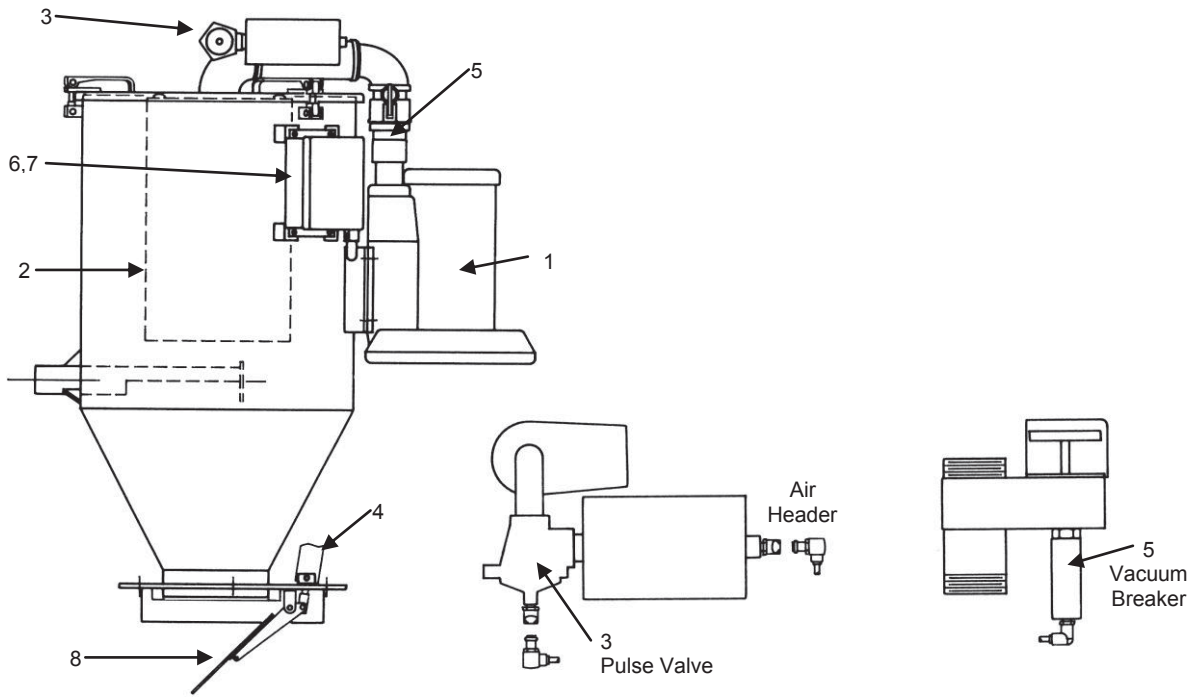

Record of Important Information for This Machine

Serial Number_____

Model Number_____

For Operational Information in This Plant Contact

Name_____

Department / Phone Number_____

Notes

_____

_____

_____

_____

_____

_____

_____

_____

_____

_____

HAPMAN

5944 East N Avenue • Kalamazoo, MI 49048

800-427-6260 • Ph: 269-343-1675 • Fax 269-349-2477 • www.hapman.com

This page is intentionally left blank

Spencer® Vortex® Regenerative Blowers

Serial No: _____

Model No: _____

Installation, Operation and Maintenance Instructions

VB-007

VB-055

Important

Read and become familiar with this manual prior to uncrating and installing your Spencer Vortex Blower. Following the instructions detailed here will help you realize its full potential of efficient service and extended lifespan. Damage resulting from failure to follow correct procedure will void the warranty.

Contents

I. General Page
Scope 2
Limited Warranty 2
Safety Precautions 2

II. Installation
Locating, Mounting, Connecting 2
Wiring 3

III. Operation
Limits of Operation 4-5
Temperature Rise 5

IV. Disassembly and Reassembly
General 5
Disassembly Procedure 5
Reassembly Cautions 5
Locknut Torque 6

V. Vortex Blower Data
Assembly Diagrams 6-17
Parts Lists 6-17
Performance Curves 6-17

VI. Troubleshooting Guide 18

I. General

Scope
Information contained in this manual relates to Vortex Blowers standard and explosion-proof motor models VB-001S, VB-001, VB-002S, VB-002, VB-003S, VB-003, VB-004S, VB-004, VB-007S, VB-007, VB-019S, VB-019, VB-030S, VB-030, VB-037S, VB-037,VB-055, VB-075, and VB-110.

Limited Warranty
We warrant that this product will be free from defects in material and workmanship for a period of 18 months from date of shipment or 12 months from date of startup, whichever comes first. Within the warranty period, we shall repair or replace F.O.B. our Factory such products that are determined by us to be defective.

This warranty will not apply to any product which has been subjected to misuse, negligence, or accident, or misapplied or improperly installed. This warranty will not apply to any product which has been disassembled, repaired, or otherwise altered by any persons not authorized by the Spencer Vortex Service Department.

On units which include thermal protection, the thermal protection must be connected as recommended.

The guarantee of the motor and control manufacturers will govern the extent of our guarantee on such equipment. Warranty work on motors and controls must be authorized by Spencer and must be performed in an authorized shop as designated by the manufacturers.

The Spencer Turbine Company reserves the right to invoice all expenses incurred when repairs are made in the field at the specific request of the customer.

No assemblies or parts of assemblies will be accepted for repair or replacement under this warranty without prior authorization by The Spencer Turbine Company. For complete warranty information, obtain Spencer's Form 706, "Terms and Conditions of Sales."

Safety Precautions
Power sources, protective devices, and grounding provisions must be in accordance with wiring instructions provided in this manual.

Blower becomes hot during operation and may cause burns if touched.

Do not operate the blower under load conditions which exceed the rated full-load amps on the nameplate.

Do not install the blower in any area which may have an explosive atmosphere or which may contain flammable gases or liquids. Always provide proper ventilation. Do not install in any area which may subject the blower to corrosive liquids. Excessive moisture may cause electrical failure; install the blower in areas free from water or rain. Do not operate blower without motor cooling fan cover, or without impeller end cover.

Before installing blowers with explosion-proof motors, the buyer must check federal, state and local codes to see if such motors are appropriate for the intended application environment. It is the buyer's responsibility to determine the suitability of any product for a particular purpose.

Storage
If machine is to be stored for an extended period of time, it must be carefully protected from dampness and dirt.

II. Installation

Locating, Mounting, Connecting
Ambient temperature at the installed location should not be less than -5˚ F or greater than 104˚ F. Relative humidity should not exceed 80%.

Mount the blower in a horizontal or vertical position as shown in Figure 1. For models VB-055, VB-075 and VB-110, it is recommended to mount in the horizontal position only. Check with factory *prior* to mounting these models vertically.

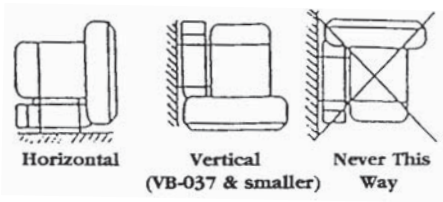

Fig. 1 Mounting Positions

Remove protective coverings, such as vinyl tape or plastic plugs, from the inlet and outlet ports. For models VB-004 and larger, attach to system piping using threaded connection as provided. Avoid excessive stress caused by pipe connector tightening or by misaligned pipe on the inlet and outlet ports. Support piping by brackets or other means. Models VB-001, VB-002 and

VB-003 are supplied with a patented (U.S. Patent 5,791,870) reversible flange with threaded pipe or tubing connections.

In the event the blower is located where dust, fibers, drops of water, or other particulates may be in the airstream, use a filter on the suction side of the piping. If foreign matter enters the impeller, it may clog, jam, or otherwise impair the blower performance.

Wiring

Caution: Confirm that the power source is the same as that indicated on the unit's nameplate. Application of incorrect voltage or improper phase connection may cause motor failure or other damage.

Use conductors and devices (such as the circuit breakers, starters, and switches shown in Figure 3) that are suitable for the applications shown in Tables 1 and 2 and are in compliance with the National Electric Code and applicable local codes and regulations. Motor terminal connections are shown below Table 1.

Provide protection from overheating of the motor windings. Some models are equipped with built-in thermal protectors (see Table 1). Where applicable, connect the leads from the pilot-duty thermal protector to the magnetic starter as shown in Fig. 3.

Check the direction of rotation of the blower.
To reverse the direction or rotation:

1) **for a single-phase motor, interchange motor leads 5 and 8.**
2) **for a three-phase motor, interchange any two of the three line connections.**

Caution: Install a properly-sized overload device and disconnect in accordance with local codes and regulations and dedicated only to the Vortex Blower.

Furnish the Vortex Blower and all associated electrical devices with a proper ground in accordance with all local codes and regulations.

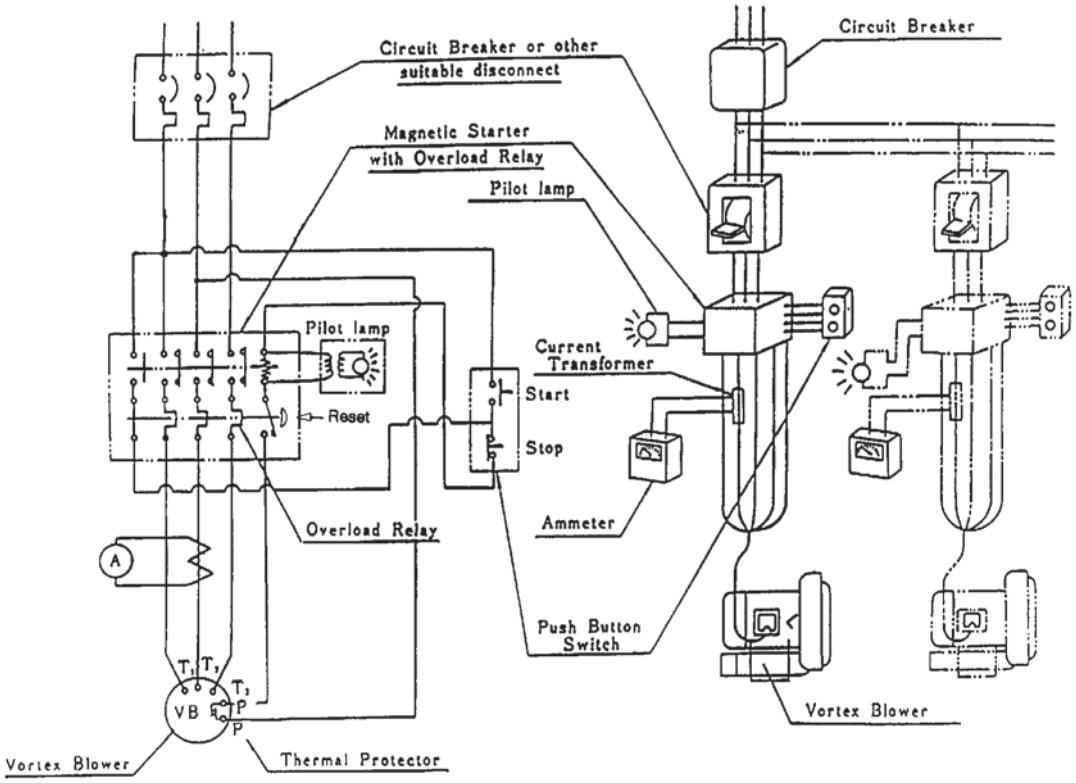

Fig. 3 Typical Wiring Diagram

Table 1 Three-Phase Motor Data - Typical Values

60 Hertz Operation						
Model No.	**VB-001**	**VB-002**	**VB-003**	**VB-004**	**VB-007**	**VB-019**
Power (hp)	0.13	0.25	0.5	0.75	1	2.5
Voltage (V)	200-230/460	200-230/460	208-230/460	200-230/460	200-230/460	200-230/460
FL Amp (A)	.5-.48/.24	.86-.73/.37	1.8-1.6/.8	2.3-2.4/1.2	2.7-2.8/1.4	7.2-6.6/3.3
Voltage (V)		575	575	575	575	575
FL Amp (A)		.4	0.8	0.96	1.4	2.1
Model No.	**VB-030**	**VB-037**	**VB-055**	**VB-075**	**VB-110**	—
Power (hp)	4	5	7.5	10	15	—
Voltage (V)	200-230/460	200-230/460	200-230/460	200-230/460	200-230/460	—
FL Amp (A)	10.6-10.2/5.1	13.2-12/6	19.8-17.2/8.6	27.5-27.2/13.6	39-37/18.5	—
Voltage (V)	575	575	575	575	575	—
FL Amp (A)	3	4.8	7	9.6	13.5	—
50 Hertz Operation						
Model No.	**VB-001**	**VB-002**	**VB-003**	**VB-004**	**VB-007**	**VB-019**
Power (hp)	0.13	0.21	0.5	0.63	.83	2.1
Voltage (V)	190-220/380-415	190-220/380-415	190/380-415	190/380-415	190/380-415	190/380-415
FL Amp (A)	.5-.52/.25-.26	.74-.66/.37-.34	2/1-.9	2.4/1.2-1.3	2.8/1.4-1.5	6.6/3.3-3.1
Model No.	**VB-030**	**VB-037**	**VB-055**	**VB-075**	**VB-110**	—
Power (hp)	3.4	4.2	6.25	8.33	12.5	—
Voltage (V)	190/380-415	190/380-415	190/380-415	190/380-415	190/380-415	—
FL Amp (A)	10.2/5.2-5.1	11.8/5.9-5.6	17.6/8.8-8.2	27/13.5-14.5	36/18-17	—

NOTE: Thermostats are provided on the VB-004 and larger models.

MOTOR WIRING

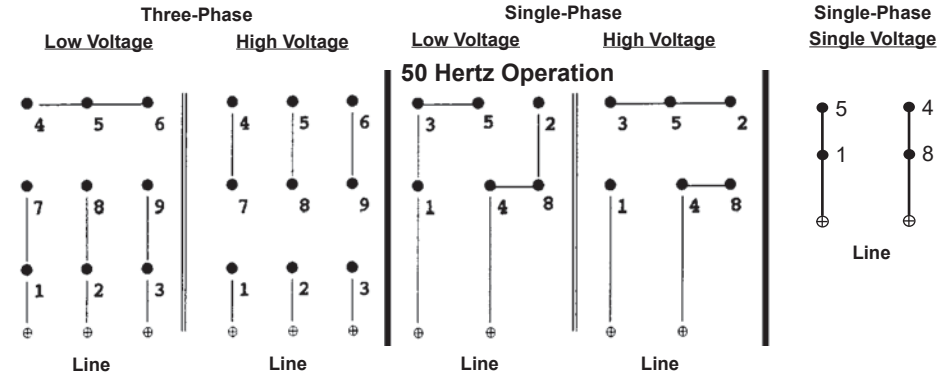

NOTES: (1) For three-phase, interchange any two line connections to reverse shaft rotation
(2) For single-phase, interchange motor leads 5 and 8 to reverse shaft rotation

THERMOSTATS VB-004 AND LARGER

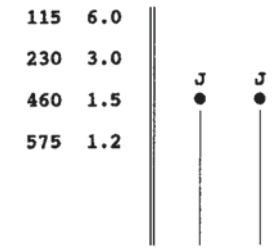

Table 2 Single-Phase Motor Data - Typical Values

60 Hertz Operation								
Model No.	**VB-001S**	**VB-002S**	**VB-003S**	**VB-004S**	**VB-007S**	**VB-019S**	**VB-030S**	**VB-037S**
Power (hp)	0.13	0.25	0.5	0.75	1	2.5	4	5
Voltage (V)	115/230	115/230	115/230	115/208-230	115/208-230	115/208-230	115/208-230	230
FL Amps (A)	1.25/.63	2.3/1.15	5.2/2.6	9.6/5-4.8	12.4/6.5-6.2	22/11.5-11	34.8/18.5-17.4	20.8
Model No.	**VB-001S**	**VB-002S**	**VB-003S**	**VB-004S**	**VB-007S**	**VB-019S**	**VB-030S**	**VB-037S**
Power (hp)	0.13	0.21	0.5	0.63	1	2.1	3.3	4.2
Voltage (V)	110/220	110/220	110/220	100-110/220	100-110/220	100-110/220	100-110/220	220
FL Amps (A)	1.34/.67	2.1/1.05	5.6/2.8	9.9-11.6/5.8	12.7-12.4/6.2	22-21/10.5	42-38.6/19.3	19

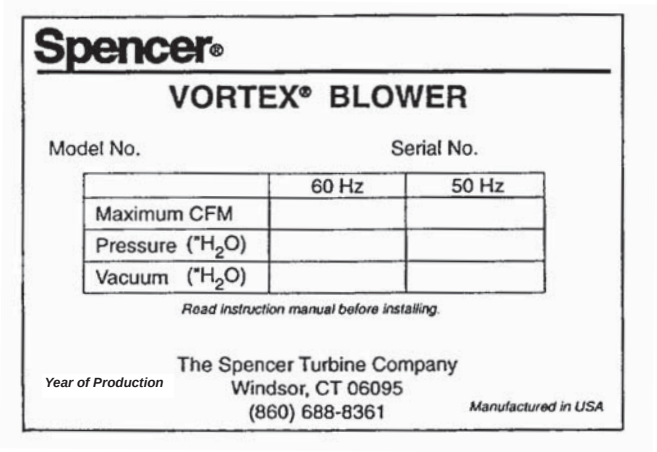

Fig. 4 Typical Nameplate

III. Operation

Limits of Operation

Operation at flows less than those indicated by the solid line on the applicable performance curve will cause overheating of the unit and is to be avoided. Throttling suction or discharge piping to reduce air volume increases differential pressure resulting in elevated temperature and increased power consumption. Use of pressure and/or vacuum relief valve recommended.

Maximum pressure and vacuum are indicated on the nameplate (see Fig. 4). These represent conditions at which the minimum allowable airflow (CFM) occurs. Check the operating pressure or vacuum to assure that the pressure or vacuum remains less than maximum.

For continuous operation at low air volume (on the dotted portion of the performance curve), provide a bypass in the piping and operate at a lower pressure than maximum operating pressure. See Performance Curves, Section V.

Caution: Low flow conditions may produce heat levels which may cause burns. Do not touch the blower in operation.

Temperature Rise

A NEMA Class F insulation system is used in the motor. Maximum allowable winding temperature is 265˚F. If a thermal protector or thermal relay activates because the temperature rise of the motor is higher than usual, investigate and correct the problem. Explosion-proof motors use a NEMA Class B insulation. Typical causes of motor overheating are given in Section VI, Troubleshooting Guide.

IV. Disassembly and Reassembly

A. General

1. Precautions should be taken when disassembling or reassembling the blower. See Warranty Terms.
2. Keep all parts clean.
3. Do not overtighten bolts and screws.

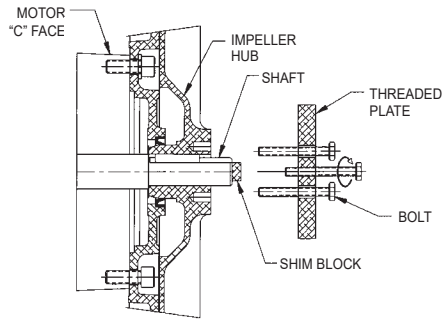

Fig. 5 Impeller Puller

B. Disassembly Procedure (Reassembly is performed in reverse order)

Caution: Shims are used to adjust the gap between the impeller and casing. When disassembling, take care to note the quantity of shims and their thickness. The shim stack replacement must be the correct thickness to assure proper clearance and to avoid degradation of performance.

1. Remove impeller cover; remove screws, pull cover away from case.
2. Unfasten lock washer; remove nut and washer.
3. Remove impeller from shaft by one of the following methods:
   a. manually pull the impeller outward, OR
   b. screw two bolts into tapped holes and pull on the bolts, OR (if the fit is tight)
   c. use a puller assembly (not furnished) as shown in Fig. 5.
4. Remove motor shaft key.
5. Remove case from motor; if necessary remove screws holding case to base and motor to case.
6. Remove shims from motor shaft if necessary; do not discard them. See Note above.

Caution: Motors are heavy. Lift motor on models larger than VB002 by the eyebolt on the motor with an aid from a lifting device.

C. Reassembly Guidance

1. The gap between the impeller and case is essential for proper performance of the unit. The shims between the shaft collar and impeller hub establish the spacing of this gap. In reassembly, before installing the impeller cover, check the gap between the impeller and case to assure that the measurement conforms to the gap specification on the assembly drawing (on the following pages) for your unit.

2. For models VB001, VB002 and VB003, gap clearance between impeller and unibody case should be checked around entire periphery of the impeller in accordance with Item 18, impeller to case gap specification prior to securing impeller.

3 On models VB004 thru VB110 remove Item 23 Plug located on bottom of the case and check impeller gap with a feeler gauge. Remove impeller and adjust shims to meet gap specification. With adjustments and gap check complete, replace plug tightly to prevent air leakage.

4. Fasten impellers using lockwashers and locknuts. Torgue locknut to recommended torque values in Table 3. Bend a lockwasher tab down into a lockwasher slot.

5. Reattach the impeller cover.

Catalog No.	Recommended Torque (Ft-Lb)
VB001, VB001S, VB002 VB002S, VB003, VB003S	22
VB004, VB004S	31
VB007, VB007S	36
VB019, VB019S	36
VB030, VB030S	44
VB037, VB037S	44
VB055	77
VB075	90
VB110	90

Table 3 Locknut Torque

V. Vortex Blower Data

Pages 7 through 17 present information about the various blower models. This information is important in understanding your blower's performance, in using the blower in the proper operating range, and in ordering parts that might be needed.

A. Assembly Diagrams
At the top of each page is an assembly diagram of the unit. Items are identified by circled numbers around the diagram. Above each diagram is the gap specification.

B. Parts Lists
At the lower left of each diagram is a table giving the item number (shown on the Assembly Diagram), the Part No. for that item and the corresponding part description. In ordering parts, provide the model number, the part number and the description.

C. Performance Curves
At the lower right of each diagram are performance curves for 50Hz and 60Hz operation. The curves present the following information:

The upper line of each curve is pressure performance while the lower line is vacuum performance. The dashed portion at the left end of some of the curves indicates an intermittent-only operating area. See **Operation** Section on page 5.

D. Estimated Acoustical Noise Level at 1.5M, 60Hz

Model	dba
VB001S	62
VB001	61
VB002S	61
VB002	61
VB003S	66
VB003	66
VB004S	63
VB004	63
VB007S	70
VB007	64
VB019S	70
VB019	73
VB030S	71
VB030	73
VB037S	74
VB037	76
VB055	82
VB075	81
VB110	80

Spencer® Vortex® Regenerative Blowers
VB001S, VB001

Assembly Diagram

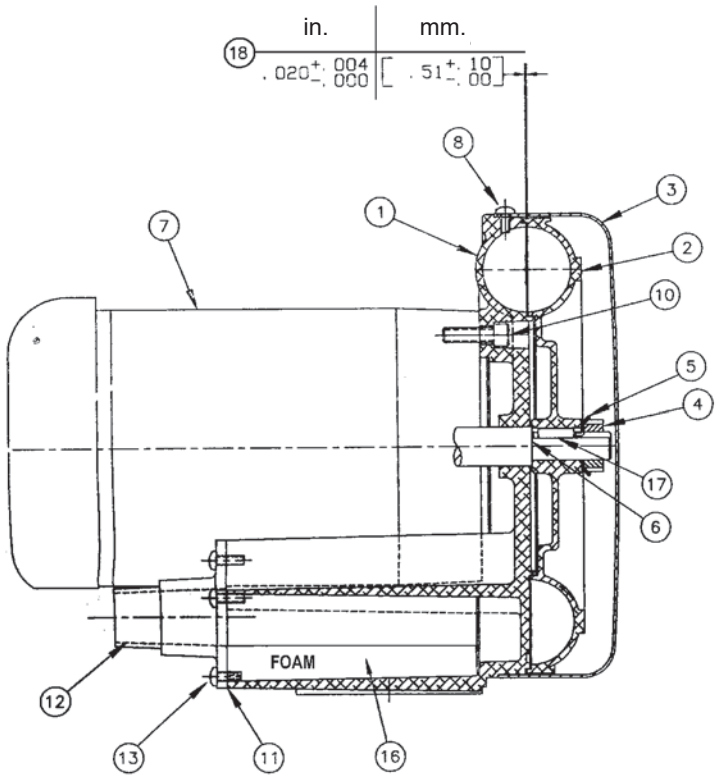

Parts List

DESCRIPTION: VORTEX BLOWER ASSEMBLY – VB001S & VB001			
ITEM	PART NO.	DESCRIPTION	QTY.
1	VBC90101	Case, Unibody	1
2	VBI90101	Impeller	1
3	VBE90101	Cover, Impeller	1
4	NUT90219	Locknut, Shaft	1
5	WSH90184	Lockwasher, Shaft	1
6	WSH90185	Shim, Shaft to Impeller (as required)	1
7	MOT90210	Motor 42C, 1/8 HP, 1PH, 50/60Hz	1
7A	MOT90215	Motor 42C, 1/8 HP, 3PH, 50/60Hz	1
8	SCR90901	M4 x 0.7 Pan Head Phillips Screw x .31 [8] Long	4
10	SCR90307	1/4-20 x .625" Long Socket Cap Screw	4
11	GSK90168	Gasket, Flange	1
12	FLC90013	Flange	1
13	SCR90888	M5 x 0.8 Hex Head Bolt x .63 [16] long	6
16	INS90014	Absorber	2
17	KEY90083	Key	1
18	N/A	Impeller to case gap specification	N/A

VB001S, VB001

Performance Curves

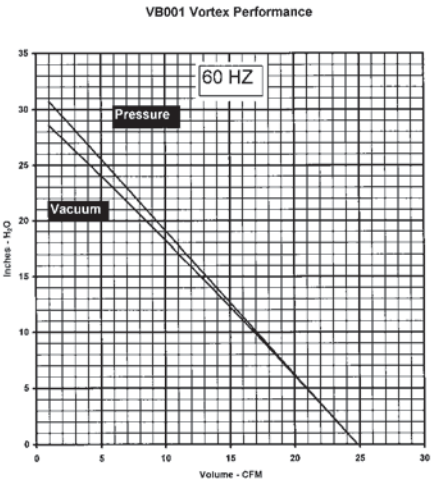

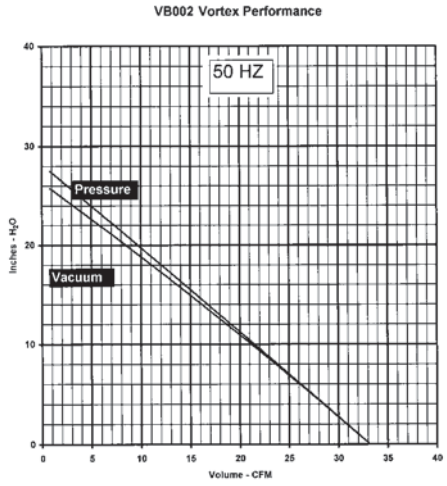

Spencer® Vortex® Regenerative Blowers
VB002S, VB002

Assembly Diagram

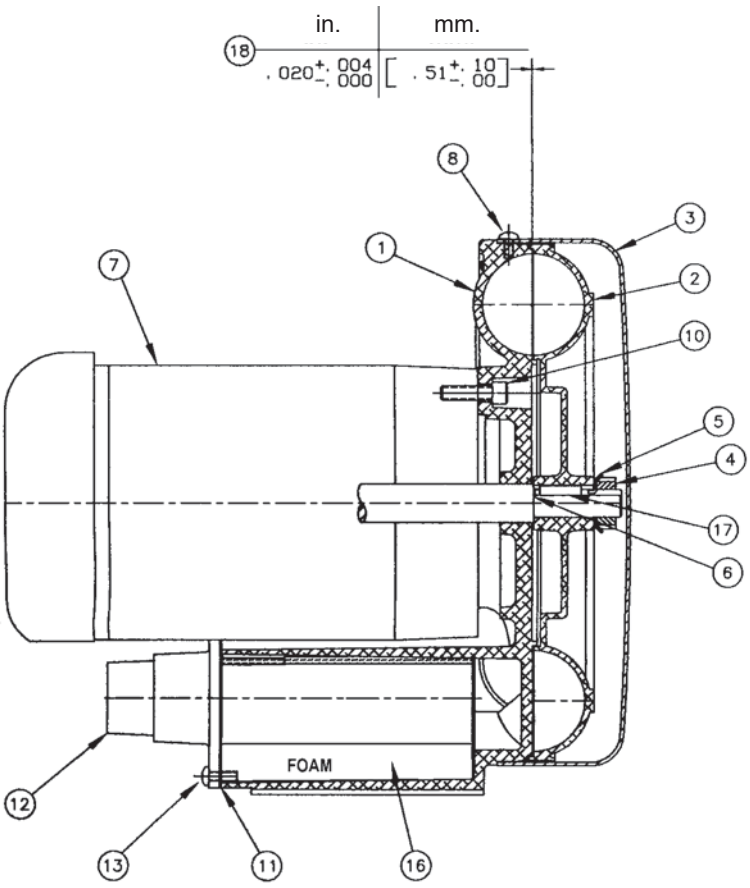

Parts List

DESCRIPTION: VORTEX BLOWER ASSEMBLY – VB002S & VB002			
ITEM	PART NO.	DESCRIPTION	QTY.
1	VBC90201	Case, Unibody	1
2	VBI90201	Impeller	1
3	VBE90201	Cover, Impeller	1
4	NUT90219	Locknut, Shaft	1
5	WSH90184	Lockwasher, Shaft	1
6	WSH90185	Shim, Shaft to Impeller (as required)	1
7	MOT90211	Motor 42C, 1/4 HP, 1PH, 50/60Hz	1
7A	MOT90212	Motor 42C, 1/4 HP, 3PH, 50/60Hz	1
8	SCR90901	M4 x 0.7 Pan Head Phillips Screw x .31 [8] Long	4
10	SCR90307	1/4-20 x .625" Long Socket Cap Screws	4
11	GSK90169	Gasket, Flange	1
12	FLC90014	Flange	1
13	SCR90888	M5 x 0.8 Hex Head Bolt x .63 [16] Long	6
16	INS90015	Absorber	2
17	KEY90085	Key	1
18	N/A	Impeller to case gap specification	N/A

VB002S, VB002

Performance Curves

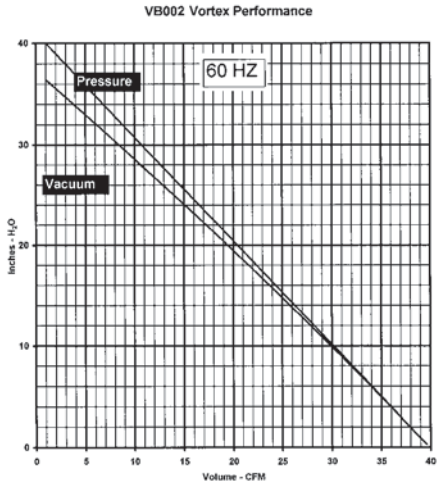

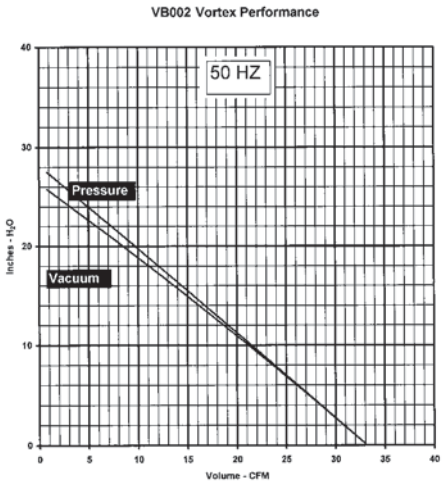

Spencer® Vortex® Regenerative Blowers
VB003S, VB003

Assembly Diagram

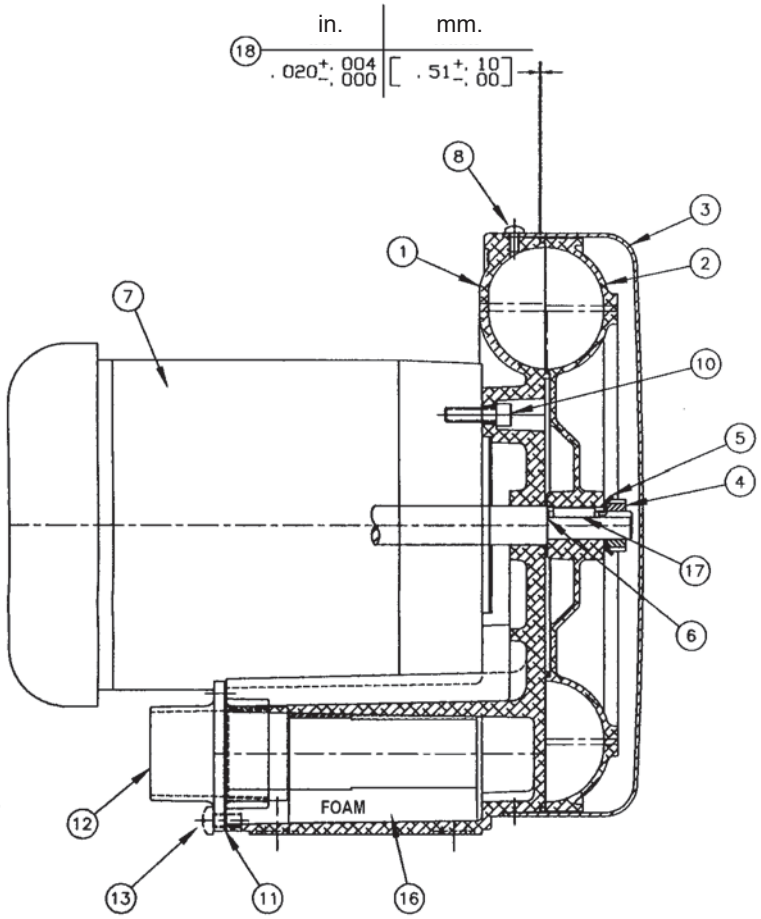

Parts List

DESCRIPTION: VORTEX BLOWER ASSEMBLY – VB003S & VB003			
ITEM	PART NO.	DESCRIPTION	QTY.
1	VBC90301	Case, Unibody	1
2	VBI90301	Impeller	1
3	VBE90301	Cover, Impeller	1
4	NUT90219	Locknut, Shaft	1
5	WSH90184	Lockwasher, Shaft	1
6	WSH90185	Shim, Shaft to Impeller (as required)	1
7	MOT90213	Motor 48C, 1/2 HP, 1PH, 50/60Hz	1
7A	MOT90214	Motor 48C, 1/2 HP, 3PH, 50/60Hz	1
7B	MOT90229	Motor 48C, 1/2 HP, 3PH, 575 Volt, 50/60Hz	1
7C	MOT90470	Motor 48C, 1/2 HP, 3PH, 60Hz	1
7D	MOT90469	Motor 48C, 1/2 HP, 1PH, 60Hz	1
8	SCR90901	M4 x 0.7 Pan Head Phillips Screw x .31 [8] Long	4
10	SCR90307	1/4-20 x .625" Long Socket Cap Screw	4
11	GSK90170	Gasket, Flange	1
12	FLC90015	Flange	1
13	SCR90888	M5 x 0.8 Hex Head Bolt x .63 [16] Long	6
16	INS90016	Absorber	2
17	KEY90085	Key	1
18	N/A	Impeller to case gap specification	N/A

VB003S, VB003

Performance Curves

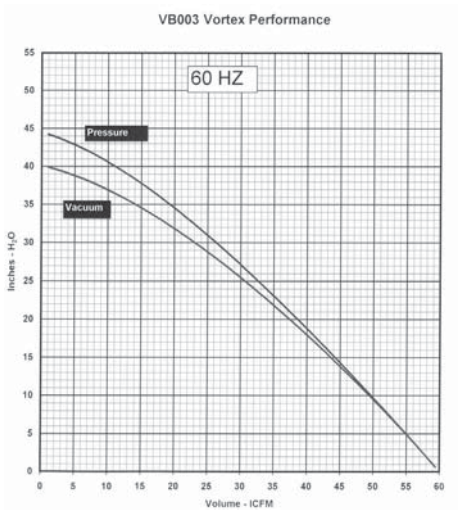

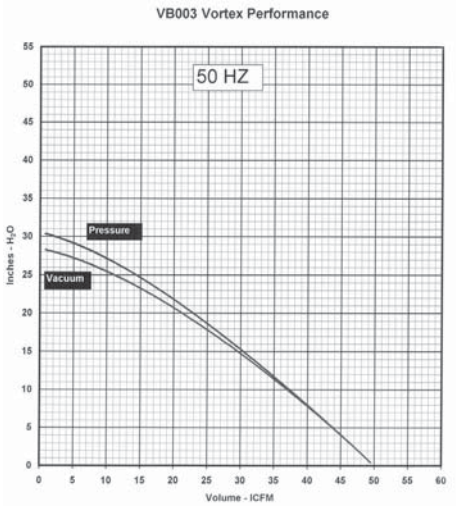

Spencer® Vortex® Regenerative Blowers
VB004S, VB004

Assembly Diagram

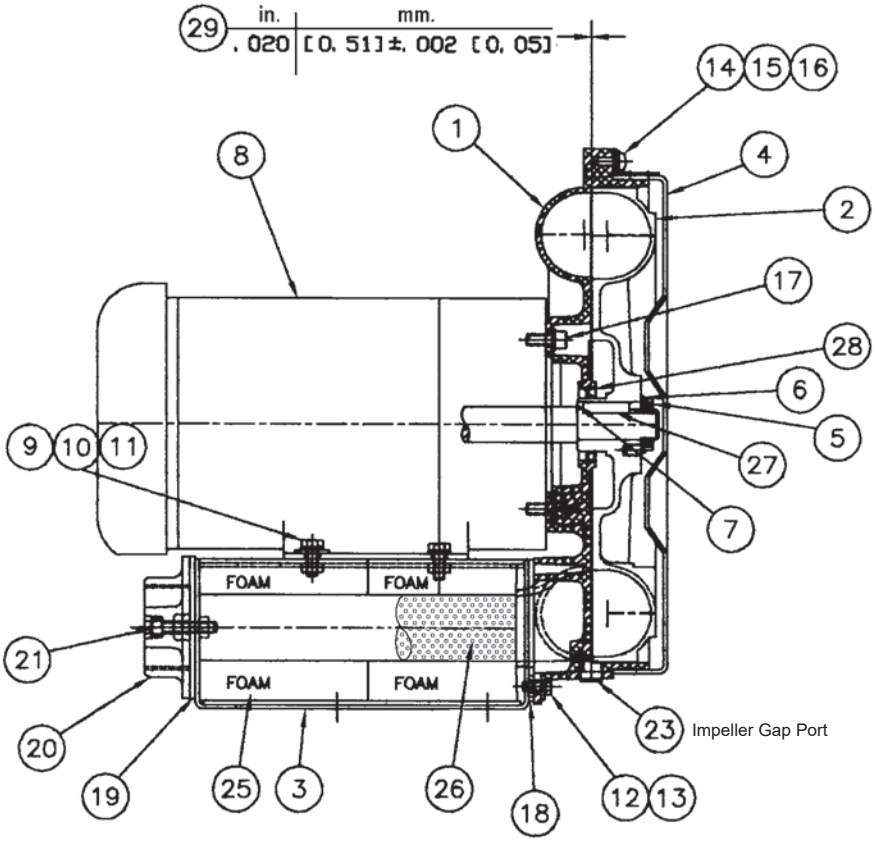

Parts List

DESCRIPTION: VORTEX BLOWER ASSEMBLY – VB004S & VB004			
ITEM	PART NO.	DESCRIPTION	QTY.
1	VBC90401	Case	1
2	VBI90401	Impeller	1
3	VBB90401	Base	1
4	VBE90401	Cover, Impeller	1
5	NUT90212	Locknut, Shaft	1
6	WSH90170	Lockwasher, Shaft	1
7	WSH90177	Shim, Shaft to Impeller (as required)	1
8	MOT90193	Motor 48C, 3/4 HP, 1PH, 50/60Hz	1
8A	MOT90192	Motor 48C, 3/4 HP, 3PH, 50/60Hz	1
8B	MOT90230	Motor 48C, 3/4 HP, 3PH, 575 Volt, 50/60Hz	1
8C	MOT90471	Motor 48C, 3/4 HP, 3PH, 60Hz	1
8D	MOT90472	Motor 48C, 3/4 HP, 1PH, 60Hz	1
9	SCR90887	M6 x 1.0 Hex Head Bolt x .63 [16] Long	4
10	WSH90142	Lock washer, M5	4
11	WSH90166	Flat Washer, M5	4
12	SCR90888	M5 x 0.8 Hex Head Bolt x .63 [16] Long	2
13	WSH90181	Flat Washer, M5	2
14	SCR90877	M5 x 0.8 Pan Head Phillips Screw x .39 [10] Long	4
15	WSH90138	Lockwasher, M5	4
16	WSH90139	Flat Washer, M5	4
17	SCR90307	1/4-20 x .625" Long Socket Cap screw	4
18	GSK90165	Gasket, Case	1
19	GSK90163	Gasket, Flange	2
20	FLC90007	Flange	2
21	SCR90931	M6 x 1.0 S.H.C.S. x .98 [25] Long	4
23	PLG90037	Plug, 1/4 NPT x .43 [11] Long	1
25	INS90017	Absorber	4
26	SCN90065	Screen	2
27	KEY90076	Key	1
28	SEL90108	Lip Seal	1
29	N/A	Impeller to case gap specification	N/A

VB004S, VB004

Performance Curves

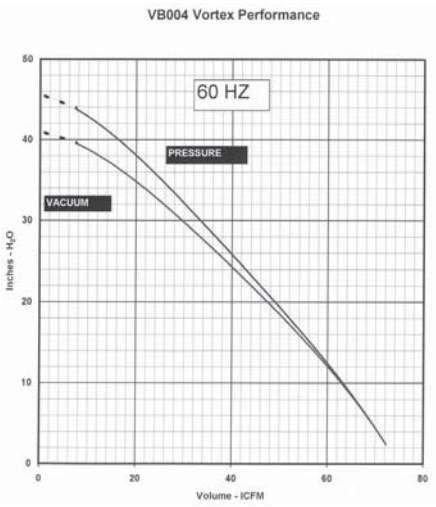

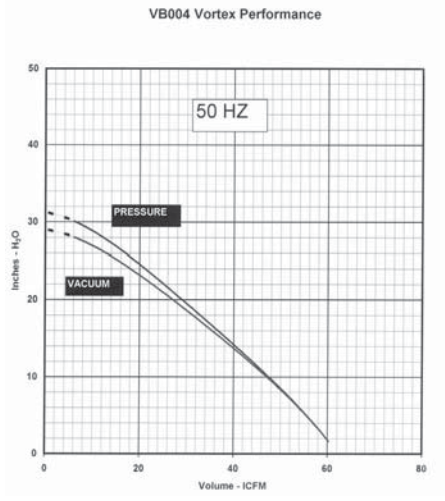

Spencer® Vortex® Regenerative Blowers
VB007S, VB007, VB007SXP, VB007XP

Assembly Diagram

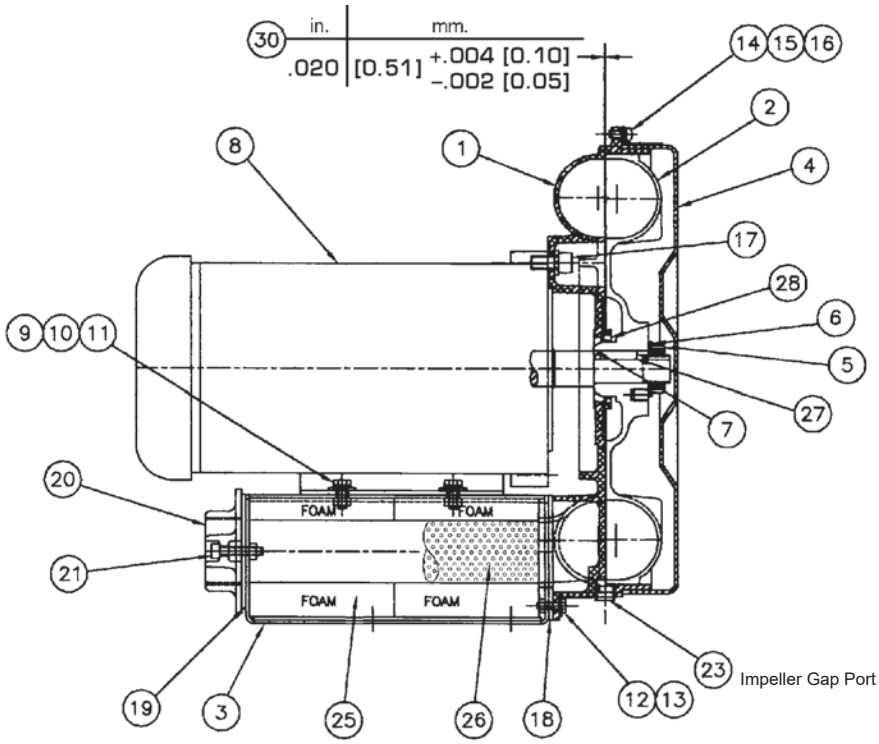

(See Bulletin 417, pages 34 and 35 for specifics on models with explosion-proof motors.)

Parts List

DESCRIPTION: VORTEX BLOWER ASSEMBLY – VB007S, VB007, VB007SXP, VB007XP			
ITEM	PART NO.	DESCRIPTION	QTY.
1	VBC90701	Case	1
2	VBI90701	Impeller	1
3	VBB90701	Base	1
4	VBE90701	Cover, Impeller	1
5	NUT90210	Locknut, Shaft	1
6	WSH90171	Lockwasher, Shaft	1
7	WSH90160	Shim, Shaft to Impeller (as required)	1
8C	MOT90225	Motor, 56C, 1-1/2 HP, 3PH, XP, 50/60Hz	1
8D	MOT90358	Motor, 56C, 1-1/2 HP, 1PH, XP, 50/60Hz	1
8G	MOT90248	Motor, 56C, 1-1/2 HP, 3PH, 50/60Hz	1
8H	MOT90253	Motor, 56C, 1-1/2 HP, 1PH, 50/60Hz	1
8I	MOT90485	Motor, 56C, 1-1/2 HP, 3PH, 60Hz	1
8J	MOT90484	Motor, 56C, 1-1/2 HP, 1PH, 60Hz	1
9	SCR90887	M6 x 1.0 Hex Head Bolt x .63 [16] Long	4
10	WSH90142	Lockwasher, M6	4
11	WSH90166	Flat Washer, M6	4
12	SCR90888	M5 x 0.8 Hex Head Bolt x .63 [16] Long	2
13	WSH90181	Washer, Flat M5	2
14	SCR90877	M5 x 0.8 Pan Head Phillips Screw x .39 [10] Long	4
15	WSH90138	Lockwasher, M5	4
16	WSH90139	Flat Washer, M5	4
17	SCR90867	3/8-16 x .75" Long Socket Cap Screw	4
18	GSK90164	Gasket, Case	1
19	GSK90163	Gasket, Flange	2
20	FLC90008	Flange, 1 1/2 FNPT	2
21	SCR90931	M6 x 1.0 S.H.C.S. x .98 [25] Long	4
23	PLG90037	Plug, 1/4 NPT x .43 [11] Long	1
25	INS90018	Absorber	4
26	SCN90064	Screen	2
27	KEY90076	Key	1
28	SEL90107	Lip Seal	1
30	N/A	Impeller to case gap specification	N/A

VB007S, VB007

Performance Curves

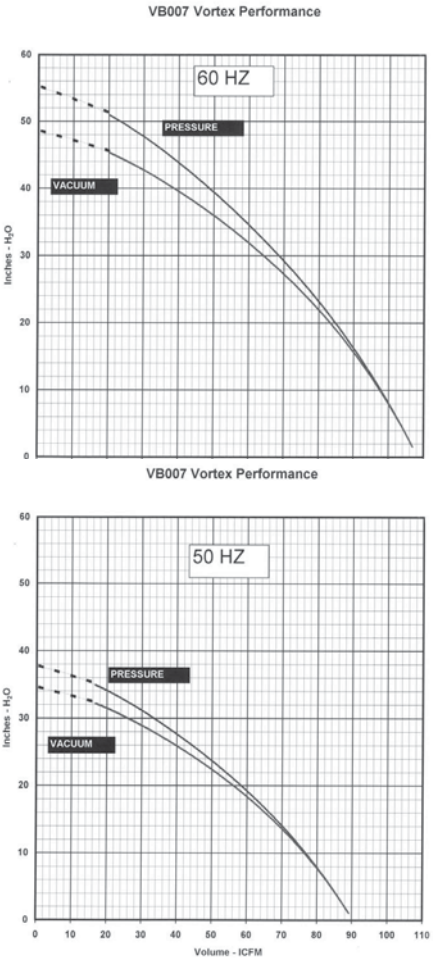

Spencer® Vortex® Regenerative Blowers
VB019S, VB019, VB019SXP, VB019XP

Assembly Diagram

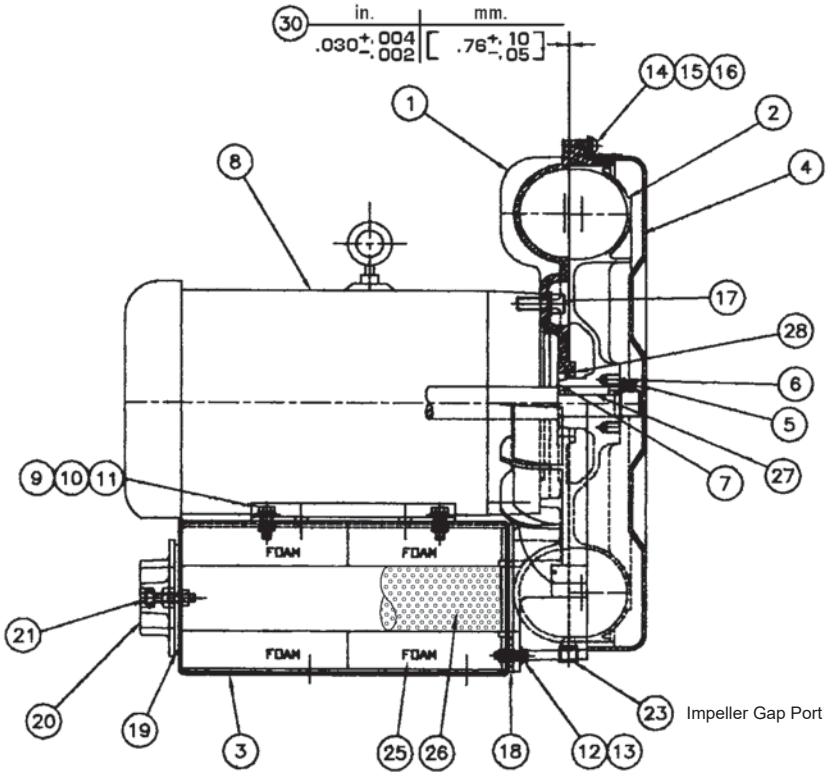

(See Bulletin 417, pages 36 and 37 for specifics on models with explosion-proof motors.)

Parts List

DESCRIPTION: VORTEX BLOWER ASSEMBLY – VB019S, VB019, VB019SXP, VB019XP			
ITEM	PART NO.	DESPCRIPTION	QTY.
1	VBC91901	Case	1
2	VBI91901	Impeller	1
3	VBB91901	Base	1
4	VBE91901	Cover, Impeller	1
5	NUT90210	Locknut, Shaft	1
6	WSH90171	Lockwasher, Shaft	1
7	WSH90160	Shim, Shaft to Impeller (as required)	1
8	MOT90254	Motor, 145TC, 2-1/2 HP, 1PH, 50/60Hz	1
8A	MOT90249	Motor, 145TC, 2-1/2 HP, 3PH, 50/60Hz	1
8B	MOT90347	Motor, 145TC, 2-1/2 HP, 3PH, 575 Volt, 50/60Hz	1
8C	MOT90224	Motor, 145TC, 2-1/2 HP, 3PH, XP, 50/60Hz	1
8D	MOT90359	Motor, 145TC, 2-1/2 HP, 1PH, XP, 50/60Hz	1
8E	MOT90476	Motor, 145TC, 2-1/2 HP, 3PH, 60Hz	1
8F	MOT90475	Motor, 145TC, 2-1/2 HP, 1PH, 60Hz	1
9	SCR90887	M6 x 1.0 Hex Head Bolt x .63 [16] Long	4
9ALT	SCR90876	M6. x 1.0 Hex Head Bolt x .98 [25] Long (Cast Motor)	4
10	WSH90142	Lockwasher, M6	4
11	WSH90166	Flat Washer, M6	4
12	SCR90943	M5 x 0.8 Hex Head Bolt x .79 [20] Long	2
13	WSH90181	Flat Washer, M5	2
14	SCR90877	M5 x 0.8 Pan Head Phillips Screw x .39 [10] Long	4
15	WSH90138	Lockwasher, M5	4
16	WSH90139	Flat Washer, M5	4
17	SCR90867	3/8-16 x .75" Long Socket Cap Screw	4
18	GSK90162	Gasket, Case	1
19	GSK90163	Gasket, Flange	2
20	FLC90008	Flange, 1 1/2 FNPT	2
21	SCR90931	M6 x 1.0 S.H.C.S. x .98 [25] Long	4
23	PLG90037	Plug, 1/4 NPT x .43 [11] Long	1
25	INS90019	Absorber	4
26	SCN90063	Screen	2
27	KEY90077	Key	1
28	SEL90107	Lip Seal	1
30	N/A	Impeller to case gap specification	N/A

VB019S, VB019

Performance Curves

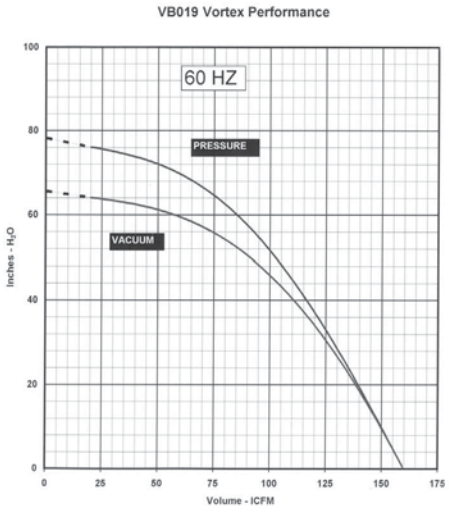

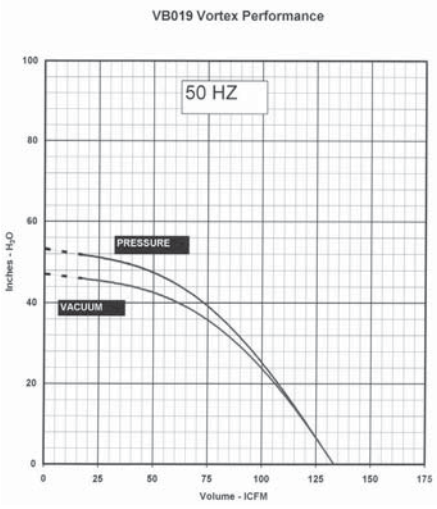

Spencer® Vortex® Regenerative Blowers
VB030S, VB030, VB030XP

Assembly Diagram

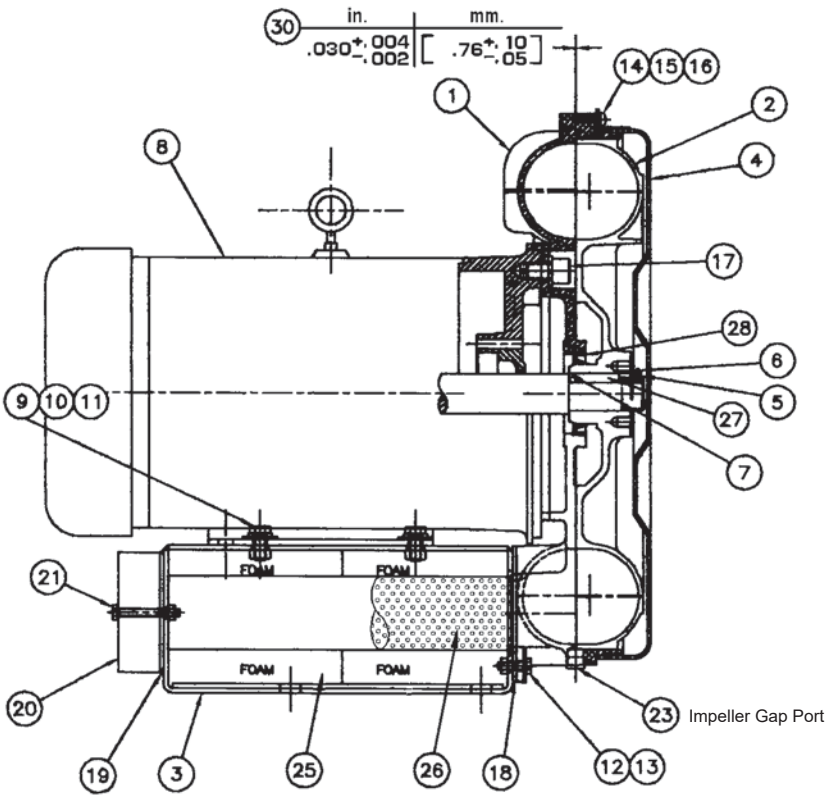

(See Bulletin 417, pages 38 and 39 for specifics on models with explosion-proof motors.)

Parts List

DESCRIPTION: VORTEX BLOWER ASSEMBLY – VB030S, VB030, VB030XP			
ITEM	PART NO.	DESCRIPTION	QTY.
1	VBC93001	Case	1
2	VBI93001	Impeller	1
3	VBB93001	Base	1
4	VBE93001	Cover, Impeller	1
5	NUT90209	Locknut, Shaft	1
6	WSH90172	Lockwasher, Shaft	1
7	WSH90157	Shim, Shaft to Impeller (as required)	1
8	MOT90370	Motor, 184TC, 4 HP, 1PH, 50/60Hz	1
8A	MOT90250	Motor, 182TC, 4 HP, 3PH, 50/60Hz	1
8B	MOT90348	Motor, 182TC, 4 HP, 3PH, 575 Volt, 50/60Hz	1
8C	MOT90223	Motor, 182TC, 4 HP, 3PH, XP, 50/60Hz	1
8D	MOT90478	Motor, 182TC, 4 HP, 3PH, 60Hz	1
8E	MOT90477	Motor, 182TC, 4 HP, 1PH, 60Hz	1
9	SCR90879	M8 x 1.25 Hex Head Bolt x .98 [25] Long	4
10	WSH90148	Lockwasher, M8	4
11	WSH90182	Flat Washer, M8	4
12	SCR90876	M6 x 1.0 Hex Head Bolt x .98 [25] Long	2
13	WSH90166	Flat Washer, M6	2
14	SCR90877	M5 x 0.8 Pan Head Phillips Screw x .39 [10] Long	4
15	WSH90138	Lockwasher, M5	4
16	WSH90139	Flat Washer, M5	4
17	SCR90335	1/2 -13 x 1.0 Long Socket Cap Screw	4
18	GSK90161	Gasket, Case	1
19	GSK90155	Gasket, Flange	2
20	FLC90009	Flange, 2 FNPT	2
21	SCR90878	M6 x 1.0 Hex Head Bolt x 1.57 [40] Long	4
23	PLG90037	Plug, 1/4 NPT x .43 [11] Long	1
25	INS90020	Absorber	4
26	SCN90062	Screen	2
27	KEY90078	Key	1
28	SEL90104	Lip Seal	1
30	N/A	Impeller to case gap specification	N/A

VB030S, VB030

Performance Curves

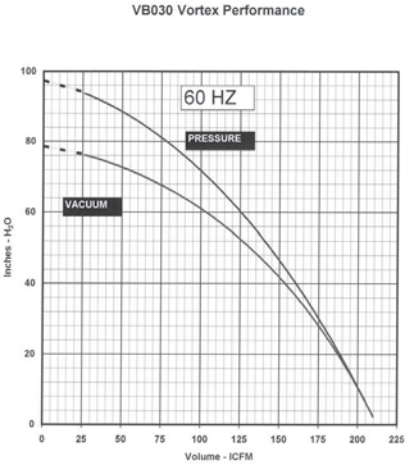

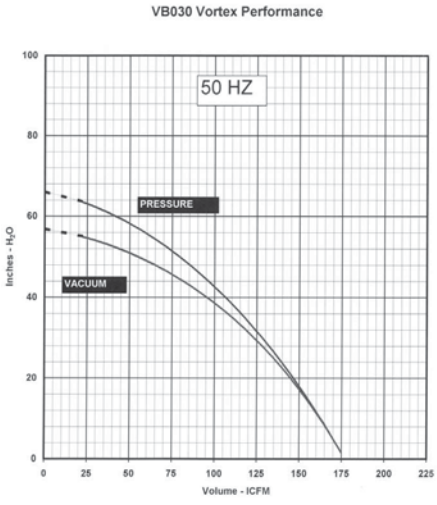

Spencer® Vortex® Regenerative Blowers
VB037S, VB037, VB037XP

Assembly Diagram

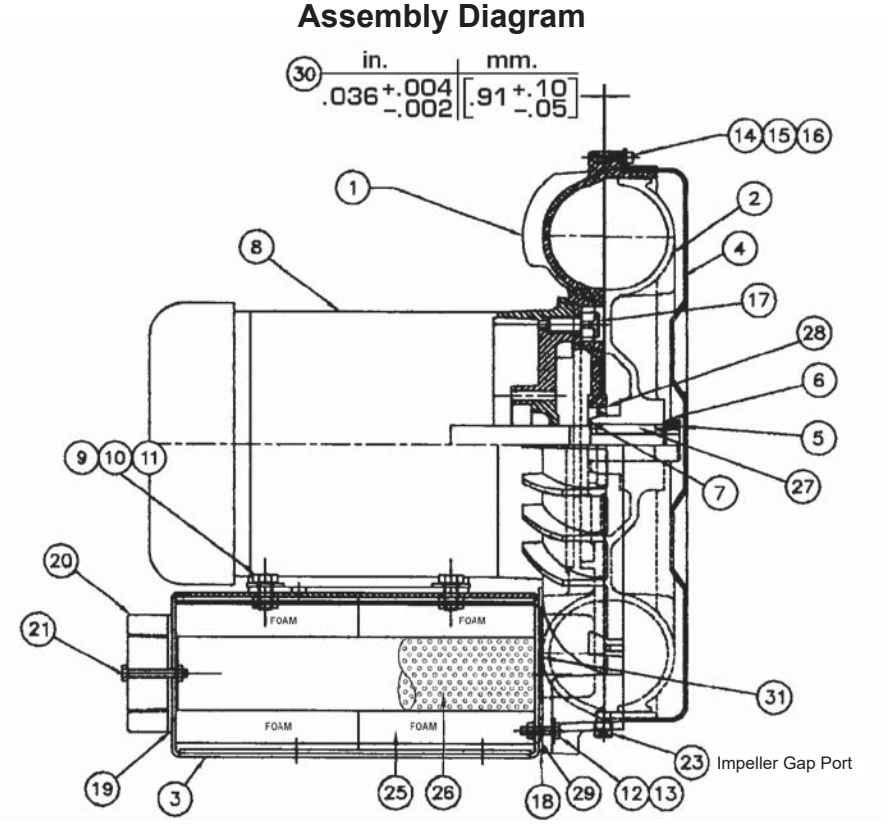

(See Bulletin 417, pages 40 and 41 for specifics on models with explosion-proof motors.)

Parts List

DESCRIPTION: VORTEX BLOWER ASSEMBLY – VB037S, VB037, VB037XP			
ITEM	PART NO.	DESCRIPTION	QTY.
1	VBC93701	Case	1
2	VBI93702	Impeller	1
3	VBB93700	Base	1
4	VBE93701	Cover, Impeller	1
5	NUT90209	Locknut, Shaft	1
6	WSH90172	Lockwasher, Shaft	1
7	WSH90157	Shim, Shaft to Impeller (as required)	1
8	MOT90361	Motor, 184TC, 5 HP, 1PH, 50/60Hz	1
8A	MOT90181	Motor, 184TC, 5 HP, 3PH, 50/60Hz	1
8B	MOT90234	Motor, 184TC, 5 HP, 3PH, 575 Volt, 50/60Hz	1
8C	MOT90222	Motor, 184TC, 5 HP, 3PH, XP, 50/60Hz	1
8D	MOT90480	Motor, 184TC, 5 HP, 3PH, 60Hz	1
8E	MOT90479	Motor, 184TC, 5 HP, 1PH, 60Hz	1
9	SCR90879	M8 x 1.25 Hex Head Bolt x .98 [25] Long	4
10	WSH90148	Lockwash, M8	4
11	WSH90182	Flat Washer, M8	4
12	SCR90878	M6 x 1.0 Hex Head Bolt x 1.57 [40] Long	2
13	WSH90166	Flat Washer, M6	2
14	SCR90877	M5 x 0.8 Pan Head Phillips Screw x .39 [10] Long	4
15	WSH90138	Lockwasher, M5	4
16	WSH90139	Flat Washer, M5	4
17	SCR90335	1/2-13 x 1.0 Long Socket Cap Screw	4
18	GSK90154	Gasket, Case	1
19	GSK90155	Gasket, Flange	2
20	FLC90009	Flange, 2 FNPT	2
21	SCR90878	M6 x 1.0 Hex Head Bolt x 1.57 [40] Long	4
23	PLG90037	Plug, 1/4 NPT x .43 [11] Long	1
25	INS90021	Absorber	4
26	SCN90056	Absorber Screen	2
27	KEY90079	Key	1
28	SEL90104	Lip Seal	1
29	SPR90088	Spacer, Washer (Case to Base)	2
30	N/A	Impeller to case gap specification	N/A
31	PLC90027	Plate, Case	1

VB037S, VB037

Performance Curves

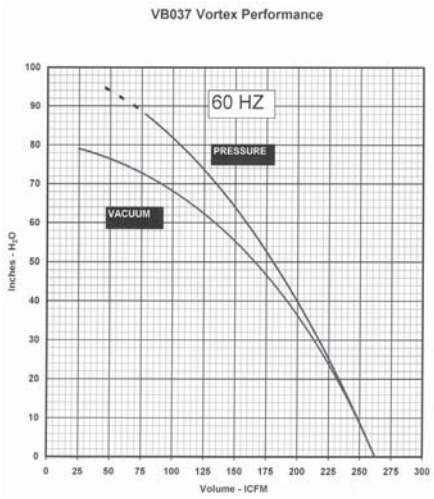

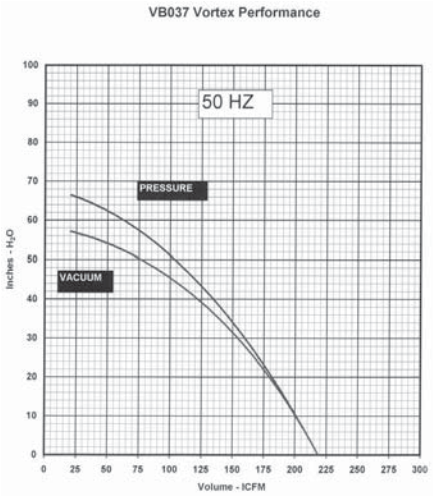

Spencer® Vortex® Regenerative Blowers
VB055, VB055XP

Assembly Diagram

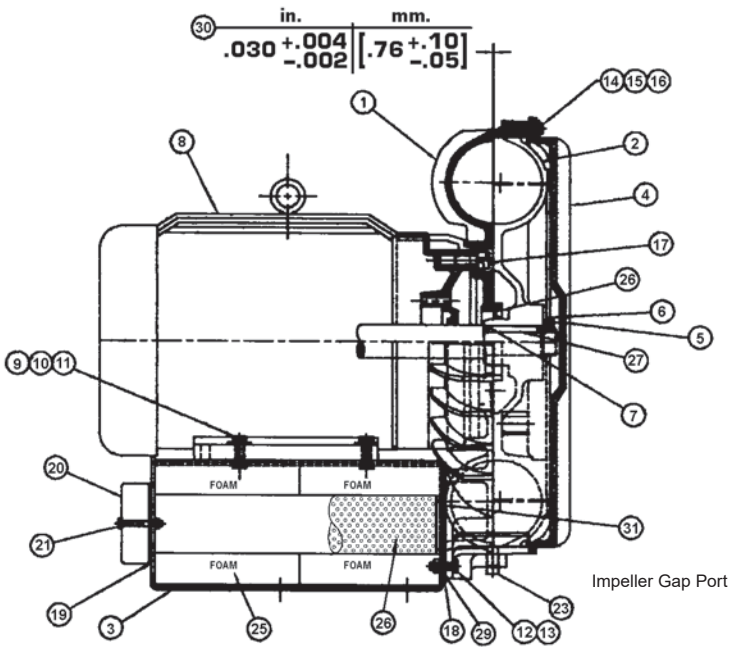

Impeller Gap Port

(See Bulletin 417, pages 42 and 43 for specifics on models with explosion-proof motors.)

Parts List

DESCRIPTION: VORTEX BLOWER ASSEMBLY – VB055, VB055XP			
ITEM	PART NO.	DESCRIPTION	QTY.
1	VBC95501	Case	1
2	VBI95502	Impeller	1
3	VBB95501	Base	1
4	VBE95501	Cover, Impeller	1
5	NUT90211	Locknut, Shaft	1
6	WSH90173	Lockwasher, Shaft	1
7	WSH90154	Shim, Shaft to Impeller (as required)	1
8	MOT90182	Motor, 213TC, 7-1/2 HP, 3PH, 50/60Hz	1
8A	MOT90205	Motor, 213TC, 7-1/2 HP, 3PH, 575 Volt, 50/60Hz	1
8B	MOT90221	Motor, 213TC, 7-1/2 HP, 3PH, XP, 50/60Hz	1
8C	MOT90481	Motor, 213TC, 7-1/2 HP, 3PH, 60Hz	1
9	SCR90881	M8 x 1.25 Hex Head Bolt x 1.18 [30] Long	4
10	WSH90148	Lockwasher, M8	4
11	WSH90182	Flat Washer, M8	4
12	SCR90895	M8 x 1.25 Hex Head Bolt x 1.57 [40] Long	2
13	WSH90182	Flat Washer, M8	2
14	SCR90876	M6 x 1.0 Hex Head Screw x .98 [25] Long	8
15	WSH90143	Lockwasher, M6	8
16	WSH90142	Washer, Flat M6	8
17	SCR90335	1/2-13 x 1.0 Long Socket Cap Screw	4
18	GSK90156	Gasket, Case	1
19	GSK90157	Gasket, Flange	2
20	FLC90010	Flange, 2-1/2 FNPT	2
21	SCR90878	M6 x 1.0 Hex Head Bolt x 1.57 [40] Long	4
23	PLG90037	Plug, 1/4 NPT x .43 [11] Long	1
25	INS90022	Absorber	4
26	SCN90057	Absorber Screen	2
27	KEY90080	Key	1
28	SEL90105	Lip Seal	1
30	N/A	Impeller to case gap specification	N/A
31	PLC90028	Case Plate	1

VB055

Performance Curves

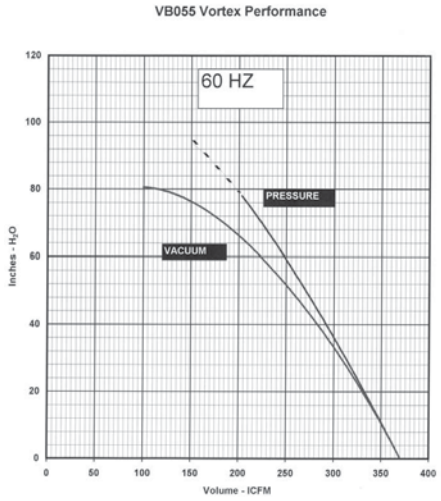

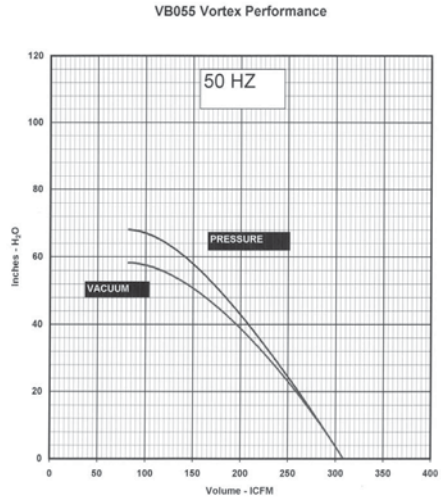

Spencer® Vortex® Regenerative Blowers
VB075, VB075XP

Assembly Diagram

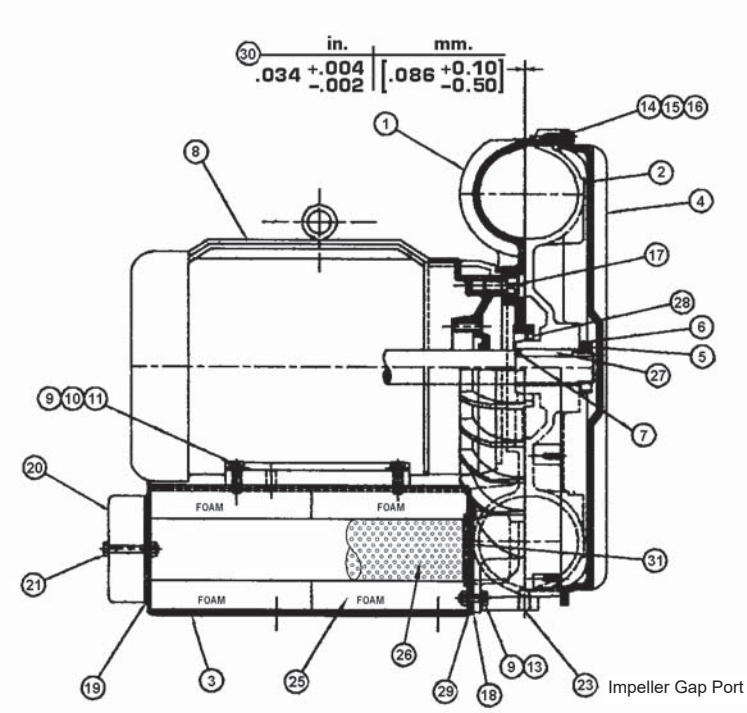

(Contact factory for specifics on models with explosion-proof motor.)

Parts List

DESCRIPTION: VORTEX BLOWER ASSEMBLY – VB075, VB075XP			
ITEM	PART NO.	DESCRIPTION	QTY.
1	VBC97501	Case	1
2	VBI97502	Impeller	1
3	VBB97501	Base	1
4	VBE97501	Cover, Impeller	1
5	NUT90213	Locknut, Shaft	1
6	WSH90174	Lockwasher, Shaft	1
7	WSH90179	Shim, Shaft to Impeller (as required)	1
8	MOT90199	Motor, 215TC, 10 HP, 3PH, 50/60Hz	1
8A	MOT90235	Motor, 215TC, 10 HP, 3PH, 575 Volt, 50/60Hz	1
8B	MOT90220	Motor, 215TC, 10 HP, 3PH, XP, 50/60Hz	1
8C	MOT90482	Motor, 215TC, 10 HP, 3PH, 60Hz	1
9	SCR90881	M8 x 1.25 Hex Head Bolt x 1.18 [30] Long	4
10	WSH90148	Lockwasher, M8	4
11	WSH90182	Flat Washer M8	4
12	SCR90881	M8 x 1.25 Hex Head Bolt x 1.18 [30] Long	2
13	WSH90182	Flat Washer M8	2
14	SCR90876	M6 x 1.0 Hex Head Screw x .98 [25] Long	8
15	WSH90143	Lockwasher, M6	8
16	WSH90142	Flat Washer M6	8
17	SCR90335	1/2-13 x 1.0 Long Socket Cap Screw	4
18	GSK90158	Gasket, Case	1
19	GSK90159	Gasket, Flange	2
20	FLC90011	Flange, 3 FNPT	2
21	SCR90883	M8 x 1.25 Hex Head Bolt x 2.165 [55] Long	4
23	PLG90037	Plug, 1/4 NPT x .43 [11] Long	1
25	INS90023	Absorber	4
26	SCN90058	Absorber Screen	2
27	KEY90081	Key	1
28	SEL90106	Lip Seal	1
29	SPR90089	Spacer, Washer (Case to Base)	2
30	N/A	Impeller to case gap specification	N/A
31	PLC90029	Case Plate	1

VB075

Performance Curves

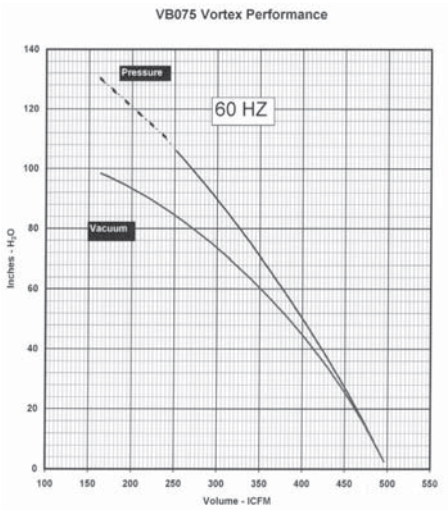

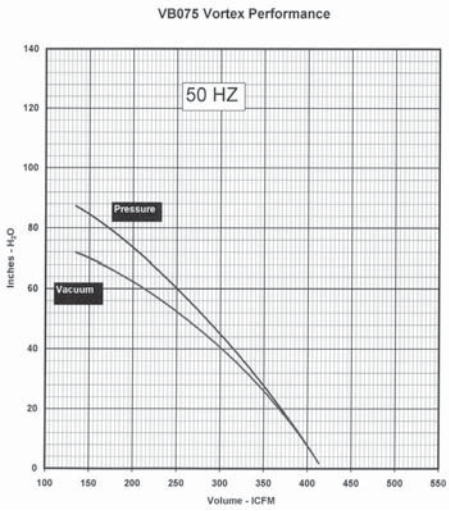

Spencer® Vortex® Regenerative Blowers
VB110, VB110XP

Assembly Diagram

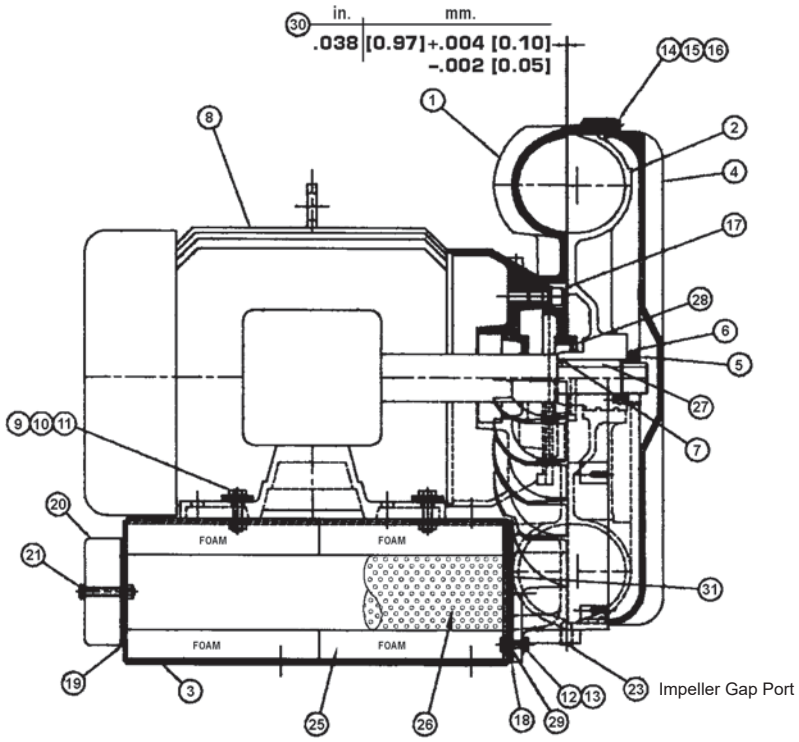

(Contact factory for specifics on models with explosion-proof motor.)

Parts List

DESCRIPTION: VORTEX BLOWER ASSEMBLY – VB110, VB110XP			
ITEM	PART NO.	DESCRIPTION	QTY.
1	VBC91101	Case	1
2	VBI91102	Impeller	1
3	VBB91101	Base	1
4	VBE91101	Cover, Impeller	1
5	NUT90213	Locknut, Shaft	1
6	WSH90174	Lockwasher, Shaft	1
7	WSH90179	Shim, Shaft to Impeller (as required)	1
8	MOT90200	Motor, 254-6TC, 15 HP, 3PH, 50/60Hz	1
8A	MOT90236	Motor, 254-6TC, 15 HP, 3PH, 575 Volt, 50/60Hz	1
8B	MOT90219	Motor, 254TC, 15 HP, 3PH, XP, 50/60Hz	1
8C	MOT90483	Motor, 254TC, 15 HP, 3PH, 60Hz	1
9	SCR90882	M10 x 1.5 Hex Head Bolt x 1.57 [40] Long	4
10	WSH90137	Lockwasher, M10	4
11	WSH90183	Flat Washer M10	4
12	SCR90881	M8 x 1.25 Hex Head Bolt x 1.18 [30] Long	2
13	WSH90182	Flat Washer M8	2
14	SCR90876	M6 x 1.0 Hex Head Screw x .98 [25] Long	8
15	WSH90143	Lockwasher, M6	8
16	WSH90142	Flat Washer M6	8
17	SCR90335	1/2-13 x 1.0 Long Socket Cap Screw	4
18	GSK90160	Gasket, Case	1
19	GSK90159	Gasket, Flange	2
20	FLC90011	Flange, 3 FNPT	2
21	SCR90883	M8 x 1.25 Hex Head Bolt x 2.16 [55] Long	4
23	PLG90037	Plug, 1/4 NPT x .43 [11] Long	1
25	INS90024	Absorber	4
26	SCN90061	Absorber Screen	2
27	KEY90082	Key	1
28	SEL90106	Lip Seal	1
29	SPR90089	Spacer, Washer (Case to Base)	2
30	N/A	Impeller to case gap specification	N/A
31	PLC90030	Case Plate	1

VB110

Performance Curves

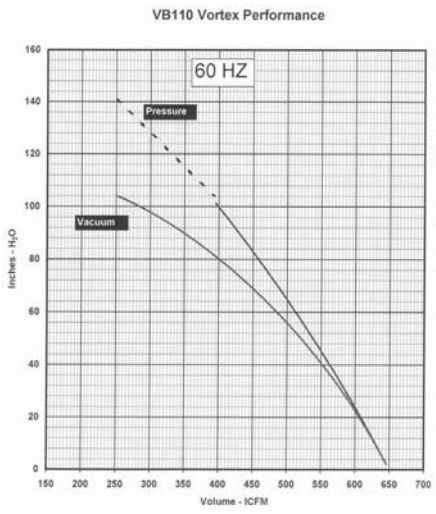

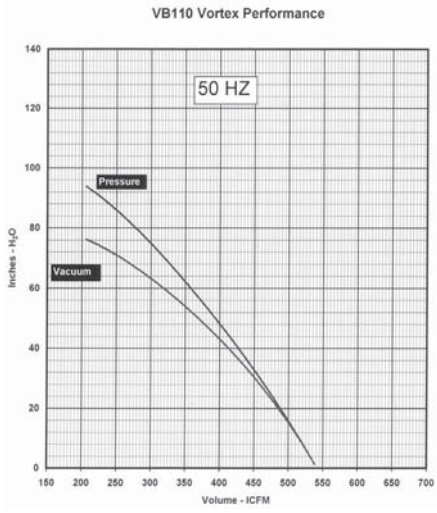

VI. Troubleshooting Guide

Trouble	Possible Cause	Corrective Action
Blower Does Not Turn and there is -		
A Humming Sound	– One phase of power line disconnected	Connect power leads properly
	– One phase of stator line open	Contact factory
	– Bearing(s) defective	Change defective bearing(s)
	– Impeller jammed by foreign material	Clean impeller
	– Impeller jammed against casing or side cover	Adjust gap
	– Rubbing of rotor core and stator core	Contact factory
	– Capacitor open (single-phase models)	Change capacitor
No Sound	– Two phases of power line disconnected	Connect power leads properly
	– Two phases of stator winding open	Contact factory
	– Faulty switch connection	Change switch
	– Fuse blown	Change fuse
Blower Turns, but -		
Fuse Blows	– Fuse capacity insufficient, wiring fault	Inspect wiring
	– Short circuit	Repair
	– Terminals shorted	Improve insulation and check connections
	– Excessive load	Increase air flow
Overheats or Thermal Protector Activates	– Power source unbalance; possible voltage drop	Check voltage; phases must be balanced within 5% and voltage must be within 10% of rated
	– Operating in single-phase condition	Check connections
	– Excessive friction due to defective bearings	Replace bearings
	– Impeller contaminated by foreign material	Clean impeller
	– Impeller rubbing against casing or side cover	Adjust gap
	– Operation at less than minimum rated flow	Increase air flow
Makes Abnormal Sound	– Impeller rubbing against casing or side cover	Adjust gap
	– Impeller rubbed by foreign material	Clean impeller
	– Bearing(s) defective	Replace bearings
	– There is a leak or air passages are clogged	Repair or clean
	– Loose cap screw	Tighten screw

Customer Maintenance Log

DATE	PROCEDURE	COMMENTS	INITIALS

Spencer®

Products & Services

Industrially rated products offering effective solutions for air and gas handling problems:

- Multistage centrifugal blowers
- Single stage centrifugal blowers
- Gas boosters and hermetic gas boosters
- Regenerative blowers
- Modular central vacuum systems
- Mobile or stationary integrated vacuum units
- Separators and dust collectors
- Custom-engineered products with special materials for extreme temperatures and pressures

Complementary accessories with single source convenience and compatibility:

- Standard and custom electrical control panels – UL, CUL Listed and C.E. Compliant available
- Valves, gauges, couplings, shrink sleeves, vibration isolators and other system components
- Comprehensive selection of tubing, fittings, vacuum hoses, valves and tools

Comprehensive engineering and other customer support services:

- The industry's largest complement of technical specialists in air and gas handling technology
- Worldwide parts and service organization
- Application research and testing facility

Worldwide organization of sales representatives and distributors offering:

- Product selection, installation and operation assistance
- Comprehensive system design services
- Follow-up services and troubleshooting

For the name and telephone number of your local Spencer Representative, call 800-232-4321 or email marketing@spencer-air.com

Blowers & Vacuum Systems with an Engineering Edge

The Spencer Turbine Company, 600 Day Hill Road, Windsor, CT 06095-4706

TEL 800-232-4321 ◆ 860-688-8361 ◆ FAX 860-688-0098 ◆ www.spencerturbine.com

Form ZZ14 Copyright ©2009 The Spencer Turbine Company 0809KBA1.0

SUFFIX	VOLTAGE	ROYAL #
01	24VDC	FP25/G NPT24
00	110VAC	FP25/G NPT110

LET	REVISION	DATE	DRAWN
A	ADD SUFFIX FOR 24VDC	4/15/13	EAD

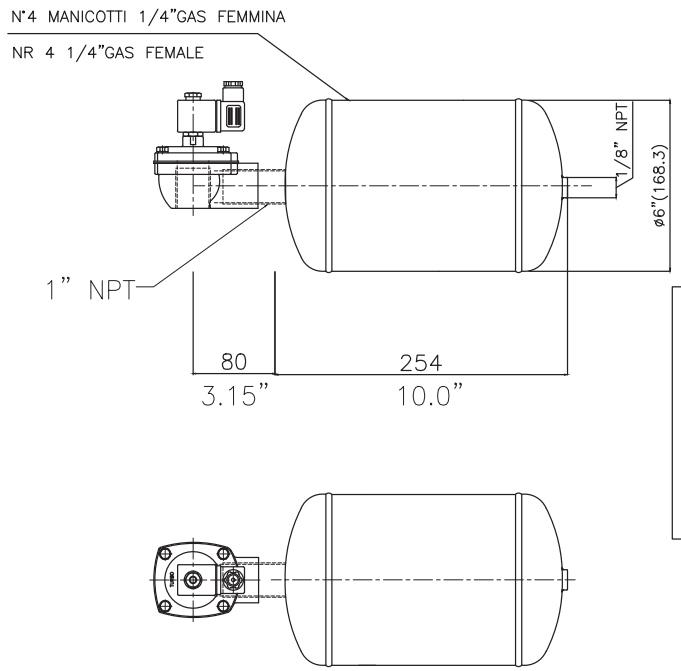

VALVOLA DA 1" NPT
TUBO ACCIAIO INOX 304 SS
TRONCHETTO FILETTATO DA 1" NPT
MANICOTTO FILETTATO FEMMINA DA 3/8"NPT
TRATTAMENTO : (EXCEPT AS NOTED BELOW) MANDARE A LUCIDARE PRIMA DEL MONTAGGIO

HAPMAN CONVEYOR NOTES FROM ORIG QUOTE DATED OCTOBER 14, 2004:

304L STAINLESS

BRUSHED FINISH TANK WITH NON-ANODIZED (NO BLACK ANODIZATION) VALVE ON END

REVISIONE/REV	DATA/DATE	DESCRIZIONE MODIFICA/REVISION DESCRIPTION	DIS/DRAWN	CONTR/CHK	APPR/APPROVED

CODICE SERBATOIO/ TANK CODE TF6P25N1PxxxBG	VALVOLA/VALVE: FP25/G NPT
CAPACITA'/LITRES: LT 6	COLORE/COLOUR: RAL NO
PRESSIONE DI ESERCIZIO/WORKING PRESSURE: 8 BAR MAX	WORKING TEMPERATURE: −10°C +55°C
TURBO srl VIA SAN CARLO 88 20031 CESANO MADERNO (MI) TEL.: ++39 0362 574024 FAX.: ++39 0362 574092 e-mail: turbocontrols@tin.it www.turbocontrols.it	CLIENTE/CUSTOMER: ROYAL/HAPMAN RIF.CLIENTE/REFERENCE DISEGNO/DWG: DP3699A

DISEGNATO DRAWN	CONTROLLATO CHECKED	APPROVATO APPROVED	DATA/DATE	SCALA/SCALE
MF				

REVISIONE REVISION

QUESTO DISEGNO E' DI ESCLUSIVA PROPRIETA' DELLA DITTA TURBO CESANO MADERNO (MI) LA QUALE NE VIETA LA COPIA, LA CESSIONE, LA RIPRODUZIONE.
THIS DRAWING IS A TURBO CESANO MADERNO (MI) PROPERTY COPY, REPRODUCTION OR SPREADING IS FORBIDDEN BY LAW.

Q:STDHAP\PNEU\09155010.DWG

UNLESS OTHERWISE SPECIFIED
DIMENSIONS ARE ENGLISH (FEET AND/OR INCHES)
TOLERANCES

DECIMALS	INCHES	FEET	ANGLES
.X ±.030 .XX ±.015 .XXX ±.005	X"= ±1/16"	X'−X"=±1/4" UP TO 20 FEET X'−X"=±1/2" OVER 20 FEET	±1°

DO NOT SCALE DWG.
BREAK ALL SHARP EDGES

MATERIAL: 304L SS

FINISH: BRUSH FINISH

HAPMAN

Hapman Conveyors
6002 EAST KILGORE ROAD
KALAMAZOO, MICHIGAN 49003
AREA CODE 616/343-1675
TEXEX 224468

NAME: AIR HEADER, 6" DIA X 10" LG W/VALVE 304L SS

DRAWN	DATE	SCALE	REV. DATE
MH	1/10/05	2"=1"	4/15/13

SHEET OF	DWG. NO.	REV.
1 1	H09155SD−B__	A

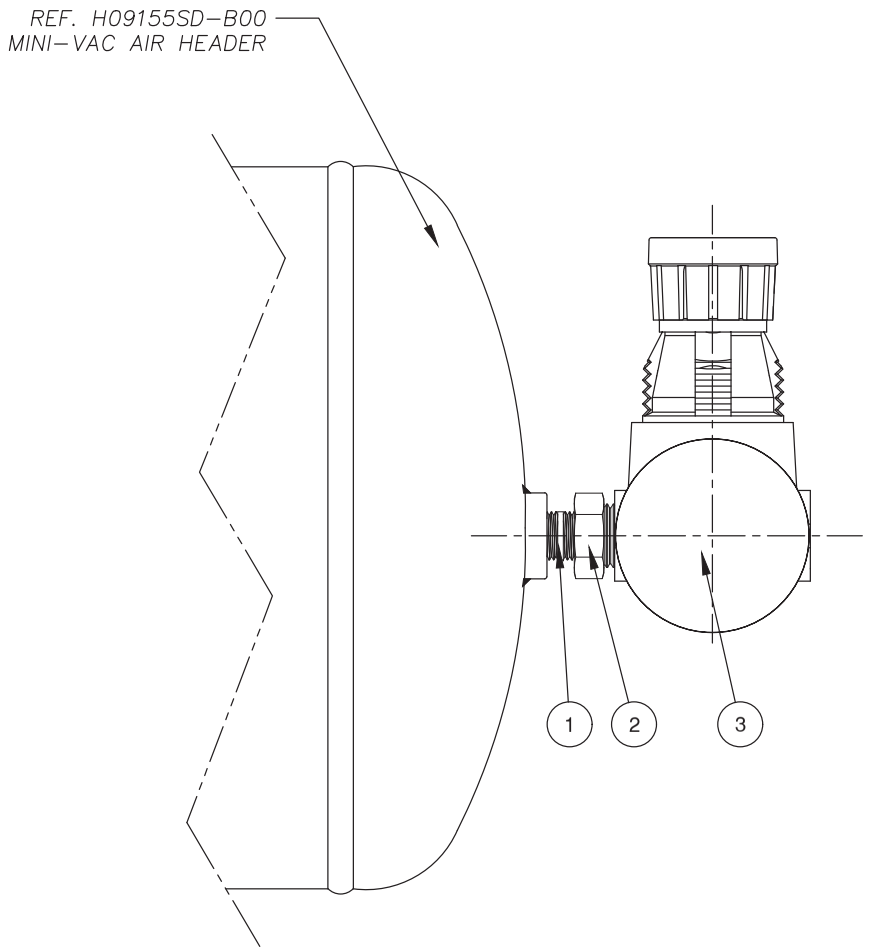

	REV.	SUF.	ITEM NO.	DRAWING/PART NO.	DESCRIPTION	QTY	UOM
B00	A		1		CLOSE NIPPLE- 1/8 NPT, PLATED	1	--
	A		2		REDUCING HEX- 1/4 NPT TO 1/8 NPT, PLATED	1	--
			3	14R116FC	REGULATOR W/GAUGE, 0-60 PSI, 1/4 NPT	1	--
							--
B01	A		1		CLOSE NIPPLE- 1/8 NPT, S.S.	1	--
	A		2		REDUCING HEX- 1/4 NPT TO 1/8 NPT, S.S.	1	--
			3	14R116FC	REGULATOR W/GAUGE, 0-60 PSI, 1/4 NPT	1	--

UNLESS OTHERWISE SPECIFIED
DIMENSIONS ARE ENGLISH (FEET AND/OR INCHES)

TOLERANCES

DECIMALS	INCHES	FEET	ANGLES
.X ±.030" .XX ±.015" .XXX ±.005"	X"= ±1/16"	X'-X"=±1/4"UP TO 20 FEET X'-X"=±1/2" OVER 20 FEET	±1°

DO NOT SCALE DRAWING | REMOVE ALL SHARP EDGES

REV	REVISION DESCRIPTION	DATE	BY
A	SEPERATED THE BOM BY THE ASSEMBLY SUFFIX NUMBER	4/30/13	CJC

HAPMAN
Ideas that move
P.O. BOX 2321
6002 E. KILGORE ROAD, KALAMAZOO, MICHIGAN 49048
PHONE (269) 343-1675 FAX (269) 349-2477

DATE	8/25/11	JOB NO.	DRAWN E. DZIERFZYC
SCALE	NONE		BOM = 0 DWG = 1

Q:\HAPMAN\LIBRARY\9535B

TITLE

REGULATOR ASSEMBLY FOR MINI-VAC AIR HEADER

CUST.

SHEET	OF	DWG. NO.	REV.
1	1	9535-B__	A

SUFFEX	MATERIAL OF CONSTRUCTION
01	304 STAINLESS STEEL CONSTRUCTION
00	CARBON STEEL CONSTRUCTION

LET	REVISION	DATE	DRAWN
A	UPDATED VENDOR DATA	11/05/07	MAV
B	REMOVED VENDOR SPECIFIC INFORMATION	01/21/16	JAF

FILTER 7.875 O.D X 3.56" I.D X 16"Lg.
STAINLESS STEEL END CAPS
GALVANIZED INNER CORE
MEDIA- "PTFE POLYESTER"/16OZ. POLYESTER FELT
FILTER AREA - 13 SQ FT.
NO OF PLEATS - 30
POTTING - WHITE FOOD GRADE SILICONE
GASKET - WHITE SILICONE
FDA APPROVED MATERIALS
OPEN TOP, CLOSED BOTTOM WITH 9/16" HOLE
MAXIMUM OPERATING TEMP - 240° F
MAXIMUM OPERATING DIFFERENTIAL PRESSURE - 25" WG
TYPICAL USES - BAG DUMP DUST COLLECTOR, MODEL 20 PNEU.
RECEIVERS

HAPMAN
ideas that move
P.O. BOX 2321
6002 E. KILGORE ROAD, KALAMAZOO, MICHIGAN 49048
PHONE (269) 343-1675 FAX (269) 349-2477

NAME
AIR FILTRATION CARTRIDGE

DRAWN	DATE	SCALE
DRB	3/16/93	NONE

DWG. NO.
104909-B

This page is intentionally left blank

Description

When it comes to machine safety, Rockwell Automation knows that protection of personnel and equipment is your main concern. At the same time, flexibility and productivity are points that must also be considered as you design your safety system. Optimize all of these with the new Allen-Bradley SensaGuard family of noncontact switches.

Featuring the latest generation of RFID technology for coding and Inductive technology for sensing, SensaGuard's large sensing range and tolerance to misalignment is a cost-effective solution that is ideally suited for a wide range of industrial safety applications.

The SensaGuard product line is a Category 4 /SIL 3 rated switch per EN954-1, TÜV functional safety approved to IEC 61508.

Features

- Switches can be connect to a standard safety relay, for example, the MSR126, MSR127, MSR200/300 Family, SmartGuard and Safety I/O Blocks
- Multiple actuator sizes for large sensing distance
- IP 69K environmental rating
- Short-circuit and over-voltage protection
- Led located on the switch for door status and troubleshooting

Benefits

- No dedicated controller required
- Cat 4/SIL 3 rating maintained even with multiple units connected in series
- Switches can be connected in series with other devices (light curtain, E-stops, key interlock switches)
- Extended diagnostics for easy troubleshooting
- Large sensing distances
- Tolerance to misalignment
- Multiple sensing directions
- Stainless steel version suitable for use in harsh environments
- Use standard proximity brackets

Specifications

Category	Cat. 4/SIL3		
Certifications	TÜV, CE, cULus (UL 508)		
Standards	IEC 60947-5-3, IEC 61508, EN 954		
PFHd	1.119...10^{-9}		
Operating Characteristics			
Sensing Distance (Target)	**18 mm Plastic**	**30 mm Plastic**	**18 mm SS**
Operating Distance, Make—mm (in)	Assured: 15 (0.59)	Assured: 25 (0.98)	Assured: 10 (0.39)
Case Material	Valox® DR 48		304 Stainless Steel
Actuator Material	Valox® DR 48		304 Stainless Steel
Typical Misalignment	See misalignment curve.		
Repeat Accuracy	10% of Sensing Range		
Output Current, Max.	200 mA (all outputs)		
Switching Current @ Voltage, Max.	24V DC +10%/-15%		
Operating Voltage/Supply Current	24V DC, +10%/-15% Class 2 SELV power supply		
Frequency of Operating Cycle	1 Hz		
Response Time (Off)	54 ms		
Outputs (Guard Door Closed, Actuator in Place)			
Safety Outputs	2 x PNP, 0.2 A, max.; Status: ON (+24V DC)		
Auxiliary Outputs	1 x PNP, 0.2 A max.; Status: OFF (0V DC)		
Environmental			
Operating Temperature—C (F)	-10...+55° (+14...+131°)		
Relative Humidity	5...95%		
Enclosure Type Rating	NEMA 3, 4X, 12, 13, IP 69K		
Shock	IEC68-2-27 30 g, 11 ms		
Vibration	IEC 68-2-6 10...55 Hz		
Radio Frequency	IEC 61000-4-3, IEC 61000-4-6		
Protection			
Protection Type	Short Circuit, Current Limitation, Overload, False Pulse, Transient Noise, Reverse Polarity, Overvoltage (inc. load dump), Thermal Shutdown with restart, Loss of GND and Vdd		
Loss of GND and Vdd protection	Incorporated		
Electrical Life	10 x 10^6		

Noncontact Switches

SensaGuard™ 18 mm Barrel

Product Selection

Description	Operating Voltage/ Input Current	Safety Outputs	Auxiliary Outputs	Actuator Type	Assured Sensing Distance	Connection	Cat. No.
18 mm Plastic Barrel	24V DC, +10%/-15%/ 50 mA max.	2 Solid State outputs	1 Solid State output	18 mm	15 mm (0.59 in)	6 in Pigtail, 8-Pin Micro (M12)	440N-Z21S16H
						3 m Cable	440N-Z21S16A
						10 m Cable	440N-Z21S16B
				30 mm	25 mm (0.98 in)	6 in Pigtail, 8-Pin Micro (M12)	440N-Z21S26H
						3 m Cable	440N-Z21S26A
						10 m Cable	440N-Z21S26B
18 mm Stainless Steel Barrel				18 mm	10 mm (0.39 in)	6 in Pigtail, 8-Pin Micro (M12)	440N-Z21S17H
						3 m Cable	440N-Z21S17A
						10 m Cable	440N-Z21S17B

Recommended Logic Interfaces

Description	Safety Outputs	Auxiliary Outputs	Terminals	Reset Type	Power Supply	Cat. Pg. No.	Cat. No.
Single-Function Safety Relays							
MSR127RP	3 N.O.	1 N.C.	Removable Screw	Monitored Manual	24V AC/DC	—	440R-N23135
MSR127TP	3 N.O.	1 N.C.	Removable Screw	Automatic/Manual	24V AC/DC	—	440R-N23132
Modular Safety Relays							
MSR211P Base 2 N.C. only	2 N.O.	1 N.C. and 2 PNP Solid State	Removable	Automatic/Manual Monitored Manual	24V DC	—	440R-H23176
MSR220P Input Module	—	—	Removable	—	24V DC	—	440R-H23178
MSR310P Base	—	3 PNP Solid State	Removable	Automatic/Manual Monitored Manual	24V DC	—	440R-W23219
MSR320P Input Module	—	2 PNP Solid State	Removable	—	24V DC	—	440R-W23218

Note: For additional Safety Relays connectivity, see the Logic section of this catalog.
For additional Safety I/O connectivity, see the Safety I/O section of this catalog.
For Application and wiring diagrams, see the Applications section of this catalog.

Connection Systems

Description	Cat. No.
Cordset	889D-F8AB-*

* Replace symbol with 2 (2 m), 5 (5 m), or 10 (10 m) for standard cable lengths.

Accessories

	Description	Dimensions	Cat. No.
	18 mm Plastic Actuator	—	440N-Z18PT
	30 mm Plastic Actuator	—	440N-Z30PT
	18 mm Stainless Steel Actuator	—	440N-Z18SST
	Mounting Bracket for Tubular Sensors—Right Angle Style	—	871A-BRS18
	Mounting Bracket for Tubular Sensors—Clamp Style	—	871A-BP18
	Snap Clamp Mounting Bracket	—	871A-SCBP18
	Swivel/Tilt bracket allows ±10° vertical and 360° rotation adjustment.	—	60-2649

Approximate Dimensions—mm (inches)

Dimensions are not intended to be used for installation purposes.

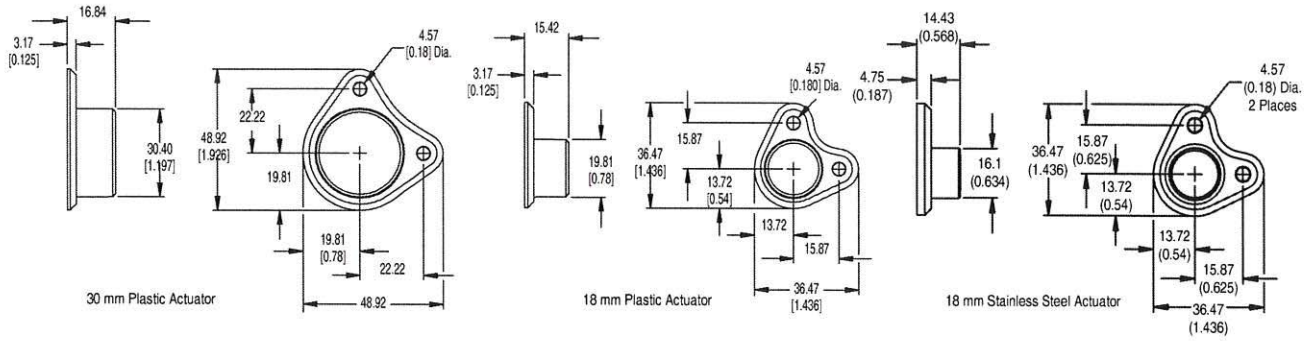

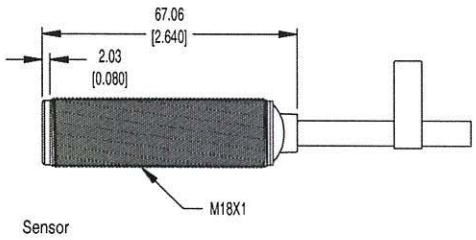

Typical Wiring Diagrams

Description		Plastic		Stainless Steel	
8-Pin Micro (M12)		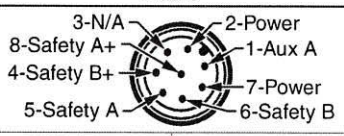		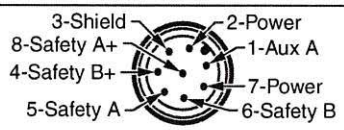	
8-Pin Cordset 889D-F8AB-*	Grey	OSSD 1	Safety A	OSSD 1	Safety A
	Red	OSSD 1+		OSSD 1+	
	Pink	OSSD 2	Safety B	OSSD 2	Safety B
	Yellow	OSSD 2+		OSSD 2+	
	White	Aux A		Aux A	
	Brown	24V DC	Unit Power	24V DC	Unit Power
	Blue	Gnd		Gnd	
	Green	NA		Shield	

* Replace symbol with 2 (2 m), 5 (5 m) or 10 (10 m) for standard cable lengths.

Misalignment Curve

18 mm Stainless Steel Barrel

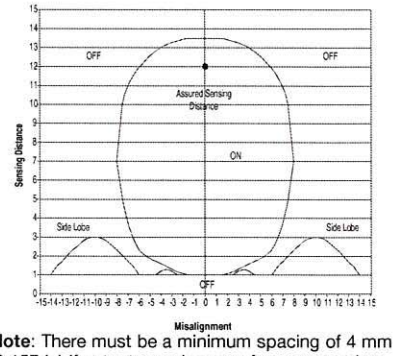

Note: There must be a minimum spacing of 4 mm (0.157 in) if actuator and sensor face approaches laterally. This will prevent false triggering due to the side lobe areas.

18 mm Plastic Barrel

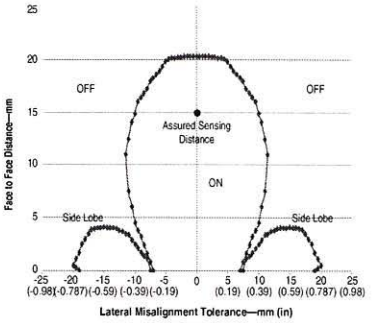

Note: There must be a minimum spacing of 4 mm (0.157 in) if actuator and sensor face approaches laterally. This will prevent false triggering due to the side lobe areas.

30 mm Plastic Barrel

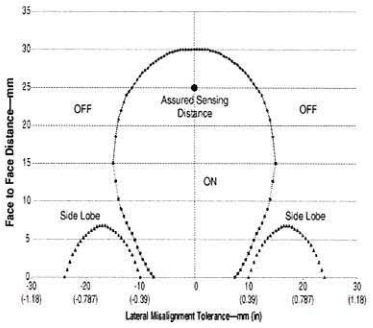

Note: There must be a minimum spacing of 7 mm (0.275 in) if actuator and sensor face approaches laterally. This will prevent false triggering due to the side lobe areas.

Minimum Distance Between Sensors

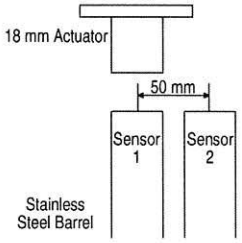

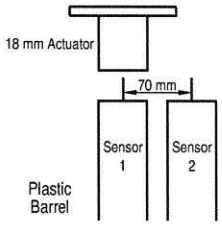

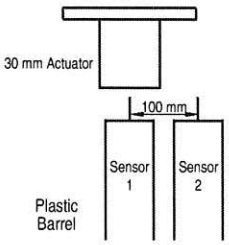

Diagnostic

Unit Indicators (per IEC 60073)

	State	Status	Troubleshooting
Device Output LED	Off	Not Powered	NA
	Red	Not Safe, OSSD Not Active	NA
	Green	Safe, OSSD Active	NA
	Green Flash	Power Up Test or OSSD Inputs Not Valid	Check 24V DC on OSSD Inputs (yellow and red wire)
	Red Flash	1 Hz Flash Recoverable Fault 4 Hz Flash Nonrecoverable Fault	Recoverable Fault: Check OSSD Outputs Are Not Shorted to GND, 24V DC or Each Other. Cycle Power.

ACS VALVES

EQUIPMENT INSTRUCTION MANUAL
ACS Rotary Airlock Valve/Feeders

DR-S

MD

CI

Heavy Duty Extra Tough

611 Argyle St. N. Caledonia, Ontario N3W 1M1 TEL: (800) 655-3447 FAX: (800) 955-4991
Email: sales@acsvalves.com Website: www.acsvalves.com

ACS VALVES
ANCASTER CONVEYING SYSTEMS

611 Argyle St. N. Caledonia, Ontario N3W 1M1 TEL: (800) 655-3447 FAX: (800) 955-4991
Email: sales@acsvalves.com Website: www.acsvalves.com

SAFETY FIRST

WARNING/CAUTION

DO NOT INSTALL ROTARY AIRLOCK VALVES & FEEDERS IN AN APPLICATION, WHICH LEAVES THE INLET OR THE OUTLET FLANGE OPENING EXPOSED.

INLET & OUTLET FLANGE GUARDS ARE MANDATORY IF EITHER THE INLET OR OUTLET FLANGES ARE EXPOSED.
THESE FLANGE GUARDS ARE AVAILABLE APON REQUEST

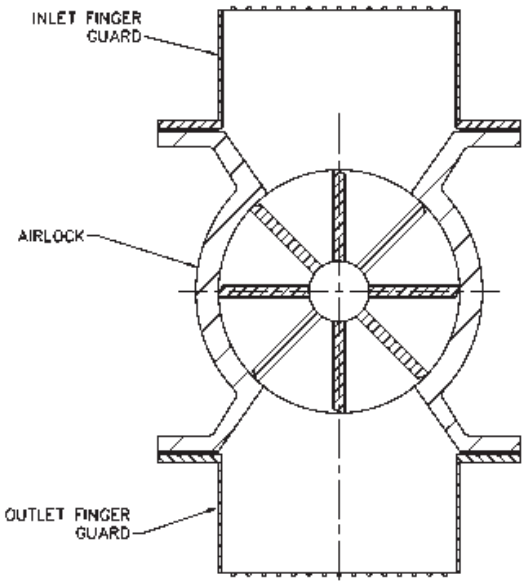

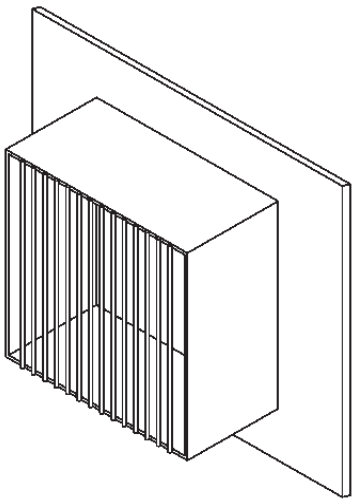

611 Argyle St. N. Caledonia, Ontario N3W 1M1 **TEL: (800) 655-3447** **FAX: (800) 955-4991**
Email: sales@acsvalves.com **Website:** www.acsvalves.com

Congratulations on your selection of an **"ACS"** Rotary airlock. The unit will require very little attention to keep it in good operating condition.

Safety Precautions

This Safety alert symbol is used to call your attention to an important safety message on equipment, safety decals and in manuals, to warn you of possible danger to your personal safety. When you see this symbol, be alert; your personal safety or the safety of the other persons is involved. Follow the instructions in the safety message.

The following definitions for identifying hazard levels are:

DANGER (RED) **–** Danger is used to indicate the presence of a hazard that WILL cause SEVERE personal injury, death, or substantial property damage of the warning is ignored.

WARNING (ORANGE) – Warning is used to indicate the presence of a hazard that CAN cause SEVERE personal injury, death, or substantial property damage if the warning is ignored.

CAUTION (YELLOW) – Caution is used to indicate the presence of a hazard that WILL or CAN cause MINOR personal injury or property damage if the warning is ignored.

WARNING: All owners and operators should read this manual, or be instructed in safe operating and maintenance procedures, before attempting to uncrate, install, operate, adjusts, or service this equipment.

611 Argyle St. N. Caledonia, Ontario N3W 1M1 TEL: (800) 655-3447 FAX: (800) 955-4991
Email: sales@acsvalves.com Website: www.acsvalves.com

RECEIVING YOUR AIRLOCK

As soon as the equipment is received, it should be carefully inspected to make certain the unit is in good condition and all items listed on the packing list are received. Even though the equipment is mounted on heavy shipping skids at our plant, it is possible for it to be damaged in shipment. All damages or shortages should be noted on the Bill of Lading. Purchaser should take immediate steps to file reports and damage claims with the carrier. All damages incurred to the units in transit are the responsibilities of the common carrier since it is the manufacturer's policy to make shipment F.O.B. its factory: i.e., Ownership passes to purchaser when the unit is loaded and accepted by trucker. Any claims for in transit damage or shortage must be brought against the carrier by the Purchaser.

If the unit is not going to be installed soon after arrival, it should be stored in a warm, dry location to protect from corrosion to the machined surfaces.

CAUTION: Read All Instructions contained in this manual before installing and operating this equipment.

WARNING

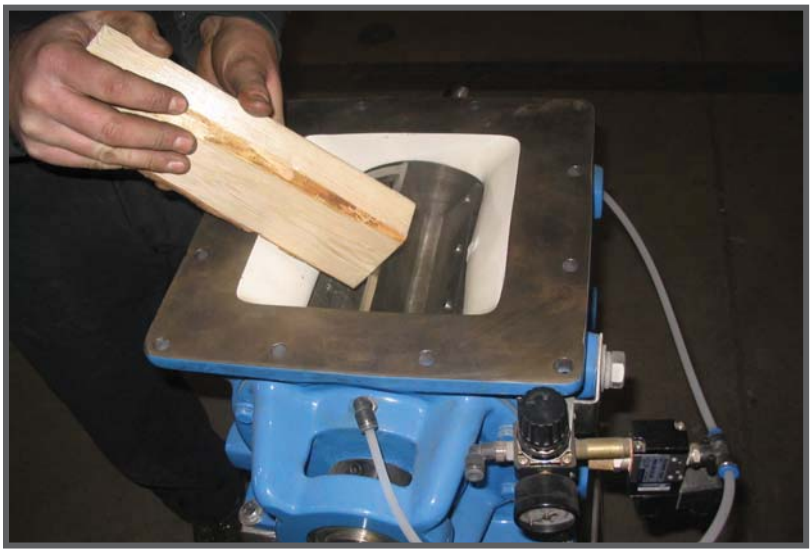

FIGURE 1

ONCE PROTECTIVE FLANGE COVER IS REMOVED FROM VALVE, DO NOT PLACE HANDS OR FEET IN THE VALVE OR ATTEMPT TO TURN ROTOR ASSEMBLY BY HAND. TO TEST ROTATE THE ROTOR, USE A SOFT PUSH BAR (2 x 4) AS SHOWN IN FIGURE 1. WE RECOMMEND ALL OWNERS AND/OR OPERATORS OF THIS EQUIPMENT READ THIS MANUAL. FOLLOW SAFE OPERATING & MAINTENANCE PROCEDURES. SAFETY COMES FIRST!

611 Argyle St. N. Caledonia, Ontario N3W 1M1 TEL: (800) 655-3447 FAX: (800) 955-4991
Email: sales@acsvalves.com Website: www.acsvalves.com

OPERATING INSTRUCTIONS FOR ACS ROTARY AIRLOCK PACKAGE

Rotary Airlocks

The Rotary Airlock is one of the most important units in your material handling system. The function of the airlock is to hold pressure or vacuum in a pneumatic system, and also to meter products into conveying lines, or storage areas, (bins, tanks, hopper, etc.)

The airlock operates by filling each rotor pocket with material at the high point of rotation and then empties into conveying lines or storage areas at the low point of rotation.

In the case of conveying line, a blow-thru is used to allow the velocity of the air to move the material through the conveying line. After each rotor pocket has emptied into the blow-thru it still contains pressurized air. With some products, this air is allowed to escape up through the bulk material as soon as the edge of the rotor blade passes the edge of the inlet opening. The release of this pressurized air assists in maintaining a continuous flow of product to the airlock inlet. With some products, this air must be vented to atmosphere or to a dust collector, as it tends to hinder rather than help the flow of material into the airlock.
*The above procedure is endlessly repeated to produce a continuous flow of material at the discharge end of the conveying line.

The airlock rotor is precision machined to obtain the desired high degree of accuracy and close tolerance. Rotors may be supplied either with fixed or adjustable tips.

The airlock rotor is mounted on bearings at each end of the rotor shaft. Rotor clearance is small to prevent excessive air leakage back to the product inlet.

Installation of Airlock Packages

After airlock packages are uncrated, disconnect the chain drive and rotate the airlock with a soft push bar, the rotor should be able to rotate freely without binding.

Check clearance between rotor tips and valve housing. Clearance should not be greater than that specified on the invoice. If adjustable tips are provided and have shifted out of adjustment during shipping, re-adjust as per instructions found in maintenance section of this manual.

If airlock clearances and rotations are correct, replace chain drive, position an anchor package.

See Figure 1

611 Argyle St. N. Caledonia, Ontario N3W 1M1 **TEL: (800) 655-3447** **FAX: (800) 955-4991**
Email: sales@acsvalves.com **Website:** www.acsvalves.com

Numerous types of bulk materials feeding devices can be connected to the inlet opening of an airlock. Bins, hoppers, mixers, sifters, screw conveyors, etc. all can be adapted for attachment to the airlock. In all cases, except sifters, rigidly attach the feeding device to the airlock flange, using silicone caulk to obtain an air-tight connection. Be sure all seams in the feeding device are air-tight.

If the airlock package is to be hung from a hopper, storage tank, etc. it may be necessary for some type of structural steel support. However, in most cases, the hopper or tank flange will have sufficient strength to support the weight of the airlock package.

Normally, it is not good practice to use the airlock to support equipment loads either in compression on the top flange or in tension from the bottom flange. Excessive loads will cause the housing to distort, which will result in the loss of precise clearances. Loss of clearance between the rotor and housing can result in excessive noise, binding and galling.

Flanges of components, which attach to the airlock must be flat and "square" with the airlock flanges. The machines flanges of cast airlock housing must not be forced or conform to warped or twisted fabricated flanges. This practice can result in broken airlock housing or loss of clearance as noted above.

If the airlock is to be installed with either the **inlet or discharge exposed, a guard must be mounted to the appropriate flange** in order to reduce the risk of personal injury to operators, maintenance personnel, or others who may be near the equipment. Any object placed in the inlet area or discharge area of the airlock will be sheared off. Inlet and discharge guards are available from **Ancaster Conveying Systems**.

Air Purge Kit - Optional

The optional air Purge Kit may be used to provide compressed air the shaft seal area on airlocks with either open or closed end rotors. This kit may also be used to provide compressed air to the end plate cavity on the airlocks with closed end rotors.

The Air Purge Kit should included a Filter/Regulator, 0-30 psi pressure gauge, tubing and miscellaneous fittings. Depending on the airlock model and what ports are to be purged, certain fittings supplied in the kit may not be required.

611 Argyle St. N. Caledonia, Ontario N3W 1M1 TEL: (800) 655-3447 FAX: (800) 955-4991
Email: sales@acsvalves.com Website: www.acsvalves.com

Air Purge Pressure Adjustment

Shut off the compressed air supply and bleed off air pressure before attempting to install or service the air purge assembly.

After installation is complete and while the filter/regulator is shut off completely, the air supply should be turned on.

After verifying that all connections are tight the regulator should be adjusted to provide the appropriate purge pressure to the airlock using the following guidelines.

1. Initial setting, prior to conveying product through the airlock or system should be 5 psig.
2. If the airlock is either receiving product from or discharging product to a pressure system the regulator should be set at 5 psig above the system conveying pressure.
3. If the airlock is used in a gravity flow application or is receiving or discharging only to a vacuum system the regulator should remain set at 5 psig.

Air Purge Assembly For Airlocks
With Open or Closed End Rotors

ITEM	P/N	QTY	DESCRIPTION
1	128961	1	Filter/Regulator with gauge & bracket
2	128937	1	3/8” Male Branch Tee Poly-Flo fitting
3	128929	4 ft.	3/8” O.D. Nylo-Seal Tubing
*4	120022	2	3/8” Poly-flo to 1/8” MNPT Connector
5	112895	1	0-30 PSI, 2” Face, ¼” CTR Back Gauge
°6	128945	2	3/8” Poly-flo to 3/8” MNPT Connector
°7	102733	2	3/8” Poly-Flo Union Tee
°8	125539	2	¾ x 3/8 Hex Bushing
	400726	1	Air Purge Kit (includes items 1 thru 8)

Please Note: *** Fittings for purging shaft seal**
° Fittings for purging end plate cavity

611 Argyle St. N. Caledonia, Ontario N3W 1M1 TEL: (800) 655-3447 FAX: (800) 955-4991
Email: sales@acsvalves.com Website: www.acsvalves.com

Airlock Maintenance And Adjustment

Airlock maintenance is just as important as the unit is to the system. Type "CI" airlocks are assembled with sealed bearings, therefore requiring no lubrication.

Blade clearance should be checked as part of the maintenance program. Blade clearance should be within the allowable clearance range of the appropriate service. (See table). Each airlock is built to a standard, which is determined by its size and design operating conditions. The appropriate standard established for any airlock can be determined by checking the order acknowledgement.

Fixed tip airlocks obviously have no adjustment at tips, but should be checked to determine if the airlock is functioning in the system properly. Airlocks equipped with adjustable tips have a definite advantage. If clearances do not fall within rotor clearance range for the airlock, the tips can easily be adjusted. Adjusting tips of an airlock should be done as follows after electrical power is turned off.

Disconnect all electrical power to airlock before performing any maintenance.

1. Disconnect drive chain.
2. Access through either inlet or outlet.
3. Mark blades one through eight (assuming it is an 8-vane rotor).
4. Loosen bolts on number one blade.
5. Using two feeler gauges, insert between blade and housing, one at each end.
6. Push blade up tight against feeler gauges and tighten bolts.
7. Rotate blade and measure clearance on both sides of housing. This will determine which is tight side of housing.
8. Repeat steps 4, 5, &6 on all blades settings them against tight side of housing.

NOTE: As each blade is adjusted, make sure clearance is held uniformly by spinning rotor 360 degrees after completing steps 4, 5 & 6, and also by re-measuring with feeler gauge.

Disassembly of an airlock can be done quickly and efficiently by following the proper procedures.

611 Argyle St. N. Caledonia, Ontario N3W 1M1 **TEL: (800) 655-3447** **FAX: (800) 955-4991**
Email: sales@acsvalves.com **Website:** www.acsvalves.com

Remove Rotor:

1. Determine which side rotor is to be pulled from. Normally clearance permitting, drive side is pulled to avoid dismantling of sprocket and re-alignment.
2. Disconnect drive chain
3. Loosen and remove bearing lock-collar at bearing opposite the drive side.
    a) Remove allen set screw from collar and peen down groove formed by set screw using a small flat punch.
    b) Loosen collar by rotating collar in the same direction as the shaft rotation. Use drift pin in the plain hole (not threaded set screw hole) and tap with hammer to rotate collar.
    c) Slide collar off shaft.
4. Airlocks with packing gland seals, loosen the packing gland bolts (2 ea.) opposite the drive side.
5. On type “CI” Airlocks loosen the shaft seal collar, located within the end plate bearing port.
6. Remove the bolts on end cover (side to be pulled).
7. On all models place wheel puller at end opposite the drive end, hooking it at back of bearing port. Place puller bolt at the shaft and push rotor through until it slides freely.
8. Remove rotor from housing gently to keep from forming burrs on rotor or housing.

Replacing Rotor

1. Carefully check to see if rotor or housing have burrs. (Blade tips, shrouds, and housing matching surfaces). If burrs are found, file them smooth using a fine file and then polish with emery paper.
2. Check rotor shaft, file and sue emery paper on any rough surface found.
3. Blow off rotor and shaft to clean any foreign material. Also check end cover to see that matching edges to housing are clean.
4. Gently slide rotor into housing. Rotor normally will not slide the last few inches easily. Use a large rubber hammer to pound rotor far enough to start end cover bolts, and tighten evenly.
5. Make sure rotor is centred in housing. If not, loosen bearing lock collars, and centre with rubber mallet by tapping end of shaft.
6. Tighten bearing lock collars in the direction opposite to shaft rotation.
7. Tighten packing gland bolts evenly or tighten shaft seal collar.
   Note: If rotor does not turn freely, loosen end cover bolts. Centre rotor with feeler gauges and retighten bolts evenly.
8. Turn rotor by hand. Check clearances and see that rotor turns freely in housing.

611 Argyle St. N. Caledonia, Ontario N3W 1M1 TEL: (800) 655-3447 FAX: (800) 955-4991
Email: sales@acsvalves.com Website: www.acsvalves.com

Removing End Covers

1. Remove bolts that attach end cover to housing
2. Loosen and remove bearing lock collar
   a) Remove allen set screw from collar and peen down groove formed by set screw using a small flat punch.
   b) Loosen collar by rotating collar in direction opposite shaft rotation. Use drift pin in the plain hole (not threaded set screw hole) and tap with hammer to rotate collar.
   c) Slide collar off shaft.
3. Loosen packing gland bolts or shaft seal collar, if applicable.
4. Attach wheel puller.
5. Tighten slowly until cover slides off shaft. If cover tends to bind on shaft, tap puller bolt with rubber mallet as you tighten.

Remove Press-Fit Bearings

1. Remove end cover.
2. Press bearing in the appropriate direction to remove from end plate.

Replacing Press-Fit Bearings

1. Align bearing with machined hole in end cover.
2. Be sure the eccentrically machined end of the inner bearing ring will be at the outer face of the endplate so that matching bearing lock collar can be properly installed.
3. Press the bearing in place.

Installing Press-Fit Bearing Lock Collar

1. Check to see that bearing has been pressed into endplate with eccentrically machined face of inner bearing ring facing outward toward the end of the shaft.
2. Slide collar on shaft with eccentrically machined, recessed face against the inner bearing ring. Rotate the collar in the opposite direction of shaft rotation until eccentric faces of collar and inner bearing ring engage.
3. Continue to rotate the collar in the opposite direction of shaft rotation until snug. Complete tightening by inserting pin in drift pin hole of the collar and tap with lightweight hammer.
4. Tighten allen set screw.

611 Argyle St. N. Caledonia, Ontario N3W 1M1 **TEL: (800) 655-3447** **FAX: (800) 955-4991**
Email: sales@acsvalves.com **Website:** www.acsvalves.com

Chain Drive Adjustment and Maintenance

Airlock drive chain tension. Check tension of airlock drive chain every 200 hours as follows:

A. Remove chain guard. Airlock drive chain should have no noticeable sag between gearmotor and valve sprockets. However, chain should be loose enough to allow a slight up and down motion with hand pressure applied midway between sprockets.
B. To adjust airlock drive chain, loosen two bolts securing gearmotor and change position of gearmotor to obtain desired degree of tightness. Tighten mounting parts and reinstall chain guard.
C. Clean and re-grease chain every 500 hours.

Inspection and Repair

Inspection and repair procedures given below provide sufficient information for restoring the package to peak operation. In most cases, repair simply consists of component replacement.

A. If airlock is not operating efficiently or satisfactory, remove from system, inspect and repair in accordance with preceding information.
B. Inspect airlock drive chain and sprockets for wear, loose links, and damage. Replace chain and sprockets if damage is noted. Be sure the same size sprockets are replacements for original sprockets.
C. Inspect base structure, chain guard, and brackets, for damage and deformation. Replace defective parts.
D. Check all accessory equipment to assure proper operation. Replace any components found to be defective.

When requesting service assistance, please have the following information at hand prior to calling system engineer.

1. Blower speed.
2. Vacuum or pressure gauge reading.
3. Pressure switch setting.
4. Blower motor amperage reading.
5. Airlock speed.
6. Method of feeding the valve.
7. Gearmotor amperage reading
8. Conveying line length
   a) Horizontal run
   b) Vertical run
   c) Number of elbows

611 Argyle St. N. Caledonia, Ontario N3W 1M1 TEL: (800) 655-3447 FAX: (800) 955-4991
Email: sales@acsvalves.com Website: www.acsvalves.com

Airlock Rotor Clearances

Model & Size	Standard Temperature Application	High Temperature Application
CI 6 x 6 CI 8 x 8 CI 10 x 10 CI 12 x 12	.004" - .007"	.007"-.010"
CI 14 x 14	.004" - .007"	.007" .010"
CI 16 x 16	.007" - .010"	.012" - .016"
CI 18 x 18 CI 22 x 22	.012" - .016" .012" - .016"	.012" - .016" .024" - .035"
CI 26 x 26	On Application	On Application
CI 30 x 30	On Application	On Application
MD 6 MD 8 MD 10 MD 12	.004" - .007"	.007" - .010"
MD 14 MD 16	-- .007" - .010"	--- .012" - .016"
AF-A AF-B	.004" - .007" .004" - .007"	.007" - .010" .007" - .010"
AF-C AF-D	.004" - .007" ---	--- ---
CDC-CI 6" CDC-CI 8" CDC-CI 10" CDC-CI 12"	.004" - .007"	.007" - .010"

BEST TO CONSULT FACTORY FOR CLEARANCES BEST SUITED TO YOUR SIZE ROTARY VALVE & APPLICATION.

611 Argyle St. N. Caledonia, Ontario N3W 1M1 **TEL: (800) 655-3447** **FAX: (800) 955-4991**
Email: sales@acsvalves.com **Website:** www.acsvalves.com

Shaft Seals

- ACST-4 shaft seals are used on both ends of the rotor shaft for superior sealing
- Each shaft seal assembly consists of one virgin teflon sleeve and three quad rings, which fit snuggly over the teflon sleeve
- The teflon sleeve has a smooth self lubricated surface creating a tight seal with the quad rings
- Also available in a packing gland style shaft seal air purge assembly consisting of a lantern ring, 2 lip seals, lot teflon packing and a adjusting pusher plate
- Air purge seals connection option for severe applications

ACST-4 Shaft Seal

ACS Packing Gland Style Shaft Seal with Lantern Ring

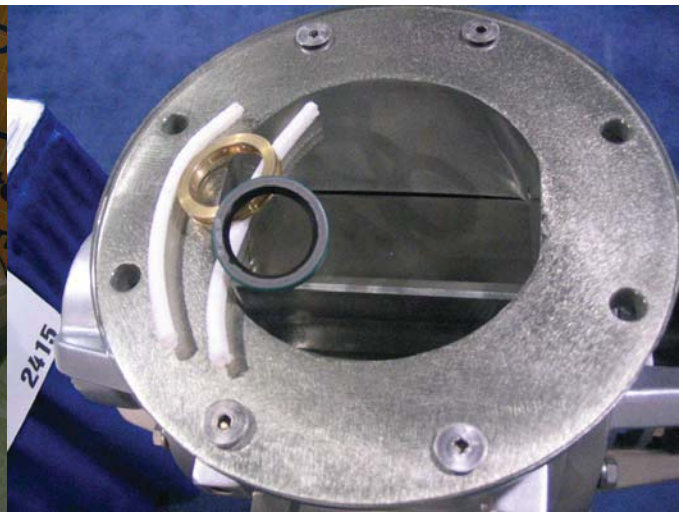

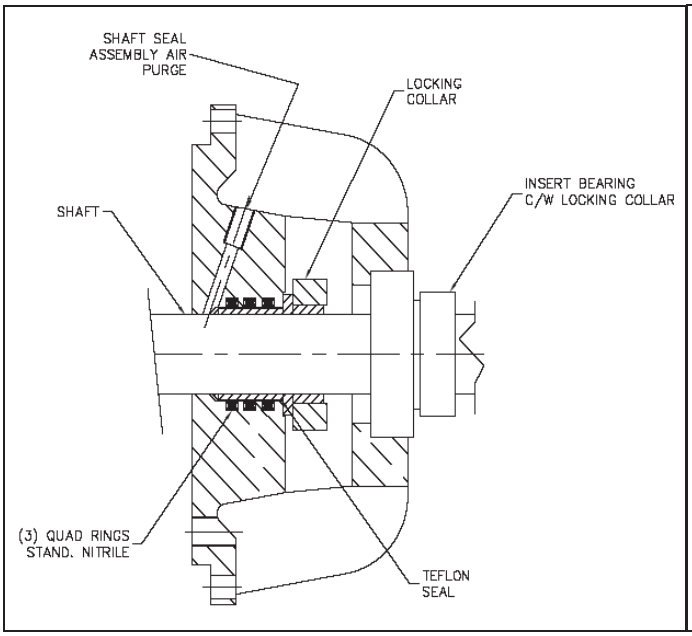

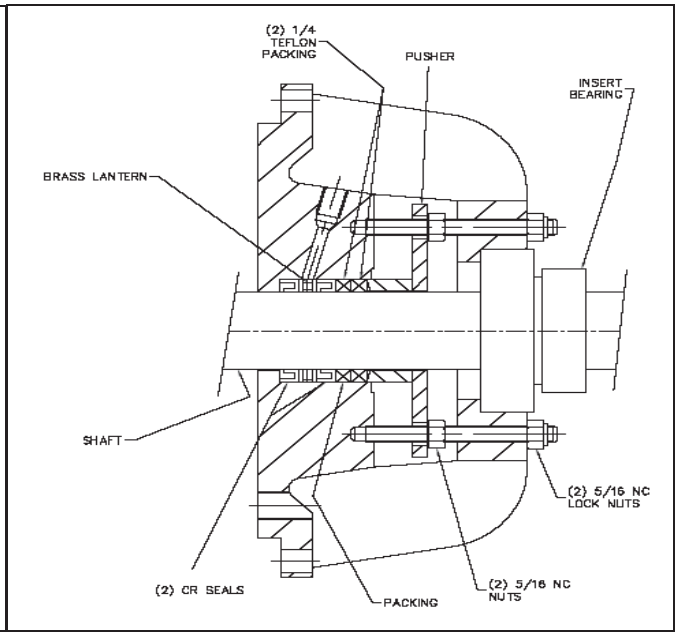

611 Argyle St. N. Caledonia, Ontario N3W 1M1 **TEL: (800) 655-3447** **FAX: (800) 955-4991**
Email: sales@acsvalves.com **Website:** www.acsvalves.com

Packing Gland Shaft Seal Assembly

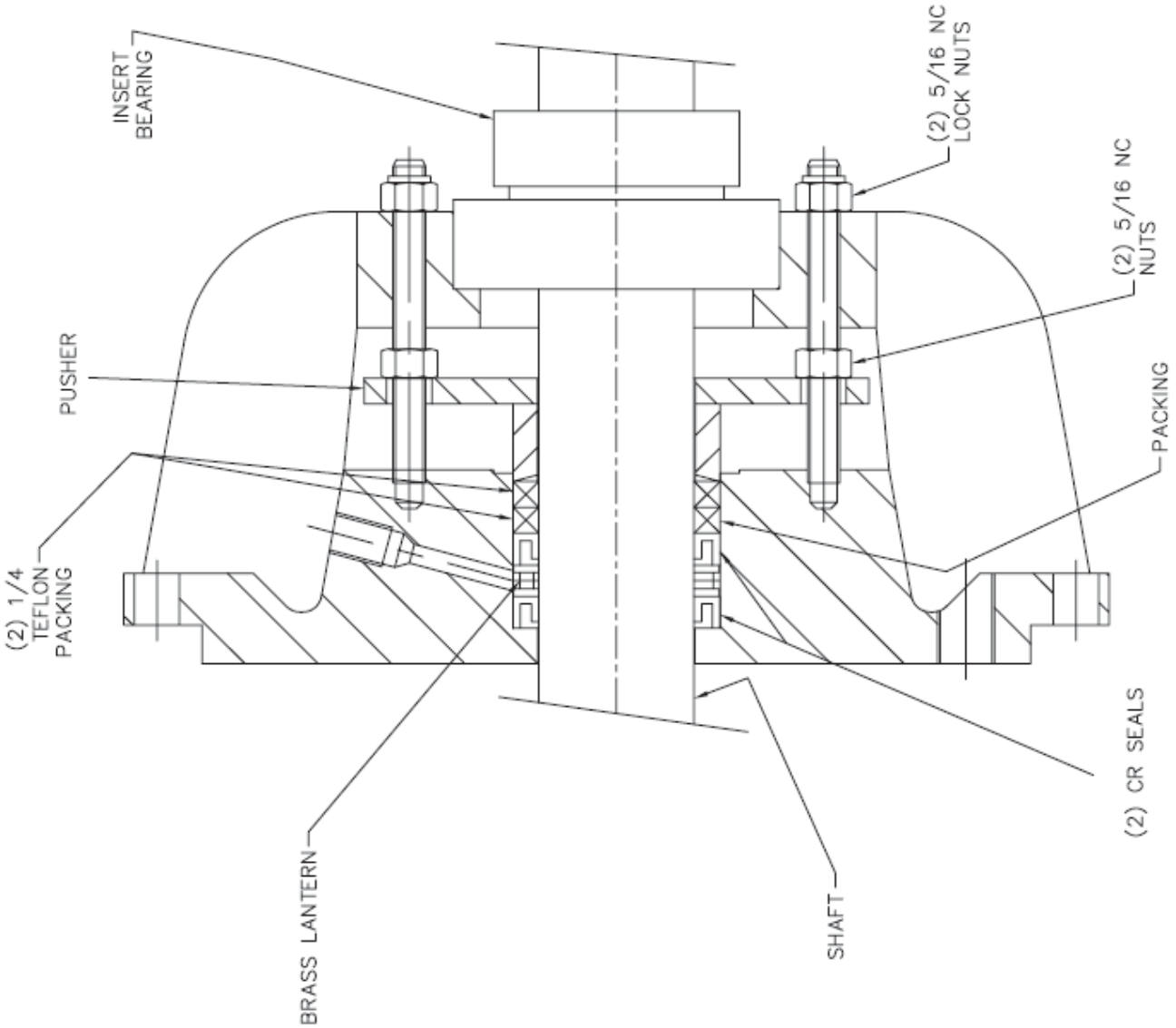

611 Argyle St. N. Caledonia, Ontario N3W 1M1 **TEL: (800) 655-3447** **FAX: (800) 955-4991**
Email: sales@acsvalves.com **Website:** www.acsvalves.com

ACST-4 Shaft Seal Assembly

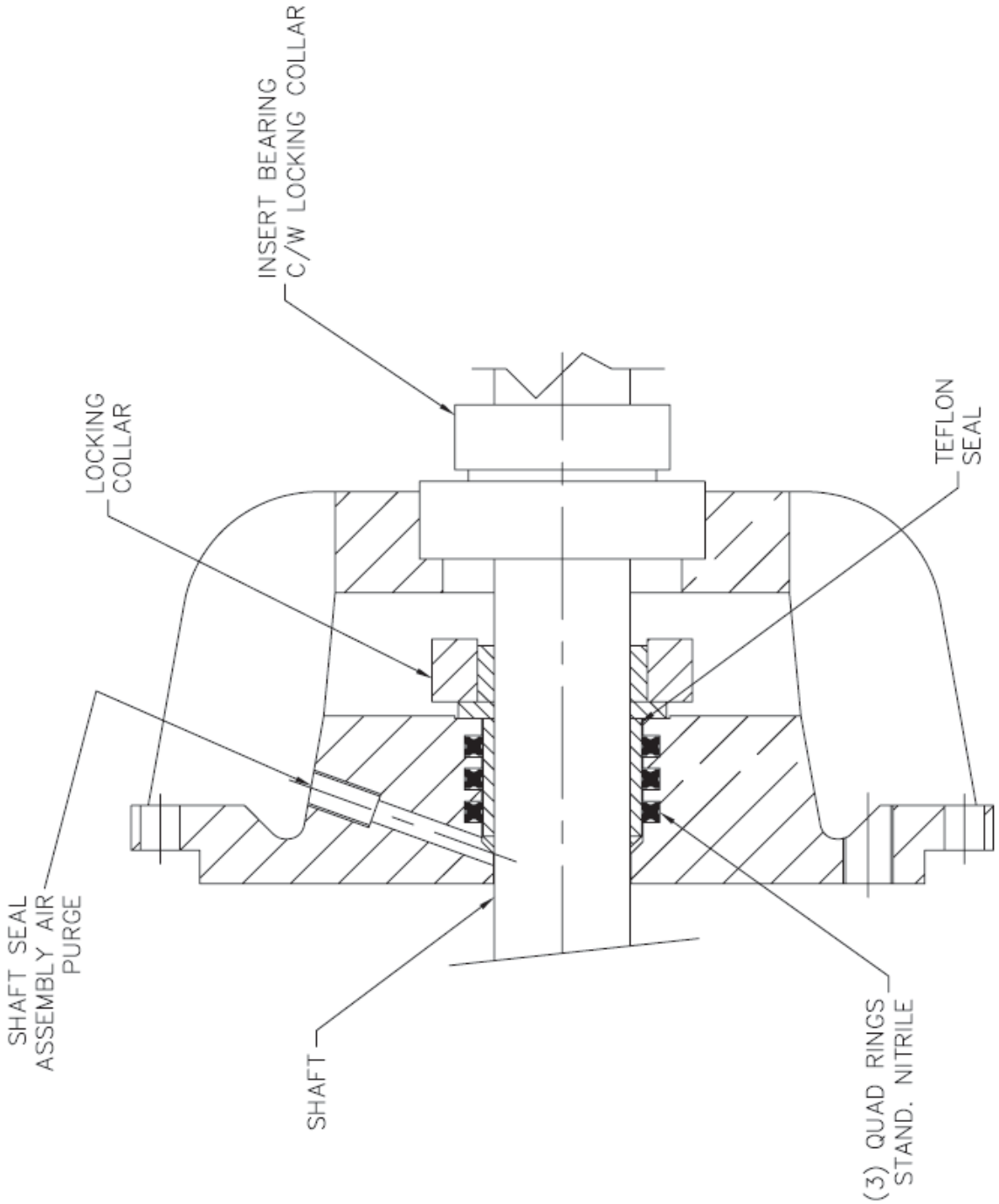

611 Argyle St. N. Caledonia, Ontario N3W 1M1 **TEL: (800) 655-3447** **FAX: (800) 955-4991**
Email: sales@acsvalves.com **Website: www.acsvalves.com**

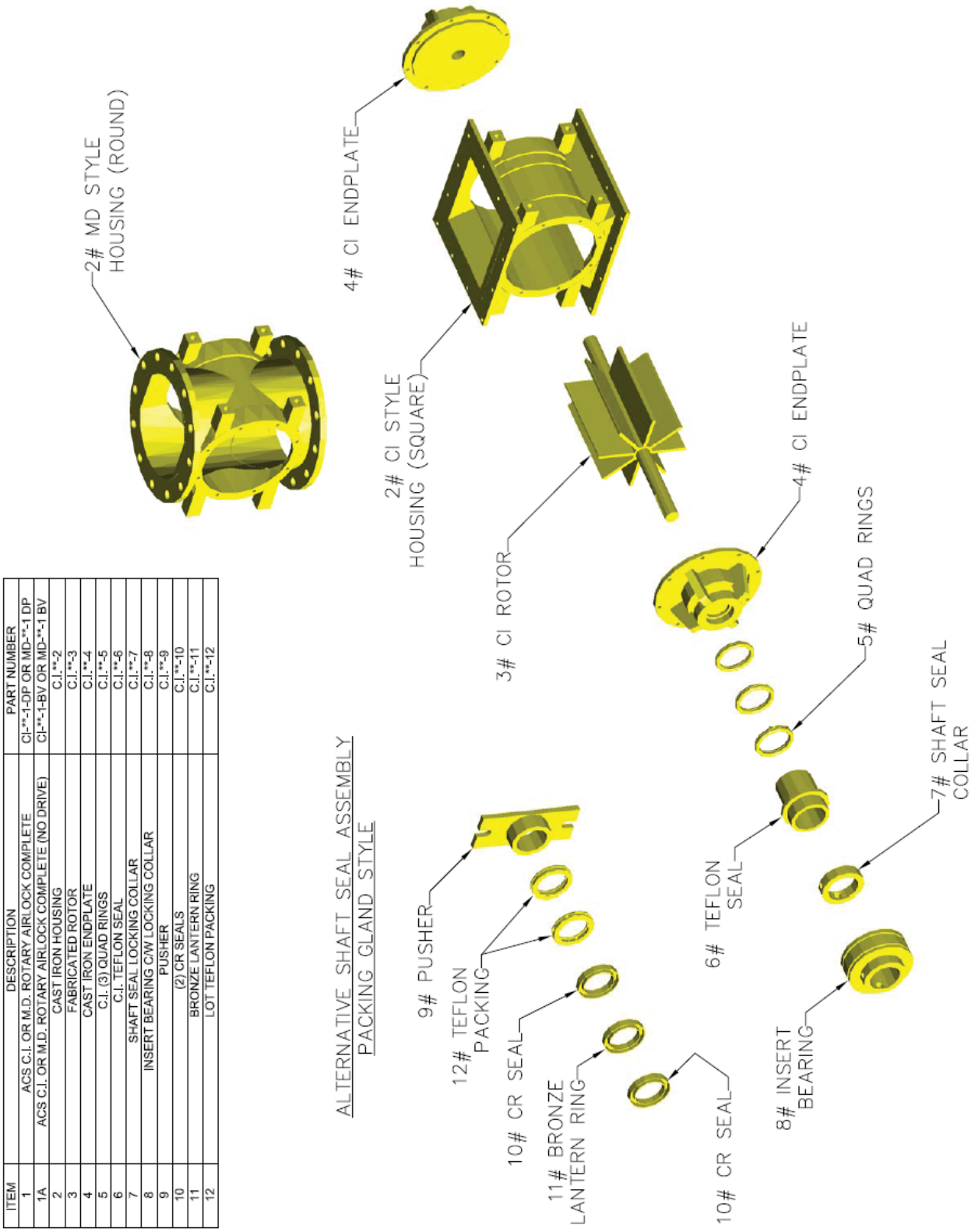

ITEM	DESCRIPTION	PART NUMBER
1	ACS C.I. OR M.D. ROTARY AIRLOCK COMPLETE	CI-**-1-DP OR MD-**-1 DP
1A	ACS C.I. OR M.D. ROTARY AIRLOCK COMPLETE (NO DRIVE)	CI-**-1-BV OR MD-**-1 BV
2	CAST IRON HOUSING	C.I.**-2
3	FABRICATED ROTOR	C.I.**-3
4	CAST IRON ENDPLATE	C.I.**-4
5	C.I. (3) QUAD RINGS	C.I.**-5
6	C.I. TEFLON SEAL	C.I.**-6
7	SHAFT SEAL LOCKING COLLAR	C.I.**-7
8	INSERT BEARING C/W LOCKING COLLAR	C.I.**-8
9	PUSHER	C.I.**-9
10	(2) CR SEALS	C.I.**-10
11	BRONZE LANTERN RING	C.I.**-11
12	LOT TEFLON PACKING	C.I.**-12

611 Argyle St. N. Caledonia, Ontario N3W 1M1 **TEL: (800) 655-3447** **FAX: (800) 955-4991**
Email: sales@acsvalves.com **Website: www.acsvalves.com**

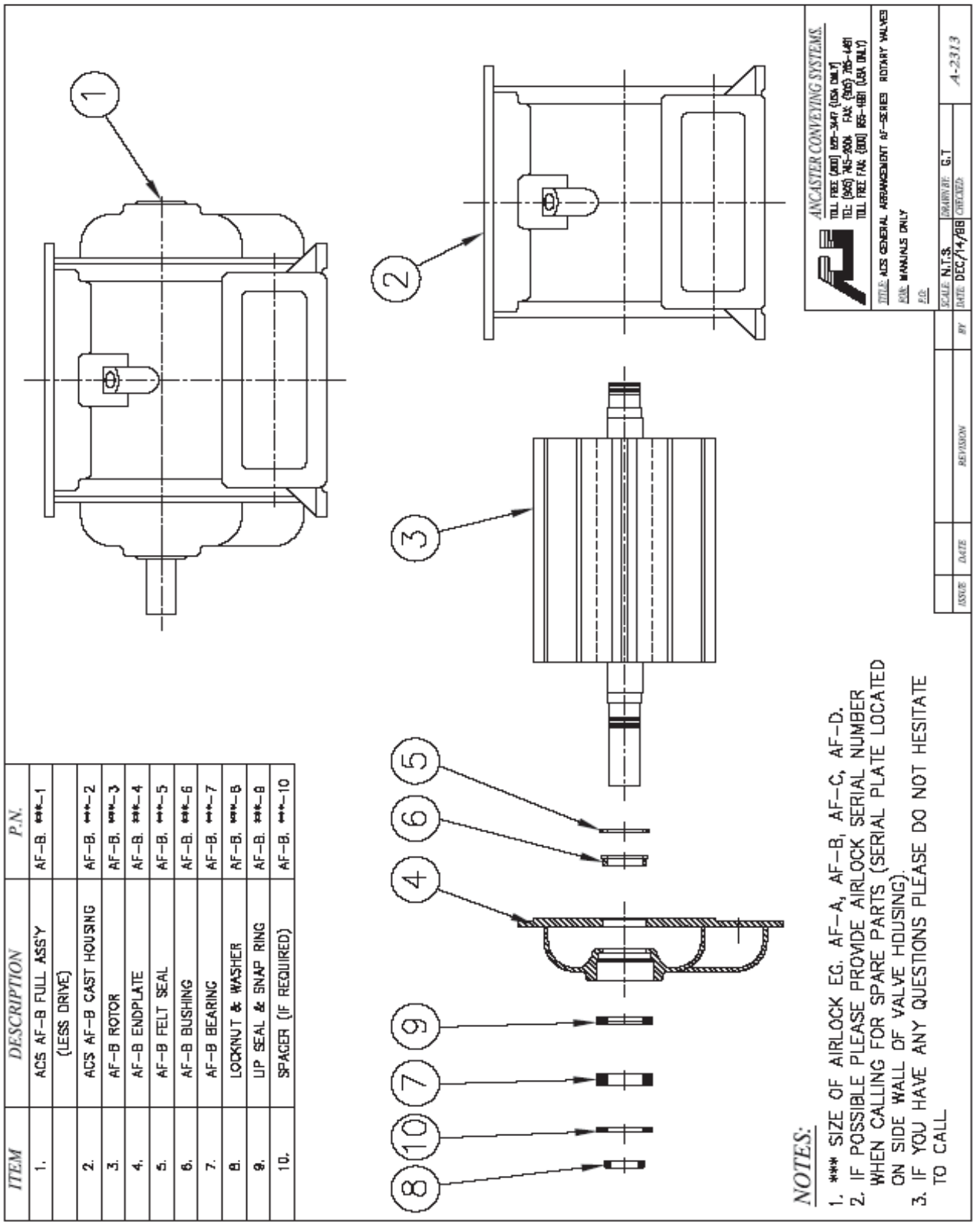

611 Argyle St. N. Caledonia, Ontario N3W 1M1 **TEL: (800) 655-3447** **FAX: (800) 955-4991**
Email: sales@acsvalves.com **Website: www.acsvalves.com**

Terms and Conditions of Sale

These General Conditions of Sale are and shall be applicable to all sales of products and services of Ancaster Conveying Systems ("ACS"). No other or inconsistent conditions of sale shall be binding upon ACS unless specifically agreed to in writing by an authorized official of ACS. ACS' distributors and sales representatives are not authorized officials of ACS for purposes of this provision. Any failure by ACS to object to any inconsistent condition or other communication from a buyer of production or services from ACS shall not be construed as an acceptance of such other inconsistent provision or as a waiver of these General Conditions of Sales

PRICES: Published prices on standard products and services are subject to change without notice. Verbal quotations on custom productions or special services expire at the close of the business day they were made, if not first accepted in writing or withdrawn. Written quotations for custom productions or special services expire 30 days from the date which they bear, unless earlier withdrawn or unless the quotation specifically provides another expiration date.

OFFICIAL CORRESPONDANCE: All official correspondence to include, but not limited to Purchase orders, Specifications, Samples, Construction Drawings, Approval Documentations, Shipping Status, Reports, Shortages of Incorrect Equipment Claims and/or Warranty Claims must be made and addressed to ACS at its principal office in Caledonia, Ontario.

ACCEPTANCE: No purchase order shall be valid and/or binding upon ACS unless first accepted by ACS at its principal office in Caledonia, Ontario.
TERMS OF PAYMENT: Unless otherwise agreed to in writing, payment is due:

a) Net within 30 days from the date of invoice from buyers whose credit has been approved by ACS.
b) Upon delivery for all other buyers. ACS with charge a 1 ½ % per month service and carrying charge with respect to all balances which are not paid when due. If a shipment of ACS' products is delayed by the acts of omissions of a buyer, payment shall become due at the time such products would have been shipped and the products will thereafter be stored by ACS at the buyer's expense and risk.

CONFIDENTIALITY: All proposals and price quotations, including any drawings prepared by ACS are confidential and remain the property of ACS. Transmission of all or any part of such information to others, or the use of any such information for the purpose other than considering the purchase of the products described, is prohibited.

TAXES: Any federal, state, provincial or local tax, tariff or charge of duty levied on the sale by ACS of any product or service or on the use or possession of any product after shipment by ACS shall be borne by and paid for by the buyer. If ACS is required by law to collect any such tax, tariff, charge or duty, the buyer will pay the amount thereof to ACS on demand or provide to ACS at the time the purchase order, any applicable exemption certificate or additional documentation.

RESPONSIBILITY FOR DOCUMENTS: Any documents, drawings or samples submitted with a purchase must be picked up by the buyer within a 30-day period. ACS shall no longer be responsible for any such items and may discard them.

ESCALATION: Any price quoted by ACS is calculated on the basis of wage and materials cost in effect at the date of the quotation and may be subject to increase to reflect increases in wage and/or materials cost accordingly.
CHANGES IN SPECIFICATIONS: No specification change shall be valid unless in writing, signed by ACS and the buyer of the product.
LOCAL CONDITIONS: ACS shall not be responsible for determining whether products furnished to any buyer comply with local conditions, codes or interpretations. The buyers of the product shall have the sole responsibility for assuring such compliance.

SHIPPING: Shipping dates are approximate and are dependant upon availability of materials and the cooperation of the buyers. ACS shall not be subject to any liability because of delay in shipping resulting from strike, accident, weather, fire or other conditions beyond ACS' control. ACS shall not be responsible for damage or loss in transit, and the buyer of any product shall have the sole responsibility to pursue any claims against a carrier.

SHORTAGES OR INCORRECT EQUIPMENT: Claims by a buyer of products from ACS for shortages or incorrect products must be made in writing within 10 days after receipt of the shipment by the recipient. Failure to give such written notice to ACS shall constitute in an unqualified acceptance of the shipped products and waiver of any claim by the buyer.

INSTALLATION: Installation of the Products shall be at the expense of the buyer. ACS can provide installation and start-up service.
In any case where ACS is utilized, the buyer shall nevertheless be obligated to furnish all necessary skilled and unskilled labor, tools, rigging and appliances with respect to the erection of a Product, without responsibility or liability of ACS.
If a Product is installed without ACS' assistance, ACS warranties contained in these general conditions shall not be applicable in the event of any claim of damage which, in ACS opinion, results from inadequate or faulty installation.

WARRANTY: ACS warrants its Products on the following terms and conditions only. THESE EXPRESSED WARRANTIES ARE IN LIEU OF ANY OTHER OBILGATION OR WARRANTY, WHETHER EXPRESSED OR IMPLIED OR ARISING BY OPERATION OF LAW.

a) ACS warrants that each of its Products shall be free of defects in workmanship and materials for a period up to one year from the date of installation (but not to exceed 18 months from the date of shipment by ACS from its factory)
b) ACS warrants that any of its custom Products which are manufactured in accordance with specifications, drawings, plans and designs set forth in writing by the buyer shall reasonably conform to all such written specifications, drawings, plans and designs.
c) The warranties set forth in (a) and (b) above are subject to and limited by the following:
    I. ACS' warranty with respect to a component of a Product supplied by another shall not exceed the warranty of the other supplier in terms or conditions.
    II. ACS' warranties shall be inapplicable if in the opinion of ACS, the Product has been mechanically, electrically or environmentally abused or altered, or if the Product was improperly installed.

III. ACS' warranties are applicable only within the continental boundaries of the United States, Hawaii, Canada and Alaska.
IV. ACS' warranties are limited to the supply of replacements for the defective part(s), FOB factory.

THIS WARRANTEE IS EXCLUSIVE AND IN LIEU OF ALL OTHER WARRANTEESS, EXPRESS, IMPLIED OR STATUTORY, INCLUDING BOTH BUT NOT LIMITED TO THE WARRANTEE OF MECHHANTABILITY. THE WARRANTEE OF FITNESS FOR USE AND THE WARRANTEE OF FITNESS FOR ANY PARTICULAR PURPOSE AND EXCLUDES ANY CLAIMS FOR INDIRECT OR CONSEQUENTIAL LOSSES OR DAMAGES. BUYER ASSUMES ALL RISK AND LIABILITY FOR LOSS, DAMAGE OR INJURY TO THIRD PERSON OR PROPERTY ARISING FROM THE USE OF GOODS SUPPLIED BY SELLER TO BUYER. BUYER AGREES TO DEFEND, INDEMNIFY AND HOLD HARMLESS SELLER AGAINEST LIABILITY OR OBLIGATION THAT ARISE FROM CONTRACT OR TORT, INCLUDING BUT NOT LIMITED TO NEGILIGENCE INCLUDING STRICT LIABILITY OR OTHERWISE WITH RESPECT TO ANY INDIRECT OR CONSEQUENTIAL DAMAGES, LOST PROFITS, OVERTIME , REPLACEMENT EQUIPMENT OR SERVICES, PENALTIES, LOSS OR DAMAGE TO BUYER OR ANY THIRD PERSON. IF THE GOODS THAT ARE THE SUBJECT OF THIS AGREEMENT CANNOT BE IN THE SELLER(S) DETERMINATION, ADEQUATELY REPAIRED OR REPLACED, SEELER(S) LIABLITY SHALL NOT EXCEED REPAYMENT OF THE AMOUNT OF PURCHASE FUNDS RECEIVED FROM BUYER.

GOVERNING LAW: Ontario law shall be applicable with respect to, and interpretation of these General Conditions of Sale.
RETURNS/CANCELLATIONS BY BUYER: Unilateral cancellation of a purchase order to ACS shall constitute a breach of contract and shall be subject to a cancellation/restocking charge. This charge shall be a minimum of 30% of the purchase order value and a maximum charge of the selling price of all materials and labor, purchased or expended by ACS to compensate for the disruptions in scheduling, planned productions and other direct costs. No approval shall be granted for the return of Goods under any circumstances where the original invoice date for such Goods is more than one-hundred eighty (180) days prior to the date that a request is made to ACS for such approval. No credit will be issued for returned Goods where the net amount involved is less than $100.00, except when an error made by ACS is to be corrected.

Start with a top-to-bottom equipment inspection and save year after year.

Proactively prevent component failures, major repairs and unplanned downtime.

Initial inspection puts you back on track. Your Hapman equipment was robustly engineered to run trouble-free for years. But you must properly maintain it to reap the savings – and it's too easy to fall behind. To keep maintenance on track, start with a top-to-bottom inspection of your Hapman equipment. One of our skilled technicians will conduct the 4-8 hour inspection. You'll get a detailed report with early warnings of part wear and/or impending component failures. We'll also evaluate your maintenance program and provide a 30-minute consultation so you can learn how to make cost-saving improvements. Fee: only $600 plus expenses.

Customized Managed Maintenance Program (MMP) minimizes "surprise" expenses. Included in your initial inspection will be a no-obligation MMP based on the level of maintenance assistance you want:

- Regularly scheduled equipment inspections by a Hapman technician
- Shared maintenance responsibilities between Hapman and your staff, or
- Full maintenance performed by Hapman

All three levels will improve your machine uptime, reliability, performance and longevity. And that's how you'll keep saving year after year.

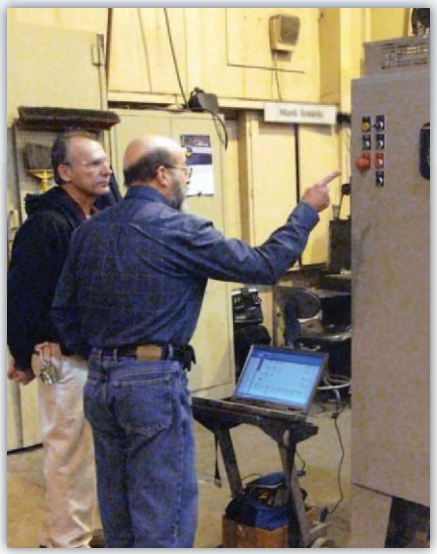

YOUR INITIAL INSPECTION INCLUDES:

- Maintenance baseline for your Hapman equipment.
- Detailed inspection report pinpointing maintenance/repair needs.
- One-on-one consultation on how to maximize equipment longevity.
- No-obligation MMP to safeguard your equipment investment.

EXCLUSIVE SAVINGS

When you sign on for the Hapman MMP:

- Save 10% on Hapman service call rates.
- Save 10% on list price of all MMP-covered parts purchases.

TO LEARN MORE WAYS TO SAVE WITH MMP OR TO SCHEDULE AN INSPECTION, CONTACT US TODAY:

800-427-6260 (US/Can) or 269-343-1675
fax 269-382-8266

HAPMAN
Ideas that move™

www.hapman.com

© 2011 Hapman. All rights reserved.

LEFT BLANK

KOFLO

MODEL 1.5-40C-4-6-2, STATIC MIXER
MODEL 2-40C-4-6-2, STATIC MIXER

LEFT BLANK

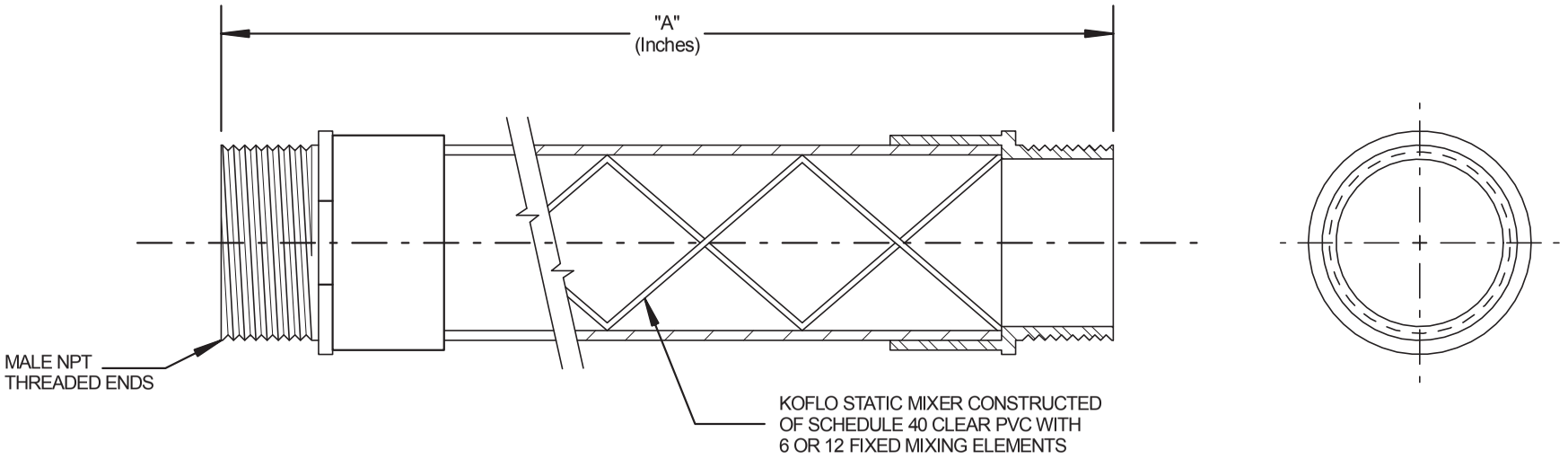

Size	6 Element Model Number	"A" 6 Element	12 Element Model Number	"A" 12 Element
3/8"	3/8-40C-4-6-2	6-1/2	3/8-40C-4-12-2	11
1/2"	1/2-40C-4-6-2	7	1/2-40C-4-12-2	12
3/4"	3/4-40C-4-6-2	9	3/4-40C-4-12-2	15
1"	1-40C-4-6-2	11	1-40C-4-12-2	18
1-1/4"	1.25-40C-4-6-2	14	1.25-40C-4-12-2	25
1-1/2"	1.5-40C-4-6-2	15	1.5-40C-4-12-2	28
2"	2-40C-4-6-2	19	2-40C-4-12-2	35

Koflo Corporation
309 CARY POINT DR.
CARY, IL 60013

SCALE: NONE	APPROVED BY JJT	DRAWN BY NJF
DATE: 1/18/94		REVISED 10/15/01
CUSTOMER:		REVISED 5/22/08
		REVISED 6/12/09
MODEL NO: CLEAR PVC SCHEDULE 40 MIXER		DRAWING NUMBER: KD-993

LEFT BLANK

MANUFACTURER INSTALLATION OPERATION AND MAINTENANCE MANUAL

AMARUQ WTP – NUNAVUT

VEOLIA PROJECT: 5000 218 009

Mc LANAHAN

MODEL M3H-CR 3/3, MICROSAND RECIRCULATION PUMP (P2-011/012/021/022)

LEFT BLANK

585 Airport Road, Gallatin, TN 37066 USA Tel: +1 (615) 451 4440 Fax: +1 (615) 451 4461 mclanahan.com

May 11, 2018
VEOLIA WATER TECHNOLOGIES
3901 RUE SARTELON
VILLE ST LAURENT QC H4S 2A6
CANADA

Thank you for your recent purchase of the following McLanahan equipment with your Purchase Order 18000630 HD referencing our Sales Order 113957.

This document contains important information regarding the installation & operations of your new equipment. Having recommended spare parts at your plant will assure minimum down time in order to perform periodic maintenance and will also eliminate the expense of air freight of critical parts. They are available for immediate shipment from our inventory.

When ordering parts, you will be required to provide the equipment's serial number.

- (4) 3X3 DG NITRILE PUMP ASM W/ 15 HP DRIVE
  S/N: **20182093- 20182096**

We suggest you become familiar with the enclosed literature to ensure the proper installation of this equipment.

Should you have any questions regarding the installation and/or operation of the equipment you have purchased, please contact our Process Equipment Department at (615) 451-4440.

Sincerely,

McLanahan Corporation

Product SUPPORT ★★★★★ Customer SERVICE

This page is intentionally left blank

INSTALLATION, OPERATION & MAINTENANCE MANUAL

(4) 3X3 DG NITRILE PUMP ASM W/ 15 HP DRIVE

PROJECT ID #20182093- 20182096

McLanahan®

WORLD HEADQUARTERS	200 Wall Street, Hollidaysburg, PA 16648 USA	Ph: +1 (814) 695 9807	Fax: +1 (814) 695 6684
TENNESSEE	585 Airport Road, Gallatin, TN 37066 USA	Ph: +1 (615) 451 4440	Fax: +1 (615) 451 4461
FLORIDA	6550 New Tampa Highway, Lakeland, FL 33815 USA	Ph: +1 (863) 667 2090	Fax: +1 (863) 667 0449
IOWA	800 First Avenue N.W., Cedar Rapids, IA 52405 USA	Ph: +1 (319) 365 0441	Fax: +1 (319) 369 5440
AUSTRALIA	16 Callistemon Close, Warabrook, NSW 2304 Australia	Ph: +02 49 248 248	Fax: +02 4926 2514
UNITED KINGDOM	Unit 15, Newman Lane, Alton, Hampshire, GU34 2QR, UK	Ph: +44 (0) 1420 542489	

mclanahan.com

This page is intentionally left blank

INSTALLATION, OPERATION & MAINTENANCE MANUAL

PUMP ASSEMBLY MANUAL

TAG INFO: ITEM #1 P2-011 PID 20182093

TAG ITEM #2 P2-012 20182094

TAG ITEM #3 P2-021 20182095

TAG ITEM #4 P2-022 20182096

McLanahan®

WORLD HEADQUARTERS 200 Wall Street, Hollidaysburg, PA 16648 USA Tel: +1 814-695-9807 Fax: +1 814-695-6684

TENNESSEE 585 Airport Road, Gallatin, TN 37066 USA Tel: +1 615-451-4440 Fax: +1 615-451-4461

FLORIDA 2920 Barneys Pumps Place, Lakeland, FL 33812 USA Tel: +1 863-667-2090 Fax: +1 863-667-0449

IOWA 800 First Avenue N.W., Cedar Rapids, IA 52405 USA Tel: +1 319-365-0441 Fax: +1 319-369-5440

AUSTRALIA 16 Callistemon Close, Warabrook, NSW 2304 Australia Tel: +02 49 248 248 Fax: +02 4926 2514

UNITED KINGDOM 11 Warren Rise, Frimley, Surrey, GU16 8SH UK Tel: +44 (0)7407 344757

mclanahan.com

Table of Contents

Table of Contents 3
Safety Precautions 5
Introduction 7
“Pumptec” Computer Software 8
Maska 9
Pump Curve 10
Specific Information About Your Pump 12
Design Condition (To be filled in by distributor or owner) 12
Gland Options 13
“H” and “P” Glands 13
“D” Gland 14
General Pump Suction Requirements 19
Installation 19
Noise 19
Foundations 20
Pipe Work 20
Power 20
Gland Services 20
Access 20
Impeller Adjustment Axially 20
Coupling Alignment 20
Motor Rotation 21
Tension V-belts 21
Belt Guard 21
Gland Service 21
Greased Bearings 21
Final Checks 21
Electrical Installation 21
Gland Services 22
Gland Service Systems 23
Lubrication and Cooling 23
Start-Up Procedure 24
Shutdown Procedure 24
Disassembly Procedure 24
Assembly Procedure 25

Spare Parts List 29
Troubleshooting 36
Wear and Replacement of Parts 36
No Discharge When Pump Runs 36
Brief Discharge Only 37
Pumps water but not solids 37
Overloads for Motor Trip Out 38
Pump Handles Only a Limited Percentage Solids 41
Pump Speed Incorrect 41
Air Entrainment 41
Poor Suction Line 41
Cavitation 41
Gland Will Not Seal Adequately 41
Excessive Heat in Drive 42
Sudden Reduction in Discharge 43
Sudden Increases in Power Demand 44
Rapid Component Wear 45
Mechanical Failure 46
Motor Manual 47
Drawings 78

Safety Precautions

Overview

READ THIS MANUAL IN ITS ENTIRETY BEFORE BEGINNING OPERATION.

- **DO NOT** install, operate or service this equipment (or any portion thereof) without fully understanding the information contained herein.
- **DO NOT** operate this equipment in any manner other than that for which it has been designed or approved.

NOTE: A copy of this manual **must** be provided to the operator of this equipment and **must** be kept with the equipment at all times.

The safety instructions presented throughout this manual do not supersede any other directives or practices associated with this equipment or its operation. Rather, they are to be used in addition to any other applicable guidelines set forth by governing bodies (ANSI, ISO, OSHA, MSHA, etc.), plant administrators, signs, tags or placards, etc. (Refer to the **TAGS** section of this manual for information regarding safety and instructional tags provided with the equipment.) In the event of conflicting information, **always use the guidelines providing the highest degree of protection/safety.**

The safety instructions used throughout this manual and on the equipment contain a "signal word" (CAUTION, WARNING or DANGER) that indicates the seriousness of the hazard as described below.

DANGER *indicates an imminently hazardous situation, which, if not avoided, will result in death or serious injury.*

WARNING *indicates a potentially hazardous situation, which, if not avoided, could result in death or serious injury.*

CAUTION *indicates a potentially hazardous situation, which, if not avoided, may result in minor or moderate injury.*

CAUTION *(used without the safety alert symbol) indicates a potentially hazardous situation, which, if not avoided, may result in property damage.*

The safety instructions listed below are general guidelines. Additional safety instructions are listed throughout this manual as required. **All** safety instructions **must** be followed at all times to ensure personal safety and to prevent equipment damage.

Verify that all personnel are clear of any/all moving or rotating parts (or parts that are subject to movement or rotation) before installing, operating or servicing this equipment or any portion thereof.

Verify that all guards and safety devices are in place, secured and functional before operating this equipment or any portion of it. **DO NOT** circumvent or disable any safety devices.

Lockout/Tagout all controls and secure all applicable components to prevent unexpected movement before performing any maintenance, repairs or adjustments on this equipment or any portion thereof.

Lockout/Tagout power at the source before accessing any electrical panels or devices on this equipment or before performing any maintenance or repairs to the power line(s) feeding this equipment.

Wear appropriate personal protective equipment at all times.

Obey all safety tags and signs and replace any that are illegible or missing.

If any questions arise concerning the safe operation of this equipment, or if clarification of any information is required, cease operation and contact **McLanahan Corporation** immediately.

The McLanahan Pump

Introduction

The Aggregate Processing Division of McLanahan is a major manufacturer of process plants for the minerals industry. The McLanahan Model lllr is the latest generation of successful abrasion/corrosion-resistant slurry handling pumps.

This manual should be carefully read before attempting to install or operate this McLanahan Model lllr Pump.

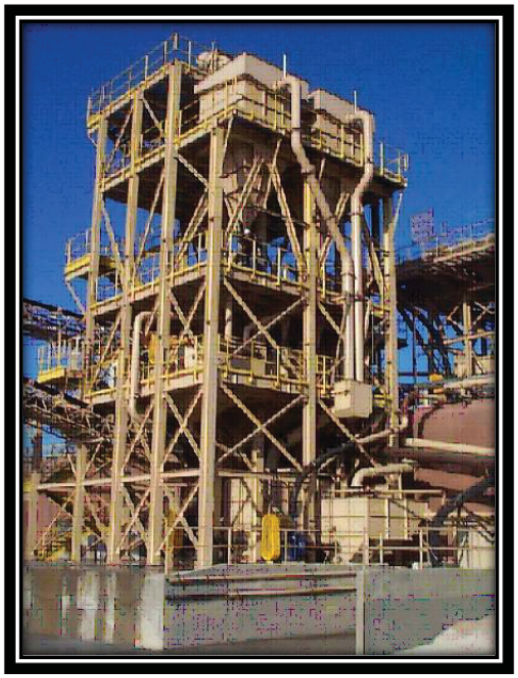

Service, Selection and Support

Total Service

From design to installation and beyond, McLanahan engineers are available to give advice on your slurry pumping needs and solutions for your problems.

The McLanahan Model lllr range has been designed to offer a wide choice of pump sizes to suit most slurry pumping applications. A standard questionnaire is available to ensure that the most complex installation, as well as the more straightforward pumping application, receives individual consideration.

McLanahan can also advise on the ancillary components within the pumping system. The provision of low head loss valves, gland feed pumps, priming devices and flexible bends, all incorporating application specific linings for trouble-free life, are an important aspect of ensuring a totally successful pump installation.

Design Specifications and Options

The McLanahan Model lllr standard casing is designed for a maximum working pressure of 88psi (6 bar). A high pressure casing is available, rated at 272psi (18.5 bar). Please contact McLanahan for pressures higher than this.

The pump units in the McLanahan Model lllr range are designated by the size of suction and discharge ports. Units up to 4” (100mm) have equal size suction and discharge; above this, the Model lllr has a larger suction than discharge. Size is given in inches i.e. 8”/6” (200/150mm) Model lllr has an 8” (200mm) suction port and a 6” (150mm) discharge port.

Suction and discharge flanges are universal and, as a standard, are available in ASA150 drilling patterns. Other drilling patterns (metric & BS4504) are available to special order. Orientation of discharge to 4 positions according to installation requirements.

The McLanahan Model lllr pump components are designed and manufactured in accordance with appropriate International Quality Standards, such as ISO9000.

"Pumptec" Computer Software

Many complex calculations are needed in order to

- Size a pump
- Establish the optimum pipeline carrying velocity
- De-rate the pump for a slurry duty
- Calculate pipeline friction head losses
- Calculate power absorbed
- Analyze the system head

McLanahan Corporation uses unique software, **Pumptec,** to perform these calculations.

The pump is able to adapt to a change of V-belt sheave ratios and different speeds. However, it is **crucial** to recalculate duty parameters and check motor and drives to guarantee that they are not overloaded under any normal operating condition.

Please consult McLanahan Corporation before making any changes to your pump system to ensure the correct combination of speed and power is selected.

Input criteria required:

- Volume to be pumped
- Percent solids
- Gradation of solids (top size & 50% passing size)
- Specific Gravity of Solids
- Specific Gravity of Liquid
- Temperature of Liquid
- Elevation above sea level
- Height of liquid level in tank (**if negative suction**, height from liquid surface to center line of pump inlet)
- Vertical height from pump inlet to discharge point
- Pressure required at delivery point
- Pipe diameter (inside diameter important)
- Pipe material
- Pipe fittings – type and quantity

Pumptec: Computer Aided Support

To complement and facilitate optimum selection of your slurry system, McLanahan uses **Pumptec.**

This unique computer program:

- Analyzes the effects of changing slurry density
- Calculates the P_{50} particle size from a sieve analysis
- Calculates settling velocities and select pump sizes
- Calculates pipeline frictional losses in various pipe materials and pipe fittings
- Calculates the pump duty and selects a pump and drive based on input parameters
- Prints full application and selection data including NPSH, BEP, RPM, HP, etc.

Troubleshooting is made easier using **Pumptec** Software to evaluate different scenarios.

Maska Pulleys Inc.
180, Boul. Gagnon, Ste-Claire
,Qc, Canada G0R 2V0
Tel:(418)883-3322 Fax:(418)883-5015
www.maskapulleys.com

Selection Parameters

Family: Classic & Narrow belts drives

Shaft diameter Driver: 1-5/8 Inch
Shaft diameter Driven: 45MM
Service Factor: 1.2
Driver power: 15 hp
Rpm Driver: 1760
Rpm Driven: 1318 **Tolerance:** -3% +3%
Center distance : Minimum: 16.5 Inch
Maximum: 18 Inch
Belts: BX,5V,5VX

Max. Hub Load: 9999
Rim Speed min.: 900 FPM
Rim Speed max.: 6500 FPM
Nbr of Grooves min.: 2
Nbr of Grooves max.: 15

Pitch Diameter (Inch)

	Min.	Max.
Driver	0.50	71.00
Driven	0.50	71.00

Actual Drive Values

Maximum number of results: 20

Rpm: 1326
Service Factor: 1.54
BeltSpeed (fpm): 3384
List Price: 298.32

Center distance (Inch): 17.0
Power/Belt (hp): 11.5

Deflection (inch): 0.26
Deflection Force (lbs): 5.0
Hub Loads (lbs): 263

Driver Sheave: 2B70

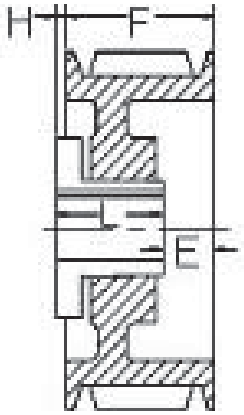

List Price: 72.00
Weight: 9.30 lbs

D.D. A or 4L Belt: 6.60"
D.D. B or 5L Belt: 7.00"
E: 1/4"
F: 1 3/4"
H: 3/8"
L: 1 7/8"
O.D.: 7.35"

Constuction type: Web

Driver Bushing: SKX1-5/8

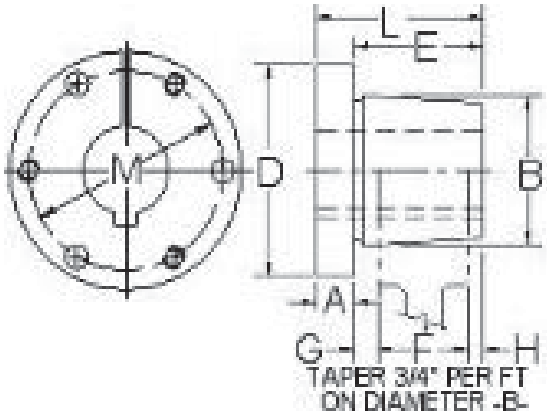

List Price: 26.80
Weight: 2.75 lbs

A: 1/2"
B: 2 13/16"
D: 3 7/8"
E: 1 3/8"
F: 1 1/4"
G: 5/16"
H: 3/16"
Keyseat: 3/8 x 3/16"
L: 1 7/8"
M: 3 5/16"

Product specifications: Standard with set screw over keyway.
Set screw - Dimensions: 1/4-20 UNC x 1/4
Hex bolt: 3=5/16-18UNC X 2

Driven Sheave: 2B94

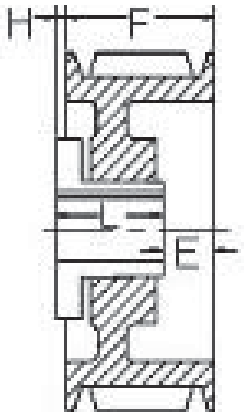

List Price: 78.00
Weight: 13.30 lbs

D.D. A or 4L Belt: 9.00"
D.D. B or 5L Belt: 9.40"
E: 1/4"
F: 1 3/4"
H: 3/8"
L: 1 7/8"
O.D.: 9.75"

Constuction type: Arms

Recommended Drive Selections are designed for use with Maska components (sheaves, bushings and V-belts) which meet or exceed MPTA & RMA standards. The use of lesser quality products could affect life expectancy of drive.Selections and Pricing are as accurate as possible; Maska is not responsible for ANY pricing or design errors.Price shown are for standard products only. For non-standard products or products that need dynamic balancing, contact Maska for pricing.

Driven Bushing: SKX45MM

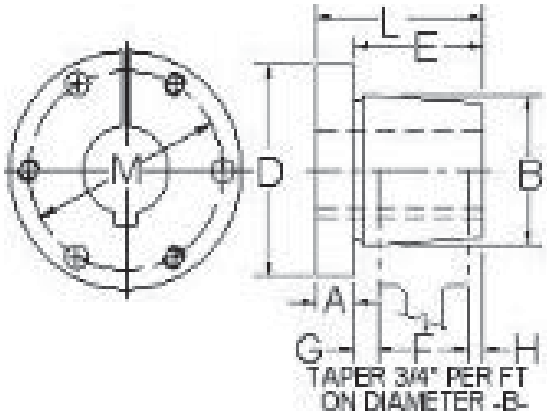

List Price: 26.80
Weight: 2.55 lbs

A: 1/2"
B: 2 13/16"
D: 3 7/8"
E: 1 3/8"
F: 1 1/4"
G: 5/16"
H: 3/16"
Key: 14 x 9"
L: 1 7/8"
M: 3 5/16"

Product specifications: Standard with set screw over keyway.
Hex bolt: 3=5/16-18UNC X 2
Set screw - Dimensions: 1/4-20 UNC x 1/4

Belts: VBBX58 (Qty:2)

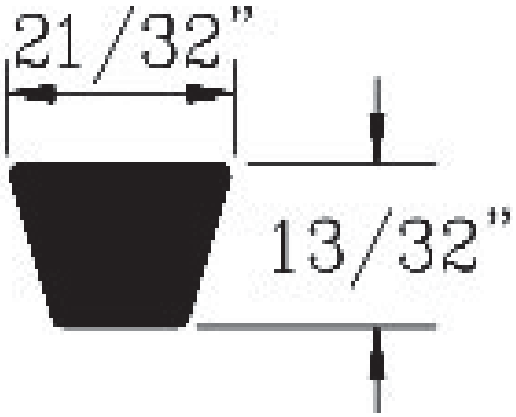

List Price: 47.36
Weight: 0.64 lbs

Recommended Drive Selections are designed for use with Maska components (sheaves, bushings and V-belts) which meet or exceed MPTA & RMA standards. The use of lesser quality products could affect life expectancy of drive.Selections and Pricing are as accurate as possible; Maska is not responsible for ANY pricing or design errors.Price shown are for standard products only. For non-standard products or products that need dynamic balancing, contact Maska for pricing.

McLanahan
AGGREGATE PROCESSING DIVISION

Standard Pump Curve

Linapump model 3/3 LPIIIr

Impellar Diameter	10"	Maximum Speed	2100rpm	Max. Solids size	$^{5}/_{8}$"	Curve No	080/01.96
No. of Vanes	4	Maximum Power	60hp	Model	3/3	date	02-Apr-97

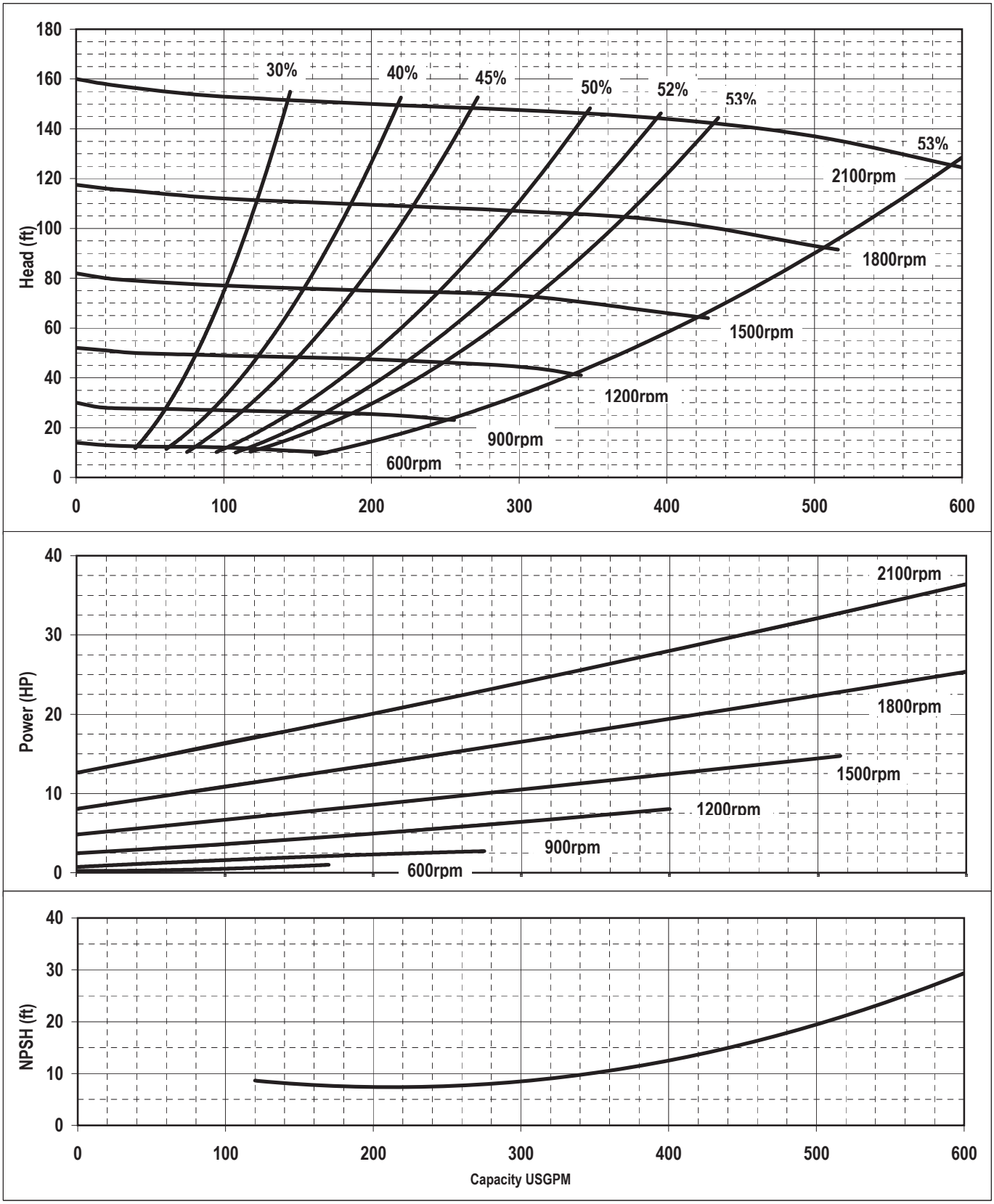

JMI - Agnico Eagle-Amaruk /

Q20180320-01, March 20, 2018

M3H-CR 3/3 , 1318 rpm, 15 hp

©2018-2019 Mclanahan. This curve is the property of Mclanahan. And must not be reproduced or disclosed without permission in writing. All rights are reserved.

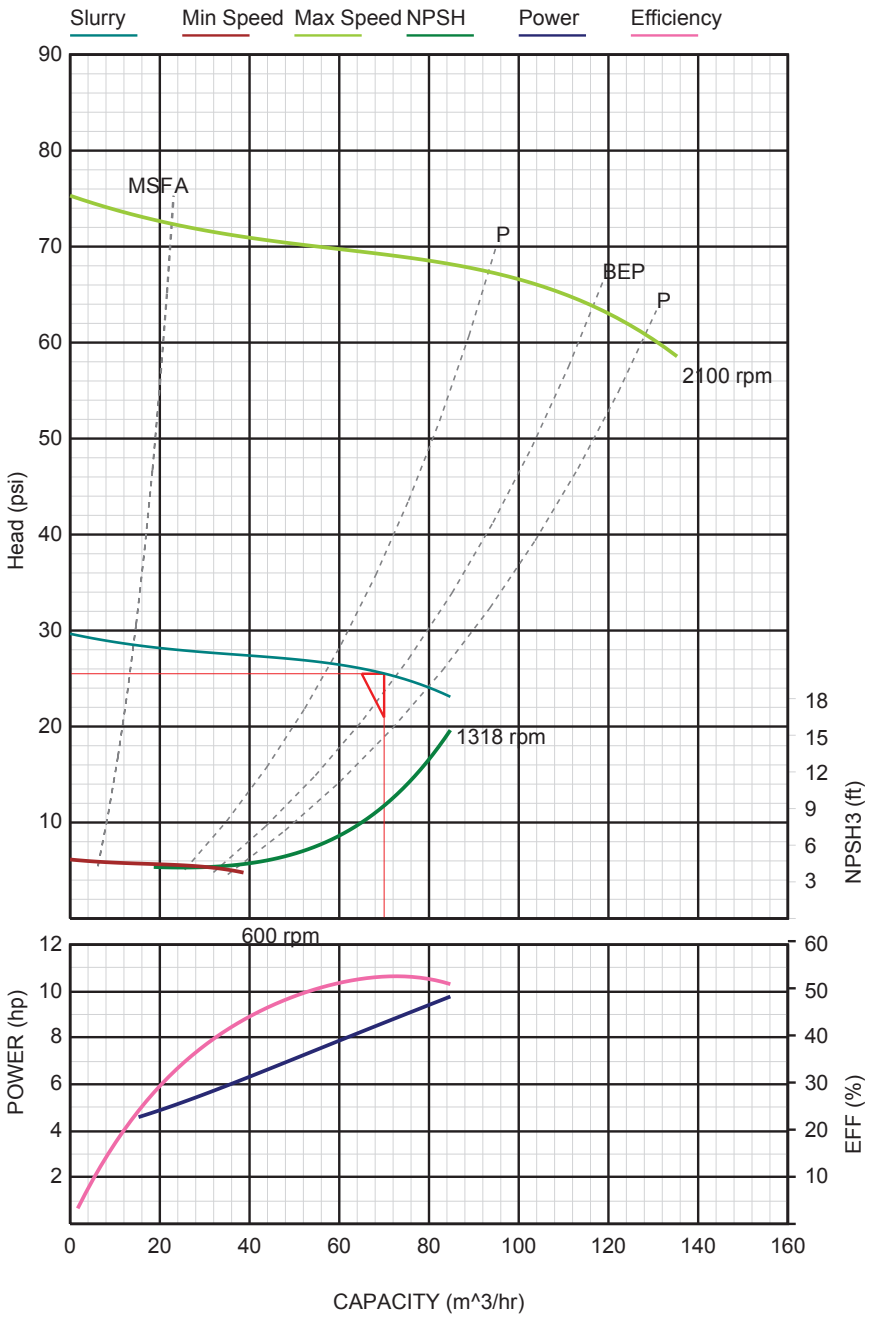

Pump model: M3H-CR 3/3

Pump	
Pump range	-CR
Speed	1318 rpm
Max Speed	2100 rpm
Efficiency @ BEP	53.13 %

Duty Point	
Flow	70 m^3/hr
Static Head	0 psi
Total Head	25.5 psi
Efficiency	53.15 %
NPSH required	7.664 ft
% of BEP	96.51 %
Power absorbed - @ Duty	8.635 hp
Motor size	15 hp
Tip Speed	57.03 ft/s
Impeller Diameter	10 in
Speed Head	25.97 psi

Slurry Data	
Solid flow rate	12.98 Tons/hr
Solid SG	2.7
Slurry SG	1.104
% Comp. by Weight	15 %
% comp. by Volume	6.135 %
Ave. Particle size (D50)	100 microns
Max Particle Size	300 microns
Head Ratio	0.982

Engineer's Notes

JMI - Agnico Eagle-Amaruk /
Q20180320-01, March 20, 2018
M3H-CR 3/3 , 1318 rpm, 15 hp

©2018-2019 Mclanahan. This datasheet is the property of Mclanahan. And must not be reproduced or disclosed without permission in writing. All rights are reserved.

Pump Details	
Pump Model	M3H-CR 3/3
Rated Flow	70 m^3/hr
Rated Head	25.5 psi
Efficiency	53.15 %
QBEP	96.51 %
Impeller Diameter	10 in
Pump Speed	1318 rpm
Minimum Speed	600 rpm
Maximum Speed	2100 rpm
Tip speed	57.03 ft/s
NPSH required	9.421 ft

Selection Details	
Required Flow	70 m^3/hr
Required Head	25.5 psi
Static Head	0 psi
Friction Head	25.5 psi
Suction Height	0 psi
Discharge Height	0 psi
Discharge Pressure	0 kPa
Head Ratio	0.982
NPSH Available	0 psi

Slurry Details	
Solid flow rate	12.98 Tonnes/hr
Slurry flow rate	70 m^3/hr
SG solid	2.7
SG liquid	1
SG slurry	1.104
% comp. by weight	15 %
% comp by volume	6.135 %
Ave. particle size	100 microns
Max particle size	300 microns
Widely graded particles	False
Froth factor	0
Set ER & HR manually	False
Efficiency ratio	0.982
Head ratio	0.982

Electrical Driver Details	
Motor	15 hp
Power absorbed by pump	9 hp
Power required	8.049 hp
Frame size	160M
Temperature rise	0
Insulation class	
Bearing size D/E	
Bearing size N/D/E	
Weight	0
Shaft size	0

Specific Information About Your Pump

Company Name:		
Address:		Tel:
		Fax:
Supplier:	Type of Industry:	
	Pump Model:	Size:
	Serial No:	Flange Type:
Contact Person:	Gland Size:	Drive Style:
Start-up date/remarks:		

Design Condition (To be filled in by distributor or owner)

The following data should be completed as a record of the duty for which the pump was originally sold. During its lifetime the pumping requirements may change; if so, the new speed and operating conditions must be carefully engineered. McLanahan engineers are able to assist you in doing this. U.S. units are used, unless otherwise noted.

Details of Solids

Description of Solids: _____

Specific Gravity Solids: S=_____ Quantity of Solids M: _____ dry tons/hr

Particle Size: Topsize= _____mesh (mm). 50% passing size= _____mesh (mm).

Details of Liquor

Description of Liquor: _____

Specific Gravity of Liquor: Sl = _____

Details of Slurry

Specific Gravity of Slurry: Sm = _____

Percent (%) of solids by volume in slurry: Cv=_____

Percent (%) of solids by weight in slurry: Cm = _____

Flow rate of slurry: Q=_____gpm (l/s, m^3/Hr).

Calculated Design Data

Total Head: _____ft (m). Maximum working Head: _____ft (m).
NPSHa: _____ft (m). NPSHr: _____ft (m).
Pump Speed on Slurry: _____rpm. Derate factor for Slurry: _____

Motor Data

Motor Power rating: _____HP (kW).
Motor Frame size: _____
Motor Speed: _____rpm.
Motor Shaft Size: _____in (mm).

Vee-Belt Drive Data

Motor pulley O.D. _____in (mm). Pump pulley O.D.: _____in (mm).
Taper lock Bush No: _____ Taper lock Bush No: _____
Vee-belt: _____No off_____ No of grooves/pulley: _____

Gland Water Requirements (H and P glands only)

Quantity: _____gpm (l/s)
Pressure: _____psi (m)

Technical Data

Pump Mass: _____lbs (kg).
Motor Mass: _____lbs (kg).
Pump Shaft Size: _____mm
Noise Level: _____db (A)

Gland Options

Gland Seals

The **gland** is usually the weakest point on any **pump**; therefore, it requires the most attention and maintenance. All glands need cooling and lubrication between the sliding surfaces, so **a leisurely drip from the glands is normal**. **NOTE: DO NOT PREVENT DRIP.** All glands must be finally adjusted while the pump is running.

The McLanahan Glands have been developed to minimize the attention and service needed; Pressure of the fluid being pumped, the size and shape of the solid particles and the concentration of the solid particles in the liquid all affect wear and tear on pumps. Three unique seal arrangements have been developed and McLanahan engineers can give advice regarding the optimum selection for a specific duty.

"H" and "P" Glands

The slurry pressure at the gland is reduced by back pump out vanes on the impeller. The rubber axial expeller, which is a stretch fit on the shaft of the "H" and "P" glands, is used to avert waste.

The solids are restrained by the outward centrifugal swirl behind the impeller, the axial expeller and the restricted path to the seal interface.

With the "H" Gland, the adjusting gland must be eased **outward** to increase the sealing pressure. The geometric shape of the **gland seal** is carefully designed to provide a flawless seal while limiting the amount of "digging" onto the gland sleeve.

The gland sealing water must be as clean as possible and at a pressure of about 3-5psi (2-4m water gauge) above the discharge pressure. A high-flushing water pressure results in greater water use and greater dilution of the pumped slurry without any benefit to the seal.

“D” Gland

This is a unique type of mechanical seal. The **face seal** runs against the **hard wearing face**.

The **face seal** acts as a spring and if any grit particles get between the rotating rubber and stationary **wear face** it is pressed into the rubber. The **face seal** is a stretch fit on the **shaft sleeve**. As the gland pressure increases, the rubber extends axially and increases the pressure at the rubbing interface. Be sure not to over-tighten the adjusting sleeve.

When the pump is first started, ensure that the adjusting nuts are finger tight. While the pump runs, adjust the gland nuts so there are approximately five (5) drops per minute from the gland. This should reduce to one (1) occasional drop and run satisfactorily for up to a year without further attention in a good application.

Dry Gland

Also known as "D" type gland
This gland has a unique proprietary design and is unlike conventional mechanical seals. A rotating rubber **face seal** is adjusted against a static **hard wearing face**; it is **self-lubricating -** pressure from inside the pump head forces small amounts of liquid between the surfaces for lubrication.

Note: The gland needs no external water source to lubricate the gland; both small amounts of water and the fines do exit the pump, accumulating at its base, hence the term **dry gland**.

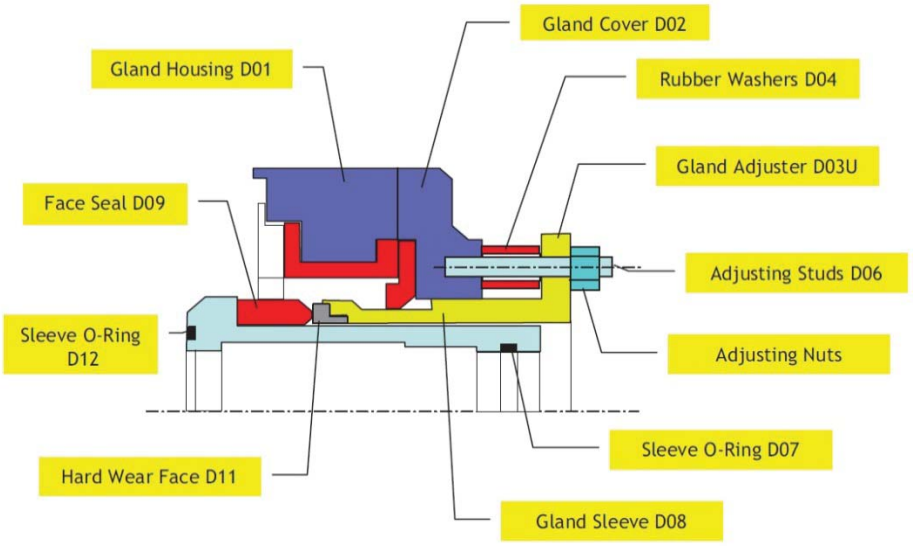

The **face seal** acts as a spring; if any grit particles get between the rotating rubber and **stationary wear face**, it is pressed into the rubber. The **face seal** is a stretch fit on the shaft sleeve. As the gland pressure increases, the rubber extends axially and increases the pressure at the rubbing interface.

While the pump is running, adjust the gland nuts so there are approximately five (5) drops per minute from the gland. This should reduce to one (1) occasional drop and run satisfactorily for up to one year without further attention in a typical application.

Hydrostatic Gland

Also known as "H" type gland
This gland has a unique proprietary design with the lowest maintenance and longest life. The unique rubber gland seal is designed to deflect inwards to provide an effective seal. The **slurry pressure** at the gland is reduced by back pump out vanes on the impeller; when fitted, it is reduced by the **rubber axial expeller**, which is a stretch fit on the shaft of the "H" gland sleeve.

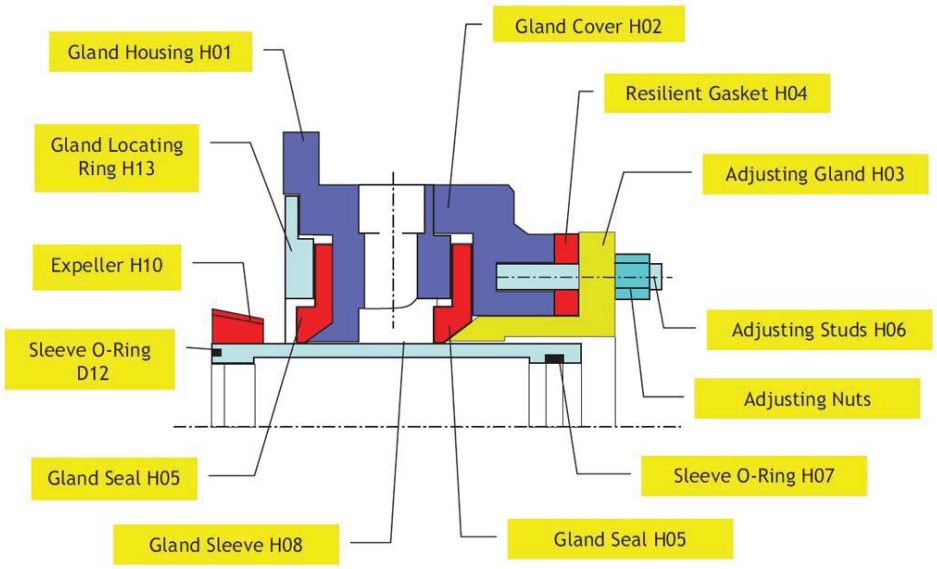

The solids are restrained by the outward centrifugal swirl behind the impeller, the axial expeller and the restricted path to the seal interface.

With the H Gland, the adjusting gland must be eased outwards to increase the sealing pressure. The geometric shape of the **gland seal** is carefully designed to give a good seal while limiting the amount of "digging" onto the gland sleeve.

The gland sealing water must be as clean as possible at a pressure of about 5psi (4m water gauge) above the discharge pressure and at a volume of between 1 to 5 gpm depending on pump size. A high-flushing water pressure results in greater water use and greater dilution of the pumped slurry without any benefit to the seal.

Packed Gland

"P" Type Gland
In a classic "stuffing box" design, sealing is obtained by compressing the gland packing rings onto the shaft sleeve. The gland offers the capacity to seal the pump even at high pressures, for instance, in series pumping.

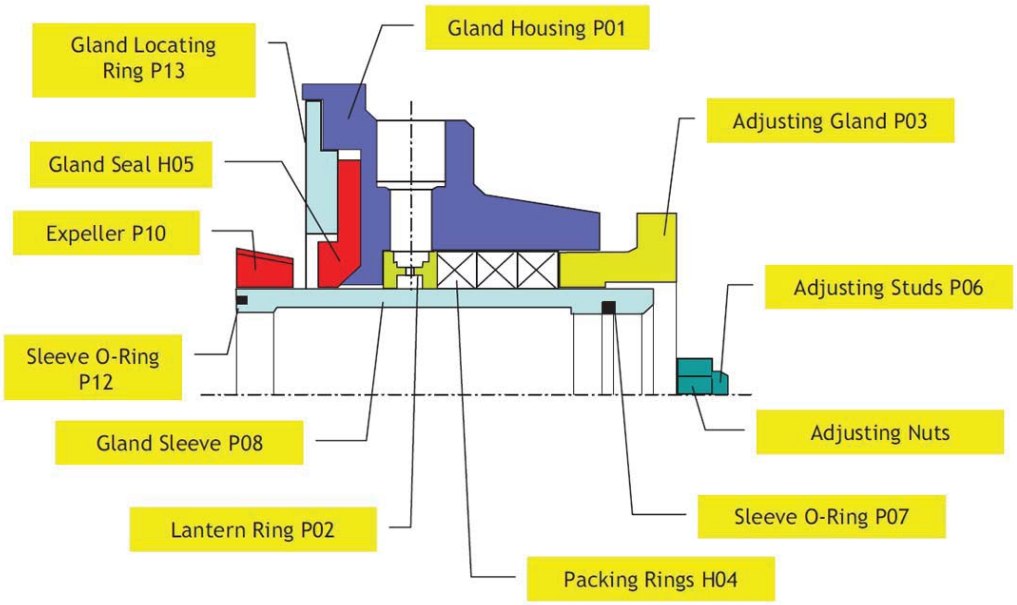

The solids are restrained by the outward centrifugal swirl behind the impeller, the axial expeller and the restricted path to the seal interface.

With the "P" gland, the adjusting gland must face inwards to increase the sealing pressure. The geometric shape of the **gland seal** is carefully designed to give a good seal while limiting the amount of "digging" onto the gland sleeve.

The gland sealing water must be as clean as possible at a pressure of about 5psi (4m water gauge) above the discharge pressure and at a volume of between 1 to 5 gpm depending on pump size. A high flushing water pressure results in greater water use and greater dilution of the pumped slurry without any benefit to the seal.

A pressure-fed grease supply can be used with the "P" gland; be sure to use synthetic rubber parts (special order).

Assembly of Dry Gland – Hard Wear Face & Gland Adjuster (2” x 2” shown)

1. Check all components

2. Extrude epoxy from package & mix thoroughly

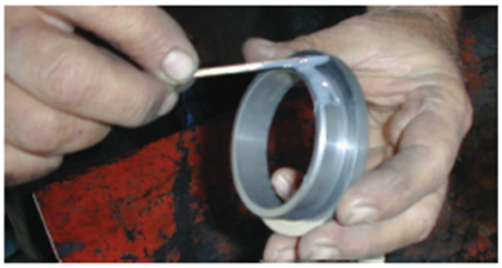

3. Apply epoxy to outer rim of Hard Wear Face (D11)

4. Place ‘O’ Ring (D10) on outer rim of Hard Wear Face (D11). Position ‘O’ Ring at leading edge.

5. Position Hard Wear Face & ‘O’ Ring into Gland Adjuster (D03U)

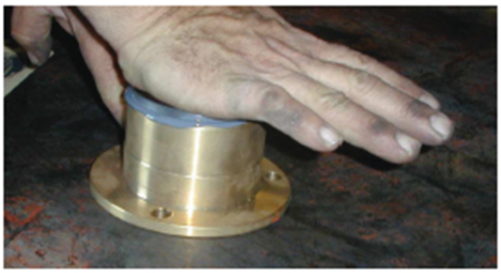

6. Using a slight twisting motion Carefully push Hard Wear Face into Adjuster

7. Wipe off excess epoxy

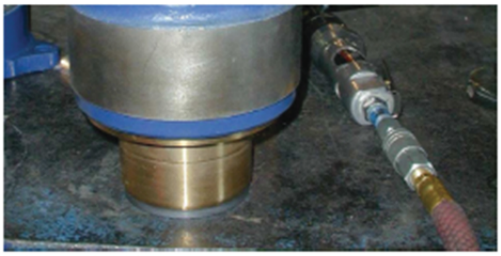

8. Place a heavy object on top of the assembly until dry (min 30 minutes)

General Pump Suction Requirements

A pump does not "suck," as fluid has no tensile strength. The centrifugal expulsion of fluids creates a low pressure area at the eye of the impeller; atmospheric pressure, plus any static head, pushes fluid into the pump. It is essential that suction systems do not restrict flow from the sump into the pump. With slurries, this is even more important as the solids themselves can settle and cause obstructions to flow.

In order to maintain the short pipelines and prevent obstruction**, cleaning is essential**. A trap to remove tramp material is beneficial as well.

Air entrained in the slurry reduces the pump's capacity and head; an air vent pipe on the suction pipe close to the pump inlet is often essential.

The pump will operate best if the flow velocity approaching the impeller is evenly distributed across the suction eye, and is sensibly axial, without swirl.

Pump performance is potentially impaired by a number of factors. Intake conditions in the sump, such as the formation of vortices, can cause an uneven flow over the eye of the impeller. Intake conditions in the suction pipeline, such as a sharp bend just before the pump, can affect performance as well.

Installation

Important Notes

- The maintenance of rotating machinery should be done by experienced mechanics.
- Protective clothing as well as proper tools and lifting equipment, all in good condition, must be used.
- Do not lift heavy weights without mechanical aids.
- Do not take any risks with your health and safety.
- If a pump has run without discharge, the fluid temperature and pressure may be dangerously high.
- The casing suspension arm is fitted as a maintenance aid only.
- The installer must ensure that guards are fitted in accordance with national & local regulations.

The following notes cover most situations; however, certain installations will require additional assessments.

Noise

Because of its heavy construction, rigid bearing housing and the sound attenuation due to the rubber lining, the noise generated by a bare shaft McLanahan Pump is low: less than 70dB (A).

The noise emission from a complete pump and drive unit will be dependent upon various factors including that from the motor, its fan and the V-belt drive. To obtain an indication of the noise level generated by a specific complete unit, take the highest component noise level, which is generally the motor, and multiply by 1.15.
For example:

dB (A) pump + dB (A) motor + dB (A) drive = 1.15 x dB (A) motor.

Other factors, including the piping system and hydraulically-generated noise as well as any reflected noise, will affect the final installed figure.

Foundations

Location and dimensions must be checked and matched to the pump-certified drawing when holding down bolts, bolt holes in steel work or pockets in concrete. The foundations must be rigid.

The pump base must be level in its final position; it must also be rigidly supported at each bolt, which is designed to hold it down, before the bolts are tightened.

Pipe Work

The suction and delivery pipe work must be independently supported and the pump must not be used as an anchor to pull the pipes into position.

The procedure for discarding solids in an emergency situation should be planned before it is needed. If the removal of suction and delivery pipe work is planned ahead of time, it will facilitate unblocking and servicing of the pump.

Precautionary checks that need to be completed include:

- Areas that could cause restriction on the suction side
- The possibility of thermal expansion in the pipework causing undue loads on the pump
- The pipework should match up to the pump without strain

The lining on the McLanahan model lllr is continued out to form gaskets on the suction and discharge flanges, therefore the use of joint rings or additional gaskets is not necessary. Connections to the pump should be made using flat-faced flanges only.

When fitting McLanahan pumps to rubber-lined equipment such as valves, hose or lined pipe, a steel gasket must be used.

Power

Check that the motor voltage, power and starter rating and supply match.

Gland Services

If gland sealing water is required, the quantity, quality and availability should be checked.

Access

Crane capacity and access routes from the delivery point should be checked. Access for maintenance, protection from flooding, as well as ventilation for motor cooling, must all be checked.

Impeller Adjustment Axially

The position of the rotating element must be set so there is a minimum running clearance, approximately 1/16” – 1/8” between the suction bush and the impeller. The bearing housing must then be locked into position. This clearance should be checked by bolting a dummy flange or stub pipe to the suction flange. This ensures any movement of the rubber lining on connection is allowed. Once connected to suction and delivery lines, the unit should be checked for free rotation.

Coupling Alignment

The pump and motor couplings must be aligned in accordance with good engineering practice. Axial or radial run-out must be less than 0.05 mm total indicated reading on a clock gauge. With V-belt pulleys, the faces of the couplings must be exactly in line and the shafts must be parallel to each other. A check with a straight edge or string line across the pulley faces should have no visible gap.

Motor Rotation

Before the belts are fitted or the couplings are connected, the direction of rotation of the motor must be checked. Incorrect motor rotation can cause the impeller to unscrew and destroy the pump.

Tension V-belts

When the motor's direction of rotation is correct, fit and tension the V-belts in accordance with the maker's recommendation. In general, a quarter to a half twist of the belt will be possible at the center of the belt by simply using fingers. Check the tension after a few running hours.

Belt Guard

The belt guard provided with this pump unit is manufactured with the shaft aperture fully closed with mesh. On installation of the V-belt drive and determination of pulley centers, the shaft guard is offered up and the mesh relieved locally to allow the shafts to pass through. Allowance may be required for movement of shafts when belt tensioning.

The mesh should be relieved and a guard should be fitted in a manner which prevents accidental contact with the rotating parts of the drive assembly.

The installer must ensure that the guard is installed in accordance with national and local regulations.

Gland Service

When these are fitted, be sure that gland water supply and protection systems are working.

Greased Bearings

The pump bearings have been greased at the factory. **Over-greasing them can cause them to overheat**; they should be looked over but may not need grease. **Suitable grease types** are: Shell Alvania 3, Mobil EP2, Caltex LS3 or their equivalents.

Final Checks

- All nuts and bolts are tight
- Gland adjusting nuts are finger tight
- No loose material is lying around the pump set
- The guards are securely fitted and the pump is safe to start

The running speed of the pump must not exceed the following:

Pump	1½ x 1½	2x2	3x3n	4x4	6x5	8x6	10x8	12x10
MAX RPM	2750	2400	2100	1600	1400	1200	1200	900

Electrical Installation

This equipment must be installed and controlled in accordance with applicable national and local regulations.

Gland Services

On the hydrostatic gland and also on the packed gland, it is usually necessary to have a clean water flushing supply to the gland.

The pressure should be 3-5 psi (2-4m) water gauge above the pump discharge pressure (remember to include the S.G. of the slurry) and the flow rate should be in accordance with the table below.

Pump	units	1½x1½	2x2	3x3n	4x4	6x5	8x6	10x8	12x10
Water flow.	USgpm	1	1	1	2	2	2	3	4
Water flow.	liter/sec	0.04	0.04	0.05	0.07	0.07	0.09	0.1	0.2

The gland flushing water should be clean. The life of the gland and gland sleeve is significantly affected by the cleanliness of the flushing water. Although a few particles will not do instant damage, the seal life will be reduced. Slurry must not be used.

There are many combinations of flow control devices that may be used. A few of these are shown on the diagram below. The objective is to maintain a secure supply of clean flushing water to extend the gland life.

With pumps in series, there are three main ways of supplying gland service water.

- Individual dedicated pumps at the correct pressure and flow rate.
- One large pump at the highest pressure throttling down the supply to each pump in the series.
- One multi-stage pump tapping off a supply at a different stage to each pump in the series.

Gland Service Systems

These are a few typical systems. Any selection of items may be combined.

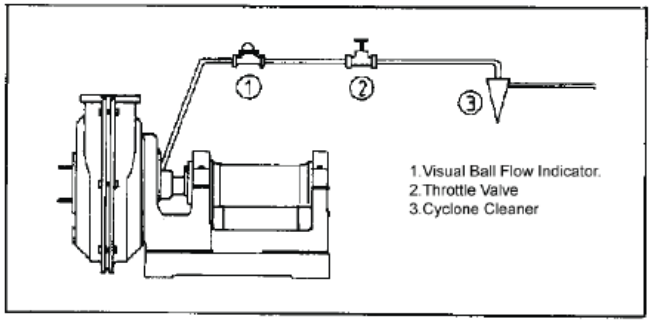

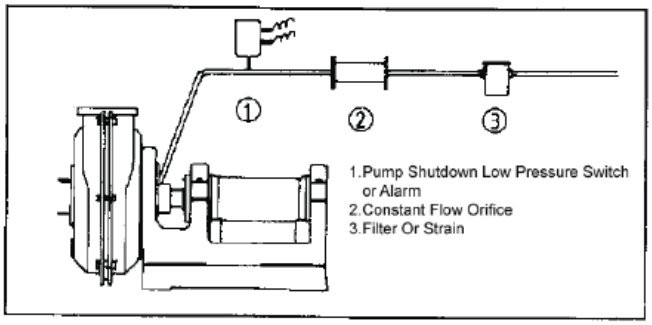

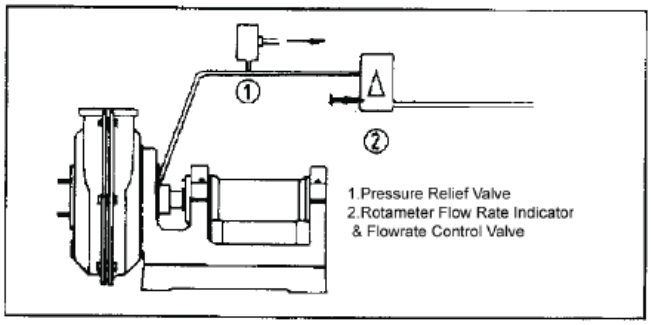

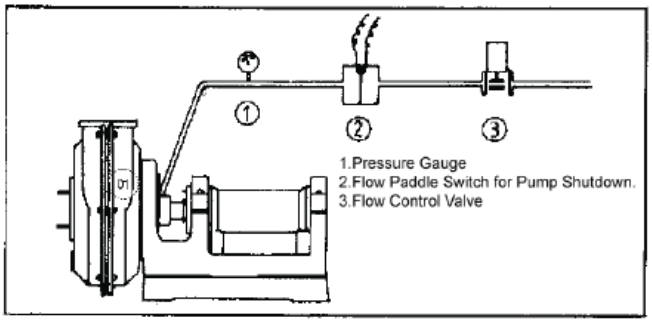

Lubrication and Cooling

Additional grease must only be added about twice per year, as the bearings are already lubricated. **DO NOT over grease the bearings**.

The bearing assemblies are all checked in the factory to prove that they are correctly assembled.

The bearings are designed to run at high temperatures (maximum 120° C) and the grease has to be compatible with this operating condition. Clean grease must be used.

If water gets into the bearings, the assembly must be stripped, thoroughly dried and greased over; then, any seal failure must be corrected.

Recommended greases are Shell Alvania 3, Mobile EP2, Caltex LS3 or their equivalents.

Start-Up Procedure

The recommended procedure to follow is listed below:

- Check the free rotation of the pump
- If required, verify that water for gland services is running
- At first start, or after any work on the electric motor terminal box, check direction of rotation **with drive belts removed**.
- Prime the pump
- Check that all guards are in place and that the pump is safe to run
- Start the pump
- If the pipeline is empty and there is no discharge valve (possibly due to abrasive nature of the product), the pump motor may be bogged down for a period of time and the pump may begin to go through the process of cavitation. This condition should be examined to evaluate the possible long term effect on the equipment.
- Check the pump for noise, vibration or any hot spots.
- **Adjust the gland to maintain a drip**, which is necessary for lubrication and for cooling.

Shutdown Procedure

This depends ultimately on the system and process flow requirements but the following procedure is recommended.

- Stop the flow of solids into the sump.
- Turn the sluicing water or run system on water only to wash out the pump and delivery pipeline.
- Shut down the pump.
- Shut down the gland service water system.

In cold weather, the pump and auxiliary equipment should be drained to prevent freezing damage.

Disassembly Procedure

Check that all power is switched off and isolated and that it is safe, electrically and mechanically, to work the pump. The following sequence is a general guide to stripping the pump for inspection. Refer to Cross Section drawings in Appendix.

On sizes up to the 4x4 (100x100) there is no separate suction bush or liner.

1. Remove the suction pipe and inspect for wear.
2. Check the suction bush liner for wear, noting any uneven wear pattern and position. Check the axial clearance.
3. Between the suction bush liner and the eye of the impeller (or on smaller pumps between the casing liner and eye of the impeller).
4. Remove nuts and suction bush. The suction bush liner is pushed out of the suction bush from the suction side. Some water spread under the lip of the suction bush liner will lubricate its passage out of the suction bush.

5. Remove casing bolts after supporting the suction side casing. Lift off the suction side casing. A crane will be necessary on the larger pumps.
6. The impeller is exposed for inspection. Hold the shaft using a spanner, which is a good fit, on the flats between the gland and the flinger. The impeller is screwed onto the shaft with an Acme right hand thread. The impeller may be very tightly locked onto the shaft and may need an impact force or a long lever to loosen it. If the impeller is to be used again, protect the rubber against damage. Inspect the impeller and note unusual wear patterns in the flow passages and back or front pump out vanes. Check that the "O" ring behind the impeller has sealed against the gland sleeve and slurry has not corroded the impeller or shaft thread. This "O" ring should be replaced at every strip-down.
7. Remove the axial expeller, which is a stretch fit on the gland sleeve. If "D" gland is fitted, the gland sleeve should be removed at this point.
8. Support the gland side casing, undo the casing to pedestal nuts and remove casing half along with the gland assembly. Undo the gland holding screws and remove the gland assembly. Undo liner nuts. The casing liner can now be removed for inspection; be sure to note any unusual wear patterns.
9. Remove bearing pedestal caps and fixings; unfasten the axial positioning jack to enable bearing assembly to be removed.
10. To disassemble the bearing assembly, remove the gland sleeve, flinger and bearing covers. The bearings can be inspected at this stage. If there is no sign of damage, the bearings should not be disturbed and they should merely be washed out with mild solvent oil and re-greased.
11. Press the shaft (with the bearing still fitted) out of the bearing housing. Push the shaft from the impeller side out of the bearing housing. The inner ring of the front bearing will still be attached to the shaft and can be removed later.
12. The remainder of the front bearing can then be withdrawn from housing.
13. Loosen the tab washer, undo the locknut and pull the end bearing off of the shaft.

Notes:

1. The 2x2, 3x3 and 4x4 pumps do not have a loose suction bush liner or suction bush.
2. The 10x8 (250/200) and larger sizes have the inside gland cover, which is held in position by (H14 / P14 / D14). Undo and withdraw the inside gland cover from the impeller side.
3. The Casing Suspension Arm is fitted as a maintenance aid ONLY and as much may be used to support **singularly**, either of the casing halves and its associated liner or the impeller. It must not be used for any other purpose. Suspension arm not fitted to 1.5 x 1.5 and 2x2 (50/50) pump.

Assembly Procedure

Before assembly, ensure all parts are clean and free of old grease and dirt. The new bearings or replacement bearings should be generously filled with grease between the rollers. Check that the Neoprene grease seals are not soft or distorted. Replace if necessary.

1. Clamp the shaft horizontally in a vice. Heat the spherical roller end bearing in an oil bath or induction heater to 240°F (115°C) and fit it to the drive end of the shaft using clean insulated gloves. Ensure the inner ring of the bearing is hard against its seat by tapping it with a brass pin. Fit the tab washer and the lock nut.
2. Fit the inner ring of the front bearing to the impeller end of the shaft. Ensure, by tapping with a brass pin, that it is hard against its seat.
3. Clamp bearing housing securely, grease bearing. Fit shaft and end bearing assembly into housing. Ensure that outer race of bearing is hard against seat.
4. Fit neoprene seal and bearing cover seal to end cover and fix to bearing housing using set screws.

5. Mount bearing housing vertically with front end upwards and wedge shaft so it is central in the housing. Fill front bearing with grease and carefully tap outer ring into bearing housing.
6. Fit neoprene seal and bearing seal cover to front cover and fix to bearing housing using set screws. Fit V-Ring Seal to shaft and place with slight tension against front cover. Fit flinger ring to shaft and locate in position using screw clamp supplied with flinger ring.
7. Set bearing housing assembly into pedestal and loosely assemble bearing pedestal caps with pedestal cap screws; fit axial positioning jack. Rarely, shims are required for shaft alignment; if factory fitted, the thickness of shim required will be stamped on the vertical face of the pedestal adjacent to the pedestal cap stud.
8. If “D” gland is to be fitted – loosely assemble gland components without damaging the wearing face when fitting. Leave the gland sleeve out, as well as “O” rings and face seal. Fit the gland side liner into the gland side casing by securing with liner nuts. Bolt the gland assembly loosely to the casing. Fit the casing and gland assembly to the pedestal using fixings; take care not to damage the wearing face against the shaft on assembly. Fit the “O” rings and face seal to gland sleeve. Slide home onto shaft, through casing and into the gland assembly. Carefully align gland components (specifically check concentricity of gland parts relative to the shaft) and tighten all fixings.
9. If “H” or “P” gland is to be fitted, fit “O” rings to gland sleeve. Slide home onto the shaft. Loosely assemble gland components, slide over shaft and onto the gland sleeve. Fit the gland side liner into the gland side casing securing with liner nuts. Fit the casing to the pedestal using fixings. Carefully align the components of the gland assembly (specifically check concentricity of gland parts relative to the shaft) and fit to the casing. The axial expeller will then have a stretch fit over the gland sleeve.
10. Smear the impeller thread on the shaft with protective long life graphite grease before screwing on the impeller, ensuring that the impeller “O” ring is fitted into the gland sleeve.
11. Fit the suction side liner in the suction side casing using liner nuts.
12. Fit the suction bush liner inside the suction bush before bolting it to the suction side casing using the bolts. NOTE: using soapy water will facilitate the process.
13. Check the concentricity of the fit between suction bush liner and the impeller.
14. Using the axial positioning jack, adjust the impeller toward the suction bush liner, keeping the holding down studs loose. Check the axial clearance between the impeller and the suction bush liner. A steel ring or dummy flange should be bolted to the suction flange to simulate any distortion in the suction bush liner when connected to the suction pipe before the axial clearance is checked. This clearance should be set at approximately 1/8”. Rotate the shaft to ensure effective clearance.
15. Tighten the bearing holding down nuts and the axial positioning jack.

ATTENTION PLANT OPERATORS:
HANG THIS NEAR YOUR PUMP

McLanahan Model IIIr Centrifugal Pump With Type "D" Gland

MOTOR DIRECTION TEST

	ALWAYS PERFORM THE MOTOR DIRECTION TEST WITH THE V BELTS REMOVED

Note: The pump ships with the V-belts removed

	WARNING: RUNNING THE PUMP IN THE WRONG DIRECTION MAY CAUSE THE IMPELLER TO UNSCREW, AND DESTROY THE PUMP.

A motor direction test should be carried out without the belts installed before running the pump for the first time, or after any work on the motors, switchgear or softstart that may affect the direction of rotation of the motor.

STARTING UP AND RUNNING THE PUMP

	BEFORE STARTING, ENSURE THAT THIS PUMP IS BEING SUPPLIED WITH GLAND SERVICE WATER. RUNNING THE PUMP WITHOUT GLAND SERVICE WATER WILL DESTROY THE GLAND

With the pump full of water, and all isolation valves open (if present) start the pump. The pump should immediately start pumping.

BEFORE STARTING THE PUMP FOR THE FIRST TIME

The gland should be pre-set before starting the pump for the first time. To do so:

- Fill the feed sump with water and open the suction isolation valve (if present).
- Evenly adjust the gland Adjusting Nuts (see section 5) so a steady trickle leaks from the gland. Note: On a "P" Gland, tightening the nuts decreases the leak rate.

	WARNING: THE PUMP MUST NOT BE ALLOWED TO RUN IF IT DOES NOT DISCHARGE
	DANGER: RUNNING THE PUMP WITH NO DISCHARGE WILL CAUSE THE LIQUID INSIDE THE PUMP TO HEAT UP. IN EXTREME CASES THIS CAN LEAD TO THE LIQUID BOILING, & THE PUMP CASE MAY EXPLODE

The outside of the pump may not feel hot, as the rubber lining of the pump acts as thermal insulation. If by accident the pump has run without pumped discharge, it must be stopped immediately and the cause of the problem investigated.

	DANGER: IF IT IS SUSPECTED THAT THE PUMP HAS OPERATED WITHOUT DISCHARGE, EXTREME CAUTION SHOULD BE USED IN DRAINING THE PUMP - THE LIQUID INSIDE MAY BE DANGEROUSLY HOT AND UNDER PRESSURE

PRIMING

The McLanahan centrifugal pump is NOT self-priming. For this reason the pump must be installed with a flooded suction, or with the appropriate system for suction lift.

ADJUSTING THE "P" TYPE PACKED GLAND:

Before starting, the gland should have been adjusted so a steady trickle leaks from the gland (see section 2). Check that Gland Service Water is being supplied. See the Manual for details of the flow & pressure requirements.

Final adjustment of the gland should be done with the pump in operation. Tighten the adjusting nuts until the leak reduces to drips. (60 drops /minute maximum, 5 TO 45 drops per minute minimum). Care must be exercised not to tighten too much, which may lead to damage to the seal.

	WARNING: THE ADJUSTING NUTS SHOULD BE ADJUSTED INCREMENTALY, EVENLY, AND IN TURN, TO ENSURE THAT THE GLAND COMPONENTS STAY PARALLEL. TIGHTENING ONE NUT MORE THAN THE OTHERS MAY CAUSE MISALIGNMENT AND DAMAGE TO THE GLAND

STOPPING THE PUMP

Before stopping the pump, it is advisable (if possible) to run the pump on clear water before turning it off, to prevent solids from settling out in the pump casing.

LUBRICATION

The Pump comes from the factory fully greased. The Shaft Bearings should be greased with the correct grade of grease every 1000 hours of operation. Inject grease into the grease nipples by six strokes of a regular size (2" diameter body) grease gun.

The recommended grease is "Conoco Tacna HD No. 2" or equivalent grade grease.

MAINTENANCE

Except for attention to the gland while the pump is in operation, there is no daily maintenance required on the pump. It is essential, however, that routine inspections be carried out, with the first such inspection taking place approximately three months from startup. This inspection should provide some idea of the wear rate, which will be a guide for scheduling future inspections and maintenance. For instructions on dismantling and reassembling the pump, see the instruction manual supplied with the pump.

SPARES

Recommended spare parts are listed in the instruction manual. It is recommended that a supply of the wear parts listed be kept in stock so as to minimize down time in the event of failure of the part. (SEE NEXT PAGE)

PUMP BEARING TEMPERATURE

On high speed duties it is to be expected that the bearings will run hotter than on low speed duties. At 150 F (65 C) the assembly will be uncomfortable to the hands for more than a second or two, but this is not unduly hot for the bearing assemblies. The bearings are designed to run at high temperatures, maximum 120° C.

3X3 DRY GLAND, NITRILE PUMP SPARE PARTS LIST

OVERVIEW

McLANAHAN CORPORATION recommends that you keep certain replacement parts at your facility. These parts will be available in the event of a breakdown and will also be available to perform any repairs that must be made as a result of regularly scheduled maintenance checks. **McLANAHAN CORPORATION** stocks a wide variety of commonly used components; however storing these parts at your facility will eliminate the expense of air-freighting critical parts that may be required during a breakdown situation. Refer to the "PARTS LIST AND ASSEMBLY" drawing(s) to assist with parts identification, part numbers and quantities. Contact the Parts Department at **McLANAHAN CORPORATION** for price and availability of all parts for your McLanahan equipment.

Qty	Part Number	Description	Lead Time	
1	09110203321	Dry Gland Repair Kit, Nitrile	Stock	
1	09110003133	Suction Side Liner, Nitrile	Stock	
1	09110003134	Gland Side Liner, Nitrile	Stock	
1	09110003135	Impeller, Nitrile	Stock	
1	09110003116	Bearing Assembly	Stock	
1	09110003225	Bearing Repair Kit	Stock	
1	09110003202	Shaft	Stock	

Appendix - Long Term Storage

General:

The following are recommendations in reference to long term storage of McLanahan Pumps and Drives; McLanahan does not accept liability for components under these conditions. Documentation and photographic evidence is necessary for warranties to apply.

Preventive Maintenance for Stored Rotating Spares

In the absence of data on premature bearing failures and armature/shaft sag and imbalance, we recommend a general procedure as follows:

The motor shaft targets should generally be used on any motor of 50HP or higher. They also should be used on fans and any other large rotating equipment that sits in storage for lengthy periods of time. By rotating these shafts monthly (or more, depending on the floor vibrations), you are preventing armature and shaft sag as well as false brinelling of the bearings into the races.

You may also find some smaller motors that have premature bearing failures after prolonged storage in your facility. If this is the case, the shaft targets should be attached (with double-stick foam tape) and smaller motors must be rotated.

What is False Brinelling?

Whenever a **non-rotating bearing** is subjected to external vibration, **false brinelling** can occur. A protective oil film cannot form between the races and rotating elements when the bearing isn't turning, causing metal-to-metal contact. False brinelling can occur during transportation, typically truck or rail, and during motor storage if the storage area is subject to vibration.

Another type of brinelling, **true brinelling** occurs in **rotating bearings**.

Pump

If stored, the pump should be kept in a clean, dry, vibration-free environment. The shaft should be rotated manually every three (3) months, or at the same interval as recommended by the electric motor manufacturer. In order to care for the natural rubber linings and components, follow the recommendations below.

Electric Motor

The following information is reprinted from the WEG "Installation and Maintenance Manual for NEMA low Voltage Electric Motors"

Storage

Motors should be raised by their eyebolts and never by their shafts. It is important that high rating three phase motors be raised by their eyebolts. Raising and lowering must be steady; otherwise bearings may be harmed. When motors are not immediately installed, they should be stored in their normal upright position in a dry even temperature place, free of dust, gases and corrosive atmosphere. Other objects should not be placed on or against them. Motors stored over long periods are subject to loss of insulation resistance and oxidation of bearings.

Bearings and lubricant deserve special attention during prolonged periods of storage. Depending on the length and conditions of storage it may be necessary to re-grease or change rusted bearings. The weight of the rotor in an inactive motor tends to expel grease from between the bearing surfaces thereby removing

the protective film that impedes metal-to-metal contact. As a preventive measure against the formation of corrosion by contact, motors should not be stored near machines which cause vibrations, and every 3 month their shafts should be rotated manually.

Insulation resistance fluctuates widely with temperature and humidity variations and the cleanliness of components. When a motor is not immediately put into service it should be protected against moist, high temperatures and impurities, thus avoiding damage to insulation resistance. If the motor has been in storage more than six month or has been subjected to adverse moisture conditions, it is best to check the insulation resistance of the stator winding with a megohmeter. If the resistance is lower than ten megohms the windings should be dried in one of the two following ways:
1) Bake in oven at temperatures not exceeding 194 degrees F until insulation resistance becomes constant.
2) With rotor locked, apply low voltage and gradually increase current through windings until temperature measured with thermometer reaches 194 degrees F. Do not exceed this temperature. If the motor is stored for an extensive period, the rotor must be periodically rotated. Should the ambient conditions be very humid, a periodical inspection is recommended during storage. It is difficult to prescribe rules for the true insulation resistance value of a machine as resistance varies according to the type, size and rated voltage and the state of the insulation material used, method of construction and the machine's insulation antecedents. A lot of experience is necessary in order to decide when a machine is ready or not to be put into service. Periodical records are useful in making this decision.

The following guidelines show the approximate values that can be expected of a clean and dry motor, at 40°C test voltage in applied during one minute.

Insulation resistance Rm is obtained by the formula: $Rm = Vn + 1$

Where: Rm – minimum recommended insulation resistance in MΩ with winding at 40°C
Vn – rated machine voltage in kV

In case the test is carried out at a temperature other than 40°C, the value must be corrected to 40°C using an approximated curve of insulation resistance vs temperature of the winding (see graph below).

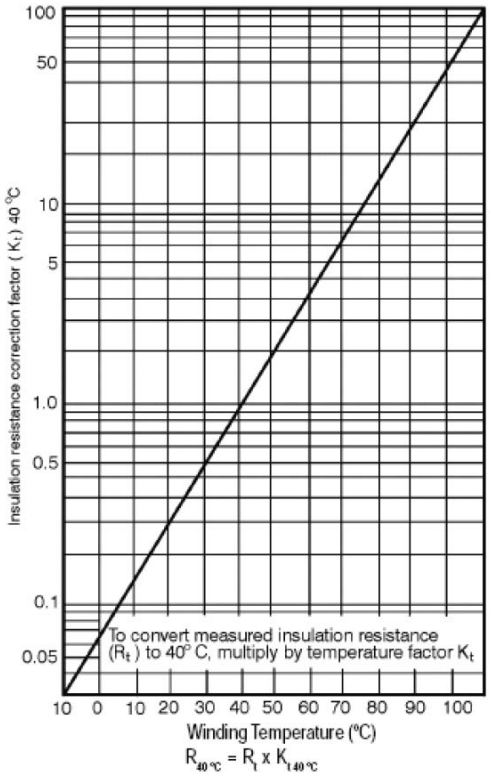

Example:
Ambient temperature = 50°C
Motor winding resistance at 50°C = 1.02 MΩ
Correction to 40°C

R 40°C = R 50°C x K 50°C
R 40º C = 1.02 x 1.3
R 40º C = 1.326 M&
The minimum resistance Rm will be:
Rm = Vn + 1
Rm = 0.440 + 1
Rm = 1.440 MΩ

On new motors, lower values are often attained due to solvents present in the insulating varnishes that later evaporate during normal operation.

This does not necessarily mean that the motor is not operational, since insulating resistance will increase after a period of service. On motors which have been in service for a while, a comparison of the values recorded in previous tests on the same motor under similar load, temperature and humidity conditions, serves as a better indication of insulation condition than that of the value derived from a single test. The cause for any substantial or sudden reduction should be determined, followed by corrective action.

Insulation resistance is usually measured with a **megger**.

In the event that insulation resistance is inferior to the values derived from the above formula, motors should be subjected to a drying process.

Drying the windings

Only qualified personnel should carry out this operation. The temperature should not rise more than 5°C per hour and the overall temperature should not exceed 105°C; if either of these two things occur, vapor which is harmful to the insulation, may be generated.

Temperature should be accurately controlled and insulation resistance should be properly measured at regular intervals during the drying process. During early stages of drying, insulation resistance will decrease as a result of the temperature increasing. However, the resistance will increase again when the insulation dries a little more.

The drying process should be extended until successive measurements of insulation resistance indicate that a constant value above the minimum acceptable value has been attained. It is extremely important that the interior of the motor be well-ventilated during the drying operation to ensure that the dampness is really removed.

Heat for drying can be obtained from outside sources such as an oven or space heater, or by introducing a current through the actual winding of the motor being dried.

Electric machines should be installed in order to allow an easy access for inspection and maintenance. Should the surrounding atmosphere be humid, corrosive or contain flammable substances or particles, it is essential to ensure an adequate degree of protection. The installation of motors in environments where there are vapors, gases or dusts, flammable or combustible materials, subject to fire or explosion, should be undertaken according to appropriate and governing codes, such as NEC Art. 500 (National Electrical Code) and UL-674 (Underwriters Laboratories, Inc.) standards.

Under no circumstances are motors to be enclosed in boxes or covered with materials which may impede or reduce the free circulation of ventilating air. Machines fitted with external ventilation should be at least 50cm from the wall to permit the passage of air. The opening for the entry and exit of air flow should never be obstructed or reduced by conductors, pipes or other objects. The place of installation should allow for renewal at a rate of 700 cubic feet per minute for each 75 HP motor capacity.

Rubber Products

Rubber products in storage can be adversely affected by several factors, including:

- Temperature
- Humidity
- Ozone
- Sunlight
- Oils
- Solvents
- Corrosive liquids and fumes
- Insects and rodents
- Radiation

The warehousing area should be relatively cool, dark and free from dampness and mildew. All rubber products should be used on a first-in, first-out basis since even under these conditions an unusual length of time in storage can result in the deterioration of certain products.

The ideal storage temperature for rubber products is 50 to 70°F (10 to 21°C) with a maximum limit of 100°F (38°C). If stored below 32°F (0°C), some products may become stiff and should be warmed before being placed in service. Rubber products should not be stored near sources of heat, such as radiators and base heaters.

Rubber products **should not** be stored under conditions of high or low humidity.

To protect against the adverse effects of ozone, rubber products should not be stored near electrical equipment that may generate ozone and should not be stored for any lengthy period in geographical areas of known high ozone concentrations. Exposure to direct and reflected sunlight should also be avoided.

Whenever viable, rubber products should be stored in their original shipping containers, especially when such containers are wooden crates or cardboard cartons; this will provide protection against the deteriorating effects of oils, solvents and corrosive liquids, and will also provide some protection against ozone and sunlight.

Certain rodents and insects thrive on rubber products, so the equipment must be protected.

McLanahan ***Pump Applications***

Sand plants
Feeding sand and water to all types of classification and dewatering plants; effluent water transfer duties.

Coal preparation plants
For dense medium circuits, feeding hydrocyclones, filtrate pumping, handling the underflow from thickeners, disposal of effluent, etc.

Chemical manufacturing & Environmental applications
McLanahan pumps, by virtue of their various rubber linings, are suitable for pumping many chemical solutions, acid or alkaline, at moderate temperatures and for the disposal of effluent.

Cement manufacture
Slurry feed to: tube mill circuits, thickener feed and underflow, flotation plant circuits.

Metalliferous mining
Mill circuits, feeding hydrocyclones, cyanide plant filter residues, concentrates, tailings disposal and other pulp and slurry handling duties.

Irrigation systems and dredging
Silt removal in dams and canal sand traps

Paper mills
China clay slurries, paper stock, effluent disposal

Steel works and manufacturing applications
Pickling acid distribution circuits in plate and wire de-scaling plants, abrasive wet scrubber blow-down

Power stations
Boiler house ash disposal, de-scaling plants

China clay production
Feeding slurry to hydrocyclones and for general use in the preparation of china clay

Glass manufacturing
Feeding polishing media, sand plants, handling effluent

Troubleshooting

If a pump fails to pump through a blockage, switch off **immediately**. Take extreme care as the pump may be filled with scorching steam and solids at a high pressure.

Wear and Replacement of Parts

To obtain the best service and performance from the pump, periodic routine inspections should be executed. The rate of wear on pumps is not precisely predictable since it varies from one application to the next, so intervals at which these inspections should be made vary. Initially, the pump should be allowed to run for a period of time (for example, three months); afterward, an examination of the pump will give some idea of the length of life, which may be expected from the rubber-covered parts.

No Discharge When Pump Runs

The pump must not be allowed to run if it does not discharge. If it is noted that the pump has been running without discharge, cease it immediately.

Take extreme care in dismantling after such an occurrence due to high temperature and pressure, which may be present in the pump casing. Do not remove the drain plug until the fluid temperature in the pump has dropped.

Air Lock

Air lock in the casing is the most common cause of failure on a newly installed pump. Even when a pump is well below water level, it may retain a large bubble inside the casing, which prevents the start of pumping. This phenomenon is far more likely with horizontal undershot discharge branch arrangements than any other practical configuration. It is least likely with horizontal overshot arrangements.

If you suspect air lock as the cause of failure to pump, start and stop pump several times to drive the air out, one fraction at a time. When using this procedure, ensure that you do not damage the motor starter or burn out the motor by trying too many starts in a short period of time. The number of permissible attempts will vary with the equipment installed but usually it is safe to try one start every three to four minutes.

Inadequate Prime

Failure to pump may be caused by inadequate priming. This is usually rectified by allowing more time for priming to occur.

It is possible when “jet priming” to have such a small amount of priming water that the pump will never prime; in this case, more water for the priming option will be needed.

Usually, the diameter of the priming branch should be at least one-third of the diameter of the suction pipe. NOTE: 2” (50mm) will prime 6” (150mm), 3” (80mm) will prime 8” (200mm) etc. The minimum water required is about 30% of the pump capacity.

If priming is by vacuum pump, there must be a valve or at least an air-lock on the delivery side. The vacuum pump must be able to “beat” the air leakage throughout the gland. To assist in this, always attempt to prime with the gland water running, no matter what style of priming is being attempted.

Installation Faults

Failure to discharge on start-up can be caused by installation faults. The most common is inadequate sump capacity. The result of installing a sump with inadequate capacity is to risk repeated air-locks of the pump. This can happen when the pump reduces the water level, either allowing a vortex to form, which air-locks the pump, or (when water is introduced to the sump) it entrains so much air that it produces the same effect.

A small sump can easily prevent any discharge reaching the end of the pump discharge line. The only remedy is to extend the sump capacity. We recommend sumps of at least one minute's pumping time as a minimum. NOTE: This recommendation does not apply to feed regulating sumps in sand plants where greater capacity is required.

Other installation faults are more obvious, such as tramp material lodged over a pump suction or a kinked suction hose.

Brief Discharge Only

1. Air Lock

A pump with a suction lift and partial air lock will often start to pump at a greatly reduced rate after each start, and then it will give up completely. At the discharge end of the pipe this may appear as a brief surge followed by failure.

This problem can only be overcome by closer attention to the priming system.

2. Obstructed Suction

If the suction line is obstructed either by tramp material or a delaminated suction hose lining, the pump may start well. However, when the discharge rate rises, the suction obstruction throttles the pump in a way that it quickly fails by gross cavitation.

Detection of this sort of condition is difficult. The only way to guarantee finding out what is actually happening is by using a vacuum gauge immediately before the pump suction. An obstructed suction line will be indicated by a sudden increase in vacuum reading immediately before the failure.

3. Lack of Delivery Resistance

A pump, which is required to pump with a suction or with a fair length of suction pipe, although with practically no resistance on the delivery side, may pump briefly before failing. The reason for this is that centrifugal pumps on open discharge need positive pressure on the suction eye to prevent gross cavitation. If the installation does not provide sufficient positive pressure on the suction side, the pump will fail.

Usually, the easiest way to overcome this difficulty is to artificially create resistance on the delivery side by extending the pipe work or introducing a valve or other resistance, such as an orifice.

Pumps water but not solids

1. Air Leaks on Suction Side

Joints in the suction line or air entrainment with feed into a sump may be insufficient if they are made poorly. Poorly made joints sometimes prevent a pump from pumping water satisfactorily. However, when solids are introduced (particularly coarse solids) the pump has a more arduous duty; it has to entrain the solids into the fast moving stream in the suction pipe. In effect, it has to "dredge" the solids

into the stream. Even if the solids were already moving in the right general direction, they must be accelerated up to the water velocity and thus they act as a suction resistance for the pump.

Introducing solids into an aerated system will cause failure. The pump can only handle a small margin of solids when pumping water alone. Air leaks can usually be detected as water leaks when the pump is not running; **where water can get out, air can get in**. Air entrainment with the feed can sometimes be overcome by the use of baffles in the sump. The air bubbles have time to rise to the surface before being drawn down to the suction.

2. Poor Suction Line

Several different factors in the suction line may allow a pump to appear adequate when it is not. A long suction line, a line with a considerably small diameter or a line with a restriction (sudden step-downs in diameter are the worst) will all affect whether or not the pump can handle solids. The reasons for this are explained in the two previous paragraphs.

Reworking the suction line is the only solution to this problem. If the line increased in diameter it should be brought to the pump inlet diameter by a specially rolled flanged taper pipe. It must not be stepped down by a mismatch.

3. Electric Motor Wrongly Wired

Most Squirrel Cage Induction Motors can be wired in two ways: **Star** or **Delta**. In order to reduce the current surge when a motor is brought **on line**, some users start their motors in **Star.** They do this because this mode gives good starting torque and a reduced starting current surge. Then, change to running their motors in **Delta** once smooth starting has been achieved. The **Delta** mode of powering the motor increases the speed close to synchronous speed, which is maximum, and maintains a constant speed under variations in load.

If a motor is left to run continuously in **Star**, it will vary its speed dramatically with load. If a mistake has been made in the wiring of the motor, it may appear that the pump is unable to pick up solids but is still pumping water. The reason would be that on **Star**, the motor speed drops when the solids load comes on.

To detect this fault, the easiest method is to check the speed of the motor shaft and compare it with the Nameplate rating. There should not be more than a few RPM difference between Nameplate RPM rating and actual speed, no matter what load the pump is pulling.

NOTE: Correction of this fault is intended for an electrician.

Overloads for Motor Trip Out

1. Wrong Pump Speed

The power drawn by a centrifugal pump discharging through a given delivery system is approximately proportional to the cube of its speed. As an example, if the speed is changed by 20% to 1.2 times the original speed, you can expect its power demand to rise by the cube of 1.2, i.e. 1.728, or nearly 73% above the original. Even a rise in speed of 10% to 1.1 times the original speed will give a rise of 33% in power demanded by the pump.

The relationship is not exact but it is close enough for field calculation purposes.

If a pump is run at the wrong speed, it can make a considerable difference to the load drawn from the motor.

Calculation of the correct pump speed is based on:

- Flow rate to be pumped
- Difference in height between pump and discharge points
- Length, diameter and inner surface of pipeline through which pump must deliver
- Number of elbows, bends, valves, other fittings in pipeline
- Equipment at end of pipeline such as hydrocyclones, pressurized distributors, jets, etc.
- Grading, tonnage and specific gravity of solids to be pumped
- Pump performance curves

As far as fault finding is concerned, the actual RPM of a pump should be compared with the RPM specified. Corrections to pump speed can be made by pulley changes.

2. Changed Pipeline System

It is not uncommon for a pump speed to be calculated on the basis of a pipeline system intended to be used at the time of the negotiations for the purchase of the pump, but to be commissioned into service with a different pipeline system. A client may say, "but it's not such a high lift so the pump does not have to work quite so hard." **This is not true.** At a given pump speed, a pump will pump a larger amount through a shorter pipeline (or lesser vertical height) and **will take more power**, not less.

When confronted with this situation, the only thing to do is to calculate the correct **head** and RPM before making a pulley change. The affinity rule can be used or the drive can be recalculated.

3. Low Voltage

The power consumed by an electric motor is the product of the voltage, amperage and power factor for the motor. If a pump demands a certain power from the motor, the motor in turn will demand corresponding amperage from the electric supply system. However, if the voltage of the electric supply system happens to be lower than normal, the motor will draw extra amps to meet the pump's power demand. This way the power consumed by the motor, the product of voltage, amperage and power factor remains unchanged.

Circumstances where lower than standard voltages might be encountered include:

- When power supply is from a generator set
- At the end of a long trailing cable
- At the end of an electric supply system remote from the nearest transformer substation
- In an area where very heavy start-up loads can occur, such as near large crusher stations or long conveyor installations

Low voltage can readily cause a motor overload by drawing higher than expected amps; this is, in no way, related to the pump itself.

If low voltage is suspected as the cause of motor overload, a qualified electrician should be called.

4. Wrongly Set Overload Protection

All motor starting equipment has some form of overload protection equipment built into the system so a burnt out motor or locked-rotor motor does not cause more extensive damage. If a motor repeatedly drops out on overload and there is no other readily apparent reason, the electrical overload protection equipment should be checked.

5. Mechanical Fault in Pump

The pump shaft should be free to turn by hand. Remove the V-belts and check the pump shaft for freedom to turn. If there is no resistance, the fault must be in the motor. If a jarring or resistance can be felt when attempting to turn the pump shaft, drop off the suction pipe and check the clearance between the impeller and suction plate. Also check for blockages.

If this proves clear, remove the suction bush and look for marks on the surface of the impeller, which might indicate if the impeller has been rubbing. In this case, rotate the shaft again to determine if the resistance is still present; if it is, remove the impeller and inspect the gland side liner. If there is still no evidence of rubbing, rotate the shaft by hand again to check that the resistance is still present; then, remove the gland sleeve. If the resistance can still be felt by hand it can only be the bearings of the pump.

The remedies for the faults, which may be revealed by this step-by-step approach are:

- Impeller rubs on suction bush: release bearing housing, set impeller to suction bush clearance by adjusting position of bearing housing until impeller runs free. Tighten bearing housing. Replace suction pipe. Re-align belt drive.
- Impeller rubs on gland half lining; reset the suction bush clearance. Check for movement of casing liner.
- Seizure in the gland area. Strip and inspect.
- Shaft tight in bearings; there is no simple field remedy if the pump shaft is found to be tight in the bearings, the rotating assembly must be removed and stripped for inspection of the bearings and grease seals.

6. Air Entrainment

In sump-fed pump systems, air entrainment with the pump feed can produce periodic overloads on the motor by the following sequence of events:

- Air entrainment with feed gives the pump a “spongy” pulp, which reduces the pump throughput and power.
- Flow through the sump is reduced allowing air in the feed now entering the sump to escape to the surface. Solids, of course, reach the pump suction.
- The pump now has a largely de-aired pulp of far greater percentage solids than intended, and the power demand rises. At this stage the pump may choke. This is a dangerous condition.
- Pump entrains the accumulated solids into suction pipeline and begins to pump normally again, increasing throughput through sump.
- Air entrainment begins to reach pump suction again and sequence repeats.
- Air entrainment can permanently reduce slurry throughput and make it appear as if the pump is not working.

In small installations this surge may be repeated at three minute intervals; in large installations, it may take as long as five minutes for the full cycle to complete. If the cycle terminates at stage three, the pump may explode, if it is left to run while blocked.

Pump Handles Only a Limited Percentage Solids

Pump Speed Incorrect

With increasing solids feed into a pumping system three major factors will limit the percentage solids handled:

- Friction resistance increases, leaving less pressure on the delivery side to maintain the velocity in the pipeline
- Critical (settling) velocity for the pulp in the pipeline increases
- Pump performance "drops" so that the total head generated by the pump diminishes

Clearly, if the pump speed has been calculated for water only, increasing tonnages of solids are fed into the system; the combination of factors above may soon produce a situation where the pipeline velocity is too low to maintain movement of the solids.

Air Entrainment

Under 15.3, section 1 above, there is an explanation of how a pump can handle water, but due to the air entrainment, fails when solids are introduced to the system. The same fault can sometimes explain why a pump appears to perform well on pulp up to a certain percentage solids, then "gives up" when this is passed.

Poor Suction Line

A suction line layout as described in 15.3, section 2 is far worse as the percentage solids is increased and can become completely blocked.

Cavitation

If a pump is expected to draw relatively coarse solids from a sump below the pump centerline, depending on the speed of the pump and its capacity in relation to the flow rate being handled, it may suffer from cavitation. When this happens, and the onset is often quite sudden and sharp, the total head generated by the pump diminishes dramatically. As described previously, the conditions for blocking a line are suddenly created; namely reduced delivery pressure for maintaining flow combined with increased requirement for velocity in the pipeline.

Generally, if cavitation is the source of the trouble, there is ample evidence; audible cavitation "rattle" in the pump or from the bearings, sudden reduction in power demand, the gland leaks or draws air and there is a dramatic drop in delivery pressure.

The solution to the problem is to make the suction arrangements as smooth as possible without restrictions as well as to arrange for the feed to come gradually up to load without sudden surges of solids. If these measures do not overcome the problem it may be necessary to change the suction line to a size larger and fit a flat topped taper-piece to the pump suction. If trouble persists, a larger pump will have to be installed. Something effective must be done as the situation is potentially dangerous.

Gland Will Not Seal Adequately

1. Poor Adjustment

The outer seal of a Hydrostatic gland assembly must be allowed to rub lightly on the gland sleeve for an effective seal to be maintained. If the gland adjuster is pushed in too far this will lift the seal off the sleeve and the gland will leak profusely. When seeing a leaking gland, most people immediately think

to tighten it. With the Hydrostatic gland, the **gland adjuster must be moved outward to reduce leakage.**

Type D and P glands should be tightened for reduction of leakage in the same way as standard packed glands in water pumps. **Over tightening should be avoided**, especially on "D" glands as a drip is always necessary to lubricate the rubber face seal.

2. Dry Running

The glands will not be damaged by a few seconds of running without lubrication and cooling by water, but if either gland runs for a length of time without water in the pump, there is danger of melting the rubber seals. If a Type D gland has been correctly adjusted, this is a fairly remote danger because without hydraulic pressure to force the rubber seal against the gland seat, the seal should run without touching the seat. However, do not run a pump in dry conditions because of the danger of damaging the gland seals.

Once seals have been damaged in this way, they must be replaced.

3. Too Much Sealing Pressure

Too much water pressure in either type of gland can make the glands almost impossible to seal reliably. With Hydrostatic glands the solution to the problem is to insert a pressure control in the gland water line. With Type D glands the problem usually only arises with pumps being run in a series or as booster pumps. In either case, the only solution is to convert the pump over to H gland or P gland and provide suitably pressured gland water.

4. Inadequate Prime

The "snore" condition for operating a pump is very difficult to seal without unacceptable leakage. Under this condition a pump continuously receives a good proportion of air drawn in with the pulp from the sump, in which the level is too low, or the sump has inadequate capacity, or both. The sump should contain a minimum of one minute's pumping time.

Excessive Heat in Drive

1. Slack V-belts

The most common cause for generation of heat in the drive to a newly installed pump is undoubtedly lack of tension in the V-belts. All V-belts should be tensioned periodically and newly commissioned drives should be re-tensioned an hour or so after start up.

This fault is easily detected (pulleys are the hottest part of the drive) as the belts will have been slipping.

2. Hot pump Bearings

On high speed duties it is to be expected that the bearings will run hotter than on low speed duties. Providing the shaft is free spinning by hand, the heat generated while running under power is probably immaterial. At 150°F (65°C) the assembly will be uncomfortable to the hands for more than a second or two; this is not unduly hot for the bearing assembles. If the bearing is failing, the shaft will not run free.

3. Inadequate Lubrication of Pump Bearings

The bearings will be charged with grease before dispatch from the factory. Details of lubricants are given in this Manual.

Addition of grease should be tried if bearings become very hot or noisy. Excess greasing should be avoided.

4. Motor Runs Hot

Motors are intended to run hot. With Continuous Maximum Rated Motors, the temperature rises are surprising and are allowed for in the design of the motor and the selection of the insulation.

Generally, heat from a motor can be safely ignored, provided the amperage drawn is lower or equal to the nameplate rating. Many motors are fitted with Thermistors in the windings, which sense the temperature rise and are wired to operate a cut-out relay if the temperature exceeds a safe limit.

If a pump is choked when the motor starts, the protection must trip out the supply to the motor.

Bearing troubles in motors are generally indicated b noise as well as heat and can sometimes be detected by use of a long-stemmed screwdriver. The blade of the screwdriver is pushed against the bearing cover and the ear of the investigator pushed up to the handle. With a limited amount of experience bearing “rumble” can quite easily be detected.

Sudden Reduction in Discharge

1. Change in Feed Conditions

Operators do not always recognize a pump as simply one element in a complete system and any change in that system will bear on all the parts of it. For instance, if a screen rejecting plus ¼” (6 mm) material is worn and passes 1” (25 mm) stones, this affects the pump performance. The suction resistance of the larger stones will cause the suction pressure to reduce and have less head available for pushing the pulp through the delivery side piping.

At the pump, the larger stones will make a significant difference to the pump performance, decreasing flow and potentially causing damage to Impeller and Linings.

In the pipeline, the large stones will probably progress by “saltation,” that is, leaping along the bottom of the pipe. The rest of the pulp is fully in suspension and has to flow past these slow moving obstacles. Overall this means the resistance of the pipeline to flow has increased, thus, again reducing flow.

A simple fault such as a screen cloth with a hole in it can cause a sudden reduction in discharge. If it causes the pipeline to block, the condition is potentially dangerous.

Other changes in feed conditions, which must be investigated are: increased tonnage of solids, change of grading of solids and change in manner of introduction of solids to pump system. On this last count, a plant, which was started in summer, and is bin-fed via a vibrating feeder, will perform differently in winter when the wetter feed “hangs up” in the feed bin and collapses down onto the feeder intermittently in larger dollops.

2. Air leaks on the Suction Pipe

A pipe, which has been steadily wearing away from the inside may break through to the open air near a flange (in a welded area) at the bottom of the pipe, which is where the coarsest solids run. In a suction pipe this will almost certainly allow air into the pipe with all the resultant ills described elsewhere.

Frequently, a pinhole leak will not allow enough air into a pump for any of the five faults listed to become critical. Operators, being human, postpone the repair or replacement of the worn pipe. The last chapter of the saga occurs surprisingly quickly and usually on nightshift – when fault produces a blocked pipeline.

3. Suction Blockage

In dredging applications there is always the danger that the pump suction will be suddenly submerged in collapsed solids from the surrounding pit contours. When pumping from a sump, the same thing can happen when solids, which have been clinging precariously to the steel sides of the sump, subside and momentarily block the pump suction.

If the pump is feeding a fair length of delivery piping, it will not be possible for the long column of pulp in that piping to come instantly to rest when the suction gets blocked. The pulp in an 8" (200mm) pipe, 1000 ft (300 m) long, moving at 10ft/sec (3 m/sec) has considerable momentum. It cannot be stopped dead in the same short length of time it takes to block the suction.

The result is a massive reduction in pressure throughout the system. It can cause a massive "water hammer" and surges that can split the pump casing, valves and piping. This can cause hoses to collapse – delivery as well as suction – and almost invariably leads to a great gulp of air being sucked through the pump gland. Usually this is sufficient to air-lock the pump.

When an operator hears the air hiss into the gland and then has to contend with the resultant air-lock, the assumption is that the gland is at fault for pump failure. However, the trouble generally begins at the end of the suction pipe and the gland collapses afterward.

In dredging applications, better control should be taken over the pit development. In sump-fed systems, the feed pulp can sometimes be directed to flush away any build-up of solids on the sides or valleys of the sump.

If this is not possible, a larger capacity take-off box at the base of the sump must improve the situation. The blocked pipeline situation is potentially dangerous.

4. Tramp Material

The simplest explanations of a fault should never be overlooked. If the complaint is sudden reduction in discharge, drain the sump and before removing any pipe work or dismantling the pump in any way, examine the take-off box at the base of the sump.

Sudden Increases in Power Demand

5. Damage Inside Pump

Pumps wear with each use. Results of abrasion, which will give an increase in power demand, are shown below in order of occurrence frequency.

- Excessive gap between impeller and suction bush
- Cut or ripped rubber in suction bush or casing gland rubbing against impeller
- Worn out cutwater
- Worn out or broken casing liners
- Impeller worn through back shroud
- Impeller passages worn significantly wider than intended

6. Change in Pipeline System

DO NOT alter pipeline system by shortening or changing layout. If altered, it will pump larger amounts and take more power.

7. Low Voltage

A new installation near the pump site can make a significant difference in the amount of voltage available, depending on the electric distribution system in the area. Lower volts means higher current for the same power output of the motor.

8. Changed Pump Speed

When dismounting both pump and motor pulleys, electricians have, in the past, interchanged the pulleys when reassembling the pump set. Ensure this does not happen.

9. Air Entrainment

In sump-fed pump systems, air entrainment can produce cyclic pump overload, caused by a change to the amount or direction in which a sump is fed. It could also be caused by a casual change to the feed type baffle arrangement in the sump.

Rapid Component Wear

1. Air Entrainment

As an experiment, place some sand in an empty bottle, fill the bottle to the very top with water, place the palm of one hand over the top and shake the bottle. You will find it difficult to move the sand vigorously against your hand. Now tip out a third of the water, and repeat the test. You will undoubtedly feel the sand in the air-water froth hitting your palm.

The point of the experiment is to show how much more readily sand can move around in froth than it can in water without air bubbles. Therefore any air leaks in the suction side accelerate abrasion.

If air entrainment is severe enough to produce an air lock in the presence of solids and water, the result is an escalation of the abrasion rate.

Air entrainment can also cause severe abrasion indirectly. With cyclic changes in pulp density due to air, the pump may have to handle far denser pulp than intended. This is also an abrasive accelerator.

2. Properties of the Solids

When confronted with a rapid abrasion problem such as coarse or sharp-edged particles, always reduce pump speed if possible. A larger pump with a larger diameter impeller will be rotating slower at the suction eye of the impeller for a given head than a smaller pump would. So, if wear on the leading edge of the vanes occurs, a larger pump would help.

3. Change in Feed Conditions

A change in feed conditions, such as extra tonnage, coarser grading or higher proportion of crushed material will all affect the rate of wear on a pump. As an example, deposits from a river are notoriously variable; the proportion of crushed sand in relation to natural sand can vary widely. However, to the operator, sand is sand, and the fact that the pump is now handling, say 80% crushed material, while three months ago it was 60% natural sand may not appear significant.

If there is a permanent change in feed conditions, which makes component life unsatisfactory, consider modifying the pump. A two-stage pump set will allow each pump to run at about 70% of the speed that a single unit would run, which would make a significant change to the abrasion rate.

4. Shaft Misalignment

After several years of wear and tear, the saddles on the pedestal occasionally wear out, thus allowing the shaft to point downward. If the eccentricity of the shaft through the gland is severe enough, the gland will not seal properly. There will also be a misalignment between the eye of the impeller and the suction bush, which will detract from pump performance. In this case, the most effective solution, reducing cost and saving time, would be to purchase a new pedestal. Temporarily, the saddles may be packed with shims; however, these inevitably get lost during impeller adjustment.

Mechanical Failure

1. Broken Shaft

Typically, the only broken shafts on McLanahan pumps are those where there has been tramp material in the feed, a bearing has seized, or slurry has worn through the gland sleeve. In this case, wear will of course weaken the shaft.

2. Broken Pedestal or Casing

Although the front bracket of the pump pedestal appears massive, it can be broken down from the box section of the pedestal by simply starting the pump backwards. As a result, the impeller will begin to unscrew from the shaft, and while in motion, strikes the suction bush, which is fixed in place by the flange of the suction pipe work. Because something has to give, occasionally, with older shafts, the thread in the shaft is stripped instead of the pedestal being broken.

Realigning broken pedestals can be quite difficult; therefore, the quickest, most cost-effective way to fix a broken pedestal is merely to replace it.

A pump running backwards is an electrical problem, which is overcome quite easily, and should not happen to begin with. Electricians are required to check the direction of rotation of a motor prior to fitting the V-belts onto the pulleys.

3. Pump Explodes

The centrifugal pump (McLanahan or any other) can potentially explode by running with pulp or water in the casing when there is no discharge. This can happen in a pump that is drawing pulp from a sump and pumping it to a cyclone through a rising pipeline. If the pump receives a sudden surge of solids, which blocks off the suction, flow will cease. In the delivery line, the solids will settle in the rising pipe but will be unable to enter the casing because the impeller will still be spinning.

As the impeller rotates, the pump will continue absorbing power. The power raises the fluid temperature. The water will eventually boil and the pressure may be enough to destroy the rubber or cause the pump head to explode. **If a pump head feels unusually warm and is not discharging**, switch the power off immediately. **Do not approach the pump** until it has been relieved of pressure, preferably through the suction or discharge pipework by flushing away the solids plugs. A sign that a pump may explode will be a considerable amount of steam leaking from the gland.

NOTE: at this point, even if a pump does not feel hot, be extremely cautious when dismantling, as the pump may be full of scalding water. Do not remove the drain plug until certain the fluid temperature in the pump has reduced. If in doubt, carefully clear blockages in the manner described above.

This page is intentionally left blank

INSTALLATION AND MAINTENANCE MANUAL FOR NEMA LOW VOLTAGE ELECTRIC MOTORS

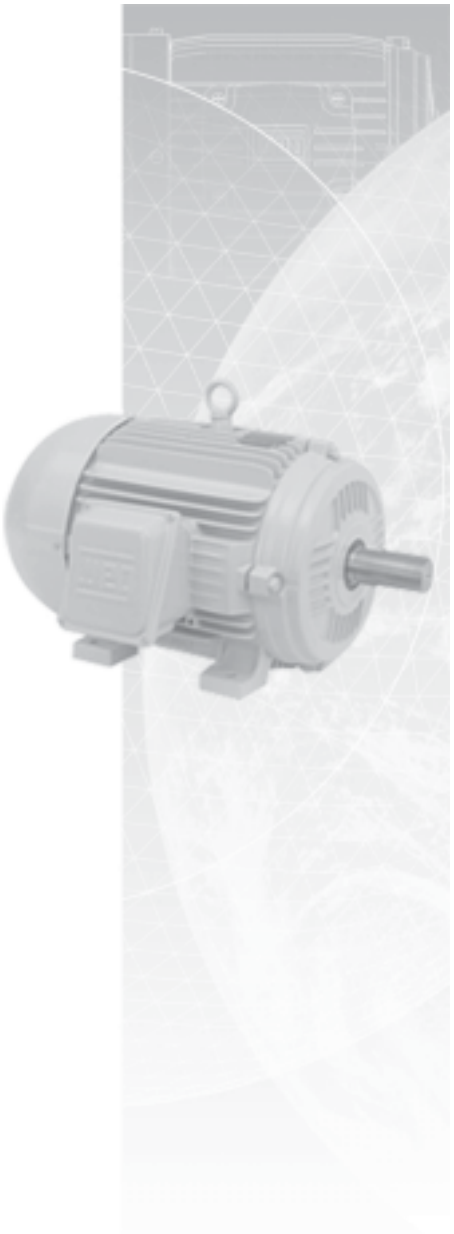

The electric motor is the item of equipment most widely used by man in his pursuit of progress, as virtually all machines and many renowned inventions depend upon it.

By virtue of the prominent role the electric motor plays in the comfort and welfare of mankind, it must be regarded and treated as a prime power unit embodying features that merit special attention, including its installation and maintenance.

This means that the electric motor should receive proper attention.

Its installation and routine maintenance require specific care to ensure perfect operation and longer life of the unit.

THE WEG ELECTRIC MOTOR INSTALLATION AND MAINTENANCE MANUAL provides the necessary information to properly install, maintain and preserve the most important component of all equipment:

THE ELECTRIC MOTOR!

WEG

Contents

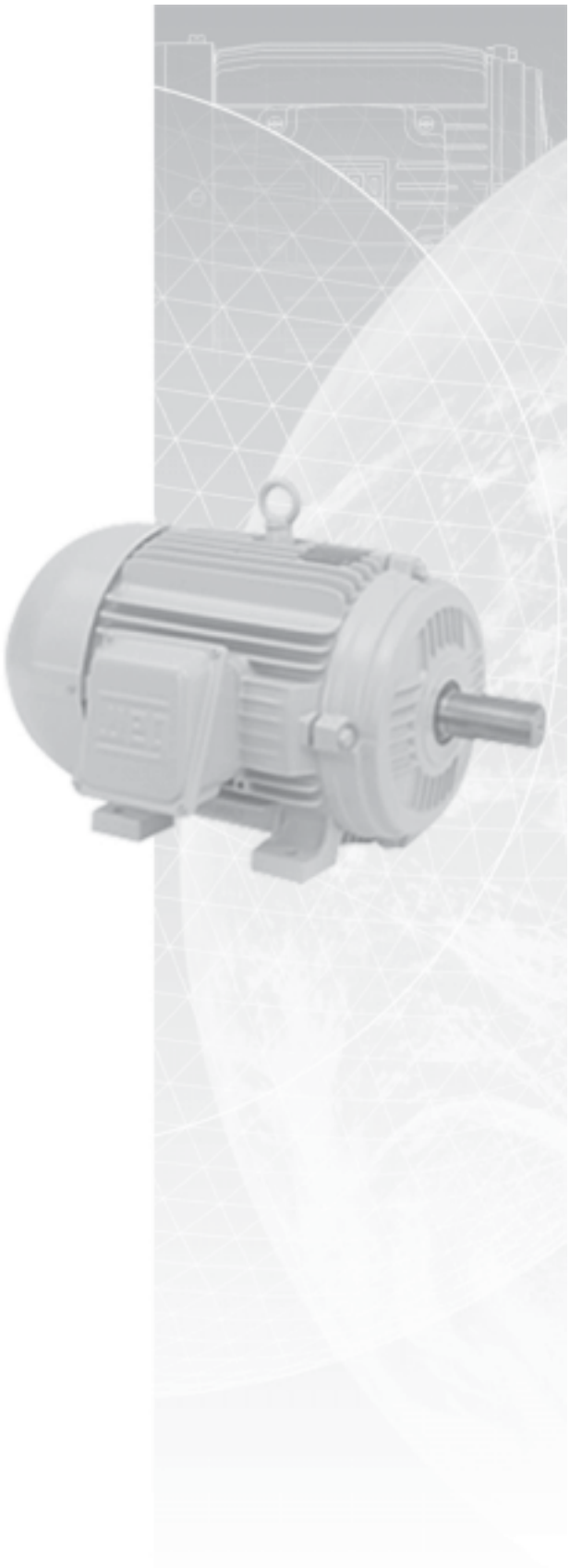

1 - Introduction 04

2 - Basic Instructions 05
2.1 Safety Instructions 05
2.2 Delivery 05
2.3 Storage 05
2.3.1 Drying the Windings 06

3 - Installation 07
3.1 Mechanical Aspects 07
3.1.1 Foundation 07
3.1.2 Types of bases 07
3.1.3 Alignment 08
3.1.4 Coupling 08
3.2 Electrical Aspects 16
3.2.1 Feed System 16
3.2.2 Starting of Electric Motors 16
3.2.3 Motor Protection 18
3.3 Start-up 18
3.3.1 Preliminary Inspection 18
3.3.2 The First Start-up 18
3.3.3 Operation 18
3.3.4 Stopping 18

4 - Maintenance 23
4.1 Cleanliness 23
4.2 Lubrication 23
4.2.1 Periodical Lubrication 23
4.2.2 Quality and Quantity of Grease 23
4.2.3 Lubricating Instructions 23
4.2.4 Replacement of Bearings 24
4.3 Air Gap Checking 24
4.4 Explosion Proof Motor Repair Steps 24
4.4.1 Objective 24
4.4.2 Repair Procedure and Precautions 24
4.4.3 Miscellaneous Recommendations 25

5 - Malfunctioning 26
5.1 Standard Three-phase Motor Failures 26
5.1.1 Short Circuits Between Turns 26
5.1.2 Winding Failures 26
5.1.3 Rotor Failures 27
5.1.4 Bearing Failures 27
5.1.5 Shaft Fractures 27
5.1.6 Unbalanced V-Belt Drives 27
5.1.7 Damage Arising from Poorly Fitted Transmission Parts or Improper Motor Alignment 27
5.2 Troubleshooting Chart 28

6 - Spare Parts and Component Terminology 29

1. Introduction

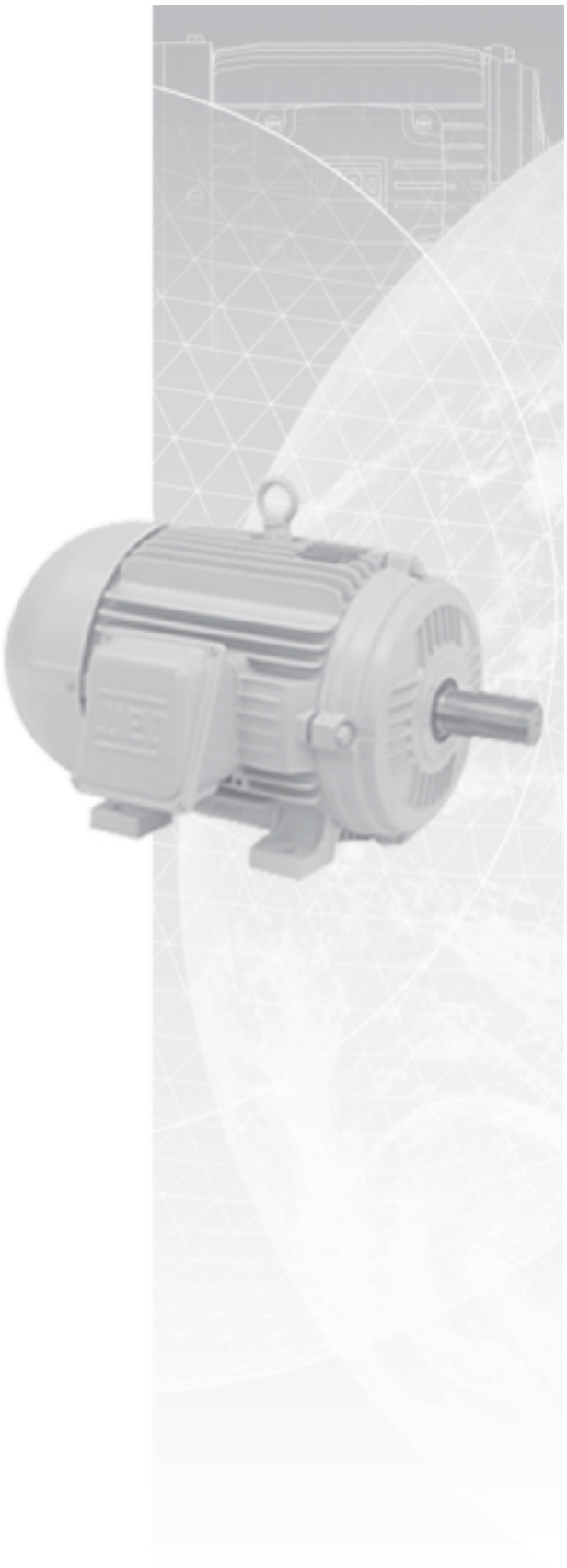

This manual covers all the three-phase and single-phase asynchronous squirrel-cage induction motors, from 140T to 580T frame sizes.

The motors described in this manual are subject to continuous improvement and all information is subject to change without notice.
For further details, please consult WEG.

2. Basic Instructions

2.1 Safety Instructions

All personnel involved with electrical installations, either handling, lifting, operation and maintenance, should be well-informed and up-to-date concerning the safety standards and principles that govern the work and carefully follow them.
Before work commences, it is the responsibility of the person in charge to ascertain that these have been duly complied with and to alert his personnel of the inherent hazards of the job in hand.
It is recommended that these tasks be undertaken only by qualified personnel and they should be instructed to:

- avoid contact with energized circuits or rotating parts,
- avoid by-passing or rendering inoperative any safeguards or protective devices,
- avoid extended exposure in close proximity to machinery with high noise levels,
- use proper care and procedures in handling, lifting, installing, operating and maintaining the equipment, and
- follow consistently any instructions and product documentation supplied when they do such work.

Before initiating maintenance procedures, be sure that all power sources are disconnected from the motor and accessories to avoid electric shock.
Fire fighting equipment and notices concerning first aid should not be lacking at the job site; these should be visible and accessible at all times.

2.2 Delivery

Prior to shipment, motors are factory-tested and balanced. They are packed in boxes or bolted to a wooden base.
Upon receipt, we recommend careful handling and a physical examination for damage which may have occurred during transportation.
In the event of damage and in order to guaranty insurance coverage, both the nearest WEG sales office and the carrier should be notified without delay.

2.3 Storage

Motors should be raised by their eyebolts and never by their shafts. It is important that high rating three-phase motors be raised by their eyebolts. Raising and lowering must be steady and joltless, otherwise bearings may be harmed.
When motors are not immediately installed, they should be stored in their normal upright position in a dry even temperature place, free of dust, gases and corrosive atmosphere.
Other objects should not be placed on or against them.
Motors stored over long periods are subject to loss of insulation resistance and oxidation of bearings.

Bearings and lubricant deserve special attention during prolonged periods of storage. Depending on the length and conditions of storage it may be necessary to regrease or change rusted bearings. The weight of the rotor in an inactive motor tends to expel grease from between the bearing surfaces thereby removing the protective film that impedes metal-to-metal contact.
As a preventive measure against the formation of corrosion by contact, motors should not be stored near machines which cause vibrations, and every 3 month their shafts should be rotated manually.

Insulation resistance fluctuates widely with temperature and humidity variations and the cleanliness of components. When a motor is not immediately put into service it should be protected against moist, high temperatures and impurities, thus avoiding damage to insulation resistance.
If the motor has been in storage more than six month or has been subjected to adverse moisture conditions, it is best to check the insulation resistance of the stator winding with a megohmeter.
If the resistance is lower than ten megohms the windings should be dried in one of the two following ways:

1) Bake in oven at temperatures not exceeding 194 degrees F until insulation resistance becomes constant.
2) With rotor locked, apply low voltage and gradually increase current through windings until temperature measured with thermometer reaches 194 degrees F. Do not exceed this temperature.

If the motor is stored for an extensive period, the rotor must be periodically rotated.
Should the ambient conditions be very humid, a periodical inspection is recommended during storage. It is difficult to prescribe rules for the true insulation resistance value of a machine as resistance varies according to the type, size and rated voltage and the state of the insulation material used, method of construction and the machine's insulation antecedents. A lot of experience is necessary in order to decide when a machine is ready or not to be put into service. Periodical records are useful in making this decision.

The following guidelines show the approximate values that can be expected of a clean and dry motor, at 40°C test voltage in applied during one minute.

Insulation resistance Rm is obtained by the formula:

$$Rm = Vn + 1$$

Where: Rm - minimum recommended insulation resistance in MΩ with winding at 40°C
Vn - rated machine voltage in kV

In case the test is carried out at a temperature other than 40°C, the value must be corrected to 40°C using an approximated curve of insulation resistance v.s temperature of the winding with the aid of Figure 2.1; it's possible verify that resistance practically doubles every 10°C that insulating temperature is lowered.

Example:

Ambient temperature = 50°C
Motor winding resistence at 50°C = 1.02 MΩ
Correction to 40°C

$$R_{40°C} = R_{50°C} \times K_{50°C}$$

$$R_{40°C} = 1.02 \times 1.3$$

$$R_{40°C} = 1.326\ M\Omega$$

The minimum resistence Rm will be:

$$Rm = Vn + 1$$
$$Rm = 0.440 + 1$$
$$Rm = 1.440\ M\Omega$$

On new motors, lower values are often attained due to solvents present in the insulating varnishes that later evaporate during normal operation. This does not necessarily mean that the motor is not operational, since insulating resistance will increase after a period of service.
On motors which have been in service for a period of time much larger values are often attained. A comparison of the values recorded in previous tests on the same motor under similar load, temperature and humidity conditions, serves as a better indication of insulation condition than that of the value derived from a single test. Any substantial or sudden reduction is suspect and the cause determined and corrective action taken.
Insulation resistance is usually measured with a MEGGER.
In the event that insulation resistance is inferior to the values derived from the above formula, motors should be subjected to a drying process.

2.3.1 Drying the windings

This operation should be carried out with maximum care, and only by qualified personnel. The rate of temperature rise should not exceed 5°C per hour and the temperature of the winding should not exceed 105°C. An overly high final temperature as well as a fast temperature increase rate can each generate vapour harmful to the insulation.
Temperature should be accurately controlled during the drying process and the insulation resistance measured at regular intervals.
During the early stages of the drying process, insulation resistance will decrease as a result of the temperature increase, but the resistance will increase again when the insulation becomes dryer.
The drying process should be extended until sucessive measurements of insulation resistance indicate that a constant value above the minimum acceptable value has been attained. It is extremely important that the interior of the motor be well ventilated during the drying operation to ensure that the dampness is really removed.
Heat for drying can be obtained from outside sources (an oven), energization of the space heater (optional), or introducing a current through the actual winding of the motor being dried.

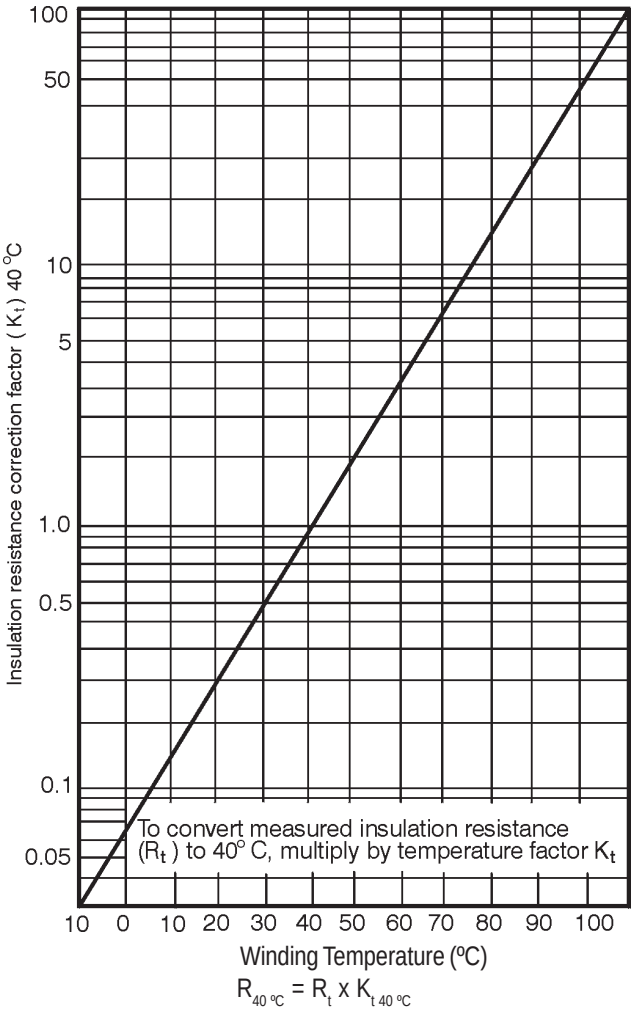

Figure 2.1

3. Installation

Electric machines should be installed in order to allow an easy access for inspection and maintenance. Should the surrounding atmosphere be humid, corrosive or contain flammable substances or particles, it is essential to ensure an adequate degree of protection.
The installation of motors in environments where there are vapours, gases or dusts, flammable or combustible materials, subject to fire or explosion, should be undertaken according to appropriate and governing codes, such as NEC Art. 500 (National Electrical Code) and UL-674 (Underwriters Laboratories, Inc.) Standards.
Under no circumstances can motors be enclosed in boxes or covered with materials which may impede or reduce the free circulation of ventilating air. Machines fitted with external ventilation should be at least 50cm from the wall to permit the passage of air.
The opening for the entry and exit of air flow should never be obstructed or reduced by conductors, pipes or other objects.
The place of installation should allow for air renewal at a rate of 700 cubic feet per minute for each 75 HP motor capacity.

3.1 Mechanical Aspects

3.1.1 Foundation

The motor base must be levelled and as far as possible free of vibrations. A concrete foundation is recommended for motors over 100 HP. The choice of base will depend upon the nature of the soil at the place of erection or of the floor capacity in the case of buildings.
When dimensioning the motor base, keep in mind that the motor may occasionally be run at a torque above that of the rated full load torque.
Based upon Figure 3.1, foundation stresses can be calculated by using the following formula:

$$F1 = 0.2247\ (0.009 \times g \times G - 213\ Tmáx/A)$$

$$F2 = 0.2247\ (0.009 \times g \times G + 213\ Tmax/A\ )$$

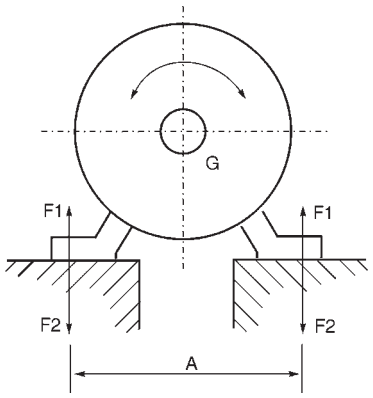

Figure 3.1 - Base stresses

Where:

F1 and F2 - Lateral stress (Lb)
g - Force of gravity (32.18 ft/s^2)
G - Weight of motor (Lb)
Tmax - Maximum torque (Lb . Ft)
A - Obtained from the dimensional drawing of the motor (in)

Sunken bolts or metallic base plates should be used to secure the motor to the base.

3.1.2 Types of Bases

a) Slide Rails

When motor drive is by pulleys the motor should be mounted on slide rails and the lower part of the belt should be pulling.
The rail nearest the drive pulley is positioned in such a manner that the adjusting bolt be between the motor and the driven machine.
The other rail should be positioned with the bolt in the opposite position, as shown in Figure 3.2.
The motor is bolted to the rails and set on the base. The drive pulley is aligned such that its center is on a plane with the center of the driven pulley and the motor shaft and that of the machine be parallel.

The belt should not be overly stretched, see Figure 3.11.
After the alignment, the rails are fixed.

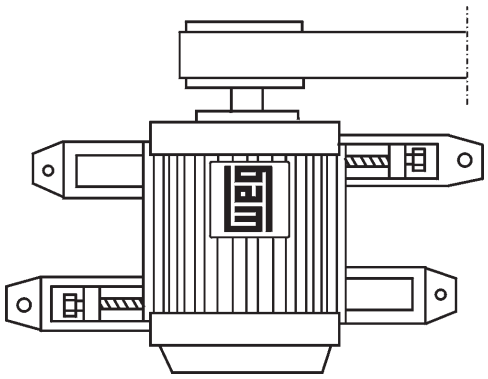

Figure 3.2 - Positioning of slide rails for motor alignment

b) Foundation Studs

Very often, particularly when drive is by flexible coupling the motor is anchored directly to the base with foundation studs.
It is recommended that shim plates of approximately 0.8 inches be used between the foundation studs and the feet of the motor for replacement purposes. These shim plates are useful when exchanging one motor for another of larger shaft height due to variations allowed by standard tolerances.
Foundation studs should neither be painted nor rusted as both interfere with to the adherence of the concrete, and bring about loosening.
After accurate alignment and levelling of the motor, the foundation studs are cemented and their screws tightened to secure the motor.

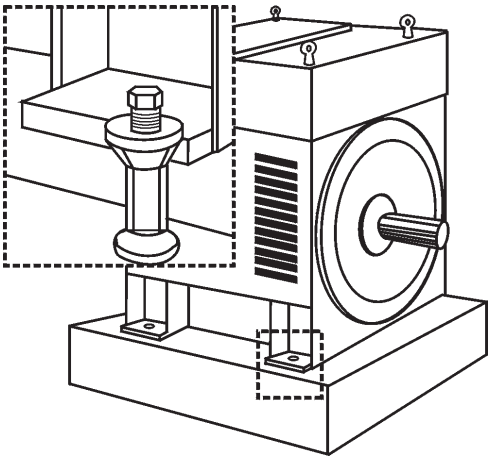

Figure 3.3 - Motor mounted on a concrete base with foundation studs

3.1.3 Alignment

The electric motor should be accurately aligned with the driven machine, particularly in cases of direct coupling. An incorrect alignment can cause bearing failure vibrations and even shaft rupture.
The best way to ensure correct alignment is to use dial gauges placed on each coupling half, one reading radially and the other exially - Figure 3.5.

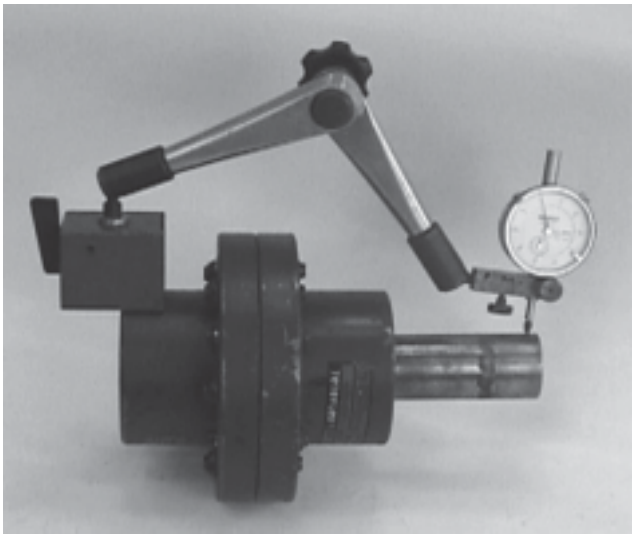

Figure 3.5 - Alignment with dial gauges

Thus, simultaneous readings are possible and allow for checking for any parallel (Figure 3.6a) and concentricity deviations (Figure 3.6b) by rotating the shafts one turn.
Gauge readings should not exceed 0.02 inches. If the installer is sufficiently skilled, he can obtain alignment with feeler gauges and a steel ruler, providing that the couplings are perfect and centered - Figure 3.6c.

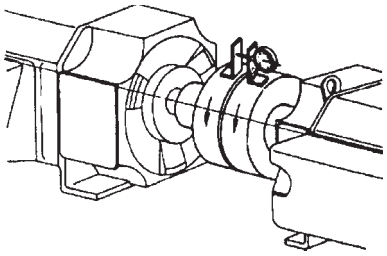

Figure 3.6a - Deviation from parallel

Figure 3.6b - Deviation from concentricity

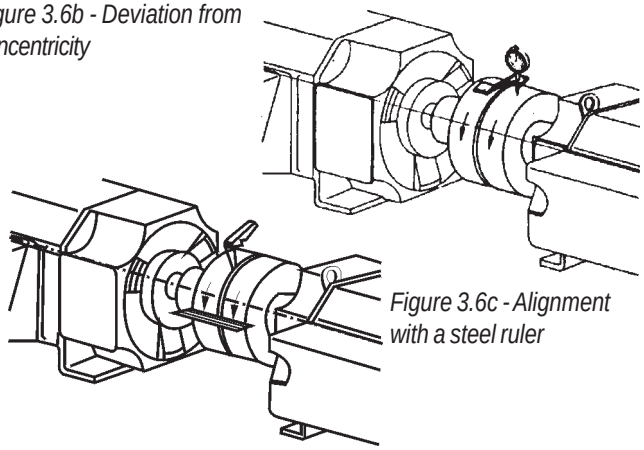

Figure 3.6c - Alignment with a steel ruler

3.1.4 Coupling

a) Direct Coupling

Direct coupling is always preferable due to its lower cost, space economy, no belt slippage and lower accident risk.
In the case of speed ratio drives, it is also common to use a direct coupling with a reducer (gear box).

CAUTION: Carefully align the shaft ends using, whenever feasible, a flexible coupling.

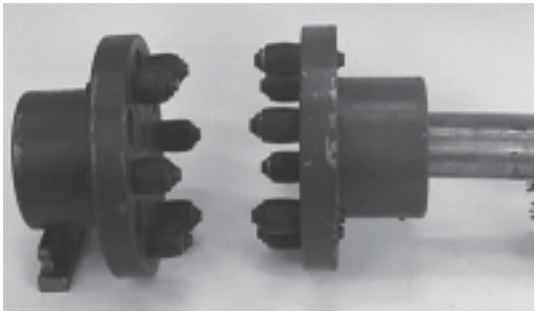

Figure 3.7 - A type of direct coupling

b) Gear Coupling

Poorly aligned gear couplings are the cause of jerking motions which bring about the vibration of the actual drive and vibrations within the motor.

Therefore, due care must be given to perfect shaft alignment: exactly parallel in the case of straight gears, and at the correct angle for bevel or helical gears.
Perfect gear engagement can be checked by the insertion of a strip of paper on which the teeth marks will be traced after a single rotation.

c) Belt and Pulley Coupling

Belt coupling is most commonly used when a speed ratio is required.
Assembly of Pulleys: To assemble pulleys on shaft ends with a keyway and threaded end holes the pulley should be inserted halfway up the keyway merely by manual pressure.
On shafts without threaded end holes the heating of the pulley to about 80°C is recommended, or alternatively, the devices illustrated in Figure 3.8 may be employed.

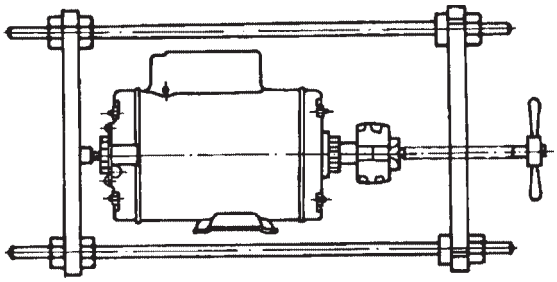

Figure 3.8 - Pulley mounting device

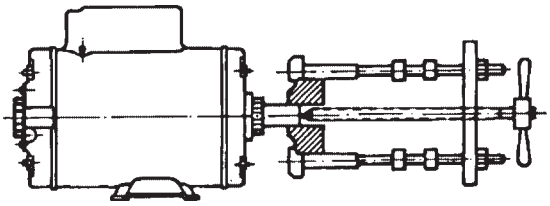

Figure 3.8a - Pulley extractor

Hammers should be avoided during the fitting of pulleys and bearings. The fitting of bearings with the aid of hammers leaves blemishes on the bearing races. These initially small flaws increase with usage and can develop to a stage that completely impairs the bearing.
The correct positioning of a pulley is shown in Figure 3.9.

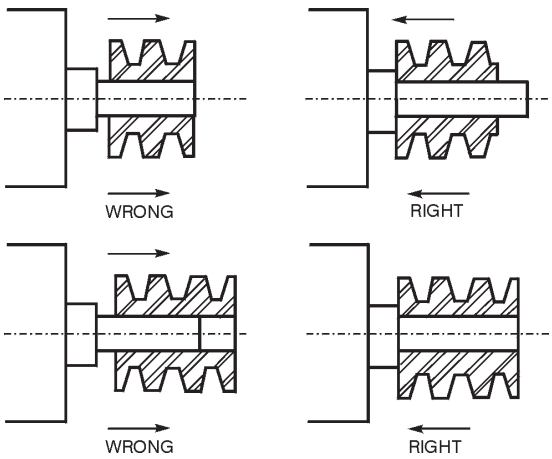

Figure 3.9 - Correct positioning of pulley on the shaft

RUNNING: To avoid needless radial stresses on the bearings it is imperative that shafts are parallel and the pulleys perfectly aligned. (Figure 3.10).

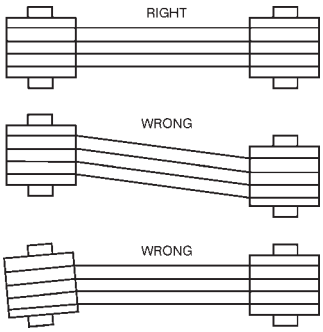

Figure 3.10 - Correct pulley alignment

Laterally misaligned pulleys, when running, transmit alternating knocks to the rotor and can damage the bearing housing. Belt slippage can be avoided by applying a resin (rosin for example).
Belt tension should be sufficient to avoid slippage during operation (Figure 3.11).
Pulleys that are too small should be avoided; these cause shaft flexion because belt traction increases in proportion to a decrease in the pulley size. Table 1 determines minimum pulley diameters, and Tables 2 and 3 refer to the maximum stresses acceptable on motor bearings up to frame 580. Beyond frame size 600, an analysis should be requested from the WEG engineering.

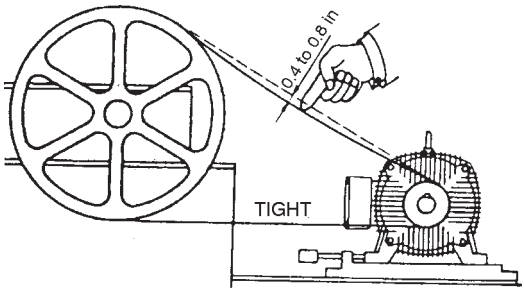

Figure 3.11 - Belt tensions

***Table 1** - Minimum pitch diameter of pulleys*

Frame	Ball bearings						
	Bearing	Size X Inches					
		0.79	1.57	2.36	3.15	3.94	4.72
140	6205-Z	1.7	1.85	2			
W 180	6206-Z	3.03	3.23	3.46			
180	6307-Z	1.69	1.81	1.93			
W 210	6308-Z		2.86	3.00	3.16		
210	6308-Z		2.90	3.06	3.22		
W 250	6309 C3		4.37	4.54	4.72	4.92	
250	6309 C3		4.41	4.59	4.77	4.97	
280	6311 C3			5.08	5.19	5.47	5.65
320	6312 C3			7.44	7.76	7.94	8.18
360	6314 C3			8.73	9.00	9.28	9.57

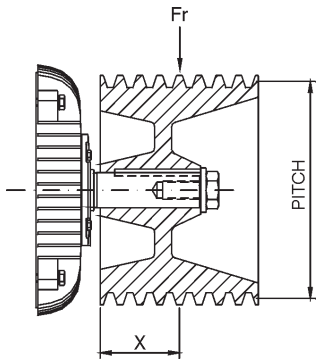

Frame	Poles		Ball Bearing					Roller Bearing					
		Bearing	Size X Inches				Bearing	Size X Inches					
			1.97	3.15	4.33	5.51		1.97	3.15	4.33	5.51	6.69	8.27
400	II	6314 C3	7.3	7.62	7.94	8.24		-	-	-	-	-	-
	IV-VI-VII	6314 C3					NU 316	4.13	4.31	4.49	4.67	4.85	-
440	II	6314 C3	11.75	12.16	12.61	13.08		-	-	-	-	-	-
	IV-VI-VIII	6319 C3					NU 319	4.02	4.17	4.32	4.47	4.62	4.82
500	II	6314 C3	23.54	24.34	25.12	25.87		-	-	-	-	-	-
	IV-VI-VIII	6319 C3					NU 319	6.52	6.73	6.95	7.17	7.39	7.67
5008	II	6314 C3	44.66	45.79	46.98	48.23		-	-	-	-	-	-
	IV-VI-VIII	6322 C3					NU 322	8.73	8.95	9.96	11.34	12.87	14.82
580	II	6314 C3	57	58	59	60		-	-	-	-	-	-
	IV-VI-VIII	6322 C3					NU 322	10.72	10.91	11.11	11.31	11.50	11.76

Important: 1) Peripheral speeds for solid grey cast iron pulleys FC 200 is V = 115 ft/s.
2) Use steel pulleys when peripheral speed is higher than 115 ft/s.
3) V-belt speed should not exceed 115 ft/s.

***Table 2** - Maximum acceptable radial load (Lbf)*

Nema 56 Motors				
Frame	Radial Force (Lbf)			
	Poles	Distance X		
		1	1,18	2
56A	II	88	-	59
	IV	88	-	59
56B	II	88	-	59
	IV	86	-	59
56D	II	127	-	70
	IV	141	-	70

Saw Arbor Motors				
80 LMS	II	-	355	-
80 MMS	II	-	359	-
80 SMS	II	-	357	-
90 LMS	II		427	-
	IV	-	555	-

Table 3 *- Maximum acceptable axial load (Lbf)*

IP55 Totally Enclosed Motors - 60Hz
Position / Construction Form

FRAME	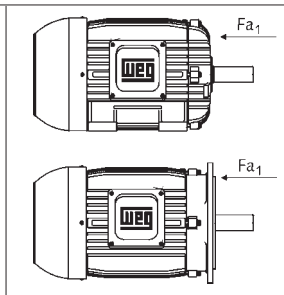				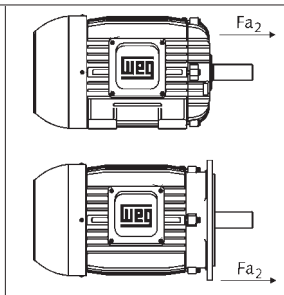				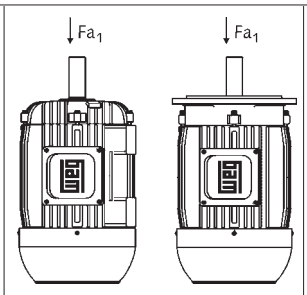				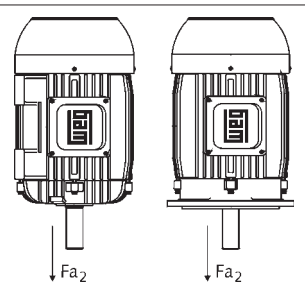			
	II	IV	VI	VIII	II	IV	VI	VIII	II	IV	VI	VIII	II	IV	VI	VIII
140	103	141	167	187	112	152	185	207	99	132	158	178	105	143	174	198
W 180	108	145	180	202	154	209	255	286	94	130	165	183	141	194	240	269
180	149	207	249	286	269	370	443	500	136	189	229	266	253	352	421	480
W 210	196	264	326	368	329	447	544	610	176	238	297	339	310	421	518	582
210	189	257	315	357	324	443	533	599	160	220	275	310	295	405	493	553
W 250	282	372	443	485	471	620	734	811	240	317	394	414	430	564	685	743
250	273	368	436	485	463	615	727	813	220	310	379	421	410	557	672	749
280	355	480	551	624	621	826	959	1,082	275	388	427	502	540	736	838	961
320	374	498	588	668	703	930	1,091	1,232	266	366	432	511	597	793	937	1,078
360	890	1,181	1,144	1,323	890	1,181	1,375	1,552	745	985	1,144	1,323	745	985	1,144	1,323
400	877	1,148	1,347	1,521	877	1,148	1,347	1,521	705	890	1,060	1,241	705	890	1,060	1,241
440	842	1,303	1,563	1,821	842	1,303	1,563	1,821	568	884	1,109	1,488	568	884	1,109	1,488
500	769	1,250	1,481	1,728	769	1,250	1,481	1,728	355	721	844	1,190	355	721	844	1,109
5008	791	1624	1909	2137	791	1624	1909	2137	728	1548	1808	2029	728	1548	1808	2029
580	679	1,406	1,649	1,865	679	1,406	1,649	1,865	033	474	549	597	033	474	549	597

Open Motors - NEMA 56 Frames - 60Hz
Position / Construction Form

FRAME	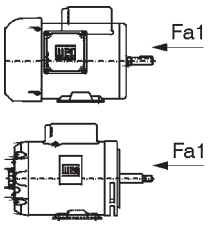		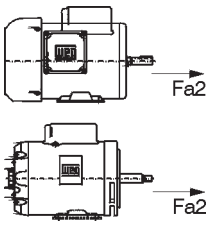		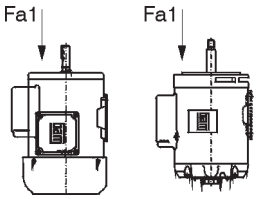		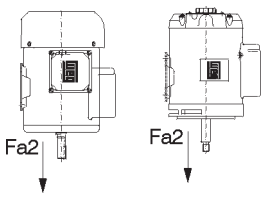	
	II	IV	II	IV	II	IV	II	IV
56 A	68	90	83	112	63	85	79	108
56 B	66	90	81	110	63	83	77	105
56 D	63	88	105	145	59	81	101	138

The maximum radial load for each frame are determined, by graphs.

INSTRUCTIONS ON HOW TO USE THE GRAPHS

1 - Maximum radial load on shaft.
2 - Maximum radial load on bearings.

Where: X - Half of pulley width (inches)
Fr- Maximum radial load in relation to the diameter and pulley width.

Example:
Verify whether a 2HP motor, II Pole, 60Hz withstands a radial load of 110Lb, considering a pulley width of 4 inches.

Frame: 145T
Fr: 110Lb
X: 2 inches

1 - Mark the distance X
2 - Find out line N = 3600 for bearing
Based on the above, this bearing withstands a radial load of 130Lb.

Frame 180T

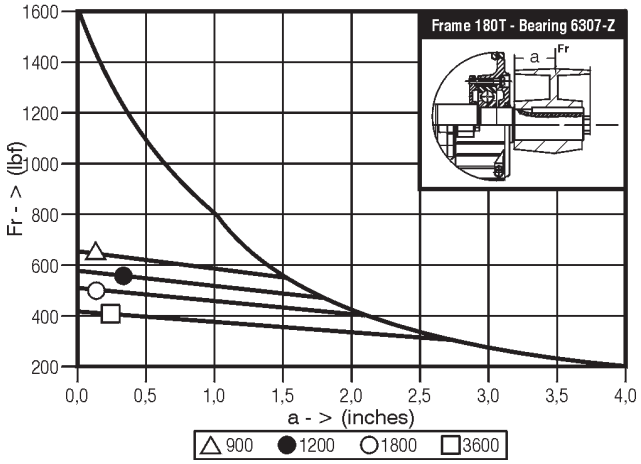

Frame 140T

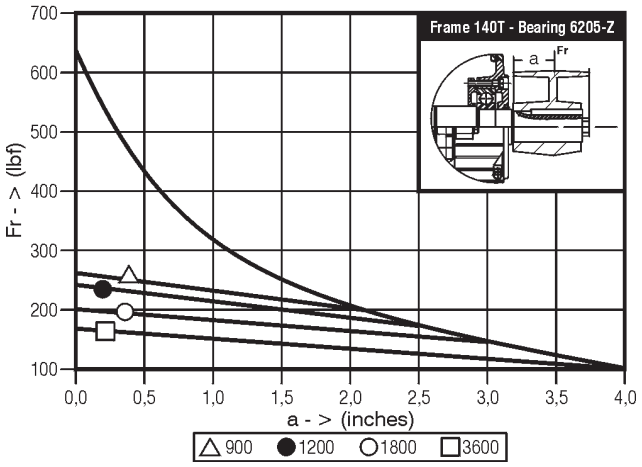

Frame W210T

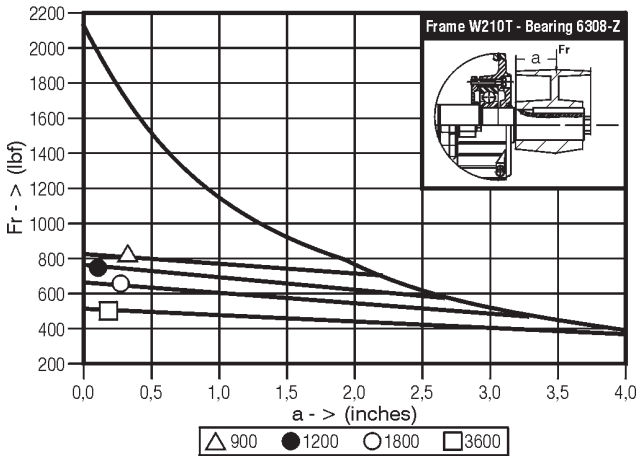

Frame W180T

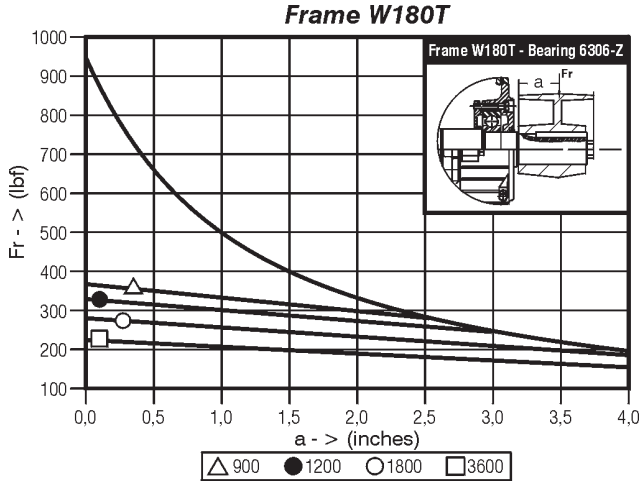

Frame 210T

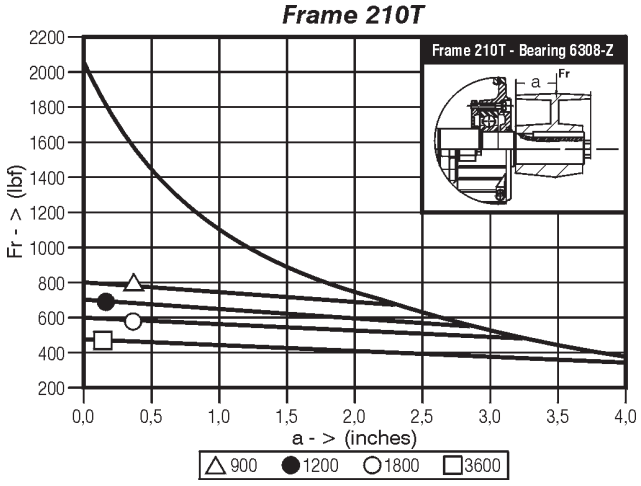

Frame W250T

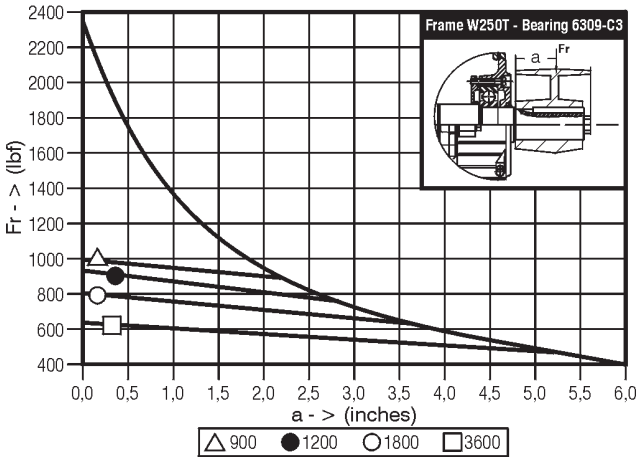

Frame 280T

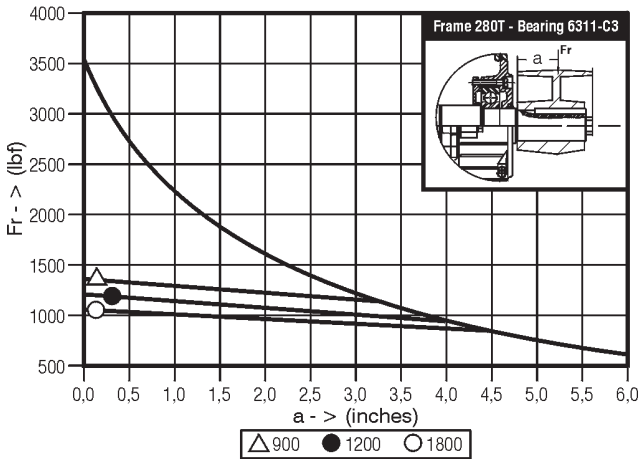

Frame 250T

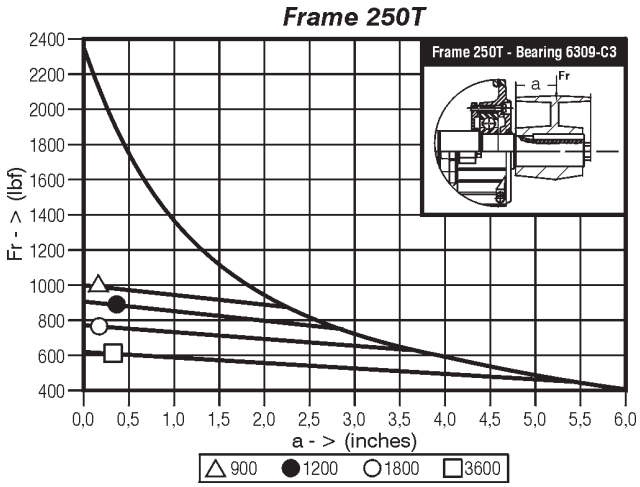

Frame 320TS

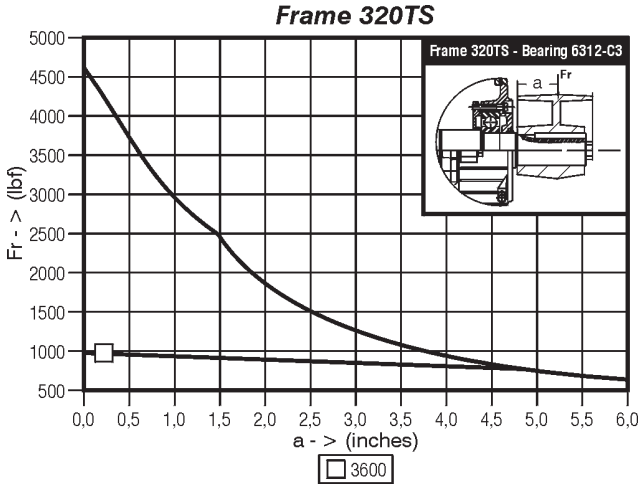

Frame 280TS

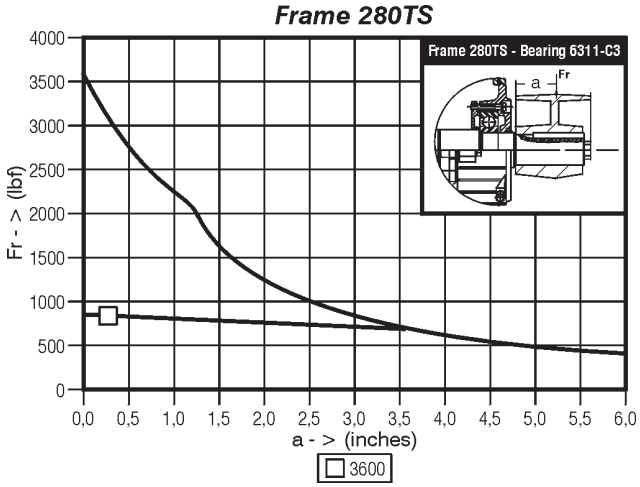

Frame 320T

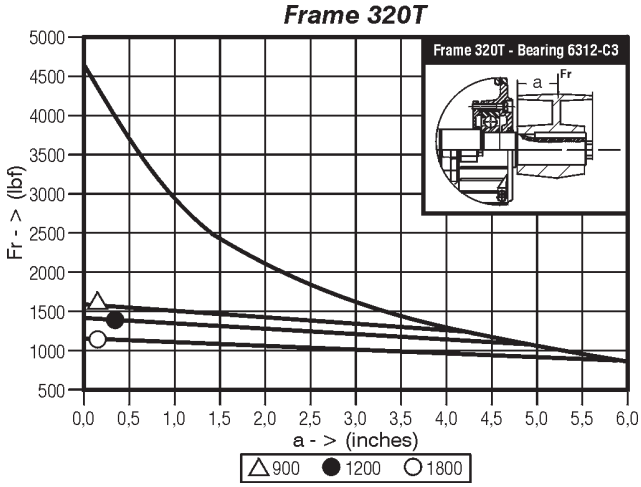

Frame 360TS

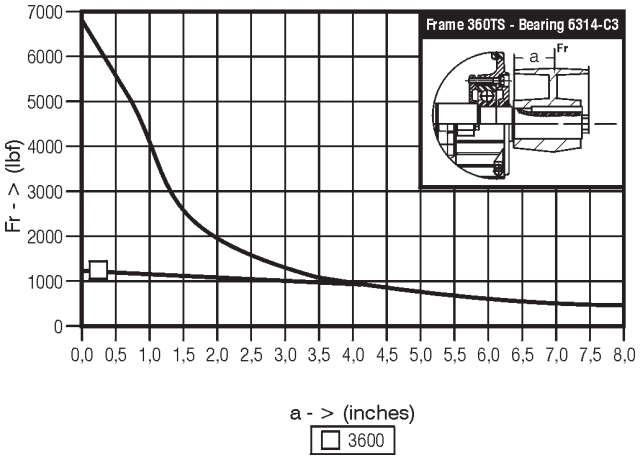

Frame 400T

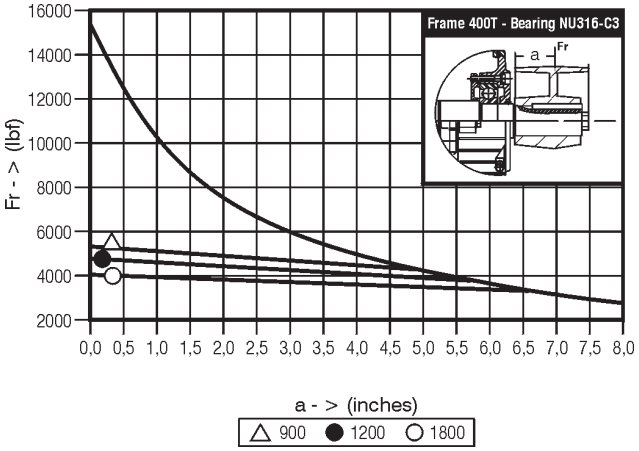

Frame 360T

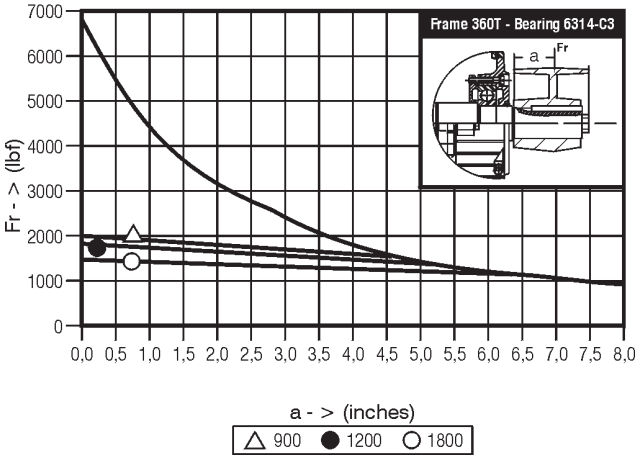

Frame 440TS

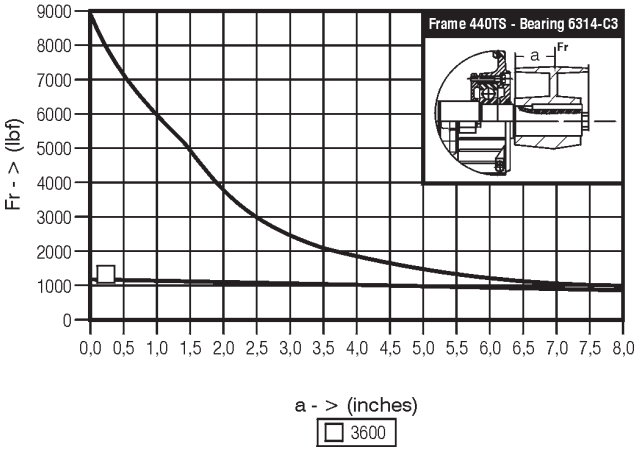

Frame 400TS

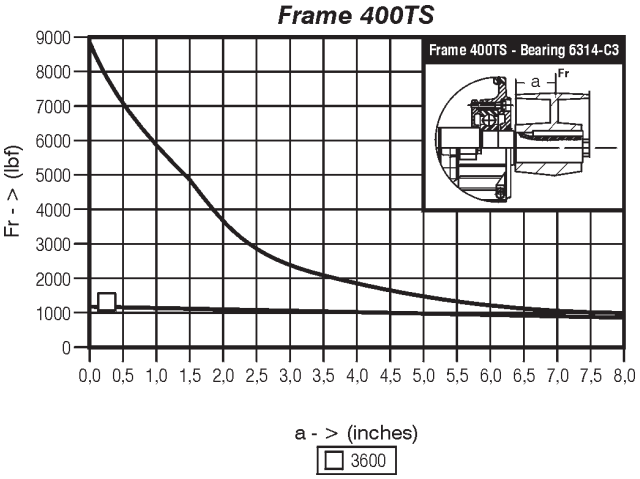

Frame 440T

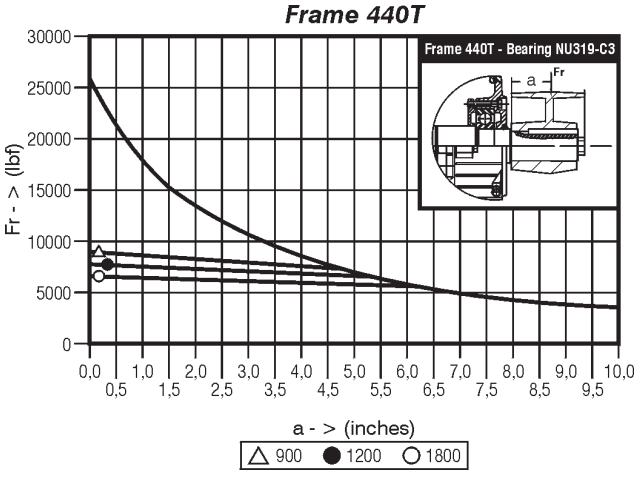

Frame 500TS

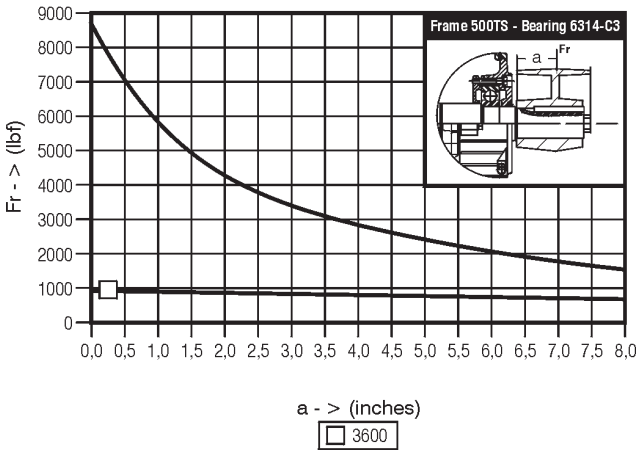

Frame 5008T

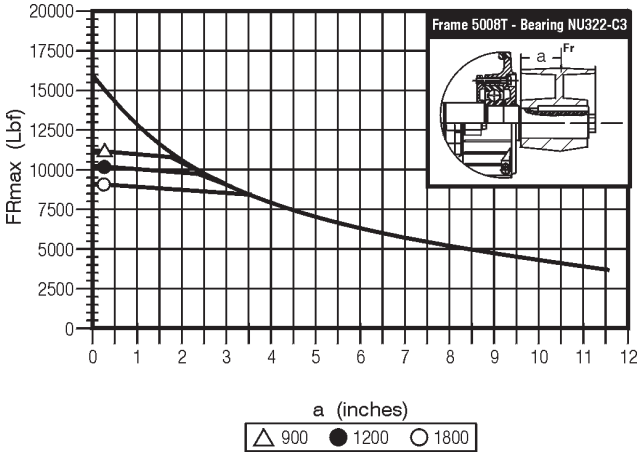

Frame 500T

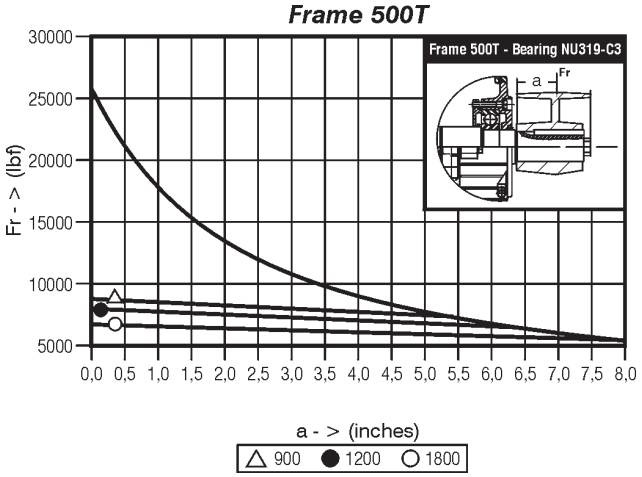

Frame 580TS

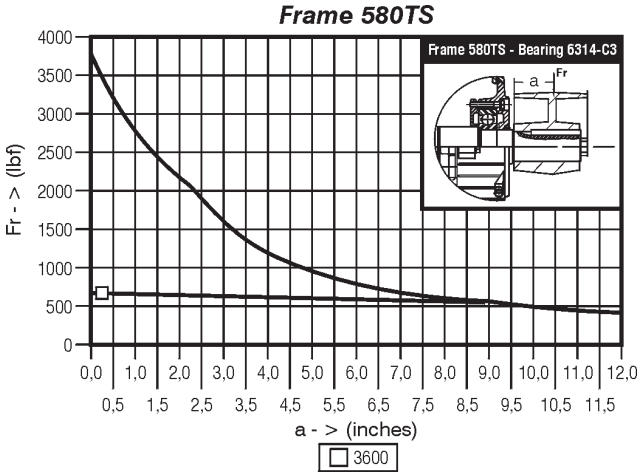

Frame 5008TS

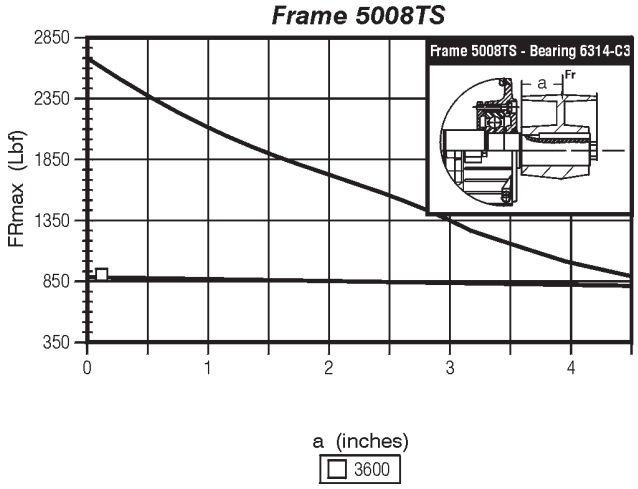

Frame 580T

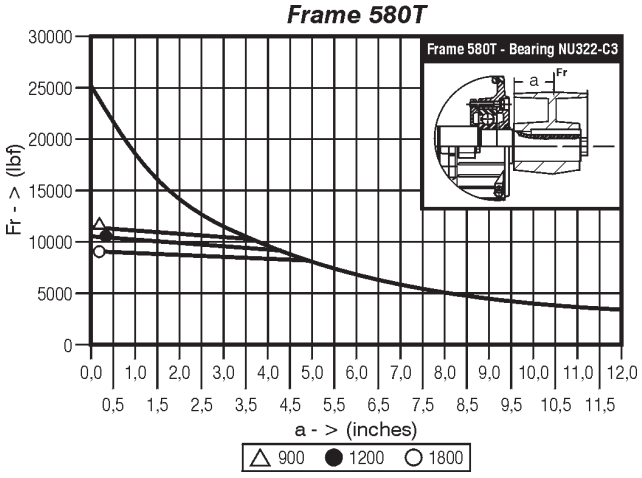

Note: For frames 600 and above, consult your engineering representative.

3.2 Electrical Aspects

3.2.1 Feed System

Proper electric power supply is very important. The choice of motor feed conductors, whether branch or distribution circuits, should be based on the rated current of the motors as per NFPA-70 Standard article 430.
Tables 4, 5 and 6 show minimum conductor gauges sized according to maximum current capacity and maximum voltage drop in relation to the distance from the distribution center to the motor, and to the type of installation (Overhead or in ducts).

To determine the conductor gauge proceed as follows:

a) Determine the current by multiplying the current indicated on the motor nameplate by 1.25 and then locate the resulting value on the corresponding table.
If the conductor feeds more than one motor, the value to be sought on the table should be equal 1.25 times the rated current of the largest motor plus the rated current of the other motors.
In the case of variable speed motors, the highest value among the rated currents should be considered.
When motor operation is intermittent, the conductors should have a current carrying capacity equal or greater, to the product of the motor rated current times the running cycle factor shown on Table 7.

***Table 7** - Running cycle factor*

Motor Short

Motor short time rating / Duty Classification	5min	15min	30 at 60min	Continuos
Short (operating valves, activating contacts etc)	1.10	1.20	1.50	-
Intermittent (passenger or freight elevators, tools, pumps, rolling bridges etc)	0.85	0.85	0.90	1.40
Cyclic (rolling mills,mining machines etc)	0.85	0.90	0.95	1.40
Variable	1.10	1.20	1.50	2.00

b) Locate the rated voltage of the motor and the feed network distance in the upper part of the corresponding table. The point of intersection of the distance column and the line referring to current will indicate the minimum required gauge of the conductor.

Example:
Size the conductors for a 15 HP, three-phase, 230V, 42A, motor located 200 feet from the main supply with cables laid in conduits.

a) Current to be located: 1.25 x 42A = 52.5A
b) Closest value on table 6:55A
c) Minimum gauge: 6 AWG

3.2.2 Starting of Electric Motor

Induction motors can be started by the following methods:

Direct Starting

Whenever possible a three-phase motor with a squirrel cage rotor should be started directly at full supply voltage by means of a contactor (Connection diagram a). This method is called Direct-on-Line (DOL) starting.
There are DOL starter assemblies available combining a three-pole contactor, a bimetal relay (overload protection device), and a fuse (short circuit protection on branch circuit).
DOL starting is the simplest method, only feasible however, when the locked rotor current (LRC) does not influence the main electric supply lines.
Initial locked rotor current (LRC) in induction motors reach values six to eight times the value of the full load current. During starting by the DOL method, starting current can reach these high levels. The main electrical supply should be rated sufficiently, such that during the starting cycle no supply disturbance to others on the power network is caused by the voltage drop in the main supply.
This can be achieved under one of the following situations:

a) The rated main supply current is high enough for the locked rotor current not to be proportionally high.
b) Motor locked rotor current is low with no effect on the networks.
c) The motor is started under no-load conditions with a short starting cycle and, consequently, a low locked rotor current with a transient voltage drop tolerable to other consumers.

Starting with a compensating switch (auto-transformer starting)

Should direct on line starting not be possible, either due to restrictions imposed by the power supply authority or due to the installation itself, reduced voltage indirect starting methods can be employed to lower the locked rotor current. The single line connection diagram (C) shows the basic components of a compensating switch featuring a transformer (usually an auto-transformer) with a series of taps corresponding to the different values of the reduced voltage. Only three terminals of the motor are connected to the switch, the other being interconnected as per diagram, for the indicated voltage.

Star-Delta starting

It is fundamental to star-delta starting that the three-phase motor has the necessary numbers of leads for both connections:

6 leads for Y/Δ
or 12 leads for YY/ΔΔ

All the connections for the various voltages are made through terminals in the terminal box in accordance with the wiring diagram that accompanies the motor. This diagram may be shown on the nameplate or in the terminal box.
The star-delta connection is usually used only in low-voltage motors due to normally available control and protection devices. In this method of starting the locked rotor current is approximately 30% of the original LRC. The locked rotor torque is reduced proportionally as well. For this reason, it is very important before deciding to use

***Table 4** - Wire and cable gauges for single-phase motor installation (voltage drop < 5%) (in conduits)*

Supply Voltage	Distance of motor from distribution centre (feet)													
115	34	51	69	85	102	137	171	205	240	273	308	342	428	514
230	69	102	138	170	204	274	342	410	480	546	616	684	856	1028
460	138	204	276	340	408	548	684	820	960	1092	1232	1368	1712	2056
575	170	250	338	420	501	670	840	1010	1181	1342	1515	1680	2105	2530
Current (A)	Cable gauge (conductor)													
5	14	14	14	14	14	14	14	12	12	12	12	10	10	8
10	14	14	14	14	12	12	10	10	10	8	8	8	6	6
15	12	12	12	12	12	10	8	8	6	6	6	6	4	2
20	12	12	12	10	10	8	8	6	6	6	4	4	4	2
30	10	10	10	8	8	6	6	6	4	4	2	2	2	1/0
40	8	8	8	8	6	6	4	4	2	2	2	2	1/0	2/0
55	6	6	6	6	6	4	4	2	2	1/0	1/0	1/0	1/0	2/0
70	4	4	4	4	4	2	2	2	1/0	1/0	2/0	2/0	2/0	2/0
95	2	2	2	2	2	2	1/0	1/0	1/0	2/0	3/0	3/0	4/0	250M

***Table 5** - Wire and cable gauges for three-phase motor installation - aerial conductors with 25cm spacing (voltage drop < 5%)*

Supply Voltage	Distance of motor from distribution centre (feet)													
115	51	69	85	102	137	171	205	240	273	308	342	428	514	685
230	102	138	170	204	274	342	410	480	546	616	684	856	1028	1370
460	204	276	340	408	547	684	820	960	1092	1232	1368	1712	2056	2740
575	250	338	420	501	670	840	1010	1181	1342	1515	1680	2105	2530	3350
Current (A)	Cable gauge (conductor)													
15	14	14	14	12	12	10	10	10	8	8	8	6	6	4
20	14	14	12	12	10	10	8	8	8	6	6	4	4	2
30	14	12	10	8	8	8	6	6	4	4	4	2	2	1/0
40	12	10	10	8	8	6	4	4	4	2	2	2	1/0	2/0
55	10	10	8	8	6	4	4	2	2	2	1/0	2/0	3/0	--
70	8	8	6	6	4	2	2	2	1/0	1/0	2/0	3/0	--	--
100	6	6	4	4	2	2	1/0	2/0	3/0	4/0	4/0	--	--	--
130	4	4	4	2	1/0	1/0	2/0	4/0	--	--	--	--	--	--
175	2	2	2	1/0	2/0	3/0	--	--	--	--	--	--	--	--
225	1/0	1/0	1/0	2/0	3/0	--	--	--	--	--	--	--	--	--
275	2/0	2/0	2/0	4/0	--	--	--	--	--	--	--	--	--	--
320	3/0	3/0	3/0	4/0	--	--	--	--	--	--	--	--	--	--

***Table 6** - Wire and cable gauges for three-phase motor installation (voltage drop < 5%) (in conduits)*

Supply Voltage	Distance of motor from distribution centre (feet)											
115	85	102	120	137	171	205	240	273	308	342	428	514
230	170	204	240	274	342	410	480	546	616	684	856	1028
460	340	408	480	548	684	820	960	1092	1232	1368	1712	2056
575	420	501	590	670	840	1010	1181	1342	1515	1680	2105	2530
Current (A)	Cable gauge (conductor)											
15	12	12	12	10	10	8	8	8	6	6	6	4
20	12	10	10	10	8	8	6	6	6	6	4	4
30	10	8	8	8	6	6	6	4	4	4	2	2
40	8	8	6	6	6	4	4	4	2	2	2	1/0
55	6	6	6	4	4	4	2	2	2	1/0	1/0	1/0
70	4	4	4	4	2	2	2	1/0	1/0	1/0	2/0	2/0
95	2	2	2	2	2	1/0	1/0	1/0	1/0	2/0	3/0	4/0
125	1/0	1/0	1/0	1/0	1/0	1/0	2/0	2/0	3/0	3/0	4/0	250M
145	2/0	2/0	2/0	2/0	2/0	2/0	2/0	3/0	3/0	4/0	250M	300M
165	3/0	3/0	3/0	3/0	3/0	3/0	3/0	3/0	4/0	4/0	250M	350M
195	4/0	4/0	4/0	4/0	4/0	4/0	4/0	4/0	250M	250M	300M	350M
215	250M	250M	250M	250M	250M	250M	250M	250M	250M	300M	350M	400M
240	300M	300M	300M	300M	300M	300M	300M	300M	300M	300M	400M	500M
265	350M	350M	350M	350M	350M	350M	350M	350M	350M	350M	500M	500M
280	400M	400M	400M	400M	400M	400M	400M	400M	400M	400M	400M	--
320	500M	500M	500M	500M	500M	500M	500M	500M	500M	500M	500M	--

Note: The above indicated values are orientative. For guaranteed values, contact the Local Power Company.

star-delta starting to verify if the reduced locked rotor torque in "STAR" connection is enough to accelerate the load.

3.2.3 Motor Protection

Motor circuits have, in principle, two types of protection: motor overload, locked rotor and protection of branch circuit from short circuits. Motors in continuous use should be protected from overloading by means of a device incorporated into the motor, or by an independent device, usually a fixed or adjustable thermal relay equal or less than to the value derived from multiplying the rated feed current at full load by:

- 1.25 for motors with a service factor equal or superior to 1.15 or;

- 1.15 for motors with service factor equal to 1.0.

Some motors are optionally fitted with overheating protective detectors (in the event of overload, locked rotor, low voltage, inadequate motor ventilation) such as a thermostat (thermal probe), thermistor (PTC), RTD type resistance which dispense with independent devices.

THERMOSTAT (THERMAL PROBE)**:** Bimetallic thermal detectors with normally closed silver contacts. These open at pre-determined temperatures. Thermostats are series connected directly to the contactor coil circuit by two conductors.

THERMISTORS: Semi-conductor heat detectors positive temperature coeficient (PTC) that sharply change their resistance upon reaching a set temperature. Thermistors, depending upon the type, are series or parallel-connected to a control unit that cuts out the motor feed, or actuates an alarm system, in response to the thermistors reaction.

RESISTANCE TEMPERATURE DETECTORS (RTD) - PT 100:The resistance type heat detector (RTD) is a resistance element usually manufactured of copper or platinum.
The RTD operates on the principle that the electrical resistance of a metallic conductor varies linearly with the temperature. The detector terminals are connected to a control panel, usually fitted with a temperature gauge, a test resistance and a terminal changeover switch.

Subject to the desired degree of safety and the client's specification, three (one per phase) or six (two per phase) protective devices can be fitted to a motor for the alarm stems, circuit breaker or combined alarm and circuit breaker, with two leads from the terminal box to the alarm or circuit breaker system and four for the combined system (alarm and circuit breaker).
Table 9 compares the two methods of protection.

3.3 Start-up

3.3.1 Preliminary Inspection

Before starting a motor for the first time, it will be necessary to:

a) Remove all locking devices and blocks used in transit and check that the motor rotates freely;

b) Check that the motor is firmly secured and that coupling elements are correctly mounted and aligned.;

c) Ascertain that voltage and frequency correspond to those indicated on the nameplate. Motor performance will be satisfactory with main supply voltage fluctuation within ten per cent of the value indicated on the nameplate or a frequency fluctuation within five per cent or, yet, with a combined voltage and frequency variance within ten per cent;

d) Check that connections are in accordance with the connection diagram shown on the nameplate and be sure that all terminal screws and nuts are tight;

e) Check the motor for proper grounding. Providing that there are no specifications calling for ground-insulated installation, the motor must be grounded in accordance with prevalent standard for grounding electrical machines. The screw identified by the symbol ⏚ should be used for this purpose.
This screw is generally to be found in the terminal box or on one foot of the frame;

f) Check that motor leads connecting with the mains, as well as the control wires and the overload protection device, are in accordance with Nema Standards;

g) If the motor has been stored in a damp place, or has been stopped for some time, measure the insulating resistance as recommended under the item covering storage instructions;

h) Start the motor uncoupled to ascertain that it is turning in the desired direction. To reverse the rotation of a three-phase motor, invert two terminal leads of the mains supply.
High voltage motors bearing an arrow on the frame indicating rotation direction can only turn in the direction shown.

3.3.2 The First Start-up

Three-Phase Motor with Cage Rotor:
After careful examination of the motor, follow the normal sequence of starting operations listed in the control instructions for the initial start-up.

3.3.3 Operation

Drive the motor coupled to the load for a period of at least one hour while watching for abnormal noises or signs of overheating.
Compare the line current with the value shown on the nameplate.
Under continuous running conditions without load fluctuations this should not exceed the rated current times the service factor, also shown on the nameplate.
All measuring and control instruments and apparatus should be continuously checked for anomalies, and any irregularities corrected.

3.3.4 Stopping

Warning:

To touch any moving part of a running motor, even though

disconnected, is a danger to life and limb.

Three-phase motor with cage rotor:
Open the stator circuit switch. With the motor at a complete stop, reset the auto-transformer, if any, to the "start" position.

Caption: ◯ unprotected
◑ partially protected
● totally protected

***Table 9** - Comparison between motor protection system*

Causes of overheating	Current-based protection		Protection with probe thermistor in motor
	Fuse only	Fuse and thermal protector	
	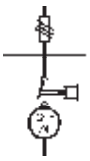	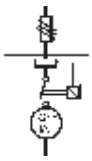	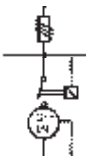
1. Overload with 1.2 times rated current	◯	●	●
2. Duty cycles S1 to S8 IEC 34, EB 120	◯	◑	●
3. Brakings, reversals and frequent starts	◯	◑	●
4. Operating with more than 15 starts p/hour	◯	◑	●
5. Locked rotor	◑	◑	●
6. Fault on one phase	◯	◑	●
7. Execessive voltage fluctuation	◯	●	●
8. Frequency fluctuation on main supply	◯	●	●
9. Excessive ambient temperature	◯	●	●
10. External heating caused by bearings, belts, pulleys etc.	◯	◯	●
11. Obstructed ventilation	◯	◯	●

CONNECTION DIAGRAMS

a) Direct starting

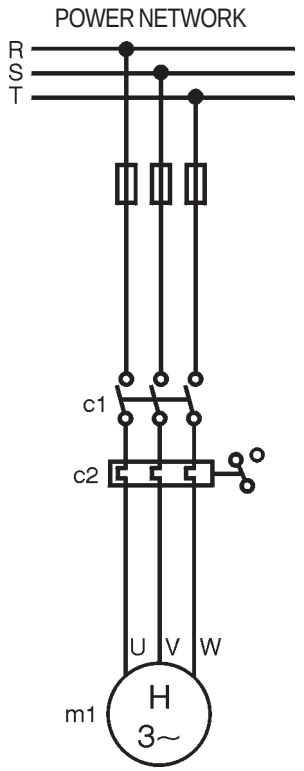

b) Star-Delta starting

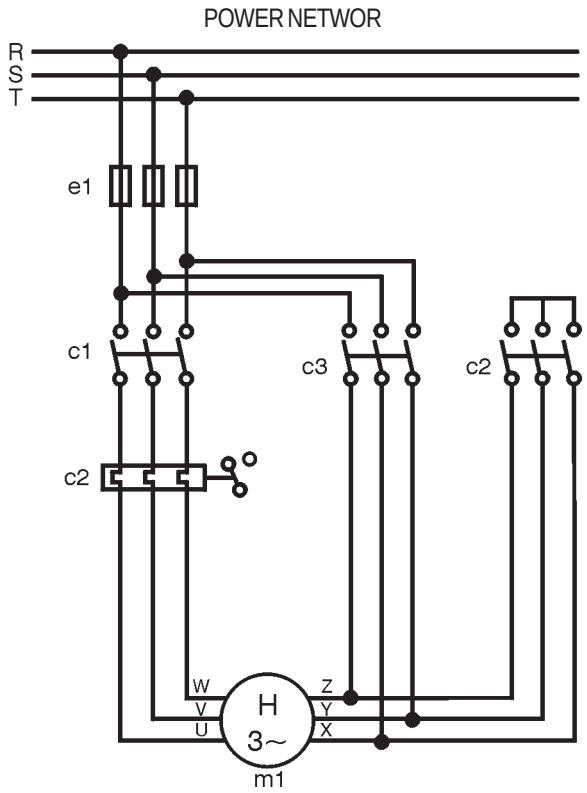

c) Auto-transformer starting

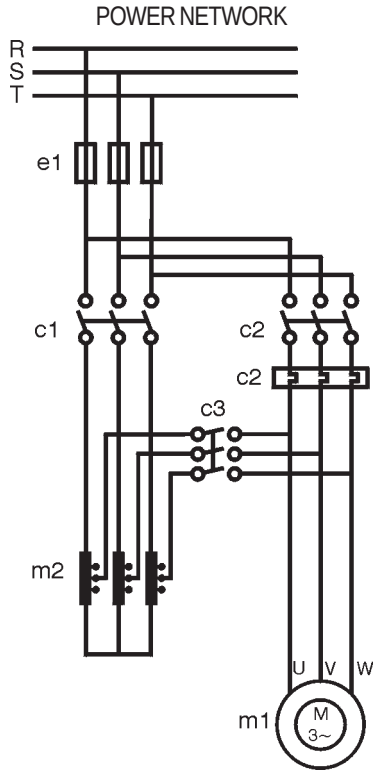

***Table 11** - Bearing specifications by type of motor*

NEMA Frames	Mounting	Bearings	
		Front (D.E.)	Rear (O.D.E.)
Open drip proof motors			
B48 and C48	ALL FORMS	6203 Z	6202 Z
56 and A56		6203 Z	6202 Z
B56 and C56		6203 Z	6202 Z
D56 and F56H/G56H		6204 Z	6202 Z / 6203 Z
Totally enclosed fan cooled motors			
143 T	ALL FORMS	6205 ZZ	6204 ZZ
145 T		6205 ZZ	6204 ZZ
182 T		6307 ZZ	6206 ZZ
184 T		6307 ZZ	6206 ZZ
W 182 T		6206 ZZ	6205 ZZ
W 184 T		6206 ZZ	6205 ZZ
213 T		6308 ZZ	6207 ZZ
215 T		6308 ZZ	6207 ZZ
W 213 T		6308 ZZ	6207 ZZ
W 215 T		6308 ZZ	6207 ZZ
254 T		6309-C3	6209 Z-C3
256 T		6309-C3	6209 Z-C3
W 254 T		6309-C3	6209 Z-C3
W 256 T		6309-C3	6209 Z-C3
284 T and TS		6311-C3	6211 Z-C3
286 T and TS		6311-C3	6211 Z-C3
324 T and TS		6312-C3	6212 Z-C3
326 T and TS		6312-C3	6212 Z-C3
364 T and TS		6314-C3	6314-C3
365 T and TS		6314-C3	6314-C3
404 T		NU 316-C3	6314-C3
404 TS		6314-C3	6314-C3
405 T		NU 316-C3	6314-C3
405 TS		6314-C3	6414-C3
444 T		NU 319-C3	6316-C3
444 TS		6314-C3	6314-C3
445 T		NU 319-C3	6316-C3
445 TS		6314-C3	6314-C3
447 T		NU 319-C3	6316-C3
447 TS		6314-C3	6314-C3
449 T		NU 322-C3	6319-C3
449 TS		6314-C3	6314-C3
504 T		NU 319-C3	6316-C3
504 TS		6314-C3	6314-C3
505 T		NU 319-C3	6316-C3
505 TS		6314-C3	6314-C3
5008 T		NU 322-C3	6319-C3
5008TS		6314-C3	6314-C3
586 T		NU 322-C3	6319-C3
586 TS		6314-C3	6314-C3
587 T		NU 322-C3	6319-C3
587 TS		6314-C3	6314-C3

Saw Arbor motor frame	Mounting	Bearings	
		Front (D.E.)	Rear (O.D.E.)
80 S MS	B3	6307 ZZ	6207 ZZ
80 M MS		6307 ZZ	6207 ZZ
80 L MS		6307 ZZ	6207 ZZ
90 L MS		6308 ZZ	6208 ZZ

ODP Motors Nema-T frames	Mounting	Bearings	
		Front (D.E.)	Rear (O.D.E.)
E143/5T	HORIZONTAL MOUNTING ONLY	6205 ZZ	6204 ZZ
F143/5T		6205 ZZ	6204 ZZ
182 T		6206 ZZ	6205 ZZ
184 T		6202 ZZ	6205 ZZ
213/5T		6208 ZZ	6206 ZZ
254 T		6309 Z-C3	6209 Z-C3
256 T		6309 Z-C3	6209 Z-C3
284 T		6311 Z-C3	6211 Z-C3
284 TS		6311 Z-C3	6211 Z-C3
286 T		6311 Z-C3	6211 Z-C3
286 TS		6311 Z-C3	6211 Z-C3
324 T		6312 Z-C3	6212 Z-C3
324 TS		6312 Z-C3	6212 Z-C3
326 T		6312 Z-C3	6212 Z-C3
326 TS		6312 Z-C3	6212 Z-C3
364 T		6314 C3	6314 C3
364 TS		6314 C3	6314 C3
365 T		6314 C3	6314 C3
365 TS		6314 C3	6314 C3
404 T		NU 316 C3	6314 C3
404 TS		6314 C3	6314 C3
405 T		NU 316 C3	6314 C3
405 TS		6314 C3	6314 C3
444 T		NU 319 C3	6316 C3
444 TS		6314 C3	6314 C3
445 T		NU 319 C3	6316 C3
445 TS		6314 C3	6314 C3

IEC frame	Mounting	Bearings	
		Front (D.E.)	Rear (O.D.E.)
Totally enclosed fan cooled motors			
63	B3	6201 ZZ	6201 ZZ
71		6203 ZZ	6202 ZZ
80		6204 ZZ	6203 ZZ
90 S - L		6205 ZZ	6204 ZZ
100 L		6206 ZZ	6205 ZZ
112 M		6307 ZZ	6206 ZZ
132 S - M		6308 ZZ	6207 ZZ
160 M - L		6309-C3	6209 Z-C3
180 M - L		6311-C3	6211 Z-C3
200 M - L		6312-C3	6212 Z-C3
225 S/M		6314-C3	6314-C3
250 S/M		6314-C3	6314-C3
280 S/M		6314-C3	6314-C3
		6316-C3	6316-C3
315 S/M		6314-C3	6314-C3
		6319-C3	6316-C3
355 M/L		6314-C3	6314-C3
		NU 322-C3	6319-C3

***Table 12** – Bearing lubrication intervals and amount of grease*

BALL BEARINGS - Series 62/63													
Relubrication intervals (running hours – horizontal position)													
	II pole		IV pole		VI pole		VIII pole		X pole		XII pole		Amount of grease
Serie 62													
Bearing	60Hz	50Hz	60Hz	50Hz	60Hz	50Hz	60Hz	50Hz	60Hz	50Hz	60Hz	50Hz	(g)
6209	18400	20000	20000	20000	20000	20000	20000	20000	20000	20000	20000	20000	9
6211	14200	16500	20000	20000	20000	20000	20000	20000	20000	20000	20000	20000	11
6212	12100	14400	20000	20000	20000	20000	20000	20000	20000	20000	20000	20000	13
Serie 63													
Bearing	60Hz	50Hz	60Hz	50Hz	60Hz	50Hz	60Hz	50Hz	60Hz	50Hz	60Hz	50Hz	(g)
6309	15700	18100	20000	20000	20000	20000	20000	20000	20000	20000	20000	20000	13
6311	11500	13700	20000	20000	20000	20000	20000	20000	20000	20000	20000	20000	18
6312	9800	11900	20000	20000	20000	20000	20000	20000	20000	20000	20000	20000	21
6314	3600	4500	9700	11600	14200	16400	17300	19700	19700	20000	20000	20000	27
6316	-	-	8500	10400	12800	14900	15900	18700	18700	20000	20000	20000	34
6319	-	-	7000	9000	11000	13000	14000	17400	17400	18600	18600	20000	45
6322	-	-	5100	7200	9200	10800	11800	15100	15100	15500	15500	19300	60

Table 13 – Bearing lubrication intervals and amount of grease

BALL BEARINGS - Series NU3													
Relubrication intervals (running hours – horizontal position)													
	II pole		IV pole		VI pole		VIII pole		X pole		XII pole		Amount of grease
Bearing	60Hz	50Hz	60Hz	50Hz	60Hz	50Hz	60Hz	50Hz	60Hz	50Hz	60Hz	50Hz	(g)
NU 309	9800	13300	20000	20000	20000	20000	20000	20000	20000	20000	20000	20000	13
NU 311	6400	9200	19100	20000	20000	20000	20000	20000	20000	20000	20000	20000	18
NU 312	5100	7600	17200	20000	20000	20000	20000	20000	20000	20000	20000	20000	21
NU 314	1600	2500	7100	8900	11000	13100	15100	16900	16900	19300	19300	20000	27
NU 316	-	-	6000	7600	9500	11600	13800	15500	15500	17800	17800	20000	34
NU 319	-	-	4700	6000	7600	9800	12200	13700	13700	15700	15700	20000	45
NU 322	-	-	3300	4400	5900	7800	10700	11500	11500	13400	13400	17300	60
NU 324	-	-	2400	3500	5000	6600	10000	10200	10200	12100	12100	15000	72

Notes:
- The ZZ bearings from 6201 to 6307 do not require relubrication as its life time is about 20,000 hours.
- Tables 1 and 2 are intended for the lubrication period under bearing temperature of 70ºC (for bearings up to 6312 and NU 312) and temperature of 85ºC (for bearings 6314 and NU 314 and larger).
- For each 15ºC of temperature rise, the relubrication period is reduced by half.
- The relubrication periods given above are for those cases applying Polyrex® EM grease.
- When motors are used on the vertical position, their relubrication interval is reduced by half if compared to horizontal position motors.

Compatibility of Polyrex® EM grease with other types of grease:

Containing polyurea thickener and mineral oil, the Polyrex® EM grease is compatible with other types of grease that contain:
- Lithium base or complex of lithium or polyurea and highly refined mineral oil.
- Inhibitor additive against corrosion, rust and anti-oxidant additive.

Notes:
- Although Polyrex® EM is compatible with types of grease given above, we do no recommended to mix it with any other greases.
- If you intend to use a type of grease different than those recommended above , first contact WEG.
- On applications (with high or low temperatures, speed variation, etc), the type of grease and relubrification interval are given on an additional nameplate attached to the motor.

4. Maintenance

A well-designed maintenance program for electric motors can be summed up as: periodical inspection of insulation levels, temperature rise, wear, bearing lubrication and the occasional checking of fan air flow.
Inspection cycles depend upon the type of motor and the conditions under which it operates.

4.1 Cleanliness

Motors should be kept clean, free of dust, debris and oil. Soft brushes or clean cotton rags should be used for cleaning. A jet of compressed air should be used to remove non-abrasive dust from the fan cover and any accumulated grime from the fan and cooling fins.
Oil or damp impregnated impurities can be removed with rags soaked in a suitable solvent.
Terminal boxes fitted to motors with IP55 protection should be cleaned; their terminals should be free of oxidation, in perfect mechanical condition, and all unused space dust-free.
Motors with IPW 55 protection are recommended for use under unfavourable ambient conditions.

4.2 Lubrication

Proper lubrication extends bearing life.

Lubrication Maintenance Includes:

a) Attention to the overall state of the bearings;
b) Cleaning and lubrication;
c) Critical inspection of the bearings.

Motor noise should be measured at regular intervals of one to four months. A well-tuned ear is perfectly capable of distinguishing unusual noises, even with rudimentary tools such as a screw driver, etc., without recourse to sophisticated listening aids or stethescopes that are available on the market.
A uniform hum is a sign that a bearing is running perfectly. Bearing temperature control is also part of routine maintenance.
Constant temperature control is possible with the aid of external thermometers or by embedded thermal elements. WEG motors are normally equipped with grease lubricated ball or roller bearings.
Bearings should be lubricated to avoid metallic contact of the moving parts, and also for protection against corrosion and wear. Lubricant properties deteriorate in the course of time and mechanical operation: furthermore, all lubricants are subject to contamination under working conditions.
For this reason lubricants must be renewed and any lubricant consumed needs replacing from time to time.

4.2.1 Periodical Lubrication

WEG motors are supplied with sufficient grease for a long running period. Lubrication intervals, the amount of grease and the type of bearing used in frames 140T to 580T are to be found in Tables 11, 12 and 13.
Lubrication intervals depend upon the size of the motor, speed, working conditions and the type of grease used.

4.2.2 Quality and Quantity of Grease

Correct lubrication is important!
Grease must be applied correctly and in sufficient quantity as both insufficient or excessive greasing are harmful.
Excessive greasing causes overheating brought about by the greater resistance encountered by the rotating parts and, in particular, by the compacting of the lubricant and its eventual loss of lubricating qualities.
This can cause seepage with the grease penetrating the motor and dripping on the coils.

GREASES FOR MOTOR BEARINGS

For operating temperatures from -30 to 170°C	
Type	**Supplier**
Polyrex® EM	Esso

4.2.3 Lubricating Instructions

a) Frame 140T to 210T motors
Frame 140T to 210T size motors are not fitted with grease nipples. Lubrication is carried out during periodical overhauls when the motor is taken apart.

Cleaning and Lubrication of Bearings

With the motor dismantled and without extracting the bearings from the shaft, all existing grease should be removed and the bearings cleaned with Diesel oil, kerosene or other solvent, until thoroughly clean.
Refill the spaces between the balls or rollers and the bearing cages with grease immediately after washing. Never rotate bearings in their dry state after washing.
For inspection purposes apply a few drops of machine oil. During these operations maximum care and cleanliness is recommended to avoid the penetration of any impurities or dust that could harm the bearings. Clean all external parts prior to reassembly.

b) Frame 360T to 580T Motors
Motors above 360T frame size are fitted with regreasable bearing system.
The lubrication system from this frame size upwards was designed to allow the removal of all grease from the bearing races through a bleeder outlet which at the same time impedes the entry of dust or other contaminants harmful to the bearing.
This outlet also prevents injury to the bearings from the well-known problem of over-greasing.

It is advisable to lubricate while the motor is running, to allow the renewal of grease in the bearing case.
Should this procedure not be possible because of rotating parts in the proximity of the nipple (pulleys, coupling sleeves, etc.) that are hazardous to the operator the following procedure should be followed:
- Inject about half the estimated amount of grease and run the motor at full speed for approximately a minute; switch off the motor and inject the remaining grease.
The injection of all the grease with the motor at rest could cause penetration of a portion of the lubricant through the internal seal of the bearing case and hence into the motor.

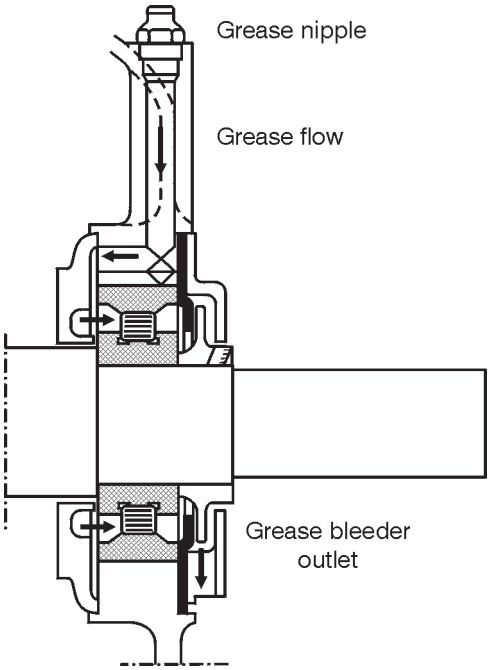

Figure 4.1 - Bearings and lubrication system

Nipples must be clean prior to introduction of grease to avoid entry of any alien bodies into the bearing.
For lubricating use only a manual grease gun.

Bearing Lubrication Steps

1. Cleanse the area around the grease nipples with clean cotton fabric.
2. With the motor running, add grease with a manual grease gun until the lubricant commences to be expelled from the bleeder outlet, or until the quantity of grease recommended in Tables 12 or 13 has been applied.
3. Allow the motor to run long enough to eject all excess grease.

4.2.4 Replacement of Bearings

The opening of a motor to replace a bearing should only be carried out by qualified personnel.
Damage to the core after the removal of the bearing cover can be avoided by filling the gap between the rotor and the stator with stiff paper of a proper thickness.

Providing suitable tooling is employed, disassembly of a bearing is not difficult.
The extractor grips should be applied to the sidewall of the inner ring to be stripped, or to an adjacent part.
To ensure perfect functioning and to prevent injury to the bearing parts, it is essential that the assembly be undertaken under conditions of complete cleanliness and by competent personnel.
New bearings should not be removed from their packages until the moment of assembly.
Prior to fitting a new bearing, ascertain that the shaft has no rough edges or signs of hammering.

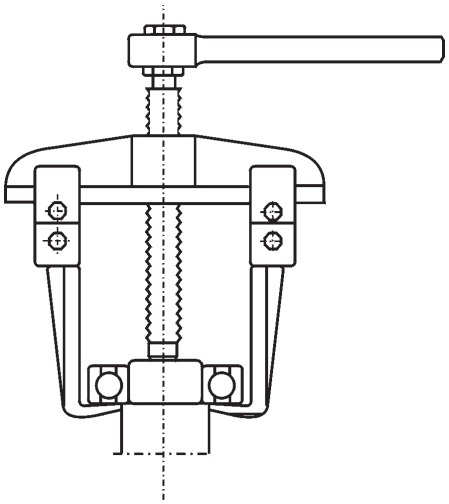

Figure 4.2 - A bearing extractor

During assembly bearings cannot be subjected to direct blows.
The aid used to press or strike the bearing should be applied to the inner ring.

4.3 Air Gap Checking (Large Rating Open Motors)

Upon the completion of any work on the bearings check the gap measurement between the stator and the rotor using the appropriate gazes.
The gap variation at any two vertically opposite points must be less than 10% of the average gap measurement.

4.4 Explosion Proof Motor Repair Steps

4.4.1 Objective

In view of the heavy liability associated with burning of motors of this type, this product has been designed and manufactured to high technical standards, under rigid controls. In addition, in many areas it is required that explosion proof motors ONLY be repaired by licensed personnel or in licensed facilities authorized to do this type of work.
The following general procedures, safeguards, and guidelines must be followed in order to ensure repaired explosion proof motors operate as intended.

4.4.2 Repair Procedure and Precautions

Dismantle the damaged motor with appropriate tools without hammering and/or pitting machined surfaces such as enclosure joints, fastening

holes, and all joints in general.
The position of the fan cover should be suitably marked prior to removal so as to facilitate reassembly later on.
Examine the motor's general condition and, if necessary, disassemble all parts and clean them with kerosene. Under no circumstances should scrapers, emery papers or tools be used that could affect the dimensions of any part during cleaning.
Protect all machined parts against oxidation by applying a coating of vaseline or oil immediately after cleaning.

STRIPPING OF WINDINGS
This step requires great care to avoid knocking and/or denting of enclosure joints and, when removing the sealing compound from the terminal box, damage or cracking of the frame.

IMPREGNATION
Protect all frame threads by inserting corresponding bolts, and the joint between terminal box and frame, by coating it with a non-adhesive varnish (ISO 287 - ISOLASIL).
Protective varnish on machined parts should be removed soon after treating with impregnating varnish. This operation should be carried out manually without using tools.

ASSEMBLY
Inspect all parts for defects, such as cracks, joint incrustations, damaged threads and other potential problems.
Assemble using a rubber headed mallet and a bronze bushing after ascertaining that all parts are perfectly fitted.
Bolts should be positioned with corresponding spring washers and evenly tightened.

TESTING
Rotate the shaft by hand while examining for any drag problems on covers or fastening rings.
Carry out running tests as for standard motors.

MOUNTING THE TERMINAL BOX
Prior to fitting the terminal box all cable outlets on the frame should be sealed with a sealing compound (Ist layer) and an Epoxy resin (ISO 340) mixed with ground quartz (2nd layer) in the following proportions:

340A resin	50 parts
340B resin	50 parts
Ground quartz	100 parts

Drying time for this mixture is two hours during which the frame should not be handled and cable outlets should be upwards.
When dry, see that the outlets and areas around the cables are perfectly sealed.
Mount the terminal box and paint the motor.

4.4.3 Miscellaneous Recommendations

- Any damaged parts (cracks, pittings in machined surfaces, defective threads) must be replaced and under no circumstances should attempts be made to recover them.
- Upon reassembling explosion proof motors IPW55 the substitution of all seals is mandatory.
- Should any doubts arise, consult WEG.

5. Malfunctioning

Most malfunctions affecting the normal running of electric motors can be prevented by maintenance and the appropriate precautions.
While ventilation, cleanliness and careful maintenance are the main factors ensuring long motor life, a further essential factor is the prompt attention to any malfunctioning as signalled by vibrations, shaft knock, declining insulation resistance, smoke or fire, sparking or unusual slip ring or brush wear, sudden changes of bearing temperatures.
When failures of an electric or mechanical nature arise, the first step to be taken is to stop the motor and subsequent examination of all mechanical and electrical parts of the installation.
In the event of fire, the installation should be isolated from the mains supply, which is normally done by turning off the respective switches.
In the event of fire within the motor itself, steps should be taken to restrain and suffocate it by covering the ventilation vents.
To extinguish a fire, dry chemical or $C0_2$ extinguishers should be used - never water.

5.1 Standard Three-Phase Motor Failures

Owing to the widespread usage of asynchronous three-phase motors in industry which are more often repaired in the plant workshops, there follows a summary of possible failures and their probable causes, detection and repairs.
Motors are generally designed to Class B or F insulation and for ambient temperatures up to 40°C.
Most winding defects arise when temperature limits, due to current overload, are surpassed throughout the winding or even in only portions thereof. These defects are identified by the darkening or carbonizing of wire insulation.

5.1.1 Short Circuits Between Turns

A short circuit between turns can be a consequent of two coinciding insulation defects, or the result of defects arising simultaneously on two adjacent wires. As wires are randomly tested, even the best quality wires can have weak spots. Weak spots can, on occasion, tolerate a voltage surge of 30% at the time of testing for shorting between turns, and later fail due to humidity, dust or vibration.
Depending on the intensity of the short, a magnetic hum becomes audible.
In some cases, the three-phase current imbalance can be so insignificant that the motor protective device fails to react. A short circuit between turns, and phases to ground due to insulation failure is rare, and even so, it nearly always occurs during the early stages of operation.

5.1.2 Winding Failures

a) One burnt winding phase

This failure arises when a motor runs wired in delta and current fails in one main conductor.
Current rises from 2 to 2.5 times in the remaining winding with a simultaneous marked fall in speed. If the motor stops, the current will increase from 3.5 to 4 times its rated value.
In most instances, this defect is due to the absence of a protective switch, or else the switch has been set too high.

b) Two burnt winding phases

This failure arises when current fails in one main conductor and the motor winding is star-connected. One of the winding phases remains currentless while the others absorb the full voltage and carry an excessive current.
The slip almost doubles.

c) Three burnt winding phases

Probable cause 1
Motor only protected by fuses; an overload on the motor will be the cause of the trouble.
Consequently, progressive carbonizing of the wires and insulation culminate in a short circuit between turns, or a short against the frame occurs.
A protective switch placed before the motor would easily solve this problem.

Probable cause 2
Motor incorrectly connected. For example: A motor with windings designed for 230/400V is connected through a star-delta switch to 400V connection.
The absorted current will be so high that the winding will burn out in a few seconds if the fuses or a wrongly set protective switch fail to react promptly.

Probable cause 3
The star-delta switch is not commutated and the motor continues to run for a time connected to the star under overload conditions.
As it only develops 1/3 of its torque, the motor cannot reach rated speed. The increased slip results in higher ohmic losses arising from the Joule effect. As the stator current, consistent with the load, may not exceed the rated value for the delta connection, the protective switch will not react.
Consequent to increased winding and rotor losses the motor will overheat and the winding burn out.

Probable cause 4
Failures from this cause arise from thermal overload, due to too many starts under intermittent operation or to an overly long starting cycle.
The perfect functioning of motor operating under these conditions is only assured when the following values are heeded:
a) number of starts per hour;
b) starting with or without load;
c) mechanical brake or current inversion;
d) acceleration of rotating masses connected to motor shaft;
e) load torque vs. speed during acceleration and braking.

The continuous effort exerted by the rotor during intermittent starting brings about heavier losses which provoke overheating.
Under certain circumstances with the motor idle there is a possibility that the stator winding is subjected to damage as a result of the

heating of the motor. In such a case, a slip ring motor is recommended as a large portion of the heat (due to rotor losses) is dissipated in the rheostat.

5.1.3 Rotor Failures

If a motor running under load conditions produces a noise of varying intensity and decreasing frequency while the load is increased, the reason, in most cases, will be an unsymmetrical rotor winding.
In squirrel-cage motors the cause will nearly always be a break in one or more of the rotor bars; simultaneously, periodical stator current fluctuations may be recorded. As a rule, this defect appears only in molded or die cast aluminum cages.
Failures due to spot heating in one or another of the bars in the rotor stack are identified by the blue coloration at the affected points.
Should there be failures in various contiguous bars, vibrations and shuddering can occur as if due to an unbalance, and are often interpreted as such. When the rotor stack acquires a blue or violet coloration, it is a sign of overloading.
This can be caused by overly high slip, by too many starts or overlong starting cycles. This failure can also arise from insufficient main voltage.

5.1.4 Bearing Failures

Bearing damage is a result of overloading brought about by an overly taut belt or axial impacts and stresses.
Underestimating the distance between the drive pulley and the driven pulley is a common occurrence.
The arc of contact of the belt on the drive pulley thus becomes inadmissibly small and thereby belt tension is insufficient for torque transmission.
In spite of this it is quite usual to increase belt tension in order to attain sufficient drive.
Admittably, this is feasible with the latest belt types reinforced by synthetic materials.
However, this practice fails to consider the load on the bearing and the result is bearing failure within a short time.
Additionally there is the possibility of the shaft being subjected to unacceptably high loads when the motor is fitted with a pulley that is too wide.

5.1.5 Shaft Fractures

Although bearings traditionally constitute the weaker part, and the shafts are designed with wide safety margins, it is not beyond the realm of possibility that a shaft may fracture by fatigue from bending stress brought about by excessive belt tension.
In most cases, fractures occur right behind the drive end bearing.
As a consequence of alternating bending stress induced by a rotating shaft, fractures travel inwards from the outside of the shaft until the point of rupture is reached when resistance of the remaining shaft cross-section no longer suffices.
Avoid additional drilling the shaft (fastening screw holes) as such operations tend to cause stress concentration.

5.1.6 Unbalanced V-Belt Drives

The substitution of only one of a number of other parallel belts on a drive is frequently the cause of shaft fractures, as well as being malpractice.
Any used, and consequently stretched belts retained on the drive, especially those closest to the motor, while new and unstretched belts are placed on the same drive turning farther from the bearing, can augment shaft stress.

5.1.7 Damage Arising from Poorly Fitted Transmission Parts or Improper Motor Alignment

Damage to bearing and fracture in shafts often ensue from inadequate fitting of pulleys, couplings or pinions. There parts “knock” when rotating. The defect is recognized by the scratches that appear on the shaft or the eventual scalelike flaking of the shaft end.
Keyways with edges pitted by loosely fitted keys can also bring about shaft failures.
Poorly aligned couplings cause knocks and radial and axial shaking to shaft and bearings.
Within a short while these malpractices cause the deterioration of the bearings and the enlargement of the bearing cover bracket located on the drive end side.
Shaft fracture can occur in more serious cases.

5.2 Troubleshooting chart

FAILURE	PROBABLE CAUSE	CORRECTIVE MEASURES
Motor fails to start	• No voltage supply • Low voltage supply • Wrong control connections • Loose connection at some terminal lug • Overload	• Check feed connections to control system and from this to motor. • Check voltage supply and ascertain that voltage remains within 10% of the rated voltage shown on the motor nameplate. • Compare connections with the wiring diagram on the motor nameplate. • Tighten all connections. • Try to start motor under no-load conditions. If it starts, there may be an overload condition or a blocking of the starting mechanism. Reduce load to rated load level and increase torque.
High noise level	• Unbalance • Distorted shaft • Incorrect alignment • Uneven air gap • Dirt in the air gap • Extraneous matter stuck between fan and motor casing • Loose motor foundation • Worn bearings	• Vibrations can be eliminated by balancing rotor. If load is coupled directly to motor shaft, the load can be unbalanced. • Shaft key bent; check rotor balance and eccentricity. • Check motor aligment with machine running. • Check shaft for warping or bearing wear. • Dismantle motor and remove dirt or dust with jet of dry air. • Dismantle motor and clean. Remove trash or debris from motor vicinity. • Tighten all foundation studs. If necessary, realign motor. • Check lubrication. Replace bearing if noise is excessive and continuous.
Overheating of bearings	• Excessive grease • Excessive axial or radial strain on belt • Deformed shaft • Rough bearing surface • Loose or poorly fitted motor end shields • Lack of grease • Hardened grease cause locking of balls • Foreign material in grease	• Remove grease bleeder plug and run motor until excess grease is expelled. • Reduce belt tension. • Have shaft straightened and check rotor balance. • Replace bearings before they damage shaft. • Check end shields for close fit and tightness around circumference. • Add grease to bearing. • Replace bearings. • Flush out housings and relubricate.
Intense bearing vibration	• Unbalanced rotor • Dirty or worn bearing • Bearing rings too tight on shaft and/or bearing housing • Extraneous solid particles in bearing	• Balance rotor statically and dynamically. • If bearing rings are in perfect condition, clean and relubricate the bearing, otherwise, replace bearing. • Before altering shaft or housing dimensions, it is advisable to ascertain that bearing dimensions correspond to manufacturer's specifications. • Take bearing apart and clean. Reassemble only if rotating and support surfaces are unharmed.
Overheating of motor	• Obstructed cooling system • Overload • Incorrect voltages and frequecies • Frequent inversions • Rotor dragging on stator • Unbalanced electrical load (burnt fuse, incorrect control)	• Clean and dry motor; inspect air vents and windings periodically. • Check application, measuring voltage and current under normal running conditions. • Compare values on motor nameplate with those of mains supply. Also check voltage at motor terminals under full load. • Exchange motor for another that meets needs. • Check bearing wear and shaft curvature. • Check for unbalanced voltages or operation under single-phase condition.

6. Spare Parts and Component Terminology

THREE-PHASE MOTORS IP55 NEMA
Frames 140T - W180T - 180T - 210T and W210T

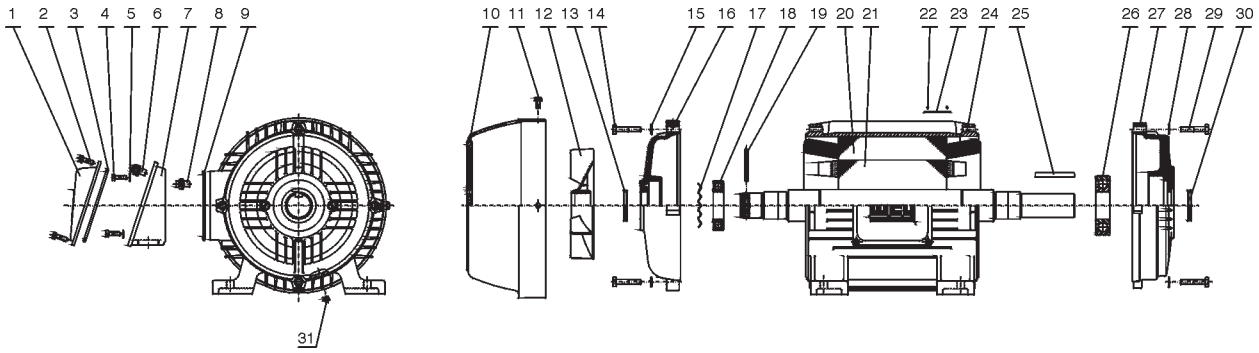

Part Nr.	Description
1	Terminal box cover
2	Terminal box cover fixing bolt
3	Terminal box cover gasket
4	Terminal box fixing bolt
5	Terminal box fixing washer
6	Terminal box grounding lug
7	Terminal box
8	Frame grounding lug
9	Terminal box o'ring gasket
10	Fan cover
11	Fan cover fixing bolt
12	Fan
13	V'Ring
14	Non-drive end endshield fixing bolt
15	Non-drive end endshield washer
16	Non-drive endshield
17	Spring washer
18	Non-drive bearing
19	Fan fixing pin
20	Wound stator
21	Rotor / shaft assembly
22	Nameplate fixing rivet
23	Nameplate
24	Frame
25	Shaft key
26	Drive end bearing
27	Drive endshield
28	Drive endshield washer
29	Drive end endshield fixing bolt
33	V'Ring
31	Drain plug

THREE-PHASE MOTORS IP55 NEMA
Frames 250T - W250T - 280T and 320T

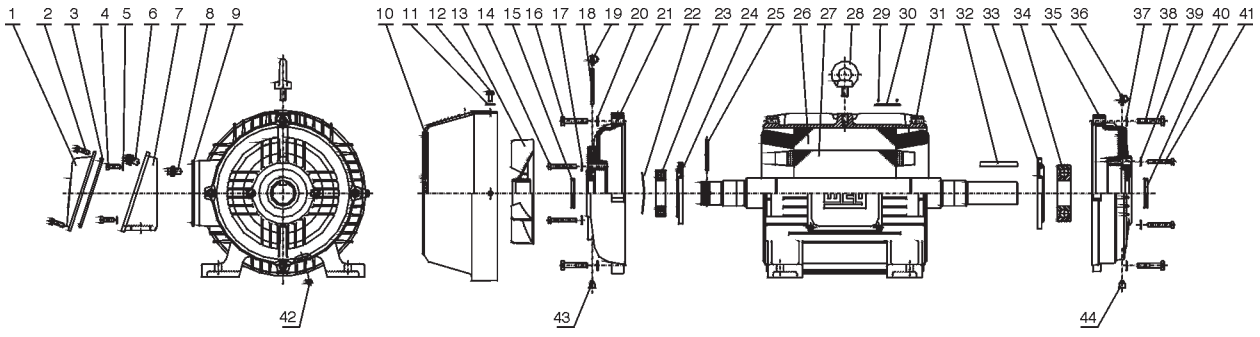

Part Nr.	Description
1	Terminal box cover
2	Terminal box cover fixing bolt
3	Terminal box cover gasket
4	Terminal box fixing bolt
5	Terminal box fixing washer
6	Terminal box grounding lug
7	Terminal box
8	Frame grounding lug
9	Terminal box o'ring gasket
10	Fan cover
11	Fan cover washer
12	Fan cover fixing bolt
13	Fan
14	Non-drive end bearing cap bolt
15	V'Ring
16	Non-drive end endshield fixing bolt
17	Non-drive end bearing cap washer
18	Non-drive end grease nipple
19	Non-drive end grease nipple cover
20	Non-drive end endshield washer
21	Non-drive endshield
22	Spring washer
23	Non-drive end bearing
24	Non-drive end bearing cap
25	Fan fixing pin
26	Wound stator
27	Rotor and shaft
28	Eyebolt
29	Nameplate fixing rivet
30	Nameplate
31	Frame
32	Shaft key
33	Drive end bearing cap
34	Drive end bearing
35	Drive andshield
36	Drive end grease nipple cover
37	Drive endshield washer
38	Drive end endshield fixing bolt
39	Drive end bearing cap washer
40	V'Ring
41	Drive end bearing cap fixing bolt
42	Drain plug
43	Non-drive and grease relief
44	Drive end grease relief

THREE-PHASE MOTORS IP55 NEMA T
Frames 360T - 400T - 440T - 500T and 580T

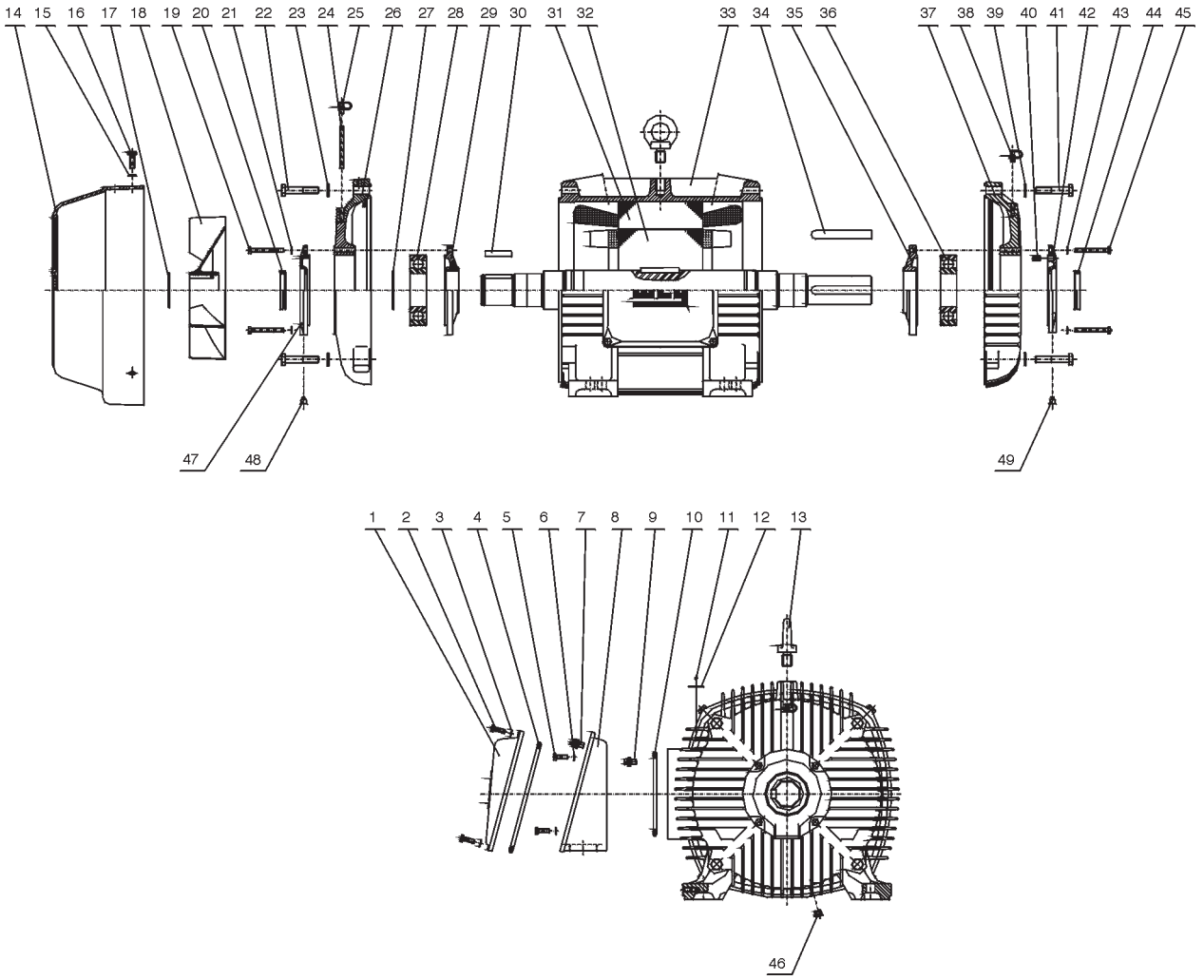

Part Nr.	Description
1	Terminal box cover
2	Terminal box cover fixing bolt
3	Terminal box cover washer
4	Terminal box cover gasket
5	Terminal box fixing bolt
6	Terminal box fixing washer
7	Terminal box grounding lug
8	Terminal box
9	Frame grounding lug
10	Terminal box o'ring gasket
11	Nameplate fixing rivet
12	Nameplate
13	Eyebolt
14	Fan cover
15	Fan cover washer
16	Fan cover fixing bolt
17	Fan fixing ring

Part Nr.	Description
18	Fan
19	Non-drive end bearing cap bolt
20	V'Ring
21	Non-drive end bearing cap washer
22	Non-drive end endshield fixing bolt
23	Non-drive end endshield washer
24	Non-drive end grease nipple
25	Non-drive end grease nipple cover
26	Non-drive enshield
27	Bearing cap
28	Non-drive bearing
29	Internal non-drive end bearing cap
30	Fan fixing key
31	Wound stator
32	Rotor / shaft assembly
33	Frame

Part Nr.	Description
34	Shaft key
35	Internal drive end bearing cap
36	Drive end bearing
37	Drive endshield
38	Drive end grease nipple cover
39	Drive endshield washer
40	Pre-load spring
41	Drive end endshield fixing bolt
42	External drive end bearing cap
43	Drive end bearing cap washer
44	V'Ring
45	Drive end bearing cap fixing bolt
46	Drain plug
47	External non-drive end bearing cap
48	Non drive end grease relief
49	Non-drive end grease relief

THREE-PHASE MOTORS NEMA 56
Frames A56 - B56 - D56 - F56H and G56H

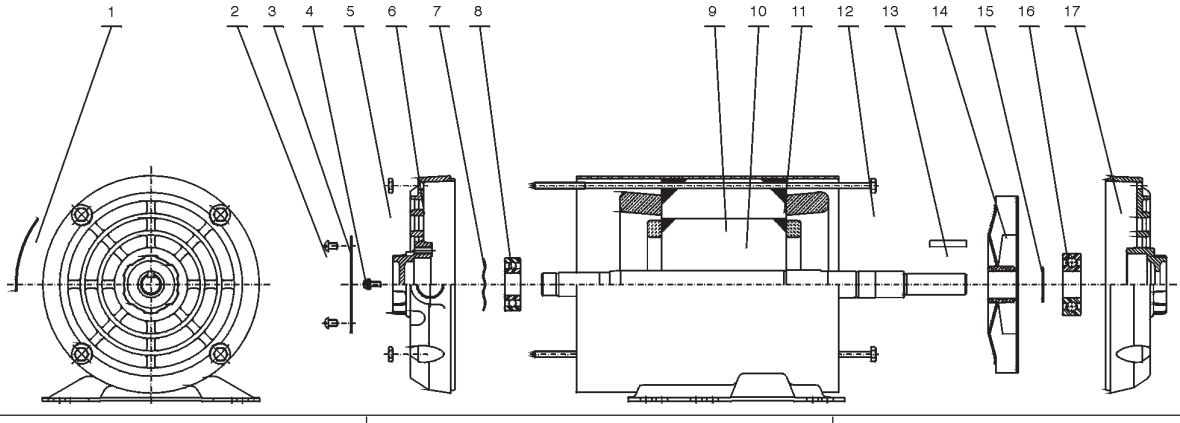

Part Nr.	Description
1	Sticker
2	Terminal box cover fixing bolt
3	Terminal box cover
4	Grounding lug
5	Through bolt fastening nut
6	Non-drive endshield
7	Spring washer
8	Non-drive end bearing
9	Wound stator
10	Rotor / shaft assembly
11	Frame
12	Through bolt
13	Shaft key
14	Fan
15	Drive end bearing fastening washer
16	Drive end bearing
17	Drive endshield

SINGLE-PHASE MOTORS NEMA 56
Frames B48 - C48 - C56 - A56 - B56 - D56 - F56H - G56H

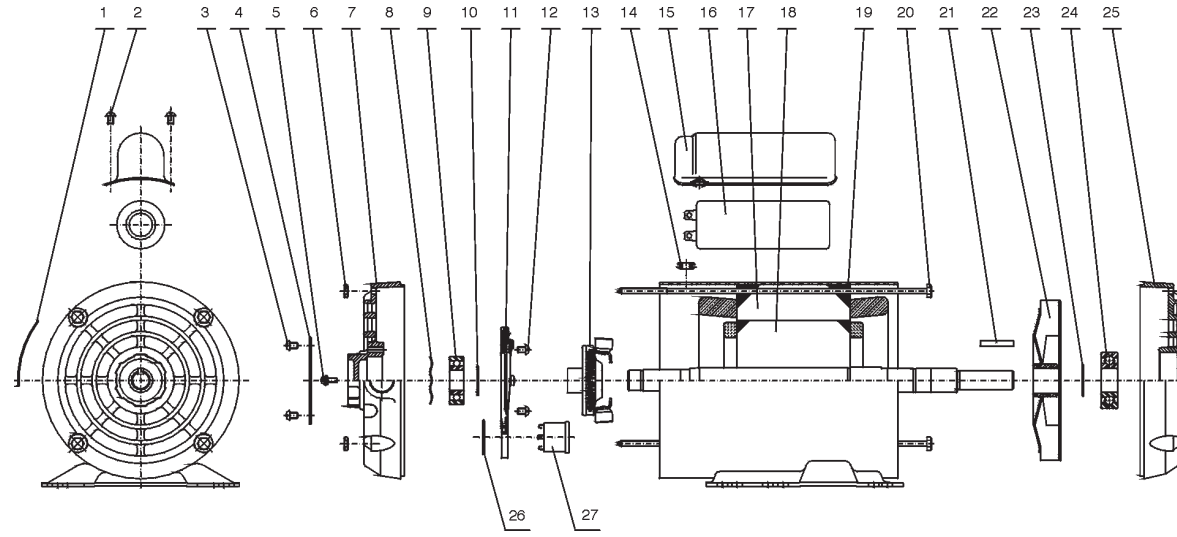

Part Nr.	Description
1	Sticker
2	Capacitor cover fixing bolt
3	Terminal box cover fixing bolt
4	Terminal box cover
5	Grounding lug
6	Through bolt fastening nut
7	Non-drive endshield
8	Spring washer
9	Non-drive and bearing
10	Non-drive and bearing fastening washer
11	Stationary switch
12	Stationary switch fastening bolt
13	Centrifugal switch
14	Rubber ring for lead passing hole to capacitor
15	Capacitor cover
16	Capacitor
17	Wound stator
18	Rotor / shaft assembly
19	Frame
20	Through bolt
21	Shaft key
22	Fan
23	Drive end bearing fastening washer
24	Drive end bearing
25	Drive endshield
26	Overload thermal protector fixing ring
27	Overload thermal protector

Note: *For F56H and G56H frame motors: 1) Part nr. 2 = 3 pieces; 2) Part nr. 15 and 16 = 2 pieces*

N O T E S :

This page is intentionally left blank

INFORMATION CONTAINED WITHIN THIS DOCUMENT IS A TRADE SECRET & ANY USE OF THE INFORMATION, EXCEPT BY ITS INTENDED RECEIVER, IS STRICTLY PROHIBITED. ANY MISAPPROPRIATION OF THE INFORMATION SHALL MAKE THE UNINTENDED RECEIVER LIABLE FOR ANY AND ALL DAMAGES SUFFERED AS A RESULT BY THE MCLANAHAN CORPORATION.

McLanahan

DESCRIPTION:	DESIGNED BY:	ORIGIN:	DWG SIZE:
GENERAL ARRANGEMENT 3" X 3" PUMP ASSEMBLY TYPICAL FOR ALL GLANDS & LININGS TABLE MOUNTED MOTORS (5-30 HP)	BFERRELL	TN	B
	DRAWN BY: BFERRELL	DATE: 12/2/2013	SCALE: AS NOTED
	CHECKED BY: BFERRELL	DATE: 12/2/2013	SHEET#: 1 /1
REFERENCE DWG: N/A			
PART NUMBER: 3X3GA / WEIGHT: AS NOTED	DRAWING NUMBER: 3X3GA		REV: 00

NOTE: CRANE & CRAWL ASSEMBLY NOT SHOWN HEREIN

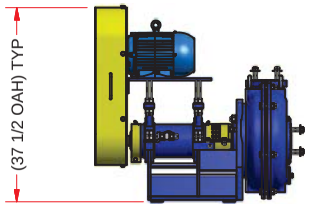

7.5 - 10 HP MOTORS
ESTIMATED WEIGHTS:
7.5 HP MOTOR = 899.0 LBS
10 HP MOTOR = 917.0 LBS
SCALE 1:24

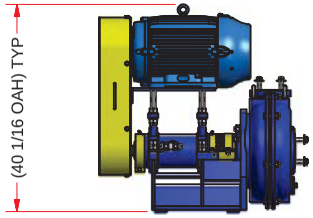

15 - 30 HP MOTORS
ESTIMATED WEIGHTS:
15 HP MOTOR = 996.0 LBS
20 HP MOTOR = 1,036.0 LBS
25 HP MOTOR = 1,133.0 LBS
30 HP MOTOR = 1,182.0 LBS
SCALE 1:24

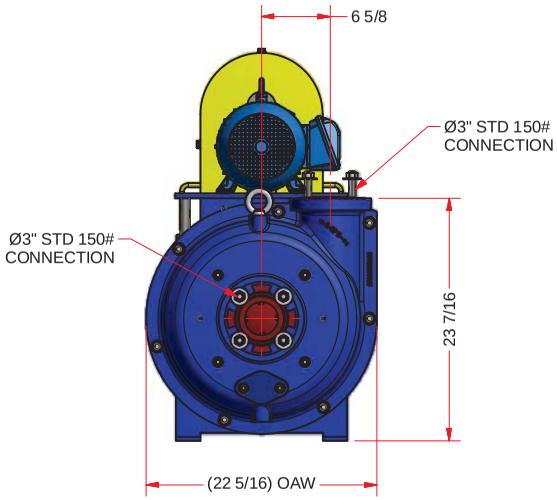

FRONT
ESTIMATED WEIGHT: 840.0 LBS
SCALE 1:12

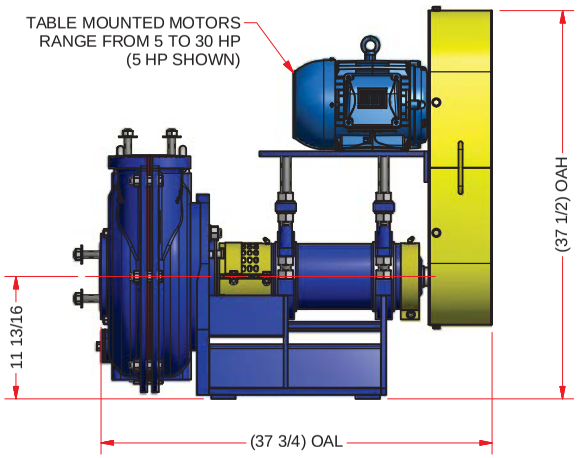

SIDE

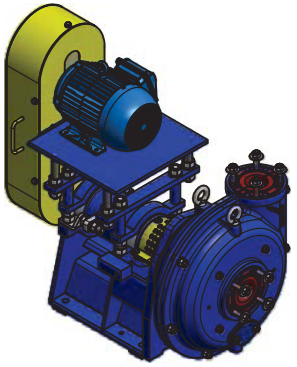

ISOMETRIC
NTS

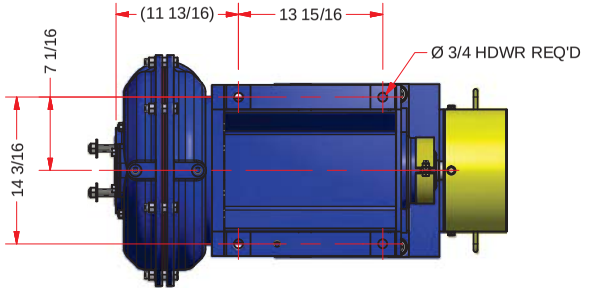

BOTTOM
FOOT PRINT

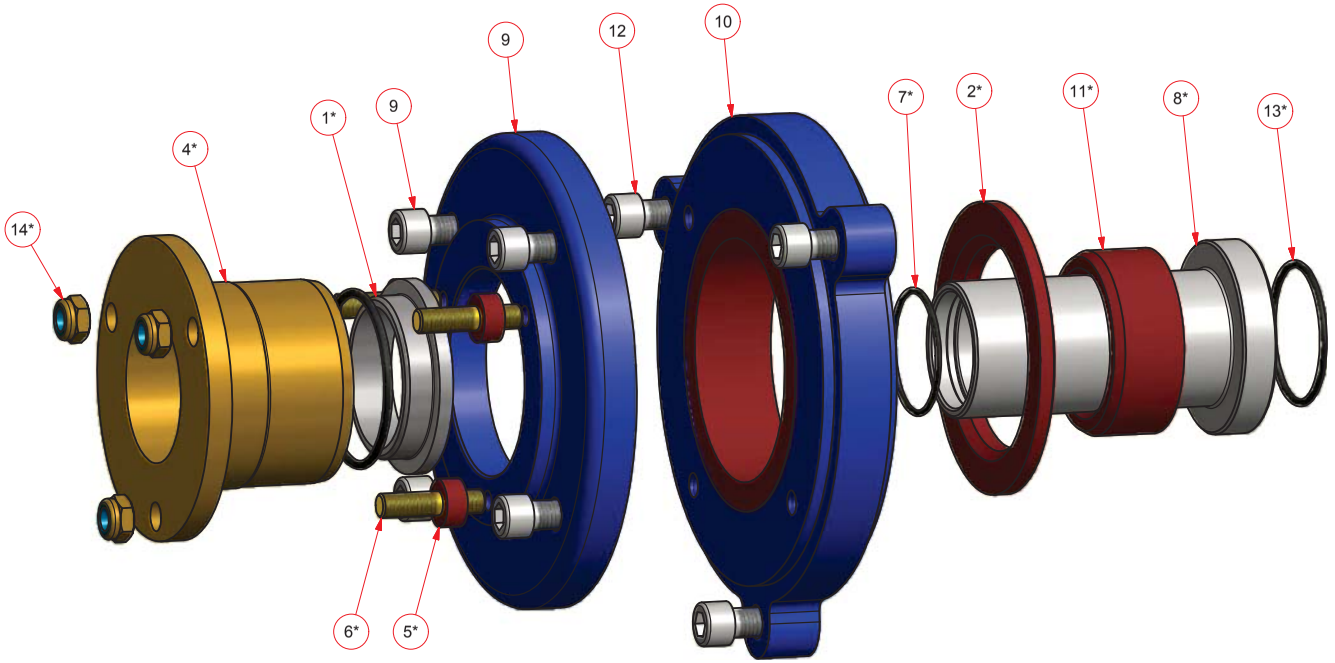

EXPLODED ASSEMBLY
SCALE 1:2

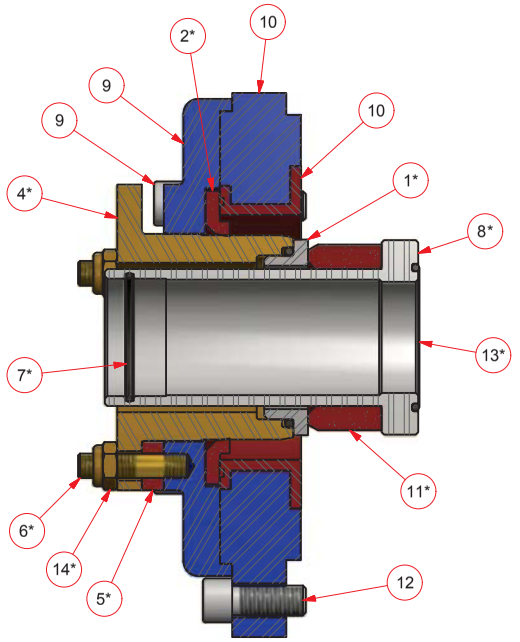

SECTION A-A
SCALE 1:2

NOTE: REPAIR KIT 09110203321 ITEMS MARKED WITH AN ASTERISK *.

MATERIAL LIST						MATERIAL LIST					
ITEM	QTY	PART NUMBER	DESCRIPTION	LBS	TOTAL LBS	ITEM	QTY	PART NUMBER	DESCRIPTION	LBS	TOTAL LBS
1*	1	09110002311	CERAMIC WEAR FACE KIT	0.2	0.2	8*	1	09110003308	SLEEVE, GLAND, DRY GLAND	2.2	2.2
			C/W CERAMIC FACE, O-RING & EPOXY			9	1	09110003314	SCREW SET, COVER	0.4	0.4
2*	1	09110002335	SEAL, DRY GLAND, NITRILE	0.1	0.1	10	1	09110003331	GLAND HOUSING, NITRILE	11.9	11.9
9	1	09110003302	GLAND COVER, DRY GLAND	6.0	6	11*	1	09110003339	SEAL, FACE, DRY GLAND, NITRILE	0.1	0.1
4*	1	09110003303	SLEEVE, AD□USTING, DRY GLAND	4.1	4.1	12	1	09110003421	SCREW SET, HOUSING	0.3	0.3
5*	3	09110003304	WASHER, DRY GLAND	0.0	0	13*	1	09110004307	O- RING, 54 □□ I.D. x 3 □□	0.0	0
6*	1	09110003306	STUD SET, AD□USTING	0.2	0.2	14*	3	296220100	NUT, M10, HEX, BRASS, NYLON	0.0	0.1
7*	1	09110003307	O-RING, 48 □□ I.D. X 2.4 □□	0.0	0						

INFORMATION CONTAINED WITHIN THIS DOCUMENT IS A TRADE SECRET & ANY USE OF THE INFORMATION, EXCEPT BY ITS INTENDED RECEIVER, IS STRICTLY PROHIBITED. ANY MISAPPROPRIATION OF THE INFORMATION SHALL MAKE THE UNINTENDED RECEIVER LIABLE FOR ANY AND ALL DAMAGES SUFFERED AS A RESULT BY THE MCLANAHAN CORPORATION.

McLanahan

DESCRIPTION:	DESIGNED BY:	ORIGIN:	DWG SIZE:
ASSEMBLY DRAWING DRY GLAND NITRILE RUBBER 3X3 PUMP	T SCHROEDER	TN	B
REFERENCE DWG: N/A	DRAWN BY: T SCHROEDER	DATE: 9/6/2013	SCALE: AS NOTED
	CHECKED BY: T SCHROEDER	DATE: 9/6/2013	SHEET#: 1 /1
PART NUMBER: 09110203325 / WEIGHT: 25.55 LBS	DRAWING NUMBER: 09110203325		REV: 0

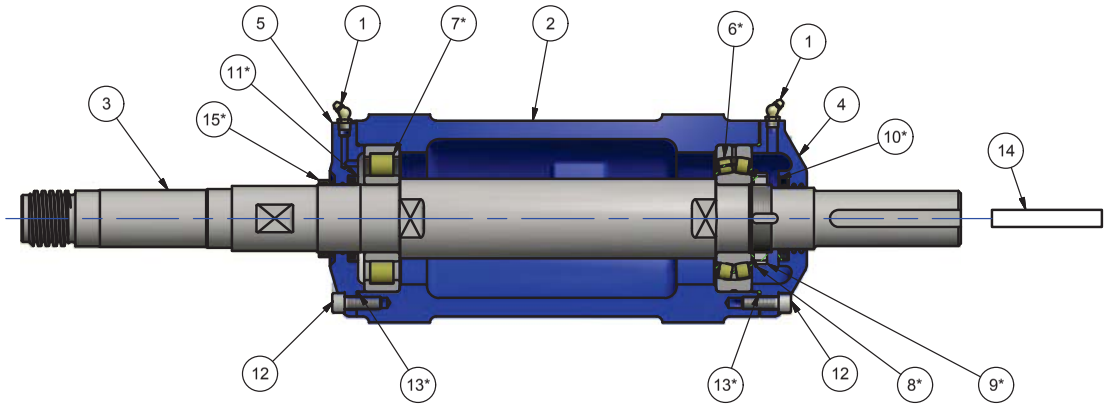

SECTION THROUGH BEARING ASSEMBLY

MATERIAL LIST					
ITE	QTY	PART NUMBER	DESCRIPTION	LBS.	TOTAL LBS.
1	2	09110002212	NIPPLE, GREASE	0.0	0.0
2	1	09110003201	BEARING HOUSING	45.8	45.8
3	1	09110003202	SHAFT	31.0	31.0
4	1	09110003203	COVER, END	5.2	5.2
5	1	09110003204	COVER, FRONT	4.4	4.4
6*	1	09110003205	BEARING, END	0.5	0.5
7*	1	09110003206	BEARING, FRONT	0.4	0.4
8*	1	09110003207	WASHER, TAB	0.1	0.1
9*	1	09110003208	NUT, LOCK	0.4	0.4
10*	1	09110003209	SEAL, END, GREASE	0.0	0.0
11*	1	09110003210	SEAL, FRONT, GREASE	0.0	0.0
12	12	09110003211	SOCKET HEAD CAP SCREW - M10x1.5x30	0.1	0.8
13*	2	09110003213	O-RING, 2MM DIA X 119MM ID, SEAL, BEARING HOUSING	0.0	0.0
14	1	09110003215	KEY, SHAFT, 89.83 MM X 9.10 MMX 13.95 MM	0.2	0.2
15*	1	09110003217	SEAL, VEE	0.0	0.0

NOTE: REPAIR KIT 09110003225 INCLUDES ITEMS MARKED WITH "*"

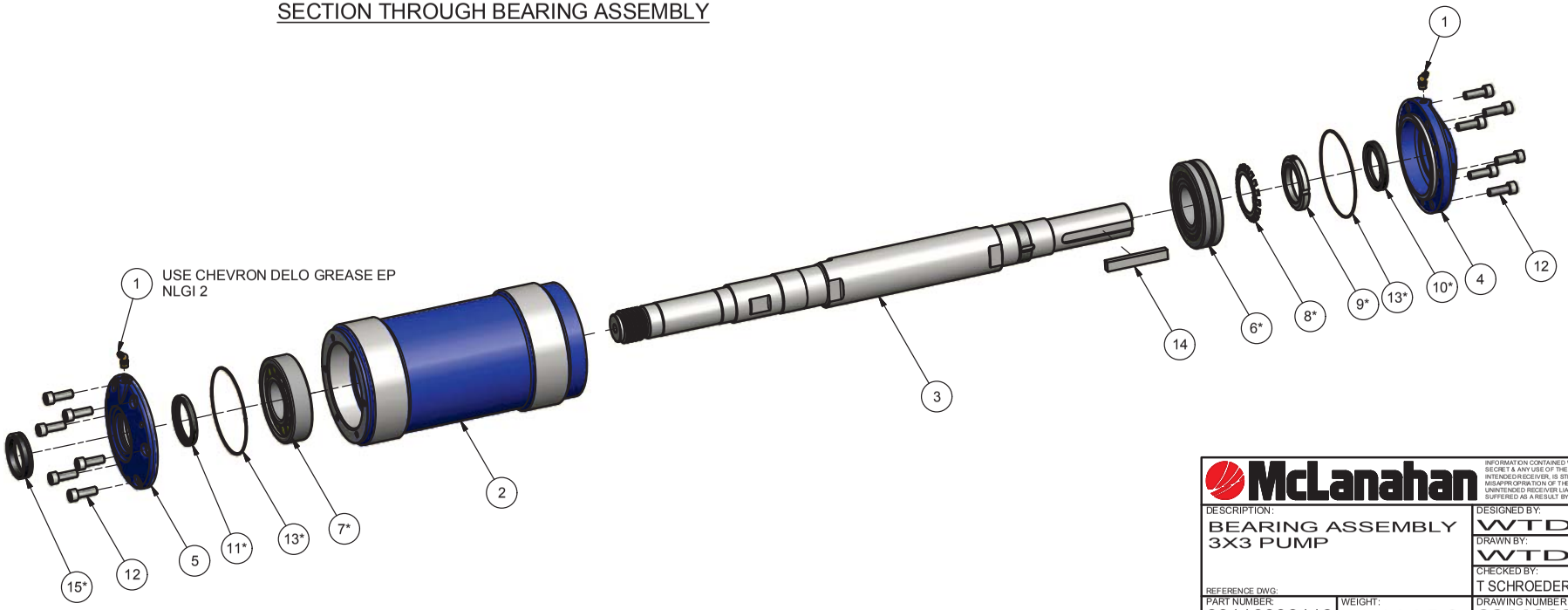

INFORMATION CONTAINED WITHIN THIS DOCUMENT IS A TRADE SECRET & ANY USE OF THE INFORMATION, EXCEPT BY ITS INTENDED RECEIVER, IS STRICTLY PROHIBITED. ANY MISAPPROPRIATION OF THE INFORMATION SHALL MAKE THE UNINTENDED RECEIVER LIABLE FOR ANY AND ALL DAMAGES SUFFERED AS A RESULT BY THE MCLANAHAN CORPORATION.

McLanahan

DESCRIPTION: BEARING ASSEMBLY 3X3 PUMP	DESIGNED BY: WTD	ORIGIN: TN	DWG SIZE: B	
	DRAWN BY: WTD	DATE: 7/23/2010	SCALE: AS NOTED	
	CHECKED BY: T SCHROEDER	DATE: 3/18/2013	SHEET#: 1 /1	
REFERENCE DWG:				
PART NUMBER: 09110003116	WEIGHT: 88.86 LBS	DRAWING NUMBER: 09110003116		REV: 00

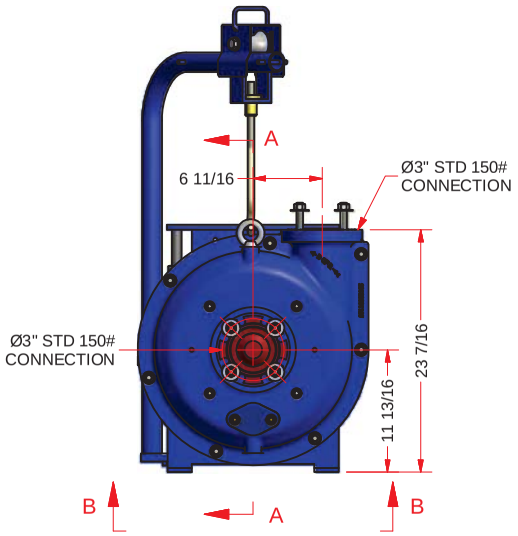

FRONT
SCALE 1:12

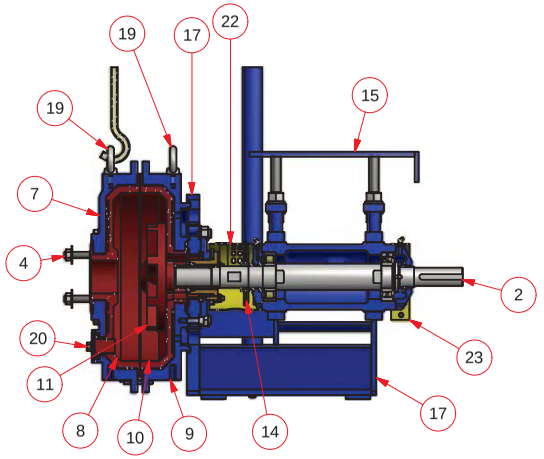

SECTION A-A
SCALE 1:12

MATERIAL LIST

ITEM	QTY	PART NUMBER	DESCRIPTION	LBS	TOTAL LBS
1	1	09110203325	DRY GLAND ASSEMBLY (NITRILE)	25.6	25.6
2	1	09110003116	BEARING ASSEMBLY	88.9	88.9
3	1	09110002001	CLAMP, SS	0.1	0.1
4	1	09110002125	STUD SET, FLANGE	3.6	3.6
5	1	09110002137	PROTECTIVE STRIP	0.3	0.3
6	1	09110003035	WASHER, AXIAL POSITIONING JACK	0.0	0
7	1	09110003105	CASING, SUCTION SIDE	98.5	98.5
8	1	09110003133	LINER, SUCTION SIDE, C/W DRAIN PLUG & HARDWARE, (NITRILE)	15.4	15.4
9	1	09110003108	CASING, GLAND SIDE	105.0	105
10	1	09110003134	LINER, GLAND SIDE C/W HARDWARE (NITRILE)	14.5	14.5
11	1	09110003135	IMPELLER, OPEN VANE (NITRILE)	17.8	17.8
12	1	09110003111	BOLT SET, CASING	3.6	3.6
13	1	09110003113	STUD SET, CASING TO PEDESTAL	2.5	2.5
14	1	09110003115	FLINGER	0.2	0.2
15	1	09110003117	MOTOR TABLE	74.3	74.3
16	2	09110003118	PEDESTAL CAP	4.4	8.7
17	1	09110003119	PEDESTAL	149.1	149.1
18	1	09110003120	JACK, AXIAL POSITIONING	2.6	2.6
24	3	09110003121	SCREW SET, HOLDING	0.3	0.9
19	2	09110003122	EYEBOLT, CASING	0.8	1.5
20	1	09110003126	STUD SET, DRAIN PLUG	0.2	0.2
21	1	09110003127	CRANE & CRAWL ASSEMBLY, 3X3	28.1	28.1
22	1	09110003130	GUARD, SHAFT	2.1	2.1
23	1	09110003139	GUARD, PULLEY SHAFT	0.7	0.7

NOTE: P/N 09110003129 NOT SHOWN, SHAFT SPANNER USED FOR MAINTENANCE

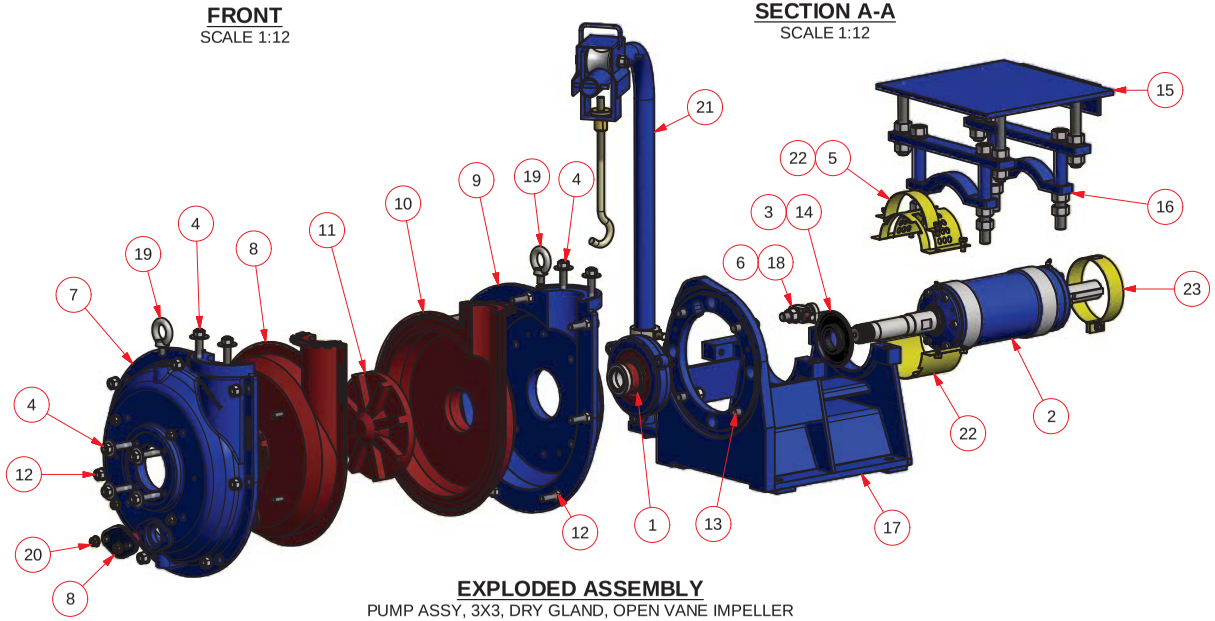

EXPLODED ASSEMBLY
PUMP ASSY, 3X3, DRY GLAND, OPEN VANE IMPELLER
SCALE 1:12

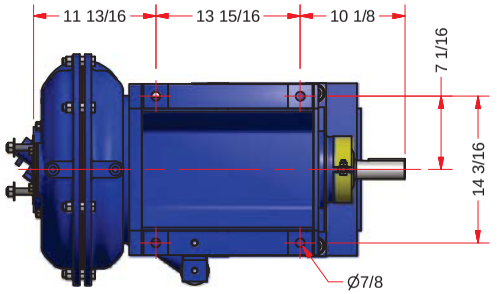

VIEW B-B
SCALE 1:12

McLanahan

INFORMATION CONTAINED WITHIN THIS DOCUMENT IS A TRADE SECRET & ANY USE OF THE INFORMATION, EXCEPT BY ITS INTENDED RECEIVER, IS STRICTLY PROHIBITED. ANY MISAPPROPRIATION OF THE INFORMATION SHALL MAKE THE UNINTENDED RECEIVER LIABLE FOR ANY AND ALL DAMAGES SUFFERED AS A RESULT BY THE MCLANAHAN CORPORATION.

DESCRIPTION: ASSEMBLY DRAWING PUMP ASSEMBLY, 3X3 DRY GLAND, NITRILE LINERS, & OPEN VANE IMPELLER	DESIGNED BY: T SCHROEDER	ORIGIN: TN	DWG SIZE: B	
REFERENCE DWG: N/A	DRAWN BY: T SCHROEDER	DATE: 2/21/2014	SCALE: AS NOTED	
	CHECKED BY: T SCHROEDER	DATE: 2/24/2014	SHEET#: 1 /1	
PART NUMBER: 09100203000	WEIGHT: 719 LBS	DRAWING NUMBER: 09100203000		REV: 0

Bill Of Materials				
Item	Qty.	Part Number	Description	Fin Wt
1	1	09100203000	PUMP ASSEMBLY, NITRILE, 3 IN X 3 IN DRY GLAND	717 lbmass
2	1	09710015084	DRIVE PACKAGE, 15 HP, 1,327 RPM, 575V, 254T TEFC, 45MM DRIVEN SHAFT	
2A	1	294315083	ELECTRIC MOTOR, 15HP, 1765 RPM, 575V, 3PH, 60HZ, 1.25 SF, 254T, TEFC, FOOT MOUNT, NEMA DES. B, CLASS F INS., 14.4 FLA, NEMA PREMIUM EFFECIENCY	291 lbmass
2B	1	2-937-40708	PULLEY, 7.35" O.D., 2-B GROOVES, "SK"	1 kg
2C	1	293740912	V-BELT PULLEY, 9.75" OD, 2-B GROOVES, MACHINED FOR "SK" BUSHING	13 lbmass
2D	1	2-938-00426	BUSHING, TYPE 'SK', 1-5/8" BORE	1 kg
2E	1	293890026	BUSHING, TYPE 'SK', 45MM BORE	3 lbmass
2F	2	293946058	V-BELT, BX58	1 lbmass
2G	1	09110003128	GUARD, BELT, 3 X 3 PUMP	35 lbmass
2H	4	294740840	CAPSCREW, HEX HEAD, 1/2" X 2-1/2", NC, GRADE 5, ZINC PLATED	1 lbmass
2I	4	296700800	WASHER, LOCK, 1/2", ZINC PLATED	0 lbmass
2J	8	296600800	WASHER, FLAT, 1/2", ZINC PLATED	0 lbmass
2K	4	296507080	NUT, HEX, 1/2", NC, GRADE 5, ZINC PLATED	0 lbmass
3	1	09110000000	DRIP TRAY, 5" X 9" X 1" DEEP, MAGNETIC MOUNTING, 1/2" HOSE CONNECTION	4 lbmass

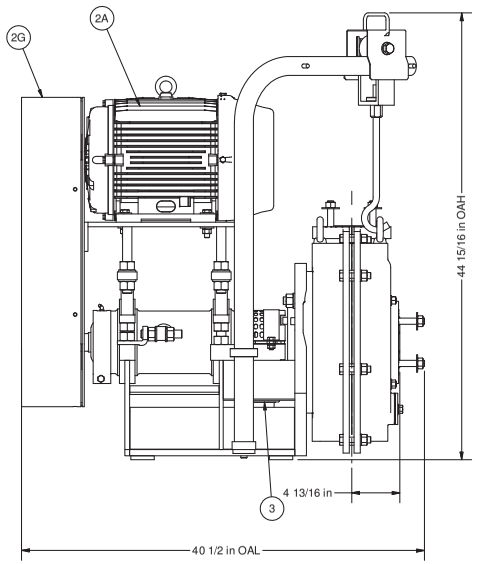

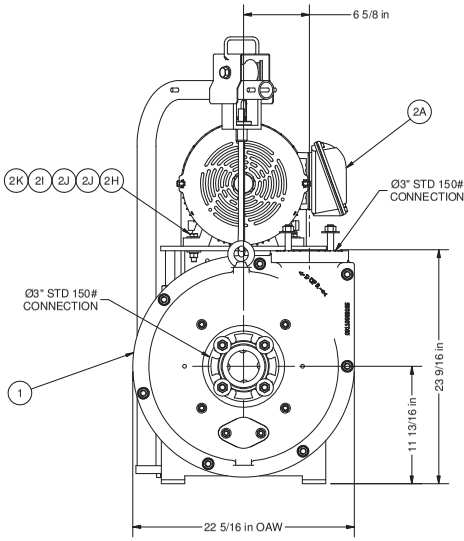

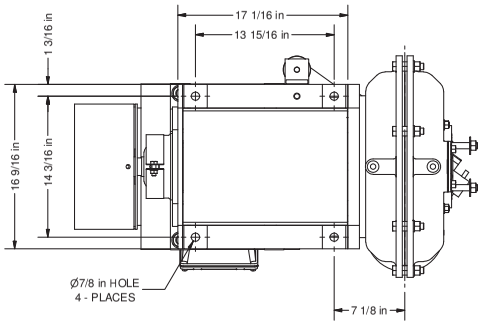

NOTE: DRIVE GAURD ITEM #2G
REMOVED FOR CLARITY

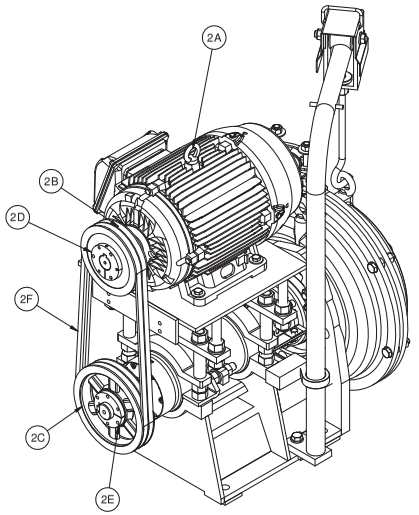

UNLESS OTHERWISE NOTED, TOLERANCES ON DIMENSIONS ARE:
XX ±0.01 in
XXX ±0.005 in
PROFILE/SAW ±1/16 in
FABRICATION ±1/8 in
ANGLE ±1°
SURFACE ✓125

REFERENCES

McLanahan

WEIGHT: 1,073#
SHEET NUMBER: 1 OF 1
SCALE: 1:8

THIS DRAWING IS THE PROPERTY OF MCLANAHAN CORPORATION AND SHALL NOT BE USED OR COPIED EXCEPT AS EXPRESSLY AUTHORIZED. INFORMATION CONTAINED IN THIS DOCUMENT IS A TRADE SECRET AND ANY USE OF THE INFORMATION BY ANY PARTY NOT INTENDED RECEIVER, IS STRICTLY PROHIBITED AND MISAPPROPRIATION OF THE INFORMATION SHALL MAKE THE UNINTENDED RECEIVER LIABLE FOR ANY AND ALL DAMAGES SUFFERED AS A RESULT BY THE MCLANAHAN CORPORATION.

THIRD ANGLE PROJECTION

ASSEMBLY DRAWING

DRAWN BY: KAZ
CHECKED BY: DEM
APPROVED BY:

PART NUMBER: 09106203013
DESCRIPTION: PUMP ASSY, 3 X 3 DRY GLAND, NITRILE LINERS C/W 15HP, 575V, 254T FRAME DRIVE PKG., 1,327 RPM, TOP VERT. DISCHG., & DRIP TRAY

1ST ISSUE DATE: 4/5/2017
SHEET SIZE: C
DRAWING NUMBER: 09106203013
REVISION

LEFT BLANK

MANUFACTURER INSTALLATION OPERATION AND MAINTENANCE MANUAL

AMARUQ WTP – NUNAVUT

VEOLIA PROJECT: 5000 218 009

Mc LANAHAN

MODEL M3H-CR 1.5/1.5, MULTIFLO EXTRACTION PUMP (P2-014/023)

LEFT BLANK

McLanahan®
585 Airport Road, Gallatin, TN 37066 USA Tel: +1 (615) 451 4440 Fax: +1 (615) 451 4461 mclanahan.com

May 22, 2018
VEOLIA WATER TECH
3901 RUE SARTELON
VILLE ST LAURENT QC H4S 2A6
CANADA

Thank you for your recent purchase of the following McLanahan equipment with your Purchase Order 18000888 HD referencing our Sales Order 114630.

This document contains important information regarding the installation & operations of your new equipment. Having recommended spare parts at your plant will assure minimum down time in order to perform periodic maintenance and will also eliminate the expense of air freight of critical parts. They are available for immediate shipment from our inventory.

When ordering parts, you will be required to provide the equipment's serial number.

- (2) PUMP ASSEMBLIES NITRILE, DRY GLAND 1.5X1.5 W/ DRIVE
  S/N: **20182147 -20182148**

We suggest you become familiar with the enclosed literature to ensure the proper installation of this equipment.

Should you have any questions regarding the installation and/or operation of the equipment you have purchased, please contact our Process Equipment Department at (615) 451-4440.

Sincerely,

McLanahan Corporation

Product SUPPORT ★★★★★ Customer SERVICE

This page is intentionally left blank

INSTALLATION, OPERATION & MAINTENANCE MANUAL

(2) PUMP ASSEMBLIES NITRILE, DRY GLAND 1.5X1.5 W/ DRIVE

PROJECT ID #20182147 -20182148

WORLD HEADQUARTERS	200 Wall Street, Hollidaysburg, PA 16648 USA	Ph: +1 (814) 695 9807	Fax: +1 (814) 695 6684
TENNESSEE	585 Airport Road, Gallatin, TN 37066 USA	Ph: +1 (615) 451 4440	Fax: +1 (615) 451 4461
FLORIDA	6550 New Tampa Highway, Lakeland, FL 33815 USA	Ph: +1 (863) 667 2090	Fax: +1 (863) 667 0449
IOWA	800 First Avenue N.W., Cedar Rapids, IA 52405 USA	Ph: +1 (319) 365 0441	Fax: +1 (319) 369 5440
AUSTRALIA	16 Callistemon Close, Warabrook, NSW 2304 Australia	Ph: +02 49 248 248	Fax: +02 4926 2514
UNITED KINGDOM	Unit 15, Newman Lane, Alton, Hampshire, GU34 2QR, UK	Ph: +44 (0) 1420 542489	

mclanahan.com

This page is intentionally left blank

INSTALLATION, OPERATION & MAINTENANCE MANUAL

1.5 x 1.5 Nitrile Dry Gland Pump Assembly Manual

WORLD HEADQUARTERS 200 Wall Street, Hollidaysburg, PA 16648 USA Tel: +1 814-695-9807 Fax: +1 814-695-6684

TENNESSEE 585 Airport Road, Gallatin, TN 37066 USA Tel: +1 615-451-4440 Fax: +1 615-451-4461

FLORIDA 2920 Barneys Pumps Place, Lakeland, FL 33812 USA Tel: +1 863-667-2090 Fax: +1 863-667-0449

IOWA 800 First Avenue N.W., Cedar Rapids, IA 52405 USA Tel: +1 319-365-0441 Fax: +1 319-369-5440

AUSTRALIA 16 Callistemon Close, Warabrook, NSW 2304 Australia Tel: +02 49 248 248 Fax: +02 4926 2514

UNITED KINGDOM 11 Warren Rise, Frimley, Surrey, GU16 8SH UK Tel: +44 (0)7407 344757

mclanahan.com

Table of Contents

Table of Contents 3
Safety Precautions 5
Introduction 7
“Pumptec” Computer Software 8
Maska 9
Pump Curve 10
Specific Information About Your Pump 12
Design Condition (To be filled in by distributor or owner) 12
Gland Options 13
“H” and “P” Glands 13
“D” Gland 14
General Pump Suction Requirements 19
Installation 19
Noise 19
Foundations 20
Pipe Work 20
Power 20
Gland Services 20
Access 20
Impeller Adjustment Axially 20
Coupling Alignment 20
Motor Rotation 21
Tension V-belts 21
Belt Guard 21
Gland Service 21
Greased Bearings 21
Final Checks 21
Electrical Installation 21
Gland Services 22
Gland Service Systems 23
Lubrication and Cooling 23
Start-Up Procedure 24
Shutdown Procedure 24
Disassembly Procedure 24
Assembly Procedure 25

Spare Parts List 29
Troubleshooting 36
Wear and Replacement of Parts 36
No Discharge When Pump Runs 36
Brief Discharge Only 37
Pumps water but not solids 37
Overloads for Motor Trip Out 38
Pump Handles Only a Limited Percentage Solids 41
Pump Speed Incorrect 41
Air Entrainment 41
Poor Suction Line 41
Cavitation 41
Gland Will Not Seal Adequately 41
Excessive Heat in Drive 42
Sudden Reduction in Discharge 43
Sudden Increases in Power Demand 44
Rapid Component Wear 45
Mechanical Failure 46
Motor Manual 47
Drawings 78

Safety Precautions

Overview

READ THIS MANUAL IN ITS ENTIRETY BEFORE BEGINNING OPERATION.

- **DO NOT** install, operate or service this equipment (or any portion thereof) without fully understanding the information contained herein.
- **DO NOT** operate this equipment in any manner other than that for which it has been designed or approved.

NOTE: A copy of this manual **must** be provided to the operator of this equipment and **must** be kept with the equipment at all times.

The safety instructions presented throughout this manual do not supersede any other directives or practices associated with this equipment or its operation. Rather, they are to be used in addition to any other applicable guidelines set forth by governing bodies (ANSI, ISO, OSHA, MSHA, etc.), plant administrators, signs, tags or placards, etc. (Refer to the **TAGS** section of this manual for information regarding safety and instructional tags provided with the equipment.) In the event of conflicting information, **always use the guidelines providing the highest degree of protection/safety.**

The safety instructions used throughout this manual and on the equipment contain a "signal word" (CAUTION, WARNING or DANGER) that indicates the seriousness of the hazard as described below.

DANGER *indicates an imminently hazardous situation, which, if not avoided, will result in death or serious injury.*

WARNING *indicates a potentially hazardous situation, which, if not avoided, could result in death or serious injury.*

CAUTION *indicates a potentially hazardous situation, which, if not avoided, may result in minor or moderate injury.*

CAUTION *(used without the safety alert symbol) indicates a potentially hazardous situation, which, if not avoided, may result in property damage.*

The safety instructions listed below are general guidelines. Additional safety instructions are listed throughout this manual as required. **All** safety instructions **must** be followed at all times to ensure personal safety and to prevent equipment damage.

Verify that all personnel are clear of any/all moving or rotating parts (or parts that are subject to movement or rotation) before installing, operating or servicing this equipment or any portion thereof.

Verify that all guards and safety devices are in place, secured and functional before operating this equipment or any portion of it. **DO NOT** circumvent or disable any safety devices.

Lockout/Tagout all controls and secure all applicable components to prevent unexpected movement before performing any maintenance, repairs or adjustments on this equipment or any portion thereof.

Lockout/Tagout power at the source before accessing any electrical panels or devices on this equipment or before performing any maintenance or repairs to the power line(s) feeding this equipment.

Wear appropriate personal protective equipment at all times.

Obey all safety tags and signs and replace any that are illegible or missing.

If any questions arise concerning the safe operation of this equipment, or if clarification of any information is required, cease operation and contact **McLanahan Corporation** immediately.

The McLanahan Pump

Introduction

The Aggregate Processing Division of McLanahan is a major manufacturer of process plants for the minerals industry. The McLanahan Model lllr is the latest generation of successful abrasion/corrosion-resistant slurry handling pumps.

This manual should be carefully read before attempting to install or operate this McLanahan Model lllr Pump.

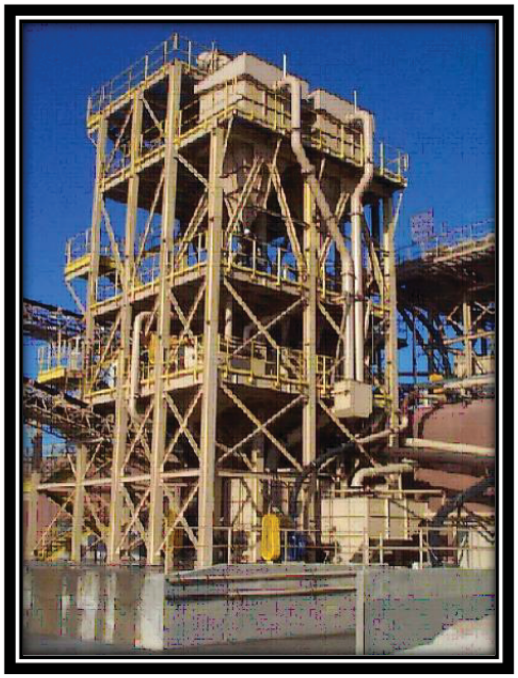

Service, Selection and Support

Total Service

From design to installation and beyond, McLanahan engineers are available to give advice on your slurry pumping needs and solutions for your problems.

The McLanahan Model lllr range has been designed to offer a wide choice of pump sizes to suit most slurry pumping applications. A standard questionnaire is available to ensure that the most complex installation, as well as the more straightforward pumping application, receives individual consideration.

McLanahan can also advise on the ancillary components within the pumping system. The provision of low head loss valves, gland feed pumps, priming devices and flexible bends, all incorporating application specific linings for trouble-free life, are an important aspect of ensuring a totally successful pump installation.

Design Specifications and Options

The McLanahan Model lllr standard casing is designed for a maximum working pressure of 88psi (6 bar). A high pressure casing is available, rated at 272psi (18.5 bar). Please contact McLanahan for pressures higher than this.

The pump units in the McLanahan Model lllr range are designated by the size of suction and discharge ports. Units up to 4” (100mm) have equal size suction and discharge; above this, the Model lllr has a larger suction than discharge. Size is given in inches i.e. 8”/6” (200/150mm) Model lllr has an 8” (200mm) suction port and a 6” (150mm) discharge port.

Suction and discharge flanges are universal and, as a standard, are available in ASA150 drilling patterns. Other drilling patterns (metric & BS4504) are available to special order. Orientation of discharge to 4 positions according to installation requirements.

The McLanahan Model lllr pump components are designed and manufactured in accordance with appropriate International Quality Standards, such as ISO9000.

"Pumptec" Computer Software

Many complex calculations are needed in order to

- Size a pump
- Establish the optimum pipeline carrying velocity
- De-rate the pump for a slurry duty
- Calculate pipeline friction head losses
- Calculate power absorbed
- Analyze the system head

McLanahan Corporation uses unique software, **Pumptec,** to perform these calculations.

The pump is able to adapt to a change of V-belt sheave ratios and different speeds. However, it is **crucial** to recalculate duty parameters and check motor and drives to guarantee that they are not overloaded under any normal operating condition.

Please consult McLanahan Corporation before making any changes to your pump system to ensure the correct combination of speed and power is selected.

Input criteria required:

- Volume to be pumped
- Percent solids
- Gradation of solids (top size & 50% passing size)
- Specific Gravity of Solids
- Specific Gravity of Liquid
- Temperature of Liquid
- Elevation above sea level
- Height of liquid level in tank (**if negative suction**, height from liquid surface to center line of pump inlet)
- Vertical height from pump inlet to discharge point
- Pressure required at delivery point
- Pipe diameter (inside diameter important)
- Pipe material
- Pipe fittings – type and quantity

Pumptec: Computer Aided Support

To complement and facilitate optimum selection of your slurry system, McLanahan uses **Pumptec.**

This unique computer program:

- Analyzes the effects of changing slurry density
- Calculates the P_{50} particle size from a sieve analysis
- Calculates settling velocities and select pump sizes
- Calculates pipeline frictional losses in various pipe materials and pipe fittings
- Calculates the pump duty and selects a pump and drive based on input parameters
- Prints full application and selection data including NPSH, BEP, RPM, HP, etc.

Troubleshooting is made easier using **Pumptec** Software to evaluate different scenarios.

McLanahan
AGGREGATE PROCESSING DIVISION

Standard Pump Curve

Linapump model 1.5/1.5 LPIIIr

Impellar Diameter	8"	Maximum Speed	2750rpm	Max. Solids size	3/8"	Curve No	B35.80
No. of Vanes	4	Maximum Power	30hp	Model	LP 1½" x 1½"	date	09-Oct-03

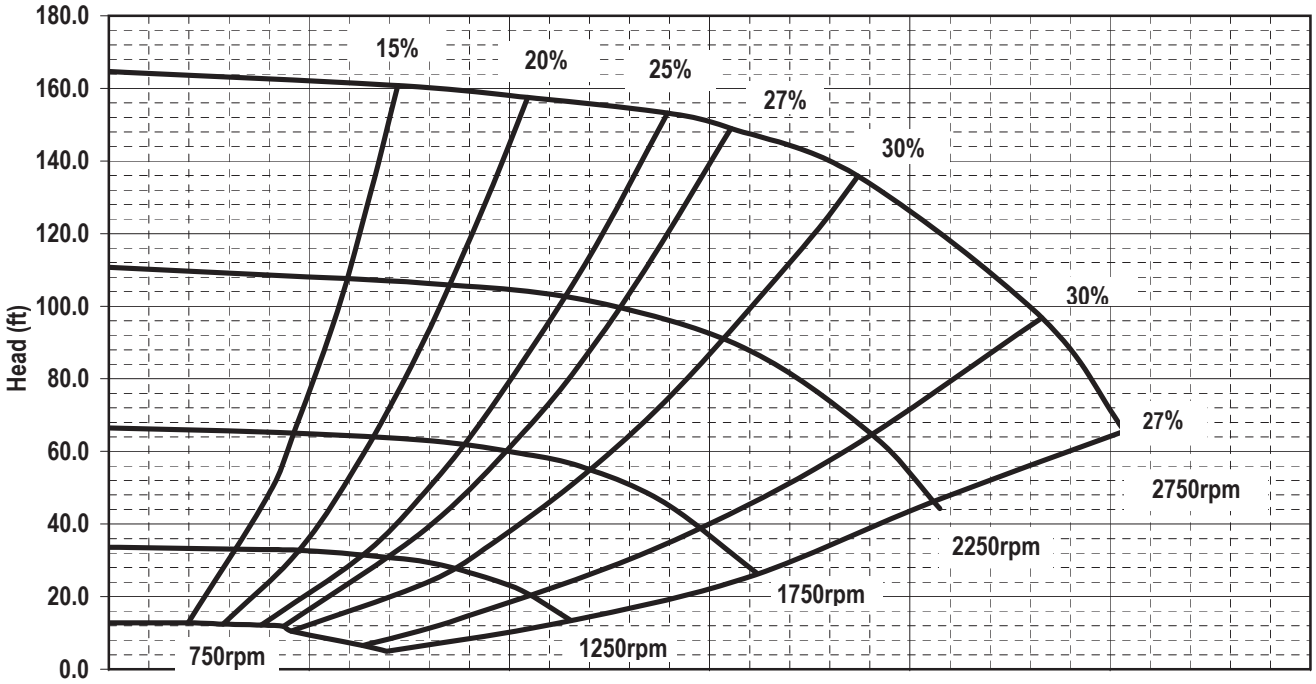

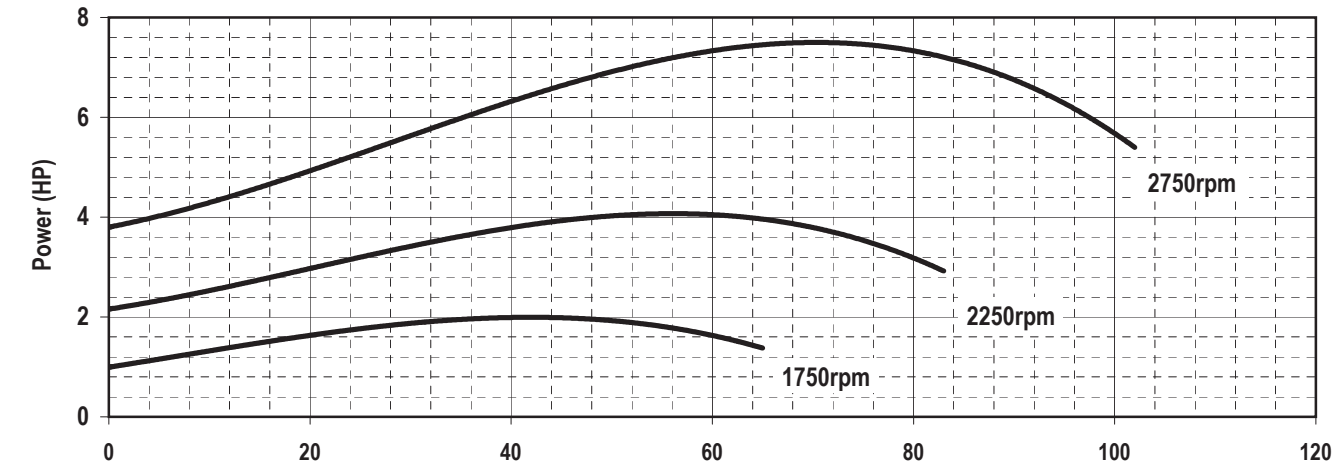

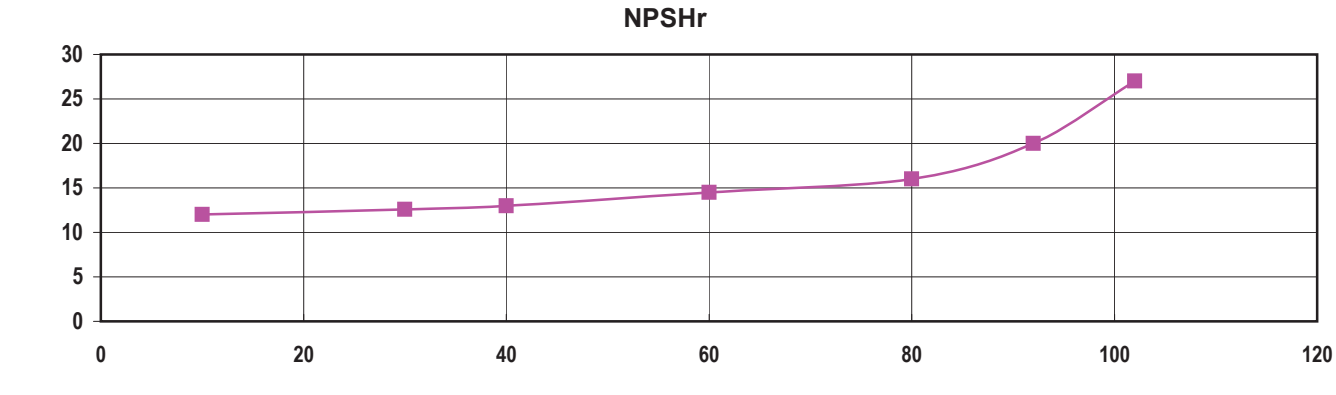

JMI - 5000218009 /

20180423-01, April 23, 2018

M3H-CR 1.5/1.5 , 976 rpm, 0.37 hp

©2018-2019 Mclanahan. This curve is the property of Mclanahan. And must not be reproduced or disclosed without permission in writing. All rights are reserved.

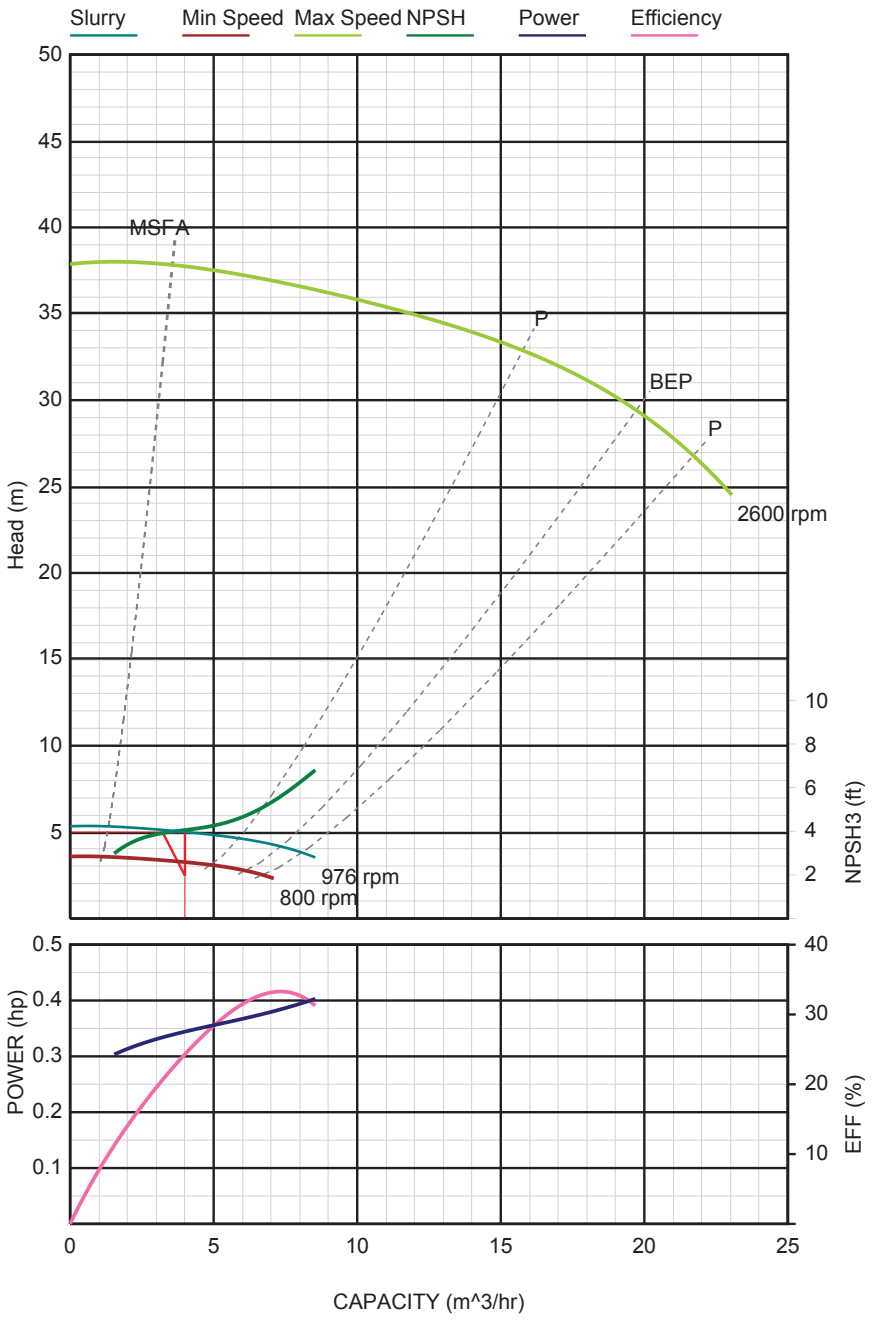

Pump model: M3H-CR 1.5/1.5

Pump	
Pump range	-CR
Speed	976 rpm
Max Speed	2600 rpm
Efficiency @ BEP	33.24 %

Duty Point	
Flow	4 m^3/hr
Static Head	0 m
Total Head	5 m
Efficiency	24.3 %
NPSH required	2.23 ft
% of BEP	54.53 %
Power absorbed - @ Duty	0.344 hp
Motor size	0.37 hp
Tip Speed	33.1 ft/s
Impeller Diameter	7.874 in
Speed Head	5.128 m

Slurry Data	
Solid flow rate	1.025 Tons/hr
Solid SG	2.7
Slurry SG	1.144
% Comp. by Weight	20 %
% comp. by Volume	8.475 %
Ave. Particle size (D50)	100 microns
Max Particle Size	200 microns
Head Ratio	0.975

Engineer's Notes

JMQ- t 888n/ 688D F
n8/ 68hn3-8/ , Ap5il n3, n8/ 6
M3H-CR / at F/ at , D9S 5pm, 8a39 2p

©2018-2019 Mclanahan. This datasheet is the property of Mclanahan. And must not be reproduced or disclosed without permission in writing. All rights are reserved.

Pump Details	
Pump Model	M3H-CR / at F/ at
Rw7ed 0lo^	h mr 3F25
Rw7ed Hewd	t m
. ssiEief Ec	nha3 y
1 % P	t hat 3 y
Qmpelle5 Biwme7e5	9a69h if
Pump I peed	D9S 5pm
Mif imum I peed	688 5pm
Mwximum I peed	nS88 5pm
Tip Npeed	33a/ s7FN
qPI H 5e4ui5ed	ha866 s7

Slurry Details	
I olid slo^ 5w7e	/ a8nt Tof NF25
I lu55c slo^ 5w7e	h mr 3F25
I G Nolid	na9
I G li4uid	/
I G Nlu55c	/ a/ hh
y Eompabc ^eig27	n8 y
y Eomp bc volume	6ah9t y
Aveapw57lEle Nize	/ 88 miE5of N
Mwx pw57lEle Nize	n88 miE5of N
Widelc g5wded pw57lEleN	0wlNe
05o72 swE7o5	8
I e7 . R & HR mwf uwllc	0wlNe
. ssiEief Ec 5w7lo	8aD9t
Hewd 5w7lo	8aD9t

Electrical Driver Details	
Mo7o5	8a39 2p
Po^e5 wbNo5bed bc pump	8 2p
Po^e5 5e4ui5ed	8a3n 2p
05wme Nize	9/
Tempe5w7u5e 5iNe	8
Qf Nulw7lof ElwNN	
%ew5if g Nize B F.	
%ew5if g Nize qFB F.	
Weig27	8
I 2ws7 Nize	8

Selection Details	
Re4ui5ed 0lo^	h mr 3F25
Re4ui5ed Hewd	t m
I 7w7lE Hewd	8 m
05lE7lof Hewd	t m
I uE7lof Heig27	8 m
BiNE2w5ge Heig27	8 m
BiNE2w5ge P5eNNu5e	8 kPw
Hewd Rw7lo	8aD9t
qPI H Avwilwble	8 m

Maska Fuctoys nc4.
6l 2PB9uo l aGc9cPg S -e aiC
P 4Pe acaCa l 2d 1R2
Tt o(06l)l l 3-3311 Vax:(06l)l l 3-5265
www.maskapuctoys.49m

Selection Parameters

Family: Classic & Narrow belts drives

Shaft diameter Driver: 6-6/l nc4h
Shaft diameter Driven: 02MM
Service Factor: 1.2
Driver power: 5 hp
Rpm Driver: 6705
Rpm Driven: 878 **Tolerance:** -3% +3%
Center distance : Micimum: 61.5 nc4h
Maximum: 63.5 nc4h
Belts: BX

Max. Hub Load: 8888
Rim Speed min.: 822 VFM
Rim Speed max.: . 522 VFM
Nbr of Grooves min.: 6
Nbr of Grooves max.: 65

Pitch Diameter (Inch)

	Min.	Max.
Driver	2.52	76.22
Driven	2.52	76.22

Actual Drive Values

Maximum number of results: 12

Rpm: 878
Service Factor: 1.36
BeltSpeed (fpm): 68l ,
List Price: 135.52

Center distance (Inch): 61.l
Power/Belt (hp): 5.l

Deflection (inch): 2.1
Deflection Force (lbs): 3.6
Hub Loads (lbs): 650

Driver Sheave: 2B40

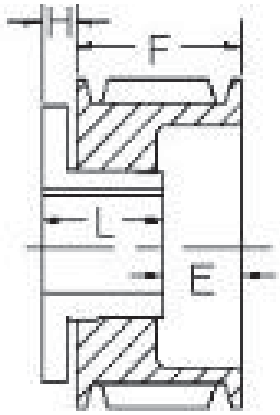

f isSFC4t : 00.22
D t iGhS 3.02 dLs

v .v . q 9C0f Bt oS 3., 2A
v .v . B 9C5f Bt oS 0.22A
W 36/31A
V: 6 3/0A
b : 65/31A
f : 6 6/0A
" .v .: 0.35A

Driver Bushing: SHX1-1/8

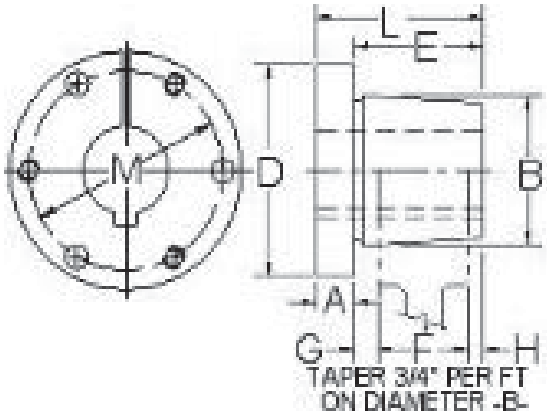

f isSFC4t : 60.82
D t iGhS 2.82 dLs

q: 3/l A
B: 6 7/l A
v : 1 66/6, A
W 7/l A
V: 3/0A
l : 6/0A
b : -6/l A
Et yst aS 6/0 x 6/l A
f : 6 6/0A
M: 1 6/0A

FC9Qu4Sspt 4iHi4aS9cs: g SacQaCQwiSh st Ss4Ct w 9Ct Ckt yway.
b t x L9oS 3K6/0-12 UNe x 6-3/l
gt Ss4Ct w - v imt csi9cs: 6/0-12 UNe x 6/0

Driven Sheave: 2B74

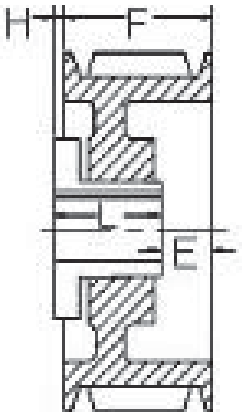

f isSFC4t : 73.22
D t iGhS 62.05 dLs

v .v . q 9C0f Bt oS 7.22A
v .v . B 9C5f Bt oS 7.02A
W 6/0A
V: 6 3/0A
b : 3/l A
f : 6 7/l A
" .v .: 7.75A

d t 49mmt cQt Qv 0Ct gt d 4S9cs aCt Qt siGct QH9Qust wiSh Maska 49mp9ct cSs (sht aCt sPLushicGs acQR-Lt oS) whi4h mt t S9Ct x4t t QMFTq = d Mq sSacQaCQs. Tht ust 9Hd sst C&uaS9 p9QQu4Ss 49uoQaHH4SdH t xpt 4Sac4y 9HD0Ct .gt d 4S9cs acQFC4icGaCt as a44uQaS as p9ssiLd ; Maska is c9SCt sp9csiLd H9CqNY pC4icG9CQt siGc t C9G.FC4t sh9wc aCt H9CsSacQaCQp9QQu4Ss 9cqy. V9Cc9c-sSacQaCQp9QQu4Ss 9CpC9QQu4Ss SaSct t QQycami4 Laac4icGP49cSs4SMaska H9CpC4icG

Driven Bushing: SKX40MM

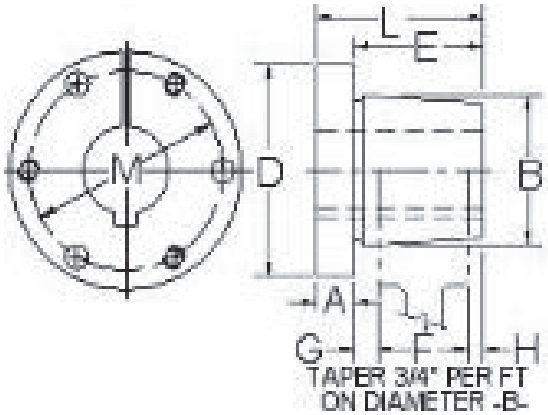

f isSFG4t : 1, .I 2
D t iGhS 1.I 2 dLs

q: 6/1A
B: 1 63/6, A
v : 3 7/I A
W: 6 3/I A
V: 6 6/0A
I : 5/6, A
b : 3/6, A
Et y: 61 x I A
f : 6 7/I A
M: 3 5/6, A

b t x L9cS 3K5/6, -6I UNe X 1
FC9Qu4Sspt 4iHi4aS9cs: g SacQaCQwiSh st Ss4Ct w 9Ot Ckt yway.
gt Ss4Ct w - v imt csi9cs: 6/0-12 UNe x 6/0

Belts: VBBX42 (Qty:2)

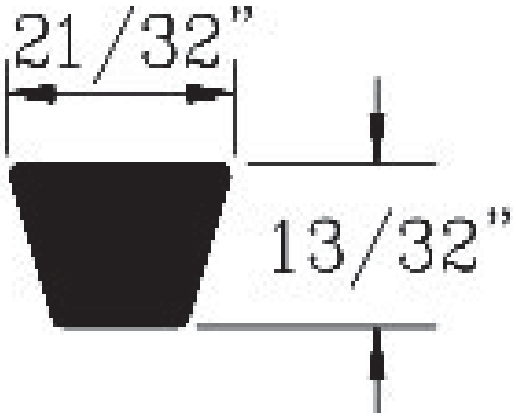

f isSFG4t : 3I .02
D t iGhS 2.0I dLs

d t 49mmt cQ Qv 0Ct gt d 4S9cs aCt Qt siGct QH9Cust wiSh Maska 49mp9ct cSs (sht aCt sPLushicGs acQR-Lt dS) whi4h mt t S9Ct x4t t QMFTq = d Mq sSacQaCQs. Tht ust 9Hd sst C&uaS9 p9Qu4S 49uaQaHH4SdH t xpt 4Sac4y 9HD0Ct gt d 4S9cs acQFG4icGaCt as a44uQaS as p9ssiLd ; Maska is c9SCt sp9csiLd H9Cq NY pG4icG9CQt siGc t CQ9G.FG4t sh9wc aCt H9CsSacQaCQp9Qu4S 9cqy. V9Cc9c-sSacQaCQp9Qu4S 9Cp9Qu4S SaSct t QQycami4 Laac4icGP49cSs4SMaska H9Cp64icG

Specific Information About Your Pump

Company Name:		
Address:		Tel:
		Fax:
Supplier:	Type of Industry:	
	Pump Model:	Size:
	Serial No:	Flange Type:
Contact Person:	Gland Size:	Drive Style:
Start-up date/remarks:		

Design Condition (To be filled in by distributor or owner)

The following data should be completed as a record of the duty for which the pump was originally sold. During its lifetime the pumping requirements may change; if so, the new speed and operating conditions must be carefully engineered. McLanahan engineers are able to assist you in doing this. U.S. units are used, unless otherwise noted.

Details of Solids

Description of Solids: _____

Specific Gravity Solids: S=_____ Quantity of Solids M: _____ dry tons/hr

Particle Size: Topsize= _____mesh (mm). 50% passing size= _____mesh (mm).

Details of Liquor

Description of Liquor: _____

Specific Gravity of Liquor: Sl = _____

Details of Slurry

Specific Gravity of Slurry: Sm = _____

Percent (%) of solids by volume in slurry: Cv=_____

Percent (%) of solids by weight in slurry: Cm = _____

Flow rate of slurry: Q=_____gpm (l/s, m^3/Hr).

Calculated Design Data

Total Head: _____ft (m). Maximum working Head: _____ft (m).
NPSHa: _____ft (m). NPSHr: _____ft (m).
Pump Speed on Slurry: _____rpm. Derate factor for Slurry: _____

Motor Data

Motor Power rating: _____HP (kW).
Motor Frame size: _____
Motor Speed: _____rpm.
Motor Shaft Size: _____in (mm).

Vee-Belt Drive Data

Motor pulley O.D. _____in (mm). Pump pulley O.D.: _____in (mm).
Taper lock Bush No: _____ Taper lock Bush No: _____
Vee-belt: _____No off_____ No of grooves/pulley: _____

Gland Water Requirements (H and P glands only)

Quantity: _____gpm (l/s)
Pressure: _____psi (m)

Technical Data

Pump Mass: _____lbs (kg).
Motor Mass: _____lbs (kg).
Pump Shaft Size: _____mm
Noise Level: _____db (A)

Gland Options

Gland Seals

The **gland** is usually the weakest point on any **pump**; therefore, it requires the most attention and maintenance. All glands need cooling and lubrication between the sliding surfaces, so **a leisurely drip from the glands is normal**. **NOTE: DO NOT PREVENT DRIP.** All glands must be finally adjusted while the pump is running.

The McLanahan Glands have been developed to minimize the attention and service needed; Pressure of the fluid being pumped, the size and shape of the solid particles and the concentration of the solid particles in the liquid all affect wear and tear on pumps. Three unique seal arrangements have been developed and McLanahan engineers can give advice regarding the optimum selection for a specific duty.

"H" and "P" Glands

The slurry pressure at the gland is reduced by back pump out vanes on the impeller. The rubber axial expeller, which is a stretch fit on the shaft of the "H" and "P" glands, is used to avert waste.

The solids are restrained by the outward centrifugal swirl behind the impeller, the axial expeller and the restricted path to the seal interface.

With the "H" Gland, the adjusting gland must be eased **outward** to increase the sealing pressure. The geometric shape of the **gland seal** is carefully designed to provide a flawless seal while limiting the amount of "digging" onto the gland sleeve.

The gland sealing water must be as clean as possible and at a pressure of about 3-5psi (2-4m water gauge) above the discharge pressure. A high-flushing water pressure results in greater water use and greater dilution of the pumped slurry without any benefit to the seal.

“D” Gland

This is a unique type of mechanical seal. The **face seal** runs against the **hard wearing face**.

The **face seal** acts as a spring and if any grit particles get between the rotating rubber and stationary **wear face** it is pressed into the rubber. The **face seal** is a stretch fit on the **shaft sleeve**. As the gland pressure increases, the rubber extends axially and increases the pressure at the rubbing interface. Be sure not to over-tighten the adjusting sleeve.

When the pump is first started, ensure that the adjusting nuts are finger tight. While the pump runs, adjust the gland nuts so there are approximately five (5) drops per minute from the gland. This should reduce to one (1) occasional drop and run satisfactorily for up to a year without further attention in a good application.

Dry Gland

Also known as "D" type gland
This gland has a unique proprietary design and is unlike conventional mechanical seals. A rotating rubber **face seal** is adjusted against a static **hard wearing face**; it is **self-lubricating -** pressure from inside the pump head forces small amounts of liquid between the surfaces for lubrication.

Note: The gland needs no external water source to lubricate the gland; both small amounts of water and the fines do exit the pump, accumulating at its base, hence the term **dry gland**.

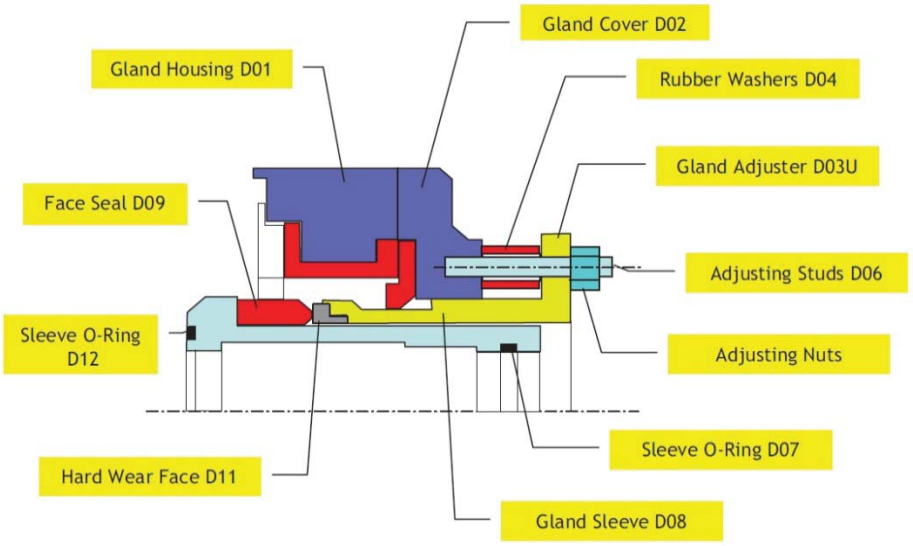

The **face seal** acts as a spring; if any grit particles get between the rotating rubber and **stationary wear face**, it is pressed into the rubber. The **face seal** is a stretch fit on the shaft sleeve. As the gland pressure increases, the rubber extends axially and increases the pressure at the rubbing interface.

While the pump is running, adjust the gland nuts so there are approximately five (5) drops per minute from the gland. This should reduce to one (1) occasional drop and run satisfactorily for up to one year without further attention in a typical application.

Hydrostatic Gland

Also known as "H" type gland
This gland has a unique proprietary design with the lowest maintenance and longest life. The unique rubber gland seal is designed to deflect inwards to provide an effective seal. The **slurry pressure** at the gland is reduced by back pump out vanes on the impeller; when fitted, it is reduced by the **rubber axial expeller**, which is a stretch fit on the shaft of the "H" gland sleeve.

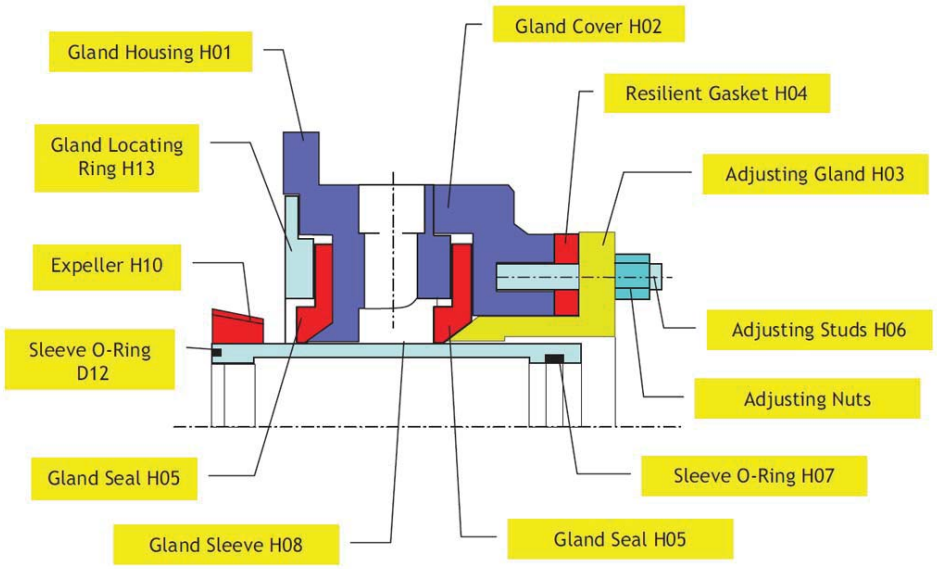

The solids are restrained by the outward centrifugal swirl behind the impeller, the axial expeller and the restricted path to the seal interface.

With the H Gland, the adjusting gland must be eased outwards to increase the sealing pressure. The geometric shape of the **gland seal** is carefully designed to give a good seal while limiting the amount of "digging" onto the gland sleeve.

The gland sealing water must be as clean as possible at a pressure of about 5psi (4m water gauge) above the discharge pressure and at a volume of between 1 to 5 gpm depending on pump size. A high-flushing water pressure results in greater water use and greater dilution of the pumped slurry without any benefit to the seal.

Packed Gland

"P" Type Gland
In a classic "stuffing box" design, sealing is obtained by compressing the gland packing rings onto the shaft sleeve. The gland offers the capacity to seal the pump even at high pressures, for instance, in series pumping.

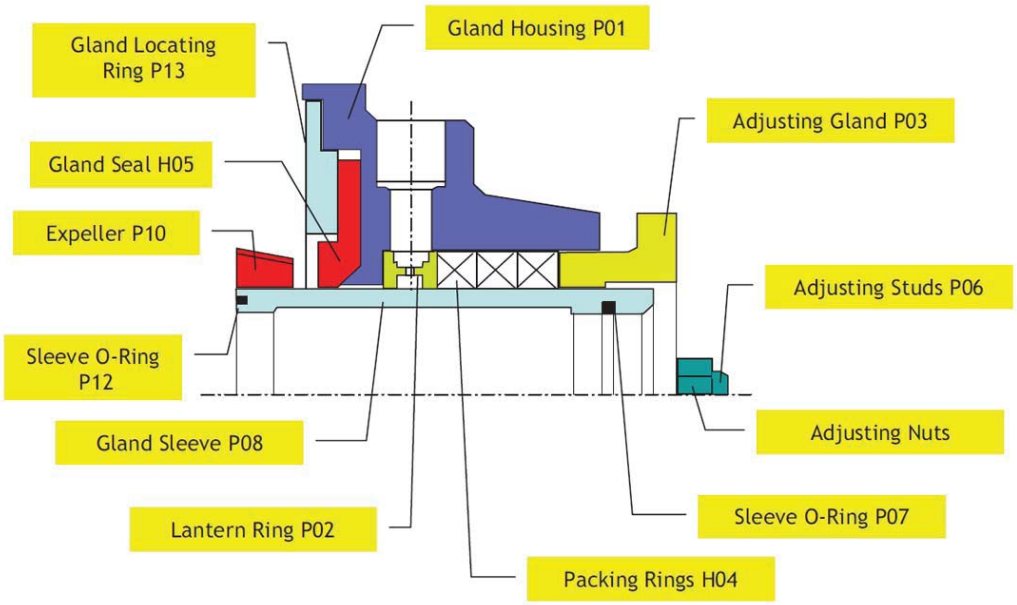

The solids are restrained by the outward centrifugal swirl behind the impeller, the axial expeller and the restricted path to the seal interface.

With the "P" gland, the adjusting gland must face inwards to increase the sealing pressure. The geometric shape of the **gland seal** is carefully designed to give a good seal while limiting the amount of "digging" onto the gland sleeve.

The gland sealing water must be as clean as possible at a pressure of about 5psi (4m water gauge) above the discharge pressure and at a volume of between 1 to 5 gpm depending on pump size. A high flushing water pressure results in greater water use and greater dilution of the pumped slurry without any benefit to the seal.

A pressure-fed grease supply can be used with the "P" gland; be sure to use synthetic rubber parts (special order).

Assembly of Dry Gland – Hard Wear Face & Gland Adjuster (2” x 2” shown)

1. Check all components

2. Extrude epoxy from package & mix thoroughly

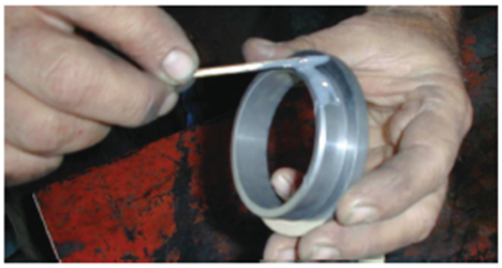

3. Apply epoxy to outer rim of Hard Wear Face (D11)

4. Place ‘O’ Ring (D10) on outer rim of Hard Wear Face (D11). Position ‘O’ Ring at leading edge.

5. Position Hard Wear Face & ‘O’ Ring into Gland Adjuster (D03U)

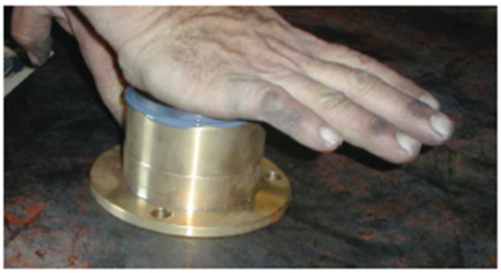

6. Using a slight twisting motion Carefully push Hard Wear Face into Adjuster

7. Wipe off excess epoxy

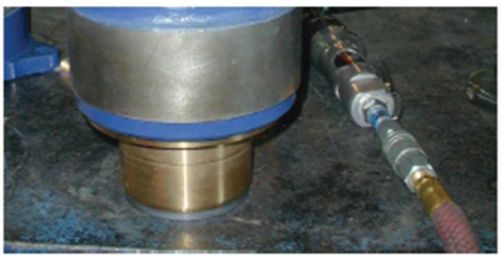

8. Place a heavy object on top of the assembly until dry (min 30 minutes)

General Pump Suction Requirements

A pump does not "suck," as fluid has no tensile strength. The centrifugal expulsion of fluids creates a low pressure area at the eye of the impeller; atmospheric pressure, plus any static head, pushes fluid into the pump. It is essential that suction systems do not restrict flow from the sump into the pump. With slurries, this is even more important as the solids themselves can settle and cause obstructions to flow.

In order to maintain the short pipelines and prevent obstruction**, cleaning is essential**. A trap to remove tramp material is beneficial as well.

Air entrained in the slurry reduces the pump's capacity and head; an air vent pipe on the suction pipe close to the pump inlet is often essential.

The pump will operate best if the flow velocity approaching the impeller is evenly distributed across the suction eye, and is sensibly axial, without swirl.

Pump performance is potentially impaired by a number of factors. Intake conditions in the sump, such as the formation of vortices, can cause an uneven flow over the eye of the impeller. Intake conditions in the suction pipeline, such as a sharp bend just before the pump, can affect performance as well.

Installation

Important Notes

- The maintenance of rotating machinery should be done by experienced mechanics.
- Protective clothing as well as proper tools and lifting equipment, all in good condition, must be used.
- Do not lift heavy weights without mechanical aids.
- Do not take any risks with your health and safety.
- If a pump has run without discharge, the fluid temperature and pressure may be dangerously high.
- The casing suspension arm is fitted as a maintenance aid only.
- The installer must ensure that guards are fitted in accordance with national & local regulations.

The following notes cover most situations; however, certain installations will require additional assessments.

Noise

Because of its heavy construction, rigid bearing housing and the sound attenuation due to the rubber lining, the noise generated by a bare shaft McLanahan Pump is low: less than 70dB (A).

The noise emission from a complete pump and drive unit will be dependent upon various factors including that from the motor, its fan and the V-belt drive. To obtain an indication of the noise level generated by a specific complete unit, take the highest component noise level, which is generally the motor, and multiply by 1.15.

For example:

dB (A) pump + dB (A) motor + dB (A) drive = 1.15 x dB (A) motor.

Other factors, including the piping system and hydraulically-generated noise as well as any reflected noise, will affect the final installed figure.

Foundations

Location and dimensions must be checked and matched to the pump-certified drawing when holding down bolts, bolt holes in steel work or pockets in concrete. The foundations must be rigid.

The pump base must be level in its final position; it must also be rigidly supported at each bolt, which is designed to hold it down, before the bolts are tightened.

Pipe Work

The suction and delivery pipe work must be independently supported and the pump must not be used as an anchor to pull the pipes into position.

The procedure for discarding solids in an emergency situation should be planned before it is needed. If the removal of suction and delivery pipe work is planned ahead of time, it will facilitate unblocking and servicing of the pump.

Precautionary checks that need to be completed include:

- Areas that could cause restriction on the suction side
- The possibility of thermal expansion in the pipework causing undue loads on the pump
- The pipework should match up to the pump without strain

The lining on the McLanahan model lllr is continued out to form gaskets on the suction and discharge flanges, therefore the use of joint rings or additional gaskets is not necessary. Connections to the pump should be made using flat-faced flanges only.

When fitting McLanahan pumps to rubber-lined equipment such as valves, hose or lined pipe, a steel gasket must be used.

Power

Check that the motor voltage, power and starter rating and supply match.

Gland Services

If gland sealing water is required, the quantity, quality and availability should be checked.

Access

Crane capacity and access routes from the delivery point should be checked. Access for maintenance, protection from flooding, as well as ventilation for motor cooling, must all be checked.

Impeller Adjustment Axially

The position of the rotating element must be set so there is a minimum running clearance, approximately 1/16” – 1/8” between the suction bush and the impeller. The bearing housing must then be locked into position. This clearance should be checked by bolting a dummy flange or stub pipe to the suction flange. This ensures any movement of the rubber lining on connection is allowed. Once connected to suction and delivery lines, the unit should be checked for free rotation.

Coupling Alignment

The pump and motor couplings must be aligned in accordance with good engineering practice. Axial or radial run-out must be less than 0.05 mm total indicated reading on a clock gauge. With V-belt pulleys, the faces of the couplings must be exactly in line and the shafts must be parallel to each other. A check with a straight edge or string line across the pulley faces should have no visible gap.

Motor Rotation

Before the belts are fitted or the couplings are connected, the direction of rotation of the motor must be checked. Incorrect motor rotation can cause the impeller to unscrew and destroy the pump.

Tension V-belts

When the motor's direction of rotation is correct, fit and tension the V-belts in accordance with the maker's recommendation. In general, a quarter to a half twist of the belt will be possible at the center of the belt by simply using fingers. Check the tension after a few running hours.

Belt Guard

The belt guard provided with this pump unit is manufactured with the shaft aperture fully closed with mesh. On installation of the V-belt drive and determination of pulley centers, the shaft guard is offered up and the mesh relieved locally to allow the shafts to pass through. Allowance may be required for movement of shafts when belt tensioning.

The mesh should be relieved and a guard should be fitted in a manner which prevents accidental contact with the rotating parts of the drive assembly.

The installer must ensure that the guard is installed in accordance with national and local regulations.

Gland Service

When these are fitted, be sure that gland water supply and protection systems are working.

Greased Bearings

The pump bearings have been greased at the factory. **Over-greasing them can cause them to overheat**; they should be looked over but may not need grease. **Suitable grease types** are: Shell Alvania 3, Mobil EP2, Caltex LS3 or their equivalents.

Final Checks

- All nuts and bolts are tight
- Gland adjusting nuts are finger tight
- No loose material is lying around the pump set
- The guards are securely fitted and the pump is safe to start

The running speed of the pump must not exceed the following:

Pump	1½ x 1½	2x2	3x3n	4x4	6x5	8x6	10x8	12x10
MAX RPM	2750	2400	2100	1600	1400	1200	1200	900

Electrical Installation

This equipment must be installed and controlled in accordance with applicable national and local regulations.

Gland Services

On the hydrostatic gland and also on the packed gland, it is usually necessary to have a clean water flushing supply to the gland.

The pressure should be 3-5 psi (2-4m) water gauge above the pump discharge pressure (remember to include the S.G. of the slurry) and the flow rate should be in accordance with the table below.

Pump	units	1½x1½	2x2	3x3n	4x4	6x5	8x6	10x8	12x10
Water flow.	USgpm	1	1	1	2	2	2	3	4
Water flow.	liter/sec	0.04	0.04	0.05	0.07	0.07	0.09	0.1	0.2

The gland flushing water should be clean. The life of the gland and gland sleeve is significantly affected by the cleanliness of the flushing water. Although a few particles will not do instant damage, the seal life will be reduced. Slurry must not be used.

There are many combinations of flow control devices that may be used. A few of these are shown on the diagram below. The objective is to maintain a secure supply of clean flushing water to extend the gland life.

With pumps in series, there are three main ways of supplying gland service water.

- Individual dedicated pumps at the correct pressure and flow rate.
- One large pump at the highest pressure throttling down the supply to each pump in the series.
- One multi-stage pump tapping off a supply at a different stage to each pump in the series.

Gland Service Systems

These are a few typical systems. Any selection of items may be combined.

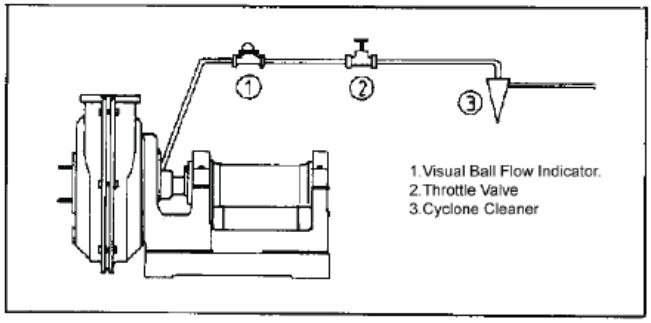

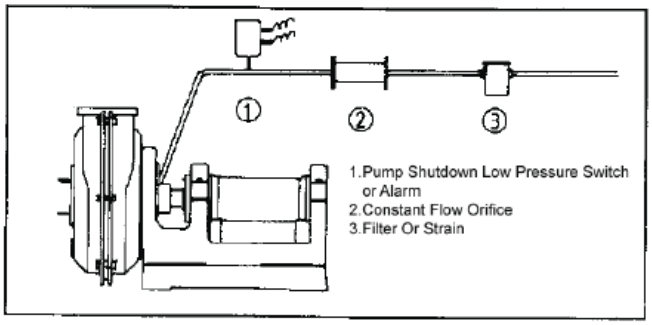

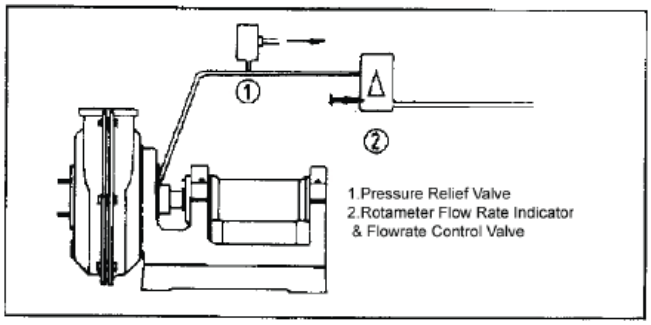

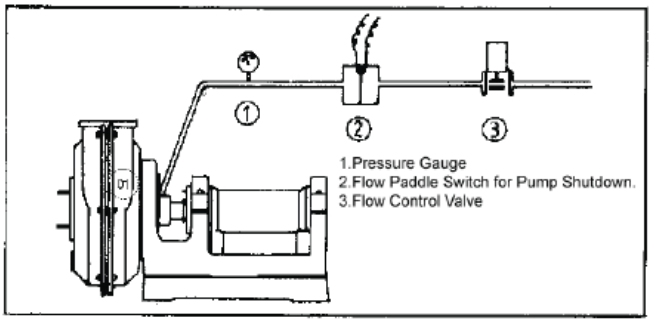

Lubrication and Cooling

Additional grease must only be added about twice per year, as the bearings are already lubricated. **DO NOT over grease the bearings**.

The bearing assemblies are all checked in the factory to prove that they are correctly assembled.

The bearings are designed to run at high temperatures (maximum 120° C) and the grease has to be compatible with this operating condition. Clean grease must be used.

If water gets into the bearings, the assembly must be stripped, thoroughly dried and greased over; then, any seal failure must be corrected.

Recommended greases are Shell Alvania 3, Mobile EP2, Caltex LS3 or their equivalents.

Start-Up Procedure

The recommended procedure to follow is listed below:

- Check the free rotation of the pump
- If required, verify that water for gland services is running
- At first start, or after any work on the electric motor terminal box, check direction of rotation **with drive belts removed**.
- Prime the pump
- Check that all guards are in place and that the pump is safe to run
- Start the pump
- If the pipeline is empty and there is no discharge valve (possibly due to abrasive nature of the product), the pump motor may be bogged down for a period of time and the pump may begin to go through the process of cavitation. This condition should be examined to evaluate the possible long term effect on the equipment.
- Check the pump for noise, vibration or any hot spots.
- **Adjust the gland to maintain a drip**, which is necessary for lubrication and for cooling.

Shutdown Procedure

This depends ultimately on the system and process flow requirements but the following procedure is recommended.

- Stop the flow of solids into the sump.
- Turn the sluicing water or run system on water only to wash out the pump and delivery pipeline.
- Shut down the pump.
- Shut down the gland service water system.

In cold weather, the pump and auxiliary equipment should be drained to prevent freezing damage.

Disassembly Procedure

Check that all power is switched off and isolated and that it is safe, electrically and mechanically, to work the pump. The following sequence is a general guide to stripping the pump for inspection. Refer to Cross Section drawings in Appendix.

On sizes up to the 4x4 (100x100) there is no separate suction bush or liner.

1. Remove the suction pipe and inspect for wear.
2. Check the suction bush liner for wear, noting any uneven wear pattern and position. Check the axial clearance.
3. Between the suction bush liner and the eye of the impeller (or on smaller pumps between the casing liner and eye of the impeller).
4. Remove nuts and suction bush. The suction bush liner is pushed out of the suction bush from the suction side. Some water spread under the lip of the suction bush liner will lubricate its passage out of the suction bush.

5. Remove casing bolts after supporting the suction side casing. Lift off the suction side casing. A crane will be necessary on the larger pumps.
6. The impeller is exposed for inspection. Hold the shaft using a spanner, which is a good fit, on the flats between the gland and the flinger. The impeller is screwed onto the shaft with an Acme right hand thread. The impeller may be very tightly locked onto the shaft and may need an impact force or a long lever to loosen it. If the impeller is to be used again, protect the rubber against damage. Inspect the impeller and note unusual wear patterns in the flow passages and back or front pump out vanes. Check that the "O" ring behind the impeller has sealed against the gland sleeve and slurry has not corroded the impeller or shaft thread. This "O" ring should be replaced at every strip-down.
7. Remove the axial expeller, which is a stretch fit on the gland sleeve. If "D" gland is fitted, the gland sleeve should be removed at this point.
8. Support the gland side casing, undo the casing to pedestal nuts and remove casing half along with the gland assembly. Undo the gland holding screws and remove the gland assembly. Undo liner nuts. The casing liner can now be removed for inspection; be sure to note any unusual wear patterns.
9. Remove bearing pedestal caps and fixings; unfasten the axial positioning jack to enable bearing assembly to be removed.
10. To disassemble the bearing assembly, remove the gland sleeve, flinger and bearing covers. The bearings can be inspected at this stage. If there is no sign of damage, the bearings should not be disturbed and they should merely be washed out with mild solvent oil and re-greased.
11. Press the shaft (with the bearing still fitted) out of the bearing housing. Push the shaft from the impeller side out of the bearing housing. The inner ring of the front bearing will still be attached to the shaft and can be removed later.
12. The remainder of the front bearing can then be withdrawn from housing.
13. Loosen the tab washer, undo the locknut and pull the end bearing off of the shaft.

Notes:

1. The 2x2, 3x3 and 4x4 pumps do not have a loose suction bush liner or suction bush.
2. The 10x8 (250/200) and larger sizes have the inside gland cover, which is held in position by (H14 / P14 / D14). Undo and withdraw the inside gland cover from the impeller side.
3. The Casing Suspension Arm is fitted as a maintenance aid ONLY and as much may be used to support **singularly**, either of the casing halves and its associated liner or the impeller. It must not be used for any other purpose. Suspension arm not fitted to 1.5 x 1.5 and 2x2 (50/50) pump.

Assembly Procedure

Before assembly, ensure all parts are clean and free of old grease and dirt. The new bearings or replacement bearings should be generously filled with grease between the rollers. Check that the Neoprene grease seals are not soft or distorted. Replace if necessary.

1. Clamp the shaft horizontally in a vice. Heat the spherical roller end bearing in an oil bath or induction heater to 240°F (115°C) and fit it to the drive end of the shaft using clean insulated gloves. Ensure the inner ring of the bearing is hard against its seat by tapping it with a brass pin. Fit the tab washer and the lock nut.
2. Fit the inner ring of the front bearing to the impeller end of the shaft. Ensure, by tapping with a brass pin, that it is hard against its seat.
3. Clamp bearing housing securely, grease bearing. Fit shaft and end bearing assembly into housing. Ensure that outer race of bearing is hard against seat.
4. Fit neoprene seal and bearing cover seal to end cover and fix to bearing housing using set screws.

5. Mount bearing housing vertically with front end upwards and wedge shaft so it is central in the housing. Fill front bearing with grease and carefully tap outer ring into bearing housing.
6. Fit neoprene seal and bearing seal cover to front cover and fix to bearing housing using set screws. Fit V-Ring Seal to shaft and place with slight tension against front cover. Fit flinger ring to shaft and locate in position using screw clamp supplied with flinger ring.
7. Set bearing housing assembly into pedestal and loosely assemble bearing pedestal caps with pedestal cap screws; fit axial positioning jack. Rarely, shims are required for shaft alignment; if factory fitted, the thickness of shim required will be stamped on the vertical face of the pedestal adjacent to the pedestal cap stud.
8. If “D” gland is to be fitted – loosely assemble gland components without damaging the wearing face when fitting. Leave the gland sleeve out, as well as “O” rings and face seal. Fit the gland side liner into the gland side casing by securing with liner nuts. Bolt the gland assembly loosely to the casing. Fit the casing and gland assembly to the pedestal using fixings; take care not to damage the wearing face against the shaft on assembly. Fit the “O” rings and face seal to gland sleeve. Slide home onto shaft, through casing and into the gland assembly. Carefully align gland components (specifically check concentricity of gland parts relative to the shaft) and tighten all fixings.
9. If “H” or “P” gland is to be fitted, fit “O” rings to gland sleeve. Slide home onto the shaft. Loosely assemble gland components, slide over shaft and onto the gland sleeve. Fit the gland side liner into the gland side casing securing with liner nuts. Fit the casing to the pedestal using fixings. Carefully align the components of the gland assembly (specifically check concentricity of gland parts relative to the shaft) and fit to the casing. The axial expeller will then have a stretch fit over the gland sleeve.
10. Smear the impeller thread on the shaft with protective long life graphite grease before screwing on the impeller, ensuring that the impeller “O” ring is fitted into the gland sleeve.
11. Fit the suction side liner in the suction side casing using liner nuts.
12. Fit the suction bush liner inside the suction bush before bolting it to the suction side casing using the bolts. NOTE: using soapy water will facilitate the process.
13. Check the concentricity of the fit between suction bush liner and the impeller.
14. Using the axial positioning jack, adjust the impeller toward the suction bush liner, keeping the holding down studs loose. Check the axial clearance between the impeller and the suction bush liner. A steel ring or dummy flange should be bolted to the suction flange to simulate any distortion in the suction bush liner when connected to the suction pipe before the axial clearance is checked. This clearance should be set at approximately 1/8”. Rotate the shaft to ensure effective clearance.
15. Tighten the bearing holding down nuts and the axial positioning jack.

ATTENTION PLANT OPERATORS:
HANG THIS NEAR YOUR PUMP

McLanahan Model IIIr Centrifugal Pump With Type "D" Gland

MOTOR DIRECTION TEST

	ALWAYS PERFORM THE MOTOR DIRECTION TEST WITH THE V BELTS REMOVED

Note: The pump ships with the V-belts removed

	WARNING: RUNNING THE PUMP IN THE WRONG DIRECTION MAY CAUSE THE IMPELLER TO UNSCREW, AND DESTROY THE PUMP.

A motor direction test should be carried out without the belts installed before running the pump for the first time, or after any work on the motors, switchgear or softstart that may affect the direction of rotation of the motor.

STARTING UP AND RUNNING THE PUMP

	BEFORE STARTING, ENSURE THAT THIS PUMP IS BEING SUPPLIED WITH GLAND SERVICE WATER. RUNNING THE PUMP WITHOUT GLAND SERVICE WATER WILL DESTROY THE GLAND

With the pump full of water, and all isolation valves open (if present) start the pump. The pump should immediately start pumping.

BEFORE STARTING THE PUMP FOR THE FIRST TIME

The gland should be pre-set before starting the pump for the first time. To do so:

- Fill the feed sump with water and open the suction isolation valve (if present).
- Evenly adjust the gland Adjusting Nuts (see section 5) so a steady trickle leaks from the gland. Note: On a "P" Gland, tightening the nuts decreases the leak rate.

	WARNING: THE PUMP MUST NOT BE ALLOWED TO RUN IF IT DOES NOT DISCHARGE
	DANGER: RUNNING THE PUMP WITH NO DISCHARGE WILL CAUSE THE LIQUID INSIDE THE PUMP TO HEAT UP. IN EXTREME CASES THIS CAN LEAD TO THE LIQUID BOILING, & THE PUMP CASE MAY EXPLODE

The outside of the pump may not feel hot, as the rubber lining of the pump acts as thermal insulation. If by accident the pump has run without pumped discharge, it must be stopped immediately and the cause of the problem investigated.

	DANGER: IF IT IS SUSPECTED THAT THE PUMP HAS OPERATED WITHOUT DISCHARGE, EXTREME CAUTION SHOULD BE USED IN DRAINING THE PUMP - THE LIQUID INSIDE MAY BE DANGEROUSLY HOT AND UNDER PRESSURE

PRIMING

The McLanahan centrifugal pump is NOT self-priming. For this reason the pump must be installed with a flooded suction, or with the appropriate system for suction lift.

ADJUSTING THE "P" TYPE PACKED GLAND:

Before starting, the gland should have been adjusted so a steady trickle leaks from the gland (see section 2). Check that Gland Service Water is being supplied. See the Manual for details of the flow & pressure requirements.

Final adjustment of the gland should be done with the pump in operation. Tighten the adjusting nuts until the leak reduces to drips. (60 drops /minute maximum, 5 TO 45 drops per minute minimum). Care must be exercised not to tighten too much, which may lead to damage to the seal.

	WARNING: THE ADJUSTING NUTS SHOULD BE ADJUSTED INCREMENTALY, EVENLY, AND IN TURN, TO ENSURE THAT THE GLAND COMPONENTS STAY PARALLEL. TIGHTENING ONE NUT MORE THAN THE OTHERS MAY CAUSE MISALIGNMENT AND DAMAGE TO THE GLAND

STOPPING THE PUMP

Before stopping the pump, it is advisable (if possible) to run the pump on clear water before turning it off, to prevent solids from settling out in the pump casing.

LUBRICATION

The Pump comes from the factory fully greased. The Shaft Bearings should be greased with the correct grade of grease every 1000 hours of operation. Inject grease into the grease nipples by six strokes of a regular size (2" diameter body) grease gun.

The recommended grease is "Conoco Tacna HD No. 2" or equivalent grade grease.

MAINTENANCE

Except for attention to the gland while the pump is in operation, there is no daily maintenance required on the pump. It is essential, however, that routine inspections be carried out, with the first such inspection taking place approximately three months from startup. This inspection should provide some idea of the wear rate, which will be a guide for scheduling future inspections and maintenance. For instructions on dismantling and reassembling the pump, see the instruction manual supplied with the pump.

SPARES

Recommended spare parts are listed in the instruction manual. It is recommended that a supply of the wear parts listed be kept in stock so as to minimize down time in the event of failure of the part. (SEE NEXT PAGE)

PUMP BEARING TEMPERATURE

On high speed duties it is to be expected that the bearings will run hotter than on low speed duties. At 150 F (65 C) the assembly will be uncomfortable to the hands for more than a second or two, but this is not unduly hot for the bearing assemblies. The bearings are designed to run at high temperatures, maximum 120° C.

1.5 X 1.5 DRY GLAND NITRILE PUMP SPARE PARTS LIST

OVERVIEW

McLANAHAN CORPORATION recommends that you keep certain replacement parts at your facility. These parts will be available in the event of a breakdown and will also be available to perform any repairs that must be made as a result of regularly scheduled maintenance checks. **McLANAHAN CORPORATION** stocks a wide variety of commonly used components; however storing these parts at your facility will eliminate the expense of air-freighting critical parts that may be required during a breakdown situation. Refer to the "PARTS LIST AND ASSEMBLY" drawing(s) to assist with parts identification, part numbers and quantities. Contact the Parts Department at **McLANAHAN CORPORATION** for price and availability of all parts for your McLanahan equipment.

Qty	Part Number	Description	Lead Time	
1	09111002000	Gland Repair Kit, Nitrile	Stock	
1	09110001134	Gland Side Liner	Stock	
1	09110001133	Suction Liner	Stock	
1	09110001135	Impeller	Stock	
1	09110002225	Bearing Repair Kit	Stock	
2	293946042	V-BELTS BX42	2 weeks	

Appendix - Long Term Storage

General:

The following are recommendations in reference to long term storage of McLanahan Pumps and Drives; McLanahan does not accept liability for components under these conditions. Documentation and photographic evidence is necessary for warranties to apply.

Preventive Maintenance for Stored Rotating Spares

In the absence of data on premature bearing failures and armature/shaft sag and imbalance, we recommend a general procedure as follows:

The motor shaft targets should generally be used on any motor of 50HP or higher. They also should be used on fans and any other large rotating equipment that sits in storage for lengthy periods of time. By rotating these shafts monthly (or more, depending on the floor vibrations), you are preventing armature and shaft sag as well as false brinelling of the bearings into the races.

You may also find some smaller motors that have premature bearing failures after prolonged storage in your facility. If this is the case, the shaft targets should be attached (with double-stick foam tape) and smaller motors must be rotated.

What is False Brinelling?

Whenever a **non-rotating bearing** is subjected to external vibration, **false brinelling** can occur. A protective oil film cannot form between the races and rotating elements when the bearing isn't turning, causing metal-to-metal contact. False brinelling can occur during transportation, typically truck or rail, and during motor storage if the storage area is subject to vibration.

Another type of brinelling, **true brinelling** occurs in **rotating bearings**.

Pump

If stored, the pump should be kept in a clean, dry, vibration-free environment. The shaft should be rotated manually every three (3) months, or at the same interval as recommended by the electric motor manufacturer. In order to care for the natural rubber linings and components, follow the recommendations below.

Electric Motor

The following information is reprinted from the WEG "Installation and Maintenance Manual for NEMA low Voltage Electric Motors"

Storage

Motors should be raised by their eyebolts and never by their shafts. It is important that high rating three phase motors be raised by their eyebolts. Raising and lowering must be steady; otherwise bearings may be harmed. When motors are not immediately installed, they should be stored in their normal upright position in a dry even temperature place, free of dust, gases and corrosive atmosphere. Other objects should not be placed on or against them. Motors stored over long periods are subject to loss of insulation resistance and oxidation of bearings.

Bearings and lubricant deserve special attention during prolonged periods of storage. Depending on the length and conditions of storage it may be necessary to re-grease or change rusted bearings. The weight of the rotor in an inactive motor tends to expel grease from between the bearing surfaces thereby removing

the protective film that impedes metal-to-metal contact. As a preventive measure against the formation of corrosion by contact, motors should not be stored near machines which cause vibrations, and every 3 month their shafts should be rotated manually.

Insulation resistance fluctuates widely with temperature and humidity variations and the cleanliness of components. When a motor is not immediately put into service it should be protected against moist, high temperatures and impurities, thus avoiding damage to insulation resistance. If the motor has been in storage more than six month or has been subjected to adverse moisture conditions, it is best to check the insulation resistance of the stator winding with a megohmeter. If the resistance is lower than ten megohms the windings should be dried in one of the two following ways:
1) Bake in oven at temperatures not exceeding 194 degrees F until insulation resistance becomes constant.
2) With rotor locked, apply low voltage and gradually increase current through windings until temperature measured with thermometer reaches 194 degrees F. Do not exceed this temperature. If the motor is stored for an extensive period, the rotor must be periodically rotated. Should the ambient conditions be very humid, a periodical inspection is recommended during storage. It is difficult to prescribe rules for the true insulation resistance value of a machine as resistance varies according to the type, size and rated voltage and the state of the insulation material used, method of construction and the machine's insulation antecedents. A lot of experience is necessary in order to decide when a machine is ready or not to be put into service. Periodical records are useful in making this decision.

The following guidelines show the approximate values that can be expected of a clean and dry motor, at 40°C test voltage in applied during one minute.

Insulation resistance Rm is obtained by the formula: $Rm = Vn + 1$

Where: Rm – minimum recommended insulation resistance in MΩ with winding at 40°C
Vn – rated machine voltage in kV

In case the test is carried out at a temperature other than 40°C, the value must be corrected to 40°C using an approximated curve of insulation resistance vs temperature of the winding (see graph below).

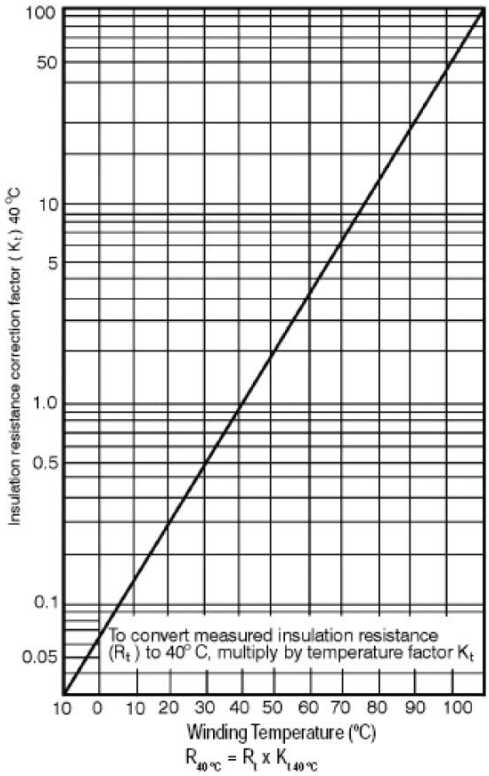

Example:
Ambient temperature = 50°C
Motor winding resistance at 50°C = 1.02 MΩ
Correction to 40°C

R 40°C = R 50°C x K 50°C
R 40º C = 1.02 x 1.3
R 40º C = 1.326 M&
The minimum resistance Rm will be:
Rm = Vn + 1
Rm = 0.440 + 1
Rm = 1.440 MΩ

On new motors, lower values are often attained due to solvents present in the insulating varnishes that later evaporate during normal operation.

This does not necessarily mean that the motor is not operational, since insulating resistance will increase after a period of service. On motors which have been in service for a while, a comparison of the values recorded in previous tests on the same motor under similar load, temperature and humidity conditions, serves as a better indication of insulation condition than that of the value derived from a single test. The cause for any substantial or sudden reduction should be determined, followed by corrective action.

Insulation resistance is usually measured with a **megger**.

In the event that insulation resistance is inferior to the values derived from the above formula, motors should be subjected to a drying process.

Drying the windings

Only qualified personnel should carry out this operation. The temperature should not rise more than 5°C per hour and the overall temperature should not exceed 105°C; if either of these two things occur, vapor which is harmful to the insulation, may be generated.

Temperature should be accurately controlled and insulation resistance should be properly measured at regular intervals during the drying process. During early stages of drying, insulation resistance will decrease as a result of the temperature increasing. However, the resistance will increase again when the insulation dries a little more.

The drying process should be extended until successive measurements of insulation resistance indicate that a constant value above the minimum acceptable value has been attained. It is extremely important that the interior of the motor be well-ventilated during the drying operation to ensure that the dampness is really removed.

Heat for drying can be obtained from outside sources such as an oven or space heater, or by introducing a current through the actual winding of the motor being dried.

Electric machines should be installed in order to allow an easy access for inspection and maintenance. Should the surrounding atmosphere be humid, corrosive or contain flammable substances or particles, it is essential to ensure an adequate degree of protection. The installation of motors in environments where there are vapors, gases or dusts, flammable or combustible materials, subject to fire or explosion, should be undertaken according to appropriate and governing codes, such as NEC Art. 500 (National Electrical Code) and UL-674 (Underwriters Laboratories, Inc.) standards.

Under no circumstances are motors to be enclosed in boxes or covered with materials which may impede or reduce the free circulation of ventilating air. Machines fitted with external ventilation should be at least 50cm from the wall to permit the passage of air. The opening for the entry and exit of air flow should never be obstructed or reduced by conductors, pipes or other objects. The place of installation should allow for renewal at a rate of 700 cubic feet per minute for each 75 HP motor capacity.

Rubber Products

Rubber products in storage can be adversely affected by several factors, including:

- Temperature
- Humidity
- Ozone
- Sunlight
- Oils
- Solvents
- Corrosive liquids and fumes
- Insects and rodents
- Radiation

The warehousing area should be relatively cool, dark and free from dampness and mildew. All rubber products should be used on a first-in, first-out basis since even under these conditions an unusual length of time in storage can result in the deterioration of certain products.

The ideal storage temperature for rubber products is 50 to 70°F (10 to 21°C) with a maximum limit of 100°F (38°C). If stored below 32°F (0°C), some products may become stiff and should be warmed before being placed in service. Rubber products should not be stored near sources of heat, such as radiators and base heaters.

Rubber products **should not** be stored under conditions of high or low humidity.

To protect against the adverse effects of ozone, rubber products should not be stored near electrical equipment that may generate ozone and should not be stored for any lengthy period in geographical areas of known high ozone concentrations. Exposure to direct and reflected sunlight should also be avoided.

Whenever viable, rubber products should be stored in their original shipping containers, especially when such containers are wooden crates or cardboard cartons; this will provide protection against the deteriorating effects of oils, solvents and corrosive liquids, and will also provide some protection against ozone and sunlight.

Certain rodents and insects thrive on rubber products, so the equipment must be protected.

McLanahan ***Pump Applications***

Sand plants
Feeding sand and water to all types of classification and dewatering plants; effluent water transfer duties.

Coal preparation plants
For dense medium circuits, feeding hydrocyclones, filtrate pumping, handling the underflow from thickeners, disposal of effluent, etc.

Chemical manufacturing & Environmental applications
McLanahan pumps, by virtue of their various rubber linings, are suitable for pumping many chemical solutions, acid or alkaline, at moderate temperatures and for the disposal of effluent.

Cement manufacture
Slurry feed to: tube mill circuits, thickener feed and underflow, flotation plant circuits.

Metalliferous mining
Mill circuits, feeding hydrocyclones, cyanide plant filter residues, concentrates, tailings disposal and other pulp and slurry handling duties.

Irrigation systems and dredging
Silt removal in dams and canal sand traps

Paper mills
China clay slurries, paper stock, effluent disposal

Steel works and manufacturing applications
Pickling acid distribution circuits in plate and wire de-scaling plants, abrasive wet scrubber blow-down

Power stations
Boiler house ash disposal, de-scaling plants

China clay production
Feeding slurry to hydrocyclones and for general use in the preparation of china clay

Glass manufacturing
Feeding polishing media, sand plants, handling effluent

Troubleshooting

If a pump fails to pump through a blockage, switch off **immediately**. Take extreme care as the pump may be filled with scorching steam and solids at a high pressure.

Wear and Replacement of Parts

To obtain the best service and performance from the pump, periodic routine inspections should be executed. The rate of wear on pumps is not precisely predictable since it varies from one application to the next, so intervals at which these inspections should be made vary. Initially, the pump should be allowed to run for a period of time (for example, three months); afterward, an examination of the pump will give some idea of the length of life, which may be expected from the rubber-covered parts.

No Discharge When Pump Runs

The pump must not be allowed to run if it does not discharge. If it is noted that the pump has been running without discharge, cease it immediately.

Take extreme care in dismantling after such an occurrence due to high temperature and pressure, which may be present in the pump casing. Do not remove the drain plug until the fluid temperature in the pump has dropped.

Air Lock

Air lock in the casing is the most common cause of failure on a newly installed pump. Even when a pump is well below water level, it may retain a large bubble inside the casing, which prevents the start of pumping. This phenomenon is far more likely with horizontal undershot discharge branch arrangements than any other practical configuration. It is least likely with horizontal overshot arrangements.

If you suspect air lock as the cause of failure to pump, start and stop pump several times to drive the air out, one fraction at a time. When using this procedure, ensure that you do not damage the motor starter or burn out the motor by trying too many starts in a short period of time. The number of permissible attempts will vary with the equipment installed but usually it is safe to try one start every three to four minutes.

Inadequate Prime

Failure to pump may be caused by inadequate priming. This is usually rectified by allowing more time for priming to occur.

It is possible when “jet priming” to have such a small amount of priming water that the pump will never prime; in this case, more water for the priming option will be needed.

Usually, the diameter of the priming branch should be at least one-third of the diameter of the suction pipe. NOTE: 2” (50mm) will prime 6” (150mm), 3” (80mm) will prime 8” (200mm) etc. The minimum water required is about 30% of the pump capacity.

If priming is by vacuum pump, there must be a valve or at least an air-lock on the delivery side. The vacuum pump must be able to “beat” the air leakage throughout the gland. To assist in this, always attempt to prime with the gland water running, no matter what style of priming is being attempted.

Installation Faults

Failure to discharge on start-up can be caused by installation faults. The most common is inadequate sump capacity. The result of installing a sump with inadequate capacity is to risk repeated air-locks of the pump. This can happen when the pump reduces the water level, either allowing a vortex to form, which air-locks the pump, or (when water is introduced to the sump) it entrains so much air that it produces the same effect.

A small sump can easily prevent any discharge reaching the end of the pump discharge line. The only remedy is to extend the sump capacity. We recommend sumps of at least one minute's pumping time as a minimum. NOTE: This recommendation does not apply to feed regulating sumps in sand plants where greater capacity is required.

Other installation faults are more obvious, such as tramp material lodged over a pump suction or a kinked suction hose.

Brief Discharge Only

1. Air Lock

A pump with a suction lift and partial air lock will often start to pump at a greatly reduced rate after each start, and then it will give up completely. At the discharge end of the pipe this may appear as a brief surge followed by failure.

This problem can only be overcome by closer attention to the priming system.

2. Obstructed Suction

If the suction line is obstructed either by tramp material or a delaminated suction hose lining, the pump may start well. However, when the discharge rate rises, the suction obstruction throttles the pump in a way that it quickly fails by gross cavitation.

Detection of this sort of condition is difficult. The only way to guarantee finding out what is actually happening is by using a vacuum gauge immediately before the pump suction. An obstructed suction line will be indicated by a sudden increase in vacuum reading immediately before the failure.

3. Lack of Delivery Resistance

A pump, which is required to pump with a suction or with a fair length of suction pipe, although with practically no resistance on the delivery side, may pump briefly before failing. The reason for this is that centrifugal pumps on open discharge need positive pressure on the suction eye to prevent gross cavitation. If the installation does not provide sufficient positive pressure on the suction side, the pump will fail.

Usually, the easiest way to overcome this difficulty is to artificially create resistance on the delivery side by extending the pipe work or introducing a valve or other resistance, such as an orifice.

Pumps water but not solids

1. Air Leaks on Suction Side

Joints in the suction line or air entrainment with feed into a sump may be insufficient if they are made poorly. Poorly made joints sometimes prevent a pump from pumping water satisfactorily. However, when solids are introduced (particularly coarse solids) the pump has a more arduous duty; it has to entrain the solids into the fast moving stream in the suction pipe. In effect, it has to "dredge" the solids

into the stream. Even if the solids were already moving in the right general direction, they must be accelerated up to the water velocity and thus they act as a suction resistance for the pump.

Introducing solids into an aerated system will cause failure. The pump can only handle a small margin of solids when pumping water alone. Air leaks can usually be detected as water leaks when the pump is not running; **where water can get out, air can get in**. Air entrainment with the feed can sometimes be overcome by the use of baffles in the sump. The air bubbles have time to rise to the surface before being drawn down to the suction.

2. Poor Suction Line

Several different factors in the suction line may allow a pump to appear adequate when it is not. A long suction line, a line with a considerably small diameter or a line with a restriction (sudden step-downs in diameter are the worst) will all affect whether or not the pump can handle solids. The reasons for this are explained in the two previous paragraphs.

Reworking the suction line is the only solution to this problem. If the line increased in diameter it should be brought to the pump inlet diameter by a specially rolled flanged taper pipe. It must not be stepped down by a mismatch.

3. Electric Motor Wrongly Wired

Most Squirrel Cage Induction Motors can be wired in two ways: **Star** or **Delta**. In order to reduce the current surge when a motor is brought **on line**, some users start their motors in **Star.** They do this because this mode gives good starting torque and a reduced starting current surge. Then, change to running their motors in **Delta** once smooth starting has been achieved. The **Delta** mode of powering the motor increases the speed close to synchronous speed, which is maximum, and maintains a constant speed under variations in load.

If a motor is left to run continuously in **Star**, it will vary its speed dramatically with load. If a mistake has been made in the wiring of the motor, it may appear that the pump is unable to pick up solids but is still pumping water. The reason would be that on **Star**, the motor speed drops when the solids load comes on.

To detect this fault, the easiest method is to check the speed of the motor shaft and compare it with the Nameplate rating. There should not be more than a few RPM difference between Nameplate RPM rating and actual speed, no matter what load the pump is pulling.

NOTE: Correction of this fault is intended for an electrician.

Overloads for Motor Trip Out

1. Wrong Pump Speed

The power drawn by a centrifugal pump discharging through a given delivery system is approximately proportional to the cube of its speed. As an example, if the speed is changed by 20% to 1.2 times the original speed, you can expect its power demand to rise by the cube of 1.2, i.e. 1.728, or nearly 73% above the original. Even a rise in speed of 10% to 1.1 times the original speed will give a rise of 33% in power demanded by the pump.

The relationship is not exact but it is close enough for field calculation purposes.

If a pump is run at the wrong speed, it can make a considerable difference to the load drawn from the motor.

Calculation of the correct pump speed is based on:

- Flow rate to be pumped
- Difference in height between pump and discharge points
- Length, diameter and inner surface of pipeline through which pump must deliver
- Number of elbows, bends, valves, other fittings in pipeline
- Equipment at end of pipeline such as hydrocyclones, pressurized distributors, jets, etc.
- Grading, tonnage and specific gravity of solids to be pumped
- Pump performance curves

As far as fault finding is concerned, the actual RPM of a pump should be compared with the RPM specified. Corrections to pump speed can be made by pulley changes.

2. Changed Pipeline System

It is not uncommon for a pump speed to be calculated on the basis of a pipeline system intended to be used at the time of the negotiations for the purchase of the pump, but to be commissioned into service with a different pipeline system. A client may say, "but it's not such a high lift so the pump does not have to work quite so hard." **This is not true.** At a given pump speed, a pump will pump a larger amount through a shorter pipeline (or lesser vertical height) and **will take more power**, not less.

When confronted with this situation, the only thing to do is to calculate the correct **head** and RPM before making a pulley change. The affinity rule can be used or the drive can be recalculated.

3. Low Voltage

The power consumed by an electric motor is the product of the voltage, amperage and power factor for the motor. If a pump demands a certain power from the motor, the motor in turn will demand corresponding amperage from the electric supply system. However, if the voltage of the electric supply system happens to be lower than normal, the motor will draw extra amps to meet the pump's power demand. This way the power consumed by the motor, the product of voltage, amperage and power factor remains unchanged.

Circumstances where lower than standard voltages might be encountered include:

- When power supply is from a generator set
- At the end of a long trailing cable
- At the end of an electric supply system remote from the nearest transformer substation
- In an area where very heavy start-up loads can occur, such as near large crusher stations or long conveyor installations

Low voltage can readily cause a motor overload by drawing higher than expected amps; this is, in no way, related to the pump itself.

If low voltage is suspected as the cause of motor overload, a qualified electrician should be called.

4. Wrongly Set Overload Protection

All motor starting equipment has some form of overload protection equipment built into the system so a burnt out motor or locked-rotor motor does not cause more extensive damage. If a motor repeatedly drops out on overload and there is no other readily apparent reason, the electrical overload protection equipment should be checked.

5. Mechanical Fault in Pump

The pump shaft should be free to turn by hand. Remove the V-belts and check the pump shaft for freedom to turn. If there is no resistance, the fault must be in the motor. If a jarring or resistance can be felt when attempting to turn the pump shaft, drop off the suction pipe and check the clearance between the impeller and suction plate. Also check for blockages.

If this proves clear, remove the suction bush and look for marks on the surface of the impeller, which might indicate if the impeller has been rubbing. In this case, rotate the shaft again to determine if the resistance is still present; if it is, remove the impeller and inspect the gland side liner. If there is still no evidence of rubbing, rotate the shaft by hand again to check that the resistance is still present; then, remove the gland sleeve. If the resistance can still be felt by hand it can only be the bearings of the pump.

The remedies for the faults, which may be revealed by this step-by-step approach are:

- Impeller rubs on suction bush: release bearing housing, set impeller to suction bush clearance by adjusting position of bearing housing until impeller runs free. Tighten bearing housing. Replace suction pipe. Re-align belt drive.
- Impeller rubs on gland half lining; reset the suction bush clearance. Check for movement of casing liner.
- Seizure in the gland area. Strip and inspect.
- Shaft tight in bearings; there is no simple field remedy if the pump shaft is found to be tight in the bearings, the rotating assembly must be removed and stripped for inspection of the bearings and grease seals.

6. Air Entrainment

In sump-fed pump systems, air entrainment with the pump feed can produce periodic overloads on the motor by the following sequence of events:

- Air entrainment with feed gives the pump a “spongy” pulp, which reduces the pump throughput and power.
- Flow through the sump is reduced allowing air in the feed now entering the sump to escape to the surface. Solids, of course, reach the pump suction.
- The pump now has a largely de-aired pulp of far greater percentage solids than intended, and the power demand rises. At this stage the pump may choke. This is a dangerous condition.
- Pump entrains the accumulated solids into suction pipeline and begins to pump normally again, increasing throughput through sump.
- Air entrainment begins to reach pump suction again and sequence repeats.
- Air entrainment can permanently reduce slurry throughput and make it appear as if the pump is not working.

In small installations this surge may be repeated at three minute intervals; in large installations, it may take as long as five minutes for the full cycle to complete. If the cycle terminates at stage three, the pump may explode, if it is left to run while blocked.

Pump Handles Only a Limited Percentage Solids

Pump Speed Incorrect

With increasing solids feed into a pumping system three major factors will limit the percentage solids handled:

- Friction resistance increases, leaving less pressure on the delivery side to maintain the velocity in the pipeline
- Critical (settling) velocity for the pulp in the pipeline increases
- Pump performance "drops" so that the total head generated by the pump diminishes

Clearly, if the pump speed has been calculated for water only, increasing tonnages of solids are fed into the system; the combination of factors above may soon produce a situation where the pipeline velocity is too low to maintain movement of the solids.

Air Entrainment

Under 15.3, section 1 above, there is an explanation of how a pump can handle water, but due to the air entrainment, fails when solids are introduced to the system. The same fault can sometimes explain why a pump appears to perform well on pulp up to a certain percentage solids, then "gives up" when this is passed.

Poor Suction Line

A suction line layout as described in 15.3, section 2 is far worse as the percentage solids is increased and can become completely blocked.

Cavitation

If a pump is expected to draw relatively coarse solids from a sump below the pump centerline, depending on the speed of the pump and its capacity in relation to the flow rate being handled, it may suffer from cavitation. When this happens, and the onset is often quite sudden and sharp, the total head generated by the pump diminishes dramatically. As described previously, the conditions for blocking a line are suddenly created; namely reduced delivery pressure for maintaining flow combined with increased requirement for velocity in the pipeline.

Generally, if cavitation is the source of the trouble, there is ample evidence; audible cavitation "rattle" in the pump or from the bearings, sudden reduction in power demand, the gland leaks or draws air and there is a dramatic drop in delivery pressure.

The solution to the problem is to make the suction arrangements as smooth as possible without restrictions as well as to arrange for the feed to come gradually up to load without sudden surges of solids. If these measures do not overcome the problem it may be necessary to change the suction line to a size larger and fit a flat topped taper-piece to the pump suction. If trouble persists, a larger pump will have to be installed. Something effective must be done as the situation is potentially dangerous.

Gland Will Not Seal Adequately

1. Poor Adjustment

The outer seal of a Hydrostatic gland assembly must be allowed to rub lightly on the gland sleeve for an effective seal to be maintained. If the gland adjuster is pushed in too far this will lift the seal off the sleeve and the gland will leak profusely. When seeing a leaking gland, most people immediately think

to tighten it. With the Hydrostatic gland, the **gland adjuster must be moved outward to reduce leakage.**

Type D and P glands should be tightened for reduction of leakage in the same way as standard packed glands in water pumps. **Over tightening should be avoided**, especially on "D" glands as a drip is always necessary to lubricate the rubber face seal.

2. Dry Running

The glands will not be damaged by a few seconds of running without lubrication and cooling by water, but if either gland runs for a length of time without water in the pump, there is danger of melting the rubber seals. If a Type D gland has been correctly adjusted, this is a fairly remote danger because without hydraulic pressure to force the rubber seal against the gland seat, the seal should run without touching the seat. However, do not run a pump in dry conditions because of the danger of damaging the gland seals.

Once seals have been damaged in this way, they must be replaced.

3. Too Much Sealing Pressure

Too much water pressure in either type of gland can make the glands almost impossible to seal reliably. With Hydrostatic glands the solution to the problem is to insert a pressure control in the gland water line. With Type D glands the problem usually only arises with pumps being run in a series or as booster pumps. In either case, the only solution is to convert the pump over to H gland or P gland and provide suitably pressured gland water.

4. Inadequate Prime

The "snore" condition for operating a pump is very difficult to seal without unacceptable leakage. Under this condition a pump continuously receives a good proportion of air drawn in with the pulp from the sump, in which the level is too low, or the sump has inadequate capacity, or both. The sump should contain a minimum of one minute's pumping time.

Excessive Heat in Drive

1. Slack V-belts

The most common cause for generation of heat in the drive to a newly installed pump is undoubtedly lack of tension in the V-belts. All V-belts should be tensioned periodically and newly commissioned drives should be re-tensioned an hour or so after start up.

This fault is easily detected (pulleys are the hottest part of the drive) as the belts will have been slipping.

2. Hot pump Bearings

On high speed duties it is to be expected that the bearings will run hotter than on low speed duties. Providing the shaft is free spinning by hand, the heat generated while running under power is probably immaterial. At 150°F (65°C) the assembly will be uncomfortable to the hands for more than a second or two; this is not unduly hot for the bearing assembles. If the bearing is failing, the shaft will not run free.

3. Inadequate Lubrication of Pump Bearings

The bearings will be charged with grease before dispatch from the factory. Details of lubricants are given in this Manual.

Addition of grease should be tried if bearings become very hot or noisy. Excess greasing should be avoided.

4. Motor Runs Hot

Motors are intended to run hot. With Continuous Maximum Rated Motors, the temperature rises are surprising and are allowed for in the design of the motor and the selection of the insulation.

Generally, heat from a motor can be safely ignored, provided the amperage drawn is lower or equal to the nameplate rating. Many motors are fitted with Thermistors in the windings, which sense the temperature rise and are wired to operate a cut-out relay if the temperature exceeds a safe limit.

If a pump is choked when the motor starts, the protection must trip out the supply to the motor.

Bearing troubles in motors are generally indicated b noise as well as heat and can sometimes be detected by use of a long-stemmed screwdriver. The blade of the screwdriver is pushed against the bearing cover and the ear of the investigator pushed up to the handle. With a limited amount of experience bearing “rumble” can quite easily be detected.

Sudden Reduction in Discharge

1. Change in Feed Conditions

Operators do not always recognize a pump as simply one element in a complete system and any change in that system will bear on all the parts of it. For instance, if a screen rejecting plus ¼” (6 mm) material is worn and passes 1” (25 mm) stones, this affects the pump performance. The suction resistance of the larger stones will cause the suction pressure to reduce and have less head available for pushing the pulp through the delivery side piping.

At the pump, the larger stones will make a significant difference to the pump performance, decreasing flow and potentially causing damage to Impeller and Linings.

In the pipeline, the large stones will probably progress by “saltation,” that is, leaping along the bottom of the pipe. The rest of the pulp is fully in suspension and has to flow past these slow moving obstacles. Overall this means the resistance of the pipeline to flow has increased, thus, again reducing flow.

A simple fault such as a screen cloth with a hole in it can cause a sudden reduction in discharge. If it causes the pipeline to block, the condition is potentially dangerous.

Other changes in feed conditions, which must be investigated are: increased tonnage of solids, change of grading of solids and change in manner of introduction of solids to pump system. On this last count, a plant, which was started in summer, and is bin-fed via a vibrating feeder, will perform differently in winter when the wetter feed “hangs up” in the feed bin and collapses down onto the feeder intermittently in larger dollops.

2. Air leaks on the Suction Pipe

A pipe, which has been steadily wearing away from the inside may break through to the open air near a flange (in a welded area) at the bottom of the pipe, which is where the coarsest solids run. In a suction pipe this will almost certainly allow air into the pipe with all the resultant ills described elsewhere.

Frequently, a pinhole leak will not allow enough air into a pump for any of the five faults listed to become critical. Operators, being human, postpone the repair or replacement of the worn pipe. The last chapter of the saga occurs surprisingly quickly and usually on nightshift – when fault produces a blocked pipeline.

3. Suction Blockage

In dredging applications there is always the danger that the pump suction will be suddenly submerged in collapsed solids from the surrounding pit contours. When pumping from a sump, the same thing can happen when solids, which have been clinging precariously to the steel sides of the sump, subside and momentarily block the pump suction.

If the pump is feeding a fair length of delivery piping, it will not be possible for the long column of pulp in that piping to come instantly to rest when the suction gets blocked. The pulp in an 8" (200mm) pipe, 1000 ft (300 m) long, moving at 10ft/sec (3 m/sec) has considerable momentum. It cannot be stopped dead in the same short length of time it takes to block the suction.

The result is a massive reduction in pressure throughout the system. It can cause a massive "water hammer" and surges that can split the pump casing, valves and piping. This can cause hoses to collapse – delivery as well as suction – and almost invariably leads to a great gulp of air being sucked through the pump gland. Usually this is sufficient to air-lock the pump.

When an operator hears the air hiss into the gland and then has to contend with the resultant air-lock, the assumption is that the gland is at fault for pump failure. However, the trouble generally begins at the end of the suction pipe and the gland collapses afterward.

In dredging applications, better control should be taken over the pit development. In sump-fed systems, the feed pulp can sometimes be directed to flush away any build-up of solids on the sides or valleys of the sump.

If this is not possible, a larger capacity take-off box at the base of the sump must improve the situation. The blocked pipeline situation is potentially dangerous.

4. Tramp Material

The simplest explanations of a fault should never be overlooked. If the complaint is sudden reduction in discharge, drain the sump and before removing any pipe work or dismantling the pump in any way, examine the take-off box at the base of the sump.

Sudden Increases in Power Demand

5. Damage Inside Pump

Pumps wear with each use. Results of abrasion, which will give an increase in power demand, are shown below in order of occurrence frequency.

- Excessive gap between impeller and suction bush
- Cut or ripped rubber in suction bush or casing gland rubbing against impeller
- Worn out cutwater
- Worn out or broken casing liners
- Impeller worn through back shroud
- Impeller passages worn significantly wider than intended

6. Change in Pipeline System

DO NOT alter pipeline system by shortening or changing layout. If altered, it will pump larger amounts and take more power.

7. Low Voltage

A new installation near the pump site can make a significant difference in the amount of voltage available, depending on the electric distribution system in the area. Lower volts means higher current for the same power output of the motor.

8. Changed Pump Speed

When dismounting both pump and motor pulleys, electricians have, in the past, interchanged the pulleys when reassembling the pump set. Ensure this does not happen.

9. Air Entrainment

In sump-fed pump systems, air entrainment can produce cyclic pump overload, caused by a change to the amount or direction in which a sump is fed. It could also be caused by a casual change to the feed type baffle arrangement in the sump.

Rapid Component Wear

1. Air Entrainment

As an experiment, place some sand in an empty bottle, fill the bottle to the very top with water, place the palm of one hand over the top and shake the bottle. You will find it difficult to move the sand vigorously against your hand. Now tip out a third of the water, and repeat the test. You will undoubtedly feel the sand in the air-water froth hitting your palm.

The point of the experiment is to show how much more readily sand can move around in froth than it can in water without air bubbles. Therefore any air leaks in the suction side accelerate abrasion.

If air entrainment is severe enough to produce an air lock in the presence of solids and water, the result is an escalation of the abrasion rate.

Air entrainment can also cause severe abrasion indirectly. With cyclic changes in pulp density due to air, the pump may have to handle far denser pulp than intended. This is also an abrasive accelerator.

2. Properties of the Solids

When confronted with a rapid abrasion problem such as coarse or sharp-edged particles, always reduce pump speed if possible. A larger pump with a larger diameter impeller will be rotating slower at the suction eye of the impeller for a given head than a smaller pump would. So, if wear on the leading edge of the vanes occurs, a larger pump would help.

3. Change in Feed Conditions

A change in feed conditions, such as extra tonnage, coarser grading or higher proportion of crushed material will all affect the rate of wear on a pump. As an example, deposits from a river are notoriously variable; the proportion of crushed sand in relation to natural sand can vary widely. However, to the operator, sand is sand, and the fact that the pump is now handling, say 80% crushed material, while three months ago it was 60% natural sand may not appear significant.

If there is a permanent change in feed conditions, which makes component life unsatisfactory, consider modifying the pump. A two-stage pump set will allow each pump to run at about 70% of the speed that a single unit would run, which would make a significant change to the abrasion rate.

4. Shaft Misalignment

After several years of wear and tear, the saddles on the pedestal occasionally wear out, thus allowing the shaft to point downward. If the eccentricity of the shaft through the gland is severe enough, the gland will not seal properly. There will also be a misalignment between the eye of the impeller and the suction bush, which will detract from pump performance. In this case, the most effective solution, reducing cost and saving time, would be to purchase a new pedestal. Temporarily, the saddles may be packed with shims; however, these inevitably get lost during impeller adjustment.

Mechanical Failure

1. Broken Shaft

Typically, the only broken shafts on McLanahan pumps are those where there has been tramp material in the feed, a bearing has seized, or slurry has worn through the gland sleeve. In this case, wear will of course weaken the shaft.

2. Broken Pedestal or Casing

Although the front bracket of the pump pedestal appears massive, it can be broken down from the box section of the pedestal by simply starting the pump backwards. As a result, the impeller will begin to unscrew from the shaft, and while in motion, strikes the suction bush, which is fixed in place by the flange of the suction pipe work. Because something has to give, occasionally, with older shafts, the thread in the shaft is stripped instead of the pedestal being broken.

Realigning broken pedestals can be quite difficult; therefore, the quickest, most cost-effective way to fix a broken pedestal is merely to replace it.

A pump running backwards is an electrical problem, which is overcome quite easily, and should not happen to begin with. Electricians are required to check the direction of rotation of a motor prior to fitting the V-belts onto the pulleys.

3. Pump Explodes

The centrifugal pump (McLanahan or any other) can potentially explode by running with pulp or water in the casing when there is no discharge. This can happen in a pump that is drawing pulp from a sump and pumping it to a cyclone through a rising pipeline. If the pump receives a sudden surge of solids, which blocks off the suction, flow will cease. In the delivery line, the solids will settle in the rising pipe but will be unable to enter the casing because the impeller will still be spinning.

As the impeller rotates, the pump will continue absorbing power. The power raises the fluid temperature. The water will eventually boil and the pressure may be enough to destroy the rubber or cause the pump head to explode. **If a pump head feels unusually warm and is not discharging**, switch the power off immediately. **Do not approach the pump** until it has been relieved of pressure, preferably through the suction or discharge pipework by flushing away the solids plugs. A sign that a pump may explode will be a considerable amount of steam leaking from the gland.

NOTE: at this point, even if a pump does not feel hot, be extremely cautious when dismantling, as the pump may be full of scalding water. Do not remove the drain plug until certain the fluid temperature in the pump has reduced. If in doubt, carefully clear blockages in the manner described above.

This page is intentionally left blank

INSTALLATION AND MAINTENANCE MANUAL FOR NEMA LOW VOLTAGE ELECTRIC MOTORS

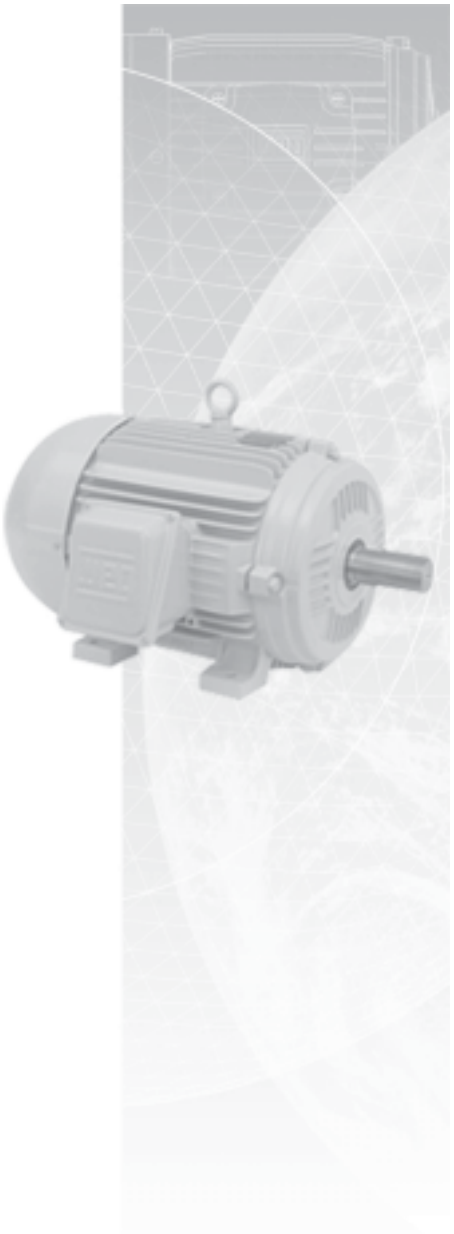

The electric motor is the item of equipment most widely used by man in his pursuit of progress, as virtually all machines and many renowned inventions depend upon it.

By virtue of the prominent role the electric motor plays in the comfort and welfare of mankind, it must be regarded and treated as a prime power unit embodying features that merit special attention, including its installation and maintenance.

This means that the electric motor should receive proper attention.

Its installation and routine maintenance require specific care to ensure perfect operation and longer life of the unit.

THE WEG ELECTRIC MOTOR INSTALLATION AND MAINTENANCE MANUAL provides the necessary information to properly install, maintain and preserve the most important component of all equipment:

THE ELECTRIC MOTOR!

WEG

Contents

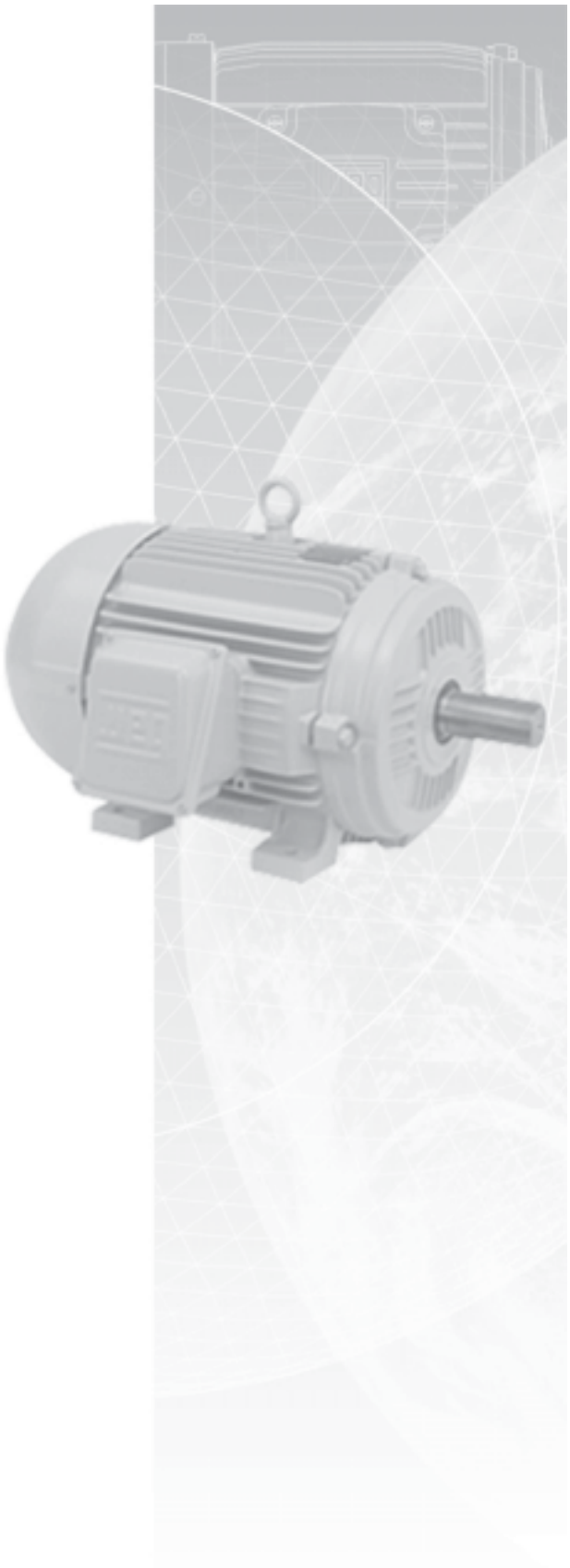

1 - Introduction 04

2 - Basic Instructions 05
- **2.1** Safety Instructions 05
- **2.2** Delivery 05
- **2.**3 Storage 05
  - **2.3.1** Drying the Windings 06

3 - Installation 07
- 3.**1** Mechanical Aspects 07
  - 3.**1.1** Foundation 07
  - 3.**1.2** Types of bases 07
  - 3.**1.**3 Alignment 08
  - 3.**1.**4 Coupling 08
- 3.**2** Electrical Aspects 16
  - 3.**2.1** Feed System 16
  - 3.**2.2** Starting of Electric Motors 16
  - 3.**2.**3 Motor Protection 18
- 3.3 Start-up 18
  - 3.3.**1** Preliminary Inspection 18
  - 3.3.**2** The First Start-up 18
  - 3.3.3 Operation 18
  - 3.3.4 Stopping 18

4 - Maintenance 23
- 4.**1** Cleanliness 23
- 4.**2** Lubrication 23
  - 4.**2.1** Periodical Lubrication 23
  - 4.**2.2** Quality and Quantity of Grease 23
  - 4.**2.**3 Lubricating Instructions 23
  - 4.**2.**4 Replacement of Bearings 24
- 4.3 Air Gap Checking 24
- 4.4 Explosion Proof Motor Repair Steps 24
  - 4.4.**1** Objective 24
  - 4.4.**2** Repair Procedure and Precautions 24
  - 4.4.3 Miscellaneous Recommendations 25

5 - **Malfunctioning** 26
- 5.**1** Standard Three-phase Motor Failures 26
  - 5.**1.1** Short Circuits Between Turns 26
  - 5.**1.2** Winding Failures 26
  - 5.**1.**3 Rotor Failures 27
  - 5.**1.**4 Bearing Failures 27
  - 5.**1.**5 Shaft Fractures 27
  - 5.**1.**6 Unbalanced V-Belt Drives 27
  - 5.**1.**7 Damage Arising from Poorly Fitted Transmission Parts or Improper Motor Alignment 27
- 5.**2** Troubleshooting Chart 28

6 - Spare Parts and Component Terminology 29

1. Introduction

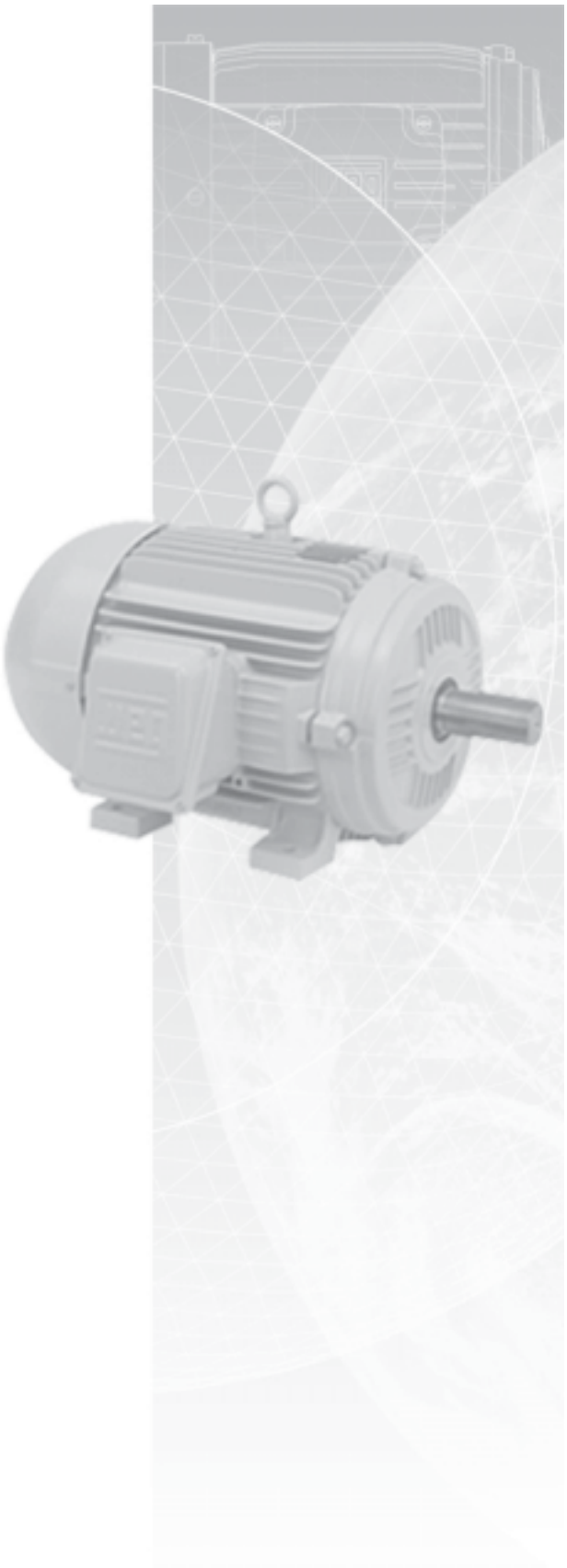

This manual covers all the three-phase and single-phase asynchronous squirrel-cage induction motors, from 140T to 580T frame sizes.

The motors described in this manual are subject to continuous improvement and all information is subject to change without notice.
For further details, please consult WEG.

2. Basic Instructions

2.1 Safety Instructions

All personnel involved with electrical installations, either handling, lifting, operation and maintenance, should be well-informed and up-to-date concerning the safety standards and principles that govern the work and carefully follow them.
Before work commences, it is the responsibility of the person in charge to ascertain that these have been duly complied with and to alert his personnel of the inherent hazards of the job in hand.
It is recommended that these tasks be undertaken only by qualified personnel and they should be instructed to:

- avoid contact with energized circuits or rotating parts,
- avoid by-passing or rendering inoperative any safeguards or protective devices,
- avoid extended exposure in close proximity to machinery with high noise levels,
- use proper care and procedures in handling, lifting, installing, operating and maintaining the equipment, and
- follow consistently any instructions and product documentation supplied when they do such work.

Before initiating maintenance procedures, be sure that all power sources are disconnected from the motor and accessories to avoid electric shock.
Fire fighting equipment and notices concerning first aid should not be lacking at the job site; these should be visible and accessible at all times.

2.2 Delivery

Prior to shipment, motors are factory-tested and balanced. They are packed in boxes or bolted to a wooden base.
Upon receipt, we recommend careful handling and a physical examination for damage which may have occurred during transportation.
In the event of damage and in order to guaranty insurance coverage, both the nearest WEG sales office and the carrier should be notified without delay.

2.3 Storage

Motors should be raised by their eyebolts and never by their shafts. It is important that high rating three-phase motors be raised by their eyebolts. Raising and lowering must be steady and joltless, otherwise bearings may be harmed.
When motors are not immediately installed, they should be stored in their normal upright position in a dry even temperature place, free of dust, gases and corrosive atmosphere.
Other objects should not be placed on or against them.
Motors stored over long periods are subject to loss of insulation resistance and oxidation of bearings.

Bearings and lubricant deserve special attention during prolonged periods of storage. Depending on the length and conditions of storage it may be necessary to regrease or change rusted bearings. The weight of the rotor in an inactive motor tends to expel grease from between the bearing surfaces thereby removing the protective film that impedes metal-to-metal contact.
As a preventive measure against the formation of corrosion by contact, motors should not be stored near machines which cause vibrations, and every 3 month their shafts should be rotated manually.

Insulation resistance fluctuates widely with temperature and humidity variations and the cleanliness of components. When a motor is not immediately put into service it should be protected against moist, high temperatures and impurities, thus avoiding damage to insulation resistance.
If the motor has been in storage more than six month or has been subjected to adverse moisture conditions, it is best to check the insulation resistance of the stator winding with a megohmeter.
If the resistance is lower than ten megohms the windings should be dried in one of the two following ways:

1) Bake in oven at temperatures not exceeding 194 degrees F until insulation resistance becomes constant.
2) With rotor locked, apply low voltage and gradually increase current through windings until temperature measured with thermometer reaches 194 degrees F. Do not exceed this temperature.

If the motor is stored for an extensive period, the rotor must be periodically rotated.
Should the ambient conditions be very humid, a periodical inspection is recommended during storage. It is difficult to prescribe rules for the true insulation resistance value of a machine as resistance varies according to the type, size and rated voltage and the state of the insulation material used, method of construction and the machine's insulation antecedents. A lot of experience is necessary in order to decide when a machine is ready or not to be put into service. Periodical records are useful in making this decision.

The following guidelines show the approximate values that can be expected of a clean and dry motor, at 40°C test voltage in applied during one minute.

Insulation resistance Rm is obtained by the formula:

$$Rm = Vn + 1$$

Where: Rm - minimum recommended insulation resistance in MΩ with winding at 40°C
Vn - rated machine voltage in kV

In case the test is carried out at a temperature other than 40°C, the value must be corrected to 40°C using an approximated curve of insulation resistance v.s temperature of the winding with the aid of Figure **2.1**; it's possible verify that resistance practically doubles every 10°C that insulating temperature is lowered.

Example:

Ambient temperature = 50°C
Motor winding resistence at 50°C = **1**.0**2** MΩ
Correction to 40°C

$$R_{40°C} = R_{50°C} \times K_{50°C}$$

$$R_{40°C} = \mathbf{1}.0\mathbf{2} \times \mathbf{1}.3$$

$$R_{40°C} = \mathbf{1}.3\mathbf{2}6\ M\Omega$$

The minimum resistence Rm will be:

$$Rm = Vn + \mathbf{1}$$
$$Rm = 0.440 + \mathbf{1}$$
$$Rm = \mathbf{1}.440\ M\Omega$$

On new motors, lower values are often attained due to solvents present in the insulating varnishes that later evaporate during normal operation. This does not necessarily mean that the motor is not operational, since insulating resistance will increase after a period of service.
On motors which have been in service for a period of time much larger values are often attained. A comparison of the values recorded in previous tests on the same motor under similar load, temperature and humidity conditions, serves as a better indication of insulation condition than that of the value derived from a single test. Any substantial or sudden reduction is suspect and the cause determined and corrective action taken.
Insulation resistance is usually measured with a MEGGER.
In the event that insulation resistance is inferior to the values derived from the above formula, motors should be subjected to a drying process.

2.3.1 Drying the windings

This operation should be carried out with maximum care, and only by qualified personnel. The rate of temperature rise should not exceed 5°C per hour and the temperature of the winding should not exceed **1**05°C. An overly high final temperature as well as a fast temperature increase rate can each generate vapour harmful to the insulation.
Temperature should be accurately controlled during the drying process and the insulation resistance measured at regular intervals.
During the early stages of the drying process, insulation resistance will decrease as a result of the temperature increase, but the resistance will increase again when the insulation becomes dryer.
The drying process should be extended until sucessive measurements of insulation resistance indicate that a constant value above the minimum acceptable value has been attained. It is extremely important that the interior of the motor be well ventilated during the drying operation to ensure that the dampness is really removed.
Heat for drying can be obtained from outside sources (an oven), energization of the space heater (optional), or introducing a current through the actual winding of the motor being dried.

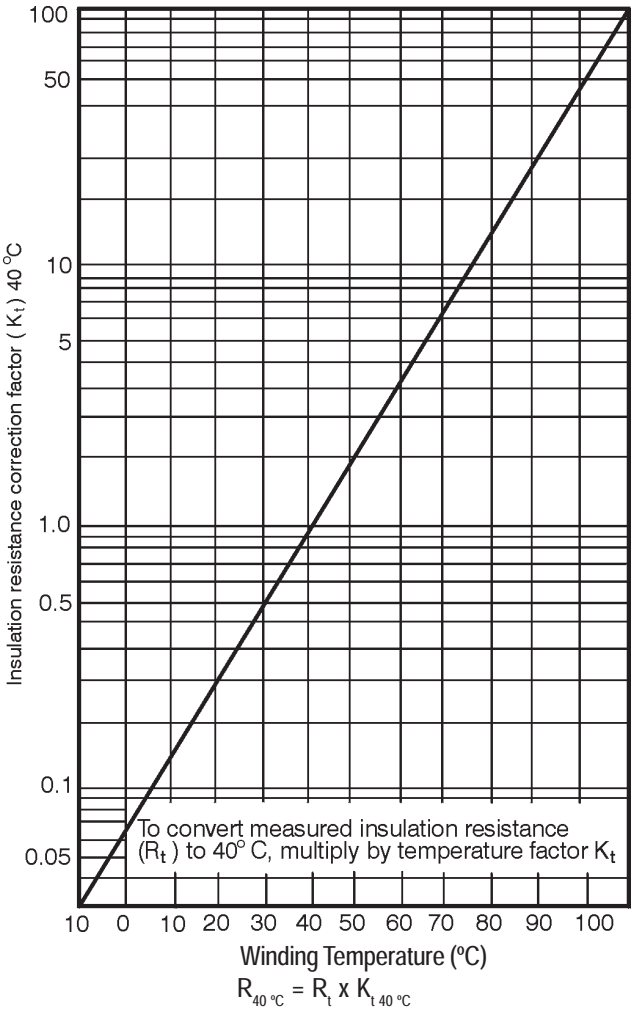

*Figure **2.1***

3. Installation

Electric machines should be installed in order to allow an easy access for inspection and maintenance. Should the surrounding atmosphere be humid, corrosive or contain flammable substances or particles, it is essential to ensure an adequate degree of protection.
The installation of motors in environments where there are vapours, gases or dusts, flammable or combustible materials, subject to fire or explosion, should be undertaken according to appropriate and governing codes, such as NEC Art. 500 (National Electrical Code) and UL-674 (Underwriters Laboratories, Inc.) Standards.
Under no circumstances can motors be enclosed in boxes or covered with materials which may impede or reduce the free circulation of ventilating air. Machines fitted with external ventilation should be at least 50cm from the wall to permit the passage of air.
The opening for the entry and exit of air flow should never be obstructed or reduced by conductors, pipes or other objects.
The place of installation should allow for air renewal at a rate of 700 cubic feet per minute for each 75 HP motor capacity.

3.1 Mechanical Aspects

3.1.1 Foundation

The motor base must be levelled and as far as possible free of vibrations. A concrete foundation is recommended for motors over **1**00 HP. The choice of base will depend upon the nature of the soil at the place of erection or of the floor capacity in the case of buildings.
When dimensioning the motor base, keep in mind that the motor may occasionally be run at a torque above that of the rated full load torque.
Based upon Figure 3.**1**, foundation stresses can be calculated by using the following formula:

$$F\mathbf{1} = 0.\mathbf{22}47\ (0.009 \times g \times G - \mathbf{21}3\ Tmáx/A)$$

$$F\mathbf{2} = 0.\mathbf{22}47\ (0.009 \times g \times G + \mathbf{21}3\ Tmax/A)$$

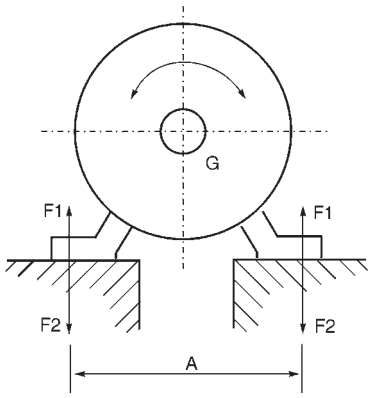

*Figure 3.**1** - Base stresses*

Where:

F**1** and F**2** - Lateral stress (Lb)
g - Force of gravity (3**2**.**1**8 ft/s²)
G - Weight of motor (Lb)
Tmax - Maximum torque (Lb . Ft)
A - Obtained from the dimensional drawing of the motor (in)

Sunken bolts or metallic base plates should be used to secure the motor to the base.

3.1.2 Types of Bases

a) Slide Rails

When motor drive is by pulleys the motor should be mounted on slide rails and the lower part of the belt should be pulling.
The rail nearest the drive pulley is positioned in such a manner that the adjusting bolt be between the motor and the driven machine.
The other rail should be positioned with the bolt in the opposite position, as shown in Figure 3.**2**.
The motor is bolted to the rails and set on the base. The drive pulley is aligned such that its center is on a plane with the center of the driven pulley and the motor shaft and that of the machine be parallel.

The belt should not be overly stretched, see Figure 3.**11**.
After the alignment, the rails are fixed.

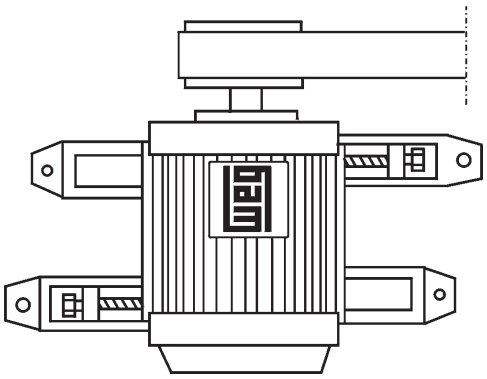

*Figure 3.**2** - Positioning of slide rails for motor alignment*

b) Foundation Studs

Very often, particularly when drive is by flexible coupling the motor is anchored directly to the base with foundation studs.
It is recommended that shim plates of approximately 0.8 inches be used between the foundation studs and the feet of the motor for replacement purposes. These shim plates are useful when exchanging one motor for another of larger shaft height due to variations allowed by standard tolerances.
Foundation studs should neither be painted nor rusted as both interfere with to the adherence of the concrete, and bring about loosening.
After accurate alignment and levelling of the motor, the foundation studs are cemented and their screws tightened to secure the motor.

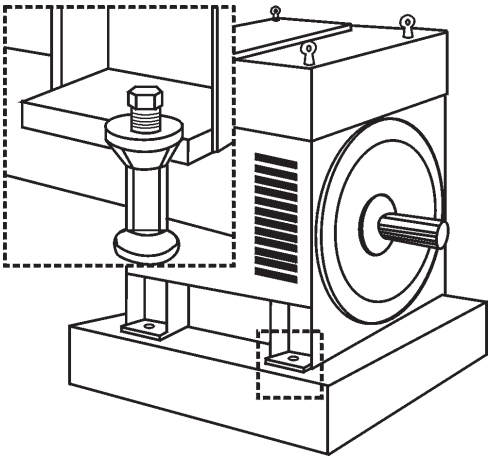

Figure 3.3 - Motor mounted on a concrete base with foundation studs

3.1.3 Alignment

The electric motor should be accurately aligned with the driven machine, particularly in cases of direct coupling. An incorrect alignment can cause bearing failure vibrations and even shaft rupture.
The best way to ensure correct alignment is to use dial gauges placed on each coupling half, one reading radially and the other exially - Figure 3.5.

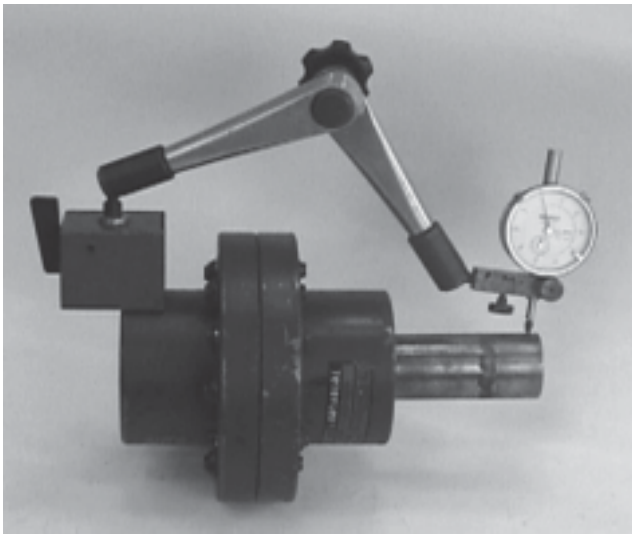

Figure 3.5 - Alignment with dial gauges

Thus, simultaneous readings are possible and allow for checking for any parallel (Figure 3.6a) and concentricity deviations (Figure 3.6b) by rotating the shafts one turn.
Gauge readings should not exceed 0.0**2** inches. If the installer is sufficiently skilled, he can obtain alignment with feeler gauges and a steel ruler, providing that the couplings are perfect and centered - Figure 3.6c.

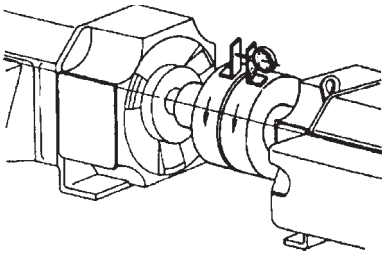

Figure 3.6a - Deviation from parallel

Figure 3.6b - Deviation from concentricity

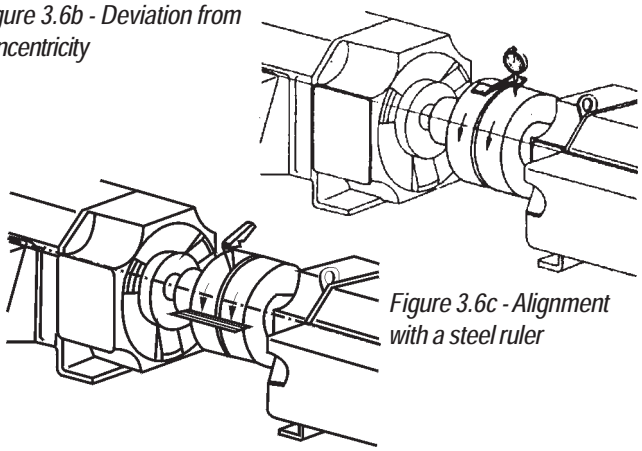

Figure 3.6c - Alignment with a steel ruler

3.1.4 Coupling

a) Direct Coupling

Direct coupling is always preferable due to its lower cost, space economy, no belt slippage and lower accident risk.
In the case of speed ratio drives, it is also common to use a direct coupling with a reducer (gear box).

CAUTION: Carefully align the shaft ends using, whenever feasible, a flexible coupling.

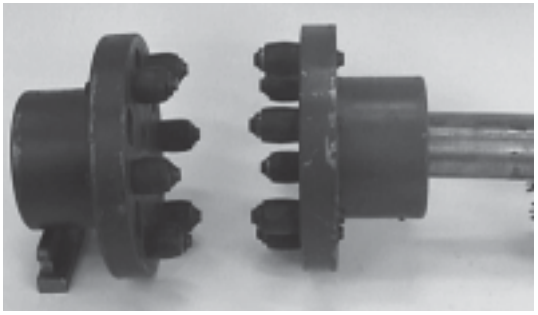

Figure 3.7 - A type of direct coupling

b) Gear Coupling

Poorly aligned gear couplings are the cause of jerking motions which bring about the vibration of the actual drive and vibrations within the motor.

Therefore, due care must be given to perfect shaft alignment: exactly parallel in the case of straight gears, and at the correct angle for bevel or helical gears.
Perfect gear engagement can be checked by the insertion of a strip of paper on which the teeth marks will be traced after a single rotation.

c) Belt and Pulley Coupling

Belt coupling is most commonly used when a speed ratio is required.
Assembly of Pulleys: To assemble pulleys on shaft ends with a keyway and threaded end holes the pulley should be inserted halfway up the keyway merely by manual pressure.
On shafts without threaded end holes the heating of the pulley to about 80°C is recommended, or alternatively, the devices illustrated in Figure 3.8 may be employed.

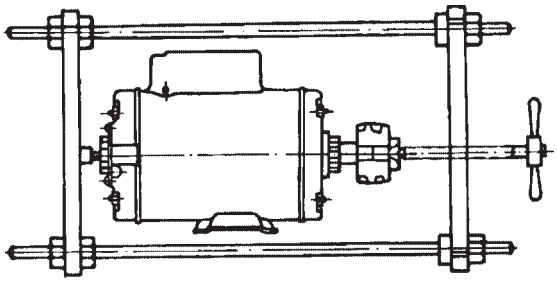

Figure 3.8 - Pulley mounting device

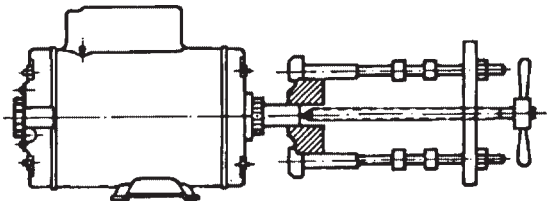

Figure 3.8a - Pulley extractor

Hammers should be avoided during the fitting of pulleys and bearings. The fitting of bearings with the aid of hammers leaves blemishes on the bearing races. These initially small flaws increase with usage and can develop to a stage that completely impairs the bearing.
The correct positioning of a pulley is shown in Figure 3.9.

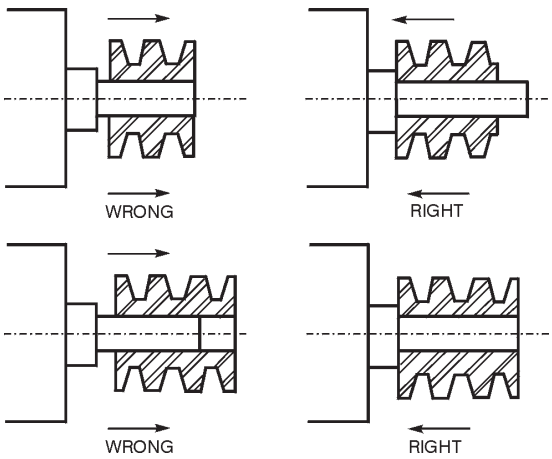

Figure 3.9 - Correct positioning of pulley on the shaft

RUNNING: To avoid needless radial stresses on the bearings it is imperative that shafts are parallel and the pulleys perfectly aligned. (Figure 3.**1**0).

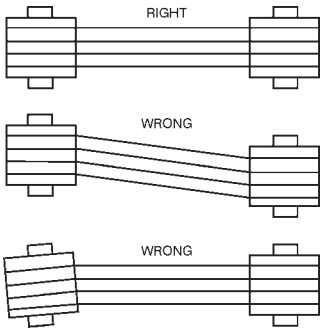

*Figure 3.**1**0 - Correct pulley alignment*

Laterally misaligned pulleys, when running, transmit alternating knocks to the rotor and can damage the bearing housing. Belt slippage can be avoided by applying a resin (rosin for example).
Belt tension should be sufficient to avoid slippage during operation (Figure 3.**11**).
Pulleys that are too small should be avoided; these cause shaft flexion because belt traction increases in proportion to a decrease in the pulley size. Table **1** determines minimum pulley diameters, and Tables **2** and 3 refer to the maximum stresses acceptable on motor bearings up to frame 580. Beyond frame size 600, an analysis should be requested from the WEG engineering.

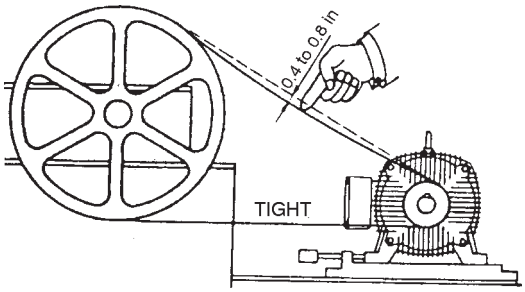

*Figure 3.**11** - Belt tensions*

***Table 1** - Minimum pitch diameter of pulleys*

Frame	Ball bearings						
	Bearing	Size X Inches					
		0.79	1.57	2.36	3.15	3.94	4.72
140	6205-Z	1.7	1.85	2			
W 180	6206-Z	3.03	3.23	3.46			
180	6307-Z	1.69	1.81	1.93			
W 210	6308-Z		2.86	3.00	3.16		
210	6308-Z		2.90	3.06	3.22		
W 250	6309 C3		4.37	4.54	4.72	4.92	
250	6309 C3		4.41	4.59	4.77	4.97	
280	6311 C3			5.08	5.19	5.47	5.65
320	6312 C3			7.44	7.76	7.94	8.18
360	6314 C3			8.73	9.00	9.28	9.57

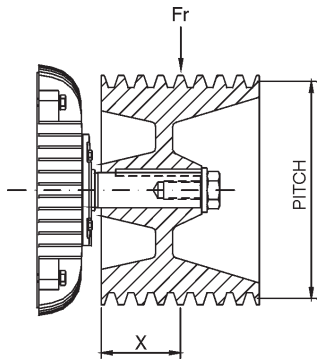

Frame	Poles		Ball Bearing				Roller Bearing						
		Bearing	Size X Inches				Bearing	Size X Inches					
			1.97	3.15	4.33	5.51		1.97	3.15	4.33	5.51	6.69	8.27
400	II	6314 C3	7.3	7.62	7.94	8.24		-	-	-	-	-	-
	IV-VI-VII	6314 C3					NU 316	4.13	4.31	4.49	4.67	4.85	-
440	II	6314 C3	11.75	12.16	12.61	13.08		-	-	-	-	-	-
	IV-VI-VIII	6319 C3					NU 319	4.02	4.17	4.32	4.47	4.62	4.82
500	II	6314 C3	23.54	24.34	25.12	25.87		-	-	-	-	-	-
	IV-VI-VIII	6319 C3					NU 319	6.52	6.73	6.95	7.17	7.39	7.67
5008	II	6314 C3	44.66	45.79	46.98	48.23		-	-	-	-	-	-
	IV-VI-VIII	6322 C3					NU 322	8.73	8.95	9.96	11.34	12.87	14.82
580	II	6314 C3	57	58	59	60		-	-	-	-	-	-
	IV-VI-VIII	6322 C3					NU 322	10.72	10.91	11.11	11.31	11.50	11.76

Important: **1**) Peripheral speeds for solid grey cast iron pulleys FC 200 is V = 115 ft/s.
2) Use steel pulleys when peripheral speed is higher than 115 ft/s.
3) V-belt speed should not exceed 115 ft/s.

***Table 2** - Maximum acceptable radial load (Lbf)*

Nema 56 Motors				
Frame	Poles	Radial Force (Lbf)		
		Distance X		
		1	1,18	2
56A	II	88	-	59
	IV	88	-	59
56B	II	88	-	59
	IV	86	-	59
56D	II	127	-	70
	IV	141	-	70

Saw Arbor Motors				
80 LMS	II	-	355	-
80 MMS	II	-	359	-
80 SMS	II	-	357	-
90 LMS	II		427	-
	IV	-	555	-

***Table 3** - Maximum acceptable axial load (Lbf)*

IP55 Totally Enclosed Motors - 60Hz
Position / Construction Form

FRAME	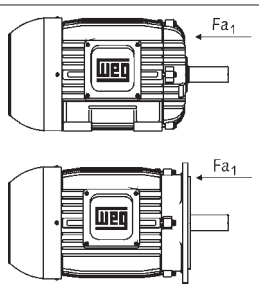				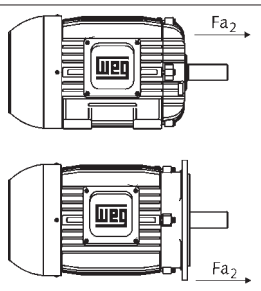				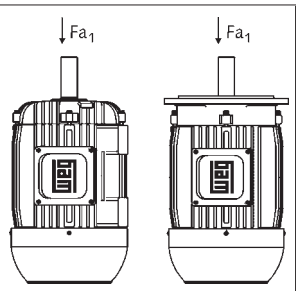				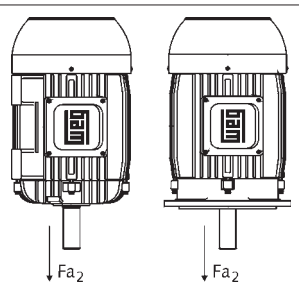			
	II	IV	VI	VIII	II	IV	VI	VIII	II	IV	VI	VIII	II	IV	VI	VIII
140	103	141	167	187	112	152	185	207	99	132	158	178	105	143	174	198
W 180	108	145	180	202	154	209	255	286	94	130	165	183	141	194	240	269
180	149	207	249	286	269	370	443	500	136	189	229	266	253	352	421	480
W 210	196	264	326	368	329	447	544	610	176	238	297	339	310	421	518	582
210	189	257	315	357	324	443	533	599	160	220	275	310	295	405	493	553
W 250	282	372	443	485	471	620	734	811	240	317	394	414	430	564	685	743
250	273	368	436	485	463	615	727	813	220	310	379	421	410	557	672	749
280	355	480	551	624	621	826	959	1,082	275	388	427	502	540	736	838	961
320	374	498	588	668	703	930	1,091	1,232	266	366	432	511	597	793	937	1,078
360	890	1,181	1,144	1,323	890	1,181	1,375	1,552	745	985	1,144	1,323	745	985	1,144	1,323
400	877	1,148	1,347	1,521	877	1,148	1,347	1,521	705	890	1,060	1,241	705	890	1,060	1,241
440	842	1,303	1,563	1,821	842	1,303	1,563	1,821	568	884	1,109	1,488	568	884	1,109	1,488
500	769	1,250	1,481	1,728	769	1,250	1,481	1,728	355	721	844	1,190	355	721	844	1,109
5008	791	1624	1909	2137	791	1624	1909	2137	728	1548	1808	2029	728	1548	1808	2029
580	679	1,406	1,649	1,865	679	1,406	1,649	1,865	033	474	549	597	033	474	549	597

Open Motors - NEMA 56 Frames - 60Hz
Position / Construction Form

FRAME	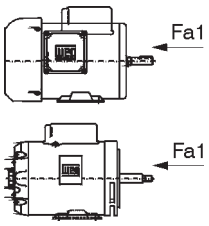		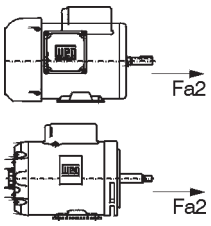		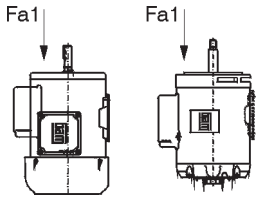		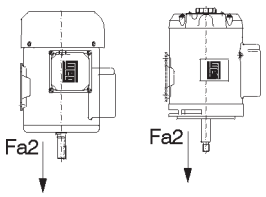	
	II	IV	II	IV	II	IV	II	IV
56 A	68	90	83	112	63	85	79	108
56 B	66	90	81	110	63	83	77	105
56 D	63	88	105	145	59	81	101	138

The maximum radial load for each frame are determined, by graphs.

INSTRUCTIONS ON HOW TO USE THE GRAPHS

1 - Maximum radial load on shaft.
2 - Maximum radial load on bearings.

Where: X - Half of pulley width (inches)
Fr- Maximum radial load in relation to the diameter and pulley width.

Example:
Verify whether a **2**HP motor, II Pole, 60Hz withstands a radial load of **11**0Lb, considering a pulley width of 4 inches.

Frame: **1**45T
Fr: **11**0Lb
X: **2** inches

1 - Mark the distance X
2 - Find out line N = 3600 for bearing
Based on the above, this bearing withstands a radial load of **1**30Lb.

Frame 180T

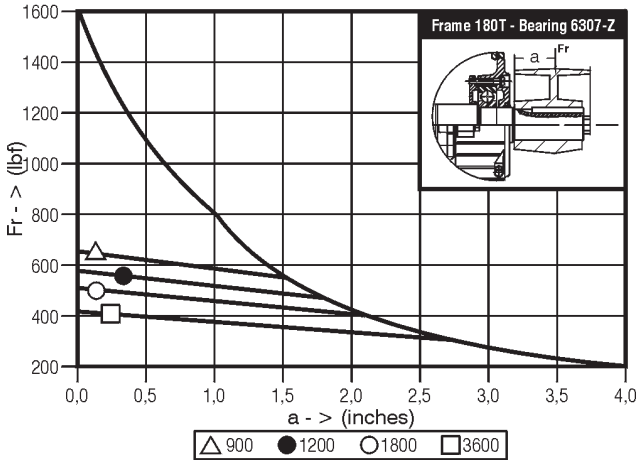

Frame 140T

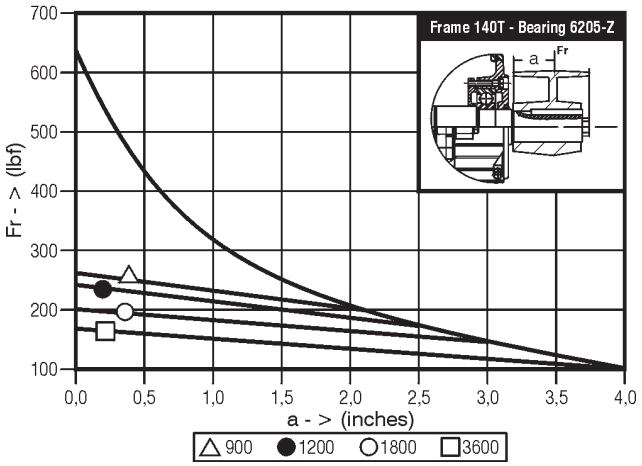

Frame W210T

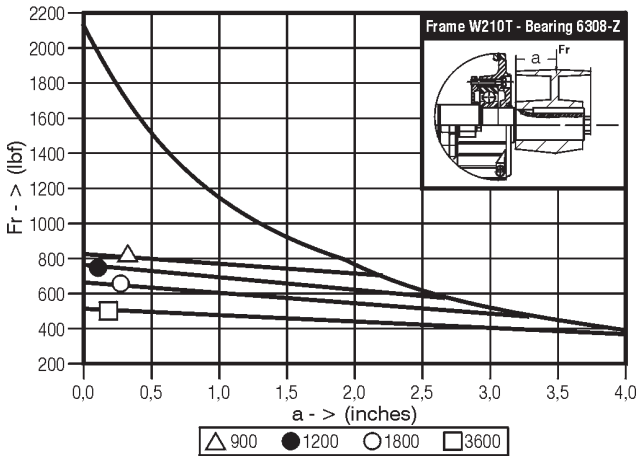

Frame W180T

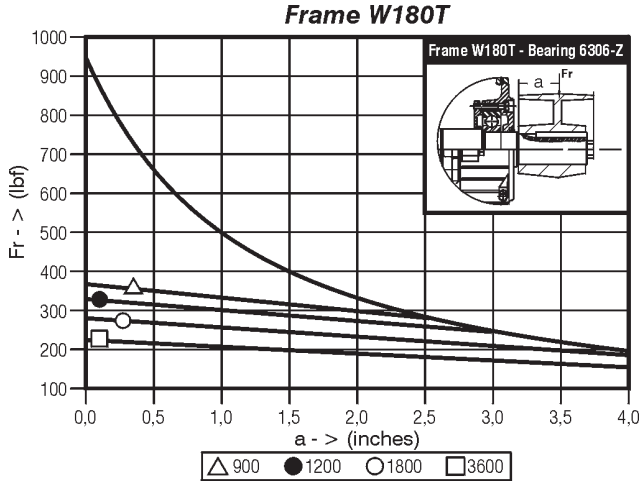

Frame 210T

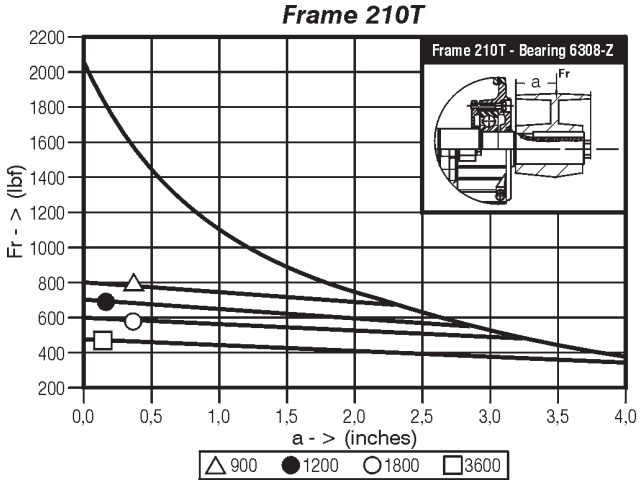

Frame W250T

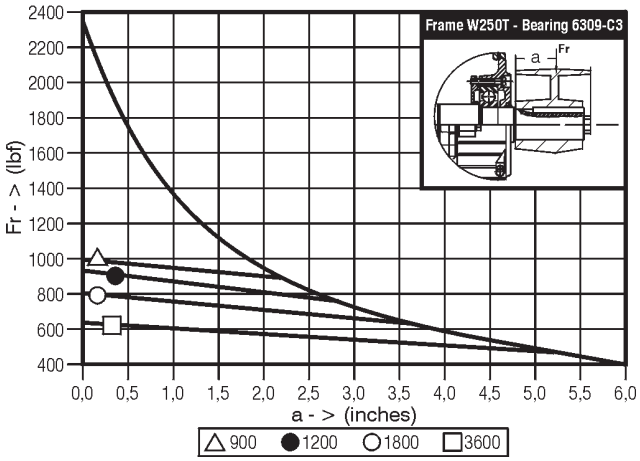

Frame 280T

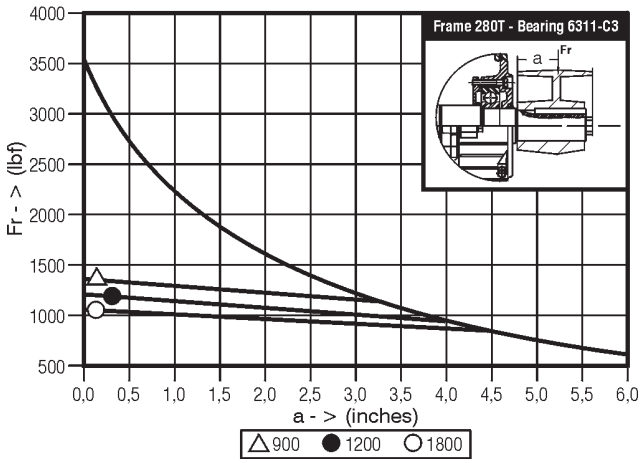

Frame 250T

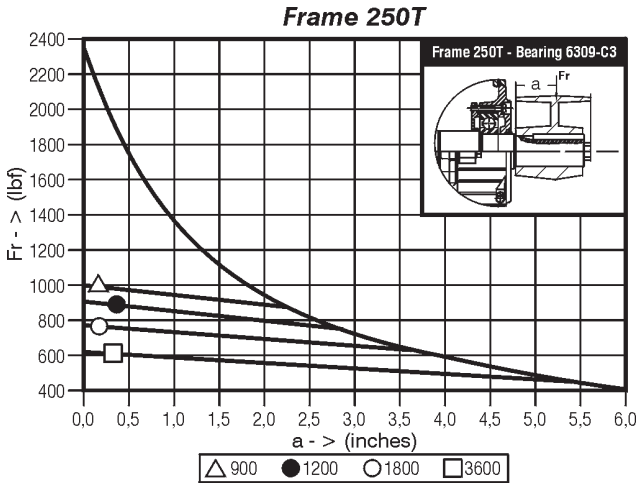

Frame 320TS

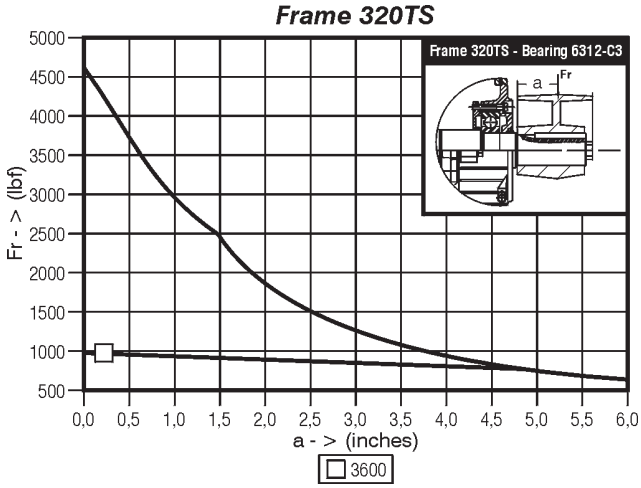

Frame 280TS

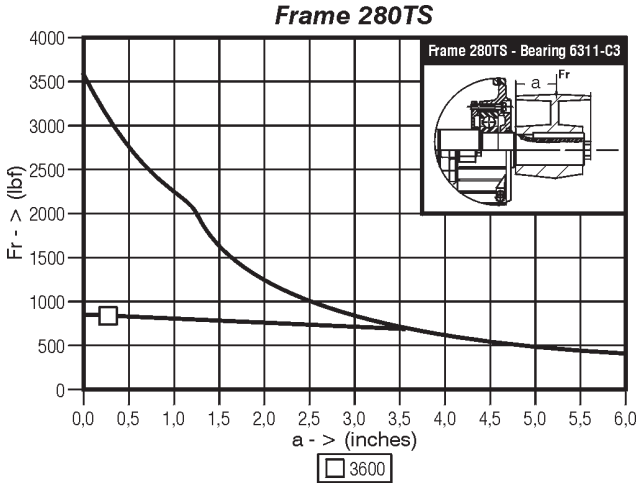

Frame 320T

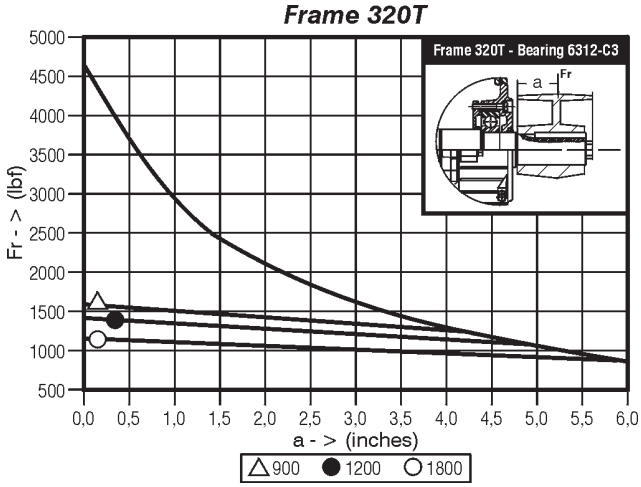

Frame 360TS

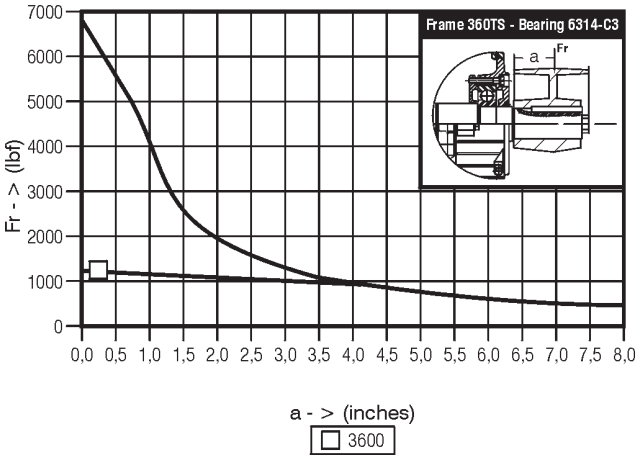

Frame 400T

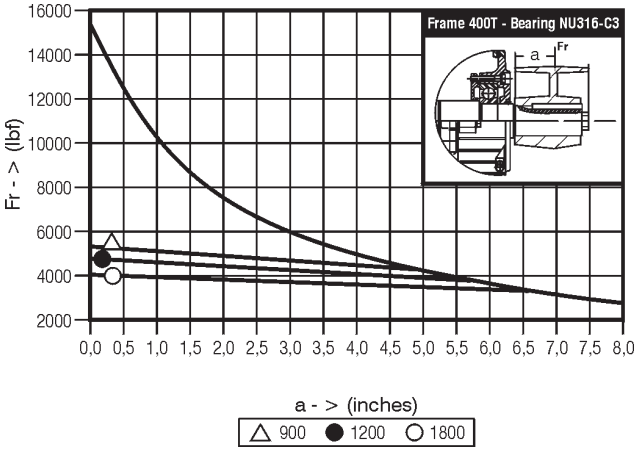

Frame 360T

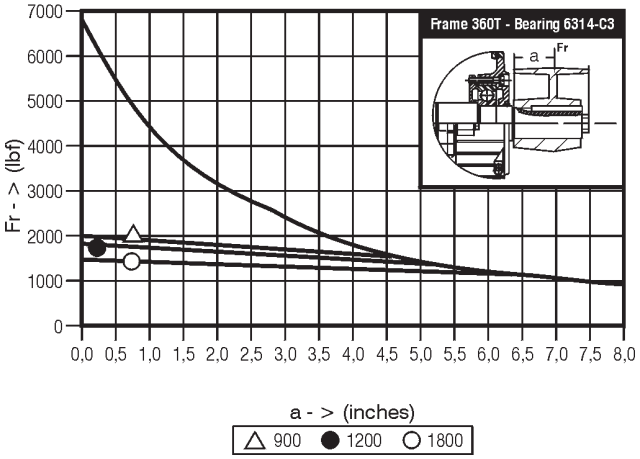

Frame 440TS

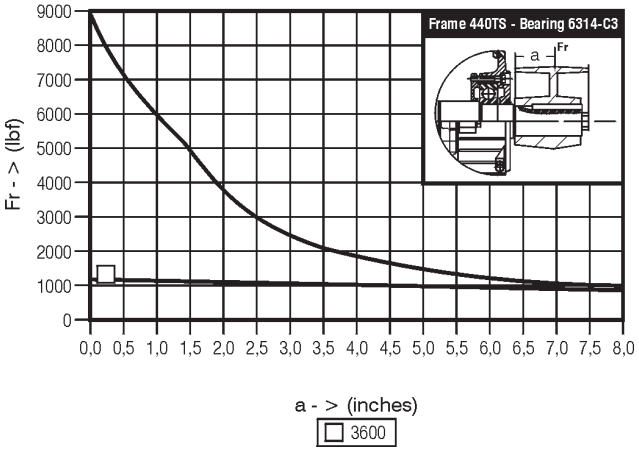

Frame 400TS

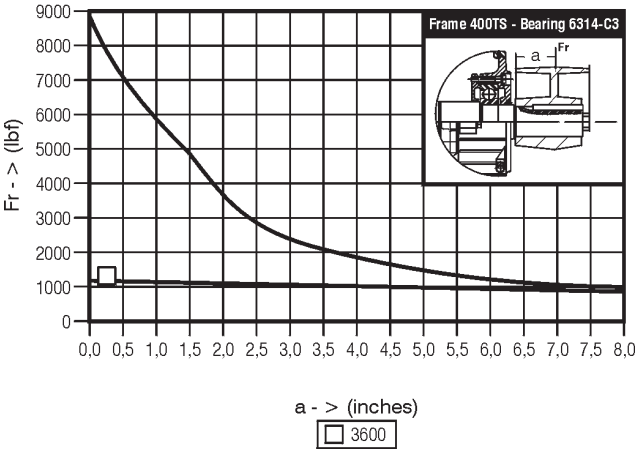

Frame 440T

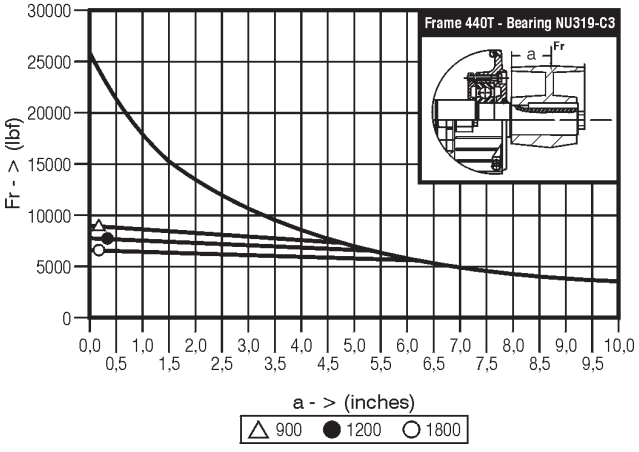

Frame 500TS

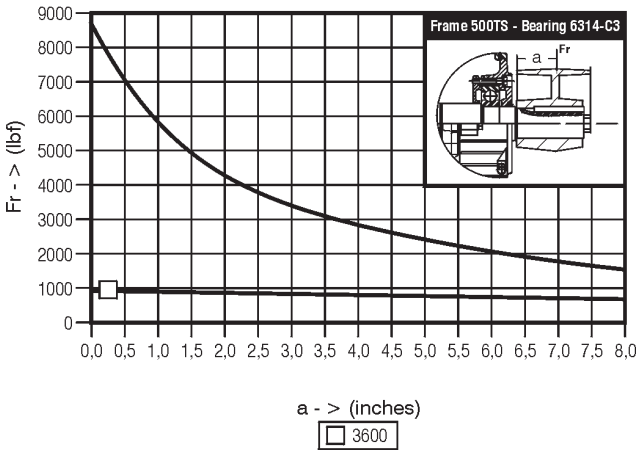

Frame 5008T

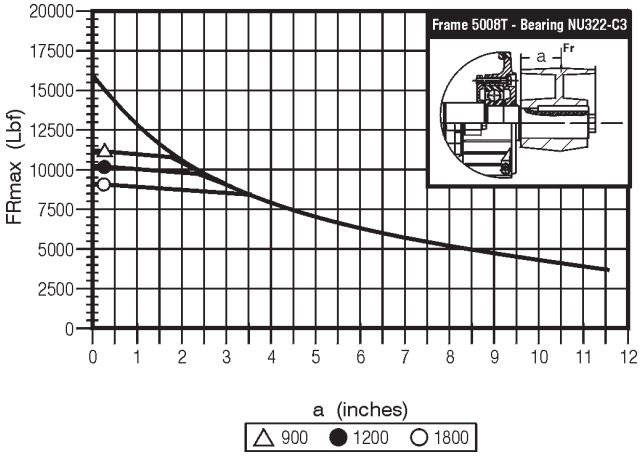

Frame 500T

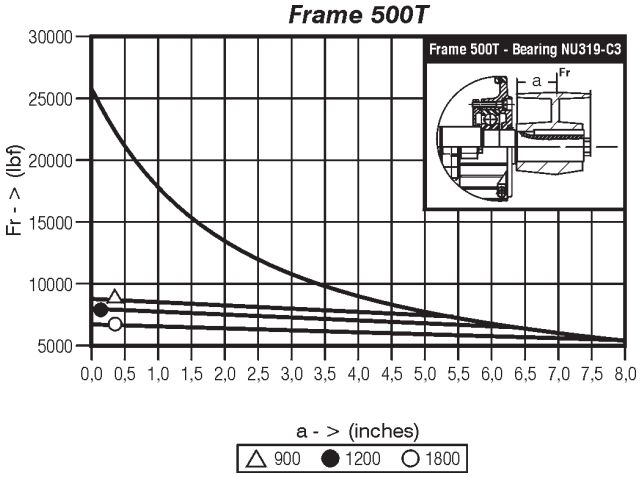

Frame 580TS

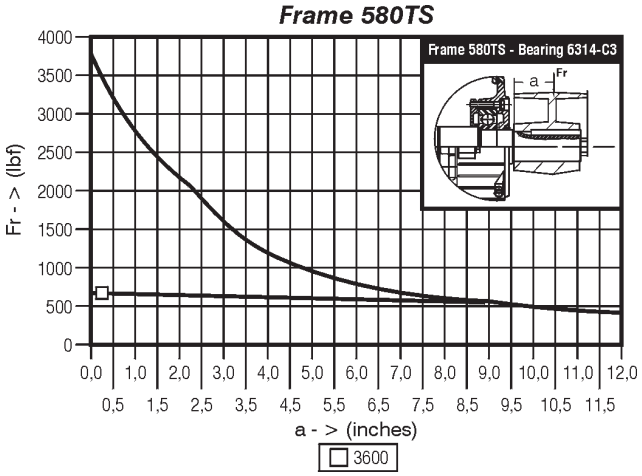

Frame 5008TS

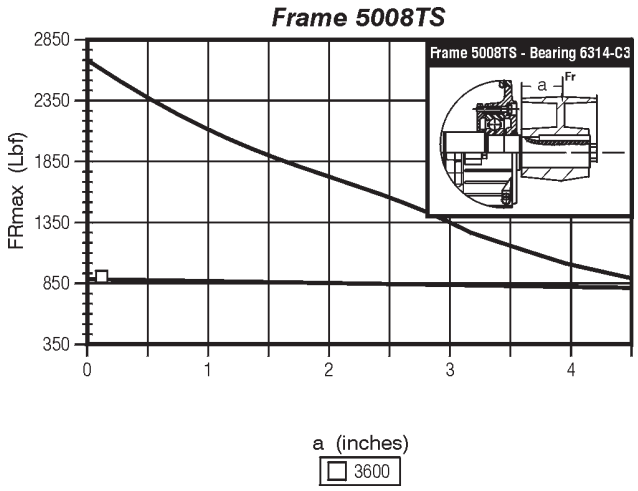

Frame 580T

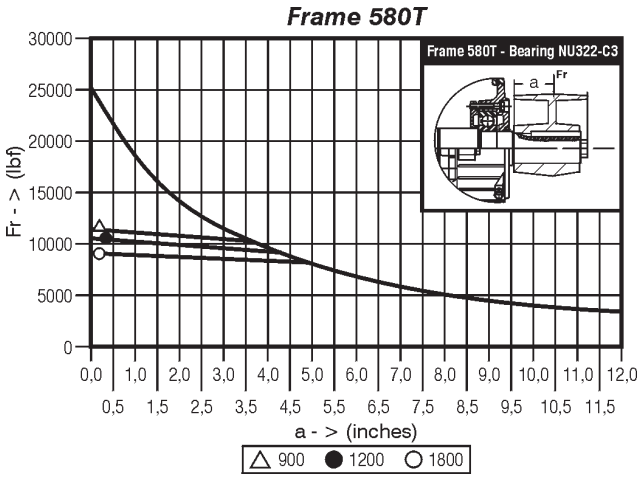

Note: For frames 600 and above, consult your engineering representative.

3.2 Electrical Aspects

3.2.1 Feed System

Proper electric power supply is very important. The choice of motor feed conductors, whether branch or distribution circuits, should be based on the rated current of the motors as per NFPA-70 Standard article 430.
Tables 4, 5 and 6 show minimum conductor gauges sized according to maximum current capacity and maximum voltage drop in relation to the distance from the distribution center to the motor, and to the type of installation (Overhead or in ducts).

To determine the conductor gauge proceed as follows:

a) Determine the current by multiplying the current indicated on the motor nameplate by **1**.**2**5 and then locate the resulting value on the corresponding table.
If the conductor feeds more than one motor, the value to be sought on the table should be equal **1**.**2**5 times the rated current of the largest motor plus the rated current of the other motors.
In the case of variable speed motors, the highest value among the rated currents should be considered.
When motor operation is intermittent, the conductors should have a current carrying capacity equal or greater, to the product of the motor rated current times the running cycle factor shown on Table 7.

***Table 7** - Running cycle factor*

Motor Short

Motor short time rating / Duty Classification	5min	**1**5min	30 at 60min	Continuos
Short (operating valves, activating contacts etc)	**1**.**1**0	**1**.**2**0	**1**.50	-
Intermittent (passenger or freight elevators, tools, pumps, rolling bridges etc)	0.85	0.85	0.90	**1**.40
Cyclic (rolling mills,mining machines etc)	0.85	0.90	0.95	**1**.40
Variable	**1**.**1**0	**1**.**2**0	**1**.50	**2**.00

b) Locate the rated voltage of the motor and the feed network distance in the upper part of the corresponding table. The point of intersection of the distance column and the line referring to current will indicate the minimum required gauge of the conductor.

Example:
Size the conductors for a **1**5 HP, three-phase, **2**30V, 4**2**A, motor located **2**00 feet from the main supply with cables laid in conduits.
a) Current to be located: **1**.**2**5 x 4**2**A = 5**2**.5A
b) Closest value on table 6:55A
c) Minimum gauge: 6 AWG

3.2.2 Starting of Electric Motor

Induction motors can be started by the following methods:

Direct Starting

Whenever possible a three-phase motor with a squirrel cage rotor should be started directly at full supply voltage by means of a contactor (Connection diagram a). This method is called Direct-on-Line (DOL) starting.
There are DOL starter assemblies available combining a three-pole contactor, a bimetal relay (overload protection device), and a fuse (short circuit protection on branch circuit).
DOL starting is the simplest method, only feasible however, when the locked rotor current (LRC) does not influence the main electric supply lines.
Initial locked rotor current (LRC) in induction motors reach values six to eight times the value of the full load current. During starting by the DOL method, starting current can reach these high levels. The main electrical supply should be rated sufficiently, such that during the starting cycle no supply disturbance to others on the power network is caused by the voltage drop in the main supply.
This can be achieved under one of the following situations:
a) The rated main supply current is high enough for the locked rotor current not to be proportionally high.
b) Motor locked rotor current is low with no effect on the networks.
c) The motor is started under no-load conditions with a short starting cycle and, consequently, a low locked rotor current with a transient voltage drop tolerable to other consumers.

Starting with a compensating switch (auto-transformer starting)

Should direct on line starting not be possible, either due to restrictions imposed by the power supply authority or due to the installation itself, reduced voltage indirect starting methods can be employed to lower the locked rotor current. The single line connection diagram (C) shows the basic components of a compensating switch featuring a transformer (usually an auto-transformer) with a series of taps corresponding to the different values of the reduced voltage. Only three terminals of the motor are connected to the switch, the other being interconnected as per diagram, for the indicated voltage.

Star-Delta starting

It is fundamental to star-delta starting that the three-phase motor has the necessary numbers of leads for both connections:

6 leads for Y/Δ
or **12** leads for YY/ΔΔ

All the connections for the various voltages are made through terminals in the terminal box in accordance with the wiring diagram that accompanies the motor. This diagram may be shown on the nameplate or in the terminal box.
The star-delta connection is usually used only in low-voltage motors due to normally available control and protection devices. In this method of starting the locked rotor current is approximately 30% of the original LRC. The locked rotor torque is reduced proportionally as well. For this reason, it is very important before deciding to use

***Table 4** - Wire and cable gauges for single-phase motor installation (voltage drop < 5%) (in conduits)*

Supply Voltage	Distance of motor from distribution centre (feet)													
115	34	51	69	85	102	137	171	205	240	273	308	342	428	514
230	69	102	138	170	204	274	342	410	480	546	616	684	856	1028
460	138	204	276	340	408	548	684	820	960	1092	1232	1368	1712	2056
575	170	250	338	420	501	670	840	1010	1181	1342	1515	1680	2105	2530
Current (A)	Cable gauge (conductor)													
5	14	14	14	14	14	14	14	12	12	12	12	10	10	8
10	14	14	14	14	12	12	10	10	10	8	8	8	6	6
15	12	12	12	12	12	10	8	8	6	6	6	6	4	2
20	12	12	12	10	10	8	8	6	6	6	4	4	4	2
30	10	10	10	8	8	6	6	6	4	4	2	2	2	1/0
40	8	8	8	8	6	6	4	4	2	2	2	2	1/0	2/0
55	6	6	6	6	6	4	4	2	2	1/0	1/0	1/0	1/0	2/0
70	4	4	4	4	4	2	2	2	1/0	1/0	2/0	2/0	2/0	2/0
95	2	2	2	2	2	2	1/0	1/0	1/0	2/0	3/0	3/0	4/0	250M

***Table** 5 - Wire and cable gauges for three-phase motor installation - aerial conductors with **2**5cm spacing (voltage drop < 5%)*

Supply Voltage	Distance of motor from distribution centre (feet)													
115	51	69	85	102	137	171	205	240	273	308	342	428	514	685
230	102	138	170	204	274	342	410	480	546	616	684	856	1028	1370
460	204	276	340	408	547	684	820	960	1092	1232	1368	1712	2056	2740
575	250	338	420	501	670	840	1010	1181	1342	1515	1680	2105	2530	3350
Current (A)	Cable gauge (conductor)													
15	14	14	14	12	12	10	10	10	8	8	8	6	6	4
20	14	14	12	12	10	10	8	8	8	6	6	4	4	2
30	14	12	10	8	8	8	6	6	4	4	4	2	2	1/0
40	12	10	10	8	8	6	4	4	4	2	2	2	1/0	2/0
55	10	10	8	8	6	4	4	2	2	2	1/0	2/0	3/0	--
70	8	8	6	6	4	2	2	2	1/0	1/0	2/0	3/0	--	--
100	6	6	4	4	2	2	1/0	2/0	3/0	4/0	4/0	--	--	--
130	4	4	4	2	1/0	1/0	2/0	4/0	--	--	--	--	--	--
175	2	2	2	1/0	2/0	3/0	--	--	--	--	--	--	--	--
225	1/0	1/0	1/0	2/0	3/0	--	--	--	--	--	--	--	--	--
275	2/0	2/0	2/0	4/0	--	--	--	--	--	--	--	--	--	--
320	3/0	3/0	3/0	4/0	--	--	--	--	--	--	--	--	--	--

***Table 6** - Wire and cable gauges for three-phase motor installation (voltage drop < 5%) (in conduits)*

Supply Voltage	Distance of motor from distribution centre (feet)											
115	85	102	120	137	171	205	240	273	308	342	428	514
230	170	204	240	274	342	410	480	546	616	684	856	1028
460	340	408	480	548	684	820	960	1092	1232	1368	1712	2056
575	420	501	590	670	840	1010	1181	1342	1515	1680	2105	2530
Current (A)	Cable gauge (conductor)											
15	12	12	12	10	10	8	8	8	6	6	6	4
20	12	10	10	10	8	8	6	6	6	6	4	4
30	10	8	8	8	6	6	6	4	4	4	2	2
40	8	8	6	6	6	4	4	4	2	2	2	1/0
55	6	6	6	4	4	4	2	2	2	1/0	1/0	1/0
70	4	4	4	4	2	2	2	1/0	1/0	1/0	2/0	2/0
95	2	2	2	2	2	1/0	1/0	1/0	1/0	2/0	3/0	4/0
125	1/0	1/0	1/0	1/0	1/0	1/0	2/0	2/0	3/0	3/0	4/0	250M
145	2/0	2/0	2/0	2/0	2/0	2/0	2/0	3/0	3/0	4/0	250M	300M
165	3/0	3/0	3/0	3/0	3/0	3/0	3/0	3/0	4/0	4/0	250M	350M
195	4/0	4/0	4/0	4/0	4/0	4/0	4/0	4/0	250M	250M	300M	350M
215	250M	250M	250M	250M	250M	250M	250M	250M	250M	300M	350M	400M
240	300M	300M	300M	300M	300M	300M	300M	300M	300M	300M	400M	500M
265	350M	350M	350M	350M	350M	350M	350M	350M	350M	350M	500M	500M
280	400M	400M	400M	400M	400M	400M	400M	400M	400M	400M	400M	--
320	500M	500M	500M	500M	500M	500M	500M	500M	500M	500M	500M	--

Note: The above indicated values are orientative. For guaranteed values, contact the Local Power Company.

star-delta starting to verify if the reduced locked rotor torque in "STAR" connection is enough to accelerate the load.

3.2.3 Motor Protection

Motor circuits have, in principle, two types of protection: motor overload, locked rotor and protection of branch circuit from short circuits. Motors in continuous use should be protected from overloading by means of a device incorporated into the motor, or by an independent device, usually a fixed or adjustable thermal relay equal or less than to the value derived from multiplying the rated feed current at full load by:

- **1**.25 for motors with a service factor equal or superior to **1**.15 or;

- **1**.15 for motors with service factor equal to **1**.0.

Some motors are optionally fitted with overheating protective detectors (in the event of overload, locked rotor, low voltage, inadequate motor ventilation) such as a thermostat (thermal probe), thermistor (PTC), RTD type resistance which dispense with independent devices.

THERMOSTAT (THERMAL PROBE)**:** Bimetallic thermal detectors with normally closed silver contacts. These open at pre-determined temperatures. Thermostats are series connected directly to the contactor coil circuit by two conductors.

THERMISTORS: Semi-conductor heat detectors positive temperature coeficient (PTC) that sharply change their resistance upon reaching a set temperature. Thermistors, depending upon the type, are series or parallel-connected to a control unit that cuts out the motor feed, or actuates an alarm system, in response to the thermistors reaction.

RESISTANCE TEMPERATURE DETECTORS (RTD) - PT **1**00:The resistance type heat detector (RTD) is a resistance element usually manufactured of copper or platinum.
The RTD operates on the principle that the electrical resistance of a metallic conductor varies linearly with the temperature. The detector terminals are connected to a control panel, usually fitted with a temperature gauge, a test resistance and a terminal changeover switch.

Subject to the desired degree of safety and the client's specification, three (one per phase) or six (two per phase) protective devices can be fitted to a motor for the alarm stems, circuit breaker or combined alarm and circuit breaker, with two leads from the terminal box to the alarm or circuit breaker system and four for the combined system (alarm and circuit breaker).
Table 9 compares the two methods of protection.

3.3 Start-up

3.3.1 Preliminary Inspection

Before starting a motor for the first time, it will be necessary to:

a) Remove all locking devices and blocks used in transit and check that the motor rotates freely;

b) Check that the motor is firmly secured and that coupling elements are correctly mounted and aligned.;

c) Ascertain that voltage and frequency correspond to those indicated on the nameplate. Motor performance will be satisfactory with main supply voltage fluctuation within ten per cent of the value indicated on the nameplate or a frequency fluctuation within five per cent or, yet, with a combined voltage and frequency variance within ten per cent;

d) Check that connections are in accordance with the connection diagram shown on the nameplate and be sure that all terminal screws and nuts are tight;

e) Check the motor for proper grounding. Providing that there are no specifications calling for ground-insulated installation, the motor must be grounded in accordance with prevalent standard for grounding electrical machines. The screw identified by the symbol ⏚ should be used for this purpose.
This screw is generally to be found in the terminal box or on one foot of the frame;

f) Check that motor leads connecting with the mains, as well as the control wires and the overload protection device, are in accordance with Nema Standards;

g) If the motor has been stored in a damp place, or has been stopped for some time, measure the insulating resistance as recommended under the item covering storage instructions;

h) Start the motor uncoupled to ascertain that it is turning in the desired direction. To reverse the rotation of a three-phase motor, invert two terminal leads of the mains supply.
High voltage motors bearing an arrow on the frame indicating rotation direction can only turn in the direction shown.

3.3.2 The First Start-up

Three-Phase Motor with Cage Rotor:
After careful examination of the motor, follow the normal sequence of starting operations listed in the control instructions for the initial start-up.

3.3.3 Operation

Drive the motor coupled to the load for a period of at least one hour while watching for abnormal noises or signs of overheating.
Compare the line current with the value shown on the nameplate.
Under continuous running conditions without load fluctuations this should not exceed the rated current times the service factor, also shown on the nameplate.
All measuring and control instruments and apparatus should be continuously checked for anomalies, and any irregularities corrected.

3.3.4 Stopping

Warning:

To touch any moving part of a running motor, even though

disconnected, is a danger to life and limb.

Three-phase motor with cage rotor:
Open the stator circuit switch. With the motor at a complete stop, reset the auto-transformer, if any, to the "start" position.

Caption: ◯ unprotected
◑ partially protected
● totally protected

***Table 9** - Comparison between motor protection system*

Causes of overheating	Current-based protection		Protection with probe thermistor in motor
	Fuse only	Fuse and thermal protector	
	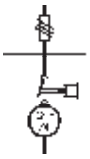	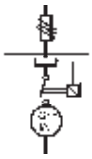	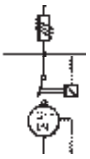
1. Overload with 1.2 times rated current	◯	●	●
2. Duty cycles S1 to S8 IEC 34, EB 120	◯	◑	●
3. Brakings, reversals and frequent starts	◯	◑	●
4. Operating with more than 15 starts p/hour	◯	◑	●
5. Locked rotor	◑	◑	●
6. Fault on one phase	◯	◑	●
7. Execessive voltage fluctuation	◯	●	●
8. Frequency fluctuation on main supply	◯	●	●
9. Excessive ambient temperature	◯	●	●
10. External heating caused by bearings, belts, pulleys etc.	◯	◯	●
11. Obstructed ventilation	◯	◯	●

CONNECTION DIAGRAMS

a) Direct starting

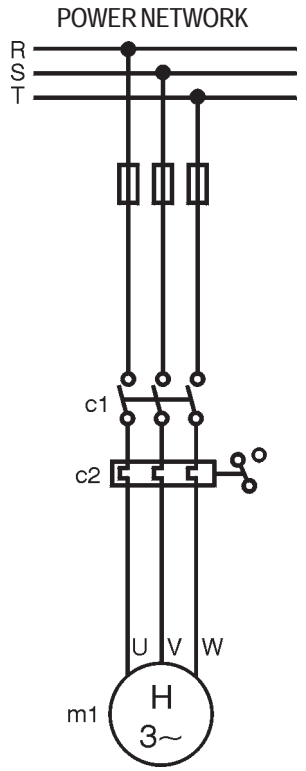

b) Star-Delta starting

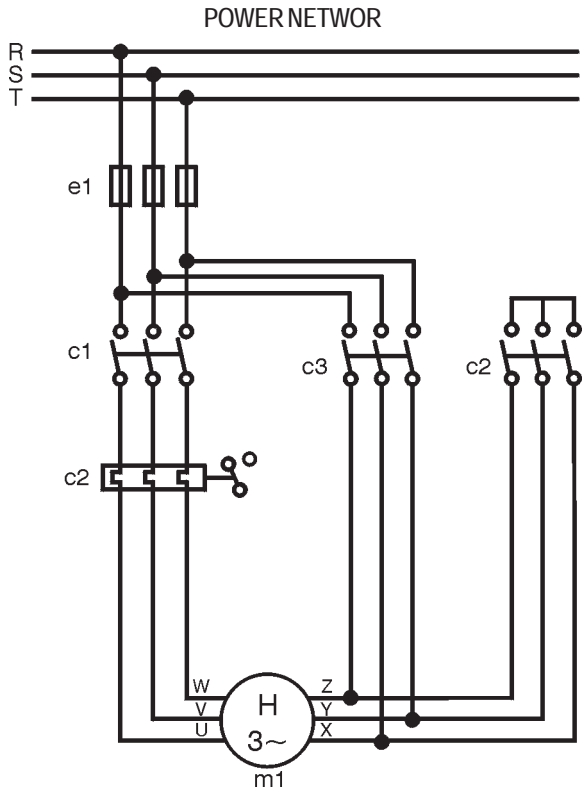

c) Auto-transformer starting

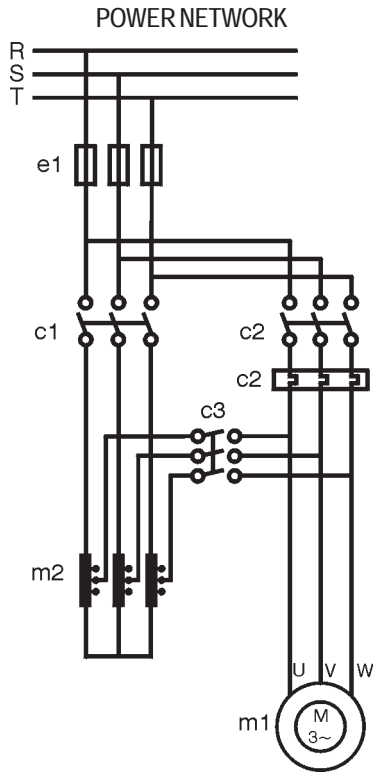

***Table 11** - Bearing specifications by type of motor*

NEMA Frames	Mounting	Bearings	
		Front (D.E.)	Rear (O.D.E.)
Open drip proof motors			
B48 and C48	ALL FORMS	6203 Z	6202 Z
56 and A56		6203 Z	6202 Z
B56 and C56		6203 Z	6202 Z
D56 and F56H/G56H		6204 Z	6202 Z / 6203 Z
Totally enclosed fan cooled motors			
143 T	ALL FORMS	6205 ZZ	6204 ZZ
145 T		6205 ZZ	6204 ZZ
182 T		6307 ZZ	6206 ZZ
184 T		6307 ZZ	6206 ZZ
W 182 T		6206 ZZ	6205 ZZ
W 184 T		6206 ZZ	6205 ZZ
213 T		6308 ZZ	6207 ZZ
215 T		6308 ZZ	6207 ZZ
W 213 T		6308 ZZ	6207 ZZ
W 215 T		6308 ZZ	6207 ZZ
254 T		6309-C3	6209 Z-C3
256 T		6309-C3	6209 Z-C3
W 254 T		6309-C3	6209 Z-C3
W 256 T		6309-C3	6209 Z-C3
284 T and TS		6311-C3	6211 Z-C3
286 T and TS		6311-C3	6211 Z-C3
324 T and TS		6312-C3	6212 Z-C3
326 T and TS		6312-C3	6212 Z-C3
364 T and TS		6314-C3	6314-C3
365 T and TS		6314-C3	6314-C3
404 T		NU 316-C3	6314-C3
404 TS		6314-C3	6314-C3
405 T		NU 316-C3	6314-C3
405 TS		6314-C3	6414-C3
444 T		NU 319-C3	6316-C3
444 TS		6314-C3	6314-C3
445 T		NU 319-C3	6316-C3
445 TS		6314-C3	6314-C3
447 T		NU 319-C3	6316-C3
447 TS		6314-C3	6314-C3
449 T		NU 322-C3	6319-C3
449 TS		6314-C3	6314-C3
504 T		NU 319-C3	6316-C3
504 TS		6314-C3	6314-C3
505 T		NU 319-C3	6316-C3
505 TS		6314-C3	6314-C3
5008 T		NU 322-C3	6319-C3
5008TS		6314-C3	6314-C3
586 T		NU 322-C3	6319-C3
586 TS		6314-C3	6314-C3
587 T		NU 322-C3	6319-C3
587 TS		6314-C3	6314-C3

Saw Arbor motor frame	Mounting	Bearings	
		Front (D.E.)	Rear (O.D.E.)
80 S MS	B3	6307 ZZ	6207 ZZ
80 M MS		6307 ZZ	6207 ZZ
80 L MS		6307 ZZ	6207 ZZ
90 L MS		6308 ZZ	6208 ZZ

ODP Motors Nema-T frames	Mounting	Bearings	
		Front (D.E.)	Rear (O.D.E.)
E143/5T	HORIZONTAL MOUNTING ONLY	6205 ZZ	6204 ZZ
F143/5T		6205 ZZ	6204 ZZ
182 T		6206 ZZ	6205 ZZ
184 T		6202 ZZ	6205 ZZ
213/5T		6208 ZZ	6206 ZZ
254 T		6309 Z-C3	6209 Z-C3
256 T		6309 Z-C3	6209 Z-C3
284 T		6311 Z-C3	6211 Z-C3
284 TS		6311 Z-C3	6211 Z-C3
286 T		6311 Z-C3	6211 Z-C3
286 TS		6311 Z-C3	6211 Z-C3
324 T		6312 Z-C3	6212 Z-C3
324 TS		6312 Z-C3	6212 Z-C3
326 T		6312 Z-C3	6212 Z-C3
326 TS		6312 Z-C3	6212 Z-C3
364 T		6314 C3	6314 C3
364 TS		6314 C3	6314 C3
365 T		6314 C3	6314 C3
365 TS		6314 C3	6314 C3
404 T		NU 316 C3	6314 C3
404 TS		6314 C3	6314 C3
405 T		NU 316 C3	6314 C3
405 TS		6314 C3	6314 C3
444 T		NU 319 C3	6316 C3
444 TS		6314 C3	6314 C3
445 T		NU 319 C3	6316 C3
445 TS		6314 C3	6314 C3

IEC frame	Mounting	Bearings	
		Front (D.E.)	Rear (O.D.E.)
Totally enclosed fan cooled motors			
63	B3	6201 ZZ	6201 ZZ
71		6203 ZZ	6202 ZZ
80		6204 ZZ	6203 ZZ
90 S - L		6205 ZZ	6204 ZZ
100 L		6206 ZZ	6205 ZZ
112 M		6307 ZZ	6206 ZZ
132 S - M		6308 ZZ	6207 ZZ
160 M - L		6309-C3	6209 Z-C3
180 M - L		6311-C3	6211 Z-C3
200 M - L		6312-C3	6212 Z-C3
225 S/M		6314-C3	6314-C3
250 S/M		6314-C3	6314-C3
280 S/M		6314-C3	6314-C3
		6316-C3	6316-C3
315 S/M		6314-C3	6314-C3
		6319-C3	6316-C3
355 M/L		6314-C3	6314-C3
		NU 322-C3	6319-C3

***Table 12** – Bearing lubrication intervals and amount of grease*

BALL BEARINGS - Series 62/63													
Relubrication intervals (running hours – horizontal position)													
	II pole		IV pole		VI pole		VIII pole		X pole		XII pole		Amount of grease
Serie 6**2**													
Bearing	60Hz	50Hz	60Hz	50Hz	60Hz	50Hz	60Hz	50Hz	60Hz	50Hz	60Hz	50Hz	(g)
6**2**09	**1**8400	**2**0000	**2**0000	**2**0000	**2**0000	**2**0000	**2**0000	**2**0000	**2**0000	**2**0000	**2**0000	**2**0000	9
6**211**	**14**200	**16**500	**2**0000	**2**0000	**2**0000	**2**0000	**2**0000	**2**0000	**2**0000	**2**0000	**2**0000	**2**0000	**11**
6**212**	**121**00	**14**400	**2**0000	**2**0000	**2**0000	**2**0000	**2**0000	**2**0000	**2**0000	**2**0000	**2**0000	**2**0000	**1**3
Serie 63													
Bearing	60Hz	50Hz	60Hz	50Hz	60Hz	50Hz	60Hz	50Hz	60Hz	50Hz	60Hz	50Hz	(g)
6309	**1**5700	**18**100	**2**0000	**2**0000	**2**0000	**2**0000	**2**0000	**2**0000	**2**0000	**2**0000	**2**0000	**2**0000	**1**3
63**11**	**11**500	**1**3700	**2**0000	**2**0000	**2**0000	**2**0000	**2**0000	**2**0000	**2**0000	**2**0000	**2**0000	**2**0000	**1**8
63**12**	9800	**11**900	**2**0000	**2**0000	**2**0000	**2**0000	**2**0000	**2**0000	**2**0000	**2**0000	**2**0000	**2**0000	**21**
63**1**4	3600	4500	9700	**11**600	**14**200	**1**6400	**1**7300	**1**9700	**1**9700	**2**0000	**2**0000	**2**0000	**2**7
63**1**6	-	-	8500	**1**0400	**12**800	**1**4900	**1**5900	**1**8700	**1**8700	**2**0000	**2**0000	**2**0000	34
63**1**9	-	-	7000	9000	**11**000	**1**3000	**1**4000	**1**7400	**1**7400	**1**8600	**1**8600	**2**0000	45
63**22**	-	-	5**1**00	7**2**00	9**2**00	**1**0800	**11**800	**151**00	**151**00	**1**5500	**1**5500	**1**9300	60

***Table 13** – Bearing lubrication intervals and amount of grease*

BALL BEARINGS - Series NU3													
Relubrication intervals (running hours – horizontal position)													
	II pole		IV pole		VI pole		VIII pole		X pole		XII pole		Amount of grease
Bearing	60Hz	50Hz	60Hz	50Hz	60Hz	50Hz	60Hz	50Hz	60Hz	50Hz	60Hz	50Hz	(g)
NU 309	9800	**1**3300	**2**0000	**2**0000	**2**0000	**2**0000	**2**0000	**2**0000	**2**0000	**2**0000	**2**0000	**2**0000	**1**3
NU 3**11**	6400	9**2**00	**191**00	**2**0000	**2**0000	**2**0000	**2**0000	**2**0000	**2**0000	**2**0000	**2**0000	**2**0000	**1**8
NU 3**12**	5**1**00	7600	**172**00	**2**0000	**2**0000	**2**0000	**2**0000	**2**0000	**2**0000	**2**0000	**2**0000	**2**0000	**21**
NU 3**1**4	**1**600	**2**500	7**1**00	8900	**11**000	**131**00	**151**00	**1**6900	**1**6900	**1**9300	**1**9300	**2**0000	**2**7
NU 3**1**6	-	-	6000	7600	9500	**11**600	**1**3800	**1**5500	**1**5500	**1**7800	**1**7800	**2**0000	34
NU 3**1**9	-	-	4700	6000	7600	9800	**122**00	**1**3700	**1**3700	**1**5700	**1**5700	**2**0000	45
NU 3**22**	-	-	3300	4400	5900	7800	**1**0700	**11**500	**11**500	**1**3400	**1**3400	**1**7300	60
NU 3**2**4	-	-	**2**400	3500	5000	6600	**1**0000	**102**00	**102**00	**121**00	**121**00	**1**5000	7**2**

Notes:
- The ZZ bearings from 6**2**0**1** to 6307 do not require relubrication as its life time is about **2**0,000 hours.
- Tables **1** and **2** are intended for the lubrication period under bearing temperature of 70ºC (for bearings up to 63**12** and NU 3**12**) and temperature of 85ºC (for bearings 63**1**4 and NU 3**1**4 and larger).
- For each **1**5ºC of temperature rise, the relubrication period is reduced by half.
- The relubrication periods given above are for those cases applying Polyrex® EM grease.
- When motors are used on the vertical position, their relubrication interval is reduced by half if compared to horizontal position motors.

Compatibility of Polyrex® EM grease with other types of grease:

Containing polyurea thickener and mineral oil, the Polyrex® EM grease is compatible with other types of grease that contain:
- Lithium base or complex of lithium or polyurea and highly refined mineral oil.
- Inhibitor additive against corrosion, rust and anti-oxidant additive.

Notes:
- Although Polyrex® EM is compatible with types of grease given above, we do no recommended to mix it with any other greases.
- If you intend to use a type of grease different than those recommended above , first contact WEG.
- On applications (with high or low temperatures, speed variation, etc), the type of grease and relubrification interval are given on an additional nameplate attached to the motor.

4. Maintenance

A well-designed maintenance program for electric motors can be summed up as: periodical inspection of insulation levels, temperature rise, wear, bearing lubrication and the occasional checking of fan air flow.
Inspection cycles depend upon the type of motor and the conditions under which it operates.

4.1 Cleanliness

Motors should be kept clean, free of dust, debris and oil. Soft brushes or clean cotton rags should be used for cleaning. A jet of compressed air should be used to remove non-abrasive dust from the fan cover and any accumulated grime from the fan and cooling fins.
Oil or damp impregnated impurities can be removed with rags soaked in a suitable solvent.
Terminal boxes fitted to motors with IP55 protection should be cleaned; their terminals should be free of oxidation, in perfect mechanical condition, and all unused space dust-free.
Motors with IPW 55 protection are recommended for use under unfavourable ambient conditions.

4.2 Lubrication

Proper lubrication extends bearing life.

Lubrication Maintenance Includes:

a) Attention to the overall state of the bearings;
b) Cleaning and lubrication;
c) Critical inspection of the bearings.

Motor noise should be measured at regular intervals of one to four months. A well-tuned ear is perfectly capable of distinguishing unusual noises, even with rudimentary tools such as a screw driver, etc., without recourse to sophisticated listening aids or stethescopes that are available on the market.
A uniform hum is a sign that a bearing is running perfectly. Bearing temperature control is also part of routine maintenance.
Constant temperature control is possible with the aid of external thermometers or by embedded thermal elements. WEG motors are normally equipped with grease lubricated ball or roller bearings.
Bearings should be lubricated to avoid metallic contact of the moving parts, and also for protection against corrosion and wear. Lubricant properties deteriorate in the course of time and mechanical operation: furthermore, all lubricants are subject to contamination under working conditions.
For this reason lubricants must be renewed and any lubricant consumed needs replacing from time to time.

4.2.1 Periodical Lubrication

WEG motors are supplied with sufficient grease for a long running period. Lubrication intervals, the amount of grease and the type of bearing used in frames **1**40T to 580T are to be found in Tables **11**, **12** and **1**3.
Lubrication intervals depend upon the size of the motor, speed, working conditions and the type of grease used.

4.2.2 Quality and Quantity of Grease

Correct lubrication is important!
Grease must be applied correctly and in sufficient quantity as both insufficient or excessive greasing are harmful.
Excessive greasing causes overheating brought about by the greater resistance encountered by the rotating parts and, in particular, by the compacting of the lubricant and its eventual loss of lubricating qualities.
This can cause seepage with the grease penetrating the motor and dripping on the coils.

GREASES FOR MOTOR BEARINGS

For operating temperatures from -30 to 170°C	
Type	**Supplier**
Polyrex® EM	Esso

4.2.3 Lubricating Instructions

a) Frame **1**40T to **21**0T motors
Frame **1**40T to **21**0T size motors are not fitted with grease nipples. Lubrication is carried out during periodical overhauls when the motor is taken apart.

Cleaning and Lubrication of Bearings

With the motor dismantled and without extracting the bearings from the shaft, all existing grease should be removed and the bearings cleaned with Diesel oil, kerosene or other solvent, until thoroughly clean.
Refill the spaces between the balls or rollers and the bearing cages with grease immediately after washing. Never rotate bearings in their dry state after washing.
For inspection purposes apply a few drops of machine oil. During these operations maximum care and cleanliness is recommended to avoid the penetration of any impurities or dust that could harm the bearings. Clean all external parts prior to reassembly.

b) Frame 360T to 580T Motors
Motors above 360T frame size are fitted with regreasable bearing system.
The lubrication system from this frame size upwards was designed to allow the removal of all grease from the bearing races through a bleeder outlet which at the same time impedes the entry of dust or other contaminants harmful to the bearing.
This outlet also prevents injury to the bearings from the well-known problem of over-greasing.

It is advisable to lubricate while the motor is running, to allow the renewal of grease in the bearing case.
Should this procedure not be possible because of rotating parts in the proximity of the nipple (pulleys, coupling sleeves, etc.) that are hazardous to the operator the following procedure should be followed:
- Inject about half the estimated amount of grease and run the motor at full speed for approximately a minute; switch off the motor and inject the remaining grease.
The injection of all the grease with the motor at rest could cause penetration of a portion of the lubricant through the internal seal of the bearing case and hence into the motor.

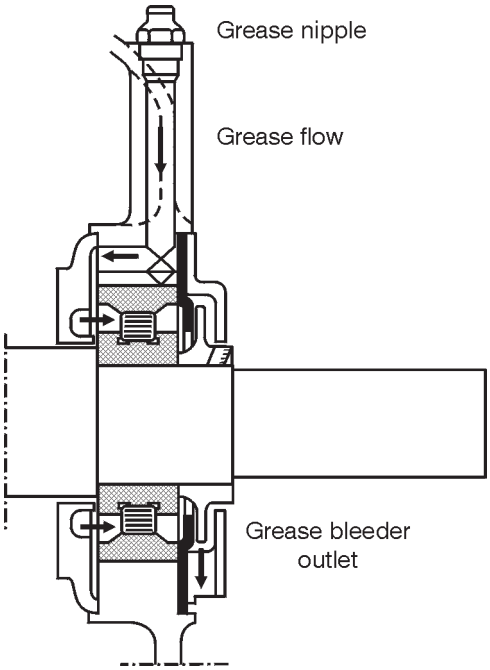

*Figure 4.**1** - Bearings and lubrication system*

Nipples must be clean prior to introduction of grease to avoid entry of any alien bodies into the bearing.
For lubricating use only a manual grease gun.

Bearing Lubrication Steps

1. Cleanse the area around the grease nipples with clean cotton fabric.
2. With the motor running, add grease with a manual grease gun until the lubricant commences to be expelled from the bleeder outlet, or until the quantity of grease recommended in Tables **12** or **1**3 has been applied.
3. Allow the motor to run long enough to eject all excess grease.

4.2.4 Replacement of Bearings

The opening of a motor to replace a bearing should only be carried out by qualified personnel.
Damage to the core after the removal of the bearing cover can be avoided by filling the gap between the rotor and the stator with stiff paper of a proper thickness.

Providing suitable tooling is employed, disassembly of a bearing is not difficult.
The extractor grips should be applied to the sidewall of the inner ring to be stripped, or to an adjacent part.
To ensure perfect functioning and to prevent injury to the bearing parts, it is essential that the assembly be undertaken under conditions of complete cleanliness and by competent personnel.
New bearings should not be removed from their packages until the moment of assembly.
Prior to fitting a new bearing, ascertain that the shaft has no rough edges or signs of hammering.

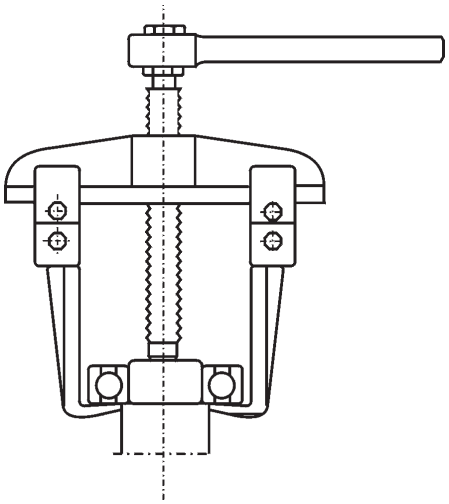

*Figure 4.**2** - A bearing extractor*

During assembly bearings cannot be subjected to direct blows.
The aid used to press or strike the bearing should be applied to the inner ring.

4.3 Air Gap Checking (Large Rating Open Motors)

Upon the completion of any work on the bearings check the gap measurement between the stator and the rotor using the appropriate gazes.
The gap variation at any two vertically opposite points must be less than **1**0% of the average gap measurement.

4.4 Explosion Proof Motor Repair Steps

4.4.1 Objective

In view of the heavy liability associated with burning of motors of this type, this product has been designed and manufactured to high technical standards, under rigid controls. In addition, in many areas it is required that explosion proof motors ONLY be repaired by licensed personnel or in licensed facilities authorized to do this type of work.
The following general procedures, safeguards, and guidelines must be followed in order to ensure repaired explosion proof motors operate as intended.

4.4.2 Repair Procedure and Precautions

Dismantle the damaged motor with appropriate tools without hammering and/or pitting machined surfaces such as enclosure joints, fastening

holes, and all joints in general.
The position of the fan cover should be suitably marked prior to removal so as to facilitate reassembly later on.
Examine the motor's general condition and, if necessary, disassemble all parts and clean them with kerosene. Under no circumstances should scrapers, emery papers or tools be used that could affect the dimensions of any part during cleaning.
Protect all machined parts against oxidation by applying a coating of vaseline or oil immediately after cleaning.

STRIPPING OF WINDINGS
This step requires great care to avoid knocking and/or denting of enclosure joints and, when removing the sealing compound from the terminal box, damage or cracking of the frame.

IMPREGNATION
Protect all frame threads by inserting corresponding bolts, and the joint between terminal box and frame, by coating it with a non-adhesive varnish (ISO **2**87 - ISOLASIL).
Protective varnish on machined parts should be removed soon after treating with impregnating varnish. This operation should be carried out manually without using tools.

ASSEMBLY
Inspect all parts for defects, such as cracks, joint incrustations, damaged threads and other potential problems.
Assemble using a rubber headed mallet and a bronze bushing after ascertaining that all parts are perfectly fitted.
Bolts should be positioned with corresponding spring washers and evenly tightened.

TESTING
Rotate the shaft by hand while examining for any drag problems on covers or fastening rings.
Carry out running tests as for standard motors.

MOUNTING THE TERMINAL BOX
Prior to fitting the terminal box all cable outlets on the frame should be sealed with a sealing compound (Ist layer) and an Epoxy resin (ISO 340) mixed with ground quartz (**2**nd layer) in the following proportions:

340A resin	50 parts
340B resin	50 parts
Ground quartz	**1**00 parts

Drying time for this mixture is two hours during which the frame should not be handled and cable outlets should be upwards.
When dry, see that the outlets and areas around the cables are perfectly sealed.
Mount the terminal box and paint the motor.

4.4.3 Miscellaneous Recommendations

- Any damaged parts (cracks, pittings in machined surfaces, defective threads) must be replaced and under no circumstances should attempts be made to recover them.
- Upon reassembling explosion proof motors IPW55 the substitution of all seals is mandatory.
- Should any doubts arise, consult WEG.

5. Malfunctioning

Most malfunctions affecting the normal running of electric motors can be prevented by maintenance and the appropriate precautions.
While ventilation, cleanliness and careful maintenance are the main factors ensuring long motor life, a further essential factor is the prompt attention to any malfunctioning as signalled by vibrations, shaft knock, declining insulation resistance, smoke or fire, sparking or unusual slip ring or brush wear, sudden changes of bearing temperatures.
When failures of an electric or mechanical nature arise, the first step to be taken is to stop the motor and subsequent examination of all mechanical and electrical parts of the installation.
In the event of fire, the installation should be isolated from the mains supply, which is normally done by turning off the respective switches.
In the event of fire within the motor itself, steps should be taken to restrain and suffocate it by covering the ventilation vents.
To extinguish a fire, dry chemical or $C0_2$ extinguishers should be used - never water.

5.1 Standard Three-Phase Motor Failures

Owing to the widespread usage of asynchronous three-phase motors in industry which are more often repaired in the plant workshops, there follows a summary of possible failures and their probable causes, detection and repairs.
Motors are generally designed to Class B or F insulation and for ambient temperatures up to 40°C.
Most winding defects arise when temperature limits, due to current overload, are surpassed throughout the winding or even in only portions thereof. These defects are identified by the darkening or carbonizing of wire insulation.

5.1.1 Short Circuits Between Turns

A short circuit between turns can be a consequent of two coinciding insulation defects, or the result of defects arising simultaneously on two adjacent wires. As wires are randomly tested, even the best quality wires can have weak spots. Weak spots can, on occasion, tolerate a voltage surge of 30% at the time of testing for shorting between turns, and later fail due to humidity, dust or vibration.
Depending on the intensity of the short, a magnetic hum becomes audible.
In some cases, the three-phase current imbalance can be so insignificant that the motor protective device fails to react. A short circuit between turns, and phases to ground due to insulation failure is rare, and even so, it nearly always occurs during the early stages of operation.

5.1.2 Winding Failures

a) One burnt winding phase

This failure arises when a motor runs wired in delta and current fails in one main conductor.
Current rises from **2** to **2**.5 times in the remaining winding with a simultaneous marked fall in speed. If the motor stops, the current will increase from 3.5 to 4 times its rated value.
In most instances, this defect is due to the absence of a protective switch, or else the switch has been set too high.

b) Two burnt winding phases

This failure arises when current fails in one main conductor and the motor winding is star-connected. One of the winding phases remains currentless while the others absorb the full voltage and carry an excessive current.
The slip almost doubles.

c) Three burnt winding phases

Probable cause 1
Motor only protected by fuses; an overload on the motor will be the cause of the trouble.
Consequently, progressive carbonizing of the wires and insulation culminate in a short circuit between turns, or a short against the frame occurs.
A protective switch placed before the motor would easily solve this problem.

Probable cause 2
Motor incorrectly connected. For example: A motor with windings designed for **2**30/400V is connected through a star-delta switch to 400V connection.
The absorted current will be so high that the winding will burn out in a few seconds if the fuses or a wrongly set protective switch fail to react promptly.

Probable cause 3
The star-delta switch is not commutated and the motor continues to run for a time connected to the star under overload conditions.
As it only develops **1**/3 of its torque, the motor cannot reach rated speed. The increased slip results in higher ohmic losses arising from the Joule effect. As the stator current, consistent with the load, may not exceed the rated value for the delta connection, the protective switch will not react.
Consequent to increased winding and rotor losses the motor will overheat and the winding burn out.

Probable cause 4
Failures from this cause arise from thermal overload, due to too many starts under intermittent operation or to an overly long starting cycle.
The perfect functioning of motor operating under these conditions is only assured when the following values are heeded:
a) number of starts per hour;
b) starting with or without load;
c) mechanical brake or current inversion;
d) acceleration of rotating masses connected to motor shaft;
e) load torque vs. speed during acceleration and braking.

The continuous effort exerted by the rotor during intermittent starting brings about heavier losses which provoke overheating.
Under certain circumstances with the motor idle there is a possibility that the stator winding is subjected to damage as a result of the

heating of the motor. In such a case, a slip ring motor is recommended as a large portion of the heat (due to rotor losses) is dissipated in the rheostat.

5.1.3 Rotor Failures

If a motor running under load conditions produces a noise of varying intensity and decreasing frequency while the load is increased, the reason, in most cases, will be an unsymmetrical rotor winding.
In squirrel-cage motors the cause will nearly always be a break in one or more of the rotor bars; simultaneously, periodical stator current fluctuations may be recorded. As a rule, this defect appears only in molded or die cast aluminum cages.
Failures due to spot heating in one or another of the bars in the rotor stack are identified by the blue coloration at the affected points.
Should there be failures in various contiguous bars, vibrations and shuddering can occur as if due to an unbalance, and are often interpreted as such. When the rotor stack acquires a blue or violet coloration, it is a sign of overloading.
This can be caused by overly high slip, by too many starts or overlong starting cycles. This failure can also arise from insufficient main voltage.

5.1.4 Bearing Failures

Bearing damage is a result of overloading brought about by an overly taut belt or axial impacts and stresses.
Underestimating the distance between the drive pulley and the driven pulley is a common occurrence.
The arc of contact of the belt on the drive pulley thus becomes inadmissibly small and thereby belt tension is insufficient for torque transmission.
In spite of this it is quite usual to increase belt tension in order to attain sufficient drive.
Admittably, this is feasible with the latest belt types reinforced by synthetic materials.
However, this practice fails to consider the load on the bearing and the result is bearing failure within a short time.
Additionally there is the possibility of the shaft being subjected to unacceptably high loads when the motor is fitted with a pulley that is too wide.

5.1.5 Shaft Fractures

Although bearings traditionally constitute the weaker part, and the shafts are designed with wide safety margins, it is not beyond the realm of possibility that a shaft may fracture by fatigue from bending stress brought about by excessive belt tension.
In most cases, fractures occur right behind the drive end bearing.
As a consequence of alternating bending stress induced by a rotating shaft, fractures travel inwards from the outside of the shaft until the point of rupture is reached when resistance of the remaining shaft cross-section no longer suffices.
Avoid additional drilling the shaft (fastening screw holes) as such operations tend to cause stress concentration.

5.1.6 Unbalanced V-Belt Drives

The substitution of only one of a number of other parallel belts on a drive is frequently the cause of shaft fractures, as well as being malpractice.
Any used, and consequently stretched belts retained on the drive, especially those closest to the motor, while new and unstretched belts are placed on the same drive turning farther from the bearing, can augment shaft stress.

5.1.7 Damage Arising from Poorly Fitted Transmission Parts or Improper Motor Alignment

Damage to bearing and fracture in shafts often ensue from inadequate fitting of pulleys, couplings or pinions. There parts "knock" when rotating. The defect is recognized by the scratches that appear on the shaft or the eventual scalelike flaking of the shaft end.
Keyways with edges pitted by loosely fitted keys can also bring about shaft failures.
Poorly aligned couplings cause knocks and radial and axial shaking to shaft and bearings.
Within a short while these malpractices cause the deterioration of the bearings and the enlargement of the bearing cover bracket located on the drive end side.
Shaft fracture can occur in more serious cases.

5.2 Troubleshooting chart

FAILURE	PROBABLE CAUSE	CORRECTIVE MEASURES
Motor fails to start	• No voltage supply • Low voltage supply • Wrong control connections • Loose connection at some terminal lug • Overload	• Check feed connections to control system and from this to motor. • Check voltage supply and ascertain that voltage remains within 10% of the rated voltage shown on the motor nameplate. • Compare connections with the wiring diagram on the motor nameplate. • Tighten all connections. • Try to start motor under no-load conditions. If it starts, there may be an overload condition or a blocking of the starting mechanism. Reduce load to rated load level and increase torque.
High noise level	• Unbalance • Distorted shaft • Incorrect alignment • Uneven air gap • Dirt in the air gap • Extraneous matter stuck between fan and motor casing • Loose motor foundation • Worn bearings	• Vibrations can be eliminated by balancing rotor. If load is coupled directly to motor shaft, the load can be unbalanced. • Shaft key bent; check rotor balance and eccentricity. • Check motor aligment with machine running. • Check shaft for warping or bearing wear. • Dismantle motor and remove dirt or dust with jet of dry air. • Dismantle motor and clean. Remove trash or debris from motor vicinity. • Tighten all foundation studs. If necessary, realign motor. • Check lubrication. Replace bearing if noise is excessive and continuous.
Overheating of bearings	• Excessive grease • Excessive axial or radial strain on belt • Deformed shaft • Rough bearing surface • Loose or poorly fitted motor end shields • Lack of grease • Hardened grease cause locking of balls • Foreign material in grease	• Remove grease bleeder plug and run motor until excess grease is expelled. • Reduce belt tension. • Have shaft straightened and check rotor balance. • Replace bearings before they damage shaft. • Check end shields for close fit and tightness around circumference. • Add grease to bearing. • Replace bearings. • Flush out housings and relubricate.
Intense bearing vibration	• Unbalanced rotor • Dirty or worn bearing • Bearing rings too tight on shaft and/or bearing housing • Extraneous solid particles in bearing	• Balance rotor statically and dynamically. • If bearing rings are in perfect condition, clean and relubricate the bearing, otherwise, replace bearing. • Before altering shaft or housing dimensions, it is advisable to ascertain that bearing dimensions correspond to manufacturer's specifications. • Take bearing apart and clean. Reassemble only if rotating and support surfaces are unharmed.
Overheating of motor	• Obstructed cooling system • Overload • Incorrect voltages and frequecies • Frequent inversions • Rotor dragging on stator • Unbalanced electrical load (burnt fuse, incorrect control)	• Clean and dry motor; inspect air vents and windings periodically. • Check application, measuring voltage and current under normal running conditions. • Compare values on motor nameplate with those of mains supply. Also check voltage at motor terminals under full load. • Exchange motor for another that meets needs. • Check bearing wear and shaft curvature. • Check for unbalanced voltages or operation under single-phase condition.

6. Spare Parts and Component Terminology

THREE-PHASE MOTORS IP55 NEMA
Frames 140T - W180T - 180T - 210T and W210T

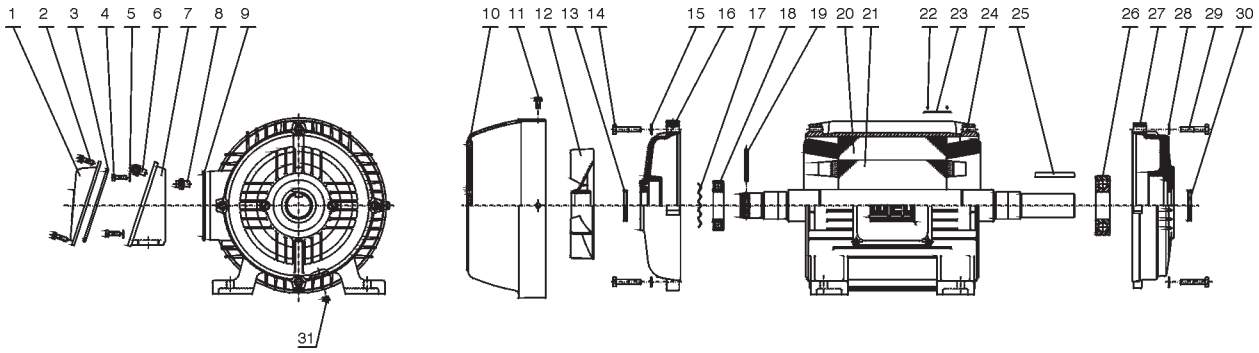

Part Nr.	Description
1	Terminal box cover
2	Terminal box cover fixing bolt
3	Terminal box cover gasket
4	Terminal box fixing bolt
5	Terminal box fixing washer
6	Terminal box grounding lug
7	Terminal box
8	Frame grounding lug
9	Terminal box o'ring gasket
10	Fan cover
11	Fan cover fixing bolt
12	Fan
13	V'Ring
14	Non-drive end endshield fixing bolt
15	Non-drive end endshield washer
16	Non-drive endshield
17	Spring washer
18	Non-drive bearing
19	Fan fixing pin
20	Wound stator
21	Rotor / shaft assembly
22	Nameplate fixing rivet
23	Nameplate
24	Frame
25	Shaft key
26	Drive end bearing
27	Drive endshield
28	Drive endshield washer
29	Drive end endshield fixing bolt
33	V'Ring
31	Drain plug

THREE-PHASE MOTORS IP55 NEMA
Frames 250T - W250T - 280T and 320T

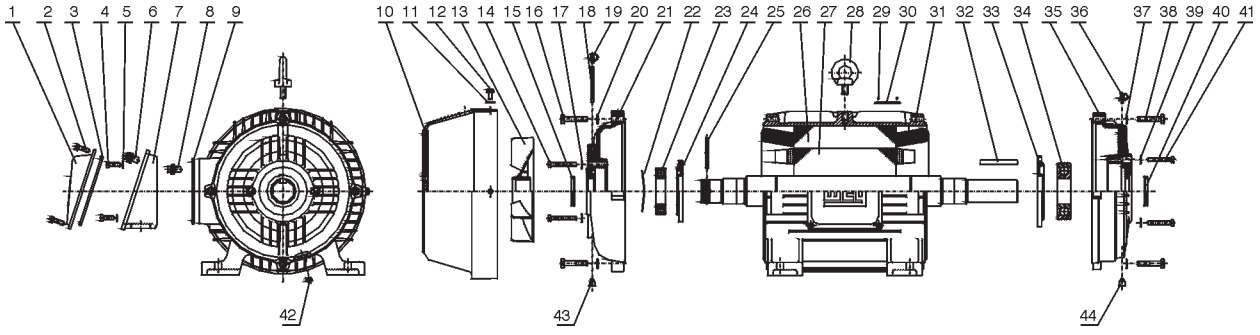

Part Nr.	Description
1	Terminal box cover
2	Terminal box cover fixing bolt
3	Terminal box cover gasket
4	Terminal box fixing bolt
5	Terminal box fixing washer
6	Terminal box grounding lug
7	Terminal box
8	Frame grounding lug
9	Terminal box o'ring gasket
10	Fan cover
11	Fan cover washer
12	Fan cover fixing bolt
13	Fan
14	Non-drive end bearing cap bolt
15	V'Ring
16	Non-drive end endshield fixing bolt
17	Non-drive end bearing cap washer
18	Non-drive end grease nipple
19	Non-drive end grease nipple cover
20	Non-drive end endshield washer
21	Non-drive endshield
22	Spring washer
23	Non-drive end bearing
24	Non-drive end bearing cap
25	Fan fixing pin
26	Wound stator
27	Rotor and shaft
28	Eyebolt
29	Nameplate fixing rivet
30	Nameplate
31	Frame
32	Shaft key
33	Drive end bearing cap
34	Drive end bearing
35	Drive andshield
36	Drive end grease nipple cover
37	Drive endshield washer
38	Drive end endshield fixing bolt
39	Drive end bearing cap washer
40	V'Ring
41	Drive end bearing cap fixing bolt
42	Drain plug
43	Non-drive and grease relief
44	Drive end grease relief

THREE-PHASE MOTORS IP55 NEMA T
Frames 360T - 400T - 440T - 500T and 580T

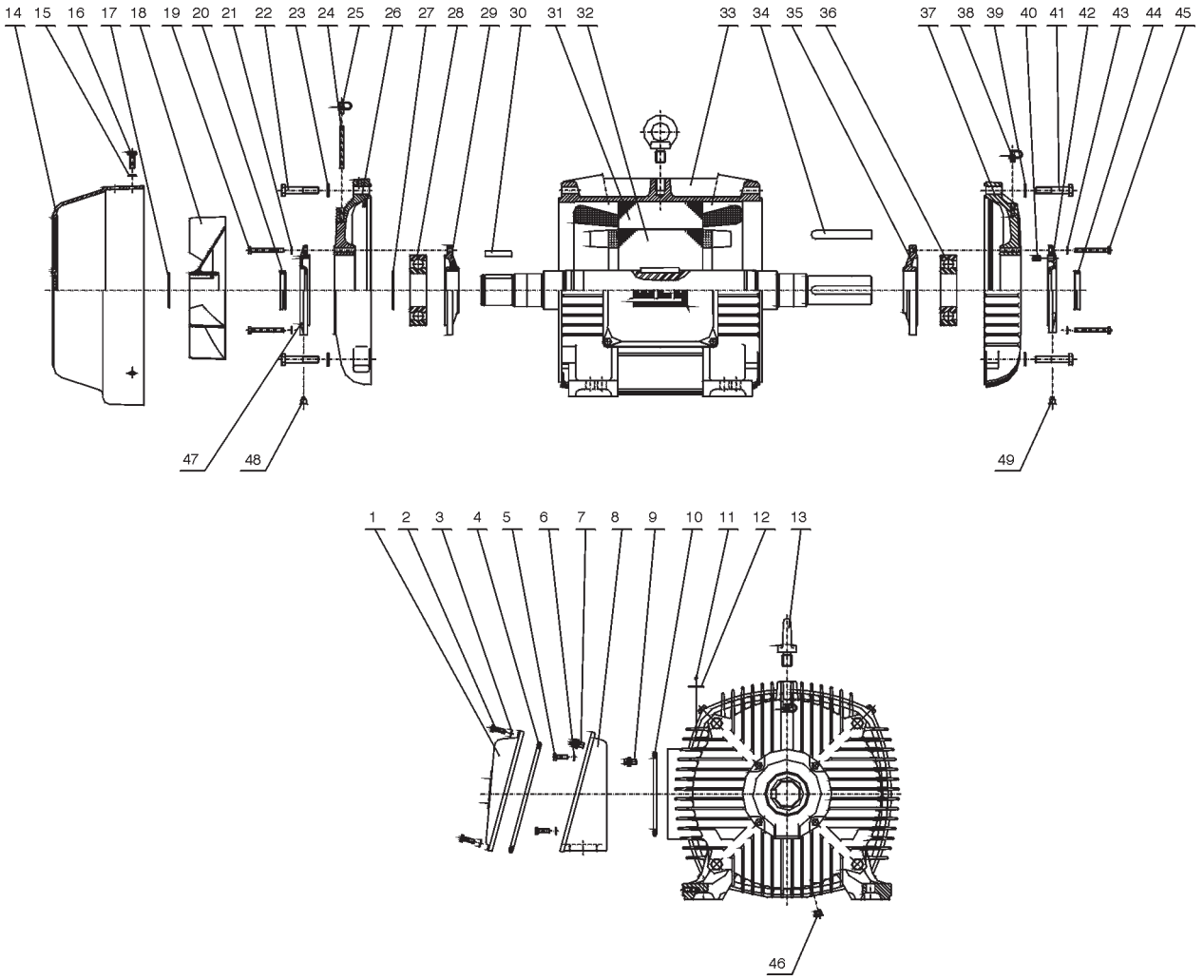

Part Nr.	Description
1	Terminal box cover
2	Terminal box cover fixing bolt
3	Terminal box cover washer
4	Terminal box cover gasket
5	Terminal box fixing bolt
6	Terminal box fixing washer
7	Terminal box grounding lug
8	Terminal box
9	Frame grounding lug
10	Terminal box o'ring gasket
11	Nameplate fixing rivet
12	Nameplate
13	Eyebolt
14	Fan cover
15	Fan cover washer
16	Fan cover fixing bolt
17	Fan fixing ring

Part Nr.	Description
18	Fan
19	Non-drive end bearing cap bolt
20	V'Ring
21	Non-drive end bearing cap washer
22	Non-drive end endshield fixing bolt
23	Non-drive end endshield washer
24	Non-drive end grease nipple
25	Non-drive end grease nipple cover
26	Non-drive enshield
27	Bearing cap
28	Non-drive bearing
29	Internal non-drive end bearing cap
30	Fan fixing key
31	Wound stator
32	Rotor / shaft assembly
33	Frame

Part Nr.	Description
34	Shaft key
35	Internal drive end bearing cap
36	Drive end bearing
37	Drive endshield
38	Drive end grease nipple cover
39	Drive endshield washer
40	Pre-load spring
41	Drive end endshield fixing bolt
42	External drive end bearing cap
43	Drive end bearing cap washer
44	V'Ring
45	Drive end bearing cap fixing bolt
46	Drain plug
47	External non-drive end bearing cap
48	Non drive end grease relief
49	Non-drive end grease relief

THREE-PHASE MOTORS NEMA 56
Frames A56 - B56 - D56 - F56H and G56H

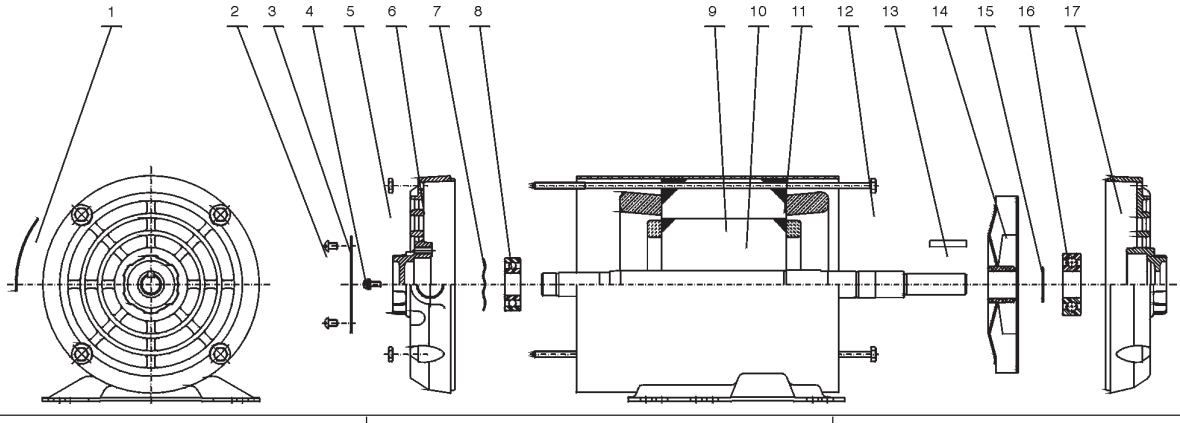

Part Nr.	Description
1	Sticker
2	Terminal box cover fixing bolt
3	Terminal box cover
4	Grounding lug
5	Through bolt fastening nut
6	Non-drive endshield
7	Spring washer
8	Non-drive end bearing
9	Wound stator
10	Rotor / shaft assembly
11	Frame
12	Through bolt
13	Shaft key
14	Fan
15	Drive end bearing fastening washer
16	Drive end bearing
17	Drive endshield

SINGLE-PHASE MOTORS NEMA 56
Frames B48 - C48 - C56 - A56 - B56 - D56 - F56H - G56H

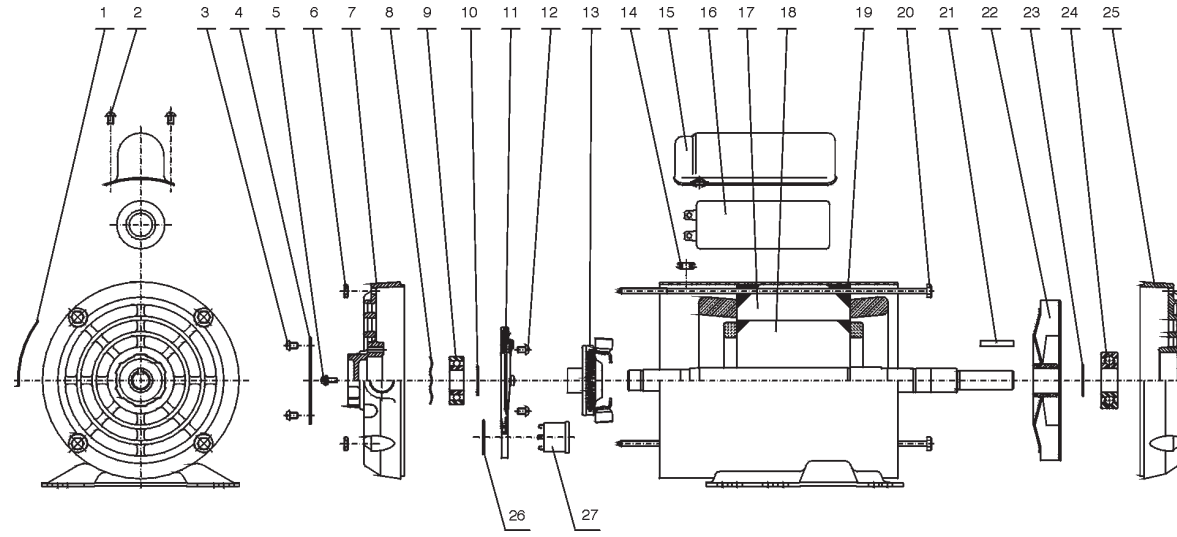

Part Nr.	Description
1	Sticker
2	Capacitor cover fixing bolt
3	Terminal box cover fixing bolt
4	Terminal box cover
5	Grounding lug
6	Through bolt fastening nut
7	Non-drive endshield
8	Spring washer
9	Non-drive and bearing
10	Non-drive and bearing fastening washer
11	Stationary switch
12	Stationary switch fastening bolt
13	Centrifugal switch
14	Rubber ring for lead passing hole to capacitor
15	Capacitor cover
16	Capacitor
17	Wound stator
18	Rotor / shaft assembly
19	Frame
20	Through bolt
21	Shaft key
22	Fan
23	Drive end bearing fastening washer
24	Drive end bearing
25	Drive endshield
26	Overload thermal protector fixing ring
27	Overload thermal protector

Note: *For F56H and G56H frame motors:* ***1)*** *Part nr.* ***2*** *= 3 pieces;* ***2)*** *Part nr.* ***15*** *and* ***16*** *=* ***2*** *pieces*

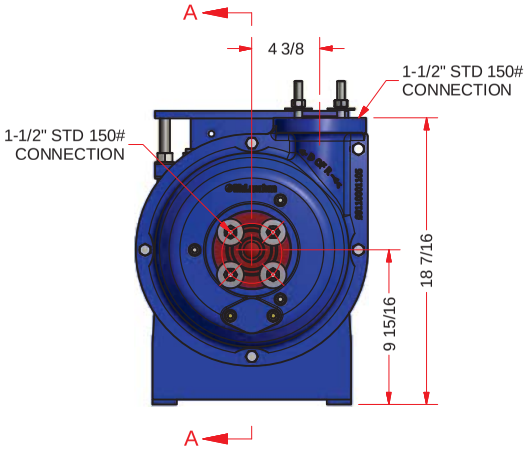

SUCTION

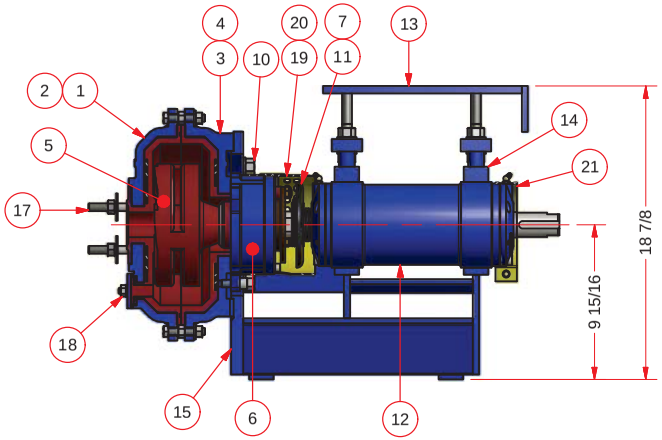

SECTION A-A

MATERIAL LIST					
ITEM	QTY	PART NUMBER	DESCRIPTION	kg	TOTAL kg
1	1	09110001105	CASING, SUCTION SIDE	17.5	17.5
2	1	09110001133	LINER, NITRILE, SUCTION SIDE C/W DRAIN PLUG	2.2	2.2
3	1	09110001108	CASING, GLAND SIDE	20.6	20.6
4	1	09110001134	LINER, NITRILE, GLAND SIDE C/W HARDWARE	1.8	1.8
5	1	09110001135	IMPELLER, NITRILE	3.9	3.9
6	1	09111001001	GLAND ASSEMBLY, DRY, NITRILE	8.9	8.9
7	1	09110002001	CLAMP, S.S.	0.0	0
8	1	09110002035	WASHER, AXIAL POSITIONING JACK	0.0	0
9	1	09110002111	BOLT SET, CASING	0.6	0.6
10	1	09110002113	STUD SET, CASING TO PEDESTAL	0.6	0.6
11	1	09110002115	FLINGER	0.1	0.1
12	1	09110002116	BEARING ASSEMBLY	24.3	24.3
13	1	09110002117	MOTOR SUPPORT TABLE	18.9	18.9
14	2	09110002118	PEDESTAL CAP	1.8	3.6
15	1	09110002119	PEDESTAL	33.5	33.5
16	1	09110002120	JACK, AXIAL POSITIONING	0.7	0.7
17	1	09110001125	STUD SET, UNC, SUCTION/DISCHARGE FLANGE (8/SET)	1.0	1
18	1	09110002126	STUD SET, DRAIN PLUG	0.1	0.1
19	1	09110002130	GUARD, SHAFT	0.9	0.9
20	1	09110002137	PROTECTIVE STRIP	0.1	0.1
21	1	09110002139	GUARD, PULLEY SHAFT	0.2	0.2

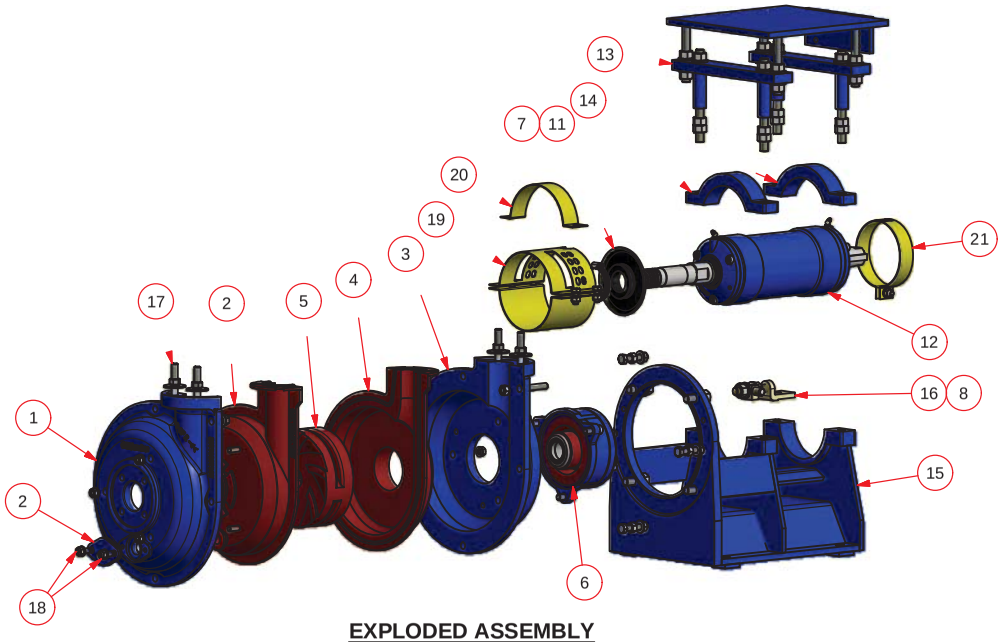

EXPLODED ASSEMBLY

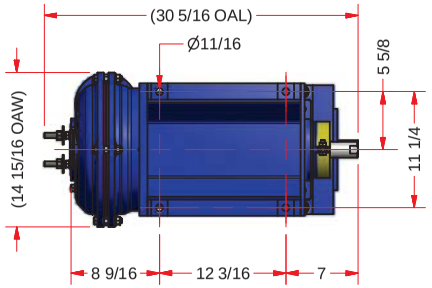

FOOT PRINT

REVISION HISTORY			
REV	DESCRIPTION	DATE	BY
1	CORRECTED P/N USED FOR ITEM 17 FROM -2125 TO -1125	6/30/2014	TBS
2	CORRECTED ITEM 6 FROM 09111002001 TO 09111001001	10/14/2014	TBS

INFORMATION CONTAINED WITHIN THIS DOCUMENT IS A TRADE SECRET & ANY USE OF THE INFORMATION, EXCEPT BY ITS INTENDED RECEIVER, IS STRICTLY PROHIBITED. ANY MISAPPROPRIATION OF THE INFORMATION SHALL MAKE THE UNINTENDED RECEIVER LIABLE FOR ANY AND ALL DAMAGES SUFFERED AS A RESULT BY THE MCLANAHAN CORPORATION.

McLanahan

DESCRIPTION: ASSEMBLY DRAWING 1.5 X 1.5 PUMP C/W DRY GLAND, CLOSED VANE IMPELLER, & NITRILE LINERS	DESIGNED BY: J BAXTER	ORIGIN: TN	DWG SIZE: B
	DRAWN BY: J BAXTER	DATE: 1/19/2012	SCALE: NTS
	CHECKED BY: T SCHROEDER	DATE: 6/30/2014	SHEET#: 1 /1
REFERENCE DWG:			
PART NUMBER: 09100201003	WEIGHT: 310 LBS	DRAWING NUMBER: 09100201003	REV: 2

INFORMATION CONTAINED WITHIN THIS DOCUMENT IS A TRADE SECRET & ANY USE OF THE INFORMATION, EXCEPT BY ITS INTENDED RECEIVER, IS STRICTLY PROHIBITED. ANY MISAPPROPRIATION OF THE INFORMATION SHALL MAKE THE UNINTENDED RECEIVER LIABLE FOR ANY AND ALL DAMAGES SUFFERED AS A RESULT BY THE MCLANAHAN CORPORATION.

McLanahan

DESCRIPTION:	DESIGNED BY:	ORIGIN:	DWG SIZE:
GENERAL ARRANGEMENT 1-1/2" X 1-1/2" PUMP ASSEMBLY TYPICAL FOR ALL GLANDS & LININGS TABLE MOUNTED MOTORS (5-15 HP)	T SCHROEDER	TN	B
	DRAWN BY:	DATE:	SCALE:
	T SCHROEDER	6/10/2013	AS NOTED
	CHECKED BY:	DATE:	SHEET#:
	T SCHROEDER	6/10/2013	1 /1
REFERENCE DWG: N/A			
PART NUMBER: 1.5X1.5GA	WEIGHT: 325 LBS	DRAWING NUMBER: 1.5X1.5GA	REV: 00

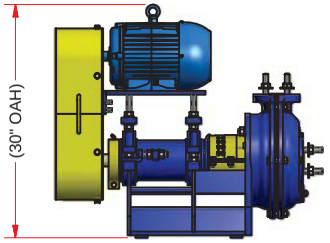

5 HP MOTOR
ESTIMATED WT: 436 LBS
SCALE: 1:16

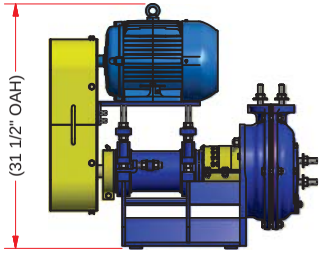

7.5 HP MOTOR
ESTIMATED WT: 495 LBS
SCALE: 1:16

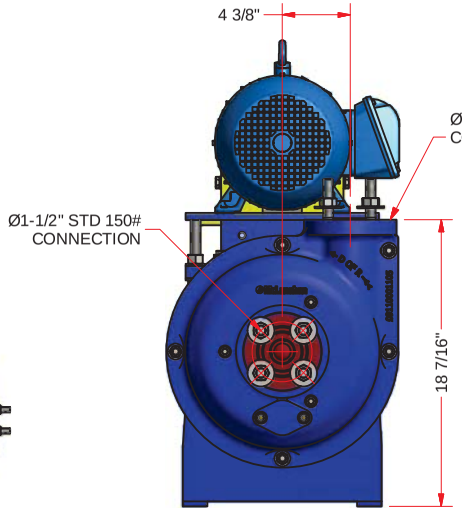

FRONT
SCALE 1:8

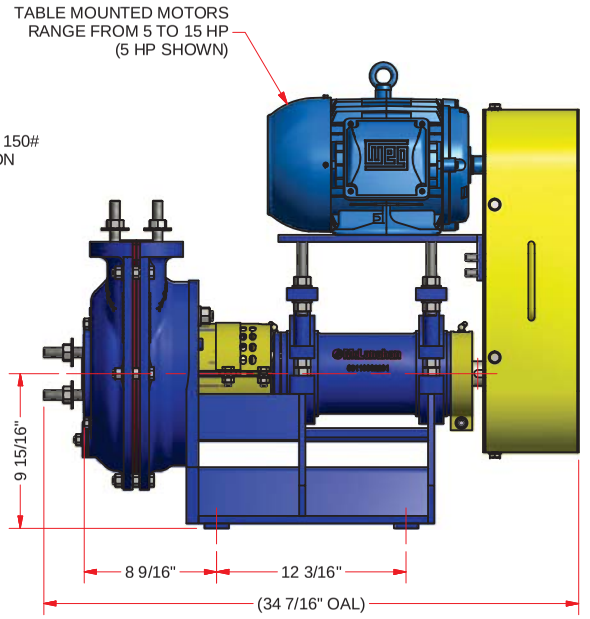

SIDE

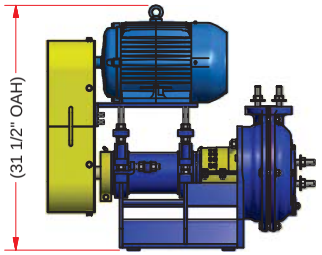

10 HP MOTOR
ESTIMATED WT: 513 LBS
SCALE: 1:16

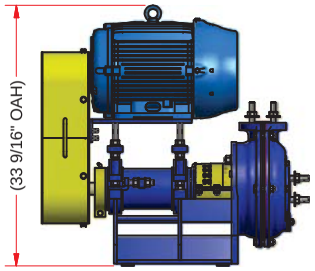

15 HP MOTOR
ESTIMATED WT: 592 LBS
SCALE: 1:16

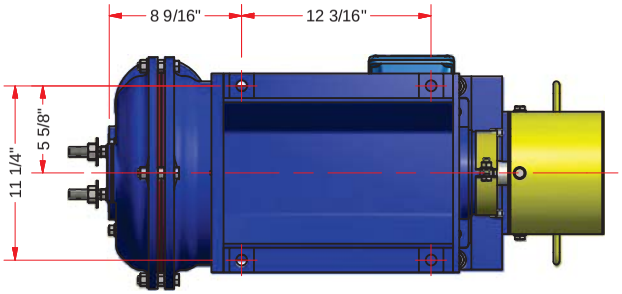

BOTTOM
FOOT-PRINT

ITEM	QTY	PART NUMBER	DESCRIPTION	LBS	TOTAL LBS
1	1	09110002201	HOUSING, BEARING	29.5	13.4
2	1	09110002202	SHAFT	16.8	7.6
3	1	09110002203	COVER, END	2.9	1.3
4	1	09110002204	COVER, FRONT	2.7	1.2
5*	1	09110002205	BEARING, END	0.4	0.2
6*	1	09110002206	BEARING, FRONT	0.4	0.2
7*	1	09110002207	WASHER, TAB	0.0	0.0
8*	1	09110002208	NUT, LOCK	0.2	0.1
9*	1	09110002209	SEAL, END, GREASE	0.0	0.0
10*	1	09110002210	SEAL, FRONT, GREASE	0.0	0.0
11	1	09110002211	SCREW SET, BEARING COVER	0.5	0.2
12	2	09110002212	NIPPLE, GREASE	0.0	0.0
13*	2	09110002213	O-RING, 99 ID x 2, SEAL, BEARING HOUSING COVER	0.0	0.0
14	1	09110002215	KEY, SHAFT, 50 X 12 X 8	0.1	0.0
15*	1	09110002217	SEAL, VEE	0.0	0.0

NOTE: REPAIR KIT 09110002225 ITEMS MARKED WITH "*"

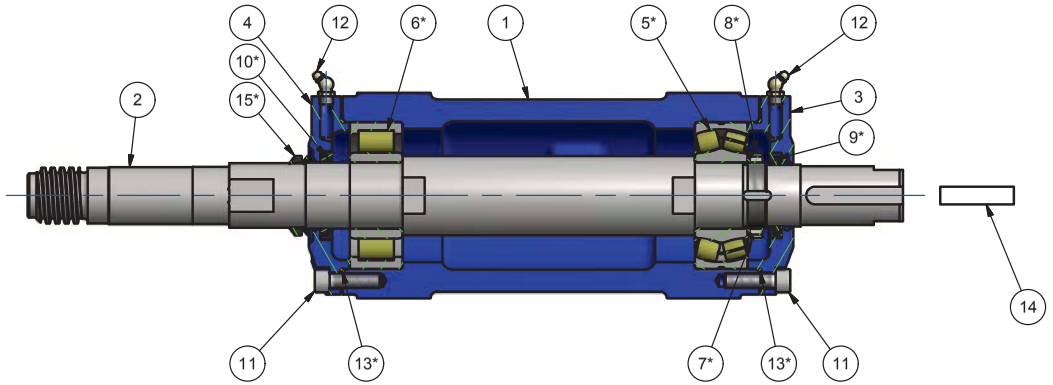

SECTION VIEW

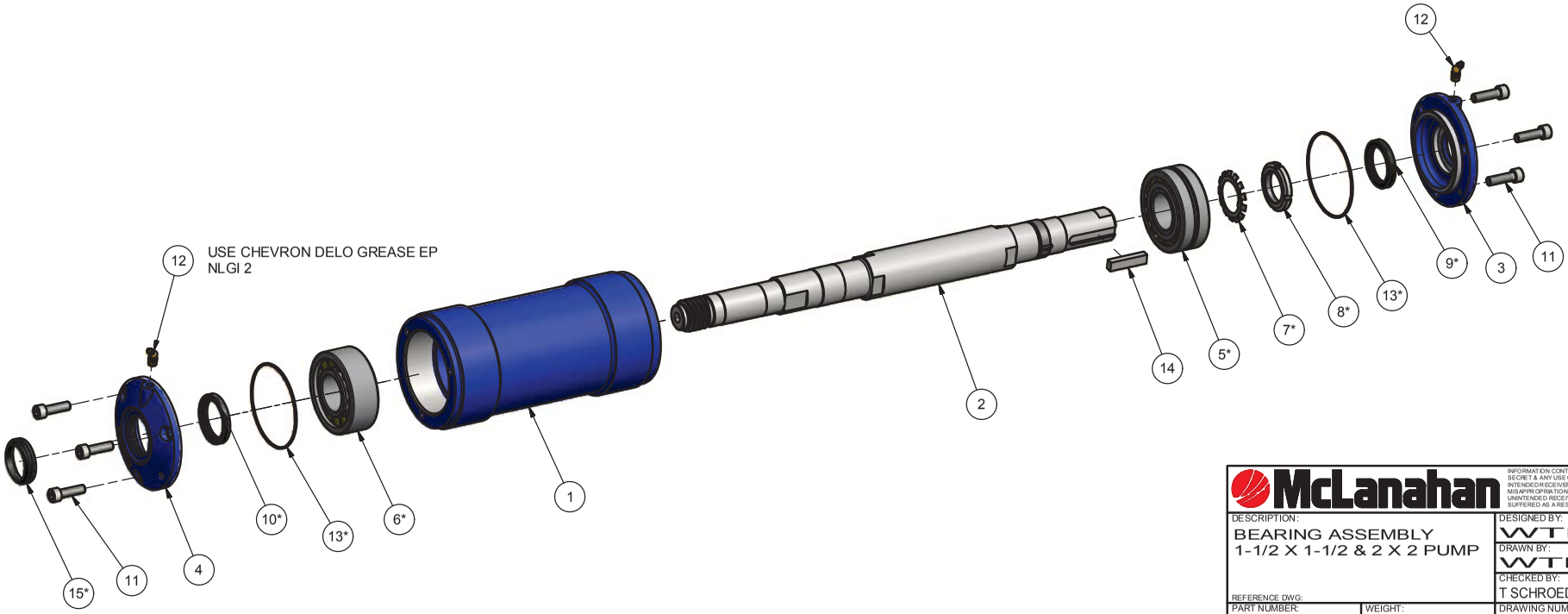

INFORMATION CONTAINED WITHIN THIS DOCUMENT IS A TRADE SECRET & ANY USE OF THE INFORMATION, EXCEPT BY ITS INTENDED RECEIVER, IS STRICTLY PROHIBITED. ANY MISAPPROPRIATION OF THE INFORMATION SHALL MAKE THE UNINTENDED RECEIVER LIABLE FOR ANY AND ALL DAMAGES SUFFERED AS A RESULT BY THE MCLANAHAN CORPORATION.

McLanahan

DESCRIPTION: BEARING ASSEMBLY 1-1/2 X 1-1/2 & 2 X 2 PUMP	DESIGNED BY: WTD	ORIGIN: TN	DWG SIZE: B
	DRAWN BY: WTD	DATE: 7/16/2010	SCALE: AS NOTED
REFERENCE DWG:	CHECKED BY: T SCHROEDER	DATE: 8/29/2013	SHEET#: 1 /1
PART NUMBER: 09110002116 / WEIGHT: 53 LBS	DRAWING NUMBER: 09110002116		REV: 0

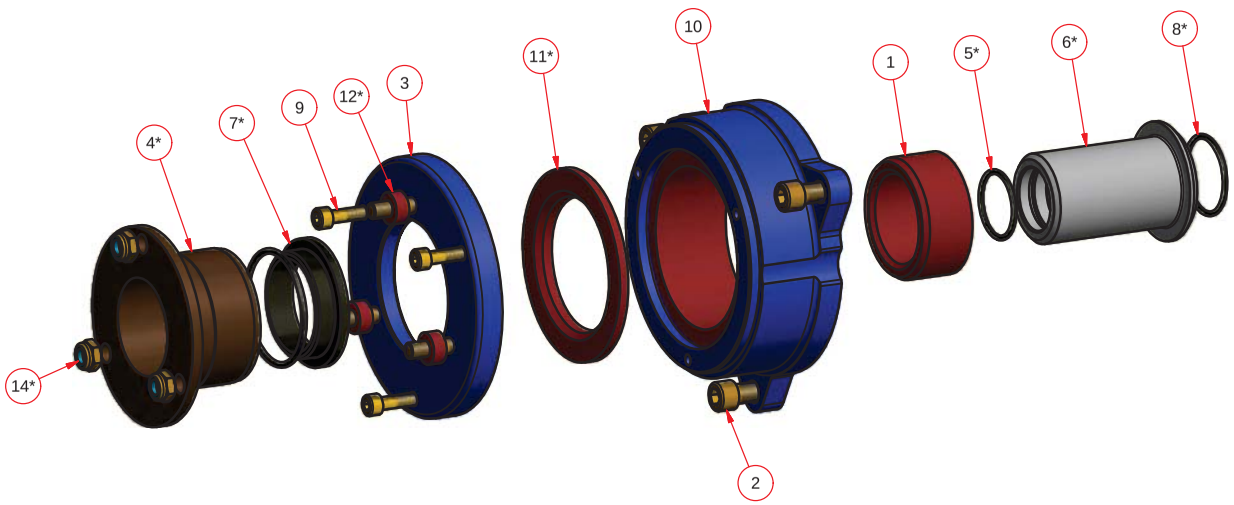

EXPLODED ASSEMBLY

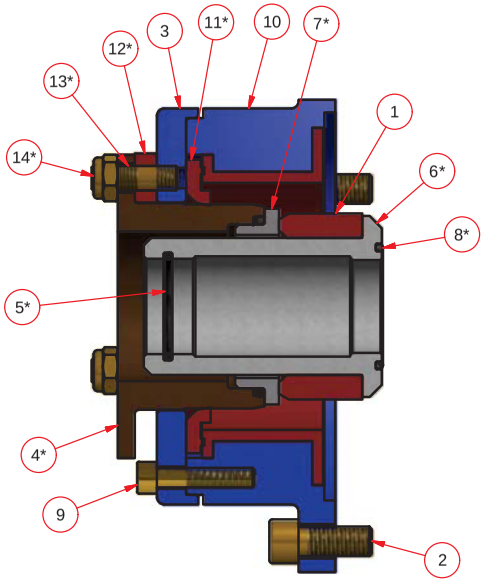

DRY GLAND

HALF SECTION SHOWN

NOTE: REPAIR KIT 09110202000 CONSISTS OF ITEMS MARKED WITH AN ASTERISK *.

MATERIAL LIST

ITEM	QTY	PART NUMBER	DESCRIPTION	LBS	TOTAL LBS
1	1	09110001339	SEAL, FACE, DRY GLAND, NITRILE	0.1	0.1
2	1	09110002121	SCREW SET, GLAND HOLDING	0.3	0.1
3	1	09110002302	GLAND COVER, DRY GLAND	2.9	1.3
4*	1	09110002303	SLEEVE, ADJUSTING, DRY GLAND	3.7	1.7
5*	1	09110002307	O-RING, SLEEVE, 39mm ID x 3mm	0.0	0
6*	1	09110002308	SLEEVE, GLAND, DRY GLAND	2.2	1
7*	1	09110002311	CERAMIC WEAR FACE KIT C/W CERAMIC FACE, O-RING & EPOXY	0.2	0.1
8*	1	09110002312	O-RING, IMPELLER, 45mm ID X 3mm	0.0	0
9	1	09110002314	SCREW SET, GLAND, COVER	0.2	0.1
10	1	09110002331	GLAND HOUSING, DRY GLAND, NITRILE	9.7	4.4
11*	1	09110002335	SEAL, DRY GLAND, NITRILE	0.1	0
12*	1	09110003304	WASHER, RUBBER, SPACER	0.0	0
13*	1	09110003306	STUD SET, ADJUSTING GLAND	0.1	0.1
14*	3	296220100	NUT, M10, HEX, BRASS, NYLON	0.0	0

McLanahan

INFORMATION CONTAINED WITHIN THIS DOCUMENT IS A TRADE SECRET & ANY USE OF THE INFORMATION, EXCEPT BY ITS INTENDED RECEIVER, IS STRICTLY PROHIBITED. ANY MISAPPROPRIATION OF THE INFORMATION SHALL MAKE THE UNINTENDED RECEIVER LIABLE FOR ANY AND ALL DAMAGES SUFFERED AS A RESULT BY THE MCLANAHAN CORPORATION.

DESCRIPTION: ASSEMBLY DRAWING DRY GLAND NITRILE RUBBER 1-1/2 X 1-1/2 PUMP	DESIGNED BY: J BAXTER	ORIGIN: TN	DWG SIZE: B	
	DRAWN BY: J BAXTER	DATE: 10/11/2010	SCALE: AS NOTED	
	CHECKED BY: T SCHROEDER	DATE: 10/14/2014	SHEET#: 1 /1	
REFERENCE DWG:				
PART NUMBER: 09111001001	WEIGHT: 20 LBS	DRAWING NUMBER: 09111001001		REV: 0

NORD

CLINCHER SERIES, GEAR REDUCER

LEFT BLANK

Intelligent Drivesystems, Worldwide Services

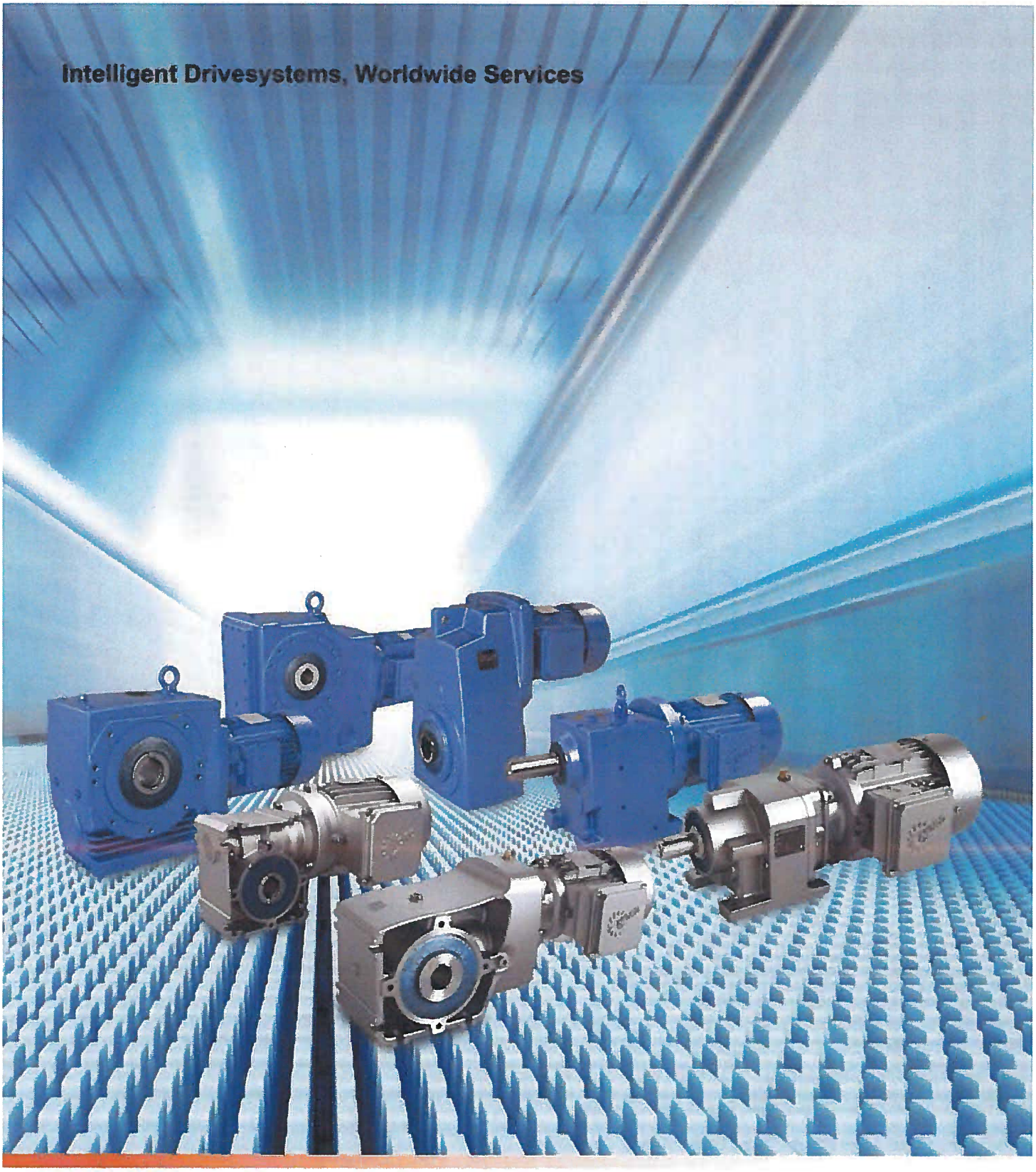

EN

B 1000

Gear units

Operating and Assembly Instructions

NORD DRIVESYSTEMS

General safety and operating instructions

1. General

Depending on its protection class, the device may have live, bare, moving or rotating parts or hot surfaces during operation,.

Unauthorised removal of covers, improper use, incorrect installation or operation causes a risk of serious personal injury or material damage.

All transport, installation, commissioning and maintenance work must be carried out by qualified specialist personnel (national accident prevention regulations must be observed).

Within the meaning of this basic safety information, qualified specialist personnel are persons who are familiar with the installation, assembly, commissioning and operation of the product and who have the training and experience to recognise and avoid any hazards and risks.

2. Correct use

NORD products may only be used according to the information in the catalogue and the associated technical documentation.

Compliance with the operating and installation instructions is a **prerequisite for fault-free operation** and for the fulfilment of any warranty claims. **These operating and installation instructions must be read** before working with the device!

These operating and installation instructions contain important information about **servicing**. They must therefore be kept **close to the device**.

All details regarding technical data and permissible conditions at the installation site must be complied with.

3. Transport, storage

Information regarding transport, storage and correct handling must be complied with.

4. Installation

The device must be protected against impermissible loads. In particular, during transport and handling, components must not be deformed or changed. Touching of electronic components and contacts must be avoided.

5. Electrical Connection

When working on live three-phase motors, the applicable national accident prevention regulations must be complied with (e.g. BGV A3, formerly VBG 4).

The electrical installation must be implemented according to the applicable regulations (e.g. cable cross-section, fuses, earth lead connections).

Information regarding EMC-compliant installation – such as shielding, earthing and installation of cables – can be found in the three-phase motor documentation. Compliance with the limiting values specified in the EMC regulations is the responsibility of the manufacturer of the system or machine.

6. Operation

Appropriate safety measures must be taken for applications where failure of the device may result in injury.

Where necessary, systems in which NORD devices are installed must be equipped with additional monitoring and protective equipment according to the applicable safety requirements, e.g. legislation concerning technical equipment, accident prevention regulations, etc.

All covers and guards must be kept closed during operation.

7. Maintenance and repairs

After the device has been disconnected from the power supply, live equipment components and power connections should not be touched immediately, because of possible charged capacitors.

Further information can be found in this documentation.

These safety instructions must be kept in a safe place!

Documentation

Name:	B 1000
Part No.:	6052802
Series:	Gear units and geared motors
Type series:	
Gear unit types:	**Helical gear unit** **NORDBLOC helical gear units** **Standard helical gear units** **Parallel shaft gear units** **Bevel gear units** **Helical worm gear units** **MINIBLOC worm gear units** **UNIVERSAL worm gear units**

Version list

Title, Date	Order number	Comments
B 1000, February 2013	6052802 / 0713	-
B 1000, September 2014	6052802 / 3814	General corrections
B 1000, April 2015	6052802 / 1915	New gear unit types SK 10382.1 + SK 11382.1
B 1000, March 2016	6052802 / 0916	General corrections New bevel gear units SK 920072.1 + SK 930072.1
B 1000, September 2016	6052802 / 3816	General corrections New SK 071.1 helical gear unit, SK 171.1, SK 371.1, SK 571.1, SK 771.1;

Table 1: Version list B 1000

Copyright notice

As an integral component of the device described here, this document must be provided to all users in a suitable form.
Any editing or amendment or other utilisation of the document is prohibited.

Publisher

Getriebebau NORD GmbH & Co. KG
Getriebebau-Nord-Straße 1 • 22941 Bargteheide, Germany • http://www.nord.com/
Fon +49 (0) 45 32 / 289-0 • Fax +49 (0) 45 32 / 289-2253

Table of Contents

1 Notes 8
1.1 General information 8
1.2 Safety and information symbols 8
1.2.1 Explanation of labels used 8
1.3 Correct use 9
1.4 Safety information 10
1.5 Other documents 11
1.6 Disposal 11

2 Description of gear unit 12
2.1 Type designations and gear unit types 12
2.2 Type plate 14

3 Assembly instructions, storage, preparation, installation 15
3.1 Transporting the gear unit 15
3.2 Storage 16
3.3 Long-term storage 16
3.4 Preparing for installation 18
3.5 Installing the gear unit 20
3.6 Fitting hubs on the gear shafts 21
3.7 Fitting push-on gear units 22
3.8 Fitting shrink discs 25
3.9 Fitting the covers 27
3.10 Fitting the covers 27
3.11 Fitting a standard motor 28
3.12 Installation of a servo motor (Option SEP / SEK) 30
3.13 Fitting the cooling coil to the cooling system 31
3.14 Installation of an oil expansion tank, Option OA 32
3.15 Subsequent paintwork 32

4 Commissioning 33
4.1 Check the oil level 33
4.2 Activating the automatic lubricant dispenser 33
4.3 Operation with lubricant cooling 34
4.4 Running-in time for the worm gear unit 35
4.5 Checklist 35

5 Service and maintenance 36
5.1 Service and Maintenance Intervals 36
5.2 Service and Maintenance Work 37

6 Appendix 42
6.1 Configurations and maintenance 42
6.2 Lubricants 55
6.3 Lubricant quantities 57
6.4 Helical gear unit 58
6.5 Torque values 65
6.6 Troubleshooting 66
6.7 Leaks and seals 67
6.8 Repair information 68
6.8.1 Repairs 68
6.8.2 Internet information 68
6.9 Abbreviations 68

List of illustrations

Fig. 1: Type plate (example) with explanation of the type plate fields 14
Figure 2: Activating the vent plug 19
Figure 3: Activating the vent plug 19
Figure 4: Removing the vent plug and fitting the special pressure vent 19
Figure 5: Example of a simple pulling device 21
Figure 6: Correct assembly of drive elements 21
Figure 7: Applying lubricant to the shaft and the hub 22
Figure 8: Removing the factory-fitted closing cap 23
Figure 9: Gear unit mounted to shaft with a shoulder using the fastening element 23
Figure 10: Gear unit mounted to shaft without a shoulder using the fastening element 23
Figure 11: Dismantling using dismantling device 23
Figure 12: Mounting the rubber buffer (Option G or VG) on parallel shaft gear units 24
Fig. 13: Attaching the torque support on bevel gear and worm gear units 24
Figure 14: Hollow shaft with shrink disc 25
Figure 15: Fitting the covers, Option SH, Option H, and Option H66 27
Fig. 16: Removal and fitting of the cover cap 27
Figure 17: Fitting the coupling onto the motor shaft - various types of coupling 29
Figure 18: Cooling cover 31
Figure 19: Installing the expansion tank 32
Figure 20: Activating the automatic lubricant dispenser with standard motor mounting 33
Figure 21: Adhesive label 34
Figure 22: Checking the oil level with a dipstick 39
Figure 23: Replacing the automatic lubricant dispenser with standard motor mounting 39
Figure 24: Oil level check with oil level tank 43

List of tables

Table 1: Version list B 1000 3
Table 2: Disposal of materials 11
Table 3: Type designations and gear unit types 13
Table 4: Allocation of cylinder types to coupling sizes 30
Table 5: Roller bearing greases 55
Table 6: Lubricant table 57
Table 7: Lubricant quantities for helical gear units 58
Table 8: Lubricant quantities for NORDBLOC 59
Table 9: Lubricant quantities for NORDBLOC helical gear units 60
Table 10: Lubricant quantities for standard helical gear units 61
Table 11: Lubricant quantities for parallel shaft gear units 62
Table 12: Lubricant quantities for bevel gear units 63
Table 13: Lubricant quantities for Helical worm gear units 64
Table 14: Torque values 65
Table 15: Overview of malfunctions 66
Table 16: Definition of leaks according to DIN 3761 67

1 Notes

1.1 General information

Read the Operating Manual carefully prior to performing any work on or putting the gear unit into operation. Strict compliance with the instructions in this Operating Manual is essential. This Operating Manual and all associated special documentation must be kept in the immediate vicinity of the gear unit.

Getriebebau NORD accepts no liability for damage to persons, materials or assets as a result of the non-observance of this Operating Manual, operating errors or incorrect use. General wearing parts, e.g. radial seals are excluded from the warranty.

If additional components are attached to or installed on or in the gear unit (e.g. motor, cooling system, pressure sensor etc.) or components (e.g. cooling system) are supplied with the order, the operating instructions for these components must be observed.

If geared motors are used, compliance with the Motor Operating Manual is also necessary.

If you do not understand the contents of this Operating Manual or additional operating instructions, please consult Getriebebau NORD!

1.2 Safety and information symbols

1.2.1 Explanation of labels used

DANGER	Indicates an immediate danger, which may result in death or serious injury.
WARNING	Indicates a possibly dangerous situation, which may result in death or serious injury.
CAUTION	Indicates a possibly dangerous situation, which may result in slight or minor injuries.
NOTICE	Indicates a possibly harmful situation, which may cause damage to the product or the environment.
Note	Indicates hints for use and useful information.

1.3 Correct use

These gear units generate a rotational movement and are intended for use in commercial systems. The gear unit must only be used according to the information in the technical documentation from Getriebebau NORD.

Commissioning (start of proper operation) is prohibited until it has been established that the machine complies with the local laws and directives. The EMC Directive 2004/108/EC and the Machinery Directive 2006/42/EC in their currently valid scope of application must be complied with in particular.

DANGER! **Explosion hazard**

Serious injury and material damage due to explosion are possible.

Use in explosion hazard areas is prohibited.

WARNING **Injury to persons**

Appropriate safety measures must be taken for applications where failure of a gear unit or geared motor may result in injury.

Safeguard a wide area around the hazard zone.

WARNING **Material damage and personal injury**

If the gear unit is not used as designed, this may cause damage to the gear unit or the premature failure of components. Personal injury as a result of this cannot be ruled out.

Strict compliance with the technical data on the type plate is essential. The documentation must be observed.

1.4 Safety information

Observe all safety information, including that provided in the individual sections of this Operating Manual. All national and other regulations on safety and accident prevention must also be observed.

DANGER! **Severe personal injury**

Serious physical and property damage may result from inappropriate installation, non-designated use, incorrect operation, non-compliance with safety information, unauthorised removal of housing components or safety covers and structural modifications to the gear unit.

- All work, e.g. transportation, storage, installation, electrical connection, commissioning, servicing, maintenance and repair must only be performed by qualified specialist personnel.
- Observe the Operating Manual
- Observe the safety information
- Observe the safety and accident prevention regulations.
- Tighten the drive elements or secure the parallel key before switching on.
- Do not make any structural modifications.
- Do not remove any safety devices.
- If necessary, wear hearing protection when working in the immediate vicinity of the gear unit.
- All rotating components must be provided with guards. In standard cases, covers are fitted by NORD . The covers must always be used if contact protection is not provided by other methods.

DANGER! **Injury to persons**

The surfaces of gear units or geared motors may become hot during or shortly after operation. Danger of burns!

- Installation and maintenance work must only be performed when gear unit is at a standstill and has cooled down. The drive must be isolated and secured to prevent accidental start-up.
- Wear protective gloves.
- Shield hot surfaces with contact guards.
- Do not store inflammable objects or substances in the immediate vicinity of the gear unit.

WARNING **Injury to persons**

Serious injury and material damage due to improper transport are possible.

- No additional loads may be attached.
- Transportation aids and lifting gear must have an adequate load-bearing capacity.
- Pipes and hoses must be protected from damage.

CAUTION **Injury to persons**

Danger of cuts from exterior edges of attachment adapters, flanges and covers.

Contact freezing with metallic components in case of low temperatures.

In addition to personal protective equipment, wear suitable protective gloves and suitable goggles during assembly, commissioning, inspection and maintenance, in order to prevent injuries.

It is recommended that repairs to NORD Products are carried out by the NORD Service department.

1.5 Other documents

Further information may be obtained from the following documents:

- Gear unit catalogues (G1000, G1012, G1014, G1035, G1050, G2000),
- Operating and maintenance instructions for the electric motor,
- if applicable, the Operating Manuals for attached or supplied options

1.6 Disposal

Observe the current local regulations. In particular, lubricants must be collected and disposed of correctly.

Gear unit components	Material
Gear wheels, shafts, rolling bearings, parallel keys, locking rings, ...	Steel
Gear unit housing, housing components, ...	Grey cast iron
Light alloy gear unit housing, light alloy gear unit housing components, ...	Aluminium
Worm gears, bushes, ...	Bronze
Radial seals, sealing caps, rubber components,...	Elastomers with steel
Coupling components	Plastic with steel
Flat seals	Asbestos-free sealing material
Gear oil	Additive mineral oil
Synthetic gear oil (type plate code: CLP PG)	Polyglycol-based lubricants
Cooling spiral, embedding material of the cooling spiral, screw fittings	Copper, epoxy, yellow brass

Table 2: Disposal of materials

2 Description of gear unit

2.1 Type designations and gear unit types

Gear unit types / Type designations
Helical gear units
SK 11E, SK 21E, SK 31E,SK 41E, SK 51E (1-stage) SK 02, SK 12, SK 22, SK 32, SK 42, SK 52, SK 62N (2-stage) SK 03, SK 13, SK 23, SK 33N, SK 43, SK 53 (3-stage) SK 62, SK 72, SK 82, SK 92, SK 102 (2-stage) SK 63, SK 73, SK 83, SK 93, SK 103 (3-stage)
NORDBLOC helical gear units
SK 320, SK 172, SK 272, SK 372, SK 472, SK 572, SK 672, SK 772, SK 872, SK 972 (2-stage) SK 273, SK 373, SK 473, SK 573, SK 673, SK 773, SK 873, SK 973 (3-stage) SK 071.1, SK 371.1, SK 571.1, SK 771.1 (1-stage) SK 072.1, SK 172.1, SK 372.1, SK 572.1, SK 672.1, SK 772.1, SK 872.1, SK 972.1 (2-stage) SK 373.1, SK 573.1, SK 673.1, SK 773.1, SK 873.1, SK 973.1 (3-stage)
Standard helical gear units
SK 0, SK 01, SK 20, SK 25, SK 30, SK 33 (2-stage) SK 10, SK 200, SK 250, SK 300, SK 330 (3-stage)
Parallel shaft gear unit
SK 0182NB, SK 0282NB, SK 1282, SK 2282, SK 3282, SK 4282, SK 5282, SK 6282, SK 7282, SK 8282, SK 9282, SK 10282, SK 11282 (2-stage) SK 1382NB, SK 2382, SK 3382, SK 4382, SK 5382, SK 6382, SK 7382, SK 8382, SK 9382, SK 10382, SK 10382.1, SK 11382, SK 11382.1, SK 12382 (3-stage)
Bevel gear units
SK 92072, SK 92172, SK 92372, SK 92672, SK 92772; SK 920072.1, SK 92072.1, SK 92172.1, SK 92372.1, SK 92672.1, SK 92772.1, SK 93072.1, SK 93172.1, SK 930072.1, SK 93372.1, SK 93672.1, SK 93772.1 (2-stage) SK 9012.1, SK 9016.1, SK 9022.1, SK 9032.1, SK 9042.1, SK 9052.1, SK 9062.1, SK 9072.1, SK 9082.1, SK 9086.1, SK 9092.1, SK 9096.1 (3-stage) SK 9013.1, SK 9017.1, SK 9023.1, SK 9033.1, SK 9043.1, SK 9053.1 (4-stage)
Helical worm gear units
SK 02040, SK 02050, SK 12063, SK 12080, SK 32100, SK 42125 (2-stage) SK 13050, SK 13063, SK 13080, SK 33100, SK 43125 (3-stage)
MINIBLOC worm gear units
SK1 S32, SK1 S40, SK 1S50, SK 1S63, SK 1SU..., SK 1SM31, SK 1SM40, SK 1SM50, SK 1SM63 (1-stage) SK 2S32NB, SK 2S40NB, SK 2S50NB, SK 2S63NB, SK 2SU..., SK 2SM40, SK 2SM50, SK 2SM63 (2-stage)

Gear unit types / Type designations					
UNIVERSAL worm gear units SK 1SI31, SK 1SI40, SK 1SI50, SK 1SI63, SK 1SI75, SK 1SIS31, ..., SK 1SIS75, SK 1SID31, ..., SK 1SID63, SK 1SMI31, ..., SK 1SMI75, SK 1SMID31, ..., SK 1SMID63, SK 1SIS-D31, ..., SK 1SIS-D63 (1-stage), SK 2SMID40, SK 2SMID50, SK 2SMID63, SK 2SID40, ..., SK 2SID63 (2-stage)					
Versions / Options					
-	Foot mounting with solid shaft	D	Torque support	IEC	Standard IEC motor mounting
A	Hollow shaft version	K	Torque bracket	NEMA	Standard NEMA motor attachment
V	Solid shaft version	S	Shrink disc	W	With free drive shaft
L	Solid shaft both sides	VS	Reinforced shrink disc	VI	Viton radial seals
Z	Output flange B14	EA	Hollow shaft with internal spline	OA	Oil expansion tank
F	Output flange B5	G	Rubber buffer	OT	Oil level tank
X	Foot mounting	VG	Reinforced rubber buffer	SO1	Synthetic oil ISO VG 220
XZ	Base and output flange B14	R	Back stop	CC	Casing cover with cooling spiral
XF	Base and output flange B5	B	Fastening element	DR	Pressure venting
AL	Reinforced axial output bearings	H	Covering cap as contact guard	H10	Modular contrate pre-stage
		H66	Covering cap IP66	/31	Worm pre-stage
5	Reinforced output shaft (Standard helical gear units)	VL	Reinforced bearings	/40	Worm pre-stage
		VL2	Agitator version		
V	Reinforced drive shaft (Standard helical gear units)	VL3	Drywell agitator version		

Table 3: Type designations and gear unit types

Double gear units consist of two single gear units. They are to be treated as per the instructions in this Manual, i.e. as two individual gear units.

Type designation for double gear units: e.g. SK 73 /22 (consisting of single gear units SK 73 and SK 22)

2.2 Type plate

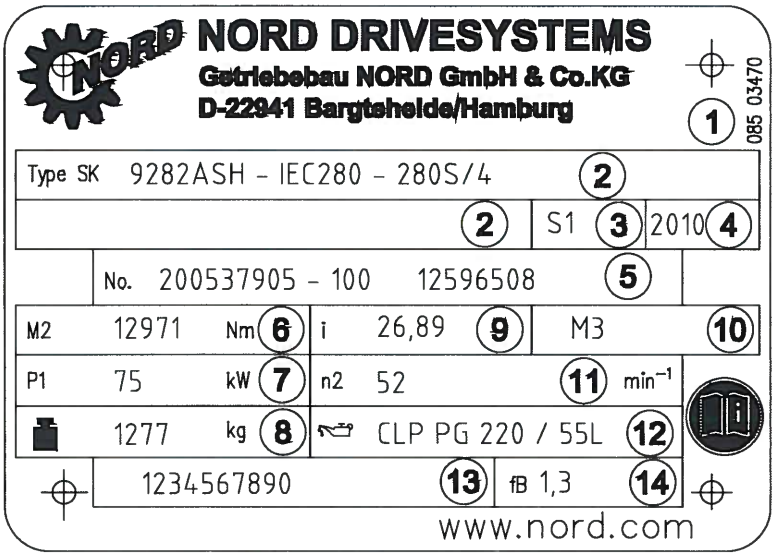

	Explanation
1	Matrix or bar code
2	NORD gear unit type
3	Operating mode
4	Year of manufacture
5	Serial number
6	Rated torque of gear unit output shaft
7	Drive power
8	Weight according to ordered version
9	Overall gear unit ratio
10	Installation orientation
11	Rated speed of gear unit output shaft
12	Lubricant type, viscosity and quantity
13	Customer's part number
14	Operating factor

Fig. 1: Type plate (example) with explanation of the type plate fields

3 Assembly instructions, storage, preparation, installation

Please observe all general safety instructions (please see chapter 1.4 "Safety information"), the safety information in the individual sections and the proper use (please see chapter 1.3 "Correct use")bestimmungsgemäße Verwendung</dg_ref_source_inline>.

3.1 Transporting the gear unit

⚠ WARNING — **Hazard due to heavy loads**

Severe injuries and material damage due to falling or tipping heavy loads are possible.

- Standing under the gear unit during transport is **extremely dangerous**.
- To prevent injury, **the danger area must be generously cordoned off.**
- Only transport using the eyebolts attached to the gear unit.
- No additional loads may be attached.
- If geared motors have an additional eyebolt attached to the motor, this must also be used.
- The thread of the eyebolt must be fully screwed in.
- Avoid pulling the eyebolts at an angle.

NOTICE — **Gear unit damage**

Damage to the gear unit due to improper use is possible.

- Prevent damage to the gear unit. Impacts to the free ends of the shafts may cause internal damage to the gear unit.
- Use adequately dimensioned and **suitable means of transportation**. Lifting tackle must be designed for the weight of the gear unit. The weight of the gear unit can be obtained from the dispatch documents.

3.2 Storage

For short-term storage before commissioning, please observe the following:

Store in the installation position (please see chapter 6.1 "Configurations and maintenance") and secure the gear unit against falling,

- Lightly oil bare metal housing surfaces and shafts
- Store in a dry place.
- Temperature in the range from – 5 °C to + 50 °C without large fluctuations,
- Relative humidity less than 60 %,
- No direct exposure to sunlight or UV light,
- No aggressive, corrosive substances (contaminated air, ozone, gases, solvents, acids, alkalis, salts, radioactivity etc.) in the immediate vicinity,
- No vibration or oscillation

3.3 Long-term storage

CAUTION — **Injury to persons**

Incorrect, or excessively long storage may result in malfunctions of the gear unit.

Perform an inspection of the gear unit prior to commissioning if the permissible storage time has been exceeded.

Information — **Long-term storage**

For storage or standstill periods in excess of 9 months, Getriebebau NORD recommends the long-term storage option.

With the long-term storage option and the use of the measures listed below, storage for up to 2 years is possible. As the actual influences on the unit greatly depend on the local conditions, these times should only be regarded as guide values.

Conditions of the gear unit and storage area for long-term storage prior to commissioning:

- Store in the installation position (please see chapter 6.1 "Configurations and maintenance") and secure the gear unit against falling.
- Transportation damage to the external paint must be repaired. Check that a suitable rust inhibitor is applied to the flange bearing surfaces. If necessary apply a suitable rust inhibitor to the surfaces.
- Gear units with the long-term storage option are completely filled with lubricant or have VCI corrosion protection agent mixed with the gear oil (see adhesive label on the gear unit, or are not filled with oil, but rather with small quantities of VCI concentrate.
- The sealing band in the vent plug must not be removed during storage. The gear unit must remain sealed tight.
- Store in a dry place.
- In tropical regions, the gear unit must be protected against damage by insects
- Temperature in the range from – 5 °C to + 40 °C without large fluctuations,
- Relative humidity less than 60 %,
- No direct exposure to sunlight or UV light,
- No aggressive, corrosive substances (contaminated air, ozone, gases, solvents, acids, alkalis, salts, radioactivity etc.) in the immediate vicinity,
- No vibration or oscillation

Measures during storage or standstill periods

- If the relative humidity is <50 % the gear unit can be stored for up to 3 years.

Measures before commissioning

- If the storage or standstill period exceeds 2 years or the temperature during short-term storage has greatly deviated from the standard range, the lubricant in the gear unit must be replaced before commissioning.
- If the gear unit is completely filled, the oil level must be reduced before commissioning.
- For gear units without oil filling, the oil level for the version must be filled before commissioning. The VCI concentrate may remain in the gear unit. Lubricant quantities and types must be filled according to the details on the type plate.

3.4 Preparing for installation

⚠ CAUTION — **Injury to persons**

Transport damage may cause malfunctions of the gear unit, which may cause material damage or personal injury.

Please inspect the delivery for transport and packaging damage immediately on receipt. Report any damage to the carrier immediately. Gear units with transport damage must not be commissioned.

The drive unit must be inspected and may only be installed if no damage is apparent. In particular the radial seals and the sealing caps must be inspected for damage.

Pay attention to leaked lubricants, they may cause slips.

All bare metal surfaces and shafts of the gear unit are protected against corrosion with oil, grease or corrosion protection agents before shipping.

Thoroughly remove all oil, grease or corrosion protection agents and any dirt from the shafts and flange surfaces before assembly.

In applications where an incorrect rotational direction may result in damage or potential risk, the correct rotational direction of the output shaft is to be established by test running the drive when uncoupled and guaranteeing such for subsequent operation.

Gears with integrated return stops are marked with arrows on the drive/driven sides. The arrows point in the rotation direction of the gear unit. When connecting the motor and during motor control, it must be ensured that the gear unit can only operate in the direction of rotation. (For further explanations see catalogue G1000 and WN 0-000 40)

NOTICE — **Gear unit damage**

For gear units with an integrated back stop, switching the drive motor to the blocked direction of rotation, i.e. incorrect direction of rotation, may result in damage to the gear unit.

Take care that the direction of rotation is correct.

Ensure that no aggressive or corrosive substances are present in the area surrounding the installation site or are subsequently expected during operation, which attack metal, lubricants or elastomers. In case of doubt, please contact Getriebebau NORD and take the recommended action.

Oil expansion tanks (Option OA) must be fitted in accordance with works standard WN 0-530 04. For gear units with an M10x1 vent plug, works standard WN 0-52135 must be also be observed during installation.

Oil level tanks (Option OT) must be fitted in accordance with works standard WN 0-521 30.

If venting of the gear unit is provided, the vent or the pressure vent must be activated before commissioning. To activate, remove the transport securing device (sealing cord). Position of the vent plug (please see chapter 6.1 "Configurations and maintenance").

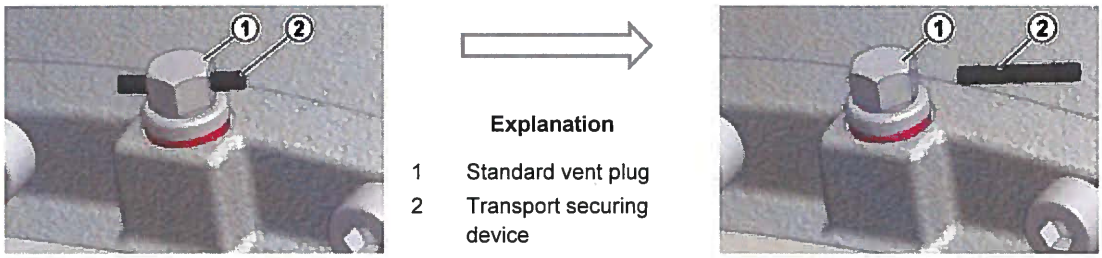

Explanation

1 Standard vent plug
2 Transport securing device

Figure 2: Activating the vent plug

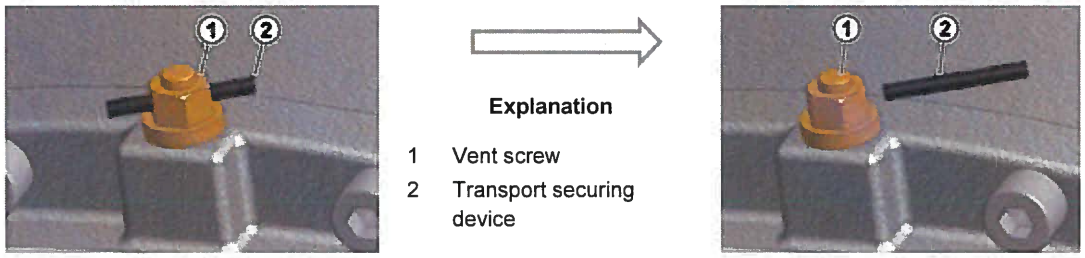

Explanation

1 Vent screw
2 Transport securing device

Figure 3: Activating the vent plug

Before commissioning, the vent plug must be replaced with the special pressure vent which is supplied as a loose part.

This is done by unscrewing the vent fitting and replacing it with the special pressure vent and seal (refer to Section 6.1 "Configurations and maintenance"). Double gear units consist of two single units and are equipped with 2 oil chambers and 2 pressure vents.

Explanation

1 Standard vent plug
2 Transport securing device
3 Special pressure vent screw

Figure 4: Removing the vent plug and fitting the special pressure vent

(please see chapter 6.5 "Torque values")

3.5 Installing the gear unit

⚠ WARNING — **Danger of burns**

The surfaces of gear units or geared motors may become hot during or shortly after operation.

Hot surfaces which can be touched directly must be protected with a contact guard.

⚠ WARNING — **Danger to persons**

If the foundation or the fastening of the gear unit is not adequately dimensioned, the gear unit may detach, fall down or rotate in an uncontrolled manner.

The foundation and the gear unit fastening must be appropriately designed for the weight and the torque. All bolts must be used to fasten the gear unit

NOTICE — **Damage to the gear unit due to overheating**

The gear unit may be damaged by overheating.

When installing, check that the cooling air from the motor fan can circulate around the geared motor and the gear unit without obstruction.

The eyebolts screwed into the gear units must be used during installation. No additional load may be attached to the gear unit.

If geared motors have an additional eyebolt attached to the motor, this must also be used. Avoid pulling the eyebolts at an angle. Observe the safety information (please see chapter 1.4 "Safety information").

The base and/or flange to which the gear unit is fitted should be vibration-free, torsionally strong and flat. The smoothness of the mating surface on the base or flange must be according to tolerance class K according to DIN ISO 2768-2. All contamination to the bolting surfaces of gear unit and base and/or flange must be thoroughly removed.

The gear housing must always be earthed. With geared motors, earthing via the motor connection must be ensured.

The gear unit must be precisely aligned with the drive shaft of the machine in order to prevent additional forces from being imposed on the gear unit due to distortion.

Welding of the gear unit is prohibited. The gear unit must not be used as the earth connection for welding work, as this may cause damage to the bearings and gear wheels.

The gear unit must be installed in the correct orientation(please see chapter 6.1 "Configurations and maintenance"). (UNIVERSAL SI and SM gear unit types do not depend on the configuration). Changes to the installation position after delivery require adjustment of the quantity of oil, and often other measures such as e.g. the installation of encapsulated roller bearings. **Damage may result if the stated installation position is not observed.**

All gear unit feet and/or all flange bolts on each side must be used. Bolts must have a minimum quality of 8.8. The bolts must be tightened to the correct torques (please see chapter 6.5 "Torque values"). Tension-free bolting must be ensured, particularly for gear units with a foot and flange.

The oil inspection screws, oil drain screws and the vent valves must be accessible.

3.6 Fitting hubs on the gear shafts

NOTICE — **Gear unit damage**

The gear unit may be damaged by axial forces.

Do not subject the gear unit to harmful axial forces when fitting the hubs. In particular, do not hit the hubs with a hammer.

Drive and driven elements, e.g. coupling and chain-wheel hubs must be mounted onto the drive and driven shaft of the gear unit using suitable pullers that will not apply damaging axial forces onto the gear unit.

Information — **Installation**

Use the end thread of the shafts for pulling. Fitting can be aided by coating the hub with lubricant or heating it up to approx. 100 °C beforehand.

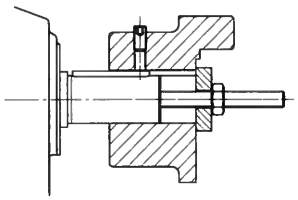

Figure 5: Example of a simple pulling device

DANGER — **Severe personal injury**

There is a danger of injury due to rapidly rotating drive and driven elements.

Drive and driven elements, such as belt drives, chain drives, shrink disks, fans and couplings must be fitted with contact protection.

Drive and driven elements may only subject the drive unit to the maximum radial forces F_R and axial forces F_A which are specified in the catalogue. Observe the correct tension, particularly on belts and chains.

Additional loads due to unbalanced hubs are not permitted.

The transverse force must be applied to the gear unit as closely as possible.

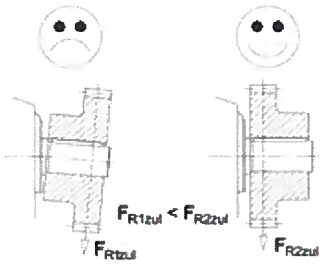

Figure 6: Correct assembly of drive elements

3.7 Fitting push-on gear units

NOTICE — **Gear unit damage**

The bearings, gear wheels, shafts and housing may be damaged by incorrect fitting.

- Observe the assembly instructions.
- The push-on gear unit must be fitted onto the shaft using a suitable puller, which will not exert damaging axial forces on the gear unit. In particular, do not hit the gear unit with a hammer.

Assembly and subsequent dismantling is aided by applying an anti-corrosive lubricant to the shaft before fitting (e.g. NORD Anti-Corrosion Part No. 089 00099). Excess grease or anti-corrosion agent may escape after assembly and may drip off. Clean these points on the output shaft after a running-in time of approx. 24 hours. This escape of grease is not due to a leak in the gear unit.

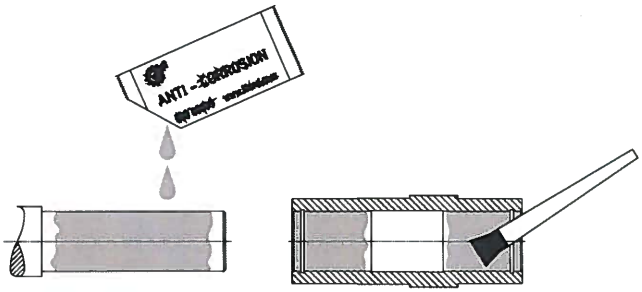

Figure 7: Applying lubricant to the shaft and the hub

Information — **Fastening element**

The gear unit can be fitted to shafts with and without a shoulder using the fastening element (Option B). Tighten the bolt of the fastening element to the correct torque (please see chapter 6.5 "Torque values"). For gear units with option H66, the factory-fitted closing cap must be removed before assembly.

For push-on gear units with option H66 and fastening element (Option B) the pressed-in closing cap must be pushed out before fitting the gear unit. The pressed-in closing cap may be destroyed during dismantling. As standard a second closing cap is supplied as a loose spare part. After fitting the gear unit, fit the new / new condition closing cap as described in Section 3.9 "Fitting the covers".

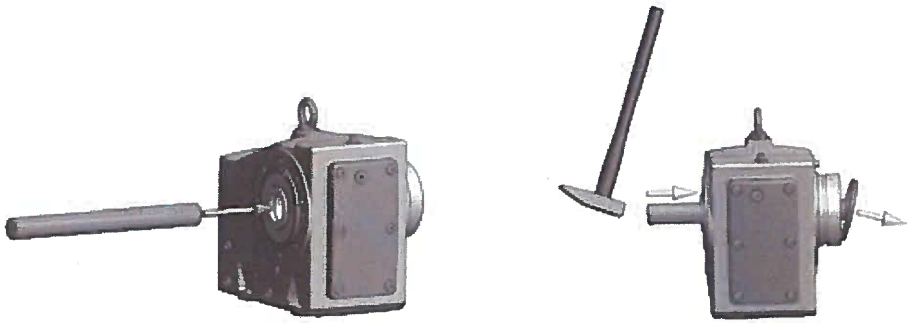

Figure 8: Removing the factory-fitted closing cap

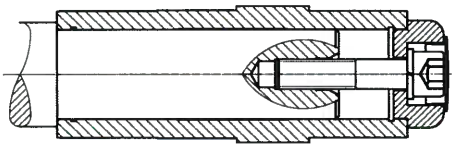

Figure 9: Gear unit mounted to shaft with a shoulder using the fastening element

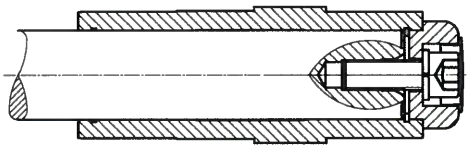

Figure 10: Gear unit mounted to shaft without a shoulder using the fastening element

A gear unit can be dismantled from a shaft with a shoulder using the following device, for example.

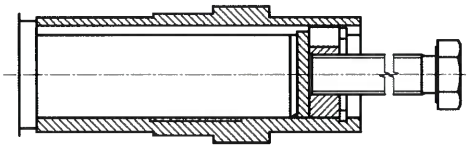

Figure 11: Dismantling using dismantling device

When assembling push-on gears with torque supports, the support must not be distorted. Tension-free mounting is aided by the rubber buffer (Option G or VG).

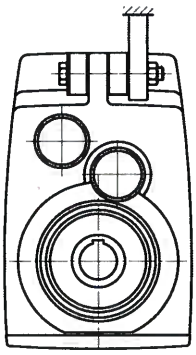

Figure 12: Mounting the rubber buffer (Option G or VG) on parallel shaft gear units

To fit the rubber buffer, tighten the screw fastening until there is no play between the contact surfaces when there is no load.

Then turn the fastening nut half a turn in order to pre-tension the rubber buffer (only applies for screw fastenings with adjusting threads). Greater pre-tension is not permissible

WARNING **Risk of injury**

The gear unit may suddenly rotate around the shaft if the bolts are loosened.

Secure the screw fastening against loosening, e.g. with Loctite 242 or a second nut.

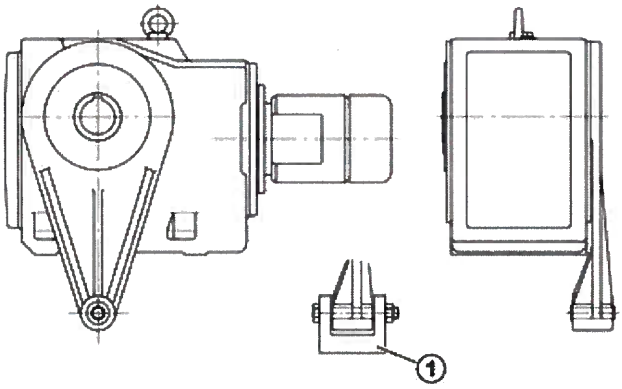

Explanation	
1	Always support torque support on both sides

Fig. 13: Attaching the torque support on bevel gear and worm gear units

Tighten the fastenings of the torque support with the correct tightening torques (please see chapter 6.5 "Torque values") and secure against loosening (e.g. Loctite 242, Loxeal 54-03).

3.8 Fitting shrink discs

⚠ CAUTION — **Risk of injury**

Risk of injury from incorrect mounting and dismantling of the shrink disc.

Observe the instructions.

NOTICE — **Gear unit damage**

If the tensioning bolts are tightened without the solid shaft inserted, the hollow shaft may be permanently deformed.

Do not tighten bolts if the solid shaft is not inserted!

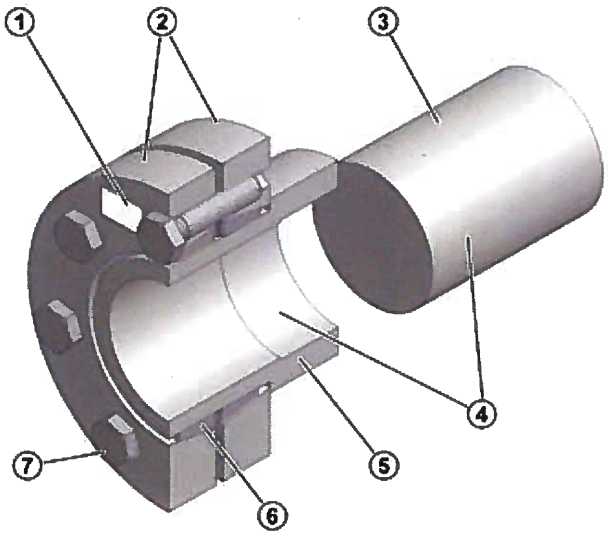

	Explanation
1	Shrink disc, type, part no. and torque details for tensioning screws
2	Tensioning flanges
3	Solid shaft of machine
4	Shaft and hollow shaft bore **FREE OF GREASE**
5	Hollow shaft of gear unit
6	Double half-slotted inner ring
7	Tensioning screws DIN 931 (933) -10.9

Figure 14: Hollow shaft with shrink disc

The shrink discs are supplied by the manufacturer ready for fitting. They must not be dismantled prior to fitting.

The solid shaft of the machine runs **free of grease** in the hollow shaft of the gear unit.

Assembly sequence

1. Remove any transport securing devices.
2. Loosen but do not remove tightening bolt and tighten gently by hand until there is no play between the flanges and the inner ring.
3. Slide the shrink disc onto the hollow shaft until the outer clamping flange is flush with the hollow shaft. The shrink disc is easier to slide on if the bore of the inner ring is lightly greased.
4. Prior to mounting, grease the solid shaft only in the area which will later come into contact with the bronze bush in the hollow shaft of the gear unit. Do not grease the bronze bush, in order to prevent grease penetrating the area around the shrink connection.
5. The hollow shaft of the gear unit must be completely de-greased and **completely free of grease.**
6. In the area of the shrink connection the solid shaft of the machine must be degreased and **completely free** of grease.
7. Insert the solid shaft of the machine into the hollow shaft so as to completely fill the area around the shrink connection.
8. Position the clamping flange by gently tightening the bolts.
9. Tighten the tensioning bolts successively in a clockwise direction by several turns – not crosswise – with approx. ¼ rotation per turn. Tighten the bolts with a torque wrench to the torque indicated on the shrink disc.
10. When the tensioning bolts have been tightened, there must be an even gap between the clamping flanges. If this is not the case, the gear unit must be dismantled and the shrink disc connection checked for correct fit.

Dismantling sequence:

1. Loosen the tensioning bolts successively in a clockwise direction by several turns with approx. ¼ rotation per turn. Do not remove the bolts from their thread.
2. Loosen the clamping flanges from the cone of the inner ring.
3. Remove the gear unit from the solid shaft of the machine.

If a shrink disk has been in use for a long period or is dirty, it must be dismantled, cleaned and the conical surfaces coated with Molykote G Rapid Plus or a similar lubricant before it is refitted. The threads and head surfaces of the screws must be treated with grease without Molykote. Any damaged or corroded elements must be replaced.

3.9 Fitting the covers

WARNING **Risk of injury**

There is a danger of injury due to shrink discs and freely rotating shaft journals.

- Use a cover (Option H and Option H66) as a guard.
- If this does not achieve sufficient protection against contact according to the required protection type, the machinery and plant constructor must ensure this by means of special attached components.

All fixing screws must be used and tightened to the correct torque (please see chapter 6.5 "Torque values"). For covers with Option H66, press in the new / new condition closing cap by tapping it lightly with a hammer.

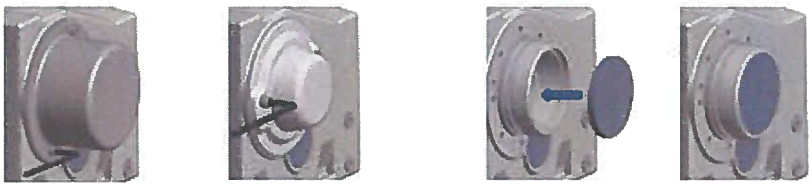

Figure 15: Fitting the covers, Option SH, Option H, and Option H66

3.10 Fitting the covers

WARNING **Risk of injury**

There is a danger of injury due to freely rotating shaft journals.

- Use a cover cap as a guard
- If this does not achieve sufficient protection against contact according to the required protection type, the machinery and plant constructor must ensure this by means of special attached components.

Many versions of the universal worm gear unit are supplied with plastic cover caps as standard. These cover caps protect the shaft sealing ring against the entry of dust and other possible contamination. The cover caps can be removed by hand without the use of tools and pushed onto the A or B side.

The cover cap must be removed before installing the universal worm gear unit. After installation is complete, the cover cap must be pushed into the threaded holes on the output flange on the corresponding side. Care must be taken that the cover cap is removed and pushed on vertically, in order not to damage the expansion elements of the cover cap.

Fig. 16: Removal and fitting of the cover cap

3.11 Fitting a standard motor

The maximum permitted motor weights indicated in the table below must not be exceeded when attaching the motor to an IEC/NEMA adapter:

Maximum permitted motor weights														
IEC motor size	63	71	80	90	100	112	132	160	180	200	225	250	280	315
NEMA motor size		56C	143T	145T	182T	184T	210T	250T	280T	324T	326T	365T		
Max. motor weight [kg]	25	30	40	50	60	80	100	200	250	350	500	700	1000	1500

WARNING **Risk of injury**

Severe injuries may be caused by rapidly rotating parts when installing and servicing couplings.

Secure the drive unit against accidental switch-on.

Assembly procedure to attach a standard motor to the IEC adapter (Option IEC/NEMA adapter)

1. Clean the motor shaft and flange surfaces of the motor and the IEC /NEMA adapter and check for damage. The mounting dimensions and tolerances of the motor must conform to DIN EN 50347/NEMA MG1 Part 4.
2. Push the coupling sleeve onto the motor shaft so that the motor parallel key engages into the groove in the sleeve on tightening.
3. Tighten the coupling sleeve on the motor shaft in accordance with the motor manufacturer's instructions until it touches the collar. With motor sizes 90, 160, 180 and 225, any spacer bushes must be positioned between the coupling sleeve and the collar. With standard helical gear units, dimension B between the coupling sleeve and the collar must be observed (see Figure 17). Certain NEMA adapters require adjustment of the coupling in accordance with the specifications indicated on the adhesive plate.
4. If the coupling half contains a threaded pin, the coupling must be secured axially on the shaft. The threaded pin must be coated prior to use with a securing lubricant e.g. Loctite 242, Loxeal 54-03 and tightened to the correct torque (please see chapter 6.5 "Torque values").

5. Sealing of the flange surfaces of the motor and the IEC/NEMA adapter is recommended if the motor is installed outdoors or in a humid environment. Before the motor is installed, the flange surfaces must be completely coated with surface sealant Loctite 574 or Loxeal 58-14 so that the flange seals after mounting.
6. Mount the motor on the IEC/NEMA adapter. Do not forget to fit the gear rim or the splined sleeve provided (see illustration below).
7. Tighten the bolts of the IEC/NEMA adapter with the correct torque (please see chapter 6.5 "Torque values").

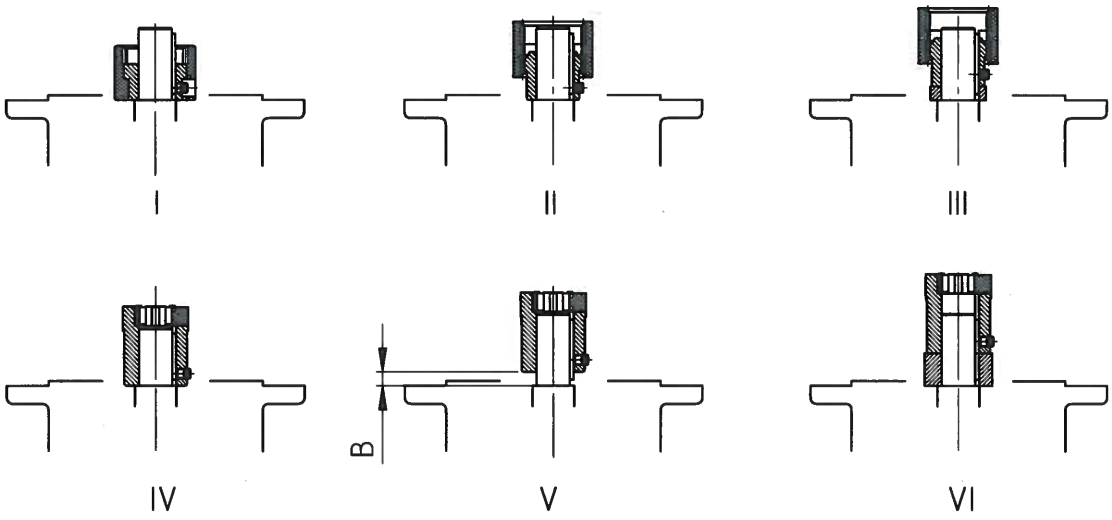

Figure 17: Fitting the coupling onto the motor shaft - various types of coupling

I Curved tooth coupling

II Curved tooth coupling, two-part

III Curved tooth coupling, two-part with spacer bush

IV Claw coupling, two-part

V Claw coupling, two-part, observe dimension B:

Standard helical gear unit: SK 0, SK 01, SK 20, SK 25, SK 30, SK 33 (2-stage) SK 010, SK 200, SK 250, SK 300, SK 330 (3-stage)		
	IEC size 63	IEC size 71
Dimension B (Fig. V)	B = 4.5 mm	B = 11.5 mm

VI Claw coupling two-part with spacer bush

3.12 Installation of a servo motor (Option SEP / SEK)

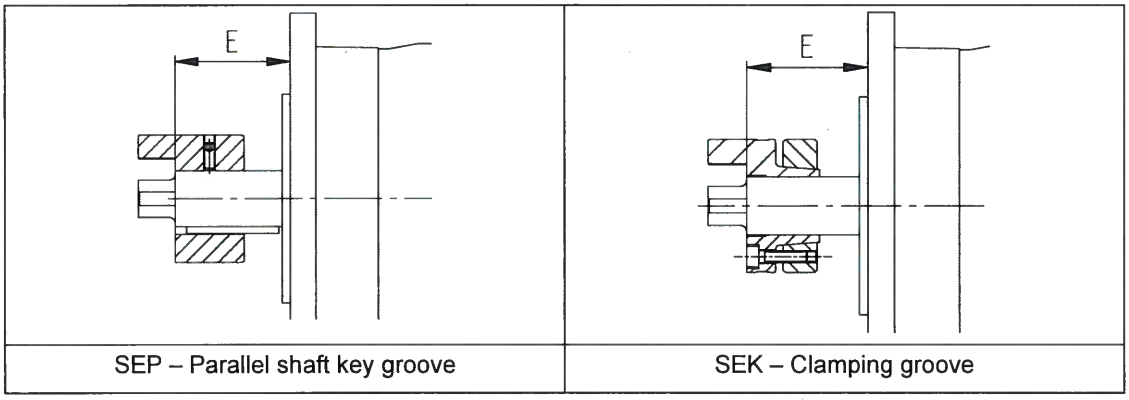

SEP – Parallel shaft key groove	SEK – Clamping groove

E = Coupling installation size of flange system

Cylinder type	Coupling size*	Installation size E [mm]
SE. 100	GS 19	40
SE. 130	GS 24	50
SE. 165	GS 28	58
SE. 215	GS 28	80
	GS 48	80
SE. 300	GS 48	82

*) All coupling sizes are available as SEP or SEK versions, the ring gear has a hardness of (Shore) 98 Sh-A-GS, colour red

Table 4: Allocation of cylinder types to coupling sizes

To prevent damage to the coupling, the dimension E which is stated in Table 12 must be complied with!

Assembly sequence for the connection of a servo motor to the servo adapter (Option SEP / SEK)

Please refer to the coupling manufacturer's operating/installation instructions for the assembly of the two halves of the coupling.

3.13 Fitting the cooling coil to the cooling system

WARNING — **Risk of injury**

Possibility of injury due to pressure discharge.

Ensure that the pressure is released from the cooling circuit before carrying out any work on the gear unit.

The cooling coil is installed in the casing cover. Cutting ring screw threads according to DIN 2353 are located at the casing cover for the connection of a pipe with an external diameter of 10 mm.

Remove the closing cap from the screw neck prior to assembly to avoid any contamination of the cooling system. The screw necks should be connected with the coolant circuit, which must be provided by the operator. The flow direction of the coolant is irrelevant.

Make sure not to twist the screw necks during or after assembly as the cooling coil may be damaged. It must be ensured that no external forces act on the cooling coil.

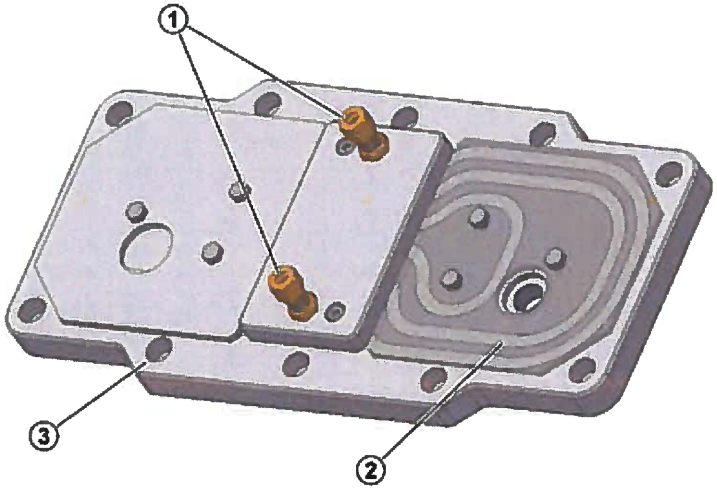

	Explanation
1	Cutting ring screw threads
2	Cooling coil
3	Housing cover

Figure 18: Cooling cover

3.14 Installation of an oil expansion tank, Option OA

The expansion tank must be installed vertically with the hose connection facing downwards and the vent plug upwards. Please note the attached factory standard 0-530-04 for the installation.

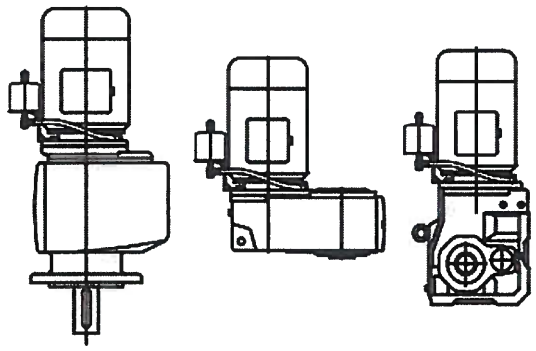

Figure 19: Installing the expansion tank

3.15 Subsequent paintwork

NOTICE **Damage to the device**

For retrospective painting of the gear unit, the radial seals, rubber elements, pressure venting valves, hoses, type plates, adhesive labels and motor coupling components must not come into contact with paints, lacquers or solvents, as otherwise components may be damaged or made illegible.

4 Commissioning

4.1 Check the oil level

The oil level must be checked prior to commissioning (please see chapter 5.2 "Service and Maintenance Work").

4.2 Activating the automatic lubricant dispenser

Some gear unit types with standard motor (Option IEC/NEMA) have an automatic lubricant dispenser for the roller bearings. This dispenser must be activated prior to commissioning. The cartridge case cover of the adapter for attaching an IEC/NEMA standard motor has a red information sign for the activation of the lubricant dispenser. A grease escape opening which is closed with a G1/4 cap screw is located opposite to the lubricant dispenser. After activation of the lubricant dispenser, the cap screw can be removed and replaced with the grease collection container (Part No. 28301210) which is supplied separately with the delivery.

Activating the automatic lubricant dispenser:

1. Loosen and remove the cylindrical screws.
2. Remove the cartridge cover.
3. Screw the activation screw into the lubricant dispenser until the lug breaks off at the defined fracture point
4. Re-fit the cartridge cover and fasten it with the cylindrical screw (please see chapter 6.5 "Torque values").
5. Mark activation date on the adhesive label indicating the month/year

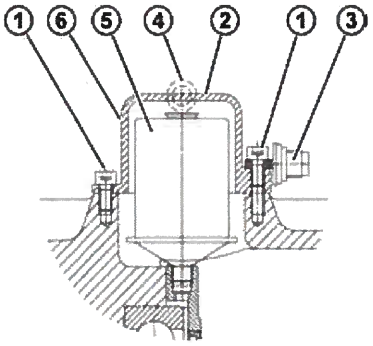

Explanation	
1	Cylindrical screw M8 x 16
2	Cartridge cover
3	Activation screw
4	Lug
5	Lubricant sensor
6	Position of adhesive label

Figure 20: Activating the automatic lubricant dispenser with standard motor mounting

Adhesive label:

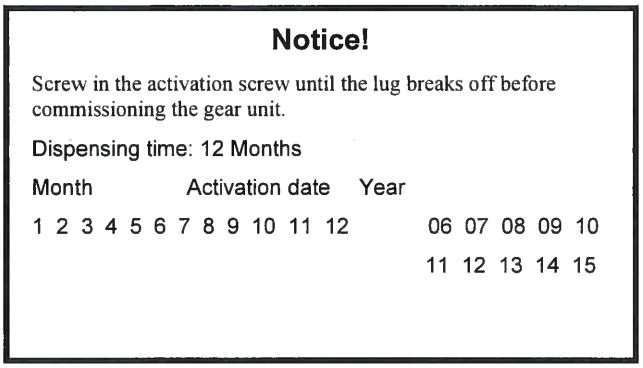

Figure 21: Adhesive label

4.3 Operation with lubricant cooling

Water cooling

NOTICE **Gear unit damage**

The gear unit may be damaged by overheating.

The drive may only be commissioned after the cooling spiral has been connected to the cooling circuit, and the cooling circuit has been put into operation.

The coolant must have a similar thermal capacity as water (specific thermal capacity at 20°C c=4.18 kJ/kgK). Industrial water without any air bubbles or sediments is recommended as a coolant. The hardness of the water must be between 1 dH and 15 dH; the pH value must be between pH 7.4 and pH 9.5. No aggressive liquids may be added to the coolant!

The **coolant pressure** must not exceed **8 bar**. The required **quantity of coolant** is **10 litres/minute**, and the **coolant inlet temperature** must not exceed 40°C; we recommend **10°C.**

We also recommend fitting a pressure reducer or similar at the coolant inlet to avoid damage due to excessive pressure.

If there is a danger of frost the operator should add a suitable anti-freeze solution to the cooling water.

The **temperature of the cooling water** and the **cooling water flow rate** must be supervised and ensured by the operator.

Air/Oil cooler

The version and all important data for the air/oil cooler can be obtained from Catalogue G1000, or contact the manufacturer of the cooling unit.

4.4 Running-in time for the worm gear unit

Information **Running-in time**

In order to achieve maximum efficiency of the worm gear unit, the gear unit must be subjected to a running-in period of approx. 25 h – 48 h under maximum load.

There may be a reduction in efficiency before the running-in period is complete.

4.5 Checklist

Checklist		
Subject of check	**Date checked:**	**Information see Section**
Is the vent plug activated or the pressure vent screwed in?		3.4
Does the required configuration conform with the actual installation?		6.1
Are the external gear shaft forces within permitted limits (chain tension)?		3.6
Is the torque support correctly fitted?		3.7
Are contact guards fitted to rotating components?		3.9
Is the automatic lubricant dispenser activated?		4.2
Is the cooling cover connected to the cooling circuit?		3.13 4.3

5 Service and maintenance

⚠ WARNING **Danger of burns**

The surfaces of gear units or geared motors may become hot during or shortly after operation.

- Installation and maintenance work must only be performed when gear unit is at a standstill and has cooled down. The drive must be isolated and secured to prevent accidental start-up.
- Wear protective gloves.
- Shield hot surfaces with contact guards.

5.1 Service and Maintenance Intervals

Service and Maintenance Intervals	Service and Maintenance Work	Information see Section
At least every six months	• Visual inspection • Check for running noises • Check the oil level • Re-grease / remove excess grease (only applicable for free drive shaft / Option W and for agitator bearings / Option VL2 / VL3) • Replace the automatic lubricator / remove excess grease (for operating times < 8 h / day): (A replacement interval of 1 year is permissible for the lubricant dispenser) (Only for IEC / NEMA standard motor mounting). Empty or replace the lubricant collection container with every second replacement of the lubricant dispenser.	5.2
For operating temperatures up to 80 °C every 10000 operating hours, at least every 2 years	• Change the oil (The interval is doubled if filled with synthetic products) • Cleaning or replacing the vent plug • Replace shaft sealing rings if worn	5.2
Every 20000 operating hours, at least every 4 years	• Re-lubrication of the bearings in the gear unit	5.2
At least every 10 years	• General overhaul	5.2

Information — **Oil change intervals**

The oil change intervals apply for normal operating conditions and operating temperatures up to 80 °C. The oil change intervals are reduced in the case of extreme conditions (operating temperatures higher than 80 °C, high humidity, aggressive environment and frequent fluctuations in the operating temperature).

5.2 Service and Maintenance Work

WARNING — **Severe personal injury**

Severe injury and material damage may be caused by incorrect servicing and maintenance work.

Servicing and maintenance work must only be performed by qualified specialist personnel. Wear the necessary protective clothing for servicing and maintenance work (e.g. industrial footwear, protective gloves, goggles, etc.)

WARNING — **Severe personal injury**

Risk of injury due to rapidly rotating and hot machine components.

Installation and maintenance work must only be performed when gear units are at a standstill and have cooled down. The drive must be isolated and secured to prevent accidental start-up.

WARNING — **Severe personal injury**

Particles or liquids thrown up during servicing and maintenance can cause injuries.

- Observe the safety information when cleaning with compressed air or a pressure washer.

WARNING — **Danger of burns**

Danger of burns due to hot oil.

- Allow the gear unit to cool down before carrying out maintenance or repair work.
- Wear protective gloves.

NOTICE — **Leaks**

Take care that no dirt or water enters the shaft sealing rings or the vents when cleaning

Dirt or water in the shaft sealing rings may cause leaks.

Visual inspection

The gear unit must be checked for leaks. In addition, the gear unit must be inspected for external damage and cracks in the hoses, hose connections and rubber buffers. Have the gear unit repaired in case of leaks, e.g. dripping gear oil or cooling water, damage or cracks. Please contact the NORD service department.

Information — **Shaft sealing rings**

Shaft sealing rings are rubbing seals and have sealing lips made from an elastomer material. These sealing lips are lubricated with a special grease at the factory. This reduces the wear due to their function and ensures a long service life. An oil film in the region of the rubbing sealing lip is therefore normal and is not due to leakage.(please see chapter 6.7 "Leaks and seals")

Check for running noises

If the gear unit produces unusual running noises and/or vibrations, this could indicate damage to the gear unit. In this case the gear should be shut down and a general overhaul carried out.

Check the oil level

Section 6.1 "Configurations and maintenance" describes the versions and the corresponding oil level screws. With double gear units, the oil level must be checked on both units. The pressure vent must be at the position marked in Section 6.1 "Configurations and maintenance"Bauformen und Wartung</dg_ref_source_inline>.

The oil level does not need to be checked on gear units without oil level screw (please see chapter 6.1 "Configurations and maintenance").

Gear unit types that are not supplied full of oil must be filled before the oil level is checked.

Check the oil level with an oil temperature of between 20 °C to 40 °C.

1. The oil level may only be checked when the gear unit is at a standstill and has cooled down. The gear unit must be secured to prevent accidental switch-on.
2. The oil level screw corresponding to the version must be screwed out (please see chapter 6.1 "Configurations and maintenance").

Information — **Checking the oil level**

At the first oil level check a small amount of oil may escape, as the oil level may be below the lower edge of the oil level hole.

3. **Gear units with oil level screw:** The correct oil level is at the lower edge of the oil level hole. If the oil level is too low, this must be corrected using the correct type of oil. An oil level glass is available instead of the oil level screw
4. **Gear units with an oil level tank:** The oil level must be checked in the oil level tank with the aid of the dipstick plug (thread G1 1/4). The oil level must be between the upper and lower marking when the dipstick is fully screwed in (see Figure 22). Top up the oil level with the relevant type of oil as necessary. These gearboxes may only be operated in the configuration stated in Section 6.1 "Configurations and maintenance".
5. The oil level screw or the cap screw with dipstick and all other loosened screws must be correctly re-tightened.

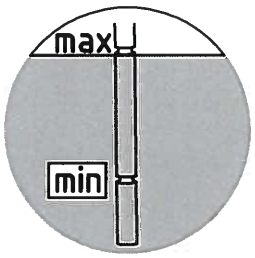

Figure 22: Checking the oil level with a dipstick

Re-greasing

Some gear unit designs (free drive shaft, Option W, agitator designs VL2 and VL3) are equipped with a re-greasing device.

For agitator versions VL2 and VL3, the vent screw located opposite to the grease nipple must be unscrewed before re-greasing. Grease should be injected until a quantity of 20 - 25 g escapes from the vent hole. After this, the vent plug must be reinserted and tightened.

For Option W and some IEC adapters, the outer roller bearing must be re-greased with approx. 20 - 25 g of grease via the grease nipple provided. Remove any excess grease from the adapter.

Recommended grease: Petamo GHY 133N (please see chapter 6.2 "Lubricants") (Fa. Klüber Lubrication).

Replacing the automatic lubricant dispenser

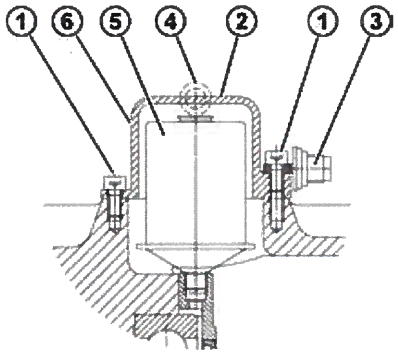

	Explanation
1	Cylindrical screws M8 x 16
2	Cartridge cover
3	Activation screw
4	Lug
5	Lubricant sensor
6	Position of adhesive label

Figure 23: Replacing the automatic lubricant dispenser with standard motor mounting

The cartridge cover must be unscrewed. The lubrication dispenser is screwed out and replaced with a new component (Part No. 283 0100). Remove any excess grease from the adapter. Then activate (please see chapter 4.2 "Activating the automatic lubricant dispenser").

Empty or replace the grease collection container (Part No. 28301210) with every second replacement of the lubricant container. To empty the container, unscrew it from the screw fitting. The container has an internal piston, which can be pressed back with a rod with a maximum diameter of 10 mm. Collect the grease which is pressed out and dispose of it correctly. Due to the shape of the container, a residual quantity of grease remains in the container. After emptying and cleaning the container, it can be screwed back into the drain hole in the IEC adapter. Replace the container with a new one if it is damaged.

Change the oil

The figures in Section 6.1 "Configurations and maintenance" show the oil drain screw, the oil level screw and the pressure vent screw for various designs.

Procedure:

1. Place a catchment vessel under the oil drain screw or the oil drain cock.
2. Completely remove the oil level screw or screwed sealing plug with dipstick if an oil level tank is being used and unscrew oil drain screw.

WARNING **Danger of burns**

Danger of burns due to hot oil.

- Allow the gear unit to cool down before carrying out maintenance or repair work.
- Wear protective gloves.

3. Drain all the oil from the gear unit.
4. If the sealing ring of the oil drain screw or oil level screw is damaged in the thread, a new oil level screw must be used or the thread must be cleaned and coated with securing lubricant, e.g. Loctite 242, Loxeal 54-03 prior to insertion.
5. Screw the oil drain screw into the hole and tighten to the correct torque (please see chapter 6.5 "Torque values").
6. Using a suitable filling device, refill with oil of the same type through the oil level hole until oil emerges from the oil level hole. (The oil can also be filled through the pressure vent screw or a sealing plug located higher than the oil level). If an oil level tank is used, fill the oil through the upper inlet (thread G1¼) until the oil level is set as described in Section 5.2 "Service and Maintenance Work".
7. Wait at least 15 minutes, or at least 30 minutes if an oil level tank is used, and then check the oil level. Proceed as described in Section 5.2 "Service and Maintenance Work".

Information — **Oil level**

The oil does not need to be changed on gear units without oil level screw (please see chapter 6.1 "Configurations and maintenance"). These gear units are lubricated for life.

Standard helical gear units have no oil level screw. Here, the oil is topped up through the pressure vent bolt using the quantities listed in the table in Section 6.4 "Helical gear unit".

Cleaning or replacing the vent plug

Unscrew the vent screw and thoroughly clean it (e.g. with compressed air) and fit the vent screw in the same place, If necessary, use a new vent screw with a new sealing ring.

Replace the shaft sealing ring

Once the shaft sealing ring has reached the end of its service life, the oil film in the region of the sealing lip increases and a measurable leakage with dripping oil occurs. **The shaft sealing ring must then be replaced.** The space between the sealing lip and the protective lip must be filled approximately 50 % with grease on fitting (recommended grease: PETAMO GHY 133N). Take care that after fitting, the new shaft sealing ring does not run in the old wear track.

Re-lubricating bearings

For bearings which are not oil-lubricated and whose holes are completely above the oil level, replace the roller bearing grease (recommended grease: PETAMO GHY 133N). Please contact the NORD service department.

General overhaul

For this, the gear unit must be completely dismantled. The following work must be carried out:

- Clean all gear unit components
- Examine all gear unit components for damage
- All damaged components must be replaced
- All roller bearings must be replaced
- Replace back stops if fitted
- Replace all seals, radial seals and Nilos rings
- Replace plastic and elastomer components of the motor coupling

The general overhaul must be carried out by qualified personnel in a specialist workshop with appropriate equipment in observance of national regulations and laws. We recommend that the general overhaul is carried out by the NORD Service department.

6 Appendix

6.1 Configurations and maintenance

Explanation of symbols for the following version illustrations:

Venting

Oil level

Oil drain

Information **Gear unit - Lubrication**

SK 320, SK 172, SK 272, SK 372 as well as SK 273 and SK 373, SK 01282 NB, SK 0282 NB, SK 1382 NB and UNIVERSAL / MINIBLOC gear units are lubricated for life. These gear units do not have an oil filler screw.

UNIVERSAL / MINIBLOC worm gear units

NORD UNIVERSAL / MINIBLOC worm gear units are suitable for all installation positions. They have an oil filler which is independent of the configuration.

As an option, types SI and SMI can be equipped with a vent screw. Gear units with vents must be installed in the stated position.

Types SI, SMI, S, SM and SU as 2-stage gear unit types and types SI, SMI as worm gear units for direct motor mounting have an oil filler which depends on the configuration and must be installed in the stated position.

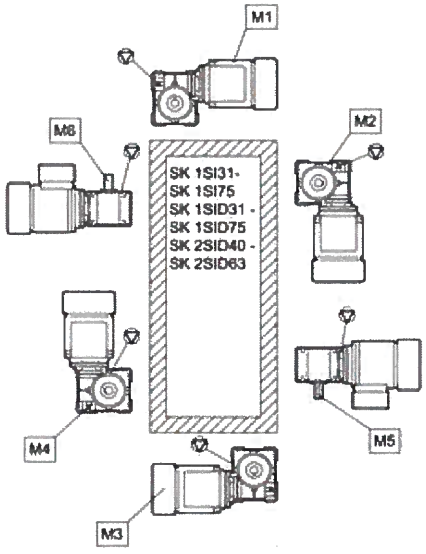

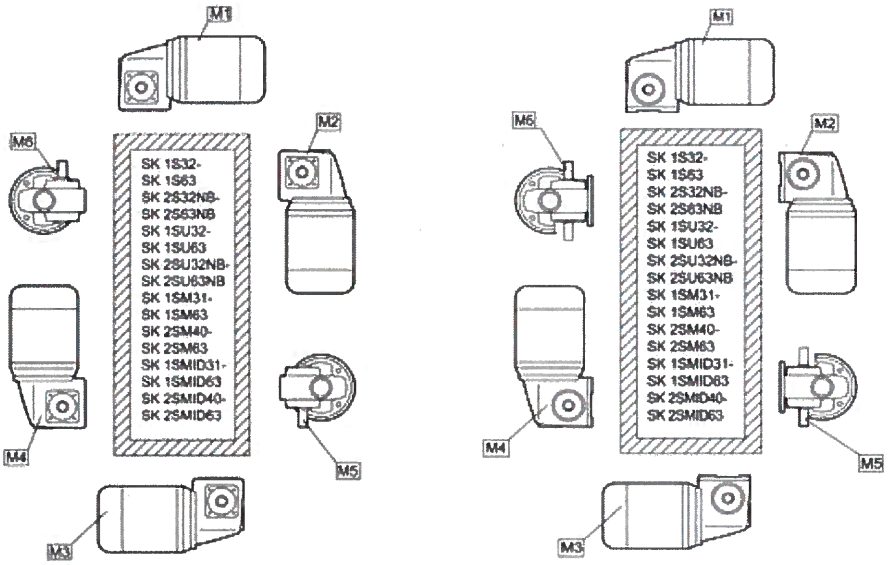

Parallel shaft gear units with oil level tank

The following applies for SK 9282, SK 9382, SK 10282, SK 10382, SK 10382.1, SK 11282, SK 11382, SK 11382.1 and SK 12382 in the M4 configuration with oil level tank:

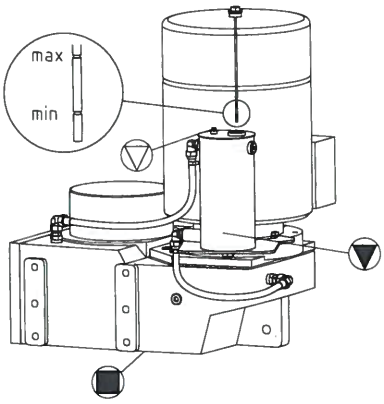

Figure 24: Oil level check with oil level tank

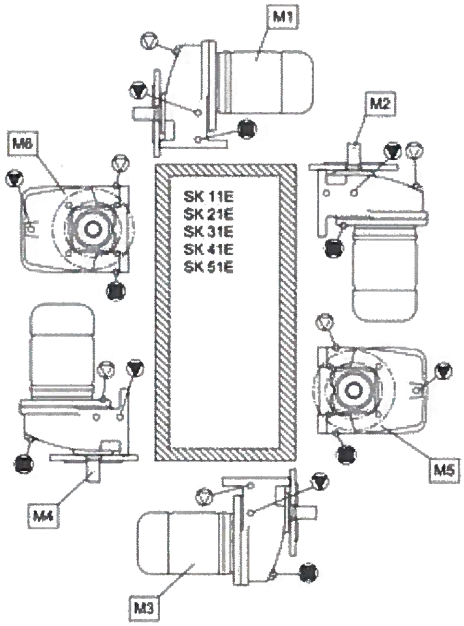
M1
M2
M6
SK 11E
SK 21E
SK 31E
SK 41E
SK 51E
M5
M4
M3

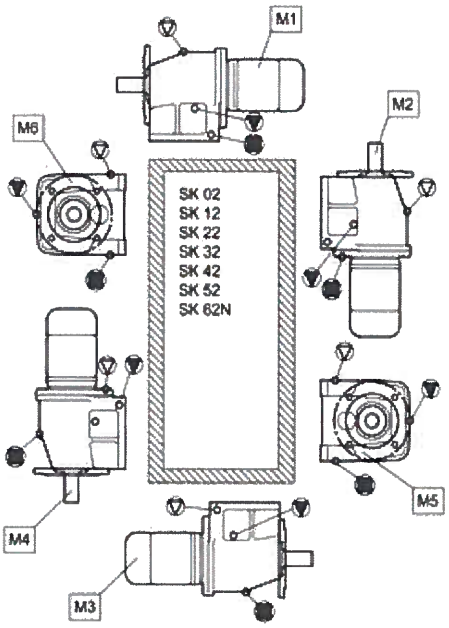
M1
M2
M6
SK 02
SK 12
SK 22
SK 32
SK 42
SK 52
SK 62N
M5
M4
M3

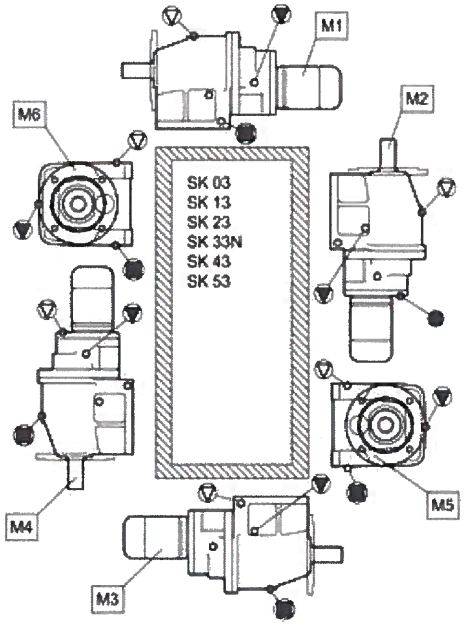
M1
M2
M6
SK 03
SK 13
SK 23
SK 33N
SK 43
SK 53
M5
M4
M3

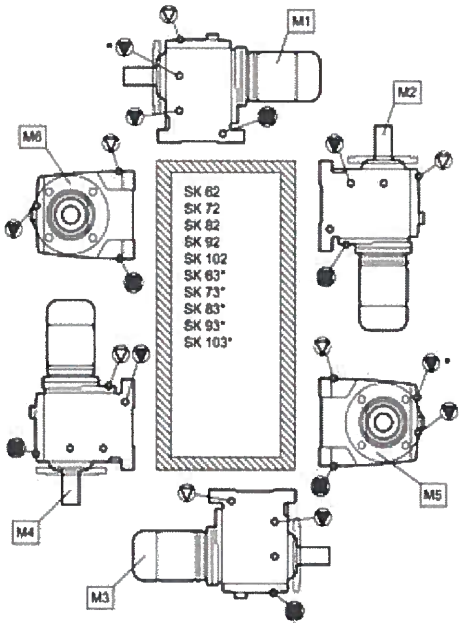
M1
M2
M6
SK 62
SK 72
SK 82
SK 92
SK 102
SK 63*
SK 73*
SK 83*
SK 93*
SK 103*
M5
M4
M3

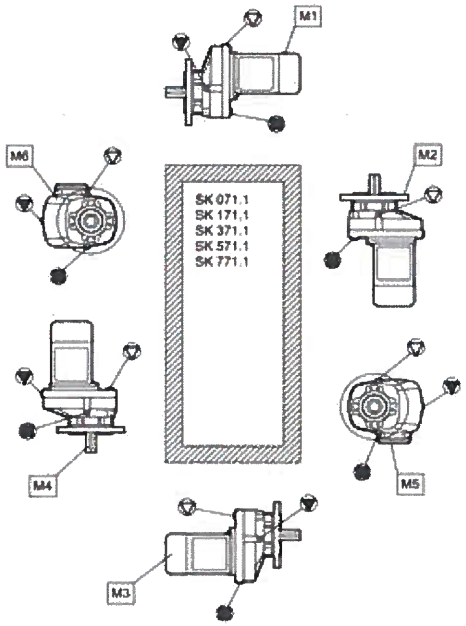
M1
M6
M2
SK 071.1
SK 171.1
SK 371.1
SK 571.1
SK 771.1
M4
M5
M3

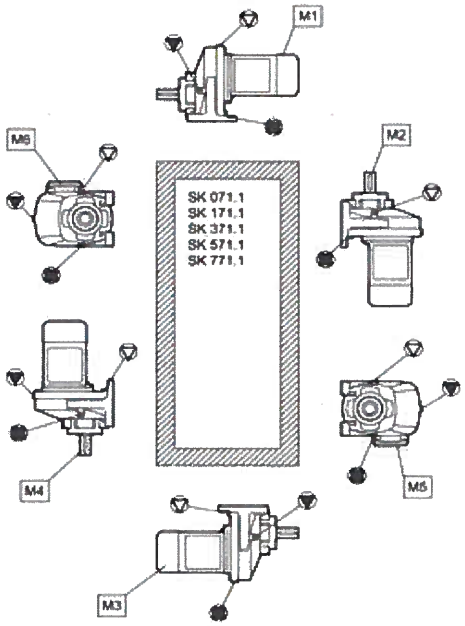
M1
M6
M2
SK 071.1
SK 171.1
SK 371.1
SK 571.1
SK 771.1
M4
M5
M3

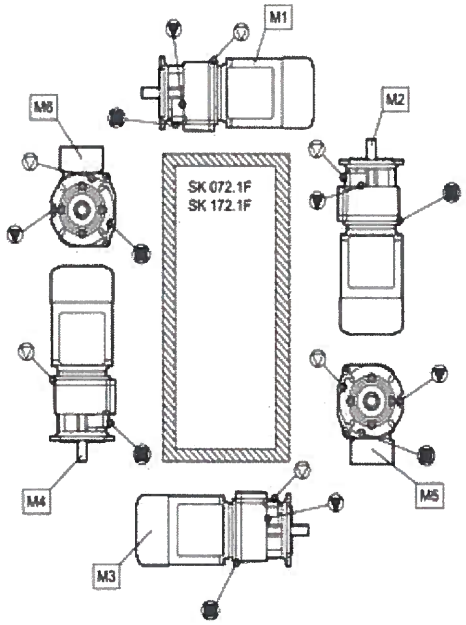
M1
M6
M2
SK 072.1F
SK 172.1F
M4
M5
M3

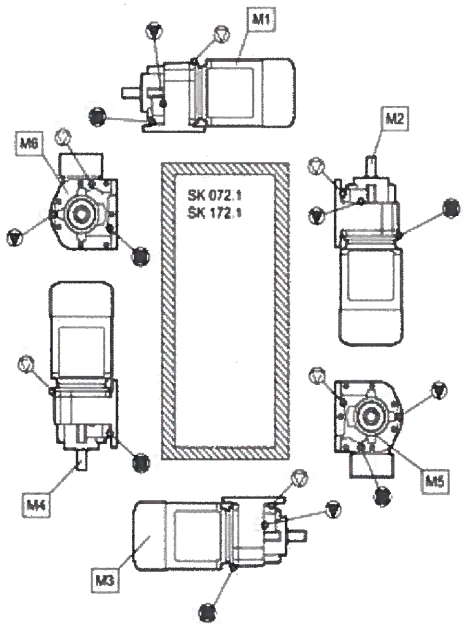
M1
M6
M2
SK 072.1
SK 172.1
M4
M5
M3

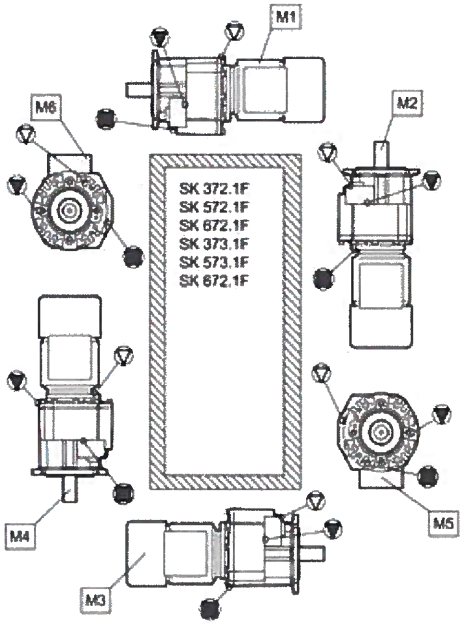
M1
M2
M3
M4
M5
M6
SK 372.1F
SK 572.1F
SK 672.1F
SK 373.1F
SK 573.1F
SK 673.1F

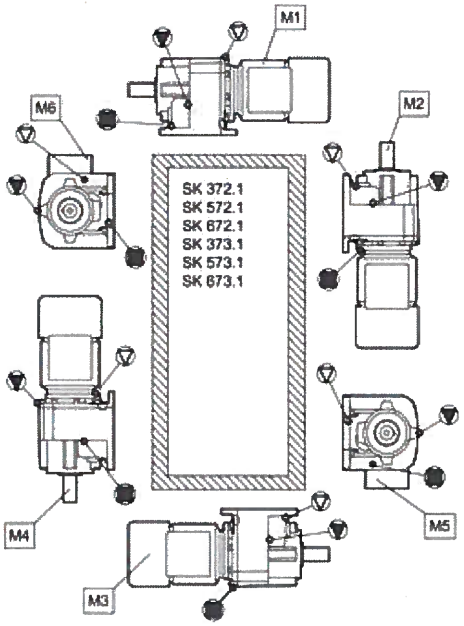
M1
M2
M3
M4
M5
M6
SK 372.1
SK 572.1
SK 672.1
SK 373.1
SK 573.1
SK 673.1

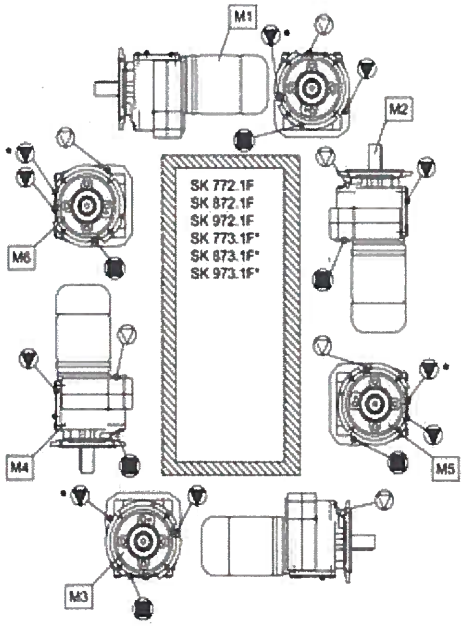
M1
M2
M3
M4
M5
M6
SK 772.1F
SK 872.1F
SK 972.1F
SK 773.1F*
SK 873.1F*
SK 973.1F*

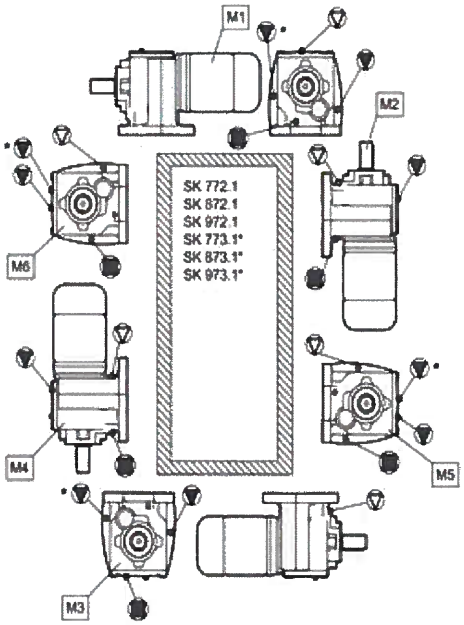
M1
M2
M3
M4
M5
M6
SK 772.1
SK 872.1
SK 972.1
SK 773.1*
SK 873.1*
SK 973.1*

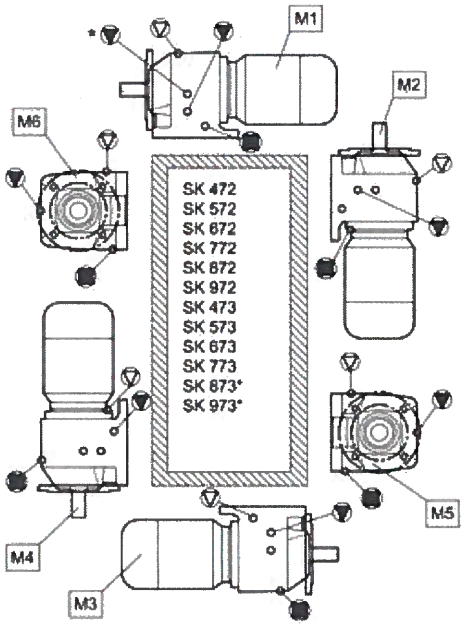
M1
M2
M6
SK 472
SK 572
SK 672
SK 772
SK 872
SK 972
SK 473
SK 573
SK 673
SK 773
SK 873*
SK 973*
M5
M4
M3

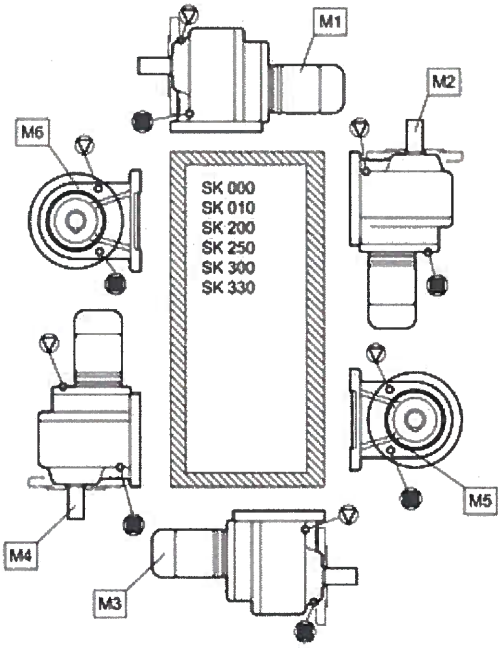
M1
M2
M6
SK 000
SK 010
SK 200
SK 250
SK 300
SK 330
M5
M4
M3

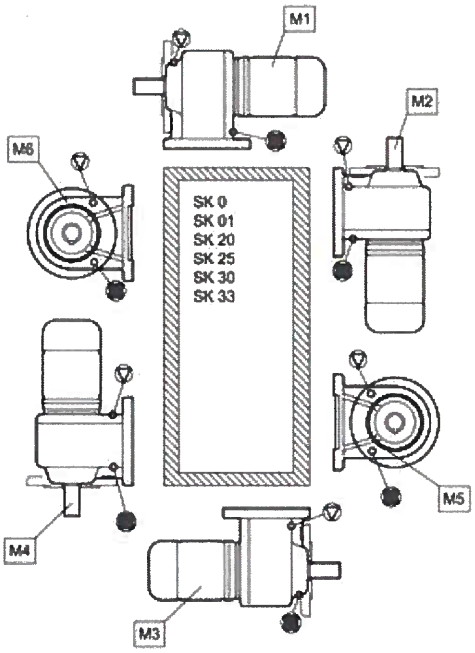
M1
M2
M6
SK 0
SK 01
SK 20
SK 25
SK 30
SK 33
M5
M4
M3

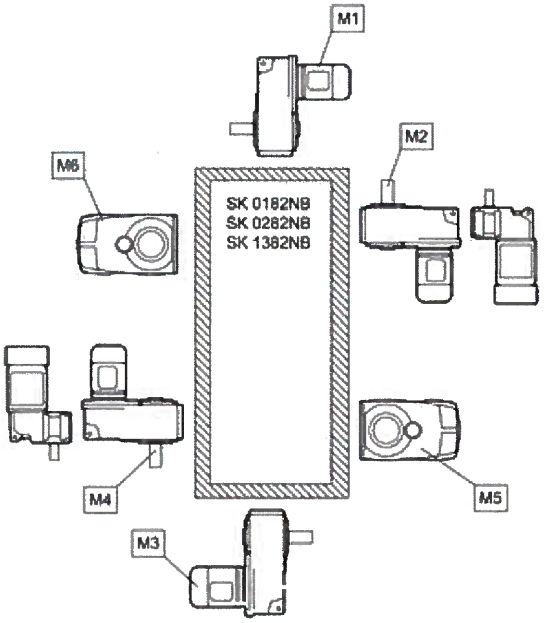
M1
M2
M6
SK 0182NB
SK 0282NB
SK 1382NB
M4
M5
M3

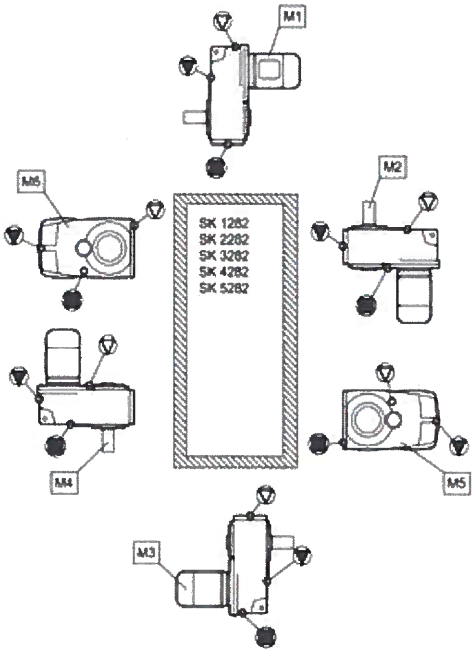
M1
M6
SK 1282
SK 2282
SK 3282
SK 4282
SK 5282
M2
M4
M5
M3

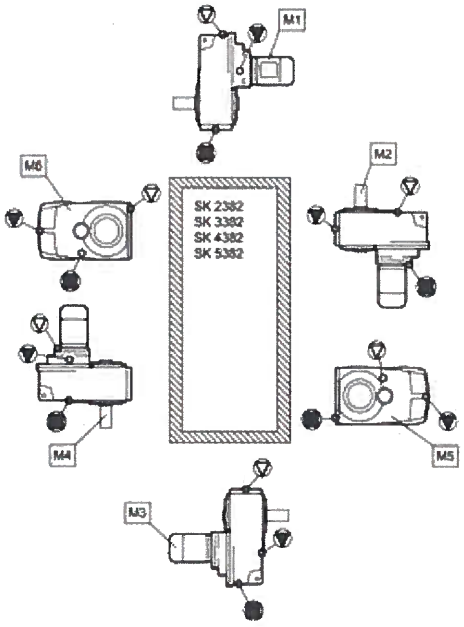
M1
M6
SK 2382
SK 3382
SK 4382
SK 5382
M2
M4
M5
M3

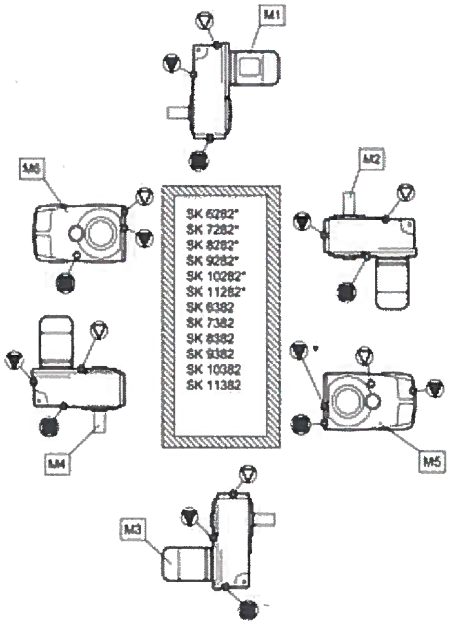
M1
M6
M2
SK 6282*
SK 7282*
SK 8282*
SK 9282*
SK 10282*
SK 11282*
SK 6382
SK 7382
SK 8382
SK 9382
SK 10382
SK 11382
M4
M5
M3

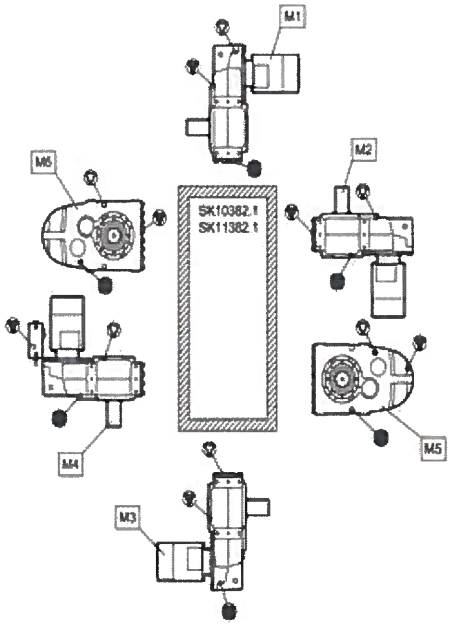
M1
M6
M2
SK10382.1
SK11382.1
M4
M5
M3

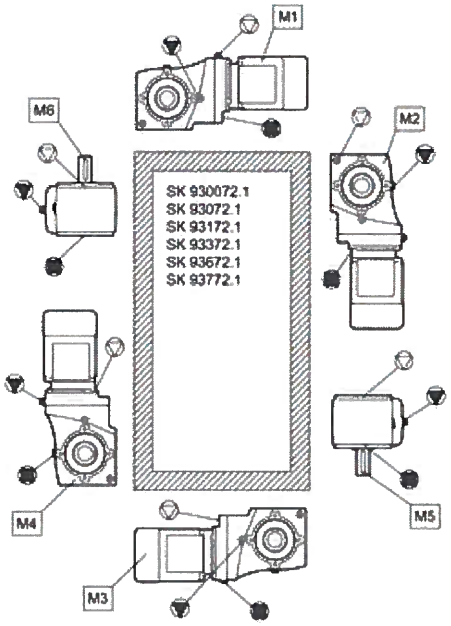
M1
M6
M2
SK 930072.1
SK 93072.1
SK 93172.1
SK 93372.1
SK 93672.1
SK 93772.1
M4
M5
M3

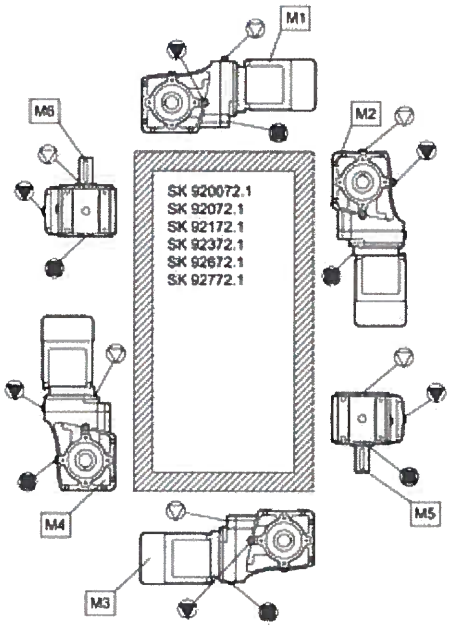
M1
M6
M2
SK 920072.1
SK 92072.1
SK 92172.1
SK 92372.1
SK 92672.1
SK 92772.1
M4
M5
M3

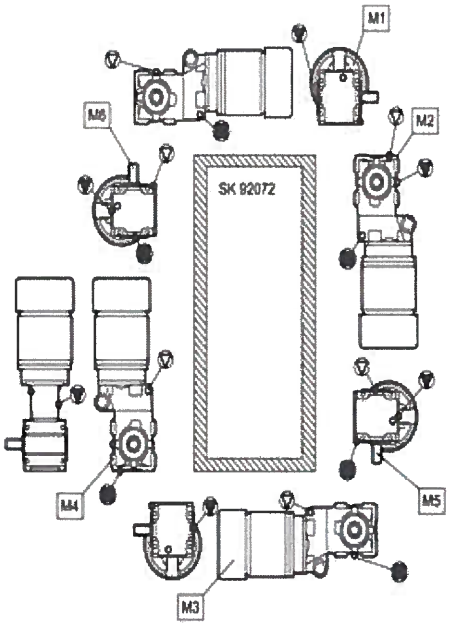
M1
M6
M2
SK 92072
M4
M5
M3

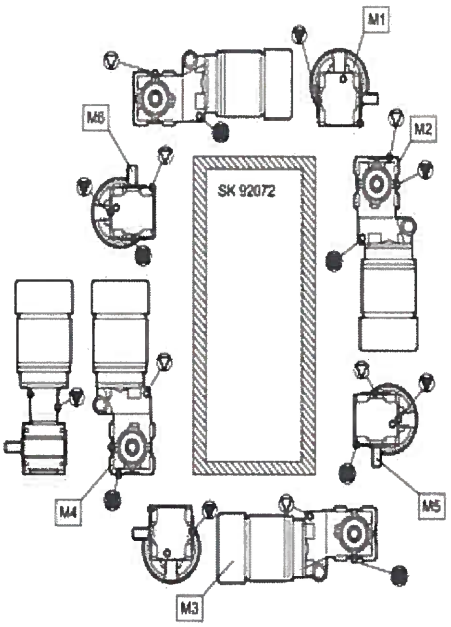
M1
M6
M2
SK 92072
M4
M5
M3

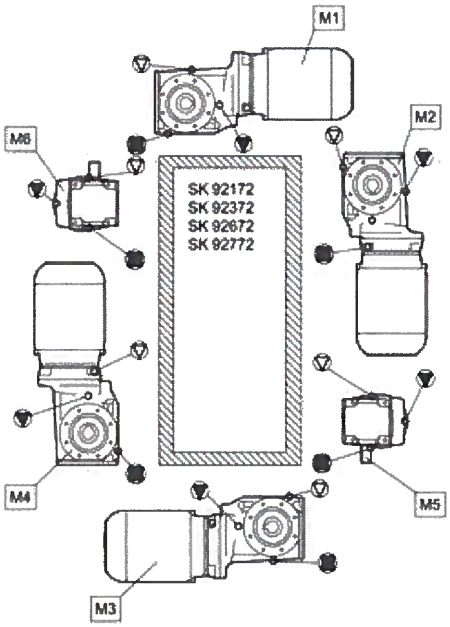
M1
M2
M3
M4
M5
M6
SK 92172
SK 92372
SK 92672
SK 92772

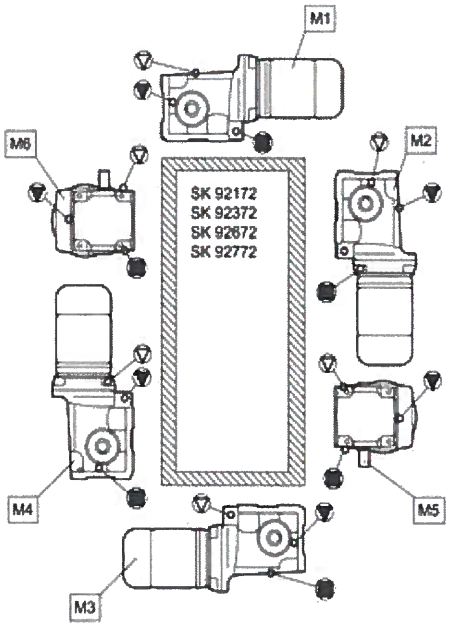
M1
M2
M3
M4
M5
M6
SK 92172
SK 92372
SK 92672
SK 92772

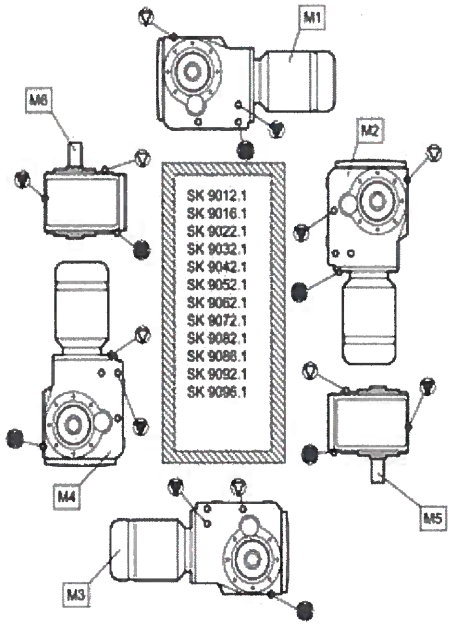
M1
M2
M3
M4
M5
M6
SK 9012.1
SK 9016.1
SK 9022.1
SK 9032.1
SK 9042.1
SK 9052.1
SK 9062.1
SK 9072.1
SK 9082.1
SK 9086.1
SK 9092.1
SK 9096.1

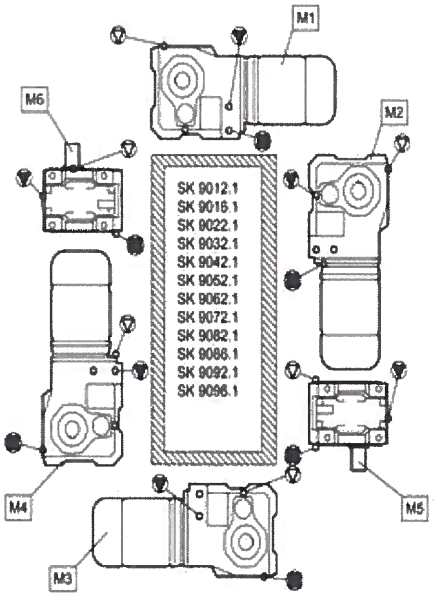
M1
M2
M3
M4
M5
M6
SK 9012.1
SK 9016.1
SK 9022.1
SK 9032.1
SK 9042.1
SK 9052.1
SK 9062.1
SK 9072.1
SK 9082.1
SK 9086.1
SK 9092.1
SK 9096.1

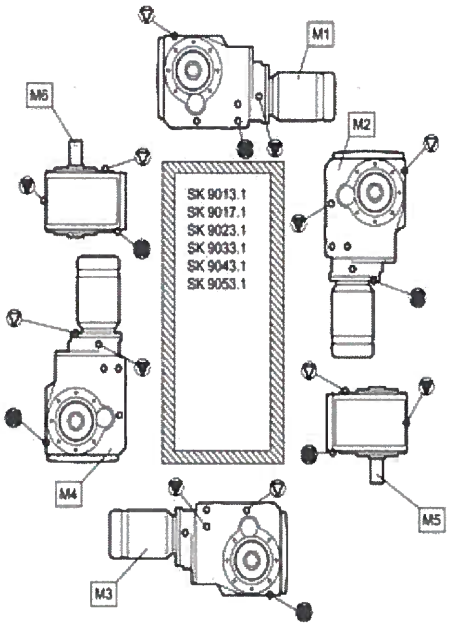
M1
M6
M2
SK 9013.1
SK 9017.1
SK 9023.1
SK 9033.1
SK 9043.1
SK 9053.1
M4
M5
M3

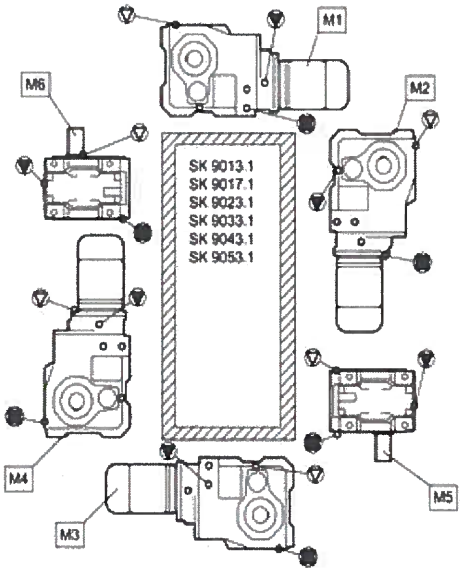
M1
M6
M2
SK 9013.1
SK 9017.1
SK 9023.1
SK 9033.1
SK 9043.1
SK 9053.1
M4
M5
M3

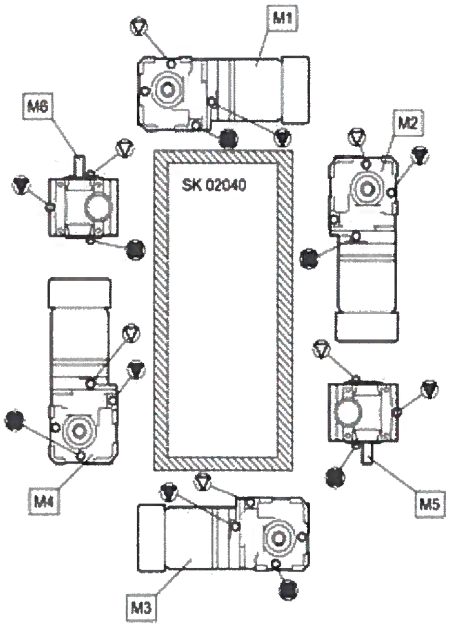
M1
M6
M2
SK 02040
M4
M5
M3

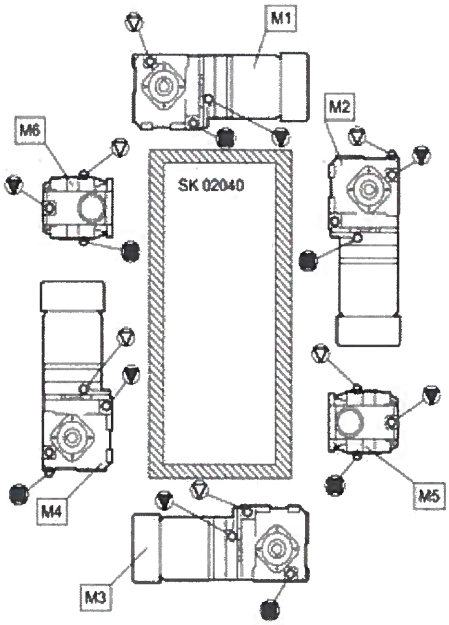
M1
M6
M2
SK 02040
M4
M5
M3

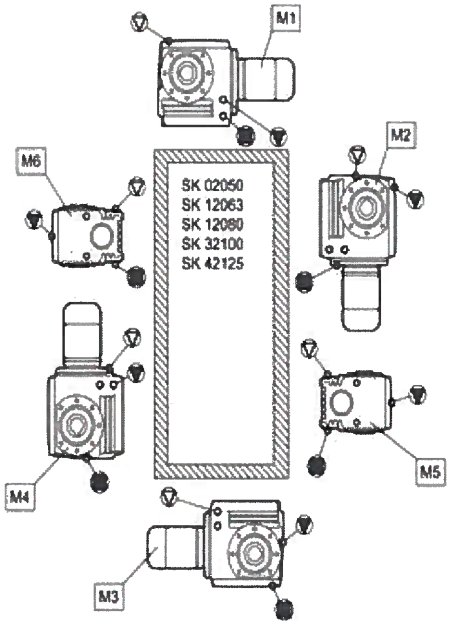
M1
M6
M2
SK 02050
SK 12063
SK 12080
SK 32100
SK 42125
M4
M5
M3

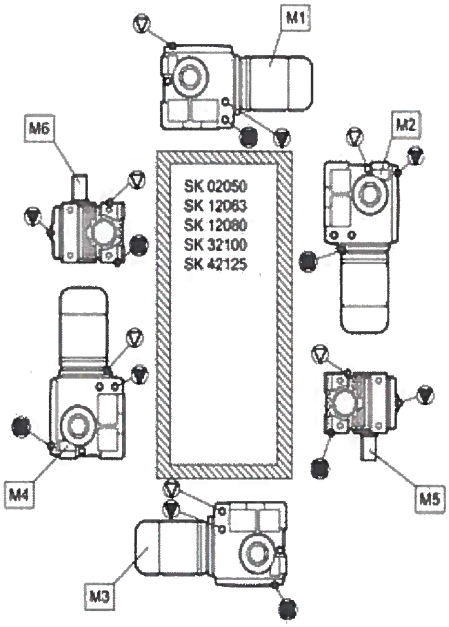
M1
M6
M2
SK 02050
SK 12063
SK 12080
SK 32100
SK 42125
M4
M5
M3

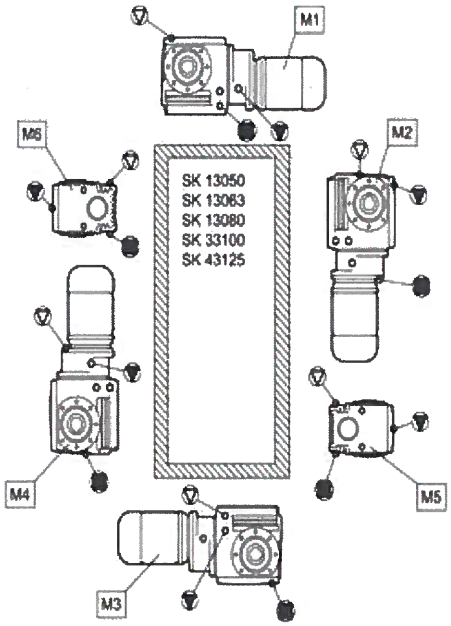
M1
M6
M2
SK 13050
SK 13063
SK 13080
SK 33100
SK 43125
M4
M5
M3

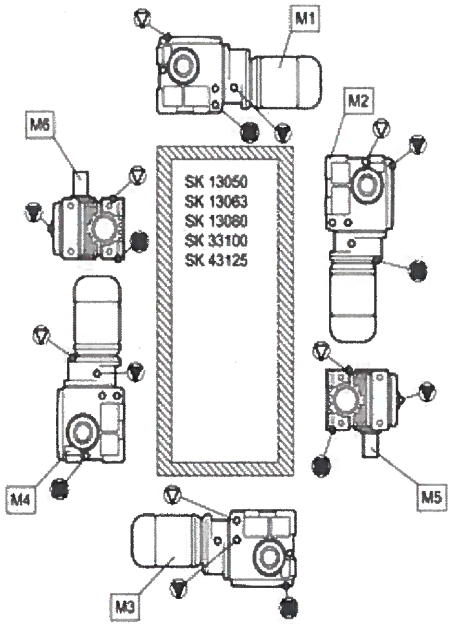
M1
M6
M2
SK 13050
SK 13063
SK 13080
SK 33100
SK 43125
M4
M5
M3

6.2 Lubricants

With the exception of type SK 11282, SK 11382, SK 12382 and SK 9096.1 gear units, all gear units are filled with lubricant ready for operation in the required installation position when delivered. This initial filling corresponds to a lubricant from the column for the ambient temperatures (normal version) in the lubricant table.

Roller bearing greases

This table shows comparable roller bearing greases from various manufacturers. The manufacturer can be changed for a given grease type. Getriebebau NORD must be contacted in case of change of grease type or ambient temperature range, as otherwise no warranty for the functionality of our gear units can be accepted.

Lubricant type	Ambient temperature	Castrol	FUCHS	KLÜBER LUBRICATION	Mobil	
Mineral oil-based grease	-30 ... 60 C	Tribol GR 100-2 PD	Renolit GP 2 Renolit LZR 2 H	-	Mobilux EP 2	Gadus S2 V100 2
	-50 ... 40 C	Optitemp LG 2	Renolit WTF 2	-	-	-
Synthetic grease	-25 ... 80 °C	Tribol GR 4747/220-2 HAT	Renolit HLT 2 Renolit LST 2	PETAMO GHY 133 N Klüberplex BEM 41-132	Mobiltemp SHC 32	
Biodegradable grease	-25 ... 40 °C	-	Plantogel 2 S	Klüberbio M 72-82	Mobil SHC Grease 102 EAL	Naturelle Grease EP2

Table 5: Roller bearing greases

Lubricant table

This table shows comparable lubricants from various manufacturers. The manufacturer can be changed within a particular viscosity or lubricant type. Getriebebau NORD must be contacted in case of change of viscosity or lubricant type, as otherwise no warranty for the functionality of our gearboxes can be accepted.

Lubricant type	Details on type plate	DIN (ISO) / Ambient temperature	Castrol	FUCHS	KLÜBER LUBRICATION	Mobil	Shell	TOTAL
Mineral oil	CLP 680	ISO VG 680 0...40 °C	Alpha EP 680 Alpha SP 680 Optigear BM 680 Optigear Synthetic 1100/680	Renolin CLP 680 Renolin CLP 680 Plus	Klüberoil GEM 1-680 N	Mobilgear 600 XP 680	Omala S2 G 680	Carter EP 680 Carter XEP 680
	CLP 220	ISO VG 220 -10...40 °C	Alpha EP 220 Alpha SP 220 Optigear BM 220 Optigear Synthetic 1100/220	Renolin CLP 220 Renolin CLP 220 Plus Renolin Gear 220 VCI	Klüberoil GEM 1-220 N	Mobilgear 600 XP 220	Omala S2 G 220	Carter EP 220 Carter XEP 220
	CLP 100	ISO VG 100 -15...25 °C	Alpha EP 100 Alpha SP 100 Optigear BM 100 Optigear Synthetic 1100/100	Renolin CLP 100 Renolin CLP 100 Plus	Klüberoil GEM 1-100 N	Mobilgear 600 XP 100	Omala S2 G 100	Carter EP 100
Synthetic oil (Polyglycol)	CLP PG 680	ISO VG 680 -20...40 °C	Alphasyn GS 680 Optigear Synthetic 800/680	Renolin PG 680	Klübersynth GH 6-680	Mobil Glygoyle 680	Omala S4 WE 680	Carter SY 680 Carter SG 680
	CLP PG 220	ISO VG 220 -25...80 °C	Alphasyn GS 220 Alphasyn PG 220 Optigear Synthetic 800/220	Renolin PG 220	Klübersynth GH 6-220	Mobil Glygoyle 220	Omala S4 WE 220	-
Synthetic oil (hydrocarbon)	CLP HC 460	ISO VG 460 -30...80 °C	Alphasyn EP 460 Optigear Synthetic PD 460	Renolin Unisyn CLP 460	Klübersynth GEM 4-460 N	Mobil SHC 634	Omala S4 GX 460	Carter SH 460
	CLP HC 220	ISO VG 220 -40...80 °C	Alphasyn EP 220 Optigear Synthetic PD 220	Renolin Unisyn CLP 220 Renolin Unisyn Gear VCI	Klübersynth GEM 4-220 N	Mobil SHC 630	Omala S4 GX 220	Carter SH 220
Bio-degradable oil	CLP E 680	ISO VG 680 -5...40 °C	-	Plantogear 680 S	-	-	-	-
	CLP E 220	ISO VG 220 -5...40 °C	Performance Bio GE 220 ESS Performance Bio GE 220 ESU	Plantogear 220 S	Klübersynth GEM 2-220	-	Naturelle Gear Fluid EP 220	-

Lubricant type	Details on type plate	DIN (ISO) / Ambient temperature	Castrol	FUCHS	KLÜBER LUBRICATION	Mobil	Shell	TOTAL
Food grade oil	CLP PG H1 680	ISO VG 680 -5...40 °C	Optileb GT 1800/680	Cassida Fluid WG 680	Klübersynth UH1 6-680	Mobil Glygoyle 680		-
	CLP PG H1 220	ISO VG 220 -25...40 °C	Optileb GT 1800/200	Cassida Fluid WG 220	Klübersynth UH1 6-220	Mobil Glygoyle 220		Nevastane SY 220
	CLP HC H1 680	ISO VG 680 -5...40 °C	Optileb GT 680	Cassida Fluid GL 680	Klüberoil 4 UH1-680 N	-		-
	CLP PG H1 220	ISO VG 220 -25...40 °C	Optileb GT 220	Cassida Fluid GL 220	Klüberoil 4 UH1-220 N	Mobil SHC Cibus 220		Nevastane XSH 220
Gear unit fluid grease		-25 ... 60 °C	Tribol GR 100-00 PD Tribol GR 3020/1000-00 PD Spheerol EPL 00	Renolit Duraplex EP 00 Renolit LST 00	MICROLUBE GB 00 Klübersynth GE 46-1200	Mobil Chassis Grease LBZ Mobil Glygoyle Grease 00	Alvania EP(LF)2 -	Multis EP 00 Marson SY 00

Table 6: Lubricant table

6.3 Lubricant quantities

Information — **Lubricants**

After changing the lubricant, and in particular after the initial filling, the oil level may change during the first few hours of operation, as the oil galleries and the hollow spaces only fill gradually during operation.

The oil level is still within the permissible tolerance.

If at the express request of the customer, an oil inspection glass is installed at an additional charge, we recommend that the customer corrects the oil level after an operating period of approx. 2 hours, so that when the gear unit is at a standstill and has cooled down, the oil level is visible in the inspection glass. Only then, is it possible to check the oil level by means of the inspection glass.

The filling quantities stated in the following tables are for guidance only. The precise quantities vary depending on the exact gear ratio. When filling, always observe the oil level screw hole as an indicator of the precise quantity of oil.

* Gear unit types SK 11282, SK 11382, SK 11382.1, SK 12382 and SK 9096.1 are normally supplied without oil.

6.4 Helical gear unit

⇨ 🕮 6.1	M1	M2	M3	M4	M5	M6	⇨ 🕮 6.1	M1	M2	M3	M4	M5	M6
SK11E	0,25	0,50	0,65	0,50	0,40	0,40	SK11E F	0,30	0,50	0,50	0,45	0,40	0,40
SK21E	0,60	1,20	1,30	1,00	1,00	1,00	SK21E F	0,50	1,20	1,30	0,60	0,90	0,90
SK31E	1,10	2,00	2,20	1,70	1,50	1,50	SK31E F	0,90	1,80	1,65	1,30	1,25	1,25
SK41E	1,60	2,60	3,30	2,80	2,30	2,30	SK41E F	1,20	2,30	2,70	2,00	1,90	1,90
SK51E	1,80	3,50	4,10	4,00	3,80	3,80	SK51E F	1,80	3,50	4,10	3,00	3,80	3,80
SK02	0,20	0,75	0,75	0,65	0,60	0,60	SK02 F	0,25	0,70	0,70	0,70	0,50	0,50
SK12	0,25	0,80	0,85	0,75	0,55	0,55	SK12 F	0,35	0,85	0,90	0,90	0,70	0,70
SK22	0,50	1,90	2,10	1,80	1,40	1,40	SK22 F	0,70	1,80	1,80	1,80	1,40	1,40
SK32	0,90	2,50	3,10	3,10	2,00	2,00	SK32 F	1,20	2,80	3,10	3,10	2,20	2,20
SK42	1,40	4,50	4,50	4,30	3,20	3,20	SK42 F	1,80	4,40	4,50	4,00	3,70	3,70
SK52	2,50	7,00	6,80	6,80	5,10	5,10	SK52 F	3,00	6,80	6,20	7,40	5,60	5,60
SK62	6,50	15,00	13,00	16,00	15,00	15,00	SK62 F	7,00	15,00	14,00	16,50	16,00	16,00
SK72	10,00	23,00	18,00	26,00	23,00	23,00	SK72 F	10,00	23,00	18,50	28,00	23,00	23,00
SK82	14,00	35,00	27,00	44,00	32,00	32,00	SK82 F	15,00	37,00	29,00	45,00	34,50	34,50
SK92	25,00	73,00	47,00	76,00	52,00	52,00	SK92 F	26,00	73,00	47,00	78,00	52,00	52,00
SK102	36,00	79,00	66,00	102,00	71,00	71,00	SK102 F	40,00	81,00	66,00	104,00	72,00	72,00
SK03	0,35	1,20	0,80	1,00	0,70	0,70	SK03 F	0,55	0,95	0,90	1,20	0,90	0,90
SK13	0,75	1,30	1,30	1,20	0,75	0,75	SK13 F	1,00	1,30	1,30	1,20	1,00	1,00
SK23	1,20	2,00	1,90	2,40	1,60	1,60	SK23 F	1,40	2,60	2,30	2,80	2,80	2,80
SK33N	1,75	3,00	3,40	4,00	2,30	2,30	SK33N F	2,20	3,00	3,40	4,20	2,30	2,30
SK43	3,00	5,60	5,20	6,60	3,60	3,60	SK43 F	3,50	5,70	5,00	6,10	4,10	4,10
SK53	4,50	8,70	7,70	8,70	6,00	6,00	SK53 F	5,20	8,40	7,00	8,90	6,70	6,70
SK63	13,00	14,50	14,50	16,00	13,00	13,00	SK63 F	13,50	14,00	15,50	16,00	14,00	14,00
SK73	20,50	20,00	22,50	27,00	20,00	20,00	SK73 F	22,00	22,50	23,00	27,50	20,00	20,00
SK83	30,00	31,00	34,00	37,00	33,00	33,00	SK83 F	31,00	34,00	35,00	40,00	34,00	34,00
SK93	53,00	70,00	59,00	72,00	49,00	49,00	SK93 F	53,00	70,00	59,00	74,00	49,00	49,00
SK103	74,00	71,00	74,00	97,00	67,00	67,00	SK103 F	69,00	78,00	78,00	99,00	67,00	67,00

Table 7: Lubricant quantities for helical gear units

NORDBLOC

📖 6.1	M1	M2	M3	M4	M5	M6	📖 6.1	M1	M2	M3	M4	M5	M6
SK072.1	0,16	0,32	0,21	0,23	0,18	0,20	SK072.1 F	0,16	0,32	0,21	0,23	0,18	0,20
SK172.1	0,27	0,59	0,42	0,45	0,32	0,39	SK172.1 F	0,27	0,59	0,42	0,45	0,32	0,39
SK372.1	0,45	1,05	0,75	1,00	0,60	0,65	SK372.1 F	0,45	1,05	0,75	1,00	0,60	0,65
SK572.1	0,75	1,90	1,50	2,00	1,10	1,15	SK572.1 F	0,75	1,90	1,50	2,00	1,10	1,15
SK672.1	1,10	2,60	2,15	2,70	1,55	1,65	SK672.1 F	1,10	2,60	2,15	2,70	1,55	1,65
SK772.1	1,30	3,80	2,40	3,20	1,60	2,50	SK772.1 F	1,30	3,80	2,40	3,30	1,70	2,40
SK872.1	2,90	7,80	4,60	6,40	2,50	4,00	SK872.1 F	3,20	7,50	5,10	6,70	2,60	4,30
SK972.1	4,50	12,00	7,50	11,50	4,20	7,50	SK972.1 F	4,50	12,50	8,00	12,50	4,50	7,70
SK772.1VL	2,00	3,80	2,40	3,20	1,60	2,50	SK772.1VL F	2,00	3,80	2,40	3,30	1,70	2,40
SK872.1VL	5,00	7,80	4,60	6,40	2,50	4,00	SK872.1VL F	5,00	7,50	5,10	6,70	2,60	4,30
SK972.1VL	8,50	12,00	7,50	11,50	4,20	7,50	SK972.1VL F	8,50	12,50	8,00	12,50	4,50	7,70
SK373.1	0,45	1,05	0,75	1,00	0,60	0,65	SK373.1 F	0,45	1,05	0,75	1,00	0,60	0,65
SK573.1	0,75	1,90	1,50	2,00	1,10	1,15	SK573.1 F	0,75	1,90	1,50	2,00	1,10	1,15
SK673.1	1,10	2,60	2,15	2,70	1,55	1,65	SK673.1 F	1,10	2,60	2,15	2,70	1,55	1,65
SK773.1	2,30	3,80	3,30	3,20	2,40	3,10	SK773.1 F	2,00	3,50	3,20	2,90	2,30	3,00
SK873.1	4,20	7,80	5,90	6,40	4,10	5,90	SK873.1 F	4,10	7,60	6,90	6,60	5,00	6,60
SK973.1	7,50	12,00	10,50	11,50	7,50	10,50	SK973.1 F	7,40	12,20	11,10	11,60	8,00	10,90
SK773.1VL	2,30	3,80	3,30	3,20	2,40	3,10	SK773.1VL F	2,00	3,50	3,20	2,90	2,30	3,00
SK873.1VL	4,20	7,80	5,90	6,40	4,10	5,90	SK873.1VL F	4,10	7,60	6,90	6,60	5,00	6,60
SK973.1VL	7,50	12,00	10,50	11,50	7,50	10,50	SK973.1VL F	7,40	12,20	11,10	11,60	8,00	10,90
SK071.1/071.1F	0,18	0,40	0,38	0,40	0,30	0,30							
SK171.1/171.1F	0,22	0,40	0,36	0,40	0,33	0,33							
SK371.1/371.1F	0,35	0,58	0,55	0,58	0,49	0,49							
SK571.1/671.1F	0,48	0,86	0,80	0,92	0,68	0,68							
SK771.1/771.1F	0,90	1,50	1,20	1,70	1,16	1,16							

Table 8: Lubricant quantities for NORDBLOC

NORDBLOC helical gear units

							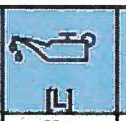						
⇨ 6.1	M1	M2	M3	M4	M5	M6	⇨ 6.1	M1	M2	M3	M4	M5	M6
SK172	0,35	0,50	0,50	0,50	0,50	0,50	SK172 F	0,35	0,50	0,50	0,50	0,50	0,50
SK272	0,60	1,00	1,00	1,00	1,00	1,00	SK272 F	0,60	1,00	1,00	1,00	1,00	1,00
SK372	0,60	1,00	1,00	1,00	1,00	1,00	SK372 F	0,60	1,00	1,00	1,00	1,00	1,00
SK472	1,00	1,90	1,90	2,00	1,80	1,80	SK472 F	1,00	1,90	1,90	1,90	1,90	1,50
SK572	1,00	1,90	1,90	2,00	1,80	1,80	SK572 F	1,00	1,90	1,90	1,90	1,90	1,50
SK672	1,40	3,40	3,10	3,15	1,45	3,15	SK672 F	1,15	3,40	2,70	2,80	1,25	2,70
SK772	2,00	3,30	3,50	4,20	2,70	3,30	SK772 F	1,60	3,30	3,50	3,30	3,10	3,10
SK872	3,70	9,60	9,10	7,30	4,70	8,00	SK872 F	3,50	9,00	7,90	7,70	3,90	7,20
SK972	6,50	16,00	15,70	14,70	8,50	14,00	SK972 F	6,50	15,00	13,00	13,50	6,50	12,00
SK273	0,62	1,10	1,10	1,10	1,10	1,10	SK273 F	0,62	1,10	1,10	1,10	1,10	1,10
SK373	0,55	1,10	1,10	1,10	1,10	1,10	SK373 F	0,55	1,10	1,10	1,10	1,10	1,10
SK473	1,30	2,50	2,10	2,40	2,10	2,10	SK473 F	1,25	2,40	2,10	2,50	2,10	2,10
SK573	1,30	2,50	2,10	2,40	2,10	2,10	SK573 F	1,25	2,40	2,10	2,50	2,10	2,10
SK673	1,80	3,80	3,20	3,40	2,90	3,00	SK673 F	1,70	3,80	3,00	3,20	3,00	3,00
SK773	2,50	4,50	3,70	4,60	3,30	3,30	SK773 F	2,30	5,00	3,60	4,50	3,90	3,90
SK873	6,20	8,40	7,50	9,10	7,50	7,50	SK873 F	5,00	8,80	7,60	8,00	8,00	8,00
SK973	11,00	15,80	13,00	16,00	13,30	13,00	SK973 F	10,30	16,50	13,00	16,00	14,00	14,00

Table 9: Lubricant quantities for NORDBLOC helical gear units

Standard helical gear units

	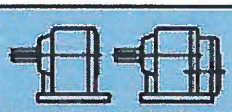							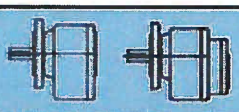					
⇨🕮 6.1	M1	M2	M3	M4	M5	M6	⇨🕮 6.1	M1	M2	M3	M4	M5	M6
SK20	0,55	1,00	0,55	1,00	0,55	0,55	SK20 F	0,35	0,60	0,35	0,60	0,35	0,35
SK0	0,13	0,22	0,13	0,22	0,13	0,13	SK0 F	0,13	0,22	0,13	0,22	0,13	0,13
SK01	0,22	0,38	0,22	0,38	0,22	0,22	SK01 F	0,22	0,38	0,22	0,38	0,22	0,22
SK25	0,50	1,00	0,50	1,00	0,50	0,50	SK25 F	0,50	1,00	0,50	1,00	0,50	0,50
SK33	1,00	1,60	1,00	1,60	1,00	1,00	SK33 F	1,00	1,50	1,00	1,50	1,00	1,00
SK30	0,90	1,30	0,90	1,30	0,90	0,90	SK30 F	0,70	1,10	0,70	1,10	0,70	0,70
SK300	1,20	2,00	1,20	2,00	1,20	1,20	SK300 F	1,25	1,50	1,20	1,80	1,30	0,95
SK330	1,80	2,80	1,80	2,80	1,80	1,80	SK330 F	1,60	2,50	1,60	2,90	1,90	1,40
SK200	0,80	1,30	0,80	1,30	0,80	0,80	SK200 F	0,65	0,95	0,70	1,10	0,80	0,50
SK010	0,38	0,60	0,38	0,60	0,38	0,38	SK010 F	0,35	0,65	0,40	0,74	0,50	0,30
SK250	1,20	1,50	1,20	1,50	1,20	1,20	SK250 F	0,90	1,40	1,00	1,60	1,30	0,80
SK000	0,24	0,40	0,24	0,41	0,24	0,24	SK000 F	0,24	0,41	0,24	0,41	0,24	0,24

Table 10: Lubricant quantities for standard helical gear units

Parallel shaft gear units

⇨🕮 6.1	M1	M2	M3	M4	M5	M6	⇨🕮 6.1	M1	M2	M3	M4	M5	M6
SK0182NB A	0,40	0,55	0,55	0,40	0,40	0,40							
SK0282NB A	0,70	1,10	0,80	1,10	0,90	0,90							
							SK1382NB A	1,40	2,30	2,20	2,20	2,00	2,00
	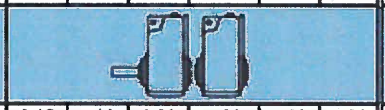												
SK1282 A	0,95	1,30	0,90	1,30	1,00	1,00	SK2382 A	2,30	2,70	2,10	3,20	2,00	2,00
SK2282 A	1,70	2,30	1,70	2,20	1,90	1,90	SK3382 A	3,80	4,30	3,00	5,50	3,00	3,00
SK3282 A	2,80	4,00	3,30	3,80	3,00	3,00	SK4382 A	6,10	6,90	4,90	8,40	5,00	5,00
SK4282 A	4,20	5,40	4,40	5,00	4,20	4,20	SK5382 A	12,50	12,00	6,70	14,00	8,30	8,30
SK5282 A	7,50	8,80	7,50	8,80	7,20	7,20	SK1382 A	1,45	1,60	1,15	1,70	1,10	1,10
								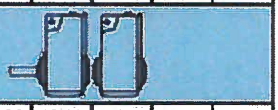					
SK6282 A	17,00	15,50	12,50	17,50	11,00	14,00	SK6382 A	16,00	13,00	10,00	18,00	14,00	12,50
SK7282 A	25,50	21,00	20,50	27,00	16,00	21,00	SK7382 A	22,00	21,00	16,00	25,00	23,00	22,00
SK8282 A	37,50	33,00	30,50	44,00	31,00	31,00	SK8382 A	34,50	32,50	25,00	38,00	35,00	30,00
SK9282 A	74,50	70,00	56,00	80,00	65,00	59,00	SK9382 A	73,50	70,00	43,00	74,50	65,00	60,00
								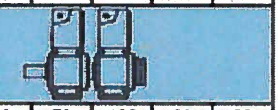					
SK10282 A	90	90	40	90	60	82	SK10382 A	85	90	73	100	80	80
SK11282 A	165	160	145	195	100	140	SK11382 A	160	155	140	210	155	135
							SK12382 A	160	155	140	210	155	135
							SK10382.1 A	76,0	80,0	71,0	92,5	71,5	66,5
							SK11382.1 A	127	133	118	194	124	112

* For further information see page 58

Table 11: Lubricant quantities for parallel shaft gear units

Bevel gear units

6.1	M1	M2	M3	M4	M5	M6	6.1	M1	M2	M3	M4	M5	M6
SK92072	0,40	0,60	0,50	0,55	0,40	0,40	SK92072 A	0,40	0,60	0,55	0,55	0,40	0,40
SK92172	0,60	0,90	1,00	1,10	1,10	0,80	SK92172 A	0,50	1,00	0,90	1,05	0,90	0,60
SK92372	0,90	1,60	1,50	1,90	1,50	0,90	SK92372 A	1,20	1,60	1,50	1,90	1,30	1,30
SK92672	1,80	3,50	3,60	3,40	2,60	2,60	SK92672 A	1,60	2,80	2,50	3,30	2,40	2,40
SK92772	2,30	4,50	4,60	5,30	4,10	4,10	SK92772 A	2,80	4,40	4,50	5,50	3,50	3,50
SK92072.1	0,26	0,49	0,42	0,54	0,29	0,31	SK93072.1	0,39	0,93	0,79	1,02	0,49	0,62
SK92172.1	0,34	0,61	0,52	0,67	0,42	0,48	SK93172.1	0,60	1,17	0,94	1,22	0,65	0,85
SK92372.1	0,43	0,92	0,73	0,83	0,55	0,61	SK93372.1	1,00	1,97	1,65	2,14	1,12	1,34
SK92672.1	0,85	1,60	1,20	1,50	1,02	1,02	SK93672.1	1,80	3,23	2,71	3,80	2,02	2,45
SK92772.1	1,30	2,65	1,86	2,45	1,60	1,60	SK93772.1	2,72	4,63	3,70	5,40	2,93	3,25
SK920072.1	0,21	0,47	0,36	0,34	0,28	0,28	SK930072.1	0,28	0,65	0,56	0,54	0,39	0,39
SK9012.1	0,70	1,70	1,90	2,10	1,10	1,50	SK9012.1 A	1,00	1,90	1,90	2,20	1,20	1,70
SK9016.1	0,70	1,70	1,90	2,10	1,10	1,50	SK9016.1 A	1,00	1,90	1,90	2,20	1,20	1,70
SK9022.1	1,30	2,90	3,30	3,80	1,70	2,80	SK9022.1 A	1,60	3,50	3,50	4,20	2,30	2,80
SK9032.1	1,80	5,40	6,10	6,80	3,00	4,60	SK9032.1 A	2,10	4,80	6,40	7,10	3,30	5,10
SK9042.1	4,40	9,00	10,00	10,70	5,20	7,70	SK9042.1 A	4,50	10,00	10,00	11,50	6,50	8,20
SK9052.1	6,50	16,00	19,00	21,50	11,00	15,50	SK9052.1 A	7,50	16,50	20,00	23,50	11,50	18,00
SK9062.1	10,00	27,50	32,00	36,00	18,00	24,00	SK9062.1 A	12,00	27,50	33,00	38,50	19,00	26,00
SK9072.1	10,00	27,50	32,00	36,00	18,00	24,00	SK9072.1 A	12,00	27,50	33,00	38,50	19,00	26,00
SK9082.1	17,00	51,50	62,50	71,50	33,00	46,50	SK9082.1 A	21,00	54,00	66,00	80,00	38,00	52,00
SK9086.1	29,00	73,00	85,00	102,00	48,00	62,00	SK9086.1 A	36,00	78,00	91,00	107,00	53,00	76,00
SK9092.1	41,00	157,00	170,00	172,00	80,00	90,00	SK9092.1 A	40,00	130,00	154,00	175,00	82,00	91,00
SK9096.1	70,00	187,00	194,00	254,00	109,00	152,00	SK9096.1 A	80,00	187,00	193,00	257,00	113,00	156,00
SK9013.1	1,35	2,10	2,15	2,75	1,00	1,80	SK9013.1 A	1,45	2,30	2,10	2,80	1,05	1,80
SK9017.1	1,30	2,00	2,10	2,70	1,00	1,70	SK9017.1 A	1,45	2,30	2,10	2,80	1,05	1,80
SK9023.1	2,20	3,20	3,60	4,70	2,20	2,90	SK9023.1 A	2,30	3,50	3,80	5,30	2,20	3,40
SK9033.1	3,10	5,70	6,30	8,00	3,40	4,80	SK9033.1 A	3,70	5,70	6,70	8,60	3,60	5,30
SK9043.1	5,00	10,10	11,00	13,30	5,70	8,10	SK9043.1 A	6,50	10,50	11,90	14,70	6,70	9,30
SK9053.1	10,00	17,00	20,00	24,50	11,50	16,50	SK9053.1 A	13,00	18,00	21,50	26,50	13,00	17,00

* For further information see page 58

Table 12: Lubricant quantities for bevel gear units

Helical worm gear units

⇨🕮 6.1	M1	M2	M3	M4	M5	M6		M1	M2	M3	M4	M5	M6
SK02040	0,40	0,80	0,75	0,65	0,50	0,50	SK02040 A	0,40	0,70	0,65	0,65	0,55	0,55
SK02050	0,40	1,40	1,10	1,30	0,70	0,70	SK02050 A	0,45	1,40	1,15	1,10	0,75	0,75
SK12063	0,60	1,80	1,20	1,60	1,00	1,00	SK12063 A	0,55	1,45	1,60	1,60	1,10	1,10
SK12080	0,90	3,10	2,40	3,00	1,80	1,80	SK12080 A	0,80	3,10	3,20	2,80	1,80	1,80
SK32100	1,50	6,30	5,60	5,50	3,60	3,60	SK32100 A	1,50	5,60	5,60	5,30	4,00	4,00
SK42125	2,80	11,80	10,20	10,00	6,20	6,20	SK42125 A	3,00	12,50	10,80	10,80	6,50	6,50
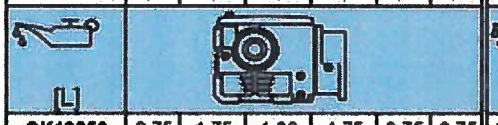							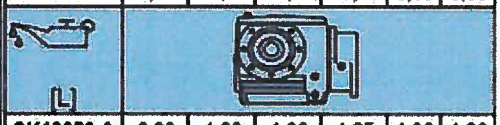						
SK13050	0,75	1,75	1,30	1,75	0,75	0,75	SK13050 A	0,90	1,80	1,30	1,65	1,30	1,30
SK13063	1,00	2,30	1,50	2,20	1,10	1,10	SK13063 A	1,05	2,10	1,80	2,10	1,40	1,40
SK13080	1,70	3,50	3,50	3,50	2,00	2,00	SK13080 A	1,60	3,60	2,90	3,75	2,00	2,00
SK33100	2,40	6,40	5,40	6,50	3,40	3,40	SK33100 A	2,60	6,00	5,80	6,00	3,50	3,50
SK43125	4,25	13,00	10,50	13,50	7,20	7,20	SK43125 A	4,60	13,60	11,40	14,30	7,60	7,60
							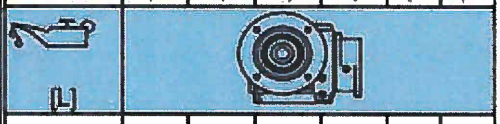						
SK02040 F	0,40	0,70	0,65	0,65	0,55	0,55							
SK02050 F	0,40	1,50	1,25	1,20	0,90	0,75	SK13050 F	0,75	1,80	1,50	1,70	1,05	0,90
SK12063 F	0,50	1,95	1,70	1,75	1,20	0,95	SK13063 F	1,00	2,30	1,90	2,20	1,35	1,10
SK12080 F	0,90	3,70	3,20	3,40	2,50	2,30	SK13080 F	1,60	3,80	3,50	3,90	2,70	2,50
SK32100 F	1,40	6,30	6,10	6,10	4,00	3,60	SK33100 F	2,65	7,20	6,40	7,60	4,30	3,80
SK42125 F	3,00	11,50	11,50	11,00	8,40	7,30	SK43125 F	4,70	15,00	13,00	16,00	9,00	7,70

Table 13: Lubricant quantities for Helical worm gear units

6.5 Torque values

Dimensions	Bolt Torques [Nm]					
	Screw connections in the strength classes			Cover screws	Threaded pin on coupling	Screw connections on protective covers
	8.8	10.9	12.9			
M4	3.2	5	6	-	-	-
M5	6.4	9	11	-	2	-
M6	11	16	19	-	-	6.4
M8	27	39	46	11	10	11
M10	53	78	91	11	17	27
M12	92	135	155	27	40	53
M16	230	335	390	35	-	92
M20	460	660	770	-	-	230
M24	790	1150	1300	80	-	460
M30	1600	2250	2650	170	-	-
M36	2780	3910	4710	-	-	1600
M42	4470	6290	7540	-	-	-
M48	6140	8640	16610	-	-	-
M56	9840	13850	24130	-	-	-
G½	-	-	-	75	-	-
G¾	-	-	-	110	-	-
G1	-	-	-	190	-	-
G1¼	-	-	-	240	-	-
G1½				300		-

Table 14: Torque values

Assembling the hose fittings

Oil the thread of the union nut, the cutting ring and the screw neck. Tighten the union nut with the wrench until the point where the union nut can only be turned with considerably more force. Turn the union nut of the screw fitting approx. 30° to 60° further but not more than 90°. For this the screw neck must be held with a wrench. Remove excess oil from the screw fitting

6.6 Troubleshooting

WARNING — **Injury to persons**

There is a slipping hazard in case of leaks.

Clean the soiled floor and machine components before starting troubleshooting.

WARNING — **Injury to persons**

Risk of injury due to rapidly rotating and hot machine components.

Troubleshooting must only be performed when gear units are at a standstill and have cooled down. The drive must be isolated and secured to prevent accidental start-up.

NOTICE — **Gear unit damage**

Damage to the gear unit is possible in case of faults.

Shut down the drive unit immediately in case of any faults in the gear unit.

Gear unit malfunctions		
Fault	**Possible cause**	**Remedy**
Unusual running noises, vibrations	Oil too low or bearing damage or gear wheel damage	Consult NORD Service
Oil escaping from the gear unit or motor	Defective seal	Consult NORD Service
Oil escaping from pressure vent	Incorrect oil level or incorrect, contaminated oil or unfavourable operating conditions	Oil change, use oil expansion tank (Option OA)
Gear unit becomes too hot	Unfavourable installation conditions or gear unit damage	Consult NORD Service
Shock when switching on, vibrations	Defective motor coupling or loose gear unit mounting or defective rubber element	Replace elastomer gear rim, tighten motor and gear unit fastening bolts, replace rubber element
Output shaft does not rotate although motor is running	Fracture in gear unit or defective motor coupling or shrink disc slippage	Consult NORD Service

Table 15: Overview of malfunctions

6.7 Leaks and seals

Gear units are filled with oil or grease to lubricate the moving parts. Seals prevent the escape of lubricants. A complete seal is not technically possible, as a certain film of moisture, for example on the radial shaft sealing rings is normal and advantageous for a long-term seal. In the region of vents, moisture due to oil may be visible due to the escape of oil mist because of the function. In the case of grease-lubricated labyrinth seals, e.g. Taconite sealing systems, used grease emerges from the sealing gap due to the principle of operation. This apparent leak is not a fault.

According to the test conditions as per DIN 3761, the leak is determined by the medium which is to be sealed, which in test bench tests exceeds the function-related moisture in a defined test period and which results in dripping of the medium which is to be sealed. The measured quantity which is then collected is designated as leakage.

Definition of leakage according to DIN 3761 and its appropriate use					
		Location of leak			
Term	Explanation	Shaft sealing ring	in IEC adapter	Housing joint	Venting
Sealed	No moisture apparent	No reason for complaint	No reason for complaint	No reason for complaint	No reason for complaint
Damp	Moisture film locally restricted (not an area)	No reason for complaint	No reason for complaint	No reason for complaint	No reason for complaint
Wet	Moisture film beyond the extent of the component	No reason for complaint	No reason for complaint	Repair if necessary	No reason for complaint
Measurable leakage	Recognisable stream, dripping	Repair recommended	Repair recommended	Repair recommended	Repair recommended
Temporary leakage	Temporary malfunction of the sealing system or oil leak due to transport *)	No reason for complaint	No reason for complaint	Repair if necessary	No reason for complaint
Apparent leakage	Apparent leakage, e.g. due to soiling, sealing systems which can be re-lubricated	No reason for complaint	No reason for complaint	No reason for complaint	No reason for complaint

Table 16: Definition of leaks according to DIN 3761

*) Previous experience has shown that moist or wet radial shaft sealing rings stop leaking later. Therefore, under no circumstances can replacement be recommended at this stage. The reason for momentary moisture may be e.g. small particles under the sealing lip.

6.8 Repair information

For enquiries to our technical and mechanical service departments, please have the precise gear unit type (type plate) and if necessary the order number (type plate) to hand.

6.8.1 Repairs

The device must be sent to the following address if it needs repairing:

Getriebebau NORD GmbH & Co. KG

Service Department

Getriebebau-Nord-Straße 1

22941 Bargteheide

No guarantee can be given for any attachments, such as encoders or external fans, if a gear unit or geared motor is sent for repair.

Please remove all non-original parts from the gear unit or geared motor.

Information — **Reason for return**

If possible, the reason for returning the component or device should be stated. If necessary, at least one contact should be stated in case of queries.

This is important in order to keep repair times as short and efficient as possible.

6.8.2 Internet information

In addition, the country-specific operating and installation instructions in the available languages can be found on our Internet site: www.nord.com

6.9 Abbreviations

2D	Dust explosion protected gear units zone 21
2G	Explosion protected gear units with ignition protection class "c"
3D	Dust explosion protected gear units zone 22
ATEX	**AT**mospheres **EX**plosibles
B5	Flange fastening with through holes
B14	Flange fastening with threaded holes
CW	Clockwise, right-hand direction of rotation
CCW	Counter-clockwise, left-hand direction of rotation
°dH	Water hardness in German hardness degrees: 1°dH = 0.1783 mmol/l
DIN	German standards institute
EC	European Community
EN	European standard
FR	Radial transverse force
FA	Axial force
IE1	Motors with standard efficiency
IE2	Motors with high efficiency
IEC	International Electrotechnical Commission
NEMA	National Electrical Manufacturers Association
IP55	International Protection
ISO	International Standardisation Organisation
pH	pH value
PPE	Personal Protective Equipment
RL	Directive
VCI	Volatile Corrosion Inhibitor
WN	Getriebebau NORD factory standard

Key word index

A

Activating the vent 18
Address 68
Assembly 18

C

Coolant 34
Cooling cover 31
Correct use 9
Covers 27

D

Danger labels 8
Disposal of materials 11

F

Faults 66

G

Gear unit types 12
General overhaul 41
General safety information 10

H

Hose fitting 65

I

Inspection intervals 36
Installing the gear unit 20
Internet 68

L

Leakage 67
Long-term storage 16
Lubricant sensor 33
Lubricants 56

M

Maintenance 68
Maintenance intervals 36
Maintenance work
- Changing the oil 40
- Check for running noises 38
- Check the oil level 38
- Lubricant sensor 39
- Radial packing ring 41
- Re-greasing VL2, VL3 and IEC 39
- Standard vent plug 41
- Visual inspection 37

Motor weights for IEC adapters 28

O

Option H66 22

P

Painting the gear unit 32
Pulling devices 21
Push-on gear unit 22

R

Repairs 68
Roller bearing greases 55
Running-in time 35

S

Safety information 2
Service 68
Shrink disc 25
Standard motor 28
Storage 16

T

Tightening torques 65
Transport 15
Type plate 14

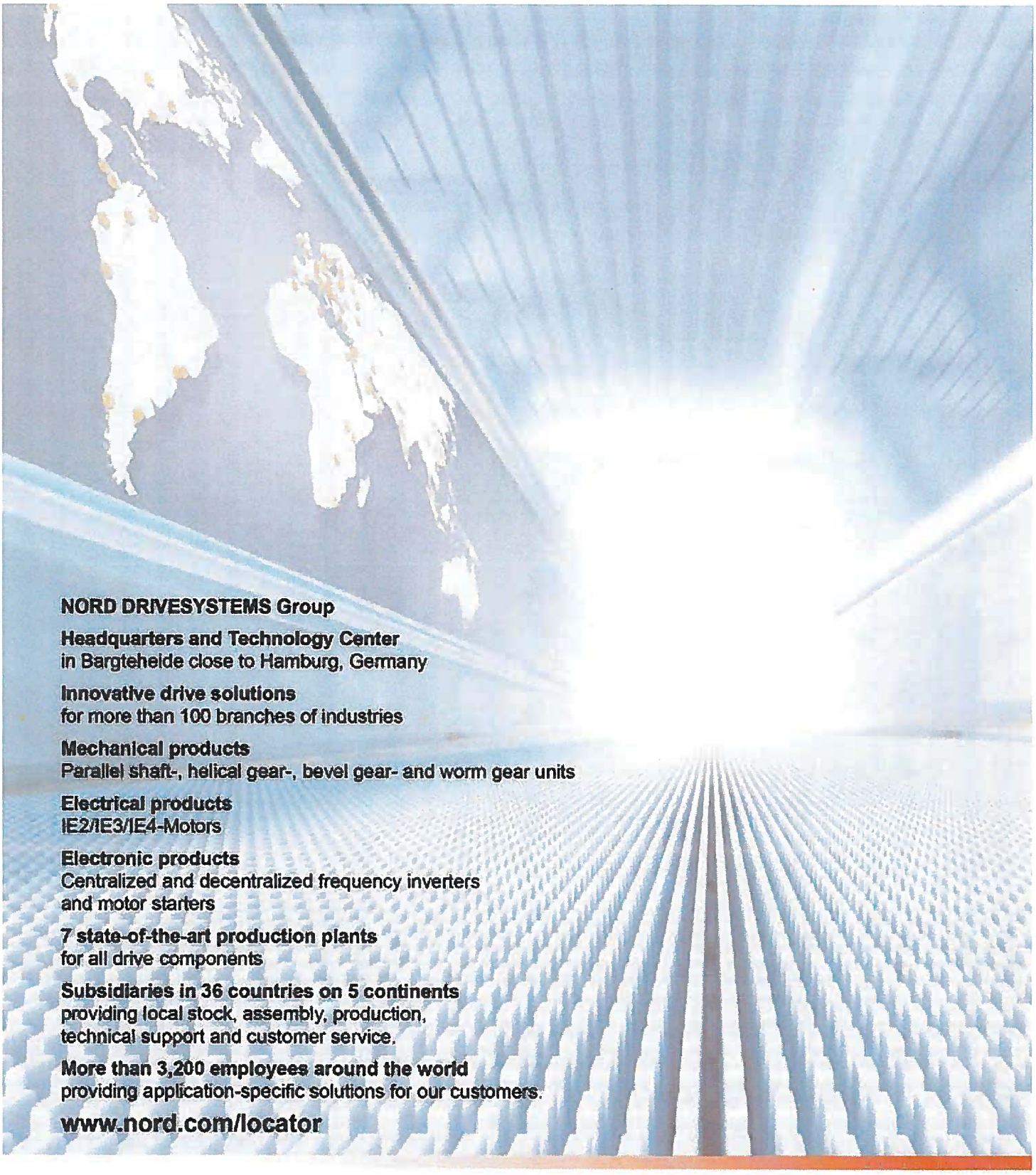

NORD DRIVESYSTEMS Group

Headquarters and Technology Center
in Bargteheide close to Hamburg, Germany

Innovative drive solutions
for more than 100 branches of industries

Mechanical products
Parallel shaft-, helical gear-, bevel gear- and worm gear units

Electrical products
IE2/IE3/IE4-Motors

Electronic products
Centralized and decentralized frequency inverters
and motor starters

7 state-of-the-art production plants
for all drive components

Subsidiaries in 36 countries on 5 continents
providing local stock, assembly, production,
technical support and customer service.

More than 3,200 employees around the world
providing application-specific solutions for our customers.

www.nord.com/locator

Headquarters:

Getriebebau NORD GmbH & Co. KG
Getriebebau-Nord-Straße 1
22941 Bargteheide, Germany
Fon +49 (0) 4532 / 289-0
Fax +49 (0) 4532 / 289-2253
info@nord.com, www.nord.com

Member of the NORD DRIVESYSTEMS Group

NORD
DRIVESYSTEMS

6052802 / 3816

VL2 & VL3 AGITATOR
MIXER & SHREDDER REDUCERS

NORD DRIVESYSTEMS

VL2 - SPREAD BEARING DESIGN

Increased bearing spreads with an oversized double row spherical bearing on the lower side. It is commonly used in shredders, mixers or applications requiring increased bearing load carrying capacities.

VL3 - SPREAD BEARING DESIGN

In addition to the VLII design an oil leakage control system is added. Our Dry Cavity System provides a very high degree of oil safety. The anti-leak QUADRILIP™ Oil Sealing System is enhanced with an oil collection cavity (just-in-case) and various ways to sense and remove the leakage from the cavity. Standard is a viewable oil sight indicator with an optional capacitive proximity switch and control available for electronic indication of a leak.

OPTIONS TO BOTH DESIGNS

You may include a grease zerk to lubricate the lower bearing, and a removable plug to allow excess grease to purge from the bearing cavity.

Unit Size	B5 Flange Diameter		Solid Shaft Diameter		Hollow Shaft Diameter		Shrink Disc Diameter		Output Bearings		Bearing Spread	
	[in]	[mm]	[in]	[mm]	[in]	[mm]	[in]	[mm]	upper	lower	[in]	[mm]
Offset Parallel (Clincher)												
SK 1282	7.87	200	1.250	30	1.188	30	1.250	30	6009Z	22210E	4.91	125
SK 2282 or SK 2382	9.84	250	1.375	35	1.438	35	1.500	35	NUP210E	22212E	5.55	141
SK 3282 or SK 3382	11.81	300	1.875	45	1.625	40	1.625	40	NUP211E	22213E	6.58	167
SK 4282 or SK 4382	11.81	300	2.250	55	2.062	50	2.000	50	NUP214E	22216E	8.45	215
SK 5282 or SK 5382	13.78	350	2.500	65	2.438	60	2.500	60	NUP217E	22219E	9.92	252
SK 6282 or SK 6382	15.75	400	3.000	75	2.750	70	3.000	70	NUP220E	23222E	12.67	322
SK 7282 or SK 7382	17.72	450	3.500	90	3.188	80	3.188	80	NUP222E	23224E	14.08	358
SK 8282 or SK 8382	21.65	550	4.250	110	4.062	100	4.000	100	NUP226E	23228E	16.76	426
SK 9282 or SK 9382	25.98	660	5.250	140	4.750	120	4.750	125	NUP232E	23236E	19.04	484
SK 10282 or SK 10382	25.98	660	6.250	160	----	----	6.250	160	23044MB	22244MB	23.70	602
SK 11282 or SK 11382	25.98	660	7.000	180	----	----	7.000	180	23048MB	22244MB	24.29	617
SK 12382	25.98	660	7.000	180	----	----	7.000	180	23048MB	22244MB	24.29	617
Helical-Bevel Speed Reducer												
SK 9012.1 or SK 9013.1	7.87	200	1.250	30	1.375	35	1.375	35	6010Z	22210E	6.17	157
SK 9016.1 or SK 9017.1	7.87	200	1.375	35	1.500	40	1.500	40	6010Z	22210E	6.17	157
SK 9022.1 or SK 9023.1	9.84	250	1.375	35	1.500	40	1.500	40	6010Z	22210E	7.13	181
SK 9032.1 or SK 9033.1	11.81	300	1.750	45	2.000	50	2.000	50	6014 2RS	22214ES	8.17	207
SK 9042.1 or SK 9043.1	13.78	350	2.375	65	2.375	60	2.375	60	NUP216E	22219ES	10.47	266
SK 9052.1 or SK 9053.1	15.75	400	2.875	75	2.750	70	3.250	70	NUP220E	23222ES	13.28	337
SK 9072.1	17.72	450	3.625	90	3.250	80	3.250	80	NUP222E	23224ES	15.74	400
SK 9072.1/32	17.72	450	3.625	90	3.250	80	3.250	80	NUP222E	23224ES	15.74	400
SK 9072.1/42	17.72	450	3.625	90	3.250	80	3.250	80	NUP222E	23224ES	15.74	400
SK 9082.1	21.65	550	4.375	110	4.000	110	4.000	110	NUP228E	23228ES	18.61	473
SK 9082.1/42	21.65	550	4.375	110	4.000	110	4.000	110	NUP228E	23228ES	18.61	473
SK 9082.1/52	21.65	550	4.375	110	4.000	110	4.000	110	NUP228E	23228ES	18.61	473
SK 9086.1	25.98	660	4.750	120	4.750	120	4.750	125	22232E	23236ES	21.50	546
SK 9086.1/52	25.98	660	4.750	120	4.750	120	4.750	125	22232E	23236ES	21.50	546
SK 9092.1	25.98	660	5.500	140	----	----	5.500	150	23040E	23236ES	25.57	650
SK 9092.1/52	25.98	660	5.500	140	----	----	5.500	150	23040E	23236ES	25.57	650
SK 9096.1	25.98	660	7.500	190	----	----	----	----	23040E	23236ES	25.57	650
SK 9096.1/62	25.98	660	7.500	190	----	----	----	----	23040E	23236ES	25.57	650
SK 9096.1/63	25.98	660	7.500	190	----	----	----	----	23040E	23236ES	25.57	650

VL2 & VL3 AGITATOR

RATIO & SPEED

OFFSET PARALLEL CLINCHER

- Ratio range : 4.03:1 to 6616.79:1
- Speed range from 1750 rpm motor : 0.26 to 434 rpm
- 95.5% minimum standard efficiency

90 SERIES RIGHT ANGLE BEVEL

- Ratio range : 8.04:1 to 4916.63:1
- Speed range from 1750 rpm motor : 0.36 to 218 rpm
- 95.5% minimum standard efficiency

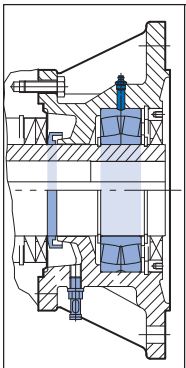

STANDARD CONFIGURATION

- B5 flange housing style
- Output shaft types : Keyed solid shaft, Keyed hollow shaft, Keyless shrink disc connector
- VLII-spread bearing design has an Increased bearing spread, and a Large double row spherical bearing on lower side
- VLIII-dry cavity design : VLII with added oil leakage control, Oil flinger, Oil accumulation cavity, Sight glass to shows if oil is present in the control cavity

STANDARD CONFIGURATION OPTIONS

Regreasable zerk lubricating nipple for lower bearing, Capacitive oil sensing switch, Capacitive oil switch

SHAFT DATA

- AISI 4140 output shaft material
- Inch shaft key dimensions according to AISI B17
- Metric shaft key dimensions according to DIN 6885
- Standard output shaft drill and tap
- Shrink disc size range [in] :1.250 to 7.000
- Shrink disc size range [mm] : 30 to 180

INTERNAL PARTS ASSEMBLY

- Heavy press fit assembly method
- Standard reversing duty
- Typical backlash range [arc minutes] : 6 to 13

GEARING

- Up to AGMA Class 13 quality rating on gears
- 58 Rockwell C minimum hardness of steel gears
- Ground or skive hobbed hard finishing of gear teeth
- Standard drop forged gear blanks
- 275% momentary overload capacity
- Standard hunting tooth ratios

HOUSING

- Class 35 gray iron typical housing material
- Single setup machining method
- UNICASE™ one piece main housing design
- Seals directly contact main housing
- Exceptional housing torsional stiffness
- Thick housing wall section
- Castings are dip sealed

BEARINGS

- ABEC-1 quality bearings
- Bearing spread is larger than standard unit by at least 50%
- Double row spherical lower output bearing
- Optional housing with grease zerk available for lower bearing regreasing
- NIGI 2EP lithium based lower bearing lubricant
- 50,000 + hours of L10 output bearing life

LUBRICANT & SEALING COMPONENTS

- Factory filled ISO 220 mineral oil
- Standard AUTOVENT™ breather style
- QUADRILIP™ output seal system
- 3 double lip & 2 single lip output shaft oil seals
- Double lipped lower flange seal
- Nitrile rubber oil seals

LUBRICANT & SEALING OPTIONS

Custom synthetic lubricating oil, High or low temperature lubricating oil, Fluid grease lubricant, Food grade lubricating oil, Long term storage preparation, Magnetic drain plug, Bullseye sight glass, Custom drain plug, Fluorinated rubber oil seal material

ENVIRONMENTAL PROTECTION

- Exterior primer coverage : all metal exterior surfaces
- Paint type : Water Based Resin
- Paint additive : 316 stainless steel flakes
- USDA incidental contact exposure : H1

ENVIRONMENTAL OPTIONS

Severe duty and washdown duty paint options, Custom paint, Top side shaft covers

DRIVESYSTEMS

www.nord.com

NORD Gear Corporation
National Customer Service Toll-Free: 888.314.6673
info.us@nord.com

NORD Gear Limited
Toll-Free in Canada: 800.668.4378
info.ca@nord.com

WEST
Corona, CA (Los Angeles)
Phone: 608.849.0190

MIDWEST
Waunakee, WI (Madison)
Phone: 608.849.7300

EAST
Charlotte, NC
Phone: 608.849.0140

CANADA
Brampton, ON (Toronto)
Phone: 905.796.3606

100200023/0509

PM064
GREASE LUBRICATION OF VL2/VL3 ASSEMBLY

TYPICAL VL2/VL3 ASSEMBLY - CLINCHER™ REDUCER SHOWN
BEVEL REDUCER OPTIONS ALSO AVAILABLE

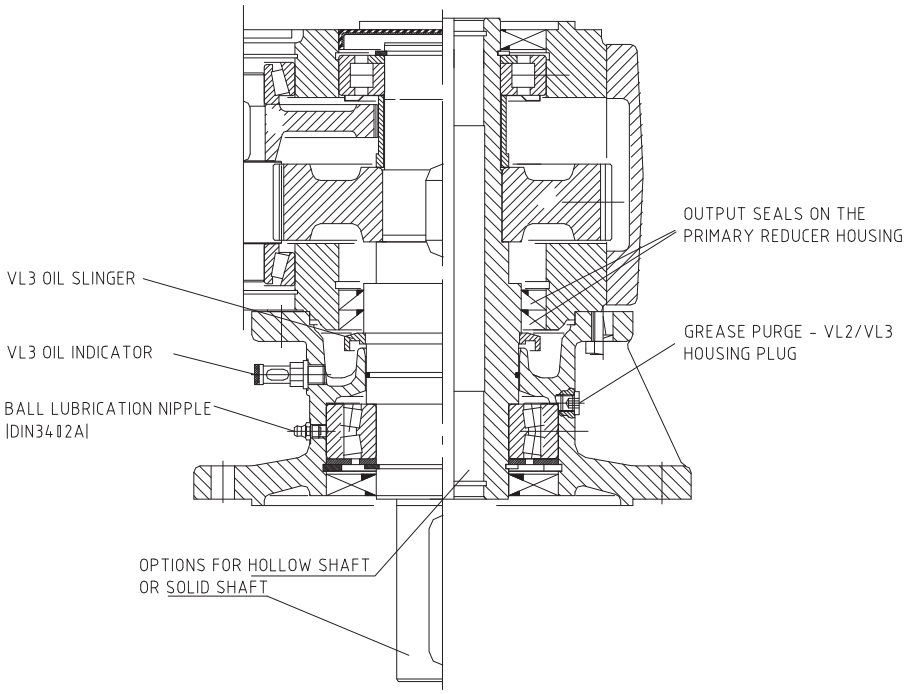

VL2 & VL3 greased bearing lubrication
Standard factory lube:

STANDARD BEARING GREASE – NLGI 2EP Lithium

Ambient Temperature	Formulation
-20 to 140°F (-30 to 60°C)	Mineral

Optional bearing greases, which must be specified at time of order (do not mix grease formulations)

OPTIONAL BEARING GREASES

Ambient Temperature	Formulation	Manufacturer	Grease Brand Name
-40 to 230°F (-40 to 110°C)	Synthetic	Shell	Aeroshell 6
-40 to 230°F (-40 to 110°C)	*Food Grade* - Synthetic	Lubriplate	SFL1

Normal grease bearing re-lubrication intervals is every 5000 hours or every10 months (minimum)

GREASE QUANTITY

Clincher	**Helical/Bevel**	Grease Quantity
SK2282 - 5282	**SK9012.1 – 9052.1**	1 oz per interval
SK6282 - 8282	**SK9062.1 – 9082.1**	2 oz per interval
SK9282 – 12382	**SK9086.1 – 9092.1**	3 oz per interval

Note: Grease purge housing plug must be removed during the re-lubrication of the bearing.

Remove and dispose of any old grease escaping the purge port, and re-install grease purge plug when finished.

LEFT BLANK

EXPANSION CHAMBERS INSTALLATION & MAINTENANCE MANUAL

Installation Instructions

Sometimes NORD requires the use of an oil expansion chamber when the motor or reducer input is mounted vertically. Consult your NORD catalog for additional information and application considerations.

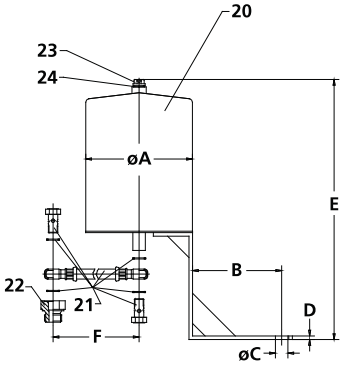

1. Secure the gear reducer in the proper mounting position for the application and remove the vent plug from the gear reducer. The hose assembly kit (21) will be fitted to the reducer using the housing port provided.
2. When using the larger 2.7 and 5.4 liter chambers, screw the adapter fitting (22) into the reducer housing port. Use all sealing gaskets provided.
3. Mount the overflow tank (20) at the highest location from the reducer, as permitted by the hose assembly kit (21). Typical mounting configurations are represented below. Use one of the input cover's mounting bolts, to mount the chamber support leg to the reducer.

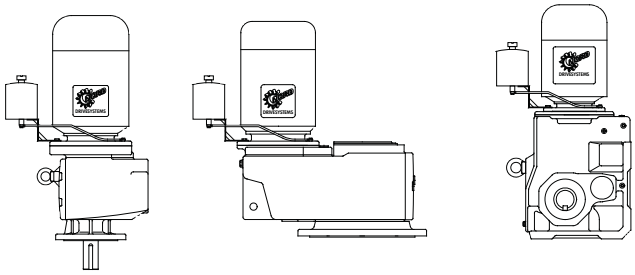

4. Be sure to use the proper fittings. Assemble one end of the vent-hose assembly (21) to bottom of the chamber and one-end to the reducer.
5. Secure the vent-plug (23) and gasket (24) that is supplied with the kit to the top of the expansion chamber.

STOP ***HARMFUL SITUATION*** **STOP**

Remove the protective "rubber element" from the supplied vent prior to use so that an open-vent is formed on top of the overflow tank. Avoid using a pressurized AUTOVENT™ breather on the overflow tank since this may create an undesired pressure-vacuum in the overflow tank.

Expansion Chamber Kit Dimensions & Parts List

Kit Part Number: 28390390 - 0.7 Liter Oil Expansion Chamber

Kit P/N	Ø A	B	Ø C	D	E	F	Units
28390390 (0.7 Liter)	3.94	1.97	0.53	0.20	8.50	19.69	inch
	100	50	13.5	5	216	500	mm

Item	Part Number	Description
20	28300390	Overflow Tank - 0.7 Liter
21	28310020	Flexible Vent Hose Assembly - Includes: Hose, metal gaskets & 2 Hollow Bolts (1 Bolt. - M12 X 1.5 and 1 Pc. - G1/4)
22	None	Adapter Fitting
23	22012004	Normal Style Vent Plug (M12 X 1.5, DIN 910)
24	25312150	Vent Plug Gasket (12 X 15.5 X 1.5)

Kit Part Number: 28390400 - 2.7 Liter Oil Expansion Chamber

Kit P/N	Ø A	B	Ø C	D	E	F	Units
28390400 (2.7 Liter)	5.91	4.92	0.69	0.20	15.22	27.56	inch
	150	125	17.5	5	386.5	700	mm

Item	Part Number	Description
20	28300400	Overflow Tank - 2.7 Liter
21	28310030	Flexible Vent Hose Assy - Includes: Hose, metal gaskets & 2 Hollow Bolts (2 Pcs. - G1/4)
22	22024030	Adapter Fitting (M24 X 1.5 to G1/4)
23	22012004	Normal Style Vent Plug (M12 X 1.5, DIN 910)
24	25312150	Vent Plug Gasket (12 X 15.5 X 1.5)

Kit Part Number: 28390400 - 2.7 Liter Oil Expansion Chamber

Kit P/N	Ø A	B	Ø C	D	E	F	Units
28390410 (5.4 Liter)	7.09	3.54	0.69	0.20	15.18	31.50	inch
	180	90	17.5	5	385.5	800	mm

Item	Part Number	Description
20	28300410	Overflow Tank - 5.4 Liter
21	28310040	Flexible Vent Hose Assy - Includes: Hose, metal gaskets & 2 Hollow Bolts (2 Pcs. - G1/4)
22	22030030	Adapter Fitting (M30 X 1.5 to G1/4)
23	22012004	Normal Style Vent Plug (M12 X 1.5, DIN 910)
24	25312150	Vent Plug Gasket (12 X 15.5 X 1.5)

Please see page 2 for gearbox compatability

Expansion Chamber Compatability Chart

Helical In-line	NORDBLOC™	NORDBLOC.1™	Clincher™	Helical-Bevel	Part Number	[lb]
SK 42/43 SK 52/53 SK 63	SK472/473 SK572/573 SK672/673 SK772/773 SK872/873 SK972/973	SK572.1/573.1* SK672.1/673.1*	SK 4282/4382 SK 5282/5382 SK 6382	SK 9042.1/9043.1 SK 9052.1/9053.1	28390390	11.0
SK 62 SK 72/73			SK 6282 SK 7282/7382	SK 9072.1 SK 9082.1	28390400	13.2
SK 82/83 SK 92/93 SK 102/103			SK 8282/8382	SK 9086.1 SK 9092.1	28390410	15.4

* Need to additionally order part #28390380 which is sub-assembly shown below.

Sub-Assembly P/N 28390380 for NORDBLOC®.1 gear units with M10x1 air vent.

❶	❷	❸	❹
1x DIN 7643 M10x1 283 00380	1x DIN 7603A Cu 10x16x1 253 10166	1x Ring 10x14x5 283 00370	1xDIN 9021 ø8,4 227 10840

Assembly of the expansion unit at the gear unit. Types SK 572.1/573.1, SK 672.1/673.1

Vent Hose Sub-Assembly

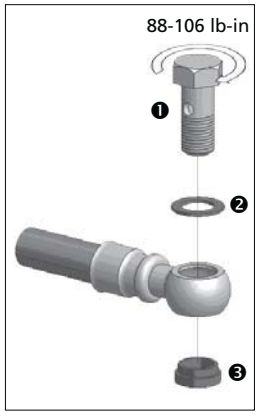

❹ For motor sizes 63, 71, 80, 90, 100 & 112

• Motor attachment bolt

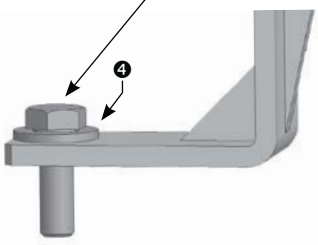

Motor Sizes 63, 71 & 80:
Assembly vent-hose to port as shown.

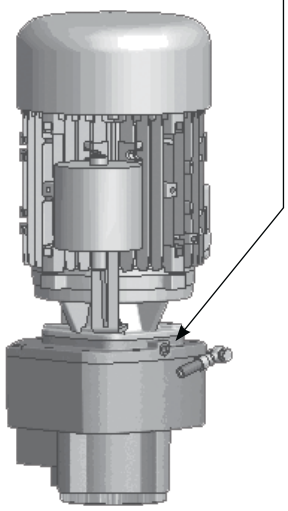

Motor Sizes 90,100 & 112:
Assembly vent-hose to port as shown.

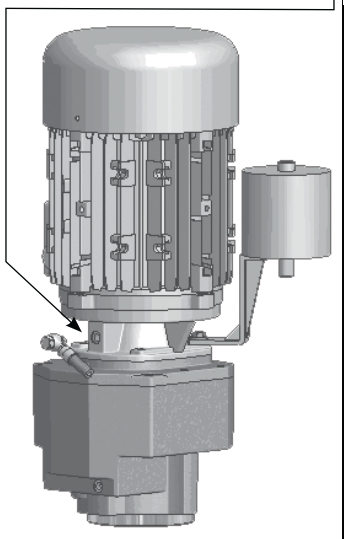

B 1091 – en

Motors

Operating and Assembly Instructions

NORD DRIVESYSTEMS

Safety and operating instructions for electric motors

(according to: Low Voltage Directive2006/95/EEC (as of 20/04/2016: 2014/35/EU

1 General

During operation, devices may, depending on their protection class, have live, bare, moving or rotating parts or hot surfaces.

Unauthorised removal of covers, improper use, incorrect installation or operation causes a risk of serious personal injury or material damage.

Further information can be found in this documentation.

All transportation, installation commissioning and maintenance work must be carried out by qualified personnel (compliant with IEC 364 or. CENELEC HD 384 or DIN VDE 0100 and IEC 664 or DIN VDE 0110 and national accident prevention regulations).

For the purposes of these basic safety instructions, qualified personnel are persons who are familiar with the assembly, installation, commissioning and operation of this product and who have the relevant qualifications for their work.

2. Proper use in Europe

The devices are components intended for installation in electrical systems or machines.

When installed in machines, the devices must not be commissioned (i.e. commencement of the proper use) until it has been ensured that the machine meets the provisions of the EC Directive 2006/42/EEC (Machinery Directive); EN 60204 must also be complied with.

Commissioning (i.e. implementation of proper use) is only permitted if the EMC directive (2004/108/EEC) is complied with (as of 20/04/2016: 2014/30/EU)).

Devices with a CE label meet the requirements of the Low Voltage Directive 2006/95/EEC (as of 20/04/2016: 2014/35/EU). The stated harmonized standards for the devices are used in the declaration of conformity.

Technical data and information for connection conditions can be found on the rating plate and in the documentation, and must be complied with.

The devices may only be used for safety functions which are described and explicitly approved.

3. Transport, storage

Information regarding transport, storage and correct handling must be complied with.

4. Installation

The installation and cooling of the equipment must be implemented according to the regulations in the corresponding documentation.

The devices must be protected against impermissible loads. Especially during transport and handling, components must not be deformed and/or insulation distances must not be changed.

Electrical components must not be mechanically damaged or destroyed (this may cause a health hazard!).

5. Electrical Connection

When working on live devices, the applicable national accident prevention regulations must be complied with (e.g. BGV A3, formerly VBG 4).

The electrical installation must be implemented according to the applicable regulations (e.g. cable cross-section, fuses, earth lead connections). Further instructions can be found in the documentation.

Information regarding EMC-compliant installation – such as shielding, earthing, location of filters and installation of cables – can be found in the documentation for the devices. These instructions must be complied with even with CE marked devices. Compliance with the limiting values specified in the EMC legal regulations is the responsibility of the manufacturer of the system or machine.

6. Operation

Where necessary, systems in which the devices are installed must be equipped with additional monitoring and protective equipment according to the applicable safety requirements, e.g. legislation concerning technical equipment, accident prevention regulations, etc.

The parameterisation and configuration of the devices must be selected so that no hazards can occur.

All covers must be kept closed during operation.

7. Maintenance and repairs

The following applies in particular for operation with frequency inverters:

After the devices are disconnected from the power supply, live equipment components and power connections should not be touched immediately, because of possible charged capacitors. Observe the applicable information signs located on the device.

Further information can be found in this documentation.

These safety instructions must be kept in a safe place!

Documentation

Title: B 1091

Order – No.: 6051302

Series: **Asynchronous motors / Synchronous motors**

• 1 and 3-phase asynchronous motors

SK 63*[1)]/*[2)] *[3)] up to SK 315*[1)]/*[2)] *[3)]

1) Power code: S, SA, SX, M, MA, MB, MX, L, LA, LB, LX, R, X, Y, A, W
- optionally supplemented with: H, P

2) Pole number labelling: 2, 4, 6, 8, ...

3) Further options

• 3-phase synchronous motors

SK 63*[1)]*[2)]/*[3)] *[4)] up to SK 132*[1)]*[2)]/*[3)] *[4)]

1) Winding version: T, F, ...

2) Power number: 1 to 9

3) Pole number labelling: 4, 6, 8, ...

4) Further options

• Three-phase asynchronous motors

SK 63*[1)]/*[2)] 2D *[3)] up to SK 200*[1)]/*[2)] 2D *[3)]

1) Power code: S, SA, SX, M, MA, MB, MX, L, LA, LB, LX, R, X, Y, A, W
- optionally supplemented with: H, P

2) Pole number labelling: 2, 4, 6

3) Options

with ATEX labelling II 2D Ex tb IIIC T . . . °C Db

SK 63*[1)]/*[2)] 3D *[3)] up to SK 200*[1)]/*[2)] 3D *[3)]

1) Power code: S, SA, SX, M, MA, MB, MX, L, LA, LB, LX, R, X, Y, A, W
- optionally supplemented with: H, P

2) Pole number labelling: 2, 4, 6

3) Options

with ATEX labelling II 3D Ex tc IIIB T . . . °C Dc

SK 63*[1)]/*[2)] 2G *[3)] up to SK 200*[1)]/*[2)] 2G *[3)]

1) Power code: S, SA, SX, M, MA, MB, MX, L, LA, LB, LX, R, X, Y, A, W
- optionally supplemented with: H, P

2) Pole number labelling: 2, 4, 6

3) further options

with ATEX labelling II 2G Ex e IIC T3 Gb

SK 63*[1)]/*[2)] 3G *[3)] up to SK 200*[1)]/*[2)] 3G *[3)]

1) Power code: S, SA, SX, M, MA, MB, MX, L, LA, LB, LX, R, X, Y, A, W
- optionally supplemented with: H, P

2) Pole number labelling: 2, 4, 6

3) further options

with ATEX labelling II 3G Ex nA IIC T3 Gc

Version list

Title, Date	Order number	Comments
B 1091, January 2015	6051302 / 0215	-
B 1091, March 2016	6051302 / 1016	• General corrections • Structural adjustments to document
B 1091, December 2016	6051302 / 4816	• General corrections
B 1091, June 2017	6051302 / 2417	• Technical supplements
B 1091, August 2017	6051302 / 3517	• Technical supplements

Copyright notice

As an integral component of the device described here, this document must be provided to all users in a suitable form.
Any editing or amendment or other utilisation of the document is prohibited.

Publisher

Getriebebau NORD GmbH & Co. KG
Getriebebau-Nord-Straße 1 • 22941 Bargteheide, Germany • http://www.nord.com/
Fon +49 (0) 45 32 / 289-0 • Fax +49 (0) 45 32 / 289-2253

Member of the NORD DRIVESYSTEMS Group

Table of Contents

1 General 8
1.1 Safety and installation notes 9
1.1.1 Explanation of labels used 9
1.1.2 List of safety and installation notes 10
1.2 Field of use 11
1.3 Correct handling of electric motors 12
1.3.1 Transport, storage 12
1.3.2 Installation 13
1.3.3 Balancing, drive elements 13
1.3.4 Alignment 14
1.3.5 Output shafts 14
1.3.6 Electrical Connection 15
1.3.7 Operation with frequency inverter 16
1.3.8 Checking the insulation resistance 17
1.3.9 Commissioning 17
1.3.10 Disposal 18
2 Maintenance and servicing 19
2.1 Safety measures 19
2.2 Bearing replacement intervals 20
2.3 Maintenance intervals 21
2.4 General overhaul 21
3 ATEX Explosion hazard areas 22
3.1 Motors with increased ignition protection, type Ex e 22
3.1.1 Cable gland 23
3.1.2 Cable connections 23
3.1.3 Terminal box cover seals 24
3.1.4 Motor position – special features for IM V3, IM V6 24
3.1.5 Further operating conditions 25
3.1.6 Protective devices 25
3.1.7 Operation with frequency inverter 26
3.1.8 Repairs 27
3.1.9 Painting 27
3.1.10 Type plate for NORD Ex e motors according to EN 600079 28
3.1.11 Applied standards 28
3.2 Motors with ignition protection class Non Sparking Ex n 29
3.2.1 Cable gland 30
3.2.2 Cable connections 30
3.2.3 Terminal box cover seals 31
3.2.4 Motor position – special features for IM V3, IM V6 31
3.2.5 Further operating conditions 32
3.2.6 Protective devices 32
3.2.7 Operation with frequency inverter 32
3.2.8 Repairs 33
3.2.9 Painting 33
3.2.10 Type plate for NORD Ex n motors according to EN 600079 34
3.2.11 Applied standards 34
3.3 Motors for use in Zone 21 and Zone 22 according to EN 60079-0 and IEC 60079 35
3.3.1 Commissioning information / Field of application 36
3.3.2 Terminal box cover seals 37
3.3.3 Electrical Connection 37
3.3.4 Cable and wiring glands 38
3.3.5 Permissible ambient temperature range 39
3.3.6 Painting 39
3.3.7 IEC-B14 motors 39
3.3.8 Motor position – special features for IM V3, IM V6 39
3.3.9 Further operating conditions 40
3.3.10 Structure and method of use 40
3.3.11 Minimum cross section of bonding conductors 40
3.3.12 Maintenance 41
3.4 Options for motors for use in Zone 21 and Zone 22 42

3.4.1 Operation with frequency inverter 42
3.4.2 External fan 43
3.4.3 Second temperature sensor 2TF 44
3.4.4 Back stop 44
3.4.5 Brake 44
3.4.6 Overview of brake installation for NORD ATEX motors 45
3.4.7 NORD Ex motor type plate (Ex, tb, EX tc) according to EN 60079 for operation with a frequency inverter 46

4 Synchronous motors – special information 47
4.1 Type designation 47
4.2 Connection 47
4.3 Encoders 48
4.4 Commissioning 48
4.5 Maintenance and servicing 48

5 Replacement parts 49

6 Declarations of Conformity 50

1 General

These operating instructions must be read before NORD motors are transported, installed, commissioned, serviced or repaired. All persons who are involved in these tasks must observe these operating instructions. In order to prevent injury or damage, all of the safety information in these operating instructions must be strictly observed.

The information and instructions in the instructions, safety and commissioning information which is supplied, as well as all other instructions must be observed.

This is essential to prevent injury and damage.

The applicable national, local and plant-specific regulations and requirements and regulations must be observed.

Technical details may vary for special designs and constructions. In case of doubt, we urgently recommend that the manufacturer is contacted, giving details of the type designation and the motor number.

Qualified personnel are persons who due to their training, experience and instruction, and their knowledge of the relevant standards, accident prevention regulations and operating conditions are authorised to carry out the necessary activities.

This also includes knowledge of first aid measures and the local emergency services.

It is assumed that the work for transport, assembly, installation, commissioning, maintenance and repair will be performed by qualified staff.

In particular, the following must be observed:

- Technical data and information regarding permissible use, installation, connection, ambient and operating conditions, which are contained in the catalogue, the order documents and other documentation for the product.
- Local and plant-specific regulations and requirements
- Correct use of tools, lifting and transportation equipment
- Use of personal protective equipment

For reasons of clarity, the operating instructions do not contain detailed information about possible versions and therefore do not consider all possible cases of installation, operation or servicing.

Because of this, these operating instruction essentially only contain the information which is necessary for proper use by qualified personnel.

In order to prevent faults it is necessary that the prescribed service and inspection work is carried out by appropriately qualified personnel.

- For the operation on an inverter, the planning guideline B1091-1 forms a part of these operating instructions.
- The supplementary operating instructions must be observed if an external fan is present.
- For braking motors, the supplementary brake operating instructions must be observed..

If the operating instructions or the planning guide are lost for any reason, these documents must be obtained from NORD.

1.1 Safety and installation notes

The devices are operating materials intended for use in industrial high voltage systems, and are operated at voltages that could lead to severe injuries or death if they are touched.

The device and its accessories must only be used for the purpose which is intended by the manufacturer. Unauthorised modifications and the use of spare parts and additional equipment which has not been purchased from or recommended by the manufacturer of the device may cause fire, electric shock and injury.

All of the associated covers and protective devices must be used.

Installation and other work may only be carried out by qualified electricians with strict adherence to the operating instructions. Therefore keep these Operating Instructions at hand, together with all supplementary instructions for any options which are used, and give them to each user.

Local regulations for the installation of electrical equipment and accident prevention must be complied with.

1.1.1 Explanation of labels used

DANGER	Indicates an immediate danger, which may result in death or serious injury.
WARNING	Indicates a possibly dangerous situation, which may result in death or serious injury.
CAUTION	Indicates a possibly dangerous situation, which may result in slight or minor injuries.
NOTICE	Indicates a possibly harmful situation, which may cause damage to the product or the environment.
Note	Indicates hints for use and useful information.

1.1.2 List of safety and installation notes

DANGER! **Electric shock**

The motor is operated with a dangerous voltage. Touching certain conducting components (connection terminals and supply cables) will cause electric shock with possibly fatal consequences.

Even when the motor is at a standstill (e.g. due to the electronic block of a connected frequency inverter or a jammed drive unit) the connection terminals and supply cables may carry a dangerous voltage. A motor standstill is not identical to electrical isolation from the mains.

Even if the drive unit has been disconnected from the mains, a connected motor may rotate and possibly generate a dangerous voltage.

Installation and work must only be carried out when the motor is at a standstill and is **disconnected** (all phases disconnected from the mains).

Follow the **5 Safety Rules** (1. Switch off the power, 2. Secure against switching on, 3. Check for no voltage, 4. Earthing and short circuiting, 5. Cover or fence off neighbouring live components).

WARNING **Hazard due to heavy loads**

The large weight of the motor must be taken into account during any transportation or installation work.

Incorrect handling may cause the motor to fall or swing without control and therefore cause severe, and possibly fatal injuries due to impact, crushing and other physical injuries. In addition, severe damage to the motor and its surroundings are possible.

Therefore:

- Do not stand under suspended loads
- Only use the attachment points provided
- Check that lifting equipment and lashings have and adequate load capacity and are undamaged
- Avoid hectic movements
- Use personal protective equipment

WARNING **Injury due to movement**

Under certain conditions (e.g. switching on the power supply, releasing a holding brake) the motor may start to move. The machinery which it drives (press / chain hoist / roller / fan etc.) may then make an unexpected movement. This may cause various injuries, including to third parties.

Before switching on, secure the danger area by warning and removing all persons from the danger area.

WARNING **Hazard due to loose parts**

Care must be taken that there are no loose parts on the motor. Otherwise, these may cause injury during transportation and installation work, or when the motor in in operation.

Loose carrying or lifting eyes may cause the motor to fall during transportation.

Parallel keys on the motor shaft may be thrown out when the motor shaft rotates.

Fasten or remove loose parts and carrying or lifting eyes; secure or remove free parallel shaft keys on the motor shaft(s).

⚠ CAUTION **Danger of burns**

The surface of the motor may heat up to temperatures in excess of 70°C.

Touching the motor may cause local burns to the affected parts of the body (hands, fingers, etc.).

To prevent such injuries, allow sufficient time for cooling down before starting work - the surface temperature should be checked with suitable measuring equipment. In addition, keep sufficient distance from adjacent components during installation, or install protection against contact.

1.2 Field of use

Use of the motors:

The motors may only be used for their intended purpose (to drive machinery).

The motors are constructed with at least protection class IP55 (for the protection class: see rating plate). They may be installed in dusty or damp environments.

In principle the conditions of use and the ambient conditions determine the necessary protection class and any other additional measures. For outdoor installation and vertical versions, e.g. V1 or V5 with the shaft pointing downwards, Getriebebau NORD recommends the use of the double fan cover option [RDD].

Motors must be protected against intensive sunlight, e.g. by the use of a protective cover. The insulation is tropicalised.

Installation altitude: ≤ 1000 m

Ambient temperature: -20°C...+40°C

For standard motors an extended ambient temperature range from -20°C...**+60**°C is permissible.. In this case, the rated power must be reduced to **82**% of the value stated in the catalogue. If the maximum ambient temperature is between +**40**°C and +**60**°C, the power output should be inversely linearly interpolated between **100**% and **82**%.

The motor connection cables and the cable glands must be suitable for temperatures ≥ 90°C.

1.3 Correct handling of electric motors

All work must only be carried out with the power to the system switched off.

1.3.1 Transport, storage

WARNING **Danger of falling**

Incorrect handling during transport may cause the motor to fall or swing without control and therefore cause severe, and possibly fatal injuries due to impact, crushing and other physical injuries. In addition, severe damage to the motor and its surroundings are possible.

Therefore:

- Use all available carrying eyes on the motor during transport
- Do not attach any additional loads The lifting eyes are only designed for the weight of the motor
- Only use the intended carrying eyes or bolts for transporting attached machinery (e.g. gear unit attachments)
- Sets of machinery must not be lifted by suspension from the individual machines.

To prevent damage to the motor, the motor must always be used with suitable lifting equipment. The roller bearings should be replaced if the time from delivery to commissioning of the motor exceeds 4 years in good conditions (storage in dry, dust and vibration-free areas). This time is greatly reduced in case of unfavourable conditions. If necessary, unprotected machined surfaces (flange surfaces, shaft ends) must be treated with corrosion inhibitors. If necessary, the insulating resistance of the windings must be checked (🕮 1.3.8 "Checking the insulation resistance").

Changes in comparison with normal operation (higher current consumption, higher temperatures or vibrations, unusual noises or smells, triggering of monitoring devices, etc.) are indications that the function is impaired. To prevent injury and damage, the responsible maintenance personnel must be informed of these changes.

In case of doubt, switch off the motor as soon as the state of the plant permits.

1.3.2 Installation

- After installation, screwed-on lifting lugs must be tightened or removed.
- Smooth running: Precise alignment of the clutch and a well-balanced drive element (clutch, pulleys, fan, etc.) are prerequisites for smooth vibration-free running.
- Complete balancing of the motor and the drive elements may be necessary.
- The top section of the terminal box and the position of the terminal box can be rotated by 4 x 90 degrees.
- Even if not required, on IEC B14 motors **all four** fixing screws, must be screwed into the flanged bearing plate! The fixing screw threads must be inserted with a sealant, e.g. Loctite 242.

⚠ WARNING **Electric shock**

The **maximum** depth for screwing into the type plate is **2** x d. There is a danger that the motor windings may be damaged if longer screws are used. This creates a danger of potential transfer to the housing and danger of electric shock if touched.

- The motor must be inspected for damage before installation and commissioning. A damaged motor must not be commissioned.
- Rotating shaft ends and unused shaft ends must be protected against contact. Unused parallel shaft keys must be secured against being thrown out.
- The motor must be suitable for the installation location. (requirements prescribed by standards, ambient conditions, installation altitude)
- Motor surfaces may become very hot during operation. Suitable protective measures must be taken if there is a danger of contact or a hazard to the vicinity of the installation.

1.3.3 Balancing, drive elements

The fitting and removal of drive elements (clutch, pulley, gear wheel,...) must be performed with suitable equipment. As standard the rotors are balanced with half key balancing. **The appropriate form of balancing must be observed if drive elements are installed on the motor shaft. Drive elements must be balanced according to ISO 1940.**

The generally required measures for protection against touching the drive elements must be observed. If a motor is started without a drive element, the parallel key must be secured against being thrown out. This also applies for any second shaft end. Alternatively, the parallel shaft key must be removed.

1.3.4 Alignment

In particular with direct coupling, the motor shafts and the driven machine must be axially and radially aligned to each other. Incorrect alignment may result in damage to the bearings, excessive vibration and breakage of the shaft.

1.3.5 Output shafts

The maximum permissible axial (F_A) and radial forces (F_R) for the A side end of the motor shaft can be obtained from the table below. Getriebebau NORD should be consulted if the radial force (F_R) is applied at a distance which is greater than the length E/2.

Type	F_R [N]	F_A [N]
63	530	480
71	530	480
80	860	760
90	910	810
100	1300	1100
112	1950	1640
132	2790	2360
160	3500	3000
180 .X	3500	3000
180	5500	4000
200 .X	5500	4000
225	8000	5000

No axial (F_A) and radial forces (F_R) are permissible for the B side shaft end.

NOTICE! Attachments must not cause rubbing (danger of excessive temperatures and sparking) or impair the necessary flow of cooling air.

1.3.6 Electrical Connection

The connection cables must be passed through the cable glands in the terminal box. The terminal box must be sealed against dust and water. The mains voltage and frequency must conform to the data on the rating plate. ±5% voltage or ±2% frequency deviations are permissible without reduction of the power. The connection and configuration of the jumpers must be made according to the circuit diagram in the terminal box.
Please refer to the following table for the labelling of the auxiliary terminals

Auxiliary terminal designation		
Additional equipment	**Labelling of auxiliary terminals New: EN 60034-8**	**Comments**
Thermistor	TP1 – TP2 1TP1 – 1TP2 2TP1 – 2TP2 3TP1 – 3TP2 4TP1 – 4TP2	Switch-off Warning Winding 1 Switch-off Winding 1 Warning Winding 2 Switch-off Winding 2
Option: TF	5TP1 – 5TP2	Brake
Bi-metal temperature sensor Normally closed Option: TW	1TB1 – 1TB2 2TB1 – 2TB2 3TB1 – 3TB2 4TB1 – 4TB2	Warning Winding 1 Switch-off Winding 1 Warning Winding 2 Switch-off Winding 2
Bi-metal temperature sensor, normally open	1TM1 – 1TM2 2TM1 – 2TM2 3TM1 – 3TM2 4TM1 – 4TM2	Warning Winding 1 Switch-off Winding 1 Warning Winding 2 Switch-off Winding 2
PT100	1R1 – 1R2 2R1 – 2R2 3R1 – 3R2	Winding 1 (Phase U) Winding 1 (Phase V) Winding 1 (Phase W)
KTY Silicon temperature sensor	(+) 4R1 – 4R2 (-) (+) 5R1 – 5R2 (-)	Winding 1 Winding 2
Heating band Option: SH	1HE1 – 1HE2 2HE1 – 2HE2	
Capacitor Motor version: EAR/EHB/EST	1CA1 – 1CA2 2CA1 – 2CA2 3CA1 – 3CA2 4CA1 – 4CA2	with operating capacitor 1 with operating capacitor 2 with starting capacitor 1 with starting capacitor 2
Direct current brake Option: BRE...	BD1 – BD2	
Option: DBR...	Brake 1: BD1-BD2 Brake 2: BD3-BD4	

1.3.7 Operation with frequency inverter

Type SK 63 ./. – SK 225 ./. three phase asynchronous motors are qualified for operation with link circuit inverters according to DIN EN 60034-18-41 (2014).

Please also observe the operating instructions for the frequency inverter which is used.

The insulation system used by NORD consists of suitable varnished copper wire, phase insulation, homogeneous impregnation and groove lining as insulation against earth, and in the standard version is designed for the increased requirements for link circuit inverters.

The maximum permissible FI input voltage is 500 V +10%. Link circuit voltages in excess of 750 V DC are not permissible. When the motor is warm due to operation, the peak voltages due to the system, the inverter, the cable or the motor must not exceed the following values.

Permissible impulse voltages depending on voltage rise-time

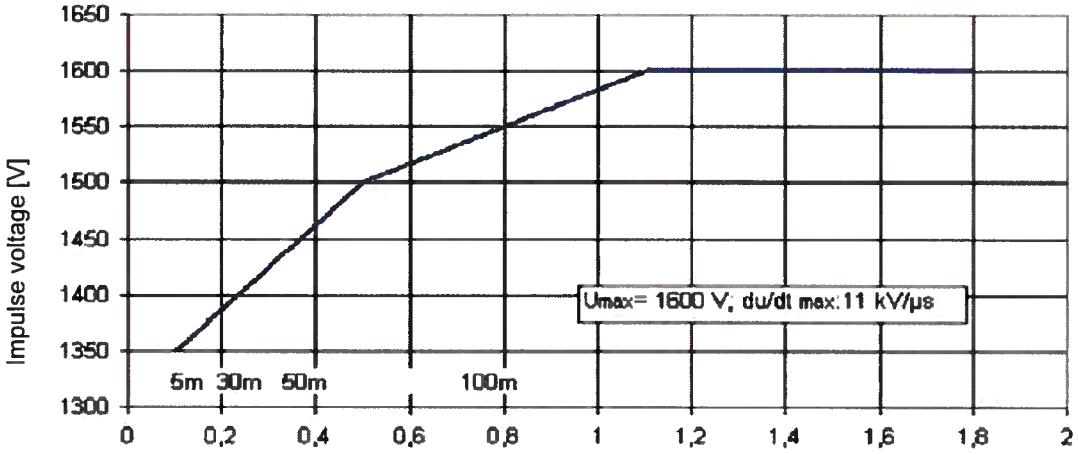

If the values are outside of the permissible range, du/dt or sine wave filters may be used (not the additional voltage drop).

The cable lengths shown in the diagram are for guidance only and may deviate according to the specific conditions.

For additional information for operation with a frequency inverter, especially with regard to information about the maximum speed, thermal design and possible torques, please refer to the current NORD motor catalogue M7000.

1.3.8 Checking the insulation resistance

Prior to initial commissioning of the motor after a long period of storage or standstill (approx. 6 months) the insulation resistance of the windings must be checked. During and immediately after the measurements, the terminals have voltages which can be dangerous, and must not be touched.

Insulation resistance

The insulation resistance of new, cleaned, repaired windings against the housing and against each other is > 200 MΩ.

Measurement

The insulation of the windings against the housing for operation voltages up to 400 V must be measured with 500 V DC. For operating voltages up to 725 V the measurement must be made with 1000 V DC. The temperature of the windings should be 25°C ± 15°C.

Testing

If the minimum insulation resistance of the winding against earth is less than 50 MΩ, this may be due to moisture. The windings must then be dried.

The insulation resistance may reduce after long periods of operation. As long as the measured value does not fall below the calculated value for the critical insulation resistance of < 50 MΩ, operation of the motor may continue. If the value is less than this, the cause must be established and if necessary the windings or parts of the windings must be repaired, cleaned or dried.

1.3.9 Commissioning

Information — **Electromagnetic compatibility**

NORD motors comply with the EU-Directive 2014/30/EU. Assembly or installation work must not cause impermissible interference. Immunity from interference must still exist.

Production of interference: In cases of large differences of torque (e.g. when driving a piston compressor) a non-sine wave motor current is induced, whose harmonics can cause an impermissible effect on the mains and therefore impermissible production of interference.

With supply by frequency inverters, various strengths of interference are produced according to the design of the frequency inverter (type, interference suppression, manufacturer). The EMC information of the inverter manufacturer must be observed. If a shielded motor supply cable is recommended, the shielding is most effective if a large area is electrically connected to the metal terminal box of the motor (with metal EMC cable gland). With motors with integrated sensors (e.g. thermistors) interference voltages due to the inverter may be produced in the sensor cables.

Interference immunity: For motors with integrated sensors (e.g. thermistors) the operator must ensure adequate immunity to interference by the selection of a suitable sensor cable (possibly with screening, with connection as for the motor supply cable) and evaluation device. The information and instructions in the operating instructions for the inverter and all other instructions must be observed before commissioning. After installation of the motor, it must be checked for correct functioning. In the case of brake motors, the correct function of the brake must also be checked.

1.3.10 Disposal

NOTICE	Environmental damage

Incorrect disposal of the product may cause damage to the environment.

- Ensure correct disposal
- Comply with current local regulations

Content: aluminium, iron, electronic components, copper

Please observe the additional documentation for the attachments

2 Maintenance and servicing

DANGER! **Electric shock**

The motor is operated with a dangerous voltage. Touching certain conducting components (connection terminals and supply cables) will cause electric shock with possibly fatal consequences.

Even when the motor is at a standstill (e.g. due to the electronic block of a connected frequency inverter or a jammed drive unit) the connection terminals and supply cables may carry a dangerous voltage. A motor standstill is not identical to electrical isolation from the mains.

Even if the drive unit has been disconnected from the mains, a connected motor may rotate and possibly generate a dangerous voltage.

Installation and work must only be carried out when the motor is at a standstill and is **disconnected** (all phases disconnected from the mains).

Follow the **5 Safety Rules** (1. Switch off the power, 2. Secure against switching on, 3. Check for no voltage, 4. Earthing and short circuiting, 5. Cover or fence off neighbouring live components).

WARNING **Injury due to movement**

Under certain conditions (e.g. switching on the power supply, releasing a holding brake) the motor may start to move. The machinery which it drives (press / chain hoist / roller / fan etc.) may then make an unexpected movement. This may cause various injuries, including to third parties.

Before switching on, secure the danger area by warning and removing all persons from the danger area.

2.1 Safety measures

Before starting any work on the motor or the device, but especially before opening the covers of active components, the motor must be isolated according to regulations. In addition to the main power circuits, any additional or auxiliary circuits must be taken into account.

The usual "5 Safety Rules" e.g. according to DIN VDE 0105 are:

- Disconnect
- Secure to prevent reactivation
- Check for no voltage on all poles
- Earth and short circuit
- Cover or cordon off adjacent live components

These measures may only be removed when the maintenance work is complete.

Motors must be properly inspected at regular intervals; current national standards and regulations must be complied with. In particular, special attention must be paid to any mechanical damage, free path of the cooling air, abnormal noises and correct electrical connection.

Only original parts may be used as spare parts with the exception of standardised, commercially available and equivalent parts.

Swapping parts between motors of the same type is not permissible.

Information **Condensation outlets**

If the motors are designed with closed condensation outlets, these must be opened occasionally in order to allow any accumulated condensation to drain off. Condensation outlets must always be located at the lowest point of the motor. During installation of the motor care must be taken that the condensation outlets point downwards and are closed. Open condensation outlets cause a reduction of the protection class.

2.2 Bearing replacement intervals

Under normal operating conditions, with horizontal installation of the motor, depending on the coolant temperature and the motor speed, the bearing replacement interval [h] for IEC motors is:

	25°C	40°C	60°C
up to 1,800 rpm	approx. 40,000 h	approx. 20,000 h	approx. 8,000 h
up to 3,600 rpm	approx. 20,000 h	approx. 10,000 h	approx. 4,000 h

Under special operating conditions, e.g. vertical motor installation, large stresses due to vibration and shock, or operation with frequent reversing, the operating hours stated above are significantly reduced.

2.3 Maintenance intervals

The motor must be checked weekly, or every 100 operating hours for unusual running noise and/or vibrations.

Please check the roller bearings at an interval of at least 10,000 h and replace them as required. In addition, the electric connections, cables and wires as well as the fan are firmly fastened and free from damage. Furthermore, the function of the insulation system must be checked.

Replace the shaft sealing rings every 10,000 hours.

The surface of the motor must not have any dirt deposits which could impair cooling.

A general overhaul of the motor must be carried out every 5 years.

2.4 General overhaul

For this the motor must be dismantled. The following work must be carried out:

- All components of the motor must be cleaned
- All components of the motor must be examined for damage
- All damaged components must be replaced
- All roller bearings must be replaced
- All seals and shaft sealing rings must be replaced

The general overhaul must be carried out by qualified personnel in a specialist workshop with appropriate equipment. We urgently recommend that the general overhaul is carried out by NORD Service.

If the drive unit is subjected to special operating conditions, the intervals stated above may be considerably reduced.

3 ATEX Explosion hazard areas

3.1 Motors with increased ignition protection, type Ex e

⚠ DANGER! **Explosion hazard**

All work must only be carried out with the machine at a standstill and the **power to the system switched off**.

Higher temperatures than the maximum permitted surface temperature of the housing may be present inside the motor. The motor must therefore never be opened in an explosive atmosphere!

Failure to comply with this may result in the ignition of an explosive atmosphere.

⚠ WARNING **Explosion hazard**

Excessively heavy dust deposits must be avoided, as these impair the cooling of the device!

Impairment or obstruction of the flow of cooling air, for example due to partial or large area coverage of the fan cover or the entry of foreign bodies fall into the fan must be avoided in order to ensure adequate cooling.

Only cable glands and reducers which are approved for use in explosion hazard areas may be used.

All cable glands which are not used must be closed with blind screw plugs which are approved for potentially explosive areas.

Only the original seals may be used.

Failure to comply increases the risk of ignition of an explosive atmosphere.

The following supplementary or special information applies for these motors.

The motors are suitable for use in Zone 1 and correspond to Device Group II, Category 2G and may be used at an ambient temperature from -20°C to +40°C

Type supplement:	**2G**	E.g.:	80 L/4 2G TF
Labelling:	CE 0102		II 2G Ex e IIC T3 Gb

If the motor is attached to a gear unit, the EX labelling of the gear unit must also be observed!

Explosive gas mixtures or dust concentrations may cause severe or fatal injuries in combination with hot, electrically live and moving components of electrical machines.

The increased danger in explosion hazard areas requires especially strict observance of the general safety and commissioning information. The person responsible must be qualified according to the national and local regulations.

Explosion protected electrical machines with ignition protection class Ex e correspond to the standard series EN 60034 (VDE 0530), as well as EN 60079-0:2014 and EN 60079-7:2007. The degree of the explosion hazard determines the zone categorisation. DIN EN 60079, Part 10 provides information with regard to this. The operator is responsible for the categorisation of the zones. The use of motors which are not certified for explosion hazard areas in explosion hazard areas is prohibited.

3.1.1 Cable gland

The cable glands must be approved for explosion hazard areas. Unused openings must be closed with approved blind plugs. When connecting the installation cables, the connections to the motor terminals and to the earth lead must use U shaped bent cables placed under the relevant terminals so that the clamping bars and the terminal bolts are equally loaded and are not deformed in any way. Alternatively, the connections may be made with a cable lug. If increased thermal requirements are made for the cables, these must be obtained from the information plate on the rotor.

For Sizes 63 to 132 an insulated cable lug must be used, if this is used to connect the earth lead in the terminal box.

The nuts of the terminal board bolts must be tightened according to the following table.

Tightening torques for terminal board connections				
Thread diameter	M4	M5	M6	M8
Tightening torque (Nm)	1.2	2.0	3.0	6.0

Use of aluminium connecting wires is not permitted.

3.1.2 Cable connections

All motors with ignition protection class Ex e are delivered with a certified cable gland.

If the supplied cable glands are used, cables with a circular cross-section must be used. The clamping nuts of the cable gland must be tightened to the torque specified in the following table.

Clamping nut tightening torques				
Cable gland	M20x1.5	M25x1.5	M32x1.5	M40x1.5
Tightening torque (Nm)	5.0	5.0	10.0	13.5

Use of reduction adapters according to Directive 94/9 EEC or 2014/34/EU and/or cable glands with ignition protection class Ex e is permissible. For this, a minimum certified temperature of 80°C is necessary.

When connecting, care must be taken that the permissible air gaps of at least 10 mm and the permissible leakage tracks of at least12 mm between the electrically live components and components with the same potential as the housing, or between live components are maintained.

Check that the terminal nuts and the screw for the earth lead are tight before closing the terminal box. The terminal box seals and the seals of the cable glands must be correctly seated and must not be damaged.

3.1.3 Terminal box cover seals

The terminal box cover gasket is captively mounted on the terminal box cover. Please only use an original seal when replacing the seal.

If the terminal box is opened during installation, maintenance, repair, troubleshooting or overhaul, the terminal box cover must be re-fitted after the work is complete. There must be no dirt on the surface of the seal or the sealing surface of the terminal box frame.

The screws for the terminal box cover must be tightened with a torque according to the list below.

Tightening torques for terminal box cover screws				
Thread diameter	M4	M5	M6	M8
Tightening torque (Nm)	0.8 - 1.2	1.2 - 1.8	1.5 - 2.5	3.0 – 5.0

3.1.4 Motor position – special features for IM V3, IM V6

If the end of the shaft faces upwards, e.g. version IMV3, IMV6, a cover must be provided by the operator / installer, which prevents foreign bodies from falling into the fan cover of the motor (see DIN EN 60079-0). This must not obstruct the fan from cooling the motor. If the end of the shaft faces downwards (AS), e.g. versions IMV1, IMV5, the motors are normally provided with a protective cover on the fan cover. A hand wheel on the second end of the shaft is not permitted.

3.1.5 Further operating conditions

The motors are designed for continuous operation and normal, non recurring starting, in which no significant starting heat occurs.

Range A in EN 60034-1 (VDE 0530 Part 1) - Voltage ± 5%, Frequency ± 2%, curve form, mains symmetry - must be complied with so that the development of heat remains within the permissible limits. Any major deviations from the rated values can cause an impermissible increase in the development of heat in the motor.

The motor temperature class stated on the type plate must at least conform to the temperature class of any combustible gas that may occur.

3.1.6 Protective devices

Each machine must be protected against excess heating by means of a current-dependent delayed protection switch whose function is tested by a designated facility, with phase failure protection according to VDE 0660 or an equivalent device. Protective devices must be adjusted to the rated current. For windings with a delta circuit, the triggers are connected in series with the windings and adjusted to 0.58x the rated current. If this circuit is not possible, additional protective measures are necessary (e.g. thermal protection of the machine).

In case of a jammed rotor, the protective device must switch of within the specified t_E-time for the relevant temperature class.

Electrical machines with heavy starting (start-up time > 1.7 x t_E-time) must be protected by means of starting monitoring according to the details in the EEC type test certificate.

Thermal protection of the machine by means of direct temperature monitoring of the windings with a thermistor temperature sensor is permissible, if this is certified and stated on the rating plate.

Do not apply voltages greater than 30 V to the thermistor temperature sensor.

If the only protection is a PTC thermistor temperature sensor, a performance-tested, PTC tripping device certified by a designated body must be used. The PTC triggering device must be equipped with the following protection class label:

II (2) G

Information for motor protection

Type plate example: **No** sole means of protection via temperature sensor	Type plate example: Sole protection via temperature sensor
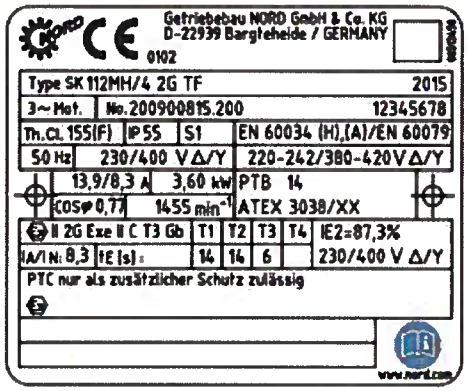	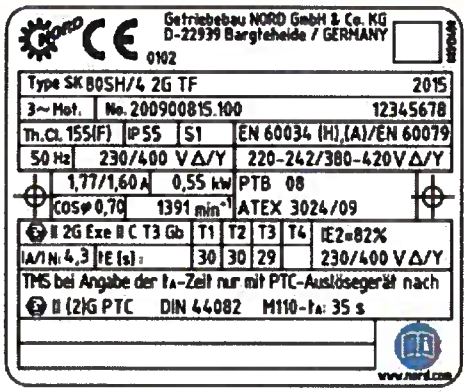
Notice! Danger! If the time tA is *not* stated on the type plate, the thermistor is *not* permissible as the sole means of protection **It is essential that the motor is protected with a motor protection relay which has been approved by a testing facility.** The motor protection relay must be approved for the ignition protection class which is stated on the motor.	A thermistor is permissible as the sole

3.1.7 Operation with frequency inverter

Operation with a frequency inverter must be explicitly certified. The separate manufacturer's information must be observed. The EMC Directive must be complied with.

3.1.8 Repairs

Repairs must be carried out by Getriebebau NORD or by an officially recognised expert. The work must be indicated with an additional repair plate. With the exception of standard, commercially available and equivalent components, only original spare parts (see spare parts list) may be used. The particularly applies for seals and connecting components.

For motors with closed condensation outlets, the threads of the closing screws must be coated with Loctite 242 or Loxeal 82-21 after the condensation has been drained. The closing screws must be re-inserted immediately. The electrical connections must be checked at regular intervals.

Check that the connection terminals, and the electrical bonding terminal are firmly fastened. Check that the cable gland and the terminal box gasket are in good condition

All work on electrical machinery must be performed when the machine is at a standstill and with all poles disconnected from the mains.

The motor must be removed for any measurement of the insulation resistance. The measurement must not be performed in the explosion hazard area. As soon as measurement has been completed, discharge the connecting terminals again immediately by shorting them in order to prevent any spark discharges occurring in the explosive area.

DANGER! **Explosion hazard**

Insulation measurements may cause sparks and therefore ignition of an explosive atmosphere.

- Only perform insulation measurements outside of an explosive atmosphere.
- Discharge the connection terminals by short circuiting them after the measurement and before returning to an explosive atmosphere.

3.1.9 Painting

Motors are provided with suitable painting ex-works. Subsequent painting may only be carried out after consultation with Getriebebau NORD or a workshop which is approved for the repair of explosion protected motors. Compliance with the valid standards and regulations is mandatory.

3.1.10 Type plate for NORD Ex e motors according to EN 600079

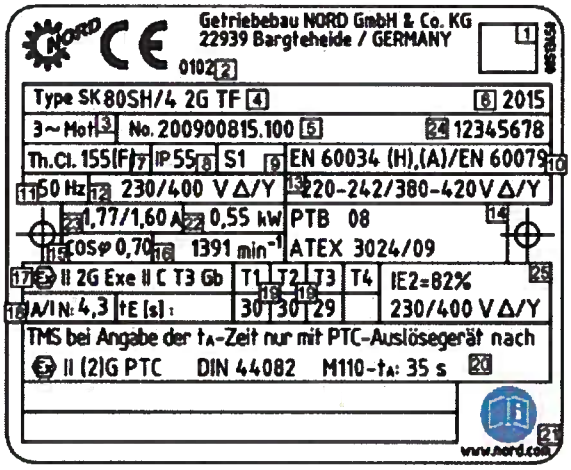

1	Data matrix code
2	Identification number of designated body
3	Number of phases
4	Type designation
5	Order number / motor number
6	Year of manufacture:
7	Thermal class of the insulation system
8	IP protection class
9	Operating mode
10	Standard specifications
11	Nominal frequency
12	Nominal voltage
13	Permissible voltage range
14	EEC type test certificate number
15	Power factor
16	Speed
17	Explosion protection marking
18	Starting current / nominal current
19	tE times
20	Note: TMS with specification of tA time only with PTC triggering device in accordance with II (2)G PTC DIN 44082
21	Notice! Pay attention to operating instructions B1091
22	Rated power (mechanical power delivered to shaft)
23	Nominal current
24	Individual serial number
25	Efficiency

Before commissioning, the type plate must be compared with the requirements of the aforementioned declaration, which result from the local regulations and operating conditions.

Explanation of standard specification in rating plate

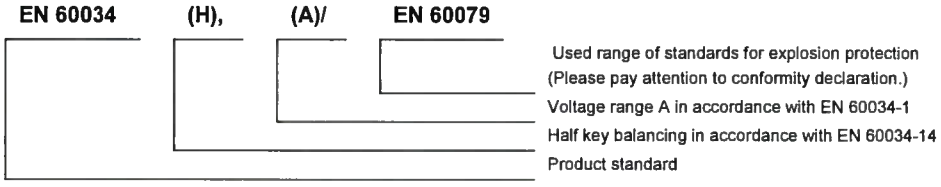

3.1.11 Applied standards

EN Standard	Issue	IEC Standard	Issue
EN 60034-7	2001-12	IEC 60034-7	2001-02
EN 60034-6	1996-08	IEC 60034-6	1991-10
EN 60079-0	2014-06	IEC 60079-0	2011, modified; cor.:2012; cor.:2013
EN 60079-7	2007-08	IEC 60079-7	2006
EN 60529	2014-09	IEC 60529	1989 +A1:1999 + A2:2013

3.2 Motors with ignition protection class Non Sparking Ex n

DANGER! **Explosion hazard**

All work must only be carried out with the machine at a standstill and the **power to the system switched off**.

Higher temperatures than the maximum permitted surface temperature of the housing may be present inside the motor. The motor must therefore never be opened in an explosive atmosphere!

Failure to comply with this may result in the ignition of an explosive atmosphere.

WARNING **Explosion hazard**

Excessively heavy dust deposits must be avoided, as these impair the cooling of the device!

Impairment or obstruction of the flow of cooling air, for example due to partial or large area coverage of the fan cover or the entry of foreign bodies fall into the fan must be avoided in order to ensure adequate cooling.

Only cable glands and reducers which are approved for use in explosion hazard areas may be used.

All cable glands which are not used must be closed with blind screw plugs which are approved for potentially explosive areas.

Only the original seals may be used.

Failure to comply increases the risk of ignition of an explosive atmosphere.

The following supplementary or special information applies for these motors.

The motors are suitable for use in Zone 2 and correspond to Device Group II, Category 3G and may be used at an ambient temperature from -20°C to +40°C.

Type supplement:	**3G**	E.g.:	80 L/4 3G TF	
Labelling:	CE		II 3G Ex nA IIC T3 Gc	With indication of the temperature class

If the motor is attached to a gear unit, the EX labelling of the gear unit must also be observed!

Explosive gas mixtures or dust concentrations may cause severe or fatal injuries in combination with hot, electrically live and moving components of electrical machines.

The increased danger in explosion hazard areas requires especially strict observance of the general safety and commissioning information. The persons responsible must be qualified according to the national and local regulations.

Explosion protected electrical machines with ignition protection class Ex n correspond to the standard series EN 60034 (VDE 0530), as well as EN 60079-0:2014 and EN 60079-15:2010. The degree of the explosion hazard determines the zone categorisation. DIN EN 60079, Part 10 provides information with regard to this. The operator is responsible for the categorisation of the zones. The use of motors which are not certified for explosion hazard areas in explosion hazard areas is prohibited.

3.2.1 Cable gland

The cable glands must be approved for explosion hazard areas. Unused openings must be closed with approved blind plugs. When connecting the installation cables, the connections to the motor terminals and to the earth lead must use U shaped bent cables placed under the relevant terminals so that the clamping bars and the terminal bolts are equally loaded and are not deformed in any way. Alternatively, the connections may be made with a cable lug. If increased thermal requirements are made for the cables, these must be obtained from the information plate on the rotor.

For Sizes 63 to 132 an insulated cable lug must be used, if this is used to connect the earth lead in the terminal box.

The nuts of the terminal board bolts must be tightened according to the following table.

Tightening torques for terminal board connections				
Thread diameter	M4	M5	M6	M8
Tightening torque (Nm)	1.2	2.0	3.0	6.0

Use of aluminium connecting wires is not permitted.

3.2.2 Cable connections

If the supplied cable glands are used, cables with a circular cross-section must be used. The clamping nuts of the cable gland must be tightened to the torque specified in the following table.

Clamping nut tightening torques				
Cable gland	M20x1.5	M25x1.5	M32x1.5	M40x1.5
Tightening torque (Nm)	5.0	5.0	10.0	13.5

Use of reduction adapters according to Directive 94/9 EEC or 2014/34/EU and/or cable glands approved according to Directive 94/9 EEC with ignition protection class Ex n is permissible. For this, a minimum certified temperature of 80°C is necessary.

When connecting, care must be taken that the permissible air gaps of at least 10 mm and the permissible leakage tracks of at least12 mm between the electrically live components and components with the same potential as the housing, or between live components are maintained.

Check that the terminal nuts and the screw for the earth lead are tight before closing the terminal box. The terminal box seals and the seals of the cable glands must be correctly seated and must not be damaged.

3.2.3 Terminal box cover seals

The terminal box cover gasket is captively mounted on the terminal box cover. Please only use an original seal when replacing the seal.

If the terminal box is opened during installation, maintenance, repair, troubleshooting or overhaul, the terminal box cover must be re-fitted after the work is complete. There must be no dirt on the surface of the seal or the sealing surface of the terminal box frame.

The screws for the terminal box cover must be tightened with a torque according to the list below.

Tightening torques for terminal box cover screws				
Thread diameter	M4	M5	M6	M8
Tightening torque (Nm)	0.8 - 1.2	1.2 - 1.8	1.5 - 2.5	3.0 – 5.0

3.2.4 Motor position – special features for IM V3, IM V6

If the end of the shaft faces upwards, e.g. version IMV3, IMV6, a cover must be provided by the operator / installer, which prevents foreign bodies from falling into the fan cover of the motor (see DIN EN 60079-0). This must not obstruct the fan from cooling the motor. If the end of the shaft faces downwards (AS), e.g. versions IMV1, IMV5, the motors are normally provided with a protective cover on the fan cover. A hand wheel on the second end of the shaft is not permitted.

3.2.5 Further operating conditions

The motors are designed for continuous operation and normal, non recurring starting, in which no significant starting heat occurs.

Range A in EN 60034-1 (VDE 0530 Part 1) - Voltage ± 5%, Frequency ± 2%, curve form, mains symmetry - must be complied with so that the development of heat remains within the permissible limits. Any major deviations from the rated values can cause an impermissible increase in the development of heat in the motor.

The motor temperature class stated on the type plate must at least conform to the temperature class of any combustible gas that may occur.

3.2.6 Protective devices

Protective devices must be adjusted to the rated current. For windings with a delta circuit, the triggers are connected in series with the windings and adjusted to 0.58x the rated current.

Alternatively, the motors can be protected with thermistor temperature sensors. Protection with thermistor temperature sensors is mandatory for inverter operation.

Do not apply voltages greater than 30 V to the thermistor temperature sensor.

We recommend the use of a functionally tested, certified PTC trigger device for protection with a thermistor temperature sensor.

The following standards must be observed for the installation of electrical systems in explosion hazard areas in Germany: DIN EN 60079-14 (VDE 0165-1), the Technical Rules for Operating Safety (TRBS), the Operating Safety Regulations (BetrSichV), the Hazardous Substances Regulation (GefStoffV) as well as the Explosion Protection Regulations (Ex-RL). Other regulations must be observed if applicable. The applicable national regulation must be observed outside of Germany.

3.2.7 Operation with frequency inverter

The design of the insulation of NORD ATEX motors with ignition protection class Ex nA is suitable for operation with a frequency inverter. Due to the variable speed range, temperature monitoring by means of thermistors or temperature sensors is necessary. For safe planning and use, the planning guide for the operating and installation instructions B1091-1 must be observed. The planning guide provides information regarding the necessary conditions for inverter operation and the approved speed ranges. Option Z (additional high inertia cast iron fan) is not permitted for inverter operation.

If the frequency inverter is not approved for operation within the explosive atmosphere, the frequency inverter must be installed outside of the explosive atmosphere.

3.2.8 Repairs

Repairs must be carried out by Getriebebau NORD or by an officially recognised expert. The work must be indicated with an additional repair plate. With the exception of standard, commercially available and equivalent components, only original spare parts (see spare parts list) may be used. The particularly applies for seals and connecting components.

For motors with closed condensation outlets, the threads of the closing screws must be coated with Loctite 242 or Loxeal 82-21 after the condensation has been drained. The closing screws must be re-inserted immediately. The electrical connections must be checked at regular intervals.

Check that the connection terminals, and the electrical bonding terminal are firmly fastened. Check that the cable gland and the terminal box gasket are in good condition

All work on electrical machinery must be performed when the machine is at a standstill and with all poles disconnected from the mains.

The motor must be removed for any measurement of the insulation resistance. The measurement must not be performed in the explosion hazard area. As soon as measurement has been completed, discharge the connecting terminals again immediately by shorting them in order to prevent any spark discharges occurring in the explosive area.

⚠ DANGER! **Explosion hazard**

Insulation measurements may cause sparks and therefore ignition of an explosive atmosphere.

- Only perform insulation measurements outside of an explosive atmosphere.
- Discharge the connection terminals by short circuiting them after the measurement and before returning to an explosive atmosphere.

3.2.9 Painting

Motors are provided with suitable painting ex-works. Subsequent painting may only be carried out after consultation with Getriebebau NORD or a workshop which is approved for the repair of explosion protected motors. Compliance with the valid standards and regulations is mandatory.

3.2.10 Type plate for NORD Ex n motors according to EN 600079

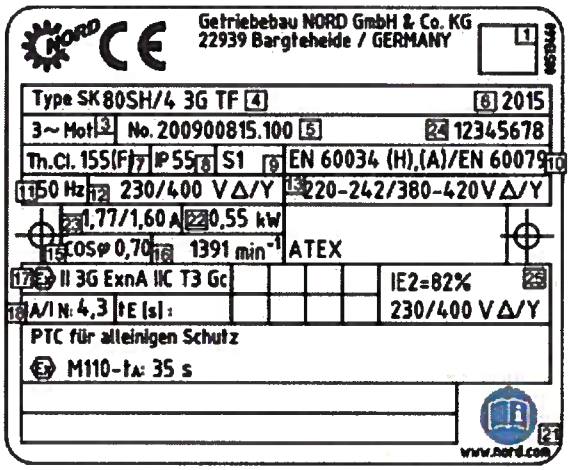

1	Data matrix code
3	Number of phases
4	Type designation
5	Order number / motor number
6	Year of manufacture:
7	Thermal class of the insulation system
8	IP protection class
9	Operating mode
10	Standard specifications
11	Nominal frequency
12	Nominal voltage
13	Permissible voltage range
15	Power factor
16	Speed
17	Explosion protection marking
18	Starting current / nominal current
21	Notice! Pay attention to operating instructions B1091
22	Rated power (mechanical power delivered to shaft)
23	Nominal current
24	Individual serial number
25	Efficiency

Before commissioning, the type plate must be compared with the requirements of the aforementioned declaration, which result from the local regulations and operating conditions.

Explanation of standard specification in rating plate

EN 60034 **(H),** **(A)/** **EN 60079**

Used range of standards for explosion protection
(Please pay attention to conformity declaration.)
Voltage range A in accordance with EN 60034-1
Half key balancing in accordance with EN 60034-14
Product standard

3.2.11 Applied standards

EN Standard	Issue	IEC Standard	Issue
EN 60034-7	2001-12	IEC 60034-7	2001-02
EN 60034-6	1996-08	IEC 60034-6	1991-10
EN 60079-0	2014-06	IEC 60079-0	2011, modified; cor.:2012; cor.:2013
EN 60079-15	2010	IEC 60079-15	2010
EN 60529	2014-09	IEC 60529	1989 +A1:1999 + A2:2013

3.3 Motors for use in Zone 21 and Zone 22 according to EN 60079-0 and IEC 60079

DANGER! **Explosion hazard**

All work must only be carried out with the machine at a standstill and the **power to the system switched off**.

Higher temperatures than the maximum permitted surface temperature of the housing may be present inside the motor. The motor must therefore never be opened in an explosive atmosphere!

Failure to comply with this may result in the ignition of an explosive atmosphere.

WARNING **Explosion hazard**

Excessively heavy dust deposits must be avoided, as these impair the cooling of the device!

Impairment or obstruction of the flow of cooling air, for example due to partial or large area coverage of the fan cover or the entry of foreign bodies fall into the fan must be avoided in order to ensure adequate cooling.

Only cable glands and reducers which are approved for use in explosion hazard areas may be used.

All cable glands which are not used must be closed with blind screw plugs which are approved for potentially explosive areas.

Only the original seals may be used.

Failure to comply increases the risk of ignition of an explosive atmosphere.

The following supplementary or special information applies for these motors.

Motors which comply with EN 60079 and IEC 60079 are suitable according to their labelling for use in Zone 21 or Zone 22 - non-conductive dust.

Type supplement:					
according to EN 60079	**Zone 21**	**2D**	e. g.:	80 L/4 2D TF	
	Zone 22	**3D**	e. g.:	80 L/4 3D TF	
according to IEC 60079	**Zone 21**	**EPL Db**	e. g.:	80 L/4 IDB TF	
	Zone 22	**EPL Dc**	e. g.:	80 L/4 IDC TF	
Labelling:					
according to IEC 60079 and 2014/34 EU (94/9 EC old)	CE 0102			II 2D Ex tb IIIC T125°C Db	for category 2 (Zone 21)[1]
	CE			II 3D Ex tc IIIB T125°C Dc	for category 3 (Zone 22 – non-conducting dust)[1]
according to IEC 60079				EX tb IIIC T125°C Db	for category 2 [1]
				Ex tc IIIB T125°C Dc	for category 3 (Zone 22 – non-conducting dust)[1]

1) The details of the surface temperature may deviate from 125 °C and may be obtained from the type plate.

If the motor is attached to a gear unit, the EX labelling of the gear unit must also be observed!

DANGER **Explosion hazard**

The increased danger in areas with inflammable dust demands the strict observation of the general safety and commissioning information. Explosive concentrations of dust may cause explosions if ignited by hot or sparking objects. Such explosions may cause serious or fatal injuries to persons or severe material damage.

The persons responsible must be qualified according to the national and local regulations.

Impact test

Special condition:

According to 26.4.2 of EN 60079-0:2009 and IEC 60079-0:2007 motors with an X labelling for Category 2D and 3D are subjected to an impact test with 4J. If higher impacts on the motor are possible, it must be provided with additional mechanical protection.

3.3.1 Commissioning information / Field of application

If the motors are required for use with frequency inverters, this must be stated in the order. The supplementary operating instructions B1091-1 must be observed. The motors must be protected against overheating with suitable monitoring equipment! The thickness of dust deposits must not exceed 5 mm! The motors are designed for the voltage and frequency range B of EN 60034 Part 1.

Exception: Size 132MA/4 2D, 132MA/4 3D, 132LH/4 2D, 132LH/4 3D motors comply with the voltage and frequency range A.

Motors for use in Zone 21 and Zone 22, with labelling TF may be thermally monitored via the built-in PTC in combination with a suitable triggering device as the sole protection.

Electrical equipment for use in areas with inflammable dust comply with the standards DIN EN 60079-0, IEC 60079-0, EN 60079-31, IEC 60079-31, as well as DIN EN 60034 and IEC 60034.

The valid version of the standard can be obtained from the EC Declaration of Conformity or the IECEx CoC. The degree of the explosion hazard determines the zone categorisation. The operator / employer is responsible for the assignment of zones (in Europe: RL 1999/92/EC).

If the certification is supplemented with an "X" the special conditions in the EC prototype certification, the IECEX CoC and/or the relevant documentation must be observed. The use of standard motors which are not certified for explosion hazard areas in explosion hazard areas is prohibited.

3.3.2 Terminal box cover seals

The terminal box cover gasket is captively mounted on the terminal box cover. Please only use an original seal when replacing the seal.

If the terminal box is opened during installation, maintenance, repair, troubleshooting or overhaul, the terminal box cover must be re-fitted after the work is complete. There must be no dirt on the surface of the seal or the sealing surface of the terminal box frame.

The screws for the terminal box cover must be tightened with a torque according to the list below.

	Tightening torques for terminal box cover screws				
	Thread diameter	M4	M5	M6	M8
	Tightening torque (Nm)	0.8 - 1.2	1.2 - 1.8	1.5 - 2.5	3.0 – 5.0

3.3.3 Electrical Connection

The electrical connections of the terminal board are protected against twisting. The voltage supply to the terminal board must be made by means of suitable ring terminals. The ring terminals are installed between the two brass washers below the lock washer. The nuts must be tightened with a torque according to the table below. The contact pressure is permanently maintained by means of the specified torque and the lock washer. In addition, twisting of the ring terminals of the voltage supply is prevented. The connection elements are corrosion-proof.

	Tightening torques for terminal board connections				
	Thread diameter	M4	M5	M6	M8
	Tightening torque (Nm)	0.8 - 1.2	1.8 - 2.5	2.7 - 4.0	5.5 - 8.0

Exploded diagram of electrical connection

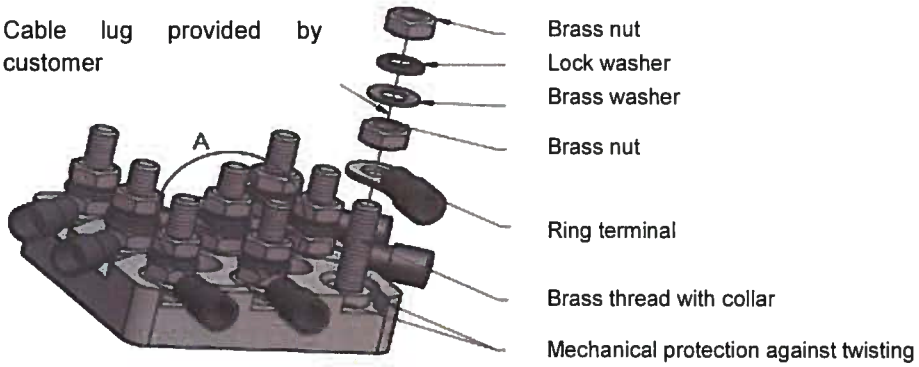

3.3.4 Cable and wiring glands

For Zone 21, the cable glands must be approved for Ex areas (minimum protection class IP 66) and must be secured against accidental loosening. Unused apertures must be sealed with authorised plugs (minimum protection class IP 66).

For Zone 22, the cable glands which are implemented according to EN 60079-0 and IEC 60079-0 must as a minimum correspond to the protection type specified on the type plate. Unused openings must be closed with plugs, which as a minimum correspond to the protection class of the motor and the requirements of EN 60079-0 and IEC 60079-0. The cable glands and blank plugs must be suitable for a temperature of at least 80 °C.

The motor must not be opened under hazardous atmospheres to connect the electrical cables or for any other work. The voltage must always be switched off and secured against being switched on again before opening the motor!

The motors are equipped with cable glands according to the following overview.

Assignment of Cable Glands to Motor Size

	Cable glands for standard motors							Cable glands for brake motors					
Type	Number	Thread	Number	Thread	Number	Thread		Number	Thread	Number	Thread	Number	Thread
63	2	M20x1.5						4	M20x1.5	2	M12x1.5		
71	2	M20x1.5						4	M20x1.5	2	M12x1.5		
80	2	M25x1.5						4	M25x1.5	2	M12x1.5		
90	2	M25x1.5						4	M25x1.5	2	M12x1.5		
100	2	M32x1.5						4	M32x1.5	2	M12x1.5		
112	2	M32x1.5						4	M32x1.5	2	M12x1.5		
132	2	M32x1.5						4	M32x1.5	2	M12x1.5	2	M16x1.5
160/ 180/..X	2	M40x1.5	2	M12x1.5	2	M16x1.5		2	M40x1.5	2	M12x1.5	2	M16x1.5
180/ 200/..X	2	M40x1.5	2	M12x1.5	2	M16x1.5		2	M40x1.5	2	M12x1.5	2	M16x1.5
225	2	M50x1.5	2	M12x1.5	2	M16x1.5		2	M50x1.5	2	M12x1.5	2	M16x1.5
250 WP	2	M63x1.5	2	M12x1.5	2	M16x1.5		2	M63x1.5	2	M12x1.5	2	M16x1.5

If the motor is supplied with a certified cable gland, the clamping nuts of the cable gland must be tightened to the torque specified in the following table.

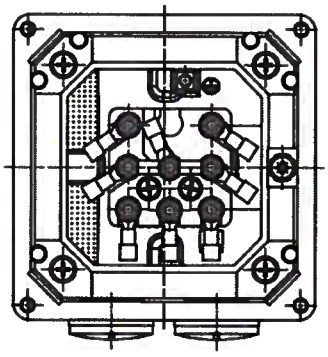

Clamping nut tightening torques						
Cable gland	M20x1.5	M25x1.5	M32x1.5	M40x1.5	M50x1.5	M63x1.5
Tightening torque (Nm)	5.0	5.0	10.0	13.5	20.0	20.0

3.3.5 Permissible ambient temperature range

For all motors, the permissible ambient temperature range is -20 °C...+40 °C. For motors for operation in Zones 21 and 22, an extended ambient temperature range from -20 °C...+**60** °C is permissible. In this case, the rated power must be reduced to **72%** of the value stated in the catalogue.

If the maximum ambient temperature is between +40 °C and +**60** °C, the power output should be inversely linearly interpolated between **100%** and **72%**. In this case thermal protection of the motor by means of a thermistor sensor is essential. The motor connection cables and the cable glands must be suitable for temperatures of at least 80 °C.

The extended ambient temperature range does not apply for optional conversions such as a brake and/or external fan. Contact the manufacturer in case of doubt with regard to permissibility!

3.3.6 Painting

Motors are provided with suitable painting ex-works. Subsequent painting may only be carried out after consultation with Getriebebau NORD or a workshop which is approved for the repair of explosion protected motors. Compliance with the valid standards and regulations is mandatory.

3.3.7 IEC-B14 motors

Please comply with the information in Section 1.3.2. Otherwise, explosion protection is not ensured.

3.3.8 Motor position – special features for IM V3, IM V6

If the end of the shaft faces upwards, e.g. version IMV3, IMV6, a cover must be provided by the operator / installer, which prevents foreign bodies from falling into the fan cover of the motor (see DIN EN 60079-0). This must not obstruct the fan from cooling the motor. If the end of the shaft faces downwards (AS), e.g. versions IMV1, IMV5, the motors are normally provided with a protective cover on the fan cover. A hand wheel on the second end of the shaft is not permitted.

3.3.9 Further operating conditions

Unless otherwise specified for operating modes and tolerances in the test certificate, the power rating plate or in IECEx CoC, electrical machinery is designed for continuous operation and normal infrequent start-ups where insignificant start-up heating occurs. The motors may only be used for the type of operation stated on the name plate.

The installation instructions must be strictly observed.

3.3.10 Structure and method of use

The motors are self-cooling. Shaft sealing rings are fitted both on the output side (DS) and on the ventilation side (VS). Motors for Zone 21 and Zone 22 have metal fans. Motors with brakes for Zone 22 (Category 3D, non-conducting dust) have a special plastic fan. The motors have protection class IP55, optionally protection class IP 66 (Zone 22 . non-conducting dust, EPL Dc) or IP 66 (Zone 21, EPL, Db). Under normal operating conditions, the surface temperature does not exceed the surface temperature stated on the name plate.

3.3.11 Minimum cross section of bonding conductors

Cross section of the phase conductor of the installation S [mm²]	Minimum cross section of the associated protective conductor S_P [mm²]
$S \leq 16$	S
$16 < S \leq 35$	16
$S > 35$	0.5 S

3.3.12 Maintenance

The voltage must always be switched off and secured against being switched on again before opening the motor!

Notice! Higher temperatures than the maximum permitted surface temperature of the housing may be present inside the motor. The motor must therefore never be opened in hazardous dust atmospheres! The motors must be checked and tested regularly for functional safety! The applicable national standards and regulations must be complied with!

Impermissibly thick dust deposits > 5 mm must not be allowed to build up! If functional safety cannot be ensured, the motor may not be operated! When the ball bearings are replaced, the rotary shaft seals must also be replaced. FKM rotary shaft seals as specified by Getriebebau NORD must be used. Ensure that they are fitted correctly! The rotary shaft seals must be lubricated on the external rings and on the seal lips. If an explosion protected gear is flanged dust-tight to the motor, an NBR rotary shaft seal can be used on the drive side of the motor if the gear oil temperature does not exceed 85°C. Only original parts may be used as spare parts with the exception of standardised, commercially available and equivalent parts. This particularly applies to seals and connection components. Parts for terminal boxes or spare parts for external grounding must be ordered as per the spare parts list in the operating instructions.

The functionality of seals, rotary shaft seals and cable glands must be regularly checked!

Maintaining dust protection for the motors is of paramount importance for explosion protection. Maintenance must be carried out by qualified personnel in a specialist workshop with appropriate equipment. We urgently recommend that the general overhaul is carried out by NORD Service.

3.4 Options for motors for use in Zone 21 and Zone 22

DANGER! **Explosion hazard**

All work must only be carried out with the machine at a standstill and the **power to the system switched off**.

Higher temperatures than the maximum permitted surface temperature of the housing may be present inside the motor. The motor must therefore never be opened in an explosive atmosphere!

Failure to comply with this may result in the ignition of an explosive atmosphere.

WARNING **Explosion hazard**

Excessively heavy dust deposits must be avoided, as these impair the cooling of the device!

Impairment or obstruction of the flow of cooling air, for example due to partial or large area coverage of the fan cover or the entry of foreign bodies fall into the fan must be avoided in order to ensure adequate cooling.

Only cable glands and reducers which are approved for use in explosion hazard areas may be used.

All cable glands which are not used must be closed with blind screw plugs which are approved for potentially explosive areas.

Only the original seals may be used.

Failure to comply increases the risk of ignition of an explosive atmosphere.

3.4.1 Operation with frequency inverter

The design of the insulation of NORD ATEX motors with ignition protection class tb and tc is suitable for operation with a frequency inverter. Due to the variable speed range, temperature monitoring by means of thermistors or temperature sensors is necessary. For safe planning and use, the planning guide for the operating and installation instructions B1091-1 must be observed. The planning guide provides information regarding the necessary conditions for inverter operation and the approved speed ranges. Option Z (additional high inertia cast iron fan) is not permitted for inverter operation.

If the frequency inverter is not approved for operation within the explosive atmosphere, the frequency inverter must be installed outside of the explosive atmosphere.

3.4.2 External fan

Motors with the additional labelling F (e.g. 80S/4 3D **F**) are equipped with an external fan and must be monitored with the integrated temperature sensor.

⚠ WARNING **Explosion hazard**

The motor must only be operated together with the external fan. Failure of the external fan may cause the motor to overheat and therefore cause damage and/or injury up to and including ignition of the explosive atmosphere.

The operating instructions for the external fan must be observed.

The power supply to the external fan is provided separately via the terminal box of the external fan. The supply voltage of the external fan must comply with the voltage which is stated on the type plate. The external fan must be protected against overheating with suitable monitoring equipment! The IP protection class of the external fan may differ from that of the motor. The lower protection class applies for the drive unit. The cable glands must as a minimum correspond to the protection class which is specified on the type plate. Unused openings must be closed with plugs, which as a minimum correspond to the protection class of the motor.

External fans and motors for use in explosion hazard areas have Ex labelling according to RL 94/9 EEC or 2014/34/EU. The labelling must be present on both the external fan and the motor. If there is a difference between the labelling on the external fan and the motor, the lower labelled explosion protection applies for the entire drive unit. The details of surface temperatures apply for the entire drive unit; the stated max, temperature applies for the individual components. Any gear unit which is present must also be taken into account. Please contact Getriebebau NORD in case of doubt. If any component of the entire drive unit is not provided with Ex labelling, the entire drive unit may not be used in an explosion hazard area.

3.4.3 Second temperature sensor 2TF

Category 3D motors (Zone 22, non-conducting dust) can be supplied with a second temperature sensor (2TF). This option can be used to implement a warning signal (overheating in the winding). It should be noted that the temperature sensor with the lower trigger temperature should be used for the warning; the temperature sensor with the higher trigger temperature must be used to evaluate the switch-off signal.

3.4.4 Back stop

Motors with the additional code RLS (e.g. 80S/4 3D **RLS**) are equipped with a back stop. For motors with a back stop, the direction of rotation is indicated by an arrow on the fan cover. The head of the arrow points in the direction of the drive shaft. When connecting the motor and during motor control, it must be ensured that the motor can only operate in the rotation direction, e.g. by means of a rotary field test. Switching of the motor into the blocked direction of rotation, i.e. the wrong direction of rotation may cause damage.

Back stops operate without wear above a speed of approx. 800 rpm. To prevent excessive heating and premature wear of the back stop, back stops must not be operated below a speed of 800 rpm. This must be observed for motors with a frequency of 50 Hz and pole numbers ≥ 8 as well as for motors with a frequency inverter.

3.4.5 Brake

Motors with the additional labelling BRE (e.g. 80S/4 3D **BRE 10**) are equipped with a brake and must be monitored with the integrated temperature sensor. Triggering of the temperature sensor of one of the components (motor or brake) must result in the safe shut-down of the entire drive unit. The motor and brake thermistors must be connected in series.

If the motor is operated with a frequency inverter, an external fan must be used for stator frequencies less than 25 Hz. Operation with stator frequencies of 25 Hz is not permissible without an external fan.

The brake may be used as a holding brake with up to 4 activations per hour.

An optional manual release (with a lockable manual release lever) may only be used if no explosive atmosphere is present.

NOTICE! The operating instructions for the brake must also be observed.

The DC supply for the brake is via a rectifier in the motor terminal box or via a direct DC supply. The brake voltage which is stated on the type plate must be complied with.

The power supply cables must not be laid in the same cable as the temperature sensor lines. The function of the brake must be checked before commissioning. No rubbing noises may occur, as impermissibly high heating could occur.

3.4.6 Overview of brake installation for NORD ATEX motors

Permissible brake sizes for Category 3D motors										
Size	LKZ	Braking torque [Nm]								
63	S, L	5								
71	S, L	5								
80	S, SH	5	10							
80	L, LH	5	10							
90	S, SH		10	20						
90	L, LH		10	20						
100	L, LH			20	40					
100	LA, AH			20	40					
112	M, SH, MH			20	40					
132	S, SH					60				
132	M, MH					60				
132	MA					60				
160	MH						100	150	250	
160	LH						100	150	250	
180	MH								250	
180	LH								250	
200	XH								250	
225	SP, MP									400
250	WP									400

3.4.7 NORD Ex motor type plate (Ex, tb, EX tc) according to EN 60079 for operation with a frequency inverter

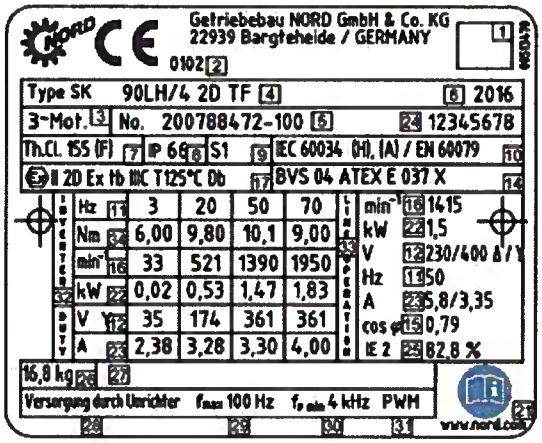

1	Data matrix code
2	Code number of the designated facility (only for Ex tb)
3	Number of phases
4	Type designation
5	Order number / motor number
6	Year of manufacture:
7	Thermal class of the insulation system
8	IP protection class
9	Operating mode
10	Standard specifications
11	Stator frequency
12	Stator voltage
14	EEC type test certificate number
15	Power factor
16	Speed
17	Explosion protection marking
21	Notice! Pay attention to operating instructions B1091
22	Rated power (mechanical power delivered to shaft)
23	Rated current at operating point
24	Individual serial number
25	Efficiency
26	Weight
27	Brake information (option only for Ex tc)
28	Note: Supply by frequency inverter
29	Maximum permissible stator frequency
30	Minimum pulse frequency of frequency inverter
31	Frequency inverter modulation method
32	Data field for operation with frequency inverters
33	Data field for mains operation
34	Rated torque on the motor shaft

Before commissioning, the type plate must be compared with the requirements of the aforementioned declaration, which result from the local regulations and operating conditions.

4 Synchronous motors – special information

The following supplementary or special information applies for these motors.

DANGER! **Electric shock**

The motor is operated with a dangerous voltage. Touching certain conducting components (connection terminals and supply cables) will cause electric shock with possibly fatal consequences.

Even when the motor is at a standstill (e.g. due to the electronic block of a connected frequency inverter or a jammed drive unit) the connection terminals and supply cables may carry a dangerous voltage. A motor standstill is not identical to electrical isolation from the mains.

Even if the drive unit has been disconnected from the mains, a connected motor may rotate and possibly generate a dangerous voltage.

Installation and work must only be carried out when the motor is at a standstill and is **disconnected** (all phases disconnected from the mains).

Follow the **5 Safety Rules** (1. Switch off the power, 2. Secure against switching on, 3. Check for no voltage, 4. Earthing and short circuiting, 5. Cover or fence off neighbouring live components).

4.1 Type designation

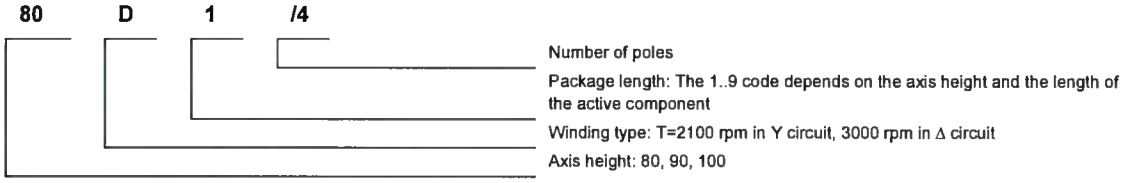

4.2 Connection

Notice! Hazardous voltages occur at the motor terminals when the motor shaft is rotating!

The motors must only be operated with suitable inverters For energy-efficient operation, the inverter must detect the position of the rotor. Various methods both with and without encoders are available for this. See also TI80_0010

Motors are normally supplied with a star circuit. Some operating points can only be used in a delta circuit. For this, the bridges must be changed according to the circuit diagram in the terminal box cover.

4.3 Encoders

Incremental encoder with zero track

The incremental encoder is located under the fan cover and is attached to this. After installation, the zero point offset is measured in the final test. The offset is provided with an adhesive label in the terminal box.

Absolute encoders

The synchronisation of the encoder is adjusted by NORD prior to delivery of the geared motor and does not require determination of the offset.

If the encoder is not synchronised, or has come out of adjustment due to an impact or removal of the motor, the zero track of the encoder must be synchronised to the rotor position.

4.4 Commissioning

The choice of inverter must be checked with regard to the motor allocation. In addition to the information in Section 1 "General" the operating manual for the frequency inverter must be observed. Further information can be obtained from TI80 0010.

4.5 Maintenance and servicing

CAUTION! The motors contain magnetic components Dismantling without specialist knowledge and suitable aids may result in injuries. This type of work must only be carried out by trained personnel.

5 Replacement parts

Please note our spare parts catalogue PL 1090 under www.nord.com.

We will be pleased to send you the spare parts catalogue on request.

6 Declarations of Conformity

GETRIEBEBAU NORD
Member of the NORD DRIVESYSTEMS Group

DRIVESYSTEMS

Getriebebau NORD GmbH & Co. KG
Getriebebau-Nord Str. 1 - 22941 Bargteheide, Germany · Fon. +49(0)4532 289 - 0 · Fax +49(0)4532 289 - 2253 · info@nord.com

EC/EU Declaration of Conformity

In the meaning of the directive 94/9/EC Annex VIII, 2004/108/EC Annex II, 2009/125/EC Annex IV, 2011/65/EU Annex VI resp. from 20. April 2016 in the meaning of the directive 2014/34/EU Annex VIII und 2014/30/EU Annex II

Getriebebau NORD GmbH & Co. KG as manufacturer hereby declares, Page 1 of 1
that the three-phase asynchronous motors from the product series

- **SK 63*[1]/*[3] 2D *[3] to SK 200*[1]/*[3] 2D *[3]**

[1] Power code: S, SA, SX, M, MA, MB, MX, L, LA, LB, LX, R, X, Y, A, W -optionally supplemented by: H, P
[2] Number of poles: 2, 4, 6
[3] Additional options

with ATEX labeling Ex II 2D Ex tb IIIC T . . . °C Db

comply with the following regulations:

ATEX Directive for products	**94/9/EG**	**(until 19. April 2016)**	**OJ. L 100 of 19.4.1994, P. 1–29**
	2014/34/EU	**(from 20. April 2016)**	**OJ. L 096 of 29.3.2014, P. 309–356**
Eco-design Directive	**2009/125/EC**	**(VO No. 640/2009)**	**OJ. L 285 of 31.10.2009, P. 10–35**
EMC Directive	**2004/108/EC**	**(until 19. April 2016)**	**OJ. L 390 of 31.12.2004, P. 24–37**
	2014/30/EU	**(from 20. April 2016)**	**OJ. L 96 of 29.3.2014, P. 79–106**
RoHS Directive	**2011/65/EU**		**OJ. L 174 of 1.7.2011, P. 88–11**

Applied standards:

EN 60079-0:2009	EN 60079-31:2009	EN 60529:2000
EN 60034-1:2010+Cor.:2010	EN 60034-2-1:2014	EN 60034-5:2001+A1:2007
EN 60034-6:1993	EN 60034-7:1993+A1:2001	EN 60034-8:2007+A1:2014
EN 60034-9:2005+A1:2007	EN 60034-11:2004	EN 60034-14:2004+A1:2007
EN 60034-30-1:2014	EN 55011:2009+A1:2010	EN 61000-6-3:2007+A1:2011
EN 61000-6-4:2007+A1:2011	EN 60204-1:2006+A1:2009+Cor.:2010	EN 50581:2012

EC-Type-Examination Certificates: BVS 04 ATEX E 037 X

Notified body for the assessment of the quality management system:

Physikalisch-Technische Bundesanstalt PTB) Bundesallee 100
Identity number: 0102 38116 Braunschweig

Notified body to issue for the EC-Type-Examination Certificate:

DEKRA EXAM GmbH Dinnendahlstraße 9
Identity number: 0158 44809 Bochum

Die erste Kennzeichnung erfolgte in 2004.

Bargteheide, 17.02.2016

U. Küchenmeister
Managing Director

pp F. Wiedemann
Head of Motors Division

GETRIEBEBAU NORD

Member of the NORD DRIVESYSTEMS Group

DRIVESYSTEMS

Getriebebau NORD GmbH & Co. KG

Getriebebau-Nord-Str. 1 . 22941 Bargteheide, Germany . Fon. +49(0)4532 289 - 0 . Fax +49(0)4532 289 - 2253 . info@nord.com

EC/EU Declaration of Conformity

In the meaning of the directive 94/9/EC Annex VIII, 2004/108/EC Annex II, 2009/125/EC Annex IV, 2011/65/EU Annex VI resp. from 20. April 2016 in the meaning of the directive 2014/34/EU Annex VIII und 2014/30/EU Annex II

Getriebebau NORD GmbH & Co. KG as manufacturer hereby declares, that the three-phase asynchronous motors from the product series

- **SK 63[•1)]/[•2)] 3D [•3)] to SK 200[•1)]/[•2)] 3D [•3)]**

  1) Power code: S, SA, SX, M, MA, MB, MX, L, LA, LB, LX, R, X, Y, A, W -optionally supplemented by: H, P

  2) Number of poles: 2, 4, 6

  3) Additional options

  with ATEX labeling Ex II 3D Ex tc IIIB T . . . °C Dc

comply with the following regulations:

ATEX Directive for products	**94/9/EG**	**(until 19. April 2016)**	OJ. L 100 of 19.4.1994, P. 1–29
	2014/34/EU	**(from 20. April 2016)**	OJ. L 096 of 29.3.2014, P. 309–356
Eco-design Directive	**2009/125/EC**	**(VO No. 640/2009)**	OJ. L 285 of 31.10.2009, P. 10–35
EMC Directive	**2004/108/EC**	**(until 19. April 2016)**	OJ. L 390 of 31.12.2004, P. 24–37
	2014/30/EU	**(from 20. April 2016)**	OJ. L 96 of 29.3.2014, P. 79–106
RoHS Directive	**2011/65/EU**		OJ. L 174 of 1.7.2011, P. 88–11

Applied standards:

EN 60079-0:2009	EN 60079-31:2009	EN 60529:2000
EN 60034-1:2010+Cor.:2010	EN 60034-2-1:2014	EN 60034-5:2001+A1:2007
EN 60034-6:1993	EN 60034-7:1993+A1:2001	EN 60034-8:2007+A1:2014
EN 60034-9:2005+A1:2007	EN 60034-11:2004	EN 60034-14:2004+A1:2007
EN 60034-30-1:2014	EN 55011:2009+A1:2010	EN 61000-6-3:2007+A1:2011
EN 61000-6-4:2007+A1:2011	EN 60204-1:2006+A1:2009+Cor.:2010	EN 50581:2012

First marking was carried out in 2011.

Bargteheide, 17.02.2016

U. Küchenmeister
Managing Director

pp F. Wiedemann
Head of Motors Division

GETRIEBEBAU NORD

Member of the NORD DRIVESYSTEMS Group

Getriebebau NORD GmbH & Co. KG
Getriebebau-Nord-Str. 1 . 22941 Bargteheide, Germany . Fon. +49(0)4532 289 - 0 . Fax +49(0)4532 289 - 2253 . info@nord.com

EC/EU Declaration of Conformity

In the meaning of the directive 94/9/EC Annex VIII, 2004/108/EC Annex II, 2009/125/EC Annex IV, 2011/65/EU Annex VI
resp. from 20. April 2016 in the meaning of the directive 2014/34/EU Annex VIII and 2014/30/EU Annex II

Getriebebau NORD GmbH & Co. KG as manufacturer hereby declares,
that the three-phase asynchronous motors from the product series

- **SK 63$^{*1)}$/$^{*2)}$ 2G $^{*3)}$ to SK 200$^{*1)}$/$^{*2)}$ 2G $^{*3)}$**

  1) Power code: S, SA, SX, M, MA, MB, MX, L, LA, LB, LX, R, X, Y, A, W -optionally supplemented by: H, P
  2) Number of poles: 2, 4, 6
  3) Additional options

with ATEX labeling Ex **II 2G Ex e IIC T3 Gb**

comply with the following regulations:

ATEX Directive for products	**94/9/EG**	**(until 19. April 2016)**	**OJ. L 100 of 19.4.1994, P. 1–29**
	2014/34/EU	**(from 20. April 2016)**	**OJ. L 096 of 29.3.2014, P. 309–356**
Eco-design Directive	**2009/125/EC**	**(VO No. 640/2009)**	**OJ. L 285 of 31.10.2009, P. 10–35**
EMC Directive	**2004/108/EC**	**(until 19. April 2016)**	**OJ. L 390 of 31.12.2004, P. 24–37**
	2014/30/EU	**(from 20. April 2016)**	**OJ. L 96 of 29.3.2014, P. 79–106**
RoHS Directive	**2011/65/EU**		**OJ. L 174 of 1.7.2011, P. 88–11**

Applied standards:

EN 60079-0:2012+A11:2013	EN 60079-7:2007	EN 60529:2014
EN 60034-1:2010+Cor.:2010	EN 60034-2-1:2014	EN 60034-5:2001+A1:2007
EN 60034-6:1993	EN 60034-7:1993+A1:2001	EN 60034-8:2007+A1:2014
EN 60034-9:2005+A1:2007	EN 60034-11:2004	EN 60034-14:2004+A1:2007
EN 60034-30-1:2014	EN 55011:2009+A1:2010	EN 61000-6-3:2007+A1:2011
EN 61000-6-4:2007+A1:2011	EN 60204-1:2006+A1:2009+Cor.:2010	EN 50581:2012

EC-Type-Examination Certificates:
PTB 14 ATEX 3030, PTB 14 ATEX 3032, PTB 08 ATEX 3024-2, PTB 14 ATEX 3034,
PTB 14 ATEX 3036, PTB 14 ATEX 3038, PTB 14 ATEX 3040, PTB 14 ATEX 3042
PTB 14 ATEX 3044, PTB 14 ATEX 3046

Notified body for the assessment of the quality management system:
Physikalisch-Technische Bundesanstalt (PTB) Bundesallee 100
Identity number: 0102 38116 Braunschweig

Notified body to issue for the EC-Type-Examination Certificate:
Physikalisch-Technische Bundesanstalt (PTB) Bundesallee 100
Identity number: 0102 38116 Braunschweig

First marking was carried out in 2008.

Bargteheide, 17.02.2016

U. Küchenmeister
Managing Director

pp F. Wiedemann
Head of Motors Division

GETRIEBEBAU NORD

Member of the NORD DRIVESYSTEMS Group

DRIVESYSTEMS

Getriebebau NORD GmbH & Co. KG

Getriebebau-Nord-Str. 1 . 22941 Bargteheide, Germany . Fon. +49(0)4532 289 - 0 . Fax +49(0)4532 289 - 2253 . info@nord.com

EC/EU Declaration of Conformity

In the meaning of the directive 94/9/EC Annex VIII, 2004/108/EC Annex II, 2009/125/EC Annex IV, 2011/65/EU Annex VI
resp. from 20. April 2016 in the meaning of the directive 2014/34/EU Annex VIII und 2014/30/EU Annex II

Getriebebau NORD GmbH & Co. KG as manufacturer hereby declares, Page 1 of 1
that the three-phase asynchronous motors from the product series

- SK 63*[1]/*[2] 3G *[3] to SK 200*[1]/*[2] 3G *[3]

[1] Power code: S, SA, SX, M, MA, MB, MX, L, LA, LB, LX, R, K, Y, A, W -optionally supplemented by: H, P

[2] Number of poles: 2, 4, 6

[3] Additional options

with ATEX labeling Ex II 3G Ex nA IIC T3 Gc

comply with the following regulations:

ATEX Directive for products	**94/9/EG**	**(until 19. April 2016)**	**OJ. L 100 of 19.4.1994, P. 1–29**
	2014/34/EU	**(from 20. April 2016)**	**OJ. L 096 of 29.3.2014, P. 309–356**
Eco-design Directive	**2009/125/EC**	**(VO No. 640/2009)**	**OJ. L 285 of 31.10.2009, P. 10–35**
EMC Directive	**2004/108/EC**	**(until 19. April 2016)**	**OJ. L 390 of 31.12.2004, P. 24–37**
	2014/30/EU	**(from 20. April 2016)**	**OJ. L 96 of 29.3.2014, P. 79–106**
RoHS Directive	**2011/65/EU**		**OJ. L 174 of 1.7.2011, P. 88–11**

Applied standards:

EN 60079-0:2012+A11:2013	EN 60079-15:2010	EN 60529:2014
EN 60034-1:2010+Cor.:2010	EN 60034-2-1:2014	EN 60034-5:2001+A1:2007
EN 60034-6:1993	EN 60034-7:1993+A1:2001	EN 60034-8:2007+A1:2014
EN 60034-9:2005+A1:2007	EN 60034-11:2004	EN 60034-14:2004+A1:2007
EN 60034-30-1:2014	EN 55011:2009+A1:2010	EN 61000-6-3:2007+A1:2011
EN 61000-6-4:2007+A1:2011	EN 60204-1:2006+A1:2009+Cor.:2010	EN 50581:2012

First marking was carried out in 2014.

Bargteheide, 17.02.2016

U. Küchenmeister
Managing Director

pp F. Wiedemann
Head of Motors Division

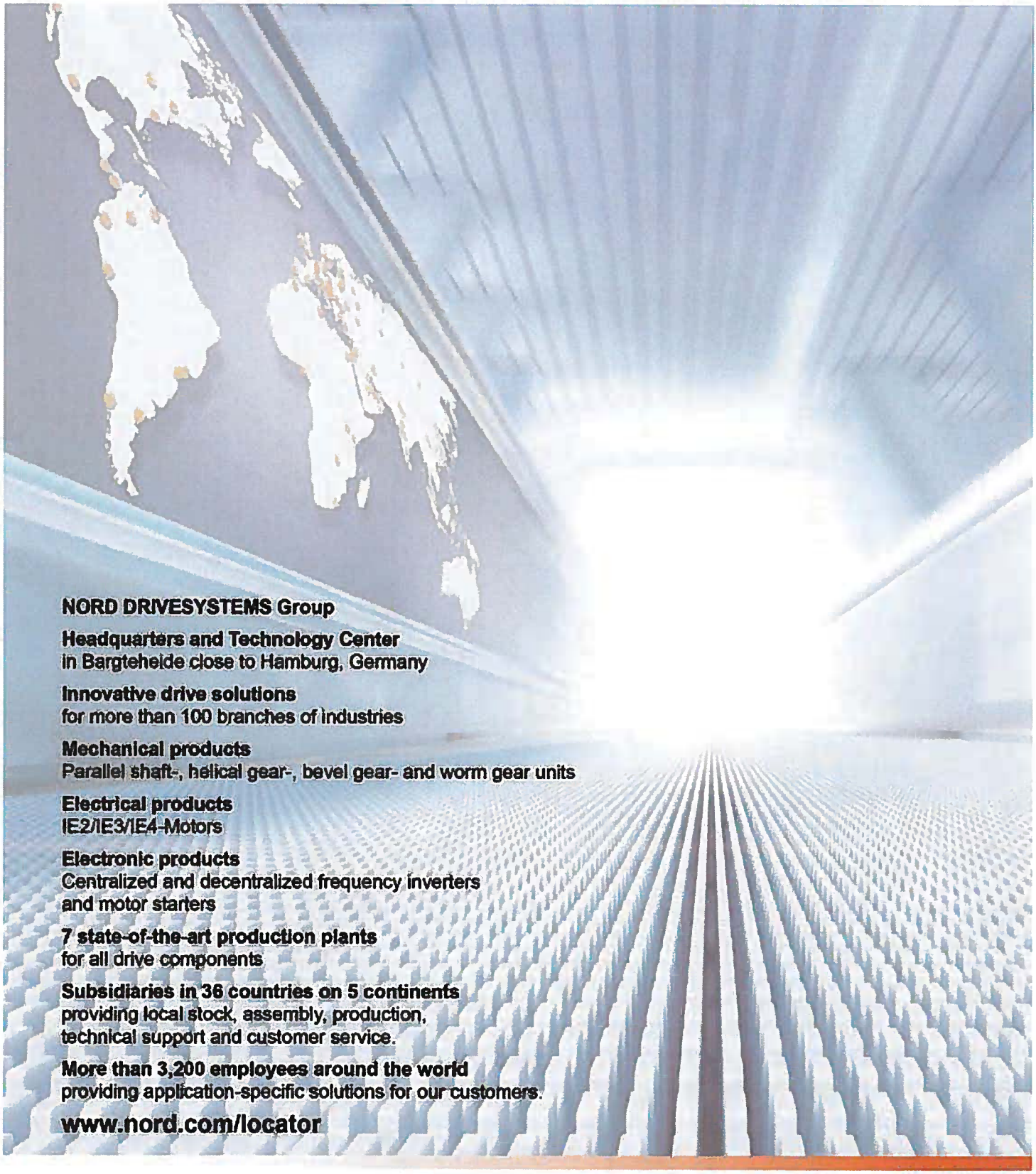

Headquarters:

Getriebebau NORD GmbH & Co. KG
Getriebebau-Nord-Straße 1
22941 Bargteheide, Germany
Fon +49 (0) 4532 / 289-0
Fax +49 (0) 4532 / 289-2253
info@nord.com, www.nord.com

Member of the NORD DRIVESYSTEMS Group

NORD
DRIVESYSTEMS

6051302 / 3517

LEFT BLANK

ONYX VALVE

SERIES PSW, PRESSURE GAUGE ISOLATOR RING

LEFT BLANK

ONYX VALVE CO ISOLATOR RING
Installation & Maintenance

Operation: (02-2010)

Obtaining accurate pressure readings on slurry lines is difficult because slurries, abrasives and solids clog pressure elements such as gauges, switches and transmitters.

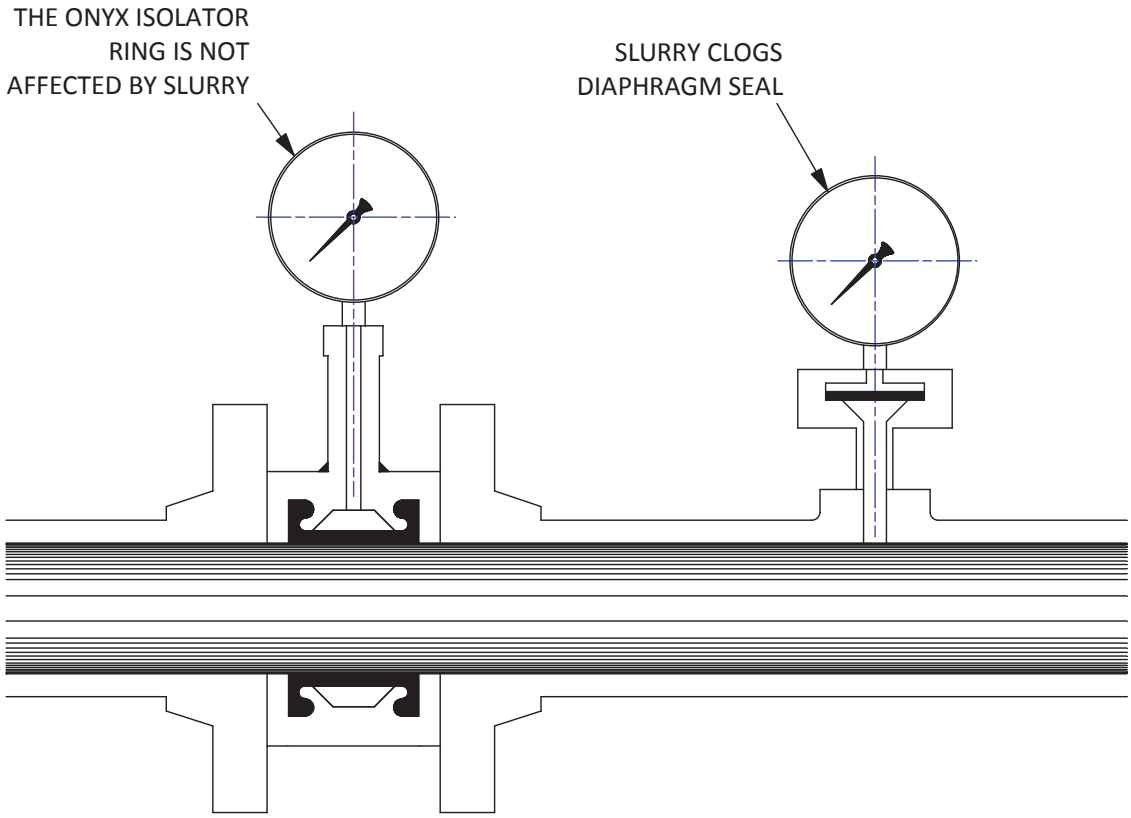

Onyx Isolator rings consist of rubber “inner tube” captured in a steel ring. The assembly is installed between flanges in the process pipe. Clear instrument oil behind the rubber membrane transmits pressure to the gauge

Onyx Isolator ring are vacuum filled at the factory with high viscosity silicone fluid. (Other fluids available on special order.)

After vacuum filling, the Isolator Ring is permanently sealed with our patented “Module Seal”. The Module Seal enables the users to remove or replace the gauges and other pressure instruments while the Isolator Ring remains in the process pipe without having to vacuum fill the rings.

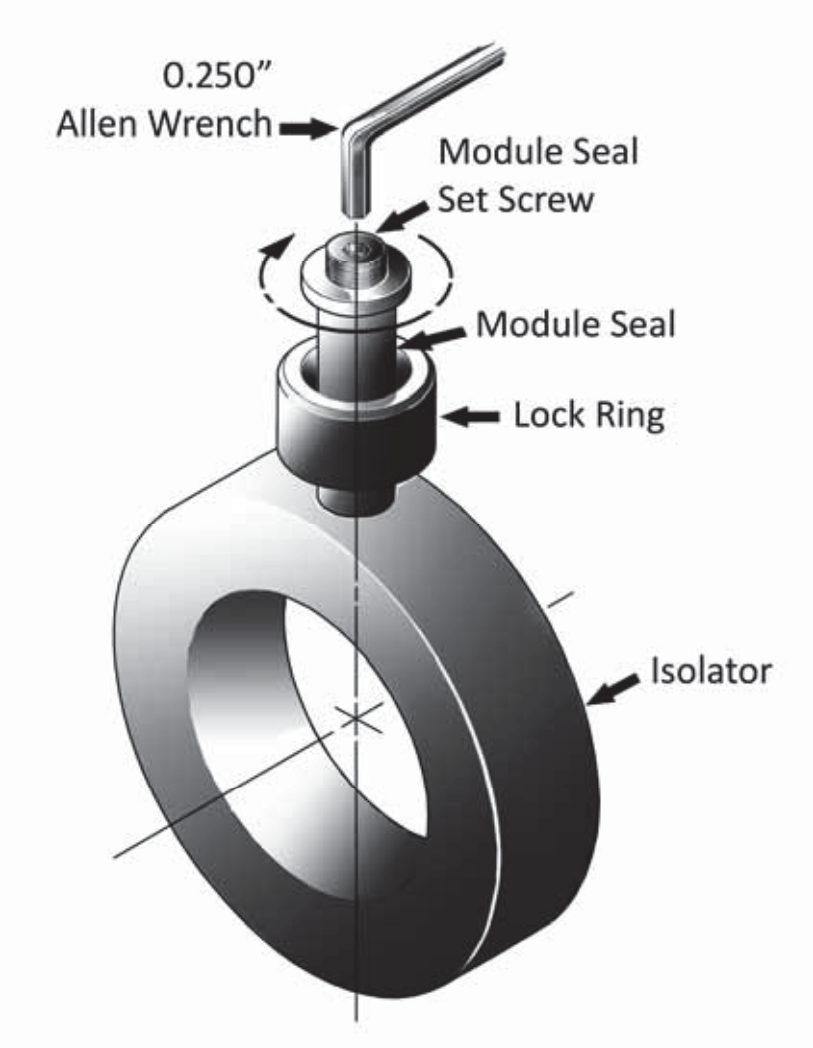

Onyx Isolator rings are usually supplied with instrumentation such as gauges, transducers, and pressure switches; refers to specific manufacturer's literature concerning maintenance for these accessories.

If you detect instrument oil weeping from under the Lock Ring, the Module seal may require minor adjustment.

To adjust the Module Seal:

a) Loosen the Lock Ring, and then carefully remove the pressure measuring instruments.

b) Insert a 0.250 inch Allen key into the Module Seal Set Screw and turn clockwise 1/8 revolution.

c) Reinstall the pressure measuring instruments and tighten Lock Ring.

Turning the Module Seal Set Screw clockwise eliminates weeping but makes the fit around the needle tighter.

If the Module Seal is too tight to reinstall the pressure measuring instrument, do not force the needle in or you will risk bending or breaking the needle. Instead, loosen the Set Screw until the needle can be inserted easily. If fluid weeping persists, it may be necessary to tighten the Set Screw further. When tightening the Set Screw, turn clockwise 1/8 revolution at a time.

PRESSURE RATING:

Onyx isolator rings are rated for operation up to 1,000 psi.

STORAGE:

Correct storage extends service life. Rubber is perishable. Ideal storage conditions are 50˚F / 60% relative humidity. We recommend the following precautions for Isolators and spare parts stored for any length of time prior to installation.

1. Keep Isolators cool. They can be stored in an unheated area, but allow maximum ventilation in storage areas subject to high ambient temperatures. Trailers and storage sheds become incredibly hot during summer months. Avoid such locations.

2. Avoid sunlight. Ultra-violet light deteriorates rubber. Leave the Isolator in its box.

3. Avoid ozone. DO NOT STORE Isolator near active electrical equipment.

4. The Isolator may be supplied with sensitive instrumentation. Refer to specific manufacturer's literature concerning proper storage.

5. Separate instruments may be supplied with a stinger fitting attached. DO NOT REMOVE RUBBER TIP PROTECTOR FROM THE STINGER FITTING NEEDLE UNTIL ATTACHING THE FITTING TO THE ISOLATOR RING.

INSTALLATION:

1. **Safety Considerations:**

   a) Isolators rings frequently handle chemically reactive and abrasive fluids; it is reasonable to expect the elastomer sleeve to eventually wear out. Instrument fill fluid must be compatible with the process liquid. Mixing incompatible fluids may cause a violent chemical reaction resulting in equipment damage or personal injury.

   b) Make certain that instruments such as gauges, pressure switches, etc, have pressure and temperature rating suitable for actual operating conditions. Exceeding manufacturer's design limits may result in equipment damage or personal injury.

c) The rubber sleeve elastomer must be compatible with the chemistry and temperature of the process fluid.

d) **Do not use Onyx Isolator rings for oxygen service**.

2. Inspect prior to installation. Onyx Isolator rings should not show any indication of leakage, and rubber sleeve should be free from cuts or punctures.

3. Onyx Isolator rings can be installed in any attitude with flow in either direction. Install in straight pipe run as far from tees and elbows as possible.

4. Onyx Isolator rings may be installed without pressure instruments attached. This minimizes damage to gauges and sensitive pressure instruments during pipe fitting and construction.

5. Onyx Isolator rings are vacuum filled at the factory to insure high accuracy in operation. DO NOT DISASSEMBLE UNLESS NECESSARY FOR REPAIRS.

6. To install, sandwich the Isolator between two flanges in the process pipe line. Center as carefully as possible. Install gaskets on both sides of Isolator ring. Insert flange bolts. Tighten flange bolts in criss cross pattern.

OPERATING INSTRUCTIONS:

1. Onyx Isolator Rings and pressure instruments are vacuum filled at the factory. They may be shipped assembled or shipped separately for field assembly.

   a) Do not disassemble the ring except to replace the rubber membrane.

   b) Do not break connections between the stinger fitting and pressure instruments.

   c) Do not remove the rubber seal (#5) from the stinger.

2. To attach a pressure instrument to the Isolator Ring:

   Pressure measuring element and stinger fitting must be pre-assembled and vacuum filled prior to attaching to the Isolator ring!!!

   a) Instruments can be attached to an Isolator Ring installed in the pipe line while the system is pressurized.

   b) Hold the pressure instrument and stinger fitting assembly upright above the Isolator Ring.

   c) Remove the rubber tip protector from the stinger needle (#5F). (Save the rubber tip protector.)

d) Gently push the needle (#5F) through the rubber seal (#5) until it hits bottom.

e) Thread the lock ring (#5C) onto the stinger fitting (#5E). **HAND TIGHTENED.**

f) Gauges can be rotated to face any direction by loosening the coupling ring, turning the gauge, and re-tightening the ring.

3. To attach instruments which did not come with a stinger fitting, refer to instructions on attaching stinger fitting to instruments at the end of this booklet.

4. To remove pressure instruments from the Isolator Ring:

A) It is NOT necessary to remove the Isolator Ring from the process pipe.

B) In order to minimize fluid loss, **reduce process pressure as low as possible before removing gauges or other instruments from the Isolator Ring.**

Turn off pump prior to removing instrument from the Isolator Ring (The interruption will be brief. Instruments can be removed from the Isolator in about 10 seconds.)

B) Loosen knurled lock ring (#5C).

C) Gently lift the gauge and stinger assembly out of the module seal.

D) Immediately attach a rubber tip protector to the end of the stinger needle.

E) Now your process can be re-pressurized without loosing fluid from the Isolator Ring.

SLEEVE AND MODULE SEAL REPLACEMENT:

1. Remove Isolator Ring from process line.
2. Remove gauge or auxiliary instrument.
3. Remove end plate screws (#4A).
4. Remove end plates (#4).
5. Remove old sleeve (#1).
6. Use a 0.250 inch hex key to remove the module seal set screw (#5B).
7. Use a packing extractor to remove the old rubber seal (#5).
8. Clean all components thoroughly.
9. Press new rubber seal (#5) into the module seal tube (#5A). Drive all the way to bottom of bore. Replace module seal set screw (#5B). Do not over tighten.
10. Collapse new sleeve (#l), push through center housing (#3) and work sleeve lips into housing grooves.

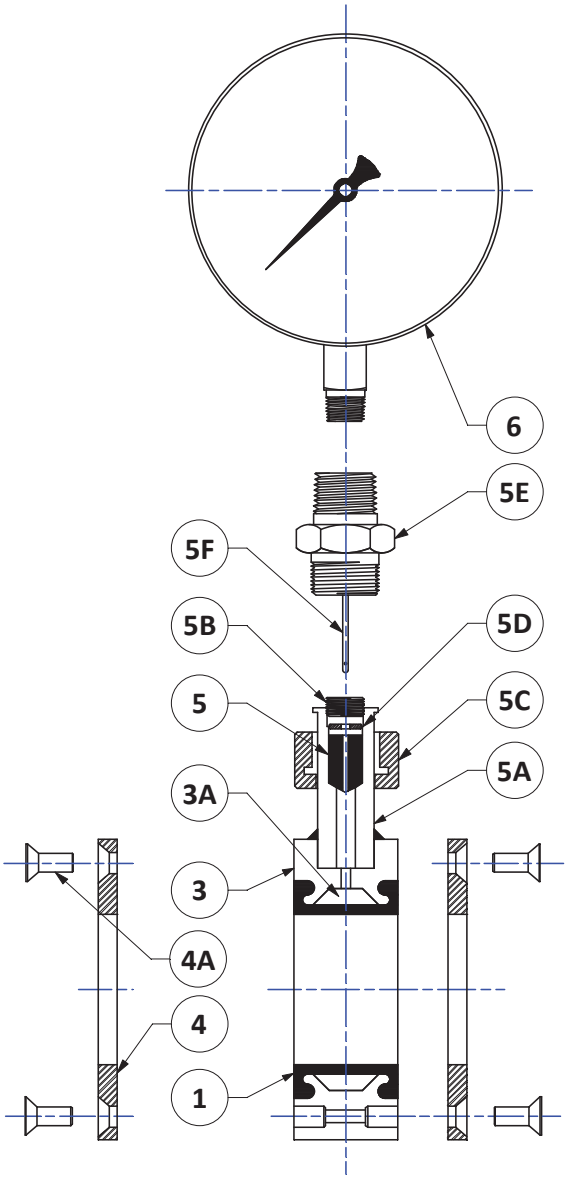

ITEM	DESCRIPTION
1	SLEEVE
3	CENTER HOUSING
3A	SENSING LIQUID, CENTER
4	END PLATE
4A	SCREW, END PLATE
5	RUBBER SEAL
5A	TUBE, MODULE SEAL
5B	SET SCREW, MODULE SEAL
5C	LOCK RING, MODULE SEAL
5D	SEAL WASHER
5E	STINGER FITTING
5F	NEEDLE, STINGER FITTING
6	GAUGE

11. Reinstall end plates (#4).
12. Replace end plate screws (#4A).
13. Connect a separate stinger fitting (#5E), to vacuum filling system, evacuate air from the ring assembly, and refill with fresh instrument fluid. Use Onyx silicone fluid.
14. The Isolator Ring can now be returned to service.

TO ATTACH STINGER FITTING TO INSTRUMENTS:

1. Attach gauge or other instrument to the stinger fitting (#5E).

2. Connect an **Onyx Vacuum Fill Tool Adapter, P/N #T75132-01-00,** to your vacuum filling system.
3. Attach the instrument assembly to the adapter fitting.
4. Evacuate all the air from the instrument, and fill with silicone fluid.
5. Detach the instrument from the filling system.
6. The instrument can now be attached to an Isolator Ring, or stored for future use.

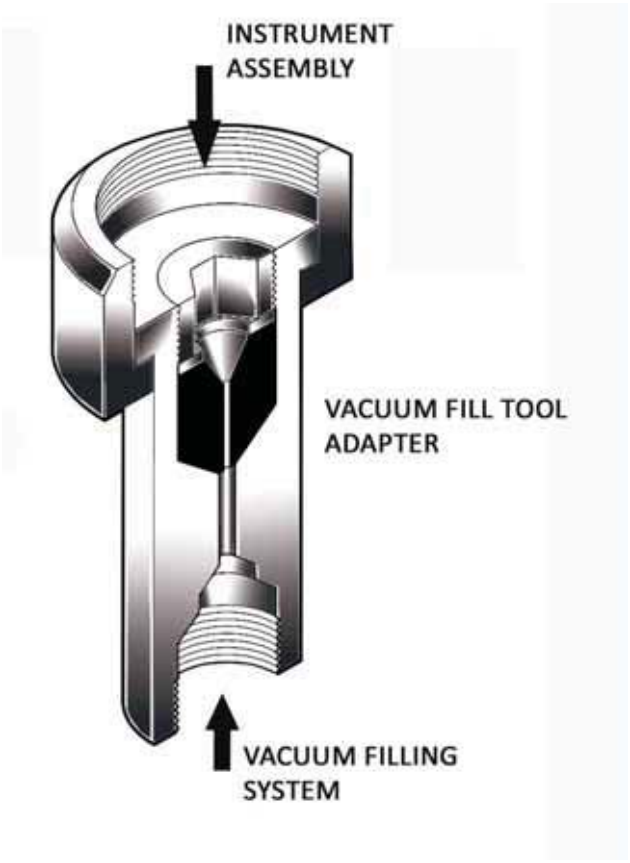

Questions?

Contact **Onyx Valve Company**

Tel: 856-829-2888
Fax: 856-829-3080

E–mail: david@onyxvalve.com

LEFT BLANK

PMP

MODEL A201, BALL VALVE

LEFT BLANK

2 Piece Ball Valve
Full Port

A201
1000 WOG
1/4" – 3" NPT

Adjustable PTFE Packing

Investment Cast Body CF8M Body

PTFE Body Seal

Full Bore Design

Stainless Steel Latch Lock Handle

Blow-out Proof Stem

Solid Ball & Stem

Bi-Directional RPTFE Seats

Pressure Rating
- 1/4" – 2" 1000 WOG
- 2-1/2" – 3" 800 WOG

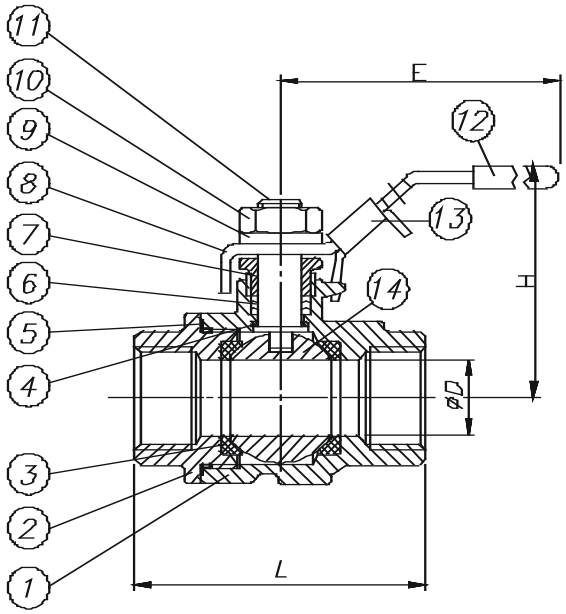

NO	PART NAME	QTY	SPECIFICATION	
1	BODY	1	WCB	CF8M
2	END CAP	1	WCB	CF8M
3	SEATS	2	RPTFE	RPTFE
4	THRUST WASHER	1	PTFE	PTFE
5	BODY GASKET	1	PTFE	PTFE
6	STEM PACKING	3	PTFE	PTFE
7	PACKING GLAND	1	SS304	SS304
8	HANDLE	1	C.S.	SS304
9	HANDLE WASHER	1	C.S.	SS304
10	HANDLE NUT	1	C.S.	SS304
11	STEM	1	SS304	SS316
12	HANDLE SLEEVE	1	PLASTIC	PLASTIC
13	LOCKING DEVICE	1	C.S.	SS304
14	BALL	1	SS304	SS316

SIZE		1/4"	3/8"	1/2"	3/4"	1"	1-1/4"	1-1/2"	2"	2-1/2"	3"
D	in	0.46	0.50	0.50	0.75	1.00	1.25	1.50	2.00	2.50	3.00
	mm	10	12	15	20	25	32	40	50	65	80
L	in	2.13	2.13	2.68	3.03	3.58	3.98	4.25	4.88	7.28	8.07
	mm	54	54	68	77	91	101	108	124	185	205
H	in	2.32	2.32	2.36	2.91	3.03	3.43	3.66	4.21	5.71	6.10
	mm	59	59	60	74	77	87	93	107	145	155
E	in	4.49	4.49	4.49	5.43	5.43	7.28	7.68	7.68	10.24	10.24
	mm	114	114	114	138	138	185	195	195	260	260

PMP Precision Valve Company Ltd. Is a progressive supplier of current products. The features, materials of construction and dimensional data as detailed in this bulletin are intended for your reference only, and should not be relied upon unless confirmed in writing by PMP Precision Valve Co. Ltd.. Certified dimensional drawings are available upon order receipt.

LEFT BLANK

PRATT

SERIES 601, BALLCENTRIC PLUG VALVE

LEFT BLANK

OPERATION / MAINTENANCE MANUAL

PRATT®

Ballcentric® Plug Valve

TABLE OF CONTENTS PAGE

General Information	2
Installation Instructions	2-3
Operation Instructions	4-5
Maintenance	6
Troubleshooting	7
Parts Information	8-9

⚠ WARNING:

1. Read all applicable directions and instructions prior to any maintenance, troubleshooting or installation.

2. Personnel involved in the installation or maintenance of valves should be constantly alert to potential emission of pipeline material and take appropriate safety precautions. Always wear suitable protection when dealing with hazardous pipeline materials.

3. Order parts from your local Pratt sales representative or directly from Henry Pratt Company. When ordering parts, please include the serial number located on the valve tag.

NOTE: "WARNING" and "CAUTION" messages (flagged with an exclamation symbol) indicate procedures that must be followed exactly to avoid equipment damage, physical injury, or death.

HENRY PRATT COMPANY
Customer Service
401 South Highland Avenue
Aurora, IL 60506
877.436.7977
www.henrypratt.com
moreinfo@henrypratt.com

FUNCTIONAL DESCRIPTION

Plug valves are designed with eccentric rubber disc seating surfaces. The plug rotates 1/4 turn to provide shutoff in pipes. The eccentric seating action provides for tighter shutoff as the actuator is adjusted to provide for more rotation. The valve can be adjusted to a maximum of 10 degrees over travel. The valves can be used to regulate flow rate by positioning the plug between 15 and 90 degrees open.

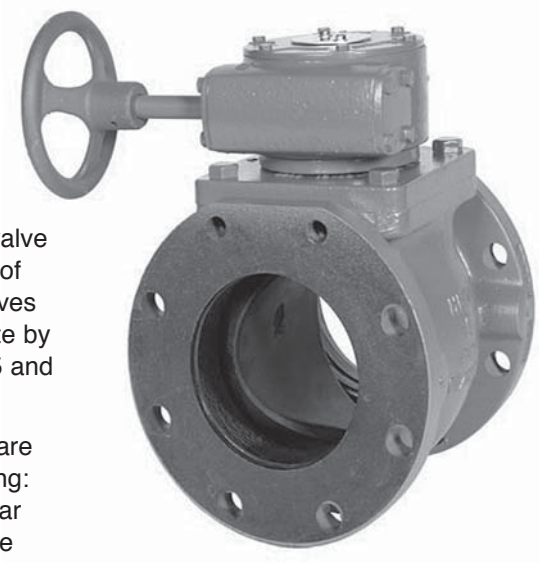

Manually operated plug valves are powered with one of the following: 2" direct nut, lever handle or gear actuators, which convert multiple handwheel, chainwheel, or nut input turns into 1/4 turn valve operation. The travel of the valve plug is limited by physical stops in the torque collar for wrench operated valves.

⚠CAUTION: Forcing the handwheel, chainwheel or nut against the stops will not provide tighter shutoff of the valve and may damage the actuator. Only actuator adjustments will affect valve shutoff.

Motor Operated Valve

Motor operated valves are powered with gear actuators, which convert multiple motor input turns into 1/4 turn valve operation. The travel of the valve plug is limited by limit switches in the motor housing and physical stop in the actuator housing. Valve shutoff is affected by limit switch and physical stop settings.

⚠CAUTION: Improperly set limit switches and/or physical stops may damage the motor and/or actuator.

Hydraulically operated valves are powered with a gear box and double acting cylinder. The linear stroke of the cylinder is converted to 1/4 turns operation by the gear box. Auxiliary controls are provided to direct hydraulic power to the cylinder and to control the operating speed of the cylinder.

INSTALLATION

When installing the plug valves, the seat end should be noted. The seat end of the valve is cast in raised letters on the appropriate flange of the valve. Generally, straightway valves should be installed with the highest pressure applied from the opposite end from the seat. This will tend to push the plug into the seat On pump discharge installations the seat end should be towards the pump.

In cases where shut-off is required in both directions, the valve should be installed so that the highest differential pressure at shut-off is opposite the seat end.

When the service is of a clogging type, with suspended solids likely to build up in the valve body, it is recommended that the valve be installed with the media entering the seat end first. In extreme cases, the valve should be installed with the plug horizontal and rotating upward into the top portion of the valve body cavity to open. See Page 6 for recommended installation options.

Class 125 flanged end valves have ANSI B16.1 flat faced 125/150 flanges. Standard ANSI B16.21 flanges and gaskets should be used to install the valves in the pipeline.

Certain size valves utilize tapped holes on the top and bottom of the flange where a backing nut is not possible. Please check specific drawings for detailed information on sizes and quantities of hexagon head screws required on these valves.

Prior to installing valves, they should be cycled open and closed several times to ensure they are in good working order and have not been damaged during shipment or storage.

INSTALLATION OPTIONS

The type of materials carried in the pipeline and the location of the valve determine the correct installation orientation.

Liquids Without Suspended Solids

Valve may be installed with plug shaft vertical or horizontal. For vertical pipe installations, install valve with seat facing downstream.

Before installation, blow out pipeline to remove all foreign materials.

Suspended Solids and Dirty Gases

Install valve with plug facing upstream. Ensure plug rotates up to the fully open position thus preventing plug from sweeping through settled debris.

NOTE: For pump isolation service install the discharge valve with the seat downstream from the pump and with the plug rotating to the top of the pipeline in the open position.

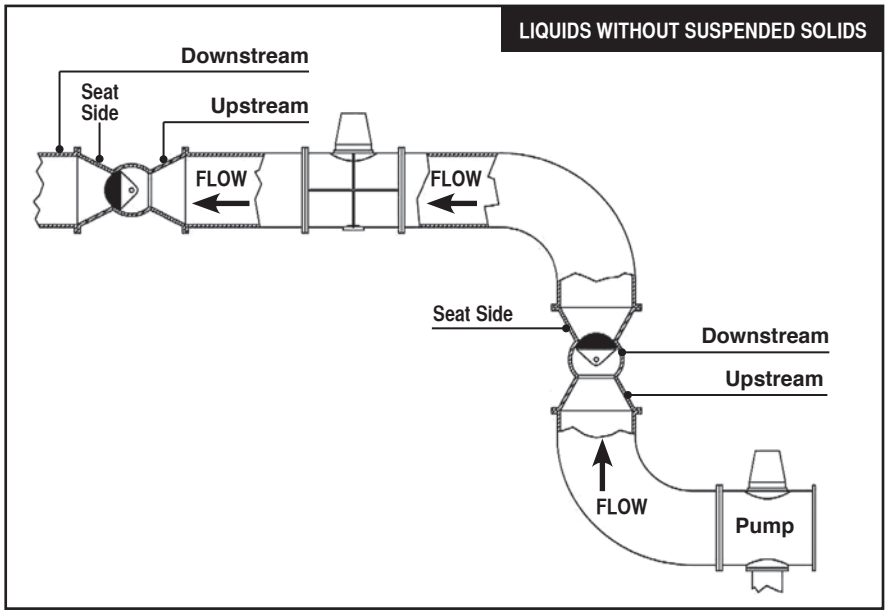

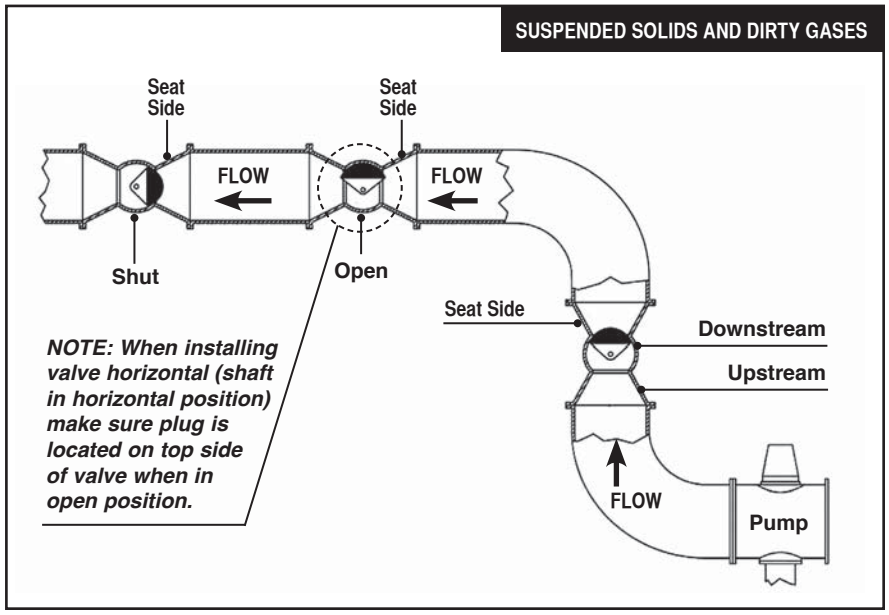

WRENCH OPERATED PLUG VALVES

Do not permit use and operation of a Wrench operated eccentric plug valves close by turning the valve 90 degrees clockwise. All wrench operated eccentric valves are equipped with a multifunction device referred to here as a torque collar. This device serves as:

1. Wrench Adapter – 2" Square
2. Position Indicator
3. Open Memory Stop
4. Closed Memory Stop
5. Running Torque Adjustment

Position Indicator: The top of the plug has an indicator plate to show the approximate plug position. Cast onto the torque collar is an indicator mark which corresponds to a graduated scale cast on the bonnet of the valve. This scale is divided into 15 degree lines and indicates the exact valve opening from full open to full closed.

Open Memory Stop: The torque collar also incorporates an open memory stop feature. The plug can be set by tightening the open memory stop adjustment bolt after the correct flow is achieved. The valve can then be closed for maintenance and reopened to the proper position without resetting the flow.

WRENCH OPERATED VALVE WITH TORQUE COLLAR

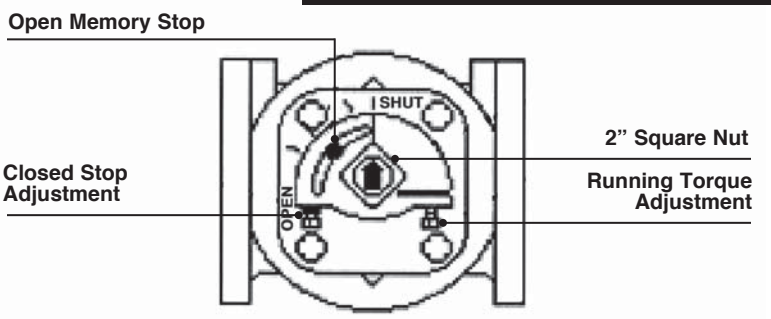

Closed Memory Stop: The closed memory stop is provided to allow for adjustment to compensate for wear of either the plug coating or the seat. The closed stop is pre-set at the factory and should not require readjustment unless wear occurs.

To adjust the plug for excess plug or seat wear simply rotate the closed stop two turns counter-clockwise then rotate the plug (clockwise) further into the seat and check the flow. Should this movement fail to shut off the flow repeat the above step. Afterward re-set the lock nut to prevent the position from being altered.

Running Torque Adjustment: The nature of eccentric plug valves "camming" action eliminates the majority of the torque prior to seating. To prevent the plug from creeping open or slamming closed, the torque collar maintains a constant drag on the shoulder of the valve bonnet. This component is factory adjusted. However, once the valve has been installed, it is recommended that the torque adjustment nut be further tightened to assure proper friction exists to prevent unwanted closure.

To prevent the plug from unnecessary movement, rotate the hex head bolt clockwise until there is a substantial drag on the plug but not so much as to prevent the movement of the plug with the supplied wrench.

GEAR OPERATED PLUG VALVES

Gear operated eccentric valves close by turning the gear input shaft clockwise until closed.

Position Indicator (above ground units only): The top of the gear operator has an indicator plate to show the plug position. This scale, cast onto the gear housing, is divided into 15 degree lines and indicates the exact valve opening from full open to full closed. Buried service units are totally enclosed and sealed for use below grade.

Open and Closed Memory Stops: The closed memory stop is provided to allow for adjustment to compensate for wear of either the plug coating or the seat. The closed stop is pre-set at the factory and should not require readjustment unless wear occurs.

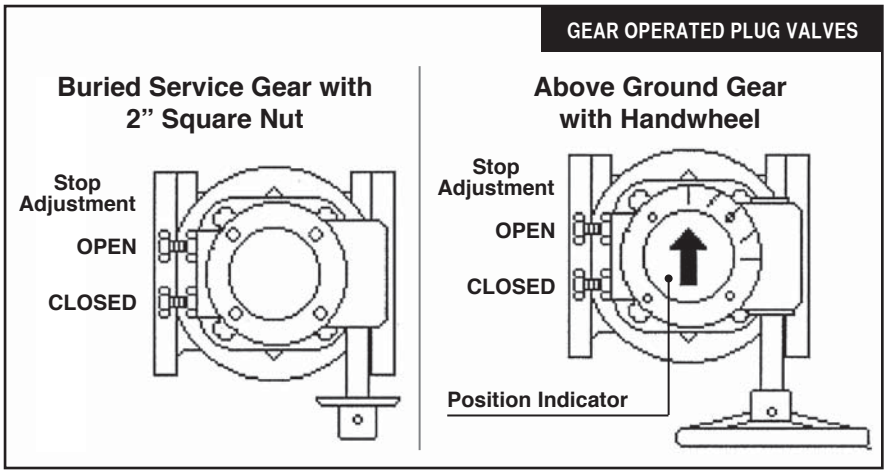

To adjust the plug for excess plug or seat wear simply rotate the closed stop two turns counterclockwise then rotate the handwheel or nut (clockwise) to move the plug further into the seat and check the flow.

Should movement fail to shut off the flow repeat the above step. Afterward re-set the lock nut to prevent the position from being altered.

ACTUATED PLUG VALVES

Described below are the operating instructions for an eccentric plug valve equipped with an electric motor actuator. General arrangement drawings are provided in conjunction with this manual to illustrate the fitup and installation of the valve and wiring of the motor. Specific wiring details are contained in the electric motor actuator manual. As with any plug valve, the actuator will cause the valve plug to rotate through 1/4 turn to open or close the valve.

The output motion of the actuator is limited to about 100 degrees of output rotation by mechanical stops in the gearing. These are factory set and should not need adjustment. The actual positioning of the valve plug will be done by limit switches in the motor actuator.

The switches are also set at the factory, but adjustment is sometimes required if the motor unit is installed on a separate mounting base or floor stand. Detailed procedures are given in the motor manual if adjustment is needed for the mechanical stops or the limit switches. The wiring and power requirements are noted on the wiring diagrams included with this instruction manual.

MAINTENANCE

The eccentric valve is designed and manufactured to be a long life valve under normal circumstances. It does not require any routine maintenance. Cycling the valve from full open to full closed on an annual basis will increase the life of the valve and operator components. However, if maintenance is required due to unusual wear or service conditions, the following procedure should be followed:

⚠CAUTION: Valve should be depressurized for all maintenance activities

Disassembly Procedure

Body: The plug valve is a top entry valve; therefore the body can remain in line during this operation.

Gear Operated Valves: Remove the bolts holding the gear operator housing cover in place. Remove the housing cover and the internal bolts holding the gear operator to the valve body. Remove the gear operator and set aside.

Wrench Operated Valves: Remove the star washer fastening the torque collar to the plug stem. Remove the torque collar and set aside. With the valve de-pressurized, remove the hexagonal head cap screws that hold the bonnet to the valve body. Remove the bonnet, leaving the plug in the body. At this point, the plug, PTFE thrust washers, journal bearings and bonnet stem seals are accessible and can be removed and replaced.

Reverse the above process for reassembling the valve only. For stem seal replacement follow procedure below.

Stem Seals: With the valve de-pressurized, using internal snap ring pliers, remove the snap ring and thrust washer. The “U” cup seals can now be pried out of the seal cavity. To replace, reverse the above process.

“U” Cup Seals: To replace “U” cup seals on actuated eccentric plug valves, depressurize the valve, remove the actuator, and remove internal bolts fastening the actuator to the valve body. Remove the actuator and set aside. Remove the internal snap ring using snap ring pliers. Remove thrust washer. The “U” cup seals are now visible. Using a screwdriver, pry out the old seals. Apply a small amount of silicone or grease to the new “U” cup seals. This will help them slide in the packing cavity. Put a piece of shim stock into the cavity and put the “U” cup over it. Slide the “U” cup over the stem with shim stock against the stem. This will let any trapped air out of the packing cavity. Now, using two screwdrivers, coax the outer lip of the “U” cup into the cavity while pressing down on the top of the “U” cup with the other screwdriver (see above diagram). Continue to do this all the way around until the “U” cup is at the bottom of the packing cavity.

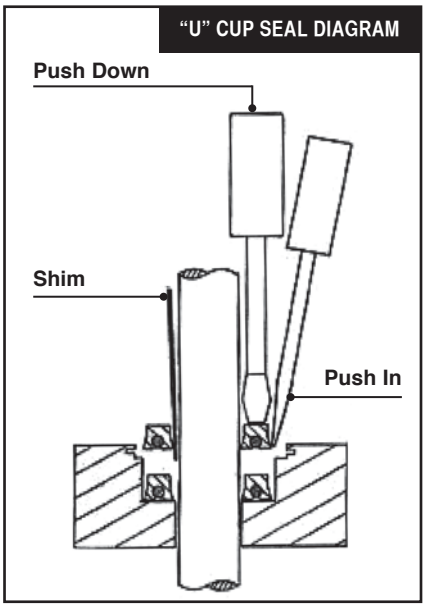

Repeat the procedure with the second “U” cup, and replace the thrust washer and snap ring. Now you can remount the actuator on the valve.

TROUBLESHOOTING

Wrench Operated Plug Valve

PROBLEM	CAUSE	SOLUTION
Valve will not open	• broken or misadjusted torque collar • obstruction in line • excessive line pressure • elastomer damage	• adjust or replace torque collar • remove obstruction • reduce pressure • replace plug
Valve will not close	• broken or misadjusted torque collar • obstruction in line • excessive line pressure • elastomer damage	• adjust or replace torque collar • remove obstruction • reduce pressure • replace plug
Valve will not shutoff flow	• improper stop adjustment • obstruction in line • excessive line pressure • elastomer damage	• adjust closed stop • remove obstruction • reduce pressure • replace plug
Valve leaks at plug stem	• damaged “U” cup seal	• replace “U” cups

Gear Operated Plug Valve

PROBLEM	CAUSE	SOLUTION
Valve will not open	• bent input shaft • obstruction in line • excessive line pressure • elastomer damage	• replace worn shaft • remove obstruction • reduce pressure • replace plug
Valve will not close	• bent input shaft • obstruction in line • excessive line pressure • elastomer damage	• replace worn shaft • remove obstruction • reduce pressure • replace plug
Valve will not shut off flow	• improper stop adjustment • obstruction in line • excessive line pressure • elastomer damage	• adjust closed stop • remove obstruction • reduce pressure • replace plug
Valve leaks at plug stem	• damaged “U” cup seal	• replace “U” cups

Actuated Plug Valve

PROBLEM	CAUSE	SOLUTION
Valve will not close/open	• no power source • improper signal • burned out or impaired component	• check incoming power source and/or replace fuses • check actuating signal sequence • check and repair or replace motor or relay devices
Valve will not shut off flow	• improper stop adjustment • actuator torques out	• re-set limit switch • check for obstructions in valve

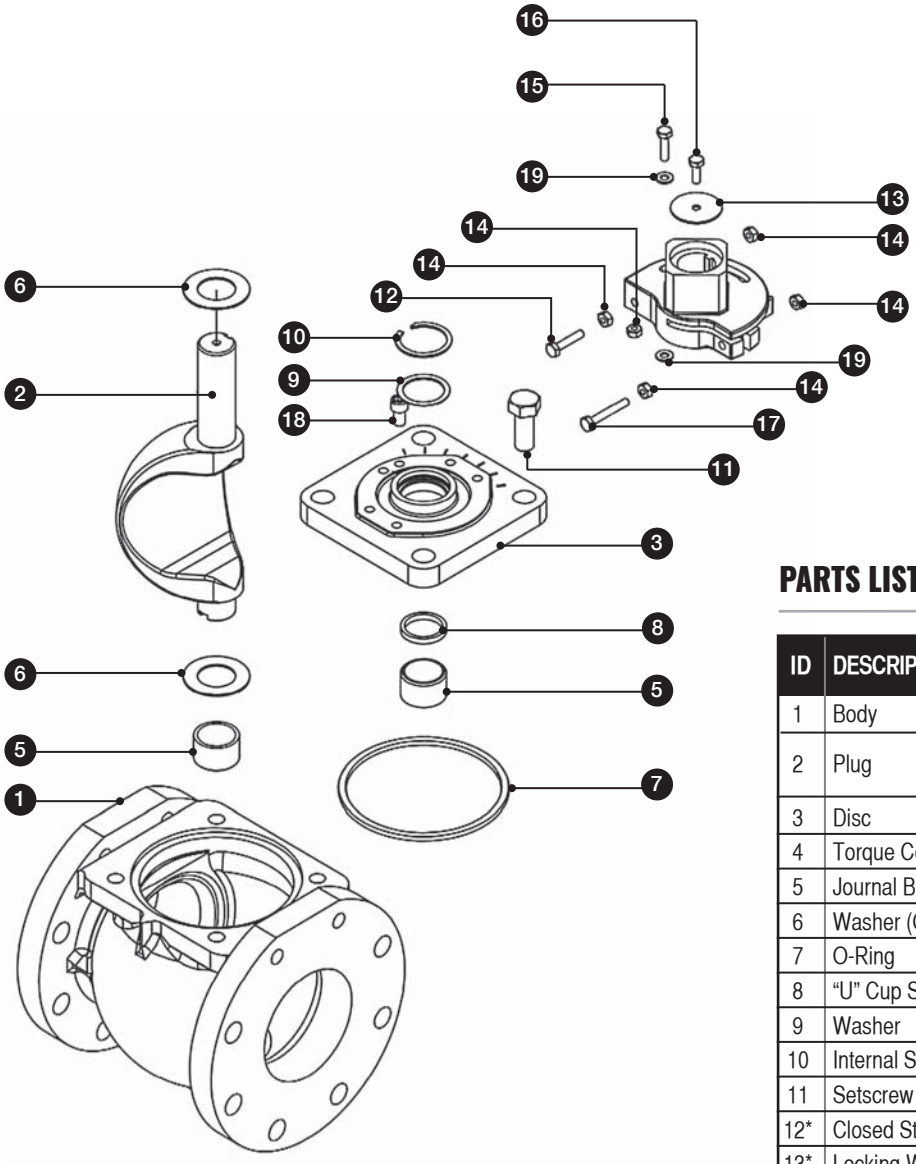

PARTS LIST

ID	DESCRIPTION	MATERIAL
1	Body	Cast Iron ASTM A-126 Class B
2	Plug	Rubber Coated Ductile Iron ASTM A-536
3	Disc	Cast Iron ASTM A-126 Class B
4	Torque Collar	Ductile Iron ASTM A-536
5	Journal Bearing	303 Stainless Steel
6	Washer (Grit Seal)	PTFE
7	O-Ring	Elas. as Spec.
8	"U" Cup Seal	Elas. as Spec
9	Washer	Brass – ASTM B138-675
10	Internal Snap Ring	Spring Steel
11	Setscrew	Steel (Zinc Plated)
12*	Closed Stop	Steel (Zinc Plated)
13*	Locking Washer	Steel
14*	Nut	Steel (Zinc Plated)
15*	Open Stop	Steel (Zinc Plated)
16*	Set Screw	Steel (Zinc Plated)
17*	Torque Bolt	Steel (Zinc Plated)
18*	Travel Stop	Steel
19*	Washer	Steel

*Torque Collar Assembly on 8" and Smaller

TO ORDER: Contact our Parts Department.
Henry Pratt Company
401 South Highland Avenue
Aurora, IL 60506-5563
(630) 844-4000

When ordering parts, please include the serial no. located on the valve tag and the part description.

14” – 36” Ballcentric Plug Valve Parts

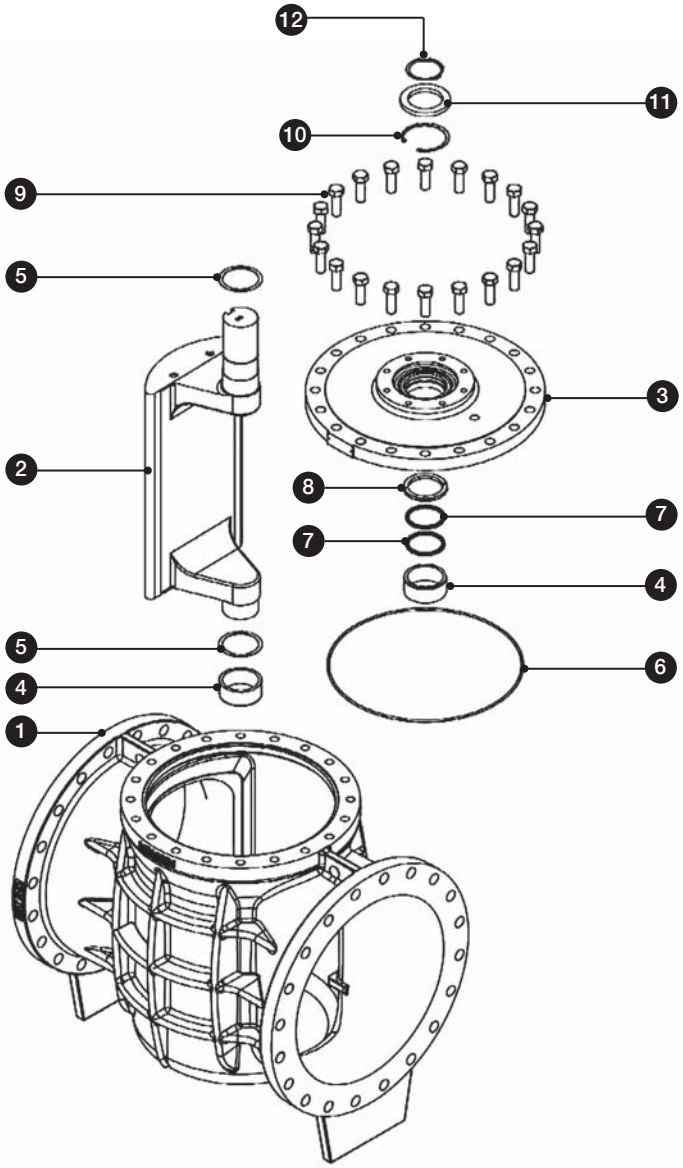

PARTS LIST

ID	DESCRIPTION	MATERIAL
1	Body	Cast Iron ASTM A-126 Class B
2	Plug	Rubber Coated Ductile Iron ASTM A-536
3	Cap	Cast Iron ASTM A-126 Class B
4	Sleeve Bearing	303 Stainless Steel
5	Washer (Grit Seal)	PTFE
6	Cap O-Ring	Elas. as Spec.
7	“U” Cup Seal	Elas. as Spec.
8	Seal Retaining Ring	(See Note 1)
9	Cap Screw	Steel (Zinc Plated)
10	Internal Snap Ring	Spring Steel
11	Support Collar	Steel
12	Internal Snap Ring	Spring Steel

Notes:
1. Seal Retaining Ring: Brass – ASTM B-138-675 on 14” – 20”, Steel on 24” and larger.

TO ORDER: Contact our Parts Department.
Henry Pratt Company
401 South Highland Avenue
Aurora, IL 60506-5563
(630) 844-4000

When ordering parts, please include the serial no. located on the valve tag and the part description.

Mueller Co.
Reliable Connections®

Henry Pratt Company
1.630.844.4000
www.henrypratt.com
moreinfo@henrypratt.com

International
1.423.490.9555
www.mueller-international.com
international@muellercompany.com

Copyright © 2017 Henry Pratt Company, LLC. All Rights Reserved.
The trademarks, logos and service marks displayed in this document herein are the property of Henry Pratt Company, LLC, its affiliates or other third parties.
Products marked with a section symbol (§) are subject to patents or patent applications. For details, visit www.mwppat.com. These products are intended for use in potable water or wastewater applications. Please contact your Henry Pratt Company Sales or Customer Service Representative concerning any other application(s).

Form 13810 - 02/17

PRIMARY FLUID SYSTEM

ACCUDRAW PVC SERIES, CALIBRATION CYLINDER

LEFT BLANK

ACCUDRAW® PVC Calibration Instructions

Note: ***Before starting either of the calibration procedures below, ensure that the pump is primed and void of any trapped air.***

Using the USGPH scale: (scale is based on **time**, in one (1) minute volume discharge)

1. Fill the calibration to the top "0" mark on the USGPH scale.
2. Close isolation valve (#2) from supply tank, open isolation valve (#1) below cylinder and start the pump.
3. Use a stopwatch to measure the time of one (1) minute (60 seconds) and record the volume dispensed by the metering pump, using the draw down scale.
4. Adjust the pump volume control higher or lower to meet with your desired output.
5. Repeat above steps 1 through 4, until the desired output is met.
6. Divide the measured USGPH number by 60 to determine the **USGPM volume**, if required.

If you wish to shorten the time of dispensing for calibration by one half (1/2) or one quarter (1/4), you must multiply the measured volume by the same number used to divide the time by.

e.g. 10 USGPH in 1 minute equals
5 USGPH X 2 in 30 seconds or
2.5 USGPH X 4 in 15 seconds

Using the ml scale: (scale is based on **volume** pumped, over any given time)

1. Fill the calibration cylinder to the top "0" mark on the ml scale.
2. Close isolation valve (#2) from supply tank, open isolation valve (#1) below cylinder and start the pump.
3. Use a stopwatch to measure the time it takes to pump down a given volume (ml) in 60 seconds.
4. Multiply the volume by 60 to determine the **ml per hour** volume, if required.
5. Adjust the pump volume control higher or lower to meet with your desired output.
6. Repeat above steps 1 through 5, until the desired output is met.

If you wish to shorten the time of dispensing for calibration by one half (1/2) or one quarter (1/4), you must multiply the volume by the same number used to divide the time by to determine ml per minute or hour.

e.g. 100 ml in 60 seconds equals
50 ml X 2 in 30 seconds or
25 ml X 4 in 15 seconds

Typical Installations ("A" and "B")

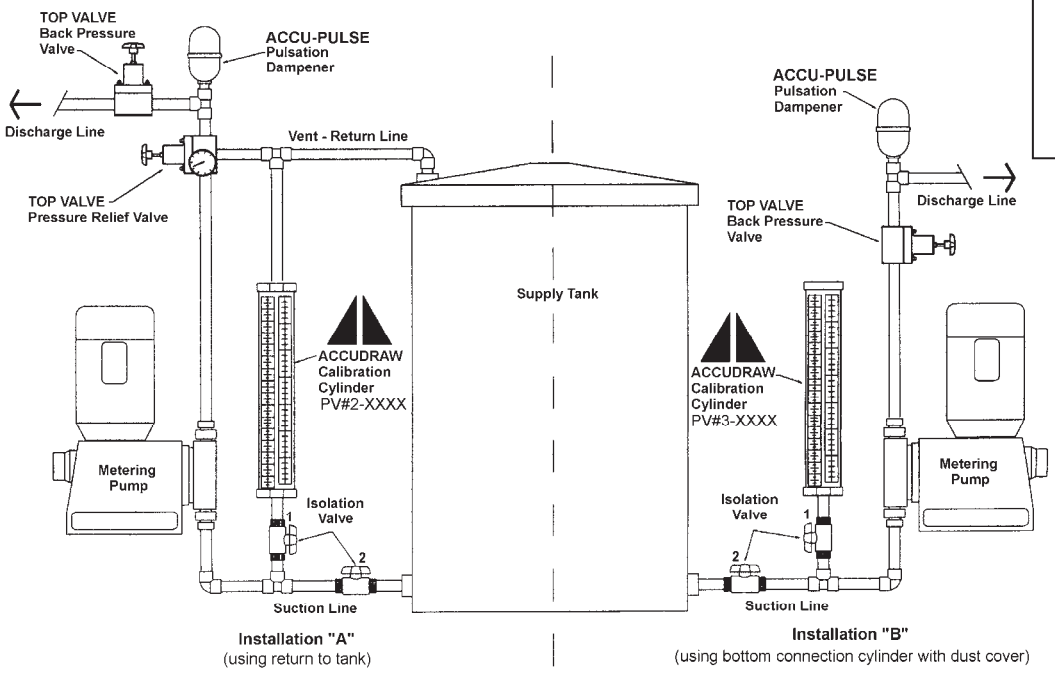

Conversion Factors
1ml = 1 cc
1000 ml – 1 liter
ml/sec x 60 = ml/min
1 US gal/min x 0.063 = liters/sec
1 US gal = 3.786 liters

Caution:
Do not use as a Pressure Vessel.

PRIMARY FLUID SYSTEMS INC.

Call Toll Free 1-800-776-6580
Tel: (905) 333-8743 Fax: (905) 333-8746

E-Mail: primary@ primaryfluid.com
www.primaryfluid.com

® Registered Trade Mark of Primary Fluid Systems Inc.

Metering Pump Accessories Save $$$$

Prevent unsafe and inefficient systems by design.

ACCUDRAW Calibration Cylinders

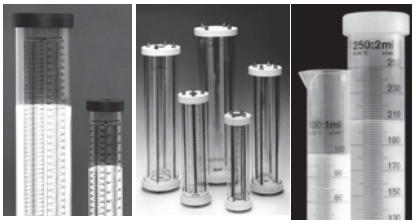

PVC **Glass** **Poly**

- *PVC, glass, polypropylene*
- *translucent, chemical resistant*
- *coloured graduations and lettering*
- *threaded or socket connections*
- *standard sizes 100 ml to 20,000 ml*

Custom built in other sizes and materials.

TOP VALVE Back Pressure/Pressure Relief

- *long life diaphragm*
- *range of 0 – 150 PSIG*
- *air release, optional gauge port*
- *PVC, CPVC, PVDF, Teflon, polypropylene, stainless, Alloy 20 and Hastelloy C*
- *7 sizes ¼" – 2" NPT*
- *colour coded handles indicate size*

Designed to enhance the <u>accuracy</u> and <u>safety</u> of your metering pumps.

ACCU-PULSE
Pulsation Dampeners

Designed to remove pulsating flows from positive displacement pumps.

- *increase system efficiency and pump life*
- *decrease maintenance and costs*
- *protect pipes, meters, valves and instrumentation from pulsation and vibration*
- *ensure meter accuracy, longevity and repeatability*
- *prevent foaming and splashing*
- *extensive range of materials and sizes*
- *lightweight, compact design*

Typical Metering Pump System

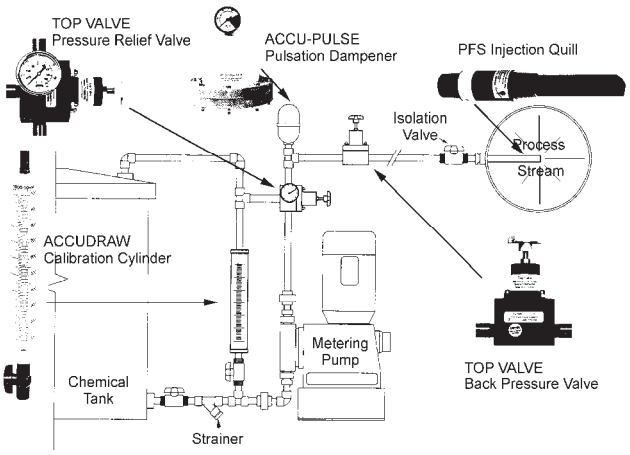

AutoCad drawings available from our web site.
Visit www.primaryfluid.com

PFS Injection Quills

Designed to inject chemical into the center stream of process.

- *provides for a more homogenous mix in the pipeline*
- *built-in checks to prevent back siphoning*
- *2 sizes 6" and 8" length*
- *PVC, CPVC, PVDF, polypropylene, stainless and Hastelloy C*
- *pressure to 3000 PSIG*
- *temperature to 260°C (500°F)*

Custom built in other sizes and materials.

Accu-Vent

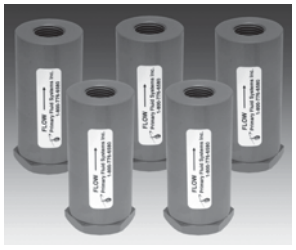

Designed to automatically vent gases and vapours.

- *vents gases and vapors released from Sodium Hypochlorite, Sulfuric Acid & Hydrogen Peroxide*
- *CPVC (Corzan) and Viton corrosion resistant wetted materials of construction*
- *specially designed float material automatically vents built up gases on system start up and under working pressure*
- *standard 1/2" or 3/4" NPT threaded connections or optional socket weld*
- *available in other materials*

PFS Corporation Stops

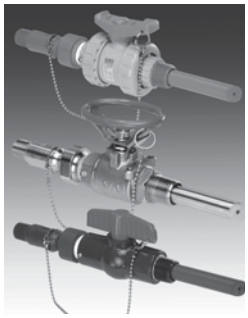

Designed to inject chemical into the center stream of process.

- *isolation valve allows for ease of maintenance*
- *available in 6 materials of construction*
- *wetted components have comparable or greater chemical resistance than quill construction material*
- *standard and custom lengths available*
- *connection in NPT, metric or flanged*

Custom built in other sizes & materials.

Call Toll Free 1-800-776-6580
Tel: (905) 333-8743 Fax: (905) 333-8746

PRIMARY FLUID SYSTEM

ACCUDRAW GLASS SERIES, CALIBRATION CYLINDER

LEFT BLANK

ACCUDRAW®

Glass Cylinder Calibration Instructions

Note: Before starting the calibration procedure below, ensure that the pump is primed and void of any trapped air.

Using the ml scale: (scale is based on **volume** pumped, over any given time)

1. Fill the calibration cylinder to the top mark with the liquid to be dispensed. This can be accomplished by manually filling the cylinder, or, if the feed tank level is higher than the cylinder, by opening the isolation valve below the cylinder and back filling the cylinder.

Caution: Never leave unattended when back filling the cylinder.

2. With the calibration cylinder full of the liquid to be dispensed, start the metering pump and operate at 100% output until all air is removed from both suction lines and pump head.
3. Shut pump "OFF".
4. With calibration cylinder full, close isolation Valve (#2) from supply tank, and open isolation valve (#1) below cylinder.
5. Start the pump.
6. Using a stop watch, measure the volume dispensed in 60 seconds.
7. Multiply the measured volume by 60 to find your **ml per hour** volume.
8. Adjust the pump volume control, higher or lower to meet with your desired output.
9. Repeat above steps 4 through 8 until your desired output is met.

If you wish to shorten the time of dispensing for calibration by one half (1/2) or one quarter (1/4), you must multiply the volume by the same number used to divide the time by to determine ml per minute or hour.

e.g. 100 ml in 60 seconds equals
50 ml X 2 in 30 seconds or
25 ml X 4 in 15 seconds

Typical Installations ("A" and "B")

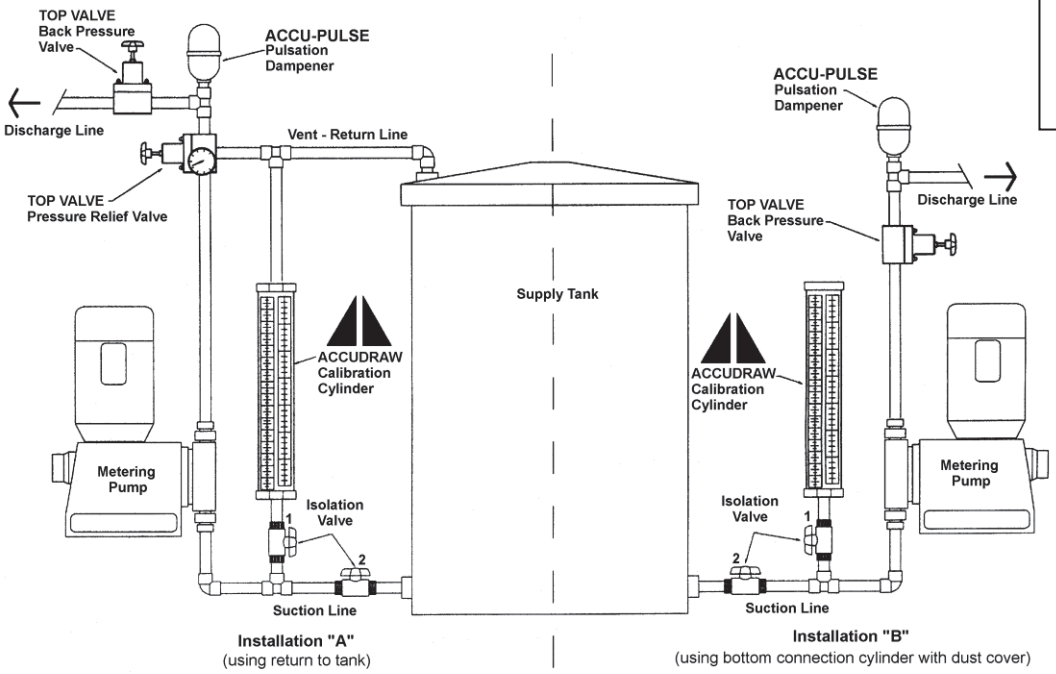

Conversion Factors
1ml = 1 cc
1000 ml – 1 liter
ml/sec x 60 = ml/min
1 US gal/min x 0.063 = liters/sec
1 US gal = 3.786 liters

Caution:
Do not use as a Pressure Vessel

PRIMARY FLUID SYSTEMS INC.

Call Toll Free 1-800-776-6580
Tel: (905) 333-8743 Fax: (905) 333-8746

E-Mail: primary@ primaryfluid.com
www.primaryfluid.com

® Registered Trade Mark of Primary Fluid Systems Inc.

Metering Pump Accessories Save $$$$

Prevent unsafe and inefficient systems by design.

ACCUDRAW Calibration Cylinders

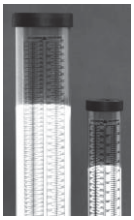

PVC **Glass** **Poly**

- *PVC, glass, polypropylene*
- *translucent, chemical resistant*
- *coloured graduations and lettering*
- *threaded or socket connections*
- *standard sizes 100 ml to 20,000 ml*

Custom built in other sizes and materials.

TOP VALVE Back Pressure/Pressure Relief

- *long life diaphragm*
- *range of 0 – 150 PSIG*
- *air release, optional gauge port*
- *PVC, CPVC, PVDF, PTFE, polypropylene, stainless, Alloy 20 and Hastelloy C*
- *7 sizes ¼" – 2" NPT*
- *colour coded handles indicate size*

Designed to enhance the <u>accuracy</u> and <u>safety</u> of your metering pumps.

ACCU-PULSE
Pulsation Dampeners

Designed to remove pulsating flows from positive displacement pumps.

- *increase system efficiency and pump life*
- *decrease maintenance and costs*
- *protect pipes, meters, valves and instrumentation from pulsation and vibration*
- *ensure meter accuracy, longevity and repeatability*
- *prevent foaming and splashing*
- *extensive range of materials and sizes*
- *lightweight, compact design*

Typical Metering Pump System

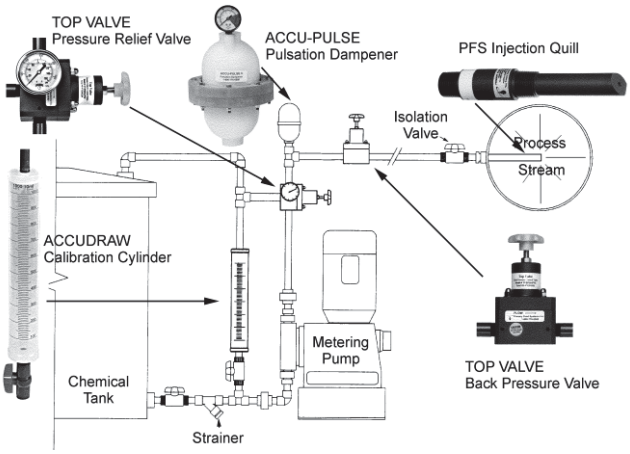

AutoCad drawings available from our web site.
Visit www.primaryfluid.com

PFS Injection Quills

Designed to inject chemical into the center stream of process.

- *provides for a more homogenous mix in the pipeline*
- *built-in checks to prevent back siphoning*
- *2 sizes 6" and 8" length*
- *½" or ¾" NPT, BPST, or Flg'd Conn.*
- *PVC, CPVC, PVDF, polypropylene, Stainless, Hastelloy C & Titanium*
- *pressure to 3000 PSIG*
- *temperature to 260°C (500°F)*

Custom built in other sizes and materials.

Accu-Vent

Designed to automatically vent gases and vapours.

- *vents gases and vapors released from Sodium Hypochlorite, Sulfuric Acid & Hydrogen Peroxide*
- *CPVC (Corzan) and Viton corrosion resistant wetted materials of construction*
- *specially designed float material automatically vents built up gases on system start up and under working pressure*
- *standard 1/2" or 3/4" NPT threaded connections or optional socket weld*
- *available in other materials*

PFS Corporation Stops

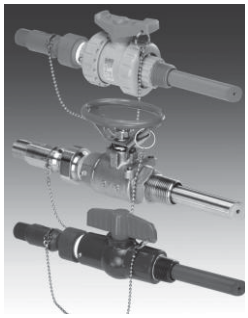

Designed to inject chemical into the center stream of process.

- *isolation valve allows for ease of maintenance*
- *available in 6 materials of construction*
- *wetted components have comparable or greater chemical resistance than quill construction material*
- *standard and custom lengths available*
- *connection in NPT, metric or flanged*

Custom built in other sizes & materials.

Call Toll Free 1-800-776-6580
Tel: (905) 333-8743 Fax: (905) 333-8746

MANUFACTURER INSTALLATION OPERATION AND MAINTENANCE MANUAL

AMARUQ WTP – NUNAVUT

VEOLIA PROJECT: 5000 218 009

PRIMARY FLUID SYSTEM

ACCUPULSE SERIES, PULSATION DAMPENER

LEFT BLANK

ACCU-PULSE Installation and Operation Instructions

Chargeable Models

ACCU-PULSE Unit Information

Serial Number: _____ **Model Number:** _____

Material of Construction: **Body:** _____

Bladder: _____

Pump Area & Number: _____

Date of Purchase: _____

Supplier: Company: _____

Contact: _____

Phone: _____

Notes:

- Primary Fluid Systems Inc. recommends installing a pressure relief valve such as TOP VALVE in all pump systems to ensure compliance with pressure limits on system equipment
- Mount ACCU-PULSE as close to pump discharge, inlet and/or quick closing valve as possible
- Temperature and pressure affect the strength and chemical resistancy of plastic and rubber; Consult Primary Fluid Systems Inc. for assistance
- Remove all pressure from ACCU-PULSE unit and pump system before attempting maintenance
- Do not exceed 150 PSI for standard models; 300 PSI for metallic units
- If a system pressure test is to be performed, ACCU-PULSE must be charged with 80% of the system test pressure, prior to test. This will avoid possible bladder damage.

Limited Warranty:

Primary Fluid Systems Inc. (Primary) warrants its products against defects in workmanship or materials for one (1) year under normal use.Primary's obligations and liabilities under this warranty shall be limited to replacement of the product, or a refund of an amount not to exceed the purchase price of the product(s) to which such warranty claim is made. Repairs or replacements are made subject to our inspection of the returned product(s). Primary's decision of one of these alternatives shall be the buyer's exclusive remedy.

This warranty does not extend to damage by corrosion or other decomposition by chemical action. Primary does not warrant damages caused by (a) improper use of the product, (b) unauthorized modification or attachment to product, (c) misuse, abuse, accident or negligent handling or installation of product, or (e) alterations or repairs made by purchaser.The materials of construction offered are recommendations subject in all cases to acceptance by purchaser. These recommendations do not constitute guarantee against corrosion or decomposition, but are based on previous experience and best available information of the industry.

Statements and instructions set forth herein are based on the best information and practices known to Primary, but it should not be assumed that every acceptable safety procedure is contained herein. Of necessity Primary cannot guarantee that actions in accordance with such statements and instructions will result in the complete elimination of hazards and it assumes no liability for accidents that may occur.

Except as specifically provided herein, Primary makes no warranty, representations, promise or guarantee, either express or implied, statutory or otherwise, with respect to the product and technical information including their quality, performance, merchantability, or fitness for a particular purpose.In no event will Primary be liable for indirect, special, incidental, economic, covert or consequential damages arising out of the use or inability to use the product, including without limitation, damages or costs relating to the loss of profits, business and goodwill even if advised of the possibility of such damages. In no event shall Primary's liability exceed the amount paid by you for the product.

The warranty and remedies set forth herein are exclusive and in lieu of all others, oral or written, express or implied. No Primary dealer, distributor, agent or employee is authorized to make any modification or addition to this warranty. This warranty gives you specific legal rights and you may also have other rights which vary from state to state.

PRIMARY FLUID SYSTEMS INC.
Call Toll Free 1-800-776-6580
Tel (905) 333-8743 Fax (905) 333-8746
E-Mail: primary@primary fluid.com
http: www.primaryfluid.com

Pump Discharge Installation: Chargeable Models

Step 1: Mounting Position

Mount ACCU-PULSE as close to the pump discharge as possible to absorb the pulse at its source. The pulsation dampener will optimally perform if mounted at the first 90 ° turn in the discharge piping. If using a flexible connector from the pump to your point of discharge, ACCU-PULSE should be hard piped to the pump discharge manifold, then continue with flexible tubing from dampener. Since pressure is equal in all directions, ACCU-PULSE can be installed in any position - vertically, horizontally, upside down. Primary Fluid Systems Inc. does recommend a vertical position for better draining of the unit.

Limitations for horizontal and upside down mounting include high specific gravity, high viscosity, settling of heavy material or possible air entrapment.

Step 2: Air Line Connection

Chargeable models do not require an air line connection, the units must be charged with compressed air or nitrogen, using a hand pump, tank or compressor.

Step 3: Charging and Start Up

Prior to starting the pump, charge ACCU-PULSE with compressed air or nitrogen to approximately 70 to 85% of expected system pressure, to a maximum of 150 PSI for standard models; 300 PSI for metallic models. Start the pump to generate working or system pressure. Once working pressure is achieved, adjustment may be necessary; gradually increase or decrease the gas charge in the dampener by bleeding or filling through the gas valve. Allow the system to respond to each adjustment (this may take a minute or two) before continuing any further adjustments. Generally, pulsation is most effectively minimized when the gas charge is 80 to 85 % of system/pump discharge pressure. Pressure should be checked periodically. Recharge when necessary.

Typical Installations

The installations below are typical installation examples only. Consult your engineering department for the appropriate installation of your application or call the factory for advice.

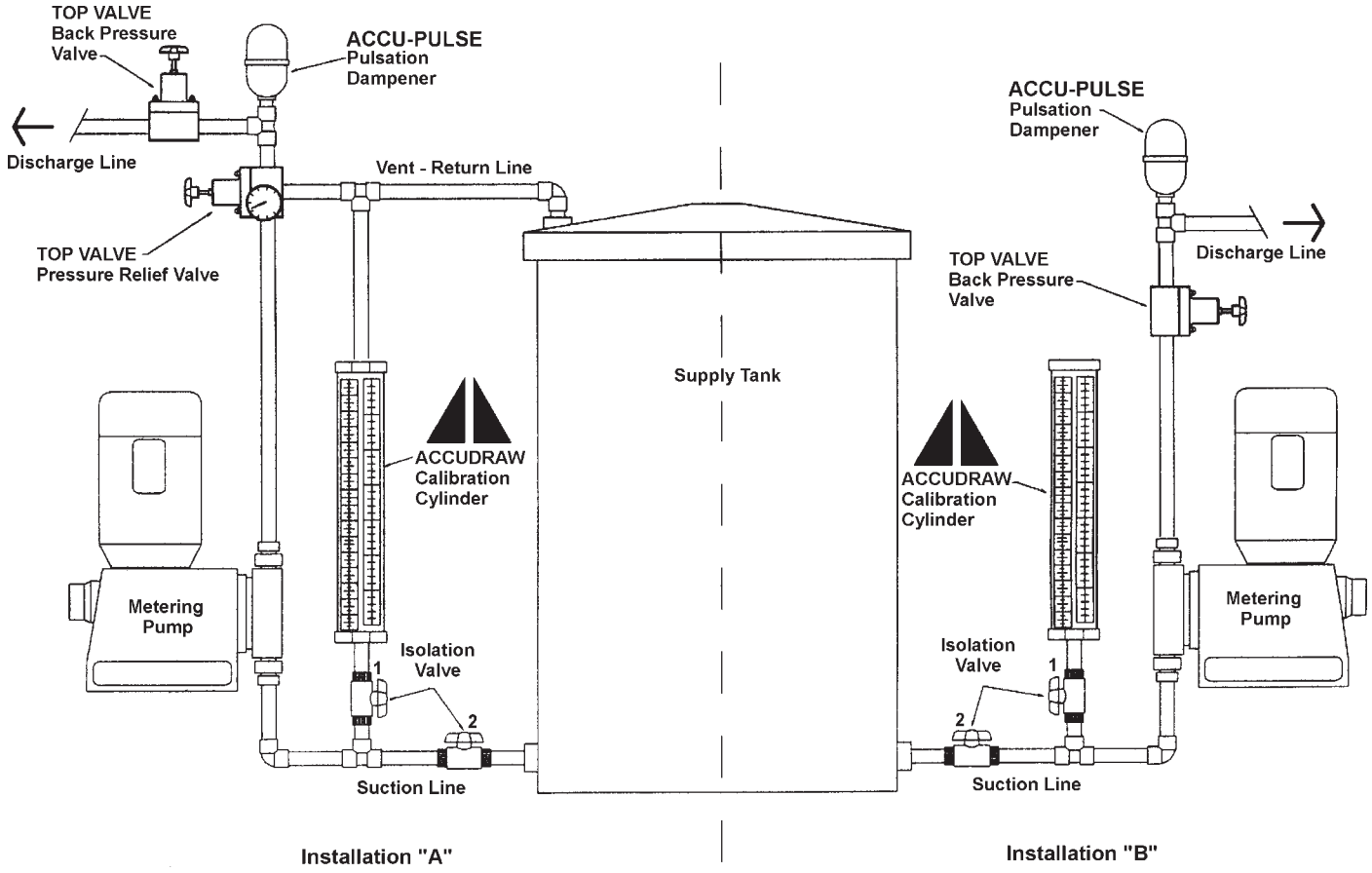

ACCU-PULSE Safety Warnings

This dampener should only be installed and used by experienced and trained professional mechanics. Observe all safety warnings. Read all safety warnings and operating manuals before using or repairing this Pulsation Dampener (hereafter referred to as “dampener”).

General Safety

This dampener is not intended to be used as a stand alone machine. EU member states must note: Do not use this dampener before it is combined into another machine or assembly that complies with all relevant EU safety directives and that the assembler’s CE mark is affixed on completion.

The internal dampener pressure will equal the maximum fluid pressure of the system in which it is installed.

Do not exceed maximum pressure as stated on dampener tag. If tag is missing, do not use this dampener without consulting distributor or factory for maximum pressure rating.

Always make sure safety shut off valves, regulators, pressure relief valves, gauges etc. are working properly before starting system or assembly.

Always wear protective gloves, safety glasses, etc. when working on or near this dampener.

Before starting a system or assembly, make certain the discharge point of the piping system is clear and safe, and all persons have been warned to stand clear.

Always wear safety glasses when installing, charging or repairing this dampener.

Do not put your face or body near dampener when the system assembly is operating or dampener is pressurized.

Do not operate a dampener that is leaking, damaged, corroded or otherwise unable to contain internal fluid, air or gas pressure.

Do not pump incompatible fluids through the dampener. Consult your distributor or the factory if you are not sure of the compatibility of the fluids with the dampener materials.

Dampeners are designed to operate with compressed air or nitrogen. Other compressed gases have not been tested and may be unsafe to use in dampeners.

Bleed all pressure from system and dampener before removing equipment from the system.

Always shut off air supply, bleed internal dampener pressure and shut isolation valve before performing maintenance or repair on dampener.

Static spark can cause an explosion resulting in severe injury or death. Ground dampeners and pumping system when pumping flammable fluids.

Equipment Misuse Hazard

General Safety:
Any misuse of this equipment such as over pressurization, modifying parts, incompatible chemicals, using worn or damage parts or using gases other than air or nitrogen to charge dampener is not recommended. Any of these circumstances could result in serious bodily injury, death, fire, explosion or property damage.

Over-Pressurization:
Never exceed the maximum operating pressure recommended for the dampener model being used. Maximum operating pressure is stated on tag. Pressure limits are stated at 20°C / 70°F.

Temperature Limits
Do not exceed the recommended operating temperatures for the shell and elastomer materials, independently. Excessive temperature will result in dampener failure.
Temperature limits are stated at zero psig / bar.

Installation and Start Up Hazards:
Install dampener before charging or pressurizing.

Do not start system or assembly without first charging or pressurizing dampener. Failure to charge may result in damage to the elastomeric bladder.

Temperature & Pressure Hazard:
Temperature and pressure reduce the strength and chemical resistance of plastic, metal and rubber.

Charging / Pressurization:
Charge or pressurize the dampener with compressed air or nitrogen only. **Do NOT use oxygen.**

Dampener Bladder Failure:
Dampeners utilize an elastomeric membrane to separate system fluid from the air supply or gas charge. When this membrane ruptures, system fluid may be expelled from the air valve. Always perform preventive maintenance and replace elastomers before excessive wear occurs.

Maintenance Hazards:
Never over-tighten clamp bands. This may cause leakage of system fluid and damage to dampener shell.

LEFT BLANK

PULSAFEEDER

PULSAR SHADOW SERIES, MECHANICAL DIAPHRAGM DOSING PUMP

LEFT BLANK

PULSAFEEDER®
ENGINEERED PRODUCTS

Installation, Operation & Maintenance Manual

PULSAR® Shadow
MECHANICAL DIAPHRAGM METERING PUMP

Bulletin: IOM-PSRM-1501 REV B

PULSAR® Factory Service Policy

Should you experience a problem with your *PULSAR* pump, first consult the troubleshooting guide in your operation and maintenance manual. If the problem is not covered or cannot be solved, please contact your local Pulsafeeder Sales Representative, or our Technical Services Department for further assistance. You may also visit our website at www.pulsa.com

Trained technicians are available to diagnose your problem and arrange a solution. Solutions may include purchase of replacement parts or returning the unit to the factory for inspection and repair. All returns require a Return Authorization number to be issued by Pulsafeeder. Parts purchased to correct a warranty issue may be credited, after an examination of original parts by Pulsafeeder. Warranty parts returned as defective which test good will be sent back freight collect. No credit will be issued on any replacement electronic parts.

Any modifications or out-of-warranty repairs will be subject to bench fees and costs associated with replacement parts.

Safety Considerations:

1. Read and understand all related instructions and documentation before attempting to install or maintain this equipment
2. Observe all special instructions, notes, and cautions.
3. Act with care and exercise good common sense and judgment during all installation, adjustment, and maintenance procedures.
4. Ensure that all safety and work procedures and standards that are applicable to your company and facility are followed during the installation, maintenance, and operation of this equipment.

Notice

Information and specifications in this document are subject to change without notice.

Copyright

Copyright © 2003 Pulsafeeder, Inc. All rights reserved.

No part of this publication may be reproduced, stored in a retrieval system or transmitted in any form or any means electronic or mechanical, including photocopying and recording for any purpose other than the purchaser's personal use without the written permission of Pulsafeeder, Inc.

Trademarks

PULSAR® is a registered trademark of Pulsafeeder, Inc.

PULSAR Shadow® is a registered trademark of Pulsafeeder, Inc.

Cruise Control®, ECA®, DLC®, and DLCM® are registered trademarks of Pulsafeeder, Inc.

Table of Contents

1. INTRODUCTION 1
   1.1 Overall Operation 1
   1.2 Component Layout 2
   1.3 Standard Reagent Head Assembly 3
   1.4 Leak Detection Assembly 4
   1.5 Control Assembly 5
   1.6 Gear Ratio Assembly 6
2. EQUIPMENT INSPECTION 6
3. STORAGE INSTRUCTIONS 7
   3.1 Short Term 7
   3.2 Long Term 7
4. INSTALLATION 8
   4.1 Location 8
   4.2 Piping System 8
   4.3 Suction Pressure Requirements 9
   4.4 Discharge Pressure Requirements 9
   4.5 Automatic Control 10
   4.6 Leak Detection Assembly 11
   4.7 Drive Motor Installation 11
      4.7.1 Motor Rotation 11
      4.7.2 Motor Installation 11
      4.7.3 Electrical 12
5. EQUIPMENT STARTUP 12
   5.1 Oil Capacities 13
   5.2 Eccentric Oil Fill 13
   5.3 Gear Oil Fill 13
   5.4 Oil Changes 14
      5.4.1 Eccentric Oil Change: 14
      5.4.2 Gear Oil Change: 14
6. STARTUP 15
   6.1 Output Adjustment 15
   6.2 Priming the Reagent Head 15
   6.3 Calibration 16
   6.4 Leak Detection 17
7. MAINTENANCE 18
   7.1 Wet End Removal, Inspection and Reinstallation 18
      7.1.1 Standard Diaphragm 18
      7.1.2 Leak Detection 19
   7.2 Check Valves 20
      7.2.1 General Description 20
      7.2.2 Removal, Inspection, and Reinstallation 20
   7.3 Oil Seals - General Description 21
   7.4 Removal and Replacement 22
   7.5 Cover Assembly 25
      7.5.1 Removal and Reinstallation 25
      7.5.2 Removal 25
      7.5.3 Reinstallation 26
   7.6 Motor 26
      7.6.1 Removal 26
      7.6.2 Reinstallation 26
8. REPLACEMENT PARTS 27

8.1 PULSAR Shadow® KOPkit Program 27
8.2 Ordering KOPkits or Parts 27
9. TROUBLESHOOTING CHART 28
10. APPENDIX I PIPING CALCULATIONS 30
10.1 Suction Head Requirements 30
10.2 System Backpressure 31
11. APPENDIX II OIL SPECIFICATIONS 32
12. APPENDIX III BOLT TORQUE TABLES 33
13. APPENDIX V PULSAFEEDER ACCESSORIES 34
13.1 Pulsation Dampeners 34
13.2 Dampener Installation 34
13.3 Pulsation Dampener Removal 36
13.4 Diaphragm Back Pressure and Pressure Relief Valves 36

Conventions

The following Conventions are used in this document.

A WARNING DEFINES A CONDITION THAT COULD CAUSE DAMAGE TO BOTH THE EQUIPMENT AND THE PERSONNEL OPERATING IT. PAY CLOSE ATTENTION TO ANY WARNING.

WARNING

NOTES ARE GENERAL INFORMATION MEANT TO MAKE OPERATING THE EQUIPMENT EASIER.

NOTE

Revision History:

REV A	Release date February, 2016 Branding and document number updated
REV B	Release date May, 2016 Appendix III, Bolt torque table updated

1. Introduction

PULSAR Shadow® metering pumps are positive displacement reciprocating pumps. They combine the high efficiency of the plunger pump with diaphragm sealing to prevent product leakage. Each pump consists of a power end and a process end separated by a mechanically operated diaphragm. Individual pumps will vary in appearance due to various liquid ends, accessories, and multiplexing; however, the basic principles of operation remain the same.

1.1 Overall Operation

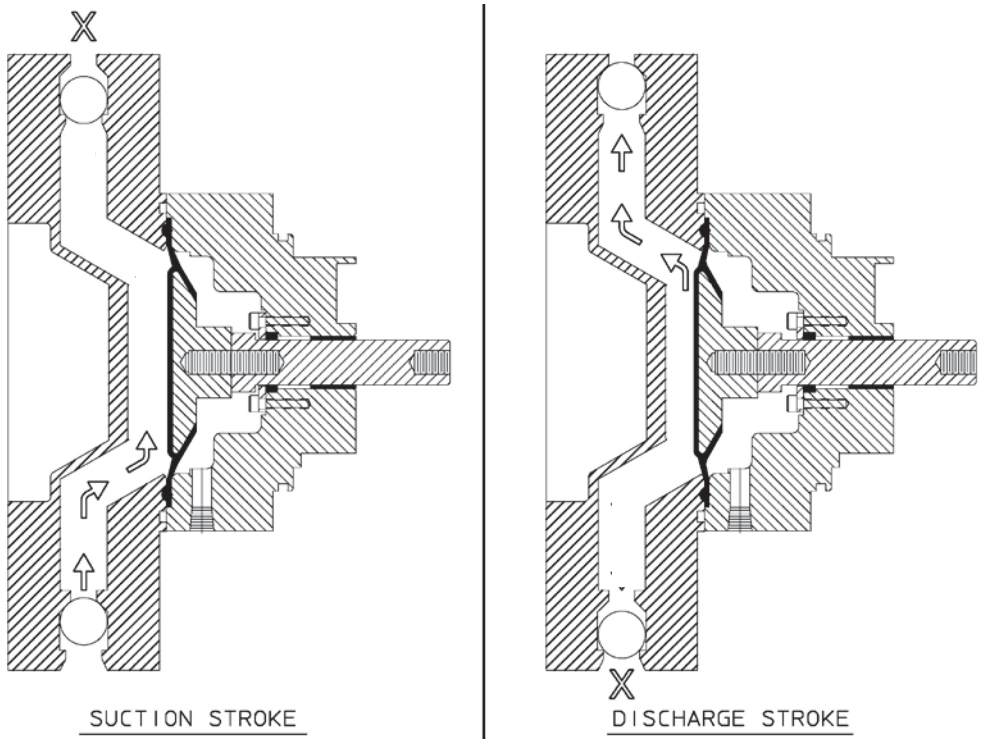

Figure 1

A diaphragm reciprocates at a preset stroke length, displacing an exact volume of process fluid. Diaphragm retraction causes the product to enter through the suction check valve. Diaphragm advance causes the discharge of an equal amount of the product through the discharge check valve.

1.2 Component Layout

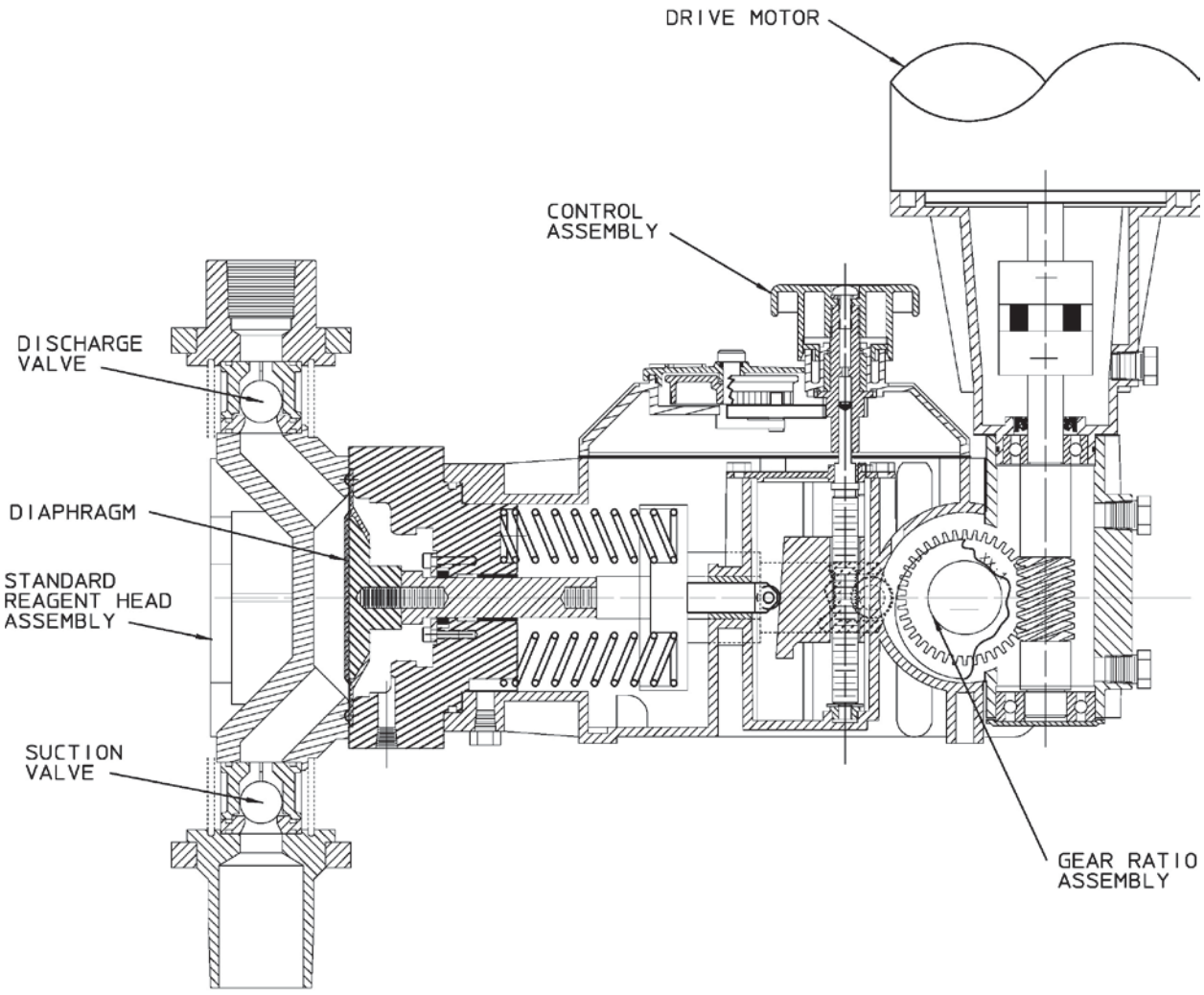

Figure 2

A typical model with manual external stroke adjustment is shown.

1.3 Standard Reagent Head Assembly

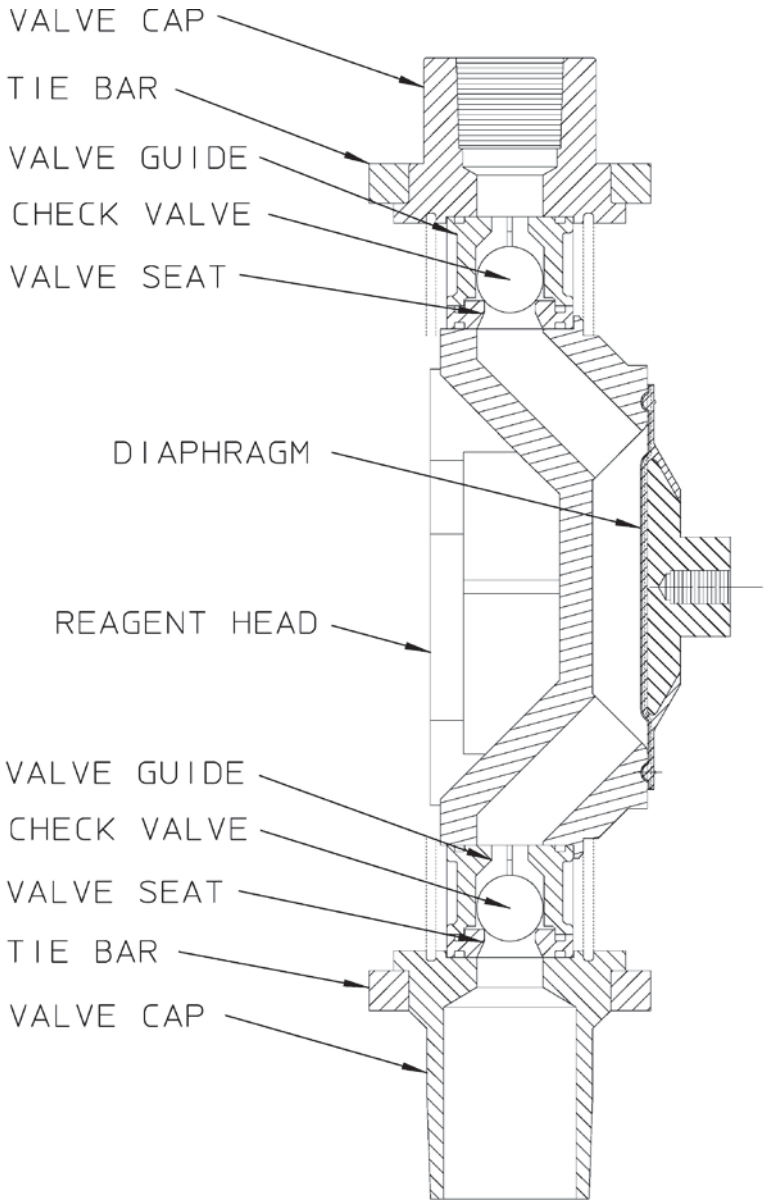

Figure 3

The typical reagent head assembly consists of reagent head, diaphragm, and suction and discharge check valves. This assembly is the only part of the pump to contact the process liquid; consequently, maintenance is critical to pump performance. For most pump configurations, suction and discharge check valve components are identical.

1.4 Leak Detection Assembly

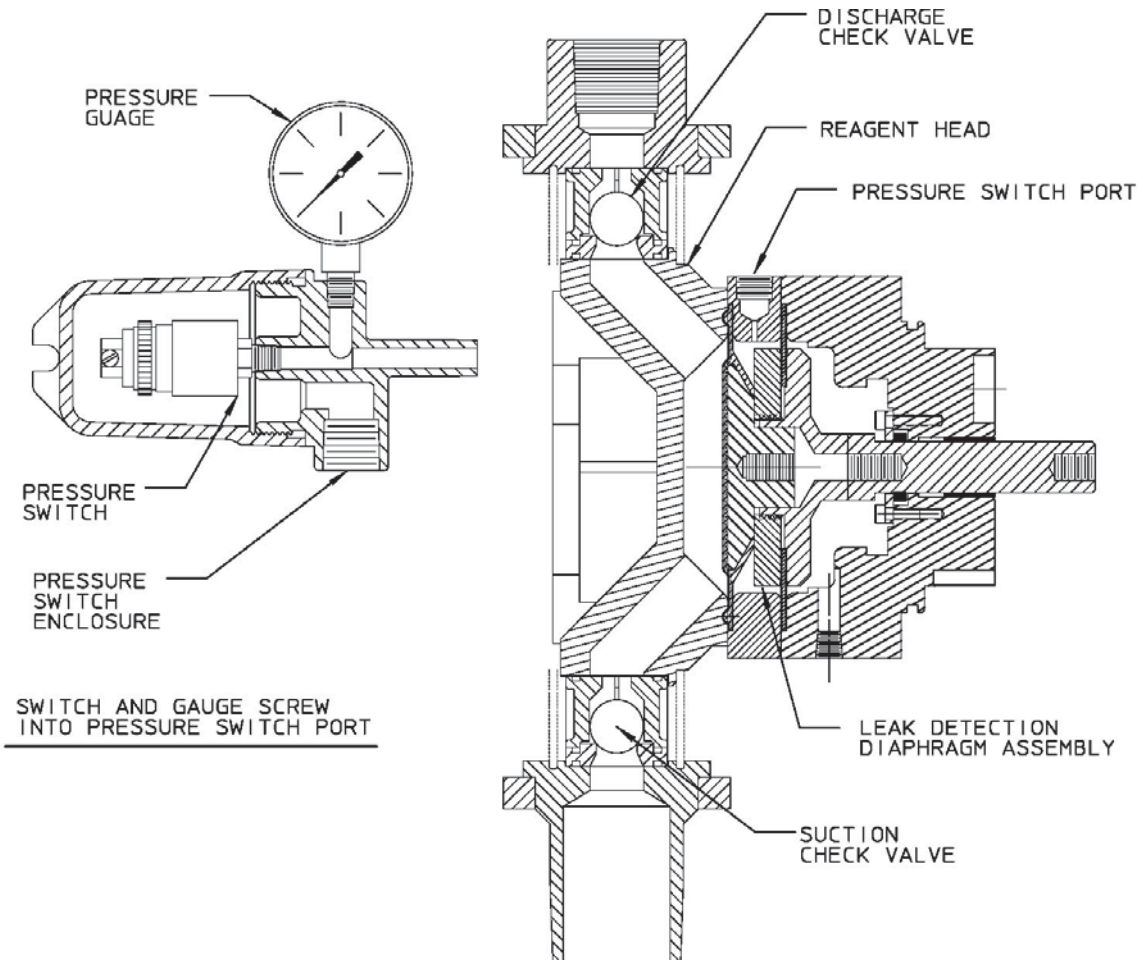

Figure 4

The Leak Detection Assembly (LDA) consists of a reagent head, suction and discharge check valves, primary diaphragm, leak detection diaphragm assembly, pressure switch port, and optional pressure switch and gauge. The reagent head, suction and discharge check valves, and primary diaphragm are the only parts of the pump to contact the process liquid; consequently, maintenance is critical to pump performance.

If there is a breach of the primary (product side) diaphragm, process liquid will enter the space between the primary and leak detection diaphragms. The liquid will be contained in this area and is prevented from contacting other components of the pump. On the discharge stroke, pressure will build in between the diaphragms. This pressure will activate the pressure switch. It is recommended that the pressure switch be integrated into a control system that will shut the pump off if a leak is detected. The pressure switch may be wired directly to a Pulsafeeder DLC or DLCM controller if the pump is so equipped.

1.5 Control Assembly

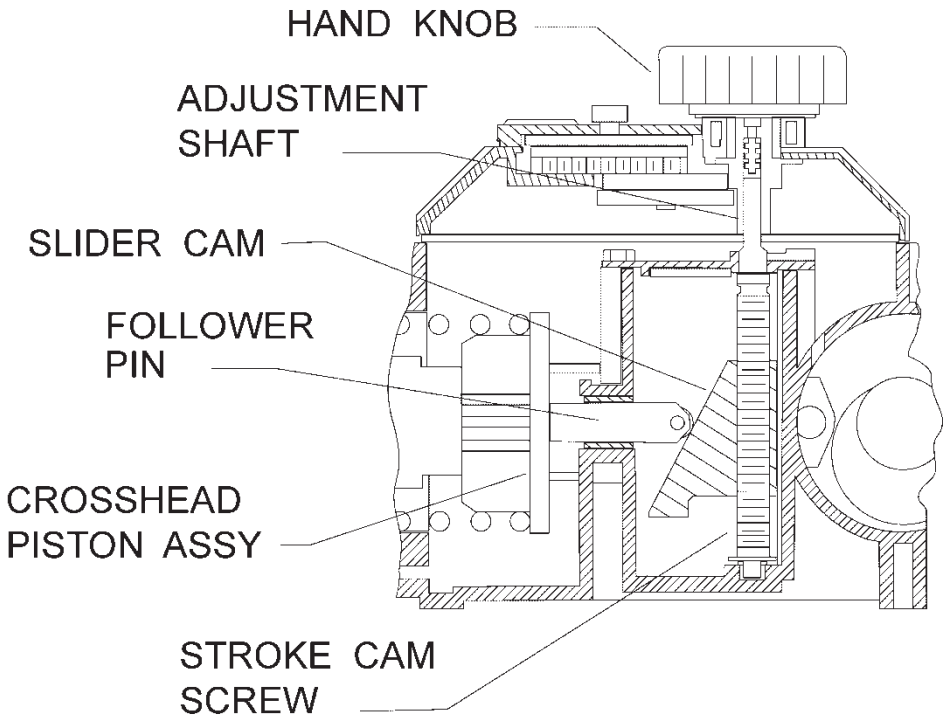

Figure 5

PULSAR Shadow® pumps incorporate a lost motion style of stroke length adjustment to limit diaphragm travel during the suction portion of each stroke. The stroke length setting is indicated by a (0 - 100) scale located on the top of the unit.

Stroke length is changed by depressing and turning the hand knob. This turns a screw, which locates a wedge-shaped slider cam to position the follower pin, which in turn limits rearward travel of the diaphragm.

To increase stroke length, the slider cam is moved downwards. This allows the follower pin to slide back, increasing the distance the diaphragm can travel with each pump stroke.

To decrease stroke length, the slider cam is moved upwards. This moves the follower pin forwards, decreasing the diaphragm travel, and therefore the flow rate of the pump.

1.6 Gear Ratio Assembly

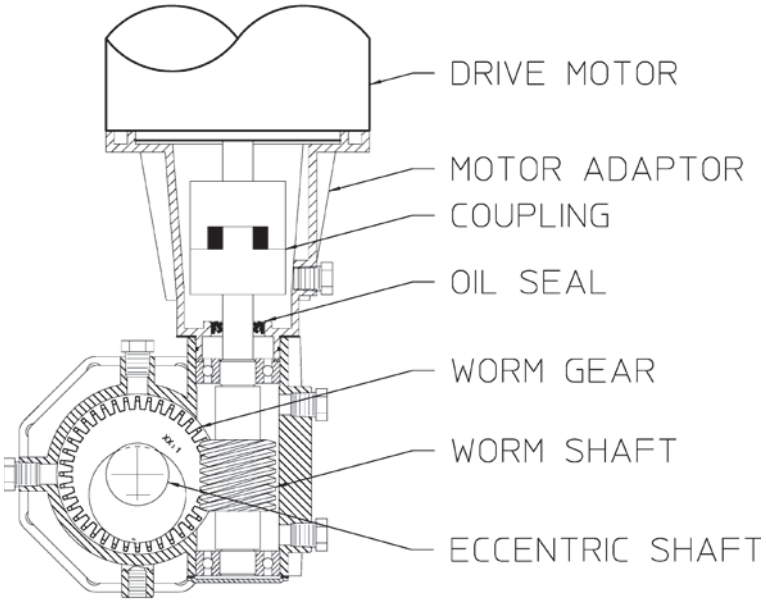

Figure 6

PULSAR Shadow® pumps are driven by a standard C-face electric motor mounted on the motor adaptor input flange. The motor drives a set of worm gears, which convert rotational speed into torque. They, in turn, power the eccentric shaft assembly that converts rotary motion into reciprocating motion. The drive motor can be wired to rotate in either direction.

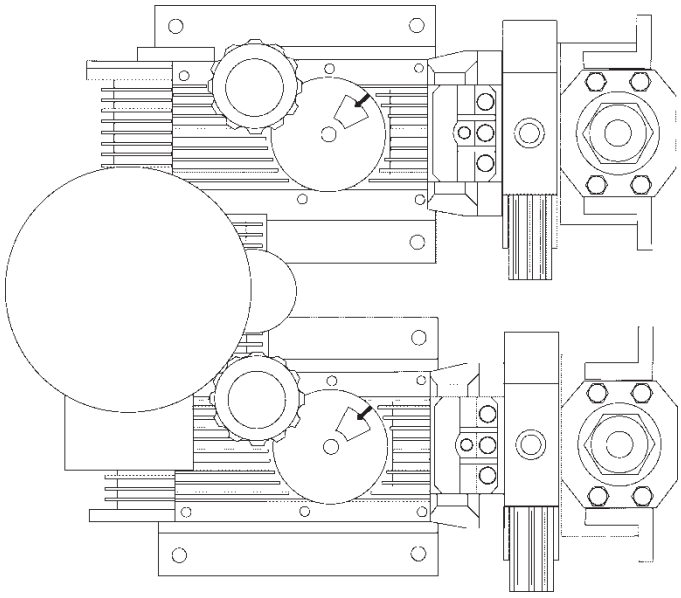

More than one pump can be driven through a single drive assembly. This is referred to as multiplexing. The pumps are mounted to a common gearbox assembly, and driven by a common motor. Each pump is mounted on a standard simplex base.

Whenever pumps are multiplexed, the eccentric shafts are positioned to place a uniform load on the driver. Before full disassembly, always note the relative positions of the eccentric shafts to each other so they can be reassembled back in the same orientation.

Figure 7

2. Equipment Inspection

Check all equipment for completeness against the order and for any evidence of shipping damage. Shortages or damage should be reported immediately to the carrier and your authorized representative for PULSAR Shadow® pumps.

3. Storage Instructions

3.1 Short Term

Storage of PULSAR Shadow® pumps for up to 12 months is considered short-term. The recommended short-term storage procedures are:

1. Store the pump indoors at room temperature in a dry environment.
2. Within two months after date of shipment, fill the eccentric box to its normal operating level with Pulsalube 9M oil. If required by the operating environment, take any steps required to prevent entry of water or humid air into the eccentric enclosure.
3. Prior to start up, inspect housing, and gearbox. Replenish eccentric and gearbox oils as required to maintain operating levels. If water or condensation is present, change oil as described under Equipment Startup, Section 5.
4. Prior to startup, perform a complete inspection and then start up in accordance with instructions in this manual.

3.2 Long Term

Every twelve months, in addition to the above short-term procedures, power up the motor and operate the pump for a minimum of one hour. It is not necessary to have liquid in the reagent head during this operation, but the suction and discharge ports must be open to atmosphere.

After twelve months of storage, Pulsafeeder's warranty cannot cover items that are subject to deterioration with age such as seals and gaskets. If the pump has been in storage longer than 12 months it is recommended that such items be inspected and replaced as necessary prior to startup. Materials and labor to replace this class of item under these circumstance are the purchaser's responsibility. For a continuance of the initial warranty after extended storage, equipment inspection and any required refurbishing must be done by a Pulsafeeder representative.

4. Installation

4.1 Location

When selecting an installation site or designing a skid package, consideration should be given to access for routine maintenance.

PULSAR Shadow® pumps are designed to operate indoors and outdoors, but it is desirable to provide a hood or covering for outdoor service. External heating is required if ambient temperatures below 0O C (32O F) are anticipated. Check with the factory if concerned with the suitability of the operating environment.

The pump must be rigidly bolted to a solid and flat foundation to minimize vibration, which can loosen connections. When the pump is bolted down, care must be taken to avoid distorting the base and affecting alignments. The pump must be level within 5O. This will assure that the eccentric and gear oils are maintained at the proper levels and that the check valves can operate properly.

4.2 Piping System

All piping systems should include:

A separate system relief valve to protect piping and process equipment, including the pump, from excess process pressures. *An external relief valve is required, as a mechanical diaphragm pump does not incorporate an internal relief.

Shutoff valves and unions (or flanges) on suction and discharge piping. This permits check valve inspection without draining long runs of piping. Shutoff valves should be of the same size as connecting pipe. Ball valves are preferred since they offer minimum flow restriction.

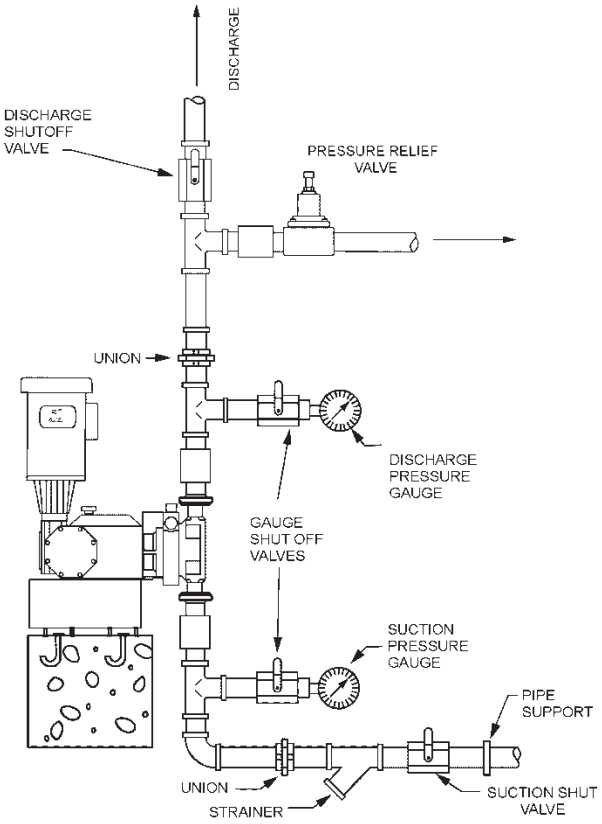

Figure 8

An inlet strainer, if the product is not a slurry. Pump check valves are susceptible to dirt and other solid contaminants unless designed for that service, and any accumulation can cause malfunction. The strainer should be located between the suction shutoff valve and the pump suction valve. It must be sized to accommodate the flow rate and the anticipated level of contamination. A 100-mesh screen size is recommended.

Vacuum/pressure gauges in the suction and discharge lines in order to check system operation. Gauges should be fitted with protective shutoff valves for isolation while not in use.

Piping weight must not be supported by valve housings or other portions of the reagent head, as the resulting stresses can cause leaks. If appropriate, provide for thermal expansion and contraction so that no excess force or moments are applied to the pump.

In piping assembly, use a sealing compound chemically compatible with the process material. Users of sealing tape are cautioned to ensure that the entering pipe thread ends are not taped, and that tape is removed from previously-used threads to the maximum practical extent prior to re-use. Both new and existing piping should be cleaned, preferably by flushing with a clean liquid (compatible with process material) and blown out with air, prior to connection to the pump.

4.3 Suction Pressure Requirements

Although PULSAR Shadow® metering pumps have suction lift capability, a flooded suction (i.e., suction pressure higher than atmospheric pressure) is preferable whenever possible. The pump should be located as close as possible to the suction side reservoir or other source.

For fluid with a vapor pressure of 5 psia or less (at operating temperature) the wet suction lift capability is ten (10) feet. If this requirement is not met, the pump will not provide reliable, accurate flow. The Net Positive Suction Head Required (NPSHR) is 0.35 bar (5 psi).

The maximum inlet pressure is limited to 0.35 bar (5 psi) below the operating discharge pressure.

Refer to Appendix I for procedures for the calculation of suction pressure.

4.4 Discharge Pressure Requirements

All PULSAR Shadow® Metering Pumps are designed for continuous service at the rated discharge pressure. If system suction pressure were to exceed system discharge pressure (a condition sometimes described as “pumping downhill”), flow would be generated (siphoning) in addition to that caused by the pump, resulting in a reduction in accuracy and loss of control over the metering process. To prevent this condition, commonly referred to as “flowthrough”, the discharge pressure must exceed suction pressure by at least 0.35 Bar (or 5 psi). This can be achieved where necessary by the installation of a backpressure valve in the discharge line.

Damage to the pump will occur if operated at pressures beyond the maximum rating.

Refer to Appendix I for procedures for the calculation of discharge pressure.

4.5 Automatic Control

Pumps equipped with the DLC, DLCM, or ECA electronic stroke length controllers are provided with separate instructions. Refer to the latest Installation, Operation and Maintenance Manual specific to your controller. Follow all safety and operational information contained in those documents. Perform and verify all controller installation procedures prior to pump startup.

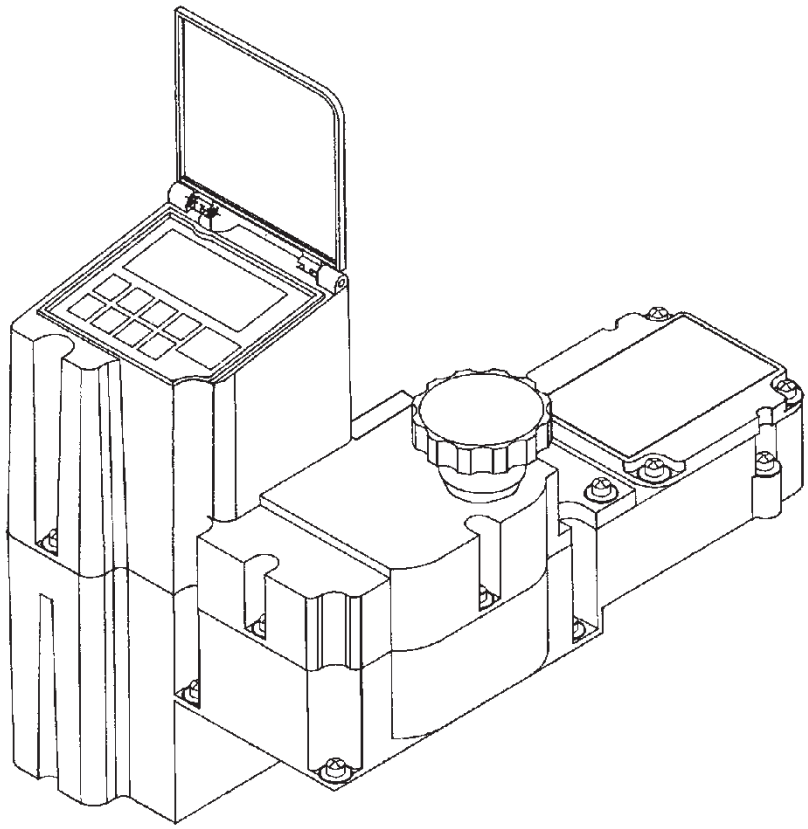

Figure 9

4.6 Leak Detection Assembly

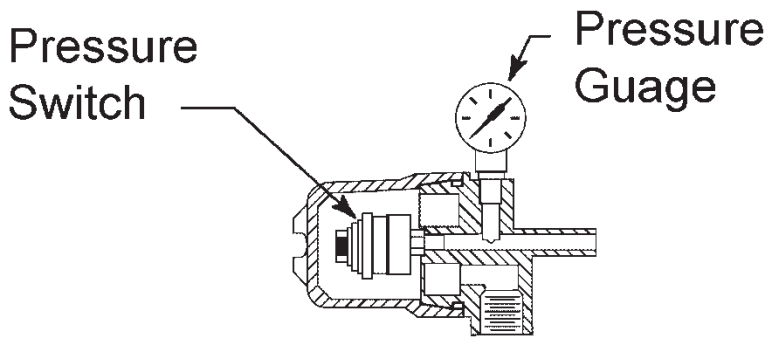

Pressure Switch Enclosure

Figure 10

If the diaphragm leak detection system was specified with an optional pressure switch, install electrical wiring and conduit in accordance with local electrical codes. The switch is rated as follows:

The switch is rated as follows:

30 VDC or 125 VAC 1 Ampere Resistive.

The switch should be wired such that if a leak condition is detected, the pump will be shut down. The switch is the SPDT (single pole, double throw) type and can therefore be connected to either open or to close upon detection of diaphragm leak condition. Contacts or wires are identified as follows:

Normally Open (NO) wire color WHITE
Normally Closed (NC) wire color RED
Common (Com) wire color BLACK

WARNING

THE ENCLOSURE IS LABELED WITH APPLICABLE SAFETY AGENCY RATINGS FOR HAZARDOUS AREA INSTALLATION. SINCE THE SWITCH IS OF THE MECHANICAL CONTACT TYPE, IT CAN NEVER QUALIFY AS NON-SPARKING (NON-INCENDIVE, OR "M") FOR OCCASIONAL AND SHORT-TERM HAZARDOUS AREA USE. PROTECTION MUST BE PROVIDED BY THE ENCLOSURE.

4.7 Drive Motor Installation

4.7.1 Motor Rotation

Motor can be operated in either direction, clockwise or counterclockwise. Verification of motor direction is not necessary at startup.

4.7.2 Motor Installation

PULSAR Shadow® pumps may be shipped with the drive motor packed separately. This is done to avoid damage during transport.

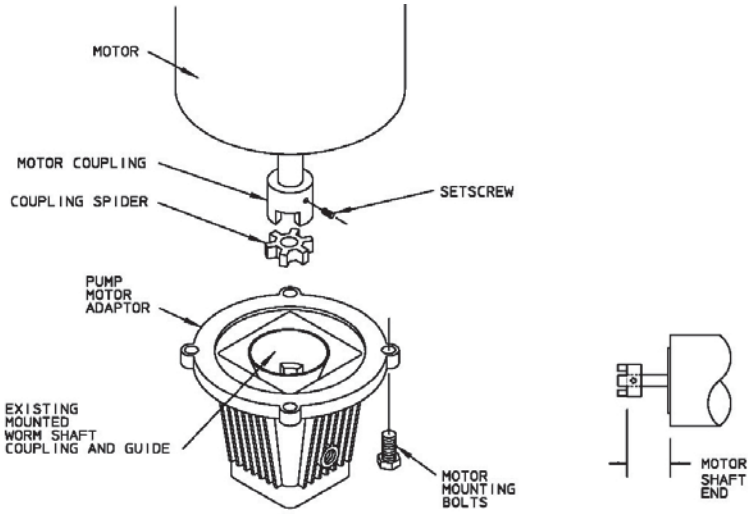

Figure 11

Remove the unattached coupling half from the motor adaptor. Ensure that the elastomer coupling spider remains in place, on the coupling half that remains attached to the worm shaft.

If applicable, remove any tape or retainer rings that hold the motor shaft key in place.

Place the loose coupling half on the motor shaft. Align the keyway with the key and align shaft end to inner coupling surface as shown in figure above.

Tighten the setscrew onto the shaft key.

Place the motor in a vertical position and align the coupling teeth.

Install the motor downwards onto the adaptor. The plastic guide will assist in aligning the coupling halves. Final position can be achieved by slightly rotating the motor until the coupling jaws align.

Rotate the motor until the clearance holes in the adaptor and the tapped holes in the motor align. Fasten the motor to the adaptor using the supplied bolts (4). Tighten bolts evenly to secure motor.

4.7.3 Electrical

Wire the PULSAR Shadow® drive motor according to the motor vendor's nameplates and instructions, and according to any appropriate national and local electrical codes and regulations.

If the motor is to be utilized with a Pulsafeeder controller, such as the DLC or DLCM, consult the appropriate Pulsafeeder IOM for further motor wiring instructions.

5. Equipment Startup

WARNING

PULSAR SHADOW® PUMP USE TWO SEPARATE OILS: PULSALUBE 9M OIL FOR THE ECCENTRIC BOX AND PULSALUBE 8G, GEAR OIL FOR THE GEARBOX. CONFUSION BETWEEN THE TWO REDUCES PERFORMANCE OF THE PUMP.

5.1 Oil Capacities

Pulsalube 9M lubricating oil is available in 950 ml (1 quart) containers.

Pulsalube 8G gear oil is available in 200 ml (.21 quarts) or 950 ml (1 quart) containers.

It is recommended that adequate supplies of both PULSAlube oils be on hand for periodic changes and emergency requirements. The approximate amounts of oil required to fill PULSAR Shadow® pumps to specified levels are:

	Eccentric Box, all	Gearbox, Model 25B	Gearbox, Model 55B
Eccentric Oil, No. 9M	950 ml (1 Qt)	--	--
Gear Oil, No. 8G	--	150 ml (0.16 Qt)	200 ml (0.21 Qt)

5.2 Eccentric Oil Fill

Fill the eccentric box with oil by removing the manual cover assembly or DLC/M or ECA controller if so equipped. Fill with the proper oil (Pulsalube 9M) to the upper edge of the crosshead assembly and return spring(s) or slightly above. Replace the cover or controller. Take care not to disturb the stroke length setting when reinstalling. See figure 12.

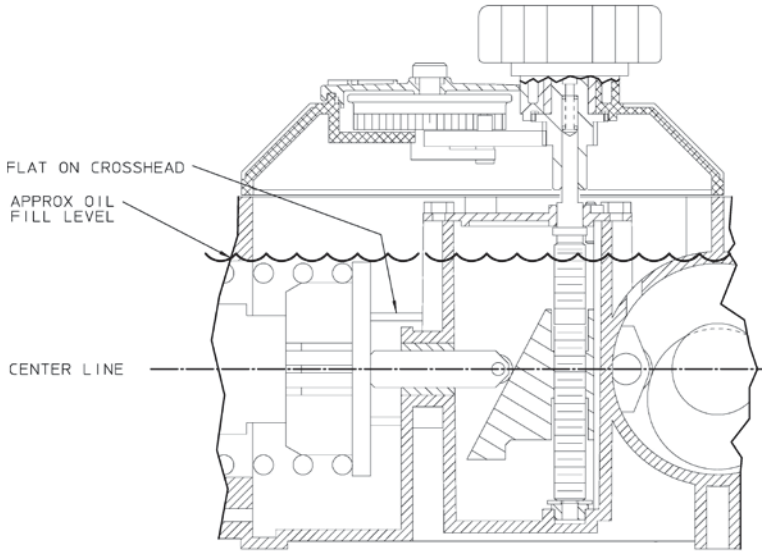

Figure 12

5.3 Gear Oil Fill

In all pump configurations, one pipe plug is present at the top of the gearbox and one is on the side at the centerline level. Remove the top plug and fill with Pulsalube 8G gear oil through the top port to the level of the eccentric shaft centerline, which is level with the side port. The side plug should be removed so that leakage from the side port indicates attainment of the required level. Replace both pipe plugs after filling.

NOTE

GEAR OIL IS FILLED AT THE FACTORY, AND THE GEARBOX IS SHIPPED FULL.

DO NOT ADD OIL THROUGH THE PORT ON THE SIDE OF THE MOTOR ADAPTOR. THIS PORT IS FOR MOTOR COUPLING ACCESS ONLY.

5.4 Oil Changes

The recommended oil change intervals are dependent upon the operating environment and level of pump usage, classified as follows:

Normal service: Clean/dry atmosphere, an ambient operating temperature of 00˚C to 400˚C (320˚F to 1040˚F) and up to 2,000 annual operating hours.

Severe Service: Humid atmosphere, an ambient operating temperature below 00˚C (320˚F) or above 400˚C (1040˚F), and over 2,000 annual operating hours.

5.4.1 Eccentric Oil Change:

The recommended eccentric oil change interval is two (2) years for normal service and one (1) year for severe service. The procedure is as follows:

1. Disconnect the power source to the drive motor
2. Relieve all pressure from the piping system.
3. Remove the top cover or controller from the pump.
4. Drain the oil by removing the drain plug on the bottom of the eccentric box.
5. Replace the drain plug.
6. Fill the eccentric box with Pulsalube 9M oil as described under **Eccentric Oil Fill.**
7. Replace the top cover or controller.

5.4.2 Gear Oil Change:

The recommended gear oil change interval is five (5) years for normal service and two (2) years for severe service. The procedure is as follows:

1. Disconnect the power source to the drive motor
2. Relieve all pressure from the piping system.
3. Remove the fill plug from the top of the gearbox.
4. Drain the oil by removing the drain plug on the bottom of the gearbox.
5. Replace the drain plug.
6. Refill with fresh Pulsalube 8G (amber) gear oil as described under **Gear Oil Fill**.
7. Be sure to replace the top fill plug and side plug.

6. Startup

6.1 Output Adjustment

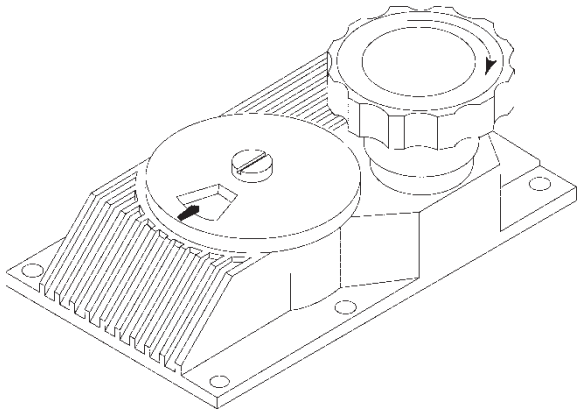

Figure 13

PULSAR Shadow® pumps have a handwheel for manual stroke length adjustment. Mounted atop the eccentric box, the handwheel can be adjusted at any point from (0 to 100%) stroke setting by pressing down and then rotating as required. Stroke length is locked during operation to prevent drift: pressing the handwheel down temporarily disengages the lock for adjustment; release after adjustment automatically resets the lock at the new setting. An indicator adjacent to the handwheel displays the output setting. Adjustments can be made while the pump is at rest or operating, although adjustments are easier to make while the pump is in operation. Manual adjustment serves as a backup for pumps provided with DLC/M controllers.

6.2 Priming the Reagent Head

1. Open the suction and discharge line shutoff valves.
2. If the piping system design and the storage tank are such that the product flows due to gravity through the pump, reduce the discharge pressure and the system will self prime when the pump is started. In the event the discharge line contains a significant amount of pressurized air or other gas, it may be necessary to lower the discharge pressure to enable the pump to self-prime.
3. If the installation involves a suction lift, it may be necessary to prime the reagent head and suction line. Try priming the reagent head first. Refer to the Maintenance Section on Check Valves. Remove the discharge valve assembly. Fill the head through the discharge valve port with process (or compatible) liquid, and then reinstall the valve.
4. Start the pump at the zero stroke length setting and slowly increase the setting to 100 to prime the pump. If this does not work, it will be necessary to fill the suction line.
5. Filling of the suction line will necessitate the use of a foot valve or similar device at the end of the suction line so that liquid can be maintained above the reservoir level. Remove the suction valve assembly, fill the line, replace the valve, then remove the

discharge valve assembly and fill the reagent head as described in Step (3) above. The pump will now self-prime when started up per step (4) above.

6.3 Calibration

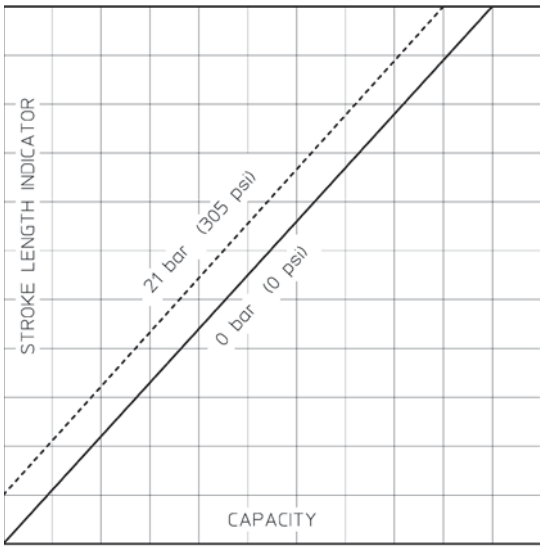

Figure 14

All metering pumps must be calibrated in order to accurately specify stroke length settings for required flow rates. For pumps provided with DLC/M electronic controls, refer to separate instructions provided with those controllers.

A typical calibration chart is shown in Figure 14. Although output is linear with respect to stroke length setting, an increase in discharge pressure decreases output uniformly, describing a series of parallel lines, one for each pressure (only two are shown).

The theoretical output flow rate at atmospheric discharge pressure is based on the displacement of the diaphragm, stroke length and the stroking rate of the pump. With increasing discharge pressure there is a some corresponding decrease in output flow. Pumps are rated at a certain flow at their rated pressure (check nameplate). Whenever possible, calibration should be performed under actual process conditions (i.e., the same or a similar process liquid at system operating pressure).

To construct a calibration chart, measure the flow rate several times at three or more stroke settings (i.e., 25, 50, 75, and 100), plot these values on linear graph paper, and draw a best-fit line through the points. For stable conditions, this line should predict settings to attain required outputs.

6.4 Leak Detection

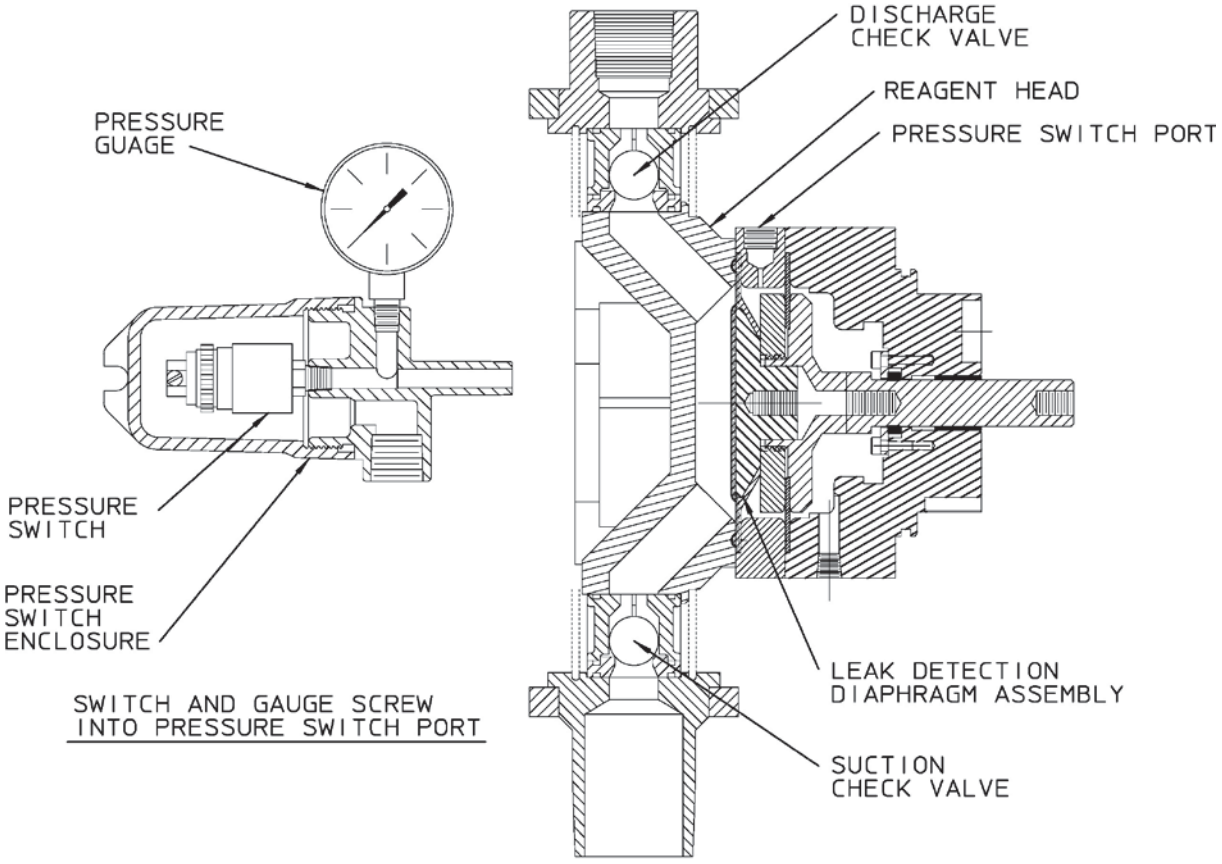

Figure 15

Follow the same priming procedure for a standard reagent for pumps equipped with the diaphragm leak detection system.

If the optional pressure switch has been supplied, apply power to the alarm circuit. It is recommended that this switch be integrated into the pump control system. If a failure of the diaphragm is detected, the pump should be shut down until a diagnosis of the fault can be made.

7. Maintenance

WARNING

BEFORE PERFORMING ANY MAINTENANCE REQUIRING REAGENT HEAD OR VALVE (WET END) DISASSEMBLY, BE SURE TO RELIEVE PRESSURE FROM THE PIPING SYSTEM AND, WHERE HAZARDOUS PROCESS MATERIALS ARE INVOLVED, RENDER THE PUMP SAFE TO PERSONNEL AND THE ENVIRONMENT BY CLEANING AND CHEMICALLY NEUTRALIZING AS APPROPRIATE. WEAR PROTECTIVE CLOTHING AND EQUIPMENT AS REQUIRED.

Accurate records from the early stages of pump operation will indicate the type and levels of required maintenance. A preventative maintenance program based on such records will minimize operational problems. It is not possible to forecast the lives of wetted parts such as diaphragms and check valves. Since corrosion rates and operational conditions affect functional material life, each metering pump must be considered according to its particular service conditions.

PULSAR Shadow® KOPkits contain all replacement parts normally used in a preventative maintenance program. It is recommended that KOPkits and PULSAlube eccentric and gear oils be kept available at all times.

7.1 Wet End Removal, Inspection and Reinstallation

WARNING

IF THE DIAPHRAGM HAS FAILED, PROCESS FLUID MAY HAVE CONTAMINATED THE PUMP ECCENTRIC OIL (ALTHOUGH NORMALLY, ANY PROCESS FLUID BEHIND A FAILED DIAPHRAGM WOULD PASS THROUGH THE BOTTOM DRAIN HOLE). HANDLE WITH APPROPRIATE CARE, CLEAN AND REPLACE OIL IF REQUIRED.

7.1.1 Standard Diaphragm

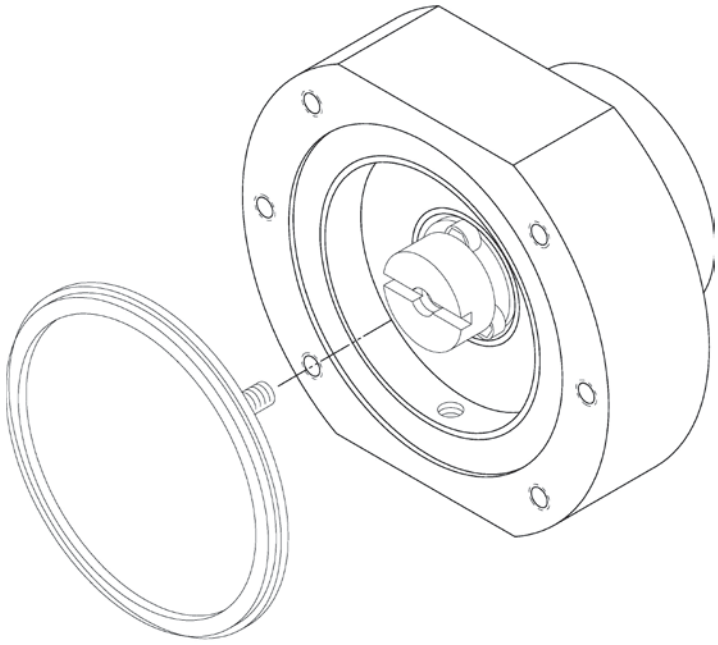

Figure 16

PULSAR Shadow® diaphragms do not have a specific cycle life; however, the accumulation of foreign material or debris sufficient to deform the diaphragm can eventually cause failure. Failure can also occur as a result of system over pressure or chemical attack. Periodic diaphragm inspection and replacement are recommended.

1. Adjust the stroke setting to 50 percent and disconnect the power source to the drive motor
2. Relieve all pressure from the piping system.
3. Take all precautions described in this manual to prevent environmental and personnel exposure to hazardous materials.
4. Close the inlet and outlet shutoff valves.
5. Disconnect piping to the reagent head and drain any process liquid, following material safety precautions described. Removal of the check valves may assist in this process.
6. Place a pan underneath the pump head adaptor to catch any liquid leakage.
7. Remove all but one top reagent head bolt. Product will leak out between the pump head adaptor and reagent head as the bolts are loosened.
8. Tilt the head and pour out any liquids retained into a suitable container, continuing to follow safety precautions as appropriate.
9. Remove the final bolt and rinse or clean the reagent head as required.
10. Remove the diaphragm by turning counter-clockwise and inspect the diaphragm. The diaphragm must be replaced if any surface is cracked, separated, or obviously damaged.
11. To install a diaphragm, first ensure that the critical sealing areas of diaphragm, reagent head, and pump head are clean and free of debris. Lubricate the elastomer (back) side of the diaphragm liberally, where it is in contact against the pump head and deflection plate, with a lubricant compatible to the fluid being pumped (silicone grease is preferred ex. Parker 'Super O-Lube').
12. Thread the diaphragm (clockwise) fully onto the shaft. When reinstalling a used diaphragm it is not necessary to maintain the previous orientation relative to the reagent head or pump head hole pattern.
13. Install the reagent head and tighten the bolts in an alternating pattern to ensure an even seating force. Torque to the values recommended in Appendix III.
14. Replace the check valve assemblies. It is recommended that new o-ring seals be utilized when these components have been disassembled for maintenance.
15. Reprime the pump per the procedure outlined in Section 6.2 ☐

7.1.2 Leak Detection

Follow the same procedures as described for the standard diaphragm, steps 1-15.

IT IS NOT NECESSARY TO REMOVE OR REPLACE THE LDA SECONDARY (REAR) DIAPHRAGM UNLESS IT HAS BEEN DAMAGED.

IF DISASSEMBLY OF THE HEAD IS REQUIRED, EXERCISE CAUTION DURING REMOVAL SINCE THE RETURN SPRING OF THE PISTON IS UNDER FULL LOAD. CONSULT FACTORY PRIOR TO PERFORMING THIS PROCEDURE.

7.2 Check Valves

7.2.1 General Description

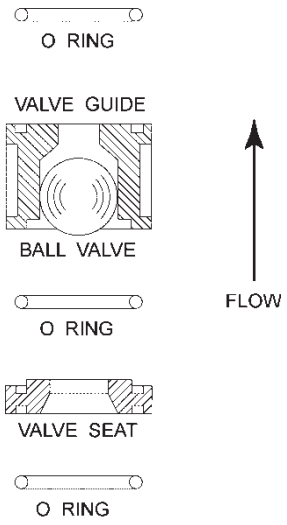

Figure 17

Most fluid metering problems are related to check valves. Problems usually stem from solids accumulation between valve and seat, corrosion of seating surfaces, erosion, or physical damage due to wear or the presence of foreign objects.

The valve incorporates a ball, guide, and seat. Flow in the unchecked direction lifts the ball off the seat, allowing liquid to pass through the guide. Reverse flow forces the ball down, sealing it against the sharp edge of the seat. The guide permits the ball to rotate but restricts vertical and lateral movement in order to minimize “slip” or reverse flow. Ball rotation prolongs life by distributing wear over the entire surface of the ball. Since ball return is by gravity, the valve must be in the vertical position in order to function properly. Parts are sealed by “O”-rings.

7.2.2 Removal, Inspection, and Reinstallation

Use the following procedure to remove, inspect and reinstall the check valves:

1. Disconnect the power source to the drive motor.
2. Relieve all pressure from the piping system.
3. Take all precautions to prevent environmental and personnel exposure to hazardous materials.
4. Close the inlet and outlet shutoff valves.
5. Loosen the suction valve tiebar bolts and spring the suction piping slightly to drain any liquid from the reagent head cavity. If the piping is closely connected it may be necessary to disconnect a union or flange.
6. Remove the suction check valve assembly (ball contained within guide and seat), holding it together as a unit.
7. Loosen the tiebar bolts on the discharge valve and spring the piping slightly to drain any liquid.
8. Remove the discharge check valve assembly, holding it together as a unit as before.
9. Disassemble both valves and examine components for wear. Seats should have sharp edges or a small chamfer, free from dents or nicks. Hold the ball firmly against its mating seat in front of a bright light to inspect for fit.

NOTE

OBSERVATION OF LIGHT BETWEEN BALL AND SEAT IS CAUSE FOR REPLACEMENT OF EITHER OR BOTH COMPONENTS. FOR BEST RESULTS, ALWAYS LOOSEN THE UNIONS OR FLANGES ON EITHER SIDE OF THE SYSTEM PIPING PRIOR TO RE-TIGHTENING OF THE CHECK VALVE ASSEMBLIES. RETIGHTEN THE UNIONS OR FLANGES AFTER THE CHECK VALVES ARE SECURELY TIGHTENED INTO POSITION.

10. Reassemble both valves using new parts as required. Sealing “O”-rings should generally be replaced.
11. Reinstall both valve assemblies, taking care to ensure that they are correctly oriented with balls above seats.
12. Tighten the tiebar bolts evenly, making sure the valve assemblies are assembled squarely. Refer to ***Appendix III*** for torque values.
13. Check for leaks and retighten tiebar bolts as necessary. Re-check any piping connections that may have been disturbed.

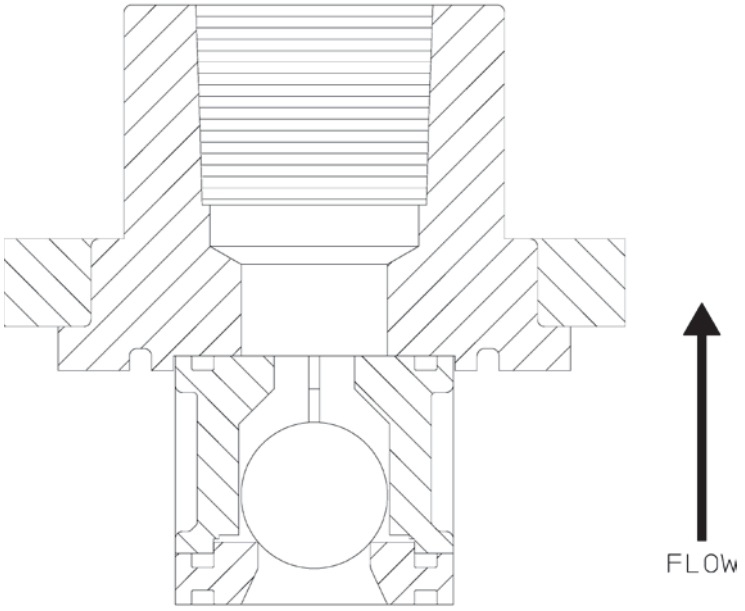

Figure 18

7.3 Oil Seals - General Description

The pump has four oil seals as follows:

Seal	**Location**
Pump shaft	Inside the pump head
Motor adapter	Inside the motor adapter, below the worm shaft coupling
Gearbox oil	Inside the screwed end play adjustment cap on the side of the gearbox
Eccentric box	On the side of the gearbox where the eccentric shaft protrudes.

7.4 Removal and Replacement

To replace the pump shaft seal:

Following the instructions in the previous sections, remove the reagent head assembly. Then remove the diaphragm. Remove the pump shaft by unscrewing counter-clockwise. Take care not to allow any shims to drop into the eccentric box when removing the shaft. A thread-locking compound is used between the pump shaft and the crosshead assembly. Remove the three (3) socket head screws and seal retainer plate. The seal can now be removed. DO NOT reuse a damaged pump shaft or polish an old one too smooth. A shaft that is too smooth will weep oil over time when running.

Reinstall by reversing the disassembly procedure. Lubricate the ID of the seal liberally with silicone grease (ex. Parker 'Super O-Lube'). Refill the eccentric box with Pulsalube Oil 9M per the Lubrication Section.

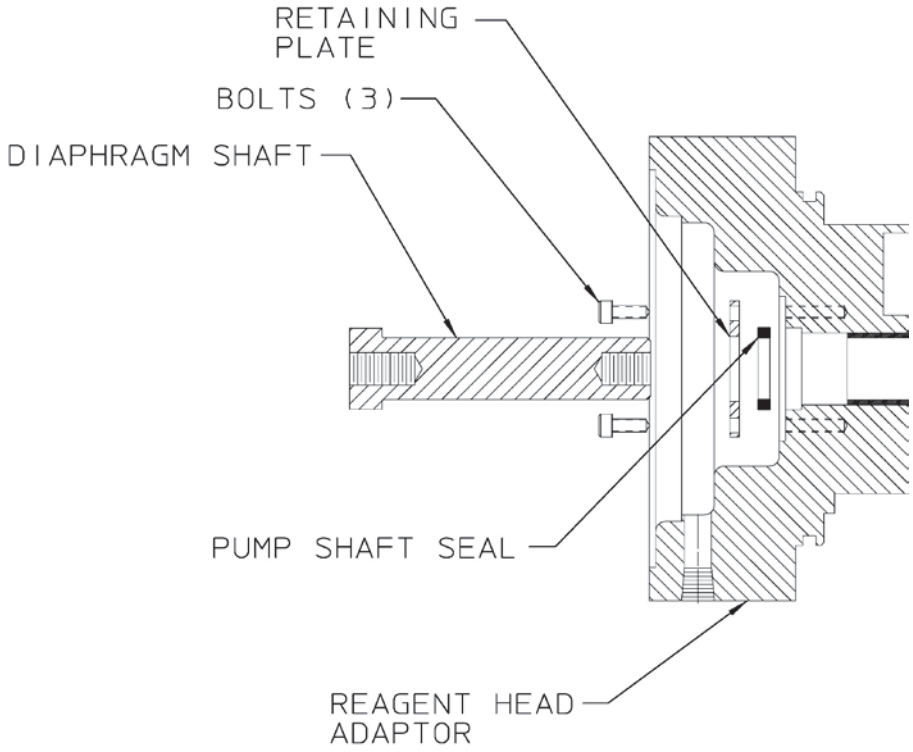

Figure 19

To replace the motor adapter seal:

First remove the motor per Motor Removal and Reinstallation. Loosen the coupling setscrew through the access hole in the motor adapter and remove the worm coupling half. Remove the four motor adapter bolts and withdraw the motor adapter from the gearbox. Take care not to lose the shims from between motor adapter and gearbox. Remove the oil seal from the motor adapter. Lubricate the replacement seal with Pulsalube 8G gear oil and install by pressing into position. Reassemble by reversing the above disassembly procedure.

To replace the gearbox oil seal:

First drain the gearbox per the lubrication instructions. Remove the four gearbox bolts, and withdraw the gearbox from the eccentric box, sliding it off the eccentric shaft. Remove the seal. Lubricate the replacement with Pulsalube 8G gear oil and install by pressing into position. Reinstall by reversing the disassembly procedure. Refill the gearbox with Pulsalube 8G gear oil per Lubrication.

To replace the eccentric box seal:

First remove the gearbox per step 3 above. Remove the four bolts, which retain the eccentric side cap to the eccentric box. Remove the eccentric side cap and withdraw the eccentric shaft. Remove the seal. Lubricate the replacement with Pulsalube 8G gear oil and install by pressing it into position. Reinstall by reversing the disassembly procedure. Refill the gearbox with Pulsalube 8G gear oil per the lubrication instructions.

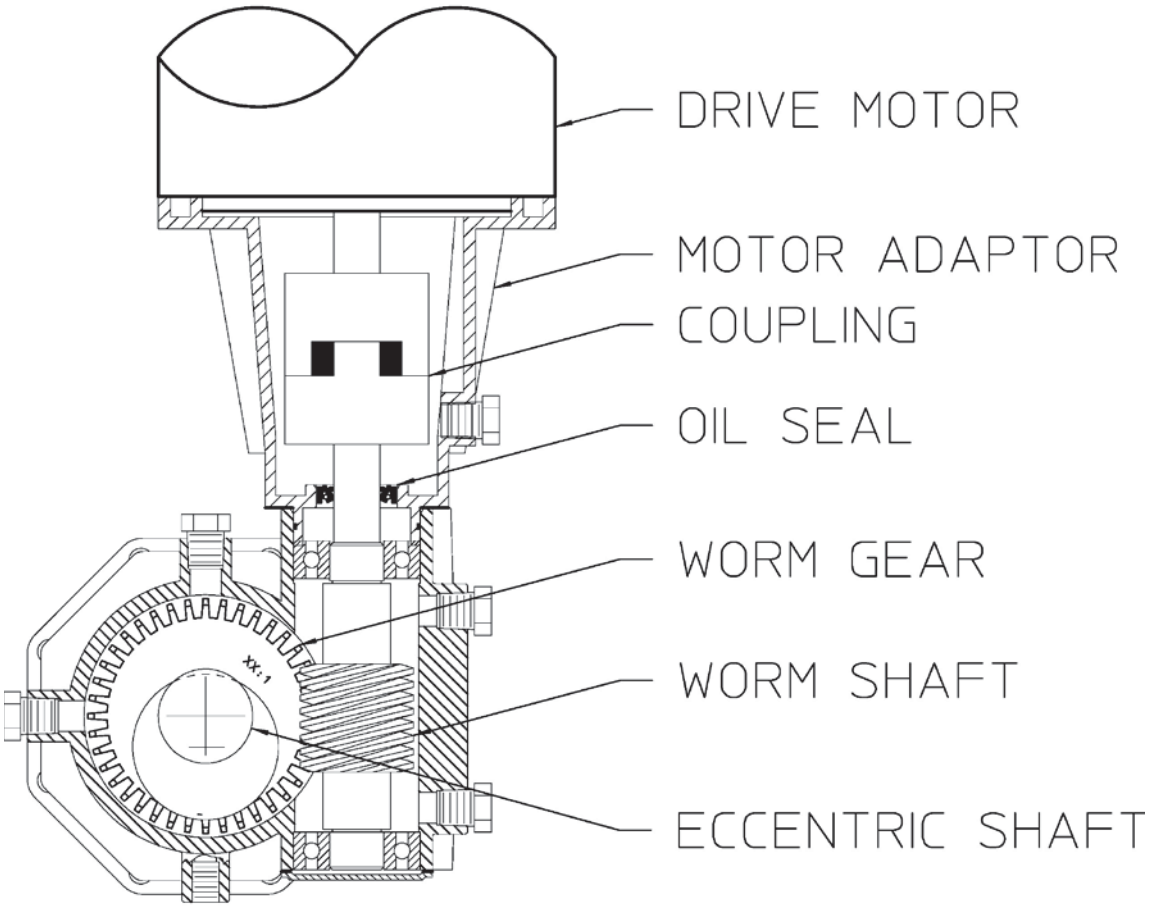

Figure 20

7.5 Cover Assembly

7.5.1 Removal and Reinstallation

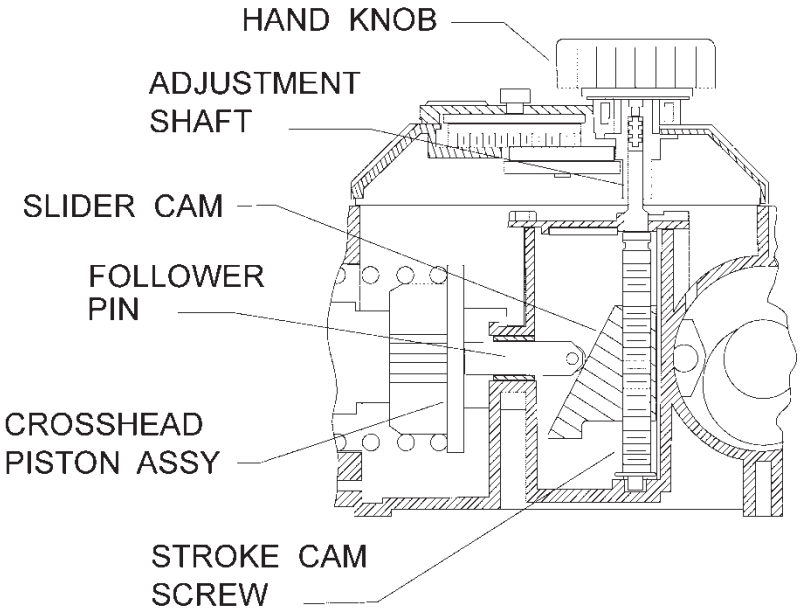

Figure 21

The hand knob linkage employs a slip type coupling which can be reassembled in either of two rotational orientations 180^0 apart from one another: therefore, the original orientation must be retained for reassembly so that pump calibration is retained.

7.5.2 Removal

1. Adjust the stroke length until the dial indicator is set at the zero stroke setting. Adjustment is easier with the drive motor running. Allow the locking mechanism to engage to the nearest detent
2. Disconnect the power source to the drive motor.
3. Remove the cover screws.
4. Using care not to rotate the adjustment shaft, remove the cover vertically from the eccentric box.

7.5.3 Reinstallation

1. Rotate the stroke cam screw clockwise until the slider cam is in a full upward position.
2. Verify that the cover dial indicates the zero stroke setting.
3. Using care not to disturb the adjustment shaft, install the cover assembly, engaging the drive coupling.
4. Replace the cover screws.
5. Press the adjustment knob down and rotate it clockwise until it stops. (Adjustment is easier with the drive motor running.) Verify that the cover dial indicates the zero stroke setting as before; if so, reinstallation is complete and if not, refer to step (6) below for realignment.
6. To re-align, loosen the screw in the center of the dial cover.
7. Adjust the dial cover to align the pointer with the ‘zero’ mark.
8. Retighten the screw in the center of the dial cover.

7.6 Motor

7.6.1 Removal

1. Disconnect the power source to the drive motor.
2. Disconnect the motor wiring from the motor.
3. Remove the four bolts retaining the motor to the motor adaptor and remove the motor.
4. The coupling is an interlocking jaw design and uses an elastomer spider between the two coupling halves. One half of the coupling remains on the worm shaft and the other coupling half on the motor shaft. Loosen the setscrew, which retains the coupling half to the motor shaft and remove the coupling half, taking care to not lose the shaft key.

7.6.2 Reinstallation

See instructions, Section 4.7

MOTOR ROTATION MAY BE WIRED FOR CW OR CCW ROTATION.

8. Replacement Parts

8.1 PULSAR Shadow® KOPkit Program

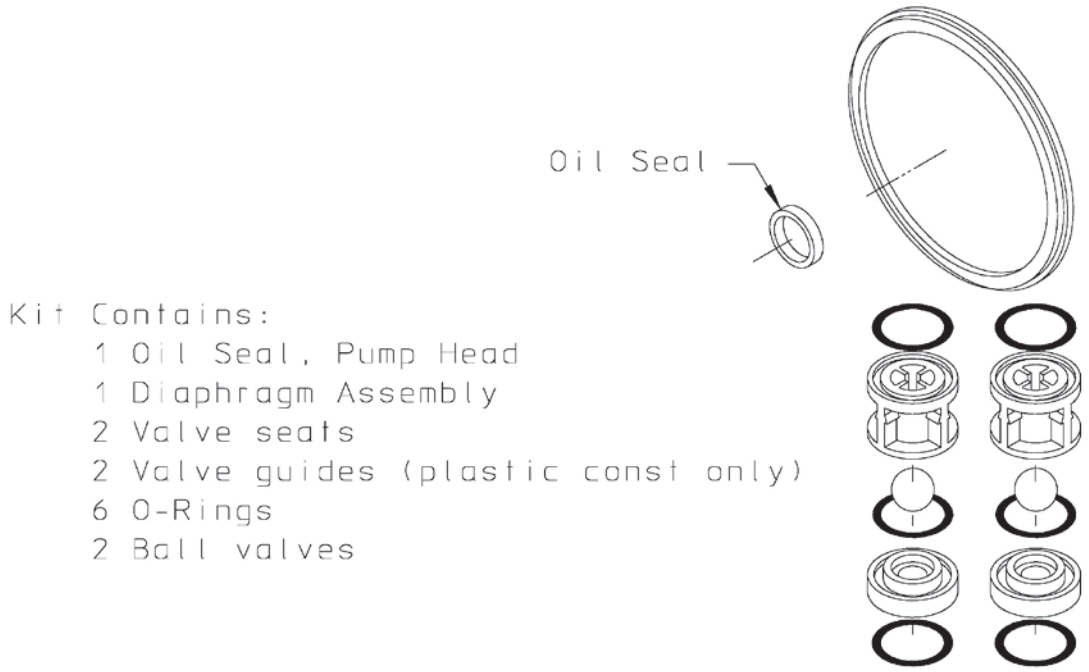

Figure 22

PULSAR Shadow® KOPkits contain all replacement parts normally used in a preventative maintenance program. Having a KOPkit on hand can eliminate delays in repairing a pump and returning it to a critical service. Pulsalube 9M eccentric oil and Pulsalube 8G gear oils are also available for preventative maintenance programs, and should be kept on hand. There is a specific KOPkit for every PULSAR Shadow® pump model. Each KOPkit is vacuum-packed for extended storage. All PULSAR Shadow® pumps have the KOPkit number identified on the pump nameplate and Pulsafeeder order documents. KOPkits can also be selected from the technical data sheet shipped with the pump or with the assistance of a Pulsafeeder representative.

8.2 Ordering KOPkits or Parts

When ordering replacement parts always specify: Pump model and serial number (stamped on pump nameplate), e.g., Model No.L2 with Serial No. 9876303-1.

Provide the part number and description from the PULSAR Shadow® parts list. Include the three-character suffix. (Note: PULSAR Shadow® part numbers begin either with the letters ‘NP’, or the letter ‘W’, e.g., NP170001-TNR or W210221-001.)

9. Troubleshooting Chart

Difficulty	Probable Cause	Remedy
Pump does not start	Coupling disconnected	Connect coupling
	Faulty power source	Check power source
	Blown fuse, and circuit breaker	Replace - eliminate overload
	Broken wire	Locate and repair
	Wired improperly	Check diagram
	Pipe line blockage	Open valves
No delivery	Motor not running	Check power source. Check wiring diagram
	Supply tank empty	Fill tank
	Lines clogged	Clean and flush
	Closed line valves	Open valves
	Ball check valves held open with solids	Clean and inspect
	Vapor lock, cavitation	Increase suction pressure
	Prime lost	Reprime, and check for leak
	Strainer clogged	Remove and clean. Replace screen if necessary
Low delivery	Motor speed too low	Check voltages, frequency, wiring, and Terminal connections. Check nameplate vs. Specifications
	Check valves worn or dirty	Clean, replace if damaged
	Calibration system error	Evaluate and correct
	Product viscosity too high	Lower viscosity by increasing product temperature. Increase pump and/or piping size
	Product cavitating	Increase suction pressure. Cool product as necessary
Delivery gradually drops	Check valve leakage	Clean, replace if damaged
	Leak in suction line	Locate and correct
	Strainer fouled	Clean or replace screen
	Product change	Check viscosity
	Supply tank vent plugged	Unplug vent
Delivery erratic	Leak in suction line	Locate and correct
	Product cavitating	Increase suction pressure
	Entrapped air or gas in product	Consult factory for suggested venting
	Motor speed erratic	Check voltage and frequency
	Fouled check valves	Clean, replace if necessary
Delivery higher than rated	Suction pressure higher than discharge pressure	Install backpressure valve or consult factory for piping recommendations
	Back pressure valve set too low	Increase setting
	Back pressure valve leaks	Repair, clean, or replace
Pump loses internal oil	Diaphragm ruptured	Replace
	Leaky seal	Replace
	Cover gasket leaks	Replace or retighten
	Pump overfilled	Remove excess oil
Noisy gearing, knocking	Discharge pressure too high	Reduce pressure
	Water hammer	Install pulsation dampener
	Stroke length at partial setting	Nondestructive knocking is characteristic of lost motion pumps
	No oil or level incorrect	Replace or refill oil

Piping noisy	Pipe size too small	Increase size of piping - install pulsation dampener
	Pipe runs too long	Install pulsation dampener in line
	Surge chambers flooded	Replace with air or inert gas. If a pulsation dampener is installed, replace diaphragm and recharge
	No surge chambers used	Install pulsation dampener
Motor overheats	Pump overloaded	Check operating conditions against pump design
	High or low voltage	Check power source
	Loose wire	Trace and correct
	Excessive discharge pressure	Correct conditions so ratings of pump are not exceeded
Leak Detection – False Alarm	Vacuum/pressure leak	Find and correct
	Switch adjustment off	Readjust switch
	Switch malfunction	Replace switch
Leak Detection – Failure to Alarm	Switch adjustment off	Readjust switch
	Switch malfunction	Replace switch
	Power off	Restore power
	Alarm wiring discontinuity	Find and correct

10. APPENDIX I Piping Calculations

10.1 Suction Head Requirements

All reciprocating metering pumps require a net positive suction head (NPSHR). The NPSHR for PULSAR Shadow® pumps is 5 psi (0.35 bar). The NPSHR is defined as the pressure required above the absolute vapor pressure of the process fluid at the pumping temperature. This pressure is required at the suction port of the pump throughout the entire pump stroking cycle in order to prevent cavitation of the process fluid within the reagent head. Satisfying the NPSHR is required to assure metering accuracy.

The net positive suction head available (NPSHA) must be greater than the NPSHR. The NPSHA of any given system is calculated as follows:

Equation 1. For fluid viscosity below 50 centipoise.

$$NPSH_A = P_A \pm P_H - P_V - \left(\frac{L_S R G Q}{C_1 d^2}\right)$$

Equation 2. For fluid viscosity at or above 50 centipoise.

$$NPSH_A = P_A \pm P_H - P_V - \sqrt{\left(\frac{L_S R G Q}{C_1 d^2}\right)^2 + \left(\frac{L_S \mu Q}{C_2 d^4}\right)^2}$$

The variables used in Equations 1 through 4 must be in the units shown in the table below for the constants listed below to be used correctly.

Variable	Units Set	
	English	Metric
NPSH	psi	bar
P_A	psia	bar(a)
P_H	psi	bar
P_V	psia	bar(a)
L_S	feet	meters
R	strokes/min	strokes/min
G	no units	no units
Q	gallons/hr	liters/hr
d	inches	millimeters
μ	centipoise	centipoise
L_D	feet	Meters
P_T	psi	bar
P_P	psi	bar
V_P	feet/sec	meters/sec
C_1	24,600	640
C_2	45,700	1.84

Note: If piping sizes vary throughout the suction line, different additive values may be used for the pressure losses attributed to the liquid's acceleration and deceleration. Use the last term of Equation 1 or 2 as many times as needed in the equation to adjust for different lengths of different pipe diameters in the suction line. (Everything but the pipe length and diameter will stay the same in the equation.)

10.2 System Backpressure

The system backpressure must exceed the suction pressure by at least 5 psi (0.35 bar) in order to prevent flowthrough, however it must not exceed the rated discharge pressure of the pump. Flowthrough can be defined as the process liquid flowing from a higher pressure to a lower pressure (downhill pumping), which results in a flow output greater than the pumps calibrated capacity, failure and undesired flow at pump shutdown. If the system backpressure is not at least 5 psi (0.35 bar) greater than the suction pressure, a backpressure valve must be installed in the discharge piping. To calculate the total system backpressure use Equation 3 or 4.

Equation 3. For fluid viscosity below 50 centipoise.

$$P_T = \left(\frac{L_D RGQ}{C_1 d^2}\right) + P_P \pm P_H$$

Equation 4. For fluid viscosity at or above 50 centipoise.

$$P_T = \sqrt{\left(\frac{L_D RGQ}{C_1 d^2}\right)^2 + \left(\frac{L_D \mu Q}{C_2 d^4}\right)^2} + P_P \pm P_H$$

NOMENCLATURE

$NPSH_R$	Net positive suction head required, [psi, bar]
$NPSH_A$	Net positive suction head available, [psi, bar]
P_A	Pressure at the surface of the liquid being pumped (atmospheric or supply tank blanket pressure) [psia, bar(a)]
P_H	Head pressure above (+) or below (-) the pump centerline, [psi, bar]
P_V	Absolute vapor pressure at pumping temperature of the process liquid at pump inlet, [psia, bar(a)]
L_S	Length of suction piping (actual, not equivalent), [ft, m]
R	Pump stroking rate, strokes/min [spm]
G	Specific gravity of process liquid, [unitless]
Q	Pump average flow rate, [gph, lph]
d	Internal pipe diameter, [inches, mm]
C_1 ,C_2	Numeric constants used in Equations 1- 4
μ	Viscosity of process liquid at pumping temperature, centipoise [cp]
L_D	Length of discharge piping (actual, not equivalent), [ft, m]
P_P	System discharge pressure, [psig, bar(g)]
P_T	Pump discharge pressure at the discharge port, [psig, bar(g)]

11. APPENDIX II Oil Specifications

PULSAlube #8G

AGMA Number	7 EP
ISO Viscosity Grade	460
API Gravity (ASTM D 287)	34.1
Viscosity (ASTM D 2161) SSU @ 100˚F	2241
Viscosity (ASTM D 2161) SSU @ 210˚F	225
Viscosity Index (ASTM D 2270)	167
Pour Point (ASTM D 97) ˚F8	-40(-40)
Flash Point, COC (ASTM D 92) ˚F8	490(254)
Timken OK Load (ASTM D 2782) Lb(kg)	100+(45+)
Four Ball EP Test (ASTM D 2783)	
Weld Point kg	250
Load Wear Index	47
Rust Test (ASTM D 665A&B)	Pass
Oxidation Test (ASTM D 2893)	Pass
Demulsibility Test (ASTM D 2711)	Pass
Foam Test (ASTM D 892)	Pass
Copper Corrosion (ASTM D 130)	1-A
Color	Amber

PULSAlube 9M

AGMA Number	7
ISO Viscosity Grade	460
API Gravity	28.7
Viscosity (ASTM D 2161) SSU @ 100˚F	2000
Viscosity (ASTM D 2161) SSU @ 210˚F	141
Viscosity Index (ASTM D 2270)	159
Pour Point (ASTM D 67) Degrees F8	-10
Flash Point, COC (ASTM D 92) Degrees F8	560
Timken OK Load (ASTM D 2782) Lb(kg)	100+(45+)
Four Ball EP Test (ASTM D 2783)	
Weld Point kg	255
Load Wear Index	44
Rust Test (ASTM D 665A&B	Pass
Oxidation Test (ASTM D 2893)	Pass
Demulsibility Test (ASTM D 2711)	Pass
Foam Test (ASTM D 892)	Pass
Copper Corrosion (ASTM D 130)	1-A
Color	Amber

12. APPENDIX III Bolt Torque Tables

PULSAR – Liquid End Bolt Torque Requirements

Metal Construction

Reagent Head Part Number	Head Size	Head Bolts			Tie Bars		
		# Bolts and Size	Torque		#Bolts and Size	Torque	
			N m	ft-lb		N m	ft-lb
NP160001	A	(6) M10*1.5	39	45	(4) M8*1.25	8	6
NP160002	B	(6) M12*1.75	68	50	(4) M8*1.25	8	6
NP160003	C	(6) M10*1.5	39	29	(4) M8*1.25	8	6
NP160004	D	(6) M8*1.25	20	15	(4) M8*1.25	8	6

Plastic Construction

Reagent Head Part Number	Head Size	Head Bolts			Tie Bars		
		# Bolts and Size	Torque		#Bolts and Size	Torque	
			N m	in-lb		N m	in-lb
NP160012	A	(6) M10*1.5	850	75	(4) M8*1.25	250	22
NP160014	B	(6) M12*1.75	850	75	(4) M8*1.25	250	22
NP160011	C	(6) M10*1.5	850	75	(4) M8*1.25	250	22
NP160013	D	(6) M8*1.25	850	75	(4) M8*1.25	250	22

13. Appendix V Pulsafeeder Accessories

13.1 Pulsation Dampeners

The PULSAtrol pulsation dampener is a pneumatically charged diaphragm-type chamber that intermittently stores energy. Used on the inlet, it can improve NPSHa (Net Positive Suction Head available) characteristics of the suction piping system. On the discharge line it will reduce peak pressures and pulsating flow variations.

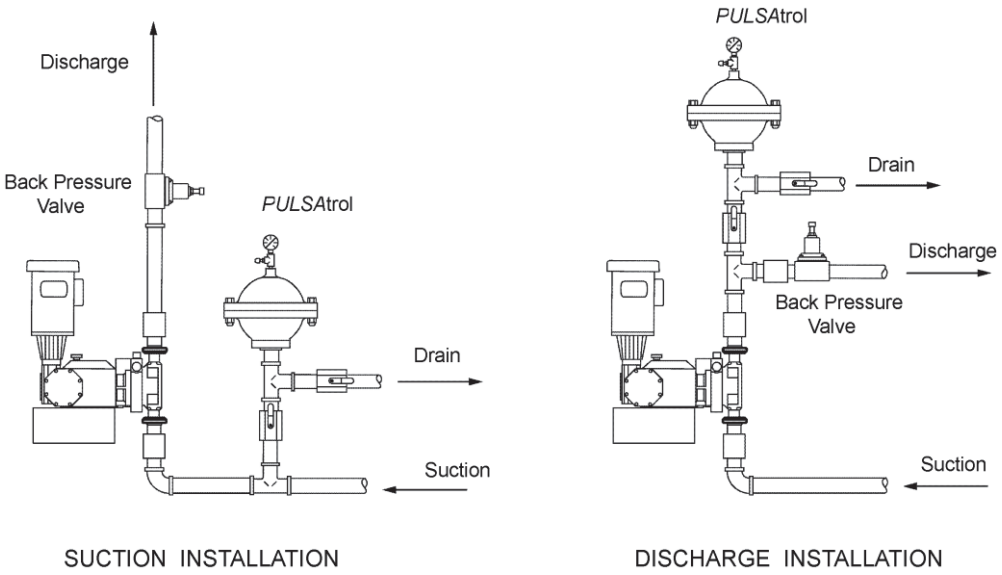

Figure 23

13.2 Dampener Installation

On both discharge and suction lines, it is desirable to mount the pulsation dampener as close to the pump connection as possible. It can be mounted in any position: horizontally, vertically, or at any angle. Vertical orientation places the process connection at the bottom, facilitating draining of the unit for maintenance or repair. A shutoff valve should always be used between the piping system and pulsation dampener. If the discharge line is open to atmospheric pressure, a backpressure valve should also be incorporated in the system beyond the pulsation dampener to assure proper operation. Pulsation dampeners do require regular maintenance and inspection. Charge pressure should be checked every 2-4 months and renewed as needed. Temperature, pressure, and other variables will affect charge life and diaphragm/bladder life.

NOTE

THE DIAPHRAGM/BLADDER IN A PULSATION DAMPENER IS A WEARABLE ITEM THAT WILL NEED PERIODIC INSPECTION AND REPLACEMENT.

A) Discharge Setup

The pulsation dampener may be precharged with air or nitrogen. When properly precharged the diaphragm is positioned against the bottom liquid chamber. It is therefore necessary to drain all liquid below the diaphragm and vent to atmospheric pressure when precharging.

Use the precharge pressure as determined from the pulsation dampener selection and sizing procedure (Catalog No. 211). This can vary from 50 to 80% of mean line pressure in accordance with fluctuation level selected. The pulsation dampener is now ready for service and the diaphragm will move to a neutral position as liquid enters the chamber.

❖ **Use the following to complete a Pre Charge Procedure for Discharge Installation**

1. Calculate the precharge pressure
   a. Mean Line Pressure (PSIG) **+** Atmospheric Pressure **=** Absolute Pressure (PSIA)
   b. Absolute Pressure (PSIA) **x** Precharge Percentage (80% max) **=** Pressure Absolute
   c. Pressure Absolute – Atmospheric Pressure = Precharge Pressure (PSIG)
2. Isolate the pulsation dampener from the process line.
3. Carefully drain off process fluid by opening a drain valve (see recommend piping arrangement).
4. Apply precharge pressure (additional liquid may drain as diaphragm moves).
5. Close drain valve.
6. Place the pulsation dampener in the process stream.

B) Suction Setup (Flooded Suction)

Charge the pulsation dampener with adequate pressure to overcome the static suction head. Start up the pump. Depress the stem on the charge valve, but only during discharge strokes of the pump, until the gauge indicates pressure pulses. The diaphragm has now centered allowing the pulsation dampener to accumulate liquid while the pump is discharging. If too much air becomes released and the gauge will not indicate pressure pulses, recharge the pulsation dampener and repeat the procedure.

❖ **Use the following to complete a Pre Charge Procedure for Suction Installation**

1. Isolate accumulator from line.
2. Carefully drain off process fluid by opening a drain valve
3. Apply 5-10 psi precharge pressure (additional liquid may drain as diaphragm moves).
4. Close drain valve.
5. Bleed off all pressure on the pulsation dampener.
6. Open the valve to put pulsation dampener in stream.
7. Push in on the stem of the charging valve during the discharge stroke of the pump and release during the suction stroke.
8. Continue this for about 10 times and observe the compound gauge. As accumulator functions, the needle will go from pressure to vacuum.

13.3 Pulsation Dampener Removal

When removing or disassembling a pulsation dampener, drain all piping and remove all air and process pressure. Assume that the diaphragm is broken and the chamber is flooded under pressure since the pressure gauge could be damaged. Separate chambers with caution in a direction away from the body.

WARNING

ıBER THAT THE PULSATION DAMPENER HOUSING WILL RETAIN SOME AMOUNT OF PROCESS FLUID, AND HANDLE ACCORDINGLY.

13.4 Diaphragm Back Pressure and Pressure Relief Valves

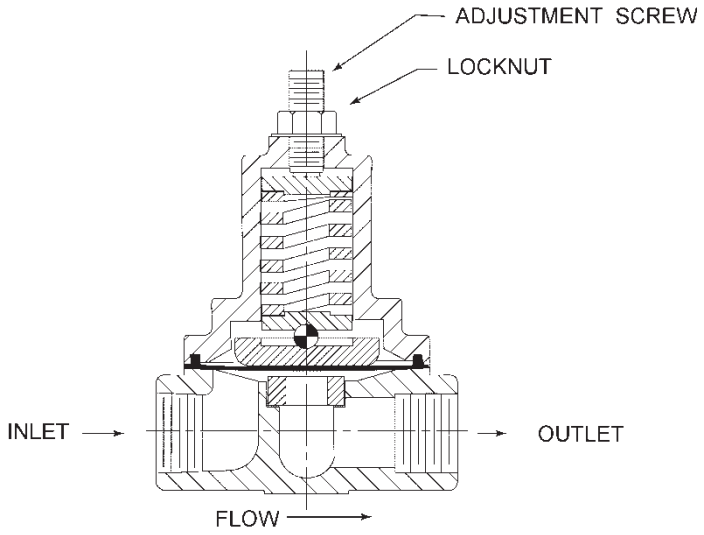

Figure 24

A diaphragm backpressure valve creates a constant system backpressure upstream of the valve. A TFE diaphragm, offering maximum chemical protection and service life, seals the spring and bonnet from the product. This diaphragm seals directly on a replaceable seat. In most systems, the setting of the backpressure valve will determine the overall system backpressure seen by the metering pump.

A diaphragm pressure relief valve protects system components from excessive pressure within the system. The valve is normally set to some value slightly above normal process pressure. If this pressure setting is exceeded, the pressure relief valve will open to control and limit system pressure. The outlet port of the pressure relief valve should be carefully directed back to the supply tank or to some other safe point. The use of a pressure relief valve is especially important in systems utilizing mechanical diaphragm pumps, as these pumps have no internal bypass or relief capability.

Be sure to install either type of valve with fluid flow in direction of arrow on valve body or label.

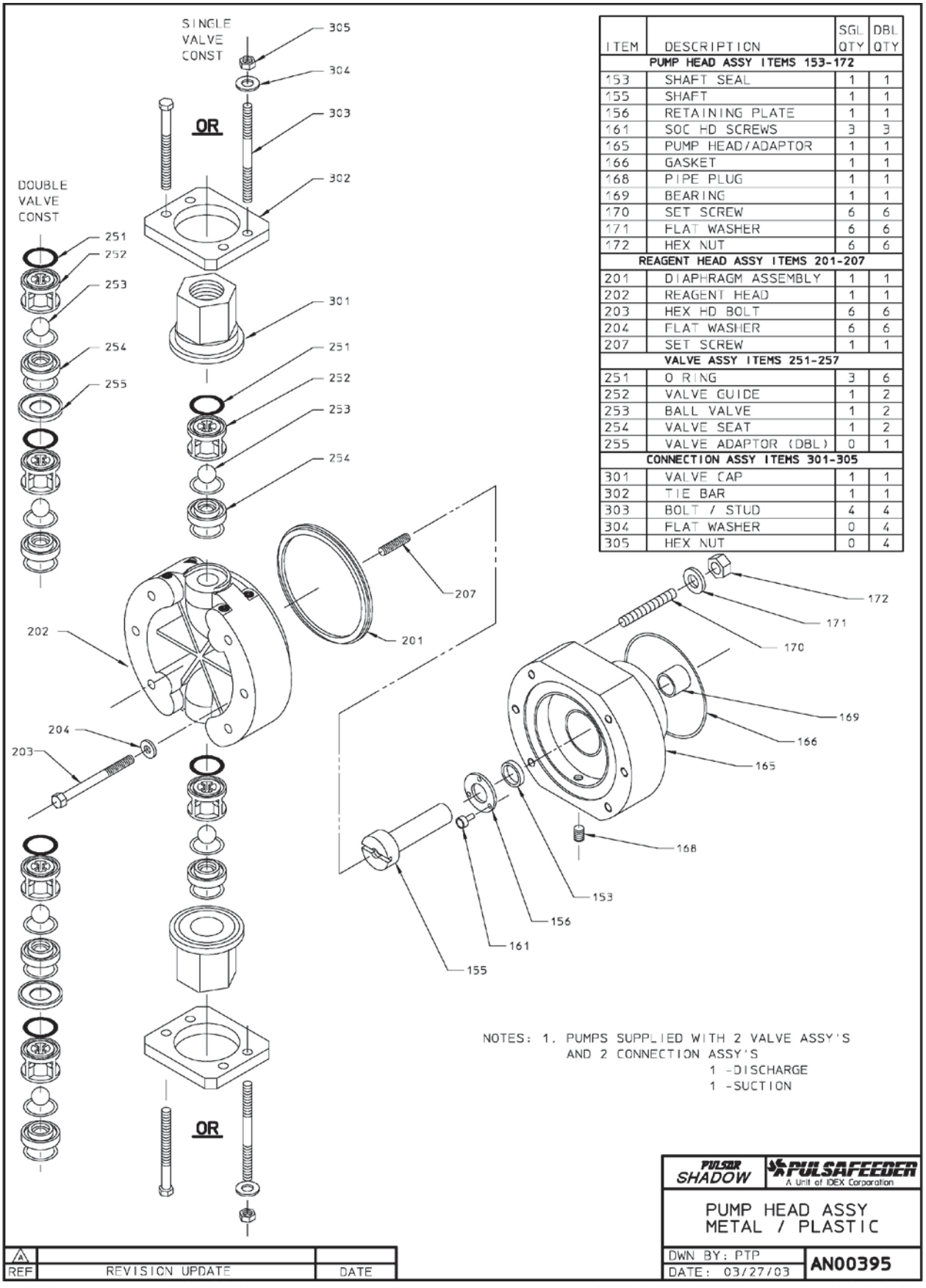

ITEM	DESCRIPTION	SGL QTY	DBL QTY
	PUMP HEAD ASSY ITEMS 153-172		
153	SHAFT SEAL	1	1
155	SHAFT	1	1
156	RETAINING PLATE	1	1
161	SOC HD SCREWS	3	3
165	PUMP HEAD/ADAPTOR	1	1
166	GASKET	1	1
168	PIPE PLUG	1	1
169	BEARING	1	1
170	SET SCREW	6	6
171	FLAT WASHER	6	6
172	HEX NUT	6	6
	REAGENT HEAD ASSY ITEMS 201-207		
201	DIAPHRAGM ASSEMBLY	1	1
202	REAGENT HEAD	1	1
203	HEX HD BOLT	6	6
204	FLAT WASHER	6	6
207	SET SCREW	1	1
	VALVE ASSY ITEMS 251-257		
251	O RING	3	6
252	VALVE GUIDE	1	2
253	BALL VALVE	1	2
254	VALVE SEAT	1	2
255	VALVE ADAPTOR (DBL)	0	1
	CONNECTION ASSY ITEMS 301-305		
301	VALVE CAP	1	1
302	TIE BAR	1	1
303	BOLT / STUD	4	4
304	FLAT WASHER	0	4
305	HEX NUT	0	4

NOTES: 1. PUMPS SUPPLIED WITH 2 VALVE ASSY'S AND 2 CONNECTION ASSY'S
1 -DISCHARGE
1 -SUCTION

REF	REVISION UPDATE	DATE
A		

PULSAR SHADOW — PULSAFEEDER, A Unit of IDEX Corporation

PUMP HEAD ASSY
METAL / PLASTIC

DWN BY: PTP
DATE: 03/27/03

AN00395

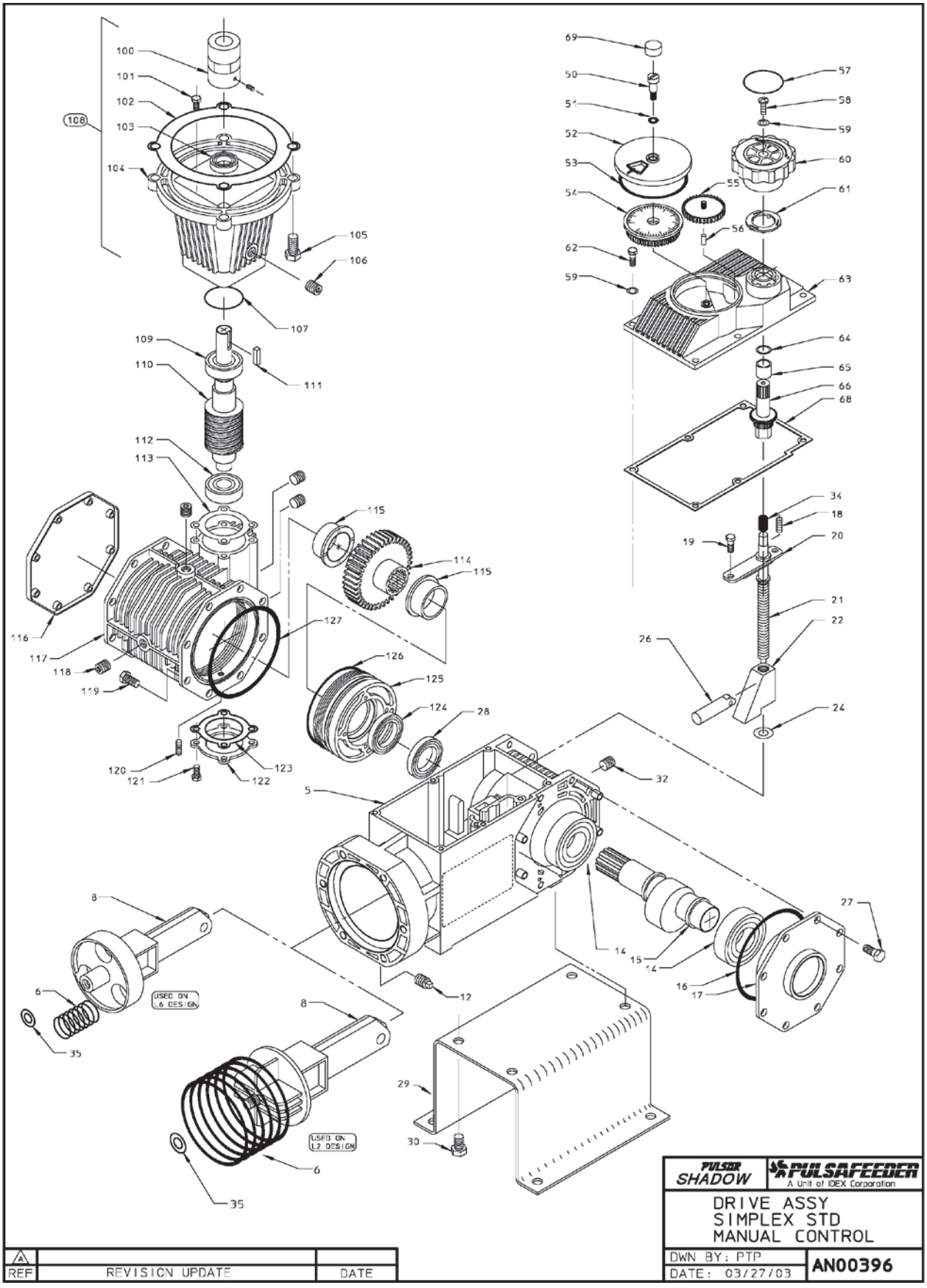
100
101
102
103
104
105
106
107
108
109
110
111
112
113
114
115
116
117
118
119
120
121
122
123
124
125
126
127
5
6
8
12
14
15
16
17
18
19
20
21
22
24
26
27
28
29
30
32
34
35
50
51
52
53
54
55
56
57
58
59
60
61
62
63
64
65
66
68
69
USED ON L6 DESIGN
USED ON L2 DESIGN
PULSAR SHADOW
PULSAFEEDER
A Unit of IDEX Corporation
DRIVE ASSY
SIMPLEX STD
MANUAL CONTROL
DWN BY: PTP
DATE: 03/27/03
AN00396
REF
REVISION UPDATE
DATE

ITEM	DESCRIPTION	QTY
	ECCENTRIC BOX ASSY ITEMS 5 -35	
5	ECCENTRIC BOX SUB-ASSY	1
6	RETURN SPRING	1-3
8	CROSSHEAD SUB-ASSY	1
12	PIPE PLUG	1
14	BEARING	2
15	ECCENTRIC	1
16	O RING	1
17	BEARING CAP	1
18	SET SCREW	1
19	HEX HD BOLT	2
20	WEDGE COVER	1
21	ADJUSTMENT SCREW	1
22	WEDGE	1
24	THRUST WASHER	1
26	FOLLOWER SUB-ASSY	1
27	HEX HD BOLT	4
28	OIL SEAL	1
29	BASE	1
30	HEX HD BOLT	4
31	TOLERANCE RING (NOT SHOWN)	2
32	PIPE PLUG	1
34	SPRING	1
35	SPACER SHIM	0-2
	MANUAL CONTROL ASSY ITEMS 50-69	
50	SHOULDER SCREW	1
51	O RING	1
52	SCALE COVER	1
53	GASKET	1
54	SCALE GEAR	1
55	GEAR	1
56	DOWEL PIN	1
57	LABEL	1
58	SCREW	1
59	FLAT WASHER	7
60	KNOB	1
61	CLICKER	1
62	HEX HD BOLT	6
63	COVER	1
64	O RING	1
65	BUSHING	1
66	GEAR SHAFT	1
68	COVER GASKET	1
69	SCREW CAP	1
	GEARBOX ASSY ITEMS 100-129	
100	COUPLING	1
101	HEX HD BOLT	4
102	GASKET	1
103	OIL SEAL	1
104	MOTOR ADAPTOR	1
105	HEX HD BOLT	4
106	PIPE PLUG	1
107	O RING	1
108	MOTOR ADAPTOR ASSY	1
109	BEARING	1
110	WORM	1
111	KEY	1
112	BEARING	1
113	SHIM PACKAGE	1
114	WORM GEAR	1
115	BEARING	2
116	COVER	1
117	GEARBOX	1
118	PIPE PLUG	4
119	HEX HD BOLT	4
120	SET SCREW	1
121	HEX HD BOLT	4
122	BOTTOM COVER	1
123	GASKET	1
124	OIL SEAL	1
125	GEARBOX CAP	1
126	O RING	1
127	O RING	1
128	NAME TAG (NOT SHOWN)	1
129	DRIVE SCREW (NOT SHOWN)	4

REF	REVISION UPDATE	DATE
A		

PULSAR SHADOW | PULSAFEEDER A Unit of IDEX Corporation

DRIVE ASSY
SIMPLEX STD
B.O.M

DWN BY: PTP
DATE: 03/27/03

AN00397

PULSAR® Shadow
MECHANICAL DIAPHRAGM METERING PUMP

Bulletin: IOM-PSRM-1501

PULSAFEEDER®
ENGINEERED PRODUCTS

Pulsafeeder, Inc.
A unit of IDEX Corporation
2883 Brighton Henrietta Town Line Road
Rochester NY 14623
+1 (585) 292-8000
www.pulsa.com
pulsa@idexcorp.com

IDEX FLUID & METERING

LEFT BLANK

PULSAFEEDER®
ENGINEERED PRODUCTS

Safety Data Sheet

pulsa.com

Pulsalube #8 GS Ultra Synthetic Gear Oil

SECTION 1: Identification

Product Identifier **Syncon® EP Plus Gear Oil**

Other means of identification
Phillips 66 Syncon® EP Plus Gear Oil 150
Phillips 66 Syncon® EP Plus Gear Oil 220
Phillips 66 Syncon® EP Plus Gear Oil 320
Phillips 66 Syncon® EP Plus Gear Oil 460
Phillips 66 Syncon® EP Plus Gear Oil 680

SDS Number **LBPH778853**
Relevant identified uses Gear Lubricant
Uses advised against All others
24 Hour Emergency Phone Number CHEMTREC 1-800-424-9300
CHEMTREC Mexico 01-800-681-9531

Manufacturer/Supplier
Phillips 66 Lubricants
P.O. Box 4428
Houston, TX 77210

SDS Information
Phone: 800-762-0942
Email: SDS@P66.com
URL: www.Phillips66.com

Customer Service
U.S.: 800-368-7128 or International: 1-832-765-2500
Technical Information
1-877-445-9198

SECTION 2: Hazard identification

Classified Hazards

This material is not hazardous under the criteria of the Federal OSHA Hazard Communication Standard 29CFR 1910.1200.

Hazards Not Otherwise Classified (HNOC)

PHNOC: None known

HHNOC: None known

Label Elements

No classified hazards

SECTION 3: Composition/information on ingredients

Chemical Name	CASRN	Concentration[1]
Synthetic Lubricant Base Oil	VARIOUS	98

[1] All concentrations are percent by weight unless ingredient is a gas. Gas concentrations are in percent by volume.

SECTION 4: First aid measures

Eye Contact: If irritation or redness develops from exposure, flush eyes with clean water. If symptoms persist, seek medical attention.

Skin Contact: Remove contaminated shoes and clothing and cleanse affected area(s) thoroughly by washing with mild soap and water or a waterless hand cleaner. If irritation or redness develops and persists, seek medical attention.

Inhalation: First aid is not normally required. If breathing difficulties develop, move victim away from source of exposure and into fresh air in a position comfortable for breathing. Seek immediate medical attention.

Ingestion: First aid is not normally required; however, if swallowed and symptoms develop, seek medical attention.

Most important symptoms and effects, both acute and delayed: Prolonged or repeated contact may dry skin and cause irritation. Inhalation of oil mists or vapors generated at elevated temperatures may cause respiratory irritation. Accidental ingestion can result in minor irritation of the digestive tract, nausea and diarrhea.

Notes to Physician: Acute aspirations of large amounts of oil-laden material may produce a serious aspiration pneumonia. Patients who aspirate these oils should be followed for the development of long-term sequelae. Inhalation exposure to oil mists below current workplace exposure limits is unlikely to cause pulmonary abnormalities.

SECTION 5: Firefighting measures

NFPA 704 Hazard Class

Health: 0 **Flammability:** 1 **Instability:** 0

0 (Minimal)
1 (Slight)
2 (Moderate)
3 (Serious)
4 (Severe)

Extinguishing Media: Dry chemical, carbon dioxide, foam, or water spray is recommended. Water or foam may cause frothing of materials heated above 212°F / 100°C. Carbon dioxide can displace oxygen. Use caution when applying carbon dioxide in confined spaces. Simultaneous use of foam and water on the same surface is to be avoided as water destroys the foam.

Specific hazards arising from the chemical

Unusual Fire & Explosion Hazards: This material may burn, but will not ignite readily. If container is not properly cooled, it can rupture in the heat of a fire.

Hazardous Combustion Products: Combustion may yield smoke, carbon monoxide, and other products of incomplete combustion. Oxides of sulfur, nitrogen or phosphorus may also be formed.

Special protective actions for firefighters: For fires beyond the initial stage, emergency responders in the immediate hazard area should wear protective clothing. When the potential chemical hazard is unknown, in enclosed or confined spaces, a self contained breathing apparatus should be worn. In addition, wear other appropriate protective equipment as conditions warrant (see Section 8).

Isolate the hazard area and deny entry to unnecessary and unprotected personnel Stop spill/release if it can be done safely. Move undamaged containers from immediate hazard area if it can be done safely Water spray may be useful in minimizing or dispersing vapors and to protect personnel. Cool equipment exposed to fire with water, if it can be done safely. Avoid spreading burning liquid with water used for cooling purposes.

See Section 9 for Flammable Properties including Flash Point and Flammable (Explosive) Limits

SECTION 6: Accidental release measures

Personal precautions, protective equipment and emergency procedures: This material may burn, but will not ignite readily. Keep all sources of ignition away from spill/release. Stay upwind and away from spill/release. Avoid direct contact with material. For large spillages, notify persons down wind of the spill/release, isolate immediate hazard area and keep unauthorized personnel out. Wear appropriate protective equipment, including respiratory protection, as conditions warrant (see Section 8). See Sections 2 and 7 for additional information on hazards and precautionary measures.

Environmental Precautions: Stop and contain spill/release if it can be done safely. Prevent spilled material from entering sewers, storm drains, other unauthorized drainage systems, and natural waterways. Use water sparingly to minimize environmental contamination and reduce disposal requirements. If spill occurs on water notify appropriate authorities and advise shipping of any hazard. Spills into or upon navigable waters, the contiguous zone, or adjoining shorelines that cause a sheen or discoloration on

the surface of the water, may require notification of the National Response Center (phone number 800-424-8802).

Methods and material for containment and cleaning up: Notify relevant authorities in accordance with all applicable regulations. Immediate cleanup of any spill is recommended. Dike far ahead of spill for later recovery or disposal. Absorb spill with inert material such as sand or vermiculite, and place in suitable container for disposal. If spilled on water remove with appropriate methods (e.g. skimming, booms or absorbents). In case of soil contamination, remove contaminated soil for remediation or disposal, in accordance with local regulations.

Recommended measures are based on the most likely spillage scenarios for this material; however local conditions and regulations may influence or limit the choice of appropriate actions to be taken. See Section 13 for information on appropriate disposal.

SECTION 7: Handling and storage

Precautions for safe handling: Keep away from flames and hot surfaces. Wash thoroughly after handling. Use good personal hygiene practices and wear appropriate personal protective equipment (see section 8). Spills will produce very slippery surfaces. Do not enter confined spaces such as tanks or pits without following proper entry procedures such as ASTM D-4276 and 29CFR 1910.146. Do not wear contaminated clothing or shoes.

Conditions for safe storage: Keep container(s) tightly closed and properly labeled. Use and store this material in cool, dry, well-ventilated area away from heat and all sources of ignition. Store only in approved containers. Keep away from any incompatible material (see Section 10). Protect container(s) against physical damage.

"Empty" containers retain residue and may be dangerous. Do not pressurize, cut, weld, braze, solder, drill, grind, or expose such containers to heat, flame, sparks, or other sources of ignition. They may explode and cause injury or death. "Empty" drums should be completely drained, properly bunged, and promptly shipped to the supplier or a drum reconditioner. All containers should be disposed of in an environmentally safe manner and in accordance with governmental regulations. Before working on or in tanks which contain or have contained this material, refer to OSHA regulations, ANSI Z49.1, and other references pertaining to cleaning, repairing, welding, or other contemplated operations.

SECTION 8: Exposure controls/personal protection

Chemical Name	ACGIH	OSHA	Phillips 66
Synthetic Lubricant Base Oil	---	---	TWA: 5 mg/m^3 STEL: 10 mg/m^3 as Oil Mist, if Generated

Note: State, local or other agencies or advisory groups may have established more stringent limits. Consult an industrial hygienist or similar professional, or your local agencies, for further information.

Engineering controls: If current ventilation practices are not adequate to maintain airborne concentrations below the established exposure limits, additional engineering controls may be required.

Eye/Face Protection: The use of eye/face protection is not normally required; however, good industrial hygiene practice suggests the use of eye protection that meets or exceeds ANSI Z.87.1 whenever working with chemicals.

Skin/Hand Protection: The use of skin protection is not normally required; however, good industrial hygiene practice suggests the use of gloves or other appropriate skin protection whenever working with chemicals. Suggested protective materials: Nitrile

Respiratory Protection: Where there is potential for airborne exposure above the exposure limit a NIOSH certified air purifying respirator equipped with R or P95 filters may be used.

A respiratory protection program that meets or is equivalent to OSHA 29 CFR 1910.134 and ANSI Z88.2 should be followed whenever workplace conditions warrant a respirator's use. Air purifying respirators provide limited protection and cannot be used in atmospheres that exceed the maximum use concentration (as directed by regulation or the manufacturer's instructions), in oxygen deficient (less than 19.5 percent oxygen) situations, or under conditions that are immediately dangerous to life and health (IDLH).

Suggestions provided in this section for exposure control and specific types of protective equipment are based on readily

available information. Users should consult with the specific manufacturer to confirm the performance of their protective equipment. Specific situations may require consultation with industrial hygiene, safety, or engineering professionals.

SECTION 9: Physical and chemical properties

Note: Unless otherwise stated, values are determined at 20°C (68°F) and 760 mm Hg (1 atm). Data represent typical values and are not intended to be specifications.

Appearance: Amber, Transparent
Physical Form: Liquid
Odor: Petroleum

Flash Point: > 469 °F / > 243 °C
Test Method: Cleveland Open Cup (COC), ASTM D92
Initial Boiling Point/Range: No data

Odor Threshold: No data
pH: Not applicable
Vapor Density (air=1): >1
Upper Explosive Limits (vol % in air): No data
Lower Explosive Limits (vol % in air): No data
Evaporation Rate (nBuAc=1): No data
Particle Size: Not applicable
Percent Volatile: No data
Flammability (solid, gas): Not applicable
Solubility in Water: Negligible

Vapor Pressure: No data
Partition Coefficient (n-octanol/water) (Kow): No data
Melting/Freezing Point: No data
Auto-ignition Temperature: No data
Decomposition Temperature: No data
Specific Gravity (water=1): 0.84 - 0.89 @ 68ºF (20ºC)
Bulk Density: 7.0-7.3 lbs/gal
Viscosity: 17 - 73 cSt @ 100°C; 139 - 740 cSt @ 40°C
Pour Point: < -43 °F / < -42 °C

SECTION 10: Stability and reactivity

Reactivity: Not chemically reactive.

Chemical stability: Stable under normal ambient and anticipated conditions of use.

Possibility of hazardous reactions: Hazardous reactions not anticipated.

Conditions to avoid: Extended exposure to high temperatures can cause decomposition. Avoid all possible sources of ignition.

Incompatible materials: Avoid contact with strong oxidizing agents and strong reducing agents.

Hazardous decomposition products: Not anticipated under normal conditions of use.

SECTION 11: Toxicological information

Information on Toxicological Effects

Substance / Mixture

Acute Toxicity	Hazard	Additional Information	LC50/LD50 Data
Inhalation	Unlikely to be harmful		>5 mg/L (mist, estimated)
Dermal	Unlikely to be harmful		> 2 g/kg (estimated)
Oral	Unlikely to be harmful		> 5 g/kg (estimated)

Aspiration Hazard: Not expected to be an aspiration hazard.

Skin Corrosion/Irritation: Not expected to be irritating. Repeated exposure may cause skin dryness or cracking.

Serious Eye Damage/Irritation: Not expected to be irritating.

Skin Sensitization: No information available on the mixture, however none of the components have been classified for skin sensitization (or are below the concentration threshold for classification).

Respiratory Sensitization: No information available.

Specific Target Organ Toxicity (Single Exposure): No information available on the mixture, however none of the components have been classified for target organ toxicity (or are below the concentration threshold for classification).

Specific Target Organ Toxicity (Repeated Exposure): No information available on the mixture, however none of the components have been classified for target organ toxicity (or are below the concentration threshold for classification).

Carcinogenicity: No information available on the mixture, however none of the components have been classified for carcinogenicity (or are below the concentration threshold for classification).

Germ Cell Mutagenicity: No information available on the mixture, however none of the components have been classified for germ cell mutagenicity (or are below the concentration threshold for classification).

Reproductive Toxicity: No information available on the mixture, however none of the components have been classified for reproductive toxicity (or are below the concentration threshold for classification

SECTION 12: Ecological information

GHS Classification:
No classified hazards

Toxicity: Experimental studies with rainbow trout, daphnia, and fresh water algae indicate that synthetic base oils are not expected to be harmful to aquatic organisms.

Persistence and Degradability: Synthetic base oils are not considered to be readily biodegradable but may be inherently biodegradable. They are expected to completely biodegrade over extended periods of time.

Bioaccumulative Potential: Not expected to bioaccumulate.

Mobility in Soil: Volatilization to air is not expected to be a significant fate process due to the low vapor pressure of this material. In water, this material will float and spread over the surface at a rate dependent upon viscosity. The main fate process is expected to be slow biodegradation of individual components in soil and sediment.

Other adverse effects: None anticipated.

SECTION 13: Disposal considerations

The generator of a waste is always responsible for making proper hazardous waste determinations and needs to consider state and local requirements in addition to federal regulations. This material, if discarded as produced, would not be a federally regulated RCRA "listed" hazardous waste and is not believed to exhibit characteristics of hazardous waste. See Sections 7 and 8 for information on handling, storage and personal protection and Section 9 for physical/chemical properties. It is possible that the material as produced contains constituents which are not required to be listed in the SDS but could affect the hazardous waste determination. Additionally, use which results in chemical or physical change of this material could subject it to regulation as a hazardous waste.This material under most intended uses would become "Used Oil" due to contamination by physical or chemical impurities. Whenever possible, Recycle used oil in accordance with applicable federal and state or local regulations. Container contents should be completely used and containers should be emptied prior to discard.

SECTION 14: Transport information

U.S. Department of Transportation (DOT)
UN Number: Not regulated
UN proper shipping name: None
Transport hazard class(es): None
Packing Group: None

Environmental Hazards: This product does not meet the DOT/UN/IMDG/IMO criteria of a marine pollutant
Special precautions for user: If shipped by land in a packaging having a capacity of 3,500 gallons or more, the provisions of 49 CFR, Part 130 apply. (Contains oil)
Transport in bulk according to Annex II of MARPOL 73/78 and the IBC Code: Not applicable

CERCLA/SARA - Section 302 Extremely Hazardous Substances and TPQs (in pounds):

SECTION 15: Regulatory information

This material does not contain any chemicals subject to the reporting requirements of SARA 302 and 40 CFR 372.

CERCLA/SARA - Section 311/312 (Title III Hazard Categories)

Acute Health Hazard:	No
Chronic Health Hazard:	No
Fire Hazard:	No
Pressure Hazard:	No
Reactive Hazard:	No

CERCLA/SARA - Section 313 and 40 CFR 372:
This material does not contain any chemicals subject to the reporting requirements of SARA 313 and 40 CFR 372.

EPA (CERCLA) Reportable Quantity (in pounds):
This material does not contain any chemicals with CERCLA Reportable Quantities.

California Proposition 65:
This material does not contain any chemicals which are known to the State of California to cause cancer, birth defects or other reproductive harm at concentrations that trigger the warning requirements of California Proposition 65.

International Hazard Classification

Canada:
This product has been classified in accordance with the hazard criteria of the Hazardous Products Regulations (SOR/2015-17) and the SDS contains all the information required by the Regulations.

International Inventories
All components are either listed on the US TSCA Inventory, or are not regulated under TSCA.
All components are either on the DSL, or are exempt from DSL listing requirements.

U.S. Export Control Classification Number: EAR99

SECTION 16: Other information

Issue Date:	Previous Issue Date:	SDS Number	Status:
22-Jun-2016	12-Apr-2016	LBPH778853	FINAL

Revised Sections or Basis for Revision:
New SDS

Guide to Abbreviations:
ACGIH = American Conference of Governmental Industrial Hygienists; CASRN = Chemical Abstracts Service Registry Number; CEILING = Ceiling Limit (15 minutes); CERCLA = The Comprehensive Environmental Response, Compensation, and Liability Act; EPA = Environmental Protection Agency; GHS = Globally Harmonized System; IARC = International Agency for Research on Cancer; INSHT = National Institute for Health and Safety at Work; IOPC = International Oil Pollution Compensation; LEL = Lower Explosive Limit; NE = Not Established; NFPA = National Fire Protection Association; NTP = National Toxicology Program; OSHA = Occupational Safety and Health Administration; PEL = Permissible Exposure

Limit (OSHA); SARA = Superfund Amendments and Reauthorization Act; STEL = Short Term Exposure Limit (15 minutes); TLV = Threshold Limit Value (ACGIH); TWA = Time Weighted Average (8 hours); UEL = Upper Explosive Limit; WHMIS = Worker Hazardous Materials Information System (Canada)

Disclaimer of Expressed and implied Warranties:

The information presented in this Safety Data Sheet is based on data believed to be accurate as of the date this Safety Data Sheet was prepared. HOWEVER, NO WARRANTY OF MERCHANTABILITY, FITNESS FOR ANY PARTICULAR PURPOSE, OR ANY OTHER WARRANTY IS EXPRESSED OR IS TO BE IMPLIED REGARDING THE ACCURACY OR COMPLETENESS OF THE INFORMATION PROVIDED ABOVE, THE RESULTS TO BE OBTAINED FROM THE USE OF THIS INFORMATION OR THE PRODUCT, THE SAFETY OF THIS PRODUCT, OR THE HAZARDS RELATED TO ITS USE. No responsibility is assumed for any damage or injury resulting from abnormal use or from any failure to adhere to recommended practices. The information provided above, and the product, are furnished on the condition that the person receiving them shall make their own determination as to the suitability of the product for their particular purpose and on the condition that they assume the risk of their use. In addition, no authorization is given nor implied to practice any patented invention without a license.

Revision Date: 22-Jun-2016

LEFT BLANK

PULSAFEEDER®
ENGINEERED PRODUCTS

Safety Data Sheet

pulsa.com

PULSALube Premium 9M Eccentric & Gear Oil

SECTION 1 PRODUCT AND COMPANY IDENTIFICATION

PRODUCT

Product Name: **MOBIL 600 W SUPER CYLINDER OIL**
Product Description: Base Oil and Additives
Product Code: 20156050D010, 601211-80
Intended Use: Cylinder oil

COMPANY IDENTIFICATION

Supplier: **East Coast Lubes Pty Ltd (Queensland and Northern Territory)**
A.B.N. 37 117 203 611
Cnr North and Mort Streets
Toowoomba, Queensland 4350 Australia

24 Hour Emergency Telephone 1300 131 001
Supplier General Contact 1800 069 019

Supplier: **Southern Cross Lubes (Victoria and Tasmania)**
58-66 Ajax Road
Altona, Victoria 3018, Australia

24 Hour Emergency Telephone 1300 131 001
Product Technical Information
Supplier General Contact 1300 466 245
1300 552 861

Supplier: **Perkal Pty Ltd Trading as Statewide Oil (Western Australia)**
A.B.N. 43 009 283 363
14 Beete Street
Welshpool, Western Australia 6106 Australia

24 Hour Emergency Telephone (8:00am to 4:30pm Mon to Fri) 1300 919 904
Product Technical Information
Supplier General Contact (08) 9350 6777
(08) 9350 6777

Supplier: **Perkal Pty Ltd Trading as Statewide Oil (South Australia)**
A.B.N. 43 009 283 363
6-10 Streiff Rd
Wingfield, South Australia 5013 Australia

24 Hour Emergency Telephone (8:00am to 4:30pm Mon to Fri) 1300 919 904
Product Technical Information
Supplier General Contact (08) 8359 8995
(08) 8359 8995

SECTION 2 HAZARDS IDENTIFICATION

This material is not hazardous according to regulatory guidelines (see (M)SDS Section 15).

Other hazard information:

Physical / Chemical Hazards:
No significant hazards.

Health Hazards:
Excessive exposure may result in eye, skin, or respiratory irritation.

Environmental Hazards:
No significant hazards.

NOTE: This material should not be used for any other purpose than the intended use in Section 1 without expert advice. Health studies have shown that chemical exposure may cause potential human health risks which may vary from person to person.

SECTION 3 COMPOSITION / INFORMATION ON INGREDIENTS

This material is defined as a mixture.

No Reportable Hazardous Substance(s) or Complex Substance(s).
Other ingredients determined not to be hazardous up to 100%.

SECTION 4 FIRST AID MEASURES

INHALATION
Remove from further exposure. For those providing assistance, avoid exposure to yourself or others. Use adequate respiratory protection. If respiratory irritation, dizziness, nausea, or unconsciousness occurs, seek immediate medical assistance. If breathing has stopped, assist ventilation with a mechanical device or use mouth-to-mouth resuscitation.

SKIN CONTACT
Wash contact areas with soap and water.

EYE CONTACT
Flush thoroughly with water. If irritation occurs, get medical assistance.

INGESTION
First aid is normally not required. Seek medical attention if discomfort occurs.

NOTE TO PHYSICIAN
None

SECTION 5 FIRE FIGHTING MEASURES

EXTINGUISHING MEDIA

Appropriate Extinguishing Media: Use water fog, foam, dry chemical or carbon dioxide (CO2) to extinguish flames.

Inappropriate Extinguishing Media: Straight streams of water

FIRE FIGHTING

Fire Fighting Instructions: Evacuate area. Prevent run-off from fire control or dilution from entering streams, sewers or drinking water supply. Fire-fighters should use standard protective equipment and in enclosed spaces, self-contained breathing apparatus (SCBA). Use water spray to cool fire exposed surfaces and to protect personnel.

Hazardous Combustion Products: Aldehydes, Incomplete combustion products, Oxides of carbon, Smoke, Fume, Sulphur oxides

FLAMMABILITY PROPERTIES

Flash Point [Method]: >282°C (540°F) [ASTM D-92]
Flammable Limits (Approximate volume % in air): LEL: 0.9 UEL: 7.0
Autoignition Temperature: N/D

SECTION 6 ACCIDENTAL RELEASE MEASURES

NOTIFICATION PROCEDURES

In the event of a spill or accidental release, notify relevant authorities in accordance with all applicable regulations.

PROTECTIVE MEASURES

Avoid contact with spilled material. See Section 5 for fire fighting information. See the Hazard Identification Section for Significant Hazards. See Section 4 for First Aid Advice. See Section 8 for advice on the minimum requirements for personal protective equipment. Additional protective measures may be necessary, depending on the specific circumstances and/or the expert judgment of the emergency responders.

For emergency responders: Respiratory protection: respiratory protection will be necessary only in special cases, e.g., formation of mists. Half-face or full-face respirator with filter(s) for dust/organic vapor or Self Contained Breathing Apparatus (SCBA) can be used depending on the size of spill and potential level of exposure. If the exposure cannot be completely characterized or an oxygen deficient atmosphere is possible or anticipated, SCBA is recommended. Work gloves that are resistant to hydrocarbons are recommended. Gloves made of polyvinyl acetate (PVA) are not water-resistant and are not suitable for emergency use. Chemical goggles are recommended if splashes or contact with eyes is possible. Small spills: normal antistatic work clothes are usually adequate. Large spills: full body suit of chemical resistant, antistatic material is recommended.

SPILL MANAGEMENT

Land Spill: Stop leak if you can do so without risk. Recover by pumping or with suitable absorbent.

Water Spill: Stop leak if you can do so without risk. Confine the spill immediately with booms. Warn other shipping. Remove from the surface by skimming or with suitable absorbents. Seek the advice of a specialist before using dispersants.

Water spill and land spill recommendations are based on the most likely spill scenario for this material; however, geographic conditions, wind, temperature, (and in the case of a water spill) wave and current direction and speed may greatly influence the appropriate action to be taken. For this reason, local experts should be consulted. Note: Local regulations may prescribe or limit action to be taken.

ENVIRONMENTAL PRECAUTIONS

Large Spills: Dyke far ahead of liquid spill for later recovery and disposal. Prevent entry into waterways, sewers, basements or confined areas.

SECTION 7 HANDLING AND STORAGE

HANDLING

Prevent small spills and leakage to avoid slip hazard. Material can accumulate static charges which may cause an electrical spark (ignition source). When the material is handled in bulk, an electrical spark could ignite any flammable vapors from liquids or residues that may be present (e.g., during switch-loading operations). Use proper bonding and/or earthing procedures. However, bonding and earthing may not eliminate the hazard from static accumulation. Consult local applicable standards for guidance. Additional references include American Petroleum Institute 2003 (Protection Against Ignitions Arising out of Static, Lightning and Stray Currents) or National Fire Protection Agency 77 (Recommended Practice on Static Electricity) or CENELEC CLC/TR 50404 (Electrostatics - Code of practice for the avoidance of hazards due to static electricity).

Static Accumulator: This material is a static accumulator.

STORAGE

The type of container used to store the material may affect static accumulation and dissipation. Do not store in open or unlabelled containers. Keep away from incompatible materials.

Material is defined under the National Standard [NOHSC:1015] Storage and Handling of Workplace Dangerous Goods.

SECTION 8 EXPOSURE CONTROLS / PERSONAL PROTECTION

Exposure limits/standards for materials that can be formed when handling this product:

NOTE: Limits/standards shown for guidance only. Follow applicable regulations.

Biological limits

No biological limits allocated.

ENGINEERING CONTROLS

The level of protection and types of controls necessary will vary depending upon potential exposure conditions. Control measures to consider:

No special requirements under ordinary conditions of use and with adequate ventilation.

PERSONAL PROTECTION

Personal protective equipment selections vary based on potential exposure conditions such as applications,

handling practices, concentration and ventilation. Information on the selection of protective equipment for use with this material, as provided below, is based upon intended, normal usage.

Respiratory Protection: If engineering controls do not maintain airborne contaminant concentrations at a level which is adequate to protect worker health, an approved respirator may be appropriate. Respirator selection, use, and maintenance must be in accordance with regulatory requirements, if applicable. Types of respirators to be considered for this material include:

Particulate

No special requirements under ordinary conditions of use and with adequate ventilation.

For high airborne concentrations, use an approved supplied-air respirator, operated in positive pressure mode. Supplied air respirators with an escape bottle may be appropriate when oxygen levels are inadequate, gas/vapour warning properties are poor, or if air purifying filter capacity/rating may be exceeded.

Hand Protection: Any specific glove information provided is based on published literature and glove manufacturer data. Glove suitability and breakthrough time will differ depending on the specific use conditions. Contact the glove manufacturer for specific advice on glove selection and breakthrough times for your use conditions. Inspect and replace worn or damaged gloves. The types of gloves to be considered for this material include:

Nitrile,Viton

No protection is ordinarily required under normal conditions of use.

Eye Protection: If contact is likely, safety glasses with side shields are recommended.

Skin and Body Protection: Any specific clothing information provided is based on published literature or manufacturer data. The types of clothing to be considered for this material include:

No skin protection is ordinarily required under normal conditions of use. In accordance with good industrial hygiene practices, precautions should be taken to avoid skin contact.

Specific Hygiene Measures: Always observe good personal hygiene measures, such as washing after handling the material and before eating, drinking, and/or smoking. Routinely wash work clothing and protective equipment to remove contaminants. Discard contaminated clothing and footwear that cannot be cleaned. Practise good housekeeping.

ENVIRONMENTAL CONTROLS

Comply with applicable environmental regulations limiting discharge to air, water and soil. Protect the environment by applying appropriate control measures to prevent or limit emissions.

SECTION 9 PHYSICAL AND CHEMICAL PROPERTIES

Note: Physical and chemical properties are provided for safety, health and environmental considerations only and may not fully represent product specifications. Contact the Supplier for additional information.

GENERAL INFORMATION

Physical State: Liquid
Colour: Brown
Odour: Characteristic
Odour Threshold: N/D

IMPORTANT HEALTH, SAFETY, AND ENVIRONMENTAL INFORMATION

Relative Density (at 15 °C): 0.907
Flammability (Solid, Gas): N/A
Flash Point [Method]: >282°C (540°F) [ASTM D-92]
Flammable Limits (Approximate volume % in air): LEL: 0.9 UEL: 7.0
Autoignition Temperature: N/D
Boiling Point / Range: > 316°C (600°F)
Decomposition Temperature: N/D
Vapour Density (Air = 1): > 2 at 101 kPa
Vapour Pressure: < 0.013 kPa (0.1 mm Hg) at 20 ºC
Evaporation Rate (n-butyl acetate = 1): N/D
pH: N/A
Log Pow (n-Octanol/Water Partition Coefficient): > 3.5
Solubility in Water: Negligible
Viscosity: 460 cSt (460 mm2/sec) at 40 ºC | 30.5 cSt (30.5 mm2/sec) at 100°C
Oxidizing Properties: See Hazards Identification Section.

OTHER INFORMATION

Freezing Point: N/D
Melting Point: N/A
Pour Point: -6°C (21°F)
DMSO Extract (mineral oil only), IP-346: < 3 %wt

SECTION 10 STABILITY AND REACTIVITY

STABILITY: Material is stable under normal conditions.

CONDITIONS TO AVOID: Excessive heat. High energy sources of ignition.

INCOMPATIBLE MATERIALS: Strong oxidisers

HAZARDOUS DECOMPOSITION PRODUCTS: Material does not decompose at ambient temperatures.

POSSIBILITY OF HAZARDOUS REACTIONS: Hazardous polymerization will not occur.

SECTION 11 TOXICOLOGICAL INFORMATION

INFORMATION ON TOXICOLOGICAL EFFECTS

Hazard Class	Conclusion / Remarks
Inhalation	
Acute Toxicity: No end point data for material.	Minimally Toxic. Based on assessment of the components.
Irritation: No end point data for material.	Negligible hazard at ambient/normal handling temperatures.
Ingestion	
Acute Toxicity: No end point data for material.	Minimally Toxic. Based on assessment of the components.
Skin	
Acute Toxicity: No end point data for material.	Minimally Toxic. Based on assessment of the components.
Skin Corrosion/Irritation: No end point data	Negligible irritation to skin at ambient temperatures. Based on

for material.	assessment of the components.
Eye	
Serious Eye Damage/Irritation: No end point data for material.	May cause mild, short-lasting discomfort to eyes. Based on assessment of the components.
Sensitisation	
Respiratory Sensitization: No end point data for material.	Not expected to be a respiratory sensitizer.
Skin Sensitization: No end point data for material.	Not expected to be a skin sensitizer. Based on assessment of the components.
Aspiration: Data available.	Not expected to be an aspiration hazard. Based on physico-chemical properties of the material.
Germ Cell Mutagenicity: No end point data for material.	Not expected to be a germ cell mutagen. Based on assessment of the components.
Carcinogenicity: No end point data for material.	Not expected to cause cancer. Based on assessment of the components.
Reproductive Toxicity: No end point data for material.	Not expected to be a reproductive toxicant. Based on assessment of the components.
Lactation: No end point data for material.	Not expected to cause harm to breast-fed children.
Specific Target Organ Toxicity (STOT)	
Single Exposure: No end point data for material.	Not expected to cause organ damage from a single exposure.
Repeated Exposure: No end point data for material.	Not expected to cause organ damage from prolonged or repeated exposure. Based on assessment of the components.

OTHER INFORMATION

Contains:
Base oil severely refined: Not carcinogenic in animal studies. Representative material passes IP-346, Modified Ames test, and/or other screening tests. Dermal and inhalation studies showed minimal effects; lung non-specific infiltration of immune cells, oil deposition and minimal granuloma formation. Not sensitising in test animals.

IARC Classification:
The following ingredients are cited on the lists below:

Chemical Name	CAS Number	List Citations
SOLVENT DEASPHALTED RESIDUAL OIL	64741-95-3	1

--REGULATORY LISTS SEARCHED--

1 = IARC 1 2 = IARC 2A 3 = IARC 2B

SECTION 12 ECOLOGICAL INFORMATION

The information given is based on data available for the material, the components of the material, and similar materials.

ECOTOXICITY

Material -- Not expected to be harmful to aquatic organisms.

MOBILITY

Base oil component -- Low solubility and floats and is expected to migrate from water to the land. Expected to partition to sediment and wastewater solids.

PERSISTENCE AND DEGRADABILITY
Biodegradation:
Base oil component -- Expected to be inherently biodegradable

BIOACCUMULATION POTENTIAL
Base oil component -- Has the potential to bioaccumulate, however metabolism or physical properties may reduce the bioconcentration or limit bioavailability.

SECTION 13 DISPOSAL CONSIDERATIONS

Disposal recommendations based on material as supplied. Disposal must be in accordance with current applicable laws and regulations, and material characteristics at time of disposal.

DISPOSAL RECOMMENDATIONS
Product is suitable for burning in an enclosed controlled burner for fuel value or disposal by supervised incineration at very high temperatures to prevent formation of undesirable combustion products. Protect the environment. Dispose of used oil at designated sites. Minimize skin contact. Do not mix used oils with solvents, brake fluids or coolants.

Empty Container Warning Empty Container Warning (where applicable): Empty containers may contain residue and can be dangerous. Do not attempt to refill or clean containers without proper instructions. Empty drums should be completely drained and safely stored until appropriately reconditioned or disposed. Empty containers should be taken for recycling, recovery, or disposal through suitably qualified or licensed contractor and in accordance with governmental regulations. DO NOT PRESSURISE, CUT, WELD, BRAZE, SOLDER, DRILL, GRIND, OR EXPOSE SUCH CONTAINERS TO HEAT, FLAME, SPARKS, STATIC ELECTRICITY, OR OTHER SOURCES OF IGNITION. THEY MAY EXPLODE AND CAUSE INJURY OR DEATH.

SECTION 14 TRANSPORT INFORMATION

LAND (ADG) : Not Regulated for Land Transport

SEA (IMDG): Not Regulated for Sea Transport according to IMDG-Code

Marine Pollutant: No

AIR (IATA): Not Regulated for Air Transport

SECTION 15 REGULATORY INFORMATION

This material is not considered hazardous according to Australia Model Work Health and Safety Regulations.

Product is not regulated according to Australian Dangerous Goods Code.

No Poison Schedule number allocated by the Standard for the Uniform Scheduling of Medicines and Poisons (SUSMP) established under the Therapeutic Goods Act.

AS1940 COMBUSTIBLE CLASS: C2

REGULATORY STATUS AND APPLICABLE LAWS AND REGULATIONS

Listed or exempt from listing/notification on the following chemical inventories: AICS, DSL, ENCS, IECSC, KECI, PICCS, TSCA

SECTION 16 OTHER INFORMATION

KEY TO ABBREVIATIONS AND ACRONYMS:

N/D = Not determined, N/A = Not applicable, STEL = Short-Term Exposure Limit, TWA = Time-Weighted Average

THIS SAFETY DATA SHEET CONTAINS THE FOLLOWING REVISIONS:
Perkal Pty Ltd Trading as Roto Oil (South Australia): Section 01: Supplier Mailing Address information was deleted.
Perkal Pty Ltd Trading as Statewide Oil (South Australia): Section 01: Supplier Mailing Address information was added.
Perkal Pty Ltd Trading as Statewide Oil (Western Australia): Section 01: Supplier Mailing Address information was modified.
Section 01: Company Contact Methods information was modified.
Section 01: Product Code information was modified.
Section 11: Tox List Cited Table information was added.
Southern Cross Lubes (Victoria and Tasmania): Section 01: Supplier Mailing Address information was modified.

The information and recommendations contained herein are, to the best of ExxonMobil's knowledge and belief, accurate and reliable as of the date issued. You can contact ExxonMobil to insure that this document is the most current available from ExxonMobil. The information and recommendations are offered for the user's consideration and examination. It is the user's responsibility to satisfy itself that the product is suitable for the intended use. If buyer repackages this product, it is the user's responsibility to insure proper health, safety and other necessary information is included with and/or on the container. Appropriate warnings and safe-handling procedures should be provided to handlers and users. Alteration of this document is strictly prohibited. Except to the extent required by law, re-publication or retransmission of this document, in whole or in part, is not permitted. The term, "ExxonMobil" is used for convenience, and may include any one or more of ExxonMobil Chemical Company, Exxon Mobil Corporation, or any affiliates in which they directly of indirectly hold any interest.

DGN: 2007389DAU (547803)
Revision Date: 26 Jul 2017

Prepared by: Exxon Mobil Corporation
EMBSI, Clinton NJ US

LEFT BLANK

SCHUTTE & KOERTING

FIGURE 264, EDUCTOR

LEFT BLANK

Schutte & Koerting

Water Jet Eductors

Introduction

The Water Jet Eductor is a type of ejector which utilizes the kinetic energy of a pressurized liquid to entrain another liquid, mix the two, and discharge the mixture against a counter pressure. Ejectors of this type are used throughout industry for pumping and mixing operations.

Application

Water jet eductors have numerous uses in the plant such as lifting, pumping, mixing and agitation of liquids, granular solids and slurries. Some specific applications are: draining flooded areas, emptying tanks and sumps, pumping and mixing operations in oil treating systems, dewatering sand and coal barges, introducing anti-knock agents and coloring additives into gasoline, continuous blending, acidifying, causticizing of oils, producing emulsions, pumping food products, pumping sand and filter clay, tank mixing, and various proportioning operations. As an example of eductor performance in a typical use, a jet eductor measuring 8½" in length will empty a 500 gallon water tank in less than half an hour, using water at 60 psig, as the sole source of motive power.

Features

Self Priming Eductors require no priming and can be used for either continuous or intermittent operation.
Simple and Reliable Since the basic eductor has no moving parts to wear or break, only periodic inspection is required.
Corrosion and Erosion Resistant Because they can be made from most materials, or coated with corrosion resistant materials, eductors can be made resistant to the corrosive effects of the liquids handled and the environment.
Automatic Control Units can be adapted for automatic operation by means of a regulating spindle or a snap valve and float arrangement.
Non-Electrical Eductors can be used in hazardous locations where electrically operated alternatives would require expensive explosion-proofing.
Easy to Install Either threaded or flanged connections are available. Units are compact, relatively light and can be adapted to a variety of piping configurations.
Low Cost Water eductors are inexpensive in relation to the work they do.

Construction

Water Jet Eductors consist of only three basic components: a converging nozzle, a diffuser (or venturi) and a body to hold these parts in their proper relative positions and provide a suction chamber.

Converging Nozzle | Diffuser (or Venturi) | Body - holds diffuser and nozzle in position

Jet ejectors can be made from most workable materials, such as: cast iron, bronze, stainless steel, aluminum, polyvinyl chloride, polyester fiberglass, Phenolic Fiberglass Reinforced Plastic (FRP), Teflon[2] and Hastelloy[3].

A variety of types and sizes are available as noted on the following pages. Certain variables such as pressure, temperature, viscosity, density, operating conditions of suction and discharge fluids, and desired results must be considered in determining the type of eductor best suited to your needs. S&K engineers will work with you to select the proper eductor for your application.

Request Performance Data Supplement 2M for operating characteristics of water jet eductors.

Index

Description	Page
Fig. 264 Water Jet Eductor	2
Fig. 266 Water Jet Eductor	2
Fig. 264 PVC and Kynar Water Jet Eductor	3
Fig. 2645 Automatic Eductor	4
Fig. 265 Liquid Jet Eductor	5
Fig. 242 Condensate and Mixing Eductor	6
Fig. 258 Tank Mixing Eductor	7
Fig. 268 Tank Mixing Eductor	7
Fig. 254 Hopper-Equipped Eductor	9
Fig. 267 Hopper-Equipped Eductor	9
Fig. 227 Hopper-Equipped Eductor	9
Fig. 224 Water Jet Sand and Mud Eductor	10
Fig. 235 Annular Multi-Nozzle Water Jet Eductor	11
Fig. 222 Portable Eductor	12
Fig. 212 Corrosion Resistant Eductor	12
Typical Applications of S&K Water Jet Eductors	12

Fig. 264 and Fig. 266 Water Jet Eductors

S&K Fig. 264 and Fig. 266 Water Jet Eductors are designed for liquid pumping and mixing operations and for the handling of some solids where requirements do not necessitate capacities greater than those obtained with sizes up to and including 6". They are considered the standard eductors within this size range. Typical applications begin on page 12.

In operation, pressure liquid enters the eductor through the pressure nozzle and produces a high velocity jet. This jet action creates a vacuum in the line which causes the suction liquid to flow up into the body of the eductor where it is entrained by the pressure liquid. Both liquids are thoroughly mixed in the throat of the eductor and are discharged against back pressure. The streamlined body with no pockets permits the pressure liquid to move straight through the eductor and reduces the possibility of solids in the suction material collecting and clogging. In addition, pressure drop in the suction chamber is held to a minimum.

Accompanying Bulletin 2M Supplement Performance Data provides performance information.

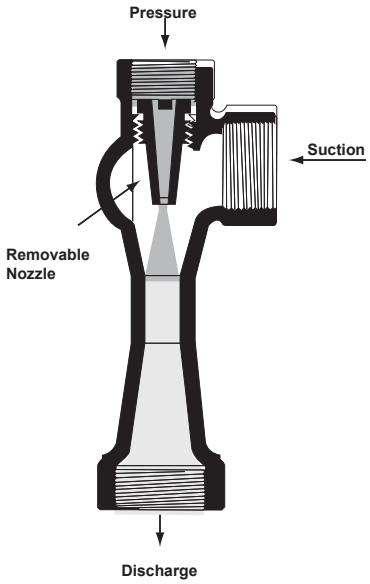

Fig 1. FIG. 264 EDUCTOR
Eductors of this type have streamlined bodies with threaded pipe connections. They are made in sizes ranging from 1/2" to 3" and are stocked in these sizes in ductile iron and bronze and Fig. 316 stainless steel. They are stocked in sizes from 1/2", 2", and 3" in PVC. Other materials are available on order.

Fig. 2. FIG. 264 EDUCTOR

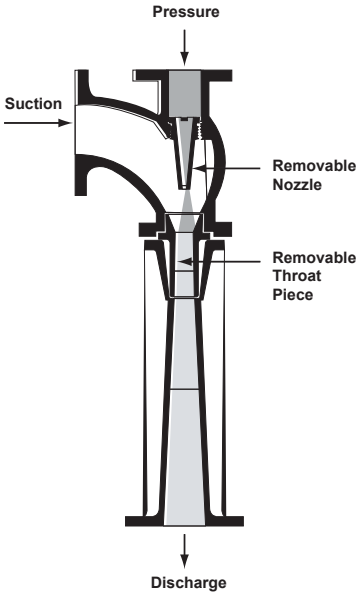

Fig. 3. FIG. 266 EDUCTOR.
These eductors are similar to Fig. 264 Eductors except that they have flanged connections and removable throat bushings along with removable nozzles. They are supplied in cast iron, bronze-mounted in 4" and 6" sizes. Other materials can be supplied on special order.

Table 1. Sizes and Dimensions, Fig. 264 and Fig. 266 Water Jet Eductors

Size In Inches	Connections In Inches		Wgt. In Lbs.	Working Pressures						Dimensions in Inches			Max. Round Particle Size In Inches
	Suction Disch.	Pressure		Cast Iron		Bronze		Stainless Steel		A	B	C	
				Motive psi	Body psi	Motive psi	Body psi	Motive psi	Body psi				
Fig. 264 Eductor													
1/2	1/2	3/8	3/4	150	125	125	100	600	500	1 1/16	2 9/16	1 1/8	1/16
3/4	3/4	1/2	1 1/4	125	125	100	100	500	500	1 3/8	3 3/8	1 1/4	1/8
1	1	3/4	2	150	150	150	125	600	600	1 1/2	4 3/16	1 5/8	5/32
1 1/2	1 1/2	1	4	150	100	125	90	600	400	2	6 1/2	2	5/16
2	2	1 1/4	6	150	100	125	85	600	400	2 1/4	7 5/8	2 1/4	3/8
2 1/2	2 1/2	1 1/2	11	200	150	200	125	600	300	2 11/16	9 1/4	3 1/8	3/8
3	3	2	20	250	150	225	125	600	400	3 1/8	11 1/4	3 1/2	13/16
Fig. 266 Eductor													
4	4	2 1/2	100	125	125	-	-	-	-	4 3/8	19 1/4	7 13/16	1
6	6	4	180	125	125	-	-	-	-	6 1/16	28 3/8	9 1/8	1 1/8

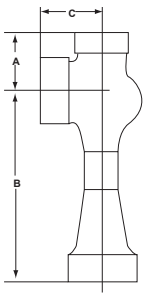

Fig. 264

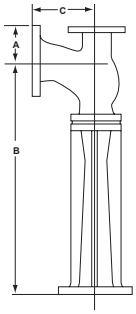

Fig. 266

Schutte & Koerting • 2510 Metropolitan Drive • Trevose, PA 19053 • USA • tel: (215) 639-0900 • fax: (215) 639-1597 • www.s-k.com • sales@s-k.com

Fig. 264 PVC and Kynar Water Jet Eductors

Fig. 264 PVC and Kynar Eductors offer resistance to many corrosive media. PVC Eductors are not recommended, however, for acetone, ketones, ether, esters, aromatic hydrocarbons or chlorinated hydrocarbons. A table of recommended uses is available on request. Maximum temperature rating is 150°F. Kynar Eductors will handle PVC applications including those mentioned above. Kynar's temperature limitation is 250°F. Pressure ratings are given in Table 2.

Fig. 264 PVC and Kynar Eductors operate on the same principle as do all other S&K Eductors. Performance characteristics with water are shown in Bulletin 2M Supplement Technical Data. For performance with other liquids, contact S&K.

Nozzles and diffusers are not removable on these eductors. Sizes 1" and smaller are of molded construction.

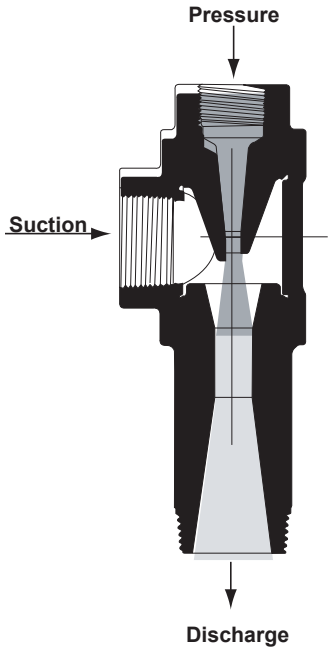

Fig. 4. FIG. 264 PVC EDUCTOR. Sizes from 1 1/2" up are designed as shown here and in Fig. 5. On these sizes, the pressure and suction connections are female and the discharge connection is male. All connections are threaded.

Fig. 5. FIG. 264 PVC EDUCTOR.

Table 2. Sizes, Dimensions, and Particle Size Data, Fig. 264 Water Jet Eductor

Size in Inches	Connections in Inches		Wgt. In Lbs.	Dimensions in Inches			Working Pressure (psig) at 75°F	Max. Round Particle Sizes (in inches) Eductors will Handle
	Suction Disch.	Pressure		A	B	C		
1/2s	1/2s	3/8s	1/2	1 7/16	3 1/4	1 7/16	325	1/16
1/2	1/2	3/8	1/2	1 7/16	3 1/4	1 7/16	325	1/16
3/4	3/4	1/2	1/2	1 11/16	3 1/2	1 11/16	275	1/8
1	1	3/4	1/2	1 7/8	3 11/16	1 7/8	250	5/32
1 1/2	1 1/2	1	1 1/2	2 9/16	5 11/32	2 1/16	200	5/16
2	2	1 1/4	2 1/2	3 1/32	6 21/32	2 5/32	185	3/8
3	3	2	6 3/4	4 1/8	9 1/2	3 7/8	165	13/16

s = denotes smaller internals.

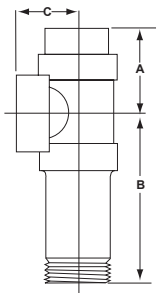

Fig. 6. FIG. 264 KYNAR EDUCTOR. 1/2" to 1" Design. Sizes 1/2", 3/4", and 1" look like this. All connections are female and are threaded.

Fig. 2645 Automatic Eductor

Fig. 2645 Automatic Water Jet Eductors are used to pump out sumps (pits, tanks, etc.) where liquid accumulates slowly but must be evacuated when it reaches a predetermined level.

As the liquid in the sump (basin, tank, cellar, bilge, etc.) accumulates, it raises the ball float until the upward action of the float opens the snap-acting valve, admitting motive fluid into the pressure connection of the eductor.

The jet action of the motive fluid creates a vacuum in the eductor and entrains the suction fluid, discharging both fluids under pressure. As the suction fluid is thus pumped out, the sump level drops to a point where the snap-acting valve shuts off. No further pumping action takes place until the sump again fills to the operating level.

Operation of the Fig. 2645 Eductor is completely automatic. It is self-operated, requires no electrical connections or any external power other than the motive fluid. The snap-acting valve and ball float are the only moving parts. The full assembly is so compact it can be installed in tanks as small as 13 1/2" diameter.

For performance information, see accompanying Bulletin 2M Supplement Performance Data.

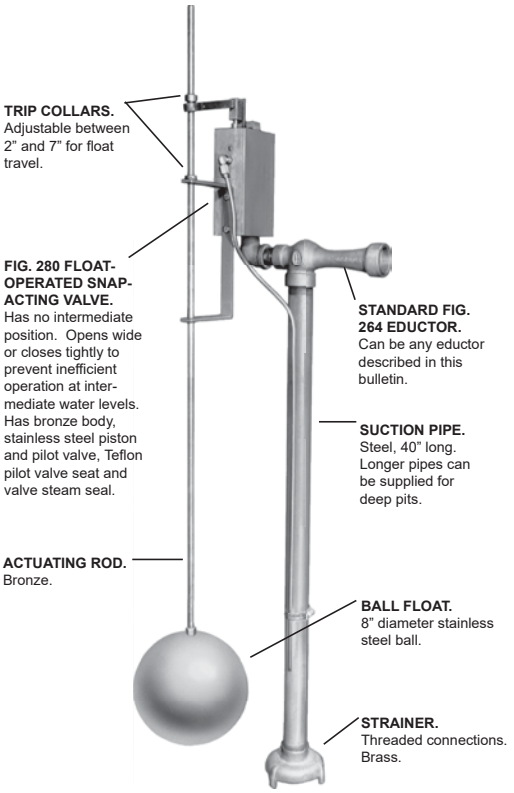

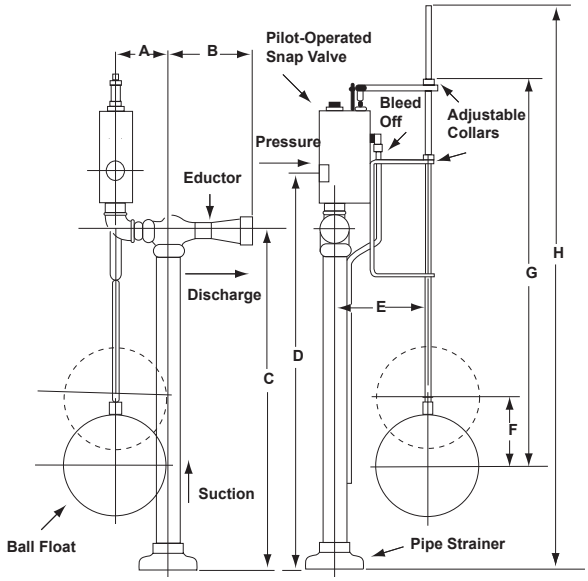

Table 3. Sizes and Dimensions, Fig. 2645 Automatic Eductor

Eductor Size In Inches	Connections In Inches N.P.T.		Wgt. In Lbs.	Working Pressure (Bronze)		Dimensions in Inches							
	Suc.-Disch.	Pressure (Snap-Valve)		Motive* (psig)	Body (psig)	A	B	C	D	E	F	G	H
3/4	3/4	1	24	100	100	3 11/16	3 3/8	41	44 7/8	7 5/6	5 3/8	47 1/8	60
1	1	1	26	150	125	4 5/16	4 3/16	41	44 7/8	7 5/6	5 3/8	47 1/8	60
1 1/2	1 1/2	1	32	125	90	4 1/8	6 1/2	41	44 7/8	7 5/6	5 3/8	47 1/8	60
2	2	2	43	125	85	6 1/4	7 5/8	38 3/8	43 15/16	7 7/16	5 3/8	47 1/8	60
2 1/2	2 1/2	2	65	200	125	6 11/16	9 1/4	38 3/8	43 15/16	7 7/16	5 3/8	47 1/8	60
3	3	2	81	200	125	6 3/8	11 1/4	38 3/8	43 15/16	7 7/16	5 3/8	47 1/8	60

*Minimum motive pressure for all Fig. 2645 Eductors: 40 psig

Fig. 265 Liquid Jet Eductor

Fig. 265 Liquid Jet Eductor is similar in design to the Fig. 264 Water Jet Eductor and is made for liquid pumping and mixing operations and for handling some solids where requirements do not necessitate capacities greater than those obtained with sizes up to and including 3". Typical applications begin on page 12.

The Fig. 265 Liquid Jet Eductor provides higher discharge pressures and higher suction flow capacities than other standard eductors.

In operation, pressure liquid enters the eductor through the pressure nozzle and produces a high velocity jet. This jet action creates a vacuum in the line which causes the suction liquid to flow up into the body of the eductor where it is entrained by the pressure liquid. Both liquids are thoroughly mixed in the throat of the eductor and are discharged against back pressure. The streamlined body with no pockets permits the pressure liquid to move straight through the eductor and reduces the possibility of solids in the suction material collecting and clogging. In addition, pressure drop in the suction chamber is held to a minimum.

Accompanying Bulletin 2M Supplement Performance Data provides performance information.

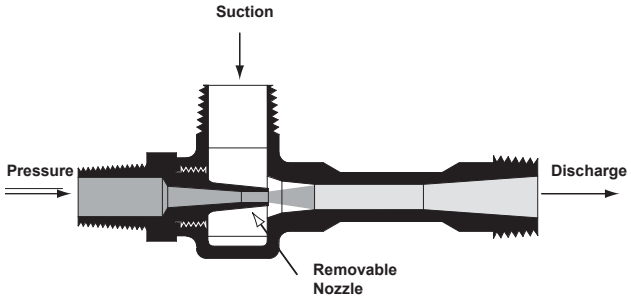

Fig 8. FIG. 265 LIQUID JET EDUCTOR
Eductors of this type have streamlined investment cast bodies with threaded NPT male pipe connections. They are made in sizes ranging from 3/4" to 3" and are stocked in these sizes in Fig. 316 stainless steel. Other materials are available on order.

Fig. 9. FIG. 265 EDUCTOR.

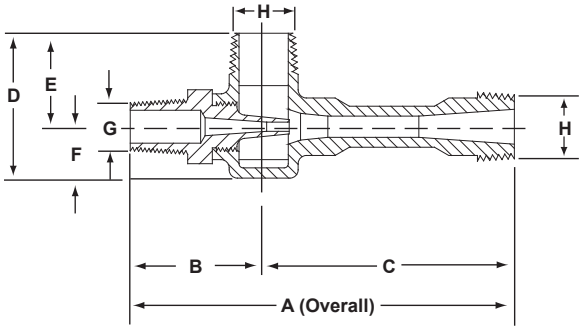

Table 265. Sizes and Dimensions, Fig. 265 Liquid Jet Eductor

Size (In Inches)	Wgt.	Dimensions						Connections	
		A	B	C	D	E	F	G	H
3/4	1	5 7/8	2	3 7/8	2 1/4	1 1/2	3/4	3/8	3/4
1	2	7 1/8	2 1/4	4 7/8	2 3/4	1 3/4	1	1/2	1
1 1/2	4	11	2 3/4	8 1/4	3 21/32	2 1/2	1 5/16	1	1 1/2
2	8	14 3/8	3 1/8	11 1/4	5	2 7/8	2 1/8	1 1/4	2
3	30	23 7/8	4	19 7/8	8	5	3	2	3

Fig. 242 Condensate and Mixing Eductor

Fig. 242 Water Jet Eductors are designed to mix two liquids intimately in various proportions in operations where the pressure liquid is the greater proportion of the mixture. Typical applications include: removal of condensate; mixing gasoline with acid; blending and proportioning chemical solutions; and diluting acids and alkali.

In operation, the pressure liquid issues from the nozzle at high velocity and entrains the suction liquid. The extreme turbulence in the throat of the eductor mixes the two liquids, blending and emulsifying thoroughly and completely. Colloidal suspensions can also be produced.

Entrainment ratio is dependent upon the eductor design. Close regulation within the design limits is usually obtained by a valve in the suction liquid line.

The pressure drop between the pressure liquid and the discharge should be at least 10 psi to give adequate mixing, and the difference between the discharge pressure and the suction pressure should not exceed 75% of the difference between the operating pressure and the suction pressure.

When used for removal of condensate, the eductor should be installed three feet below the condensate level at the drain of the condenser. For performance information, see Technical Data Supplement to Bulletin 2M.

Fig. 10. FIG. 242 EDUCTOR.

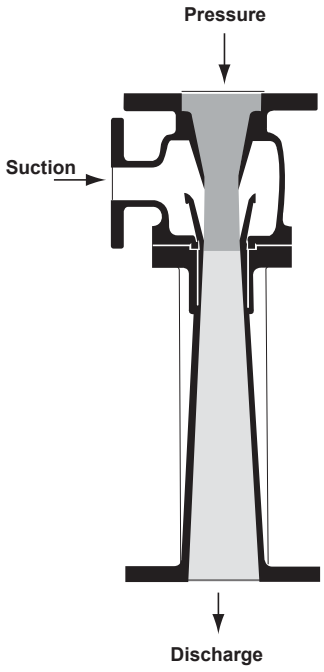

Fig. 11. FIG. 242 EDUCTOR.
The 242 is the flanged type Condensate and Mixing Eductor. This style, too, is made in bronze or cast iron, bronze mounted, but can be supplied in other materials. Nozzles and throat bushings are removable.

Table 4. Sizes and Dimensions, Fig. 242 Condensate and Mixing Eductor

Size No.	Connection in Inches			Dimensions in Inches			Weight in Lbs.
	Pressure	Suction*	Discharge	A	B	C	
2	2	1 - 2	2	4 3/4	11 3/4	3 3/4	50
2 1/2	2 1/2	1 1/4 - 2 1/2	2 1/2	3 1/2	15 1/4	4	60
3	3	2 - 3	3	4	17 15/16	4 5/8	70
4	4	2 - 4	4	5 9/16	20 3/8	5 1/2	80
6	6	3 - 6	6	6 1/4	29	6	270
8	8	4 - 8	8	14 1/16	35 1/2	7 13/16	450

*Note: Suction connection may vary to suit conditions.

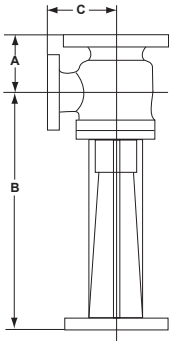

Fig. 258 and Fig. 268 Tank Mixing Eductors

Fig. 258 and Fig. 268 Tank Mixing Eductors are used to agitate liquid, dissolve powdered solids in liquid, and to mix two or more liquids intimately within a tank or other vessel without the use of baffles or moving parts inside the tank. These units take the place of mechanical agitators.

The 268 is used in preference to the 258 in operations where it is desirable to start mixing from a shallow level or where uniform local agitation is required over large, shallow tank area. Typical applications of each are shown in the application section beginning on page 12.

Fig. 258 and 268 Eductors are operated by a flow of pressure liquid through the nozzle. As shown in the sectional drawings, the motive liquid entrains suction liquid, the two are mixed intimately in the venturi, and the mixture is discharged into the tank. Pressure liquid can be taken from the tank by means of a pump or it can be a new liquid. Standard, stock units are designed to entrain 3 gallons of suction fluid for each gallon of motive fluid. (Special designs of the 258 Eductor can be made to give 1 to 1 ratio.)

Normally, the tank is filled by means of the eductors. Mixing occurs as soon as the level of liquid in the tank covers the suction of the eductor. In addition to the mixing obtained between suction and motive fluids in the eductor, the jet action of the discharge from the eductor serves to agitate the tank and prevents stratification.

If a drawing or sketch of the mixing tank is furnished, S&K will recommend and quote on the proper type of distribution system.

Performance information is given in accompanying Performance Data, Bulletin 2M Supplement. Similar units using steam as motive fluid for heating, circulating and mixing are described in Bulletin 3A as “Fig. 314” units.

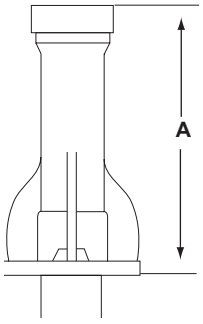

Table 5. Sizes and Dimensions, Fig. 258 Tank Mixing Eductor

Size in Inches	Connections in Inches		Wgt. in Lbs.	Dimensions in Inches
	Disch.	Pressure		A
1/2	1	1/2	2	5 1/2
3/4	1 1/2	3/4	6	8 1/2
1	2	1	22 1/2	12 5/16
1 1/4	2 1/2	1 1/4	29	11 1/8
1 1/2	3	1 1/2	36 1/2	15 7/8
2	4*	2	78	19 5/8
3	6*	3	ON APPL.	28 13/16
4	†	4*		†
5	†	5*		†
6	†	6*		†

*Flanged Connection
† Varies with performance and application
Note: A discharge flange is not supplied on large fabricated units unless required by the application.
(See Fig. 16 for dimensions of Fig. 268 Eductor).

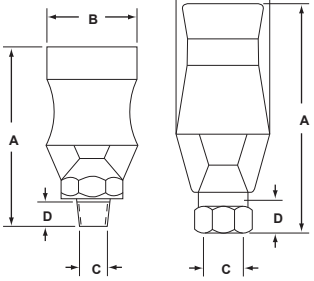

Sizes 3/8, 3/4 Sizes 1 1/2, 2, 3

Table 5-A. Sizes and Dimensions, Fig. 268 Tank Mixing Eductor

Size in Inches	A	B	C	D	Wgt. in Lbs.
3/8	3 3/4	1 3/4	3/8	7/16	3/4
3/4	5 1/4	2 3/8	3/4	9/16	2 1/2
1 1/2	8 13/16	4 1/16	1 1/2	13/16	6 1/4
2	12 1/4	5 13/16	2	45/64	22
3	17	8 1/8	3	15/16	48

Fig. 258 and Fig. 268 Tank Mixing Eductors

Fig. 12. FIG. 258 TANK MIXING EDUCTOR.

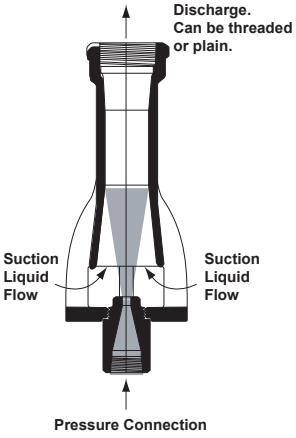

Fig. 13. FIG. 258 TANK MIXING EDUCTOR.
Standard units are made in cast iron and bronze but can be made in many other materials on special order. Large sizes can be fabricated instead of cast.

Fig. 14. FIG. 268 TANK MIXING EDUCTOR. 3/8" and 3/4" sizes.

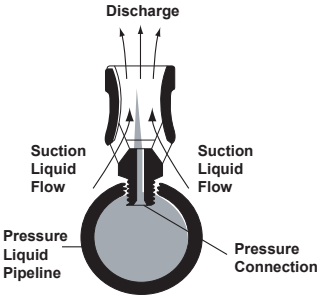

Fig. 15. FIG. 268 TANK MIXING EDUCTOR.
This design is used for 3/8" (3 3/4" overall length and 1 3/4" overall width), and 3/4" (5 1/4" overall length and 2 3/8" overall width) pressure connection sizes. It is threaded directly into threads tapped into the 1 1/2" diameter or larger pressure liquid pipeline. It is cast in one piece and is stocked in cast iron, bronze and 316 stainless steel. Other materials can be supplied on special order.

Fig. 17. FIG. 268 TANK MIXING EDUCTOR. 1 1/2" size and over.

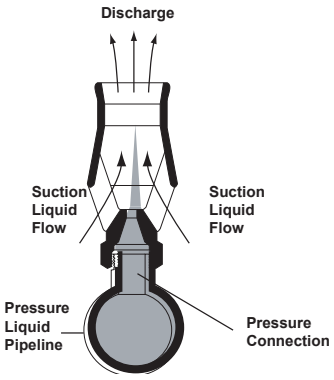

Fig. 16. FIG. 268 TANK MIXING EDUCTOR.
This design is used for 1 1/2" (8 7/8" overall length x 4 1/8" overall width), 2" (12 1/4" overall length x 5 7/8" overall width) and 3" (17" overall length x 8 1/8" overall width) pressure connection sizes. All are cast in one piece and have female thread connections for installation on nipples welded into the pressure liquid piping. The 1 1/2" and 2" sizes are stocked in cast iron, bronze, and 316 stainless steel. The 3" size is stocked in cast iron and stainless steel only. Other materials can be supplied on special order.

Fig. 254 and Fig. 267 and Fig. 227 Hopper-Equipped Eductors

Fig. 254 and Fig. 267 Hopper-Type Eductors are made for handling slurries or dry solids in granular form and are used extensively for ejecting sludges from tank bottoms, for pumping sand from filter beds and for washing and conveying granular materials. Typical materials handled include: borax, charcoal, diatomaceous earth, lime, mash, fly ash, rosin, rock and granulated salt, sand, dry sawdust, light soda ash, dry sodium nitrate, powdered sulphur, wheat and many others.

A typical application of Fig. 254 Eductor is shown in the application section of this bulletin, beginning on page 12. the material from adhering to the sides of the hopper and keep it moving down into the eductor. Pressure water, passing through the eductor nozzle, entrains the sand, sludge or other materials and discharges into the piping system.

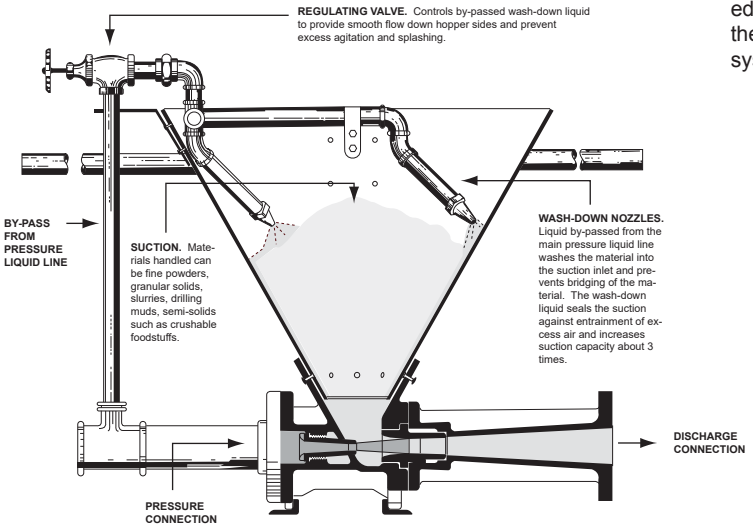

Fig. 18. FIG. 254 HOPPER-EQUIPPED EDUCTOR.
Standard units are made in cast iron and have hardened steel nozzles and throat bushings. Special materials are also available on special order. Both nozzles and throat pieces are removable and pressure and discharge connections can be fitted for hose where maximum portability is desired. Handles and supporting feet are optional.

Fig. 19. FIG. 267 HOPPER-EQUIPPED EDUCTOR.
This economical unit is available from stock with body and nozzle in cast iron, bronze, 316 stainless steel, Kynar and PVC. Hoppers are stocked in Type 304 stainless steel (1, 1 1/2 & 2" sizes) and are also available in galvanized steel, brass, aluminum and PVC.

Table 6. Sizes and Dimensions, Fig. 254(1) and Fig. 267(2) Hopper-Equipped Eductors

Size in Inches	Connection (Inches)		Dimension (Inches)			
	Disch.	Press.	A	B	C	D
FIG. 254(1)						
1 1/2	1 1/2	1 1/2	13 1/4	11 1/2	18	15 1/4
2	2	2	14 1/2	13 3/4	21	17 3/4
3	3	2 1/2	17 3/4	17 1/2	23 3/8	19 3/4
4	4	4	19 5/8	24 3/16	27	22 1/2
6	6	6	28 1/16	36 7/16	38	28 5/16
FIG. 267(2)						
1	1	3/4	1 1/2	4 3/16	24	42
1 1/2	1 1/2	1	2	6 1/2	24	41 1/2
2	2	1 1/4	2 1/4	7 5/8	24	41
2 1/2	2 1/2	1 1/2	2 11/16	9 1/4	24	41 1/4
3	3	2	3 1/8	11 1/4	24	40 3/4

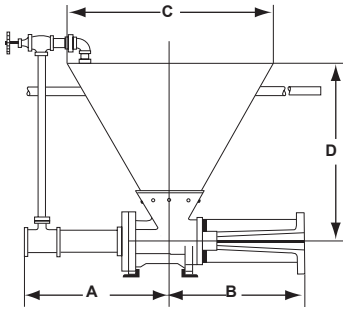

Fig. 254(1)

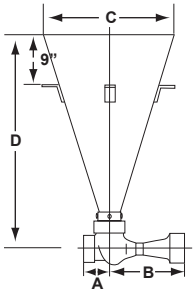

Fig. 267(2)

Fig. 227 Hopper-Equipped Eductor

Furnished with a stainless steel funnel, the eductor can be made of any machinable material. Bronze units up to and including 3" and cast iron units up to and including 4" sizes are available from stock. Prices, delivery or a sectional outline drawing 67-XS-081-J will be furnished on request. Stainless steel funnels are stocked in 1-1/4", 1-1/2" and 2" sizes.

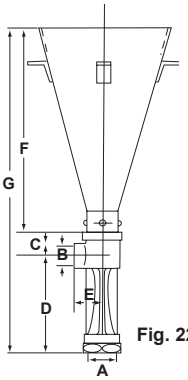

Fig. 227

Table 227. Sizes and Dimensions of Fig. 227 Hopper-Equipped Eductor

Dimensions in Inches							Wgt. (Lbs)
A	B	C	D	E	F	G	
1 1/4	3/4	1 9/16	6 7/16	1 13/16	39 5/8	47 5/8	31
1 1/2	3/4	2	8 13/16	2	39 1/4	50	36
2	1	2 1/2	9 1/8	2 1/4	38 1/2	49 7/8	45
2 1/2	1 1/4	2 3/4	11 1/4	2 3/8	37 7/8	51 7/8	51
3	1 1/2	3 1/16	13 5/16	2 3/4	37	53 3/8	58
4	2	3 5/8	17 1/16	3 3/16	35 1/2	56 3/16	70

Fig. 224 Water Jet Sand and Mud Eductor

Fig. 224 Water Jet Sand and Mud Eductors are used in pumping out wells, pits, tanks, or sumps where there is an accumulation of sand, mud, or other material not easily handled by the standard eductor. They are ideal for handling the heavy sludge residue from refining operations. A typical application of a Fig. 224 Eductor is shown in the application section beginning on page 12.

These eductors have an open suction and are designed to be submerged in the material being handled. The pressure liquid, passing through the nozzle, produces a high velocity jet which entrains the sludge or mud. This mixture is then discharged through a vertical pipe or hose. For performance information, see Bulletin 2M Supplement.

Similar units which use steam as the motive power are described in Bulletin 2A under “Fig. 225 Syphons”.

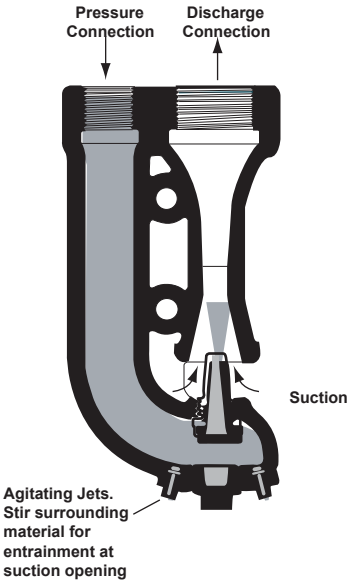

Fig. 20. FIG. 224 WATER JET SAND AND MUD EDUCTOR.
Standard units are made of cast iron with bronze pressure nozzles. Other corrosion-resistant materials are available on special order.

Fig. 21. FIG. 224 EDUCTOR.

Table 7. Sizes and Dimensions, Fig. 224 Sand and Mud Eductor

Size in Inches	Connections in Inches		Wgt in Lbs.	Dimensions in Inches	
	Disch.	Pressure		A	B
1 1/2	1 1/2	1	8	9 3/8	4 5/8
2 1/2	2 1/2	2	42	16 3/4	7 7/8
3	3	2 1/2	87	21 7/8	10 1/4
4	4	3	130	25 1/2	11
5*	5	4	-	30 1/4	17 3/8
6*	6	4	-	35 5/16	18

*Flanged Connections.

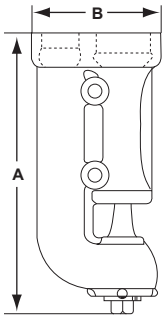

Fig. 235 Annular Multi-Nozzle Water Jet Eductor

Fig. 235 Annular Multi-Nozzle Water Jet Eductors are designed to handle solids and semi-solids. They operate at highest efficiency in large sizes and at low discharge heads. Because these eductors have high air handling capacities, they are particularly well suited for priming large pumps such as dredging pumps which frequently encounter air pockets.

Nozzles on the periphery of the throat introduce the pressure water. The pressure water creates a vacuum which draws in and entrains the material being handled and all flow discharges through the discharge connection. All suction flow is in a straight line through the eductor. For performance information, see Bulletin 2M Supplement.

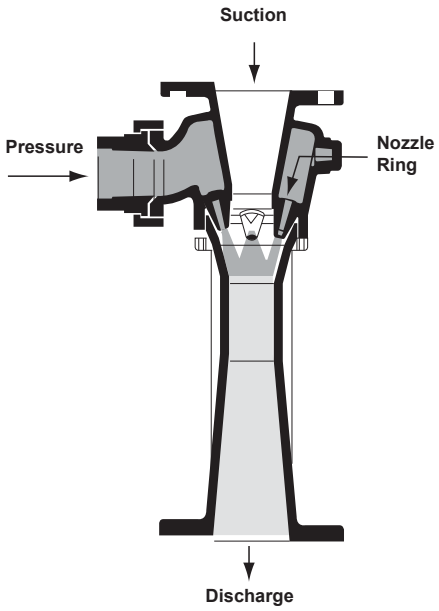

Fig. 22. FIG. 235 ANNULAR MULTI-NOZZLE WATER JET EDUCTOR.
These eductors are made to order from any workable material. Sizes from 1 1/2" to 6" are cast with flanged suction, discharge and pressure connections, except 2" size which has sil-brazed pressure connection. Sizes above 6" (to 28" and up) are generally fabricated.

Table 8. Sizes and Dimensions, Fig. 235 Annular Multi-Nozzle Water Jet Eductor

Size in Inches	Connections in Inches		Wgt. In Lbs.	Dimensions in Inches		
	Suction Disch.	Pressure		A	B	C
1 1/2	1 1/2	1	16	2 7/8	8 7/16	3 3/8
2	2	1 1/4	22	3 1/8	11 7/8	3 3/4
2 1/2	2 1/2	1 1/2	27	3 1/4	12 5/16	4
4	4	2 1/2	65	4 1/8	18 11/16	5 1/8
5	5	3	100	4 5/8	24 7/16	6
6	6	4	150	5 1/4	30	7 1/4

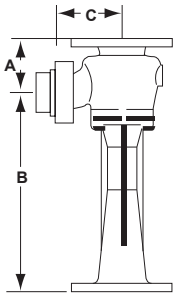

Fig. 23. FIG. 235 EDUCTOR.
(2" size with sil-brazed connection).

Special Purpose Eductors

The special-purpose eductors illustrated here are similar in operation to the basic Fig. 264 Eductor described on page 3.

Fig. 24. FIG. 222 PORTABLE EDUCTOR.
Is designed for use as an auxiliary with a pump where the suction lift is too great for the pump alone. Made of anodized aluminum, bronze or other materials as required.

Fig. 25. FIG. 212 CORROSION RESISTANT EDUCTOR.
Is made of Phenolic Fiberglass Reinforced Plastic (FRP). Body is of one-piece construction.

TYPICAL APPLICATIONS OF S&K WATER JET EDUCTORS

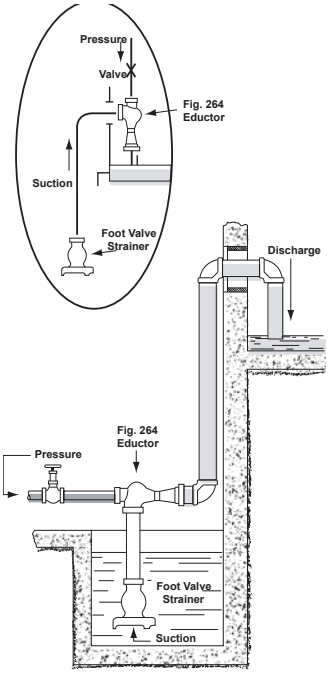

Fig. 26. FIG. 264 EDUCTOR USED TO EMPTY TANKS.
Water jet eductors are often used to empty tanks or to pump out sumps, penstocks, cellars, and the like. The pressure line should be fitted with a regulating stop valve and a pressure gauge while the suction line should be provided with an S&K Strainer. Discharge lines should be sealed for a positive pick-up of the liquid by turning the discharge line up or by submerging the end of the discharge line. It is recommended that the eductor be installed a short distance above the liquid to be handled and that short suction lines be used. Eductors will operate with long suction lines, as shown in the line drawing, however, with suction lifts greater than 15', capacities are reduced considerably. When handling hot liquid the eductor must be arranged with a short suction line or must be submerged.

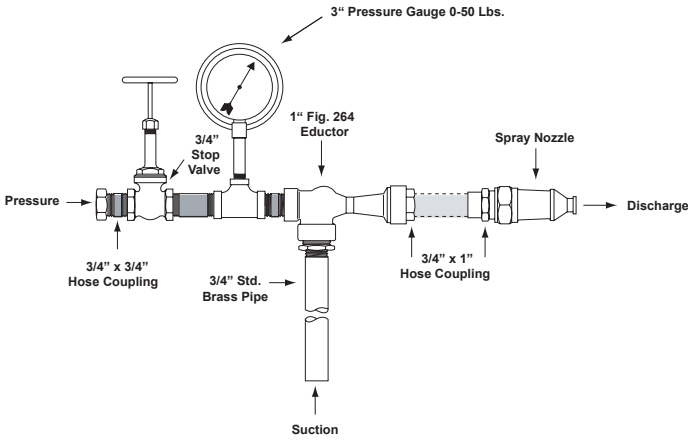

Fig. 27. FIG. 264 EDUCTOR USED IN MIXING LIQUIDS.
This illustration shows a typical arrangement used in mixing liquids such as chemicals or fertilizers in proportion for spraying. The solution to be applied is mixed in a container in approximately twice the strength at which it is to be used. The water jet proportioning apparatus is operated by a jet of high pressure water and is controlled by a 3/4" stop valve. A 3" pressure gauge indicates pressure. The jet action of the pressure water draws the solution from the container and the water and solution are mixed in the throat of the eductor and are discharged through a standard 3/4" hose to a spray nozzle. Solids can be handled and sprayed through a non-clogging type spray nozzle.

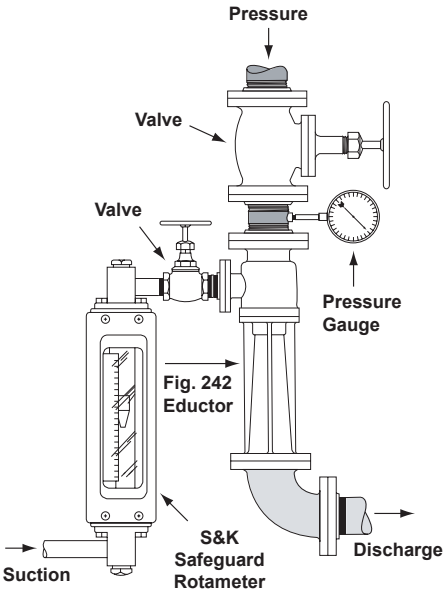

Fig. 28. FIG. 242 EDUCTOR USED IN TYPICAL PROPORTIONING SYSTEM.
This shows a typical proportioning system using a Fig. 242 Eductor. Rate of flow is measured by a Rotameter and is controlled by a valve in the line. A valve in the pressure line and orifice of the eductor nozzle control the flow of the pressure liquid. Fluids are thoroughly mixed in the desired proportions and are then discharged.

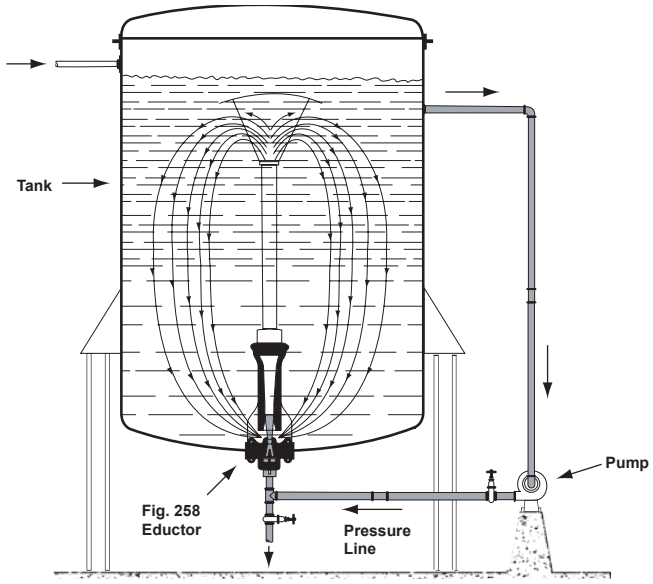

Fig. 30. FIG. 258 EDUCTOR IN BATCH MIXING APPLICATION.
This illustrates the batch mixing of two or more liquids with an S&K Fig. 258 Eductor. The pressure liquid, taken from the top of the tank is passed through a pump to the eductor. The jet action of this fluid entrains the liquid at the bottom of the tank and proper mixing results.

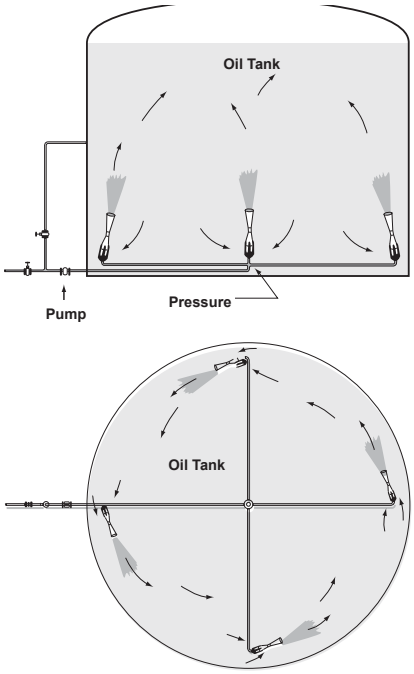

Fig. 29. FIG. 258 EDUCTORS FOR TANK BLENDING OF OILS.
For the tank blending of oils, the arrangement shown has proved highly satisfactory. In this particular installation five 8" Fig. 258 Eductors are used in a 100' tank. Initially, the eductors are used to fill the tank during which time they provide continuous agitation. After the tank is filled, the oil is drawn off and recirculated by means of the same pumps. Oil from the top of the tank issues through the eductor nozzle and entrains oil from the bottom of the tank. The two are mixed in the throat of the eductor and are discharged with sufficient force to maintain constant agitation and further blending in the tank.

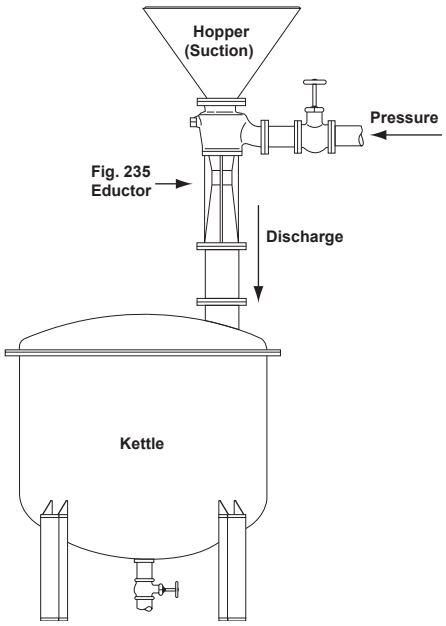

Fig. 31. FIG. 235 EDUCTOR USED IN MIXING DRY POWDER.
Mixing dry powder and a liquid prior to discharge into a tank is accomplished through the use of a Fig. 235 Eductor as shown here.
Pressure liquid enters the eductor, entrains the powder, mixes the two in the venturi of the eductor and discharges the mixture into a receptacle. The streamline eductor design provides maximum efficiency in this operation.

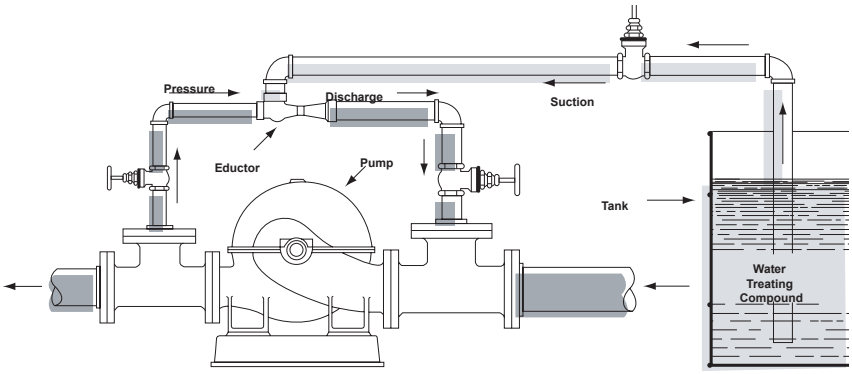

Fig. 32. FIG. 264 OR FIG. 265 WATER JET EDUCTORS USED TO ENTRAIN ANOTHER LIQUID.
This illustration shows a Fig. 264 or Fig. 265 Eductor being used to introduce a water treating compound into boiler feed water. A portion of the water issuing from the pump is bypassed into the eductor where it acts as the pressure medium to draw in and entrain the water treating compound.

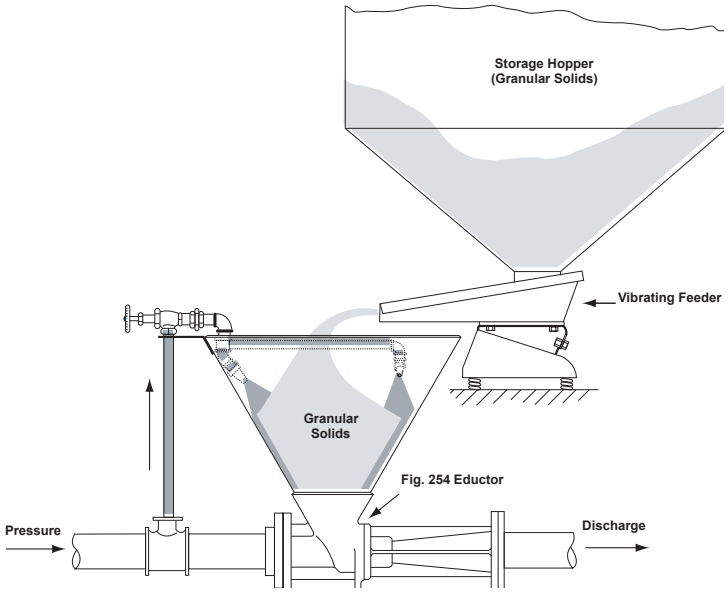

Fig. 33. APPLICATION OF FIG. 254 SOLIDS/LIQUID HOPPER EDUCTOR.
One arrangement for handling granular solids with the Fig. 254 Eductor is illustrated here. In this installation, granular solids drop from a storage hopper into a vibrating feeder which feeds the solids into the eductor hopper at a controlled rate. Water, bypassed from the pressure line, flows through nozzles located in the hopper and washes the solids into the eductor. There they are entrained by the jet action of the pressure water and are discharged. Although the material can be placed in the hopper manually, this system reduces handling and controls the flow of solids.

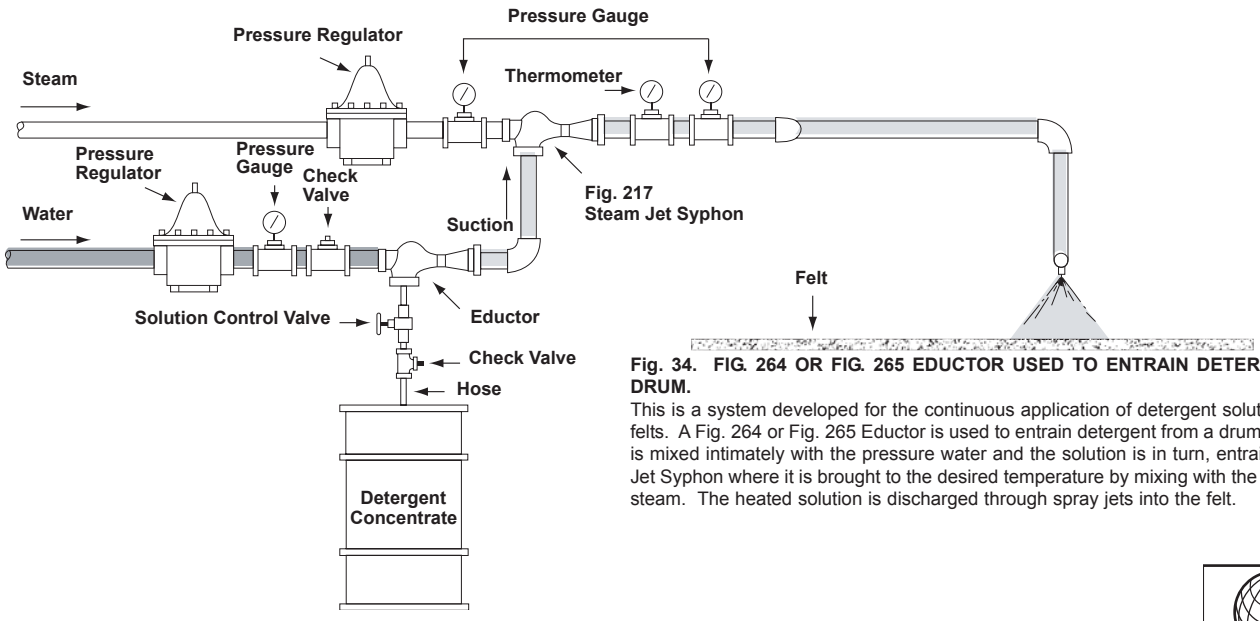

Fig. 34. FIG. 264 OR FIG. 265 EDUCTOR USED TO ENTRAIN DETERGENT FROM A DRUM.
This is a system developed for the continuous application of detergent solution to paper mill felts. A Fig. 264 or Fig. 265 Eductor is used to entrain detergent from a drum. This detergent is mixed intimately with the pressure water and the solution is in turn, entrained by a Steam Jet Syphon where it is brought to the desired temperature by mixing with the syphon's motive steam. The heated solution is discharged through spray jets into the felt.

ISO 9001 Certified

SEEPEX

SERIES BN 05-12, PROGRESSIVE CAVITY PUMP (CATIONIC POLYMER) (P9-621/622/623)

LEFT BLANK

SEEPEX.
ALL THINGS FLOW

Operating and Assembly Instruction
Progressive Cavity Pump

Commission-no.
868806 - 868808

Type
BN 05-12

Read instructions before beginning any work!

Always keep instructions handy on the worksite.

Original Instructions

Issue 04.06.2018

1 Safety 1
1.1 General notes
1.2 Safety and warning notes
1.2.1 Warning notes
1.2.2 Danger symbols
1.2.3 Information symbols
1.3 Dangers that can be caused by the machine
1.4 Qualification of the personnel
1.5 Authorized people
1.5.1 Tasks and information for the owner/operators
1.5.2 Safety notes for maintenance, inspection and assembly work
1.6 Personal protective equipment
1.7 Safety and protective devices
1.8 Foreseeable misuse
1.9 Designated use
1.10 Warranty

2 Description of the pump 5
2.1 General description
2.2 Mode of action and pumping principle of the pump
2.3 Constructive design

3 Technical Data 6
3.1 Data sheet 8
3.2 Characteristic Curves 11

4 Transport, Intermediate storage, Disposal 14
4.1 Safety
4.2 Transport
4.2.1 Dimensions, weight and center of gravity
4.2.2 Symbol
4.2.3 Lashing points (AP) for lifting devices
4.2.4 Unpacking the machine
4.3 Temporary storage/corrosion protection
4.4 Disposal

5 Assembly / Installation 17
5.1 Mounting tools / lifting gear
5.2 Space requirement
5.2.1 Dimension for stator replacement
5.3 Assembly of the complete mounted pump
5.4 Power supply of the pump
5.5 Pipelines
5.5.1 Suction and pressure connection
5.5.2 Pipeline dimensions
5.5.3 Residue-free pipelines
5.5.4 Tension-free assembly
5.6 Dimensional Drawing 19

6 Commissioning / De-Commissioning 20
6.1 Commissioning report 20
6.2 Measures before commissioning 22
6.2.1 Checking pipelines
6.2.2 Protective devices on the pump
6.2.3 Electrical / hydraulic connections
6.2.4 Direction of rotation check
6.2.5 Additional devices - optional
6.3 Initial commissioning/repeated commissioning
6.3.1 Avoiding dry running of the pump
6.3.2 Pressure in the suction and pressure connection
6.4 De-commissioning
6.4.1 Switching off the pump
6.4.2 Emptying the pump
6.4.3 Dismantling the pump
6.4.4 Preservation/storage of the pump

7 Maintenance 27
7.1 Preventative measures
7.1.1 Pump down-time
7.2 Lubrication
7.2.1 Joint grease
7.3 Inspection

8 Malfunctions, causes, rectification 29

9 Pump Dismantling / Reassembly 31
9.1 Pump Dismantling / Reassembly 31
9.1.1 Prepare the pump for dismantling
9.1.2 Dismantling
9.1.3 Reassembly

9.2 Rotating unit – individual parts 37
9.2.1 Dismantling
9.2.2 Rotating unit (RTE) - prepare individual parts for reassembly
9.2.3 Rotating unit (RTE) - individual parts - reassembly
9.3 Holding band - assembly 41
9.3.1 Prepare the holding band
9.3.2 Check the holding band
9.3.3 Assembling the holding band
9.3.4 Correct tension for the holding band (HBD)
9.3.5 Cant up the holding band
9.3.6 Shear the holding band
9.3.7 Check the holding band after assembly
9.4 Single acting mechanical seal 43
9.4.1 Safety
9.4.2 Application conditions and material version
9.4.3 Design
9.4.4 Commissioning
9.4.5 Monitoring during operation
9.4.6 Dismantling of mechanical seal
9.4.7 Reassembly of mechanical seal
9.6 Sectional drawing shaft sealing 44

10 Spare parts 46
10.1 Order template for spare parts 48
10.2 Sectional drawing 51
10.2.1 Parts list 52

11 Special tools 54

12 Related documents 56
12.1 Accessories 58
12.1.1 Accessorie TSE 58
12.1.2 Drawing TSE
12.1.3 Part list TSE
12.2 Technical Information 74
12.4 Warranty Card 79
12.5 Terms and Conditions 80

13 Appendix 83
13.1 Manufacturer's documents / suppliers
13.1.1 Gearbox 84

Subsidiaries

1.1 General notes

- ➢ Always keep the operating and maintenance instructions close by the machine.
- ➢ If problems cannot be solved with reference to the operating and maintenance instructions, please contact the manufacturer.

Observe the following points in addition to these operating and maintenance instructions:

- Prohibition, warning and mandatory signs, warning notes on the machine
- Relevant laws and ordinances
- Statutory provisions on accident prevention
- Corresponding harmonized standards and regulations

1.2 Safety and warning notes

- ➢ Comply with safety and warning notes for safe and efficient use of the product.

Signal words for specific dangers and (possible) consequences are explained below. These are supplemented by symbols (pictograms) if necessary.

1.2.1 Warning notes

NOTICE
Caution for machine! Possible danger. Material damage can occur.

⚠ **CAUTION**
Caution for people and machine! Possible danger. Minor injury or damage to property can occur.

⚠ **WARNING**
Warning for people! Possible danger. Death or serious injury can occur.

⚠ **DANGER**
Danger for people! Possible danger. Immediate risk of sever or fatal injury.

1.2.2 Danger symbols

Warning: Suspended load.

Warning: Tipping over.

Warning: Hand injuries.

Warning: Dangerous electrical voltage.

Warning: Pull-in hazard.

Warning: Excess pressure.

Warning: Risk to the environment.

Warning: Hot surfaces.

1.2.3 Information symbols

NOTICE

Observe operating and maintenance instructions.

Ensure environmental protection.

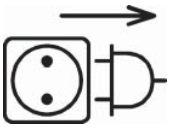

Disconnect power plug before opening.

Wear eye protection.

Wear gloves.

➢ Instruction to act/take measures

• List item

1.3 Dangers that can be caused by the machine

SEEPEX machines are built in accordance with the state of the art.

Nevertheless, there is a residual risk, because the machine works with:

- Mechanical movements that pose a danger
- Electrical voltages and currents

We have used design measures and applied safety technology to minimize the risk to the health of people posed by this danger.

1.4 Qualification of the personnel

This handbook is intended for:

- Owner
- Operators
- Setters
- Maintenance personnel

1.5 Authorized people

People authorized to undertake operation, set up and maintenance are instructed and trained specialists employed by the owner/manufacturer.

Detailed technical knowledge is essential for performing any work on the machine.

The owner is responsible for:

- Personnel training
- Compliance with safety regulations
- Compliance with operating and maintenance instructions

The operator must:

- Have received instruction
- Read and understood the relevant parts of the operating instructions before starting work
- Know the safety devices and regulations

1.5.1 Tasks and information for the owner/operators

- ➢ Regularly check and maintain the machine, replacing all parts in good time which no longer guarantee safe operation.
- ➢ It is essential to comply with the procedure described in the operating instructions for shutting down the machine.
- On completion of work, attach all safety and protective devices and make sure they are functioning.

1.5.2 Safety notes for maintenance, inspection and assembly work

- ➢ Do not work on the machine or system unless it is stationary and depressurised.
- ➢ Switch off the master switch and pull out the power plug before starting work on live components.
- ➢ Comply with the procedure for shutting down the machine as described in the Shut-down chapter.
- ➢ Decontaminate (de-toxify) machines that are used for pumping media that can be harmful to health.
- ➢ Refer to the Initial start-up chapter before repeated start-up of the machine.

1.6 Personal protective equipment

- ➢ Wear personal protective equipment and/or additional equipment for your own safety.
- ➢ Avoid/limit risks by the use of collective technical protective equipment or by organisational measures at work.

1.7 Safety and protective devices

- ➢ Prior to start-up, bolt SEEPEX machines onto a concrete foundation so as to ensure stability.
- ➢ Starting and stopping devices must be clearly recognisable. Take appropriate measures to avoid defects.
- No protective device is necessary for checking and/or setting the shaft seal.
- Hot surfaces are identified with a danger symbol on the machine.

1.8 Foreseeable misuse

Serious personal injury and damage to property can be caused by:

- Incorrect use
- Incorrect installation or operation of the machine
- Impermissible removal of necessary protective equipment

1.9 Designated use

- Only use SEEPEX machines if they are in perfect condition and in compliance with the oper-ating and maintenance instructions.
- Do not start up the machine unless the system in which the machine is installed is in accor-dance with the provisions of the applicable guidelines and statutory regulations.
- Equivalent sustained sound pressure level at workplaces of operating personnel C75 dB (A). Cavitation-free operation of the machine and screwed connection to concrete founda-tion are essential.
- SEEPEX machines are components that are exclusively intended for pumping media in accordance with the technical data (chapter 3.0). Written approval must be obtained from the manufacturer before other media are pumped.
- Refer to the information on the type plate and the operating instructions for technical data (chapter 3.0), and comply with them.
- The operating instructions are assigned to the SEEPEX machine based on the commission number.

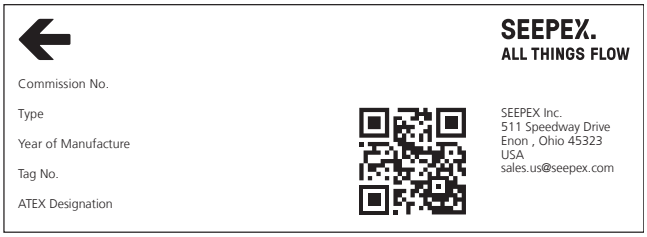

Similar illustration

1.10 Warranty

- Warranty in accordance with our terms and conditions of delivery and order confirmation.
- It is a condition of the machine warranty that the machine must correspond to the listed operating instructions in accordance with the type plate/data sheet.
- All wearing parts are excluded from the warranty.
- These operating instructions are subject to copyright. Reproduction is not permitted and will be punished. Contravention will be pursued through the courts.

2.1 General description

seepex pumps are members of the group of rotating displacement pumps.

- Characteristic features
  - Special configuration/arrangement of the rotor and stator pumping elements.
  - Motion sequence

2.2 Mode of action and pumping principle of the seepex pump

- Seal lines are created by the geometrical configuration/contact between both pumping elements.
- Seal lines provide total separation between the suction and pressure sides.
  Result:
  - Increased suction lift capability of the pump
  - High pressure build-up irrespective of the rotation speed

2.3 Constructive design

No.	Designation
ANT	Drive
200	Lantern
307	Plug-in shaft
400	Coupling rod
SEA	Shaft seal
500	Suction casing
600	Rotor
RTE	Rotating unit
601	Stator
700	Pressure branch

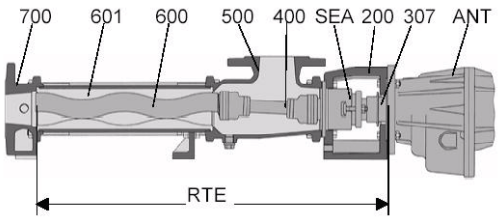

3.1 Data sheet

3.2 Characteristic Curves

Progressive cavity pump

BN 05-12 / A6-J0-J0-F0-LA

Application data

U 495 XXX001

Conveyed product	Polymer
Flowability	flowable
Viscosity	low viscosity (<500 cP/mPas)
Solids content	not specified
Size of solids	not specified
Specific gravity	unknown, 1 kg/dm³ assumed
Product temperature	32°F - 113°F
pH value	5-9
Kind of operation	continuous
Operating hours	8h/day
Location	indoor, dry atmosphere
Altitude of installation	up to 1000 m assumed
Surrounding temperature	normal (32-113°F)

Performance data

	Capacity	**Pressure**	**Speed**	
	0.26 USGPM	80 psi	41 rpm	min
	3 USGPM	80 psi	390 rpm	max
Starting torque	30 lb.ft			
Req. power at pump shaft	0.75 HP			
Inlet pressure	flooded suction (up to 0,5bar)			
NPSHr	6.23 ft			

Tolerances according to SEEPEX standards.

Materials and executions

Installation	vertical, drive on top
Direction of rotation	clockwise (right)
Lantern - Design	with cover plates
Lantern - Material	EN-JL 1040 (gci-25)
Lantern - Flange diameter	160 mm
Suction casing - Design	standard
Suction casing - Material	1.4408 / ASTM A351 grade CF8M
Pressure branch - Design	standard
Pressure branch - Material	1.4408 / ASTM A351 grade CF8M
Position of branch	position 3
Pressure connection	1 1/2" NPT
Suction connection	1 1/4" NPT
Joint - Design	pin joint with joint sleeve, grease filled
Joint - Material	standard
Joint - Universal joint sleeve: material	NBR - Perbunan
Joint - Joint Grease	joint grease SEEPEX 30321
Coupling rod - Design	standard
Coupling rod - Material	1.6582 encapsulated
Rotor - Design	standard
Rotor - Material	1.4404 / AISI 316L
Rotor - Coating	ductile chromium coating
Stator - Design	standard with TSE, sensor sleeve 1.4404
Stator - Material	NBR - Perbunan
Shaft sealing	mechanical seal
Code	back-to-back GLRD - LA
Shaft diameter	30 mm
Make	Burgmann
Type	MG1-G60 Q1Q1 VGG
Casing - material	1.4404 / AISI 316L
Casing - connection standard	NPT
Plug-in Shaft - Design	standard
Plug-in Shaft - Material	1.4404 / AISI 316L
Plug-in Shaft - Drilling diameter	24
Plug-in Shaft - Drilling depth	45
Bolting - Design	completely stainless steel
Painting - Number of colors	single-colored standard
Painting - Painted components	1 complete combination

Painting - Color	Standard Enamel (SEEPEX Blue)

Drive

Drive Type	Gear & Motor at freq. inv.
Type	Gear
Make	Nord
Model	SK02F/56C
Mounting position	M4
Ratio (i)	4.82
Flange diameter	160 mm
Shaft diameter	24 mm
Shaft length	45 mm
Shaft drawing	716/M500-003B4

	Norm	**Min**	**Max**
Speed	373 rpm	40 rpm	389 rpm
Motor speed	1800 rpm	195 rpm	1880 rpm
Frequency	60 Hz	7 Hz	65 Hz

Type	Motor
Make	Marathon Motors
Model	56H17T5312
Rated output	1 HP
Rated speed	1800 rpm
Mounting position	V1/V5
Starting	direct on frequency inverter
Explosion proof	Weatherproof
Efficiency class	IE1
Winding protection	Thermostats
Voltage	rated voltage 575V
Frequency	60Hz
Thermal class	F
Enclosure	TENV

Baseplate

Design	1/2" thick plate, 10" wide
Material	steel, painted
GPU Type Code	B-ST

TSE

Design	standard design, complete - sensor sleeve fitted to the stator of the pump with integrated temperature sensor - connection head (IP55) - separate TSE control device suitable for mounting inside a control panel
Voltage	110-115V/50-60Hz
Temperature coefficient	NTC
Material sensor sleeve	1.4404
Material connection head	aluminium

Packing

Type of packing	crate (US)

Miscellaneous

Design	Tag each: P9-621, P9-622, P9-623 Tag all: PI018, 98345

Documentation

Characteristic Curves
Size
05–12

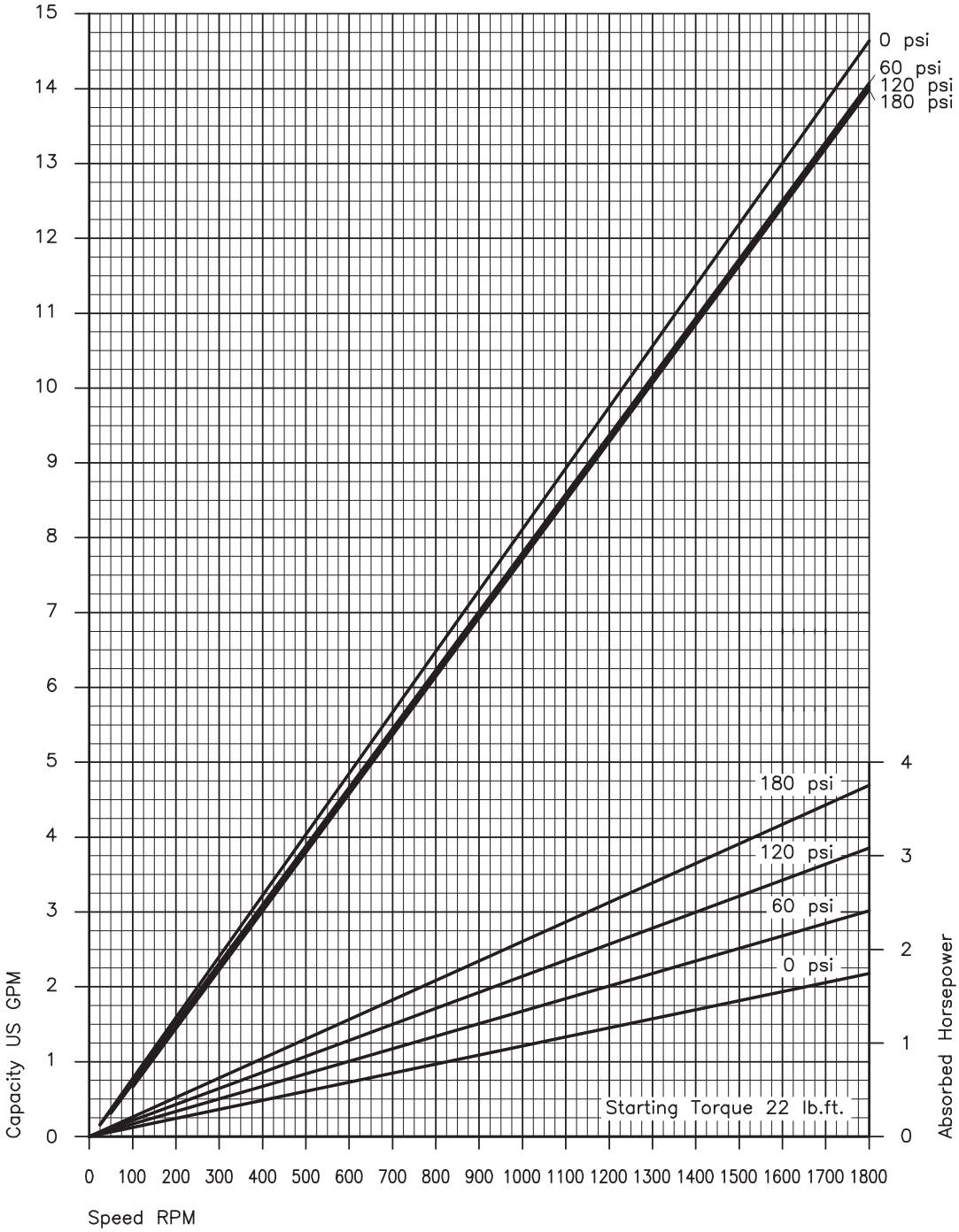

Values based upon water 68°F ; For notes on drive selection refer to PER

CHA.05–12 D 01.14us

Characteristic Curves
Size
05–12

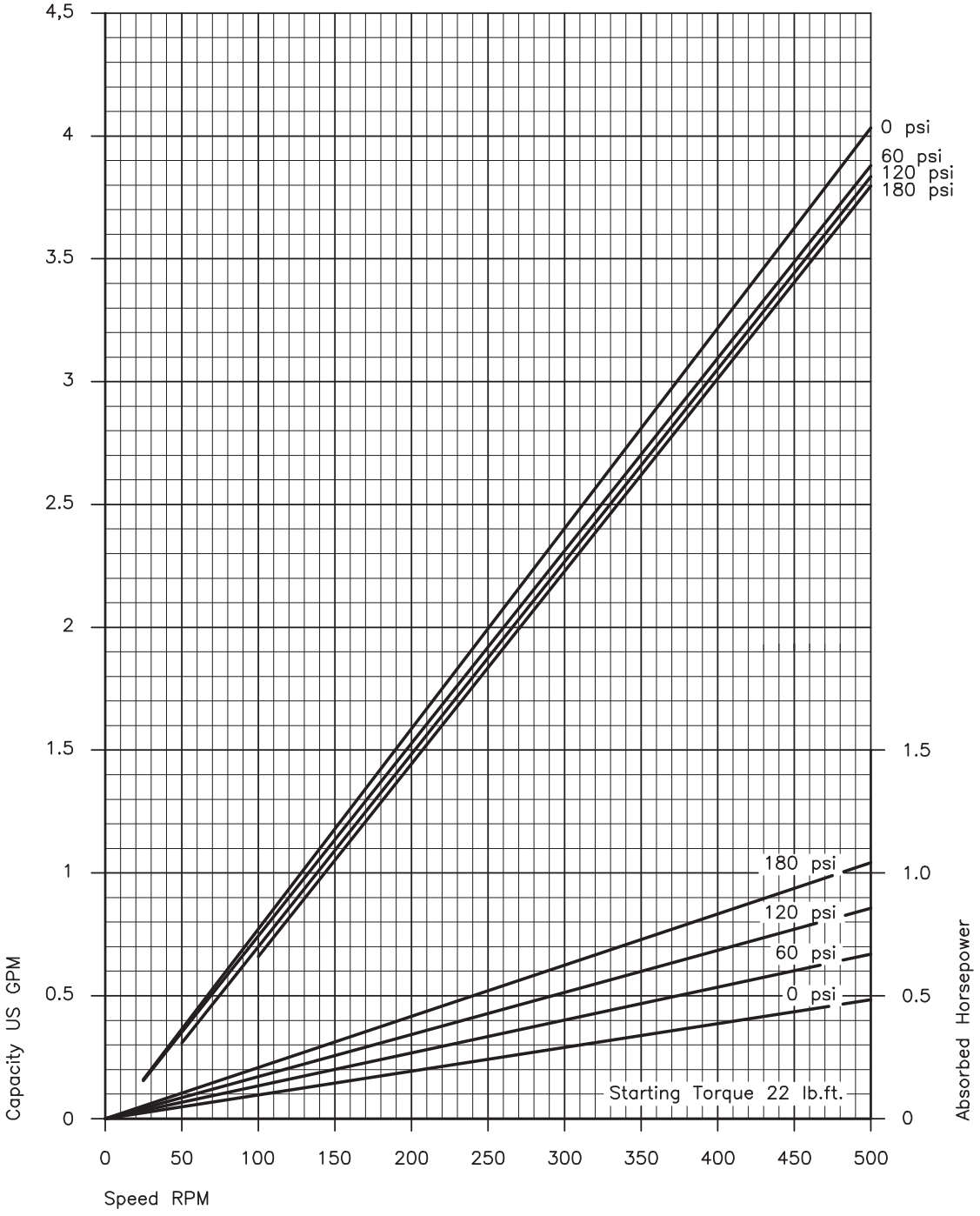

Values based upon water 68°F ; For notes on drive selection refer to PER

CHA.05–12.s D 01.14us

4.1 Safety

CAUTION

Damage to property/injuries due to incorrect transport.
Slight injury or damage to property can occur.

- ➢ Comply with the safety notes and transport notes on the packaging.
- ➢ Use suitable means of transport, lifting devices and tools.
- ➢ Use protective equipment.

4.2 Transport

4.2.1 Dimensions, weight and centre of gravity

- ➢ Note the dimensional drawing (chapter 5.6).

4.2.2 Symbol

- Meaning of symbol

Top	Fragile item	Against moisture protect	Centre of gravity	Lashing points

4.2.3 Lashing points (AP) for lifting devices

WARNING

Warning of suspended load.
Death or serious injury can occur.

- ➢ Use the lashing points (AP) for lifting devices.
- ➢ Note the centre of gravity (dimensional drawing chapter 5.6).

Lifting machine	Industrial trucks

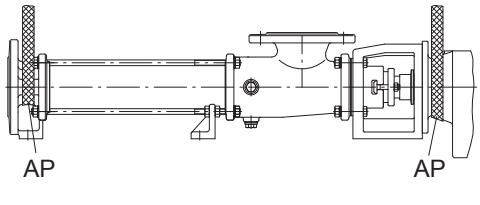

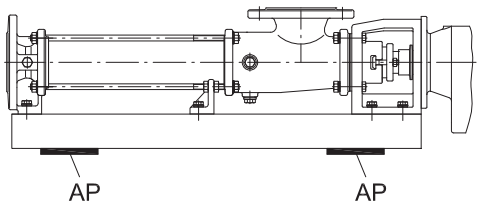

4.2.4 Unpacking the machine

- ➢ Comply with the symbols and notices on the packaging.
- ➢ Remove the screwed connection between the machine and packaging.
- ➢ Remove the machine with a lifting machine/industrial truck.

4.3 Temporary storage/corrosion protection

- All SEEPEX machines have corrosion protection applied as standard prior to transport.

NOTICE
Damage to property if corrosion protection is missing. Property damage can occur due to corrosion. ➢ Temporary storage must be in a dry, enclosed, frost-free room in order to provide protection against ambient influences. ➢ Contact SEEPEX regarding the necessary corrosion protection for temporary storage.

4.4 Disposal

NOTICE
Environmental protection. Material damage can occur. ➢ Drain the pumping medium and dispose of it in accordance with the regulations. ➢ Dispose of the machine with regard to its composition and existing regulations.

5.1 Mounting tools / lifting gear

CAUTION

Pump falling over.
Slight injury or damage to property can occur.

- ➢ Adhere to the lifting tool's starting point.
- ➢ Pay attention to the dimensions, weight and centre of gravity of the pump.
- ➢ Use suitable mounting tools/lifting gear.

5.2 Space requirement

The required space should be determined by considering the following factors:

- Dimensions and weight.
- Requisite transport and lifting equipment.
- Pipe routing – dismantling (dimension for stator replacement).

5.2.1 Dimension for stator replacement (P)

- ➢ Refer to the dimensional drawing.

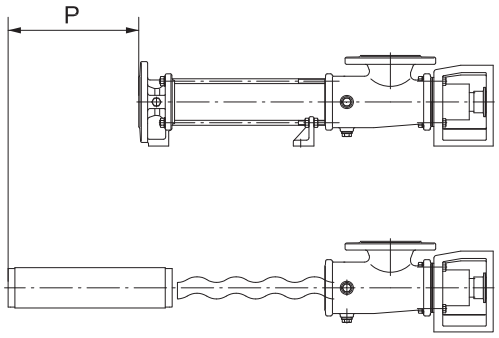

5.3 Assembly of the complete mounted pump

- ➢ Assemble according to technical data (chapter 3.).
- ➢ Note dimensional drawing.

Tension-free mounting of the pump

- ➢ Balance unevenness with suitable supports.
- Applies to mounting on foundations/load-bearing elements.
- Total areas of all pump bearing areas are resting on the surface.

Correct position of the drives

- All drives are set up ready for operation and mounted.
- Correct displacements of the drive during transport/installation of the pump by adjusting/fixing the drive.

CAUTION

Safety protection devices.
Slight injury or damage to property may result.

- ➢ Connect safety protection devices and activate.

5.4 Power supply of the SEEPEX pump

DANGER

Line voltage and line frequency.
Death or serious injury can occur.

- ➢ Note type plate on the pump.
- ➢ Pay attention to manufacturer's directions (chapter 13.).
- ➢ Pay attention to safety regulations.

5.5 Pipelines

5.5.1 Suction and pressure connection

- Refer to the dimensional drawing for the position, nominal width and standard.
- Note direction of rotation/flow direction.

5.5.2 Pipeline dimensions

- Adhere to specifications regarding pressure in the pressure respectively suction connection.
- Note technical data (chapter 3.).
- Nominal width of suction pipe = nominal width of suction connection of pumps.

5.5.3 Residue-free pipelines

NOTICE

Damage to property through assembly residue.
No claims under guarantee if violated.

- ➢ Keep all pipelines free of foreign objects.
- ➢ Remove weld spatters, screws, steel chips etc.

5.5.4 Tension-free assembly

- ➢ Assemble pipelines and other components in a tension-free manner on the pump.

Copyright: This drawing is our property and patented for us according to the law of copyright and associated rights !

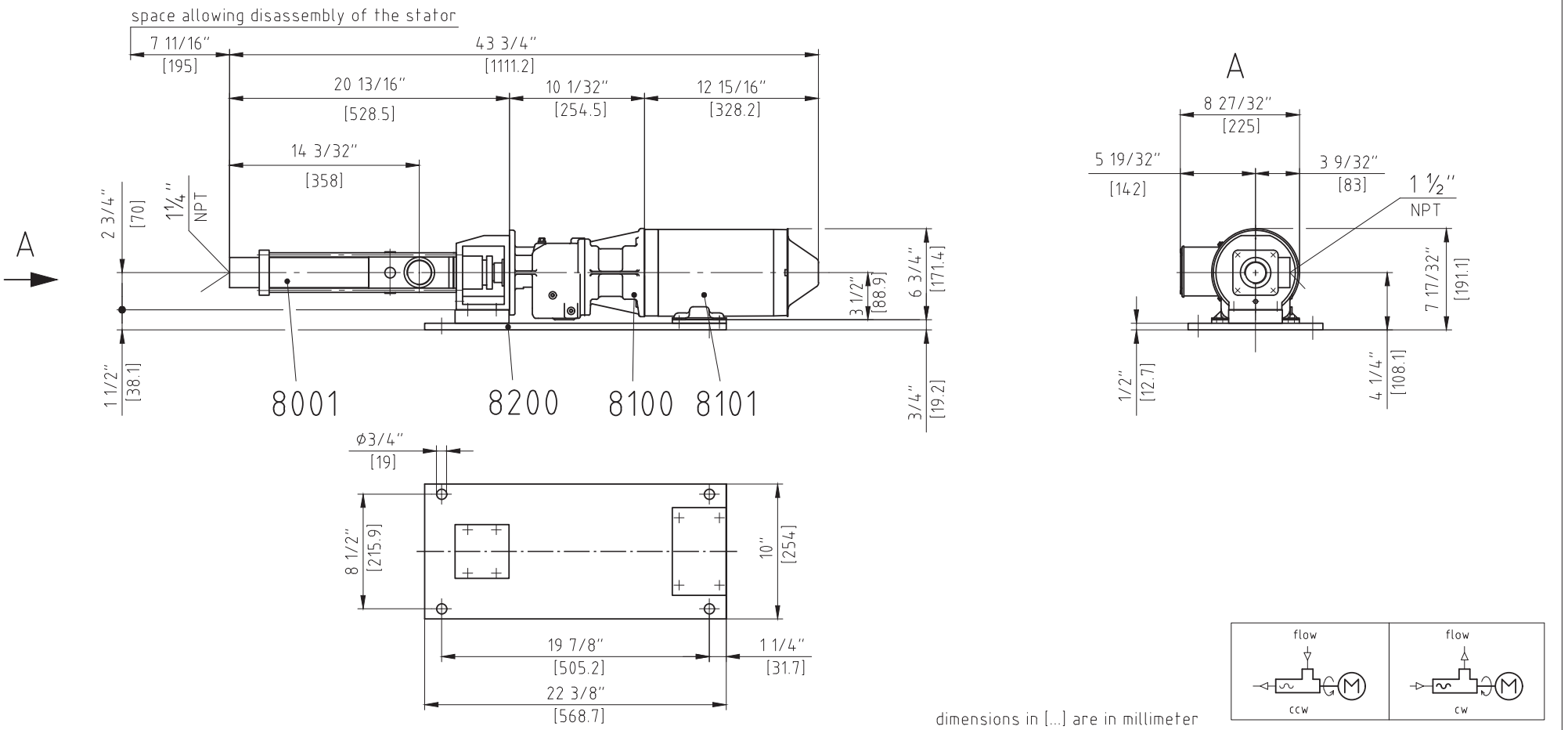

dimensions in [...] are in millimeter

Quant.	Denomination	Item	Material	Note	Weight / kg
1	baseplate:	8200		Var.: 801-200/M500-C-738	19
1	motor: Marathon 056H17T5312	8101			18
1	gear: Nord SK02F-56C	8100			14
1	pump: BN 05-12 / 1-6L	8001			14

	2018	Name	Day	Scale	Weight	Denomination
SEEPEX. ALL THINGS FLOW	Drawn	cbo	30.05.	1:10	65 kg	dimensional drawing
	Checked	lsh	31.05.	EDP-No. 172720.dwg		Drawing-no. 262-C65/M500-C-740A4

General tolerances for dimensions without specified tolerances acc. to DIN ISO 2768-v

Master Copy

6.1 Commissioning report

Send commissioning report online to www.seepex.com\ **Must be specified with every order!**			**From:**
Commission: _____	**Model:** _____		Contact person: ..... Tel.: ..... Fax: ..... E-mail: .....
Customer Service: SEEPEX Inc. 511 Speedway Drive Enon, Ohio 45323 service@seepex.com			**Address of plant:** ....

Delivery date:		
Date of installation:		
Assembly check carried out on:		
Please enter operational data:		
Conveying liquid:		
Temperature:		
Fuse level/motor protection or power consumption		
Frequency control	☐ no	
	☐ yes	If yes:
		☐ Supplied by SEEPEX
		☐ Supplied by customer
		Frequency:
		Speed:
		Power consumption:

Place, date

Signature / company stamp

6.2 Measures before commissioning

➢ Note the technical data (chapter 3.).

6.2.1 Checking pipelines

➢ Check flange screwed connections (SCH).

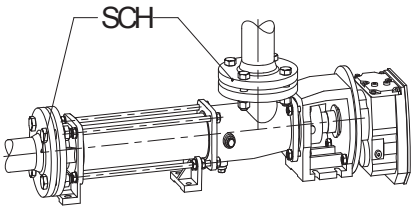

➢ Check threaded connections (G).

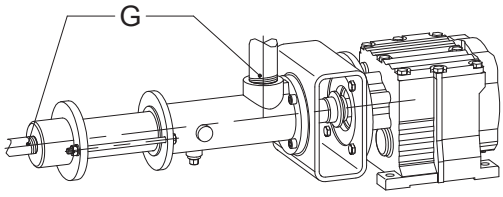

NOTICE

Ensure the liquid can flow through without obstruction.
Malfunction and/or irreparable damage to the pump.

➢ Open all shut-off elements before switching on the pump.

6.2.2 Protective devices on the pump

DANGER

Missing protective device.
Danger of pulling in and crushing.

➢ Equip the pump with a protective device. Protective devices provided for preventing contact with surfaces or moving parts must be regarded as suitable if contact is not possible in a test involving a test finger, with regard to the penetration possibility, strength and shock resistance.

➢ Comply with national protection regulations.

➢ In pumps with an open suction flange/feed hopper, attach touch protection. These safety clearances protect those persons who are attempting to reach danger areas without additional help and under the conditions defined for various situations of reaching up, reaching under or reaching through

In shaft seals, touch protection is only necessary if there are components on the rotating shaft.

6.2.3 Electrical/hydraulic connections

DANGER

Dangerous voltage.
Death or serious injury can occur.

➢ Observe safety regulations.

➢ Disconnect the pump from all sources of energy.

➢ Prevent electrical connections from being switched on again.

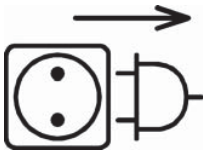

6.2.4 Direction of rotation check

- The pump direction of rotation determines the flow direction of the pumping medium.
- Note the direction of rotation arrow on the type plate.

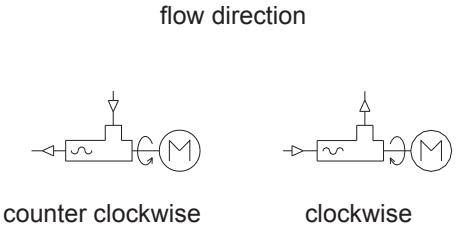

6.2.5 Additional devices - optional

- Refer to additional devices (chapter 12.1).

6.3 Initial commissioning/repeated commissioning

- Start up the pump.

NOTICE
Dry running of the pump. Malfunction and/or irreparable damage to the pump. ➢ Fill the suction casing with liquid in order to lubricate the pumping elements.

6.3.1 Avoid dry running of the pump

NOTICE
High temperature between rotor and stator. Stator material burned. Complete failure of the pump ➢ Make sure that the suction-side conveying capacity does not cavitate. ➢ If this cannot be guaranteed on the machine side, assemble a SEEPEX dry running protection (DRP).

6.3.2 Pressure in the suction and pressure connection

⚠ **CAUTION**
High pressure. Malfunction and/or irreparable damage to the shaft seal or pump. ➢ Maintain pressure in the suction connection in accordance with the technical data (chapter 3.). ➢ Assemble an oil-filled contact pressure gauge to monitor and deactivate the pump.

6.4 De-commissioning

Protect the pump and additional devices against the following:

- Frost
- Deposit of solids
- Sedimentation from the liquid
- Corrosion of parts that come into contact with the medium

6.4.1 Switching off the pump

DANGER

Dangerous voltage.
Death or serious injury can occur.

- Observe safety regulations.
- Disconnect the pump from all sources of energy.
- Prevent electrical connections from being switched on again.

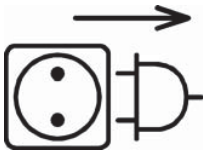

6.4.2 Emptying the pump

CAUTION

Liquid draining out.
Minor injury or damage to property can occur.

- Wear suitable protective clothing.
- Refer to the technical data (chapter 3.) for the corresponding configuration of the pump housing.

To drain the pump:

- If the pump housing has screwed plugs, remove the screwed plugs.
- Drain using a connection branch (suction casing, pressure branch) if the pump housing is coated or the housing does not have screwed plugs.
- Drain the residual liquid from the pump housing.
- Drain the pipelines on the suction and pressure sides, or shut off behind the pump connections.

6.4.3 Removing the pump

WARNING

Risk of pump tipping or falling.
Death or serious injury can occur.

- Support the drive unit to guarantee stability.

Pipeline dismantling

- Remove flange bolts (SCH) and flange seals (DFL).

with/without base plate

- Remove bolts (SCH) from the pump feet.

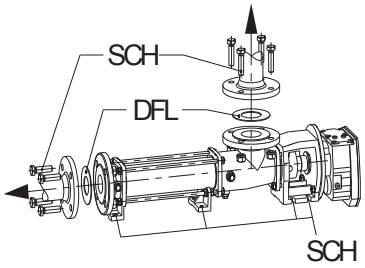

Pipeline dismantling

- Remove threaded connections (G).

with/without base plate

- Remove bolts (SCH) from the pump feet.

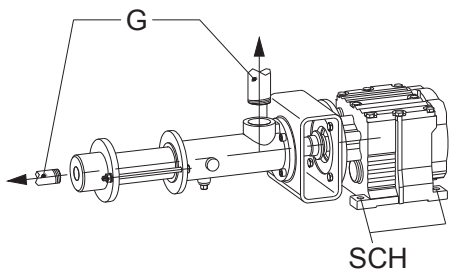

6.4.4 Preservation/storage of the pump

NOTICE
Damage to property due to lack of corrosion protection. Property damage can occur due to corrosion. ➢ Contact SEEPEX to discuss suitable preservation measures. – State the commission number of the pump.

7.1 Preventive measures

The maintenance personnel must have these operating instructions, follow them and also require corresponding qualifications.

DANGER

Dangerous voltage.
Death or serious injury can occur.

- ➢ Observe safety regulations.
- ➢ Disconnect the pump from all sources of energy.
- ➢ Prevent electrical connections from being switched on again.

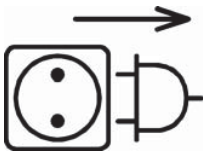

7.1.1 Pump down-time

NOTICE

Pump down-time.
Production failure due to wear.

- ➢ Acquisition of a set of wearing parts and a set of gaskets.

7.2 Lubrication

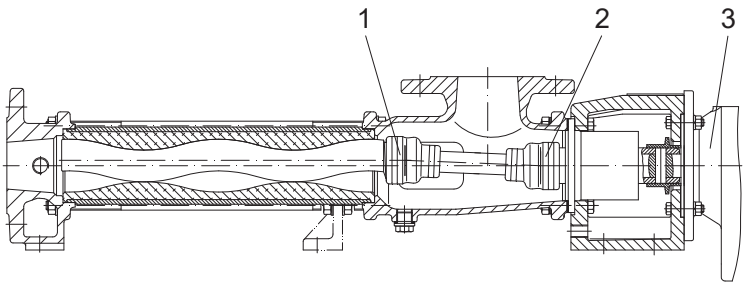

No.	Denomination	Lubricant	Lubricant change in operating hours	Fill volume
1	Pin joint	SEEPEX special grease (30321)	10,000 h	7 cm^3
2	Pin joint	SEEPEX special grease (30321)	10,000 h	7 cm^3
3	Drive	Refer to manufacturer's documentation (chapter 13._)		
Rotor/stator		Conveying medium	---	---
Shaft seal		Conveying medium	---	---

7.2.1 Joint grease

NOTICE

Other grease types.
Malfunction and/or irreparable damage to the joints or the pump.

- ➢ Exclusively use SEEPEX special grease.

7.3 Inspection

Component	Interval	Action
Joints	Every 10,000 operating hours	Renew joint grease
Shaft seal	Every week	Visual check for leaks
Drive unit	Every 3,000 operating hours, at least every 6 months	Comply with manufacturer's documentation

Refer to technical data (chapter 3.) for application range of the pump.

Malfunction										Causes	Rectification
Pump is not sucking	Pump pumping unevenly	Conveying capacity is not achieved	Pressure head is not reached	Pump does not start up	Pump seized / pump does not pump	Pump is loud when running	Motor gets too hot	Premature stator wear	Shaft seal is leaky		
				X			X		X	Static friction between stator/rotor too great.	Apply lubricant (liquid soap) between stator and rotor.
X										Incorrect direction of rotation.	Check direction of rotation and swap over motor connections if necessary.
X	X	X			X	X				Suction pipe or shaft seal leaking.	Eliminate leaks.
X	X	X				X				Suction head too great.	Check the suction head, if necessary increase pipe cross section on suction pipe and use a larger filter, open suction-side valve fully.
X	X	X								Viscosity of conveying product too great.	Check/adapt (data sheet).
		X		X			X			Pump rotation speed incorrect.	Correct rotation speed (data sheet).
	X	X									Avoid air bubbles in the conveying product.
		X		X	X		X	X		Pressure head too great.	Check pressure head with pressure gauge, reduce pressure head by using larger pressure pipe crossed section or shortening the pressure pipe.
X	X	X			X			X		Pump running partially/ completely dry.	Check there is adequate conveying product available on the suction side. Dry running protection DRP.
						X	X			Check coupling.	If necessary, move pump in relation to drive, check wear on coupling gear, re-adjust coupling if necessary.
X		X								Rotation speed too low.	Increase rotation speed for low-viscosity media/large suction volume.

Malfunction										Causes	Rectification
Pump is not sucking	Pump pumping unevenly	Conveying capacity is not achieved	Pressure head is not reached	Pump does not start up	Pump seized / pump does not pump	Pump is loud when running	Motor gets too hot	Premature stator wear	Shaft seal is leaky		
X	X					X				Rotation speed too high.	Reduce rotation speed for high-viscosity media, risk of cavitation.
						X				Joint play too large.	Check mounting of coupling rod bushing.
X		X		X	X			X		Foreign objects in pump.	Dismantle pump, remove foreign bodies, replace defective parts.
X		X	X		X					Stator/rotor worn.	Dismantle pump and renew defective parts.
X		X			X	X				Joint parts worn.	Renew joint parts, use SEEPEX pin joint grease.
X		X			X			X		Suction pipe blocked.	Clean the suction pipe.
X				X	X		X	X		Temperature of pumping liquid too high.	Check temperature, use an undersize rotor.
X		X		X			X		X	Gland packing too firm/ worn.	Loosen packing gland or tighten. Renew unusable packing rings.
X				X	X			X		Solid content and/or grain size too great.	Reduce pump speed, install screen with permitted mesh width. Increase liquid proportion.
X				X				X	X	Sedimentation/gumming of solids when pump stationary.	Rinse through and clean the pump immediately.
X				X	X			X	X	Conveying product hardens when the temperature drops below a certain limit.	Heat the pump.
				X	X		X	X		Stator swollen and unable to withstand conveying product.	Select a suitable stator material, use an undersize rotor.
						X			X	Bearings in pump drive housing or drive unit defective.	Renew bearings.
									X	Mechanical seal defective.	Check sliprings and O-rings for wear/resistance, renew if necessary.

9.1 Pump Dismantling/Reassembly

Range: BN

Size: 025-12 up to 1-6L

9.1.1 Preparing the pump for dismantling

DANGER

Dangerous voltage.
Death or serious injury can occur.

- Note safety regulations.
- Disconnect motor from all sources of energy.
- Secure electrical connections against restarting.

- Empty pipelines.
- Allow pipelines to cool down.
- Remove pipeline connections (suction side/pressure side).
- Note decommissioning (→ chapter 6.4).

9.1.2 Dismantling

WARNING

Risk of pump tipping or falling.
Death or serious injury can occur.

- Fasten the lantern **(200)** to secure the pump.

9.1.2.1 Pressure branch (700) - Dismantling

- Prop up stator **(601)** with a support **(S)**.
- Remove screw fitting **(604, 606)**.
- Remove pressure branch **(700)**.
- Remove tie bolt **(602)**.

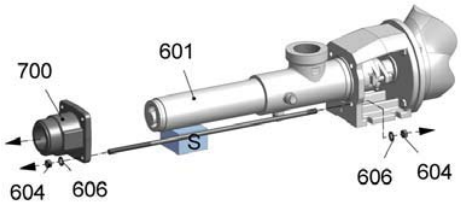

9.1.2.2 Stator (601) - Dismantling

- Raise/move splash ring **(310)**.
- Remove the plug-in shaft pins **(309)**.
- Insert tool **(WS)**.
- Turn tool **(WS)** upwards.

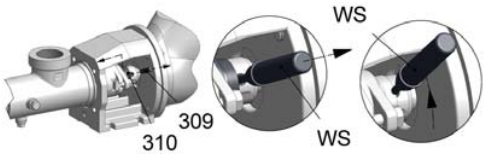

Tool (**W2**/chain wrench)

- Add lubricant **(GM)** to the opening on pressure branch side between the rotor **(600)** and the stator **(601)**.
- Turn the stator **(601)** in the “left” rotating direction and remove.
  - Use tool **(W2)**.
- Prop up the rotor **(600)** with support **(S)**.

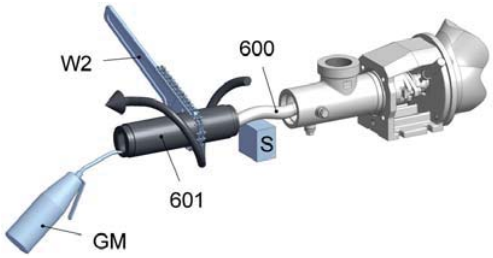

9.1.2.3 Suction casing (500) - Dismantling

- Provide rotor **(600)** with protective cover **(SH)**.
- Prop up rotor **(600)** with support **(S)**.
- Dismantle the suction casing **(500)**.
- Remove tool **(WS)**.

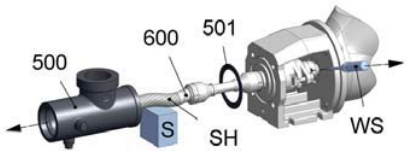

9.1.2.4 Rotating unit (RTE) - Dismantling

Tool (**W10**/dismantling tool)

Tool (**W9**/mounting lever)

with flush connection

- Remove the flush connection **(SSÜ)** on the shaft seal casing **(SEA)**.

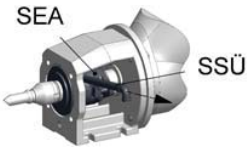

- Assemble tool (**W10**/dismantling tool).

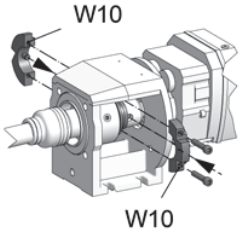

- Pull the rotating unit **(RTE)** with shaft seal **(SEA)** off from the output shaft of the drive **(ANT)**.
  - Use tool (**W9**/mounting lever).

- Dismantle tool (**W10**/dismantling tool).

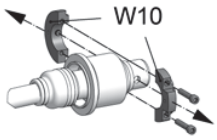

- Pull off the splash ring **(310)**.
- Pull off the shaft seal casing **(SEA)**.
  - Note dismantling shaft seal (→ chapter 9.4).

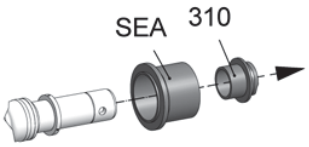

without flush connection

- Assemble tool (**W10**/dismantling tool).

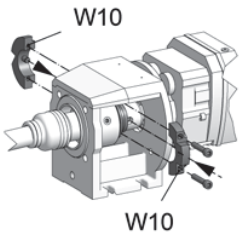

- Pull the rotating unit **(RTE)** with shaft seal **(SEA)** off from the output shaft of the drive **(ANT)**.
  - Use tool (**W9**/mounting lever).

- Dismantle tool (**W10**/dismantling tool).

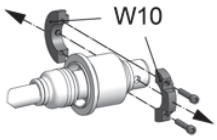

- Pull off the splash ring **(310)**.
- Pull off the shaft seal casing **(SEA)**.
  - Note dismantling shaft seal (→ chapter 9.4).

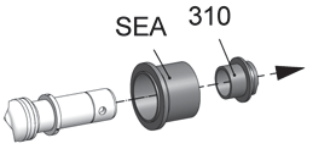

9.1.2.5 Rotor (600), coupling rod (400), plug-in shaft (307) - Dismantling

- Joint **(G)** dismantling note rotating unit - individual parts (→ chapter 9.2).

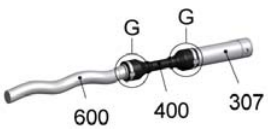

9.1.2.6 Lantern (200)/drive (ANT) - Dismantling

CAUTION

Falling or tilting drive.
Slight injury can occur.

- Secure the drive **(ANT)**.

- Remove the screw fitting **(210, 212, 213)**.
- Remove the drive **(ANT)**.

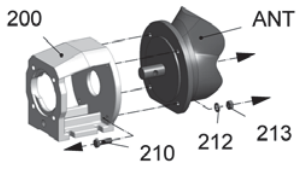

9.1.3 Reassembly

WARNING

Risk of pump tipping or falling.
Death or serious injury can occur.

- Fasten the lantern **(200)** to secure the pump.

9.1.3.1 Lantern (200)/drive (ANT) - Reassembly

- Clean the flange bearing surfaces **(FLS),** bolt circle **(ZD)** and the output shaft of the drive unit **(ANT)**.
- Mount the drive **(ANT)** to the lantern **(200)** with screw fittings **(210, 212, 213)**.

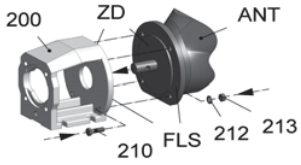

9.1.3.2 Rotor (600), coupling rod (400), plug-in shaft (307) - Reassembly

- Joint **(G)** reassembly note rotating unit - individual parts (→ chapter 9.2).

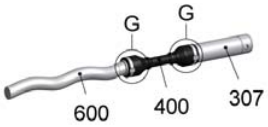

9.1.3.3 Rotating unit (RTE) - Reassembly

- Slide on shaft seal casing **(SEA)**.
  - Note reassembly shaft seal (→ chapter 9.4).
- Moisten splash ring **(310)** and plug-in shaft **(307)** with antiseize graphite petroleum.
- Slide splash ring **(310)** onto plug-in shaft **(307)**.
  - Observe fitting position of splash ring (see lettering).

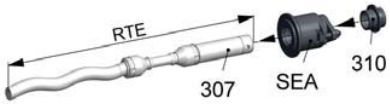

- Apply antiseize graphite petroleum to the output shaft of drive **(ANT)**.
- Slide on rotating unit **(RTE)**.

with flush connection

- Mount the flush connection **(SSÜ)**.

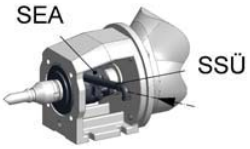

9.1.3.4 Suction casing (500) - Reassembly

- Provide rotor **(600)** with protective cover **(SH)**.
- Prop up rotor **(600)** with support **(S)**.
- Slide on casing gasket **(501)**.
- Assemble suction casing **(500)** and adjust.
  - Use spirit level **(W)**.
- Remove protective cover **(SH)**.

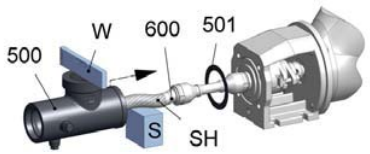

9.1.3.5 Stator (601) - Reassembly

- Insert tool **(WS)**.
- Turn tool **(WS)** down.

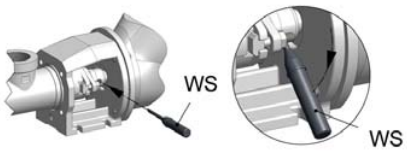

Tool (**W2**/chain wrench)

- Moisten outer surface of the rotor **(600)** with lubricant **(GM)**.
- Moisten inner surface of the stator **(601)** with lubricant **(GM)**.
- Prop up stator **(601)** with support **(S)**.
- Turn stator **(601)** in the “right” rotating direction and slide onto rotor **(600)**.
  - Use tool **(W2)**.

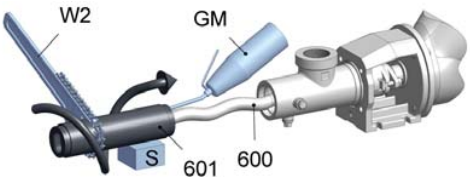

- Remove tool **(WS)**.
- Slide in plug-in shaft pin **(309)**.

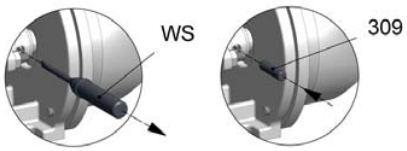

- Pay attention to the position of the splash ring **(310)**.
- Insert the splash ring collar at a distance of 0.5 mm from the lantern **(200)**.

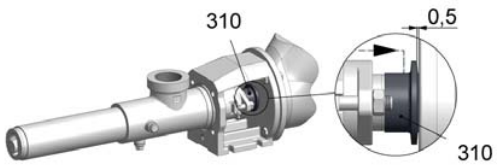

9.1.3.6 Pressure branch (700) - Reassembly

- Prop up stator **(601)** with a support **(S)**.
- Insert tie bolts **(602)** loosely into the lantern **(200)**.

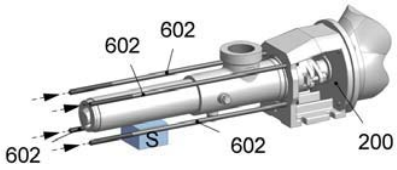

- Push pressure branch **(700)** on to the stator **(601)**.
- Insert tie bolts **(602)** loosely in the pressure branch **(700)**.
- Remove the support **(S)**.

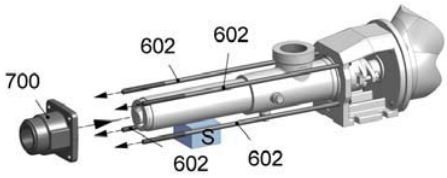

- Mount screw fitting **(604, 606)**.
- Tighten tie bolts **(602)** equally.

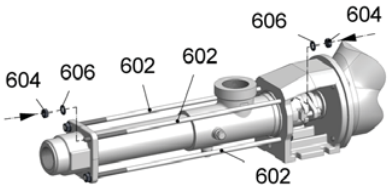

9.2 Rotating unit individual parts

9.2.1 Dismantling

9.2.1.1 Holding band (406) - dismantling

CAUTION

Risk of injury.
Possibility of parts spinning out.

➢ Wear protective goggles.

➢ Detach holding band loop (SCL).
  – Use suitable tool (WM).
➢ Push out parts of holding band loop (SCL).
➢ Remove holding band (406).

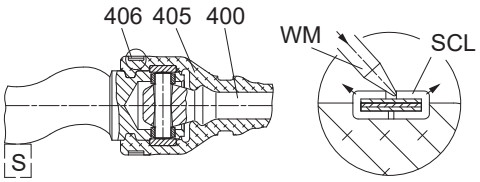

Tool (W15/mounting plate)

➢ Pull back universal joint sleeve (405).
➢ Secure tool (W15).

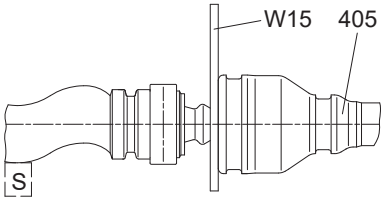

9.2.1.2 Retaining sleeve (401) - dismantling

➢ Knock back retaining sleeve (401).
  – Use suitable tool (WM).

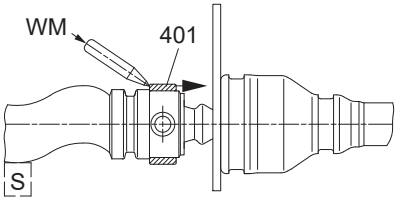

9.2.1.3 Detach joint

- Eject coupling rod pin (402)
- Remove coupling rod (400).

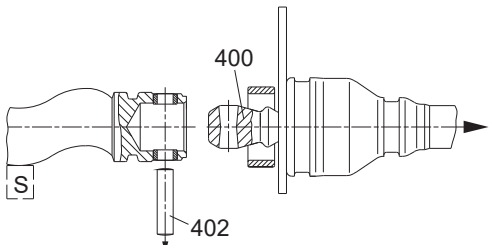

Tool (W4/assembly mandrel)

- Knock out guide bushings (403) using tool (W4).

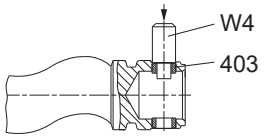

9.2.2 Rotating unit (RTE) - prepare individual parts for reassembly

9.2.2.1 Rotor (600)

- Remove any damage.
- Clean rotor (600).

Tool (W4/assembly mandrel)

- Press in guide bushings (403) (depth = 2/3).
  - Use tool (W4).

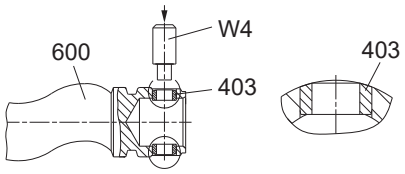

9.2.2.2 Coupling rod (400)

- Clean coupling rod (400).
- Check bore head for wear.
  - If wearing is detec on the bore head, renew coupling rod (400).

9.2.2.3 Plug-in shaft (307)

- Remove any damage.
- Clean plug-in shaft (307).

Tool (W4/assembly mandrel)

- Press in guide bushings (403) (depth = 2/3).
  - Use tool (W4).

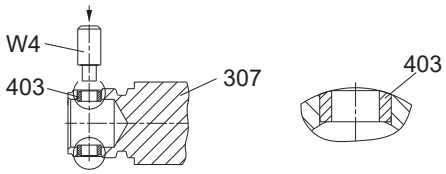

9.2.3 Rotating unit (RTE) - individual parts - reassembly

NOTICE

Malfunction of the joints.
Malfunction and/or destruction of joints.

➢ Replace coupling rod pins (402) and guide bushings (403) jointly.

9.2.3.1 Coupling rod (400) - reassembly

➢ Slide the universal joint sleeve (405) and holding bands (406) onto coupling rod (400).
➢ Adapt diameter and width of the holding band to the universal joint sleeve.
➢ Fill the joint head with SEEPEX joint grease.

Rotor (600)

➢ Insert coupling rod pins (402).
➢ Slide on retaining sleeve (401).
➢ Connect rotor/coupling rod.
➢ Slide in coupling rod pins (402).

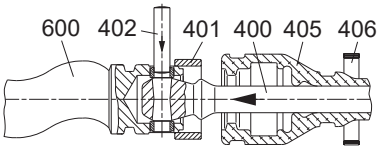

Plug-in shaft (307)

➢ Insert coupling rod pins (402).
➢ Slide on retaining sleeve (401).
➢ Connect plug-in shaft/coupling rod.
➢ Slide in coupling rod pins (402).

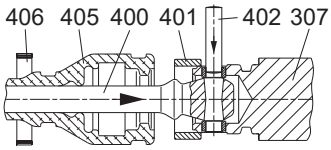

9.2.3.2 Retaining sleeve (401) - reassembly

Tool (W4/assembly mandrel)

➢ Knock back retaining sleeve (401).
  – Use tool (W4).

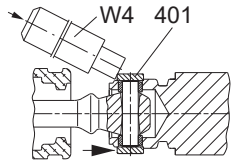

➢ Secure retaining sleeve (401) in a displaced manner (2x180°).
  – Use suitable tool (WK).

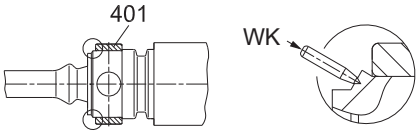

9.2.3.3 Universal joint sleeve (405) - reassembly

- Moisten the surface of coupling rod (400) / inner surface of universal joint sleeve (405) with joint grease (maintenance chapter 7.).
- Slide on universal joint sleeve (405).
- Vent the interior of the joint.
  - Use suitable tool (WS).

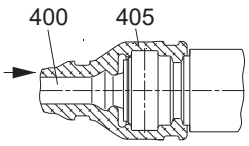

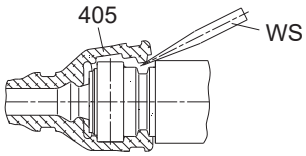

- Assemble the holding band.
  - Holding band assembly (chapter 9._).

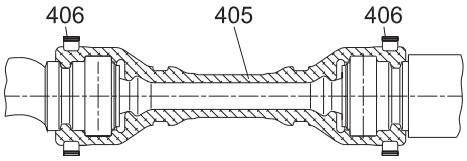

9.3 Holding band - assembly

9.3.1 Prepare the holding band

➢ Only use prefabricated double-band holding bands.

9.3.2 Check the holding band

- Bent-over holding band (HBD) is in contact with holding band loop (SCL) to avoid damaging universal joint sleeve.

➢ Press on holding band (HBD) using tool (WZ) if necessary.

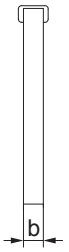

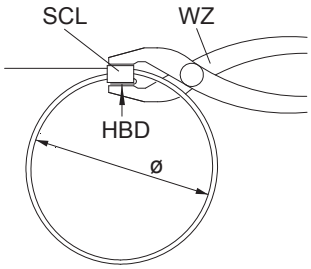

9.3.3 Assemble the holding band

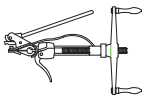

➢ Use tool (W3/mounting tool)

➢ Feed holding band into tool (W3).

➢ Hold ends of holding band with the eccentric lever (EX).

➢ Turn the crank (KU) until the holding band is strained and lies against the holding band loop (SCL).

➢ Carefully pull the holing band together until it is in contact with the circular groove of universal joint sleeve.

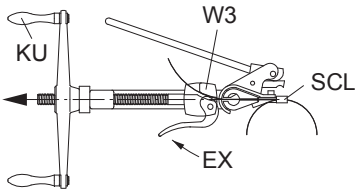

9.3.4 Correct tension of the holding band (HBD)

Correct

The holding band (HBD) has drawn in the out shape of the universal joint sleeve and is firmly seated.

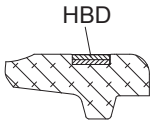

Incorrect

The holding band (HBD) is too loose, can slip off.

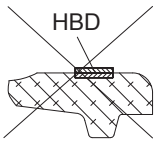

Incorrect

The holding band (HBD) is too tight, universal joint sleeve will be damaged/sheared off.

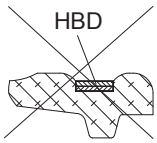

9.3.5 Cant up the holding band

- Swivel mounting tool (W3) approx. 60° upwards.
- Loosen crank (KU) by a half turn.
- Swivel cutting lever (SH) forward until the pressure piece is lying behind the holding band loop (SCL).

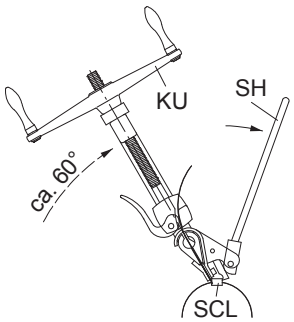

9.3.6 Shear the holding band (material: 1.4301; 1.4571)

- Hit the cutting lever (SH) with the inside of your hand.
  - Cant up and shear the end of the holding band behind the loop (SCL).
  - Carefully straighten up the holding band if it rises up on the sheared side.

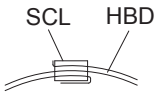

NOTICE
Universal joint sleeve damage. Pin joint grease can emerge. ➢ Avoid hammering or knocking.

9.3.7 Check the holding band after assembly

- The holding band must lie in the groove of the universal joint sleeve.
- Replace the holding band if the holding band slips back through the loop.

9.4 Mechanical seal general

9.4.1 Safety

WARNING

Shaft seal is leaky.
Leakage may escape into the atmosphere.

- ➢ Take safety measures to protect persons and the environment.
- ➢ Wear suitable protective clothing.
- ➢ Dispose of leakage appropriately.
- ➢ Note applicable regulations when handling hazardous substances.

9.4.2 Operating conditions and material combination

- Adjust to the relevant application
  - – Refer to technical data (chapter 3).

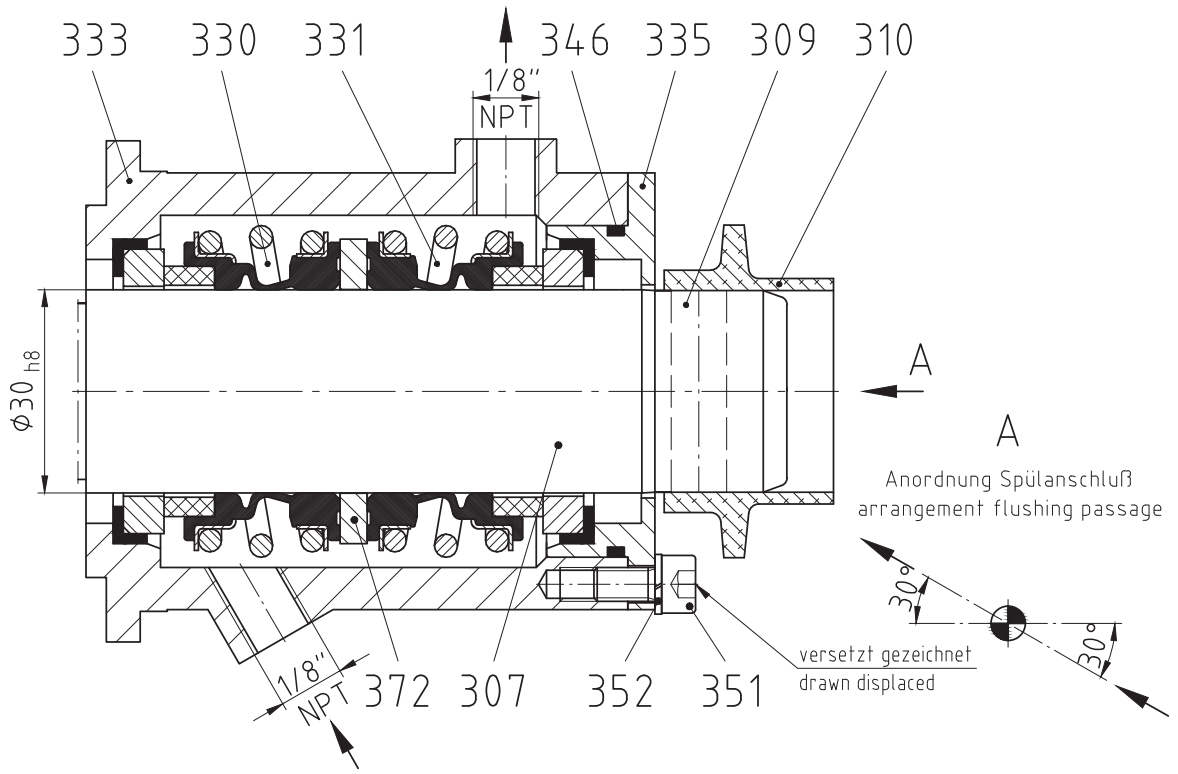

Stück Unit	Norm Standard	Pos./Item	Benennung/Denomination Zeichnungs–Nummer/Drawing–Number	Werkstoff/Material	Bemerkung/Remark	Gewicht Weight kg
1		372	Stützring / support ring 062-372/M500-0-040_4			
2		352	Federring / spring washer		B5	
2		351	Zylinderschraube / socket screw		M5 x 10	
1		346	O-Ring / o-ring		ϕ42 x 2	
1		335	Gehäusedeckel / casing cover 262-335/M500-0-001_4			
1		333	GLRD-Gehäuse / mechanical seal casing 262-333/M500-0-011_4			
1		331	GLRD / mechanical seal MG1-ϕ30-G60		Fabrikat / make : Burgmann	
1		330	GLRD / mechanical seal MG1-ϕ30-G60		Fabrikat / make : Burgmann	
1		310	Spritzring / splash ring 062-310/M500-0-002_4		gekürzt / shorted	
1		309	Steckwellenbolzen / plug-in shaft pin 062-309/M500-0-001_4			
1		307	Steckwelle / plug-in shaft 262-307/M500-0-030_3			

SEEPEX.
ALL THINGS FLOW

Allgemeintoleranzen für Maße ohne einzelne Toleranzeintragung DIN ISO 2768–mittel General tolerances for mass without individual tolerance entry DIN ISO 2768–average	Aus–gabe Issue	Änderung Modification	Name Name	Datum Date	Maßstab/Scale 1:1	Werkstoff/Material	Gewicht/Weight
					Bezeichnung/Denomination GLRD-Schnittzeichnung mechanical seal sectional drawing Burgmann MG1-ϕ30-G60 Ausführung/design back-to-back, Spülanschlüsse/flushing connection 1/8"NPT		
Rauheit für Oberflächenzeichen DIN ISO 1302 Reihe 2 Roughness for surface finish indication DIN ISO 1302 Reihe 2			Name Name	Datum Date	Zeichnungs–Nummer/Drawing–Number 262-0GB/M500-0-091A4		
		Bearbeitet/Drawn	hgg	27.03.2000			
		Geprüft/Checked	kno	27.03.2000	EDV–Nr./EDP–No. 38256.dwg		
		Normiert/Standard			Ersatz für/Replacement for:	Ersetzt durch/Replacement by:	
		Gedruckt/Printed					

Urheberrechtsschutz: Diese Zeichnung ist unser Eigentum und uns nach dem Gesetz über Urheberrecht und verwandte Schutzrechte geschützt.
Protection of Copyright: This drawing is our property and is protected acc. to the law referring to copyright and related protective laws.

10.1 Spare parts list

10.2 Sectional drawing and parts list

Version for copying

10.1 Spare parts list

Spare parts can be ordered online or requested from
www.seepex.com\

Type: BN 025-12 to 1-6L

☐ Request ☐ Order

Must be included in every order or enquiry!

Commission:

Type:

Sender:

Contact: .....
Tel.: .....
Fax: .....
E-mail: .....

Customer Service:
SEEPEX Inc.
511 Speedway Drive
Enon, Ohio 45323
service.us@seepex.com

Delivery address:
.....
.....
.....
.....
.....

No.	Quantity	Component	Material	Comment
Minor set of wearing parts ☐				
301	1	Set of packing rings		according to data sheet (chapter 3.1)
330	1	Mechanical seal		according to data sheet (chapter 3.1)
601	1	Stator		
Major set of wearing parts ☐				
301	1	Set of packing rings		according to data sheet (chapter 3.1)
307	1	Plug-in shaft		
330	1	Mechanical seal		according to data sheet (chapter 3.1)
400	1	Coupling rod with coupling rod bushings		
402	2	Coupling rod pin		
403	4	Guide bushing		
405	2	Universal joint sleeve		
406	2	Holding band, large		
600	1	Rotor		
601	1	Stator		

Place, date

Signature / company stamp

Version for copying

No.	Quantity	Component	Material	Comment
Set of gaskets			☐	
301	1	Set of packing rings		according to data sheet (chapter 3.1)
310	1	Splash ring		according to data sheet (chapter 3.1)
330	1	Mechanical seal		
501	1	Casing gasket		
503	3	Sealing ring		
Plug-in shaft & shaft seal			☐	
301		Set of packing rings		according to data sheet (chapter 3.1)
307		Plug-in shaft		
309		Plug-in shaft pin		
310		Splash ring		according to data sheet (chapter 3.1)
330		Mechanical seal		according to data sheet (chapter 3.1)
Coupling rod & joint parts			☐	
400		Coupling rod with coupling rod bushings		
401		Retaining sleeve		
402		Coupling rod pin		
403		Guide bushing		
405		Universal joint sleeve		
406		Holding band, large		
401-406		Complete set of joint parts		
Conveying elements			☐	
600		Rotor		
601		Stator		
Miscellaneous parts			☐	
501		Casing gasket		
098		Pin joint grease		1 cartridge = 300 g (approx. 315 cm³) Grease quantity according to maintenance (chapter 7.0)

Place, date

Signature / company stamp

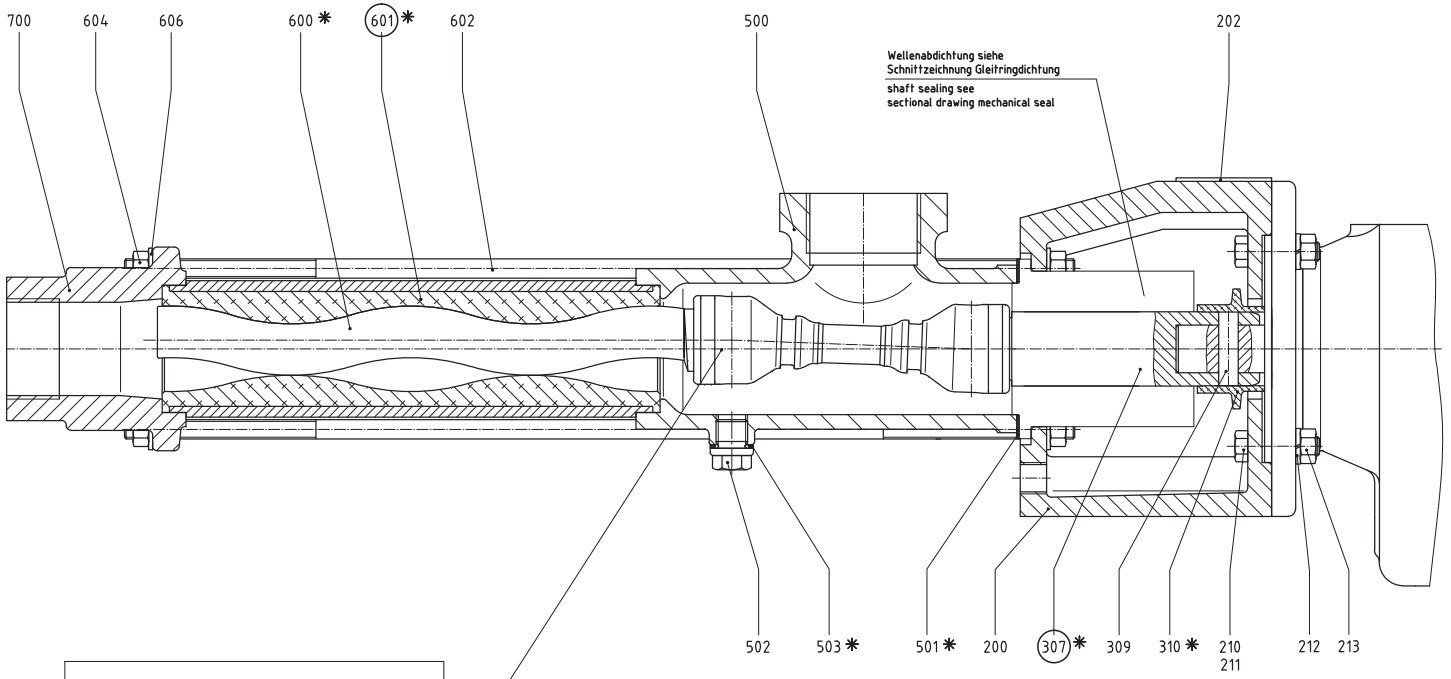

098 *

SEEPEX Gelenkfett

Typ und Füllmenge:
Betriebs- und Montageanleitung
entnehmen

SEEPEX joint grease

type and filling quantity:
see operating and
assembly instruction

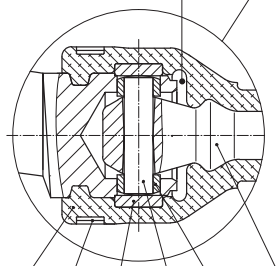

405 * 406 * 401 402 * 403 * 400 *

○ Werkzeuge
Betriebs- und Montageanleitung
entnehmen

Tools
see operating and
assembly instruction

* Verschleißteile und Dichtungen
Betriebs- und Montageanleitung
entnehmen

Wearing parts and sealings
see operating and
assembly instruction

Stück Unit	Norm Standard	Pos./Item	Benennung/Denomination Zeichnungs-Nummer/Drawing-Number	Werkstoff/Material	Bemerkung/Remark	Gewicht Weight kg

SEEPEX.
ALL THINGS FLOW

Allgemeintoleranzen für Maße ohne einzelne Toleranzeintragung DIN ISO 2768-mittel	ABC Änderung Modification	Name Name	Datum Date	Maßstab/Scale	Werkstoff/Material	Gewicht/Weight

Bezeichnung/Denomination

General tolerances for mass without individual tolerance entry DIN ISO 2768-average

Schnittzeichnung Baureihe "BN"
sectional drawing range "BN"

Rauheit für Oberflächenzeichen DIN ISO 1302 Reihe 2		Name Name	Datum Date	Zeichnungs-Nummer/Drawing-Number
	Bearbeitet/Drawn	hof	22.06.1995	062-013A1
Roughness for surface finish indication DIN ISO 1302 Reihe 2	Geprüft/Checked	hue	22.06.1995	EDV-Nr./EDP-No. 13031.dwg
	Normiert/Standard			Ersatz für/Replacement for: Ersetzt durch/Replacement by:
	Gedruckt/Printed	hof	14.10.1998	

Urheberrechtsschutz: Diese Zeichnung ist unser Eigentum und uns nach dem Gesetz über Urheberrecht und verwandte Schutzrechte geschützt.
Protection of Copyright: This drawing is our property and is protected acc. to the law referring to copyright and related protective laws.

Stückliste
Parts List
Liste des pièces

SEEPEX.
ALL THINGS FLOW

Stck.	Pos.	DE **Baureihe BN** **Schnittzeichnung Nr. 062-013A1** **Benennung Stck. / Pos.**	EN **range BN** **sectional drawing no. 062-013A1** **denomination Qty. / Item**	FR **série BN** **plan no. 062-013A1** **désignation Qté. / Poste**
1	200	Laterne	lantern	lanterne
1	202	Typenschild	type plate	plaque signalitique
4	210	6kt-Schraube	hexagon bolt	vis
	211	6kt-Schraube	hexagon bolt	vis
4	212	Federring	spring washer	rondelle frein
4	213	6kt-Mutter	hexagon nut	écrou
1	307	Steckwelle	plug-in shaft	arbre à broche
1	309	Steckwellenbolzen	plug-in shaft pin	cheville pour arbre à broche
1	310	Spritzring	splash ring	bague de projection
1	400	Kuppelstange	coupling rod	barre d'accouplement
2	401	Gelenkhülse	retaining sleeve	douille d'articulation
2	402	Kuppelstangenbolzen	coupling rod pin	axe d'articulation
4	403	Führungsbuchse	guide bushing	douille de guidage
1	405	Manschette	universal joint sleeve	manchette
2	406	Halteband	holding band	collier de serrage
1	500	Sauggehäuse	suction casing	carter d'aspiration
1	501	Sauggehäusedichtung	casing gasket	étanchéité du carter d'aspiration
3	502	Verschlussschraube	screwed plug	bouchon de vidange
3	503	Dichtring	sealing ring	joint d'étanchéité
1	600	Rotor	rotor	rotor
1	601	Stator	stator	stator
4	602	Spannschraube	tie bolt	tirant
8	604	6kt-Mutter	hexagon nut	écrou
8	606	Scheibe	washer	rondelle
1	700	Druckstutzen	pressure branch	bride de refoulement
	098	SEEPEX Gelenkfett Typ und Füllmenge: Betriebs- und Montageanleitung entnehmen	SEEPEX joint grease type and filling quantity: see Operating and Assembly Instruction	SEEPEX graisse d' articulations sommaire pour type et quantité: voir instructions de montage et de fonctionnement
		Verschleißteile und Dichtungen: Betriebs- und Montageanleitung entnehmen	Wearing parts and sealings: see Operating and Assembly Instruction	pièces d'usure et étanchéités: voir instructions de montage et de fonctionnement
		Werkzeuge: Betriebs- und Montageanleitung entnehmen	Tools: see Operating and Assembly Instruction	Outils: voir instructions de montage et de fonctionnement
		Wellenabdichtung siehe Schnittzeichnung Gleitringdichtung	shaft sealing see sectional drawing mechanical seal	dispositif d' etanchéité voir vue éclatée garniture mécanique

Version for copying

Spare parts can be ordered online or requested from
www.seepex.com\

Must be specified with every order!

Sender:

Contact: .....
Tel.: .....
Fax: .....
E-mail: .....

Commission:

_____

Mark tool!

X

Customer Service:
SEEPEX Inc.
511 Speedway Drive
Enon, Ohio 45323
service.us@seepex.com

Delivery address:
.....
.....
.....
.....
.....

For installation of:	Packing gland	Stator	Universal joint sleeve	
Tool no.	**W1** ☐	**W2** ☐	**W15** ☐	
Denomination:	Packing puller	Chain wrench plus spare chain	Mounting plate	
Order no.	PKZ	KRZ	MTP	
		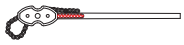	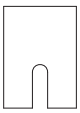	

For installation of:	**Rotating unit**			
	Holding band	Joint	Plug-in shaft	
Tool no.	**W3** ☐	**W4** ☐	**W10** ☐	
Denomination:	Mounting tool	Drift	Dismantling tool	
Order no.	MHB	MTD	AZV	
	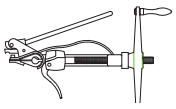		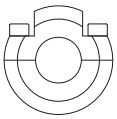	

12.1 Additional components

12.2 Technical information

12.3 Manufacturer's documents shaft seal

1. General

	NOTICE
	Dry-running of the pump/temperature increase in the stator Damage to property and malfunction can be caused. ➢ Adhere to max. permissible operating temperature. ➢ Install dry-running protection device (TSE).

Functional principle:

- continuous monitoring of the temperature in the stator (temperature sensor)
- Shut off the pump when reaching the set category temperature.

Operating mode:

- existing temperature at the stator is compared to the category temperature in the TSE control device.
- Two relays switch within the TSE control device when reaching the shut-off value.
- The drive motor is shut off through potential-free alternating contacts.
- An alert is triggered.
- A required acknowledgement of the alert prevents an automatic reactivation of the pump.

2. Technical Data

2.1 Temperature sensor

- The temperature is measured at the stator through an NTC resistor with a protective sleeve.

Permissible temperature range: 0-150°C

Standard resistor: 10 kOhm at 25°C

Temp °C	0	10	20	25	30	40	50	60
Resistor Ohm	32,650	19,900	12,490	10,000	8,057	5,327	3,603	2,488

Temp °C	70	80	90	100	110	120	130	140
Resistor Ohm	1.752	1.255	915	678	510	389	301	235

2.2 Technical data - TSE control device

- The TSE control device is suitable for cabinet installation or wall mounting.

Types:	SGRTSE 230V ACB
	SGRTSE 115V ACB
	SGRTSE 24V ACB
	SGRTSE 24V DCB
Temperature range:	0-150°C
Input:	NTC temperature sensor 10 kOhm (at 25°C) with sensor breakage guard at -25°C
Relay output:	2 potential-free changeover contacts (K1, K2), switching capacity 500 VA at 110-230 V resistive load
Available operating voltage:	24V, 115V, 230V AC; 24V DC
Power drain:	max. 4 VA
Sensor circuit:	Open-circuit voltage max. 2.5 VDC Short-circuit current max. 0.5 mA DC
Display at the device:	Malfunction/dry-running Shut-off temperature
Operation at the device:	Setup shut-off temperature Reset alert
Housing material:	ABS
Fastening:	Installation on standard bar 35 mm in accordance with standard or screw connection in accordance with standard.
Protection:	Casing IP 40; terminals IP 20
Ambient temp.:	0-50!
Dimensions:	45x75x110 mm (WxHxD)
EMV (2004/108/EG):	CE conform in accordance with standard

2.3 Dimensions and wall mounting

- Installation depth = 110 mm

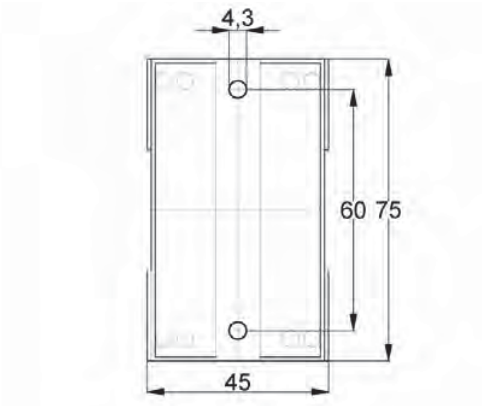

3. Electrical connection

3.1 Installation instructions

Check line voltage

➢ Check line voltage/nominal voltage against information on type plate before connection and commissioning.
  – Permissible mains voltage variations of the nominal equipment voltage +/-10%

➢ Electrical connections are in accordance with the connection map, the provisions of the local utility or the relevant VDE regulations.

Mains power failure

➢ Initiate appropriate measures to prevent the failures.
  – Filter failures through external mains filter.
  – Equip device internally with mains filter.
  – Install sensor leads shielded.
  – Ground shield on one side.

3.2 Connection diagram TSE control device

- Terminal assignment

1 + 3	Operating voltage
11 + 13	Operating hour counter potential-free contact
12 + 13	external potential-free contact
14 +15	Temperature sensor
5, 6, 7	Relay output K1
8, 9, 10	Relay output K2

- The TSE control device can be released after dry-running by a button (closer) at terminals 12+13.

➢ Install button (closer).

3.3 Relay function

Actual temperature > shut-off temperature	**(Malfunction/dry-running)**
Contact 6-5 and 9-8	closed
Contact 6-7 and 9-10	open

- Relays K1 and K2 are in parallel and they work together.
  - K1: Switch-off condition integrated in motor contactor control.
  - K2: optional connection to the fault sensor or process computer (reserve).

4. Measures before commissioning

4.1 Check position of temperature control point at pump

➢ At the factory, the temperature sensor is always installed at the liquid inlet side.

➢ Check the specified installation position of the temperature control point when changing the direction of rotation and exchanging the stator.

4.1.1 Pump with "anti-clockwise rotation" - standard design

➢ Check suction casing side fitting position.

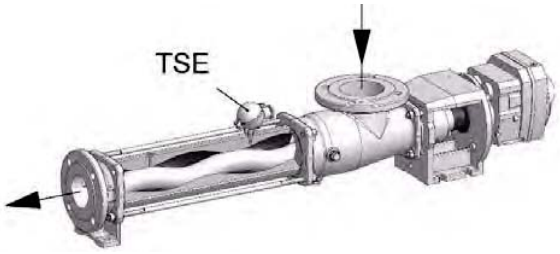

4.1.2 Pump with "clockwise rotation" - special design.

➢ Pressure branch side fitting position.

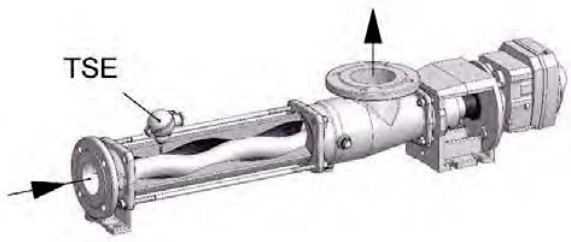

4.1.3 Performance check

➢ Execute performance check before first commissioning.
➢ Switch on control voltage at terminals 1+3.
– Digital display at TSE control device is illuminated.

➢ Keep "stator temp" button depressed and read temperature value.

• The function exists if the display is in accordance with the existing temperature.
➢ Observe deviations in case of functional failures.
– Find malfunctions, causes and remedies (→ see chapter 8) in the operating and assembly instructions.

5. Commissioning and control

5.1 Set the switch-off temperature

➢ Set the switch-off temperature at the TSE control device as low as possible.
– Shorter shut-off times after the dry-running occurs.
– optimum stator protection

5.1.1 Coarse setting of the shut-off temperature

• When delivered, the shut-off temperature is factory-set to 50°C.
• Maintain factory settings during commissioning or, in case of higher medium temperatures, set a value of 20-30°C above the temperature of the pumped medium.

➢ After the coarse setting, commission the pump for a max time of 60 min.
– Subsequently, perform the fine adjustment of the shut-off temperature (→ chapter 5.1.2).

5.1.2 Fine adjustment of the shut-off temperature

➢ Start pump until the operating temperature in the stator is stabilized (approx. 30-60 min.).

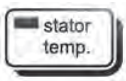

- This will be shown on the display of the TSE control device when the pump is running and by pressing the button "stator temp.".

➢ Set the final shut-off temperature (→ chapter 5.1.3).
  – The shut-off temperature is 10°C higher than the operating temperature displayed.
  – Adhere to chapter 5.1.3.
  – Consider maximum medium temperature that can occur during operation.

➢ Check information in the data sheet for a medium temperature > 40°C.

➢ Rotor/stator - consider sizing.

➢ A consultation with the manufacturer is required if the temperature information in the data sheet and the actual value do not conform.

5.1.3 Adjust shut-off temperature at the control unit.

➢ Switch control voltage on.
  – After a self-test at the control unit, the currently set shut-off temperature will be shown on the display.

➢ Press briefly
  – Setup mode is displayed.
  – The display shows alternating "SET" and the shut-off temperature set last.

➢ Increase shut-off value.
  – The value changes initially by +1° each.
  – After approx. 3 sec. in +10° steps.

➢ Decrease shut-off value.
  – The value changes initially by -1° each.
  – After approx. 3 sec. in -10° steps.

➢ Press briefly
  – Operating mode is displayed.
  – Adjusted shut-off temperature was transmitted to the permanent memory and will be shown on the display.

- In setup mode, the device changes - without saving possibly changed settings - after 10 sec. into the operating mode.

5.2 Switch display from °C to °F

➢ Press button 10 seconds until the display changes.

- The selected temperature unit will be displayed next to the °C or °F symbol.

5.3 Release control unit after the dry-running

- The installed relays switch-off and remain locked in this position if the set temperature at the TSE control unit is exceeded.
  - Red LED appears (alert).

➢ Acknowledge alert/release relay in accordance with the following options:

➢ actuate "reset" button at the TSE control unit for at least 1 sec.
➢ Shut-off operating voltage at the TSE control unit (terminals 1-3).
➢ Actuate external contact ("reset" button, closed for at least 1 sec.).

5.4 Call operating hour counter

- The TSE control unit includes an operating hour counter. This value can be called on the service level. The transition to the service level is only possible after a code number has been entered.

➢ Press approx. 5 sec until the "Cod" is displayed.
  – The display shows alternating "Cod" and 100.

➢ Press button sequence.
➢ Enter code "33".

➢ Press briefly
  – Code will be acknowledged.
  – Transfer to the service level.

Display alternating: "¯Hi¯" and #value# • No function

➢ Press briefly
  – Transfer to next parameter/display value.

Display alternating: "bh.Hi" and #value# • Operating hour counter (displayed value x 10,000)

➢ Press briefly
  – Transfer to next parameter/display value.

Display alternating: "bh.Lo" and #value# • Operating hour counter (displayed value x 1)

➢ Return to the operating mode.

6. Stator change

6.1 General

➢ List the material of the installed TSE sensor sleeve when ordering a replacement stator.
➢ Do not readjust the sensor sleeve installed at the factory.

6.2 Dismantling/reassembly connection head and temperature sensor

- Adherence to associated drawing required.

6.2.1 Dismantling

- Do not reuse sensor sleeve after dismantling.

- Open cover of connection head.
- Remove connection wires at the temperature sensor.
- After loosening the screw at the side, pull off connection head from the threaded sleeve.
- Rotate threaded sleeve out of the stator.
- Remove clamp screw, rubber ring and temperature sensor from sensor sleeve.

6.2.2 Reassembly

- Do not readjust the sensor sleeve installed at the factory.
- Install threaded sleeve in the stator.
- Install sensor sleeve.
- Open cover of connection head.
- Install connection wires at the temperature sensor.
- Remove protective tube (transport guard of sensor sleeve).
- Slide thermistor sensor with clamp screw and rubber ring up to the base of the sensor sleeve and fixate.
- Screw threaded sleeve with two O-rings into threaded hole at the stator.
- When installing the connection head, route connection cable at the thermistor sensor from below through the hole in the terminal board.
- After fixating the connection head on the threaded sleeve, fasten connection cable at existing terminals and close connection head.

7. Functional failure

Causes for alerts and shut-offs of the pump without dry-running:

- Sensor or wire break
- Short-circuit sensor/wire
- Overshooting or undershooting of the measuring range (-25...150°C)

We recommend the following approach for checking the TSE control device and the sensor circuit incl. temperature sensor.

7.1 Performance check sensor circuit

➢ Remove the temperature sensor supply line at the TSE control device terminals 14+15.
➢ Connect resistor measuring unit (multimeter/ohmmeter).
➢ Determine electrical resistance with using the table (→ chapter 2.1) and compare with the temperature at the pump.
➢ Proceed as follows in case of resistor value deviations >10% from the target value:
➢ disconnect connecting wire to the control unit at the connection head of the pump
➢ Repeat measurement at the connection head of the TSE.
  – A defect at the temperature sensor exists in case of identical deviations.
➢ Exchange the temperature sensor.
  – Observe chapters 6.2 - 6.3.
• In case of correct values, a defect of the connection cable or the connection terminals exists.

7.2 Performance check TSE control device

• A defect at the TSE control device is probable if the sensor circuit is functioning properly.
➢ To check, disconnect terminal 14+15 of the sensor supply line.
➢ Connect commercially available carbon film or metal film resistor in accordance with the following array:

Resistor Ohm	10,000	5,600	2,200	1,000	560	220
Switch temp. °C	25	39	63	87	107	143

➢ Switch on control voltage at terminals 1+3.
  – Digital display at TSE control device is illuminated.

➢ Keep "stator temp" button depressed and read temperature value.
  – Read value must be in accordance with the switching temperature allocated to the resistor used.
➢ Return TSE control unit for repair in case of display deviations of more than 5-10°C or in case of no display.

1 Area of application

Conveying liquids with the following properties

- aggressive, toxic
- sticky, highly viscous
- polymerising
- tendency to leave deposits
- high vapour pressure or gaseous
- high pressure, high temperature

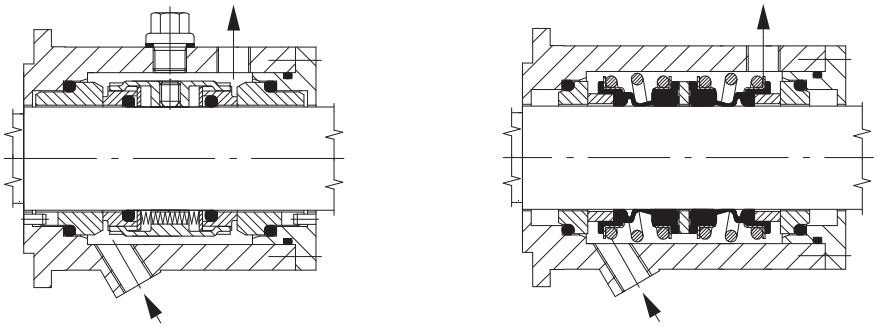

medium side atmospheric side

double acting back-to-back

2 Buffer fluid

2.1 General

The buffer fluid fills the space between the set of mechanical seals on the medium side and the atmosperic side

2.2 Task

- to dissipate the corresponding frictional heat.
- to avoid infiltration of the product into the sealing gap.

2.3 Medium

- clean, cold and stable liquid is used, e.g. water.
- it must be compatible with the product and free of solids.
- it must not have a tendency to leave deposits.
- it should have low viscosity and a good thermal conductivity.
- Bear in mind the resistance to corrosion of all acontact parts.

2.4 Pressure

The buffer fluid pressure must always be 1,5-2 bar greater than the maximum product pressure. This ensures that infiltration of the product in the mechanical seal (GLRD) sealing gap is prevented.

3 Buffer system in accordance with API 610, Plan 53 and Plan 54

Functions

- Pressure build-up in the buffer area
- Leakage compensation
- Agitation of the buffer fluid
- Colling of the buffer fluid

3.1 Buffer system natural circulation (thermosyphon principle) API Plan 53

Thermosyphon vessel (TS)

Agitation - natural circulation

Cooling and leakage compensation in the TS vessels

Pressure function:

with nitrogen (N2)

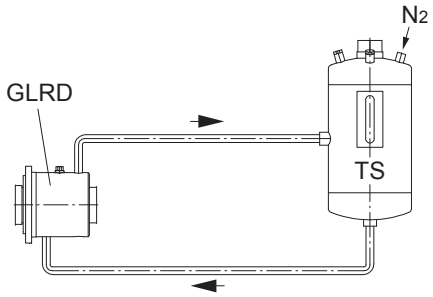

➢ Requisite buffer pressure in the mechanical seal (GLRD)
– at least 1,5-2 bar above the maximum pressure in the pump suction casing.

3.2 Seal flush supply from an external system API Plan 54

1	Pressure reducing valve
2	Shut-off valve
3	Pressure manometer
4	Shut-off valve
GLRD	mechanical seal

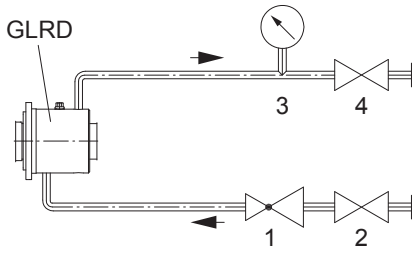

➢ Requisite buffer pressure in the mechanical seal (GLRD)
– at least 1,5-2 bar above the maximum pressure in the pump suction casing.

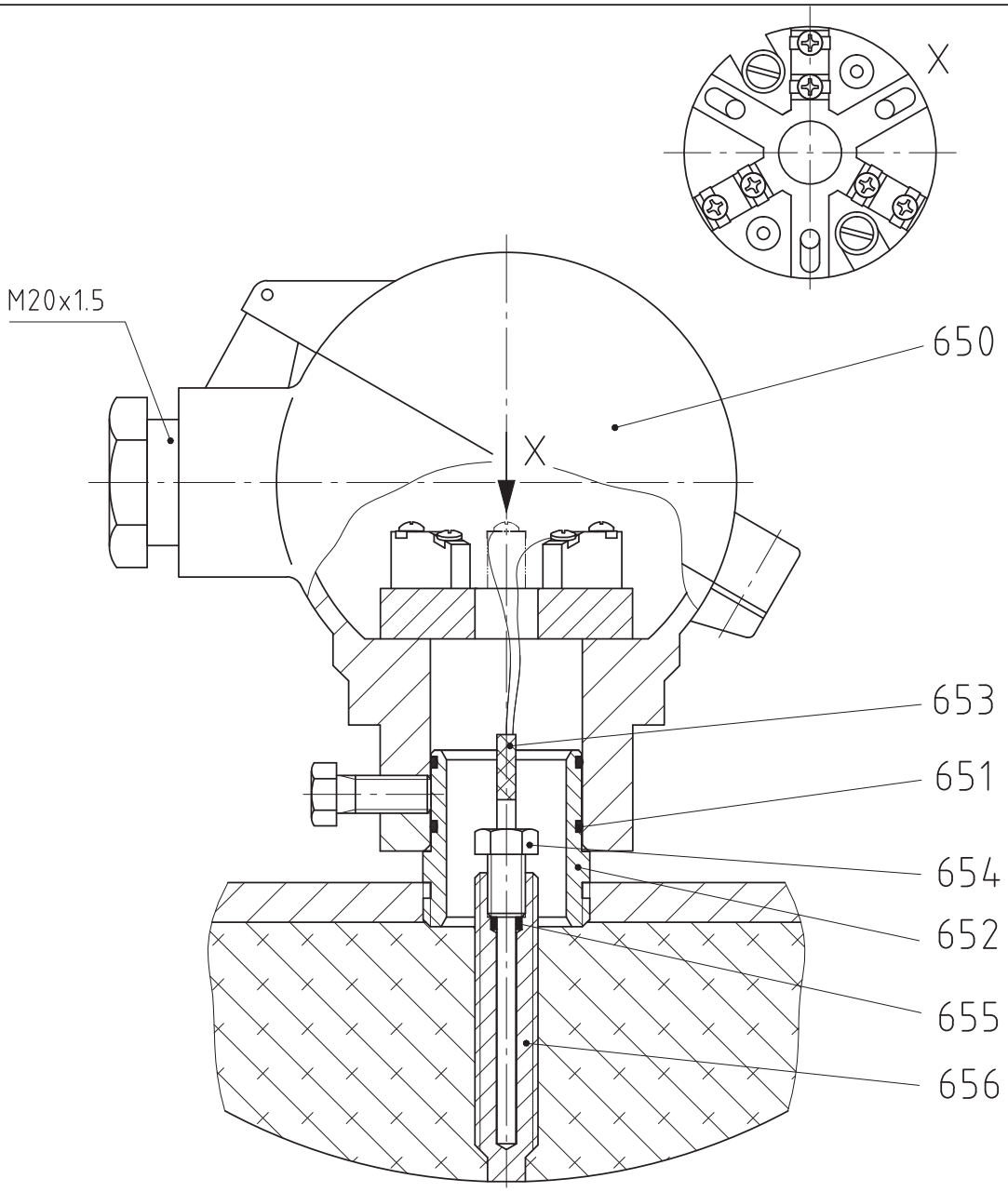

Stück Unit	Norm Standard	Pos./Item	Benennung/Denomination Zeichnungs–Nummer/Drawing–Number	Werkstoff/Material	Bemerkung/Remark	Gewicht Weight kg

SEEPEX.
ALL THINGS FLOW

Allgemeintoleranzen für Maße ohne einzelne Toleranzeintragung DIN ISO 2768–mittel General tolerances for dimensions without specified tolerances DIN ISO 2768–average	Aus–gabe Issue	Änderung Modification	Name Name	Datum Date	Maßstab/Scale %	Werkstoff/Material	Gewicht/Weight
					Bezeichnung/Denomination Schnittzeichnung TSE Anschlusskopf sectional drawing TSE connection head		

Oberflächenzeichen für Rauheit nach DIN EN ISO 1302 Symbol for surface roughness acc. to DIN EN ISO 1302		Name Name	Datum Date	Zeichnungs–Nummer/Drawing–Number	
	Bearbeitet/Drawn	hof	20.11.2008	702-006A4	
	Geprüft/Checked	pj	20.11.2008	EDV–Nr./EDP–No. L:\Lfdzchng.965\96587.dwg	
	Normiert/Standard			Ersatz für/Replacement for:	Ersetzt durch/Replaced by:
	Gedruckt/Printed				

Urheberrechtsschutz: Diese Zeichnung ist unser Eigentum und uns nach dem Gesetz über Urheberrecht und verwandte Schutzrechte geschützt.
Protection of Copyright: This drawing is our property and is protected acc. to the law referring to copyright and related protective laws.

Stck.	Pos.	DE	EN	FR
		TSE-Anschlusskopf	**TSE connection head**	**TSE tête de connexion**
		Schnittzeichnung Nr. 702-006A4	**sectional drawing No. 702-006A4**	**plan no. 702-006A4**
Stck.	**Pos.**	**Benennung Stck. / Pos.**	**denomination Qty. / Item**	**désignation Qté. / Poste**
1	650	Anschlusskopf	connection head	tête de connexion
2	651	O-Ring	o-ring	joint torique
1	652	Gewindehülse	screw socket	douille filetée
1	653	Thermistorfühler	thermistor sensor	thermistance
1	654	Klemmschraube	clamping screw	vis de blocage
1	655	Gummiring	rubber ring	anneau de caoutchouc
1	656	Fühlerhülse	sensor sleeve	fourreau de sonde

SEEPEX.
ALL THINGS FLOW

Technical data:

- NTC-resistance sensor fitted in stainless steel protection sleeve.
- Standard resistance: 10 kΩ at 25°C.

temp. °C	resistance Ω	temp. °C	resistance Ω	temp. °C	resistance Ω	temp. °C	resistance Ω
-20	97.080	23	10.920	66	2.011,0	109	525,00
-19	91.610	24	10.450	67	1.942,0	110	510,30
-18	86.490	**25**	**10.000**	68	1.876,0	111	496,70
-17	81.690	26	9.573,0	69	1.813,0	112	483,00
-16	77.180	27	9.167,0	70	1.752,0	113	470,00
-15	72.950	28	8.777,0	71	1.693,0	114	457,30
-14	68.980	29	8.407,0	72	1.636,0	115	445,00
-13	65.240	30	8.057,0	73	1.582,0	116	433,30
-12	61.730	31	7.723,0	74	1.530,0	117	421,70
-11	58.430	32	7.403,0	75	1.479,0	118	410,70
-10	55.330	33	7.097,0	76	1.431,0	119	400,00
-9	52.400	34	6.807,0	77	1.384,0	120	389,30
-8	49.650	35	6.530,0	78	1.340,0	121	379,30
-7	47.060	36	6.267,0	79	1.297,0	122	369,70
-6	44.620	37	6.017,0	80	1.255,0	123	360,00
-5	42.330	38	5.777,0	81	1.215,0	124	350,60
-4	40.160	39	5.547,0	82	1.177,0	125	341,70
-3	38.110	40	5.327,0	83	1.140,0	126	333,10
-2	36.190	41	5.117,0	84	1.104,0	127	324,70
-1	34.370	42	4.917,0	85	1.070,0	128	316,50
0	32.650	43	4.727,0	86	1.036,0	129	308,60
1	31.030	44	4.543,0	87	1.004,0	130	300,93
2	29.500	45	4.370,0	88	973,70	131	293,47
3	28.050	46	4.200,0	89	944,00	132	286323
4	26.690	47	4.040,0	90	915,30	133	279,17
5	25.390	48	3.890,0	91	887,70	134	272,03
6	24.170	49	3.743,0	92	861,00	135	265,70
7	23.010	50	3.603,0	93	835,30	136	259,30
8	21.920	51	3.467,0	94	810,30	137	253,00
9	20.880	52	3.340,0	95	786,70	138	246,93
10	19.900	53	3.217,0	96	763,30	139	241,03
11	18.970	54	3.099,0	97	741,00	140	235,27
12	18.090	55	2.986,0	98	719,30	141	229,70
13	17.250	56	2.878,0	99	698,70	142	224,30
14	16.460	57	2.774,0	100	678,30	143	219,00
15	15.710	58	2.675,0	101	659,00	144	213,90
16	15.000	59	2.579,0	102	640,30	145	208,87
17	14.320	60	2.488,0	103	622,00	146	204,03
18	13.680	61	2.400,0	104	604,30	147	199,33
19	13.070	62	2.316,0	105	587,00	148	194,77
20	12.490	63	2.235,0	106	571,00	149	190,33
21	11.940	64	2.157,0	107	555,00	150	185,97
22	11.420	65	2.083,0	108	539,70		

1.0 Connection of the drive motor to a frequency inverter

	NOTICE
	➢ Heed the technical information and information in the manufacturer's operating instructions when installing and commissioning the frequency inverter.

➢ Perform the connection of the frequency inverter and motor in accordance with the table.

- An incorrect motor connection causes considerable reduction in motor performance. The pump may possibly not start, or it might cause the drive to overheat.

Details motor type place (nominal motor voltage / circuit arrangement)	Line voltage of the frequency inverter	Output voltage of the frequency inverter	Motor connection
230 V ▲ / 400 V Y	1 x 230 V AC	3 x 0 to 230 V	Delta ▲
230 V ▲ / 400 V Y	3 x 400 V AC	3 x 0 to 400 V	Star Y
400 V ▲ / 690 V Y	3 x 400 V AC	3 x 0 to 400 V	Delta ▲

1.1 Standard three phase current squirrel cage motors with PTC thermistors

Delta connection (▲)

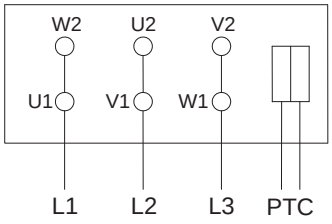

Motor terminal board

Star connection (Y)

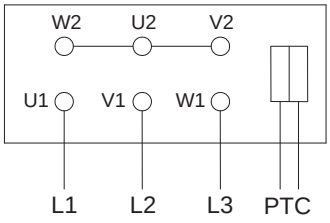

Motor terminal board

1.2 Self ventilated and force ventilated motors

➢ Self ventilated motors must be equipped with a PTC temperature monitoring device for speed control by means of a frequency inverter.
➢ Force ventilated motors may be loaded with nominal torque for the complete speed range.
➢ Connect force ventilators to a separate terminal board on the fan cover.
➢ Heed type plate details of the force ventilator or see separate terminal connection diagram.

1.3 Setting up the frequency inverter

➢ The power output of the frequency inverter must correspond to the motor power.
  - Where applicable the power of the inverter can be customized to the motor rating by adjusting the parameters.
➢ The pump requires a higher torque to start (breakaway torque).
  - This required torque can only be achieved by frequency inverters, which make 1.5 times the rated current for the motor available for at least 30s.
  - The operating torque is approximately constant throughout the whole speed range where the conveying pressure remains constant.
➢ Head the following frequency inverter characteristic curves (Item 1.3.1, 1.3.2).
  - The quadratic characteristic curve, which is frequently designated the pump and ventilator characteristic curve, is **not** suitable for progressive cavity pumps

1.3.1 Linear voltage / frequency characteristic curve up to mains frequency

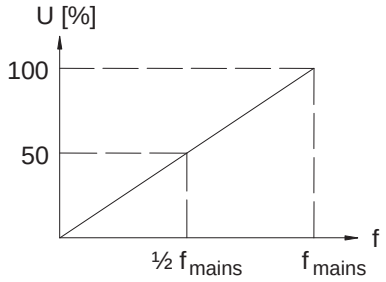

(f Mains = 50/60 Hz)

1.3.2 Linear voltage / frequency characteristic curve up to levels above the mains frequency

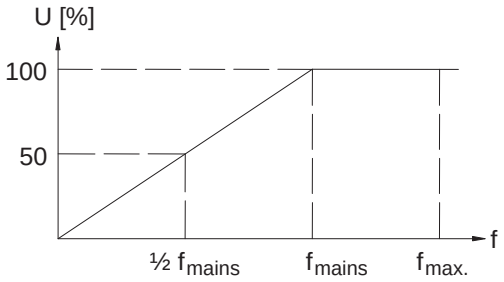

(f mains = 50/60 Hz)

1.3.3 Linear voltage / frequency characteristic curve with the installation of a magnetic bias (StartBoost)

- If problems arise when starting the pump which make a higher breakaway torque necessary, these should be resolved by the adjustment of a magnetic bias. In the case of the magnetic bias the drive is supplied with current by the frequency inverter at just 0Hz.

NOTICE
Magnetisation current set too high Damage to the motor due to overheating. ➢ Heed the frequency inverter manufacturer's instructions when setting the magnetic bias.

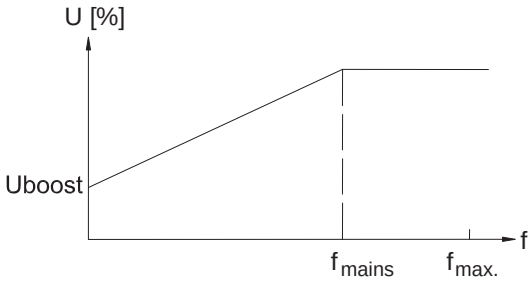

(f_{mains} = 50/60 Hz)

Warranty Card

Complete and return to validate warranty

Please complete this card and return it to seepex Inc. By using this card, the valid warranty period will commence at the pump “start-up” date. If this card is not completed the warranty coverage period will commence on the date the pump is shipped from the seepex factory. This card must be completed and mailed no later than one year from the date of shipment.

Client

User Entity:	.....	Address of plant:	.....
Contact Person:	.....		.....
Phone Number:	.....		.....
Fax Number:	.....		.....
E-mail Address:	.....		.....

Technical Pump Data

Pump Model:	.....
Pump Commission:	.....

Performance Data

Pumped Product:	.....		
Diff. Pressure:	.....	Flow Rate:	.....
Temperature:	.....	Viscosity:	.....
Solids Size:	.....	Solids %:	.....

Inquiry

Was the appearance of the pump acceptable?		..... Yes	..... No
Did the pump suffer any freight damage?		..... Yes	..... No
Did the pump perform as expected?		..... Yes	..... No
Did you receive:	- Data Sheets?	..... Yes	..... No
	- O&M Manuals?	..... Yes	..... No
Did you local seepex distributor contact your to arrange a start-up?		..... Yes	..... No

other comments

.....

.....

Name of person completing card (please print)

Date:	.....	Signature:	.....

TERMS & CONDITIONS OF SALE AND/OR REPAIR 01.16

The following terms and conditions shall apply to an order for all or any part of the articles covered by the accompanying offer unless a specific exception in included therein. Acceptance of any order by SEEPEX Inc. is expressly made conditional upon Buyer's acceptance of SEEPEX Inc. Terms and Conditions of Sale and/or Repair. All prior or future terms, conditions or negotiations (whether written or oral) by Buyer will therefore be considered void and inapplicable, unless otherwise agreed in writing. SEEPEX Inc. reserves the right, in its sole discretion, to refuse any order, unconditionally, for any reason, including but not limited to: expiration of the validity of the offer, errors in the offer, unacceptable payment risks, conflicts with contractual commitments made to other potential customers and the chance that a customer may try to enforce an implied warranty or merchantability of the products offered.

1. PRICES

1.1.
Any prices quoted shall only be valid for orders placed within 30 days from the date of issue of the offer. Prices are Ex-Works SEEPEX Inc. plant (Enon, Ohio USA) in U.S. dollars, unless otherwise agreed. SEEPEX Inc. reserves the right to correct typographical or clerical errors.

2. TERMS

2.1.
All orders are subject to approval by the SEEPEX Inc. Credit Department. Unless otherwise agreed, if payment for the invoice due is not made in full within thirty (30) days after shipment, late fees of eighteen percent (18%) per year (equivalent to a nominal monthly interest rate of 1.5%) will be applied on the unpaid balance until paid in full. The terms and conditions herein set forth are based upon tariffs, taxes, foreign exchange rates, delivery, and other conditions in effect on the date of the customer's order. In the event that such tariffs, taxes, foreign exchange rates, delivery, and/or other conditions should change prior to delivery of the goods, SEEPEX Inc. reserves the right to charge such increased duties, taxes, or charges to the customer.

2.2.
Unless the order includes the appropriate exemption certificates and/or licenses, duties and taxes levied by Federal, State, or other governments are required to be charged automatically at the rate imposed at time of importation/shipment. Any change in law, regulations, or Government practice which causes a variation of any kind in the applicable charges from the amounts stated in the offer shall result in an equivalent change in the price quoted.

2.3.
Until payment is made in full, SEEPEX Inc. shall retain the right, without notice, to repossess and/or retain the items, and/or dispose of them, for its benefit and hold the customer responsible for any loss. Customer agrees to enter into any agreements, contracts, or notices required confirming such rights.

3. SECURITY

3.1.
In order to secure any obligations due to SEEPEX Inc. from the customer the customer grants to SEEPEX Inc. a security interest in:
a) The merchandise covered by the customer's order (s), and
b) All property and funds of the customer now or hereafter in SEEPEX Inc.'s possession, and in all additions and proceeds of such merchandise and/or property. The customer hereby authorizes SEEPEX Inc. to sign alone any financing statement or statements and to do all and any other things which may be necessary to perfect such security interest.

4. CANCELLATION

4.1.
After acceptance, orders may be canceled only with the express approval of SEEPEX Inc. In the event of an approved cancellation, the customer shall remain responsible for payment for all work performed and/or material expenses incurred by SEEPEX Inc. as of the time of cancellation. SEEPEX Inc. reserves the right to cancel the order if SEEPEX Inc. determines, in its sole discretion, that the customer's financial condition renders the customer unable or unlikely to pay for the order as agreed.

5. RETURN

5.1.
No credit will be allowed for returns unless SEEPEX Inc. has authorized such returns in writing in advance. A copy of this authorization must be returned with the item as the packing slip. All returns are subject to restocking charges and to the SEEPEX Inc. Return Goods Authorization (RGA) Policy, which is available on www.seepex.com, and is incorporated herein by reference. SEEPEX Inc. will only issue credits for items that can be resold. Items that are special for a specific customer, including but not limited to: special hoppers, baseplates, electrical panels, gear reducers and electric motors are specifically excluded from consideration for credit. Any items not received in good condition or items that cannot be put back into stock will not be accepted. Any elastomer material with over three (3) years of fabrication will not be accepted for return and/or credit. Customers must pay for all freight associated with any return, including parts or equipment that may be considered to be covered by the limited warranty protection clause below. Outstanding RGA's that have declined repair will be scrapped automatically after ninety (90) days if no other written instructions are provided.

6. SHIPMENT

6.1.
a) Handling Charge: Customer shall be responsible for making all arrangements for shipment of the order with a suitable carrier. In the event that customer requests that SEEPEX Inc. make arrangements for shipment, then customer agrees to pay to SEEPEX Inc., in addition to the applicable shipping charges, a handling charge in the amount of 10% of the shipping charges with a minimum $5.00 to a maximum charge of $150.00, with special services requiring additional charges.
b) New Articles: Where shipping instructions dictate no specific routing, SEEPEX Inc. will utilize its best judgement in determining routing but shall not be liable for any charges once the goods have reached their agreed upon point of delivery. If changes are made at customer's request in a) the agreed upon point of delivery, or b) in the routing selected by SEEPEX Inc. and if such changes involve additional costs to be incurred, such costs shall be borne exclusively by the customer, unless otherwise agreed in writing.
c) Repair Work: All items for which the customer requests repair or other services by SEEPEX Inc. shall be delivered to and picked up from the SEEPEX Inc. plant (Enon, Ohio USA) unless otherwise agreed in writing. All costs of delivery shall be paid by the customer unless otherwise agreed to in writing prior to shipment.
d) All Orders: On collect freight shipments, cartage charges from plant to carrier are the responsibility of the customer. Title to articles passes to customer upon delivery to carrier acting as customer's agent subject to any right of retention by SEEPEX Inc. All claims for shortage in, and damages in, shipment or otherwise must be reported to carrier immediately upon receipt with copy or report to ourselves within five (5) business days.

7. WARRANTIES & LIABILITY LIMITATIONS

7.1.
a) New Articles: SEEPEX Inc. warrants articles of our manufacture against defects in material and/or workmanship for a period of three (3) years from date of delivery, provided that the articles have been installed, maintained, and operated in strict accordance with SEEPEX Inc. recommendations and instructions.
b) Repair Work: Defined herein as work and services performed by SEEPEX Inc. SEEPEX Inc. warrants all repair work and services that it performs against defects in workmanship and/or materials for a period of three (3) years from the date of delivery of the repaired articles.
c) All Orders: All warranty claims shall be submitted promptly in writing to SEEPEX Inc. Any warranty replacement and/or repair shall be made Ex-Works SEEPEX Inc. plant (Enon, Ohio USA). SEEPEX Inc.'s warranty obligation shall be limited to the replacement and/or repair only of defective material and/or workmanship.

7.2.
In no event shall SEEPEX Inc. be liable for any incidental or consequential loss or damage of whatever kind of nature including but not limited to loss of business income or profits, or damage resulting from delay in manufacture or delivery, loss of use or damage to any installation into which the article may be installed, whether arising out of contract or tort.

SEEPEX Inc.
511 Speedway Drive
Enon, Ohio 45323
USA

T +1 937 864-7150
sales.us@seepex.com
www.seepex.com

7.3.

SEEPEX Inc. shall not be liable for any loss or damage resulting from delay and/or late delivery due to causes beyond our reasonable control. Notwithstanding anything herein to the contrary, SEEPEX Inc.'s liability to customer on any cause of action shall be limited to the amount paid by the customer on the subject order. SEEPEX Inc. makes no warranties, express or implied, with respect to articles or products manufactured or provided by any party other than SEEPEX Inc., except to transfer to the customer, where permissible, any warranty provided to SEEPEX Inc. by the original manufacturer. On any claims for repairs and/or replacement under such warranty, all costs incurred by SEEPEX Inc. which are not underwritten by the original manufacturers shall be borne by the customer. Except as provided herein, SEEPEX Inc. expressly disclaims all representations, promises, or warranties, express or implied with respect to any products, articles, work, or services, including any warranties of merchantability and of fitness for a particular purpose. All warranties made by SEEPEX Inc. shall be void where the goods have been subject to misuse, neglect, damage or alteration. SEEPEX Inc. shall be held free and harmless from any dispute or claim anywhere arising from and relating to infringement of patent, design, trademark, or copyright of items, sold or repaired under this contract.

8. PROPERTY RIGHTS AND RISKS

8.1.

SEEPEX Inc. disclaims any liability or responsibility whatsoever with regard to loss or damages to the customer's property while in the possession, custody or control of SEEPEX Inc. for requested repairs or other services, and the customer expressly agrees to indemnify and hold SEEPEX Inc. harmless against any and all claims for such loss or damage.

9. HAZARDOUS MATERIALS

9.1.

Any hazardous materials or the existence of any hazards relative to the condition of any product tendered to SEEPEX Inc. for service or repair work must be disclosed by customer in writing in the RGA Request Form, whether or not required to be disclosed per federal law on the MSDS sheet. **Customer shall defend, indemnify and hold SEEPEX Inc. harmless from and against any and all claims of injury or damage, including attorney's fees, caused by any hazardous condition or material on or about products accepted for service/repair. This obligation includes but is not limited to claims of bodily injury or death suffered by SEEPEX Inc. employees, or by other parties.**

13.1 Manufacturer's documents / suppliers

- available

Intelligent Drivesystems

B1000

Operating & Instruction Manuals For Gear Units

B1000

NORD DRIVESYSTEMS

TABLE OF CONTENTS

TITLE	Document Number & Hyperlink
General Instructions	U10000
Safety Notes	U10020
Storage & Commissioning	U10040
Unit Installation	U10060
Solid Shaft Connections	U10250
Keyed Hollow Shaft	U10270
Shaft Fixing Kit	U10280
Hollow Shaft With Shrink Disc	U10290
NORD GRIPMAXX™	U10310
Reducer Mounting Footed & Flange Mount Gear Units	U10500
Clincher™ Shaft-Mount With Rubber Buffers	U10580
Right Angle Shaft-Mount with Torque Arm (D)	U10600
90.1 Helical-Bevel Shaft-Mount with Bottom Mount Torque Arm (K)	U10620
Helical & Bevel Reducer Lubrication	U10750
VL2 & VL3 Extended Bearing Lubrication	U10760
Helical Worm Reducer Lubrication	U10770
Minicase™ (SM) Worm Reducer Lubrication	U10790
Minicase™ (SMI/SMID) Worm Reducer Lubrication	U10800
FLEXBLOC™ Worm Reducer Lubrication	U10810
Expansion Chambers Installation & Maintenance Manual	U10830
Helical & Bevel Reducer Lubrication Types	U11000
Helical Worm Reducer Lubrication Types	U11020
Minicase™ (SM) Worm Reducer Lubrication Types	U11040
Minicase™ (SMI/SMID) Worm Reducer Lubrication Types	U11050
FLEXBLOC™ Worm Reducer Lubrication Types	U11060
Standard In-Line Footed Oil Fill Quantities	U11500
Standard In-Line Flanged Oil Fill Quantities	U11600
Helical In-Line Footed Oil Fill Quantities	U11700
Helical In-Line Flanged Oil Fill Quantities	U11800
CLINCHER™ Oil Fill Quantities	U11900
90.1 Helical-Bevel Footed Oil Fill Quantities	U12000
90.1 Helical-Bevel Flanged Oil Fill Quantities	U12100
92 Series Helical-Bevel Footed Oil Fill Quantities	U12200
92.1/93.1 Series Helical Bevel Oil Fill Quantities	U12205
92 Series Helical-Bevel Flanged Oil Fill Quantities	U12300
Helical-Worm Footed Oil Fill Quantities	U12400
Helical-Worm Solid Shaft/Flanged Oil Fill Quantities	U12500
Helical-Worm Hollow Shaft Oil Fill Quantities	U12600
Nordbloc Footed Oil Fill Quantities	U12700
Nordbloc Flanged Oil Fill Quantities	U12800

TABLE OF CONTENTS

TITLE	Document Number & Hyperlink
Nordbloc.1 Footed Oil Fill Quantities	U12900
Nordbloc.1 Flanged Oil Fill Quantities	U13000
Minicase™ (SM) Footed Oil Fill Quantities	U13100
Minicase™ (SMI) Footed Oil Fill Quantities	U13150
Minicase™ Flanged (SM) Oil Fill Quantities	U13200
Minicase™ Flanged (SMI) Oil Fill Quantities	U13250
FLEXBLOC™ Oil Fill Quantities	U13300
Standard In-Line Oil Plug & Vent Locations	U14000
Helical In-Line Oil Plug & Vent Locations	U14100
CLINCHER™ Oil Plug & Vent Locations	U14200
92 Series Helical-Bevel Oil Plug & Vent Locations	U14300
92.1/93.1 Series Helical-Bevel Oil Plug & Vent Locations	U14305
90.1 Helical-Bevel Oil Plug & Vent Locations	U14400
Helical-Worm Oil Plug & Vent Locations	U14500
Nordbloc Oil Plug & Vent Locations	U14600
Nordbloc.1 Oil Plug & Vent Locations	U14700
Minicase™ (SMI) Worm Oil Plug & Vent Locations	U14750
FLEXBLOC™ Vent Locations	U14800
Standard In-Line Parts List Drawings	U15000
Helical In-Line Parts List Drawings	U15100
CLINCHER™ Parts List Drawings	U15200
CLINCHER™ VL2 & VL3 Parts List Drawings	U15210
90.1 Helical-Bevel Parts List Drawings	U15300
90.1 Helical-Bevel VL2 & VL3 Parts List Drawings	U15310
92 Series Helical-Bevel Parts List Drawings	U15400
Helical-Worm Parts List Drawings	U15500
Nordbloc™ Parts List Drawings	U15600
Troubleshooting	U19000
Motors - AC Induction, Single and Polyphase	U30000
Motor Brakes Installation & Maintenance	U35000
Fast Acting Brake Rectifiers [GPE, GPU & PMG]	U35100
Current Sensing Brake Relay [IR] Installation & Maintenance	U35200
NEMA/IEC Inputs Adapters & Their Couplings	U45100
NEMA or IEC Input Adapter Lubrication Options	U45250
NEMA or IEC Input Adapter with Grease Fitting	U45255
Solid Input Shaft [W]	U45300
Motor Mount Platform [MK]	U45400
Sugar Scoop	U45500
NSD tuph Touch-Up Kit	U65100
Terms & Conditions of Sale	Terms

BIM TO USER MANUAL CROSS REFERENCE

Old BIM TITLE (No Longer Available)	New User Manual Document Numbers & Hyperlinks
BIM 1010 - Unicase Helical In-Line Gearboxes Installation & Maintenance Instructions	U10000 - General Instructions U10020 - Safety Notes U10040 - Storage & Commissioning U10060 - Unit Installation U10250 - Solid Shaft Connections U10500 - Reducer Mounting Footed & Flange Mount Gear Units U10750 - Helical & Bevel Reducer Lubrication U11000 - Helical & Bevel Reducer Lubrication Types U11700 - Helical In-Line Footed Oil Fill Quantities U11800 - Helical In-Line Flanged Oil Fill Quantities U14100 - Helical In-Line Oil Plugs & Vent Locations U15100 - Helical In-Line Parts Lists Drawings
BIM 1011 - NORDBLOC Helical Gearboxes Installation & Maintenance Instructions	U10000 - General Instructions U10020 - Safety Notes U10040 - Storage & Commissioning U10060 - Unit Installation U10250 - Solid Shaft Connections U10500 - Reducer Mounting Footed & Flange Mount Gear Units U10750 - Helical & Bevel Reducer Lubrication U11000 - Helical & Bevel Reducer Lubrication Types U12700 - Nordbloc™ Footed Oil Fill Quantities U12800 - Nordbloc™ Flanged Oil Fill Quantities U14600 - Nordbloc™ Oil Plugs & Vent Locations U15600 - Nordbloc™ Parts Lists Drawings
BIM 1012 - Standard Helical In-Line Gearboxes Installation & Maintenance Instructions	U10000 - General Instructions U10020 - Safety Notes U10040 - Storage & Commissioning U10060 - Unit Installation U10250 - Solid Shaft Connections U10500 - Reducer Mounting Footed & Flange Mount Gear Units U10750 - Helical & Bevel Reducer Lubrication U11000 - Helical & Bevel Reducer Lubrication Types U11500 - Standard In-Line Footed Oil Fill Quantities U11600 - Standard In-Line Flanged Oil Fill Quantities U14000 - Standard In-Line Oil Plugs & Vent Locations U15000 - Standard In-Line Parts Lists Drawings
BIM 1013 - NORDBLOC.1 Helical Gearboxes Installation & Maintenance Instructions	U10000 - General Instructions U10020 - Safety Notes U10040 - Storage & Commissioning U10060 - Unit Installation U10250 - Solid Shaft Connections U10500 - Reducer Mounting Footed & Flange Mount Gear Units U10750 - Helical & Bevel Reducer Lubrication U11000 - Helical & Bevel Reducer Lubrication Types U12900 - Nordbloc.1™ Footed Oil Fill Quantities U13000 - Nordbloc.1™ Flanged Oil Fill Quantities U14700 - Nordbloc.1™ Oil Plugs & Vent Locations
BIM 1020 - Unicase Shaft Mount Gearboxes Installation & Maintenance Instructions	U10000 - General Instructions U10020 - Safety Notes U10040 - Storage & Commissioning U10060 - Unit Installation U10250 - Solid Shaft Connections U10500 - Reducer Mounting Footed & Flange Mount Gear Units U10580 - CLINCHER™ w/ Rubber Buffer U10750 - Helical & Bevel Reducer Lubrication U11000 - Helical & Bevel Reducer Lubrication Types U11900 - CLINCHER™ Oil Fill Quantities U14200 - CLINCHER™ Oil Plugs & Vent Locations U15200 - CLINCHER™ Parts Lists Drawings

BIM TO USER MANUAL CROSS REFERENCE

Old BIM TITLE (No Longer Available)	New User Manual Document Numbers & Hyperlinks
BIM 1030 - Unicase Helical Worm Gearboxes Installation & Maintenance Instructions	U10000 - General Instructions U10020 - Safety Notes U10040 - Storage & Commissioning U10250 - Solid Shaft Connections U10500 - Reducer Mounting Footed & Flange Mount Gear Units U10770 - Helical-Worm Reducer Lubrication U11020 - Helical-Worm Reducer Lubrication Types U12400 - Helical-Worm Footed Oil Fill Quantities U12500 - Helical-Worm Solid Shaft/Flanged Oil Fill Quantities U12600 - Helical-Worm Hollow Shaft Oil Fill Quantities U14500 - Helical-Worm Oil Plugs & Vent Locations U15500 - Helical-Worm Parts LIsts Drawings
BIM 1031 - MINICASE Worm Gearboxes Installation & Maintenance Instructions	U10000 - General Instructions U10020 - Safety Notes U10040 - Storage & Commissioning U10250 - Solid Shaft Connections U10500 - Reducer Mounting Footed & Flange Mount Gear Units U10770 - Helical Worm Reducer Lubrication U11040 - Minicase™ Worm Reducer Lubrication Types U13100 - Minicase™ Foot Mount Oil Fill Quantities U13200 - Minicase™ Flange Mount Oil Fill Quantities
BIM 1033 - SI Design FLEXBLOC Worm Gearboxes Installation & Maintenance Instructions	U10000 - General Instructions U10020 - Safety Notes U10040 - Storage & Commissioning U10250 - Solid Shaft Connections U10500 - Reducer Mounting Footed & Flange Mount Gear Units U10770 - Helical Worm Reducer Lubrication U11060 - FLEXBLOC™ Worm Reducer Lubrication Types U13300 - FLEXBLOC™ Oil Fill Quantities U14800 - FLEXBLOC™ Oil Plugs & Vent Locations
BIM 1040 - 92 & 90.1 Helical-Bevel Installation & Maintenance Instructions	U10000 - General Instructions U10020 - Safety Notes U10040 - Storage & Commissioning U10060 - Unit Installation U10250 - Solid Shaft Connections U10500 - Reducer Mounting Footed & Flange Mount Gear Units U10750 - Helical & Bevel Reducer Lubrication U11000 - Helical & Bevel Reducer Lubrication Types U12000 - Bevel Footed Oil Fill Quantities U12100 - Bevel Flanged Oil Fill Quantities U12200 - 92 Series Helical-Bevel Footed Oil Fill Quantities U12300 - 92 Series Helical-Bevel Flanged Oil Fill Quantities U14300 - 92 Series Helical-Bevel Oil Plugs & Vent Locations U14400 - 90.1 Helical-Bevel Oil Plugs & Vent Locations U15300 - 90.1 Helical-Bevel Parts Lists U15400 - 92 Series Helical-Bevel Parts Lists Drawings
BIM 1001 - Hollow Shrink Disc Shaft Installation & Maintenance Instructions	U10290 - Hollow Shaft with Shrink Disc
BIM 1002 - Keyed Shaft & Fixing Element Installation & Maintenance Instructions	U10270 - Keyed Hollow Shaft U10280 - Shaft Fixing Kit
BIM 1003 - Expansion Chambers Installation & Maintenance Instructions	U10830 - Expansion Chambers Installation & Maintenance Manual
BIM 1009 - Inputs	U45100 - NEMA IEC Inputs & Their Couplings U45250 - NEMA or IEC Input Adapter Lubrication Options U45300 - Solid Input Shaft [W] U45400 - Motor Mount Platform U45500 - Sugar Scoop
BIM 1004 - Motors	U30000 - Motors - AC Induction, Single and Polyphase
BIM 1014 - Motor Brakes	U35000 - Motor Brakes Installation & Maintenance
BIM 1092 - Current Sensing Brake Relay [IR]	U35195 - Identification of Recifier U35200 - Current Sensing Relay U35205 - Current Sensing Relay
BIM 1095 - Fast Brake Rectifier [GPE & GPU]	U35100 - Fast Brake Rectifier
BIM 9002 - GRIPMAXX™	U10310 - NORD GRIPMAXX™

1. Importance of the operating instructions

These operating instructions are intended to provide general information and safety guidelines. It is the responsibility of the buyer, machine builder, installer and user of the NORD product to make sure that all the proper safetynotes and operating instructions have been reviewed and understood. If the contents of this instruction or any applicable operating instructions are not understood, please consult NORD.

⚠ *WARNING* ⚠

Electric motors, gearmotors, electrical brakes, variable frequency drives, and gear reducers contain potentially dangerous high-voltage, rotating-components and surfaces that may become hot during operation. All work involved in the transport, connection, commissioning and maintenance of any NORD product must be carried out by qualified and responsible technicians.

2. Inspect incoming freight

Before accepting shipment from the freight company, thoroughly inspect the NORD equipment for any shipping and handling damage. If any goods called for in the bill of lading or express receipt are damaged, or if the quantity is short, do not accept until the freight express agent makes an appropriate notation on your freight bill or express receipt. If any concealed loss or damage is discovered later, notify your freight carrier or express agent at once, and request a formal review of your claim.

Claims for loss or damage in shipment must not be deducted from the NORD invoice, nor should payment of the NORD invoice be withheld awaiting adjustment of such claims, as the carrier guarantees safe delivery. NORD will try to assist in collecting claims for loss or damage during shipment; however, this willingness on our part does not remove the transportation company's responsibility in reimbursing you for collection of claims or replacement of material.

3. Obtaining detailed operating instructions

One can receive the detailed installation and maintenance instructions by entering a serial number (or NORD order number) at the appropriate location on the NORD web site.

i. Record the serial number from your gearmotor, gear reducer, or motor nameplate, or record the serial number found on your order confirmation.

ii. Go to **www.nord.com/docs** to download the appropriate operating instructions.

EXAMPLE: www.nord.com/docs

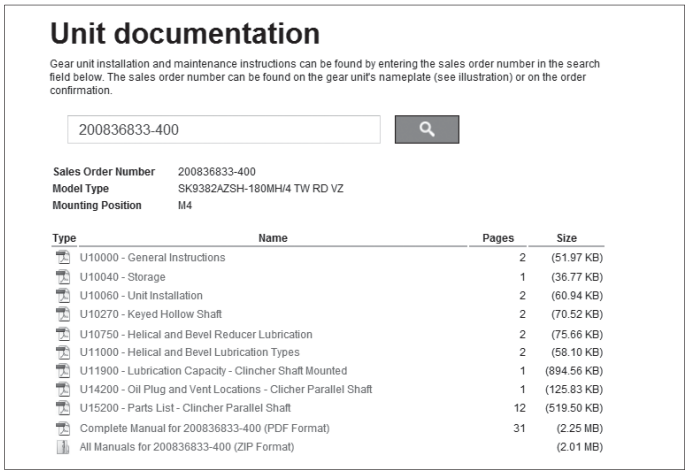

4. Intended use

NORD is a supplier of electric motors, gearmotors, reducers, electromechanical brakes, mechanical variators, and electrical variable frequency drives that are intended for commercial installations on larger systems and machines.

⚠ *WARNING* ⚠

NORD does not accept any liability for damage or injury caused by:

- Inappropriate use, operation or adaptation of the drive system.
- Unauthorized removal of housing covers, safety and inspection covers, guarding, etc.
- Unauthorized modifications to the drive system.
- Improper servicing or repair work on the drive system.
- Damage caused during shipment or transportation.
- Disregard of the important Safety Notes or Operating Instructions.

5. Notes concerning warranty and liability

All units are supplied according to the terms described in our standard "Conditions of Sale." The unit limited warranty is also defined in our "Conditions of Sale" and is located in the back of our product catalogs as well as the back of your order invoice.

All NORD Safety Notes and all related NORD Operating instructions shall be considered up-to-date at the time in which they were compiled by the buyer, machine builder, installer or user. NORD reserves the right to incorporate technical modifications and information updates to any safety/operating instructions that are within the scope of providing additional knowledge or clarification, communicating design changes, or product enhancements. Information updates may include any NORD product, or subsequent products purchased and supplied by NORD; No specific claims can be derived from the information or illustrations and descriptions contained in the safety notes or related operating instructions.

⚠ *WARNING* ⚠

NORD assumes no liability for personal injury, equipment damage or malfunctions resulting from failure to comply with any installation safety notes. The applicable national, regional, and local work regulations and safety requirements must also be complied with. Failure to comply with any safety notes or regulations may result in serious injury, damage to property, or even death.

6. Checklist for installation and operation

☑ Verify that the purchased NORD product has been supplied with the expected accessories & options. Check the received goods and packing slip to make sure items are properly received.

☑ Make sure that you have all of the required Operating Instructions for your NORD electric motor, gearmotor, reducer, electromechanical brake, mechanical variable speed drives, or electrical variable frequency drives.

☑ Consult NORD if you feel you are missing any documentation or if you have questions.

1. Safety & information symbols

All work including transportation, storage, installation, electrical connection, commissioning, servicing, maintenance and repair must be performed **only by qualified specialists or personnel**. It is recommended that repairs to NORD Products are carried out by the NORD Service Department. Instructions related to operational safety will be emphasized as shown.

Symbol	Meaning
⚠	**General Warning or Hazard -** Severe risk or danger of personal injury or death by working around dangerously high electrical voltage or moving machinery. Proper safety precautions must be taken.
STOP	**Possible Harmful Situation -** Care must be taken to avoid the possibility of damaging the drive unit, driven machine, or the environment.
i	**Important Note -** Useful note or tip to help assure trouble-free operation.
♻	**Material Disposal Note -** Important note concerning suggested material disposal.

2. Safety warnings

⚠ GENERAL WARNINGS ⚠

- All work involved in the transport, connection, commissioning and maintenance of any NORD product must be carried out by qualified and responsible technicians. All applicable national, regional, and local work regulations and safety requirements must also be complied with. **NORD assumes no liability for personal injury, accidental death, or equipment damage and malfunctions resulting from failure to comply with installation or operating instructions, safety notes, or any work regulations and laws!**
- Gear unit installation and maintenance work may only be performed when no power is available to the prime mover or motor. Electric motors, electrical brakes, and variable frequency drives, contain potentially dangerous high-voltage. Prior to installation or maintenance, shut down the power at the circuit breaker or power switch. **While working on the drive, make sure the power from the prime mover is isolated or secured on "lock-out" to prevent accidental start-up and to safeguard against injury!**
- Surfaces of motors and gear units may become hot during operation or shortly after start-up. In some instances additional protection against accidental contact may be necessary. **Use caution to avoid burns or serious injury!**

3. Observe published performance range & nameplate data

STOP HARMFUL SITUATION STOP

Observe the data on all reducer nameplates and verify published ratings for the NORD item/s in question. Do not operate any NORD equipment outside the published performance range. Failure to comply may result in damage to the drive unit, driven machine, or the environment.

U.S. Nameplate

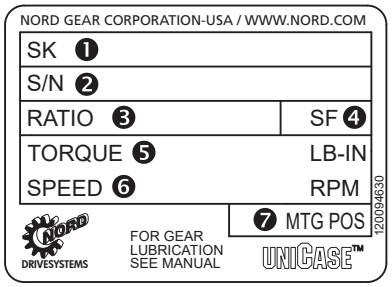

❶ Model/Type
❷ Serial Number
❸ Gear Ratio
❹ Service Factor
❺ Torque Rating
❻ Output Speed RPM
❼ Mounting Position

European Nameplate

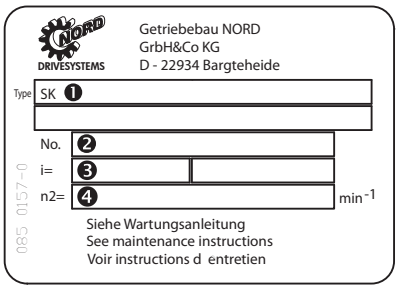

❶ Model/Type
❷ Serial Number
❸ Gear Ratio
❹ Speed

4. Transportation and handling

Make sure that all eyebolts and lifting lugs are tight and lift only at designed points. Protect the mounting surface from possible damage during transportation.

⚠ WARNING ⚠

Do not attach other machinery or loads to the NORD assembly, since the supplied lifting bolts are not designed for this purpose.

If the gearmotor or assembly is equipped with two suspension eye bolts, then both locations should be used for transportation and placement of the unit; in this case the tension force of the slings must not exceed a 45° angle.

In some instances it may be appropriate to use additional lifting straps or slings in order to assure safe transportation of the assembly. Always use sufficiently rated handling equipment and ensure that adequate safety measures are taken to protect personnel from injury during transportation. Once the NORD assembly is properly installed, remove the transportation fixtures.

7. DISPOSAL

MATERIAL DISPOSAL

Properly dispose of all used gear units and internal parts in accordance with all local regulations. In particular, all lubricants must be properly collected and disposed.

For confirmation of specific materials used in a specific reducer or gearmotor assembly, please consult NORD with the appropriate unit identification or serial number.

Components	Material
Gear wheels, shafts, rolling bearings, parallel keys, snap rings, spacers, shims, etc.	Steel
Gear housing and housing components	Cast iron or Aluminum (depending on type and size)
Worm gears	Bronze alloy
Radial seals, sealing caps, and rubber components	Elastomers with some steel
Coupling components	Plastic or Elastomer with Steel
Housing gaskets and flat oil seals	Asbestos-free sealing or gasket material (various types used)
Gear Oil	Mineral, SHC-Synthetic or PG-Synthetic (can vary)

1. Storage

IMPORTANT NOTE

For storage periods longer than 9 months, or for storage in less than desirable conditions, please consult NORD for recommendations.

Storage for up to 9 months is possible, so long as the following conditions are observed:

- Store the gear unit in its actual mounting position in accordance with the specified oil fill-level, in a clean and dry temperature controlled area. Avoid temperature fluctuations within the range of 0°C and 40°C (32°F to 104°F) and avoid relative humidity conditions in excess of 60%.
- Protect all exposed or unpainted shaft and flange surfaces with an anti-corrosion agent or grease.
- Store in a location free from shock and vibration, to avoid false brinelling of bearing elements and raceways.
- Whenever possible, rotate the shafts periodically, by hand if necessary, to help prevent brinelling (bearing damage) and to help keep the shaft seals pliable.
- Avoid direct exposure to the sun or UV light and aggressive or corrosive materials in the environment (ozone, gases, solvents, acids, caustic solutions, salts, radioactivity, etc.

2. Commissioning

Prior to gear unit start-up, complete the following:

• Please check your gear unit for a vent and if applicable to your product, remove the sealing plug to activate.

WARNING

To prevent build-up of excessive pressure, sealed vents must be activated as shown prior to gear unit start up.

Sealed vent

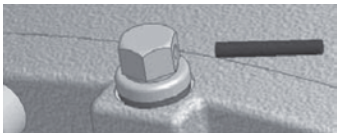

Activated vent

- Check the lubricant and be sure the gear unit is filled with the proper oil type, to the proper level, as determined by the mounting position.

IMPORTANT NOTE

Some smaller gear units are supplied as maintenance free/ lubricated for life gear units. Oil level may not be checked on some of these units.

- Check the condition of all shaft seals and all assembled flange gasket areas. If any change is detected in the shape, color, hardness or permeability, or if any leaks are detected, the corresponding shaft seals and/or gaskets must be replaced.
- Remove all anti-corrosive metal protectant from otherwise bare metal surfaces. Follow product manufacturers directions and warnings during surface protection removal.
- Check the resistance of all motor and brake windings to verify the integrity of the winding insulation and inspect all terminal box openings and wire connection areas to verify that all components are dry and free of corrosion.

3. Long-Term Storage

By taking special precautions, problems such as seal leakage and reducer failure due to the lack of lubrication, improper lubrication quantity, or contamination can be avoided. The following precautions will protect gear reducers during periods of extended storage:

- Store the gear unit in its actual mounting position in accordance with the specified oil fill-level, in a clean and dry temperature controlled area. Avoid temperature fluctuations within the range of 0°C and 40°C (32°F to 104°F) and avoid relative humidity conditions in excess of 60%.
- Fill the reducer full with oil that is compatible with the product normally used or recommended during service.
- Apply grease to all unpainted or unprotected shafts, bores, keyways, flange surfaces, tapped holes, and to the exterior of all oil seals.
- Store in a location free from shock and vibration, to avoid false brinelling of bearing elements and raceways.
- Once every few months rotate the input shaft approximately 10-20 revolutions to redistribute the weight of gears and shafts and to prevent brinnelling of the bearings and drying of the seal track.
- Avoid direct exposure to the sun or UV light and aggressive or corrosive materials in the environment (ozone, gases, solvents, acids, caustic solutions, salts, radioactivity, etc.)

4. Commissioning After Long-Term Storage

• Please check your gear unit for a vent and if applicable to your product, remove the sealing plug to activate.

⚠ *WARNING* ⚠

To prevent build-up of excessive pressure, sealed vents must be activated as shown prior to gear unit start up.

Sealed vent

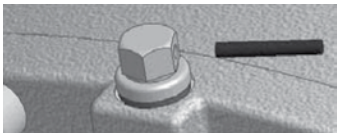

Activated vent

- Remove all anti-corrosive metal protectant from otherwise bare metal surfaces. Follow product manufacturers directions and warnings during surface protection removal.
- Drain the reducer and refill it with the proper type and amount of lubricant.
- Observe start-up and initial operation to make sure there are no seal or gasket leaks, or unusual sounds, vibration or heat rise during operation.
- Check the resistance of all motor and brake windings to verify the integrity of the winding insulation and inspect all terminal box openings and wire connection areas to verify that all components are dry and free of corrosion.

1. Installation site

Drives must be properly installed if they are to produce the rated torque. Improper installation may lead to oil leaks, reduced life, or even catastrophic failure. NORD gear drives and motors are intended to be installed at a suitable mounting site under the following conditions:

- Unimpeded airflow to and around the units.
- Accessibility to oil drain, level and breather plugs.
- On brakemotors, allow adequate space for removing the fan guard and replacing and adjusting the brake.
- Mounting surfaces must be flat, torsionally rigid, and dampened against vibration.
- Unless special measures are taken, the immediate vicinity around the gear drive or motor should not be exposed to any aggressive or corrosive substances, contaminated air, ozone, gases, solvents, acids, alkalis, salts, radioactivity, etc.

2. Mounting position

Reducer mounting position charts illustrate the standard mounting positions for horizontal and vertical mounting. All gear units are assembled with the oil fill-level, oil-drain and vent plugs installed in their proper locations, **according to the customer-specified mounting position**. For mounting orientations other than shown consult NORD Gear.

STOP *HARMFUL SITUATION* STOP

The gear reducer may not receive proper lubrication if the unit is not mounted in the position for which it is designed. Observe the mounting position designated on the reducer nameplate, or specified in the order acknowledgement. Consult NORD prior to changing mounting position in the field. While it is often possible to simply relocate the oil fill-level and vent locations, and adjust the oil fill amount, in some cases, different mounting positions may lend themselves to different internal construction features.

3. Reducer mounting

- The support foundation must be straight, level and flat. Whether the gear unit is foot-mounted or flange-mounted, NORD recommends that the straightness and flatness of the customer-supplied support foundation follow **Table 1**.
- The gear unit must be properly aligned with the driven shaft of the machine in order to prevent additional stress or load forces from being imposed upon the gear unit.
- To facilitate oil drainage it may be desirable to elevate the gear box foundation above the surrounding support structure.
- All bolting surfaces must be clean and free from contamination and corrosion.

Table 1: Recommended Straightness and Flatness of Customer-Supplied Support Foundation

Above (in)	To & Including (in)	General Tolerance on Straigtness & Flatness ISO 2768-2, Tolerance Class K
0.00	0.39	+/- 0.002 in
0.39	1.18	+/- 0.004 in
1.18	3.9	+/- 0.008 in
3.9	11.8	+/- 0.016 in
11.8	39	+/- 0.024 in
39	118	+/- 0.031 in

Above (mm)	To & Including (mm)	General Tolerance on Straigtness & Flatness ISO 2768-2, Tolerance Class K
0	10	+/- 0.05 mm
10	30	+/- 0.1 mm
30	100	+/- 0.2 mm
100	300	+/- 0.4 mm
300	1000	+/- 0.6 mm
1000	3000	+/- 0.8 mm

Straightness: Based upon the length of the corresponding line.

Flatness: Based upon the longer lateral surface or the diameter of the circular surface.

STOP *HARMFUL SITUATION* STOP

The responsibility for the design and construction of the support foundation is with the user. The foundation must be adequate to withstand normal operating loads and possible overloads while maintaining alignment to attached system components under such loads. ***Motors and drive components mounted on prefabricated base plates can become misaligned during shipment. Always check alignment after installation.***

4. Steel foundation

An engineered structural steel foundation should be designed to provide adequate rigidity and prevent loads from distorting the housing or causing misalignment of internal gears and shafts. When foot-mounting the gear reducer, a base plate or sole plate with suitable thickness (generally equal or greater than the thickness of the drive feet) should be securely bolted to steel supports and extend under the entire gear drive assembly. When flange-mounting the gear unit, the bulk head plate must be engineered to minimize buckling distortions and support the cantilevered weight of the gear unit or gear motor.

STOP *HARMFUL SITUATION* STOP

Do not weld on the gear unit or use the gear unit as an earth or ground connection for any welding procedure as this may cause permanent damage to the bearings and gears.

5. Concrete foundation

If a concrete foundation is used, allow the concrete to set firmly before bolting down the gear drive. Grout structural steel mounting pads and bolts of sufficient size into the concrete, to adequately distribute the load stress onto the concrete foundation.

Figure 1: Concrete Foundation

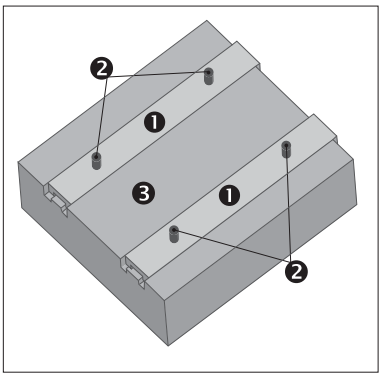

❶ Grouted Structural Steel Mounting Pads
❷ Mounting Bolts
❸ Concrete Foundation

6. Bolt connections for footed & flange mounted units

NORD footed reducers and flange-mount reducers (with B5 flange) have clearance designed into the mounting holes to allow for some minor adjustments in alignment. Bolt size, strength and quantity should be verified to insure proper torque reaction capacity whatever the mounting arrangement. Tightening torque for gear reducer mounting bolts, and recommended fastener grades, are provided in Table 2.

Table 2A: Tightening Torque for Inch Reducer Mounting Bolts

Thread Size	Grade SAE 5 / ASTM A449		Grade SAE 8	
(in)	(lb-ft)	(Nm)	(lb-ft)	(Nm)
1/4-20	7.1	9.6	10.0	13.6
5/16-18	16	21	22	30
3/8-16	28	37	39	53
1/2-13	69	93	98	132
5/8-11	138	188	195	264
3/4-10	247	334	348	472
7/8-9	396	537	558	757
1-8	592	802	833	1,130
1 1/8-7	-	-	1,233	1,672
1 1/4-7	-	-	1,717	2,327
1 3/8-6	-	-	2,267	3,073
1 1/2-6	-	-	2,983	4,045
1 3/4-5	-	-	4,458	6,045

- Calculated tightening torques are based a conventional 60°, clean and dry (un-lubricated) thread, with thread-friction and head-friction equal to 0.15.
- When using inch-fasteners, NORD recommends a minimum Grade SAE 5 (ASTM A-449) for sizes up to 1-8 UNC, and Grade SAE 8 for all larger sizes.

Table 2B: Tightening Torque for Metric Reducer Mounting Bolts

Above	ISO Grade 8.8		ISO Grade 10.9		ISO Grade 12.9	
(mm)	(lb-ft)	(Nm)	(lb-ft)	(Nm)	(lb-ft)	(Nm)
M4	2.4	3.2	3.5	4.7	4.1	5.5
M5	4.7	6.4	6.9	9.3	8.1	11
M6	8	11	12	16	14	19
M8	20	27	29	39	34	46
M10	39	53	58	78	67	91
M12	68	92	100	135	110	155
M14	107	145	159	215	180	250
M16	170	230	247	335	290	390
M18	240	325	343	465	400	540
M20	339	460	487	660	570	770
M22	465	630	664	900	770	1,050
M24	583	790	848	1,150	960	1,300
M27	848	1,150	1,217	1,650	1,440	1,950
M30	1,180	1,600	1,660	2,250	1,950	2,650
M36	2,050	2,780	2,884	3,910	3,470	4,710
M42	3,297	4,470	4,639	6,290	5,560	7,540
M48	4,940	6,700	7,010	9,500	8,260	11,200

- Calculated tightening torques are based on a conventional 60°, clean and dry (un-lubricated) thread, with thread-friction and head-friction equal to 0.15.
- When using metric-fasteners, NORD recommends a minimum ISO Grade 8.8 bolt.

7. Mounting the prime mover

When the motor is not flange mounted or integrally mounted to the gearbox, it is important to properly secure and align the gear drive with respect to the driven machine before attempting to align the prime mover or motor.

A. After the main gear drive is properly aligned and bolted in place, align the prime mover with respect to the reducer input shaft.

B. Use shims under the feet of the prime mover as needed, and secure in place with the proper mounting bolts. Dowel pins may be field-installed to help prevent misalignment and ensure proper realignment if removed for service.

IMPORTANT NOTE

When using a high speed coupling connection between the prime mover and the reducer, check alignment per the coupling manufacturers recommendations. If the coupling is misaligned, the reducer alignment or shimming is incorrect. Re-align the gear reducer and re-check the high-speed coupling alignment before re-aligning the motor.

1. Solid shaft diameter tolerance

Reducer input and output shaft extensions have a diameter tolerance as specified in **Table 1**.

Table 1: Solid Shaft Diameter Tolerance

Above ø (in)	To & Including ø (in)	Tolerance (in)
0.375	1.750	+0.0000 / -0.0005
1.750	7.500	+0.0000 / -0.0010

Above ø (mm)	To & Including ø (mm)	Tolerance (mm)	ISO 286-2 Fit Class
10	18	+0.012 / +0.001	k6
18	30	+0.015 / +0.002	k6
30	50	+0.018 / +0.002	k6
50	80	+0.030 / +0.011	m6
80	120	+0.035 / +0.013	m6
120	180	+0.040 / +0.015	m6
180	190	+0.046 / +0.017	m6

2. Fitting drive elements onto the reducer solid shaft

Solid input and output shaft extensions are provided with a drill and tap feature as indicated in Table 2. When installing drive elements such as coupling hubs, pulleys, sprockets, or gears, NORD recommends using the threaded hole in the end of the shaft, along with a suitable assembly device fitted into the threaded hole.

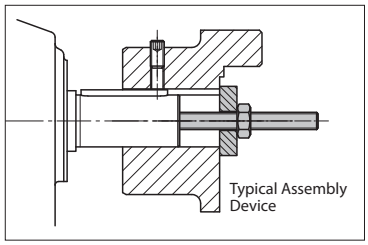

Table 2: Solid Shaft End - Threaded Holes

Above ø (in)	To & Including ø (in)	Tap size & Depth (in)
0.375	0.500	10-24 x 0.43 in
0.500	0.875	1/4-20 x 0.59 in
0.875	0.938	5/16-18 x 0.71 in
0.938	1.100	3/8-16 x 0.87 in
1.100	1.300	1/2-13 x 1.10 in
1.300	1.875	5/8-11 x 1.42 in
1.875	3.500	3/4-10 x 1.73 in
3.500	5.125	1-8 x 2.63 in
5.125	7.500	1 1/4 - 7 x 3.15

Above ø (mm)	To & Including ø (mm)	Tap Size & Depth (mm)
10	13	M4 x 10 mm
13	16	M5 x 12.5 mm
16	21	M6 x 16 mm
21	24	M8 x 19 mm
24	30	M10 x 22 mm
30	38	M12 x 28 mm
38	50	M16 x 36 mm
50	85	M20 x 42 mm
85	130	M24 x 50 mm
130	190	M30 x 60 mm

HARMFUL SITUATION

DO NOT DRIVE or **HAMMER** the coupling hub, pulley, sprocket, or gear into place. An endwise blow to the reducer shaft can generate damaging axial forces and cause damage to the reducer housing, bearings or internal components.

WARNING

To avoid serious injury the user must provide suitable safety guards for all rotating shafts and shaft components such as couplings, chain drives, belt drives, etc. All guarding must adhere to local regulations and safety standards.

3. Installing interference-fit hubs to the reducer shaft

Prior to installing any interference-fit hubs to the reducer shaft, consult with the manufacturer to determine proper assembly and fit. Interference-fits usually require heating the coupling, sprocket or gear hub, per the manufacturer's recommendations. Coupling hub installation typically follows ANSI/AGMA 9002-A86. Always make sure the reducer shaft seals are protected from the heat source. Apply uniform heat to the drive element hub to prevent distortion. NORD does not recommend heating the drive element hub beyond 212°F to 275°F (100°C to 135° C).

WARNING

When using heat to mount a drive element hub, do not use open flame in a combustible atmosphere or near flammable materials. Use suitable protection to avoid burns or serious injury.

HARMFUL SITUATION

When using external chain or belt drives, make sure the reducer is sized so that the shaft and bearings have adequate capacity. To avoid unnecessary bearing loads and additional shaft deflection, mount all power take-off devices (sprockets, pulleys, etc.) so that the applied load center is as close to the gear housing as possible and check component alignment and tension of any belts or chains per the manufacturer's recommendation. Do not over tighten the belts or chains.

4. Coupling installation

The performance and life of any coupling depends upon how well it is installed. Coupling hubs are typically mounted flush with the shaft ends, unless specifically ordered for overhung mounting. Shaft couplings should be installed according to the coupling manufacturer's recommendations for gap, angular and parallel alignment. To help obtain critical shaft alignment coupling hubs may be installed to the machine shafts prior to final shimming or tightening of the foundation bolts. Proper coupling alignment allows for thermal and mechanical shaft movement during operation and ensures that only torque (no radial load) is transmitted between the mating shafts.

Coupling gap and angular alignment

The shaft gap must be sufficient to accommodate any anticipated thermal or mechanical axial movement. When setting the coupling gap, insert a spacer or shim stock equal to the required spacing or gap between the coupling hub faces. Measure the clearance using feeler gauges at 90-degree intervals, to verify the angular alignment.

Parallel (or offset) alignment

Mount a dial indicator to one coupling hub, and rotate this hub, sweeping the outside diameter of the other hub. The parallel or offset misalignment is equal to one-half of the total indicator reading. Another method is to rest a straight edge squarely on the outside diameter of the hubs at 90° intervals and measure any gaps with feeler gauges. The maximum gap measurement is the parallel or offset misalignment.

Check alignment

After both angular and parallel alignments are within specified limits, tighten all foundation bolts securely and re-check critical alignment. If any of the specified limits for alignment are exceeded, realign the coupling.

5. Installing sheaves (pulleys), sprockets and gears

To avoid unnecessary bearing loads and additional shaft deflection, mount all power take-off devices (sprockets, pulleys, gears, etc.) so that the applied load center is as close to the gear housing as possible, as shown in **Figure 2**.

Figure 2: Sprocket or Gear Mounting

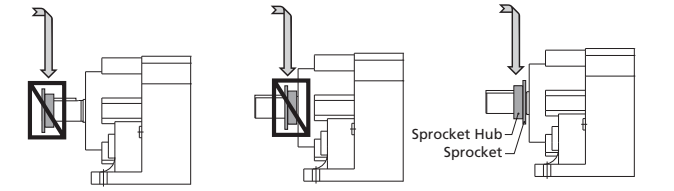

Preferred Mounting of Sprocket or Gear

Align the driver sheave or sprocket with the driven sheave or sprocket by placing a straight-edge length-wise across the face of the sheaves or sprockets. Alignment of bushed sheaves and sprockets should be checked only after bushings have been tightened. Check horizontal shaft alignment by placing one leg of a square or a level vertically against the face of the sheave or sprocket.

Always check component alignment and tension any belts or chains per the manufacturer's recommendation. The ideal belt or chain tension allows proper wrap of the driver and driven wheels, while maintaining the lowest possible tension of the belts or chain, so that no slipping occurs under load conditions. Check belt or chain tension frequently over the first 24 to 48 hours of operation.

STOP *HARMFUL SITUATION* STOP

When using external chain or belt drives, make sure the reducer is sized so that the shaft and bearings have adequate capacity. To avoid unnecessary bearing loads and additional shaft deflection, mount all power take-off devices (sprockets, pulleys, etc.) so that the applied load center is as close the gear housing as possible and check component alignment and tension of any belts or chains per the manufacturer's recommendation. Do not over tension the belts or chains.

6. Outboard pinion gear alignment

Align outboard pinion gears and adjust the gear tooth clearance according to the manufacturer's recommendations, checking for acceptable outboard pinion tooth contact. The foundation bolts may have to be loosened and the gear unit moved slightly to obtain proper gear tooth contact. After the unit is moved to correct tooth contact, the prime mover may need to be realigned.

KEYED HOLLOW SHAFT

1. Keyed hollow shaft design

NORD uses high quality carbon steel to manufacture hollow-shafts. Upon request, NORD can provide alternate materials, such as stainless steel. NORD hollow shafts are designed with a bore relief (reduced contact area) between the mating shafts.

The bore relief provides a cavity to hold an anti-seize assembly paste. It also acts as a design feature intended to help prevent corrosion and to facilitate gearbox removal from the solid shaft.

NORD furnishes dual keys designed to be used in each of the bore land areas, as opposed to supplying a single long key. The dual keys are intended to simplify assembly onto the machine's solid shaft.

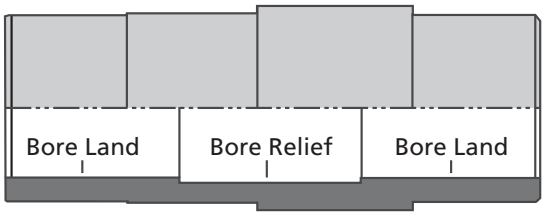

IMPORTANT NOTE

If a single shaft key or dual shaft keys are supplied by others, the key/s must engage the full bore-land length at each end of the hollow shaft.

2. Key and keyway dimensions

Unless otherwise indicated, inch keys and keyways follow the ANSI B17.1 standard and metric keys and keyways follow the DIN6885-1 standard. Inch bores will typically utilize square keys but in some instances the larger hollow shaft bore sizes utilize the alternate rectangular key shown in the ANSI B17.1 standard.

Key slots for the solid machine shaft should be made with a Class 2, transitional-fit class (slightly loose to slightly tight). Key slots in the female shaft are designed to be a low clearance fit. These suggested practices should allow for easier assembly with the mating solid shaft, without allowing excessive clearance which could cause keys to work loose during reducer operation.

IMPORTANT NOTE

If the key fit is too tight, light filing of the key sides and hand-fitting of the keys may be required.

3. Keyed hollow-shaft bore tolerances

Standard keyed hollow-shaft bore tolerances are shown in the following table.

Table 1 - Keyed hollow bore tolerances

Above ø [in]	To and Including ø [in]	Bore Diameter Tolerance ø [in]
0.4375	1.6250	+0.0010 / -0.0000
1.6250	3.2500	+0.0012 / -0.0000
3.2500	7.0000	+0.0014 / -0.0000

Above ø [mm]	To and Including ø [mm]	Bore Diameter Tolerance ø [mm]
10	18	+0.018 / -0.000
18	30	+0.021 / -0.000
30	50	+0.025 / -0.000
50	80	+0.030 / -0.000
80	120	+0.035 / -0.000
120	180	+0.040 / -0.000
180	190	+0.035 / -0.000

Metric hollow bore tolerances per ISO286-2, Class H7

4. Suggested solid shaft (machine shaft) tolerances

NORD recommends a close fit of the customer-supplied solid shaft or machine-shaft, for the following reasons:

- To help minimize the potential for fretting and corrosion.
- To help prevent excessive free play in the shaft connection that could lead to excessive load stress on the driven system, the gear drive, or both.

Table 2 - Suggested solid shaft tolerances

Above ø [in]	To and Including ø [in]	Shaft Diameter Tolerance Uniform Load ø [in]	Shaft Diameter Tolerance Shock Load ø [in]
0.4375	0.8750	+0.0000 / -0.0005	+0.0000 / +0.0005
0.8750	4.5000	+0.0000 / -0.0010	+0.0000 / +0.0010
4.5000	7.0000	+0.0000 / -0.0012	+0.0000 / +0.0015

Above ø [mm]	To and Including ø [mm]	Shaft Diameter Tolerance Uniform Load ❶ ø [mm]	Shaft Diameter Tolerance Shock Load ❷ ø [mm]
10	18	+0.000 / -0.011	+0.012 / +0.001
18	30	+0.000 / -0.013	+0.015 / +0.002
30	50	+0.000 / -0.016	+0.018 / +0.002
50	80	+0.000 / -0.019	+0.021 / +0.002
80	120	+0.000 / -0.022	+0.025 / +0.003
120	180	+0.000 / -0.025	+0.028 / +0.003
180	190	+0.000 / -0.029	+0.033 / +0.004

❶ **Uniform load: Mating shaft diameter tolerance per ISO286-2, class h6**

❷ **Shock load: Mating shaft diameter tolerance per ISO286-2, class k6**

As indicated in Table 2, different solid shaft tolerances are suggested depending upon the load type.

- If the machine load conditions are considered "Uniform" a clearance fit is allowed.
- If the machine load conditions are considered to have "Shock Load" a light clearance to interference fit condition is suggested.

Typically the machine builder will have good knowledge as to the load type. As an alternate method to classify load type, one could follow the "Mass Acceleration Factor Selection Method" that is discussed in NORD's product catalog/s.

Straightness, roundness, and diameter tolerance variations of both shafts should be controlled as accurately as possible. When mating, solid shaft design features are not controlled, reducer installation may be very difficult without ordering special hollow-bore design features to accomodate.

STOP	*HARMFUL SITUATION*	STOP
The supporting solid shaft or driven machine shaft must be of adequate size and strength to withstand normal operating loads and peak loads without damage to itself or any of the system components.		

5. Suggested solid-shaft mating shaft surface finish

Controlling the mating shaft surface finish helps to assure proper fit and assembly while minimizing the possibility of corrosion and fretting. NORD recommends that the mating solid shaft surface should be at least 125 micro-inches (3.2 microns) or smoother.

6. Assembly to the machine shaft

A. Clean and remove any dirt, grease, or rust-preventative coatings from both the reducer hollow shaft and the machine shaft.

B. Make sure the edges of both the reducer hollow shaft and machine shaft are free from any nicks or burrs. If nicks or burrs are present remove them using an abrasive material such as an emery cloth.

C. Before installing the gear reducer onto the machine shaft, apply an anti-seize compound or anti-corrosive lubricant to the mating shafts as shown in Figure 1. Assembly and subsequent dismantling will be aided by the anti-seize agent.

Figure 1 – Application of anti-seize to the mating shafts

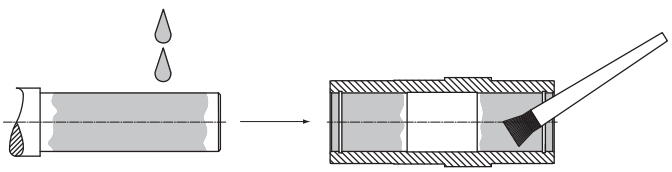

Apply to machine shaft Apply to bore land area

D. Fit the shaft key/s into place on the machine shaft. Depending upon the key slot design on the machine shaft, it may be necessary to stake or Loctite® the key/s into place so they do not slide axially while fitting the reducer to the shaft.

E. Lift the gear unit assembly into place and align it carefully with respect to the machine shaft.

F. Fit the gear unit assembly onto the machine shaft using a suitable pulling device.

G. Secure the reducer onto the machine shaft in an axial direction, to prevent the reducer from shifting or walking out of place during operation.

STOP	*HARMFUL SITUATION*	STOP
Do not use excessive force or try to hammer the gear unit into place. The housing, shafting, bearings or gear wheels may become damaged.		

7. Securing the reducer onto the machine shaft

There are slight shaft oscillations during operation in any rotating shaft equipment or any shaft-mounted reducer assembly. Therefore it is important to secure the reducer in an axial direction onto the machine shaft, to prevent the reducer from shifting or walking out of place during operation.

Possible methods to secure the reducer axially to the machine shaft include:

- Using commercial set collars, retaining rings, or snap rings.
- Using the optional "NORD Fixing Element Kit" (see U10280).

The NORD Fixing Element Kit includes all of the necessary parts to secure the shaft by using a tapped hole in the end of the mating male shaft.

Loctite® is a registered trademark of Loctite Corporation U.S.A. and Henkel.

1. Shaft fixing kit - basic design

The NORD Fixing Kit provides a method for securing the reducer in an axial direction, after the keyed-hollow shaft reducer is mounted onto the machine shaft. The fixing kit prevents the reducer from shifting or walking out of place during operation. NORD offers a variety of standard fixing kits, based upon bore size, as shown on Page 2 of this manual.

Figure 1 – Fixing kit components

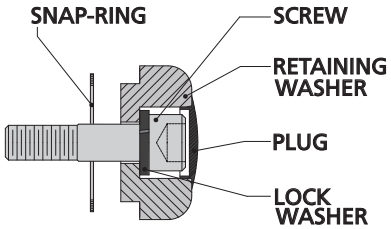

IMPORTANT NOTE

For installation of the keyed-hollow bore reducer to the machine-shaft, see user manual U10270.

2. Assembly types

There are two types of assembly methods commonly used for securing the fixing kit.

Figure 2 – Fixing kit assembly methods

Type 1

The machine-shaft is located against a fixed snap-ring located inside the bore of the reducer.

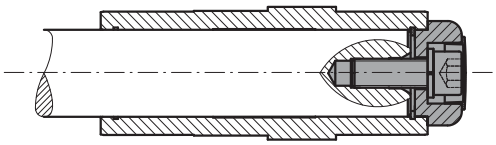

Type 2

The machine shaft is shouldered and is pulled tight against the hollow-shaft; the snap-ring is no longer required.

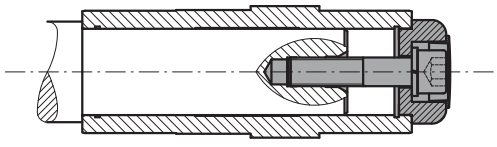

HARMFUL SITUATION

The maximum edge break on the solid machine shaft must not exceed the values shown on Page 2 of this manual. Otherwise the load-bearing capacity of the snap-ring will be reduced and may result in failure.

3. Assembly

A. If using a Type 1 assembly, secure the appropriate snap-ring into the bore of the reducer. With Type 2 assembly, no snap-ring is required.

B. Draw the hollow bore gear reducer onto the machine shaft as instructed in U10270. Remember to apply a suitable assembly paste or anti-seize compound to the mating shafts.

C. Install the retaining washer over the end of the hollow bore.

D. Secure the appropriate cap-screw into the machine shaft and tighten the screw based upon the assembly type, as noted below. Then install the protective plug over the screw hole.

Type 1 - Screw tightening

Tighten until lightly snug and secure the screw with a thread-locking compound to prevent the screw from backing out.

HARMFUL SITUATION

Over tightening the retaining screw may cause the snap ring to be pulled out of its seating groove, causing damage to the hollow-bore or snap ring.

Type 2 - Screw tightening

Follow the cap screw manufactures guidelines and tighten the screw to the proper torque, based upon the bolt grade and material. For reference tightening torque values, also see manual U10060, Table 2.

4. Disassembly

When using Type 2 assembly, it is possible to design a simple disassembly tool to allow easier removal of the hollow-bore reducer. The solid shaft is shouldered to rest against the hollow-bore of the reducer. The machine shaft is supported in both of the hollow bore land areas, but the overall length is reduced compared to Type 1 assembly.

Figure 3 – Disassembly Tool

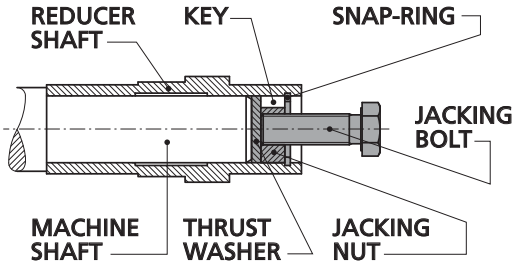

IMPORTANT NOTE

For suggestions on how to construct a disassembly tool for a particular reducer and bore size, please consult NORD's application engineering department.

5. Standard fixing kit size offerings

NORD offers a variety of standard fixing kit sizes as shown by the following tables.

Table 1 - Standard fixing kit size offerings

Shaft Bore [in]	Bolt Size	Allowable Thrust Groove ❷ lb [N]	Allowable Thrust Ring ❸ lb [N]	Max. Edge Break ❹ in [mm]
0.500	10-32	730 [3255]	520 [2300]	0.02 [0.5]
0.750	1/4-20	1800 [7905]	560 [2500]	0.04 [1]
1.000	3/8-16	2900 [13020]	1000 [4600]	0.04 [1]
1.188	7/16-14	5100 [22630]	1000 [4700]	0.04 [1]
1.250	7/16-14	5100 [22630]	1000 [4700]	0.04 [1]
1.375	5/8-11	6500 [29140]	1400 [6400]	0.06 [1.5]
1.438	5/8-11	6900 [30690]	1500 [6500]	0.06 [1.5]
1.500	5/8-11	7800 [34875]	1500 [6700]	0.06 [1.5]
1.625	5/8-11	9900 [44020]	1900 [8400]	0.08 [2]
1.688	5/8-11	10500 [46810]	1800 [8200]	0.08 [2]
1.938	5/8-11	11100 [49600]	1900 [8400]	0.08 [2]
2.000	5/8-11	14100 [62775]	2700 [12100]	0.08 [2]
2.063	5/8-11	14100 [62775]	2700 [12100]	0.08 [2]
2.188	5/8-11	16800 [74865]	2900 [13000]	0.08 [2]
2.375	3/4-10	17400 [77190]	2900 [13000]	0.08 [2]
2.438	3/4-10	17400 [77190]	2900 [13000]	0.08 [2]
2.750	3/4-10	19600 [87110]	4700 [21000]	0.10 [2.5]
2.938	3/4-10	20900 [93000]	4700 [21000]	0.10 [2.5]
3.188	3/4-10	27700 [123225]	7000 [31200]	0.12 [3]
3.438	3/4-10	29300 [130200]	7000 [31400]	0.12 [3]
3.625	3/4-10	30900 [137330]	7000 [31400]	0.12 [3]
3.938	7/8-9	32400 [144305]	6900 [30800]	0.12 [3]
4.000	7/8-9	39000 [173600]	16400 [73000]	0.12 [3]
4.063	7/8-9	39000 [173600]	16400 [73000]	0.12 [3]
4.375	7/8-9	41500 [184450]	16200 [72000]	0.12 [3]
4.438	7/8-9	41500 [184450]	16200 [72000]	0.12 [3]
4.750	7/8-9	44200 [196850]	15700 [70000]	0.12 [3]
4.938	7/8-9	48000 [213900]	15500 [69000]	0.12 [3]

Upon request, additional hollow-bore sizes & fixing kit sizes may be offered.

Shaft Bore [mm]	Bolt Size	Allowable Thrust Groove ❷ N [lb]	Allowable Thrust Ring ❸ N [lb]	Max. Edge Break ❹ mm [in]
16	M5	Not applicable ❶		
20	M6	8370 [1900]	5600 [1300]	1.0 [0.04]
25	M10	12400 [2800]	7300 [1600]	1.0 [0.04]
30	M10	17515 [3900]	7200 [1600]	1.0 [0.04]
35	M12	29140 [6500]	8700 [1900]	1.5 [0.06]
40	M16	41850 [9400]	10900 [2400]	2.0 [0.08]
45	M16	46810 [10500]	10700 [2400]	2.0 [0.08]
50	M16	62775 [14100]	19000 [4300]	2.0 [0.08]
60	M20	74865 [16800]	29200 [6600]	2.0 [0.08]
70	M20	87110 [19600]	30300 [6800]	2.5 [0.10]
80	M20	115630 [26000]	56000 [12600]	2.5 [0.10]
90	M24	130200 [29300]	56000 [12600]	3.0 [0.12]
100	M24	144305 [32400]	55000 [12400]	3.0 [0.12]
110	M24	181350 [40800]	71000 [16000]	3.0 [0.12]
120	M24	196850 [44300]	70000 [15700]	3.0 [0.12]

Upon request, additional hollow-bore sizes and fixing kit sizes may be offered.

❶ This fixing kit is not supplied with a snap-ring. A Type 2 machine shaft is required.

❷ Thrust load-bearing capacity of the groove is based upon using a hollow-shaft material with a yield-strength of at least 45,000 psi (310 N/mm²).

❸ Thrust load-bearing capacity of the snap-ring is based upon a typical snap-ring material with a yield-strength of at least 30,500 psi (210 N/mm²).

❹ On the solid machine shaft, observe the maximum edge break (radius or chamfer) shown. A larger edge break will result in reduced load-bearing capacity of the snap-ring.

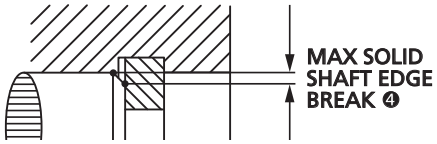

HOLLOW SHAFT WITH SHRINK DISC

1. Shrink disc design concept

A shrink disc option is adaptable to many NORD hollow-bore reducers. The shrink disc applies a high-capacity, zero backlash, interference fit to the driven machine shaft. The double tapered inner ring converts most all of the screw clamping load into radial contact pressure, as the outer clamping discs are pulled together by proper tightening of the locking screws. As the inner ring is contracted, the clearance between the customer solid shaft and reducer shaft is absorbed.

- In their relaxed state, shrink discs provide a generous assembly clearance, thus eliminating the typical assembly and disassembly challenges of using interference fits.
- Shrink discs also reduce solid machine shaft stresses by eliminating the need for shaft keys and keyways.
- When properly applied, high shrink fits help eliminate shaft fretting corrosion and allow for easier shaft mounting and dismounting.

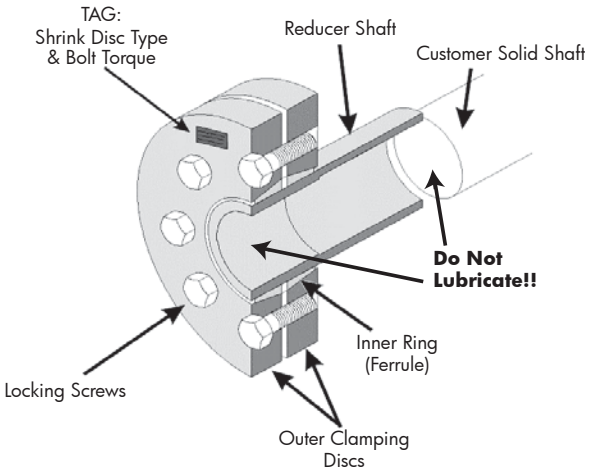

2. Solid (machine) shaft design guidelines

Always use a solid shaft material of adequate strength and apply proper shaft fits in order to establish adequate clamping force during assembly and assure proper shaft release during disassembly.

- Use solid shaft material with yield strength of at least 52,260 psi (360 N/mm²).
- The solid machine shaft should be machined according to ISO 286-2, Class h6 fit tolerances, with a shaft finish of 125 micro inches (3.2 µm) or smoother, per Table 1.
- The solid machine shaft must extend the full length of the reducer hollow shaft.

STOP *HARMFUL SITUATION* **STOP**

Contact NORD when using a shrink disc in an application where the shrink disc connection must simultaneously transmit torque and thrust.

3. Safety

⚠ *WARNING* ⚠

- The supporting solid shaft or driven machine shaft must be of adequate size and strength to withstand normal operating loads and peak loads without damage to itself or any of the system components.
- The transmissible torque and the gripping capacity of the shrink disc may be reduced if shaft tolerances or clearances are larger than specified.
- Excessive tightening torque can result in permanent deformation of the inner ring and the reducer hollow bore, making disassembly very difficult. Do not over tighten the shrink disc to compensate for excessive clearance between the machine shaft and reducer bore.
- Observe the published ratings and safety factors for both the reducer and shrink disc. Overload conditions or excessively high torque can cause the shrink disc connection to slip. In extreme cases localized galling or welding of components may occur.

4. Shrink disc shaft tolerances

Recommended solid shaft tolerances and reducer bore tolerances are shown in the table below.

Table 1: Shrink disc shaft tolerances

Above & Including ø [in]	To & Including ø [in]	Solid Shaft Tolerance ø [in]	Reducer Bore Tolerance ø [in]	Max. Assembly Clearance [in]
0.7500	1.1250	+0.0000 / -0.0005	+0.0008 / -0.0000	0.0013
1.1250	1.9375	+0.0000 / -0.0006	+0.0009 / -0.0000	0.0015
2.0000	3.1250	+0.0000 / -0.0007	+0.0011 / -0.0000	0.0018
3.1875	4.6875	+0.0000 / -0.0008	+0.0013 / -0.0000	0.0021
4.7500	7.0625	+0.0000 / -0.0009	+0.0015 / -0.0000	0.0024
7.1250	7.5000	+0.0000 / -0.0011	+0.0018 / -0.0000	0.0029

Above ø [mm]	To & Including ø [mm]	Solid Shaft Tolerance ø [mm]	Reducer Bore Tolerance ø [mm]	Max. Assembly Clearance [mm]
18	30	+0.000 / -0.013	+0.021 / -0.000	0.034
30	50	+0.000 / -0.016	+0.025 / -0.000	0.041
50	80	+0.000 / -0.019	+0.030 / -0.000	0.049
80	120	+0.000 / -0.022	+0.035 / -0.000	0.057
120	180	+0.000 / -0.025	+0.040 / -0.000	0.065
180	190	+0.000 / -0.029	+0.046 / -0.000	0.075

Shaft/bore tolerances per ISO 282-6, Class h6/H7.

Solid shaft finish should be 125 micro inches (3.2 micro meters) or smoother.

HOLLOW SHAFT WITH SHRINK DISC

5. Installation

⚠ WARNING ⚠

Disconnect all power sources from the equipment before beginning this installation procedure. Handle the components with care and avoid all sharp machined edges to prevent personal injury.

STOP HARMFUL SITUATION STOP

Do not tighten any of the shrink disc locking screws prior to installing the reducer with shrink disc onto the machine shaft. The inner ring of the shrink disc can become permanently contracted or damaged at relatively low tightening torque.

A. Inspect the gear unit received. Make sure the shrink disc and extended hollow shaft projection is on the side of the reducer where it was specified or ordered.

B. Loosen the shrink disc locking screws but do not take the shrink disc completely apart. Remove and discard any packaging material or transportation spacers that come with the shrink disc.

C. Remove all burrs, rust, corrosion, lubricants, and foreign matter from the surfaces of the solid shaft and hollow-bore.

D. Make sure the shrink disk is positioned onto the hollow shaft until the outer clamping ring is flush with the edge of the hollow shaft.

E. To aid in assembly, it is acceptable to lightly grease the solid shaft, only in the area that will come in contact with the bronze-bushing side of the reducer hollow-shaft. ***The reducer hollow shaft must be completely de-greased and free of lubricant, especially in the area of the shrink disc.***

F. Position the gear reducer onto the solid machine shaft and make certain the area under the shrink disc is completely supported by the solid shaft.

G. After confirming the proper positioning of gear reducer and the shrink disc, hand tighten (3) or (4) equally spaced locking screws to make sure the outer collars of the shrink disc are drawn together in a parallel fashion. Then hand-tighten the remaining screws.

H. Refer to Table 2 for the specified tightening torques for the shrink disc locking screws. Using a properly set torque wrench using approximately ¼ (90°) turns; tighten the locking screws, by working in a circular clockwise or counterclockwise sequence around the shrink disc.

I. Continue the tightening sequence (Step H.) even if some locking screws initially require very low tightening torque to achieve ¼ turns; do this for several passes until ¼ turns can no longer be achieved.

J. Reset the torque wrench to approximately 3-5% over-torque and tighten the locking screws for 1 or 2 more passes. This procedure will compensate for relaxation of the locking screws, since tightening of a given screw will always tend to relax the adjacent screw. Without a slight overtorquing of the screws, an infinite number of passes would be required to reach the desired tightening torque.

Table 2 - Shrink Disc Locking Screw Torque

Screw Size	Wrench Size [mm]	Tightening Torque [Nm]	[lb-in]	[lb-ft]
M5	8	7	62	5.2
M6	10	12	106	8.9
M8	13	30	266	22
M10	17	59	522	44
M12	19	100	885	74
M16	24	250	2213	184
M20	30	490	4337	361
M24	36	840	7435	620
M30	46	1700	15050	1254

BOLT TIGHTENING PATTERN

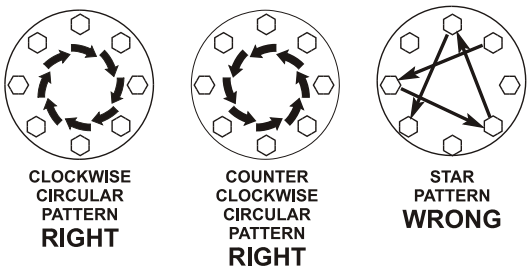

K. Reset the torque wrench to the correct tightening torque as indicated in Table 2. Make sure each locking screw has been properly tightened until the screws are no longer turning at the specified torque wrench setting. If necessary repeat Steps G. & H.

6. Removal

A. Loosen the shrink disc locking screws in a circular pattern by using ½ (180°) turns, until the shrink disc hub can be moved or until the shrink disc hub and reducer shaft will return to their original fits.

⚠ WARNING ⚠

Do not completely remove the locking screws before the outer clamping disks of the shrink disc are disengaged from the inner ring. A sudden release of the outer collars will create high separating forces and could result in injury or even death.

B. Loosen the outer collars of the shrink disc from the tapered inner ring. This may require tapping the bolts with a **soft faced** hammer or prying lightly between the outer collars.

C. Remove the gear reducer from the machine shaft.

7. Re-installation

A. It may be possible to re-use the shrink disc. However the shrink disk should not be re-used if it becomes damaged during removal, or excessively rusty or corroded. Shrink discs must always be disassembled and thoroughly cleaned before re-using.

B. After cleaning the shrink disc, lubricate between the taper of the outer clamping disks and the outside of the inner ring using MOLYKOTE® G-Rapid Plus Paste (product of Dow Corning) or equivalent. In addition, grease screw threads and head contact area with multi-purpose grease.

NORD GRIPMAXX™

1. General information

The NORD GRIPMAXX™ keyless bushing system is adaptable to most all NORD shaft-mounted reducers. The bushing system offers interchangeable bushings to accommodate a large range of driven machine-shaft sizes.

The unique design of the NORD GRIPMAXX™ bushing system offers a number of distinct advantages as follows:

- The NORD GRIPMAXX™ allows the machine builder to utilize standard cold finished shaft stock, without the need for additional shaft machining or shaft keys.
- It uses a NORD shrink disc to apply a high-capacity, zero backlash, interference fit to the driven machine shaft, while eliminating the typical assembly and disassembly challenges of using interference fits.
- The built in clearance between the customer shaft and the bushing system helps to ensure easy installation and removal of the gearbox. To help ensure easy removal, the NORD GRIPMAXX™ bushings are prepared with a special low-wear, corrosion-resistant hardened surface treatment, that minimizes the formation of shaft corrosion and fretting.
- The NORD GRIPMAXX™ is ideal for start-stop operation and bi-directional loading because it does not depend on keys or keyways that transmit torque, which can also can become loose or deform when subjected to these loading conditions.
- Unlike the typical conical or tapered bushing kits, the NORD GRIPMAXX™ design allows a tight fit against a shouldered machine shaft.
- The torque bushing and support bushing are the same part and are fully interchangeable with one another.

2. GRIPMAXX™ assembly detail

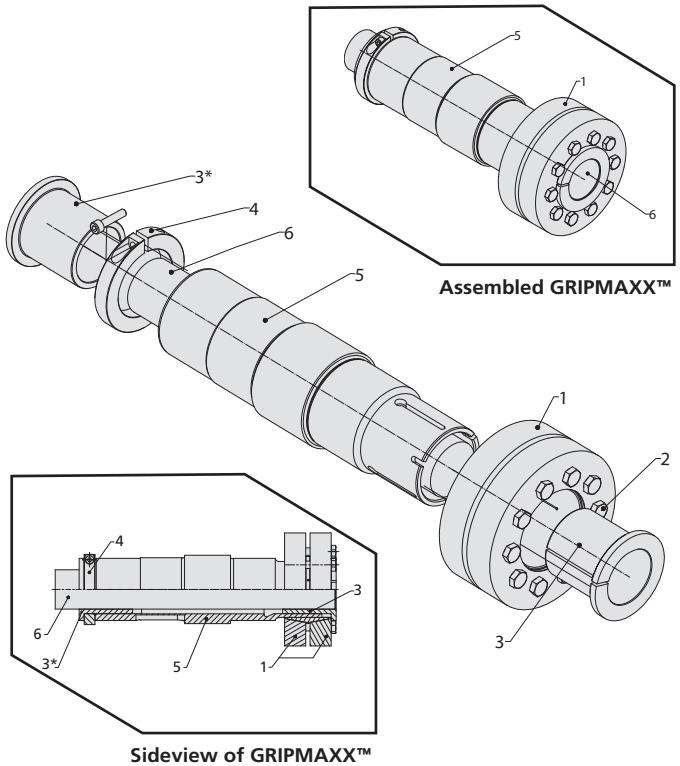

Assembled GRIPMAXX™

Sideview of GRIPMAXX™

[1] NORD Shrink Disc
[2] Locking Screw
[3] Bushing (Torque Side)
[3*] Bushing (Support Side)
[4] Clamp Ring
[5] Gear Reducer Hollow Shaft
[6] Machine Shaft

IMPORTANT NOTE

NORD recommends that the machine shaft have a yield strength of at least 52,260psi (360N/mm^2)

IMPORTANT NOTE

Observe the recommended machine shaft tolerances in table 1, page 2.

WARNING

The supporting solid shaft or driven machine shaft must be of adequate size and strength to withstand normal operating loads and peak loads without damage to itself or any of the system components.

3. Installation

⚠ WARNING ⚠

Disconnect all power sources from the equipment before beginning this installation procedure. Handle the components with care and avoid all sharp or machined edges to prevent personal injury.

STOP HARMFUL SITUATION STOP

Do not tighten any of the shrink disc locking screws prior to installing the reducer with shrink disc onto the machine shaft. The inner ring of the shrink disc can become permanently contracted or damaged at a relatively low tightening torque.

Table 1 - Required Machined Shaft Tolerance

Inch Machine Shaft			Metric Machine Shaft		
From ø [in]	To ø [in]	ISO 286-2 Tolerance h11(-) [in]	Over ø [mm]	Including ø [mm]	ISO 286-2 Tolerance h11(-) [mm]
0.4375	0.6875	- 0.004	10	18	- 0.11
0.7500	1.0625	- 0.005	18	30	- 0.13
1.1250	1.9375	- 0.006	30	50	- 0.16
2.0000	3.1250	- 0.007	50	80	- 0.19
3.1875	4.6875	-0.008	80	120	-0.22
4.7500	4.7500	-0.009	120	125	-0.25

A. Carefully inspect the machine shaft [6] and remove all burrs, rust, corrosion, lubricants, and foreign matter from the shaft surface. Verify that the diameter is within the dimensional tolerances shown in Table 1.

B. Inspect the gear unit received to confirm the correct position of the shrink disc [1]. Make sure the hollow shaft [5] projection is on the side of the reducer where it was specified or ordered.

C. In addition to cleaning the machine shaft [6], remove all dirt, grease or oils from the reducer hollow shaft [5], bushings [3], clamp ring [4], and shrink disk [1]. ***Do not apply lubricants, corrosion preventatives, anti-sieze compounds or coatings to the mating surfaces of the shaft, bushings, clamp collars or shrink disc.***

D. Position the clamp ring [4] and support bushing [3*] over the machine shaft [6], making sure the support bushing is in its desired location. Then secure the support bushing [3*] with the clamp ring [4] and tighten the clamp ring screw.

E. Slide the gear reducer onto the machine shaft [6] until the gear reducer stops against the secured support bushing [3*].

F. Without taking the shrink disc [1] apart, loosen the shrink disc locking screws [2]. Slide the shrink disk over the reducer shaft [5] and slide the torque bushing [3] onto the machine shaft, making sure it is seated completely.

G. Confirm the positioning of the shrink disc [1] and torque bushing [3]. ***Do not tighten the shrink disc until the machine shaft and torque bushing are in proper position, or the reducer shaft will be damaged.*** Hand-tighten 3 or 4 or locking screws [2] and make sure the outer collars of the shrink disc are drawn together in a parallel fashion and then hand-tighten the remaining screws.

H. Refer to Table 2 for the specified tightening torques for the shrink disc locking screws. Using a properly set torque wrench using approximately ¼ (90°) turns; tighten the locking screws, by working in a circular clockwise or counterclockwise sequence around the shrink disc.

I. Continue the tightening sequence (Step H.) even if some locking screws initially require very low tightening torque to achieve ¼ turns; do this for several passes until ¼ turns can no longer be achieved.

J. Reset the torque wrench to approximately 3-5% over-torque and tighten the locking screws for 1 or 2 more passes. This procedure will compensate for relaxation of the locking screws, since tightening of a given screw will always tend to relax the adjacent screw. Without a slight overtorquing of the screws, an infinite number of passes would be required to reach the desired tightening torque.

Table 2 - Shrink Disc Locking Screw Torque

Screw Size	Wrench Size [mm]	Tightening Torque [Nm]	[lb-in]	[ft-lb]
M5	8	7	62	5.2
M6	10	12	106	8.9
M8	13	30	266	22
M10	17	59	522	44
M12	19	100	885	74
M16	24	250	2213	184
M20	30	490	4337	361

BOLT TIGHTENING PATTERN

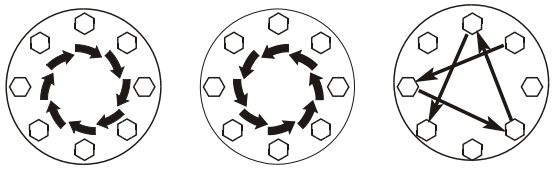

K. Reset the torque wrench to the correct tightening torque as indicated in Table 2. Make sure each locking screw has been properly tightened until the screws are no longer turning at the specified torque wrench setting. If necessary repeat Steps G. & H.

5. Bushing kit removal

A. Loosen the shrink disc locking screws [2] in circular pattern by using ½ (180°) turns, until the shrink disc hub can be moved or until the shrink disc hub and reducer shaft will return to their original fits.

> ⚠ *WARNING* ⚠
>
> Do not completely remove the locking screws before the outer clamping disks of the shrink disc are disengaged from the inner ring. A sudden release of the outer collars will create high separating forces and could result in injury or even death.

B. Loosen the outer collars of the shrink disc from the tapered inner ring. This may require tapping the bolts with a **soft faced** hammer or prying lightly between the outer collars.

C. Remove the gear reducer from the machine shaft.

6. Re-installation

A. It may be possible to re-use the bushings and shrink disc that are part of the NORD bushing system. However these components should not be re-used if they are damaged during removal, or excessively rusty or corroded.

B. Never re-use any of the bushing kit components without prior cleaning. Shrink discs must always be disassembled and thoroughly cleaned before re-using.

C. After cleaning the shrink disc, lubricate between the taper of the outer clamping disks and the outside of the inner ring using MOLYKOTE® G-Rapid Plus Paste (product of Dow Corning) or equivalent. In addition, grease screw threads and head contact area with multipurpose grease.

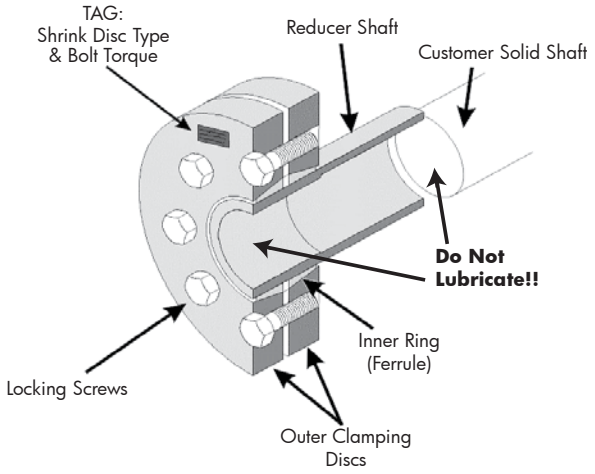

1. Foot-mounted reducers

When installing the foot-mounted gear unit, observe the flatness specifications and bolt tightening torque guidelines provided in U10060 and make sure the mating mounting surface and reducer feet are clean and free of debris. Use of shims under the feet of the gear unit may be required in order to align the output shaft to the driven equipment. Make sure that all feet are supported so that the housing will not distort when it is bolted down. Improper shimming will cause mis-alignment and may reduce the life of the gear unit or cause component failure. Dowel pins may be field-installed to help prevent misalignment and ensure proper realignment if removed for service.

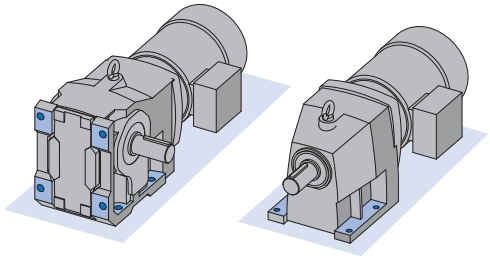

IMPORTANT NOTE

Gear units may be subjected to radial loads or side pull, caused by external chain drives or belt drives. In these instances it is recommended that the mounting base be designed with a slide-plate adjustment to accommodate extra slack in the chain or the belt after the feet are loosened. When using an external chain or belt drive, make sure the reducer is sized so that the shaft and bearings have adequate capacity.

2. Flange-mounted reducers (with B5 flange)

When using the B5 flange to mount the gear unit, the bulk head plate must be engineered to minimize buckling distortions and support the cantilevered weight of the gear reducer or gearmotor. On the B5 mounting flange NORD provides a pilot register or and the flange pilot tolerance as listed per Table 1. When the mating hole is designed with the proper fit, the flange pilot tenon provides a means of accurately positioning the reducer while the hold-down bolts are properly secured; once the reducer is secured, the tenon helps prevent movement of the reducer and it helps locate the center of the reducer output shaft.

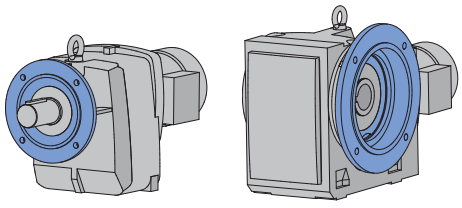

Table : Flange Pilot Tolerance

Above ø (in)	To & Including ø (in)	Tolerance (in)	ISO 286-2 Fit Class
1.969	3.150	+0.0005 / -0.0003	j6
3.150	4.724	+0.0005 / -0.0004	j6
4.724	7.087	+0.0006 / -0.0004	j6
7.087	9.055	+0.0000 / -0.0005	h6
9.055	9.843	+0.0000 / -0.0011	h6
9.843	12.402	+0.0000 / -0.0013	h6
12.402	15.748	+0.0000 / -0.0014	h6
15.748	19.685	+0.0000 / -0.0016	h6

Above ø (mm)	To & Including ø (mm)	Tolerance (mm)	ISO 286-2 Fit Class
50	80	+0.012 / -0.007	j6
80	120	+0.013 / -0.009	j6
120	180	+0.014 / -0.011	j6
180	230	+0.000 / -0.013	h6
230	250	+0.000 / -0.029	h6
250	315	+0.000 / -0.032	h6
315	400	+0.000 / -0.036	h6
400	500	+0.000 / -0.040	h6

When installing the flange mounted gear unit, observe the flatness specifications and bolt tightening torque guidelines provided in U10060. Make sure the mating mounting surface and reducer flange are clean and free of debris. Use a straight edge or parallel bar to check for high spots on the mating mounting surface and remove any raised material around the mounting holes.

Set the gear unit into place and tighten the bolts until they are snug. Before final bolt-tightening check for any material gaps between the mating surfaces and if shimming is required, use "U" shaped shims at least 2 times the width of the bolt. Avoid over shimming a very irregular surface as this will make it very difficult to achieve proper alignment.

IMPORTANT NOTE

For heavy shock applications, it is advisable to field-install dowel pins through the mounting flange connection (in addition to the mounting bolts). This will help control flange movement or flange rotation and relieve the mounting bolts from this additional stress.

3. Flange-mounted reducers (with B14 flange)

When using the B14 flange to mount the gear unit, the bulk head plate must be engineered to minimize buckling distortions and support the cantilevered weight of the gear reducer or gearmotor. When properly installed, the output flange of the reducer housing is designed to enable the permissible torques and radial forces to be reliably transmitted by the bolt connections.

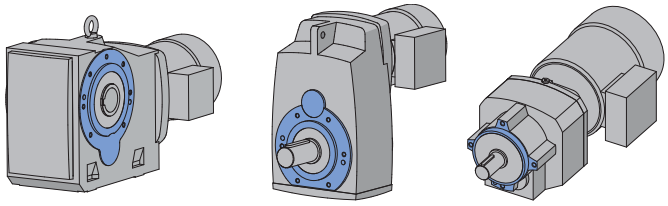

IMPORTANT NOTE

When using the B14 flange-face for mounting, if dowel pin holes are provided in addition to the threaded holes, then it is advisable to also use the proper dowel pins, to help control flange movement or flange rotation and relieve the mounting bolts from this additional stress This is especially important for heavy shock applications.

4. Foot & flange reducer housings

Some gear reducer housings are available with a foot and an output flange. Units with a foot and a B5 Flange are designated with the suffix XF after the primary model number and units with a B14 face-flange are designated with the suffix XZ after the primary model number. When a gear unit is provided with both a foot and a flange, the foot is consider the primary mounting surface. The flange is generally considered to be the secondary mounting option and it is intended that this surface be used for auxiliary add on elements that place minimal load stress on the reducer housing.

HARMFUL SITUATION

To prevent overstress on the main gear unit housing, never tighten the reducer mounting feet and the mounting flange against one-another. Auxiliary add-on elements that are mounted to the reducer flange, must not transmit excessive force, torque or vibration to the main gear housing.

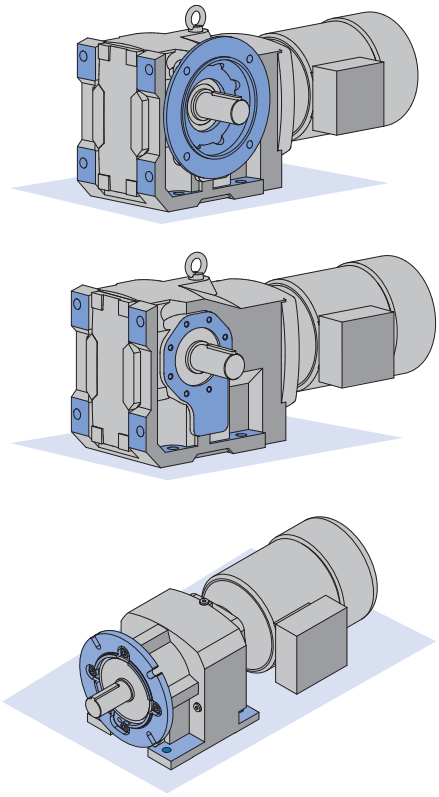

CLINCHER™ SHAFT-MOUNT WITH RUBBER BUFFERS

1. Purpose of the built-in torque arm lug

The preferred method of installing a shaft-mounted Clincher™ reducer is to support the weight of the gear unit or gearmotor assembly from the driven solid machine shaft. In order to restrain the gearbox, react the torque, and keep the gear unit from spinning around the shaft, the Clincher™ gear units have a built-in torque arm lug or tab cast into the reducer housing. This torque tab is intended to be used in conjunction with the NORD Rubber Buffers.

Figure 1: Built-in torque lug

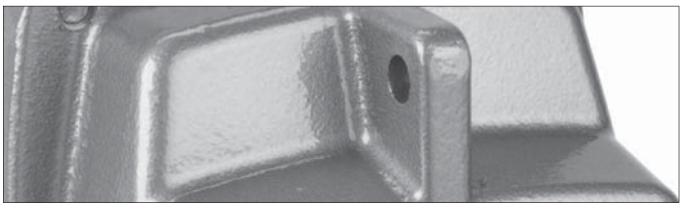

2. Rubber buffers

When specified, NORD provides two rubber buffers that are installed on either side of the gear unit's integral torque lug.

When properly used in tandem, on either side of the torque-arm lug, the rubber buffers help isolate and absorb the load forces present in the system and increase the reducer's service life by reducing cumulative torsional shock loads.

- The primary load force acts in the direction of driven shaft rotation, reacts the torque of the reducer, keeping the gearbox from spinning on the shaft.
- Additional forces present themselves in the direction opposite of the shaft rotation, due to the typical slight out-of-round condition present in the machine shaft. This condition is the reason most shaft mounted-reducers have a slight shaft-wobble, which is normal.

For further dampening it is possible to combine several rubber buffers in a row, on either side of the torque lug.

IMPORTANT NOTE

Please reference Table 1 on page 2 of this manual for dimensional information.

HARMFUL SITUATION

Always mount at least one rubber buffer on either side of the reducer's torque-arm lug. When using rubber buffers in tandem, make sure equal numbers are used on both sides of the torque tab. Failure to do so will not properly cushion the reducer and can result in excessive binding, bearing stress, and damage to the reducer.

3. Machine support

WARNING

It is the responsibility of the machine builder to design a support bracket of adequate strength and rigidity, and supply an appropriate tightening bolt assembly. Failure to do so may result in injury caused from a damaged or broken torque-reaction assembly.

A single customer-supplied machine support bracket, of adequate strength and rigidity, can provide adequate restraint for both directions. This is because when the rubber buffer system is used, the applied load forces are always parallel to the retaining bolt and there are no twisting forces induced onto the bolt in either the clockwise or counter-clockwise direction. In some cases the customer may desire to supply a rigid support on either side of the rubber buffers. In these instances, longer assembly hardware is required.

4. Installation of the rubber buffers

A. Install the Clincher™ hollow bore reducer onto the machine shaft. Line up the hole in the reducer's torque-arm lug with the hole in the machine's support bracket and temporarily hold the reducer in place.

B. Properly secure the gear unit assembly to the driven shaft in an axial direction. If using the NORD Shaft Fixing Kit, follow the instructions in User Manual U10280.

C. Install the rubber buffers on either side of the gear unit's torque-arm lug. Apply a thread locking compound to the end of the fixing bolt. Then place the fixing bolt through the rubber buffers, torque-arm lug and rigid machine support bracket and loosely secure the nut onto the end of the bolt.

D. Tighten the fixing bolt and nut until lightly snug until all of the free play is eliminated from the rubber buffer assembly. Then snug the fixing bolt assembly by tightening an additional 1/4 to 1/2 turn.

WARNING

To help prevent damage to the rubber buffers, avoid over-tightening.

IMPORTANT NOTE

- A min. of (2) rubber buffers are required for each unit.
- For larger size CLINCHER'S™, NORD offers the heavy-duty rubber buffer (Option VG).
- A metric fixing bolt is preferred for rubber buffer assembly. NORD recommends a minimum ISO Grade 8.8 fixing bolt.

CLINCHER™ SHAFT-MOUNT WITH RUBBER BUFFERS

Table 1: Rubber buffer assembly/typical dimensions

Standard Rubber Buffer Assembly Option **(G)**

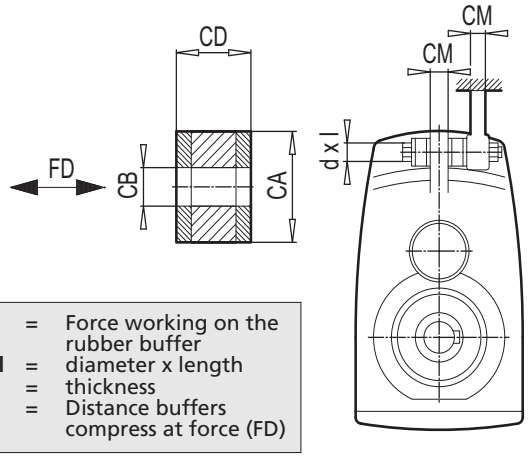

FD = Force working on the rubber buffer
d x l = diameter x length
c = thickness
S_{FD} = Distance buffers compress at force (FD)

Heavy Duty Rubber Buffer Assembly Option **(VG)**

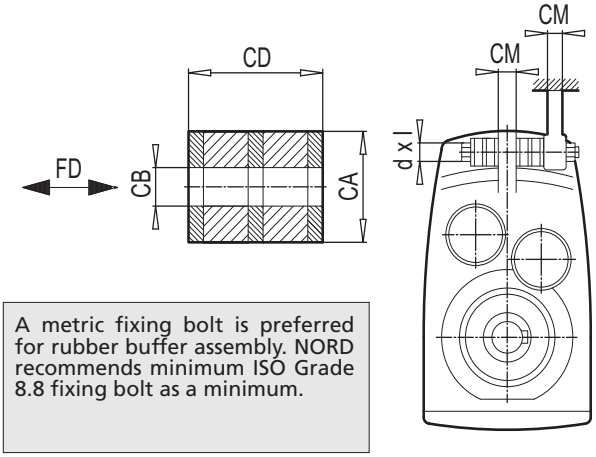

A metric fixing bolt is preferred for rubber buffer assembly. NORD recommends minimum ISO Grade 8.8 fixing bolt as a minimum.

Type	Rubber Buffer P/N	CB inch [mm]	CA inch [mm]	CD inch [mm]	CM inch [mm]	Bolt d x l [metric]	FD lb [kN]	SFD inch [mm]
SK0182NB..G	29603000	0.43 [11]	1.18 [30]	0.59 [15]	0.39 [10]	M10 x 70	217 [0.967]	0.06 [1.5]
SK0282NB..G	29603000	0.43 [11]	1.18 [30]	0.59 [15]	0.47 [12]	M10 x 70	234 [1.04]	0.07 [1.7]
SK1282..G	29603000	0.43 [11]	1.18 [30]	0.59 [15]	0.55 [14]	M10 x 80	504 [2.24]	0.14 [3.6]
SK1382NB..G	29603000	0.43 [11]	1.18 [30]	0.59 [15]	0.55 [14]	M10 x 80	402 [1.79]	0.11 [2.8]
SK2282..G SK2382..G	29604000	0.49 [12.5]	1.57 [40]	0.59 [15]	0.63 [16]	M12 x 90	600 [2.67]	0.07 [1.8]
SK3282..G SK3382..G	29604000	0.49 [12.5]	1.57 [40]	0.59 [15]	0.71 [18]	M12 x 90	935 [4.16]	0.11 [2.9]
SK4282..G SK4382..G	29606000	0.83 [21]	2.36 [60]	1.18 [30]	0.87 [22]	M20 x 150	1661 [7.39]	0.29 [7.3]
SK5282..G SK5382..G	29606000	0.83 [21]	2.36 [60]	1.18 [30]	1.1 [28]	M20 x 150	2133 [9.49]	0.37 [9.4]
SK6282..G SK6382..G	29608000	0.98 [25]	3.15 [80]	1.57 [40]	1.38 [35]	M24 x 190	3779 [16.81]	0.36 [9.2]
SK7282..G SK7382..G	29608000	0.98 [25]	3.15 [80]	1.57 [40]	1.57 [40]	M24 x 200	4676 [20.8]	0.45 [11.4]
SK8282..G SK8382..G	29610000	1.22 [31]	3.94 [100]	1.97 [50]	1.97 [50]	M30 x 260	6382 [28.39]	0.64 [16.3]
SK9282..G SK9382..G	29610000	1.22 [31]	3.94 [100]	1.97 [50]	2.17 [55]	M30 x 260	9777 [43.49]	0.98 [24.9]

Type	Rubber Buffer P/N	CB inch [mm]	CA inch [mm]	CD inch [mm]	CM inch [mm]	Bolt d x l [metric]	FD lb [kN]	SFD inch [mm]
SK7282.VG SK7382.VG	29620850	0.98 [25]	3.35 [85]	2.36 [60]	1.57 [40]	M24 x 240	4676 [20.8]	0.48 [12.2]
SK8282.VG SK8382.VG	29621100	1.22 [31]	4.33 [110]	3.54 [90]	1.97 [50]	M30 x 340	6382 [28.39]	0.76 [19.3]
SK9282.VG SK9382.VG	29621400	1.22 [31]	5.51 [140]	4.33 [110]	2.17 [55]	M30 x 380	9777 [43.49]	0.83 [21.2]
SK10282.VG SK10382.VG	29621800	1.22 [31]	5.51 [140]	4.33 [110]	3.15 [80]	M30 x 430	12670 [56.36]	1.08 [27.4]
SK11282.VG SK11382.VG	29621800	1.93 [49]	7.09 [180]	5.91 [150]	3.54 [90]	M48 x 550	18185 [80.89]	1.52 [38.5]
SK12382.VG	29621800	1.93 [49]	7.09 [180]	5.91 [150]	3.54 [90]	M48 x 550	23720 [105.51]	1.98 [50.2]

RIGHT-ANGLE SHAFT-MOUNT WITH TORQUE ARM (D)

1. Torque arm (D)

The preferred method of installing a shaft-mounted reducer is to support the weight of the gear unit or gearmotor assembly from the driven solid machine shaft. A torque arm is required in order to restrain the gearbox, react the load torque, and keep the gear unit from spinning around the shaft.

The Torque-Arm (D) bracket is mounted to either side of the right-angle gear unit using mounting screws that thread into the B14 flange-face of the reducer. The anchor hole of the torque-arm bracket is supplied with a resilient rubber bushing.

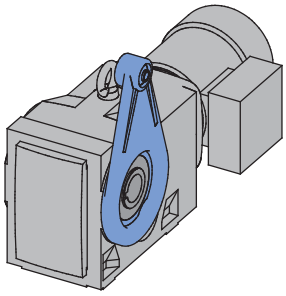

IMPORTANT NOTE

The side of the reducer that the torque arm is mounted on, and the angular position can be specified at time of order. Consult the appropriate NORD catalog for specific Torque Arm (D) mounting options and ordering guidelines.

2. Purpose of the built-in resilient rubber bushing

The resilient rubber bushing installed into the anchor hole end of the torque-arm helps isolate and absorb all the load forces present in the system and increase the reducer's service life by reducing cumulative torsional shock loads.

- The primary load force acts in the direction of driven shaft rotation, reacts the load torque of the reducer, and prevents the gearbox from spinning on the shaft.
- Additional forces present themselves in the direction opposite of the shaft rotation, due to the typical slight out-of-round condition present in the machine shaft. This condition is the reason most shaft mounted-reducers have a slight shaft-wobble, which is normal.

HARMFUL SITUATION

Always make sure that the Torque Arm (D) has the resilient rubber bushing installed into the anchor hole end of the torque arm. Failure to do so will not properly cushion the reducer and can result in excessive binding, bearing stress, and damage to the reducer.

3. Machine support

The user must supply a suitably strong and rigid mating machine support that provides load bearing capacity on both sides of the torque-arm bracket.

WARNING

It is the responsibility of the machine builder to design a support bracket of adequate strength and rigidity, and supply an appropriate tightening bolt assembly. Failure to do so may result in injury caused from a damaged or broken torque-reaction assembly.

4. Installation of a right-angle reducer with torque arm

A. Make sure the Torque-Arm (D) is mounted in the correct position on the reducer. Assembled screw heads should always sit flush with the torque arm.
   - To reposition the torque-arm, remove the mounting screws, relocate the torque-arm, and reassemble the mounting screws as noted above.
   - If the torque-arm was shipped loose, position the torque-arm in the correct location on the gear unit, and secure the torque-arm as noted above.

IMPORTANT NOTES

- Torque arm mounting screws should be secured with a thread locking product (ex. Loctite® 242 or Loxeal® 54-03) and tightened per the table on page 2.
- Assembled screw heads should always sit flush with the torque arm.
- The support bracket should provide support on both sides of the torque arm or be in the form of a U-shape.
- Do not force the torque-arm. The torque arm must remain at a right angle to the gear unit.
- If mounting holes do not align properly the machine support may need to be moved.

B. Install the right-angle hollow bore reducer onto the machine shaft. Then line up the hole in the reducer's torque-arm with the hole in the machine's support bracket, and temporarily hold the reducer in place.

C. Apply a thread locking compound such as Loctite® 242 or Loxeal® 54-03 to the end of the anchor bolt that is used to secure the torque arm in place.

D. Place the anchor bolt through the support bracket and the reducer torque-arm. Attach the mating nut to the bolt and tighten the assembly until snug. At least one bolt diameter should protrude from the nut after assembly.

WARNING

Do not force misalignment of the torque-arm. The torque arm must remain at a right angle to the gear unit or excessive load may be placed on the reducer shaft and bearings.

E. Properly secure the gear unit assembly to the driven shaft in an axial direction.

Table 1 - Torque Arm (D) with rubber buffer

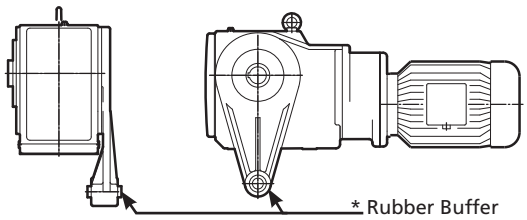

- For all 90.1 Series Helical-Bevel gear units, NORD also offers a bottom mount Torque Arm (K). See User Manual U10620.
- For the large 90.1 Series Helical-Bevel gear units sizes: SK9082.1, SK9086.1, SK9092.1, and SK9096.1, please use the Torque Arm (K).
- A metric fixing bolt is preferred for fastening the Torque-Arm(D) to the machine support bracket.

Gear Unit Series	Torque Arm				Torque Arm Mounting Screw					
	Type	Rubber Buffer P/N	Anchor Hole Size	Anchor Bolt Size	Qty	Size	Grade	Torque (Nm)	Torque (lb-ft)	Torque (lb-in)
92.1/93.1 Series Helical-Bevel	SK92072.1AD/SK93072.1AD	29602505	10.5 mm [0.41 in]	M10	4	M8 x 25	8.8	27	20	35
	SK92172.1AD/SK93172.1AD	29602505	10.5 mm [0.41 in]	M10	4	M8 x 25	8.8	27	20	35
	SK92372.1AD/SK93372.1AD	29602505	10.5 mm [0.41 in]	M10	4	M10 x 30	8.8	53	39	35
	SK92672.1AD/SK93672.1AD	29602505	10.5 mm [0.41 in]	M10	4	M10 x 30	8.8	53	39	35
	SK92772.1AD/SK93772.1AD	29603605	16.5 mm [0.65 in]	M16	4	M12 x 30	8.8	92	68	35
92 Series Helical-Bevel	SK92172AZD	29602505	10.5 mm [0.41 in]	M10	8	M6 x 16	8.8	11	8	71
	SK92372AZD	29602505	10.5 mm [0.41 in]	M10	8	M8 x 25	8.8	27	20	71
	SK92672AZD	29602505	10.5 mm [0.41 in]	M10	8	M8 x 25	8.8	27	20	71
	SK92772AZD	29603605	16.5 mm [0.65 in]	M16	8	M8 x 25	8.8	27	20	71
90.1 Series Helical-Bevel	SK9012.1AZD/SK9013.1AZD	29602505	10.5 mm [0.41 in]	M10	7	M8 x 20	8.8	27	20	62
	SK9016.1AZD/SK9017.1AZD	29602505	10.5 mm [0.41 in]	M10	7	M8 x 20	8.8	27	20	62
	SK9022.1AZD/SK9023.1AZD	29603605	16.5 mm [0.65 in]	M16	7	M8 x 25	8.8	27	20	62
	SK9032.1AZD/SK9033.1AZD	29603605	16.5 mm [0.65 in]	M16	7	M10 x 30	8.8	53	39	62
	SK9042.1AZD/SK9043.1AZD	29605205	25 mm [0.98 in]	M24	7	M12 x 35	8.8	92	68	62
	SK9052.1AZD/SK9053.1AZD	29605205	25 mm [0.98 in]	M24	7	M12 x 35	8.8	92	68	62
	SK9072.1AZD	29605205	25 mm [0.98 in]	M24	7	M16 x 45	8.8	230	170	62
Helical-Worm	SK02040AZD	29602505	10.5 mm [0.41 in]	M10	4	M6 x 20	8.8	11	8	35
	SK02050AZD/SK13050AZD	29602505	10.5 mm [0.41 in]	M10	4	M8 x 20	8.8	27	20	35
	SK12063AZD/SK13063AZD	29602505	10.5 mm [0.41 in]	M10	7	M8 x 22	8.8	27	20	62
	SK12080AZD/SK13080AZD	29602505	10.5 mm [0.41 in]	M10	7	M10 x 25	8.8	53	39	62
	SK32100AZD/SK33100AZD	29603605	16.5 mm [0.65 in]	M16	7	M12 x 30	8.8	92	68	62
	SK42125AZD/SK43125AZD	29603605	16.5 mm [0.65 in]	M16	7	M12 x 30	8.8	92	68	62
MINICASE® SMI Series Worm	SK1SMI31AZD	29602505	10.5 mm [0.41 in]	M10	4	M6 x 16	8.8	11	8	35
	SK1SMI40AZD/SK2SMI40AZD	29602505	10.5 mm [0.41 in]	M10	4	M8 x 22	8.8	27	20	35
	SK1SMI50AZD/SK2SMI50AZD	29602505	10.5 mm [0.41 in]	M10	4	M8 x 22	8.8	27	20	35
	SK1SMI50AZD/SK2SMI50AZD	29602505	10.5 mm [0.41 in]	M10	4	M8 x 22	8.8	27	20	35
	SK1SMI63AZD/SK2SMI63AZD	29602505	10.5 mm [0.41 in]	M10	4	M10 x 25	8.8	53	39	35
	SK1SMI75AZD	29602505	10.5 mm [0.41 in]	M10	4	M12 x 30	8.8	92	68	35
MINICASE® SM Series Worm	SK1SM31AZD	29602505	10.5 mm [0.41 in]	M10	4	M6 x 20	8.8	11	8	35
	SK1SM40AZD/SK2SM40AZD	29602505	10.5 mm [0.41 in]	M10	4	M8 x 20	8.8	27	20	35
	SK1SM50AZD/SK2SM50AZD	29602505	10.5 mm [0.41 in]	M10	4	M8 x 20	8.8	27	20	35
	SK1SM63AZD/SK2SM63AZD	29602505	10.5 mm [0.41 in]	M10	4	M8 x 20	8.8	27	20	35
"FLECBLOC™ SI Series Worm"	SK1SI31D	29602505	10.5 mm [0.41 in]	M10	4	M6 x 16	8.8	11	8	35
	SK1SI40D	29602505	10.5 mm [0.41 in]	M10	4	M8 x 22	8.8	27	20	35
	SK1SI50D	29602505	10.5 mm [0.41 in]	M10	4	M8 x 22	8.8	27	20	35
	SK1SI63D	29602505	10.5 mm [0.41 in]	M10	4	M10 x 25	8.8	53	39	35
	SK1SMI75D	29602505	10.5 mm [0.41 in]	M10	4	M12 x 30	8.8	92	68	35

90.1 HELICAL-BEVEL SHAFT-MOUNT WITH BOTTOM MOUNT TORQUE ARM (K)

1. Torque arm (K)

The preferred method of installing a shaft-mounted reducer is to support the weight of the gear unit or gearmotor assembly from the driven solid machine shaft. A torque arm is required in order to restrain the gearbox, react to the load torque, and keep the gear unit from spinning around the shaft.

Table 1 (Page 2) provides a list of Torque-Arm (K) part numbers available for the 90.1 Series Helical-Bevel gear units. The Torque Arm (K) is secured to the base of the reducer. On most sizes there is an integral resilient rubber bushing located at the fastening hole-end of the torque arm. On the larger sizes, rubber buffers are used in conjunction with the torque arm and when properly used they are applied in tandem, on either side of the torque arm lug.

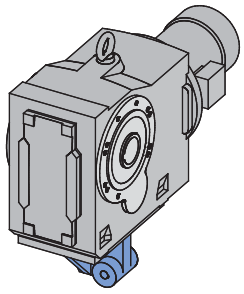

IMPORTANT NOTE

When ordering the Torque Arm (K) one can specify which side of the reducer to mount the fastening hole that bolts to the machine support bracket. Consult the appropriate NORD catalog for specific Torque Arm (K) mounting options and ordering guidelines.

2. Purpose of the rubber bushing or rubber buffers

Regardless if the Torque Arm (K) is supplied with the integral rubber bushing or whether separate rubber buffers are required, the bushing/buffers help isolate and absorb all the load forces present in the system and increase the reducer's service life by reducing cumulative torsional shock loads.

- The primary load force acts in the direction of driven shaft rotation, reacts the load torque of the reducer, and prevents the gearbox from spinning on the shaft.
- Additional forces present themselves in the direction opposite of the shaft rotation, due to the typical slight out-of-round condition present in the machine shaft. This condition is the reason most shaft mounted-reducers have a slight shaft-wobble, which is normal.

HARMFUL SITUATION

Always make sure that the Torque Arm (K) is used in conjunction with the required rubber bushing/s. Failure to do so will not properly cushion the reducer and can result in excessive binding, bearing stress, and damage to the reducer.

3. Machine support

The user must supply a suitably strong and rigid mating machine support that provides load bearing capacity on both sides of the machine support bracket.

WARNING

It is the responsibility of the machine builder to design a support bracket of adequate strength and rigidity, and supply an appropriate tightening bolt assembly. Failure to do so may result in injury caused from a damaged or broken torque-reaction assembly.

4. Installation of the right-angle reducer with torque arm (K)

A. Make sure the Torque-Arm (K) is mounted so that the machine fastening hole is on the correct side of the reducer.
   - The torque-arm can be repositioned on the as-received unit by removing the fixing screws, re-position the torque-arm in the correct location, and re-securing the fixing screws to the proper tightening torque, as indicated in Table 2 (Page 2).
   - If the torque-arm was shipped loose, position the torque-arm in the correct location on the gear unit, and secure the torque-arm with the proper fixing screws & tightening torque, as indicated in Table 2 (Page 2).

B. Install the right-angle hollow bore reducer onto the machine shaft. Line up the hole in the reducer's torque-arm with the hole in the machine's support bracket ,and temporarily hold the reducer in place

C. Properly secure the gear unit assembly to the driven shaft in an axial direction.

D. Apply thread locking compound to the end of the fixing bolt, then place the fastening bolt through the rigid machine support bracket and reducer torque-arm and loosely secure the nut onto the end of the bolt.

E. If the torque arm has an integral rubber bushing follow step F and skip steps G-H. If the torque arm uses rubber buffers skip forward to steps G-H.

F. Tighten the fixing bolt to the proper tightening torque as indicated in Table 2 (Page 2).

G. Install the rubber buffers on either side of the gear unit's torque-arm lug and place the fixing bolt through the rubber buffers and torque-arm lug and into the rigid machine support bracket.

H. Tighten the fixing bolt and nut lightly snug, until all the free-play is eliminated from the rubber buffer assembly. Then snug the fixing bolt assembly by tightening an additional ¼ to ½ turn.

WARNING

To prevent damage to the rubber buffers, avoid over-tightening.

90.1 HELICAL-BEVEL SHAFT-MOUNT WITH BOTTOM MOUNT TORQUE ARM (K)

Torque Arm (K) with integrated bushing

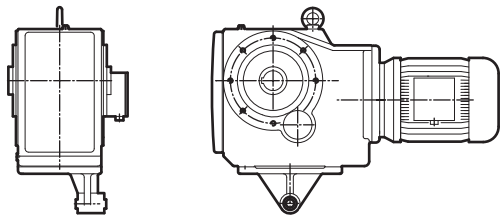

Available for Sizes SK9012.1 - SK9072.1

- For most all 90.1 series Helical-Bevel gear units, an optional tear-drop shaped side -mounted torque arm (D) is available. See user manual U10600.

Torque Arm (K) with rubber buffer

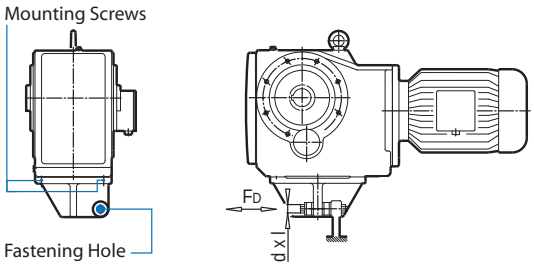

Available for Sizes SK9082.1 - SK90906.1

- A metric fixing bolt is preferred for fastening the torque arm (K) to the machine support bracket.

Type	Torque Arm P/N	Reducer Hardware Hex Head Cap Screws + Lock Washer	Mounting Screw P/N	Lock Washer P/N	Rubber Buffer P/N	Fastening Hole In [mm]	Fastening Bolt Size	Bolt d x l [metric]	FD lb [N]	SFD inch [mm]
SK9012.1...K SK9013.1...K	68190600	M10 X 30 + A10 (Qty 3 Ea.)	22010300	28560106	N/A	0.41 [10.5]	M10	N/A	N/A	N/A
SK9016.1...K SK9017.1...K	68190600	M10 X 30 + A10 (Qty 3 Ea.)	22010300	28560106	N/A	0.41 [10.5]	M10	N/A	N/A	N/A
SK9022.1...K SK9023.1...K	68290610	M12 X 35 + A12 (Qty 3 Ea.)	22012350	28560126	N/A	0.65 [16.5]	M16	N/A	N/A	N/A
SK9032.1...K SK9033.1...K	68390610	M12 X 35 + A12 (Qty 3 Ea.)	22012350	28560126	N/A	0.65 [16.5]	M16	N/A	N/A	N/A
SK9042.1...K SK9043.1...K	68490610	M16 X 40 + A16 (Qty 3 Ea.)	22016400	28560166	N/A	0.98 [25]	M24	N/A	N/A	N/A
SK9052.1...K SK9053.1...K	68590620	M16 X 40 + A16 (Qty 3 Ea.)	22016450	28560166	N/A	0.98 [25]	M24	N/A	N/A	N/A
SK9072.1...K	68690620	M24 X 60 + A24 (Qty 4 Ea.)	22024060	28560246	N/A	0.98 [25]	M24	N/A	N/A	N/A
SK9082.1...K SK9082.1...SHK	68819010	M24 x 65 + A24 (Qty 4 Ea.)	22024650	22024650	29610000	1.22 [31]	M30	M30 x 260	5300 [23.64]	0.53 [13.5]
SK9086.1...K SK9086.1...SHK	68819010	M24 x 65 + A24 (Qty 4 Ea.)	22024650	22024650	29610000	1.22 [31]	M30	M30 x 260	6900 [30.77]	0.69 [17.6]
SK9092.1...SHK	68919010	M36 x 90 + A36 (Qty 4 Ea.)	22036900	28560366	29610000	1.22 [31]	M30	M30 x 260	10300 [45.71]	1.03 [26.2]
SK9096.1...SHK	69019000	M42 x 120 + A42 (Qty 4 Ea.)	22042120	28560426	29621800	1.93 [49]	M48	M48 x 550	12,500 [55.56]	1.06 [27.0]

HELICAL & BEVEL REDUCER LUBRICATION

1. Importance of proper lubrication

Proper gearbox lubrication is essential in order to reduce friction, heat, and component wear. Lubricants reduce heat and wear by inserting a protective "fluid boundary" between mating parts and preventing direct metal to metal contact. Lubricants also help prevent corrosion and oxidation, minimize foam, improve heat transfer, optimize reducer efficiency, absorb shock loads and reduce noise.

Most NORD reducers are shipped from the factory with a pre-determined oil fill level in accordance to the specified reducer size and mounting position.

2. Standard oil type

The following tables indicate the standard oil fill type used. Please see user manual U11000 for more specific information and for optional helical and bevel gear lubricants:

Serviceable Gear Units	
Helical In-line	Standard Oil Fill: ISO VG 220, Mineral Oil
Clincher Parallel-Shaft	
Right-Angle Bevel	
NORDBLOC® Series In-line	
NORDBLOC®.1 Series In-line	
Standard Series In-line	

IMPORTANT NOTE

For shipping purposes, the following large Clincher™ gear units are supplied without oil:
• Clincher™ Sizes SK11282, SK11382 and SK12382

Maintenance-free / Lubricated For Life Gear Units	
Clincher™ sizes SK0182NB, SK0282NB & SK1382NB	Standard Oil Fill: ISO VG220 SHC/PAO Synthetic Oil
NORDBLOC® Sizes SK172, SK272, SK371F, SK372, SK373, SK320	

IMPORTANT NOTE

Maintenance-free units are supplied as sealed units with no vent-plug. Consult NORD prior to ordering if interested in ordering any of the above sizes as serviceable gear units.

IMPORTANT NOTE

Consult the sticker adjacent to the fill plug to determine the type of lubricant installed at the factory. Some units have special lubricants designed to operate in certain environments or intended to extend the service life or service temperature range of the lubricant. If in doubt about which lubricant is needed for a certain application, please contact NORD Gear.

3. Lubrication replacement

If the gear unit is filled with mineral oil, the lubricant should be replaced at least after every 10,000 operating hours or after every two years. If the gear unit is filled with synthetic oil, the lubricant should be replaced at least after every 20,000 operating hours or after every four years. Often gear reducers are exposed to extreme ambient conditions, hostile environments, wet conditions, or dirty and dusty operating areas. Especially in these situations, it is important to establish a condition-based oil service interval.

4. Oil viscosity

Viscosity, or the oil's resistance to shear under load, is often considered the single most important property of any gear oil.

- Often one will consider making a viscosity correction to the oil to improve the performance when operating the gear unit at low temperature or high temperature.
- In cases of extreme load conditions, gear pairs and antifriction bearings may be more susceptible to sliding or scuffing wear. In these operating conditions, it may also be beneficial to consider an increased lubrication viscosity and/or a lubrication with improved antiwear additive packages.

IMPORTANT NOTE

The user should consult with their primary lubrication supplier before considering changes in oil type or viscosity.

5. Maximum oil sump temperature limit

To prevent reducer overheating, the reducer's maximum oil sump temperature limit must not be exceeded for prolonged periods of operation (up to 3 hours continuous operation depending upon reducer size).

Oil Type	Maximum Oil Temperature Limit	
	NORD	AGMA 9005-D94
Mineral	80-85°C (176-185°F)	95°C (203°F)
Synthetic	105°C (220°F)	107°C (225°F)

IMPORTANT NOTE

Use caution when specifying gear reducers for high temperature service. If there is concern about exceeding the allowable safe operating temperatures, please consult NORD to discuss alternatives.

6. The importance of routine oil analysis

Routine oil analysis, sound lubrication practices, and good tracking of oil performance trends will help establish proper lubrication maintenance and change-out intervals. To maximize equipment reliability, NORD Gear generally recommends a condition-based lubrication maintenance program. One may take exceptions to this general recommendation on sealed-for-life or maintenance-free gear units or smaller and less costly gear units. In these instances, the replacement cost of the gear unit is often small compared to the costs associated with this type of oil analysis program.

STOP *HARMFUL SITUATION* **STOP**

NORD suggests replacing the gear oil if oil analysis indicates any of the following:

- Viscosity has changed by approximately 10% or more.
- Debris particles (silicon, dust, dirt or sand) exceed 25 ppm.
- Iron content exceeds 150-200 ppm.
- Water content is greater than 0.05% (500 ppm).
- The total acid number (TAN) tests indicate a significant level of oxidative break-down of the oil, and a critical reduction in performance; If the TAN number measured changes by more than 5% over the new oil, then an oil change would be recommended.

7. Mounting position and oil fill quantity

All NORD Gear reducers are shipped from the factory with a pre-determined oil fill level in accordance to the specified reducer size and mounting position. ***For additional information, please see the seperate mounting position diagrams and the corresponding oil fill quantity tables for the specified gear unit.***

The gearbox nametag will indicate the mounting position that was provided. ***For mounting orientations other than shown in the mounting position charts, please consult NORD Gear.***

STOP *HARMFUL SITUATION* **STOP**

Actual oil volume can vary slightly depending upon the gear case size, mounting and ratio. Prior to commissioning the reducer, check the oil-fill level using the reducer's oil-level plug and drain or add additional oil as needed. The minimum acceptable oil level is 0.15 in (4mm) below the oil level hole.

8. Oil plug locations

All gear units are assembled with the oil fill-level, oil-drain and vent plugs installed in their proper locations, according to the specified mounting position. All standard plugs are metric and utilize sealing gaskets between the head of the plug and the reducer housing.

9. Drain and fill-level plugs

All reducer drain plugs are metric socket head cap screws. For easier identification, it is NORD's standard practice to provide a hex-head screw for the fill-level plug. For ease of draining the used oil from the gear reducer, use the socket head screw located at the lowest part of the gearbox.

Drain Plug

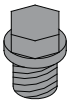

Fill Level Plug

10. Vent plug locations

Reducer venting allows for air pressure differences that occur during operation, between the inner space of the reducer and the atmosphere, while ensuring leak-free operation. The AUTOVENT™ is standard for all vented gear units, unless otherwise noted.

AUTOVENT™ - The AUTOVENT™ helps prevent bearing and gear damage by behaving like a check valve to block the entry of foreign material (water, dust, corrosives, etc.). The breather opens at approximately 2-3 psi during operation and closes tightly as the gearbox cools. This option is perfect for humid conditions and wash-down environments, helping to maintain proper oil cleanliness, and reducing foaming and oxidation. NORD may choose to offer one of two style options as shown in Figure 1. The Type 2 AUTOVENT™ comes closed upon delivery with a transportation sealing plug (see Warning).

Figure 1 AUTOVENT™ Types

Type 1

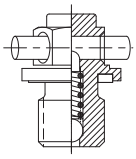

Type 2 with transportation plug

Open Vent - An optional open vent can be supplied by NORD. The open vent comes closed upon delivery with a transportation sealing plug (see Warning).

⚠ *WARNING* ⚠

To prevent build-up of excessive pressure, sealed vents must be activated as shown prior to gear unit start up.

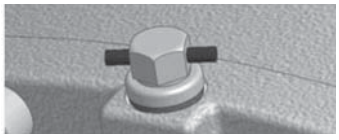

Sealed vent

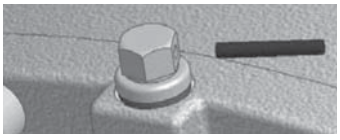

Activated vent

Filtered Vent - NORD may offer an optional filtered vent, which allows gases to permeate, but does not allow dust and debris to pass through the vent.

VL2 & VL3
EXTENDED BEARING LUBRICATION

1. VL2 – Spread Bearing Design

NORD offers reinforced output shaft bearings with increased bearing distance. The lower bearing is a oversized, double row spherical bearing, which absorbs high overhung and thrust loads while providing a longer bearing service life. The spherical roller bearing is especially useful in compensating for alignment errors in long agitator shafts. The VL2 spread bearing design is commonly used for shredders, mixers, overhead conveyors or applications requiring increased bearing load carrying capacities. Included with the VL2 design is a grease fitting for the lower bearing and a removable plug to allow excess grease to purge from the bearing cavity.

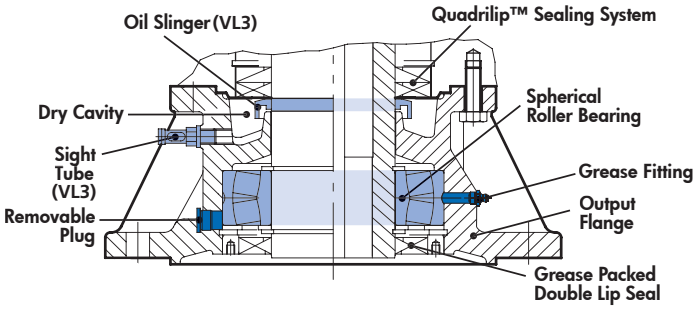

2. VL3 – Spread Bearing Design with Oil Safe Dry Cavity

The VL3 dry cavity design adds additional oil leak protective measures to the VL2 spread bearing design. NORD's Quadralip™ sealing system prevents oil from leaking from the gearbox into the VL2 flange. If in any case oil does leak past the Quadralip™ seals, it would flow down to the oil slinger mounted onto the shaft. As the shaft rotates, the oil will sling off into the dry cavity. A sight tube is provided for dry cavity inspection. At the bottom of the spread bearing flange is greased packed, double lip seal.

3. Service Guidelines for the Extended Bearing Flange

The spherical roller bearing on the extended bearing housing should be re-greased with 0.75 to 1.0 ounces (20-25 grams) of grease after every 2,500 hours of service or at least every 6 months. Prior to re-greasing the screw plug located opposite to the grease nipple should be unscrewed. After re-greasing the screw plug must be reinstalled and tightened. The extended bearing is factory assembled with the proper amount and type of grease. The type of grease supplied depends upon the type of oil specified at time of order.

Bearing Grease Options

Reducer Oil Type	Grease Type	Thickener Type	NLGI Grade	Ambient Temperature Range	Manufacture Brand / Type
Mineral	Standard	Li-Complex	NLGI 2	-30 to 60 °C (-22 to 140 °F)	Mobil Grease XHP222
Synthetic	High-Temperature	Polyurea	NLGI 2	-25 to 80 °C (-13 to 176 °F)	Mobil / Polyrex EP 2
Food-Grade	Food-Grade	Al-Complex	NLGI 2	-25 to 40 °C (-13 to 104 °F)	Mobil / FM222

STOP *HARMFUL SITUATION* STOP

Grease compatibility depends upon the type of thickener or soap complex used, the base oil type suspended within the thickener, and the type of additives used. The user should check with the lubrication supplier before making substitutions in brand and type in order to assure compatibility and to avoid causing possible damage to the extended bearing.

HELICAL-WORM REDUCER LUBRICATION

1. Importance of proper lubrication

Proper gearbox lubrication is essential in order to reduce friction, heat, and component wear. Lubricants reduce heat and wear by inserting a protective "fluid boundary" between mating parts and preventing direct metal to metal contact. Lubricants also help prevent corrosion and oxidation, minimize foam, improve heat transfer, optimize reducer efficiency, absorb shock loads and reduce noise.

NORD helical-worm reducers are shipped from the factory with a pre-determined oil fill level in accordance to the specified reducer size and mounting position.

2. Standard oil type

NORD helical worm gear reducers are filled with ISO VG 680 synthetic-hydrocarbon/polyalphaolefin (SHC/PAO) worm gear oil.

- SHC/PAO worm gear oils have good high and low temperature stability, are compatible with most paint and seal types, and are miscible with mineral oils.
- SHC/PAO worm gear oils also contain a small amount of organic ester and other antiwear (AW) packages to offer improved lubrication conditions, especially in the worm mesh, where a sideways sliding motion prevails.

Please see user manual U11020 for more specific information and for optional helical worm lubricants.

HARMFUL SITUATION

In worm gears avoid using extreme pressure (EP) gear oils containing sulfur-phosphorous chemistries; these additives can react adversely with bronze worm gears, and accelerate wear.

IMPORTANT NOTE

Consult the sticker adjacent to the fill plug to determine the type of lubricant installed at the factory. Some units have special lubricants designed to operate in certain environments or intended to extend the service life or service temperature range of the lubricant. If in doubt about which lubricant is needed for a certain application, please contact NORD Gear.

3. Lubrication replacement

The helical-worm gear oil should be replaced at least after every 20,000 operating hours or after every four years. Often gear reducers are exposed to extreme ambient conditions, hostile environments, wet conditions, or dirty and dusty operating areas. Especially in these situations, it is important to establish a condition-based oil service interval.

4. Efficiency

Helical worm gears reach efficiencies up to 92% and are generally much more efficient than worm-only gear units. However, it is important to consider the following, when using worm gears.

- Worm gears reach their peak rated efficiency, after they undergo a natural run-in process (up to 25 hours operating time at maximum rated load). Catalog published power and torque figures are based upon the rated efficiency after the run-in is complete.
- Worm gears have naturally lower startup efficiencies compared to operating efficiencies. As input speed increases the enhanced hydrodynamic effects of the oil result in less tooth friction and increased worm gear efficiency.

IMPORTANT NOTE

Worm gear reducers applied in cold temperature service, may require increased motor power for the following reasons:

- Lower operating temperatures, cause lubrication viscosity to increase in both the gearbox and in the moving areas of the driven machine.
- Worm-gears have naturally lower start-up efficiencies compared to operating efficiencies.
- In extreme cases, one might need to consider increasing the motor power and lowering the oil viscosity

5. Oil Viscosity

Viscosity, or the oil's resistance to shear under load, is often considered the single most important property of any gear oil.

- Often one will consider making a viscosity correction to the oil to improve the performance when operating the gear unit at low temperature or high temperature.
- In cases of extreme load conditions, gear pairs and antifriction bearings may be more susceptible to sliding or scuffing wear. In these operating conditions, it may also be beneficial to consider an increased lubrication viscosity and/or a lubrication with improved antiwear additive packages.

IMPORTANT NOTE

The user should consult with their primary lubrication supplier before considering changes in oil type or viscosity.

6. Maximum oil sump temperature limit

To prevent reducer overheating, the reducer's maximum oil sump temperature limit must not be exceeded for prolonged periods of operation (up to 3 hours continuous operation depending upon reducer size).

Oil Type	Maximum Oil Temperature Limit	
	NORD	AGMA 9005-D94
Synthetic	105°C (220°F)	107°C (225°F)

IMPORTANT NOTE

Use caution when specifying gear reducers for high temperature service. If there is concern about exceeding the allowable safe operating temperatures, please consult NORD to discuss alternatives.

HELICAL-WORM REDUCER LUBRICATION

7. The importance of routine oil analysis

Routine oil analysis, sound lubrication practices, and good tracking of oil performance trends will help establish proper lubrication maintenance and change-out intervals. To maximize equipment reliability, NORD Gear generally recommends a condition-based lubrication maintenance program. One may take exceptions to this general recommendation on sealed-for-life or maintenance-free gear units or smaller and less costly gear units. In these instances, the replacement cost of the gear unit is often small compared to the costs associated with this type of oil analysis program.

STOP *HARMFUL SITUATION* **STOP**

NORD suggests replacing the gear oil if oil analysis indicates any of the following:

- Viscosity has changed by approximately 10% or more.
- Debris particles (silicon, dust, dirt or sand) exceed 25 ppm.
- Iron content exceeds 150-200 ppm.
- Water content is greater than 0.05% (500 ppm).
- The total acid number (TAN) tests indicate a significant level of oxidative break-down of the oil, and a critical reduction in performance; If the TAN number measured changes by more than 5% over the new oil, then an oil change would be recommended.

8. Mounting position and oil fill quantity

All NORD Gear reducers are shipped from the factory with a pre-determined oil fill level in accordance to the specified reducer size and mounting position. ***For additional information, please see the seperate mounting position diagrams and the corresponding oil fill quantity tables for the specified gear unit.***

The gearbox nametag will indicate the mounting position that was provided. ***For mounting orientations other than shown in the mounting position charts, please consult NORD Gear.***

STOP *HARMFUL SITUATION* **STOP**

Actual oil volume can vary slightly depending upon the gear case size, mounting and ratio. Prior to commissioning the reducer, check the oil-fill level using the reducer's oil-level plug and drain or add additional oil as needed. The minimum acceptable oil level is 0.15 in (4mm) below the oil level hole.

9. Oil plug locations

All gear units are assembled with the oil fill-level, oil-drain and vent plugs installed in their proper locations, according to the specified mounting position. All standard plugs are metric and utilize sealing gaskets between the head of the plug and the reducer housing.

10. Drain and fill-level plugs

All reducer drain plugs are metric socket head cap screws. For easier identification, it is NORD's standard practice to provide a hex-head screw for the fill-level plug. For ease of draining the used oil from the gear reducer, use the socket head screw located at the lowest part of the gearbox.

Drain Plug

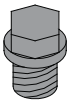

Fill Level Plug

11. Vent plug locations

Reducer venting allows for air pressure differences that occur during operation, between the inner space of the reducer and the atmosphere, while ensuring leak-free operation. The AUTOVENT™ is standard for all vented gear units, unless otherwise noted.

AUTOVENT™ - The AUTOVENT™ helps prevent bearing and gear damage by behaving like a check valve to block the entry of foreign material (water, dust, corrosives, etc.). The breather opens at approximately 2-3 psi during operation and closes tightly as the gearbox cools. This option is perfect for humid conditions and wash-down environments, helping to maintain proper oil cleanliness, and reducing foaming and oxidation. NORD may choose to offer one of two style options as shown in Figure 1. The Type 2 AUTOVENT™ comes closed upon delivery with a transportation sealing plug (see Warning).

Figure 1 AUTOVENT™ Types

Type 1

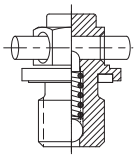

Type 2 with transportation plug

Open Vent - An optional open vent can be supplied by NORD. The open vent comes closed upon delivery with a transportation sealing plug (see Warning).

⚠ *WARNING* ⚠

To prevent build-up of excessive pressure, sealed vents must be activated as shown prior to gear unit start up.

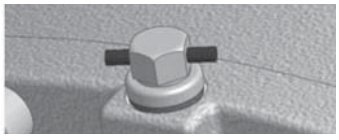

Sealed vent

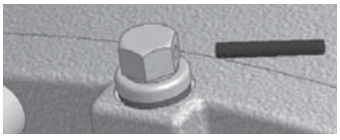

Activated vent

Filtered Vent - NORD may offer an optional filtered vent, which allows gases to permeate, but does not allow dust and debris to pass through the vent.

MINICASE® (SM SERIES) WORM GEAR LUBRICATION GUIDELINES

1. Importance of proper gearbox lubrication

Proper gearbox lubrication is essential in order to reduce friction, heat, and component wear. Lubricants reduce heat and wear by inserting a protective "fluid boundary" between mating parts and preventing direct metal to metal contact. Lubricants also help prevent corrosion and oxidation, minimize foam, improve heat transfer, optimize reducer efficiency, absorb shock loads and reduce noise.

2. Maintenance free design

MINICASE® (SM series) worm gear reducers are designed to be maintenance-free and are supplied completely sealed. They are factory oil-filled with a pre-determined oil fill amount in accordance to the specified reducer size and mounting position. The synthetic lubrication used is suitable for the life of the product so the MINICASE™ is inherently maintenance free.

3. Standard oil type

The standard factory oil fill for MINICASE® (SM) worm gear reducers is ISO viscosity VG synthetic hydrocarbon/polyalphaolefin (SHC/PAO oil) food grade oil suitable for NSF-H1 incidental contact and is a factory stocked lubricant. Food grade oil suitable for NSF-H1 incidental contact is a factory stocked option.

See user manual U11040 for specific information and for optional MINICASE® (SM) worm lubrication types and options.

HARMFUL SITUATION

In worm gears avoid using extreme pressure (EP) gear oils containing sulfur-phosphorous chemistries; these additives can react adversely with bronze worm gears, and accelerate wear.

4. Efficiency

It is important to consider the following, when using worm gears.

- Worm gears reach their peak rated efficiency, after they undergo a natural run-in process (up to 25 hours operating time at maximum rated load). Catalog published power and torque figures are based upon the rated efficiency after the run-in is complete.
- Worm gears have naturally lower startup efficiencies compared to operating efficiencies. As input speed increases the enhanced hydrodynamic effects of the oil result in less tooth friction and increased worm gear efficiency.

IMPORTANT NOTE

Worm gear reducers applied in cold temperature service, may require increased motor power for the following reasons:

- Lower operating temperatures, cause lubrication viscosity to increase in both the gearbox and in the moving areas of the driven machine.
- Worm-gears have naturally lower start-up efficiencies compared to operating efficiencies.
- In extreme cases, one might need to consider increasing the motor power and/or lowering the oil viscosity.

5. Maximum oil sump temperature limit

To prevent reducer overheating, the reducer's maximum oil sump temperature limit must not be exceeded for prolonged periods of operation (up to 3 hours continuous operation depending upon reducer size).

Oil Type	Maximum Oil Temperature Limit	
	NORD	AGMA 9005-D94
Synthetic	105°C (220°F)	107°C (225°F)

IMPORTANT NOTE

Use caution when specifying gear reducers for high temperature service. If there is concern about exceeding the allowable safe operating temperatures, please consult NORD to discuss alternatives.

MINICASE® (SM SERIES) WORM GEAR LUBRICATION GUIDELINES

6. Oil Viscosity

The viscosity rating determines the operating oil's resistance to shear under load conditions. Some important viscosity considerations include the following:

- Lightly loaded gears require lower viscosity oils than highly loaded gears.
- Lower viscosity will provide thin oil film, lower friction, higher mechanical efficiency, and better heat removal conditions.
- Higher viscosity will provide thicker oil film, and better resistance to sliding wear, scuffing wear, and galling at high pressure.
- Higher operating temperatures will cause a reduction in viscosity and lower operating temperatures, cause an increase in viscosity or a thickening of the oil.

The standard oil-fill is considered acceptable for most applications. In certain situations an oil viscosity change may be beneficial.

- If the gear unit is exposed to frequent high load conditions. A higher viscosity oil will have a higher film thickness offering better overall resistance to oil shear, sliding wear and scuffing wear in gears and roller element bearings.
- An oil viscosity correction or lubrication change may improve the overall performance when operating the gear unit at very low or high ambient temperature conditions.

IMPORTANT NOTE

The user should consult with their primary lubrication supplier before considering changes in oil type or viscosity.

7. Viscosity Index

Viscosity index helps quantify the rate of oil viscosity change with respect to temperature changes. Oils with a reasonably high viscosity index tend to be more stable in a changing temperature environment. The ability of an oil to maintain a small viscosity differential over the operating range of the gearbox provides a more consistent lubricating film and better wear performance.

Synthetic oils typically have a higher viscosity index than mineral oils and polyglycol oils tend to have an exceptionally high viscosity index compared to other synthetic oils like polyalphaolefin or ester based products.

MINICASE® (SMI/SMID) WORM GEAR LUBRICATION GUIDELINES

1. Importance of proper gearbox lubrication

Proper gearbox lubrication is essential in order to reduce friction, heat, and component wear. Lubricants reduce heat and wear by inserting a protective "fluid boundary" between mating parts and preventing direct metal to metal contact. Lubricants also help prevent corrosion and oxidation, minimize foam, improve heat transfer, optimize reducer efficiency, absorb shock loads and reduce noise.

2. Factory Oil-Filled / Maintence-Free

NORD modular worm gear units are inherently maintence-free, factory oil filled, and supplied with a high-quality, long-life, synthetic oil which is intend to be suitable for the life of the gear unit.

MINICASE® (SMI/SMID) worm gear units are assembled at the factory from stocked component parts. They are filled at time of assembly in accordance to the specified reducer mounting position. See user manuals U13150 and U13250 for more info.

3. Standard Oil Types

MINICASE® (SMI/SMID) worm gear units are factory filled with synthetic poly glycol oil. Food-grade polyglycol oil is optional. The specific oil type and viscosity grade are displayed on the reducer nameplate. See user manual 11050 for specific MINICASE® (SMI/SMID) worm lubrication types and options.

STOP *HARMFUL SITUATION* **STOP**

In worm gears avoid using extreme pressure (EP) gear oils containing sulfur-phosphorous chemistries; these additives can react adversely with bronze worm gears, and accelerate wear.

4. Efficiency

It is important to consider the following, when ordering worm gears.

- Worm gears reach their peak rated efficiency, after they undergo a natural run-in process (up to 25 hours operating time at maximum rated load). Catalog published power and torque figures are based upon the rated efficiency after the run-in is complete.
- Worm gears have naturally lower startup efficiencies compared to operating efficiencies. As input speed increases the enhanced hydrodynamic effects of the oil result in less tooth friction and increased worm gear efficiency.

IMPORTANT NOTE

Worm gear reducers applied in cold temperature service, may require increased motor power for the following reasons:

- Lower operating temperatures, cause lubrication viscosity to increase in both the gearbox and in the moving areas of the driven machine.
- Worm-gears have naturally lower start-up efficiencies compared to operating efficiencies.
- In extreme cases, one might need to consider increasing the motor power and lowering the oil viscosity

5. Optional Vent Kits

MINICASE® (SMI/SMID) worm gear units are designed to operate sealed or vented. As a standard the modular worm gear units are factory oil filled and supplied with oil plugs in the housing, making vent plugs optional. See user manual U14750.

NORD can supply an AUTOVENT™ or an open vent with each gear unit size. If a vent is desired the type must be specified at the time of order. Reducer vents are sealed with a transportation plug that must be removed prior to gear unit start-up.

Type	Transportation Seal	Installation	Part Number
AUTOVENT™	Included	Factory or Field site	66093510
Open Vent	None	Field Only	60693500
Open Vent	Included	Factory or Field site	22008004 (vent) 25308120 (gasket)

Unless noted by a seperate part number, vent kits include the housing gasket

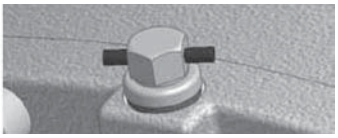

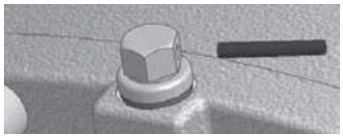

WARNING

To prevent build-up of excessive pressure, sealed vents must be activated as shown prior to gear unit start-up.

6. AUTOVENT™

The AUTOVENT™ helps prevent bearing and gear damage by behaving like a check valve to block the entry of foreign material (water, dust, corrosives, etc.). The breather opens at approximately 2-3 psi during operation and closes tightly as the gearbox cools. This option is perfect for humid conditions and wash-down environments, helping to maintain proper oil cleanliness, while reducing foaming and oxidation.

7. Open Vent

A typical gearbox industry open vent option can also be supplied by NORD. This option allows free exchange of air and does not build-up any back pressure inside the gear unit. This option is ideal for many operating conditions where the geared product is used in relatively clean and moisture-free environment.

8. When to Use a Sealed or a Vented Unit

There are many conditions that should be considered when deciding whether to use a sealed or vented unit.

1. If the duty cycle is intermittent, the run times are short, and any build-up of internal pressure or temperature is relatively low, the sealed unit option may be used.
2. If running continuous and under moderate to high load conditions, worm gears can generate higher operating temperatures and a build-up of internal pressure. In these instances a vent is strongly recommended. Consult NORD if operation at high load conditions is required.
3. If running continuous at 4-pole electric motor speeds (1800 rpm at 60 Hz) or higher, then a vent option is usually recommended. Consult NORD if operation at higher speeds is required.
4. Radial shaft seals produce a hydrodynamic pumping action to help push lubricant back into the gear unit, causing a small amount of ingested air and a small pressure increase (1-2 psi) that does not normally require a reducer vent; however when combined with continuous operation under high load (Condition 2), additional operating pressures will result and a vent should be used.
5. When the environment is contaminated with water, dirt, or other objects that may be ingested into the breather, increased wear of bearings, gearing, and lubrication breakdown can result. In these instances the sealed option or an AUTOVENT™ should be considered.

9. Maximum Oil Sump Temperature Limit

To prevent reducer overheating, the reducer's maximum oil-sump temperature limit must not be exceeded for prolonged periods of operation.

Oil Type	Maximum Oil Temperature Limit	
	NORD	AGMA 9005-D94
Synthetic	105°C (220°F)	107°C (225°F)

IMPORTANT NOTE

Use caution when specifying gear reducers for high temperature service. If there is concern about exceeding the safe operating temperature limit, please consult NORD to discuss alternatives.

10. Oil Viscosity

The viscosity rating determines the operating oil's resistance to shear under load conditions. Some important viscosity considerations include the following:

- Lightly loaded gears require lower viscosity oils than highly loaded gears.
- Lower viscosity will provide thin oil film, lower friction, higher mechanical efficiency, and better heat removal conditions.
- Higher viscosity will provide thicker oil film, and a better resistance to sliding wear, scuffing wear, and galling at high pressure.
- Higher operating temperatures will cause a reduc-tion in viscosity and lower operating temperatures, cause an increase in viscosity or a thickening of the oil.

The standard oil-fill is considered acceptable for most applications. In certain situations an oil viscosity change may be beneficial.

- If the gear unit is exposed to frequent high load conditions. A higher viscosity oil will have a higher film thickness offering better overall resistance to oil shear, sliding wear and scuffing wear in gears and roller element bearings.
- An oil viscosity correction or lubrication change may improve the overall performance when operating the gear unit at very low or high ambient temperature conditions.

IMPORTANT NOTE

The user should consult with their primary lubrication supplier before considering changes in oil type or viscosity.

11. Viscosity Index

Viscosity index helps quantify the rate of oil viscosity change with respect to temperature changes. Oils with a reasonably high viscosity index tend to be more stable in a changing temperature environment. The ability of an oil to maintain a small viscosity differential over the operating range of the gearbox provides a more consistent lubricating film and better wear performance.

Synthetic oils typically have a higher viscosity index than mineral oils and polyglycol oils tend to have an exceptionally high viscosity index compared to other synthetic oils like polyalphaolefin or ester based products.

FLEXBLOC™ (SI/SID SERIES) WORM GEAR LUBRICATION GUIDELINES

1. Importance of Proper Lubrication

Proper gearbox lubrication is essential in order to reduce friction, heat, and component wear. Lubricants reduce heat and wear by inserting a protective "fluid boundary" between mating parts and preventing direct metal to metal contact. Lubricants also help prevent corrosion and oxidation, minimize foam, improve heat transfer, optimize reducer efficiency, absorb shock loads and reduce noise.

2. Factory Oil-Filled / Maintence-Free

NORD modular worm gear units are inherently maintence-free, factory oil filled, and supplied with a high-quality, long-life, synthetic oil which is intend to be suitable for the life of the gear unit.

FLEXBLOC™ SI worm gear units are filled at time of assembly to a universal oil fill, allowing for many mounting position possibilities. See user manual U13300.

3. Standard oil type

FLEXBLOC™ (SI/SID) worm gear units are factory filled with synthetic poly glycol oil. Food-grade polyglycol oil is optional. The specific oil type and viscosity grade are displayed on the reducer nameplate. See user manual 11060 for specific FLEXBLOC™ (SI/SID) worm lubrication types and options.

STOP *HARMFUL SITUATION* **STOP**

In worm gears avoid using extreme pressure (EP) gear oils containing sulfur-phosphorous chemistries; these additives can react adversely with bronze worm gears, and accelerate wear.

4. Efficiency

It is important to consider the following, when ordering worm gears.

- Worm gears reach their peak rated efficiency, after they undergo a natural run-in process (up to 25 hours operating time at maximum rated load). Catalog published power and torque figures are based upon the rated efficiency after the run-in is complete.
- Worm gears have naturally lower startup efficiencies compared to operating efficiencies. As input speed increases the enhanced hydrodynamic effects of the oil result in less tooth friction and increased worm gear efficiency.

IMPORTANT NOTE

Worm gear reducers applied in cold temperature service, may require increased motor power for the following reasons:

- Lower operating temperatures, cause lubrication viscosity to increase in both the gearbox and in the moving areas of the driven machine.
- Worm-gears have naturally lower start-up efficiencies compared to operating efficiencies.
- In extreme cases, one might need to consider increasing the motor power and lowering the oil viscosity

5. Optional Vent Kits

FLEXBLOC™ (SI) worm gear units are designed to operate sealed or vented. As a standard the modular worm gear units are factory oil filled and supplied with oil plugs in the housing, making vent plugs optional. See user manual U14800 for vent locations.

NORD can supply an AUTOVENT™ or an open vent with each gear unit size. If a vent is desired the type must be specified at the time of order. Reducer vents are sealed with a transportation plug that must be removed prior to gear unit start-up.

Type	Transportation Seal	Installation	Part Number
AUTOVENT™	Included	Factory or Field site	66093510
Open Vent	None	Field Only	60693500
Open Vent	Included	Factory or Field site	22008004 (vent) 25308120 (gasket)

Unless noted by a seperate part number, vent kits include the housing gasket

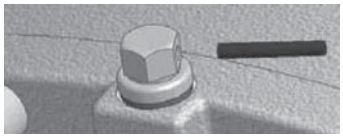

WARNING

To prevent build-up of excessive pressure, sealed vents must be activated as shown prior to gear unit start-up.

6. AUTOVENT™

The AUTOVENT™ helps prevent bearing and gear damage by behaving like a check valve to block the entry of foreign material (water, dust, corrosives, etc.). The breather opens at approximately 2-3 psi during operation and closes tightly as the gearbox cools. This option is perfect for humid conditions and wash-down environments, helping to maintain proper oil cleanliness, while reducing foaming and oxidation.

7. Open Vent

A typical gearbox industry open vent option can also be supplied by NORD. This option allows free exchange of air and does not build-up any back pressure inside the gear unit. This option is ideal for many operating conditions where the geared product is used in relatively clean and moisture-free environment.

FLEXBLOC™ (SI/SID SERIES) WORM GEAR LUBRICATION GUIDELINES

8. When to Use a Sealed or a Vented Unit

There are many conditions that should be considered when deciding whether to use a sealed or vented unit.

1. If the duty cycle is intermittent, the run times are short, and any build-up of internal pressure or temperature is relatively low, the sealed unit option may be used.
2. If running continuous and under moderate to high load conditions, worm gears can generate higher operating temperatures and a build-up of internal pressure. In these instances a vent is strongly recommended. Consult NORD if operation at high load conditions is required.
3. If running continuous at 4-pole electric motor speeds (1800 rpm at 60 Hz) or higher, then a vent option is usually recommended. Consult NORD if operation at higher speeds is required.
4. Radial shaft seals produce a hydrodynamic pumping action to help push lubricant back into the gear unit, causing a small amount of ingested air and a small pressure increase (1-2 psi) that does not normally require a reducer vent; however when combined with continuous operation under high load (Condition 2), additional operating pressures will result and a vent should be used.
5. When the environment is contaminated with water, dirt, or other objects that may be ingested into the breather, increased wear of bearings, gearing, and lubrication breakdown can result. In these instances the sealed option or an AUTOVENT™ should be considered.

9. Maximum Oil Sump Temperature Limit

To prevent reducer overheating, the reducer's maximum oil-sump temperature limit must not be exceeded for prolonged periods of operation.

Oil Type	Maximum Oil Temperature Limit	
	NORD	AGMA 9005-D94
Synthetic	105°C (220°F)	107°C (225°F)

IMPORTANT NOTE

Use caution when specifying gear reducers for high temperature service. If there is concern about exceeding the allowable safe operating temperatures, please consult NORD to discuss alternatives.

10. Oil Viscosity

The viscosity rating determines the operating oil's resistance to shear under load conditions. Some important viscosity considerations include the following:

- Lightly loaded gears require lower viscosity oils than highly loaded gears.
- Lower viscosity will provide thin oil film, lower friction, higher mechanical efficiency, and better heat removal conditions.
- Higher viscosity will provide thicker oil film, and better resistance to sliding wear, scuffing wear, and galling at high pressure.
- Higher operating temperatures will cause a reduction in viscosity and lower operating temperatures, cause an increase in viscosity or a thickening of the oil.

The standard oil-fill is considered acceptable for most applications. In certain situations an oil viscosity change may be beneficial.

- If the gear unit is exposed to frequent high load conditions. A higher viscosity oil will have a higher film thickness offering better overall resistance to oil shear, sliding wear and scuffing wear in gears and roller element bearings.
- An oil viscosity correction or lubrication change may improve the overall performance when operating the gear unit at very low or high ambient temperature conditions.

IMPORTANT NOTE

The user should consult with their primary lubrication supplier before considering changes in oil type or viscosity.

11. Viscosity Index

Viscosity index helps quantify the rate of oil viscosity change with respect to temperature changes. Oils with a reasonably high viscosity index tend to be more stable in a changing temperature environment. The ability of an oil to maintain a small viscosity differential over the operating range of the gearbox provides a more consistent lubricating film and better wear performance.

Synthetic oils typically have a higher viscosity index than mineral oils and polyglycol oils tend to have an exceptionally high viscosity index compared to other synthetic oils like polyalphaolefin or ester based products.

Installation Instructions

Sometimes NORD requires the use of an oil expansion chamber when the motor or reducer input is mounted vertically. Consult your NORD catalog for additional information and application considerations.

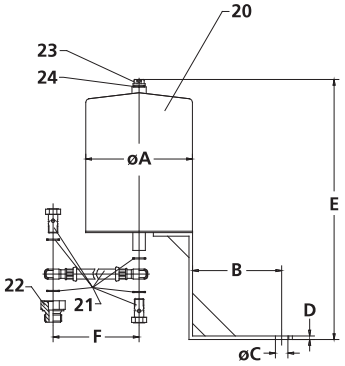

1. Secure the gear reducer in the proper mounting position for the application and remove the vent plug from the gear reducer. The hose assembly kit (21) will be fitted to the reducer using the housing port provided.
2. When using the larger 2.7 and 5.4 liter chambers, screw the adapter fitting (22) into the reducer housing port. Use all sealing gaskets provided.
3. Mount the overflow tank (20) at the highest location from the reducer, as permitted by the hose assembly kit (21). Typical mounting configurations are represented below. Use one of the input cover's mounting bolts, to mount the chamber support leg to the reducer.

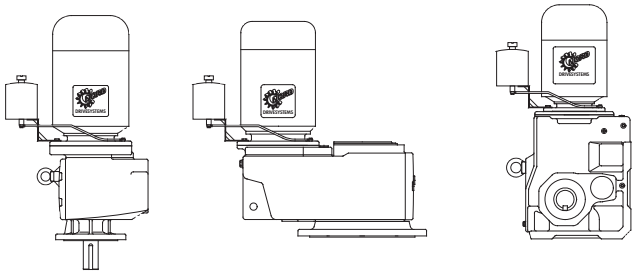

4. Be sure to use the proper fittings. Assemble one end of the vent-hose assembly (21) to bottom of the chamber and one-end to the reducer.
5. Secure the vent-plug (23) and gasket (24) that is supplied with the kit to the top of the expansion chamber.

STOP *HARMFUL SITUATION* STOP

Remove the protective "rubber element" from the supplied vent prior to use so that an open-vent is formed on top of the overflow tank. Avoid using a pressurized AUTOVENT™ breather on the overflow tank since this may create an undesired pressure-vacuum in the overflow tank.

Expansion Chamber Kit Dimensions & Parts List

Kit Part Number: 28390390 - 0.7 Liter Oil Expansion Chamber

Kit P/N	Ø A	B	Ø C	D	E	F	Units
28390390 (0.7 Liter)	3.94	1.97	0.53	0.20	8.50	19.69	inch
	100	50	13.5	5	216	500	mm

Item	Part Number	Description
20	28300390	Overflow Tank - 0.7 Liter
21	28310020	Flexible Vent Hose Assembly - Includes: Hose, metal gaskets & 2 Hollow Bolts (1 Bolt. - M12 X 1.5 and 1 Pc. - G1/4)
22	None	Adapter Fitting
23	22012004	Normal Style Vent Plug (M12 X 1.5, DIN 910)
24	25312150	Vent Plug Gasket (12 X 15.5 X 1.5)

Kit Part Number: 28390400 - 2.7 Liter Oil Expansion Chamber

Kit P/N	Ø A	B	Ø C	D	E	F	Units
28390400 (2.7 Liter)	5.91	4.92	0.69	0.20	15.22	27.56	inch
	150	125	17.5	5	386.5	700	mm

Item	Part Number	Description
20	28300400	Overflow Tank - 2.7 Liter
21	28310030	Flexible Vent Hose Assy - Includes: Hose, metal gaskets & 2 Hollow Bolts (2 Pcs. - G1/4)
22	22024030	Adapter Fitting (M24 X 1.5 to G1/4)
23	22012004	Normal Style Vent Plug (M12 X 1.5, DIN 910)
24	25312150	Vent Plug Gasket (12 X 15.5 X 1.5)

Kit Part Number: 28390410 - 5.4 Liter Oil Expansion Chamber

Kit P/N	Ø A	B	Ø C	D	E	F	Units
28390410 (5.4 Liter)	7.09	3.54	0.69	0.20	15.18	31.50	inch
	180	90	17.5	5	385.5	800	mm

Item	Part Number	Description
20	28300410	Overflow Tank - 5.4 Liter
21	28310040	Flexible Vent Hose Assy - Includes: Hose, metal gaskets & 2 Hollow Bolts (2 Pcs. - G1/4)
22	22030030	Adapter Fitting (M30 X 1.5 to G1/4)
23	22012004	Normal Style Vent Plug (M12 X 1.5, DIN 910)
24	25312150	Vent Plug Gasket (12 X 15.5 X 1.5)

Please see page 2 for gearbox compatability

Expansion Chamber Compatability Chart

Helical In-line	NORDBLOC™	NORDBLOC.1™	Clincher™	Helical-Bevel	Part Number	[lb]
SK 42/43 SK 52/53 SK 63	SK472/473 SK572/573 SK672/673 SK772/773 SK872/873 SK972/973	SK572.1/573.1* SK672.1/673.1*	SK 4282/4382 SK 5282/5382 SK 6382	SK 9042.1/9043.1 SK 9052.1/9053.1	28390390	11.0
SK 62 SK 72/73			SK 6282 SK 7282/7382	SK 9072.1 SK 9082.1	28390400	13.2
SK 82/83 SK 92/93 SK 102/103			SK 8282/8382	SK 9086.1 SK 9092.1 SK 9096.1	28390410	15.4

* Need to additionally order part #28390380 which is sub-assembly shown below.

Sub-Assembly P/N 28390380 for NORDBLOC®.1 gear units with M10x1 air vent.

❶	❷	❸	❹
1x DIN 7643 M10x1 283 00380	1x DIN 7603A Cu 10x16x1 253 10166	1x Ring 10x14x5 283 00370	1xDIN 9021 ø8,4 227 10840

Assembly of the expansion unit at the gear unit. Types SK 572.1/573.1, SK 672.1/673.1

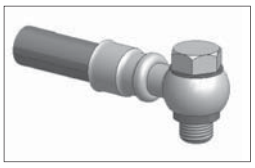

Vent Hose Sub-Assembly

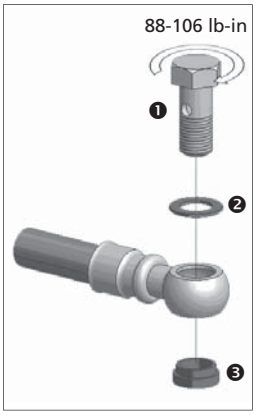

❹ For motor sizes 63, 71, 80, 90, 100 & 112

• Motor attachment bolt

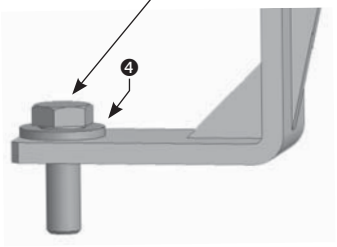

Motor Sizes 63, 71 & 80:
Assembly vent-hose to port as shown.

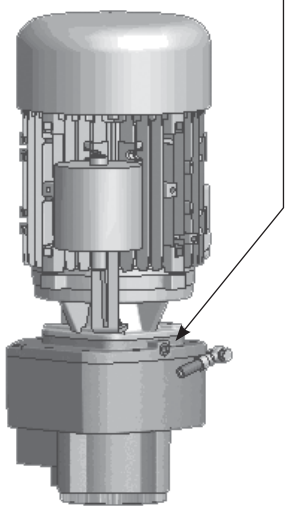

Motor Sizes 90,100 & 112:
Assembly vent-hose to port as shown.

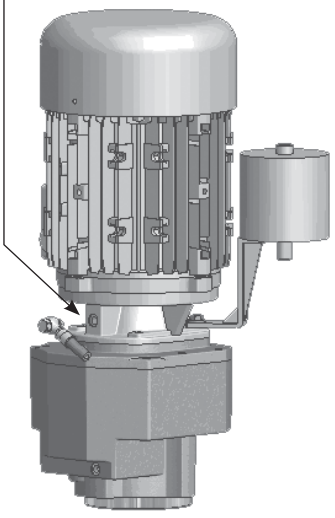

HELICAL & BEVEL REDUCER LUBRICATION TYPES

Lubrication Tables – Helical and Bevel Gear Units

Standard Oil Lubricants

ISO Viscosity	Oil Type	Ambient Temperature Range	Manufacturer Brand/Type	Notes
VG220	MIN-EP	0 to 40°C (32 to 104°)	Mobilgear 600XP220	♦❶
	PAO	-35 to 60°C (-31 to 140°F)	Mobil SHC630	♦❷
	FG	-5 to 40°C (23 to 104°F)	Fuchs FM220	♦

Optional Oil Lubricants

ISO Viscosity	Oil Type	Ambient Temperature Range	Manufacturer Brand/Type	Notes
VG460	PAO	-35 to 80°C (-31 to 176°F)	Mobil SHC 634	-
	FG-PAO	-35 to 80°C (-31 to 176°F)	Mobil SHC Cibus 460	-
VG220	FG-PAO	-35 to 60°C (-31 to 140°F)	Mobil SHC Cibus 220	-
VG150	PAO	-35 to 25°C (-31 to 77°F)	Mobil SHC629	-

Grease Options (applied to greased bearings and seal cavities)

NLGI Grade	Grease Type/Thickener	Ambient Temperature Range	Manufacturer Brand/Type	Notes
NLGI 2	Standard (Li-Complex)	-30 to 60°C (-22 to 140°F)	Mobil Grease XHP222	♦❶
	High Temp (Polyurea)	-40 to 80°C (-40 to 176°F)	Mobil / Polyrex EP 2	♦❷
	Food-Grade (Polyurea)	-30 to 40°C (-22 to 104°F)	Mobil SHC Polyrex 222	♦

♦ Stocked Lubricants

❶ Standard product on serviceable gear units

❷ Standard product on maintenance free gear units

IMPORTANT NOTES

- The "Ambient Temperature" is intended to be an operation guideline based upon the typical properties of all the lubricant. The viscosity and other properties of the lubricant change based upon load, speed, ambient conditions, and reducer operating temperatures. The user should consult with their lubrication supplier & NORD gear before considering changes in oil type or viscosity.
- To prevent reducer overheating, observe the maximum operating oil temperature limits:
  Mineral Oil: 80-85 °C (176 – 180 °F).
  Synthetic Oil: 105 °C (225 °F).
- In the following instances, please consult NORD for specific recommendations:
  - √ Gear units will operate in high ambient temperature conditions exceeding 40 °C (104 °F).
  - √ Gear units will operate in cold ambient temperature conditions approaching 0 °C (32 °F) or lower.
  - √ Lower than an ISO VG100 viscosity oil is being considered for a cold-temperature service.
  - √ Fluid grease is required for lubricating the gear unit.
- Observe the general lubrication guidelines outlined in user manual U10750.

Oil Formulation Codes

MIN-EP - Mineral Oil with EP Additive
PAO-EP - Synthetic Polyalphaolefin Oil with EP Additive
PAO - Synthetic Polyalphaolefin Oil
PG - Synthetic Polyglycol Oil
FG - Food-Grade Oil
FG-PAO - Food-Grade, Synthetic Poyalphaolefin Oil
FG-PG - Food-Grade, Synthetic Polyglycol Oil

Lubrication Notes

- Avoid using (EP) gear oils in worm gears that contain sulfur-phosphorous chemistries, as these additives can react adversely with bronze worm gears and accelerate wear.
- Food grade lubricants must be in compliance with FDA 212 CFR 178.3570 and qualify as a NSF-H1 lubricant. Please consult with lubrication manufacturer for more information.
- When making a lubrication change, check with the lubrication supplier to assure compatibility and to obtain recommended cleaning or flushing procedures.
- Do not to mix different oils with different additive packages or different base oil formulation types. Polyglycol (PG) oils are not miscible with other oil types and should never be mixed with mineral oil or polyalphaolefin (PAO) synthetic oil.

HELICAL & BEVEL REDUCER LUBRICATION TYPES

Oil Cross-reference Chart

ISO Viscosity	Oil Type	Ambient Temperature Range	Mobil	Shell	Castrol	FUCHS	KLÜBER LUBRICATION
VG150	MIN-EP	0 to 25°C (32 to 77°F)	Mobilgear 600XP150	Omala 150	Alpha SP150	Renolin EP150	Klüberoil GEM 1-150N
	PAO-EP	-30 to 25 °C (-22 to 77 °F)	Mobilgear SHC150	Omala HD 150	Alphasyn EP150	Gearmaster SYN150/NA	Klübersynth EG 4-150
	PAO	-30 to 25°C (-22 to 77°F)	Mobil SHC629	Omala RL 150	Alphasyn T150	N/A	Klübersynth GEM 4-150N
	PG	-25 to 25°C (-13 to 77°F)	Mobil Glygoyle 150	Tivela S150	Alphasyn PG150	Renolin PG150	Klübersynth GH 6-150
	FG	0 to 25°C (32 to 77°F)	Mobil DTE FM 150	N/A	N/A	N/A	N/A
	FG-PAO	-15 to 25°C (5 to 77°F)	Mobil SHC Cibus 150	N/A	N/A	Cassida GL150	Klüberoil 4 UH 1-150N
	FG-PG	-25 to 25°C (-13 to 77°F)	Mobil Glygoyle 150	N/A	N/A	N/A	Klübersynth UH1 6-150
VG220	MIN-EP	0 to 40°C (32 to 104°)	Mobilgear 600XP220	Omala 220	Alpha SP220	Renolin EP220	Klüberoil GEM 1-220N
	PAO-EP	-30 to 60 °C (-22 to 140 °F)	Mobilgear SHC220	Omala HD220	Alphasyn EP220	Gearmaster SYN220/NA	Klübersynth EG 4-220
	PAO	-30 to 60°C (-22 to 140°F)	Mobil SHC630	Omala RL220	Alphasyn T220	N/A	Klübersynth GEM 4-220N
	PG	-25 to 60°C (-13 to 140°F)	Mobil Glygoyle 220	Tivela S220	Alphasyn PG220	Renolin PG220	Klübersynth GH 6-220
	FG	0 to 40°C (32 to 104°F)	Mobil DTE FM 220	N/A	N/A	Fuchs FM220	N/A
	FG-PAO	-25 to 60°C (-13 to 140°F)	Mobil SHC Cibus 220	N/A	N/A	Cassida GL220	Klüberoil 4 UH 1-220N
	FG-PG	-25 to 60°C (-13 to 140°F)	Mobil Glygoyle 220	N/A	N/A	Cassida WG220	Klübersynth UH1 6-220
VG460	MIN-EP	0 to 40°C (32 to 104°F)	Mobilgear 600XP460	Omala 460	Alpha SP460	Renolin EP460	Klüberoil GEM 1-460N
	PAO-EP	-20 to 80°C (-4 to 176°F)	Mobilgear SHC460	Omala HD460	Alphasyn EP460	Gearmaster SYN460/NA	Klübersynth EG 4-460
	PAO	-20 to 80°C (-4 to 176°F)	Mobil SHC 634	Omala RL460	Alphasyn T460	N/A	Klübersynth GEM 4-460N
	PG	-20 to 80°C (-4 to 176°F)	Mobil Glygoyle 460	Tivela S460	Alphasyn PG460	N/A	Klübersynth GH 6-460
	FG	0 to 40°C (32 to 104°F)	Mobil DTE FM460	N/A	N/A	Fuchs FM460	N/A
	FG-PAO	-20 to 80°C (-4 to 176°F)	Mobil SHC Cibus 460	N/A	N/A	Cassida GL460	Klüberoil 4 UH 1-460N
	FG-PG	-20 to 80°C (-4 to 176°F)	Mobil Glygoyle 460	N/A	N/A	Cassida WG460	Klübersynth UH1 6-460

Low-end service temperature limit may vary for a specific lubricant; Please also see the important notes on Page 1.

HELICAL-WORM REDUCER LUBRICATION TYPES

Lubrication Tables – Helical Worm Gear Units

Standard Oil Lubricants

ISO Viscosity	Oil Type	Ambient Temperature Range	Manufacturer Brand/Type	Notes
VG680	PAO	0 to 60°C (32 to 140°F)	Mobil SHC636	♦

Optional Oil Lubricants

ISO Viscosity	Oil Type	Ambient Temperature Range	Manufacturer Brand/Type	Notes
VG460	PAO	0 to50°C (32 to 122°F)	Mobil SHC 634	-
	FG-PAO	0 to50°C (32 to 122°F)	Mobil SHC Cibus 460	-

Grease Options (applied to greased bearings and seal cavities)

NLGI Grade	Grease Type/Thickener	Ambient Temperature Range	Manufacturer Brand/Type	Notes
NLGI 2	Standard (Li-Complex)	-30 to 60°C (-22 to 140°F)	Mobil Grease XHP222	♦
	High Temp (Polyurea)	-40 to 80°C (-40 to 176°F)	Mobil / Polyrex EP 2	♦
	Food-Grade (Polyurea)	-30 to 40°C (-22 to 104°F)	Mobil SHC Polyrex 222	♦

♦ **Stocked Lubricants**

IMPORTANT NOTES

- The "Ambient Temperature" is intended to be an operation guideline based upon the typical properties of all the lubricant. The viscosity and other properties of the lubricant change based upon load, speed, ambient conditions, and reducer operating temperatures. The user should consult with their lubrication supplier & NORD Gear before considering changes in oil type or viscosity.
- To prevent reducer overheating, observe the maximum operating oil temperature limits:

  Synthetic Oil: 105 °C (225 °F).
- In the following instances, please consult NORD for specific recommendations:

√ Gear units will operate in high ambient temperature conditions exceeding 40 °C (104 °F).
√ Gear units will operate in cold ambient temperature conditions approaching 0 °C (32 °F) or lower.
√ Lower than an ISO VG100 viscosity oil is being considered for a cold-temperature service.
√ Fluid grease is required for lubricating the gear unit.

- Observe the general lubrication guidelines outlined in user manual U10770.

Oil Formulation Codes

PAO - Synthetic Polyalphaolefin Oil
PG - Synthetic Polyglycol Oil
FG-PAO - Food-Grade, Synthetic Poyalphaolefin Oil
FG-PG - Food-Grade, Synthetic Polyglycol Oil

Lubrication Notes

- Avoid using (EP) gear oils in worm gears that contain sulfur-phosphorous chemistries, as these additives can react adversely with bronze worm gears and accelerate wear.
- Food grade lubricants must be in compliance with FDA 212 CFR 178.3570 and qualify as a NSF-H1 lubricant. Please consult with lubrication manufacturer for more information.
- When making a lubrication change, check with the lubrication supplier to assure compatibility and to obtain recommended cleaning or flushing procedures.
- Do not to mix different oils with different additive packages or different base oil formulation types. Polyglycol (PG) oils are not miscible with other oil types and should never be mixed with mineral oil or polyalphaolefin (PAO) synthetic oil.

HELICAL-WORM REDUCER LUBRICATION TYPES

Oil Cross-reference Chart

ISO Viscosity	Oil Type	Ambient Temperature Range	Mobil	Shell	Castrol	FUCHS	KLÜBER LUBRICATION
VG 100	PAO	-35 to 25°C (-31 to 77°F)	Mobil SHC627	N/A	N/A	N/A	Klübersynth GEM 4-100N
	PG	-25 to 25°C (-13 to 77°F)	Mobil Glygoyle 100	N/A	N/A	N/A	Klübersynth GH 6-100
	FG-PAO	-35 to 25°C (-31 to 77°F)	Mobil SHC Cibus 100	N/A	N/A	N/A	Klüberoil 4 UH 1-100N
	FG-PG	-25 to 25°C (-13 to 77°F)	Mobil Glygoyle 100	N/A	N/A	N/A	Klübersynth UH1 6-100
VG150	PAO	-35 to 25°C (-31 to 77°F)	Mobil SHC629	Omala RL 150	Alphasyn T150	N/A	Klübersynth GEM 4-150N
	PG	-25 to 25°C (-13 to 77°F)	Mobil Glygoyle 150	Tivela S150	Alphasyn PG150	Renolin PG150	Klübersynth GH 6-150
	FG-PAO	-15 to 25°C (5 to 77°F)	Mobil SHC Cibus 150	N/A	N/A	Cassida GL150	Klüberoil 4 UH 1-150N
	FG-PG	-25 to 25°C (-13 to 77°F)	Mobil Glygoyle 150	N/A	N/A	N/A	Klübersynth UH1 6-150
VG220	PAO	-15 to 40°C (5 to 104°F)	Mobil SHC630	Omala RL220	Alphasyn T220	N/A	Klübersynth GEM 4-220N
	PG	-25 to 40°C (-13 to 104°F)	Mobil Glygoyle 220	Tivela S220	Alphasyn PG220	Renolin PG220	Klübersynth GH 6-220
	FG-PAO	-25 to 40°C (-13 to 104°F)	Mobil SHC Cibus 220	N/A	N/A	Cassida GL220	Klüberoil 4 UH 1-220N
	FG-PG	-25 to 40°C (-13 to 104°F)	Mobil Glygoyle 220	N/A	N/A	Cassida WG220	Klübersynth UH1 6-220
VG460	PAO	0 to50°C (32 to 122°F)	Mobil SHC 634	Omala RL460	Alphasyn T460	N/A	Klübersynth GEM 4-460N
	PG	0 to50°C (32 to 122°F)	Mobil Glygoyle 460	Tivela S460	Alphasyn PG460	N/A	Klübersynth GH 6-460
	FG-PAO	0 to50°C (32 to 122°F)	Mobil SHC Cibus 460	N/A	N/A	Cassida GL460	Klüberoil 4 UH 1-460N
	FG-PG	0 to50°C (32 to 122°F)	Mobil Glygoyle 460	N/A	N/A	Cassida WG460	Klübersynth UH1 6-460
VG680	PAO	0 to 60°C (32 to 140°F)	Mobil SHC636	Omala RL680	N/A	N/A	Klübersynth GEM 4-680N
	PG	0 to 60°C (32 to 140°F)	Mobil Glygoyle 680	Tivela S680	N/A	N/A	Klübersynth GH 6-680
	FG-PAO	0 to 60°C (32 to 140°F)	N/A	N/A	N/A	Cassida GL680	Klüberoil 4 UH1-680N
	FG-PG	0 to 60°C (32 to 140°F)	Mobil Glygoyle 680	N/A	N/A	Cassida WG680	Klübersynth UH1 6-680

Low-end service temperature limit may vary for a specific lubricant; Please also see the important notes on Page 1.

MINICASE® (SM SERIES) WORM GEAR LUBRICATION TYPES

Lubrication Tables – MINICASE® (SM series) Worm Gear Units

Standard Oil Lubricants

ISO Viscosity	Oil Type	Ambient Temperature Range	Manufacturer Brand/Type	Notes
VG680	PG	-20 to 40°C (-4 to 104°F)	Klübersynth GH 6-680	♦

Optional Oil Lubricants

ISO Viscosity	Oil Type	Ambient Temperature Range	Manufacturer Brand/Type	Notes
VG680	FG-PG	-25 to 80°C (-13 to 176°F)	Klübersynth UH1 6-680	♦

Grease Options (applied to greased bearings and seal cavities)

NLGI Grade	Grease Type/Thickener	Ambient Temperature Range	Manufacturer Brand/Type	Notes
NLGI 2	High Temp (Polyurea)	-25 to 80°C (-13 to 176°F)	Kluber / Petamo GHY133N	♦
	Food-Grade (Aluminum Complex)	-25 to 40°C (-13 to 104°F)	Kluber / Klubersynth UH1 14-151	♦

♦ **Stocked Lubricants**

IMPORTANT NOTES

- Observe the general lubrication guidelines in User Manual U17900.
- Ambient temperature range is a guideline only. The allowed operating temperature range for the gear unit is dependent upon assembly components used, their individual temperature limits, and the actual operating conditions.
- The selected oil type and viscosity is considered appropriate for most applications utilizing the specified NORD gear unit type. Different oil types or viscosity grades may be recommended if the gear unit is exposed to frequent high load conditions or operating under extreme low or high ambient temperature conditions.
- To prevent reducer overheating, observe the maximum operating oil temperature limits:
  Synthetic oil: 105 °C (225 °F).
- Consult NORD for recommendations in the following instances:
  √ The gear unit is exposed to frequent high load conditions.
  √ Ambient temperature conditions exceed 40 °C (104 °F) or approach 0 °C (32 °F) or lower.
  √ Fluid grease is being considered or specified for lubricating the gear unit.
  √ Lower than an ISO VG100 viscosity oil is being considered for a cold-temperature service.

Oil Formulation Codes

PAO - Synthetic Polyalphaolefin Oil
PG - Synthetic Polyglycol Oil
FG-PAO - Food-Grade, Synthetic Poyalphaolefin Oil
FG-PG - Food-Grade, Synthetic Polyglycol Oil

WARNING

- Avoid using (EP) gear oils in worm gears that contain sulfur-phosphorous chemistries, as these additives can react adversely with bronze worm gears and accelerate wear.
- Food grade lubricants must be in compliance with FDA 212 CFR 178.3570 and qualify as a NSF-H1 lubricant. Please consult with lubrication manufacturer for more information.
- When making a lubrication change, check with the lubrication supplier to assure compatibility and to obtain recommended cleaning or flushing procedures.
- Do not to mix different oils with different additive packages or different base oil formulation types. Polyglycol (PG) oils are not miscible with other oil types and should never be mixed with mineral or polyaolphaolefin (PAO) oils.

MINICASE® (SM SERIES) WORM GEAR LUBRICATION TYPES

Oil Cross-reference Chart

ISO Viscosity	Oil Type	Ambient Temperature Range	Mobil	Shell	Castrol	FUCHS	KLÜBER LUBRICATION
VG 100	PAO	-35 to 25°C (-31 to 77°F)	Mobil SHC627	N/A	N/A	N/A	Klübersynth GEM 4-100N
	PG	-25 to 25°C (-13 to 77°F)	Mobil Glygoyle 100	N/A	N/A	N/A	Klübersynth GH 6-100
	FG-PAO	-30 to 25°C (-22 to 77°F)	Mobil SHC Cibus 100	N/A	N/A	N/A	Klüberoil 4 UH 1-100N
	FG-PG	-25 to 25°C (-13 to 77°F)	Mobil Glygoyle 100	N/A	N/A	N/A	Klübersynth UH1 6-100
VG150	PAO	-35 to 25°C (-31 to 77°F)	Mobil SHC629	Omala RL 150	Alphasyn T150	N/A	Klübersynth GEM 4-150N
	PG	-25 to 25°C (-13 to 77°F)	Mobil Glygoyle 150	Tivela S150	Alphasyn PG150	Renolin PG150	Klübersynth GH 6-150
	FG-PAO	-15 to 25°C (5 to 77°F)	Mobil SHC Cibus 150	N/A	N/A	Cassida GL150	Klüberoil 4 UH 1-150N
	FG-PG	-25 to 25°C (-13 to 77°F)	Mobil Glygoyle 150	N/A	N/A	N/A	Klübersynth UH1 6-150
VG220	PAO	-35 to 40°C (-31 to 104°F)	Mobil SHC630	Omala RL220	Alphasyn T220	N/A	Klübersynth GEM 4-220N
	PG	-25 to 40°C (-13 to 104°F)	Mobil Glygoyle 220	Tivela S220	Alphasyn PG220	Renolin PG220	Klübersynth GH 6-220
	FG-PAO	-25 to 40°C (-13 to 104°F)	Mobil SHC Cibus 220	N/A	N/A	Cassida GL220	Klüberoil 4 UH 1-220N
	FG-PG	-25 to 40°C (-13 to 104°F)	Mobil Glygoyle 220	N/A	N/A	Cassida WG220	Klübersynth UH1 6-220
VG460	PAO	-20 to 40°C (-4 to 104°F)	Mobil SHC 634	Omala RL460	Alphasyn T460	N/A	Klübersynth GEM 4-460N
	PG	-20 to 40°C (-4 to 104°F)	Mobil Glygoyle 460	Tivela S460	Alphasyn PG460	N/A	Klübersynth GH 6-460
	FG-PAO	-5 to 40°C (23 to 104°F)	Mobil SHC Cibus 460	N/A	N/A	Cassida GL460	Klüberoil 4 UH 1-460N
	FG-PG	-5 to 40°C (23 to 104°F)	Mobil Glygoyle 460	N/A	N/A	Cassida WG460	Klübersynth UH1 6-460
VG680	PAO	-20 to 40°C (-4 to 104°F)	Mobil SHC636	Omala RL680	N/A	N/A	Klübersynth GEM 4-680N
	PG	-20 to 40°C (-4 to 104°F)	Mobil Glygoyle 680	Tivela S680	N/A	N/A	Klübersynth GH 6-680
	FG-PAO	-5 to 40°C (23 to 104°F)	N/A	N/A	N/A	Cassida GL680	Klüberoil 4 UH1-680N
	FG-PG	-25 to 80°C (-13 to 176°F)	Mobil Glygoyle 680	N/A	N/A	Cassida WG680	Klübersynth UH1 6-680

Low-end service temperature limit may vary for a specific lubricant; Please also see the important notes on Page 1.

MINICASE® (SMI/SMID) WORM GEAR LUBRICATION TYPES

Lubrication Tables – MINICASE® (SMI/SMID series) Worm Gear Units

Standard Oil Lubricants

ISO Viscosity	Oil Type	Ambient Temperature Range	Manufacturer Brand/Type	Notes
VG680	PG	-20 to 40°C (-4 to 104°F)	Klübersynth GH 6-680	♦

Optional Oil Lubricants

ISO Viscosity	Oil Type	Ambient Temperature Range	Manufacturer Brand/Type	Notes
VG680	FG-PG	-25 to 80°C (-13 to 176°F)	Klübersynth UH1 14-151	♦

Grease Options (applied to greased bearings and seal cavities)

NLGI Grade	Grease Type/Thickener	Ambient Temperature Range	Manufacturer Brand/Type	Notes
NLGI 2	High Temp (Polyurea)	-25 to 80°C (-13 to 176°F)	Kluber / Petamo GHY133N	♦
	Food-Grade (Aluminum Complex)	-25 to 40°C (-13 to 104°F)	Kluber / Klubersynth UH1 14-151	♦

♦ **Stocked Lubricants**

IMPORTANT NOTES

- Observe the general lubrication guidelines in User Manual U10800.
- Ambient temperature range is a guideline only. The allowed operating temperature range for the gear unit is dependent upon assembly components used, their individual temperature limits, and the actual operating conditions.
- The selected oil type and viscosity is considered appropriate for most applications utilizing the specified NORD gear unit type. Different oil types or viscosity grades may be recommended if the gear unit is exposed to frequent high load conditions or operating under extreme low or high ambient temperature conditions.
- To prevent reducer overheating, observe the maximum operating oil temperature limits:
  Synthetic oil: 105 °C (225 °F).
- Consult NORD for recommendations in the following instances:
  √ The gear unit is exposed to frequent high load conditions.
  √ Ambient temperature conditions exceed 40 °C (104 °F) or approach 0 °C (32 °F) or lower.
  √ Fluid grease is being considered or specified for lubricating the gear unit.
  √ Lower than an ISO VG100 viscosity oil is being considered for a cold-temperature service.

Oil Formulation Codes

PAO - Synthetic Polyalphaolefin Oil
PG - Synthetic Polyglycol Oil
FG-PAO - Food-Grade, Synthetic Poyalphaolefin Oil
FG-PG - Food-Grade, Synthetic Polyglycol Oil

WARNING

- Avoid using (EP) gear oils in worm gears that contain sulfur-phosphorous chemistries, as these additives can react adversely with bronze worm gears and accelerate wear.
- Food grade lubricants must be in compliance with FDA 212 CFR 178.3570 and qualify as a NSF-H1 lubricant. Please consult with lubrication manufacturer for more information.
- When making a lubrication change, check with the lubrication supplier to assure compatibility and to obtain recommended cleaning or flushing procedures.
- Do not to mix different oils with different additive packages or different base oil formulation types. Polyglycol (PG) oils are not miscible with other oil types and should never be mixed with mineral or polyaolphaolefin (PAO) oils.

MINICASE® (SMI/SMID) WORM GEAR LUBRICATION TYPES

Oil Cross-reference Chart

ISO Viscosity	Oil Type	Ambient Temperature Range	Mobil	Shell	Castrol	FUCHS	KLÜBER LUBRICATION
VG 100	PAO	-35 to 25°C (-31 to 77°F)	Mobil SHC627	N/A	N/A	N/A	Klübersynth GEM 4-100N
	PG	-25 to 25°C (-13 to 77°F)	Mobil Glygoyle 100	N/A	N/A	N/A	Klübersynth GH 6-100
	FG-PAO	-30 to 25°C (-22 to 77°F)	Mobil SHC Cibus 100	N/A	N/A	N/A	Klüberoil 4 UH 1-100N
	FG-PG	-25 to 25°C (-13 to 77°F)	Mobil Glygoyle 100	N/A	N/A	N/A	Klübersynth UH1 6-100
VG150	PAO	-35 to 25°C (-31 to 77°F)	Mobil SHC629	Omala RL 150	Alphasyn T150	N/A	Klübersynth GEM 4-150N
	PG	-25 to 25°C (-13 to 77°F)	Mobil Glygoyle 150	Tivela S150	Alphasyn PG150	Renolin PG150	Klübersynth GH 6-150
	FG-PAO	-15 to 25°C (5 to 77°F)	Mobil SHC Cibus 150	N/A	N/A	Cassida GL150	Klüberoil 4 UH 1-150N
	FG-PG	-25 to 25°C (-13 to 77°F)	Mobil Glygoyle 150	N/A	N/A	N/A	Klübersynth UH1 6-150
VG220	PAO	-35 to 40°C (-31 to 104°F)	Mobil SHC630	Omala RL220	Alphasyn T220	N/A	Klübersynth GEM 4-220N
	PG	-25 to 40°C (-13 to 104°F)	Mobil Glygoyle 220	Tivela S220	Alphasyn PG220	Renolin PG220	Klübersynth GH 6-220
	FG-PAO	-25 to 40°C (-13 to 104°F)	Mobil SHC Cibus 220	N/A	N/A	Cassida GL220	Klüberoil 4 UH 1-220N
	FG-PG	-25 to 40°C (-13 to 104°F)	Mobil Glygoyle 220	N/A	N/A	Cassida WG220	Klübersynth UH1 6-220
VG460	PAO	-20 to 40°C (-4 to 104°F)	Mobil SHC 634	Omala RL460	Alphasyn T460	N/A	Klübersynth GEM 4-460N
	PG	-20 to 40°C (-4 to 104°F)	Mobil Glygoyle 460	Tivela S460	Alphasyn PG460	N/A	Klübersynth GH 6-460
	FG-PAO	-5 to 40°C (23 to 104°F)	Mobil SHC Cibus 460	N/A	N/A	Cassida GL460	Klüberoil 4 UH 1-460N
	FG-PG	-5 to 40°C (23 to 104°F)	Mobil Glygoyle 460	N/A	N/A	Cassida WG460	Klübersynth UH1 6-460
VG680	PAO	-20 to 40°C (-4 to 104°F)	Mobil SHC636	Omala RL680	N/A	N/A	Klübersynth GEM 4-680N
	PG	-20 to 40°C (-4 to 104°F)	Mobil Glygoyle 680	Tivela S680	N/A	N/A	Klübersynth GH 6-680
	FG-PAO	-5 to 40°C (23 to 104°F)	N/A	N/A	N/A	Cassida GL680	Klüberoil 4 UH1-680N
	FG-PG	-25 to 80°C (-13 to 176°F)	Mobil Glygoyle 680	N/A	N/A	Cassida WG680	Klübersynth UH1 14-151

Low-end service temperature limit may vary for a specific lubricant; Please also see the important notes on Page 1.

FLEXBLOC™ (SI/SID SERIES) WORM GEAR LUBRICATION TYPES

Lubrication Tables – FLEXBLOC™ (SI/SID Series) Worm Gear Units

Standard Oil Lubricants

NORD uses a semi automated assembly process to produce the FLEXBLOC™ gear unit assemblies. During this process the gear units are factory filled in accordance with the following table.

Standard Oil Lubricants

ISO Viscosity	Oil Type	Ambient Temperature Range	Manufacturer Brand/Type	Notes
VG680	FG-PG	-25 to 80°C (-13 to 176°F)	Klübersynth UH1 6-680	Inch
	PG	-20 to 40°C (-4 to 104°F)	Klübersynth GH 6-680	Metric
VG220	FG-PG	-25 to 40°C (-13 to 104°F)	Klübersynth UH1 6-220	Inch
	PG	-25 to 40°C (-13 to 104°F)	Klübersynth GH 6-220	Metric

Grease Options (applied to greased bearings and seal cavities)

NLGI Grade	Grease Type/Thickener	Ambient Temperature Range	Manufacturer Brand/Type	Notes
NLGI 2	High Temp (Polyurea)	-25 to 80°C (-13 to 176°F)	Kluber / Petamo GHY133N	♦
	Food-Grade (Aluminum Complex)	-25 to 40°C (-13 to 104°F)	Kluber / Klubersynth UH1 14-151	♦

♦ **Stocked Lubricants**

IMPORTANT NOTES

- Observe the general lubrication guidelines in User Manual U10800.
- Ambient temperature range is a guideline only. The allowed operating temperature range for the gear unit is dependent upon assembly components used, their individual temperature limits, and the actual operating conditions.
- The selected oil type and viscosity is considered appropriate for most applications utilizing the specified NORD gear unit type. Different oil types or viscosity grades may be recommended if the gear unit is exposed to frequent high load conditions or operating under extreme low or high ambient temperature conditions.
- To prevent reducer overheating, observe the maximum operating oil temperature limits:
  Synthetic oil: 105 °C (225 °F).
- Consult NORD for recommendations in the following instances:
  √ The gear unit is exposed to frequent high load conditions.
  √ Ambient temperature conditions exceed 40 °C (104 °F) or approach 0 °C (32 °F) or lower.
  √ Fluid grease is being considered or specified for lubricating the gear unit.
  √ Lower than an ISO VG100 viscosity oil is being considered for a cold-temperature service.

Oil Formulation Codes

PAO - Synthetic Polyalphaolefin Oil
PG - Synthetic Polyglycol Oil
FG-PAO - Food-Grade, Synthetic Poyalphaolefin Oil
FG-PG - Food-Grade, Synthetic Polyglycol Oil

WARNING

- Avoid using (EP) gear oils in worm gears that contain sulfur-phosphorous chemistries, as these additives can react adversely with bronze worm gears and accelerate wear.
- Food grade lubricants must be in compliance with FDA 212 CFR 178.3570 and qualify as a NSF-H1 lubricant. Please consult with lubrication manufacturer for more information.
- When making a lubrication change, check with the lubrication supplier to assure compatibility and to obtain recommended cleaning or flushing procedures.
- Do not to mix different oils with different additive packages or different base oil formulation types. Polyglycol (PG) oils are not miscible with other oil types and should never be mixed with mineral or polyaolphaolefin (PAO) oils.

FLEXBLOC™ (SI/SID SERIES) WORM GEAR LUBRICATION TYPES

Oil Cross-reference Chart

ISO Viscosity	Oil Type	Ambient Temperature Range	Mobil	Shell	Castrol	FUCHS	KLÜBER LUBRICATION
VG 100	PAO	-35 to 25°C (-31 to 77°F)	Mobil SHC627	N/A	N/A	N/A	Klübersynth GEM 4-100N
	PG	-25 to 25°C (-13 to 77°F)	Mobil Glygoyle 100	N/A	N/A	N/A	Klübersynth GH 6-100
	FG-PAO	-30 to 25°C (-22 to 77°F)	Mobil SHC Cibus 100	N/A	N/A	N/A	Klüberoil 4 UH 1-100N
	FG-PG	-25 to 25°C (-13 to 77°F)	Mobil Glygoyle 100	N/A	N/A	N/A	Klübersynth UH1 6-100
VG150	PAO	-35 to 25°C (-31 to 77°F)	Mobil SHC629	Omala RL 150	Alphasyn T150	N/A	Klübersynth GEM 4-150N
	PG	-25 to 25°C (-13 to 77°F)	Mobil Glygoyle 150	Tivela S150	Alphasyn PG150	Renolin PG150	Klübersynth GH 6-150
	FG-PAO	-15 to 25°C (5 to 77°F)	Mobil SHC Cibus 150	N/A	N/A	Cassida GL150	Klüberoil 4 UH 1-150N
	FG-PG	-25 to 25°C (-13 to 77°F)	Mobil Glygoyle 150	N/A	N/A	N/A	Klübersynth UH1 6-150
VG220	PAO	-35 to 40°C (-31 to 104°F)	Mobil SHC630	Omala RL220	Alphasyn T220	N/A	Klübersynth GEM 4-220N
	PG	-25 to 40°C (-13 to 104°F)	Mobil Glygoyle 220	Tivela S220	Alphasyn PG220	Renolin PG220	Klübersynth GH 6-220
	FG-PAO	-25 to 40°C (-13 to 104°F)	Mobil SHC Cibus 220	N/A	N/A	Cassida GL220	Klüberoil 4 UH 1-220N
	FG-PG	-25 to 40°C (-13 to 104°F)	Mobil Glygoyle 220	N/A	N/A	Cassida WG220	Klübersynth UH1 6-220
VG460	PAO	-20 to 40°C (-4 to 104°F)	Mobil SHC 634	Omala RL460	Alphasyn T460	N/A	Klübersynth GEM 4-460N
	PG	-20 to 40°C (-4 to 104°F)	Mobil Glygoyle 460	Tivela S460	Alphasyn PG460	N/A	Klübersynth GH 6-460
	FG-PAO	-5 to 40°C (23 to 104°F)	Mobil SHC Cibus 460	N/A	N/A	Cassida GL460	Klüberoil 4 UH 1-460N
	FG-PG	-5 to 40°C (23 to 104°F)	Mobil Glygoyle 460	N/A	N/A	Cassida WG460	Klübersynth UH1 6-460
VG680	PAO	-20 to 40°C (-4 to 104°F)	Mobil SHC636	Omala RL680	N/A	N/A	Klübersynth GEM 4-680N
	PG	-20 to 40°C (-4 to 104°F)	Mobil Glygoyle 680	Tivela S680	N/A	N/A	Klübersynth GH 6-680
	FG-PAO	-5 to 40°C (23 to 104°F)	N/A	N/A	N/A	Cassida GL680	Klüberoil 4 UH1-680N
	FG-PG	-25 to 80°C (-13 to 176°F)	Mobil Glygoyle 680	N/A	N/A	Cassida WG680	Klübersynth UH1 6-680

Low-end service temperature limit may vary for a specific lubricant; Please also see the important notes on Page 1.

STANDARD IN-LINE FOOTED OIL FILL QUANTITIES

Standard In-line footed lubrication

All Standard In-line reducers are shipped from NORD with a pre-determined oil fill level in accordance to the specified reducer size and mounting position. When filling these gear units the oil must be measured and added until one establishes the proper fill quantity. For additional information please refer to the "Oil & vent plug locations" documentation for your specified gear unit

STOP *HARMFUL SITUATION* **STOP**

For mounting orientations other than shown please consult NORD Gear. Reducer modifications may be required.

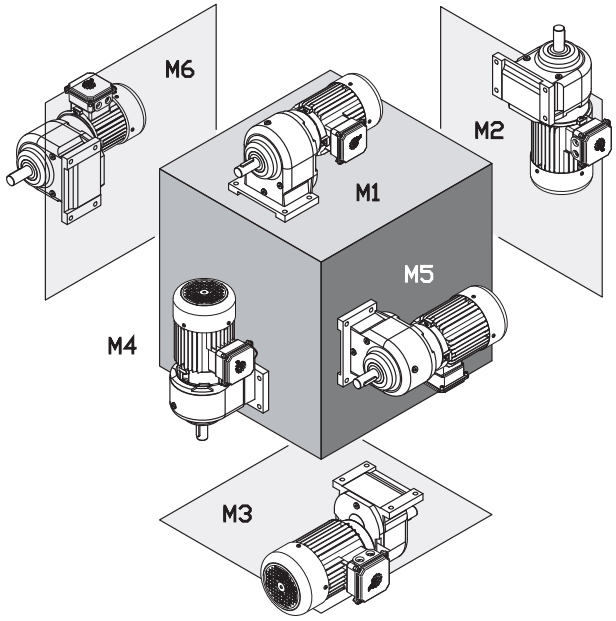

Type	M1		M2		M3		M4		M5		M6	
	Quarts	Liters	Quarts	Liters	Quarts	Liters	Quarts	Liters	Quarts	Liters	Quarts	Liters
SK0 / SK05	0.14	0.13	0.23	0.22	0.14	0.13	0.23	0.22	0.14	0.13	0.14	0.13
SK000	0.25	0.24	0.42	0.40	0.25	0.24	0.42	0.40	0.25	0.24	0.25	0.24
SK01 / SK015	0.23	0.22	0.40	0.38	0.23	0.22	0.40	0.38	0.23	0.22	0.23	0.22
SK010 / SK0105	0.40	0.38	0.63	0.60	0.40	0.38	0.63	0.60	0.40	0.38	0.40	0.38
SK20 / SK205	0.58	0.55	1.06	1.00	0.58	0.55	1.06	1.00	0.58	0.55	0.58	0.55
SK200 / SK2005	0.85	0.80	1.37	1.30	0.85	0.80	1.37	1.30	0.85	0.80	0.85	0.80
SK25 / SK255	0.53	0.50	1.06	1.00	0.53	0.50	1.06	1.00	0.53	0.50	0.53	0.50
SK250 / SK2505	1.27	1.20	1.59	1.50	1.27	1.20	1.59	1.50	1.27	1.20	1.27	1.20
SK30 / SK305	0.95	0.90	1.37	1.30	0.95	0.90	1.37	1.30	0.95	0.90	0.95	0.90
SK300 / SK3005	1.27	1.20	2.11	2.00	1.27	1.20	2.11	2.00	1.27	1.20	1.27	1.20
SK33 / SK335	1.06	1.00	1.69	1.60	1.06	1.00	1.69	1.60	1.06	1.00	1.06	1.00
SK330 / SK3305	1.90	1.80	2.96	2.80	1.90	1.80	2.96	2.80	1.90	1.80	1.90	1.80

STANDARD IN-LINE FLANGED OIL FILL QUANTITIES

Standard In-line flanged lubrication

All Standard In-line reducers are shipped from NORD with a pre-determined oil fill level in accordance to the specified reducer size and mounting position. When filling these gear units the oil must be measured and added until one establishes the proper fill quantity. For additional information please refer to the "Oil & vent plug locations" documentation for your specified gear unit

STOP *HARMFUL SITUATION* STOP

For mounting orientations other than shown please consult NORD Gear. Reducer modifications may be required.

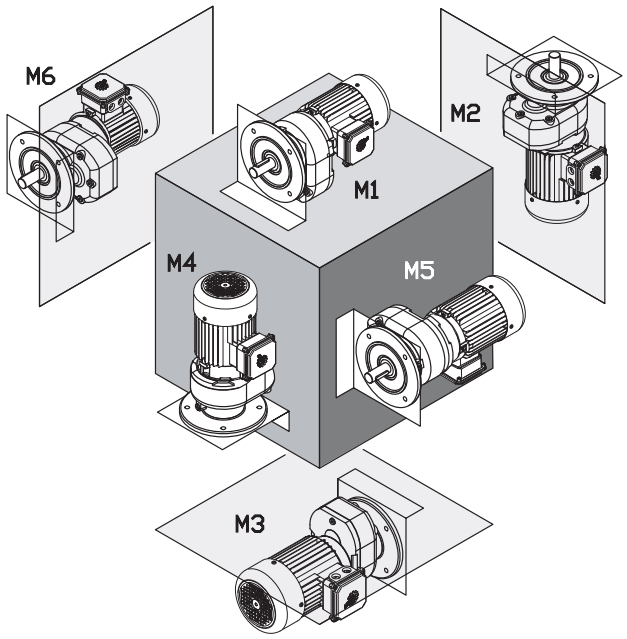

Type	M1		M2		M3		M4		M5		M6	
	Quarts	Liters	Quarts	Liters	Quarts	Liters	Quarts	Liters	Quarts	Liters	Quarts	Liters
SK0 F / SK05 F	0.14	0.13	0.23	0.22	0.14	0.13	0.23	0.22	0.14	0.13	0.14	0.13
SK000 F	0.25	0.24	0.43	0.41	0.25	0.24	0.43	0.41	0.25	0.24	0.25	0.24
SK01 F	0.23	0.22	0.40	0.38	0.23	0.22	0.40	0.38	0.23	0.22	0.23	0.22
SK010 F / SK0105 F	0.37	0.35	0.69	0.65	0.37	0.35	0.78	0.74	0.37	0.35	0.37	0.35
SK20 F	0.37	0.35	0.63	0.60	0.37	0.35	0.63	0.60	0.37	0.35	0.37	0.35
SK200 F / SK2005 F	0.69	0.65	1.00	0.95	0.69	0.65	1.16	1.10	0.69	0.65	0.69	0.65
SK25 F	0.53	0.50	1.06	1.00	0.53	0.50	1.06	1.00	0.53	0.50	0.53	0.50
SK250 F / SK2505 F	0.95	0.90	1.48	1.40	0.95	0.90	1.69	1.60	0.95	0.90	0.95	0.90
SK30 F	0.74	0.70	1.16	1.10	0.74	0.70	1.16	1.10	0.74	0.70	0.74	0.70
SK300 F / SK3005 F	1.32	1.25	1.59	1.50	1.32	1.25	1.90	1.80	1.32	1.25	1.32	1.25
SK33 F / SK335F	1.06	1.00	1.59	1.50	1.06	1.00	1.59	1.50	1.06	1.00	1.06	1.00
SK330 F / SK3305 F	1.69	1.60	2.64	2.50	1.69	1.60	3.06	2.90	1.69	1.60	1.69	1.60

HELICAL IN-LINE FOOTED OIL FILL QUANTITIES

Helical In-line footed lubrication

The following NORD Gear reducers are shipped from the factory with a pre-determined oil fill level in accordance to the specified reducer size and mounting position. For additional information, please refer to the "Oil Plug & Vent Locations" documentation for your gear unit.

STOP *HARMFUL SITUATION* **STOP**

Actual oil volume can vary slightly depending upon the gear case size, mounting and ratio. Prior to commissioning the reducer, check the oil-fill level using the reducer's oil level plug and drain or add addition oil as needed. The minimum acceptable oil level is 0.15 in (4mm) below the oil level hole.

For mounting orientations other than shown please consult NORD Gear. Reducer modifications may be required.

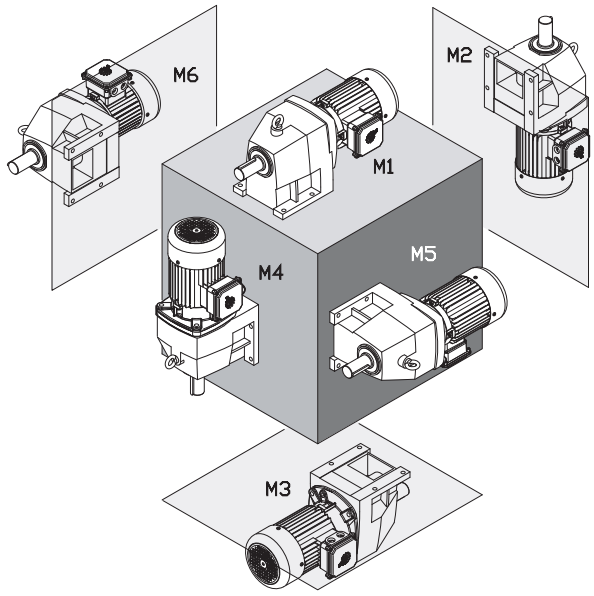

Type	M1		M2		M3		M4		M5		M6	
	Quarts	Liters	Quarts	Liters	Quarts	Liters	Quarts	Liters	Quarts	Liters	Quarts	Liters
SK02	0.21	0.20	0.79	0.75	0.79	0.75	0.69	0.65	0.63	0.60	0.63	0.60
SK 03	0.37	0.35	1.27	1.20	0.85	0.80	1.06	1.00	0.74	0.70	0.74	0.70
SK11E	0.26	0.25	0.53	0.50	0.69	0.65	0.53	0.50	0.42	0.40	0.42	0.40
SK12	0.26	0.25	0.85	0.80	0.90	0.85	0.79	0.75	0.58	0.55	0.58	0.55
SK 13	0.79	0.75	1.37	1.30	1.37	1.30	1.27	1.20	0.79	0.75	0.79	0.75
SK21E	0.63	0.60	1.27	1.20	1.37	1.30	1.06	1.00	1.06	1.00	1.06	1.00
SK22	0.53	0.50	2.01	1.90	2.22	2.10	1.90	1.80	1.48	1.40	1.48	1.40
SK 23	1.27	1.20	2.11	2.00	2.01	1.90	2.54	2.40	1.69	1.60	1.69	1.60
SK31E	1.16	1.10	2.11	2.00	2.32	2.20	1.80	1.70	1.59	1.50	1.59	1.50
SK32	0.95	0.90	2.64	2.50	3.28	3.10	3.28	3.10	2.11	2.00	2.11	2.00
SK 33N	1.85	1.75	3.17	3.00	3.59	3.40	4.23	4.00	2.43	2.30	2.43	2.30
SK41E	1.69	1.60	2.75	2.60	3.49	3.30	2.96	2.80	2.43	2.30	2.43	2.30
SK42	1.48	1.40	4.76	4.50	4.76	4.50	4.54	4.30	3.38	3.20	3.38	3.20
SK 43	3.17	3.00	5.92	5.60	5.49	5.20	6.97	6.60	3.80	3.60	3.80	3.60
SK51E	1.90	1.80	3.70	3.50	4.33	4.10	4.23	4.00	4.02	3.80	4.02	3.80
SK52	2.64	2.50	7.40	7.00	7.19	6.80	7.19	6.80	5.39	5.10	5.39	5.10
SK 53	4.76	4.50	9.19	8.70	8.14	7.70	9.19	8.70	6.34	6.00	6.34	6.00
SK62	6.87	6.50	15.9	15.0	13.7	13.0	16.9	16.0	15.9	15.0	15.9	15.0
SK 63	13.7	13.0	15.3	14.5	15.3	14.5	16.9	16.0	13.7	13.0	13.7	13.0
SK72	10.6	10.0	24.3	23.0	19.0	18.0	27.5	26.0	24.3	23.0	24.3	23.0
SK 73	21.7	20.5	21.1	20.0	23.8	22.5	28.5	27.0	21.1	20.0	21.1	20.0
SK82	14.8	14.0	37.0	35.0	28.5	27.0	46.5	44.0	33.8	32.0	33.8	32.0
SK 83	31.7	30.0	32.8	31.0	35.9	34.0	39.1	37.0	34.9	33.0	34.9	33.0
SK92	26.4	25.0	77.0	73.0	49.7	47.0	80.0	76.0	55.0	52.0	55.0	52.0
SK 93	56.0	53.0	74.0	70.0	62.0	59.0	76.0	72.0	52.0	49.0	52.0	49.0
SK102	38.0	36.0	84.0	79.0	70.0	66.0	108	102	75.0	71.0	75.0	71.0
SK 103	78.0	74.0	75.0	71.0	78.0	74.0	102	97.0	71.0	67.0	71.0	67.0

HELICAL IN-LINE FLANGED OIL FILL QUANTITIES

Helical In-line flanged lubrication

The following NORD Gear reducers are shipped from the factory with a pre-determined oil fill level in accordance to the specified reducer size and mounting position. For additional information, please refer to the "Oil Plug & Vent Locations" documentation for your gear unit.

STOP *HARMFUL SITUATION* **STOP**

Actual oil volume can vary slightly depending upon the gear case size, mounting and ratio. Prior to commissioning the reducer, check the oil-fill level using the reducer's oil level plug and drain or add addition oil as needed. The minimum acceptable oil level is 0.15 in (4mm) below the oil level hole.

For mounting orientations other than shown please consult NORD Gear. Reducer modifications may be required.

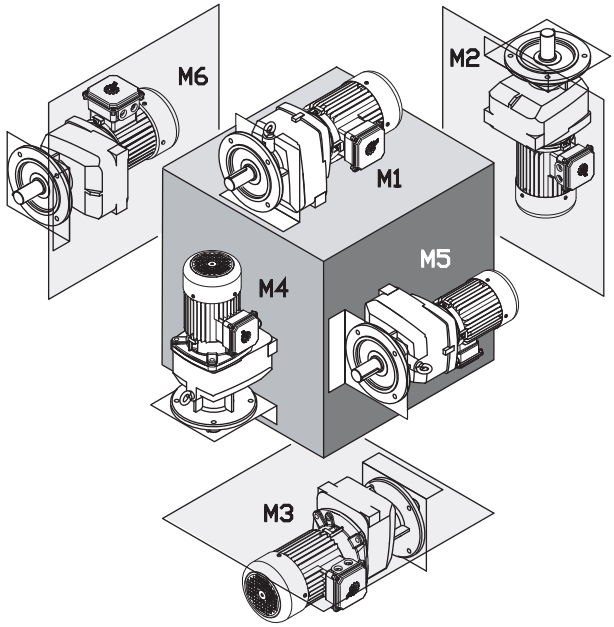

Type	M1		M2		M3		M4		M5		M6	
	Quarts	Liters	Quarts	Liters	Quarts	Liters	Quarts	Liters	Quarts	Liters	Quarts	Liters
SK02F	0.26	0.25	0.74	0.70	0.74	0.70	0.74	0.70	0.53	0.50	0.53	0.50
SK 03 F	0.58	0.55	1.00	0.95	0.95	0.90	1.27	1.20	0.95	0.90	0.95	0.90
SK11E F	0.32	0.30	0.53	0.50	0.53	0.50	0.48	0.45	0.42	0.40	0.42	0.40
SK12F	0.37	0.35	0.90	0.85	0.95	0.90	0.95	0.90	0.74	0.70	0.74	0.70
SK 13 F	1.06	1.00	1.37	1.30	1.37	1.30	1.27	1.20	1.06	1.00	1.06	1.00
SK21E F	0.53	0.50	1.27	1.20	1.37	1.30	0.63	0.60	0.95	0.90	0.95	0.90
SK22F	0.74	0.70	1.90	1.80	1.90	1.80	1.90	1.80	1.48	1.40	1.48	1.40
SK 23 F	1.48	1.40	2.75	2.60	2.43	2.30	2.96	2.80	2.96	2.80	2.96	2.80
SK31E F	0.95	0.90	1.90	1.80	1.74	1.65	1.37	1.30	1.32	1.25	1.32	1.25
SK32F	1.27	1.20	2.96	2.80	3.28	3.10	3.28	3.10	2.32	2.20	2.32	2.20
SK 33N F	2.32	2.20	3.17	3.00	3.59	3.40	4.44	4.20	2.43	2.30	2.43	2.30
SK41E F	1.27	1.20	2.43	2.30	2.85	2.70	2.11	2.00	2.01	1.90	2.01	1.90
SK42F	1.90	1.80	4.65	4.40	4.76	4.50	4.23	4.00	3.91	3.70	3.91	3.70
SK 43 F	3.70	3.50	6.02	5.70	5.28	5.00	6.45	6.10	4.33	4.10	4.33	4.10
SK51E F	1.90	1.80	3.70	3.50	4.33	4.10	3.17	3.00	4.02	3.80	4.02	3.80
SK52F	3.17	3.00	7.19	6.80	6.55	6.20	7.82	7.40	5.92	5.60	5.92	5.60
SK 53 F	5.49	5.20	8.88	8.40	7.40	7.00	9.40	8.90	7.08	6.70	7.08	6.70
SK 62 F	7.40	7.00	15.9	15.0	14.8	14.0	19.5	18.5	16.9	16.0	16.9	16.0
SK 63 F	14.3	13.5	14.8	14.0	16.4	15.5	19.0	18.0	14.8	14.0	14.8	14.0
SK 72 F	10.6	10.0	24.3	23.0	19.5	18.5	29.6	28.0	24.3	23.0	24.3	23.0
SK 73 F	23.2	22.0	23.8	22.5	24.3	23.0	29.1	27.5	21.1	20.0	21.1	20.0
SK 82 F	15.9	15.0	39.1	37.0	30.6	29.0	47.6	45.0	36.5	34.5	36.5	34.5
SK 83 F	32.8	31.0	35.9	34.0	37.0	35.0	42.3	40.0	35.9	34.0	35.9	34.0
SK 92 F	27.5	26.0	77.0	73.0	49.7	47.0	82.0	78.0	55.0	52.0	55.0	52.0
SK 93 F	56.0	53.0	74.0	70.0	62.0	59.0	78.0	74.0	52.0	49.0	52.0	49.0
SK 102 F	42.3	40.0	86.0	81.0	70.0	66.0	110	104	76.0	72.0	76.0	72.0
SK 103 F	73.0	69.0	82.0	78.0	82.0	78.0	105	99.0	71.0	67.0	71.0	67.0

CLINCHER™ OIL FILL QUANTITIES

CLINCHER™ lubrication

Unless otherwise noted below, the following NORD Gear reducers are shipped from the factory with a pre-determined oil fill level in accordance to the specified reducer size and mounting position. For additional information, please refer to the "Oil Plug & Vent Locations" documentation for your gear unit.

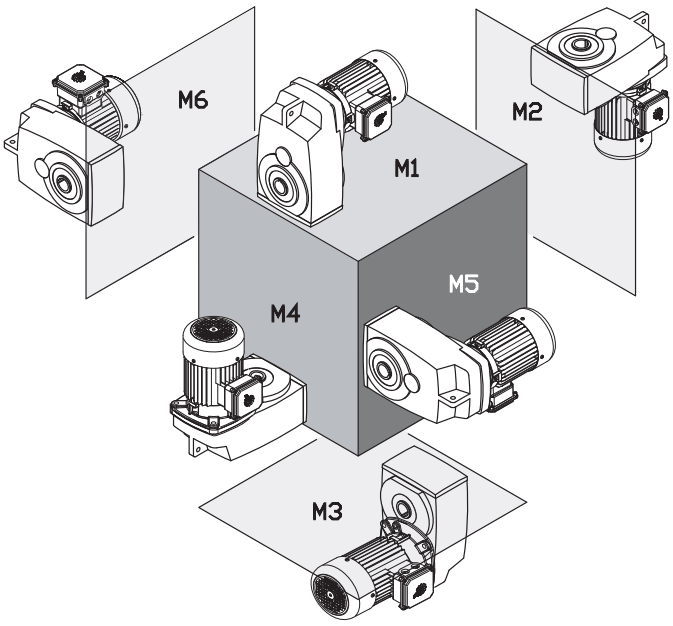

STOP *HARMFUL SITUATION* **STOP**

Actual oil volume can vary slightly depending upon the gear case size, mounting and ratio. Prior to commissioning the reducer, check the oil-fill level using the reducer's oil level plug and drain or add addition oil as needed. The minimum acceptable oil level is 0.15 in (4mm) below the oil level hole.

For mounting orientations other than shown please consult NORD Gear. Reducer modifications may be required.

Type	M1		M2		M3		M4		M5		M6	
	Quarts	Liters	Quarts	Liters	Quarts	Liters	Quarts	Liters	Quarts	Liters	Quarts	Liters
SK 0182NB	0.42	0.40	0.58	0.55	0.58	0.55	0.42	0.40	0.42	0.40	0.42	0.40
SK 0282NB	0.74	0.70	1.16	1.10	0.85	0.80	1.16	1.10	0.95	0.90	0.95	0.90
SK 1282	1.00	0.95	1.37	1.30	0.95	0.90	1.37	1.30	1.06	1.00	1.06	1.00
SK 1382NB	1.48	1.40	2.43	2.30	2.32	2.20	2.32	2.20	2.11	2.00	2.11	2.00
SK 1382	1.53	1.45	1.69	1.60	1.22	1.15	1.80	1.70	1.16	1.10	1.16	1.10
SK 2282	1.80	1.70	2.43	2.30	1.80	1.70	2.32	2.20	2.01	1.90	2.01	1.90
SK 2382	2.43	2.30	2.85	2.70	2.22	2.10	3.38	3.20	2.11	2.00	2.11	2.00
SK 3282	2.96	2.80	4.23	4.00	3.49	3.30	4.02	3.80	3.17	3.00	3.17	3.00
SK 3382	4.02	3.80	4.54	4.30	3.17	3.00	5.81	5.50	3.17	3.00	3.17	3.00
SK 4282	4.44	4.20	5.71	5.40	4.65	4.40	5.28	5.00	4.44	4.20	4.44	4.20
SK 4382	6.45	6.10	7.29	6.90	5.18	4.90	8.88	8.40	5.28	5.00	5.28	5.00
SK 5282	7.93	7.50	9.30	8.80	7.93	7.50	9.30	8.80	7.61	7.20	7.61	7.20
SK 5382	13.2	12.5	12.7	12.0	7.08	6.70	14.8	14.0	8.77	8.30	8.77	8.30
SK 6282	18.0	17.0	16.4	15.5	13.2	12.5	18.5	17.5	11.6	11.0	14.8	14.0
SK 6382	16.9	16.0	13.7	13.0	10.6	10.0	19.0	18.0	14.8	14.0	13.2	12.5
SK 7282	26.9	25.5	22.2	21.0	21.7	20.5	28.5	27.0	16.9	16.0	22.2	21.0
SK 7382	23.2	22.0	22.2	21.0	16.9	16.0	26.4	25.0	24.3	23.0	23.2	22.0
SK 8282	39.6	37.5	34.9	33.0	32.2	30.5	46.5	44.0	32.8	31.0	32.8	31.0
SK 8382	36.5	34.5	34.3	32.5	26.4	25.0	40.2	38.0	37.0	35.0	31.7	30.0
SK 9282	79.0	75.0	74.0	70.0	59.0	56.0	85.0 †	80.0 †	69.0	65.0	62.0	59.0
SK 9382	78.0	74.0	74.0	70.0	45.4	43.0	79.0 †	75.0 †	69.0	65.0	63.0	60.0
SK 10282	95.0	90.0	95.0	90.0	42.3	40.0	95.0 †	90.0 †	63.0	60.0	87.0	82.0
SK 10382	90.0	85.0	95.0	90.0	77.0	73.0	106 †	100 †	85	80.0	85.0	80.0
SK 11282*	174	165	169	160	153	145	206 †	195 †	106	100	148	140
SK 11382*	169	160	164	155	148	140	222 †	210 †	164	155	143	135
SK 12382*	169	160	164	155	148	140	**222 †**	**210 †**	164	155	143	135

*** For shipping purposes the larger Clincher™ gear units are supplied without oil.**

† Oil quantities shown are for the gearbox only. When the OT (oil tank) option is used, the oil must be filled to the level shown on the dipstick which is located inside of the oil tank. Even when the gear unit is filled by NORD, the user MUST add more oil untill the oil is filled to the proper level.

90.1 HELICAL-BEVEL FOOTED OIL FILL QUANTITIES

90.1 Helical-bevel footed lubrication

Unless otherwise noted below, the following NORD Gear reducers are shipped from the factory with a pre-determined oil fill level in accordance to the specified reducer size and mounting position. For additional information, please refer to the "Oil Plug & Vent Locations" documentation for your gear unit.

HARMFUL SITUATION

Actual oil volume can vary slightly depending upon the gear case size, mounting and ratio. Prior to commissioning the reducer, check the oil-fill level using the reducer's oil level plug and drain or add addition oil as needed. The minimum acceptable oil level is 0.15 in (4mm) below the oil level hole.

For mounting orientations other than shown please consult NORD Gear. Reducer modifications may be required.

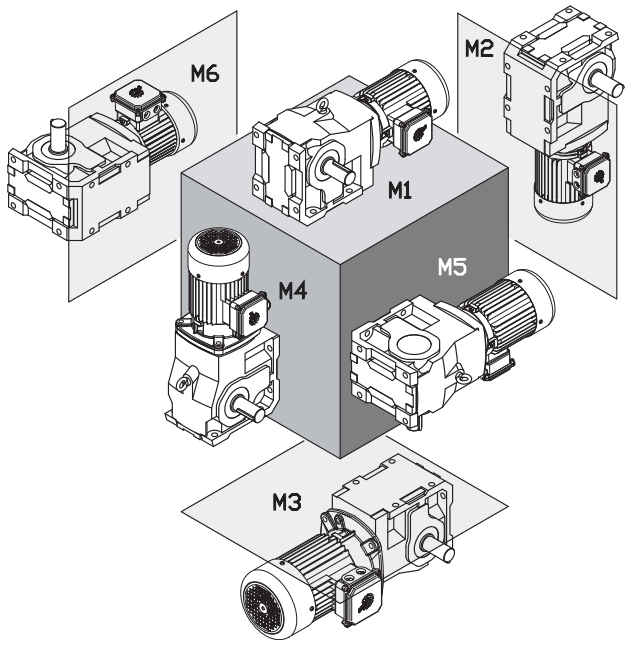

Type	M1		M2		M3		M4		M5		M6	
	Quarts	Liters	Quarts	Liters	Quarts	Liters	Quarts	Liters	Quarts	Liters	Quarts	Liters
SK 9012.1	0.74	0.70	1.80	1.70	2.01	1.90	2.22	2.10	1.16	1.10	1.59	1.50
SK 9013.1	1.43	1.35	2.22	2.10	2.27	2.15	2.91	2.75	1.06	1.00	1.90	1.80
SK 9016.1	0.74	0.70	1.80	1.70	2.01	1.90	2.22	2.10	1.16	1.10	1.59	1.50
SK 9017.1	1.37	1.30	2.11	2.00	2.22	2.10	2.85	2.70	1.06	1.00	1.80	1.70
SK 9022.1	1.37	1.30	3.06	2.90	3.49	3.30	4.02	3.80	1.80	1.70	2.96	2.80
SK 9023.1	2.32	2.20	3.38	3.20	3.80	3.60	4.97	4.70	2.32	2.20	3.06	2.90
SK 9032.1	1.90	1.80	5.71	5.40	6.45	6.10	7.19	6.80	3.17	3.00	4.86	4.60
SK 9033.1	3.28	3.10	6.02	5.70	6.66	6.30	8.45	8.00	3.59	3.40	5.07	4.80
SK 9042.1	2.85	2.70	9.51	9.00	10.6	10.0	11.3	10.7	5.49	5.20	8.14	7.70
SK 9043.1	5.28	5.00	10.7	10.1	11.6	11.0	14.1	13.3	6.02	5.70	8.56	8.10
SK 9052.1	6.87	6.50	16.9	16.0	20.1	19.0	22.7	21.5	11.6	11.0	16.4	15.5
SK 9053.1	10.6	10.0	18.0	17.0	21.1	20.0	25.9	24.5	12.2	11.5	17.4	16.5
SK 9062.1	10.6	10.0	29.1	27.5	33.8	32.0	38.0	36.0	19.0	18.0	25.4	24.0
SK 9072.1	10.6	10.0	29.1	27.5	33.8	32.0	38.0	36.0	19.0	18.0	25.4	24.0
SK 9082.1	18.0	17.0	54.0	52.0	66.0	63.0	76.0	72.0	34.9	33.0	49.1	46.5
SK 9086.1	30.6	29.0	77.0	73.0	90.0	85.0	108	102	51.0	48.0	66.0	62.0
SK 9092.1	43.3	41.0	166	157	180	170	182	172	85.0	80.0	95.0	90.0
SK 9096.1	74.0	70.0	198	187	205	194	268	254	115	109	161	152

Oil Levels shown apply to base models and gear units ending in LX, AX, & VX.

90.1 HELICAL-BEVEL FLANGED OIL FILL QUANTITIES

90.1 Helical-bevel flanged lubrication

Unless otherwise noted below, the following NORD Gear reducers are shipped from the factory with a pre-determined oil fill level in accordance to the specified reducer size and mounting position. For additional information, please refer to the "Oil Plug & Vent Locations" documentation for your gear unit.

STOP *HARMFUL SITUATION* **STOP**

Actual oil volume can vary slightly depending upon the gear case size, mounting and ratio. Prior to commissioning the reducer, check the oil-fill level using the reducer's oil level plug and drain or add addition oil as needed. The minimum acceptable oil level is 0.15 in (4mm) below the oil level hole.

For mounting orientations other than shown please consult NORD Gear. Reducer modifications may be required.

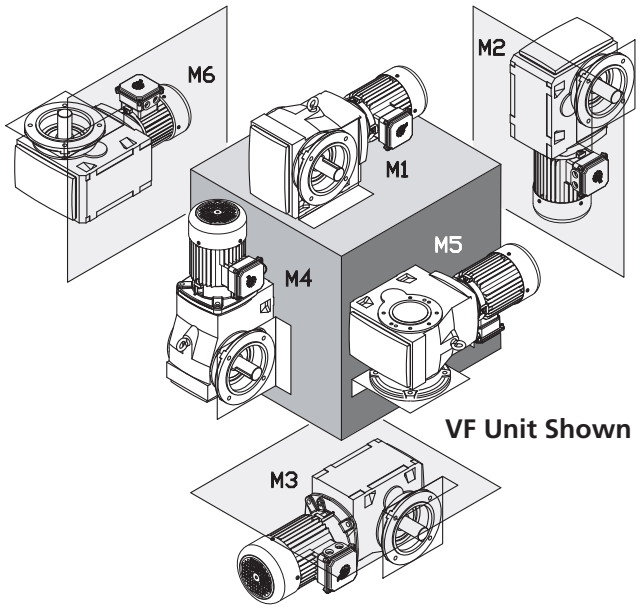

VF Unit Shown

Type	M1		M2		M3		M4		M5		M6	
	Quarts	Liters	Quarts	Liters	Quarts	Liters	Quarts	Liters	Quarts	Liters	Quarts	Liters
SK 9012.1	1.06	1.00	2.01	1.90	2.01	1.90	2.32	2.20	1.27	1.20	1.80	1.70
SK 9013.1	1.53	1.45	2.43	2.30	2.22	2.10	2.96	2.80	1.11	1.05	1.90	1.80
SK 9016.1	1.06	1.00	2.01	1.90	2.01	1.90	2.32	2.20	1.27	1.20	1.80	1.70
SK 9017.1	1.53	1.45	2.43	2.30	2.22	2.10	2.96	2.80	1.11	1.05	1.90	1.80
SK 9022.1	1.69	1.60	3.70	3.50	3.70	3.50	4.44	4.20	2.43	2.30	2.96	2.80
SK 9023.1	2.43	2.30	3.70	3.50	4.02	3.80	5.60	5.30	2.32	2.20	3.59	3.40
SK 9032.1	2.22	2.10	5.07	4.80	6.76	6.40	7.50	7.10	3.49	3.30	5.39	5.10
SK 9033.1	3.91	3.70	6.02	5.70	7.08	6.70	9.09	8.60	3.80	3.60	5.60	5.30
SK 9042.1	4.76	4.50	10.6	10.0	10.6	10.0	12.2	11.5	6.87	6.50	8.66	8.20
SK 9043.1	6.87	6.50	11.1	10.5	12.6	11.9	15.5	14.7	7.08	6.70	9.83	9.30
SK 9052.1	7.93	7.50	17.4	16.5	21.1	20.0	24.8	23.5	12.2	11.5	19.0	18.0
SK 9053.1	13.7	13.0	19.0	18.0	22.7	21.5	28.0	26.5	13.7	13.0	18.0	17.0
SK 9062.1	12.7	12.0	29.1	27.5	34.9	33.0	40.7	38.5	20.1	19.0	27.5	26.0
SK 9072.1	12.7	12.0	29.1	27.5	34.9	33.0	40.7	38.5	20.1	19.0	27.5	26.0
SK 9082.1	22.2	21.0	57.0	54.0	70.0	66.0	85.0	80.0	40.2	38.0	55.0	52.0
SK 9086.1	38.0	36.0	82.0	78.0	96.0	91.0	113	107	56.0	53.0	80.0	76.0
SK 9092.1	42.3	40.0	137	130	163	154	185	175	87.0	82.0	96.0	91.0
SK 9096.1	85.0	80.0	198	187	204	193	272	257	119	113	165	156

Oil Levels shown apply to base models and gear units ending in AZ, AF, VZ, & VF.

92 SERIES HELICAL-BEVEL FOOTED OIL FILL QUANTITIES

92 Helical-bevel footed lubrication

The following NORD Gear reducers are shipped from the factory with a pre-determined oil fill level in accordance to the specified reducer size and mounting position. For additional information, please refer to the "Oil Plug & Vent Locations" documentation for your gear unit.

STOP *HARMFUL SITUATION* **STOP**

Actual oil volume can vary slightly depending upon the gear case size, mounting and ratio. Prior to commissioning the reducer, check the oil-fill level using the reducer's oil level plug and drain or add addition oil as needed. The minimum acceptable oil level is 0.15 in (4mm) below the oil level hole.

For mounting orientations other than shown please consult NORD Gear. Reducer modifications may be required.

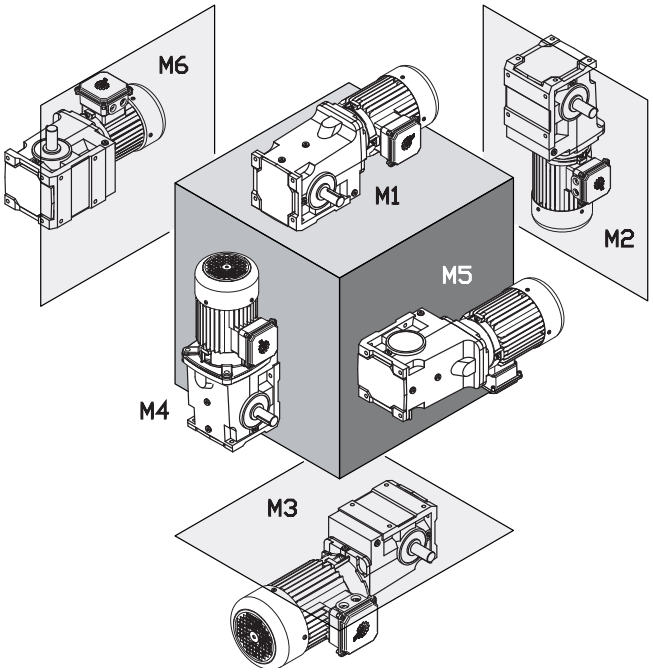

Type	M1		M2		M3		M4		M5		M6	
	Quarts	Liters	Quarts	Liters	Quarts	Liters	Quarts	Liters	Quarts	Liters	Quarts	Liters
SK 92072	0.42	0.40	0.63	0.60	0.53	0.50	0.58	0.55	0.42	0.40	0.42	0.40
SK 92172	0.63	0.60	0.95	0.90	1.06	1.00	1.16	1.10	1.16	1.10	0.85	0.80
SK 92372	0.95	0.90	1.69	1.60	1.59	1.50	2.01	1.90	1.59	1.50	0.95	0.90
SK 92672	1.90	1.80	3.70	3.50	3.80	3.60	3.59	3.40	2.75	2.60	2.75	2.60
SK 92772	2.43	2.30	4.76	4.50	4.86	4.60	5.60	5.30	4.33	4.10	4.33	4.10

Oil Levels shown apply to base models and gear units ending in LX, AX, & VX.

92.1/93.1 SERIES HELICAL-BEVEL OIL FILL QUANTITIES

92.1/93.1 Helical-bevel lubrication

All NORD Gear reducers are shipped from the factory with a pre-determined oil fill level in accordance to the specified reducer size & mounting position. For additional information, please refer to the "Oil Plug & Vent Locations" documentation for your gear unit.

STOP *HARMFUL SITUATION* **STOP**

Actual oil volume can vary slightly depending upon the gear case size, mounting and ratio. Prior to commissioning the reducer, check the oil-fill level using the reducer's oil level plug and drain or add addition oil as needed.

For mounting orientations other than shown please consult NORD Gear. Reducer modifications may be required.

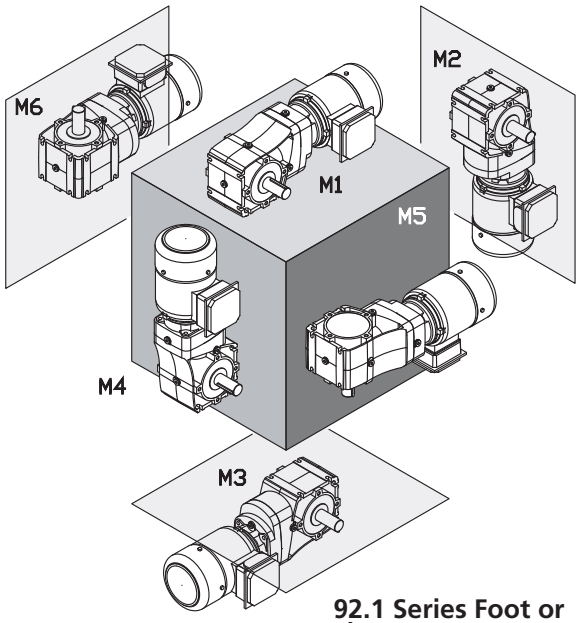

92.1 Series Foot or Flange Mount

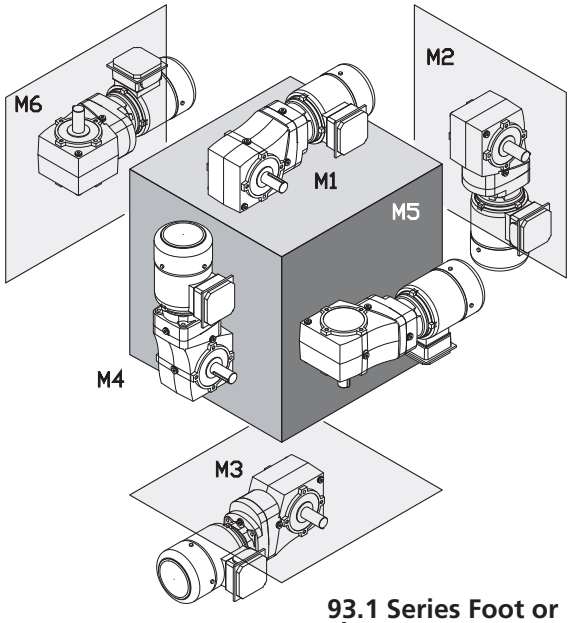

93.1 Series Foot or Flange Mount

92.1 Series Oil Fill

	M1		M2		M3		M4		M5		M6	
	Quarts	Liters	Quarts	Liters	Quarts	Liters	Quarts	Liters	Quarts	Liters	Quarts	Liters
SK 92072.1	0.28	0.26	0.52	0.49	0.44	0.42	0.57	0.54	0.31	0.29	0.33	0.31
SK 92172.1	0.36	0.34	0.65	0.61	0.55	0.52	0.71	0.67	0.44	0.42	0.51	0.48
SK 92372.1	0.45	0.43	0.97	0.92	0.77	0.73	0.88	0.83	0.58	0.55	0.65	0.61
SK 92672.1	0.90	0.85	1.69	1.60	1.27	1.20	1.59	1.50	1.08	1.02	1.08	1.02
SK 92772.1	1.37	1.30	2.80	2.65	1.97	1.86	2.59	2.45	1.69	1.60	1.69	1.60

Oil levels shown apply to all foot & flange mounted units.

93.1 Series Oil Fill

	M1		M2		M3		M4		M5		M6	
	Quarts	Liters	Quarts	Liters	Quarts	Liters	Quarts	Liters	Quarts	Liters	Quarts	Liters
SK 93072.1	0.41	0.39	0.98	0.93	0.84	0.79	1.08	1.02	0.52	0.49	0.66	0.62
SK 93172.1	0.63	0.60	1.24	1.17	0.99	0.94	1.29	1.22	0.69	0.65	0.90	0.85
SK 93372.1	1.06	1.00	2.08	1.97	1.74	1.65	2.26	2.14	1.18	1.12	1.42	1.34
SK 93672.1	1.90	1.80	3.41	3.23	2.86	2.71	4.44	4.20	2.13	2.02	2.59	2.45
SK 93772.1	2.87	2.72	4.89	4.63	3.91	3.70	5.71	5.40	3.10	2.93	3.43	3.25

Oil levels shown apply to all foot & flange mounted units.

92 SERIES HELICAL-BEVEL FLANGED OIL FILL QUANTITIES

92 Helical-bevel flanged lubrication

The following NORD Gear reducers are shipped from the factory with a pre-determined oil fill level in accordance to the specified reducer size and mounting position. For additional information, please refer to the "Oil Plug & Vent Locations" documentation for your gear unit.

STOP *HARMFUL SITUATION* **STOP**

Actual oil volume can vary slightly depending upon the gear case size, mounting and ratio. Prior to commissioning the reducer, check the oil-fill level using the reducer's oil level plug and drain or add addition oil as needed. The minimum acceptable oil level is 0.15 in (4mm) below the oil level hole.

For mounting orientations other than shown please consult NORD Gear. Reducer modifications may be required.

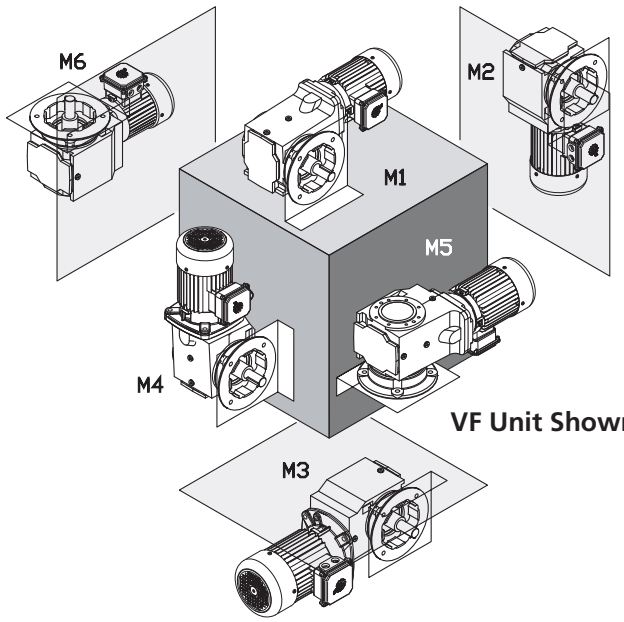

VF Unit Shown

Type	M1		M2		M3		M4		M5		M6	
	Quarts	Liters	Quarts	Liters	Quarts	Liters	Quarts	Liters	Quarts	Liters	Quarts	Liters
SK 92072	0.42	0.40	0.63	0.60	0.58	0.55	0.58	0.55	0.42	0.40	0.42	0.40
SK 92172	0.53	0.50	1.06	1.00	0.95	0.90	1.11	1.05	0.95	0.90	0.63	0.60
SK 92372	1.27	1.20	1.69	1.60	1.59	1.50	2.01	1.90	1.37	1.30	1.37	1.30
SK 92672	1.69	1.60	2.96	2.80	2.64	2.50	3.49	3.30	2.54	2.40	2.54	2.40
SK 92772	2.96	2.80	4.65	4.40	4.76	4.50	5.81	5.50	3.70	3.50	3.70	3.50

Oil Levels shown apply to gear units ending in AZ, AF, VZ, & VF.

HELICAL-WORM FOOTED OIL FILL QUANTITIES

Helical-worm footed lubrication

The following NORD Gear reducers are shipped from the factory with a pre-determined oil fill level in accordance to the specified reducer size and mounting position. For additional information, please refer to the "Oil Plug & Vent Locations" documentation for your gear unit.

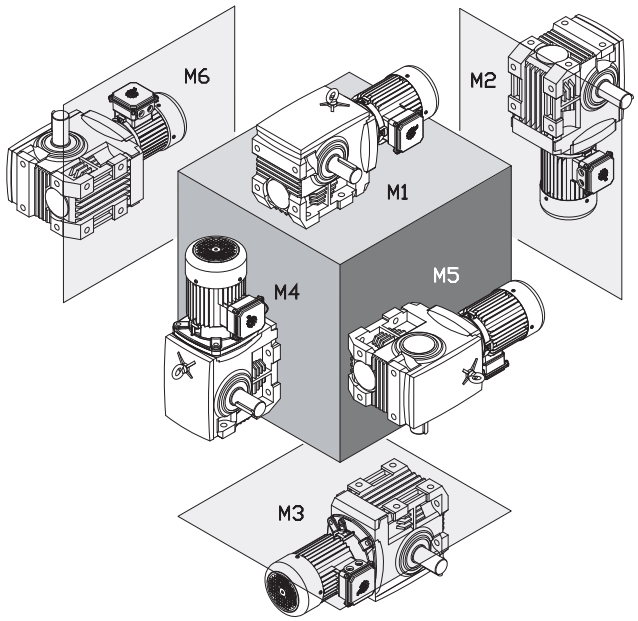

STOP *HARMFUL SITUATION* STOP

Actual oil volume can vary slightly depending upon the gear case size, mounting and ratio. Prior to commissioning the reducer, check the oil-fill level using the reducer's oil level plug and drain or add addition oil as needed. The minimum acceptable oil level is 0.15 in (4mm) below the oil level hole.

For mounting orientations other than shown please consult NORD Gear. Reducer modifications may be required.

Type	M1		M2		M3		M4		M5		M6	
	Quarts	Liters	Quarts	Liters	Quarts	Liters	Quarts	Liters	Quarts	Liters	Quarts	Liters
SK 02040	0.42	0.40	0.85	0.80	0.79	0.75	0.69	0.65	0.53	0.50	0.53	0.50
SK 02050	0.42	0.40	1.48	1.40	1.16	1.10	1.37	1.30	0.74	0.70	0.74	0.70
SK 13050	0.79	0.75	1.85	1.75	1.37	1.30	1.85	1.75	0.79	0.75	0.79	0.75
SK 12063	0.63	0.60	1.90	1.80	1.27	1.20	1.69	1.60	1.06	1.00	1.06	1.00
SK 13063	1.06	1.00	2.43	2.30	1.59	1.50	2.32	2.20	1.16	1.10	1.16	1.10
SK 12080	0.95	0.90	3.28	3.10	2.54	2.40	3.17	3.00	1.90	1.80	1.90	1.80
SK 13080	1.80	1.70	3.70	3.50	3.70	3.50	3.70	3.50	2.11	2.00	2.11	2.00
SK 32100	1.59	1.50	6.66	6.30	5.92	5.60	5.81	5.50	3.80	3.60	3.80	3.60
SK 33100	2.54	2.40	6.76	6.40	5.71	5.40	6.87	6.50	3.59	3.40	3.59	3.40
SK 42125	2.96	2.80	12.5	11.8	10.8	10.2	10.6	10.0	6.55	6.20	6.55	6.20
SK 43125	4.49	4.25	13.7	13.0	11.1	10.5	14.3	13.5	7.61	7.20	7.61	7.20

HELICAL-WORM SOLID SHAFT/FLANGED OIL FILL QUANTITIES

Helical-worm solid shaft/flanged lubrication

The following NORD Gear reducers are shipped from the factory with a pre-determined oil fill level in accordance to the specified reducer size and mounting position. For additional information, please refer to the "Oil Plug & Vent Locations" documentation for your gear unit.

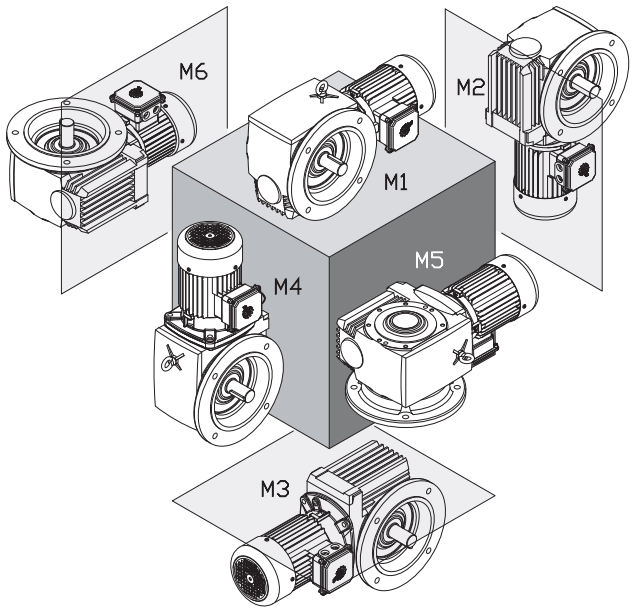

STOP *HARMFUL SITUATION* STOP

Actual oil volume can vary slightly depending upon the gear case size, mounting and ratio. Prior to commissioning the reducer, check the oil-fill level using the reducer's oil level plug and drain or add addition oil as needed. The minimum acceptable oil level is 0.15 in (4mm) below the oil level hole.

For mounting orientations other than shown please consult NORD Gear. Reducer modifications may be required.

Type	M1		M2		M3		M4		M5		M6	
	Quarts	Liters	Quarts	Liters	Quarts	Liters	Quarts	Liters	Quarts	Liters	Quarts	Liters
SK 02040 VF	0.53	0.50	0.85	0.80	0.79	0.75	0.63	0.60	0.53	0.50	0.53	0.50
SK 02050 VF	0.42	0.40	1.59	1.50	1.32	1.25	1.27	1.20	0.95	0.90	0.79	0.75
SK 13050 VF	0.79	0.75	1.90	1.80	1.59	1.50	1.80	1.70	1.11	1.05	0.95	0.90
SK 12063 VF	0.53	0.50	2.06	1.95	1.80	1.70	1.85	1.75	1.27	1.20	1.00	0.95
SK 13063 VF	1.06	1.00	2.43	2.30	2.01	1.90	2.32	2.20	1.43	1.35	1.16	1.10
SK 12080 VF	0.95	0.90	3.91	3.70	3.38	3.20	3.59	3.40	2.64	2.50	2.43	2.30
SK 13080 VF	1.69	1.60	4.02	3.80	3.70	3.50	4.12	3.90	2.85	2.70	2.64	2.50
SK 32100 VF	1.48	1.40	6.66	6.30	6.45	6.10	6.45	6.10	4.23	4.00	3.80	3.60
SK 33100 VF	2.80	2.65	7.61	7.20	6.76	6.40	8.03	7.60	4.54	4.30	4.02	3.80
SK 42125 VF	3.17	3.00	12.2	11.5	12.2	11.5	11.6	11.0	8.88	8.40	7.71	7.30
SK 43125 VF	4.97	4.70	15.9	15.0	13.7	13.0	16.9	16.0	9.51	9.00	8.14	7.70

HELICAL-WORM HOLLOW SHAFT OIL FILL QUANTITIES

Helical-worm hollow shaft lubrication

The following NORD Gear reducers are shipped from the factory with a pre-determined oil fi ll level in accordance to the specifi ed reducer size and mounting position. For additional information, please refer to the "Oil Plug & Vent Locations" documentation for your gear unit.

STOP *HARMFUL SITUATION* **STOP**

Actual oil volume can vary slightly depending upon the gear case size, mounting and ratio. Prior to commissioning the reducer, check the oil-fi ll level using the reducer's oil level plug and drain or add addition oil as needed. The minimum acceptable oil level is 0.15 in (4mm) below the oil level hole.

For mounting orientations other than shown please consult NORD Gear. Reducer modifications may be required.

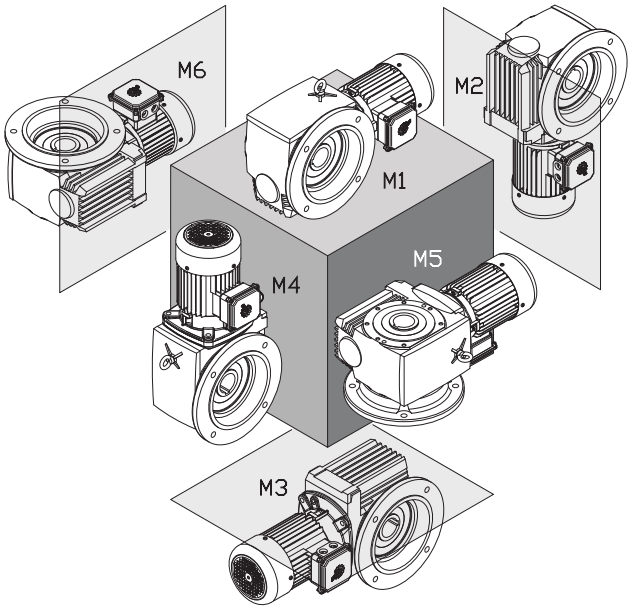

AF Unit Shown

Type	M1		M2		M3		M4		M5		M6	
	Quarts	Liters	Quarts	Liters	Quarts	Liters	Quarts	Liters	Quarts	Liters	Quarts	Liters
SK 02040	0.42	0.40	0.74	0.70	0.69	0.65	0.69	0.65	0.58	0.55	0.58	0.55
SK 02050	0.48	0.45	1.48	1.40	1.22	1.15	1.16	1.10	0.79	0.75	0.79	0.75
SK 13050	0.95	0.90	1.90	1.80	1.37	1.30	1.74	1.65	1.37	1.30	1.37	1.30
SK 12063	0.58	0.55	1.53	1.45	1.69	1.60	1.69	1.60	1.16	1.10	1.16	1.10
SK 13063	1.11	1.05	2.22	2.10	1.90	1.80	2.22	2.10	1.48	1.40	1.48	1.40
SK 12080	0.85	0.80	3.28	3.10	3.38	3.20	2.96	2.80	1.90	1.80	1.90	1.80
SK 13080	1.69	1.60	3.80	3.60	3.06	2.90	3.96	3.75	2.11	2.00	2.11	2.00
SK 32100	1.59	1.50	5.92	5.60	5.92	5.60	5.60	5.30	4.23	4.00	4.23	4.00
SK 33100	2.75	2.60	6.34	6.00	6.13	5.80	6.34	6.00	3.70	3.50	3.70	3.50
SK 42125	3.17	3.00	13.2	12.5	11.4	10.8	11.4	10.8	6.87	6.50	6.87	6.50
SK 43125	4.86	4.60	14.4	13.6	12.0	11.4	15.1	14.3	8.03	7.60	8.03	7.60

Oil Levels shown apply to gear units ending in AZ, AF.

NORDBLOC® FOOTED OIL FILL QUANTITIES

NORDBLOC® footed lubrication

The following NORD Gear reducers are shipped from the factory with a pre-determined oil fill level in accordance to the specified reducer size and mounting position. For additional information, please refer to the "Oil Plug & Vent Locations" documentation for your gear unit.

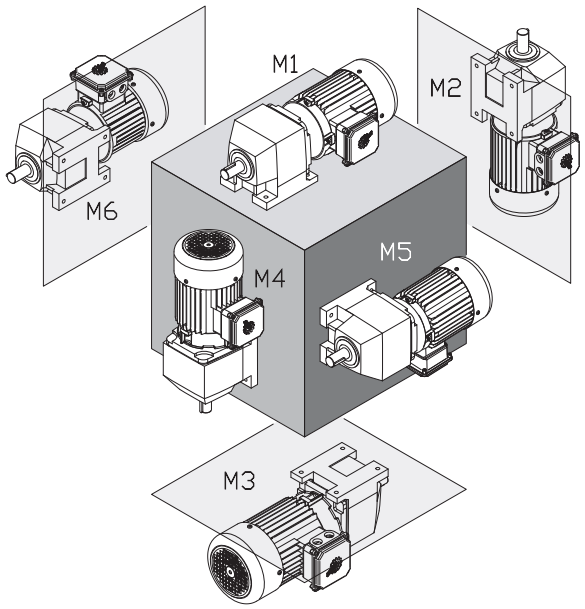

STOP *HARMFUL SITUATION* **STOP**

Actual oil volume can vary slightly depending upon the gear case size, mounting and ratio. Prior to commissioning the reducer, check the oil-fill level using the reducer's oil level plug and drain or add addition oil as needed. The minimum acceptable oil level is 0.15 in (4mm) below the oil level hole.

For mounting orientations other than shown please consult NORD Gear. Reducer modifications may be required.

Type	M1		M2		M3		M4		M5		M6	
	Quarts	Liters	Quarts	Liters	Quarts	Liters	Quarts	Liters	Quarts	Liters	Quarts	Liters
SK 172	0.37	0.35	0.53	0.50	0.53	0.50	0.53	0.50	0.53	0.50	0.53	0.50
SK 272	0.63	0.60	1.06	1.00	1.06	1.00	1.06	1.00	1.06	1.00	1.06	1.00
SK 273	0.66	0.62	1.16	1.10	1.16	1.10	1.16	1.10	1.16	1.10	1.16	1.10
SK 372	0.63	0.60	1.06	1.00	1.06	1.00	1.06	1.00	1.06	1.00	1.06	1.00
SK 373	0.58	0.55	1.16	1.10	1.16	1.10	1.16	1.10	1.16	1.10	1.16	1.10
SK 472	1.06	1.00	2.01	1.90	2.01	1.90	2.11	2.00	1.90	1.80	1.90	1.80
SK 473	1.37	1.30	2.64	2.50	2.22	2.10	2.54	2.40	2.22	2.10	2.22	2.10
SK 572	1.06	1.00	2.01	1.90	2.01	1.90	2.11	2.00	1.90	1.80	1.90	1.80
SK 573	1.37	1.30	2.64	2.50	2.22	2.10	2.54	2.40	2.22	2.10	2.22	2.10
SK 672	1.48	1.40	3.59	3.40	3.28	3.10	3.33	3.15	1.53	1.45	3.33	3.15
SK 673	1.90	1.80	4.02	3.80	3.38	3.20	3.59	3.40	3.06	2.90	3.17	3.00
SK 772	2.11	2.00	3.49	3.30	3.70	3.50	4.44	4.20	2.85	2.70	3.49	3.30
SK 773	2.64	2.50	4.76	4.50	3.91	3.70	4.86	4.60	3.49	3.30	3.49	3.30
SK 872	3.91	3.70	10.1	9.60	9.62	9.10	7.71	7.30	4.97	4.70	8.45	8.00
SK 873	6.55	6.20	8.88	8.40	7.93	7.50	9.62	9.10	7.93	7.50	7.93	7.50
SK 972	6.87	6.50	16.9	16.0	16.6	15.7	15.5	14.7	8.98	8.50	14.8	14.0
SK 973	11.6	11.0	16.7	15.8	13.7	13.0	16.9	16.0	14.1	13.3	13.7	13.0

NORDBLOC® FLANGED OIL FILL QUANTITIES

NORDBLOC® flanged lubrication

The following NORD Gear reducers are shipped from the factory with a pre-determined oil fill level in accordance to the specified reducer size and mounting position. For additional information, please refer to the "Oil Plug & Vent Locations" documentation for your gear unit.

STOP *HARMFUL SITUATION* **STOP**

Actual oil volume can vary slightly depending upon the gear case size, mounting and ratio. Prior to commissioning the reducer, check the oil-fill level using the reducer's oil level plug and drain or add addition oil as needed. The minimum acceptable oil level is 0.15 in (4mm) below the oil level hole.

For mounting orientations other than shown please consult NORD Gear. Reducer modifications may be required.

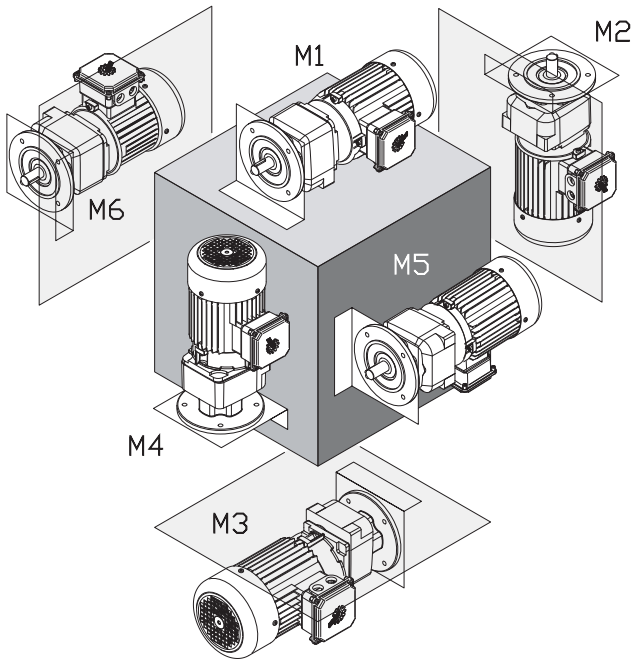

Mounting Position	M1		M2		M3		M4		M5		M6	
	Quarts	Liters	Quarts	Liters	Quarts	Liters	Quarts	Liters	Quarts	Liters	Quarts	Liters
SK 172 F	0.37	0.35	0.53	0.50	0.53	0.50	0.53	0.50	0.53	0.50	0.53	0.50
SK 272 F	0.63	0.60	1.06	1.00	1.06	1.00	1.06	1.00	1.06	1.00	1.06	1.00
SK 273 F	0.66	0.62	1.16	1.10	1.16	1.10	1.16	1.10	1.16	1.10	1.16	1.10
SK 372 F	0.63	0.60	1.06	1.00	1.06	1.00	1.06	1.00	1.06	1.00	1.06	1.00
SK 373 F	0.58	0.55	1.16	1.10	1.16	1.10	1.16	1.10	1.16	1.10	1.16	1.10
SK 472 F	1.06	1.00	2.01	1.90	2.01	1.90	2.01	1.90	2.01	1.90	1.59	1.50
SK 473 F	1.32	1.25	2.54	2.40	2.22	2.10	2.64	2.50	2.22	2.10	2.22	2.10
SK 572 F	1.06	1.00	2.01	1.90	2.01	1.90	2.01	1.90	2.01	1.90	1.59	1.50
SK 573 F	1.32	1.25	2.54	2.40	2.22	2.10	2.64	2.50	2.22	2.10	2.22	2.10
SK 672 F	1.22	1.15	3.59	3.40	2.85	2.70	2.96	2.80	1.32	1.25	2.85	2.70
SK 673 F	1.80	1.70	4.02	3.80	3.17	3.00	3.38	3.20	3.17	3.00	3.17	3.00
SK 772 F	1.69	1.60	3.49	3.30	3.70	3.50	3.49	3.30	3.28	3.10	3.28	3.10
SK 773 F	2.43	2.30	5.28	5.00	3.80	3.60	4.76	4.50	4.12	3.90	4.12	3.90
SK 872 F	3.70	3.50	9.51	9.00	8.35	7.90	8.14	7.70	4.12	3.90	7.61	7.20
SK 873 F	5.28	5.00	9.30	8.80	8.03	7.60	8.45	8.00	8.45	8.00	8.45	8.00
SK 972 F	6.87	6.50	15.9	15.0	13.7	13.0	14.3	13.5	6.87	6.50	12.7	12.0
SK 973 F	10.9	10.3	17.4	16.5	13.7	13.0	16.9	16.0	14.8	14.0	14.8	14.0

NORDBLOC®.1 FOOTED OIL FILL QUANTITIES

NORDBLOC®.1 footed lubrication

The following NORD Gear reducers are shipped from the factory with a pre-determined oil fill level in accordance to the specified reducer size and mounting position. For additional information, please refer to the "Oil Plug & Vent Locations" documentation for your gear unit.

STOP *HARMFUL SITUATION* **STOP**

Actual oil volume can vary slightly depending upon the gear case size, mounting and ratio. Prior to commissioning the reducer, check the oil-fill level using the reducer's oil level plug and drain or add addition oil as needed. The minimum acceptable oil level is 0.15 in (4mm) below the oil level hole.

For mounting orientations other than shown please consult NORD Gear. Reducer modifications may be required.

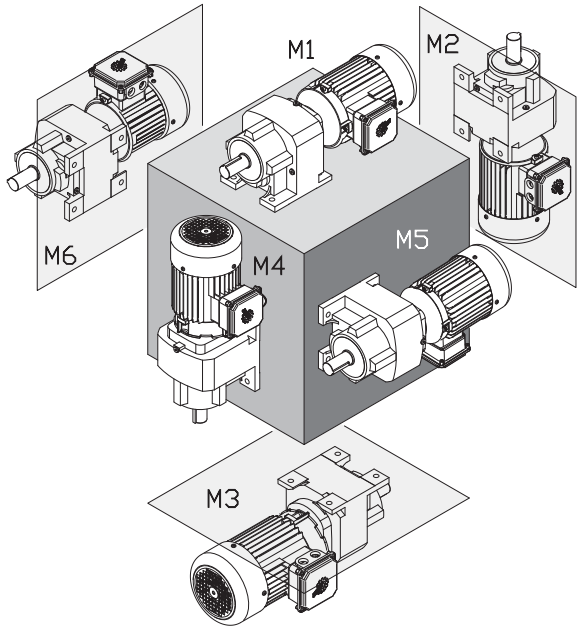

Type	M1		M2		M3		M4		M5		M6	
	Quarts	Liters	Quarts	Liters	Quarts	Liters	Quarts	Liters	Quarts	Liters	Quarts	Liters
SK072.1	0.17	0.16	0.34	0.32	0.22	0.21	0.24	0.23	0.19	0.18	0.21	0.20
SK172.1	0.29	0.27	0.62	0.59	0.44	0.42	0.48	0.45	0.34	0.32	0.41	0.39
SK372.1	0.48	0.45	1.11	1.05	0.79	0.75	1.06	1.00	0.63	0.60	0.69	0.65
SK373.1	0.48	0.45	1.11	1.05	0.79	0.75	1.06	1.00	0.63	0.60	0.69	0.65
SK572.1	0.79	0.75	2.01	1.90	1.59	1.50	2.11	2.00	1.16	1.10	1.22	1.15
SK573.1	0.79	0.75	2.01	1.90	1.59	1.50	2.11	2.00	1.16	1.10	1.22	1.15
SK672.1	1.16	1.10	2.75	2.60	2.27	2.15	2.85	2.70	1.64	1.55	1.74	1.65
SK673.1	1.16	1.10	2.75	2.60	2.27	2.15	2.85	2.70	1.64	1.55	1.74	1.65
SK772.1	1.37	1.30	4.02	3.80	2.54	2.40	3.38	3.20	1.69	1.60	2.64	2.50
SK773.1	2.43	2.30	4.02	3.80	3.49	3.30	3.38	3.20	2.54	2.40	3.28	3.10
SK872.1	3.06	2.90	8.24	7.80	4.86	4.60	6.76	6.40	2.64	2.50	4.23	4.00
SK873.1	4.44	4.20	8.24	7.80	6.23	5.90	6.76	6.40	4.33	4.10	6.23	5.90
SK972.1	4.76	4.50	12.7	12.0	7.93	7.50	12.2	11.5	4.44	4.20	7.93	7.50
SK973.1	7.93	7.50	12.7	12.0	11.1	10.5	12.2	11.5	7.93	7.50	11.1	10.5
SK772.1VL	2.11	2.00	4.02	3.80	2.54	2.40	3.38	3.20	1.69	1.60	2.64	2.50
SK773.1VL	2.43	2.30	4.02	3.80	3.49	3.30	3.38	3.20	2.54	2.40	3.28	3.10
SK872.1VL	5.28	5.00	8.24	7.80	4.86	4.60	6.76	6.40	2.64	2.50	4.23	4.00
SK873.1VL	4.44	4.20	8.24	7.80	6.23	5.90	6.76	6.40	4.33	4.10	6.23	5.90
SK972.1VL	8.98	8.50	12.7	12.0	7.93	7.50	12.2	11.5	4.44	4.20	7.93	7.50
SK973.1VL	7.93	7.50	12.7	12.0	11.1	10.5	12.2	11.5	7.93	7.50	11.1	10.5

NORDBLOC®.1 FLANGED OIL FILL QUANTITIES

NORDBLOC®.1 flanged lubrication

The following NORD Gear reducers are shipped from the factory with a pre-determined oil fill level in accordance to the specified reducer size and mounting position. For additional information, please refer to the "Oil Plug & Vent Locations" documentation for your gear unit.

STOP *HARMFUL SITUATION* **STOP**

Actual oil volume can vary slightly depending upon the gear case size, mounting and ratio. Prior to commissioning the reducer, check the oil-fill level using the reducer's oil level plug and drain or add addition oil as needed. The minimum acceptable oil level is 0.15 in (4mm) below the oil level hole.

For mounting orientations other than shown please consult NORD Gear. Reducer modifications may be required.

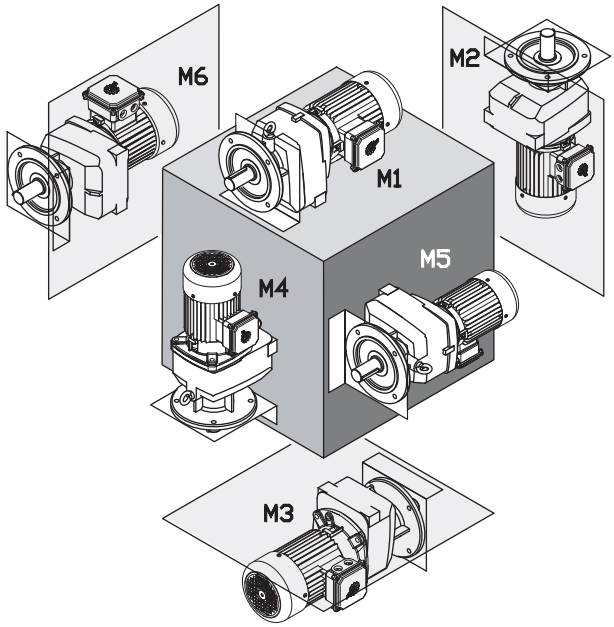

Type	M1		M2		M3		M4		M5		M6	
	Quarts	Liters	Quarts	Liters	Quarts	Liters	Quarts	Liters	Quarts	Liters	Quarts	Liters
SK072.1 F	0.17	0.16	0.34	0.32	0.22	0.21	0.24	0.23	0.19	0.18	0.21	0.20
SK172.1 F	0.29	0.27	0.62	0.59	0.44	0.42	0.48	0.45	0.34	0.32	0.41	0.39
SK372.1 F	0.48	0.45	1.11	1.05	0.79	0.75	1.06	1.00	0.63	0.60	0.69	0.65
SK373.1 F	0.48	0.45	1.11	1.05	0.79	0.75	1.06	1.00	0.63	0.60	0.69	0.65
SK572.1 F	0.79	0.75	2.01	1.90	1.59	1.50	2.11	2.00	1.16	1.10	1.22	1.15
SK573.1 F	0.79	0.75	2.01	1.90	1.59	1.50	2.11	2.00	1.16	1.10	1.22	1.15
SK672.1 F	1.16	1.10	2.75	2.60	2.27	2.15	2.85	2.70	1.64	1.55	1.74	1.65
SK673.1 F	1.16	1.10	2.75	2.60	2.27	2.15	2.85	2.70	1.64	1.55	1.74	1.65
SK772.1 F	1.37	1.30	4.02	3.80	2.54	2.40	3.49	3.30	1.80	1.70	2.54	2.40
SK773.1 F	2.11	2.00	3.70	3.50	3.38	3.20	3.06	2.90	2.43	2.30	3.17	3.00
SK872.1 F	3.06	2.90	7.93	7.50	5.39	5.10	7.08	6.70	2.75	2.60	4.54	4.30
SK873.1 F	4.33	4.10	8.03	7.60	7.29	6.90	6.97	6.60	5.28	5.00	6.97	6.60
SK973.1 F	7.82	7.40	12.9	12.2	11.7	11.1	12.3	11.6	8.45	8.00	11.5	10.9
SK972.1 F	4.76	4.50	13.2	12.5	8.45	8.00	13.2	12.5	4.76	4.50	8.14	7.70
SK772.1F VL	2.11	2.00	4.02	3.80	2.54	2.40	3.49	3.30	1.80	1.70	2.54	2.40
SK773.1F VL	2.11	2.00	3.70	3.50	3.38	3.20	3.06	2.90	2.43	2.30	3.17	3.00
SK872.1F VL	5.28	5.00	7.93	7.50	5.39	5.10	7.08	6.70	2.75	2.60	4.54	4.30
SK873.1F VL	4.33	4.10	8.03	7.60	7.29	6.90	6.97	6.60	5.28	5.00	6.97	6.60
SK972.1F VL	8.98	8.50	13.2	12.5	8.45	8.00	13.2	12.5	4.76	4.50	8.14	7.70
SK973.1F VL	7.82	7.40	12.9	12.2	11.7	11.1	12.3	11.6	8.45	8.00	11.5	10.9

MINICASE® (SM SERIES) WORM GEAR OIL FILL QUANTITIES - FOOT HOUSING

MINICASE® (SM Series) Lubrication

NORD MINICASE® (SM Series) worm gear reducers and worm gearmotors are inherently maintence free, factory oil filled, and supplied with a high quality, long life synthetic gear oil intended to be suitable for the life of the product. These gear units are also supplied without oil service plugs or vents.

Related User Manuals

U10790 MINICASE® (SM Series) Worm – Lubrication Guidelines.
U11040 MINICASE® (SM Series) Worm – Lubrication Types.

STOP *HARMFUL SITUATION* STOP

For mounting orientations other than shown please consult NORD Gear. Reducer modifications may be required.

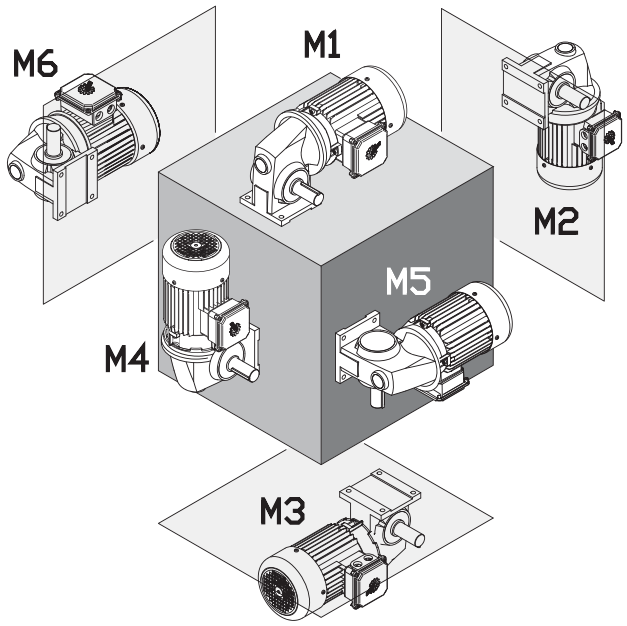

Type	M1		M2		M3		M4		M5		M6	
	oz	ml	oz	ml	oz	ml	oz	ml	oz	ml	oz	ml
SK 1SM31	4.1	120	4.1	120	4.1	120	4.1	120	4.1	120	4.1	120
SK 1SM40	7.4	220	7.4	220	7.4	220	7.4	220	7.4	220	7.4	220
SK 2SM40	11.2	330	11.2	330	11.2	330	12.2	360	11.2	330	11.2	330
SK 1SM50	8.5	250	8.5	250	8.5	250	8.5	250	8.5	250	8.5	250
SK 2SM50	11.8	350	11.8	350	11.8	350	14.2	420	11.8	350	11.8	350
SK 1SM63	14.2	420	14.2	420	14.2	420	14.2	420	14.2	420	14.2	420
SK 2SM63	17.9	530	17.9	530	17.9	530	21.3	630	17.9	530	17.9	530

Oil levels shown apply to any foot-mount gear housings including those ending with no suffix or ending with LX or AX.

MINICASE® (SMI/SMID) WORM GEAR OIL FILL QUANTITIES - FOOT HOUSING

MINICASE® (SMI/SMID Series) Lubrication

NORD MINICASE® (SMI/SMID Series) worm gear reducers and worm gearmotors are inherently maintence free, factory oil filled, and supplied with a high quality, long life synthetic gear oil intended to be suitable for the life of the product. For lubrication types see user manual U11050.

NORD MINICASE® (SMI/SMID Series) worm gear reducers and worm gearmotors are equipped with oil plugs. Venting the gear unit is optional as discussed in user manual U14750.

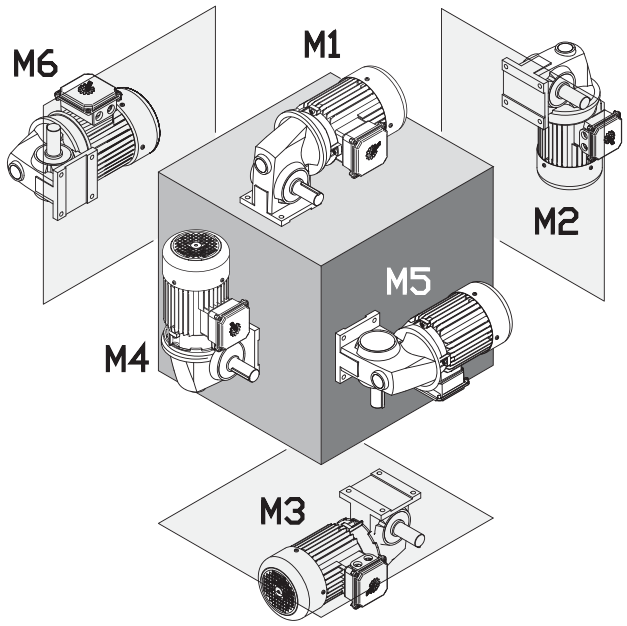

Related User Manuals

U10800 - MINICASE® (SMI/SMID Series) Worm – Lubrication Guidelines.
U11050 - MINICASE® (SMI/SMID Series) Worm – Lubrication Types
U14750 - MINICASE® (SMI/SMID Series) Worm – Oil Plug Locations

STOP *HARMFUL SITUATION* **STOP**

For mounting orientations other than shown please consult NORD Gear. Reducer modifications may be required.

MINICASE® (SMI Series) Gear Reducer Oil Fill - Foot Housing

Type	M1		M2		M3		M4		M5		M6	
	oz	ml	oz	ml	oz	ml	oz	ml	oz	ml	oz	ml
SK 1SMI31	1.5	45	1.5	45	1.5	45	1.5	45	1.5	45	1.5	45
SK 1SMI40	2.7	80	2.7	80	2.7	80	2.7	80	2.7	80	2.7	80
SK 1SMI50	4.4	130	4.4	130	4.4	130	4.4	130	4.4	130	4.4	130
SK 1SMI63	9.1	270	9.1	270	9.1	270	9.1	270	9.1	270	9.1	270
SK 1SMI75	14.2	420	14.2	420	14.2	420	14.2	420	14.2	420	14.2	420

Oil fill level is universal and independent of mounting position
Oil levels shown apply to any foot-mount gear housings including those ending with no-suffix or LX or AX.

MINICASE® (SMID Series) Integral Gearmotor Oil Fill - Foot Housing

Type	M1		M2		M3		M4		M5		M6	
	oz	ml	oz	ml	oz	ml	oz	ml	oz	ml	oz	ml
SK 1SMID31	2.0	60	3.6	105	2.4	70	1.7	50	2.4	70	2.4	70
SK 1SMID40	3.4	100	5.6	165	4.1	120	3.0	90	4.1	120	4.1	120
SK 1SMID50	5.9	175	8.8	260	6.6	195	5.4	160	6.6	195	6.6	195
SK 1SMID63	9.6	285	14.4	425	11.0	325	9.1	270	11.0	325	11.0	325

Oil levels shown apply to any foot-mount gear housings including those ending with no-suffix or LX or AX.

MINICASE® (SM SERIES) WORM GEAR OIL FILL QUANTITIES - FLANGE HOUSING

MINICASE® (SM Series) Lubrication

NORD MINICASE® (SM Series) worm gear reducers and worm gearmotors are inherently maintence free, factory oil filled, and supplied with a high quality, long life synthetic gear oil intended to be suitable for the life of the product. These gear units are also supplied without oil service plugs or vents.

Related User Manuals

U10790 MINICASE® (SM Series) Worm – Lubrication Guidelines.
U11040 MINICASE® (SM Series) Worm – Lubrication Types.

STOP *HARMFUL SITUATION* STOP

For mounting orientations other than shown please consult NORD Gear. Reducer modifications may be required.

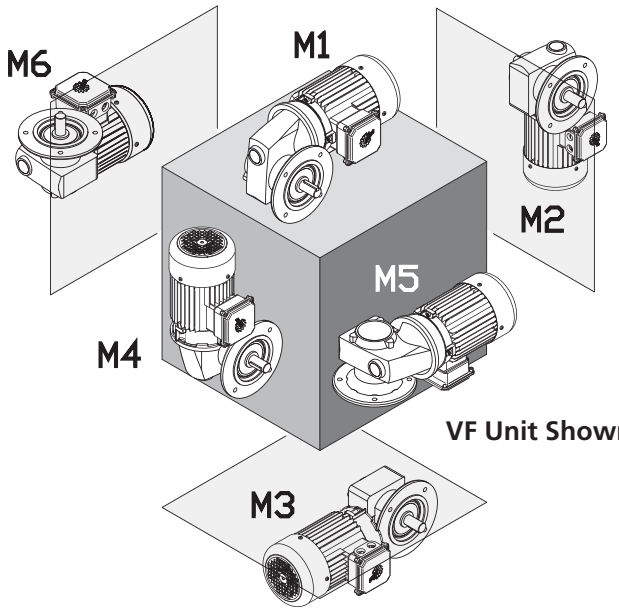

VF Unit Shown

Type	M1		M2		M3		M4		M5		M6	
	oz	ml	oz	ml	oz	ml	oz	ml	oz	ml	oz	ml
SK 1SM31	4.4	130	4.4	130	4.4	130	4.4	130	4.4	130	4.4	130
SK 1SM40	8.1	240	8.1	240	8.1	240	8.1	240	8.1	240	8.1	240
SK 2SM40	11.5	340	11.5	340	11.5	340	12.8	380	11.5	340	11.5	340
SK 1SM50	9.1	270	9.1	270	9.1	270	9.1	270	9.1	270	9.1	270
SK 2SM50	12.5	370	12.5	370	12.5	370	15.2	450	12.5	370	12.5	370
SK 1SM63	15.2	450	15.2	450	15.2	450	15.2	450	15.2	450	15.2	450
SK 2SM63	20.3	600	20.3	600	20.3	600	24.7	730	20.3	600	20.3	600

Oil Levels shown apply to flange-mount gear housings with model type ending in AZ, AF, VZ or VF.

MINICASE® (SMI/SMID) WORM GEAR OIL FILL QUANTITIES - FLANGE HOUSING

MINICASE® (SMI/SMID Series) Lubrication

NORD MINICASE® (SMI/SMID Series) worm gear reducers and worm gearmotors are inherently maintence free, factory oil filled, and supplied with a high quality, long life synthetic gear oil intended to be suitable for the life of the product. For lubrication types see user manual U11050.

NORD MINICASE® (SMI/SMID Series) worm gear reducers and worm gearmotors are equipped with oil plugs. Venting the gear unit is optional as discussed in user manual U14750.

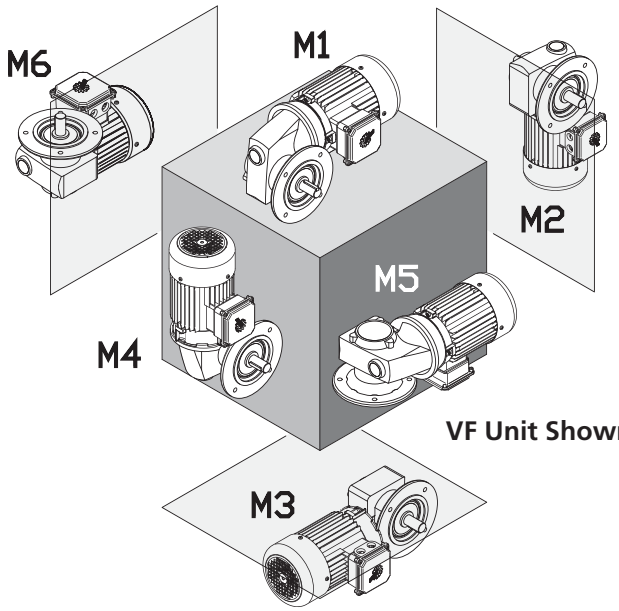

VF Unit Shown

Related User Manuals

U10800 - MINICASE® (SMI/SMID Series) Worm – Lubrication Guidelines.
U11050 - MINICASE® (SMI/SMID Series) Worm – Lubrication Types
U14750 - MINICASE® (SMI/SMID Series) Worm – Oil Plug Locations

STOP *HARMFUL SITUATION* **STOP**

For mounting orientations other than shown please consult NORD Gear. Reducer modifications may be required.

MINICASE® (SMI Series) Gear Reducer Oil Fill - Flange Housing

Type	M1		M2		M3		M4		M5		M6	
	oz	ml	oz	ml	oz	ml	oz	ml	oz	ml	oz	ml
SK 1SMI31	1.5	45	1.5	45	1.5	45	1.5	45	1.5	45	1.5	45
SK 1SMI40	2.7	80	2.7	80	2.7	80	2.7	80	2.7	80	2.7	80
SK 1SMI50	4.4	130	4.4	130	4.4	130	4.4	130	4.4	130	4.4	130
SK 1SMI63	9.1	270	9.1	270	9.1	270	9.1	270	9.1	270	9.1	270
SK 1SMI75	14.2	420	14.2	420	14.2	420	14.2	420	14.2	420	14.2	420

Oil Fill is universal and independent of mounting position.
Oil Levels shown apply to flange-mount gear housings with model type ending in AZ, AF, VZ or VF.

MINICASE® (SMID Series) Integral Gearmotor Oil Fill - Flange Housing

Type	M1		M2		M3		M4		M5		M6	
	oz	ml	oz	ml	oz	ml	oz	ml	oz	ml	oz	ml
SK 1SMID31	2.0	60	3.6	105	2.4	70	1.7	50	2.4	70	2.4	70
SK 1SMID40	3.4	100	5.6	165	4.1	120	3.0	90	4.1	120	4.1	120
SK 1SMID50	5.9	175	8.8	260	6.6	195	5.4	160	6.6	195	6.6	195
SK 1SMID63	9.6	285	14.4	425	11.0	325	9.1	270	11.0	325	11.0	325

Oil Levels shown apply to flange-mount gear housings with model type ending in AZ, AF, VZ or VF.

FLEXBLOC™ (SI/SID SERIES) WORM GEAR OIL FILL QUANTITIES

FLEXBLOC™ (SI/SID Series) Lubrication

NORD FLEXBLOC™ worm gear reducers are inherently maintence free, factory oil filled, and supplied with a high quality, long life synthetic gear oil intended to be suitable for the life of the product. For lubrication types see User Manual U11060.

NORD FLEXBLOC™ worm gear reducers are equipped with oil plugs. Venting the gear unit is optional as discussed in User Manual U14800.

Related User Manuals

U10810 FLEXBLOC™ (SI/SID Series) Worm – Lubrication Guidelines
U11060 FLEXBLOC™ Worm (SI/SID Series) – Lubrication Types
U14800 FLEXBLOC™ Worm (SI/SID Series) – Oil Plug Locations

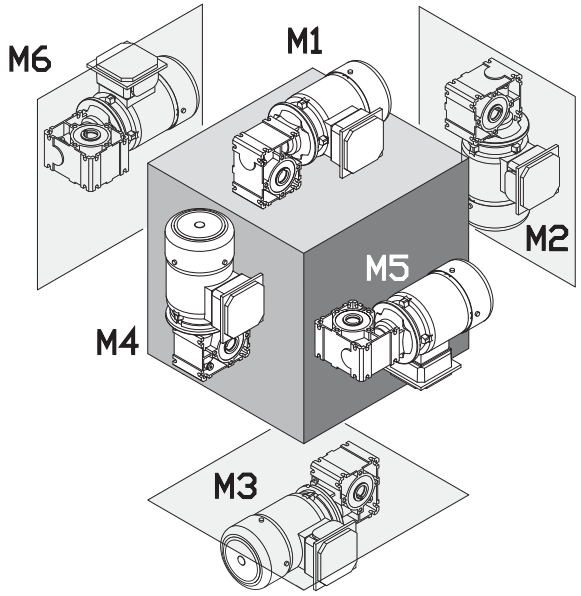

FLEXBLOC™ (SI Series) Gear Reducer Oil Fill

Type	M1		M2		M3		M4		M5		M6	
	oz	ml	oz	ml	oz	ml	oz	ml	oz	ml	oz	ml
SK 1SI31	1.0	30	1.0	30	1.0	30	1.0	30	1.0	30	1.0	30
SK 1SI40	1.9	55	1.9	55	1.9	55	1.9	55	1.9	55	1.9	55
SK 1SI50	3.2	95	3.2	95	3.2	95	3.2	95	3.2	95	3.2	95
SK 1SI63	6.1	180	6.1	180	6.1	180	6.1	180	6.1	180	6.1	180
SK 1SI75	12.2	360	12.2	360	12.2	360	12.2	360	12.2	360	12.2	360

Oil Fill is universal and independent of mounting position.

FLEXBLOC™ (SID Series) Gear Reducer Oil Fill

Type	M1		M2		M3		M4		M5		M6	
	oz	ml	oz	ml	oz	ml	oz	ml	oz	ml	oz	ml
SK 1SID31	1.7	50	3.0	90	2.4	70	1.7	50	2.4	70	2.4	70
SK 1SID40	3.0	90	5.1	150	3.7	110	2.7	80	4.1	120	4.1	120
SK 1SID50	5.7	170	6.8	200	5.7	170	5.1	150	6.1	180	6.1	180
SK 1SID63	9.8	280	12.2	360	9.8	290	8.1	240	10.5	310	10.5	310

Integral gear motors only available upon special request.

STANDARD IN-LINE OIL PLUG & VENT LOCATIONS

Oil plug connections

All reducers are shipped from the factory with a pre-determined oil fill level in accordance to the specified reducer size and mounting position. ***For mounting orientations other than shown please consult NORD Gear. New plug locations may be required.***

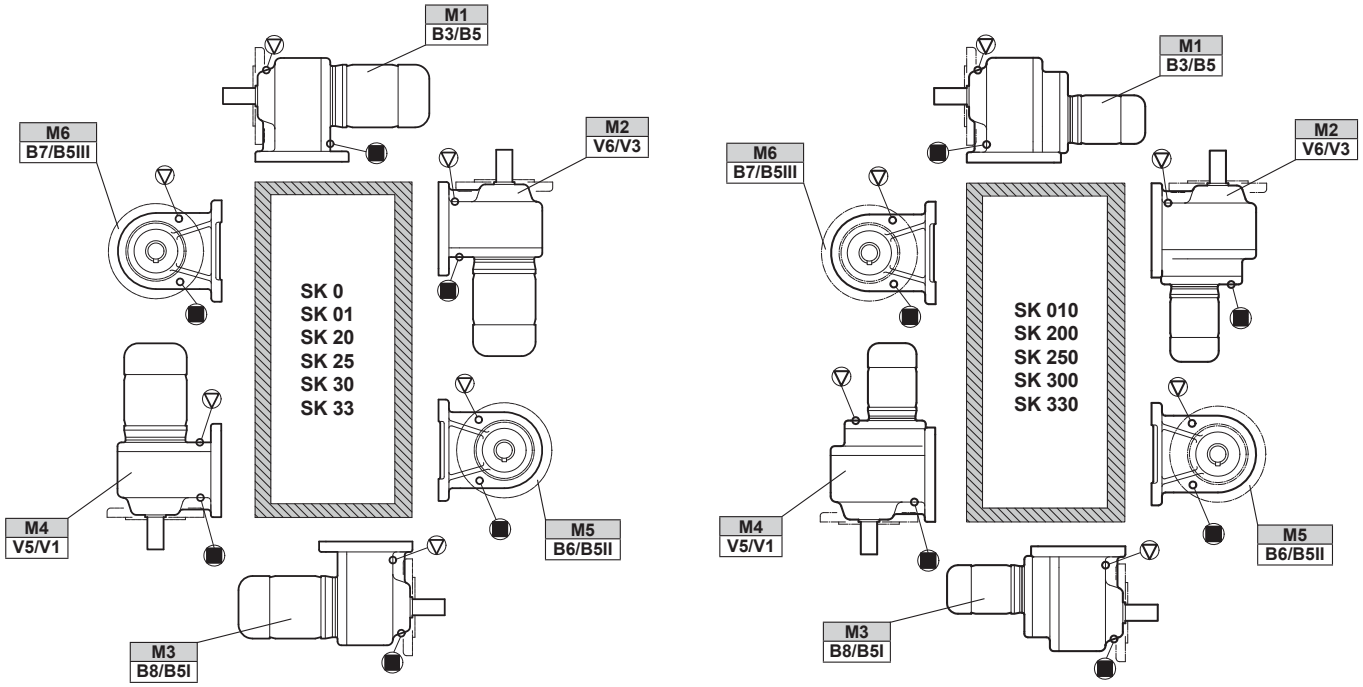

HELICAL IN-LINE
OIL PLUG & VENT LOCATIONS

Oil plug connections

Prior to commissioning the reducer, check the oil-fill level using the reducer's oil-level plug and drain or add additional oil as needed. The minimum acceptable oil level is 0.15 in (4mm) below the oil level hole. ***For mounting orientations other than shown please consult NORD Gear. New plug locations may be required.***

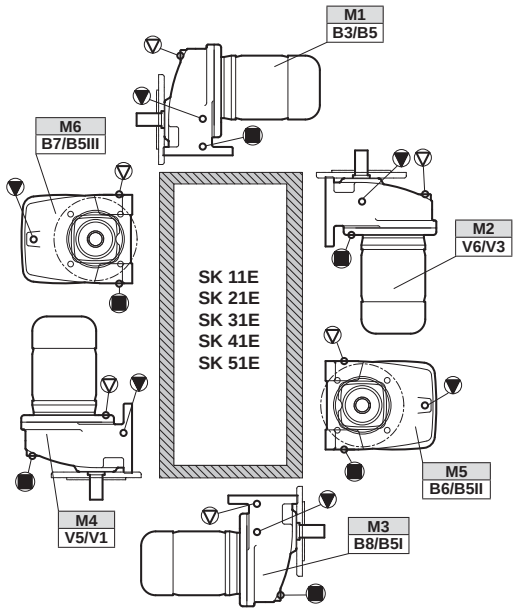

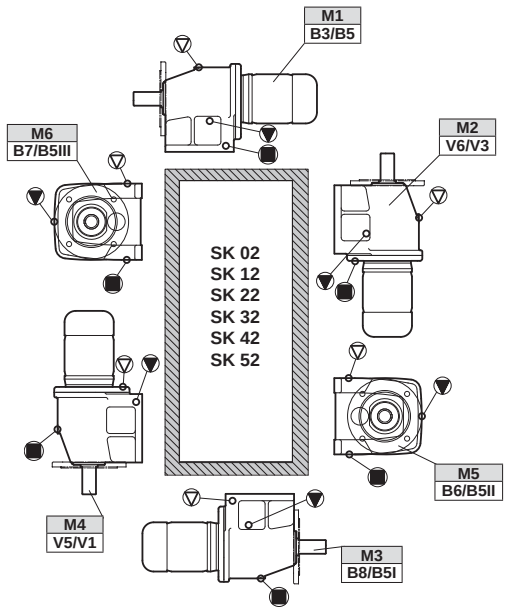

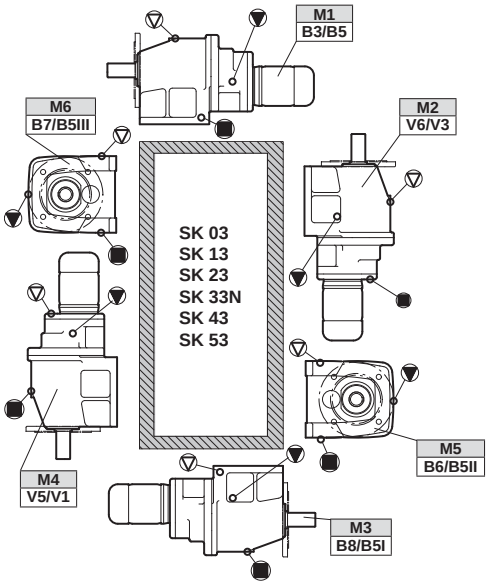

▽ = Vent

▼ = Oil Level

■ = Oil Plug

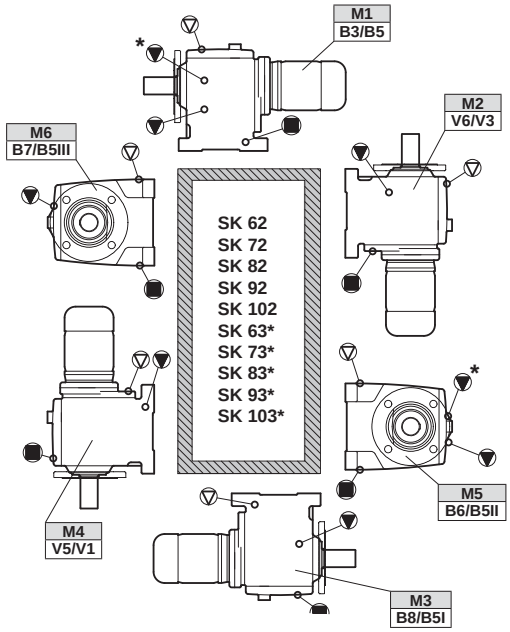

*** Oil level for 3 stage gear units.**

CLINCHER™ OIL PLUG & VENT LOCATIONS

Oil plug connections

Prior to commissioning the reducer, check the oil-fill level using the reducer's oil-level plug and drain or add additional oil as needed. The minimum acceptable oil level is 0.15 in (4mm) below the oil level hole. ***For mounting orientations other than shown please consult NORD Gear. New plug locations may be required.***

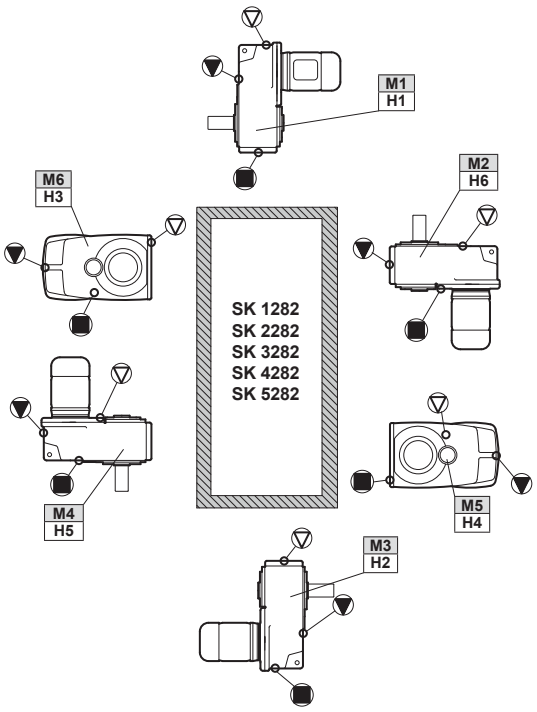

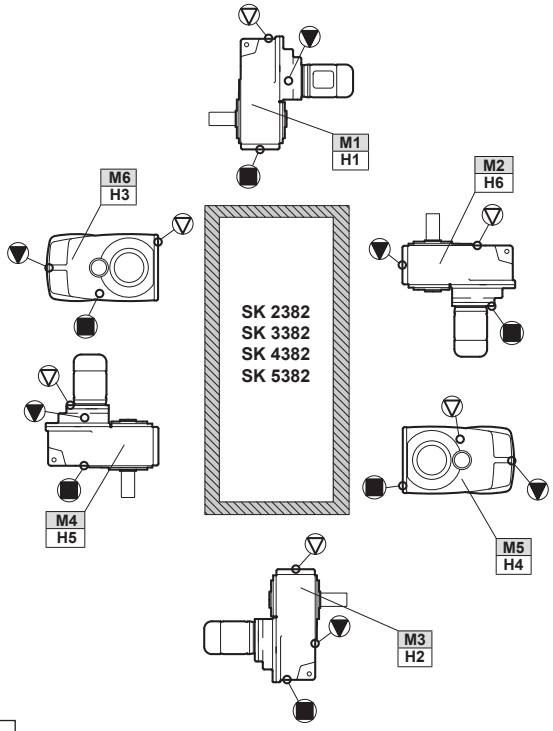

▽ = Vent

▼ = Oil Level

■ = Oil Plug

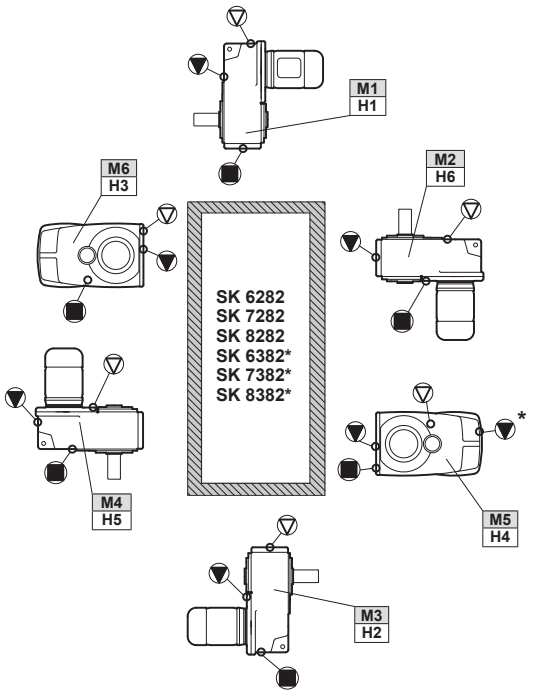

* Oil level for 3 stage gear units

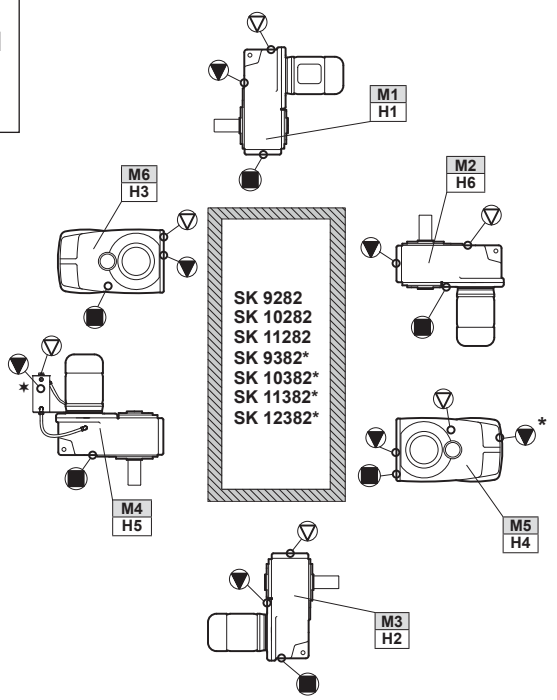

* Oil level for 3 stage gear units

∗ Oil fill level should be verified using the dip stick located in the oil tank for the M4/H5 position.

92 SERIES HELICAL-BEVEL OIL PLUG & VENT LOCATIONS

Oil plug connections

Prior to commissioning the reducer, check the oil-fill level using the reducer's oil-level plug and drain or add additional oil as needed. The minimum acceptable oil level is 0.15 in (4mm) below the oil level hole. ***For mounting orientations other than shown please consult NORD Gear. New plug locations may be required.***

Foot Mount

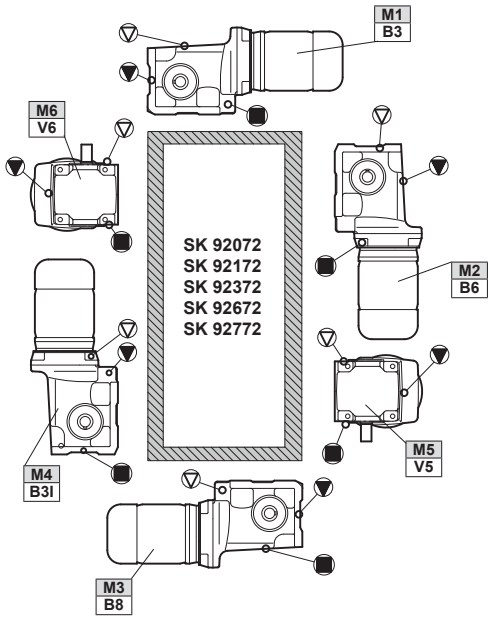

Shaft/Flange Mount

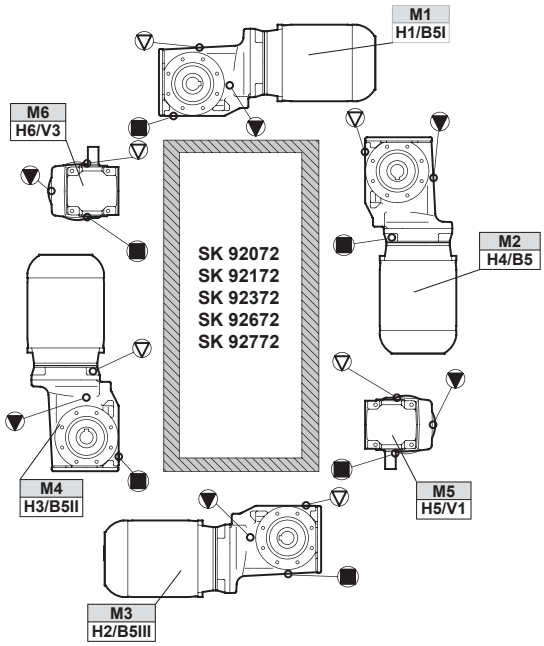

▽ = Vent

▼ = Oil Level

■ = Oil Plug

92.1/93.1 SERIES HELICAL-BEVEL OIL PLUG & VENT LOCATIONS

Oil plug locations

Prior to commissioning the reducer, check the oil-fill level using the reducer's oil-level plug and drain or add additional oil as needed. ***For mounting orientations other than shown please consult NORD Gear. New plug locations may be required.***

92.1 Series

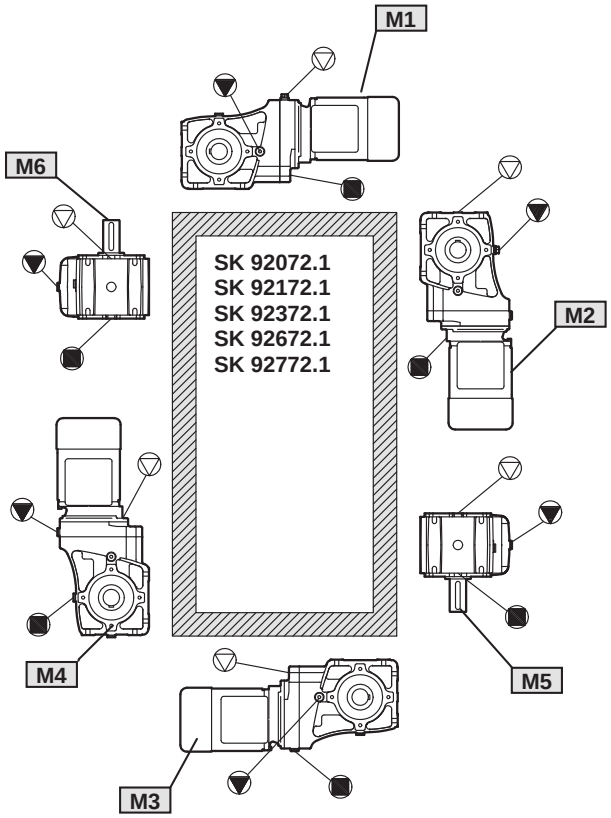

93.1 Series

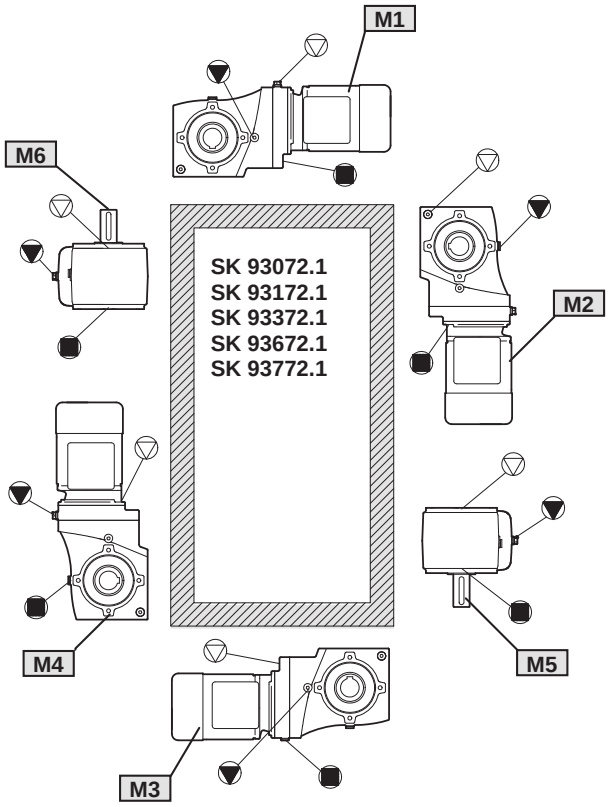

▽ = Vent

▼ = Oil Level

■ = Oil Plug

90.1 HELICAL-BEVEL OIL PLUG & VENT LOCATIONS

Oil plug connections

Prior to commissioning the reducer, check the oil-fill level using the reducer's oil-level plug and drain or add additional oil as needed. The minimum acceptable oil level is 0.15 in (4mm) below the oil level hole. ***For mounting orientations other than shown please consult NORD Gear. New plug locations may be required.***

Foot Mount

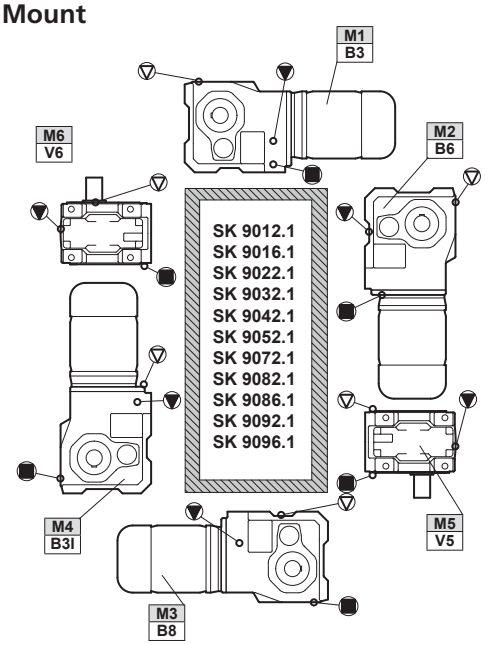

Foot Mount

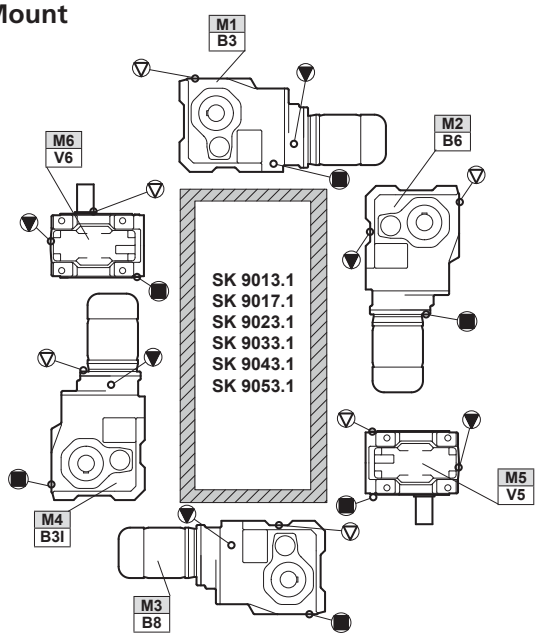

Shaft/Flange Mount

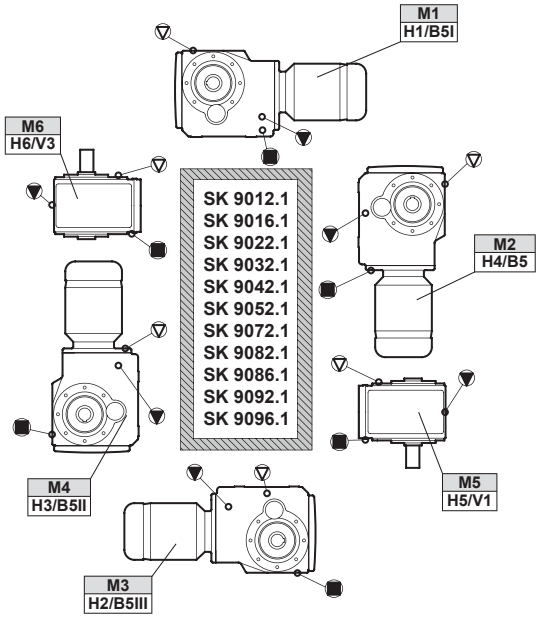

Shaft/Flange Mount

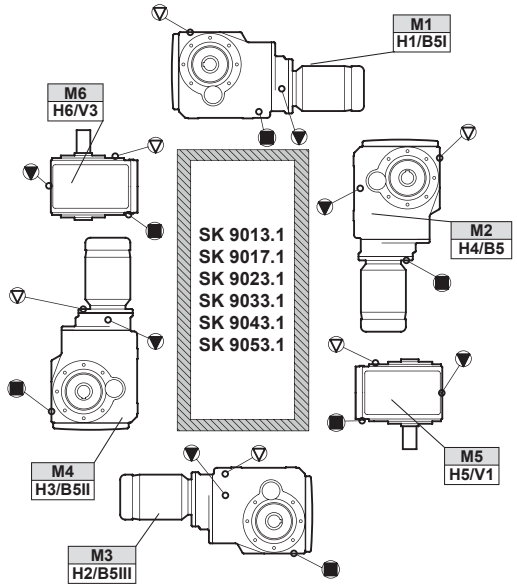

▽ = Vent

▼ = Oil Level

■ = Oil Plug

NORD Gear Limited
Toll Free in Canada: 800.668.4378

NORD Gear Corporation
Toll Free in the United States: 888.314.6673

HELICAL-WORM
OIL PLUG & VENT LOCATIONS

Oil plug connections

Prior to commissioning the reducer, check the oil-fill level using the reducer's oil-level plug and drain or add additional oil as needed. The minimum acceptable oil level is 0.15 in (4mm) below the oil level hole. ***For mounting orientations other than shown please consult NORD Gear. New plug locations may be required.***

Foot Mount

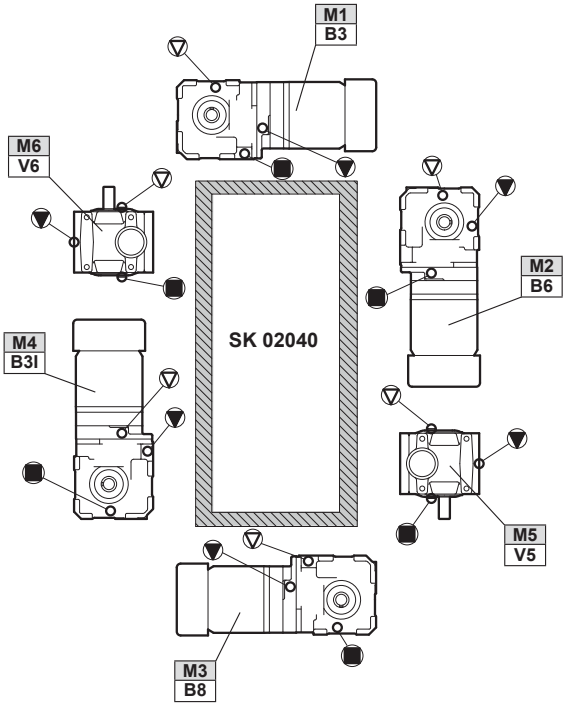

Shaft/Flange Mount

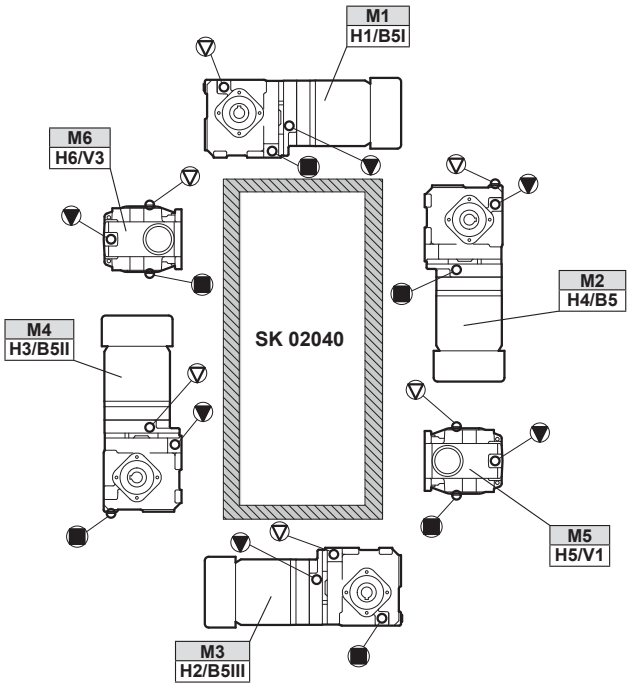

▽ = Vent

▼ = Oil Level

■ = Oil Plug

HELICAL-WORM
OIL PLUG & VENT LOCATIONS

Foot Mount

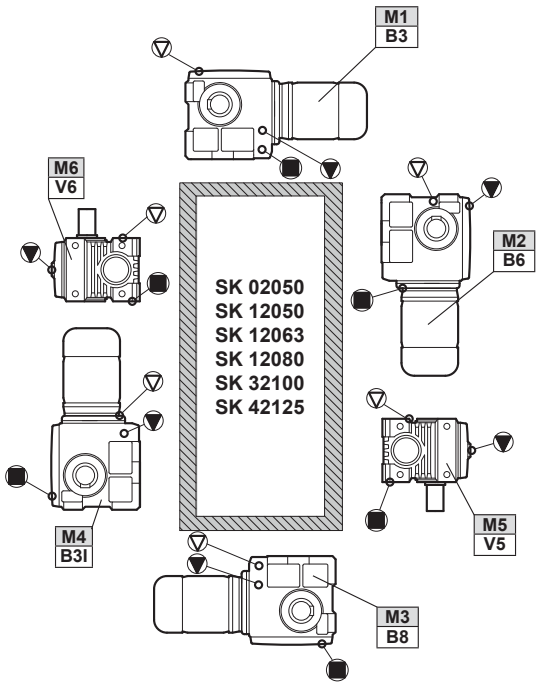

Foot Mount

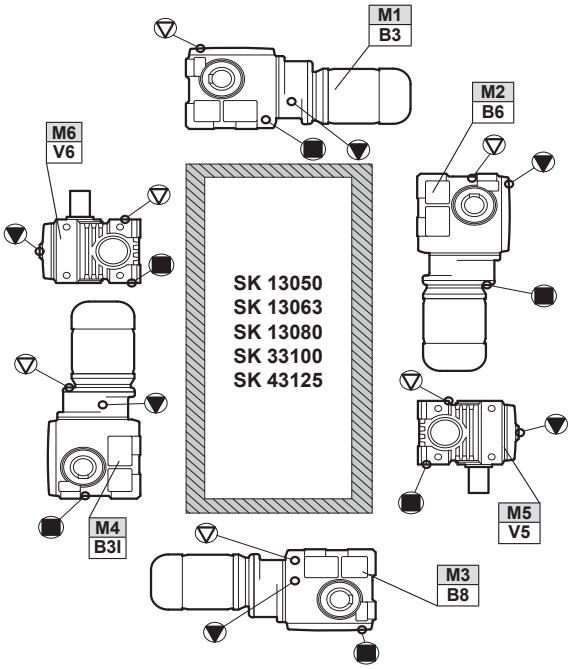

Shaft/Flange Mount

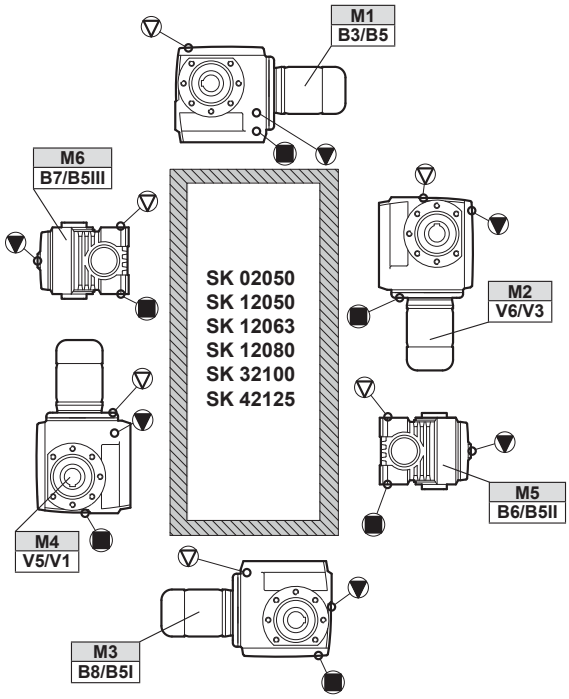

Shaft/Flange Mount

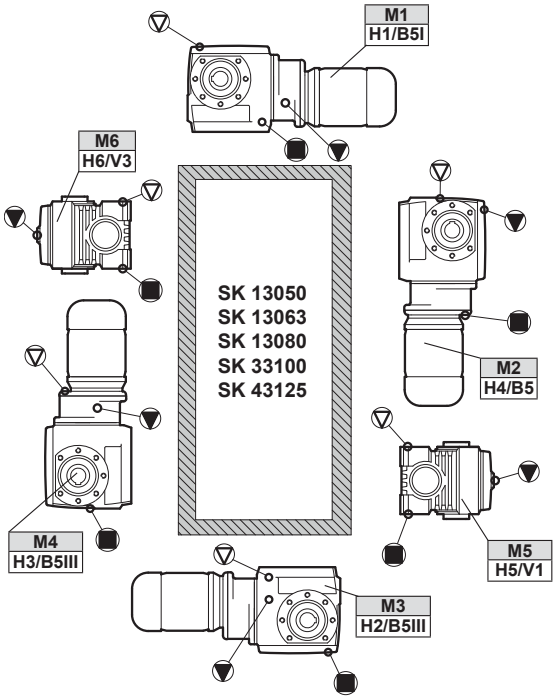

▽ = Vent

▼ = Oil Level

■ = Oil Drain

NORD Gear Limited
Toll Free in Canada: 800.668.4378

NORD Gear Corporation
Toll Free in the United States: 888.314.6673

NORDBLOC®
OIL PLUG & VENT LOCATIONS

Oil plug connections

Prior to commissioning the reducer, check the oil-fill level using the reducer's oil-level plug and drain or add additional oil as needed. The minimum acceptable oil level is 0.15 in (4mm) below the oil level hole. ***For mounting orientations other than shown please consult NORD Gear. New plug locations may be required.***

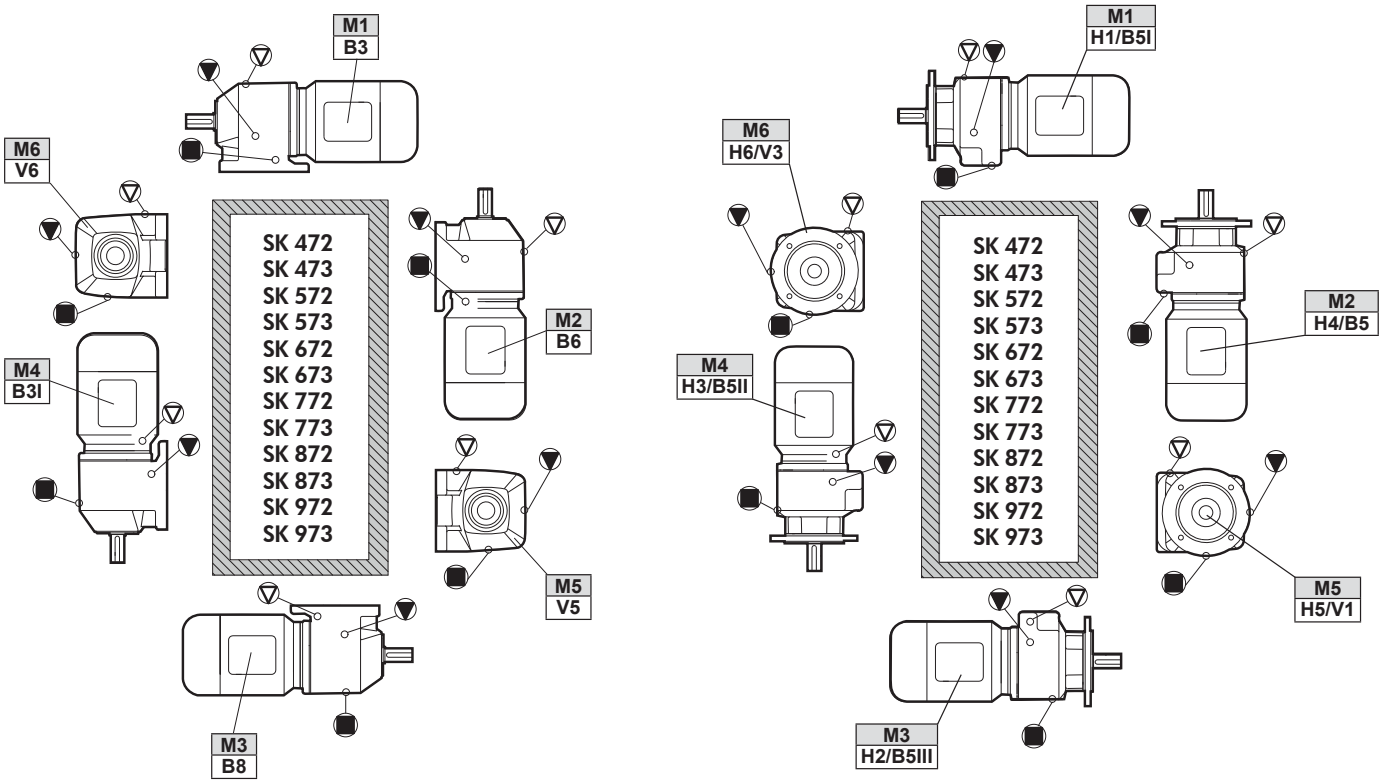

NORDBLOC®.1
OIL PLUG & VENT LOCATIONS

Oil plug connections

Prior to commissioning the reducer, check the oil-fill level using the reducer's oil-level plug and drain or add additional oil as needed. The minimum acceptable oil level is 0.15 in (4mm) below the oil level hole. ***For mounting orientations other than shown please consult NORD Gear. New plug locations may be required.***

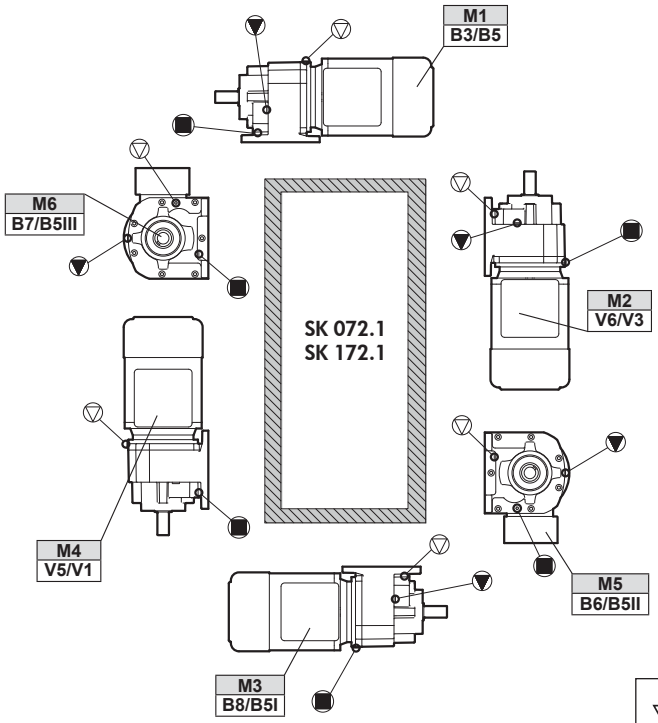

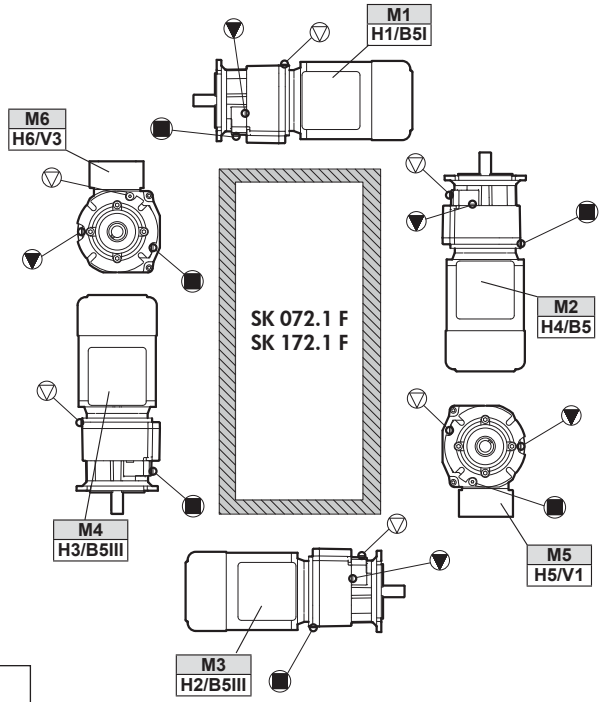

▽ = Vent
▼ = Oil Level
■ = Oil Plug

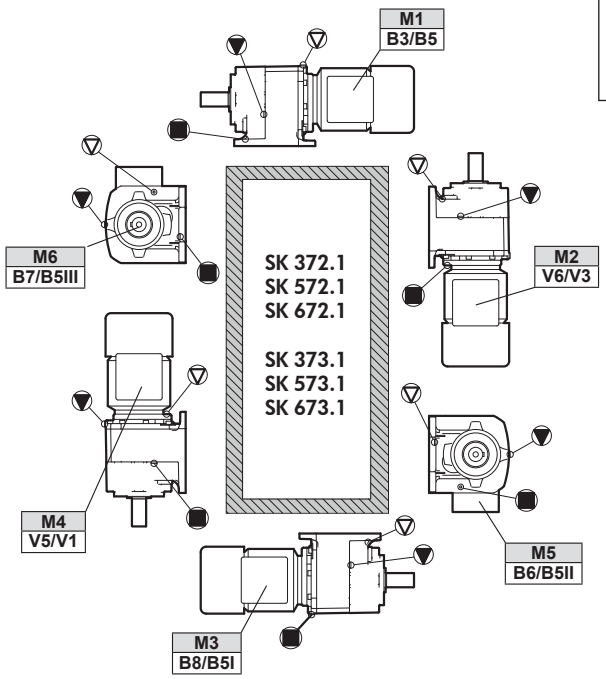

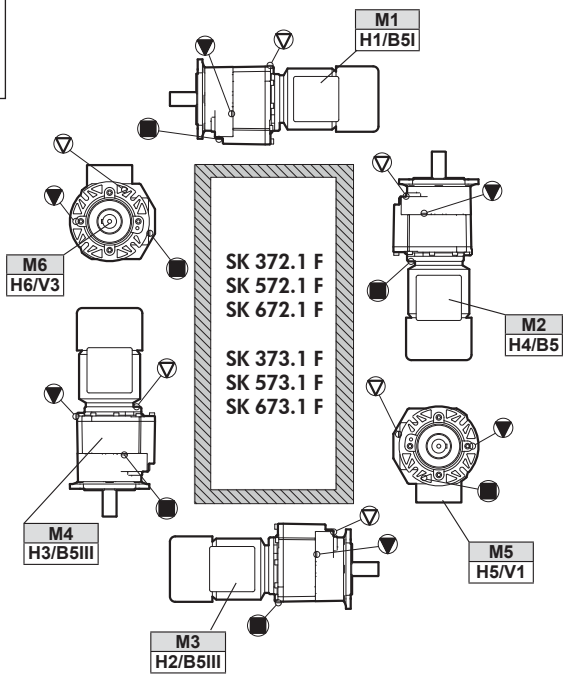

NORDBLOC®.1
OIL PLUG & VENT LOCATIONS

Oil plug connections

Prior to commissioning the reducer, check the oil-fill level using the reducer's oil-level plug and drain or add additional oil as needed. The minimum acceptable oil level is 0.15 in (4mm) below the oil level hole. ***For mounting orientations other than shown please consult NORD Gear. New plug locations may be required.***

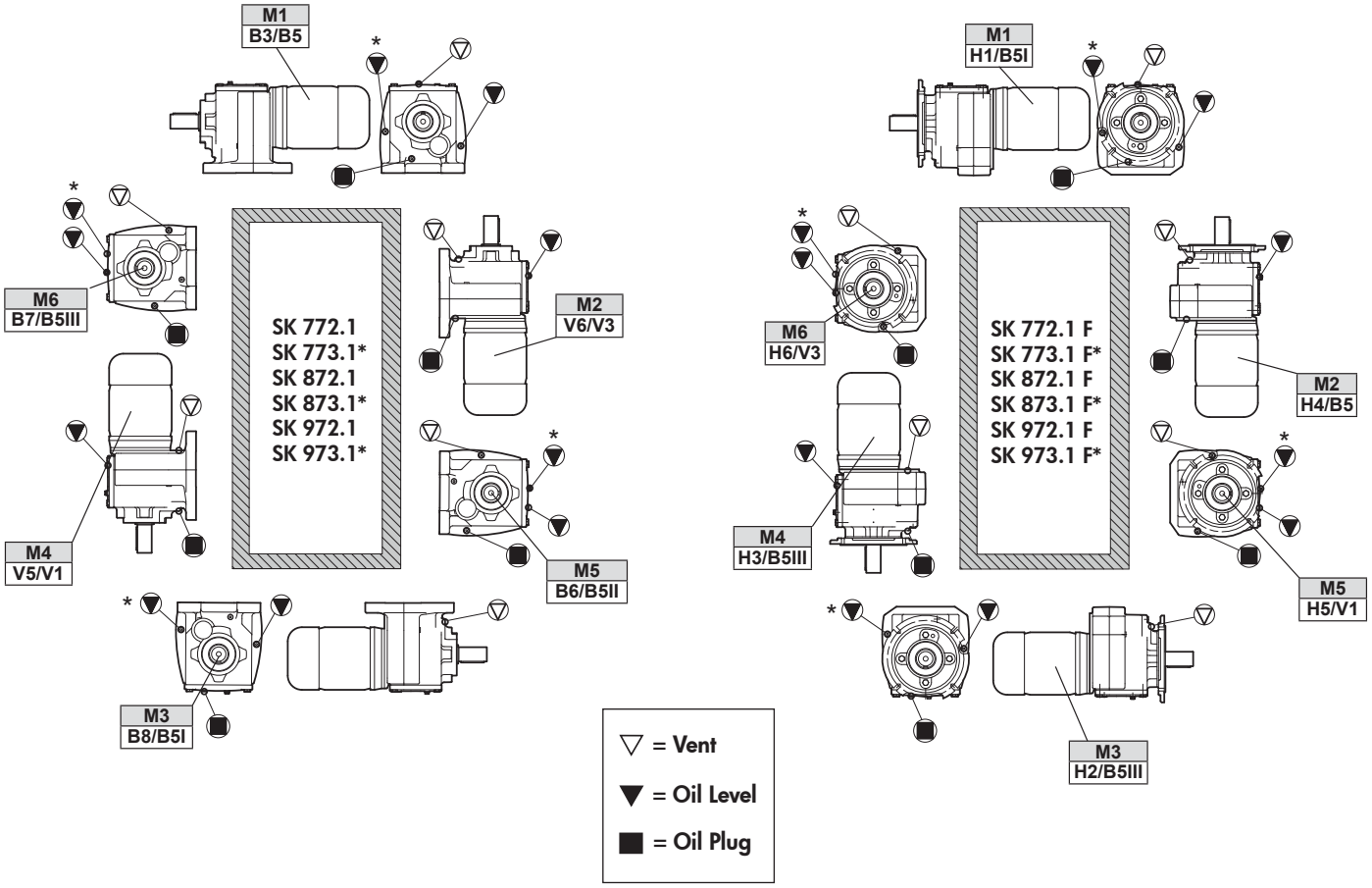

*** Oil fill level for three stage gear units.**

MINICASE® (SMI/SMID) WORM GEAR OIL PLUG & VENT LOCATIONS

DRIVESYSTEMS — RETAIN FOR FUTURE USE — U14750 - 1 of 1

Oil Plug and Vent Locations

MINICASE® (SMI/SMID) reducers and gear motors are fitted with oil plugs to allow for optional venting of the gear unit. NORD can supply either an AUTOVENT™ (valve-type) vent or an open vent. Vent options are available for most gear unit sizes and positions as indicated by the table below. For more complete details on vent options and when to consider reducer venting, see user manual U10800.

Vent Compatability by Unit Size & Mounting Position

	M1	M2	M3	M4	M5	M6
SMI/SMID 31		✓	✓	✓		✓
SMI/SMID 40		✓	✓	✓		✓
SMI/SMID 50	✓	✓	✓	✓		✓
SMI/SMID 63	✓	✓	✓	✓	✓	✓
SMI/SMID 75	✓	✓	✓	✓		✓

Continuous Input speed ≤ 1800 rpm

Vent Kit Part Numbers

Type	Transportation Seal	Installation	Part Number
AUTOVENT™	Included	Factory or Field site	66093510
Open Vent	None	Field Only	60693500
Open Vent	Included	Factory or Field site	22008004 (vent) 25308120 (gasket)

Unless noted by a seperate part number, vent kits include the housing gasket

Optional Vent Locations

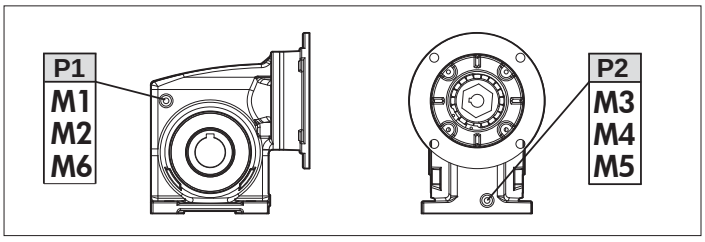

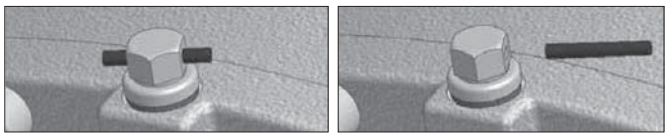

WARNING

To prevent build-up of excessive pressure, sealed vents must be activated as shown prior to gear unit start-up.

MINICASE® (SMI/SMID) Foot Housing

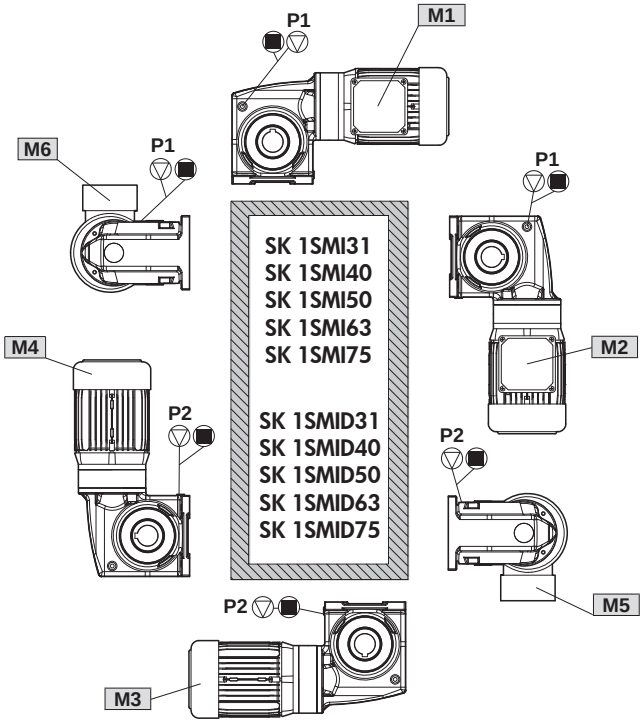

MINICASE® (SMI/SMID) Flange Housing

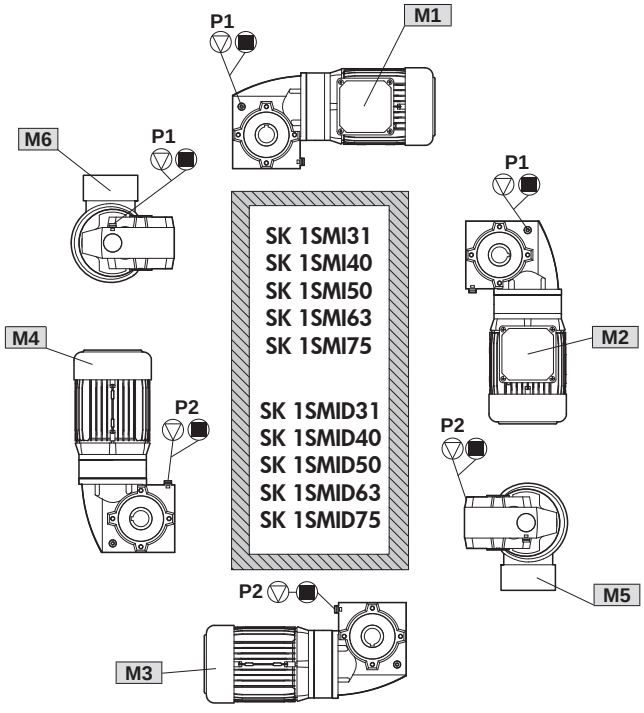

▽ = Vent
■ = Oil Plug

NORD Gear Limited
Toll Free in Canada: 800.668.4378

NORD Gear Corporation
Toll Free in the United States: 888.314.6673

FLEXBLOC™ (SI/SID SERIES) WORM GEAR OIL PLUG & VENT LOCATIONS

Vent locations

FLEXBLOC™ (SI?SID SERIES) reducers are fitted with oil plugs to allow for optional venting of the gear unit. NORD can supply either an AUTOVENT™ (valve-type) vent or an open vent. Vent options are available for most gear unit sizes and positions as indicated by the table below. For more complete details on vent options and when to consider reducer venting, see user manual U10810.

Vent Compatability by Unit Size & Mounting Position

	M1	M2	M3	M4	M5	M6
SI/SID 31		✓	✓	✓		✓
SI/SID 40		✓	✓	✓		✓
SI/SID 50	✓	✓	✓	✓		✓
SI/SID 63	✓	✓	✓	✓	✓	✓
SI/SID 75	✓	✓	✓	✓		✓

Continuous Input speed ≤ 1800 rpm

Vent Kit Part Numbers

Type	Transportation Seal	Installation	Part Number
AUTOVENT™	Included	Factory or Field site	66093510
Open Vent	None	Field Only	60693500
Open Vent	Included	Factory or Field site	22008004 (vent) 25308120 (gasket)

Unless noted by a seperate part number, vent kits include the housing gasket

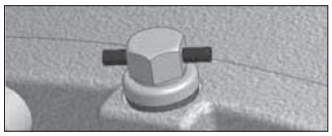

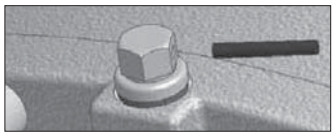

Optional Vent Locations

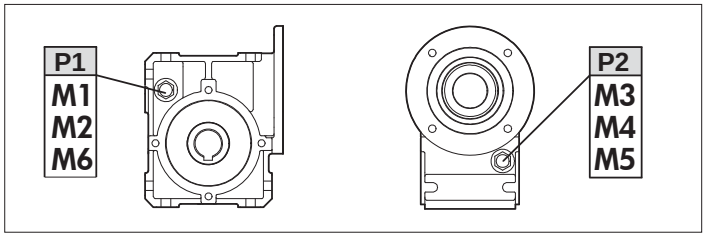

WARNING

To prevent build-up of excessive pressure, sealed vents must be activated as shown prior to gear unit start-up.

FLEXBLOC™ (SI Series) Universal Housing

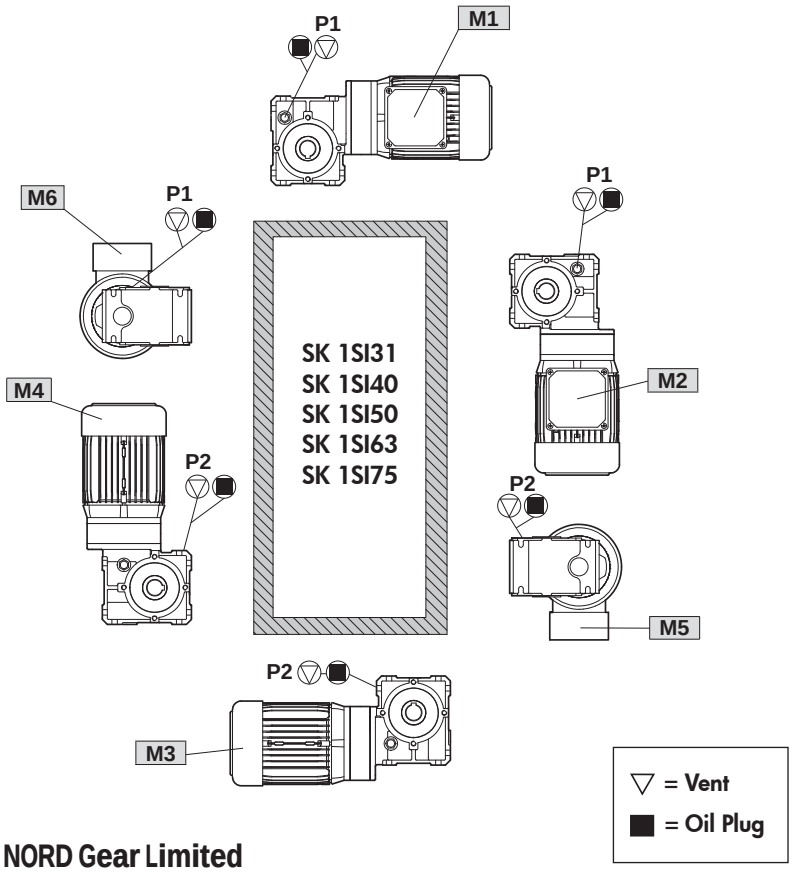

NORD Gear Limited
Toll Free in Canada: 800.668.4378

NORD Gear Corporation
Toll Free in the United States: 888.314.6673

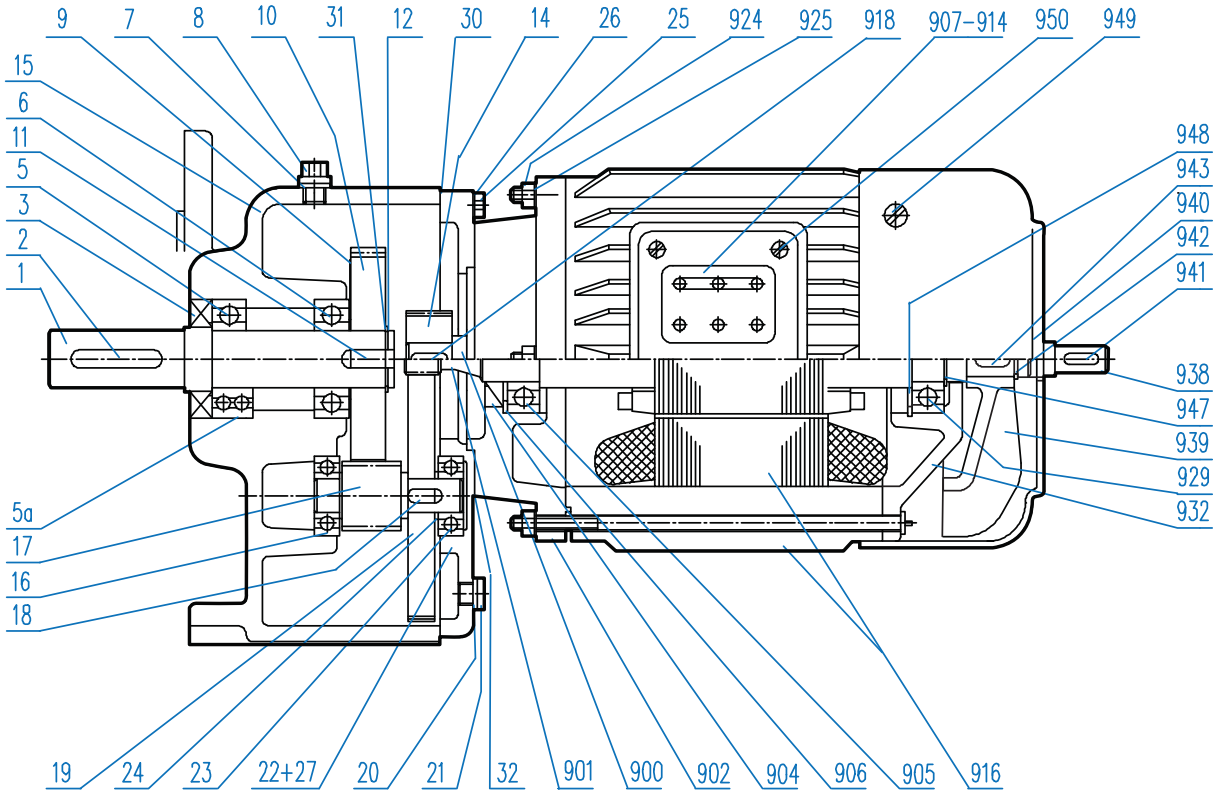

SK 0 - SK 33 Helical Gear Unit

1	Output shaft	21	Plug	910	Terminal box cover gasket
2	Key	22	Gear case cover	911	Terminal board
3	Shaft seal	23	Pinion shaft bearing	914	Cable entry gland
5	Output shaft bearing, normal	24	Shim	916	Stator case
5A	Output shaft bearing, reinforced	25	Hexagon bolt	918	Key
6	Output shaft bearing	26	Washer	924	Collar bolt
7	Seal	27	Spiral pin	925	Hexagonal nut
8	Vent screw	30	Seal	929	Bearing B
9	Shim	31	Shim	932	Endshield B
10	Driven gear	32	Seal	938	Second motor shaft end*
11	Key	900	Rotor with shaft,plain	939	Fan
12	Circlip	901	Rotor with shaft,gearcut	940	Fan cover
14	Driving pinion	902	End shield A	941	Key
15	Gear case	904	Shaft seal	942	Circlip
16	Pinion shaft, bearing	905	Bearing A	943	Key
17	Driven pinion	906	Bearing shim	947	Circlip
18	Key	907	Terminal box frame	948	Circlip
19	Driving gear	908	Terminal box cover	949	Oval flat-head bolt
20	Seal	909	Terminal box frame gasket	950	Oval flat-head bolt

* Optional Part

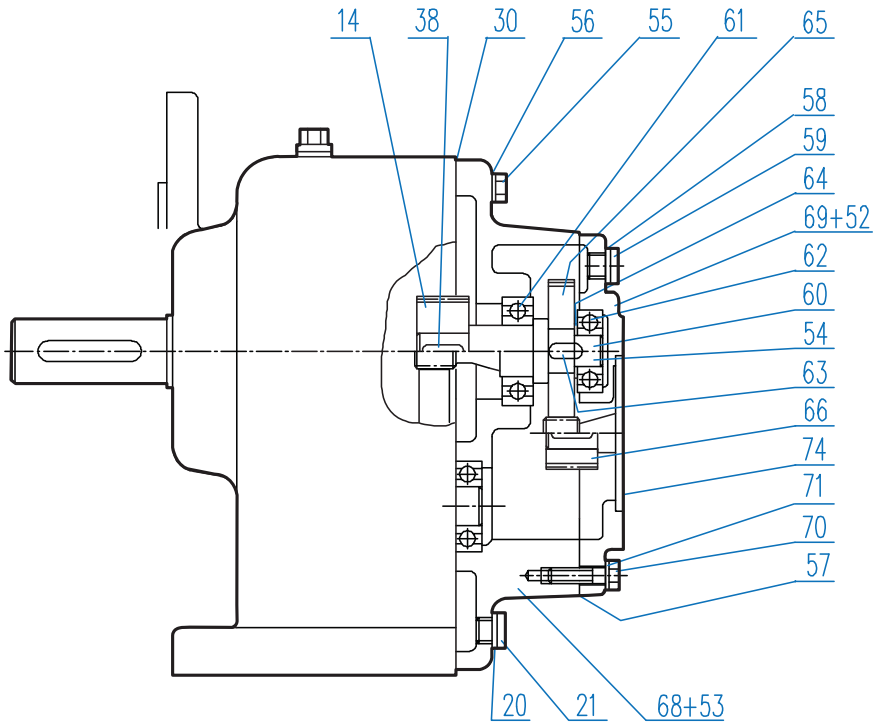

SK 010 - SK 330 Third Stage Reduction Gear

14	Driving pinion	55	Hexagon bolt	64	Shim
20	Seal	56	Washer	65	Driving gear
21	Plug	57	Seal	66	Driving pinion
27	Spiral pin	58	Seal	68	Gear case 3rd.-red.
30	Seal	59	Plug	69	Gear case cover
38	Key	60	Intermediate shaft, plain	70	Hexagon bolt
52	Spiral pin	61	Grooved ball bearing	71	Washer
53	Spiral pin	62	Grooved ball bearing	74	Seal
54	Intermediate shaft, gearcut	63	Key		

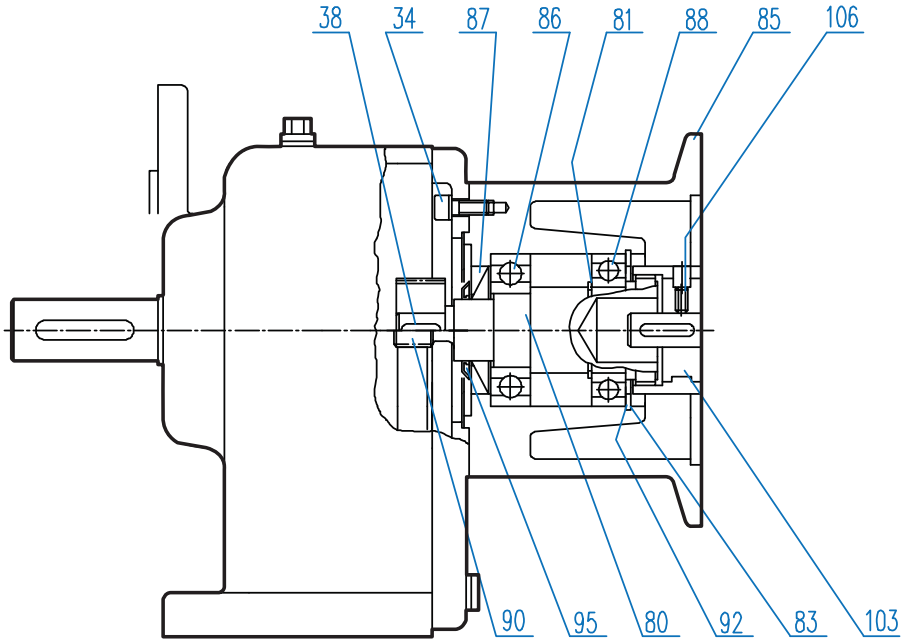

SK 0 - SK 330 IEC Input

34	Socket head bolt	85	IEC adaptor	92	Shim
38	Key	86	Input shaft bearing	103	Coupling
80	Input shaft	87	Shaft seal	106	Set screw
81	Circlip	88	Input shaft bearing		
83	Circlip	90	Pinion shaft		

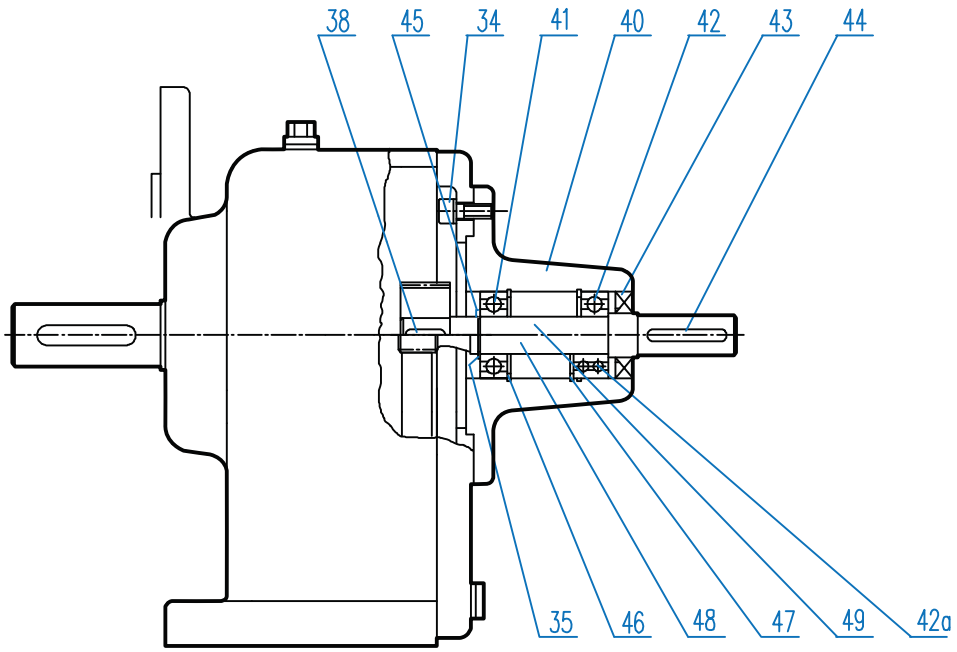

SK 0 - SK 330 Solid Shaft Input (W)

34	Socket head bolt	42	Grooved ball bearing, normal	46	Circlip
35	Shim	42A	Grooved ball bearing, reinforced	47	Circlip
38	Key	43	Shaft seal	48	Input shaft, gearcut
40	Input bearing housing	44	Key	49	input shaft, plain
41	Grooved ball bearing	45	Circlip		

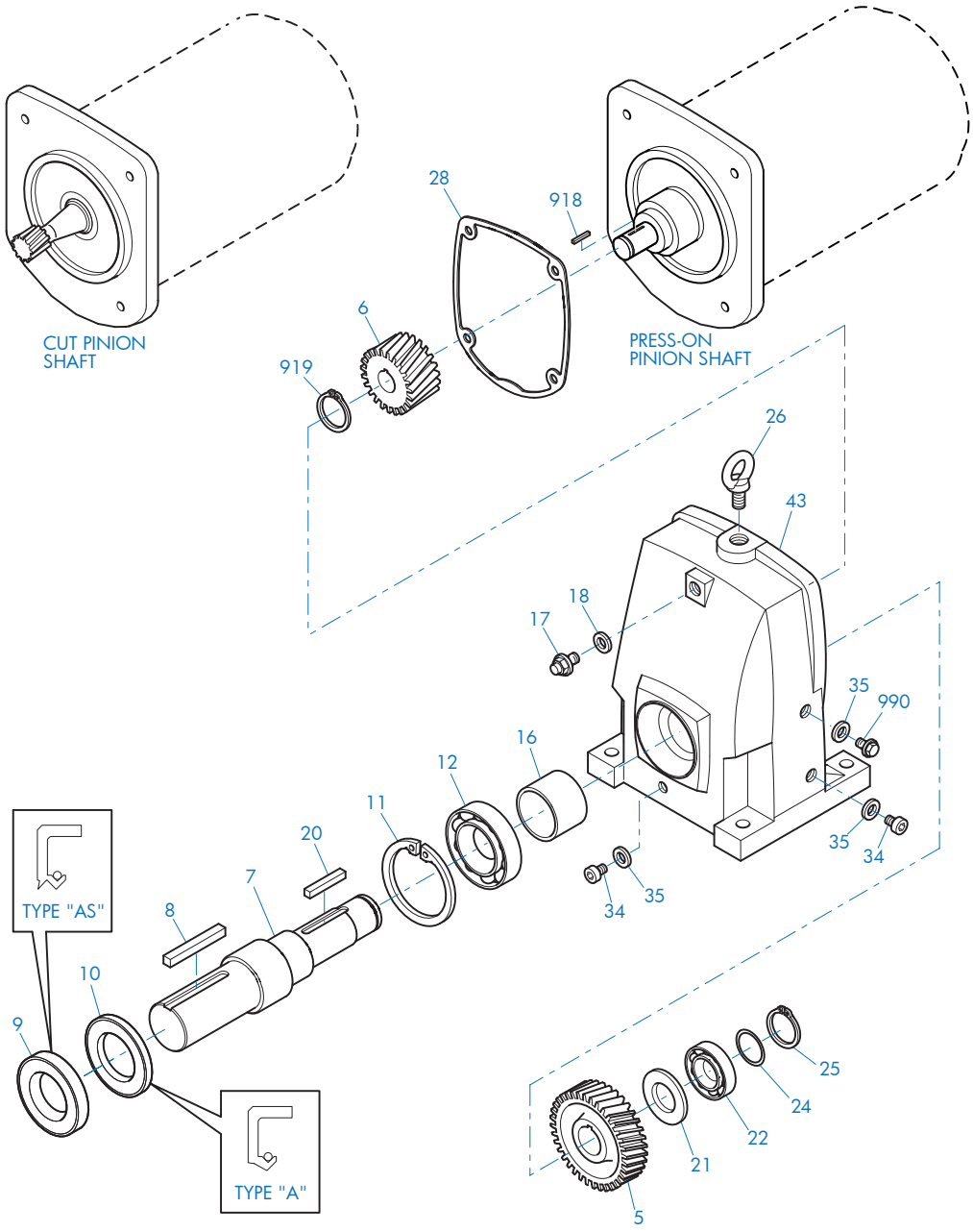

SK 11E - SK 51E Foot Mount

5	Gear	16	Spacer	26	Flanged Eye Bolt
6	Pinion	17	Vent Plug	28	Gasket
7	Output Shaft	18	Seal	34	Drain Plug
8	Key	20	Key	35	Gasket
9	Oil Seal	21	Spacer	43	Gearcase
10	Oil Seal	22	Anti-Friction Bearing	918	Key
11	Snap Ring	24	Shim	919	Snap Ring
12	Anti-Friction Bearing	25	Snap Ring	990	Oil Level Plug

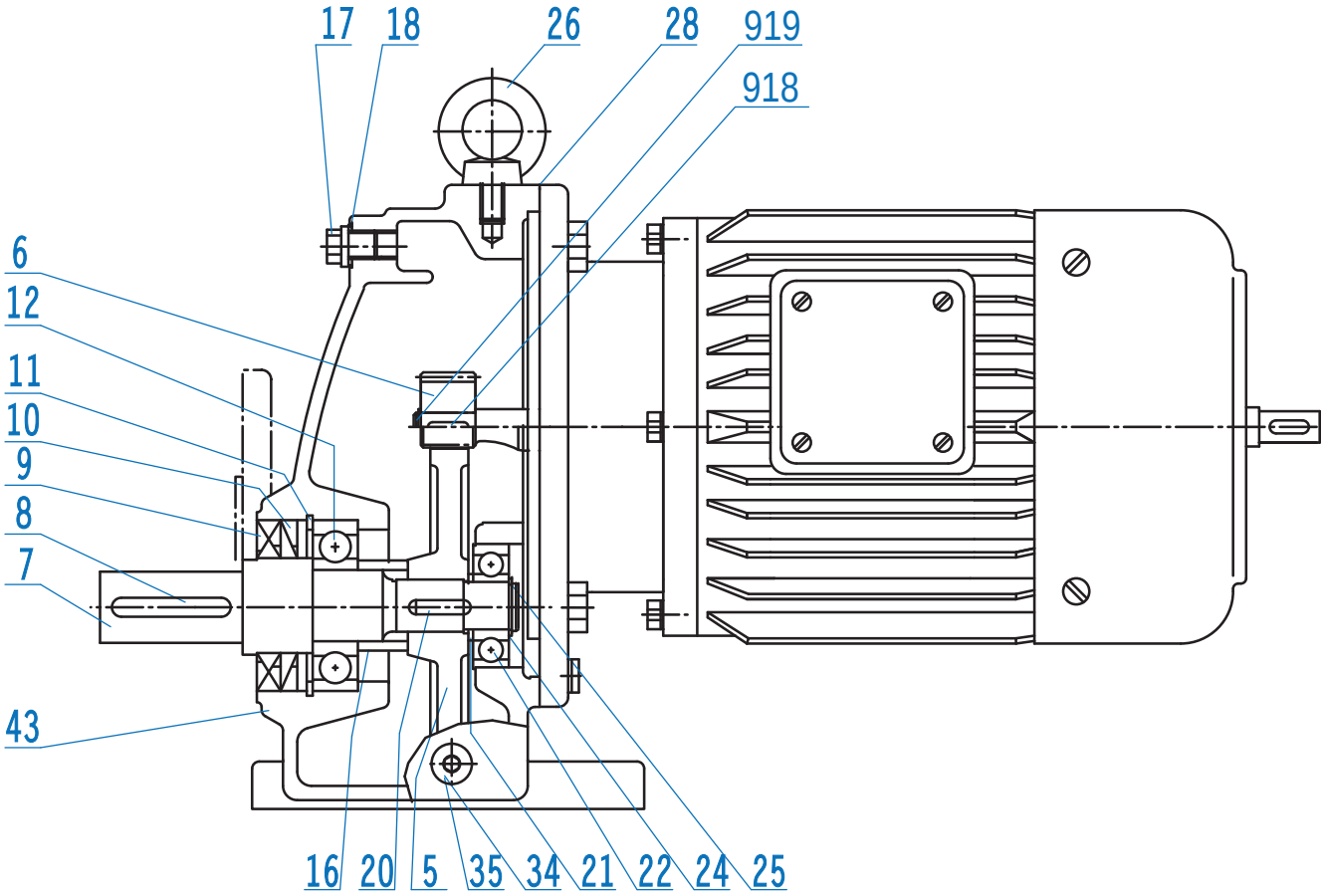

SK 11E - SK 51E Foot Mount

5	Gear	16	Spacer	26	Flanged Eye Bolt
6	Pinion	17	Vent Plug	28	Gasket
7	Output Shaft	18	Seal	34	Drain Plug
8	Key	20	Key	35	Gasket
9	Oil Seal	21	Spacer	43	Gearcase
10	Oil Seal	22	Anti-Friction Bearing	918	Key
11	Snap Ring	24	Shim	919	Snap Ring
12	Anti-Friction Bearing	25	Snap Ring		

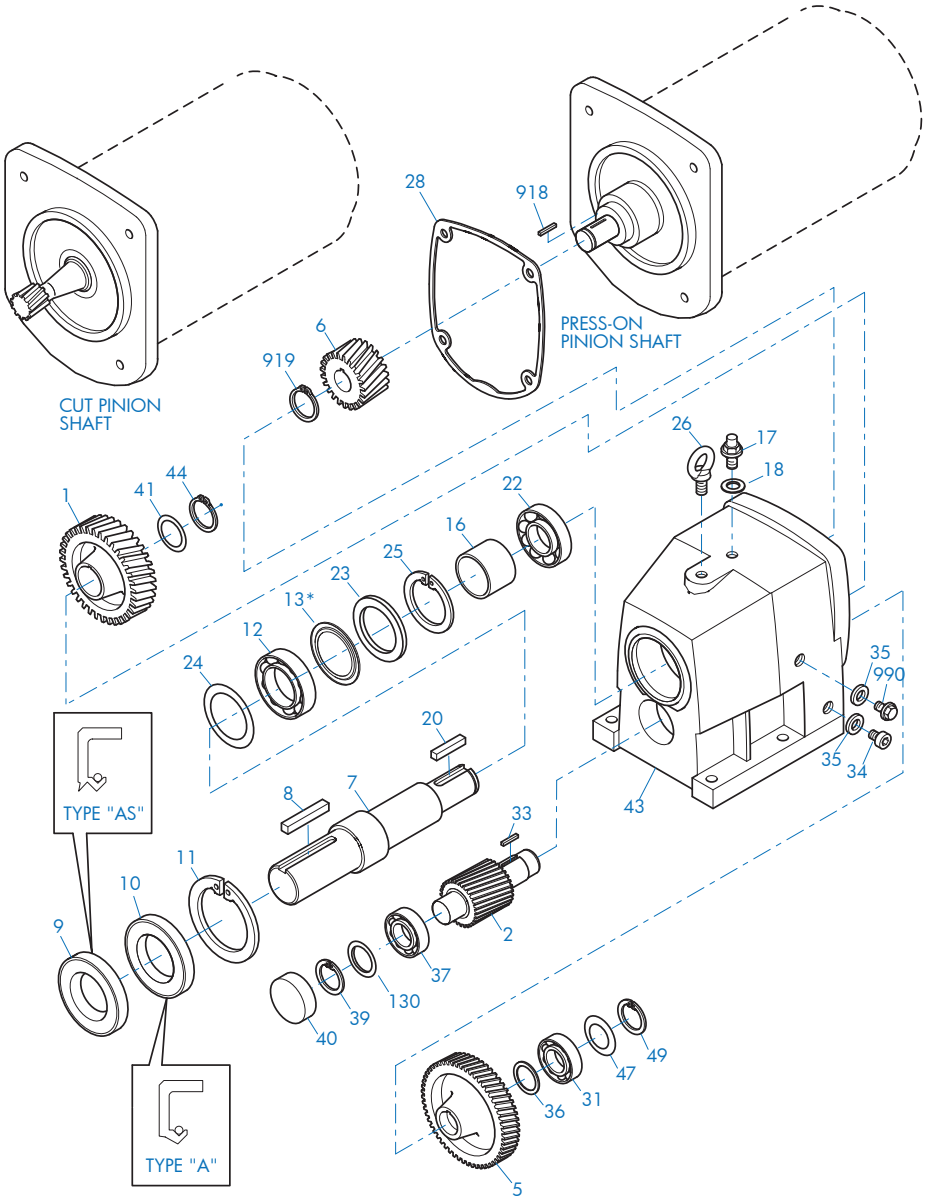

SK02 - SK52 Foot Mount

1	Gear	18	Seal	37	Anti-Friction Bearing
2	Pinion Shaft	20	Key	39	Snap Ring
5	Gear	22	Anti-Friction Bearing	40	Bore Plug
6	Pinion	23	Thrust Washer	41	Shim
7	Output Shaft	24	Shim	43	Gearcase
8	Key	25	Snap Ring	44	Snap Ring
9	Oil Seal	26	Flanged Eye Bolt	47	Shim
10	Oil Seal	28	Gasket	49	Snap Ring
11	Snap Ring	31	Anti-Friction Bearing	130	Shim
12	Anti-Friction Bearing	33	Key	918	Key
13	NILOS Ring*	34	Drain Plug	919	Snap Ring
16	Spacer	35	Gasket	990	Oil Level Plug
17	Vent Plug	36	Spacer		

* Conditionally used part

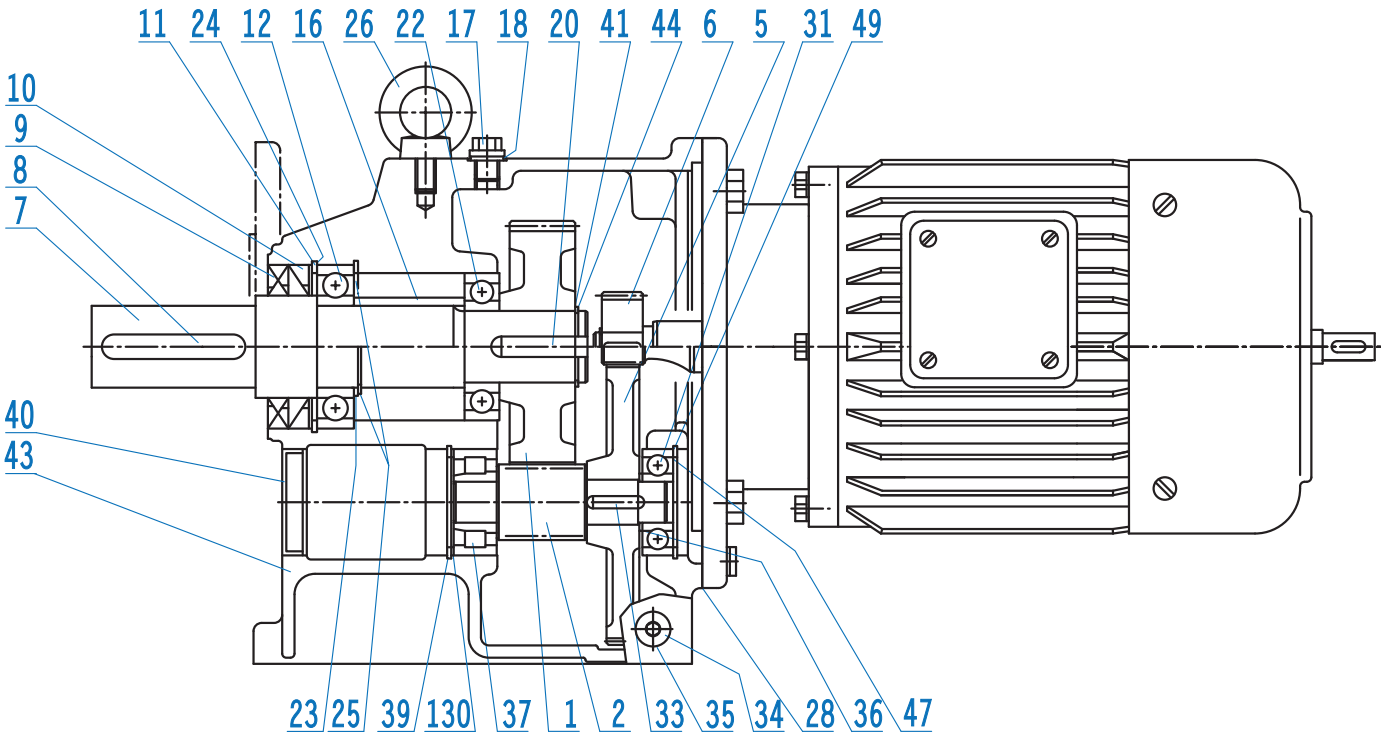

SK02 - SK52 Foot Mount

1	Gear	18	Seal	37	Anti-Friction Bearing
2	Pinion Shaft	20	Key	39	Snap Ring
5	Gear	22	Anti-Friction Bearing	40	Bore Plug
6	Pinion	23	Thrust Washer	41	Shim
7	Output Shaft	24	Shim	43	Gearcase
8	Key	25	Snap Ring	44	Snap Ring
9	Oil Seal	26	Flanged Eye Bolt	47	Shim
10	Oil Seal	28	Gasket	49	Snap Ring
11	Snap Ring	31	Anti-Friction Bearing	130	Shim
12	Anti-Friction Bearing	33	Key	918	Key
13	NILOS Ring*	34	Drain Plug	919	Snap Ring
16	Spacer	35	Gasket		
17	Vent Plug	36	Spacer		

* Conditionally used part

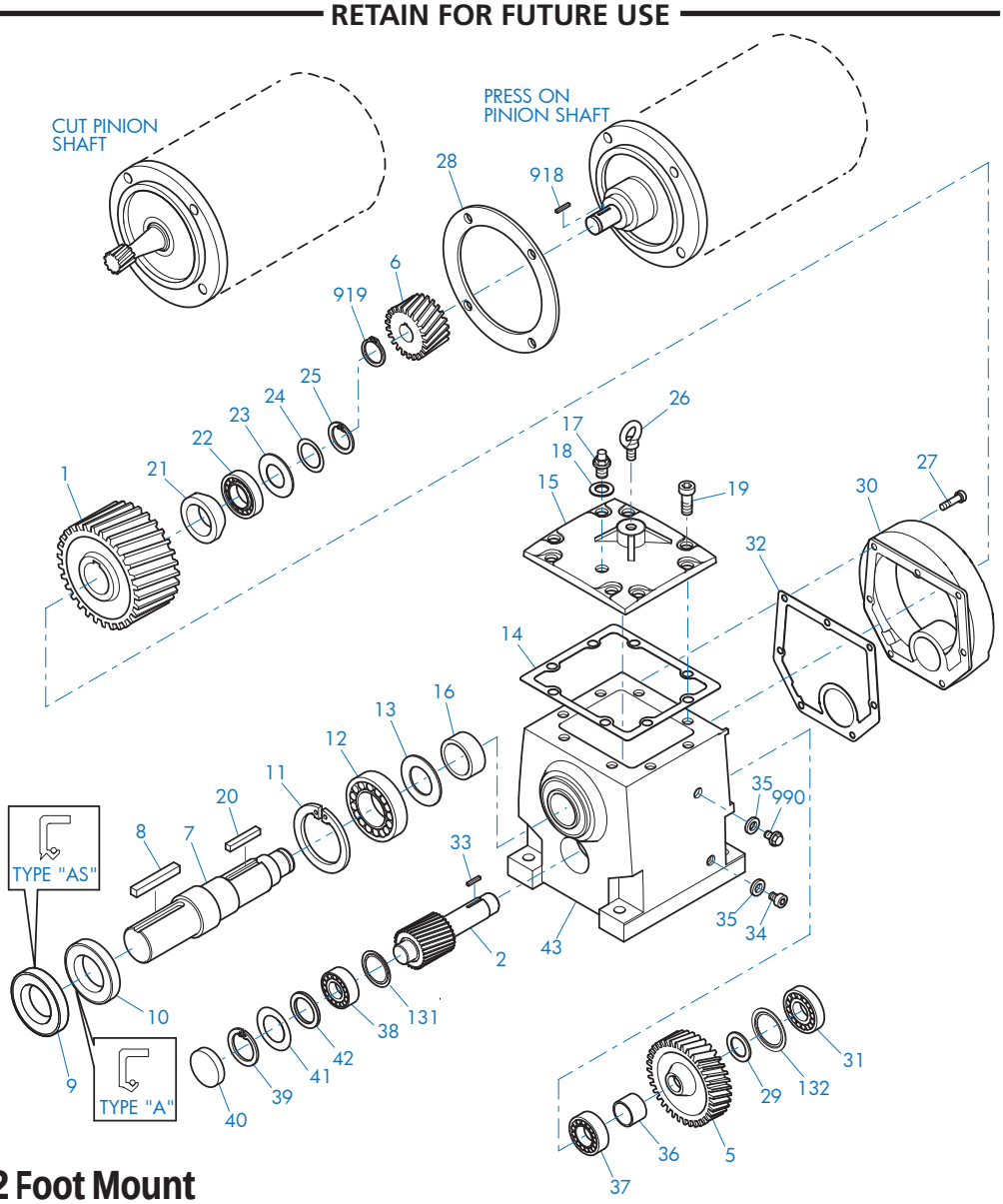

SK62 - SK102 Foot Mount

1	Gear	19	Bolt	35	Gasket
2	Pinion Shaft	20	Key	36	Spacer
5	Gear	21	Spacer	37	Anti-Friction Bearing
6	Pinion	22	Anti-Friction Bearing	38	Anti-Friction Bearing
7	Output Shaft	23	Thrust Washer	39	Snap Ring
8	Key	24	Shim	40	Bore Plug
9	Oil Seal	25	Snap Ring	41	Shim
10	Oil Seal	26	Flanged Eye Bolt	42	Thrust Washer
11	Snap Ring	27	Bolt	43	Gearcase
12	Anti-Friction Bearing	28	Gasket	131	NILOS Ring
13	NILOS ring	29	Spacer	132	NILOS Ring
14	Gasket	30	Input Cover	918	Key
15	Inspection Cover	31	Anti-Friction Bearing	919	Snap Ring
16	Spacer	32	Gasket	990	Oil Level Plug
17	Vent Plug	33	Key		
18	Seal	34	Drain Plug		

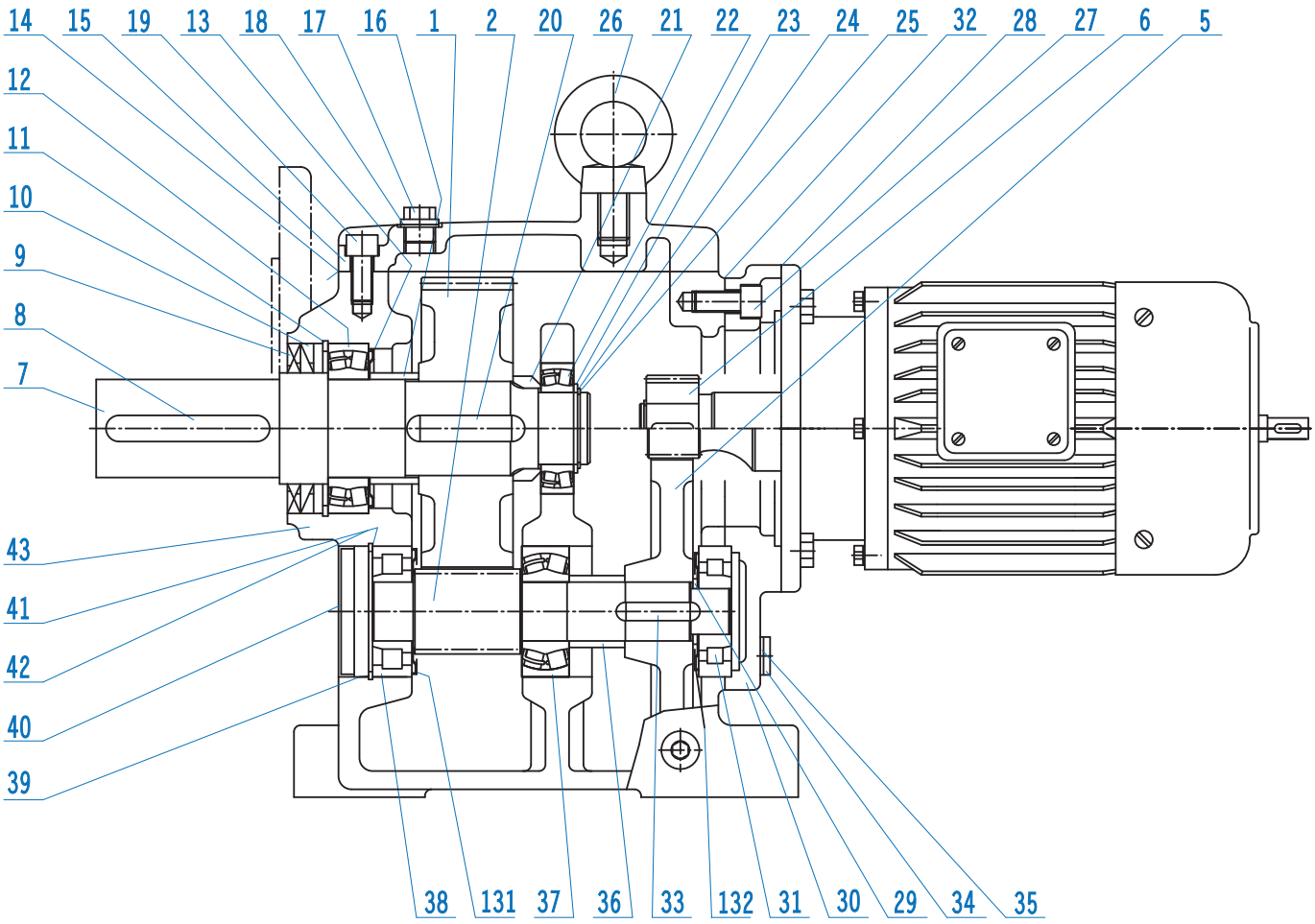

SK62 - SK102 Foot Mount

1	Gear	18	Seal	33	Key
2	Pinion Shaft	19	Bolt	34	Drain Plug
5	Gear	20	Key	35	Gasket
6	Pinion	21	Spacer	36	Spacer
7	Output Shaft	22	Anti-Friction Bearing	37	Anti-Friction Bearing
8	Key	23	Thrust Washer	38	Anti-Friction Bearing
9	Oil Seal	24	Shim	39	Snap Ring
10	Oil Seal	25	Snap Ring	40	Bore Plug
11	Snap Ring	26	Flanged Eye Bolt	41	Shim
12	Anti-Friction Bearing	27	Bolt	42	Thrust Washer
13	NILOS ring*	28	Gasket	43	Gearcase
14	Gasket	29	Spacer	131	NILOS Ring*
15	Inspection Cover	30	Input Cover	132	NILOS Ring*
16	Spacer	31	Anti-Friction Bearing	918	Key
17	Vent Plug	32	Gasket	919	Snap Ring

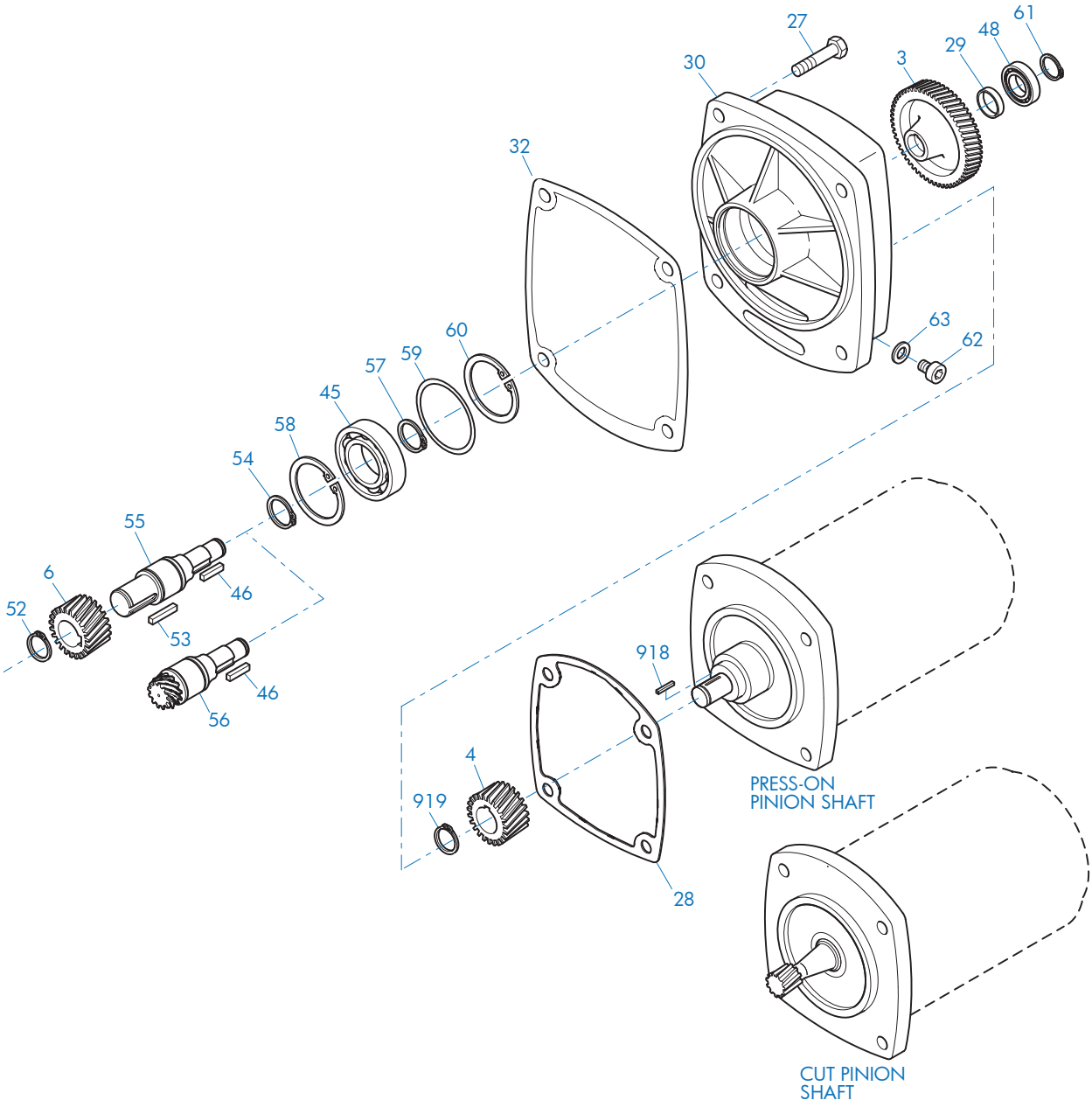

SK03 - SK53 Third Stage Reduction Gear

3	Gear	46	Key	59	Shim
4	Pinion	48	Anti-Friction Bearing	60	Snap Ring
6	Pinion	52	Snap Ring	61	Snap Ring
27	Bolt	53	Key	62	Oil Plug
28	Gasket	54	Snap Ring	63	Gasket
29	Spacer	55	Intermediate Shaft, Plain	918	Key
30	Third Reduction Gearcase	56	Intermediate Shaft, Gearcut	919	Snap Ring
32	Gasket	57	Snap Ring		
45	Anti-Friction Bearing	58	Snap Ring		

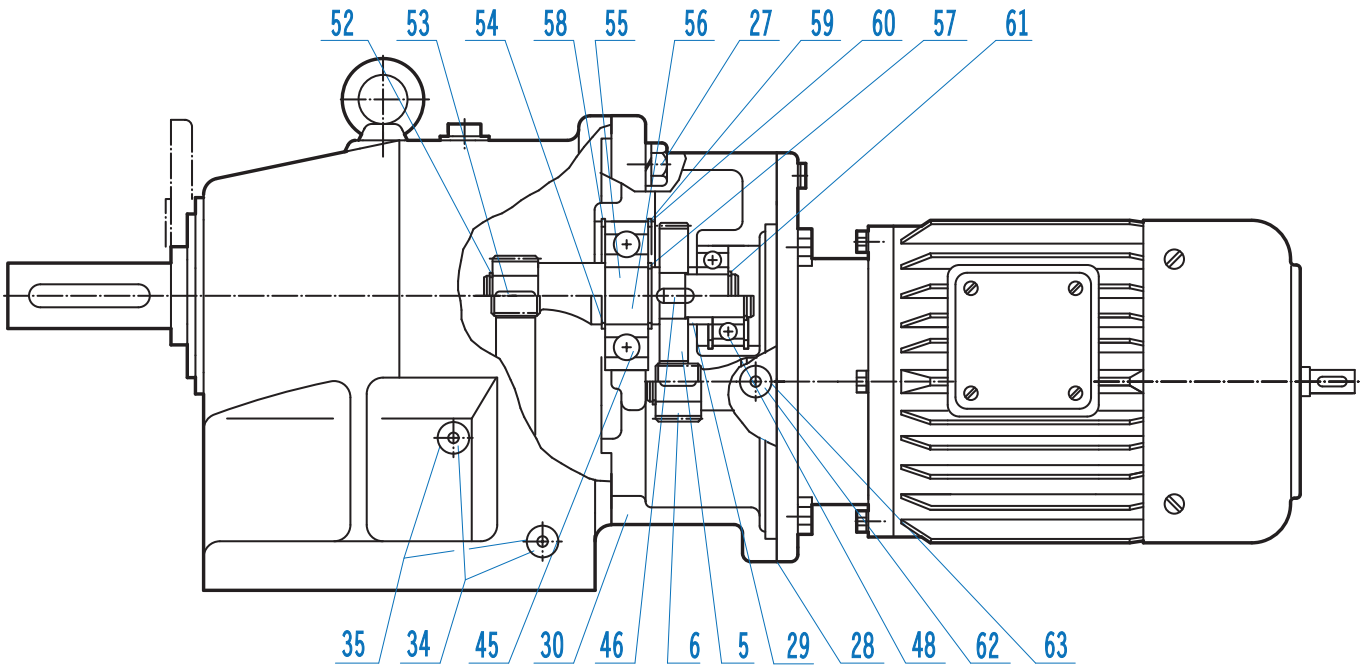

SK03 - SK53 Using Third Stage Reduction Gear

3	Gear	46	Key	59	Shim
4	Pinion	48	Anti-Friction Bearing	60	Snap Ring
6	Pinion	52	Snap Ring	61	Snap Ring
27	Bolt	53	Key	62	Oil Plug
28	Gasket	54	Snap Ring	63	Gasket
29	Spacer	55	Intermediate Shaft, Plain	918	Key
30	Third Reduction Gearcase	56	Intermediate Shaft, Gearcut	919	Snap Ring
32	Gasket	57	Snap Ring		
45	Anti-Friction Bearing	58	Snap Ring		

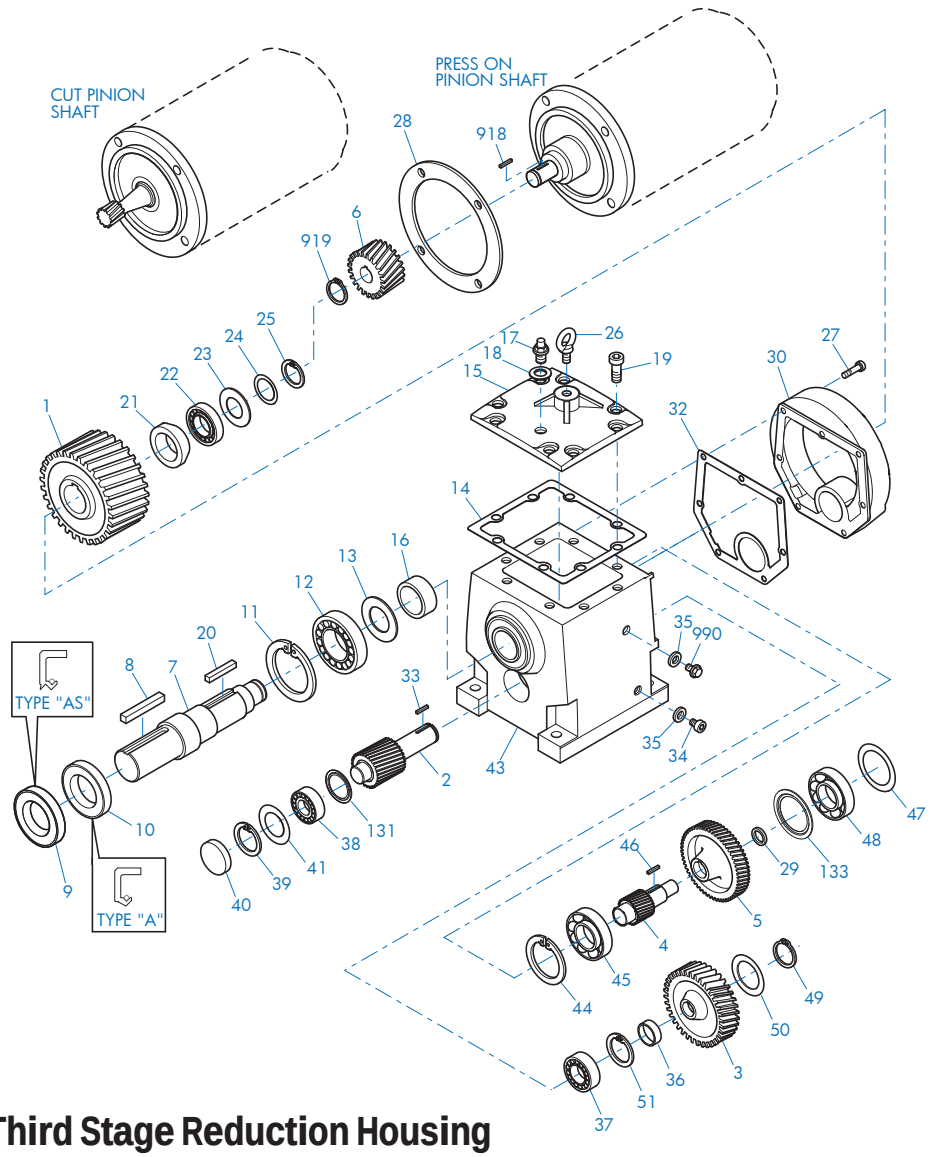

SK63 - SK103 Third Stage Reduction Housing

1	Gear	19	Bolt	38	Anti-Friction Bearing
2	Pinion Shaft	20	Key	39	Snap Ring
3	Gear	21	Spacer	40	Bore Plug
4	Pinion Shaft	22	Anti-Friction Bearing	41	Shim
5	Gear	23	Thrust Washer	43	Gearcase
6	Pinion	24	Shim	44	Snap Ring
7	Output Shaft	25	Snap Ring	45	Anti-Friction Bearing
8	Key	26	Flanged Eye Bolt	46	Key
9	Oil Seal	27	Bolt	47	Shim
10	Oil Seal	28	Gasket	48	Bearing
11	Snap Ring	29	Spacer	49	Snap Ring
12	Anti-Friction Bearing	30	Input Cover	50	Thrust Washer
13	NILOS Ring	32	Gasket	51	Snap Ring
14	Gasket	33	Key	131	NILOS Ring
15	Inspection Cover	34	Drain plug	133	NILOS Ring
16	Spacer	35	Gasket	918	Key
17	Vent Plug	36	Spacer	919	Snap Ring
18	Seal	37	Anti-Friction Bearing	990	Oil Level Plug

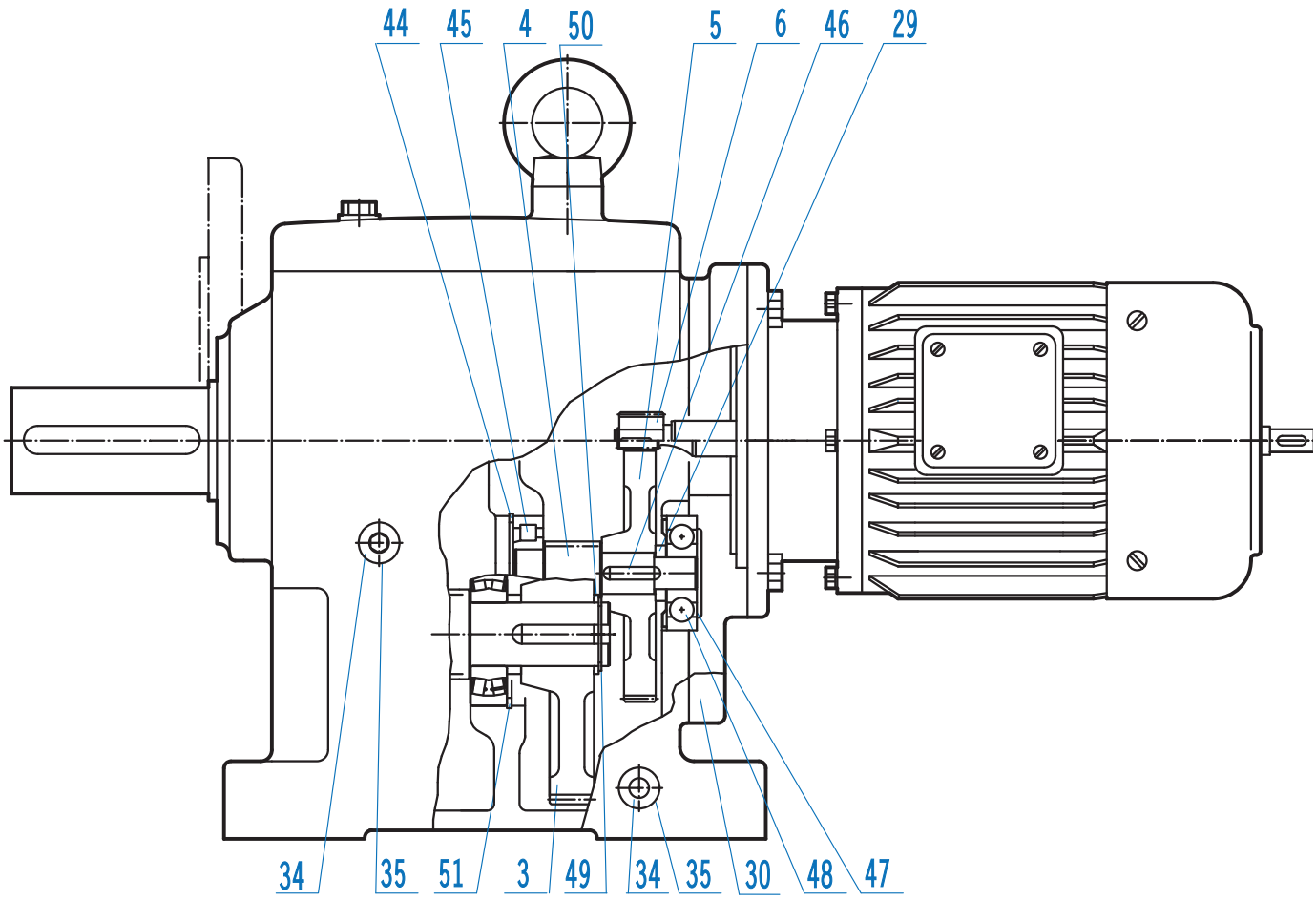

SK63 - SK103 Foot Mount

3	Gear	32	Gasket	47	Shim
4	Pinion Shaft	33	Key	48	Bearing
5	Gear	34	Drain plug	49	Snap Ring
6	Pinion	35	Gasket	50	Thrust Washer
28	Gasket	44	Snap Ring	51	Snap Ring
29	Spacer	45	Anti-Friction Bearing	133	NILOS Ring
30	Input Cover	46	Key		

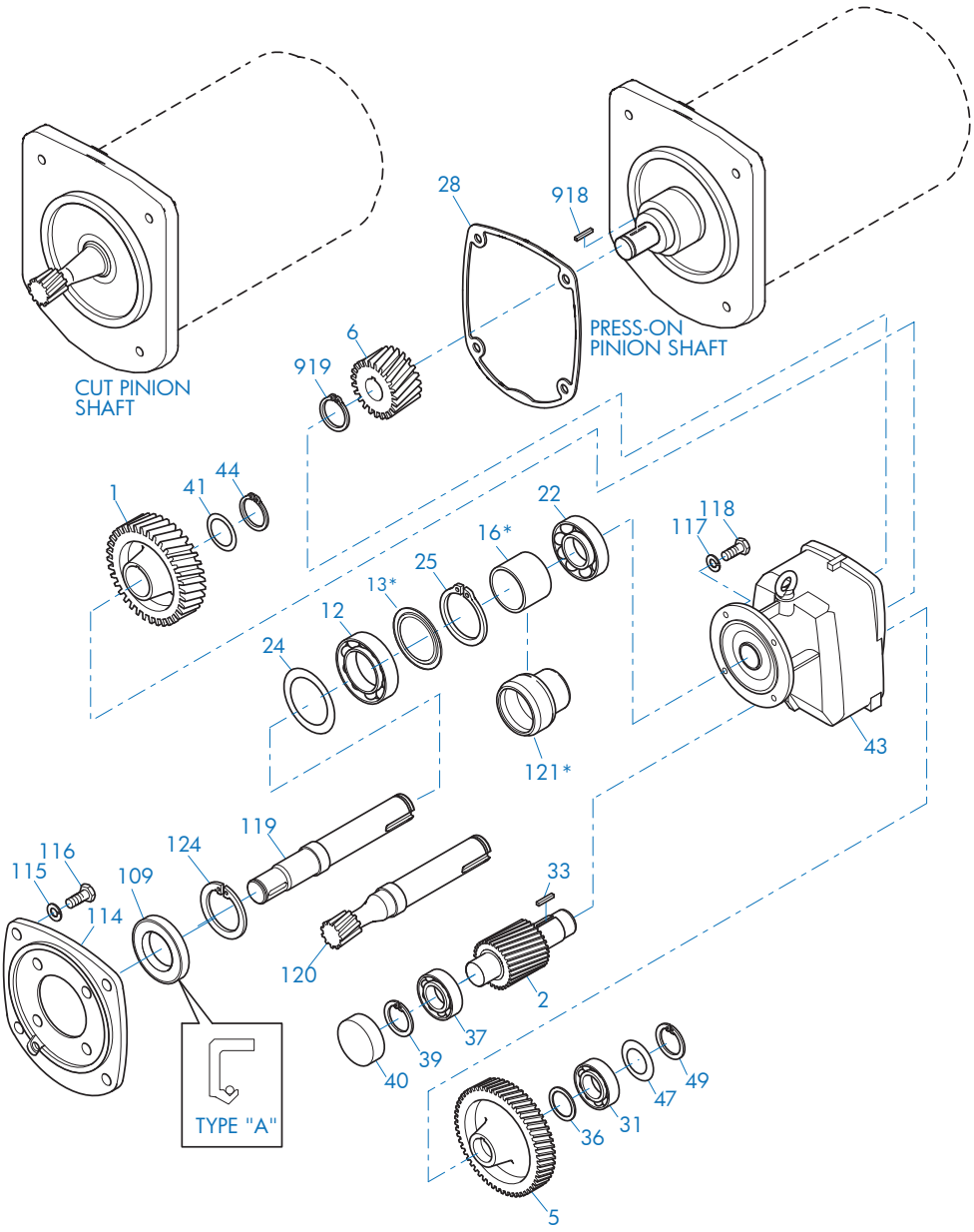

SK12/02 - SK103/52 Input Compound Reduction

1	Gear	33	Key	115	Lock Washer
2	Pinion Shaft	36	Spacer	116	Bolt
5	Gear	37	Anti-Friction Bearing	117	Lock Washer
6	Pinion	39	Snap Ring	118	Bolt
12	Anti-Friction Bearing	40	Bore Plug	119	Intermediate Shaft, Plain
13	Nilos Ring*	41	Shim	120	Intermediate Shaft, Gearcut
16	Spacer*	43	Gearcase	121	Bearing Sleeve*
22	Anti-Friction Bearing	44	Snap Ring	124	Snap Ring
24	Shim	47	Shim	918	Key
25	Snap Ring	49	Snap Ring	919	Snap Ring
28	Gasket	109	Oil Seal		
31	Anti-Friction Bearing	114	Intermediate Flange		

* Conditionally used part

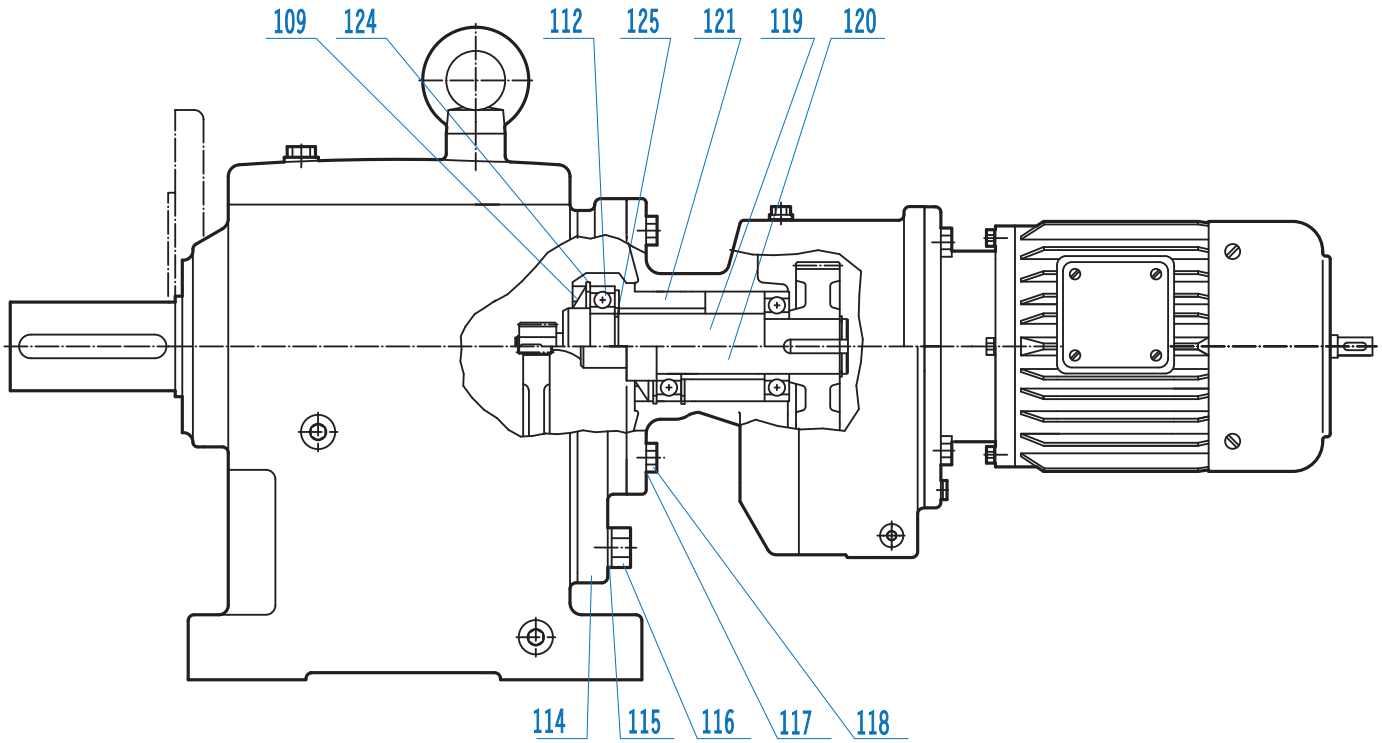

SK12/02 - SK103/52 Input Compound Reduction

12	Anti-Friction Bearing	115	Lock Washer	120	Intermediate Shaft, Gearcut
13	Nilos Ring*	116	Bolt	121	Bearing Sleeve*
16	Spacer*	117	Lock Washer	124	Snap Ring
25	Snap Ring	118	Bolt		
109	Oil Seal	119	Intermediate Shaft, Plain		
114	Intermediate Flange				

* Conditionally used part

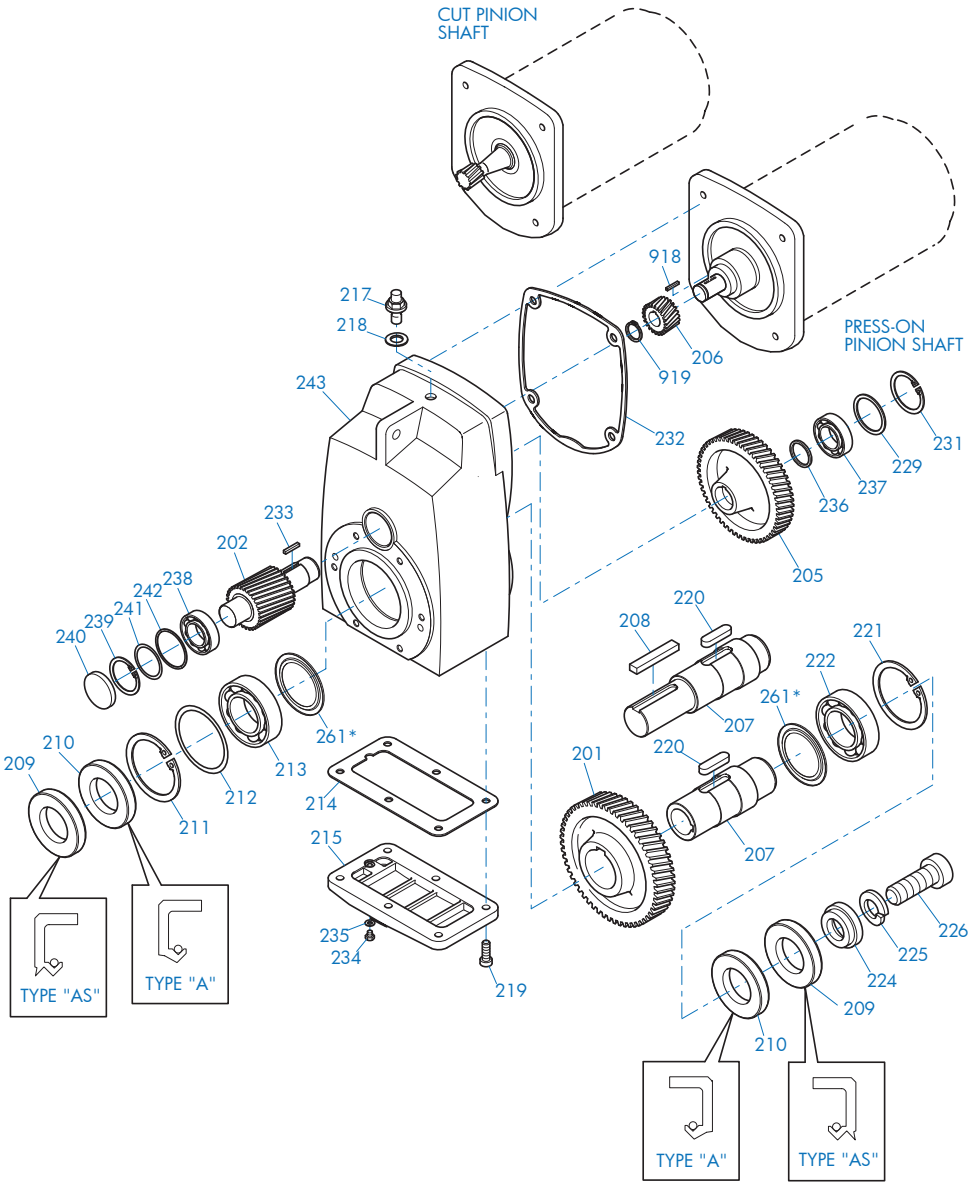

SK 0182NB - SK 5282

201 Gear	217 Vent Plug	234 Drain Plug
202 Pinion Shaft	218 Gasket	235 Gasket
205 Gear	219 Bolt	236 Thrust Washer
206 Pinion	220 Key	237 Anti-Friction Bearing
207 Output Shaft	221 Snap Ring	238 Anti-Friction Bearing
208 Key	222 Anti-Friction Bearing	239 Snap Ring
209 Oil Seal	224 Retaining Washer	240 Bore Plug
210 Oil Seal	225 Lock Washer	241 Shim
211 Snap Ring	226 Bolt	242 Thrust Washer
212 Shim	229 Thrust Washer	243 Gearcase
213 Anti-Friction Bearing	231 Snap Ring	261 Nilos Ring*
214 Gasket	232 Gasket	918 Key
215 Inspection Cover	233 Key	919 Snap Ring

* Conditionally used part

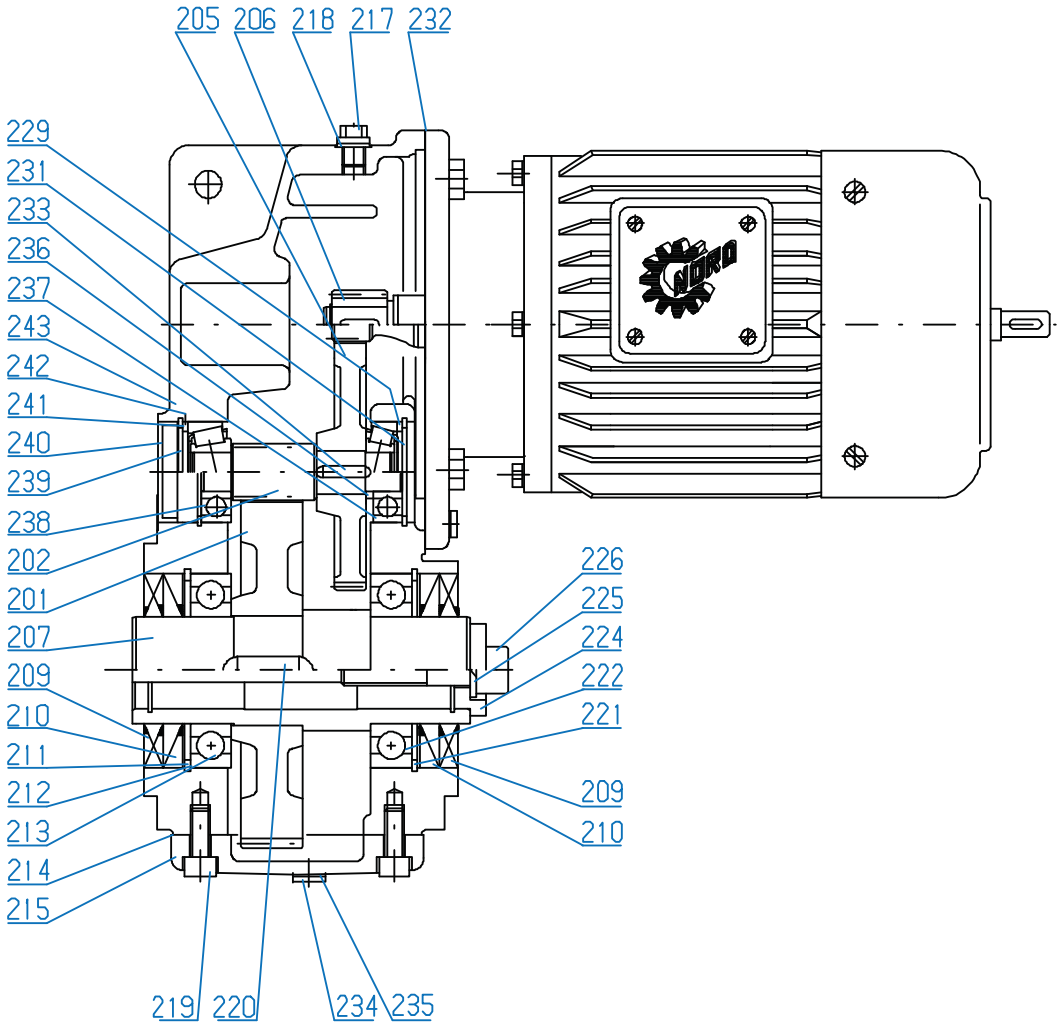

SK 0182NB - SK 5282

201 Gear	217 Vent Plug	233 Key
202 Pinion Shaft	218 Gasket	234 Drain Plug
205 Gear	219 Bolt	235 Gasket
206 Pinion	220 Key	236 Thrust Washer
207 Output Shaft	221 Snap Ring	237 Anti-Friction Bearing
209 Oil Seal	222 Anti-Friction Bearing	238 Anti-Friction Bearing
210 Oil Seal	224 Retaining Washer	239 Snap Ring
211 Snap Ring	225 Lock Washer	240 Bore Plug
212 Shim	226 Bolt	241 Shim
213 Anti-Friction Bearing	229 Thrust Washer	242 Thrust Washer
214 Gasket	231 Snap Ring	243 Gearcase
215 Inspection Cover	232 Gasket	261 Nilos Ring*

* Conditionally used part

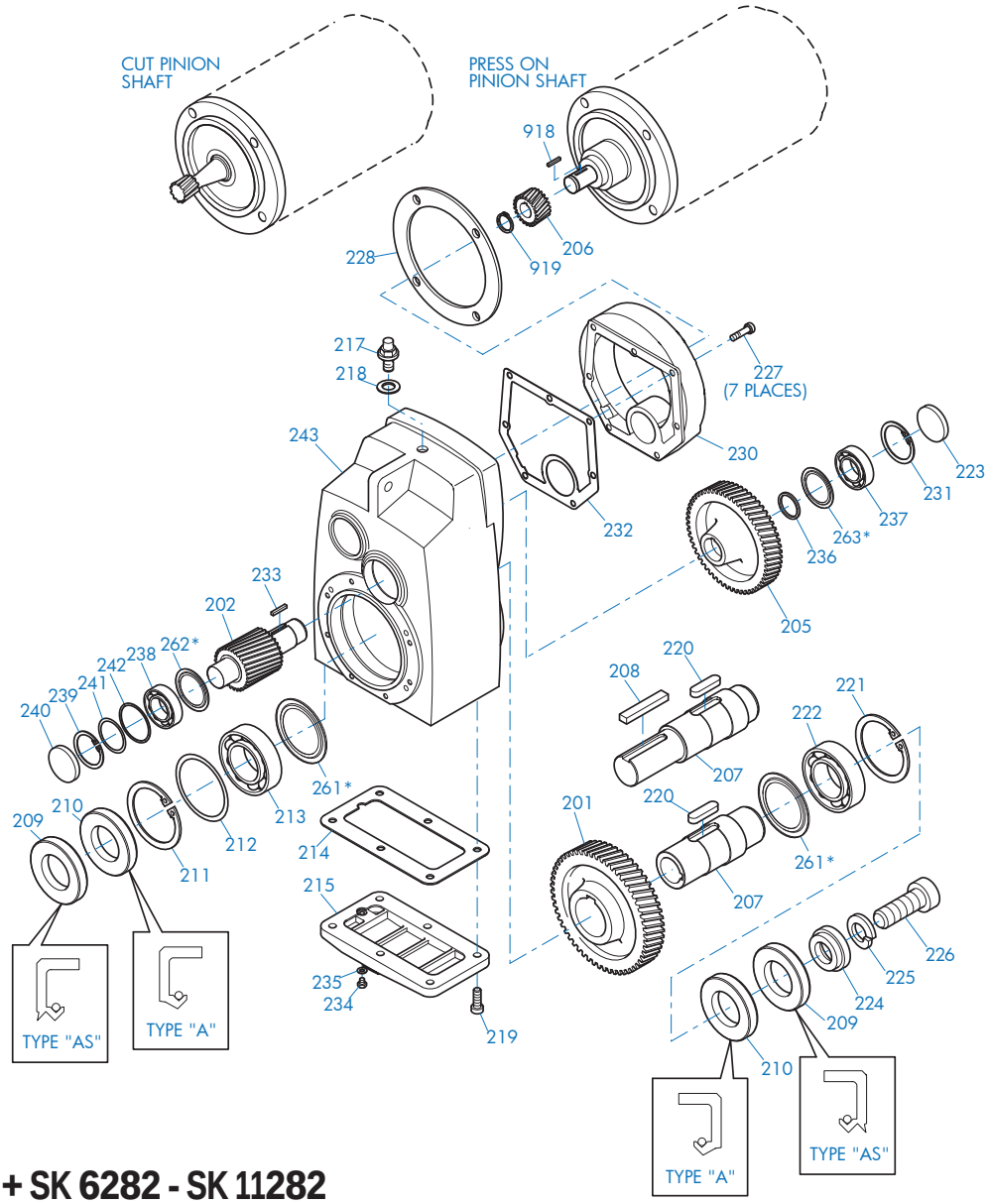

SK 0282NB + SK 6282 - SK 11282

201 Gear	219 Bolt	236 Thrust Washer
202 Pinion Shaft	220 Key	237 Anti-Friction Bearing
205 Gear	221 Snap Ring	238 Anti-Friction Bearing
206 Pinion	222 Anti-Friction Bearing	239 Snap Ring
207 Output Shaft	224 Retaining Washer	240 Bore Plug
208 Key	225 Lock Washer	241 Shim
209 Oil Seal	226 Bolt	242 Thrust Washer
210 Oil Seal	227 Bolt	243 Gear case
211 Snap Ring	228 Gasket	261 Nilos Ring*
212 Shim	230 Input Cover	262 Nilos Ring*
213 Anti-Friction Bearing	231 Snap Ring	263 Nilos Ring*
214 Gasket	232 Gasket	918 Key
215 Inspection Cover	233 Key	919 Snap Ring
217 Vent Plug	234 Drain Plug	
218 Gasket	235 Gasket	

* Conditionally used part

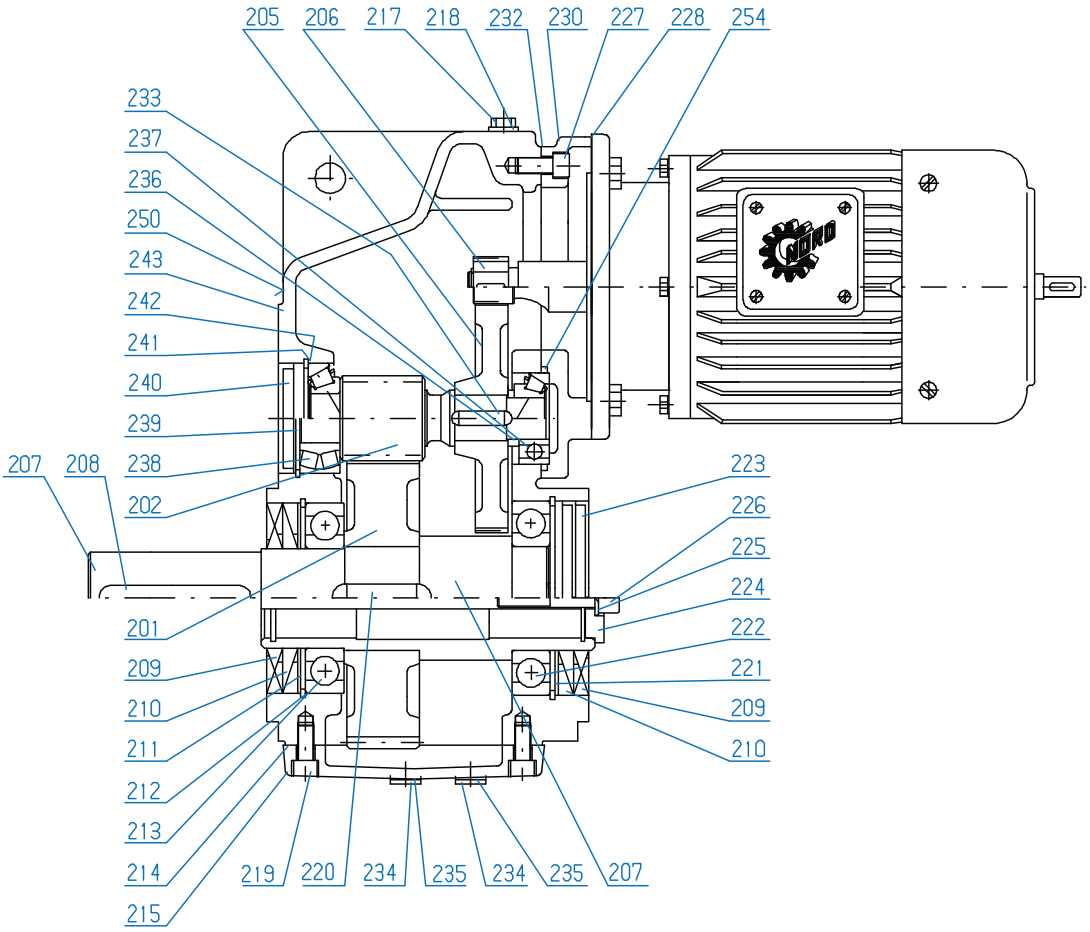

SK 0282NB + SK 6282 - SK 11282

201 Gear
202 Pinion Shaft
205 Gear
206 Pinion
207 Output Shaft
208 Key
209 Oil Seal
210 Oil Seal
211 Snap Ring
212 Shim
213 Anti-Friction Bearing
214 Gasket
215 Inspection Cover
217 Vent Plug
218 Gasket
219 Bolt
220 Key
221 Snap Ring
222 Anti-Friction Bearing
223 Bore Plug
224 Retaining Washer
225 Lock Washer
226 Bolt
227 Bolt
228 Gasket
230 Input Cover
232 Gasket
233 Key
234 Drain Plug
235 Gasket
236 Thrust Washer
237 Anti-Friction Bearing
238 Anti-Friction Bearing
239 Snap Ring
240 Bore Plug
241 Shim
242 Thrust Washer
243 Gear case
250 Bore Plug
261 Nilos Ring*
262 Nilos Ring*
263 Nilos Ring*

* Conditionally used part

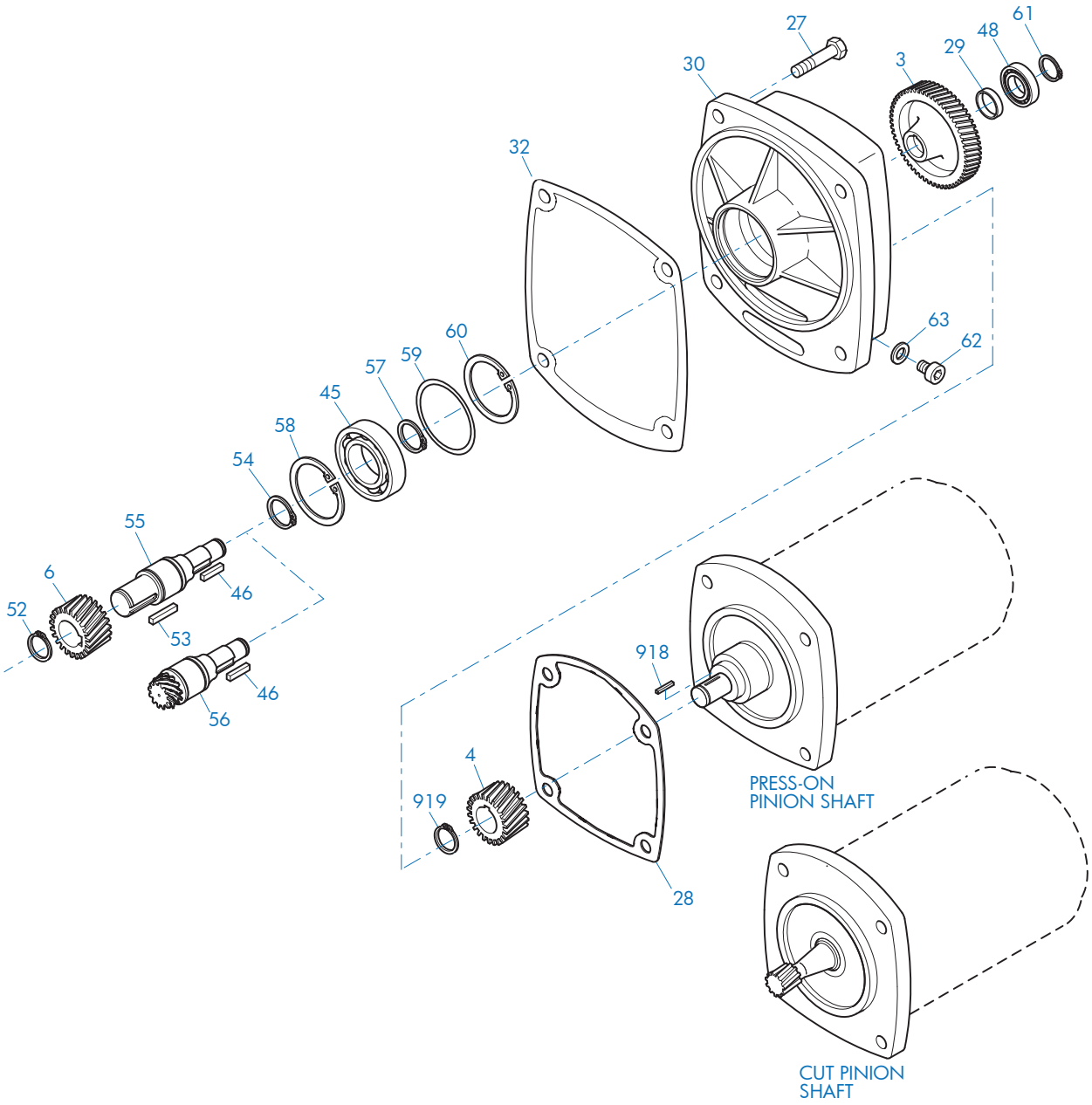

SK 2382 - SK 5382 Third Stage Reduction Housing

3	Gear	46	Key	59	Shim
4	Pinion	48	Anti-Friction Bearing	60	Snap Ring
6	Pinion	52	Snap Ring	61	Snap Ring
27	Bolt	53	Key	62	Oil Plug
28	Gasket	54	Snap Ring	63	Gasket
29	Spacer	55	Intermediate Shaft, Plain	918	Key
30	Third Reduction Gearcase	56	Intermediate Shaft, Gearcut	919	Snap Ring
32	Gasket	57	Snap Ring		
45	Anti-Friction Bearing	58	Snap Ring		

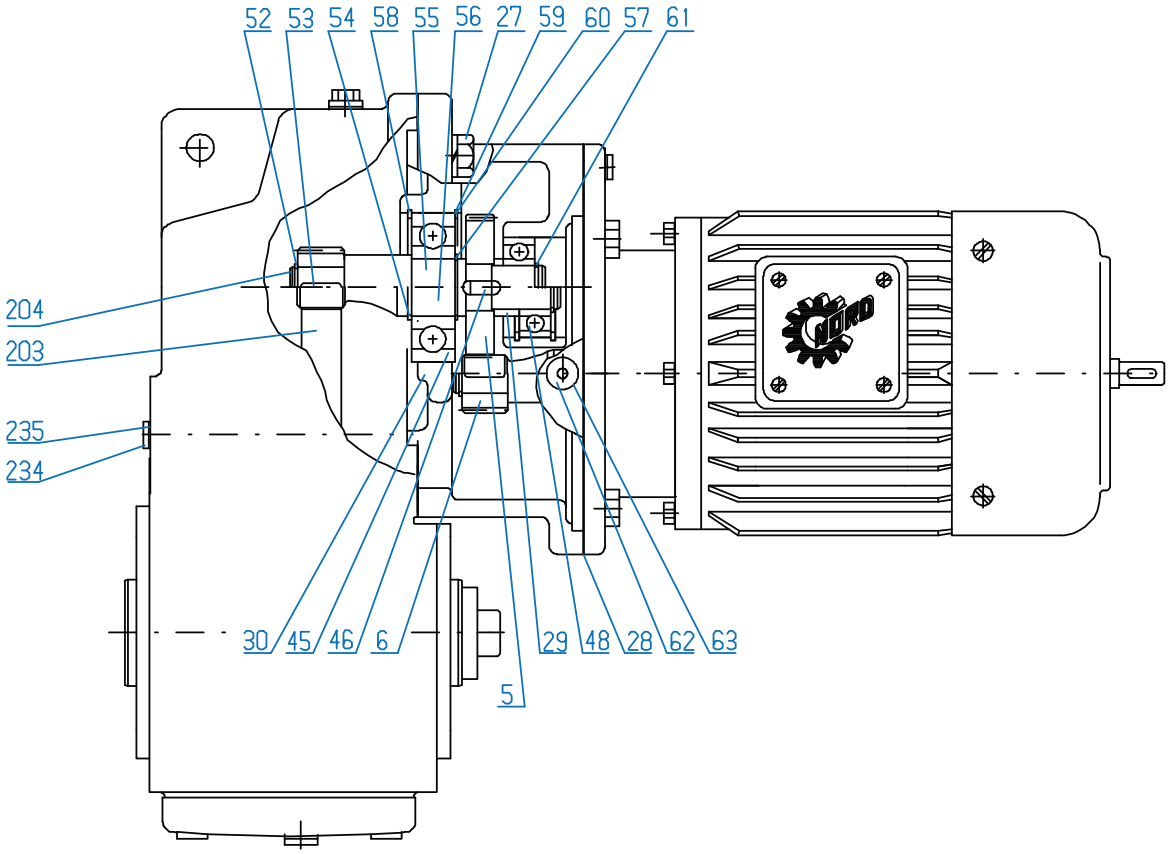

SK 2382 - SK 5382 Third Stage Reduction Housing

3	Gear	46	Key	59	Shim
4	Pinion	48	Anti-Friction Bearing	60	Snap Ring
6	Pinion	52	Snap Ring	61	Snap Ring
27	Bolt	53	Key	62	Oil Plug
28	Gasket	54	Snap Ring	63	Gasket
29	Spacer	55	Intermediate Shaft, Plain	203	Gear
32	Gasket	56	Intermediate Shaft, Gearcut	204	Pinion Shaft
30	Third Reduction Gearcase	57	Snap Ring	234	Oil Plug
45	Anti-Friction Bearing	58	Snap Ring	235	Gasket

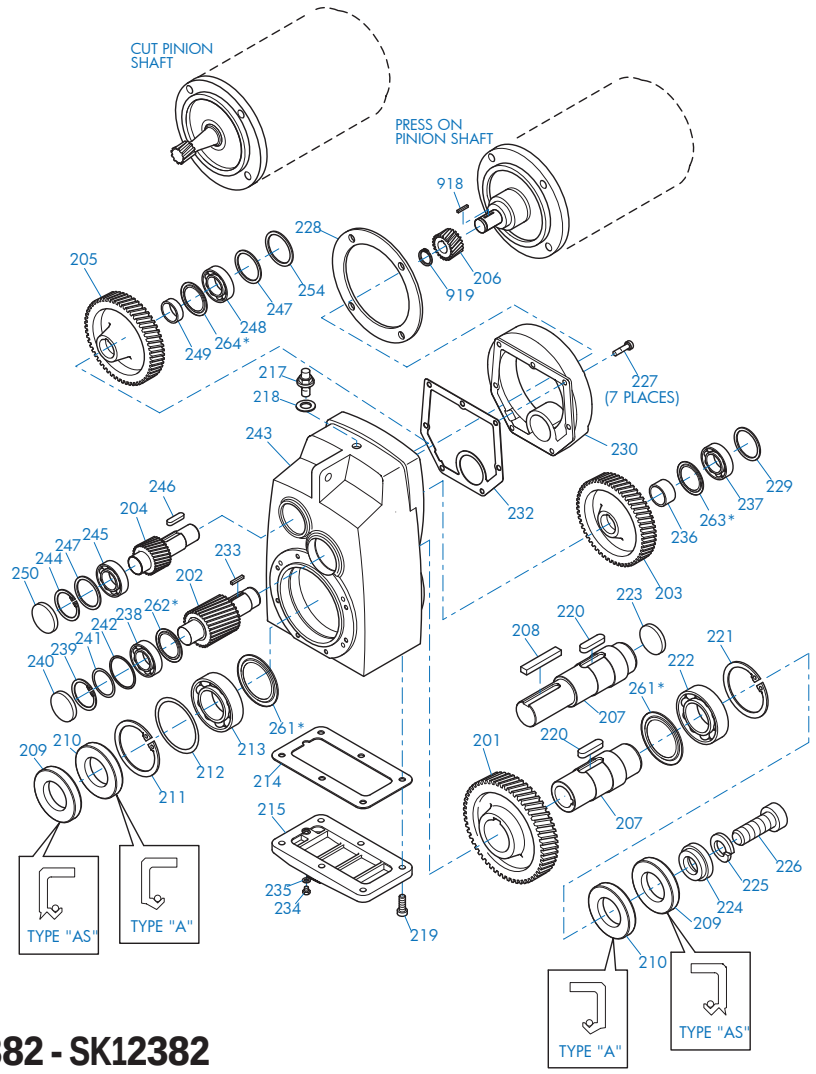

SK 1382 NB + SK 6382 - SK12382

201 Gear	221 Snap Ring	241 Shim
202 Pinion Shaft	222 Anti-Friction Bearing	242 Thrust Washer
203 Gear	223 Bore Plug	243 Gearcase
204 Pinion Shaft	224 Retaining Washer	244 Snap Ring
205 Gear	225 Lock Washer	245 Anti-Friction Bearing
206 Pinion	226 Bolt	246 Key
207 Output Shaft	227 Bolt	247 Shim
208 Key	228 Gasket	248 Anti-Friction Bearing
209 Oil Seal	229 Thrust Washer	249 Spacer
210 Oil Seal	230 Input Cover	250 Bore Plug
211 Snap Ring	232 Gasket	254 Thrust Washer
212 Shim	233 Key	261 Nilos Ring*
213 Anti-Friction Bearing	234 Drain Plug	262 Nilos Ring*
214 Gasket	235 Gasket	263 Nilos Ring*
215 Inspection Cover	236 Thrust Washer	264 Nilos Ring*
217 Vent Plug	237 Anti-Friction Bearing	918 Key
218 Gasket	238 Anti-Friction Bearing	919 Snap Ring
219 Bolt	239 Snap Ring	
220 Key	240 Bore Plug	

* Conditionally used part

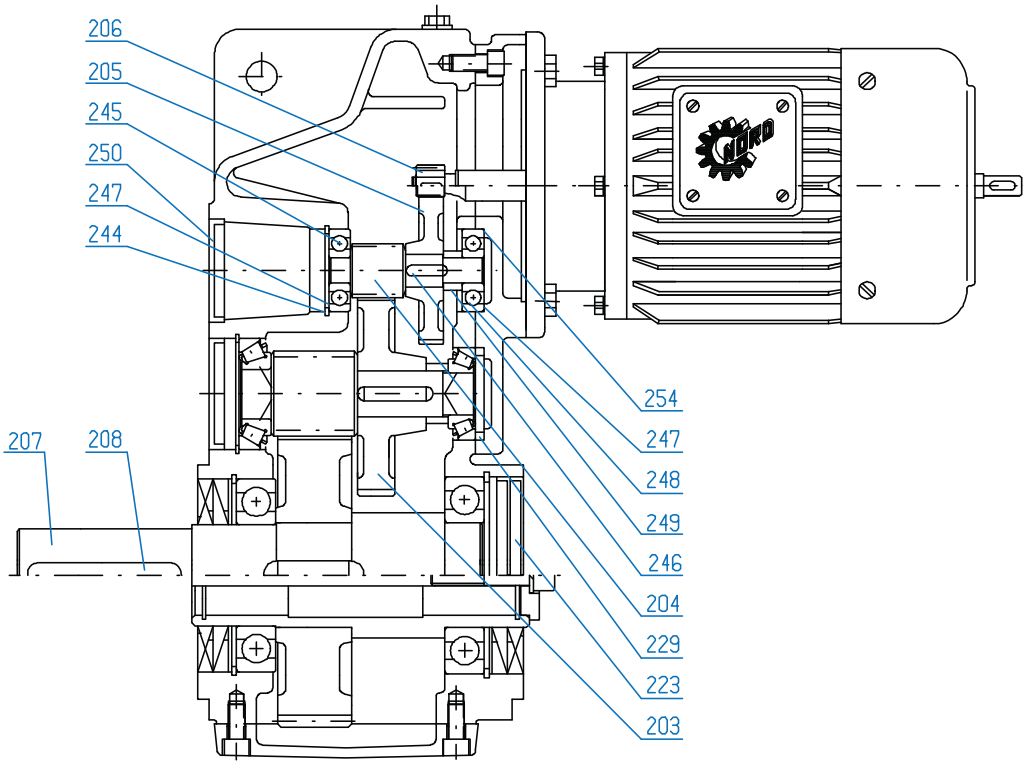

SK 1382 NB + SK 6382 - SK12382

203 Gear	229 Thrust Washer	250 Bore Plug
204 Pinion Shaft	244 Snap Ring	254 Thrust Washer
205 Gear	245 Anti-Friction Bearing	261 Nilos Ring*
206 Pinion	246 Key	262 Nilos Ring*
207 Output Shaft	247 Shim	263 Nilos Ring*
208 Key	248 Anti-Friction Bearing	264 Nilos Ring*
223 Bore Plug	249 Spacer	

* Conditionally used part

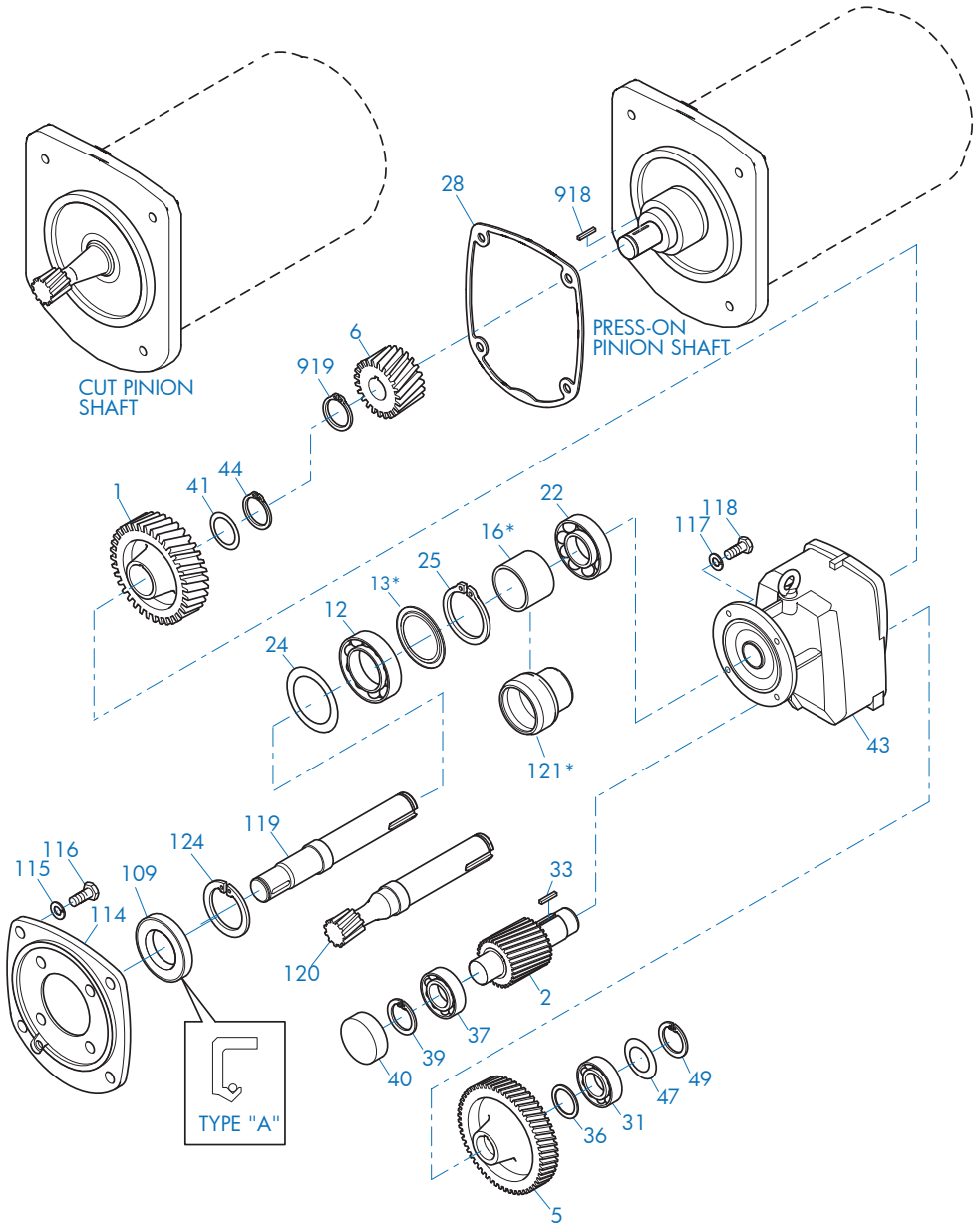

SK1282/02 - SK11382/52 Multi-stage Reduction Unit

1	Gear	33	Key	115	Lock Washer
2	Pinion Shaft	36	Spacer	116	Bolt
5	Gear	37	Anti-Friction Bearing	117	Lock Washer
6	Pinion	39	Snap Ring	118	Bolt
12	Anti-Friction Bearing	40	Bore Plug	119	Intermediate Shaft, Plain
13	Nilos Ring*	41	Shim	120	Intermediate Shaft, Gearcut
16	Spacer*	43	Gearcase	121	Bearing Sleeve*
22	Anti-Friction Bearing	44	Snap Ring	124	Snap Ring
24	Shim	47	Shim	918	Key
25	Snap Ring	49	Snap Ring	919	Snap Ring
28	Gasket	109	Oil Seal		
31	Anti-Friction Bearing	114	Intermediate Flange		

* Conditionally used part

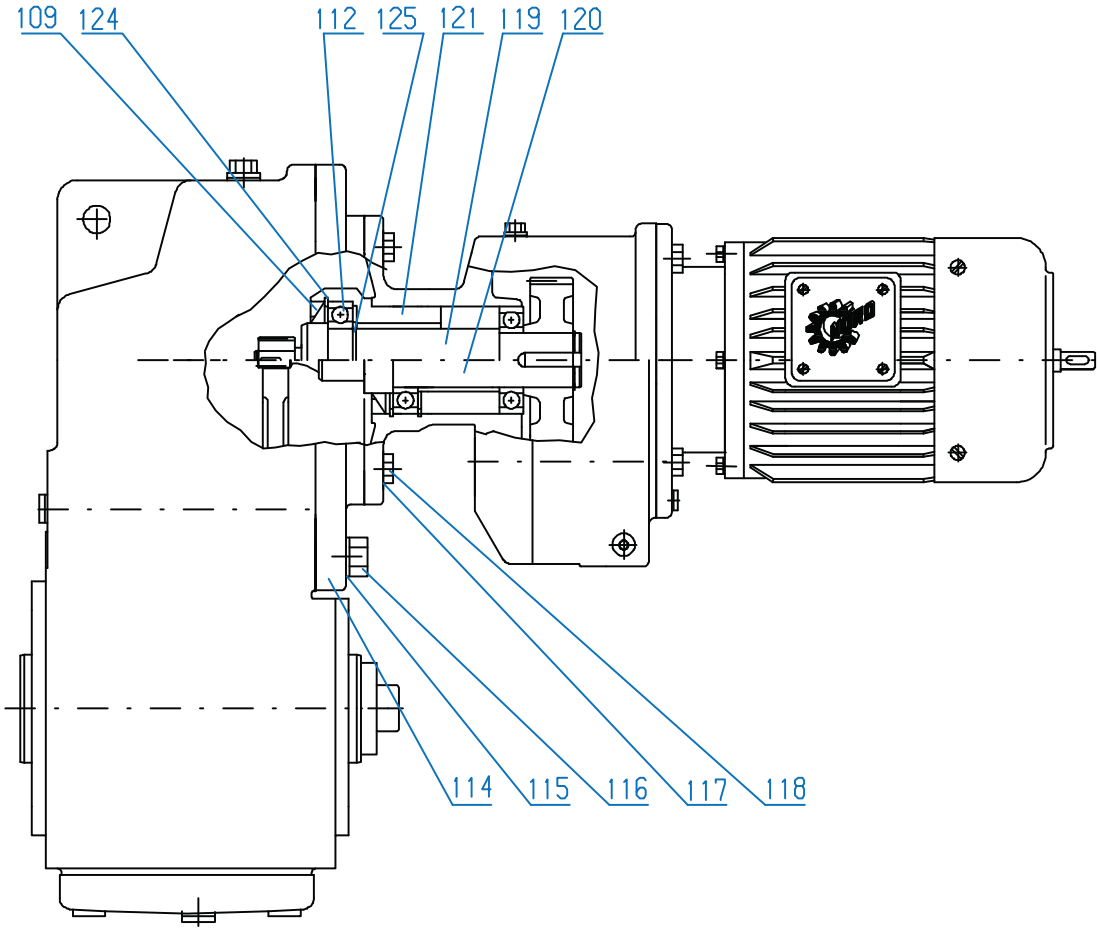

SK 1282/02 - SK 11382/52

12 Anti-friction Bearing	114 Intermediate Flange	119 Intermediate Shaft, Plain
13 Nilos Ring*	115 Lock Washer	120 Intermediate Shaft, Gearcut
16 Spacer	116 Bolt	121 Bearing Sleeve
25 Snap Ring	117 Lock Washer	124 Snap Ring
109 Oil Seal	118 Bolt	

* Conditionally used part

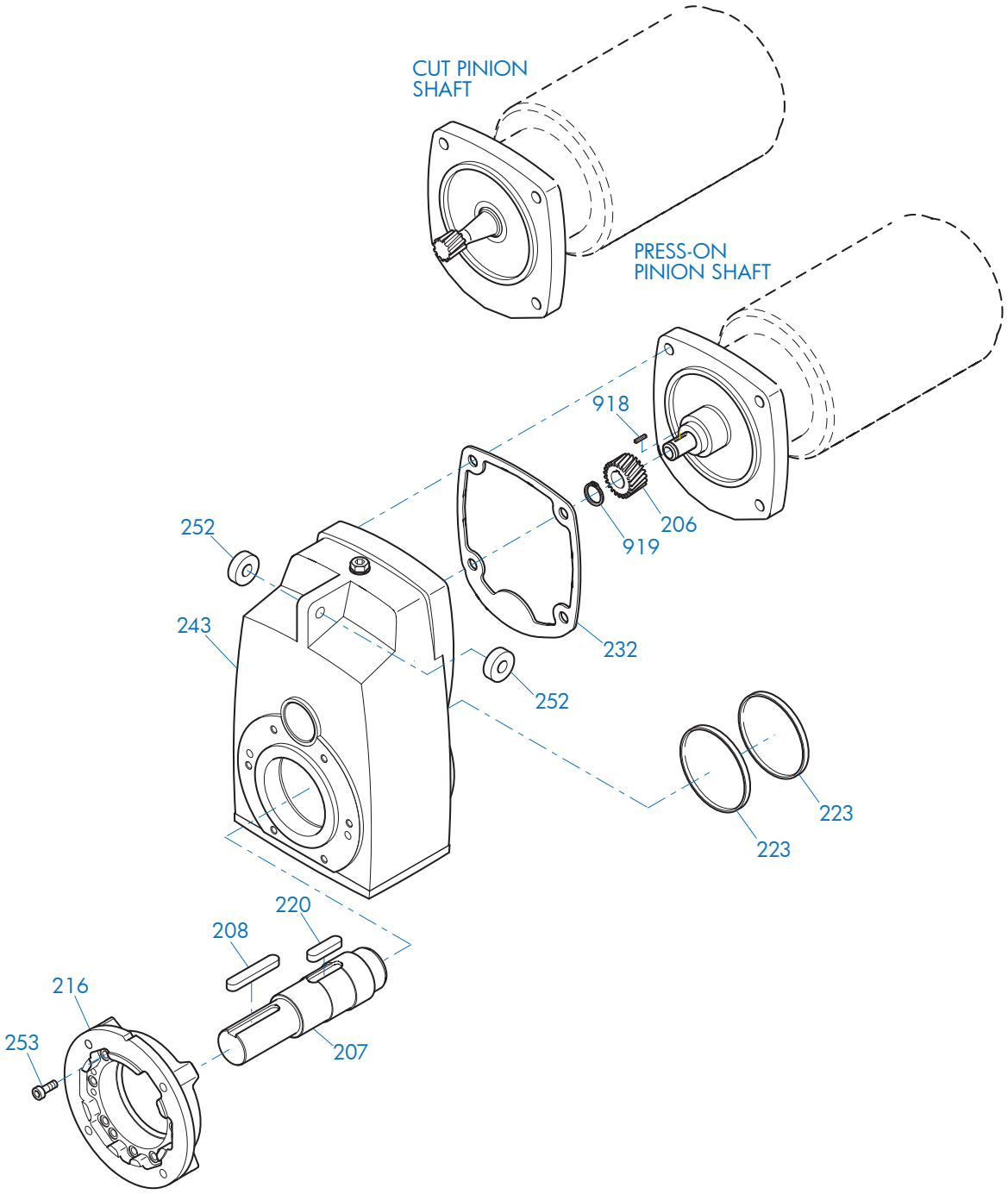

SK 0182NB - SK 11282 & SK 1382 - SK 11382

206 Pinion	220 Key	252 Rubber Buffer
207 Output Shaft	223 Bore Plug	253 Bolt
208 Key	232 Gasket	918 Key
216 Flange	243 Gearcase	919 Snap Ring

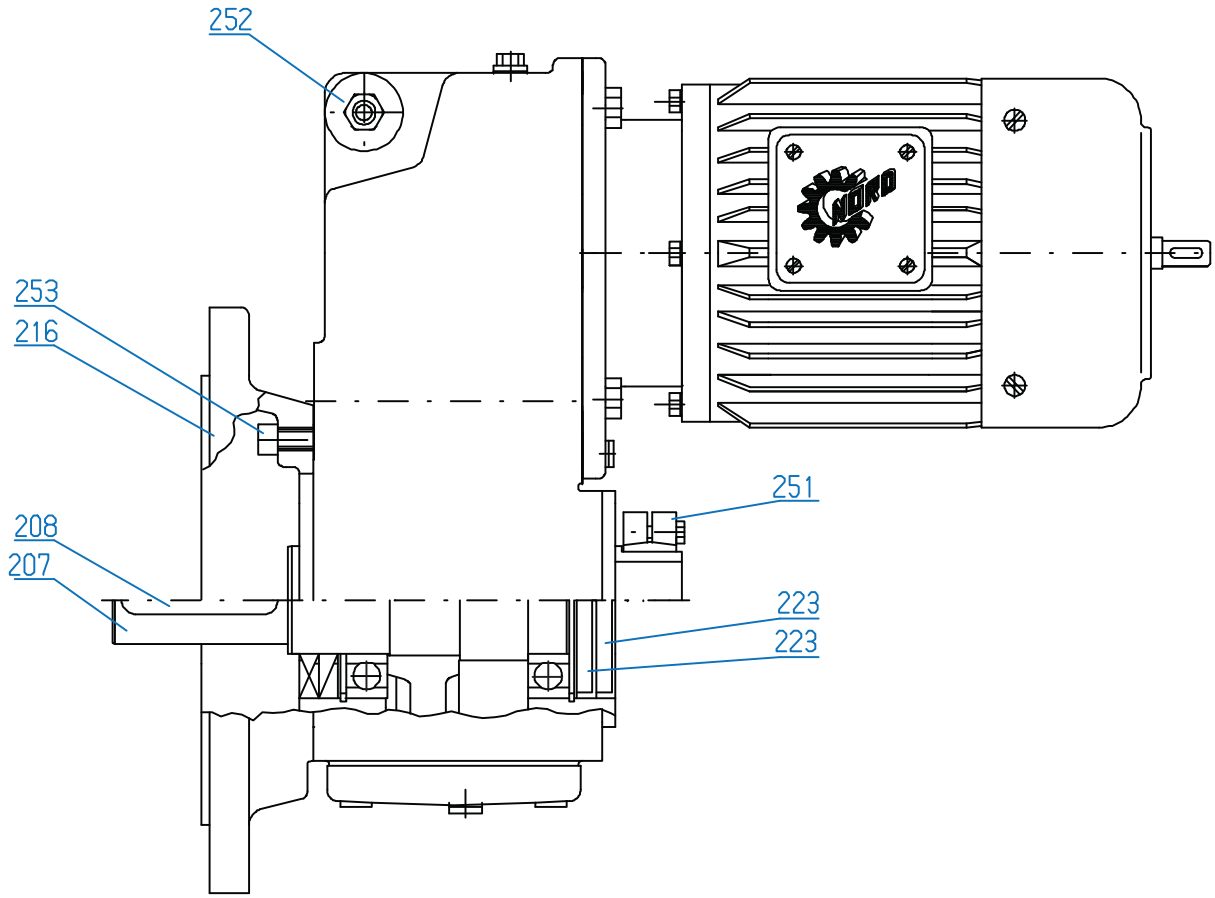

SK 0182NB - SK 11282 & SK 1382 - SK 11382

207 Output Shaft	223 Bore Plug	253 Bolt
208 Key	251 Shrink Disc	
216 Flange	252 Rubber Buffer	

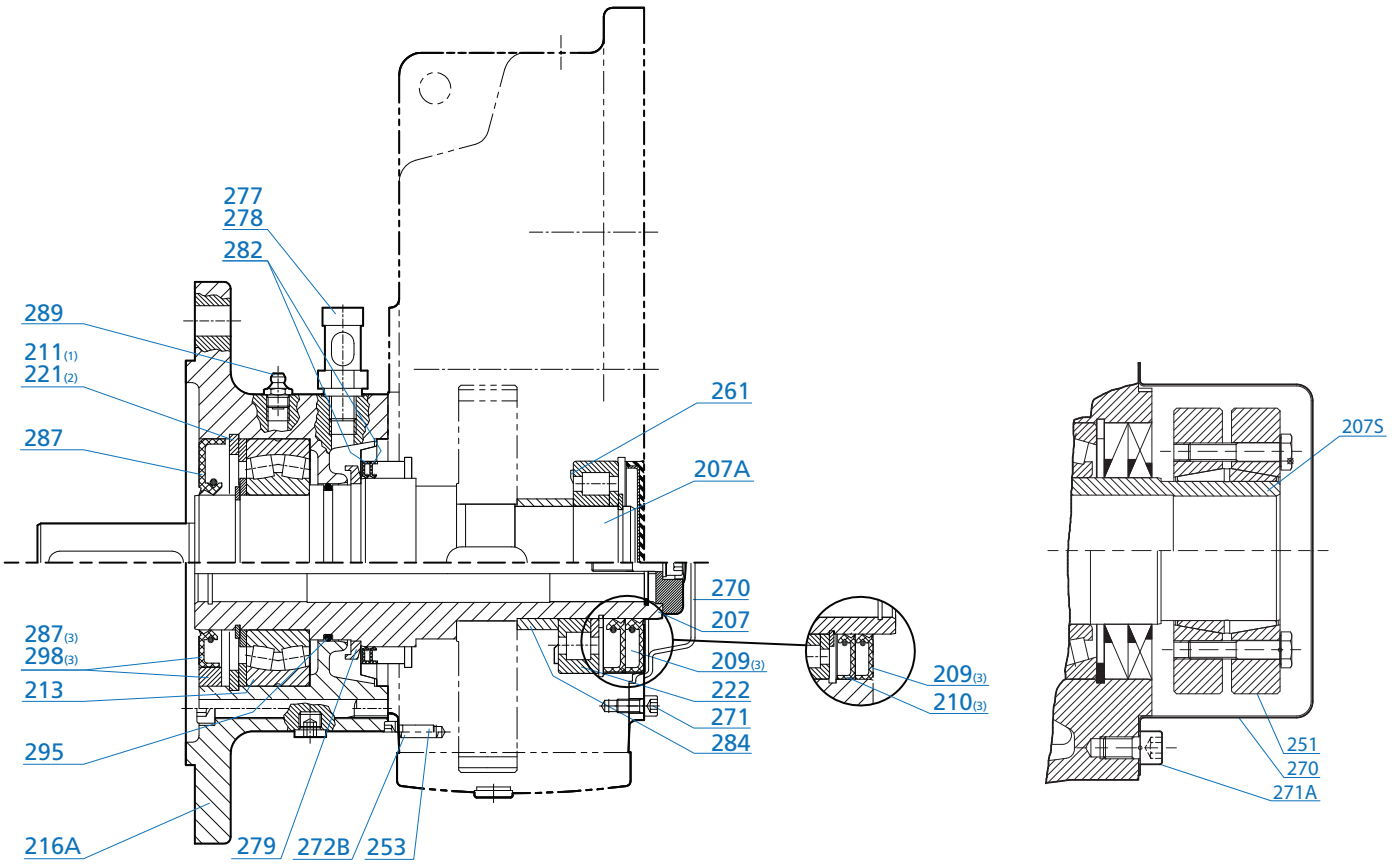

Parallel Helical Clincher VL2 & VL3

207A	Hollow Output Shaft	222	Bearing	278	Plug Gasket
207	Solid Output Shaft	251	Shrink Disk	279	Oil Slinger (VL3)
207S	Shrink Disk Hollow Shaft	253	Screw	282	Seal
209 (3)	Seal	261	NILOS Ring	284	Spacer
210 (3)	Seal	270	Shaft Cover	287 (3)	Seal
211 (1)	Snap Ring	271	Shaft Cover Screw	289	Grease Fitting
213	Bearing	272B	Dowel Pin	295	O-Ring
216A	Flange	277	Drain Plug (VL2)	298 (3)	Bushing
221(3)	Snap Ring	277	Oil Level Indicator (VL3)		

(1) = Needed for 2282/3282 **(3) = Varies By Unit**
(2) = Needed for 3282/3382

90.1 HELICAL-BEVEL PARTS LIST DRAWINGS

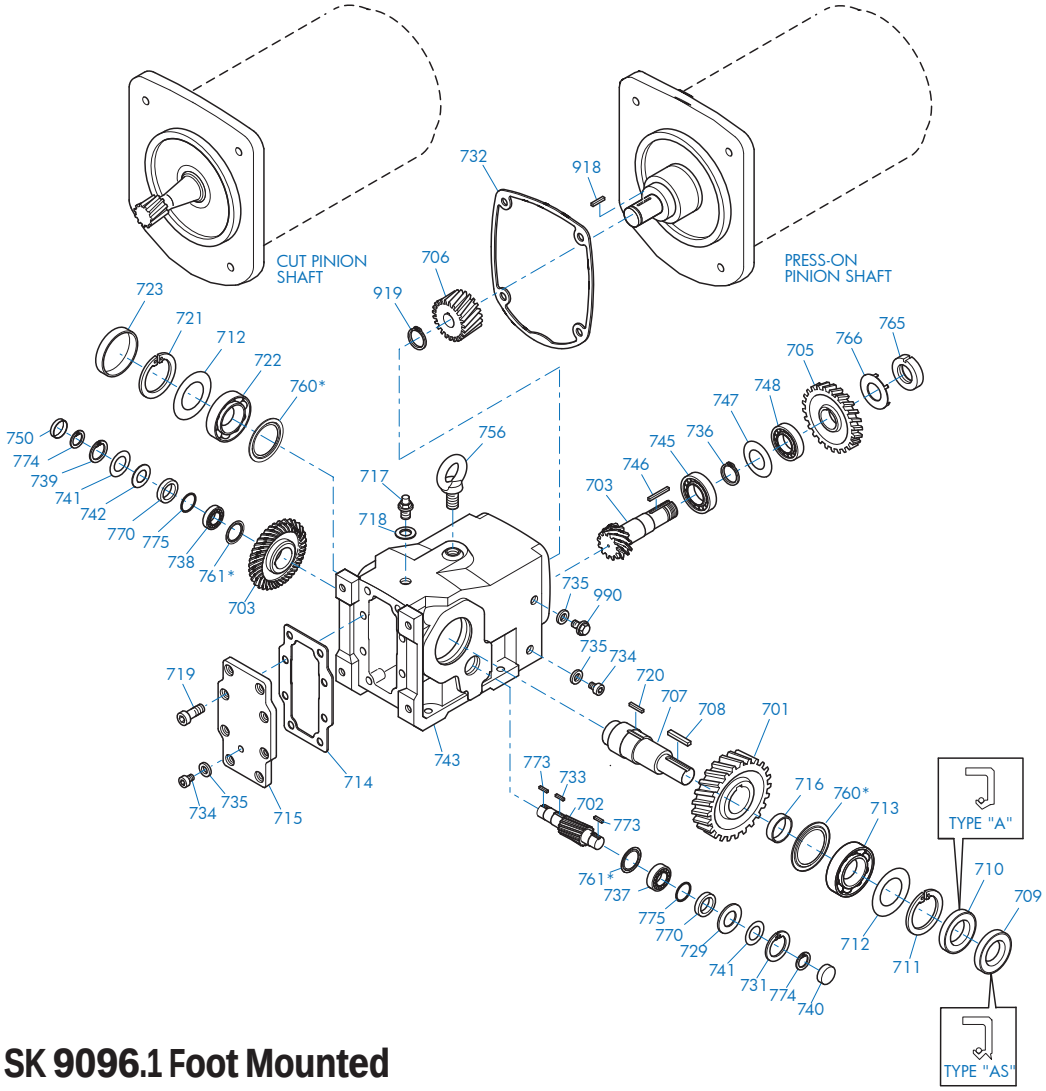

SK 9012.1 - SK 9096.1 Foot Mounted

701 Output Gear
702 Pinion Shaft
703 Bevel Gearset
705 Gear
706 Pinion
707 Output Shaft
708 Key
709 Oil Seal
710 Oil Seal
711 Snap Ring
712 Shim
713 Anti-Friction Bearing
714 Gasket
715 Inspection Cover
716 Spacer
717 Vent screw
718 Gasket
719 Bolt
720 Key
721 Snap Ring
722 Anti-Friction Bearing
723 Bore Plug
729 Thrust Washer
731 Snap Ring
732 Gasket
733 Key
734 Oil Plug
735 Gasket
736 Snap Ring
737 Anti-Friction Bearing
738 Anti-Friction Bearing
739 Snap Ring
740 Bore Plug
741 Shim
742 Thrust Washer
743 Gearcase
745 Anti-Friction Bearing
746 Key
747 Shim
748 Anti-Friction Bearing
750 Bore Plug
756 Flanged Eye Bolt
760 Nilos Ring*
761 Nilos Ring*
765 Slotted Round Nut
766 Tab Lock Washer
770 Backstop (If Equipped)
773 Key (w/Backstop)
774 Snap Ring (w/Backstop)
775 Thrust Washer (w/Backstop)
918 Key
919 Snap Ring
990 Oil Level Plug

* Conditionally used part

NORD Gear Limited
Toll Free in Canada: 800.668.4378

NORD Gear Corporation
Toll Free in the United States: 888.314.6673

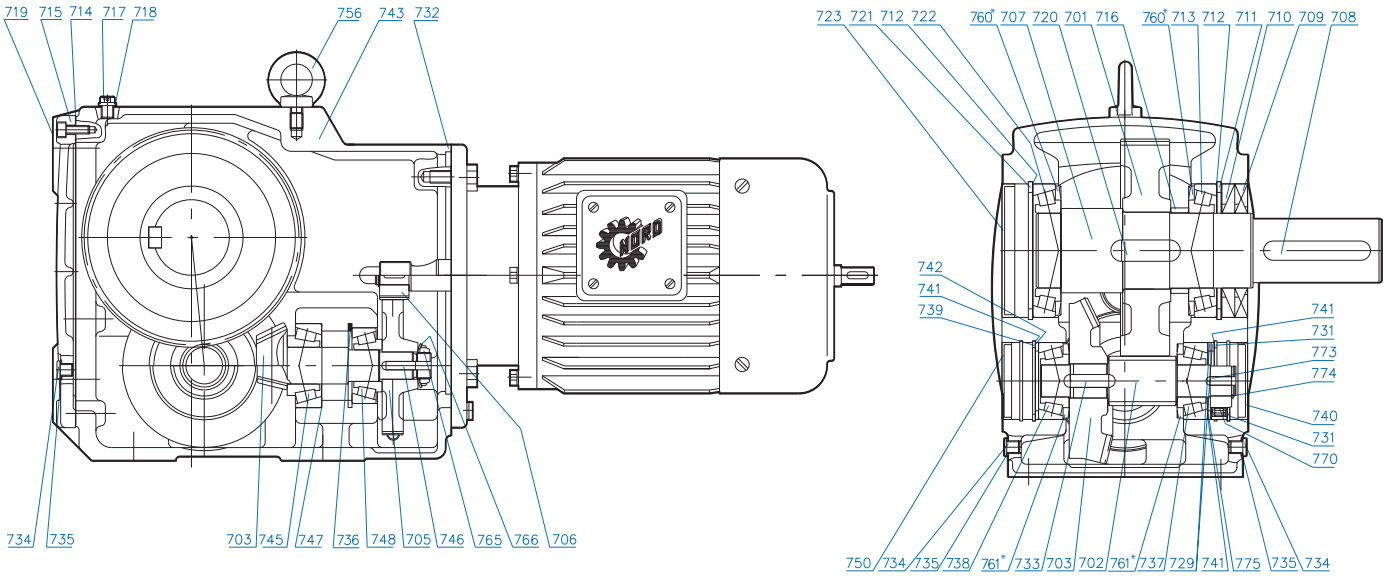

SK 9012.1 - SK 9096.1 Foot Mounted

701 Output Gear
702 Pinion Shaft
703 Bevel Gearset
705 Gear
706 Pinion
707 Output Shaft
708 Key
709 Oil Seal
710 Oil Seal
711 Snap Ring
712 Shim
713 Anti-Friction Bearing
714 Gasket
715 Inspection Cover
716 Spacer
717 Vent
718 Gasket
719 Bolt
720 Key
721 Snap Ring
722 Anti-Friction Bearing
723 Bore Plug
729 Thrust Washer
731 Snap Ring
732 Gasket
733 Key
734 Oil Plug
735 Gasket
736 Snap Ring
737 Anti-Friction Bearing
738 Anti-Friction Bearing
739 Snap Ring
740 Bore Plug
741 Shim
742 Thrust Washer
743 Gearcase
745 Anti-Friction Bearing
746 Key
747 Shim
748 Anti-Friction Bearing
750 Bore Plug
756 Flanged Eye Bolt
760 Nilos Ring*
761 Nilos Ring*
765 Slotted Round Nut
766 Tab Lock Washer
770 Backstop (If Equipped)
773 Key (w/Backstop)
774 Snap Ring (w/Backstop)
775 Thrust Washer (w/Backstop)

* Conditionally used part

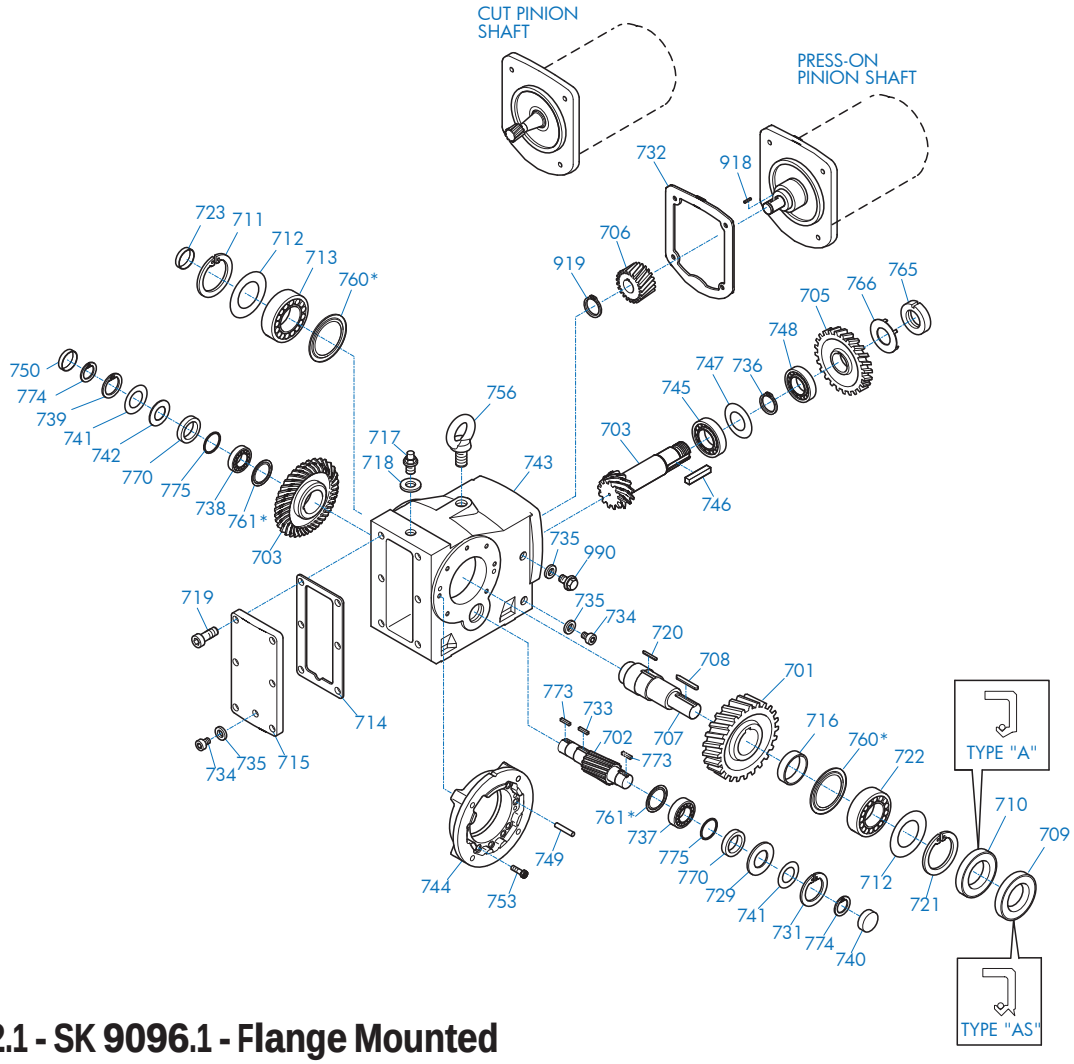

SK 9012.1 - SK 9096.1 - Flange Mounted

701 Output Gear
702 Pinion Shaft
703 Bevel Gearset
705 Gear
706 Pinion
707 Output Shaft
708 Key
709 Oil Seal
710 Oil Seal
711 Snap Ring
712 Shim
713 Anti-Friction Bearing
714 Gasket
715 Inspection Cover
716 Spacer
717 Vent Plug
718 Gasket
719 Bolt
720 Key
721 Snap Ring
722 Anti-Friction Bearing
723 Bore Plug
729 Thrust Washer
731 Snap Ring
732 Gasket
733 Key
734 Oil plug
735 Gasket
736 Snap Ring
737 Anti-Friction Bearing
738 Anti-Friction Bearing
739 Snap Ring
740 Bore Plug
741 Shim
742 Thrust Washer
743 Gearcase
744 Flange
745 Anti-Friction Bearing
746 Key
747 Shim
748 Anti-Friction Bearing
749 Dowel Pin
750 Bore Plug
753 Bolt
756 Flanged Eye Bolt
760 Nilos Ring*
761 Nilos Ring*
765 Slotted Round Nut
766 Tab Lock Washer
770 Backstop (If Equipped)
773 Key (w/Backstop)
774 Snap Ring (w/Backstop)
775 Thrust Washer (w/Backstop)
918 Key
919 Snap Ring
990 Oil Level Plug

* Conditionally used part

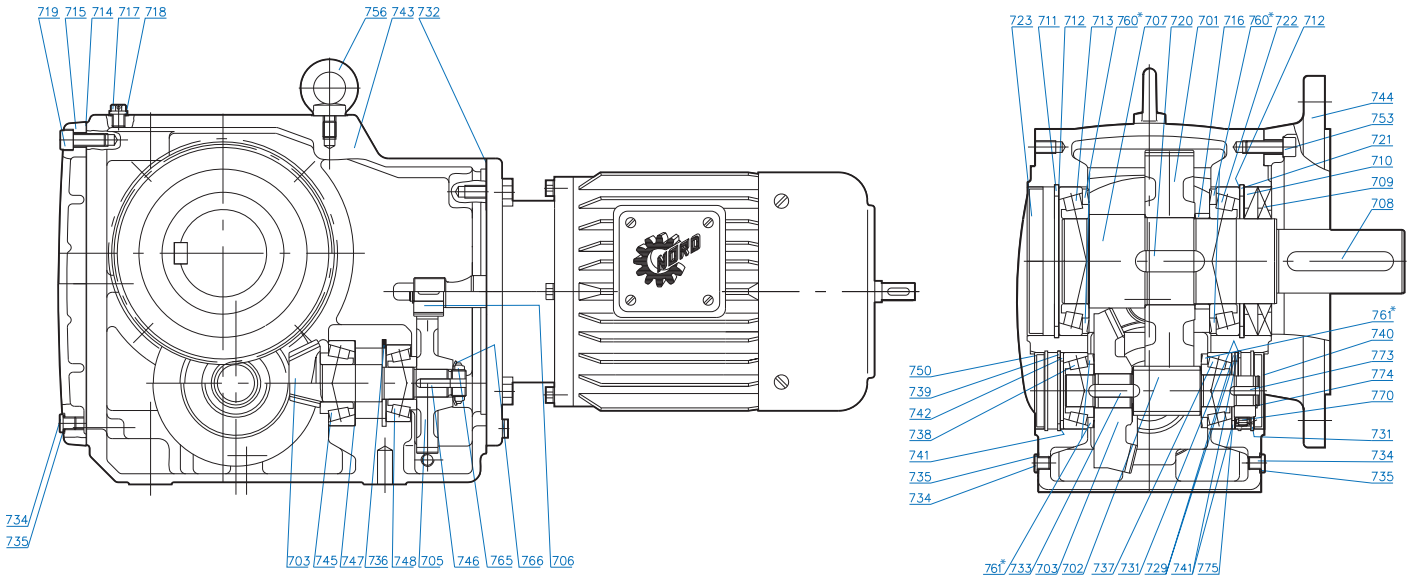

SK 9012.1 - SK 9096.1 - Flange Mounted

701 Output Gear
702 Pinion Shaft
703 Bevel Gearset
705 Gear
706 Pinion
707 Output Shaft
708 Key
709 Oil Seal
710 Oil Seal
711 Snap Ring
712 Shim
713 Anti-Friction Bearing
714 Gasket
715 Inspection Cover
716 Spacer
717 Vent Plug
718 Gasket
719 Bolt
720 Key
721 Snap Ring
722 Anti-Friction Bearing
723 Bore Plug
729 Thrust Washer
731 Snap Ring
732 Gasket
733 Key
734 Oil plug
735 Gasket
736 Snap Ring
737 Anti-Friction Bearing
738 Anti-Friction Bearing
739 Snap Ring
740 Bore Plug
741 Shim
742 Thrust Washer
743 Gearcase
744 Flange
745 Anti-Friction Bearing
746 Key
747 Shim
748 Anti-Friction Bearing
750 Bore Plug
753 Bolt
756 Flanged Eye Bolt
760 Nilos Ring*
761 Nilos Ring*
765 Slotted Round Nut
766 Tab Lock Washer
770 Backstop*
773 Key (w/Backstop)
774 Snap Ring (w/Backstop)
775 Thrust Washer (w/Backstop)

* Conditionally used part

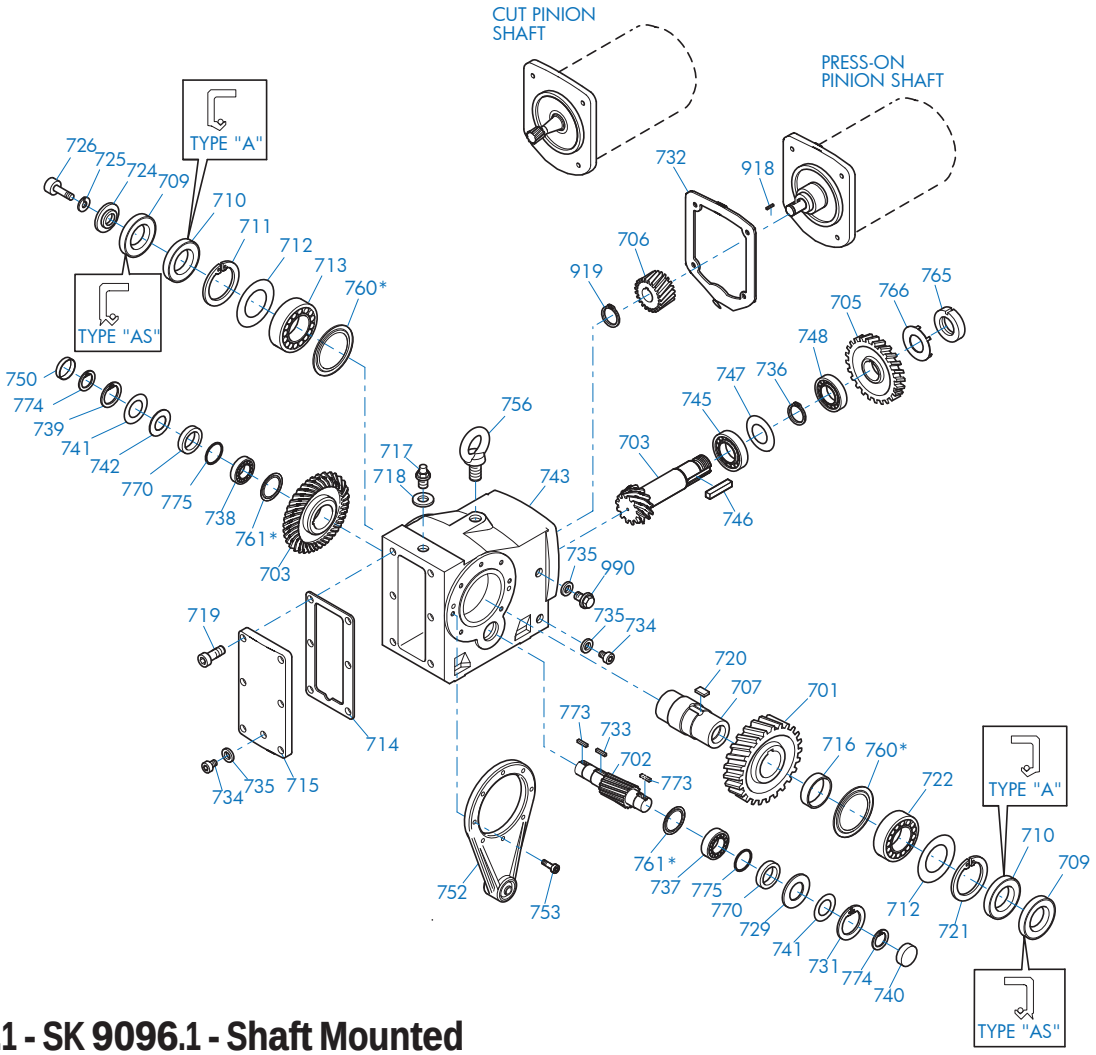

SK 9012.1 - SK 9096.1 - Shaft Mounted

701 Gear
702 Pinion Shaft
703 Bevel Gearset
705 Gear
706 Pinion
707 Output Shaft
709 Oil Seal
710 Oil Seal
711 Snap Ring
712 Shim
713 Anti-Friction Bearing
714 Gasket
715 Inspection Cover
716 Spacer
717 Vent Plug
718 Gasket
719 Bolt
720 Key
721 Snap Ring
722 Anti-Friction Bearing
724 Retaining Washer
725 Lock Washer
726 Bolt
729 Thrust Washer
731 Snap Ring
732 Gasket
733 Key
734 Oil plug
735 Gasket
736 Snap Ring
737 Anti-Friction Bearing
738 Anti-Friction Bearing
739 Snap Ring
740 Bore Plug
741 Shim
742 Thrust Washer
743 Gearcase
745 Anti-Friction Bearing
746 Key
747 Shim
748 Anti-Friction Bearing
750 Bore Plug
752 Torque Arm
753 Bolt
756 Flanged Eye Bolt
760 Nilos Ring*
761 Nilos Ring*
765 Slotted Round Nut
766 Tab Lock Washer
770 Backstop (If Equipped)
773 Key (w/Backstop)
774 Snap Ring (w/Backstop)
775 Thrust Washer (w/Backstop)
918 Key
919 Snap Ring
990 Oil Level Plug

* Conditionally used part

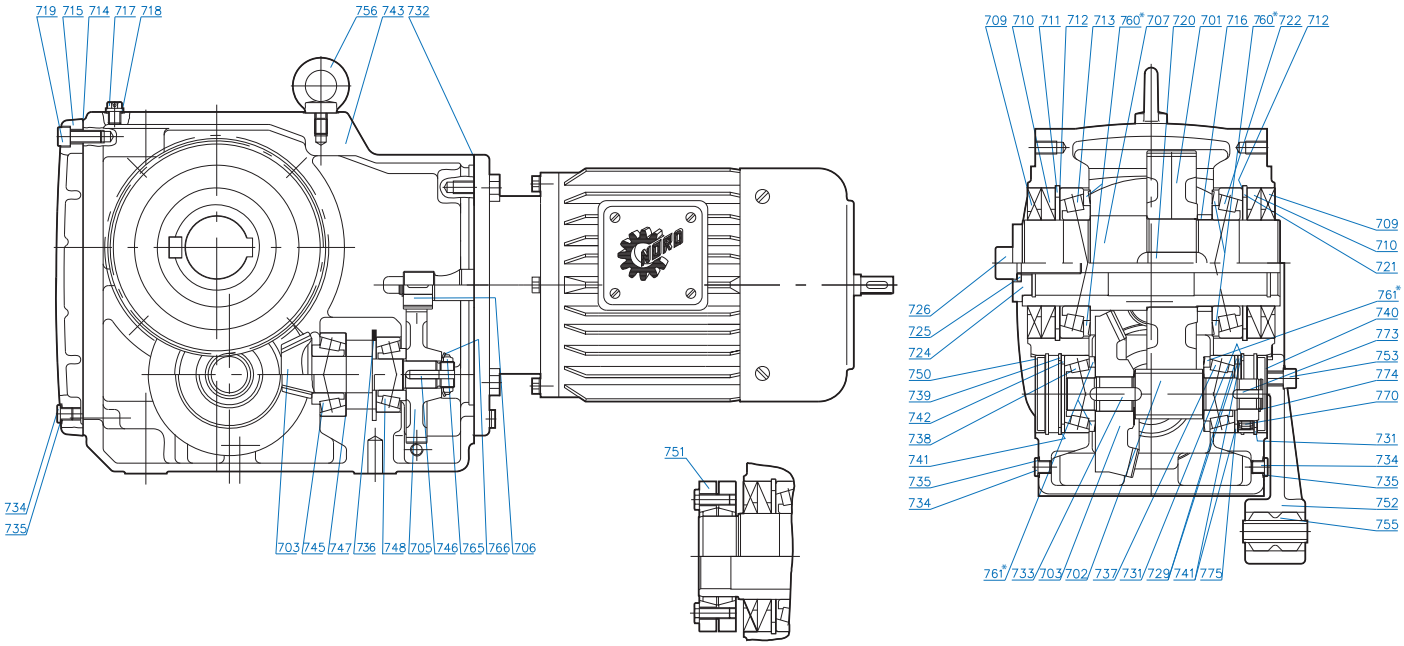

SK 9012.1 - SK 9096.1 - Shaft Mounted

701 Gear
702 Pinion Shaft
703 Bevel Gearset
705 Gear
706 Pinion
707 Output Shaft
709 Oil Seal
710 Oil Seal
711 Snap Ring
712 Shim
713 Anti-Friction Bearing
714 Gasket
715 Inspection Cover
716 Spacer
717 Vent Plug
718 Seal
719 Bolt
720 Key
721 Snap Ring
722 Anti-Friction Bearing
724 Washer
725 Lock Washer
726 Bolt
729 Thrust Washer
731 Snap Ring
732 Gasket
733 Key
734 Oil plug
735 Gasket
736 Snap Ring
737 Anti-Friction Bearing
738 Anti-Friction Bearing
739 Snap Ring
740 Bore Plug
741 Shim
742 Thrust Washer
743 Gearcase
745 Anti-Friction Bearing
746 Key
747 Shim
748 Anti-Friction Bearing
750 Bore Plug
751 Shrink Disc
752 Torque Arm
753 Bolt
755 Rubber Buffer
756 Flanged Eye Bolt
760 Nilos Ring*
761 Nilos Ring*
765 Slotted Round Nut
766 Tab Lock Washer
770 Backstop*
773 Key (w/Backstop)
774 Snap Ring (w/Backstop)
775 Thrust Washer (w/Backstop)

* Conditionally used part

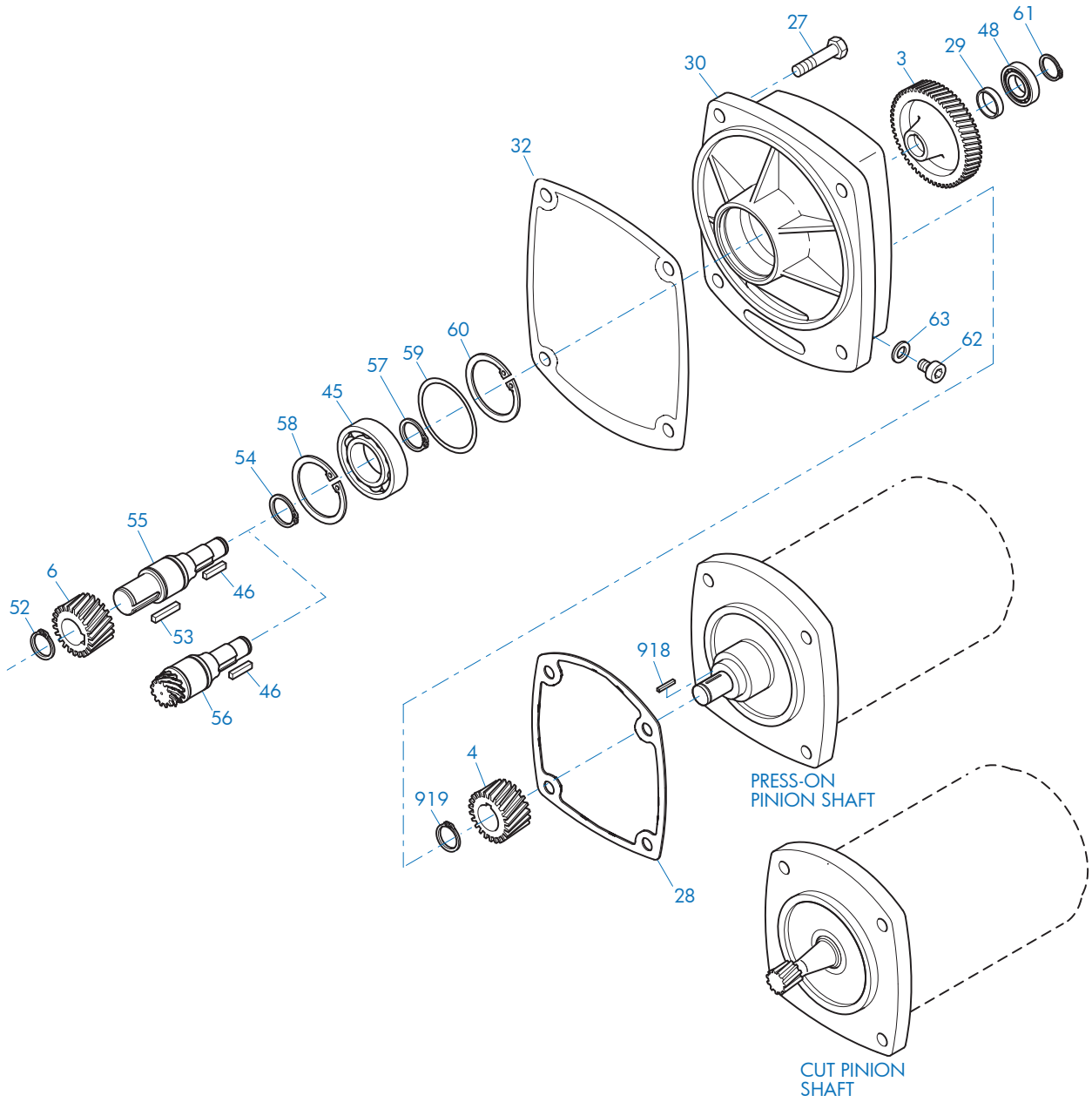

SK9013.1 - SK9053.1 Third Stage Reduction Gear

3	Gear	46	Key	59	Shim
4	Pinion	48	Anti-Friction Bearing	60	Snap Ring
6	Pinion	52	Snap Ring	61	Snap Ring
27	Bolt	53	Key	62	Oil Plug
28	Gasket	54	Snap Ring	63	Gasket
29	Spacer	55	Intermediate Shaft, Plain	918	Key
30	Third Reduction Gearcase	56	Intermediate Shaft, Gearcut	919	Snap Ring
32	Gasket	57	Snap Ring		
45	Anti-Friction Bearing	58	Snap Ring		

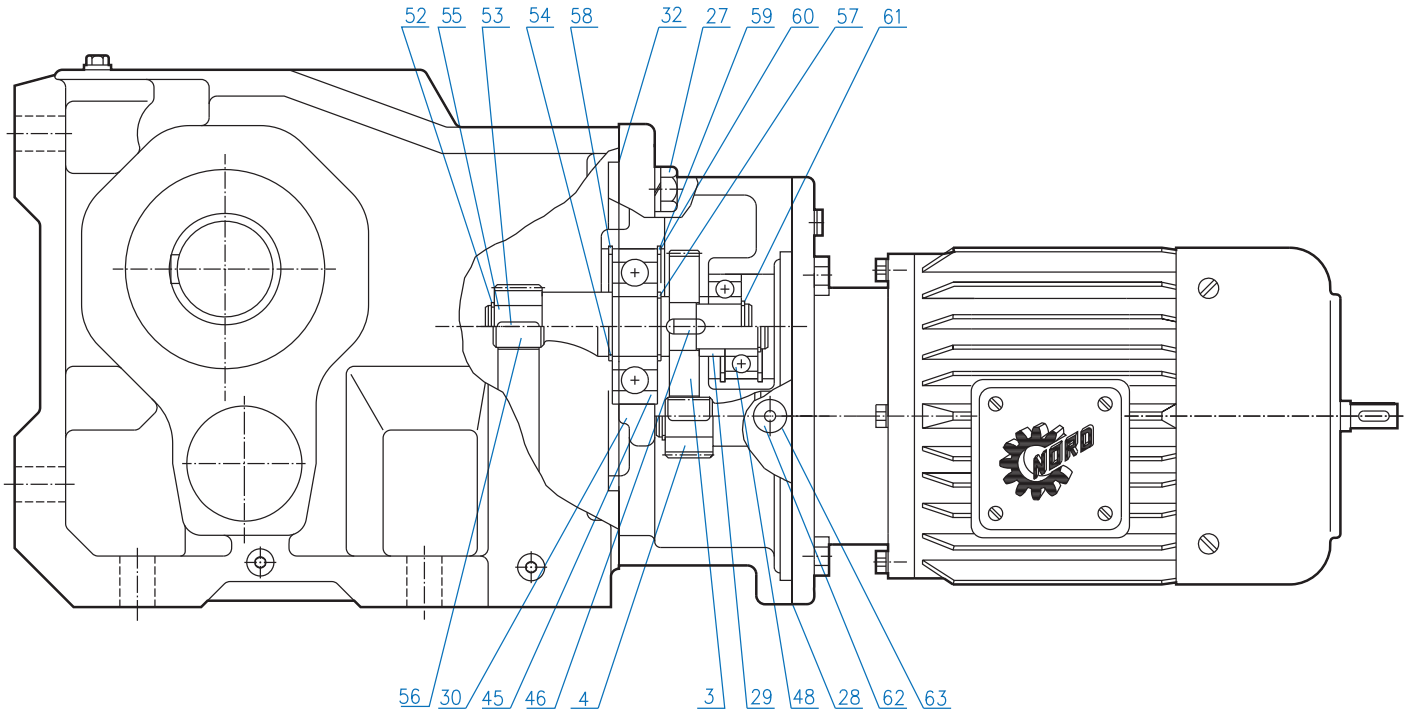

SK9013.1 - SK9053.1 Third Stage Reduction Gear

3	Gear	46	Key	58	Snap Ring
4	Pinion	48	Anti-Friction Bearing	59	Shim
27	Bolt	52	Snap Ring	60	Snap Ring
28	Gasket	53	Key	61	Snap Ring
29	Spacer	54	Snap Ring	62	Oil Plug
30	Third Reduction Gearcase	55	Intermediate Shaft, Plain	63	Gasket
32	Gasket	56	Intermediate Shaft, Gearcut		
45	Anti-Friction Bearing	57	Snap Ring		

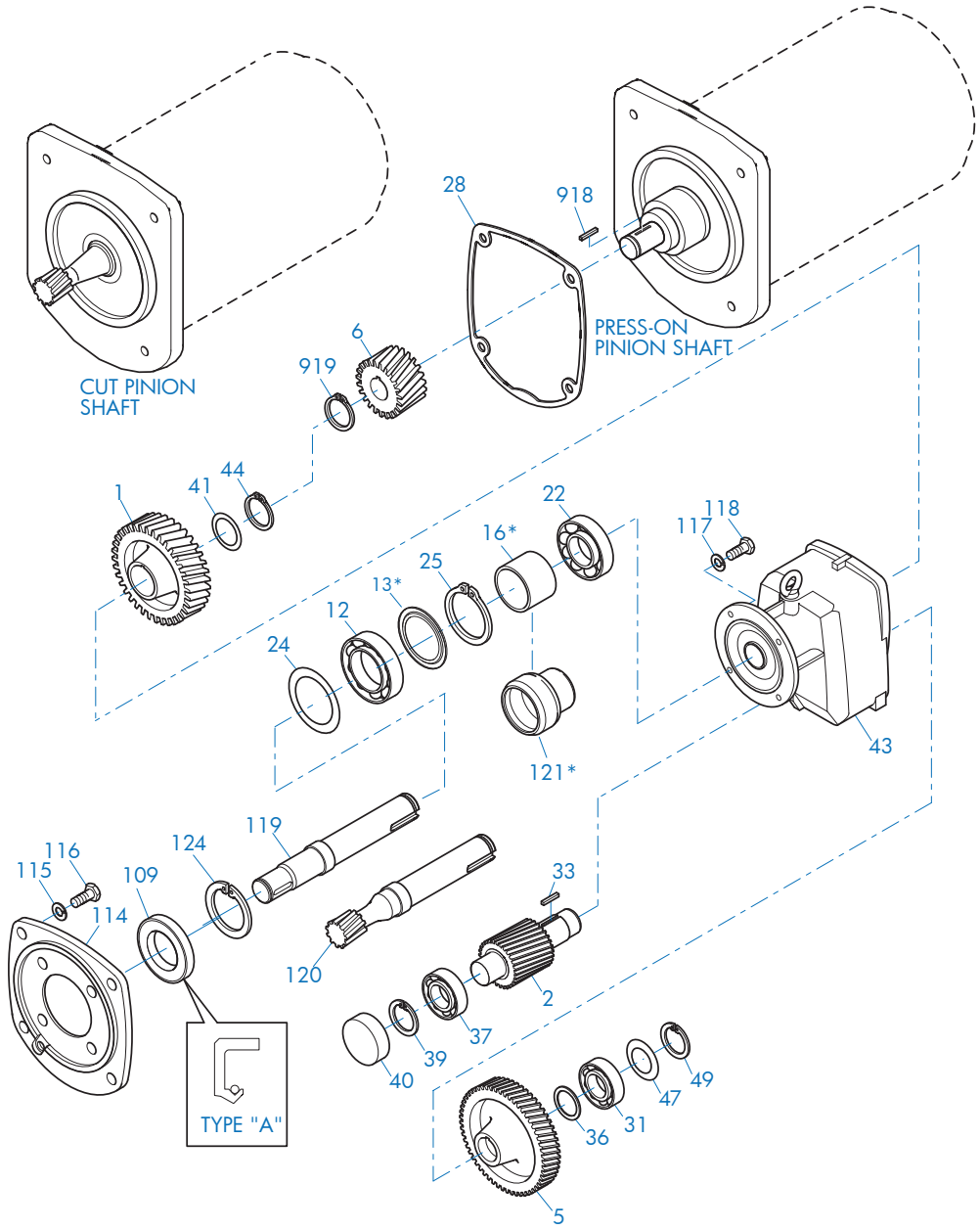

SK9062.1/32 - SK9092.1/52 Input Compound Reduction

1	Gear	33	Key	115	Lock Washer
2	Pinion Shaft	36	Spacer	116	Bolt
5	Gear	37	Anti-Friction Bearing	117	Lock Washer
6	Pinion	39	Snap Ring	118	Bolt
12	Anti-Friction Bearing	40	Bore Plug	119	Intermediate Shaft, Plain
13	Nilos Ring*	41	Shim	120	Intermediate Shaft, Gearcut
16	Spacer*	43	Gearcase	121	Bearing Sleeve*
22	Anti-Friction Bearing	44	Snap Ring	124	Snap Ring
24	Shim	47	Shim	918	Key
25	Snap Ring	49	Snap Ring	919	Snap Ring
28	Gasket	109	Oil Seal		
31	Anti-Friction Bearing	114	Intermediate Flange		

* Conditionally used part

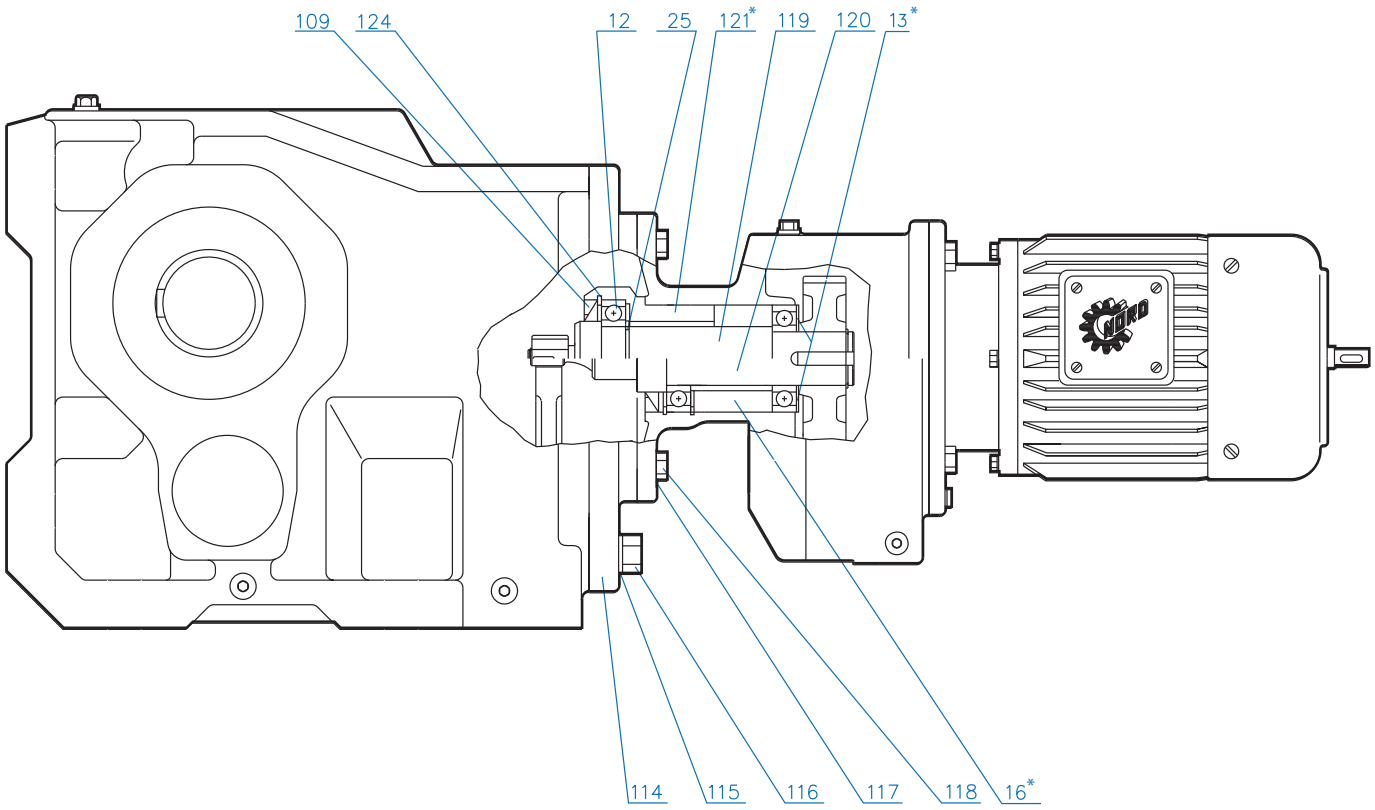

SK9062.1/32 - SK9092.1/52 Input Compound Reduction

11 Bearing	114 Intermediate Flange	119 Intermediate Shaft, Plain
13 Nilos Ring*	115 Lock Washer	120 Intermediate Shaft, Gearcut
16 Spacer*	116 Bolt	121 Bearing Sleeve *
25 Snap Ring	117 Lock Washer	124 Snap Ring
109 Oil Seal	118 Bolt	

* Conditionally used part

Helical Bevel VL2 & VL3
PARTS LIST DRAWINGS

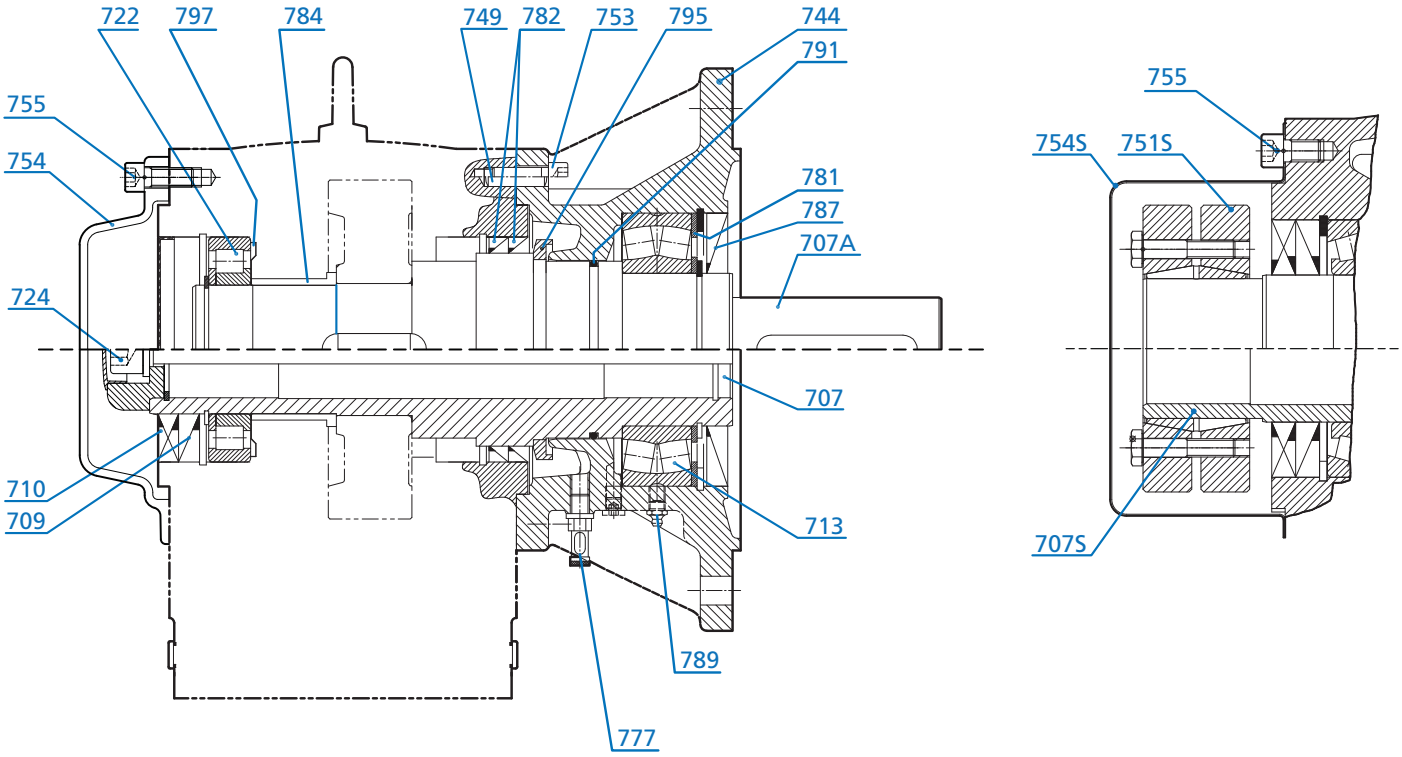

Helical Bevel VL2 & VL3

707	Hollow Output Shaft	744	Flange VLII & VLIII	782	Seal
707A	Output Shaft	749	Dowel Pin	784	Spacer VLIII
707S	Shrink Disk Hollow Shaft	751S	Shrink Disk	787	Seal
709	Seal	753	Screw	789	Grease Fitting
710	Seal	754	Shaft Cover	791	O-Ring
711	Snap Ring	755	Shaft Cover Screw	795	Oil Slinger (VLIII Only)
713	Bearing	777	Drain Plug (VLII)	797	NILOS Ring
722	Bearing	777	Oil Indicator (VLIII Only)		
724	Fixing Kit	781	Axial Shim		

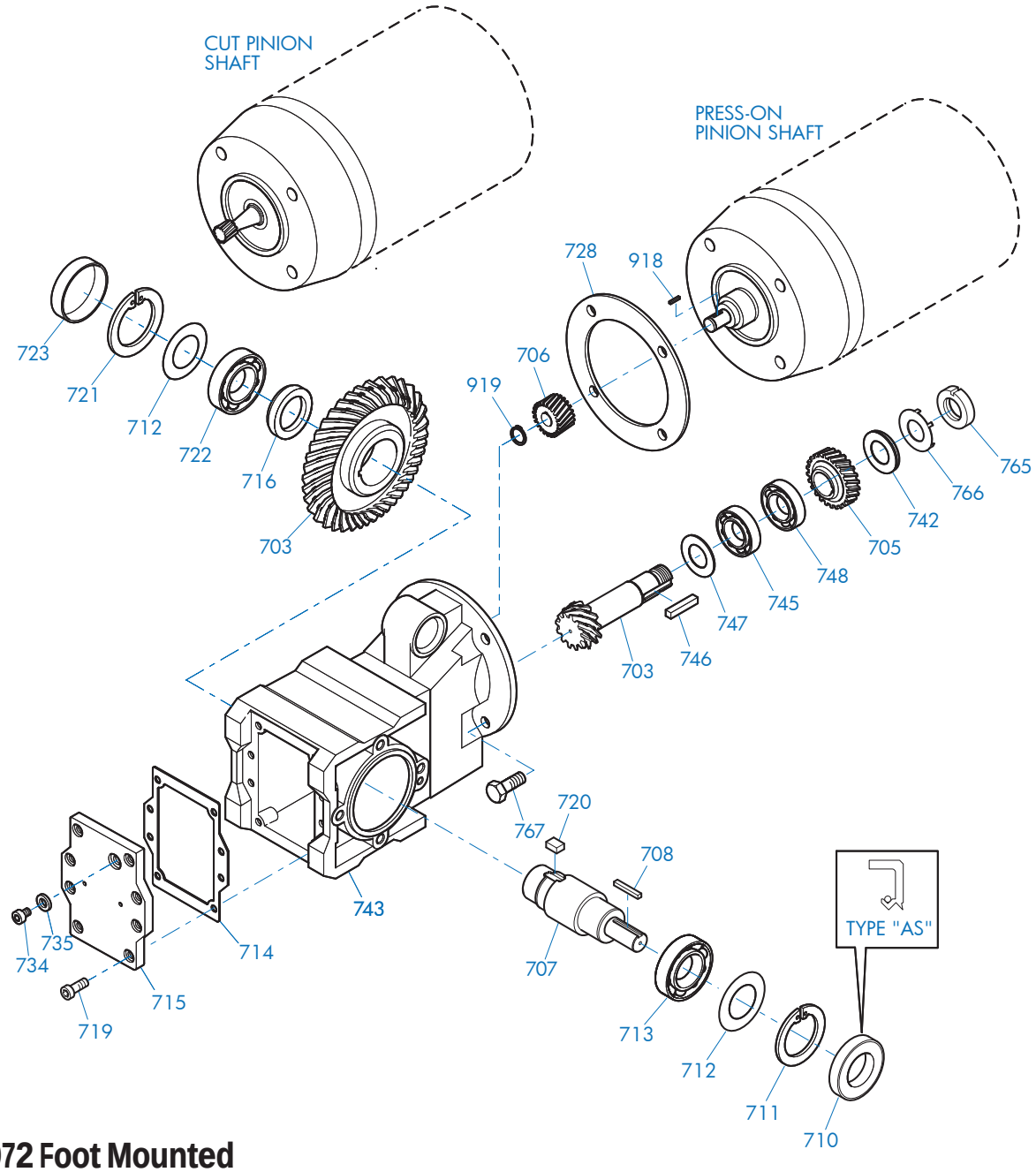

SK 92072 Foot Mounted

703 Bevel Gearset	716 Spacer	745 Anti-Friction Bearing
705 Gear	719 Bolt	746 Key
706 Pinion	720 Key	747 Shim
707 Output Shaft	721 Snap Ring	748 Anti-Friction Bearing
708 Key	722 Anti-Friction Bearing	765 Slotted Nut
710 Oil Seal	723 Bore Plug	766 Tab Lock Washer
711 Snap Ring	728 Gasket	767 Bolt
712 Shim	734 Oil Plug	918 Key
713 Anti-Friction Bearing	735 Gasket	919 Snap Ring
714 Gasket	742 Thrust Washer	
715 Inspection Cover	743 Gear case	

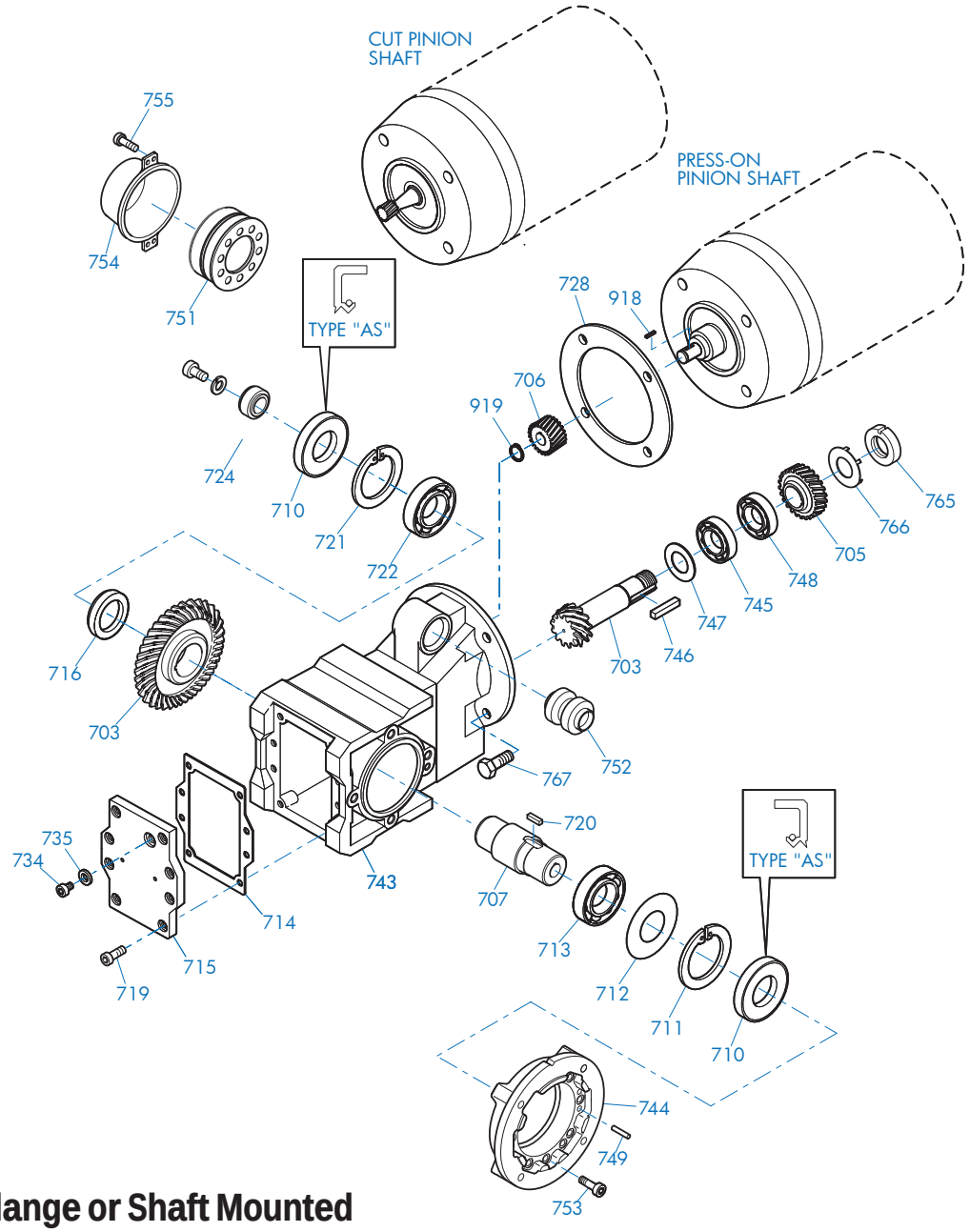

SK 92072 Flange or Shaft Mounted

703 Bevel Gearset
705 Gear
706 Pinion
707 Output Shaft
710 Oil Seal
711 Snap Ring
712 Shim
713 Anti-Friction Bearing
714 Gasket
715 Inspection Cover
716 Spacer
719 Bolt
720 Key
721 Snap Ring
722 Anti-Friction Bearing
724 Fixing Element Kit
728 Gasket
734 Oil Plug
735 Gasket
743 Gearcase
744 Flange
745 Anti-Friction Bearing
746 Key
747 Shim
748 Anti-Friction Bearing
749 Grooved Pin
751 Shrink Disc
752 Rubber Buffer
753 Bolt
754 Cover
755 Bolt
765 Slotted Round Nut
766 Tab Lock Washer
767 Bolt
918 Key
919 Snap Ring

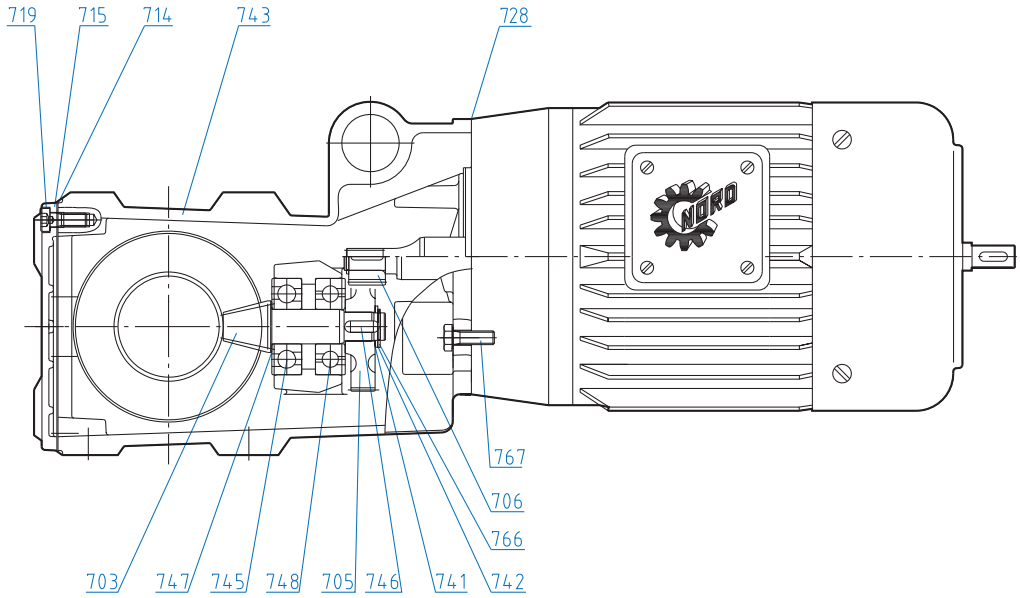

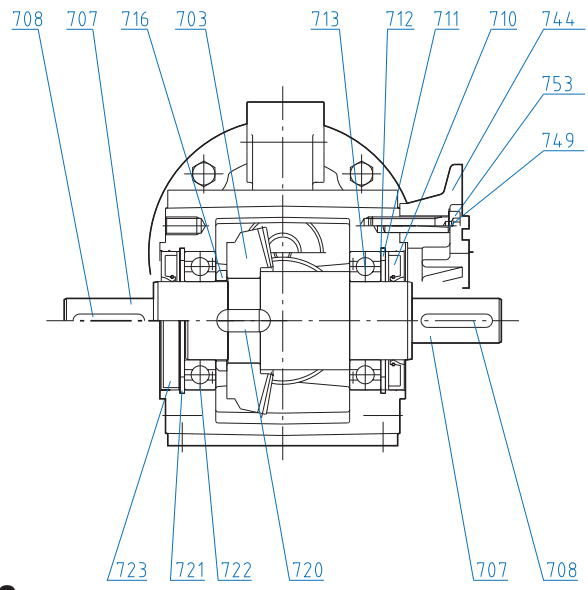

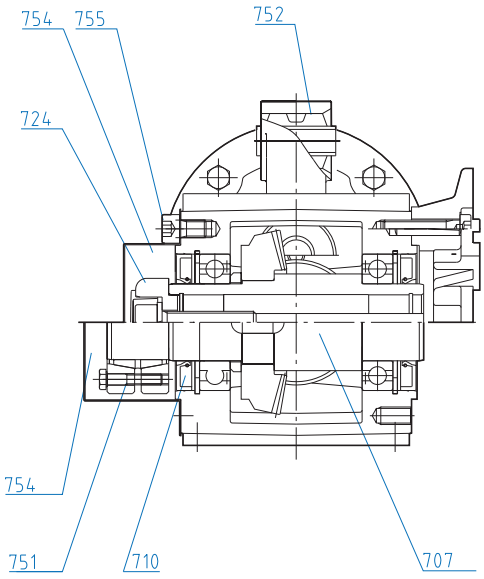

SK 92072

703 Bevel Gearset
705 Gear
706 Pinion
707 Output Shaft
708 Key
710 Oil Seal
711 Snap Ring
712 Shim
713 Anti-Friction Bearing
714 Gasket
715 Inspection Cover
716 Spacer
719 Bolt
720 Key
721 Snap Ring
722 Anti-Friction Bearing
723 Bore Plug
724 Fixing Element Kit
728 Gasket
741 Shim
742 Thrust Washer
743 Gear case
744 Flange
745 Anti-Friction Bearing
746 Key
747 Shim
748 Anti-Friction Bearing
749 Grooved Pin
751 Shrink Disc Connector
752 Rubber Buffer
753 Socket Head Screw
754 Shrink Disc Cover
755 Socket Head Screw
766 Tab Lock Washer
767 Bolt

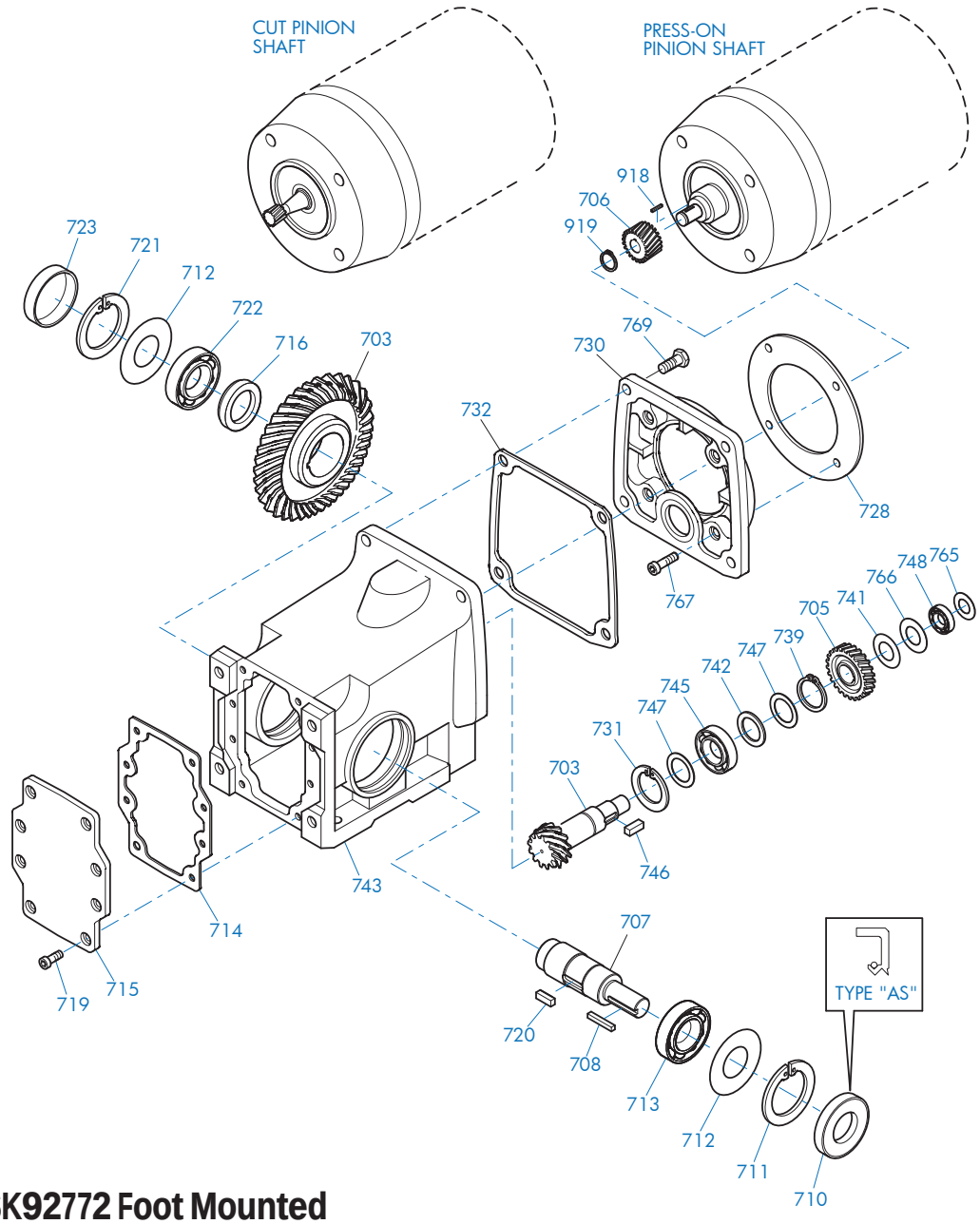

SK 92172 - SK92772 Foot Mounted

703 Bevel Gearset
705 Gear
706 Pinion
707 Output Shaft
708 Key
710 Oil Seal
711 Snap Ring
712 Shim
713 Anti-Friction Bearing
714 Gasket
715 Inspection Cover
716 Spacer
719 Bolt
720 Key
721 Snap Ring
722 Anti-Friction Bearing
723 Bore Plug
728 Gasket
730 Input Cover
731 Snap Ring
732 Gasket
739 Snap Ring
741 Shim
742 Thrust Washer
743 Gearcase
745 Anti-Friction Bearing
746 Key
747 Shim
748 Anti-Friction Bearing
765 Shim
766 Snap Ring
767 Bolt
769 Bolt
918 Key
919 Snap Ring

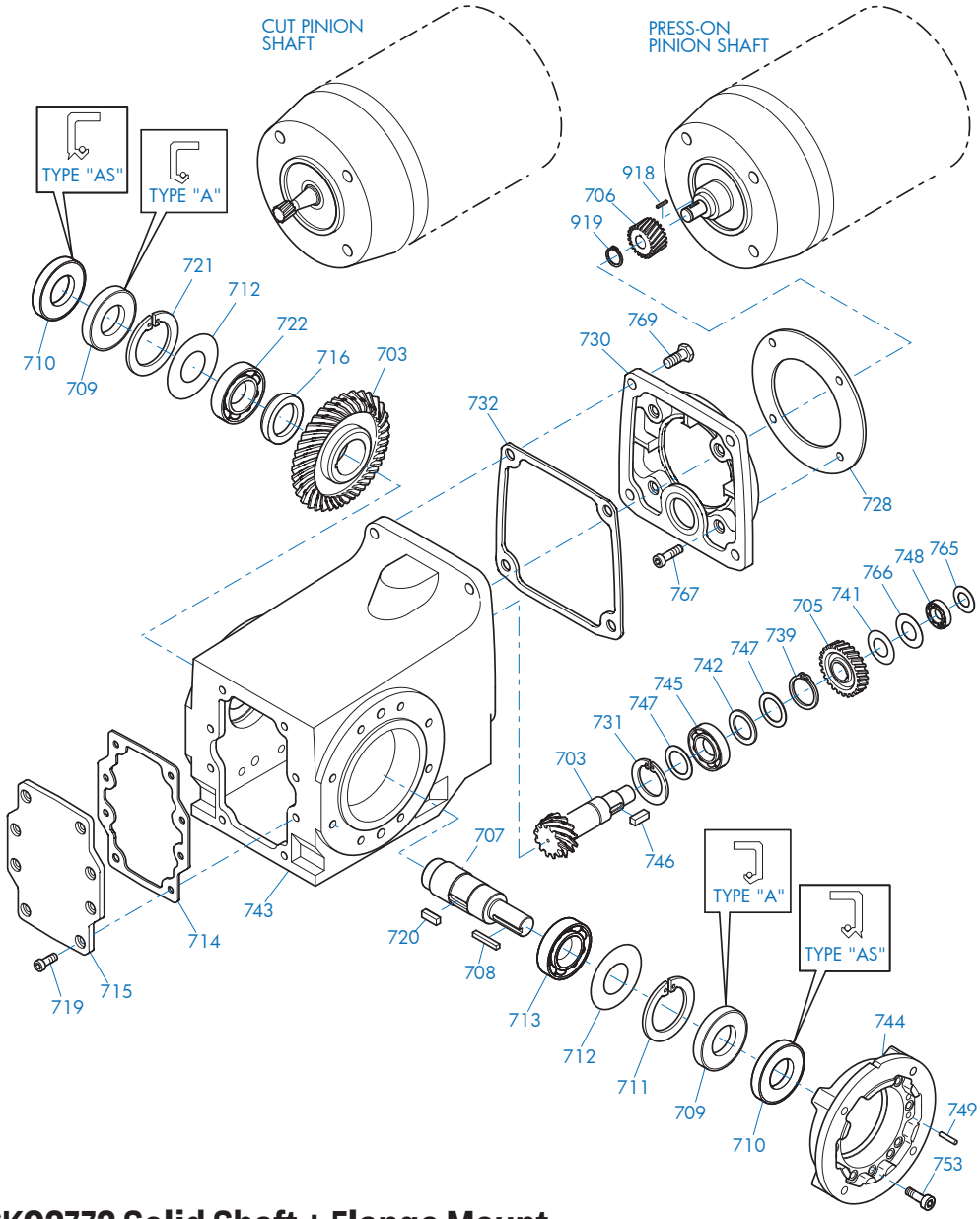

SK 92172 - SK92772 Solid Shaft + Flange Mount

703 Bevel Gearset
705 Gear
706 Pinion
707 Output Shaft
708 Key
709 Oil Seal
710 Oil Seal
711 Snap Ring
712 Shim
713 Anti-Friction Bearing
714 Gasket
715 Inspection Cover
716 Spacer
719 Bolt
720 Key
721 Snap Ring
722 Anti-Friction Bearing
728 Gasket
730 Input Cover
731 Snap Ring
732 Gasket
739 Snap Ring
741 Shim
742 Thrust Washer
743 Gearcase
744 Flange
745 Anti-Friction Bearing
746 Key
747 Shim
748 Anti-Friction Bearing
749 Grooved Pin
753 Bolt
765 Shim
766 Snap Ring
767 Bolt
769 Bolt
918 Key
919 Snap Ring

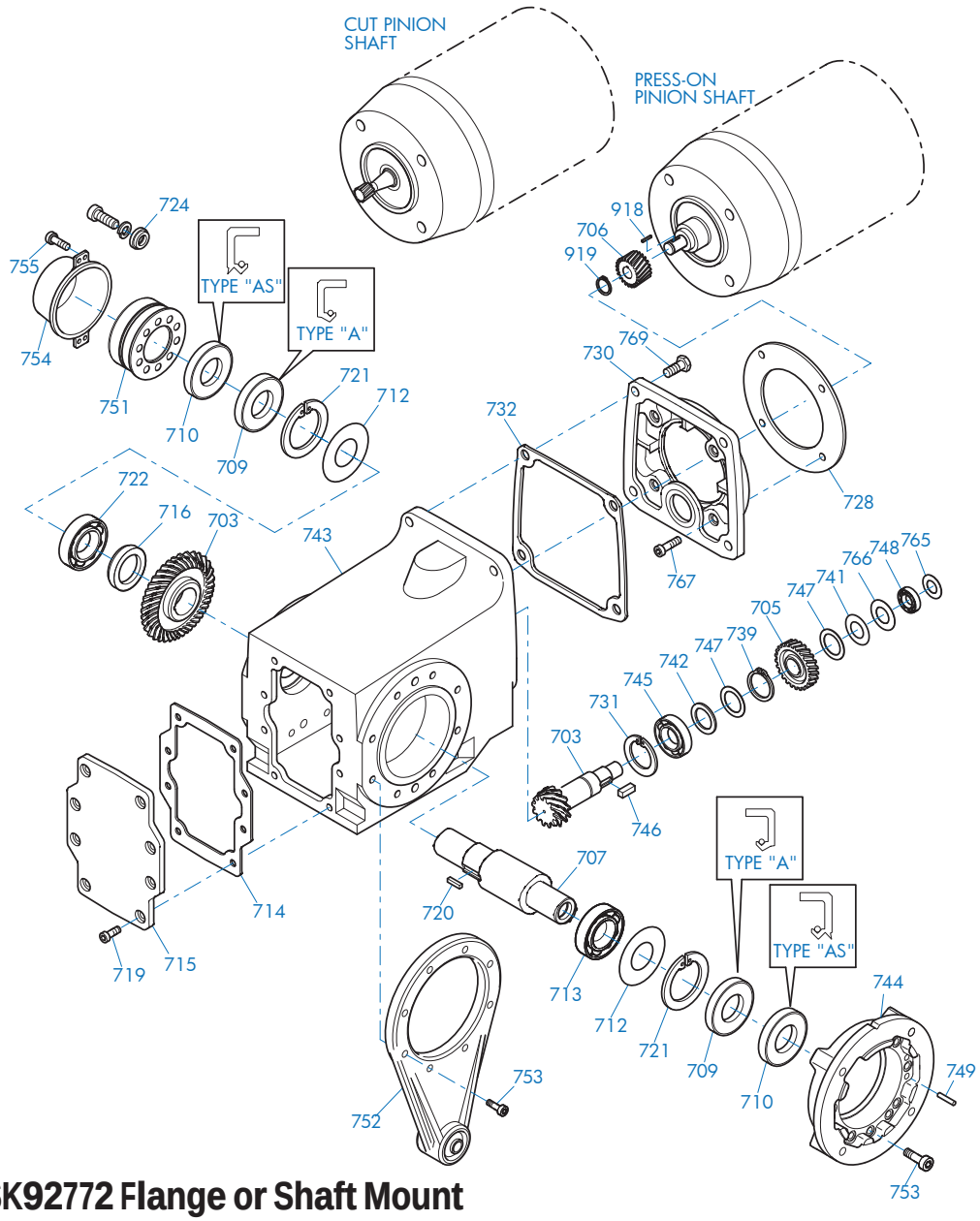

SK 92172 - SK92772 Flange or Shaft Mount

703 Bevel Gearset	722 Anti-Friction Bearing	748 Anti-Friction Bearing
705 Gear	724 Fixing Element Kit	749 Grooved Pin
706 Pinion	728 Gasket	751 Shrink Disc Connector
707 Output Shaft	730 Input Cover	752 Torque Arm
709 Oil Seal	731 Snap Ring	753 Bolt
710 Oil Seal	732 Gasket	754 Cover
712 Shim	739 Snap Ring	755 Bolt
713 Anti-Friction Bearing	741 Shim	765 Shim
714 Gasket	742 Thrust Washer	766 Snap Ring
715 Inspection Cover	743 Gearcase	767 Bolt
716 Spacer	744 Flange	769 Bolt
719 Bolt	745 Anti-Friction Bearing	918 Key
720 Key	746 Key	919 Snap Ring
721 Snap Ring	747 Shim	

92 SERIES HELICAL-BEVEL PARTS LIST DRAWINGS

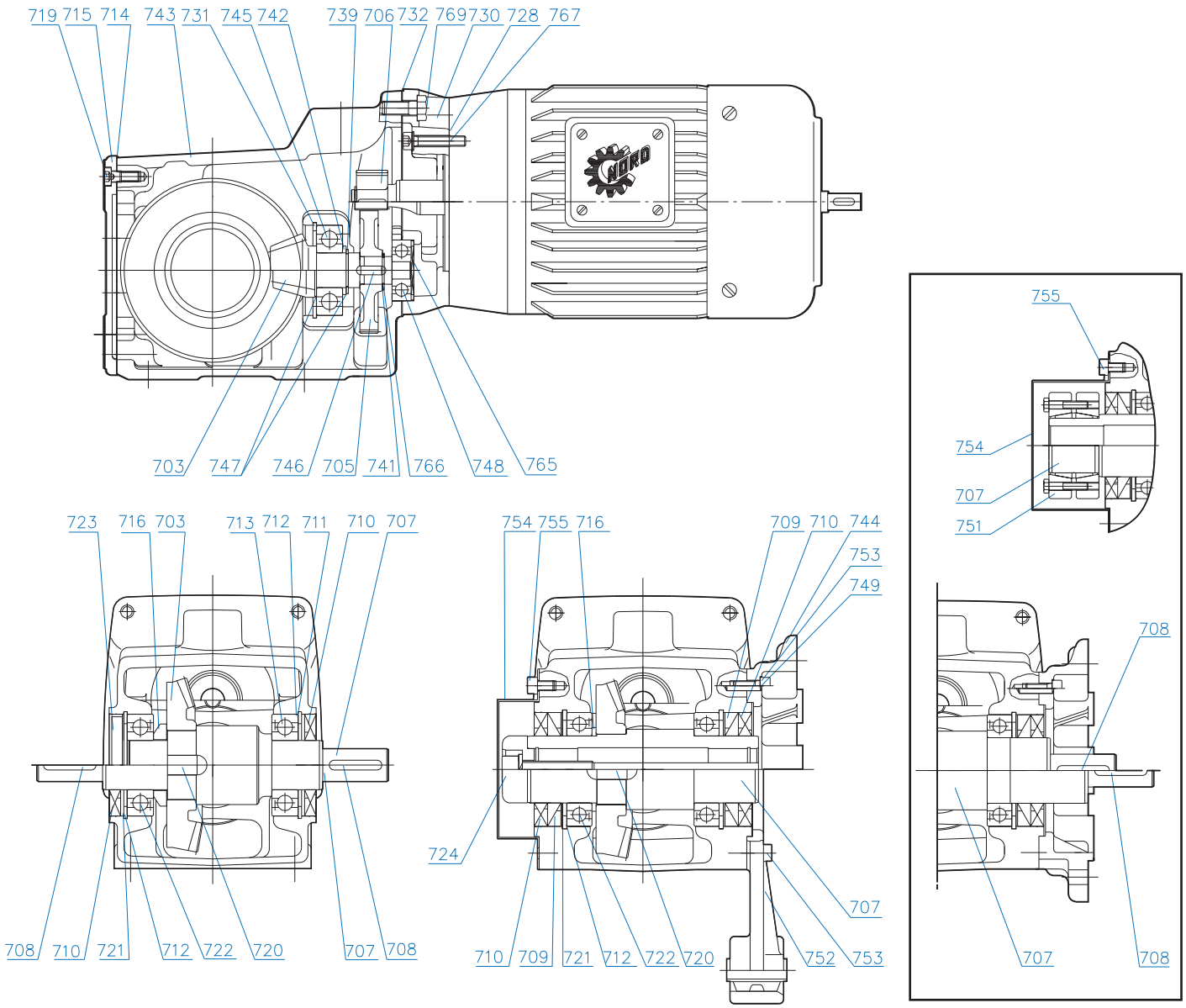

SK 92172 - SK 92772

703 Bevel Gearset
705 Gear
706 Pinion
707 Output Shaft
708 Key
709 Oil Seal
710 Oil Seal
711 Snap Ring
712 Shim
713 Anti-Friction Bearing
714 Gasket
715 Inspection Cover
716 Spacer
719 Bolt
720 Key
721 Snap Ring
722 Anti-Friction Bearing
723 Sealing Plug
724 Fixing Element Kit
728 Gasket
730 Gearbox Cover
731 Snap Ring
732 Gasket
739 Snap Ring
741 Shim
742 Thrust Washer
743 Gearcase
744 Flange
745 Anti-Friction Bearing
746 Key
747 Shim
748 Anti-Friction Bearing
749 Grooved Pin
751 Shrink Disc Connector
752 Torque Arm
753 Bolt
754 Cover
755 Bolt
765 Slotted Round Nut
766 Tab Lock Washer
767 Bolt
769 Hexagonal Screw

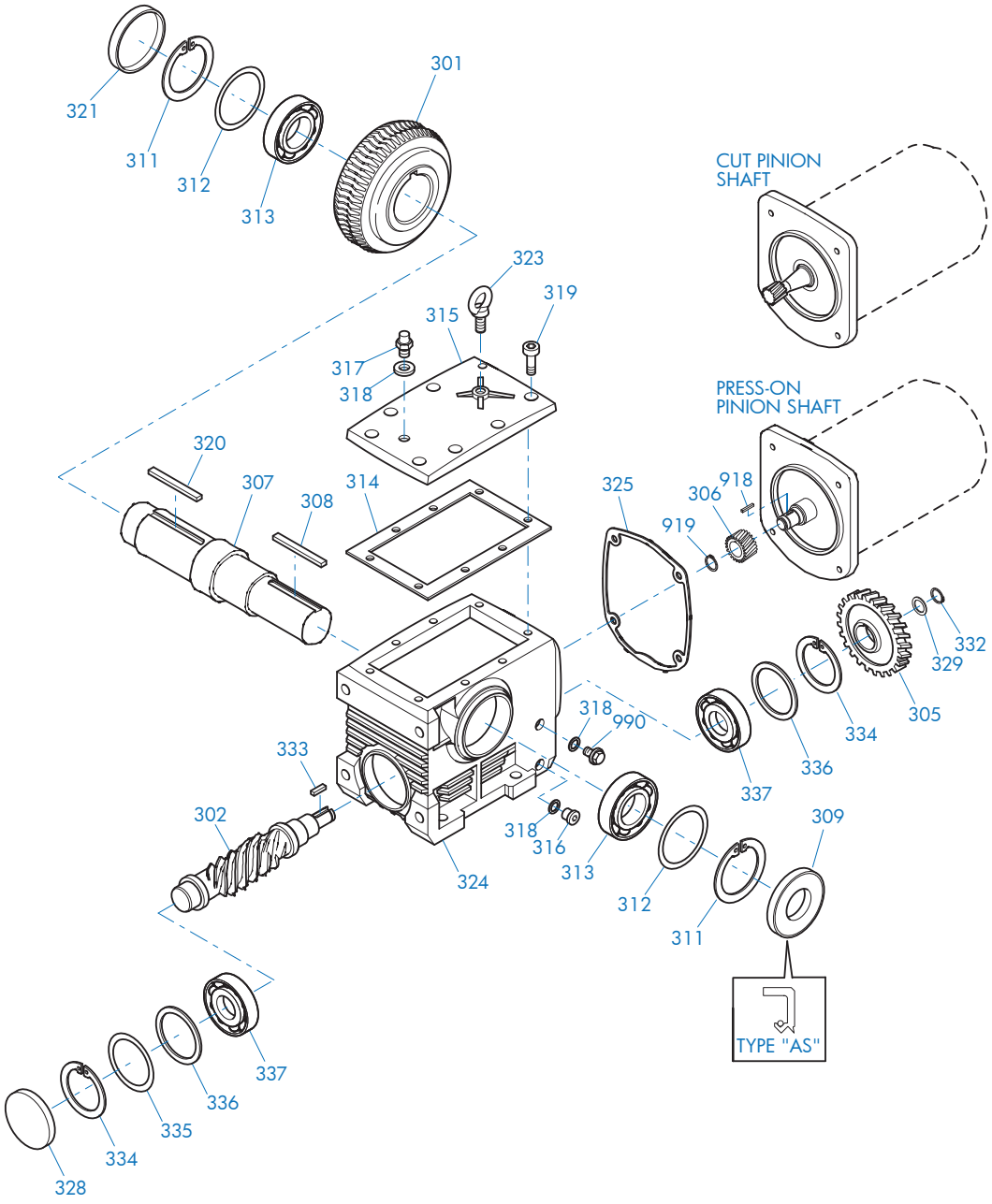

SK 02040 - SK 42125 Foot Mounted

301 Worm Wheel	315 Inspection Cover	329 Thrust Washer
302 Worm	316 Drain Plug	332 Snap Ring
305 Gear	317 Vent Plug	333 Key
306 Pinion	318 Gasket	334 Snap Ring
307 Output Shaft	319 Socket Head Screw	335 Shim
308 Key	320 Key	336 Thrust Washer
309 Oil Seal	321 Bore Plug	337 Anti-Friction Bearing
311 Snap Ring	323 Flanged Eye Bolt	918 Key
312 Shim	324 Gearcase	919 Snap Ring
313 Anti-Friction Bearing	325 Gasket	990 Oil Level Plug
314 Gasket	328 Bore Plug	

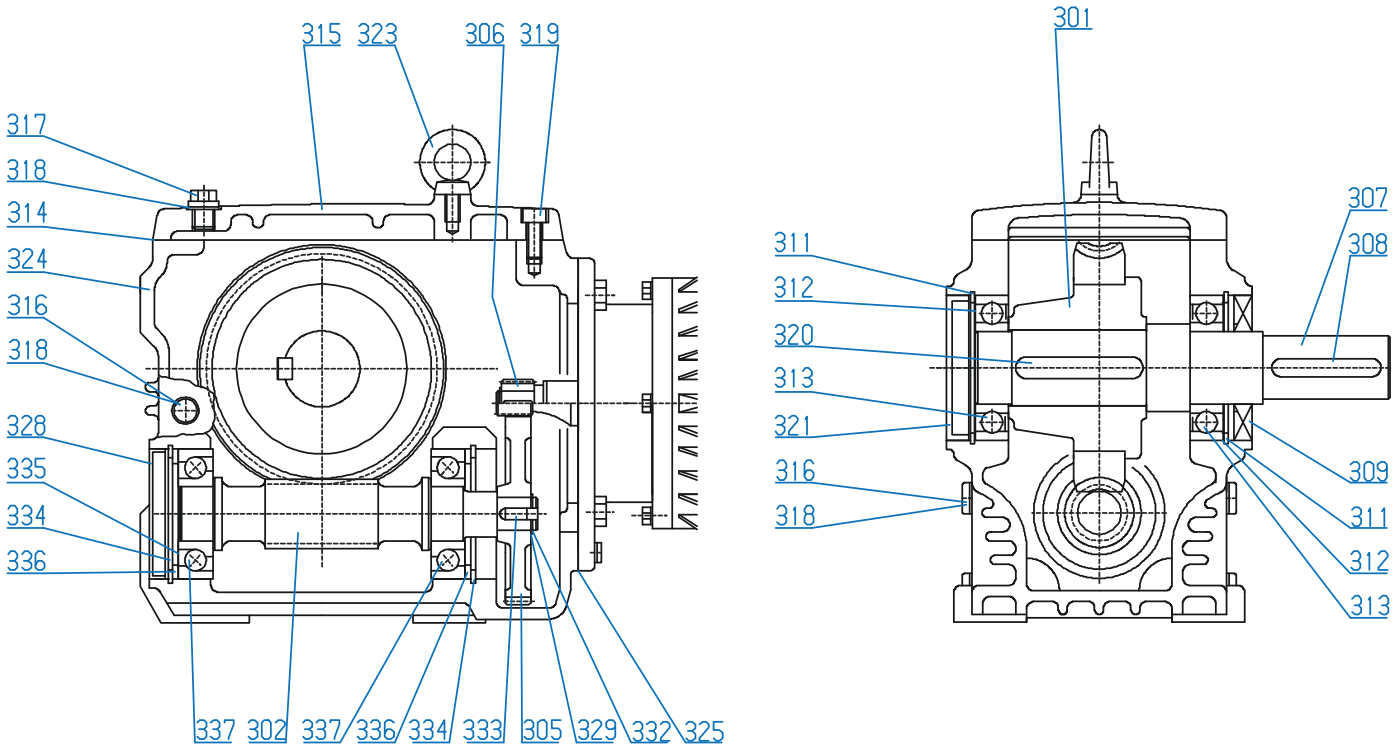

SK 02040 - SK 42125 Foot Mounted

301 Worm Wheel	314 Gasket	325 Gasket
302 Worm	315 Inspection Cover	328 Bore Plug
305 Gear	316 Drain Plug	329 Thrust Washer
306 Pinion	317 Vent Plug	332 Snap Ring
307 Output Shaft	318 Gasket	333 Key
308 Key	319 Socket Head Screw	334 Snap Ring
309 Oil Seal	320 Key	335 Shim
311 Snap Ring	321 Bore Plug	336 Thrust Washer
312 Shim	323 Flanged Eye Bolt	337 Anti-Friction Bearing
313 Anti-Friction Bearing	324 Gearcase	

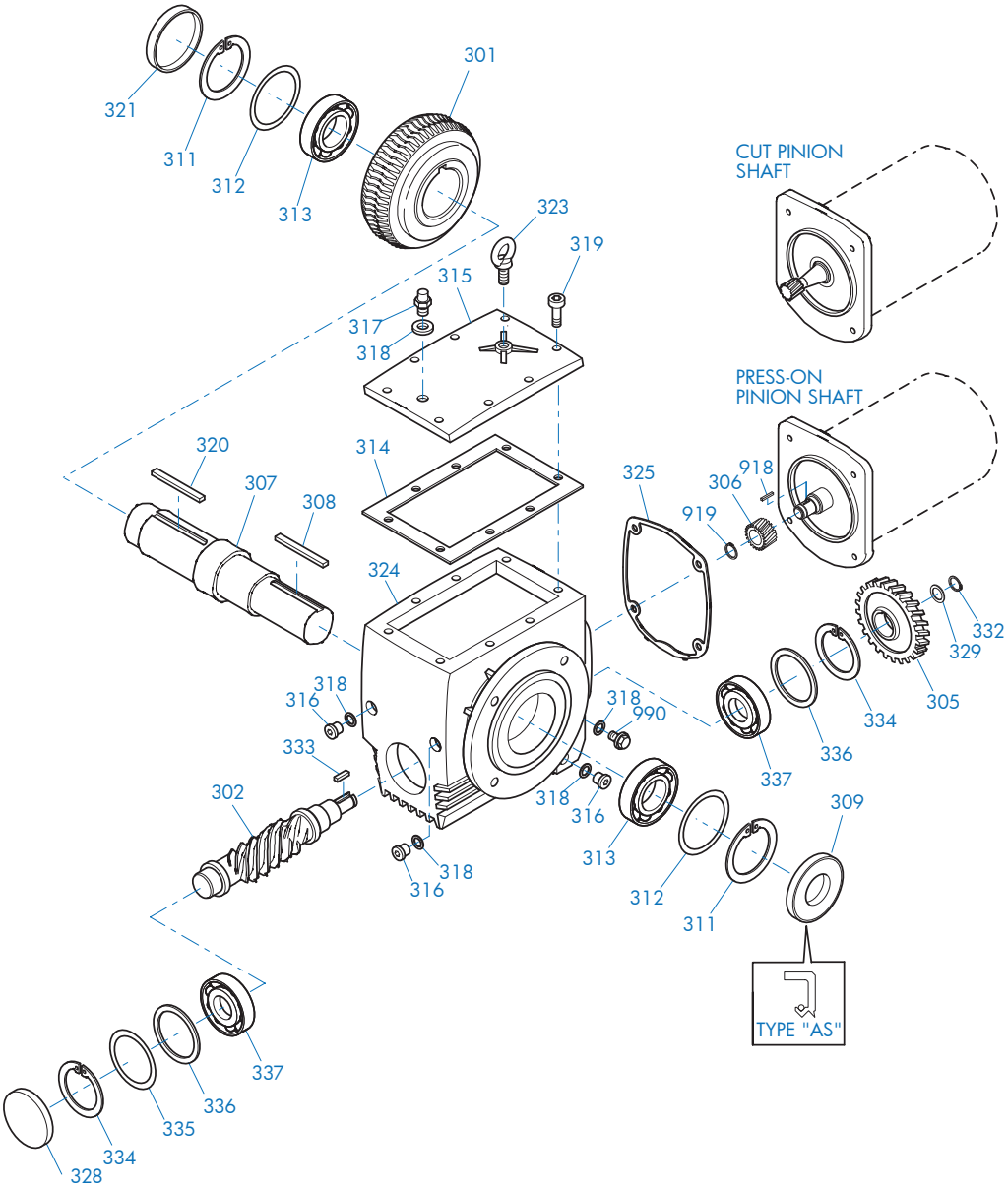

SK 02040 - SK 42125 Flange Mounted

301 Worm Wheel	315 Inspection Cover	329 Thrust Washer
302 Worm	316 Drain Plug	332 Snap Ring
305 Gear	317 Vent Plug	333 Key
306 Pinion	318 Gasket	334 Snap Ring
307 Output Shaft	319 Socket Head Screw	335 Shim
308 Key	320 Key	336 Thrust Washer
309 Oil Seal	321 Bore Plug	337 Anti-Friction Bearing
311 Snap Ring	323 Flanged Eye Bolt	918 Key
312 Shim	324 Gearcase	919 Snap Ring
313 Anti-Friction Bearing	325 Gasket	990 Oil Level Plug
314 Gasket	328 Bore Plug	

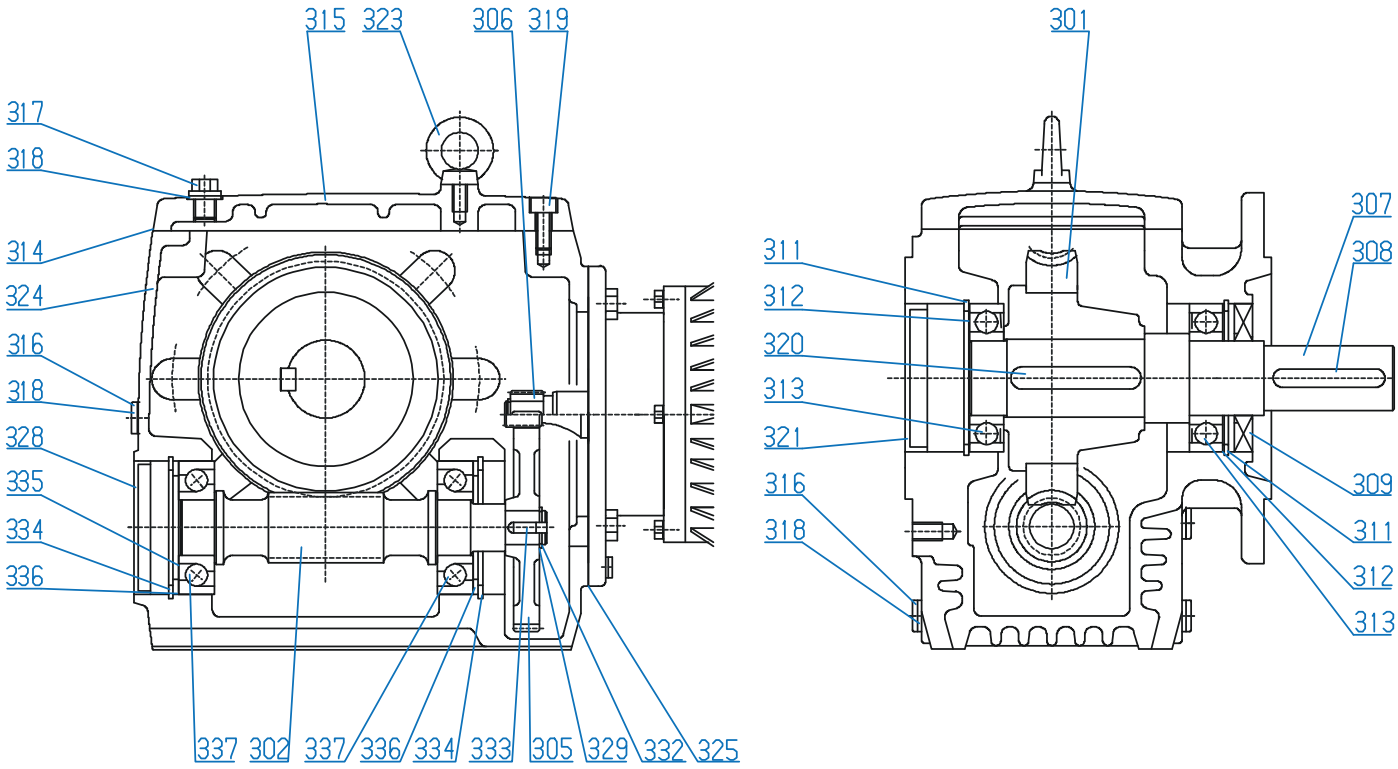

SK 02040 - SK 42125 Flange Mounted

301 Worm Wheel	314 Gasket	325 Gasket
302 Worm	315 Inspection Cover	328 Bore Plug
305 Gear	316 Drain Plug	329 Thrust Washer
306 Pinion	317 Vent Plug	332 Snap Ring
307 Output Shaft	318 Gasket	333 Key
308 Key	319 Socket Head Screw	334 Snap Ring
309 Oil Seal	320 Key	335 Shim
311 Snap Ring	321 Bore Plug	336 Thrust Washer
312 Shim	323 Flanged Eye Bolt	337 Anti-Friction Bearing
313 Anti-Friction Bearing	324 Gearcase	

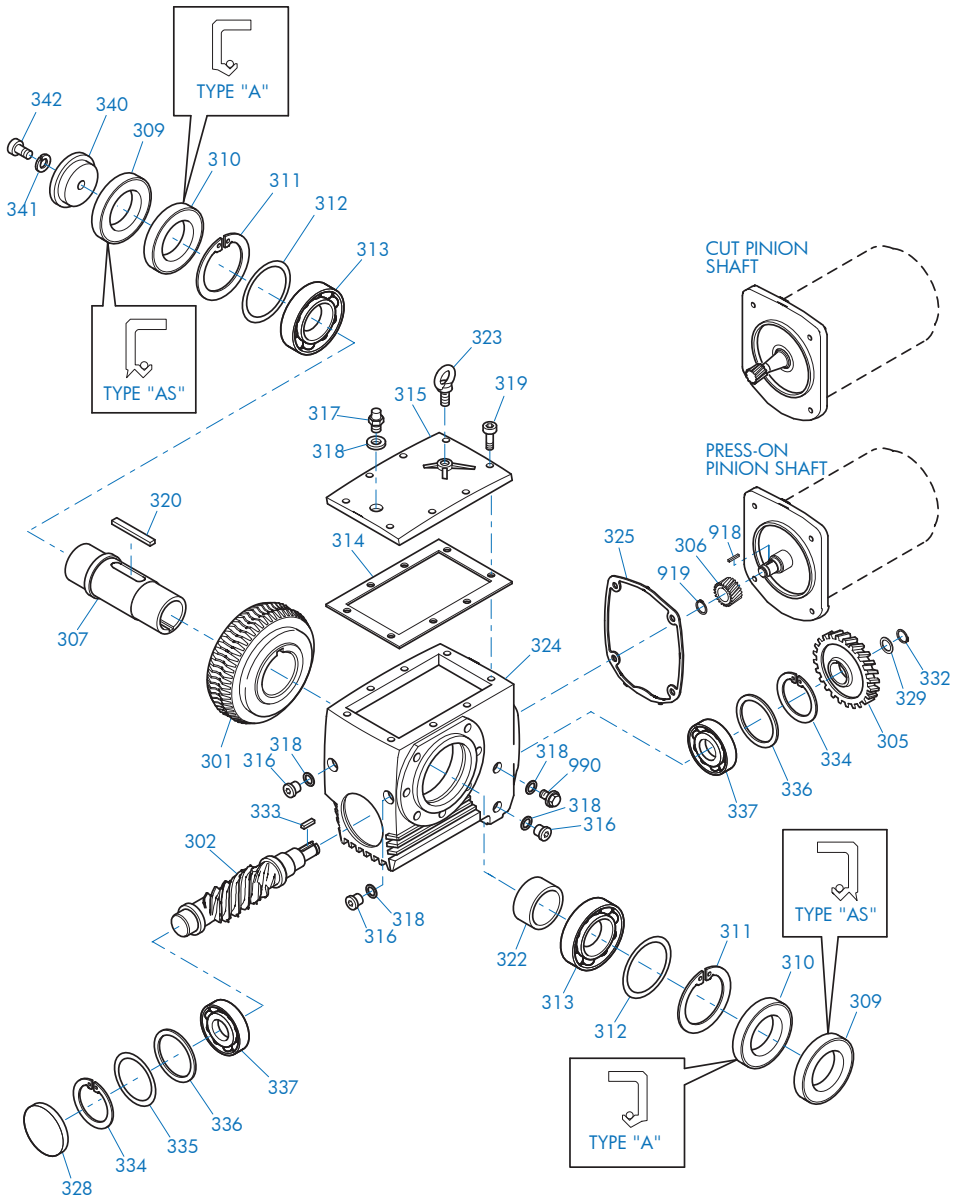

SK 02040 - SK 42125 Shaft Mounted

301 Worm Wheel
302 Worm
305 Gear
306 Pinion
307 Output Shaft
309 Oil Seal
310 Oil Seal
311 Snap Ring
312 Shim
313 Anti-Friction Bearing
314 Gasket
315 Inspection Cover
316 Drain Plug
317 Vent Plug
318 Gasket
319 Socket Head Screw
320 Key
322 Spacer
323 Flanged Eye Bolt
324 Gearcase
325 Gasket
328 Bore Plug
329 Thrust Washer
332 Snap Ring
333 Key
334 Snap Ring
335 Shim
336 Thrust Washer
337 Anti-Friction Bearing
340 Retaining Washer
341 Lock Washer
342 Bolt
350 Flange
351 Bolt
918 Key
919 Snap Ring
990 Oil Level Plug

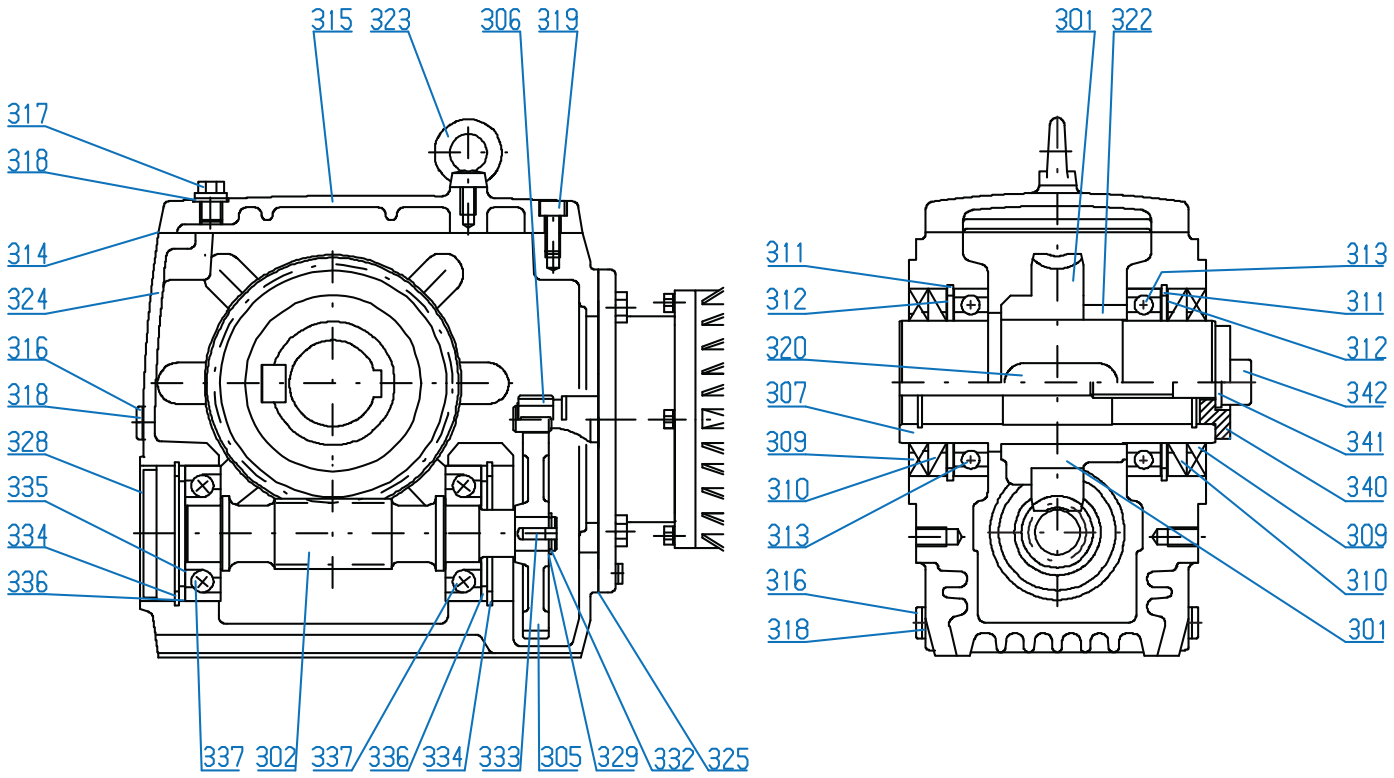

SK 02040 - SK 42125 Shaft Mounted

301 Worm Wheel	316 Drain Plug	333 Key
302 Worm	317 Vent Plug	334 Snap Ring
305 Gear	318 Gasket	335 Shim
306 Pinion	319 Socket Head Screw	336 Thrust Washer
307 Output Shaft	320 Key	337 Anti-Friction Bearing
309 Oil Seal	322 Spacer	340 Retaining Washer
310 Oil Seal	323 Flanged Eye Bolt	341 Lock Washer
311 Snap Ring	324 Gearcase	342 Bolt
312 Shim	325 Gasket	350 Flange
313 Anti-Friction Bearing	328 Bore Plug	351 Bolt
314 Gasket	329 Thrust Washer	
315 Inspection Cover	332 Snap Ring	

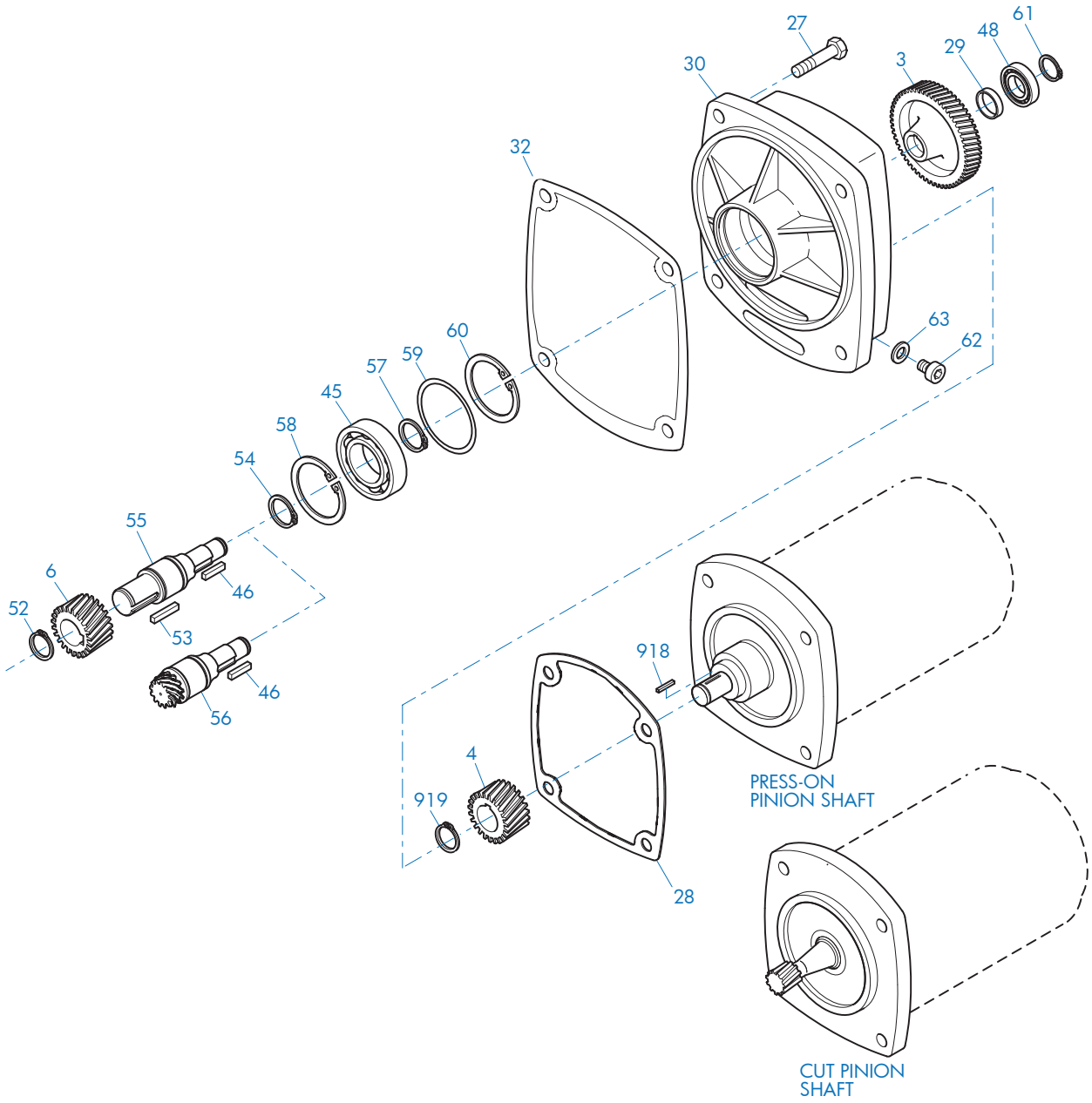

SK13050 - SK43125 Third Stage Reduction Gear

3	Gear	46	Key	59	Shim
4	Pinion	48	Anti-Friction Bearing	60	Snap Ring
6	Pinion	52	Snap Ring	61	Snap Ring
27	Bolt	53	Key	62	Oil Plug
28	Gasket	54	Snap Ring	63	Gasket
29	Spacer	55	Intermediate Shaft, Plain	918	Key
30	Third Reduction Gearcase	56	Intermediate Shaft, Gearcut	919	Snap Ring
32	Gasket	57	Snap Ring		
45	Anti-Friction Bearing	58	Snap Ring		

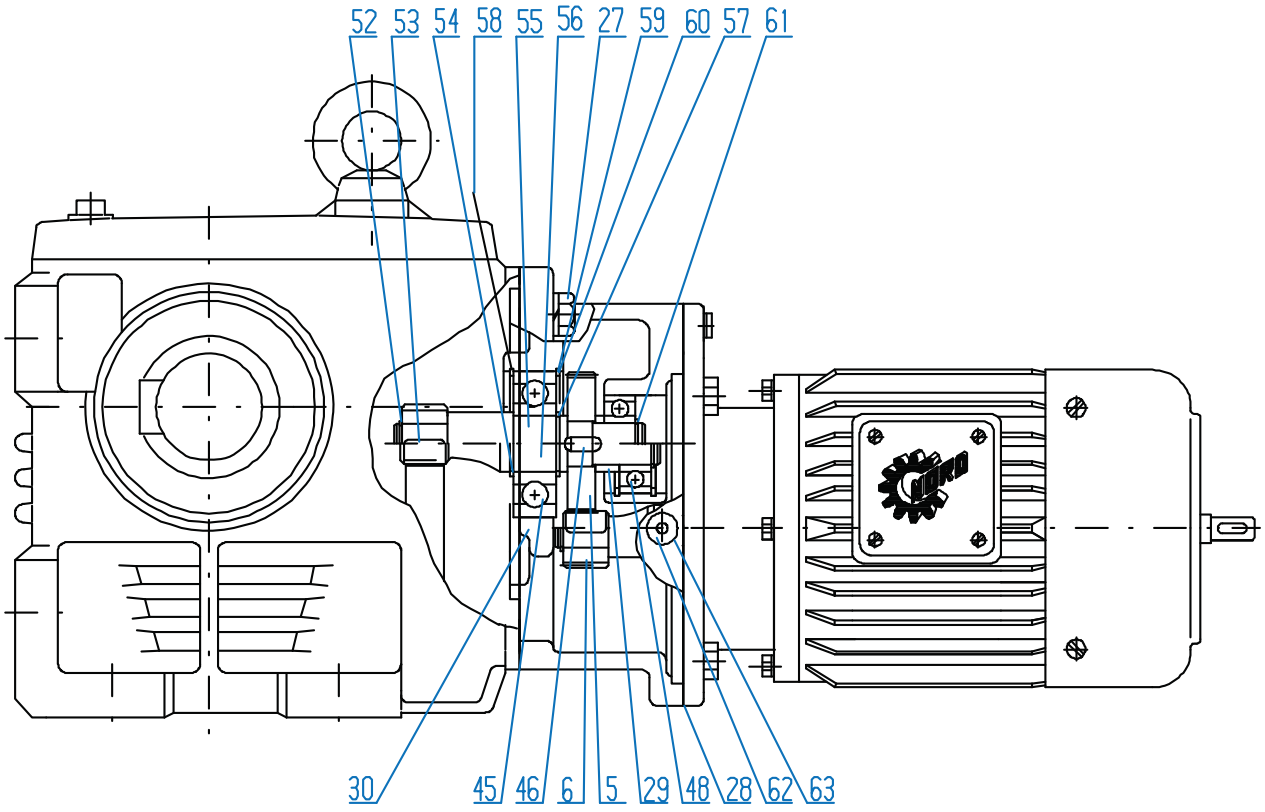

SK13050 - SK43125 Third Stage Reduction Gear

3	Gear	46	Key	58	Snap Ring
4	Pinion	48	Anti-Friction Bearing	59	Shim
27	Bolt	52	Snap Ring	60	Snap Ring
28	Gasket	53	Key	61	Snap Ring
29	Spacer	54	Snap Ring	62	Oil Plug
30	Third Reduction Gearcase	55	Intermediate Shaft, Plain	63	Gasket
32	Gasket	56	Intermediate Shaft, Gearcut		
45	Anti-Friction Bearing	57	Snap Ring		

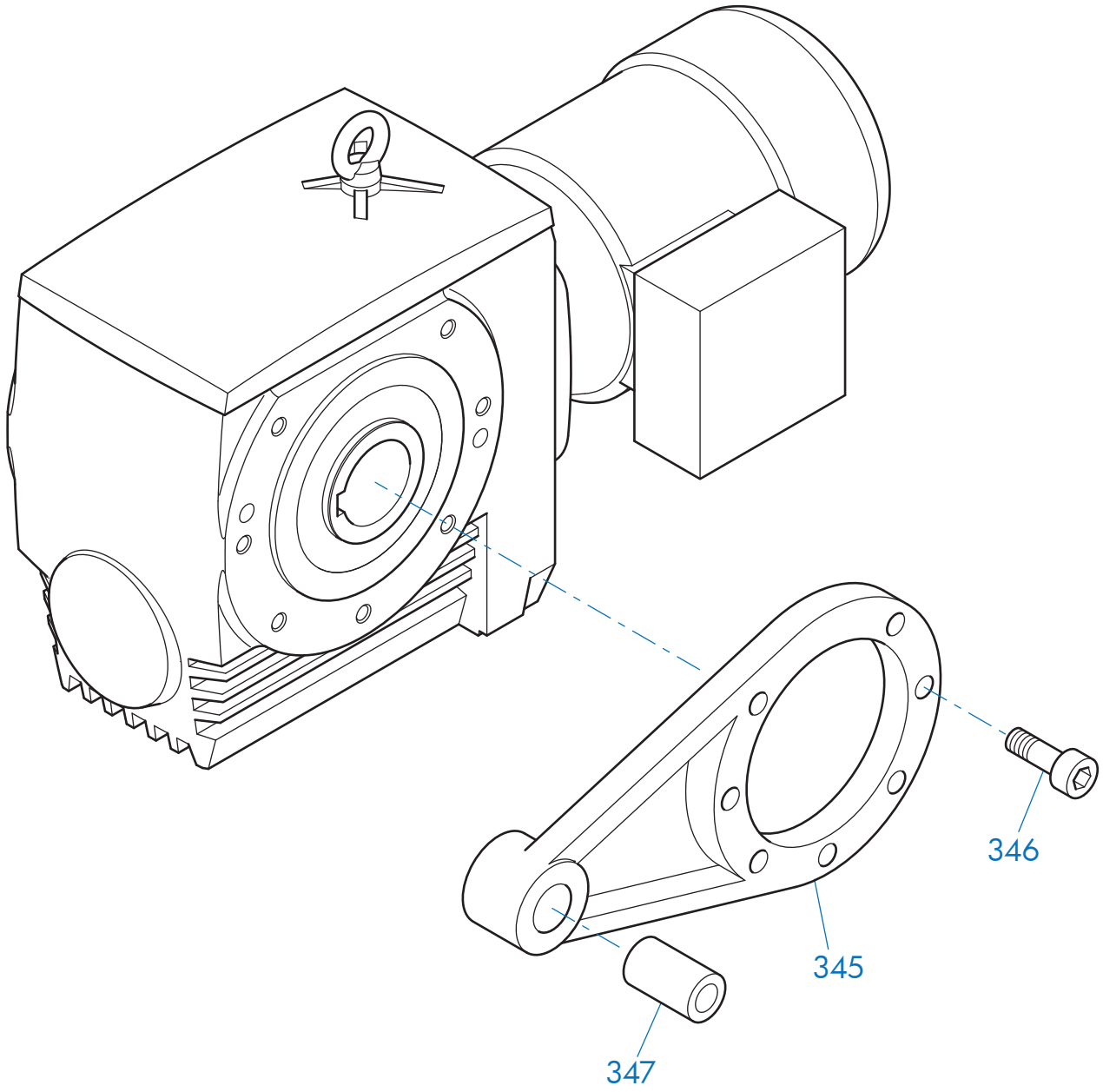

SK13050 - SK43125 Torque Arm

345 Torque Arm	346 Bolt	347 Bushing

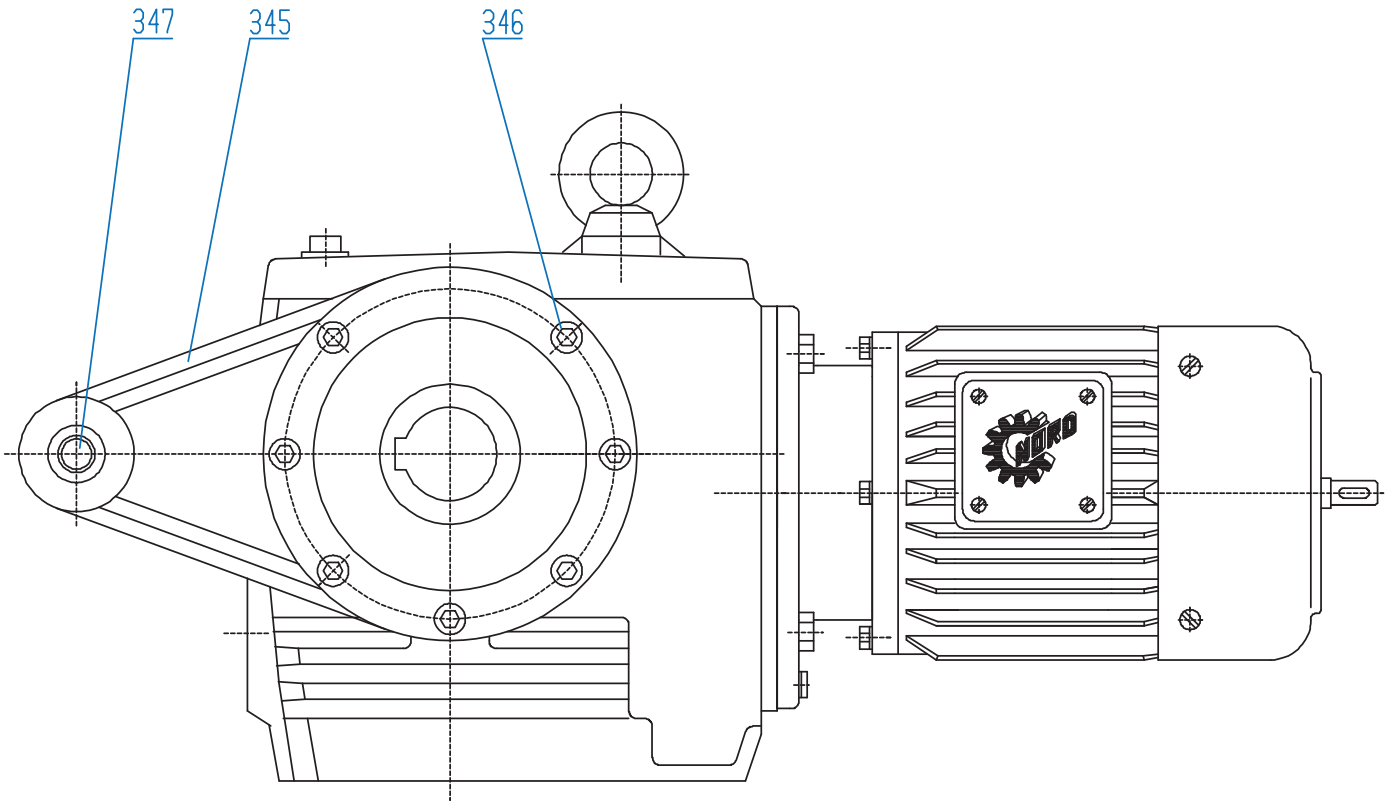

SK13050 - SK43125 Torque Arm

345 Torque Arm	346 Bolt	347 Bushing

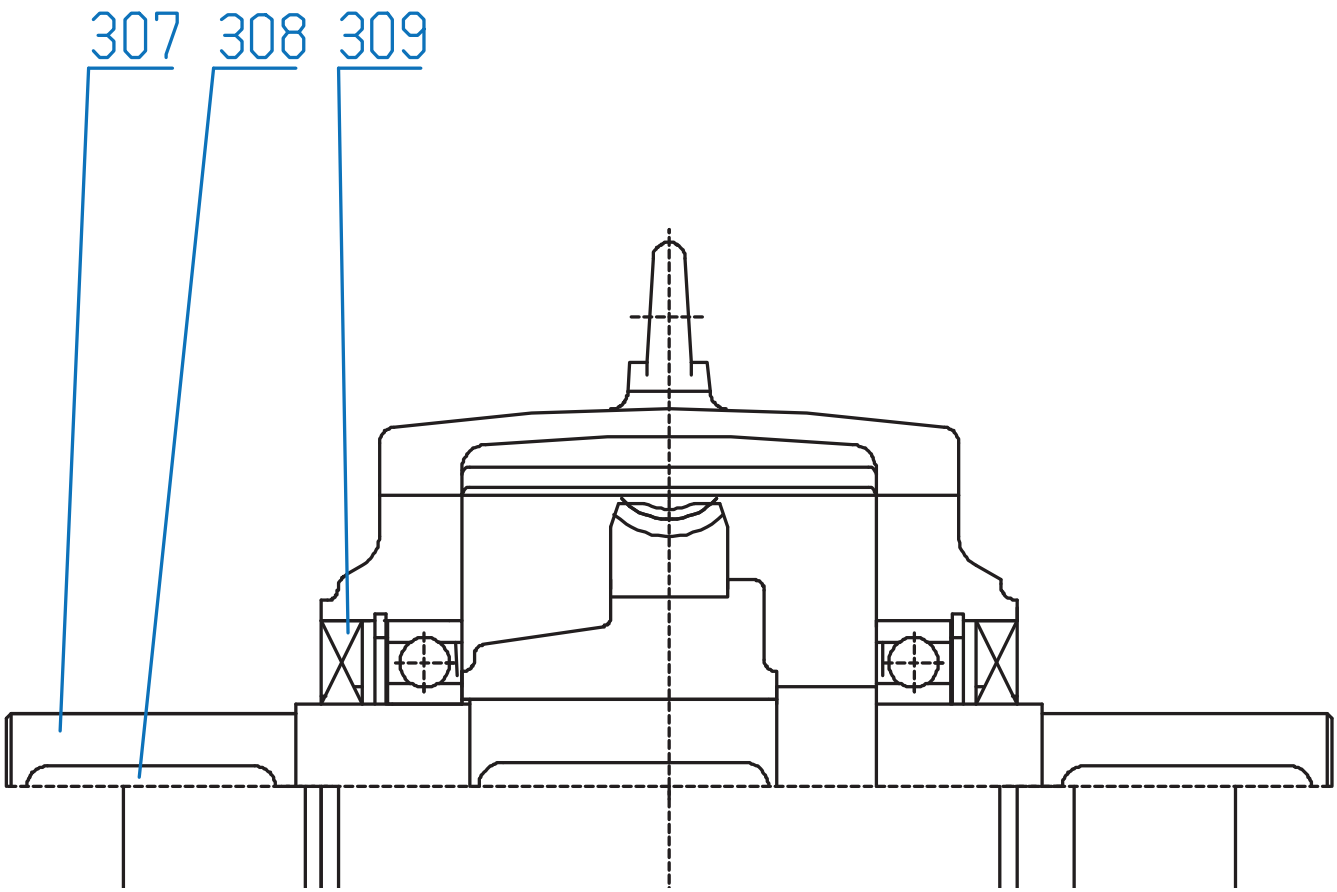

SK13050 - SK43125

307 Output Shaft	309 Oil Seal	350 Flange
308 Key	346 Screw	354 Shrink Disc Connector

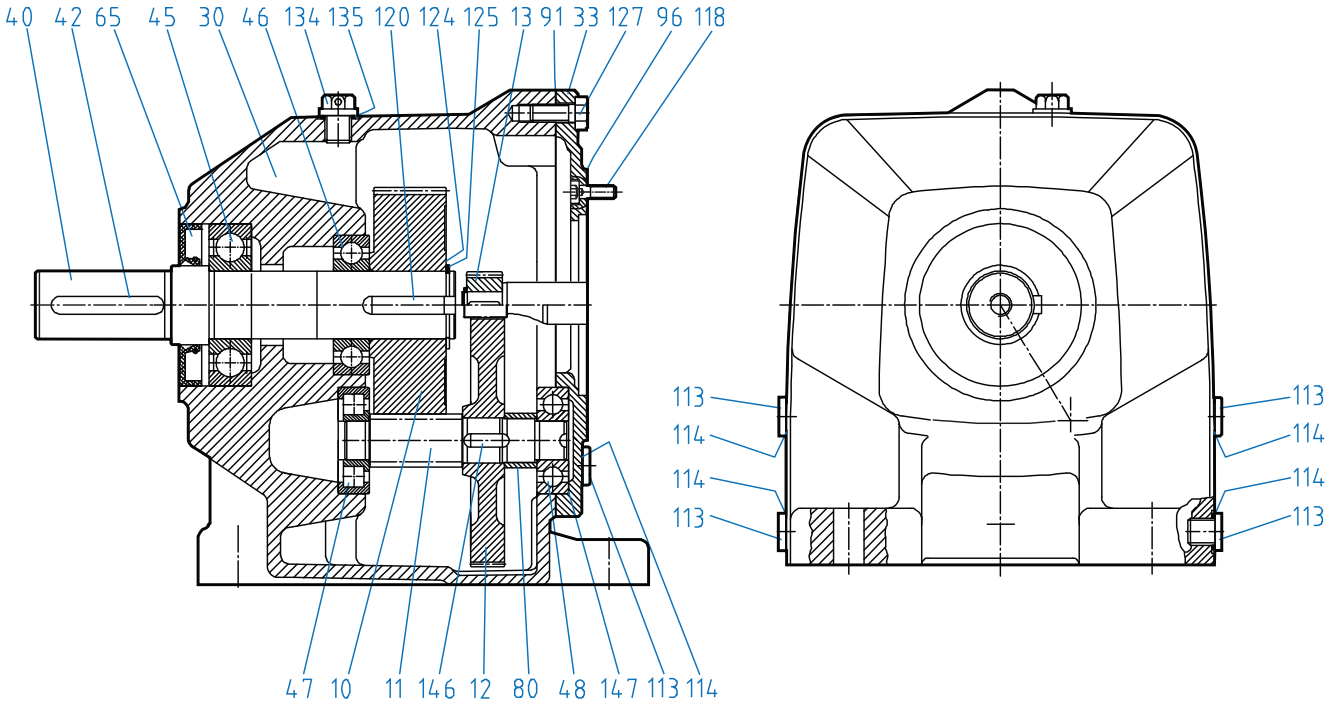

SK 172 - SK 972 Foot Mounted

10	Driven gear	46	Output shaft bearing	118	Bolt
11	Pinion shaft	47	Pinion shaft bearing	120	Key
12	Driving gear	48	Pinion shaft bearing	124	Shim
13	Driving pinion	65	Shaft seal	125	Snap ring
30	Gearcase	80	Spacer	127	Bolt
33	Input cover	91	Gasket	134	Vent plug
40	Output shaft	96	Gasket	135	Gasket
42	Key	113	Oil plug	146	Key
45	Output shaft bearing	114	Gasket	147	Shim

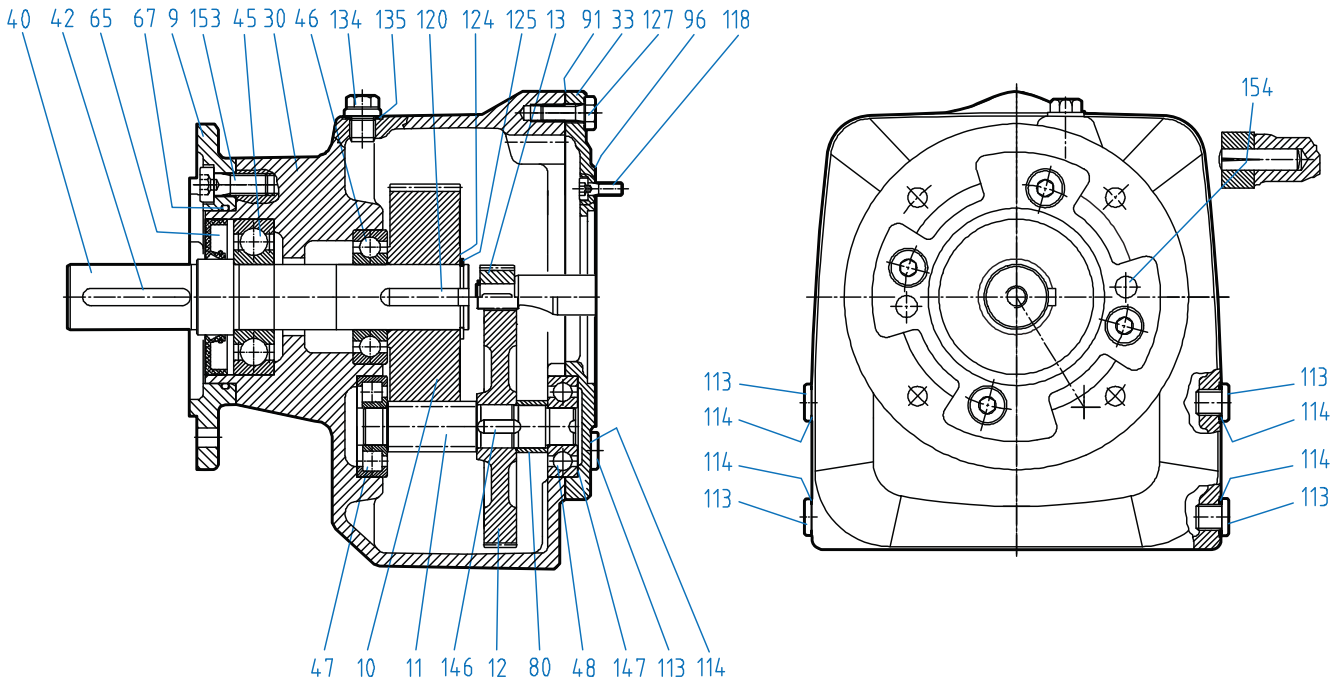

SK 172 - SK 972 Flange Mounted

9	Flange	47	Pinion shaft bearing	124	Shim
10	Driven gear	48	Pinion shaft bearing	125	Snap ring
11	Pinion shaft	65	Shaft seal	127	Bolt
12	Driving gear	67	O-Ring	134	Vent plug
13	Driving pinion	80	Spacer	135	Gasket
30	Gearcase	91	Gasket	146	Key
33	Input cover	96	Gasket	147	Shim
40	Output shaft	113	Oil plug	153	Bolt
42	Key	114	Gasket	154	Grooved dowel pin
45	Output shaft bearing	118	Bolt		
46	Output shaft bearing	120	Key		

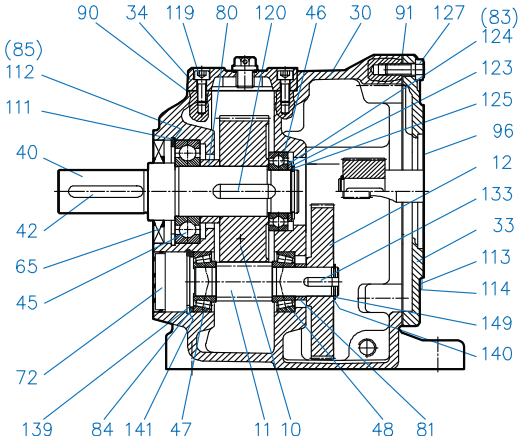

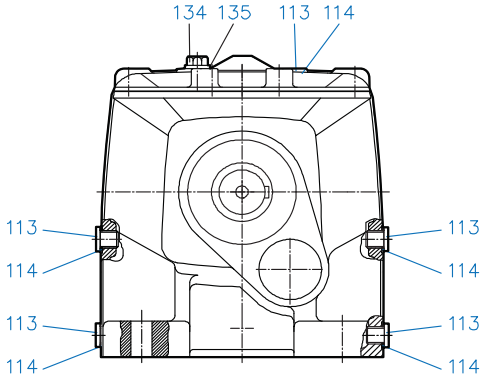

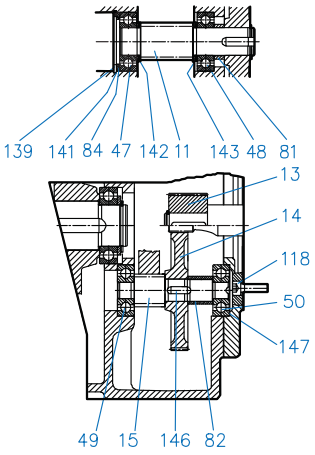

SK 273 - SK 973 Foot Mounted

10	Driven gear	65	Shaft seal	120	Key
11	Pinion shaft	72	Bore plug	123	Thrust washer
12	Driving gear	80	Spacer	124	Shim
13	Driving pinion	81	Spacer	125	Snap ring
14	Driving gear	82	Spacer	127	Bolt
15	Pinion shaft	83	Thrust washer	133	Key
30	Gearcase	84	Thrust washer	134	Vent plug
33	Input cover	85	Thrust washer	135	Gasket
34	Gear case cover	90	Gasket	139	Snap ring
40	Output shaft	91	Gasket	140	Shim
42	Key	96	Gasket	141	Shim
45	Output shaft bearing	111	Snap ring	142	Thrust washer
46	Output shaft bearing	112	Shim	143	Thrust washer
47	Pinion shaft bearing	113	Oil plug	146	Key
48	Pinion shaft bearing	114	Gasket	147	Shim
49	Pinion shaft bearing	118	Bolt	149	Snap ring
50	Pinion shaft bearing	119	Bolt		

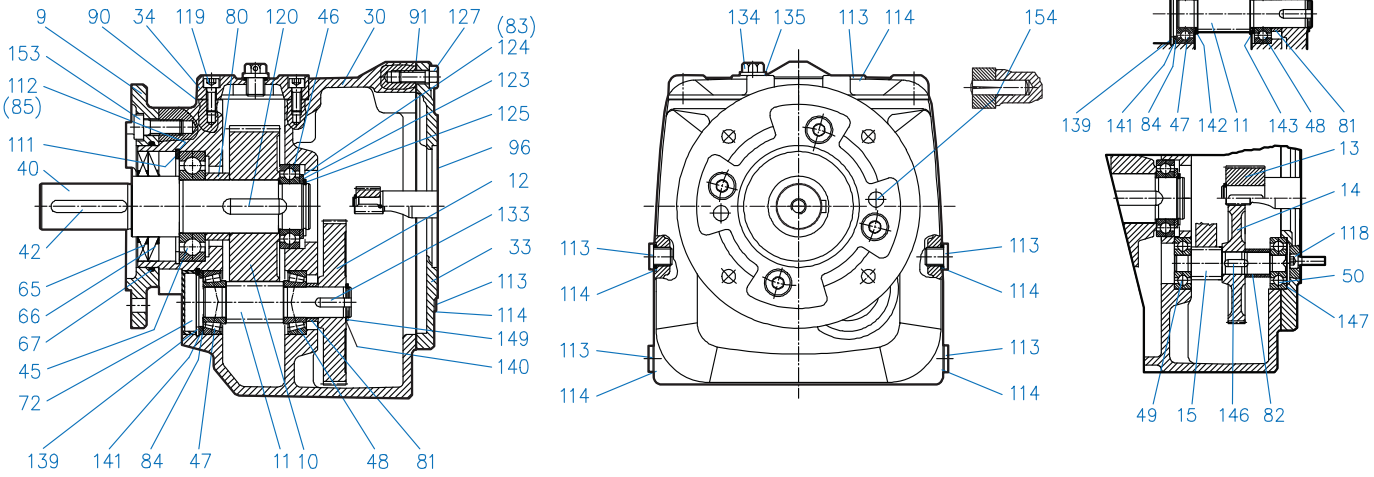

SK 273 - SK 973 Flange Mounted

9	Flange	66	Shaft seal	123	Thrust washer
10	Driven gear	67	O-Ring	124	Shim
11	Pinion shaft	72	Bore plug	125	Snap ring
12	Driving gear	80	Spacer	127	Bolt
13	Driving pinion	81	Spacer	133	Key
14	Driving gear	82	Spacer	134	Vent plug
15	Pinion shaft	83	Thrust washer	135	Gasket
30	Gearcase	84	Thrust washer	139	Snap ring
33	Input cover	85	Thrust washer	140	Shim
34	Gearcase cover	90	Gasket	141	Shim
40	Output shaft	91	Gasket	142	Thrust washer
42	Key	96	Gasket	143	Thrust washer
45	Output shaft bearing	111	Snap ring	146	Key
46	Output shaft bearing	112	Shim	147	Shim
47	Pinion shaft bearing	113	Oil plug	149	Snap ring
48	Pinion shaft bearing	114	Gasket	153	Bolt
49	Pinion shaft bearing	118	Bolt	154	Grooved dowel pin
50	Pinion shaft bearing	119	Bolt		
65	Shaft seal	120	Key		

TROUBLESHOOTING

Troubleshooting

This section identifies some of the most common issues involved with NORD Gear speed reducers , and provides recommendations to assist you in defining and answering your questions as you work with our products. You may also contact our Engineering/Application departments if your questions are not answered in the table below.

Problem With the Reducer		Possible Causes	Suggested Remedy
Runs Hot	Overloading	Load exceeds the capacity of the reducer	Check rated capacity of reducer, replace with unit of sufficient capacity or reduce the load.
	Improper lubrication	Insufficient lubrication	Check lubricant level and adjust up to recommended levels
		Excessive lubrication	Check lubricant level and adjust down to recommended levels.
		Wrong lubrication	Flush out and refill with correct lubricant as recommended
Runs Noisy	Loose foundation bolts	Weak mounting structure	Inspect mounting of reducer. Tighten loose bolts and/or reinforce mounting and structure.
		Loose hold down bolts	Tighten bolts
	Failure of bearings	May be due to lack of lubricant	Replace bearing. Clean and flush reducer and fill with recommended lubricant.
		Overload	Check rated capacity of reducer.
	Insufficient lubricant	Level of lubricant in reducer not properly maintained.	Check lubricant level and adjust to factory recommended level.
Output shaft does not turn	Internal parts are broken or missing	Overloading of reducer can cause damage	Replace broken parts. Check rated capacity of reducer.
		Key missing or sheared off on input shaft.	Replace key.
		Coupling loose or disconnected	Properly allign reducer and coupling. Tighten coupling.
Oil Leakage	Worn seals	Caused by dirt or grit entering seal.	Replace seals. Autovent may be clogged. Replace or clean.
	Unit runs hot or leaks	Overfilled reducer	Check lubricant level and adjust to recommended level.
		Vent clogged.	Clean or replace, being sure to prevent any dirt from falling into the reducer.
	Incorrect fill level	Improper mounting position, such as wall or ceiling mount of horizontal reducer.	Check mounting position on the name tag & verify with mounting chart in manual.

1. Overview

This user manual applies to NORD Motor products and it provides general information for motor operation, installation, maintenance, inspection, repair, and trouble shooting, which is relevant to most of the motor products shipped by NORD. Information and instructions provided in this manual, safety and commissioning information and all other manuals applicable to any items supplied by NORD must be observed.

This instruction manual is not intended to include comprehensive details and information related to all possible design variations or accessories options available with NORD motors. If there is any uncertainty about specific procedures, instructions or motor details, then please refer these questions to NORD for additional information or clarification.

Before installing, operating, or performing maintenance on any electrical motor become familiar with the following:

- The detailed operating instructions and wiring diagrams.
- All applicable national, local and system-specific regulations, codes and practices.
- The national / regional regulations governing safety and accident prevention.
- The proper use of any tools, transportation or hoisting equipment, and safety equipment needed to complete the installation.
- To avoid serious injury or possible damage to the equipment or machine, compliance with all safety and information notes is mandatory!

⚠ *WARNING* ⚠

All work involved in the transport, connection, commissioning and maintenance of any NORD product must be carried out by qualified and responsible technicians. All applicable national, regional, and local work regulations and safety requirements must also be complied with. NORD assumes no liability for personal injury, accidental death, or equipment damage and malfunctions resulting from failure to comply with installation or operating instructions, safety notes, or any work regulations and laws!

⚠ *WARNING* ⚠

To avoid electrocution, injury or death, make certain the motor is properly grounded, completely de-energized and brought to a no-voltage condition prior to working on any electrical connections.

2. Motor Types

NORD AC electric induction motors described in this manual generally include the following types:

- Single speed or two-speed design.
- Three phase alternating current or single phase design.
- Enclosure types: TEFC, TENV, and TEBC.

3. Enclosure Types

Totally enclosed fan cooled (TEFC).

TEFC motor designs rely on fan that is mounted on the motor's rotor shaft so the cooling capacity can vary based upon the motor's operating speed.

Totally enclosed, non-ventilated (TENV)

The TENV motor designs rely purely on convection cooling and they have no fan. Often TENV designs are labeled for intermittent or periodic duty or at a lower power rating than is typical for the given motor frame size.

Totally enclosed, blower cooled (TEBC)

The TEBC design uses separate blower or ventilator fan, with its own low wattage motor and a separate power supply, to provide continuous airflow and cooling. The blower can be used to extend the speed range of the motor and allow extreme slow speed operation without causing a concern for overheating. Blower data is provided in Table 6, page 11.

4. Voltage and Frequency Variation

Voltage and frequency variations are based upon the assumption that the nameplate horsepower will not be exceeded and that the motor temperature may increase. Standard allowable deviations are based upon the type of motor labeling.

NEMA and CSA Labeled Motors

Variations are based upon the nominal utilization voltage, and not the service (supply) voltage as per ANSI C84.1.

Service Voltages	Utilization Voltages
120V, 208V, 240V, 480V, 600V	115V, 200V, 230V, 460V, 575V

- Voltage variation at rated frequency = ±10%.
- Frequency variations at rated voltage = ±5%.
- Combined voltage/frequency variation = ±5%.

CE Labeled Motors

Per IEC 60038, allowable service voltage variations on in the current system, compared to the previous system, are as indicated.

Previous Service Voltages	Current Service Voltages
220V, 380V, 660V	230V, 400V, 690V +6/-10%
240V, 415V	230V, 400V +10/-6%

- Per EN 60034-1 a ±5% voltage variation and a ±2% frequency variation can be tolerated.
- The allowed variations are based upon the voltage (or voltage range) indicated on the motor nameplate.

5. Motor Nameplate Information

The motor nameplate and the display of technical information may vary slightly depending upon the global standard/s that the motor conforms to and the efficiency level. Please reference the examples below.

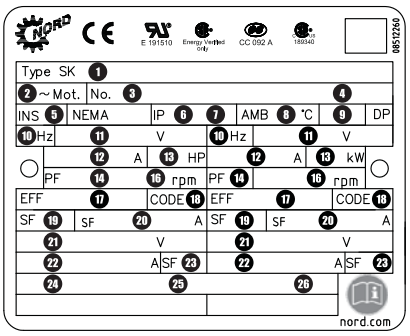

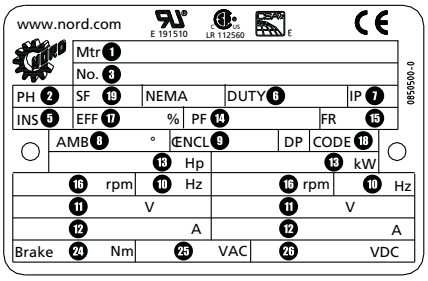

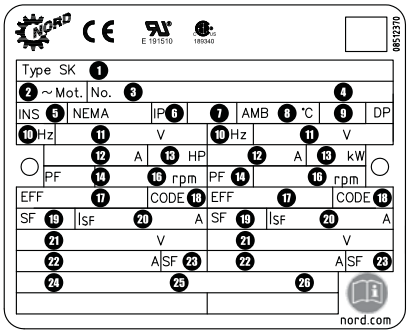

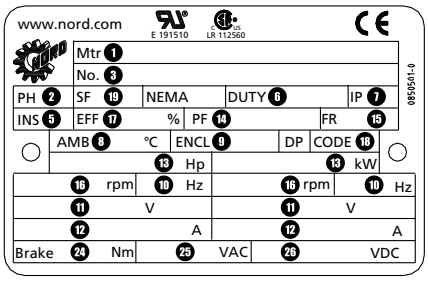

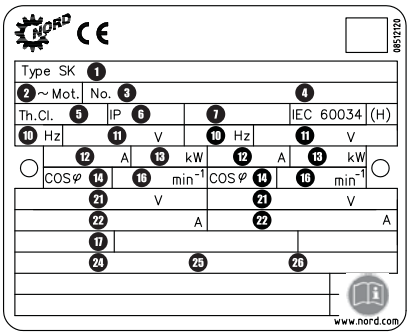

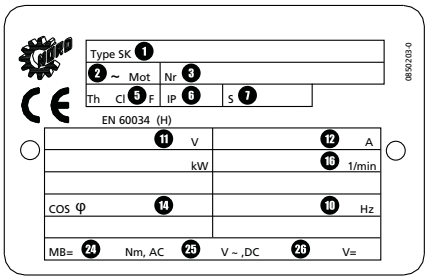

Table 1. Nameplate Data

Field	Definition
1	Model / Type
2	Number of Phases
3	Order Number
4	Serial Number
5	Insulation Class
6	IP (Ingress Protection) Enclosure Rating
7	Duty Cycle
8	Ambient Temperature Rating (°C)
9	Enclosure Type
10	Motor Frequency (Hz)
11	Voltage Rating (V)
12	Current Rating (A)
13	Rated Power (HP or kW)

Field	Definition
14	Power Factor
15	Motor Frame Size
16	Full Load Speed (rpm or 1/min^2)
17	Efficiency
18	NEMA Code Letter
19	Service Factor
20	Current Rating (If Service Factor ≥ 1.15)
21	Operating Voltage Rage (A)
22	Current Rating at Operating Voltage Range (A)
23	Service Factor at Operating Voltage Range (A)
24	Brake Rating (Nm)
25	Brake Supply Voltage (VAC)
26	Brake Coil Voltage (VDC)

6. Motor Options And Nomenclature

NORD offers many options for its motors. The option code will be shown in the motor nomenclature. Below are commonly used options.

Code	Description
AICM	Additional Internal Insulation Coating Applied
BRE	With Brake
EAR	Single Phase, Start Cap/Run Cap
ECR	Single Phase, Start Cap/Run Cap Increased SF
EHB	Single Phase, Run Capacitor Only
EP	Epoxy Dipped Windings
F	Blower Cooling Fan - 3ph & 1ph
FC	Blower Cooling Fan - 1ph
FHL	Brake – Lockable Manual Release
H	Energy Efficient
HL	Brake – Manual Hand Release
IG	Incremental Encoder
IP66	IP66 Environmental Protection
IR	Brake – Current Sensing Relay
KB	Condensation Holes - Removable Plugs
KD	Condensation Holes - Open
MIK	Brake – Microswitch
MS	Power Plug Connector

Code	Description
OL	TENV Motor – Without Fan / With Cover
OL/H	TENV Motor - Without Fan & Cover
P	Premium Efficient Motors
RD	Canopy Cover
RDD	Double Canopy Cover
RG	Brake – Corrosion Protected
RLS	Backstop
SH	Motor Space Heater
SR	Brake – Dust Protected
TF	Thermistor
TW	Thermostat
VN	10:1 Constant Torque Rated Motor
VR	5:1 Constant Torque Rated Motor
VW	20:1 Constant Torque Rated Motor
VZ-F	1000+:1 Constant Torque Rated Motor
WE	2nd Motor Shaft End
WU	High Slip Rotor
Z	High Inertia Motor Fan

Motor Nomenclature

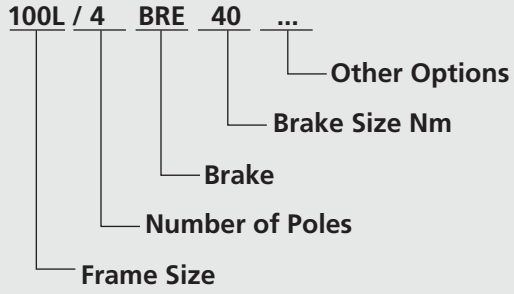

Ordering Examples

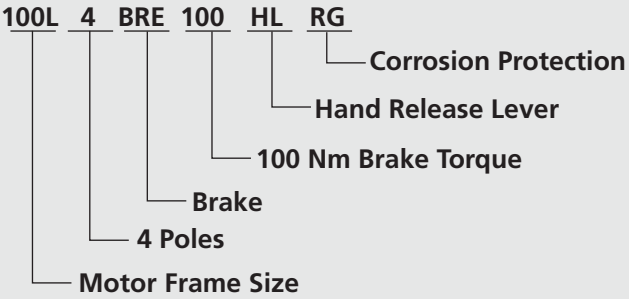

100 Frame Motor with 4 poles, Brake, 100 Nm with a hand release lever, corrosion protected brake, and a current sensing relay.

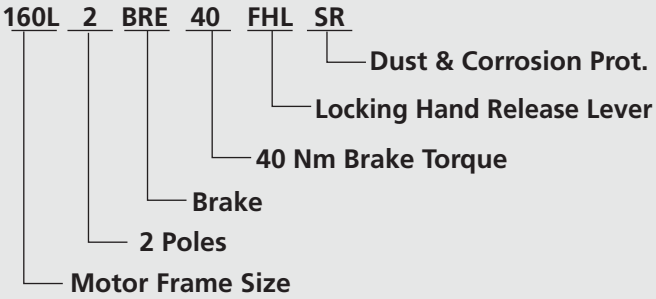

63 Frame Energy efficient motor with 4 poles, Brake, 40 Nm with a locking hand release lever and dust & corrosion protection.

7. Application Conditions

Standard NORD motors are designed to operate in dusty or moist environments and have anti-fungal, thermal class F insulation.

- Enclosure Protection Rating = IP55 (minimum).
- Maximum Installation Height = 3300 ft (1000 m).
- Ambient Temperature = -4 to 104°F (-20 to 40 °C).
- Tropical-proof, Thermal Class F insulation.

The protection level and maximum ambient temperature are stated on the motor nameplate.

IMPORTANT NOTE

NORD can provide motors for an expanded range of applications and service conditions including higher protection levels, extreme ambient conditions and, higher altitudes.

WARNING

Consult NORD for recommendations if motors are operated under extreme loading conditions, exposed to high inertia loads, or need to operate under unusually high cycling conditions with high starting and stopping frequency.

WARNING

Special design and assembly considerations are needed if NORD motors are subject to any of the following conditions:

- Outdoor installation with motor in a vertical position.
- Direct contact with aggressive or corrosive materials (acids, bases, salts, certain gases, etc.).
- Exposure to extreme high or low temperatures, high relative humidity, condensation moisture or very wet environments.
- Subject to extreme material build-up on the unit (dirt, dust, sand, etc.).
- Hazardous Locations (risk of fire or explosion).

8. Transportation

During transportation observe the following:

- Make sure that all eyebolts and lifting lugs are tight and firmly against their supporting surface.
- Use all the lifting eyes that are intentionally supplied with the motor.
- Lift only at designed points.
- Protect the mounting surface from possible damage during transportation.
- Always use sufficiently rated handling equipment, lift mechanisms and lifting straps.
- With heavier objects or unbalanced loads, it may be appropriate to use more than one lifting point or an additional strap or sling to assure safe transportation of the assembly. This is especially true of assembled gearmotors and motorized reducers.
- Once the NORD motor or assembly is properly installed, remove the transportation fixtures completely or make certain they are properly re-secured and tightened.

WARNING

Transportation – Use of Lifting Devices

To avoid death, serious injury or equipment damage…

- Hoisting lugs or lifting eyes attached to the motor are designed for the weight of the motor only! Do not attach any additional loads!
- The motor must only be transported and lifted using the lifting eyes, in a position that is appropriate for its type of construction. Otherwise, it could fall over or slip in the lifting tackle.
- During suspended transport, two straps must be able to carry the entire load weight safely.
- When required use additional, suitable means of support for transportation, installation or removal.
- Always secure the support equipment to prevent it from slipping.

9. Storage

If the motor is not in service, store it according to the following conditions:

- Store the motor in a clean, dry, dirt-free, vibration free area.
- Storage temperatures of 10°C (50°F) to 50°C (120°F) must be maintained.
- Relative humidity must not exceed 60%.
- If vibration in the area exceeds 0.002 inch (0.05 mm) at 60 hertz, then vibration isolation pads are suggested to prevent brinelling of the bearings.
- Treat the unprotected shaft end and mating flange surfaces with a corrosion inhibitor that can be cleaned off prior to commissioning.
- Before placing the motor into service, visually inspect the motor exterior for evidence of deterioration during storage. Turn the motor shaft by hand to make sure the shaft turns freely.
- Motor space heaters, when provided, are to be connected and energized whenever there is a possibility that the storage ambient conditions will reach the dew point. Space heaters are optional. Remove motor from the storage container when the heater is energized.
- If the motor needs to be stored for extended periods, or if it is stored in less than favorable conditions, it is recommend that the winding insulation resistance be checked prior to commissioning (page 7).
- Even if stored in favorable conditions, the antifriction motor bearings and motor shaft seals may need to be replaced if the storage period is more than 4 years.

10. Safety Considerations

When installing, servicing or replacing electric motors it is important to be working in a “voltage-free” state. Observe the following safety rules.

Five Safety Rules

1. Disconnect the system. Disconnect the auxiliary circuits (brakes, space heaters, etc.).
2. Prevent reconnection (follow safe lock-out/tag-out practices).
3. Make sure that the equipment is at zero voltage.
4. Make certain the equipment is properly grounded and short-circuited.
5. Cover or isolate nearby components that are still electrically live.

To energize the system, apply the measures in reverse order.

Qualified Personnel

All work involved in the transport, connection, commissioning and maintenance of any NORD product must be carried out by qualified and responsible technicians.

For the purpose of this documentation, a qualified personnel is taken to mean a person or people who fulfill the following requirements:

- Through appropriate training and experience, they are able to recognize and avoid risks and potential dangers in their particular field of activity.
- They have been instructed to carry out work on the machine by the appropriate person responsible.
- They are responsible for knowing and complying with all applicable national, regional, and local work regulations and safety requirements.

10. Safety Considerations Ctd.

General Warnings and Cautions

⚠ *WARNING* ⚠

To avoid electrocution, injury or death, make certain all electrical devices (motors, brakes, variable frequency drives, etc.) are properly grounded, completely de-energized, and brought to a no-voltage condition prior to working on any electrical connections. Remember that most of these devices carry potentially dangerous energy levels for a period of time after power is removed. Always follow proper lock-out/tag-out procedures.

⚠ *WARNING* ⚠

Electrical machines contain dangerous voltage levels, electrically live parts, rotating surfaces and hot surfaces. To prevent injury, death or possible equipment damage always observe the following:

- Keep all safety covers and guards in place during operation. Remove and replace covers in compliance with the applicable safety regulations.
- Allow the machine to cool down before starting any work on it.
- Operate the machines properly.
- Perform regular maintenance on the machine.
- Secure and guard free-standing shaft extensions.

⚠ *WARNING* ⚠

Electrically Live Parts

Electrical machines contain electrically live parts. Fatal or severe injuries and substantial material damage can occur if the required covers are removed or if the machines are not handled, operated, or maintained properly.

⚠ *WARNING* ⚠

Rotating Parts

Electrical machines contain dangerous rotating parts. Fatal or severe injuries and substantial material damage can occur if the required covers are removed or if the machines are not handled, operated, or maintained properly.

⚠ *WARNING* ⚠

Hot Surfaces

Electrical machines have hot surfaces. Fatal or severe injuries and substantial material damage can occur if the required covers are removed or if the machines are not handled, operated, or maintained properly. Allow the machine to cool down before starting any work on it.

⚠ *WARNING* ⚠

Maintain Proper Cooling

Operating the motor without the intended cooling fan may cause overheating and result in very hot surfaces, personal injury and material damage. Never commission a motor intended to be fan cooled when it is missing the shaft-driven fan or external blower assembly.

⚠ *WARNING* ⚠

Condensation Drain Holes (Optional)

Inserting objects into the condensation drain holes can damage the winding and can result in death, serious injury and damage to property!

- Before opening sealed drain holes, make sure the motor is in a no-voltage condition. Close the condensation drain holes before re-commissioning.
- Exercise caution around drain holes that are intended to be left open, especially when the motor is energized.

STOP *HARMFUL SITUATION* STOP

Before start-up check the following:

- All electrical connections are secure, well grounded and properly made.
- The motor is rotating in the correct direction (when de-coupled from the driven load).
- There are no temperature-sensitive parts (cables etc.), in contact with motor enclosure.
- Condensation drain holes are always located at the lowest point of the motor.

11. Checking the Insulation

Before putting the motor into operation for the first time, after a lengthy period of storage or standstill (approx. 6 months), the insulation resistance of the winding should be checked.

⚠ WARNING ⚠

During and directly after measurement the motor connection terminals carry hazardous voltages.

A. Control

The insulation resistance of new, cleaned, or repaired motor windings against the grounded housing and against one another should be > 200 Mega-Ohms.

B. Measurement

Using a Mega-Ohm meter apply a DC voltage of 500 VDC to the motor winding for a period of 60 seconds and record the winding insulation resistance compared to ground.

- The 500 VDC test voltage is applicable to low voltage motors up to 1000 VAC.
- When performing this test the temperature of the windings should be 25°C ± 15°C (77°F ± 27°F).

C. Verification

- If the insulation resistance of the winding is less than 50 Mega-Ohms, the cause may be moisture. The windings should be dried and the test should be repeated.
- After any lengthy period of operation the insulation resistance may drop. So long as the measured value does not fall below the critical value of 50 Mega-Ohm, the motor may continue to be operated.
- If the measured value falls below the critical 50 Mega-Ohm level, the cause must be established and the windings or winding sections must be cleaned, dried, repaired, or replaced as needed.

12. Bearing Lubrication

NORD motor frame sizes 63 up to and including 225 are normally supplied with internally grease lubricated bearings and require no lubrication during normal operation.

NORD motor frame sizes 250 and larger are supplied with grease fittings for re-greasing the motor bearings.

IMPORTANT NOTE

Motors with grease fittings are normally supplied with a label indicating the grease type used, the suggested re-lubrication interval, and the amount of new grease to be applied. General bearing maintence guidelines are listed in Table 3.

Typical motor bearing grease is an NLGI No. 2 consistency, high grade product with a polyurea base thickener, synthetic or blended mineral/synthetic oil, and stabilizing agents to protect against heat and oxidation.

Table 3 – Motor Bearing Maintence Guidelines

Frame Size	Power	Poles	Re-greasing Interval
63-225	0.16-60 HP (0.12-45 kW)	All	Maintence Free
250 to 280	75-125 HP (55-75 kW)	2	4000 h
		4 to 8	8000 h
315	150-250 HP (132-200 kW)	2	3000 h
		4 to 8	6000 h

STOP HARMFUL SITUATION STOP

When re-greasing motor bearings do not to mix different greases without verifying the compatibility with a reputable grease lubrication supplier. Mixing incompatible products can lead to bearing failure.

13. Mechanical Installation

Integral motors, NEMA C-face motors, and IEC flange mounted motors must be rigidly secured to their mating connection surface using all fastening screws tightened to the proper bolt torque. It is good practice to apply a medium strength thread- locking agent (Loctite® 242) to the mounting screws.

Foot mounted motors must be securely installed to a rigid and level foundation or mounting surface to minimize vibration and maintain alignment between the motor and shaft load. All mounting hole locations must be utilized. Tighten all hold down screws or bolts to the proper bolt torque.

STOP HARMFUL SITUATION STOP

Failure to provide a proper mounting surface may cause vibration, misalignment and bearing damage.

Accurate alignment and proper balancing of output devices (couplings, belts, pulleys, etc.) is required to assure quite, low vibration, trouble free operation. When the motor is directly coupled to a gear drive or a driven machine make sure that the motor shaft and driven machine shaft are aligned with one another axially.

STOP HARMFUL SITUATION STOP

Inaccurate alignment may lead to bearing damage, excessive vibrations and shaft breakage.

IMPORTANT NOTE

For motor replacement guidelines see section 20 on page 15 and section 21 on page 16.

14. Electrical Connections

⚠ WARNING ⚠

To avoid electrocution, injury or death, make certain all electrical devices (motors, brakes, variable frequency drives, etc.) are properly grounded, completely de-energized, and brought to a no-voltage condition prior to working on any electrical connections. Remember that most of these devices potentially dangerous energy levels for a period of time after power is removed. Always follow proper lock-out/tag-out procedures.

IMPORTANT NOTE

External motor brakes have their own connection requirements as indicated in the appropriate brake instruction manuals.

⚠ WARNING ⚠

If the motor has an integral brake, make certain there is no load connected to the driven equipment before releasing the brake. Otherwise serious injury, death, or damage to the equipment may result.

- The supply voltage and frequency must agree with the motor nameplate data.
- Always feed the connecting leads into the terminal box using appropriate mating cable glands. The mating connection cables and cable glands should be suitable for temperatures ≥ 194°F (90°C).
- Provide the ends of the connecting leads and ground lead with cable lugs or curved ring eyelets before connecting them to the terminal board.
- Make certain that the wiring connections and arrangement of the terminal board jumpers conform to the appropriate wiring diagram as provided in the motor terminal box and/or page 9 of this manual.
- Tighten the terminal board screw connections on the on the main terminal board per the table below.

Table 4 – Tightening Torque: Terminal Board and Grounding Screws

Thread Size	Nut Size [mm]	Tightening Torque [lb-ft]	Tightening Torque [N-m]
M4	7	0.6-0.9	0.8-1.2
M5	8	1.3-1.8	1.8-2.5
M6	10	2.0-3.0	2.7-4
M8	13	4.0-5.9	5.5-8
M10	17	6.6-9.6	9-13
M12	19	11.8-14.8	16-20

- Upon final assembly, the terminal box cover must be sealed so that it is dust-tight and water-tight.

Table 5 – Tightening Torque: Terminal Box Cover Screws

Thread Size	Tightening Torque [lb-ft]	Tightening Torque [N-m]
M4	0.6-0.9	0.8-1.2
M5	0.9-1.3	1.2-1.8
M6	1.1-1.8	1.5-2.5
M8	2.2-3.7	3.0-5.0

15. Wiring Diagrams

NORD Frames 63-225
230 / 460V, 60Hz, 3Ø | 200 / 400V, 50Hz, 3Ø

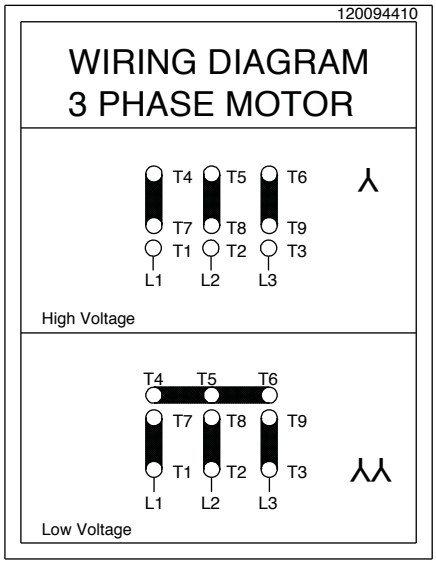

NORD mfg by Siemens - Frames 200 +
230 / 460V, 60Hz, 3Ø | 200 / 400V, 50Hz, 3Ø
190 / 380V, 60Hz, 3Ø

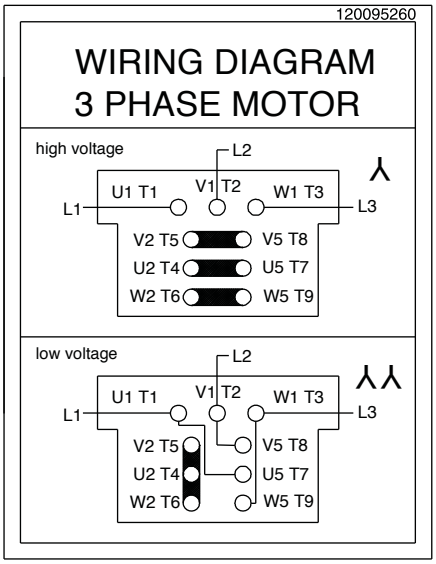

NORD mfg by Siemens - Frames 200 +
230 / 460V, 60Hz, 3Ø | 200 / 400V, 50Hz, 3Ø
190 / 380V, 60Hz, 3Ø

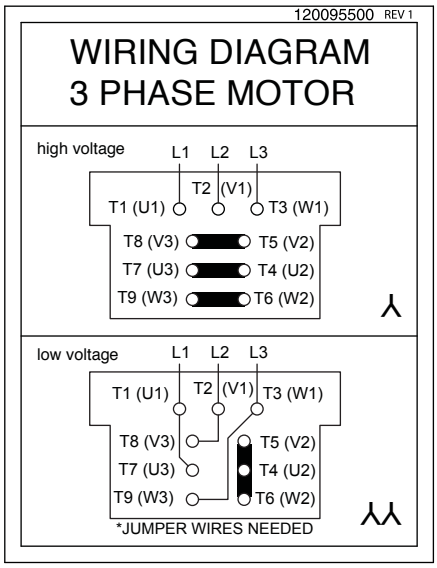

NORD Frames 63 - 225
460 / 800V, 60Hz, 3Ø | 230 / 400V, 50Hz, 3Ø
208 / 360V, 60Hz, 3Ø | 400 / 690V, 50Hz, 3Ø
332 / 575V, 60Hz, 3Ø

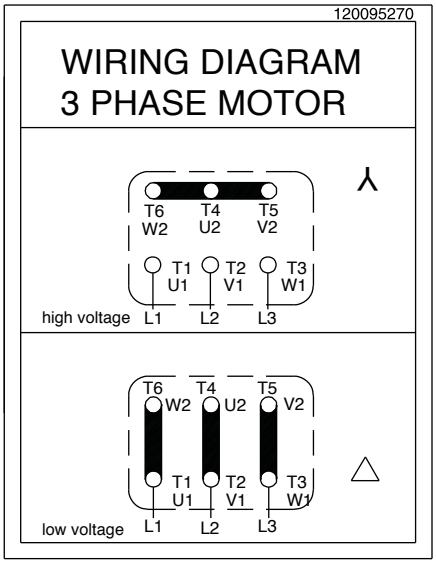

NORD - 2 - SPEED MOTORS
SINGLE WINDING (4-2 & 8-4 POLE)

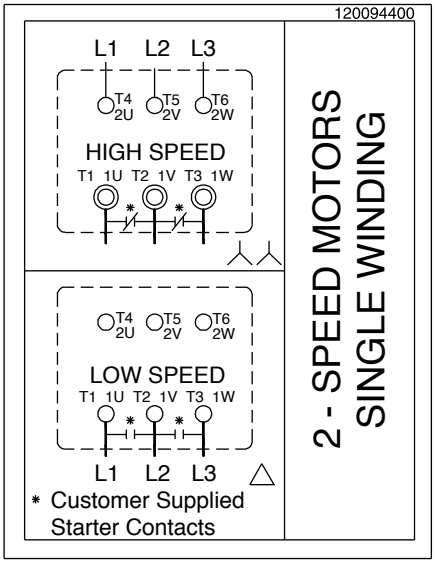

NORD - 2 - SPEED MOTORS
DUAL WINDING (8-2 POLE)

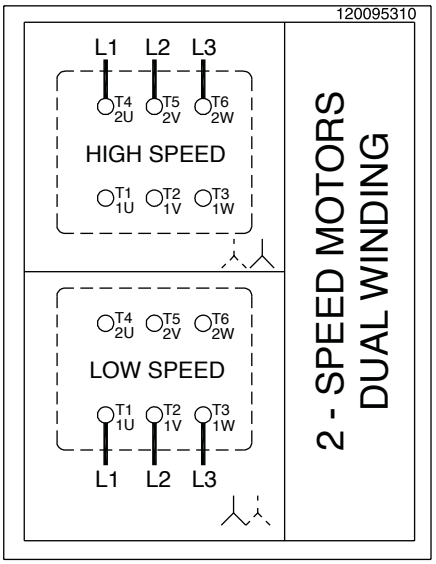

15. Wiring Diagrams Ctd.

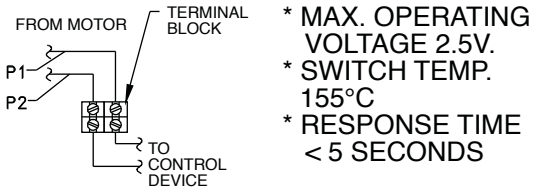

THERMISTOR
"TF" OPTION

120095240

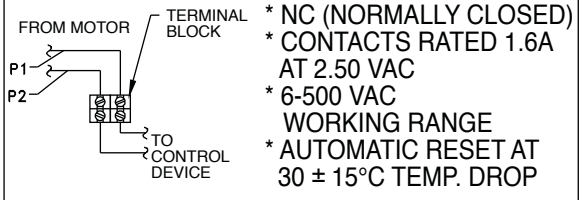

THERMISTATS
"TW" OPTION

120095230

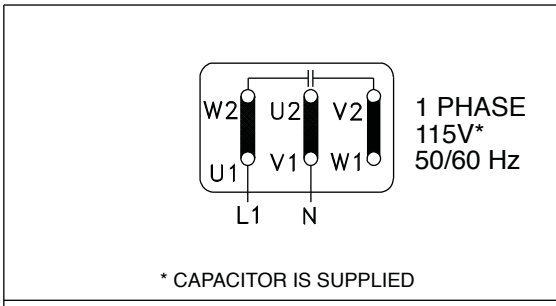

BLOWER COOLING FAN
"FC" OPTION

120095450

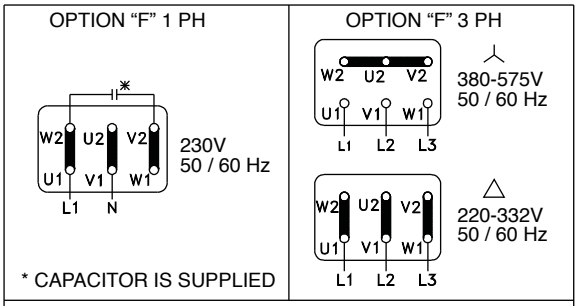

BLOWER COOLING FAN
"F" OPTION

120095250

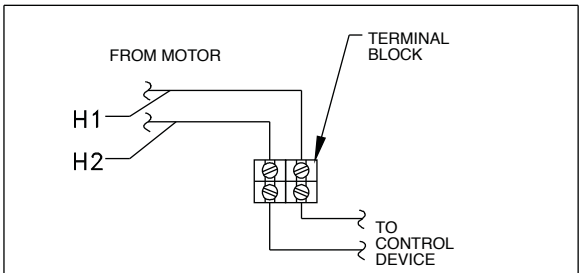

SPACE HEATER
"SH" OPTION

120095220

16. Motor Accessories

Blower Cooling Fan (Option F & FC)

- Connection Diagram Shown on page 10
- Option FC is 1-phase, 115V
- Option F has capability of 1 phase by connecting a supplied capacitor

Option F – 3ph & 1ph 220-575V 50/60Hz

Motor Frame	60Hz Ratings			50Hz Ratings		
	Voltage [V]	Current [A]	Power [W]	Voltage [V]	Current [A]	Power [W]
Single phase connection - ⊥ (Delta)						
63	230 – 277	0.11	38	230 – 277	0.10	27
71	230 – 277	0.12	41	230 – 277	0.10	28
80	230 – 277	0.13	44	230 – 277	0.11	29
90	230 – 277	0.25	88	230 – 277	0.26	72
100	230 – 277	0.28	88	230 – 277	0.26	70
112	230 – 277	0.31	107	230 – 277	0.26	73
132	230 – 277	0.27	89	230 – 277	0.29	82
160 - 225	230 – 277	0.41	140	230 – 277	0.45	128
Three phase low-voltage connection - (Delta)						
63	220 – 332	0.08	23	220 – 290	0.10	27
71	220 – 332	0.08	24	220 – 290	0.10	30
80	220 – 332	0.08	25	220 – 290	0.01	29
90	220 – 332	0.21	64	220 – 290	0.28	86
100	220 – 332	0.21	66	220 – 290	0.27	86
112	220 – 332	0.23	70	220 – 290	0.27	85
132	220 – 332	0.25	74	220 – 290	0.32	96
160 - 225	220 – 322	0.49	165	220 – 290	0.52	155
Three phase high-voltage connection - (Y)						
63	380 – 575	0.04	23	380 – 500	0.05	29
71	380 – 575	0.04	25	380 – 500	0.05	30
80	380 – 575	0.04	26	380 – 500	0.05	29
90	380 – 575	0.12	62	380 – 500	0.16	82
100	380 – 575	0.12	66	380 – 500	0.16	83
112	380 – 575	0.13	70	380 – 500	0.16	82
132	380 – 575	0.14	75	380 – 500	0.18	96
160 - 225	380 – 575	0.28	165	380 – 500	0.29	155

Option FC – 115V 50/60Hz 1ph

Motor Frame	60Hz Ratings			50Hz Ratings		
	Voltage [V]	Current [A]	Power [W]	Voltage [V]	Current [A]	Power [W]
Single Phase Connection - ⊥ (Delta)						
63	100 – 135	0.23	42	100 – 135	0.30	42
71	100 – 135	0.23	47	100 – 135	0.30	44
80	100 – 135	0.27	57	100 – 135	0.30	43
90	100 – 135	0.46	102	100 – 135	0.57	78
100	100 – 135	0.53	105	100 – 135	0.54	78
112	100 – 135	0.60	115	100 – 135	0.55	80

Table 6 – Option F & FC

16. Motor Accessories Ctd.

Thermostats (Option TW and Option 2TW)

Standard connection	Series connected, one per phase
Contact	NC (Normally Closed)/ Auto Re-setting
Response Temperature (Option TW)	311 °F (155 °C) Shut-Off Device
Response Temperature (Option 2TW)	311 °F (155 °C) Shut-Off Device + 266°F (130 °C) Alarm Device
Nominal Current	1.6 Amp at 250 V
Resistance	< 50 mΩ
Switch Rebound	< 1ms
Insulation Rating	2000 VAC
Cycles	10,000 max
Lead Identification (inside terminal box)	P1 and P2 or TB1 and TB2 / 2TB1 and 2TB2

Motor thermostats or bi-metallic switches can be wired directly into the control circuit without a separate control module or tripping device. Thermostats operate on a relatively high control voltage so they are much less sensitive to voltage interference from the main power supply. Often one can run thermostat leads and motor power leads next to each other when using the appropriate shielded cable. The installer is responsible to wire the thermostats into the motor control circuit. The leads may be labeled in a variety of ways as indicated.

Thermistors (Option TF)

Standard Connection	Three devices, series connected, one per phase
Type	Positive temperature coefficient (PTC)
Transition Temperature	150°C±5 °C
Resistance	20… 500Ω (below transition) > 4 kΩ (above transition)
Reed Current	< 1mA
Max Voltage	30V
Lead Identification (inside terminal box)	P1 and P2 or TP1 and TP2

With a separate control module or tripping device (ex. Kirwan INT69) thermistors are used to sense motor overload/ over temperature conditions by converting the critical operating temperature limit into large internal resistance change. Due to their small size, heat sink construction, and high change in resistance value, minor resistance variations caused by relatively long lead runs can be tolerated. This feature also allows for one controller to be used for several temperature sensing locations. Many variable frequency drives come with on-board thermistor inputs. NORD does not supply the thermistor control module.

⚠ WARNING ⚠

Thermostats and Thermistors will automatically reset.

⚠ WARNING ⚠

All wiring must be completed by qualified personal and adhere to all local codes.

Space Heaters (Option SH)

- Connection Diagram shown on Page 9
- Space Heaters are mounted directly on the motor winding
- The leads are brought into the terminal box and labeled H1 and H2
- They require a separate voltage supply and must not be energized when the motor is energized
- The heaters will keep the winding of the motor approximately 5°C above the surrounding ambient

Table 5. Space Heater Data

Frame Size	Wattage	Voltages	Heater Strips/MTR
63 & 71	18W	110V	1
		230V	
		460V	
80	25W	110V	1
		230V	
		460V	
90 – 112	50W	110V	2
		230V	
		460V	
132-180	100W	110V	2
		230V	
		460V	
200 & 225	120W	110V	2
		230V	
		460V	

Encoder (Option IG)

- Most standard encoders will be enclosed inside the fan cover
- Incremental, Quadrature, Differential, Marker Channel
- IP66 Protection
- IG1 = 1024PPR, IG2 = 2048PPR, IG4 = 4096PPR
- TTL/RS422, HTL/Push-Pull, Line Driver.
- 5V or 10-30V available.
- Absolute encoders also available.
- Seperate encoder wiring instructions are provided by NORD.

17. Inspection

Inspect the motor after every 500 operating hours.

> ⚠ *WARNING* ⚠
>
> If it is necessary to clean the motor exterior, do not use shop air. Shop air can force contaminents into the motor and may cause parts damage or result in blowing debris causing injury.

Table 8 - Inspection Guidelines

Inspect	Check	Action
Motor Exterior	Check the external surfaces for contamination. Accumulation of dirt and fibrous deposits must be removed.	Clean the motor external surfaces using clean, lint-free cloths.
		Clean deposits from between cooling fins using a vacuum cleaner and a stiff-bristled nylon brush.
	Check the external surfaces for oil film and greasy deposits.	Clean the oil film and greasy deposits from the motor surface using clean, lint-free cloths.
		If necessary, moisten the cloth with an approved non-flammable, residue-free solvent. Do not pour solvent on the motor.
	Check for evidence of damage or overheating.	If the motor has physical damage, replace the motor.
Motor Mountings	Make sure the mounting hardware is secure.	If the mounting hardware is not secure, check the motor/gearbox alignment, and tighten the mounting hardware.
Motor Electrical Connections	Check that all electrical connections are secure.	If the electrical connections are not secure, tighten them.
	Check the electrical connections for evidence of arcing.	Loose electrical connections can cause arcing, which is evident by discoloration and charring. If you find evidence of arcing, replace the damaged connections.
Insulation Resistance	Using an ohmmeter, check and record the resistance of motor winding insulation.	Compare the current resistance reading to previous readings. If the resistance drops significantly, perform an internal inspection for insulation damage or deterioration.
Motor Brake	On motors that have a brake, use a feeler gauge to check the air gap in between the brake pad and the rotor according to the appropriate user manual.	If the air gap exceeds the maximum allowed for that brake configuration provided in the manual, adjust the air gap or replace the brake pad according to user manual U35000.

18. Parts List

If you are ordering a part, provide the model and order number (table 1, page 2) of your motor. This will determine the specific part number you need.

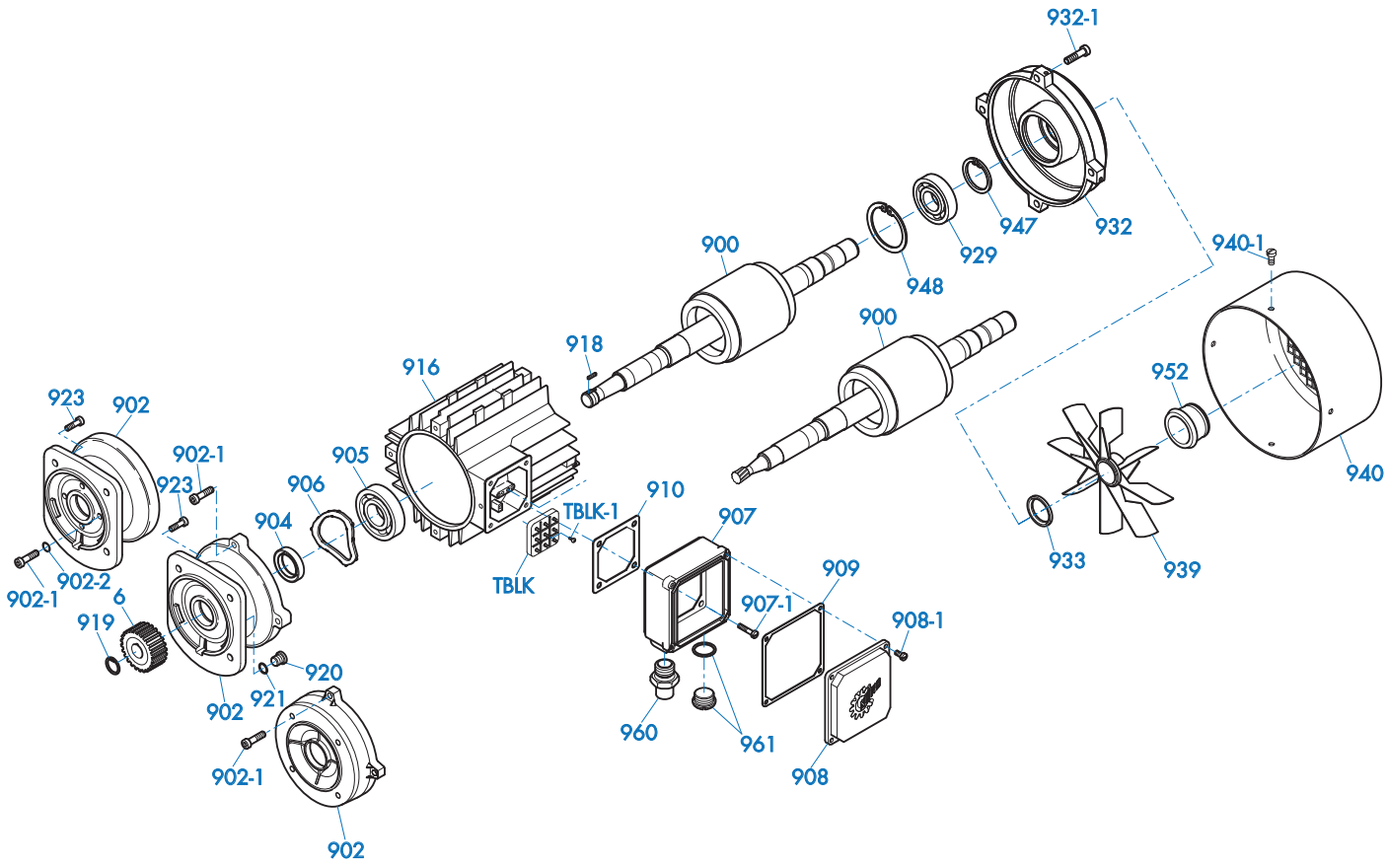

Part Number	Part Description	Qty per Assembly
6	Input Pinion	1
900	Rotor Assembly	1
902	A-Endbell	1
902-1	Screw	4
902-2	Dubo Seal	4
904	Oil Seal	1
905	Bearing	1
906	Preload Spring	1
907	Terminal Box Frame	1
907-1	Screw	4
908	Terminal Box Cover	1
908-1	Screw	4
909	Gasket - Terminal Box Frame	1
910	Gasket - Terminal Box Cover	1
916	Stator	1
918	Key	1
919	Retaining Ring	1
920	Oil Plug	1

Part Number	Part Description	Qty per Assembly
921	Gasket	1
923	Screw	4
929	Bearing	1
932	B-Endbell	1
932-1	Screw	4
933	Oil Seal	1
939	Fan	1
940	Fan Cover	1
940-1	Screw	4
947	Retaining Ring	1
948	Retaining Ring	1
952	Fan Clip	1
960	NPT Thread Adapter	1
961	Plug (includes O-ring)	1
TBLK	Terminal Block	1
TBLK-1	Screw, Terminal Block Mounting	2
	Jumper Bar (not illustrated)	AR

19. Repair

Reference the parts list drawing on page 14 for clarification.

A. Disassemble the motor according to the general exploded view in PARTS INFORMATION. Disassemble only as far as necessary to replace the failed parts.

B. Whenever the motor is disassembled, clean all dust and contamination from the motor interior using a vacuum cleaner and a soft-bristled nylon brush.

C. The following parts must be replaced if they are removed:

- Oil seal (904), Oil seal (933)
- Gasket (909), Gasket (910), Gasket (921)
- Gasket on plug (961)
- Self-locking screws (907-1, 908-1, 923, 932-1, 940-1)
- Dubo Seals (902-2)

D. If the following parts are removed, inspect them, and replace them if they are deformed or damaged:

- Retaining ring (919), Retaining ring (947), Retaining ring (948)
- Fan clip (952)

20. Removing and Replacing Integral Motors

Reference the parts list on Page 14 for clarification.

A. Disconnect the power to the electric motor. Make certain the motor is properly grounded, de-energized and secured with a lock-out/tag-out device.

B. Drain the oil from the mating gearbox, or rotate the motor/gearbox assembly so that the motor is up, to prevent oil from spilling from the gearbox when the motor is removed.

C. Support the motor and prepare it for removal. Steady the motor and support it. For larger motors, use of mechanical lifting or support devices to may be appropriate.

D. Remove the fastening screws that hold the motor to the reducer input.

IMPORTANT NOTE

Most integral motor installations have mounting bolts accessible from the motor exterior. If the bolts are not clearly visible, unbolt the input flange from the gearbox. Remove the bolts securing the motor to the reducer input flange, and discard the old DUBO sealing rings that were under the screw heads.

E. Maintain motor shaft alignment and move the motor directly away from its mounting surface until the motor shaft and mating input gear clear both the internal gear mesh and reducer input.

F. Remove and discard the old flange gasket.

G. Clean the gasket faces on the motor and gearbox, making sure no cleaning debris enters the gearbox.

H. Check the replacement motor to make sure the motor flange, motor shaft, and motor pinion are identical to the motor that was removed.

I. Place a new gasket between the gearbox and new motor.

J. Position the motor on the gearbox, making sure the input pinion meshes with the input gear. Rotate the motor as necessary to align the bolt holes and seat the motor flange. Make sure the gasket remains properly aligned and seated

K. Apply a medium strength thread locking compound to the bolt threads. Install the bolts and tighten them to the appropriate torque.

IMPORTANT NOTE

If the motor/gearbox installation uses an input flange, first mount the input flange to the motor using the four mounting bolts and NEW DUBO sealing rings under the head of each fastening screw. Make sure the fastening screws are clean and apply new thread sealant if necessary.

L. Check the gearbox oil level in accordance with the appropriate User Manual/s. If necessary fill or add oil to the gearbox.

HARMFUL SITUATION

Do not mix different types of oil!

M. Re-establish the electrical connection to the motor.

N. Observe the subsequent start-up closely to make certain the equipment is operating properly and there are no seal or gasket leaks.

21. Removing and Replacing NEMA C-Face or IEC Fange-Mounted Motors

For further clarification of these instructions, reference the parts list on Page 14 of this manual.

A. Disconnect the power to the electric motor. Make certain the motor is properly grounded, de-energized and secured with a lock-out/tag-out device.

B. Support the motor and prepare it for removal. Steady the motor and support it. For larger motors, use of mechanical lifting or support devices to may be appropriate.

C. Remove the fastening screws that hold the motor to the C-face or IEC mounting flange.

D. Maintain motor shaft alignment, and move the motor directly away from its mounting surface until the motor shaft and mating coupling clear the mounting flange surface of the driven equipment.

E. Measure and record the proper placement of the motor shaft coupling prior to removing it from the old motor.

F. Make sure the new motor shaft, key and key slot are free of all nicks, burrs, and lubrication or grease.

G. Install the new shaft key on the new motor. If the shaft key is not captured or if an open-ended key slot is utilized it is good practice to secure the key into the key slot with a medium strength thread locking agent or alternatively one may stake the key in place.

H. Re-install the coupling on the new motor shaft, making sure the placement of the coupling is in the same location as it was on the old motor (See Step E).

I. Clean all old gasket material, sealants, contamination, and corrosion from the flange surface on the driven equipment.

J. If the motor is utilized in a wet or wash down environment apply a sealing gasket or gasket eliminating compound to the mating flange surface, as would seem most appropriate for the application.

K. Support the new motor and mount it flush against the mating flange surface of the driven equipment.

L. Apply a medium strength thread locking agent to the bolt threads.

M. Install the bolts and tighten them to the appropriate torque.

N. Re-establish the electrical connection to the motor.

O. Observe the subsequent start-up closely to make certain the equipment is operating properly.

22. Testing

IMPORTANT NOTE

NORD electric motors do not require periodic testing. However, if a motor is removed from its installation, NORD recommends that the motor be checked according to the following static and dynamic testing procedures before it is reinstalled. Finding a condition that will require future repair before the motor is reinstalled decreases the overall maintenance time.

This section provides general test information and functional checks for the types of motors covered by this manual. Read and understand the tests and checks before performing them on your motor.

Record and date all measurements taken.

If the motor fails any of the test procedures provided below, use the troubleshooting guide to determine the motor problem.

Static Testing

A. The motor can only be static tested if it is disconnected from the component it drives and securely mounted on a fixture or mounting plate. These tests are usually conducted when a motor has been removed for any reason other than failure

B. Turn the motor shaft slowly by hand. Feel and listen for evidence of a failed bearing, which is indicated by a rough feel as the shaft rotates, and by noise.

C. Check for smooth rotation, with no evidence of binding or catching. If the shaft does not rotate smoothly, or binds or catches, the bearings are worn or failing, lack lubrication, or are contaminated.

D. Check the motor shaft for side play by applying pressure at right angles to the shaft in several places around the circumference. If the shaft moves perceptibly, the front bearing may be worn.

Dynamic Testing

A. Find the motor voltage and rated load current values as listed on the motor nameplate.

B. Using a volt-ohmmeter, verify that the motor power supply is in the correct range.

C. Run the motor with no load. As the motor is operating, listen for unusual motor noise and check for excessive vibration. Vibration and motor noise are indications of bearing contamination, lack of lubrication, damage, or failure.

D. Use an ammeter to measure the no-load current. Record the no-load current for comparison with previous readings, and for reference during future testing.

E. If the motor passes the no-load test, operate the motor at rated load and check and record the current.

F. Check the motor operating temperature at rated load. If the motor operates at a higher than normal temperature, the motor may be damaged, overloaded or failing.

23. Troubleshooting

Fault	Likely Cause	Corrective Action
Motor fails to start.	• Motor is mis-wired • Brake is may not be releasing. • Fan guard damaged and contacting fan. • Motor protection device has tripped or does not switch • 1-Ph Capacitor or start switch has failed.	• Verify and correct motor wiring. • Troubleshoot brake per User Manual U35000. • Replace damaged fan guard. • Check motor protection device for correct setting and correct error. • Discharge capacitor and use a volt-ohm meter to check the capacitor for an open circuit - replace if needed. Inspect switch and connections. Replace if contacts look burned or pitted.
Fuses blow or motor protection faults immediately.	• Short circuit in line. • Lines connected incorrectly. • Fuse or circuit breaker tripped. • Motor is overloaded or equipment jammed. • Stator is shorted or went to ground.	• Rectify short circuit. • Check circuit diagram and make corrections. • Replace fuse or circuit breaker. • Make sure load is free. Verify motor amp draw compared to nameplate rating. • A damaged or blown stator will show a burn mark. Stator must be repaired or replaced.
Motor hums and has high current consumption	• Brake may not be releasing. • Rotor may be rubbing stator. • Defective or incorrect stator winding.	• Troubleshoot brake per User Manual U35000. • Send motor to a repair specialist.
Severe speed loss under load or excessive acceleration time.	• Overload. • Excessive voltage drop. • Damaged or failing motor bearings. • Damaged or worn gear unit. • 1-Ph Capacitor or start switch has failed.	• Check load conditions and make certain system is unobstructed. Reduce load or consider a larger motor. • Verify service voltage is within specification. Check if nearby equipment is affecting incoming power. Make sure connection harness and wiring is adequate. • Replace motor bearings. • Replace or repair damaged gear unit. • See instructions under "Motor fails to start".
Motor runs the incorrect direction.	• Incorrect wiring.	• Rewire motor according to system schematic and/or switch two incoming motor phases.
Motor heats up excessively or thermal overload protection trips	• Overload. • Ambient temperature is too high. • Inadequate cooling. • Operation is outside the allowed duty cycle. • Motor protection device may be defective. • Excessive supply voltage. • System short or damaged stator.	• Make sure load is free. Verify motor amp draw compared to nameplate rating. Reduce load or consider a larger motor. • Do not operate above the rated conditions. • Correct cooling air supply. Open and clear cooling air passages. Retrofit with forced ventilator fan if needed. • Adjust operating duty cycle or contact a specialist to select a suitable motor or drive. • Replace motor protection device. • Adapt motor supply voltage. • Check for loose, cut or damaged wires. Check stator winding for defects or burn damage.
Excessive Noise or Vibration	• Motor bearings contaminated or damaged. • Excessive motor shaft end play. • Misaligned or imbalanced load.	• Test motor by itself. If bearings are bad noise may be heard or roughness detected. Replace bearings. Add lubrication if bearings have grease fittings. • Check shaft endplay with motor and system power disconnected. If shaft movement is excessive replace motor shaft bearings. • Check all mating shaft connections for proper alignment and correct all imbalanced load conditions.
1 Ph Start Capacitor Failures	• Motor is not coming up to speed quickly enough. • Motor is being cycled frequently • Start switch is defective or damaged.	• Verify motor size to load conditions. Motor should come up to speed in no more than 2-3 seconds. • Verify duty cycle and consult specialist for recommendations. • Replace start switch.
1 Ph Run Capacitor Failures	• Possible power surge to motor caused by transient voltage or lightening. • Excessive ambient temperature.	• Install proper surge protection. • Verify ambient conditions do not exceed nameplate value.

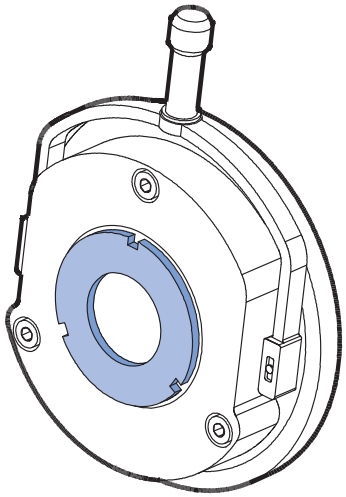

General Instructions

This manual describes general operating and maintenance guidelines for a majority of brake products shipped by NORD Gear. This instruction manual is not intended to include a comprehensive listing of all details or procedures required for installation, operation and maintenance.

Brakes covered in this manual are manufactured by PRECIMA. Please feel free to contact NORD with any questions about the supplied brake components.

Safety Notice

Only qualified personnel should attempt installation, operation and maintenance of NORD brakes. Read this manual in its entirety before operating, commissioning, servicing, or assembling the motor brake. If you have a question about a procedure or are uncertain about any detail, seek clarification and DO NOT PROCEED!

⚠ *WARNING* ⚠

- This equipment contains high electrical voltage. Remove and lockout all power from the electric motor and brake before any work is completed on the brake.
- The user is responsible for conforming to all national and local electrical and safety codes. Wiring practices, proper grounding, disconnects, and over current protection, are of particular importance.
- Make certain the load is supported when servicing the brake. Removing power from the brake or removing the brake from the motor will release the load, which may cause severe injury or death.
- Failure to follow proper procedures and precautions may result in severe bodily injury or death.

Brake Operation

The standard NORD motor brake is “spring-set”. When power is removed and the brake is de-energized (power-off), the brake springs exert a force against the armature plate in turn preventing the brake rotor (or brake disc) from rotating. When the brake coil is energized (power-on), a magnetic field builds and pulls the armature plate across the air gap to the brake casing, which releases the brake rotor and allows the motor shaft to rotate.

Figure 1: Basic Brake Operation

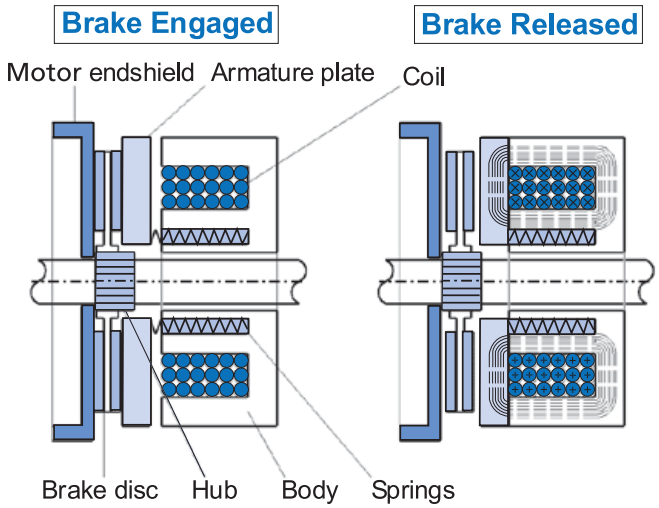

NORD brakes are DC voltage brakes and in most instances are supplied with a motor mounted brake rectifier for easy connections to AC power. AC power is taken directly from the power line or from the terminal block of the motor and converted to DC by the supplied rectifier.

ⓘ *IMPORTANT NOTE* ⓘ

If the motor is connected to a frequency inverter, soft start, or is a two-speed motor, the AC power must be supplied to the brake rectifier separately from the motor power.

Advantages

- Each NORD motor frame size has a number of brake sizes available, with different torque capacities.
- Brake torque adjustments are possible by changing the brake spring combinations. In addition, brake sizes from 5-40 Nm (3.7-30 lb-ft) are typically supplied with an additional spanner-nut adjustment on the back of the brake.
- NORD brakes provide a high degree of safety because when power is removed the brake will automatically set to hold the load.
- The brake rotor or brake disc is environmentally safe and asbestos-free.
- The connection between the rectifier and the brake coil is completed at the factory and the brake air-gap is factory-set but can be adjusted in the event of wear.

General Selection Considerations

As indicated in the NORD catalog, each NORD motor can be supplied with a number of brake torque sizes.

NORD relies on the equipment builder to specify appropriate brake sizing for their application, while giving consideration to the following:

- For most applications, we advise sizing the brake to 1.5 - 2 times the motor rated torque.
- For vertical applications, it may be advisable to size the brake size up to 3 times the motor rated torque.
- For some applications, it may be necessary to specify a reduced brake torque setting to prevent excessive peak load conditions developed at the reducer output.
- On travel drive applications, excessive brake torque may lead to wheel skid; in addition on crane applications excess hoist-cable swing can result.

⚠ CAUTIONS ⚠

- **Brake torque -** The brake torque is measured with a mean friction radius of the brake pad surface with a circumferential speed of 1m/sec (197 fpm).
- **Brake torque tolerance -** For different applications and operating conditions, brake torque can vary from +40/-20% compared to the rated brake torque.
- **Hoisting (lifting/lowering) applications -** must have the brake wired for fast response (DC-switching)
- **Initial operation & wear-in period -** In new condition, the brake will have a reduced torque of up to 30%. In order to achieve full rated brake torque, a short run-in period is required. The run in time will vary depending on system loads.
- **The brake rotor or brake pad -** must be protected against foreign matter, oil and grease. Contaminants of this type can greatly influence wear and reduce breaking torque.

Brake Torque Adjustment

Brake torque adjustments are possible by changing the brake spring combinations or by removing springs (Table 1).

In addition, brake sizes from 5-40 Nm (3.7-30 lb-ft) are typically supplied with a threaded adjustment nut or spanner nut to allow for additional fine torque adjustments of the brake. The braking torque can be adjusted by unscrewing the spanner nut a number of turns or "clicks" with a spanner wrench (Table 2).

Table 1a: Brake Torque Reduction - Spring Removal

"Brake Size"	7 Springs		5 Springs		3 Springs	
	[Nm]	[lb-ft]	[Nm]	[lb-ft]	[Nm]	[lb-ft]
BRE 5	5	3.7	3.5	2.6	2	1.5
BRE10	10	7.4	7	5.2	4	3.0
BRE20	20	14.8	14	10.3	8	5.9
BRE40	40	29.5	28	20.7	17	12.5
BRE60	60	44.3	43	31.7	26	19.2
BRE100	100	73.8	70	51.6	42	31.0
BRE150	150	111	107	78.9	65	47.9

On brake sizes 5-150 Nm (3.7-111 lb-ft) full brake torque is achieved with all (7) springs. The brake springs are placed in such a manner where there are (3) inner and (4) outer springs. When adjusting the brake torque, start by removing the outer springs at opposite corners to prevent uneven brake wear.

Table 1b: Brake Torque Reduction - Spring Removal

"Brake Size"	8 Springs		6 Springs		4 Springs	
	[Nm]	[lb-ft]	[Nm]	[lb-ft]	[Nm]	[lb-ft]
BRE250	250	184	187	138	125	92
BRE400	400	295	300	221	200	148
BRE800	800	590	600	443	400	295
BRE1200	1200	885	900	664	600	443

On brake sizes 250-1200 Nm (184-885 lb-ft) full brake torque is achieved with all (8) springs. The brake springs are placed in such a manner where there are (4) inner and (4) outer springs. When adjusting the brake torque, start by removing the outer springs at opposite corners to prevent uneven brake wear.

Table 2: Spanner Nut Adjustment

"Brake Size"	Torque Reduction*		Max. Turns	Minimum Torque✹	
	[Nm]	[lb-ft]		[Nm]	[lb-ft]
BRE 5	0.2	0.15	6	0.8	0.59
BRE10	0.2	0.15	12	1.6	1.18
BRE20	0.3	0.22	12	4.4	3.25
BRE40	1	0.74	9	8.0	5.90

✹ **With the minimum number of springs and maximum number of turns to the spanner nut.**

* **Per each turn of the spanner nut**

Brake sizes from 5-40 Nm (3.7-30 lb-ft) are typically supplied with a threaded adjustment nut or spanner nut. Additional fine torque adjustment can be made by unscrewing the spanner nut a number of turns or "clicks" with a spanner wrench.

Brake Control Rectifiers

NORD brake control rectifiers convert AC voltage to DC voltage. Rectifiers are used because most applications require AC voltage to power the motor, but DC power is required to power the brake and DC power is not typically available. NORD brake motors typically include the rectifier located inside the terminal box.

Rectifier Advantages

- Individual power source for each brake.
- Compact size, mounted inside the terminal box.
- Multiple types, voltage options and release/engagement modes available.
- Mountable in a separate control cabinet.
- Integral protection against voltage spikes.

Model	Type	Part No.	Color	Input Voltage V_{AC} ± 10%	Rated Current A_{DC} (40°C)	Rated Current A_{DC} (75°C)
GVE20L	Full-wave	19141000	Black	110-275	1.5	1.0
GVE20V	Full-wave	19141030	Black	110-275	1.5	1.0
GHE40L	Half-wave	19141010	Yellow	200-480	2.0	1.0
GHE40V	Half-wave	19141040	Yellow	200-480	2.0	1.0
GHE50L	Half-wave	19141020	Gray	200-575	2.0	1.0
GHE50V	Half-wave	19141050	Gray	200-575	2.0	1.0
GUE40V	Dual-wave	19140300	Black	230-460	0.7	0.5
PMG500	Push-Hybrid	19140200	Black	200-500	4.0	2.8

Rectifier electronics are sealed for moisture-protection; electronics on models ending with the suffix "V" are resin-encapsulated to provide added protection if water should get into the motor terminal box.

Rectifier Types

Full-wave rectifier [GVE]:
A rectifier in which both the positive and negative half-cycles of the AC input signal are rectified to produce a uni-directional DC current supply to the load or the brake. The output voltage is 90% of the input voltage ($V_{DC} = 0.90 \times V_{AC}$).

Half-wave rectifier [GHE]:
A rectifier in which only alternate half-cycles of the AC input signal are rectified to produce a uni-directional DC current supply to the load or the brake. The output voltage is 45% of the input voltage ($V_{DC} = 0.45 \times V_{AC}$).

Dual Wave Rectifier [GUE]
A rectifier that can be wired as either a full-wave rectifier or a half-wave rectifier depending upon how it is connected to the AC input signal.

IMPORTANT NOTE

If the motor is connected to a frequency inverter, soft start, or is a two-speed motor, then seperate AC power must be supplied to the brake rectifier.

Rectifier Types [Ctd.]

PMG 500 Push-Hybrid rectifier [PMG]:
A fast-acting or push-hybrid brake rectifier provides an initial "push" in the form of a timed full-wave brake-release function, which is then followed by a continuous half-wave brake-holding function. There are two ways to apply these rectifiers as follows:

- "Overexcitation" of the brake coil provides faster brake release or improved cycling capacity. The DC voltage of the brake coil is determined based upon using a half-wave rectifier. The output voltage is 45% of the input voltage ($V_{DC} = 0.45 \times V_{AC}$).
- "Reducer-Power Holding" of the brake coil maintains the brake in a released state by using only 25% of the power needed for the initial brake release. This results in very fast brake stopping. The DC voltage of the brake coil is determined based upon using a full-wave rectifier. The output voltage is 90% of the input voltage. ($V_{DC} = 0.90 \times V_{AC}$).

NORD offers additional fast-acting rectifiers besides the PMG 500. For additional details please reference User Manual U35100 – Fast Acting Brake Rectifiers.

IMPORTANT NOTE

In order to prevent rapid wear, the PMG 500 rectifier is required when utilizing the larger 800 Nm (590 lb-ft) and 1200 Nm (885 lb-ft) twin-rotor brakes. The PMG 500 rectifier is wired to "overexcite" the brake during its initial release.

Brake Switching Options

The rectifiers discussed in this manual can be wired to allow brake switching at either the AC power source (input) or the DC power source (output).

- AC switching allows the brake rectifier to be powered directly from the motor's terminal block with no additional wiring. However, this provides a slower brake stopping time due to the additional time needed to de-energize or collapse the motor's magnetic field.
- DC switching directly interrupts the current flow in the DC circuit of the brake rectifier. This method of brake switching guarantees faster brake stopping or brake engagement times.

WARNING

When the moving system undergoes a change in height (such as in a lift or incline conveyor application) or if the system tends to speed up or overhaul during normal operation, then DC-switching of the brake is required in order to prevent excessive load movement, drift or falling loads during stopping.

Figure 2.1: GVE/GHE Dimensions

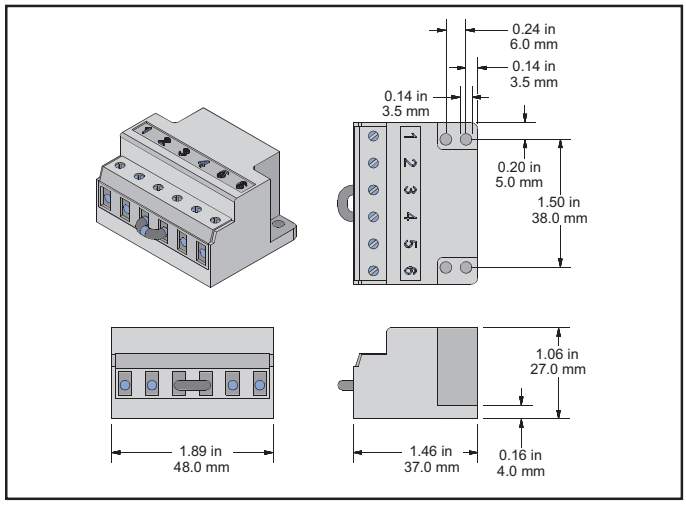

Figure 3.1: GUE Dimensions

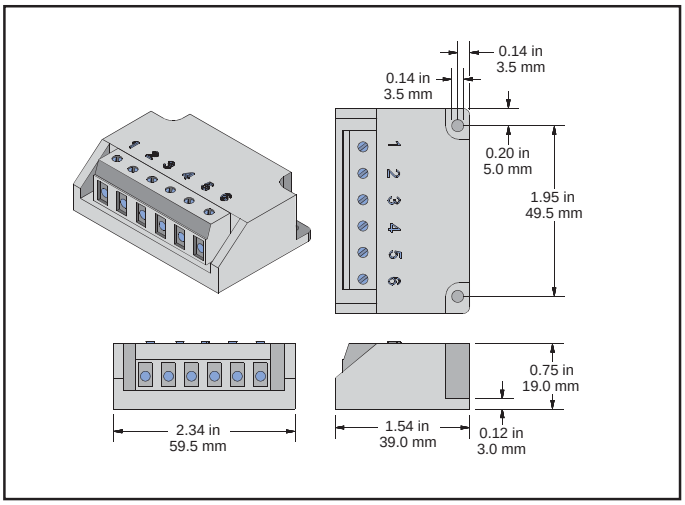

Figure 2.2: GVE/GHE Braking Methods

STANDARD STOPPING AC-SWITCHING

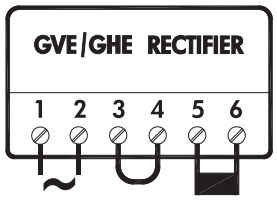

1 & 2	3 & 4	5 & 6
AC BRAKE VOLTAGE	JUMPER	DC BRAKE

FAST STOPPING DC-SWITCHING

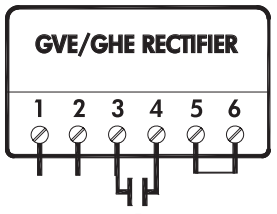

1 & 2	3 & 4	5 & 6
AC BRAKE VOLTAGE	NORMALLY OPEN CONTACT	DC BRAKE

* The normally open contact/s (NO) is not supplied by NORD it must close at the same time power is supplied to the brake. The contact must be capable of switching inductive loads and/or be rated at IEC AC3.

Braking Method	Break Release (Start)	Brake Engage (Stop)	Power Source
10	Standard	Standard (AC-Switching)	Motor terminals
15	Standard	Fast (DC-switching)	Motor terminals
20	Standard	Standard (AC-Switching)	Separate power
25	Standard	Fast (DC-switching)	Separate power

Figure 3.2: GVE/GHE Braking Methods

STANDARD STOPPING AC-SWITCHING

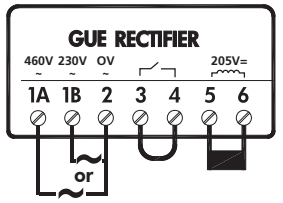

1B & 2	3 & 4	5 & 6
AC BRAKE VOLTAGE	JUMPER	DC BRAKE

FAST STOPPING DC-SWITCHING

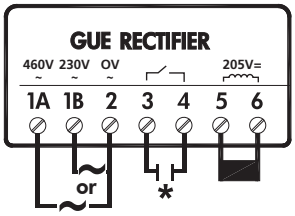

1 & 2	3 & 4	5 & 6
AC BRAKE VOLTAGE	NORMALLY OPEN CONTACT	DC BRAKE

* The normally open contact/s (NO) is not supplied by NORD it must close at the same time power is supplied to the brake. The contact must be capable of switching inductive loads and/or be rated at IEC AC3.

Braking Method	Break Release (Start)	Brake Engage (Stop)	Power Source
10	Standard	Standard (AC-Switching)	Motor terminals
15	Standard	Fast (DC-switching)	Motor terminals
20	Standard	Standard (AC-Switching)	Separate power
25	Standard	Fast (DC-switching)	Separate power

Figure 4.1: PMG 500 Dimensions

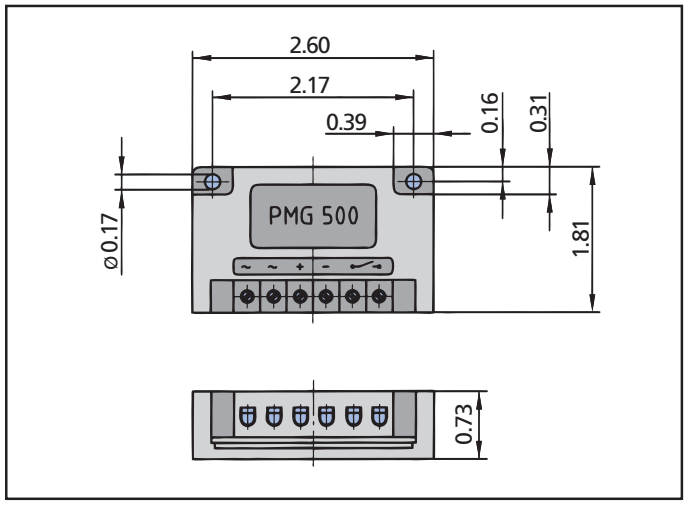

PMG 500 Push-Hybrid Rectifier

The PMG 500 rectifier provides an initial "push" the form of a timed full-wave brake-release function, which is then followed by a continuous half-wave brake-holding function.

- In order to prevent rapid wear, the PMG 500 rectifier is required when utilizing the larger 800 Nm (590 lb-ft) - and 1200 Nm (885 lb-ft) twin-rotor brakes.
- The PMG 500 rectifier is wired to "overexcite" the brake during its initial release. The DC voltage of the brake coil is determined based upon using a half-wave rectifier.

In some applications the PMG rectifier may be used for "Reduced Power Holding" or very fast brake engagement (See user manual U35100 for details).

IMPORTANT NOTE

If the motor is connected to an AC drive, soft start, or is a two-speed motor, the AC power must be supplied to the brake rectifier seperately from the motor power.

Figure 4.2: PMG 500 Braking Methods

STANDARD STOPPING (AC-SWITCHING)

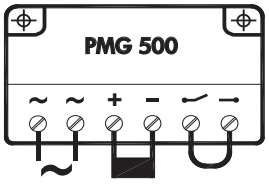

~ & ~	+ & -	⊷ & ⊸
AC BRAKE VOLTAGE	DC BRAKE	JUMPER

FAST & VERY FAST STOPPING (DC-SWITCHING)

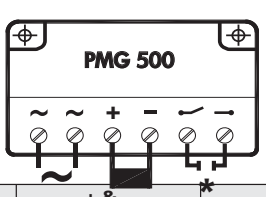

~ & ~	+ & -	⊷ & ⊸
AC BRAKE VOLTAGE	DC BRAKE	NORMALLY OPEN CONTACT

* The normally open contact/s (NO) is not supplied by NORD it must close at the same time power is supplied to the brake. The contact must be capable of switching inductive loads and/or be rated at IEC AC3.

Braking Method	Break Release (Start)	Brake Engage (Stop)	Power Source
30	Fast (Overecitation)	Standard (AC Switching)	Motor terminals
35	Fast (Overecitation)	Fast (DC Switching)	Motor terminals
45	Fast (Overecitation)	Standard (AC Switching)	Seperate power
50	Fast (Overecitation)	Fast (DC Switching)	Seperate power

BRAKE SIZE: BRE 5 **BRAKE TORQUE: 5 Nm (3.7 lb-ft) max.**

NORD Brake P/N	Half-Wave [V_{AC}]	Half-Wave [A_{AC}]	Full-Wave [V_{AC}]	Full-Wave [A_{AC}]	P_C [W]	V_C [V_{DC}]	I_C [A_{DC}]	R_C [Ω]
19010212	-	-	-	-	22	24	0.92	26.0
19010912	230	0.09	115	0.19	22	105	0.21	500
19011902	400	0.05	200	0.11	22	180	0.12	1475
19011912	460	0.05	230	0.10	22	205	0.11	1900
19012212	500	0.04	250	0.08	21	225	0.09	2450
19012512	575	0.04	-	-	22	250	0.09	2850

BRAKE SIZE: BRE20 **BRAKE TORQUE: 20 Nm (15 lb-ft) max.**

NORD Brake P/N	Half-Wave [V_{AC}]	Half-Wave [A_{AC}]	Full-Wave [V_{AC}]	Full-Wave [A_{AC}]	P_C [W]	V_C [V_{DC}]	I_C [A_{DC}]	R_C [Ω]
19030222	-	-	-	-	34	24	1.42	16.9
19030922	230	0.18	115	0.35	41	105	0.39	270
19031922	400	0.09	200	0.17	34	180	0.19	950
19031932	460	0.07	230	0.13	30	205	0.15	1391
19032222	500	0.07	250	0.15	36	225	0.16	1391
19032522	575	0.06	-	-	35	250	0.14	1780

BRAKE SIZE: BRE 60 **BRAKE TORQUE: 60 Nm (44 lb-ft) max.**

NORD Brake P/N	Half-Wave [V_{AC}]	Half-Wave [A_{AC}]	Full-Wave [V_{AC}]	Full-Wave [A_{AC}]	P_C [W]	V_C [V_{DC}]	I_C [A_{DC}]	R_C [Ω]
19050252	-	-	-	-	52	24	2.18	11.0
19050952	230	0.27	115	0.54	63	105	0.60	174
19051902	400	0.13	200	0.27	54	180	0.30	602
19051952	460	0.12	230	0.25	57	205	0.28	740
19052252	500	0.10	250	0.20	50	225	0.22	1004
19052552	575	0.09	-	-	48	250	0.19	1300

BRAKE SIZE: BRE 150 **BRAKE TORQUE: 150 Nm (110 lb-ft) max.**

NORD Brake P/N	Half-Wave [V_{AC}]	Half-Wave [A_{AC}]	Full-Wave [V_{AC}]	Full-Wave [A_{AC}]	P_C [W]	V_C [V_{DC}]	I_C [A_{DC}]	R_C [Ω]
19070252	-	-	-	-	77	24	3.20	7.5
19070952	230	0.39	115	0.79	92	105	0.88	120
19071902	400	0.18	200	0.36	73	180	0.40	445
19071952	460	0.15	230	0.31	70	205	0.34	600
19072252	500	0.15	250	0.30	76	225	0.34	670
19072552	575	0.14	-	-	76	250	0.30	825

BRAKE SIZE: BRE 400 **BRAKE TORQUE: 400 Nm (295 lb-ft) max.**

NORD Brake P/N	Half-Wave [V_{AC}]	Half-Wave [A_{AC}]	Full-Wave [V_{AC}]	Full-Wave [A_{AC}]	P_C [W]	V_C [V_{DC}]	I_C [A_{DC}]	R_C [Ω]
19092252	-	-	-	-	144	24	6.00	4.0
19092952	230	0.62	115	1.24	145	105	1.38	76
19093902	400	0.35	200	0.70	141	180	0.78	230
19093952	460	0.31	230	0.62	140	205	0.68	300
19093962	500	0.29	250	0.57	143	225	0.63	355
19093972	575	0.26	-	-	142	250	0.57	440

BRAKE SIZE: BRE 1200 **BRAKE TORQUE: 1200 Nm (885 lb-ft) max. ❷**

NORD Brake P/N	Half-Wave [V_{AC}]	Half-Wave [A_{AC}]	Full-Wave [V_{AC}]	Full-Wave [A_{AC}]	P_C [W]	V_C [V_{DC}]	I_C [A_{DC}]	R_C [Ω]
19099802	230	0.62	-	-	145	105	1.38	76
19099902	400	0.27	-	-	108	180	0.60	300
19099902	460	0.31	-	-	140	205	0.68	300

BRAKE SIZE: BRE 10 **BRAKE TORQUE: 10 Nm (7.4 lb-ft) max.**

NORD Brake P/N	Half-Wave [V_{AC}]	Half-Wave [A_{AC}]	Full-Wave [V_{AC}]	Full-Wave [A_{AC}]	P_C [W]	V_C [V_{DC}]	I_C [A_{DC}]	R_C [Ω]
19020222	-	-	-	-	28	24	1.17	20.6
19020922	230	0.14	115	0.28	33	105	0.32	332
19021902	400	0.07	200	0.15	29	180	0.16	1100
19021922	460	0.06	230	0.11	26	205	0.13	1620
19022222	500	0.06	250	0.12	30	225	0.13	1700
19022522	575	0.05	-	-	27	250	0.11	2323

BRAKE SIZE: BRE40 **BRAKE TORQUE: 40 Nm (30 lb-ft) max.**

NORD Brake P/N	Half-Wave [V_{AC}]	Half-Wave [A_{AC}]	Full-Wave [V_{AC}]	Full-Wave [A_{AC}]	P_C [W]	V_C [V_{DC}]	I_C [A_{DC}]	R_C [Ω]
19040232	-	-	-	-	41	24	1.69	14.2
19040932	230	0.21	115	0.42	49	105	0.46	226
19041902	400	0.11	200	0.22	45	180	0.25	723
19041922	460	0.11	230	0.22	50	205	0.24	840
19042232	500	0.09	250	0.18	44	225	0.20	1150
19042532	575	0.08	-	-	44	250	0.18	1425

BRAKE SIZE: BRE 100 **BRAKE TORQUE: 100 Nm (74 lb-ft) max.**

NORD Brake P/N	Half-Wave [V_{AC}]	Half-Wave [A_{AC}]	Full-Wave [V_{AC}]	Full-Wave [A_{AC}]	P_C [W]	V_C [V_{DC}]	I_C [A_{DC}]	R_C [Ω]
19060252	-	-	-	-	80	24	3.33	7.2
19060952	230	0.39	115	0.79	92	105	0.88	120
19061902	400	0.21	200	0.42	83	180	0.46	390
19061952	460	0.20	230	0.40	91	205	0.44	464
19062252	500	0.16	250	0.32	79	225	0.35	643
19062552	575	0.14	-	-	79	250	0.31	795

BRAKE SIZE: BRE 250 **BRAKE TORQUE: 250 Nm (185 lb-ft) max.**

NORD Brake P/N	Half-Wave [V_{AC}]	Half-Wave [A_{AC}]	Full-Wave [V_{AC}]	Full-Wave [A_{AC}]	P_C [W]	V_C [V_{DC}]	I_C [A_{DC}]	R_C [Ω]
19080252	-	-	-	-	99	24	4.14	5.8
19080952	230	0.51	115	1.03	120	105	1.14	92
19081902	400	0.27	200	0.54	108	180	0.60	300
19081952	460	0.24	230	0.49	111	205	0.54	380
19082252	500	0.20	250	0.40	100	225	0.44	507
19081962	575	0.17	-	-	95	250	0.38	655

BRAKE SIZE: BRE 800 **BRAKE TORQUE: 800 Nm (590 lb-ft) max. ❶**

NORD Brake P/N	Half-Wave [V_{AC}]	Half-Wave [A_{AC}]	Full-Wave [V_{AC}]	Full-Wave [A_{AC}]	P_C [W]	V_C [V_{DC}]	I_C [A_{DC}]	R_C [Ω]
19094252	-	-	-	-	144	24	6.00	4.0
19094952	230	0.62	-	-	145	105	1.38	76
19095902	400	0.27	-	-	108	180	0.60	300
19095902	460	0.31	-	-	140	205	0.68	300
19095962	500	0.29	-	-	143	225	0.63	355

IMPORTANT NOTE

The PMG500 rectifier is required when utilizing the larger 800 Nm (590 lb-ft) - and 1200 Nm (885 lb-ft) twin-rotor brakes. In order to prevent rapid wear, NORD recommends using the PMG500 rectifier to "overexcite" the brake during its release. The brake coil should be sized utilizing the PMG rectifier like a half-wave rectifier.

Half-Wave [V_{AC}] = AC supply voltage with half-wave rectifier

Half-Wave [A_{AC}] = AC supply current to half-wave rectifier

Full-Wave [V_{AC}] = DC supply voltage with full-wave rectifier

Full-Wave [A_{AC}] = AC supply current to full-wave rectifier

Pc [W] = Power to brake coil

Vc [V_{DC}] = DC brake coil voltage (range -30% to +10%)

Ic [A_{DC}] = DC current top brake coil

Rc [V] = Brake coil resistance (±5%)

❶ When used as a stopping brake, evaluation of brake work is essential.

❷ Designed as a holding brake or emergency stop brake only.

Brake coil data based upon ambient conditions of 20°C (68°F).

General Maintenance

Brake Air Gap

In order to obtain optimal brake performance and maximum brake life, it is necessary to periodically check and reset the brake air gap. As the brake rotor wears and decreases in thickness, the air gap will increase. If the air gap is too large, the brake coil may not have enough magnetic force to pull the metal armature disc across the gap and the brake will drag.

IMPORTANT NOTE

When a complete brake motor is supplied by NORD, the air gap is already set at the factory. If the brake is ordered as a part, the air gap must be set in the field. All brake air gap adjustments must be made with the brake assembled onto the motor and power off (brake engaged).

Hand Release Lever (HL)

It is common to supply the NORD brake with a hand release lever assembly. The hand release lever allows the brake to be manually released without requiring that the brake be energized with voltage. The lever has a spring return that allows the brake to be hand released and returned automatically to its set position. The handle of the hand release lever can be unscrewed for easy removal.

Figure 5

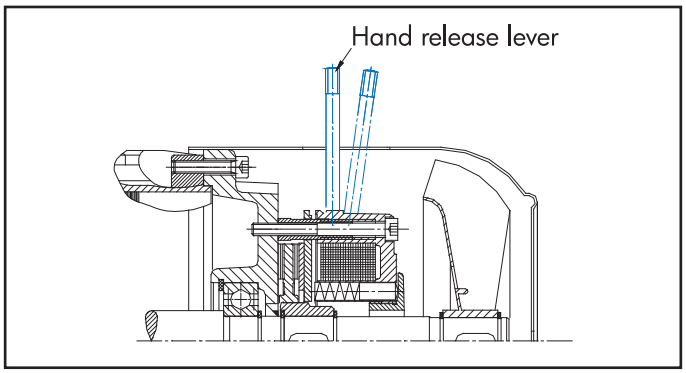

IMPORTANT NOTE

When a brake motor with hand-lever is supplied by NORD, both the hand lever air gap and brake air gap are set at the factory. When ordered as parts, proper hand-lever and air gap adjustments must be made in the field. Hand-lever adjustments must always be made prior to assembling the brake to the motor. All brake air gap adjustments must be made with the brake assembled to the motor and the power off (brake engaged).

Brake Hand-Lever Installation and Adjustment

Figure 6

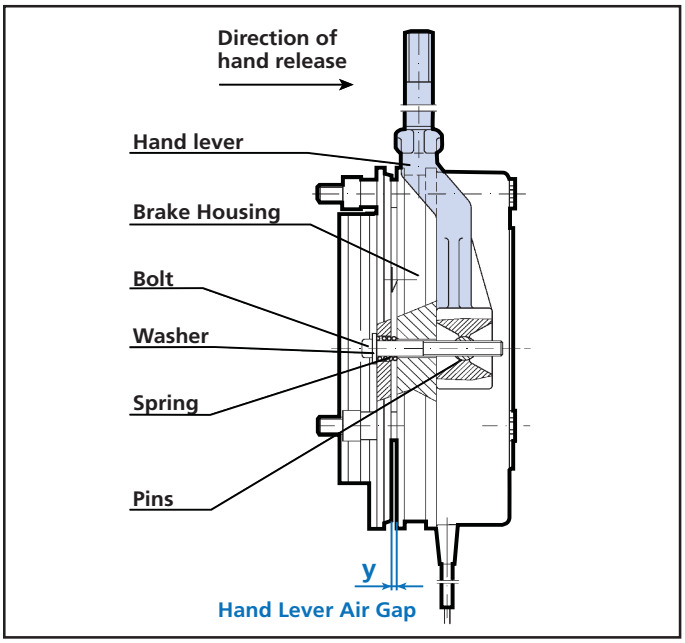

1. Place the hand-lever over the brake housing (as shown) and align the pins.
2. Screw the bolts with washer and spring into the pins.
3. Using a feeler gage, adjust the hand-lever air gap per Table 5.

Table 5: Hand-Lever Air Gap Setting

Brake Size	Dimension "y" ❶ [mm]	[in]
BRE 5	1	0.040
BRE 10	1	0.040
BRE 20	1	0.040
BRE 40	1	0.040
BRE 60	1	0.040

Brake Size	Dimension "y" ❶ [mm]	[in]
BRE 100	1.2	0.047
BRE 150	1.2	0.047
BRE 250	1.5	0.059
BRE 400	1.5	0.059
BRE 800	1.5	0.059
BRE 1200	1.5	0.059

❶ Tolerance: + 0.008 in [+ 0.2 mm]

IMPORTANT NOTE

When setting the hand-lever gap or dimension "y" the magnetic brake coil housing and the anchor plate must be kept uniform all around.

WARNING

- To assure proper assembly and proper functioning of the brake, the hand-lever must be assembled to the brake, and the hand-lever air gap must be adjusted, before the brake is assembled to the motor.
- Once adjusted properly, the hand-lever air gap setting should not be altered, even when readjusting the air gap setting.

Setting the Brake Air Gap

NORD spring-loaded brakes are virtually maintenance free. However, the air-gap of the brake rotor or brake disc must be periodically checked and adjusted. If necessary, the worn brake rotor must be replaced. Table 6 serves as guide to check and set the brake air gap as needed.

IMPORTANT NOTE

When a complete brake motor is supplied by NORD, the air gap is already set at the factory. If the brake is ordered as a part, the air gap must be set in the field. All brake air gap adjustments must be made with the brake assembled to the motor and the power off (brake engaged).

The brake air gap is checked by placing a feeler gage between metal anchor plate and the brake coil housing as shown in Figure 6. This procedure is identical even for the larger BRE800 and BRE1200 twin rotor brakes.

Figure 7 – Setting the Brake Air Gap

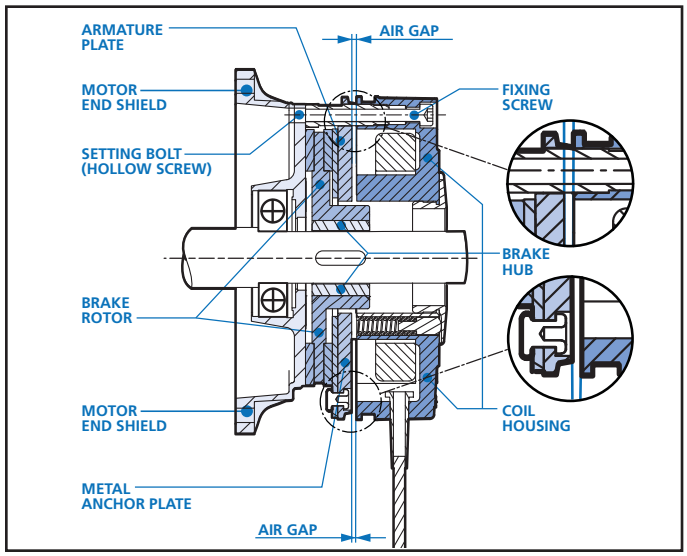

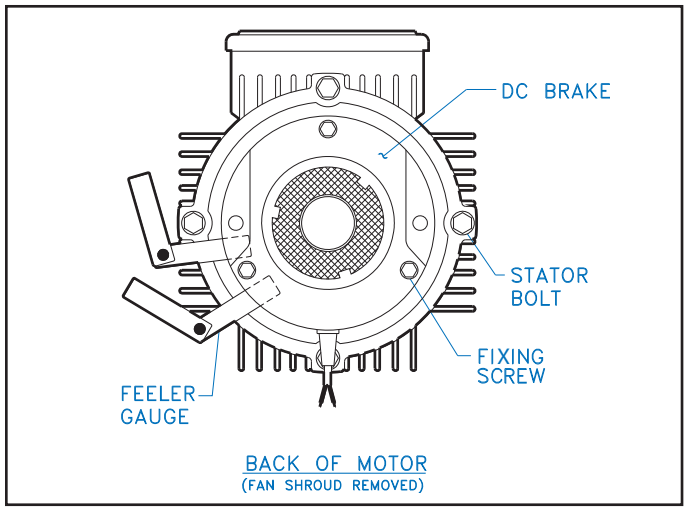

Procedure

1. Loosen the fixing screws that attach the brake to the motor's end-shield by approximately half a turn.
2. If required, the brake assembly may be loosened slightly from the motor's end shield by turning the threaded setting bolts (hollow screws) that surround the fixing screws, counter clockwise, into the brake coil housing.
3. Depending upon whether or not the air gap needs to be decreased or increased, turn the fixing screws accordingly until the desired nominal air gap (Table 6) is reached, as measured using the appropriate feeler gauge.
   - Turning the fixing screws clockwise allows the brake coil housing to be moved towards the anchor plate and reduces the air gap.
   - Turning the fixing screws counter-clockwise allows the brake coil housing to be moved away from the anchor plate and increases the air gap.
4. If the setting bolts (hollow screws) were adjusted as suggested in Step 2, re-secure the brake coil housing firmly against the motor's end shield by turning the setting bolts (hollow screws) clockwise, out of the brake coil housing.
5. Tighten the fixing screws to the appropriate torque.
6. Re-check and measure the air gap in multiple locations to check for appropriate spacing. Repeat the steps as needed until the desired air gap spacing is uniform and consistent all the way around the brake.

Table 6: Brake Air Gap Settings

Brake Size	Fixing Screw Tightening Torque		Nominal Air Gap Setting ❶		Maximum Air Gap ❷	
	[lb-ft]	[Nm]	[in]	[mm]	[in]	[mm]
BRE 5	2.2	3	0.008	0.2	0.024	0.6
BRE10	4.4	6	0.008	0.2	0.028	0.7
BRE20	7.4	10	0.012	0.3	0.031	0.8
BRE40	7.4	10	0.012	0.3	0.035	0.9
BRE60	18	25	0.012	0.3	0.039	1.0
BRE100 ❸	18	25	0.016	0.4	0.043	1.1
BRE150 ❸	18	25	0.016	0.4	0.043	1.1
BRE250	37	50	0.020	0.5	0.047	1.2
BRE400	37	50	0.020	0.5	0.047	1.2
BRE800	37	50	0.028	0.7	0.047	1.2
BRE1200	37	50	0.028	0.7	0.047	1.2

❶ Tolerance: + 0.004 in [+ 0.1 mm]

❷ Brake air gap must be re-adjusted before the stated value.

❸ When using the stainless steel friction plate (RG) increase the nominal air gap to 0.6 mm (0.024 in.).

Brake Rotor (Brake Disc) Wear Assessment

Periodically the brake rotor or brake disc must also be checked for wear. If the brake rotors wear approaches the minimum allowed thickness, then the part should be replaced. Use Table 7 to determine whether or not the brake rotor requires replacement.

Table 7: Brake Rotor Thickness

Brake Size	Nominal Brake Rotor Thickness ❶		Minimum Brake Rotor Thickness ❷	
	[in]	[mm]	[in]	[mm]
BRE 5	0.295	7.5	0.177	4.5
BRE10	0.335	8.5	0.217	5.5
BRE20	0.406	10.3	0.295	7.5
BRE40	0.492	12.5	0.374	9.5
BRE60	0.571	14.5	0.453	11.5
BRE100	0.630	16	0.492	12.5
BRE150	0.709	18	0.571	14.5
BRE250	0.787	20	0.650	16.5
BRE400	0.787	20	0.650	16.5
BRE800	0.787	20	0.650	16.5
BRE1200	0.866	22	0.689	17.5

❶ As new condition.

❷ Worn condition - brake rotor replacement is required!

Brake Pad Replacement (reference to parts list on page 8)

When the brake pad is worn the pad should be replaced to maintain proper brake operation and ensure safety.

Required Tools

- Phillips head screw drivers (fan shroud removal)
- External snap ring pliers (fan and brake hub removal).
- Large flat head screw driver or small pry bar (fan removal)
- Metric T-handle wrenches and open-end wrenches.

Procedure

1. Remove the fixing screws (946) securing the fan cover (940) to the motor end-shield (932). If the brake has a hand release (937), the lever arm should be removed by unscrewing it.
2. Remove the fan cover (940) and note the position of the hand release slot if applicable.
3. Remove the snap ring holding the cooling fan (939) and carefully remove the cooling fan (939), key and second snap ring (997).
4. If the brake is equipped with a dust boot (992), remove it.
5. Remove the socket head cap screws holding the brake coil (936) to the motor end-shield (932).
6. Remove the brake coil (936), noting the hand release (937) and power cable locations.
7. Slide the brake rotor (993) off the brake hub (938) which is secured to the motor shaft.
8. Clean the brake, install the new brake rotor pad and reassemble the brake in reverse order of the steps outlined.

Optional Brake Accessories

NORD can supply a variety of brake options and accessories, of which some of the most common are noted below.

Hand Release Lever (HL)

The hand release lever allows the brake to be manually released without requiring that the brake be energized with voltage. The lever has a spring return that allows the brake to be hand released and returned automatically to its set position. The handle of the hand release lever can be unscrewed for easy removal.

Figure 8

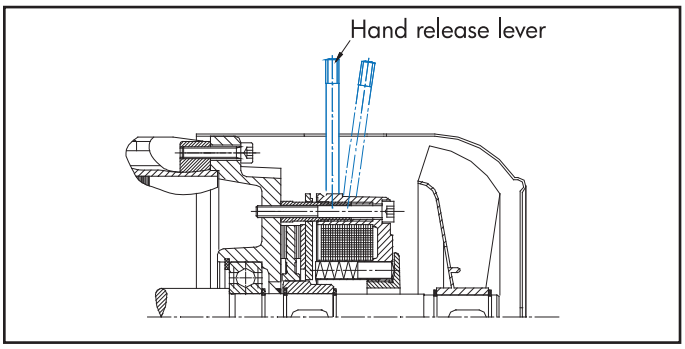

Locking Hand Release Lever (FHL)

This option allows the brake to be manually released and locked off without requiring voltage to the brake. The lock mechanism prevents the spring from returning the brake to a closed state without manual action by the user. The hand release lever can be unscrewed for easy removal.

Figure 9

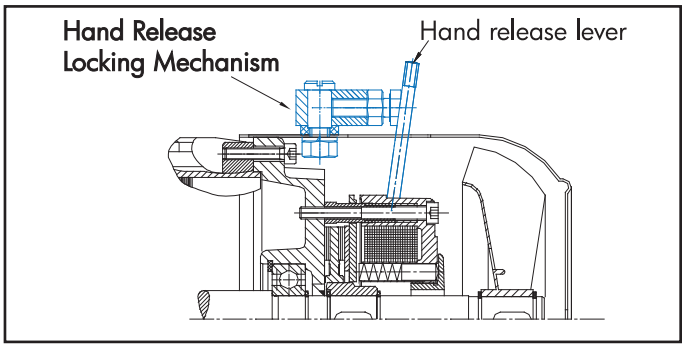

Corrosion Protected Brake (RG)

The brake is fitted with a stainless steel brake plate to provide additional corrosion protection in severe and wet environments.

Dust & Corrosion Protected Brake (SR)

A rubber-sealing boot is installed on the brake to provide additional protection in dusty environments. This feature includes the stainless steel brake plate (RG).

IP66 Brake (IP66)

NORD can also provide an IP66 brake option designed for a bigger degree of protection against severe environments.

Parts List - Precima Brakes

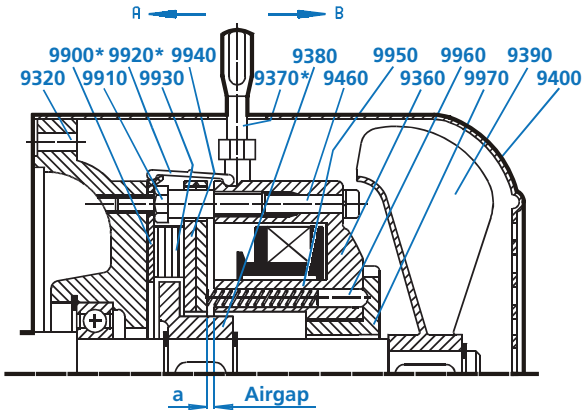

Normal Design, Enclosure IP55 with following options:

RG – Stainless Steel Disc (Item 9900)
SR – Dust Boot-includes Option RG (Item 9920)
HL – Hand Release (Item 9370)

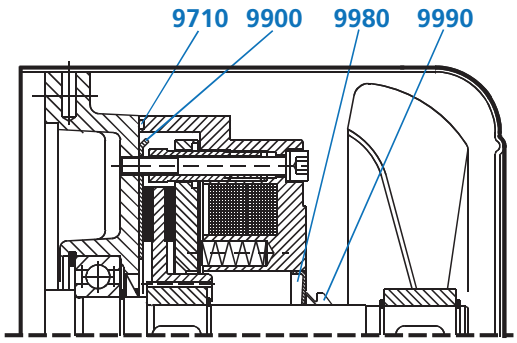

Optional Brake with optional IP66 enclosure

9320	Non-drive end shield	9710	O-ring - optional	9960	Pressure plate adjustment**
9360	Brake coil	9900	Friction plate - optional	9970	Adjustable ring **
9370	Manual brake lever – optional	9910	Setting bolt	9980	Bushing/seal - optional
9380	Brake hub	9920	Dust protection ring	9990	V-ring - optional
9390	Fan	9930	Brake rotor		
9400	Fan cover	9940	Armature plate		
9460	Fixing screw	9950	Spring		

***** Only for brakes that are 5 Nm to 40 Nm***

Table 8: Spare Parts

Brake Size	NORD Motor Frame	Brake Rotor [Item 9930]	Brake Hub [Item 9380]	Brake Hub Bore / (Style)	Hand Release (HL) [Item 9370]	Stainless Disc (RG) [Item 9900]	Dust Boot (SR) [Item 9920]
BRE5	63/71/80	19120042	19100112	15 mm (hex)	19150042	19130042	19110042
BRE10	63/71	19120082	19100212	15 mm (hex)	19150082	19130082	19110082
BRE10	80/90	19120082	19100222	20 mm (hex)	19150082	19130082	19110082
BRE20	80/90/112	19120162	19100322	20 mm (hex)	19150162	19130162	19110162
BRE20	100	19120162	19100332	25 mm (hex)	19150162	19130162	19110162
BRE40	90/100	19120322	19100452	25 mm (spline)	19150322	19130322	19110402
BRE40	112	19120402	19100442	30 mm (hex)	19150322	19130322	19110402
BRE60	100	19120602	19100532	25 mm (spline)	19150602	19130602	19110602
BRE60	112	19120602	19100542	30 mm (spline)	19150602	19130602	19110602
BRE60	132	19120602	19100552	35 mm (spline)	19150602	19130602	19110602
BRE100	132/160	19120802	19100652	35 mm (spline)	19150802	19130802	19110802
BRE150	132	19121502	19100752	35 mm (spline)	19151502	19131502	19111502
BRE150	160/180	19121502	19100772	45 mm (spline)	19151502	19131502	19111502
BRE250	160/180	19122402	19100872	45 mm (spline)	19152402	19132500	19112502
BRE250	200	19122402	19100882	50 mm (spline)	19152402	19132500	19112502
BRE400	200/225	19124002	19100912	60 mm (spline)	19154003	10114020	19114002

IMPORTANT NOTES

- For brake coil part numbers, listed by brake size and coil voltage, please see page 4.
- The large BRE 800 and BRE 1200 twin rotor brakes are supplied to NORD pre-assembled and complete. For parts list details and spare parts information please contact NORD.

Brake Times & Electrical Selection

Brake timing performance is critical in selecting the optimal brake system. NORD brakes can provide exceptional performance in terms of the release (start) times and engagement (stop) times. Use the following guidelines in order to select the correct brake control components and connections.

1) Determine if the brake needs to be wired directly from the motor terminal block or powered by a separate power source.

- If you are using a frequency inverter, soft-start or a two speed motor you will need to supply the rectifier from a separate power source.

- If the motor is powered direct across-the-line the rectifier power can be supplied from the motor's terminal block.

2) What type of performance do I need?

- Is the standard brake performance OK?

- Is a higher performance required for fast brake release or very fast brake stopping?

3) Determine the brake supply voltage and check the rectifier compatability using the table on page 10?

Selection Suggestions

When Fast Stopping is Recommended

Any applications that require quick stops and positive action at stand-still

Recommended Applications

- conveyors and inclined conveyors
- hoists and lifts
- bulk material handling equipment (bucket elevators, idler conveyor's).

⚠ *CAUTION* ⚠

- **Hoisting (lifting/lowering) applications** - must have the brake wired for fast response.

When Fast-Release is Recommended (Overexcitation)

Fast Release is recommended in any application that is very high-cycling with frequent starts and stops. These applications require the brake to release very-quickly in order to avoid excessive heat build-up in the AC motor and brake coil.

Recommended Applications

- Index conveyors
- Diverters
- Storage and retrieval crane systems

Power Source	Brake Release (start)	Brake engagement (stop)	Braking Method *	Rectifier
Motor Terminal Block	Standard	Standard (AC switching)	10	GVE/GHE/GUE
	Standard	Fast (DC switching)	15	GVE/GHE/GUE
	❶ Fast (Overexcitation)	Standard (AC switching)	30	PMG 500
	❶ Fast (Overexcitation)	Fast (DC switching)	35	PMG 500
Separate Power Source	Standard	Standard (AC switching)	20	GVE/GHE/GUE
	Standard	Fast (DC switching)	25	GVE/GHE/GUE
	❶ Fast (Overexcitation)	Standard (AC switching)	45	PMG 500
	❶ Fast (Overexcitation)	Fast (DC switching)	50	PMG 500

*** Braking methods referenced in connection diagrams on pages 11-15.**

❶ Please see important note below:

IMPORTANT NOTE

The PMG500 rectifier is required when utilizing the larger 800 Nm (590 lb-ft) - and 1200 Nm (885 lb-ft) twin-rotor brakes. In order to prevent rapid wear, NORD recommends using the PMG500 rectifier to "overexcite" the brake during its release. The brake coil should be sized utilizing the PMG rectifier like a half-wave rectifier.

The table below determines the rectifier and DC brake voltage required, based on the AC supply voltage & braking method.

Rectifier Supply Voltage (VAC)	Brake Coil Voltage (VDC)	Braking Method	Rectifier Type	Rectifier P/N	BRE 5	BRE 10	BRE 20	BRE 40	BRE 60	BRE 100	BRE 150	BRE 250	BRE 400	BRE 800	BRE 1200
115 (105-120)	105	20	GVE20L	19141000	X	X	X	X	X	X	X				
	105	25	GVE20L	19141000	X	X	X	X	X	X	X				
208 (200-208)	180	10	GVE20L	19141000	X	X	X	X	X	X	X	X	X		
	180	15	GVE20L	19141000	X	X	X	X	X	X	X	X	X		
	180	20	GVE20L	19141000	X	X	X	X	X	X	X	X	X		
	105	25	GHE40L	19141010	X	X	X	X	X	X	X				
	105	25	GHE50L	19141020	X	X	X	X	X	X	X				
	180	25	GVE20L	19141000	X	X	X	X	X	X	X	X	X		
	105	30	PMG500	19140200										X	X
	105	35	PMG500	19140200										X	X
	105	45	PMG500	19140200										X	X
	105	50	PMG500	19140200										X	X
	180	55	PMG500	19140200										X	X
230 (220-240)	105	10	GHE40L	19141010	X	X	X	X	X	X	X				
	205	10	GVE20L	19141000	X	X	X	X	X	X	X	X	X		
	105	15	GHE40L	19141010	X	X	X	X	X	X	X				
	205	15	GVE20L	19141000	X	X	X	X	X	X	X	X	X		
	105	20	GHE40L	19141010	X	X	X	X	X	X	X				
	205	20	GUE40V	19140300	X	X	X	X	X	X	X				
	205	20	GVE20L	19141000	X	X	X	X	X	X	X	X	X		
	105	25	GHE40L	19141010	X	X	X	X	X	X	X				
	205	25	GUE40V	19140300	X	X	X	X	X	X	X				
	205	25	GVE20L	19141000	X	X	X	X	X	X	X	X	X		
	105	30	PMG500	19140200										X	X
	105	35	PMG500	19140200										X	X
	105	45	PMG500	19140200										X	X
	105	50	PMG500	19140200										X	X
332	180	30	PMG500	19140200										X	X
	180	35	PMG500	19140200										X	X
400 (380-415)	180	10	GHE40L	19141010	X	X	X	X	X	X	X	X	X		
	180	15	GHE40L	19141010	X	X	X	X	X	X	X	X	X		
	180	20	GHE40L	19141010	X	X	X	X	X	X	X	X	X		
	180	25	GHE40L	19141010	X	X	X	X	X	X	X	X	X		
	180	30	PMG500	19140200										X	X
	180	35	PMG500	19140200										X	X
	180	45	PMG500	19140200										X	X
	180	50	PMG500	19140200										X	X
460 (440-480)	205	10	GHE40L	19141010	X	X	X	X	X	X	X	X	X		
	205	15	GHE40L	19141010	X	X	X	X	X	X	X	X	X		
	205	20	GHE40L	19141010	X	X	X	X	X	X	X	X	X		
	205	20	GUE40V	19140300	X	X	X	X	X	X	X				
	205	25	GHE40L	19141010	X	X	X	X	X	X	X	X	X		
	205	25	GUE40V	19140300	X	X	X	X	X	X	X				
	205	30	PMG500	19140200										X	X
	205	35	PMG500	19140200										X	X
	205	45	PMG500	19140200										X	X
	205	50	PMG500	19140200										X	X
575 (550-600)	250	10	GHE50L	19141020	X	X	X	X	X	X	X	X	X		
	250	15	GHE50L	19141020	X	X	X	X	X	X	X	X	X		
	250	20	GHE50L	19141020	X	X	X	X	X	X	X	X	X		
	250	25	GHE50L	19141020	X	X	X	X	X	X	X	X	X		

? Specify Rectifier Model Type _____ And DC Brake Voltage _____

Typical Connection Diagrams

BR101A — 10
POWERED FROM MOTOR TERMINAL BLOCK
STANDARD RELEASE
NORMAL STOPPING (AC-SWITCHING)

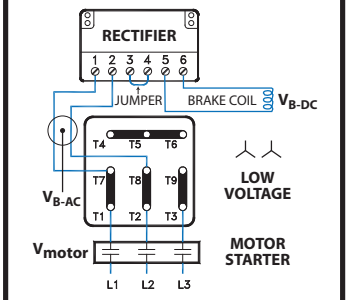

MOTOR	RECTIFIER	V_{motor}	$V_{B\text{-}AC}$	$V_{B\text{-}DC}$
208-230YY/460Y	GVE20	208 VAC	230 VAC	205 VDC
230YY/460Y	GVE20	230 VAC	230 VAC	205 VDC
230YY/460Y	GHE40	230 VAC	230 VAC	105 VDC

BR101B — 10
POWERED FROM MOTOR TERMINAL BLOCK
STANDARD RELEASE
NORMAL STOPPING (AC-SWITCHING)

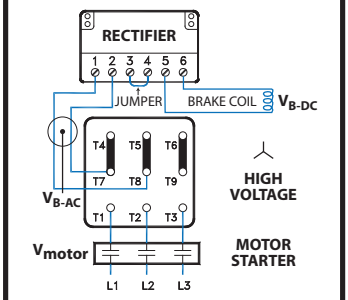

MOTOR	RECTIFIER	V_{motor}	$V_{B\text{-}AC}$	$V_{B\text{-}DC}$
230YY/460Y	GVE20	460 VAC	230 VAC	205 VDC

GP101C — 10
POWERED FROM MOTOR TERMINAL BLOCK
STANDARD RELEASE
NORMAL STOPPING (AC-SWITCHING)

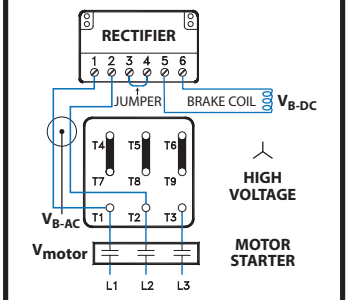

MOTOR	RECTIFIER	V_{motor}	$V_{B\text{-}AC}$	$V_{B\text{-}DC}$
230YY/460Y	GHE40	460 VAC	460 VAC	205 VDC

BR601A — 10
POWERED FROM MOTOR TERMINAL BLOCK
STANDARD RELEASE
NORMAL STOPPING (AC-SWITCHING)

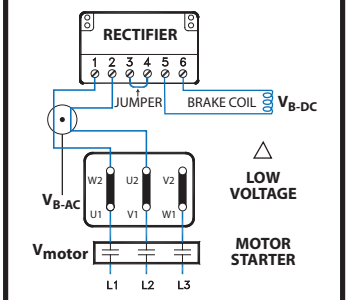

MOTOR	RECTIFIER	V_{motor}	$V_{B\text{-}AC}$	$V_{B\text{-}DC}$
208Δ/360Y	GVE20	208 VAC	208 VAC	180 VDC
230Δ/400Y	GVE20	230 VAC	230 VAC	205 VDC
400Δ/690Y	GHE40	400 VAC	400 VAC	180 VDC
460Δ/Y	GHE40	460 VAC	460 VAC	205 VDC

BR601B — 10
POWERED FROM MOTOR TERMINAL BLOCK
STANDARD RELEASE
NORMAL STOPPING (AC-SWITCHING)

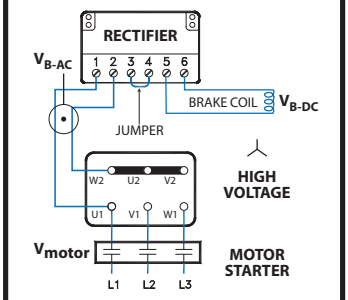

MOTOR	RECTIFIER	V_{motor}	$V_{B\text{-}AC}$	$V_{B\text{-}DC}$
230Δ/400Y	GVE20	400 VAC	230 VAC	205 VDC

BR601C — 10
POWERED FROM MOTOR TERMINAL BLOCK
STANDARD RELEASE
NORMAL STOPPING (AC-SWITCHING)

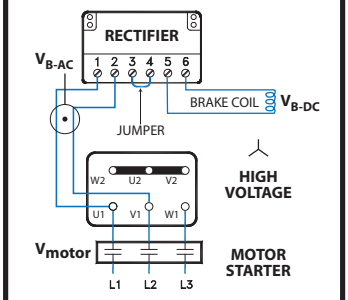

MOTOR	RECTIFIER	V_{motor}	$V_{B\text{-}AC}$	$V_{B\text{-}DC}$
332Δ/575Y	GHE50	575 VAC	575 VAC	250 VDC

BR603A — 15
POWERED FROM MOTOR TERMINAL BLOCK
STANDARD RELEASE
FAST STOPPING (DC-SWITCHING)

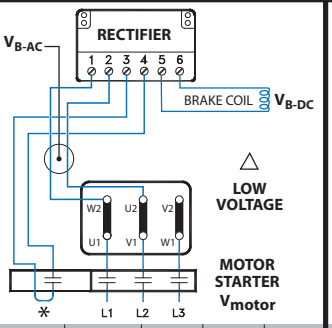

MOTOR	RECTIFIER	V_{motor}	$V_{B\text{-}AC}$	$V_{B\text{-}DC}$
208Δ/360Y	GVE20	208 VAC	208 VAC	180 VDC
230Δ/400Y	GVE20	230 VAC	230 VAC	205 VDC
400Δ/690Y	GHE40	400 VAC	400 VAC	180 VDC
460Δ/Y	GHE40	460 VAC	460 VAC	205 VDC

BR603B — 15
POWERED FROM MOTOR TERMINAL BLOCK
STANDARD RELEASE
FAST STOPPING (DC-SWITCHING)

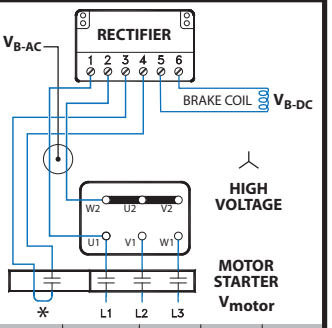

MOTOR	RECTIFIER	V_{motor}	$V_{B\text{-}AC}$	$V_{B\text{-}DC}$
230Δ/400Y	GVE20	400 VAC	230 VAC	105 VDC

BR603C — 15
POWERED FROM MOTOR TERMINAL BLOCK
STANDARD RELEASE
FAST STOPPING (DC-SWITCHING)

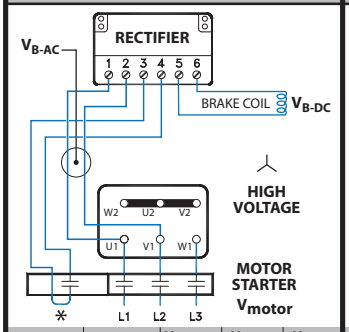

MOTOR	RECTIFIER	V_{motor}	$V_{B\text{-}AC}$	$V_{B\text{-}DC}$
332Δ/575Y	GHE50	575 VAC	575 VAC	250 VDC

BR103A — 15
POWERED FROM MOTOR TERMINAL BLOCK
STANDARD RELEASE
FAST STOPPING (DC-SWITCHING)

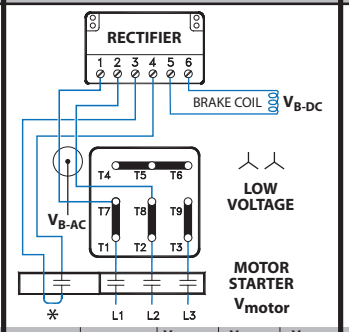

MOTOR	RECTIFIER	V_{motor}	$V_{B\text{-}AC}$	$V_{B\text{-}DC}$
208-230YY/460Y	GVE20	208 VAC	230 VAC	205 VDC
230YY/460Y	GVE20	230 VAC	230 VAC	205 VDC
230YY/460Y	GHE40	230 VAC	230 VAC	105 VDC

BR103B — 15
POWERED FROM MOTOR TERMINAL BLOCK
STANDARD RELEASE
FAST STOPPING (DC-SWITCHING)

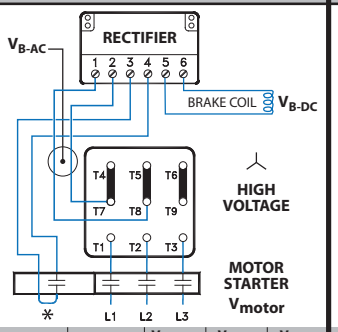

MOTOR	RECTIFIER	V_{motor}	$V_{B\text{-}AC}$	$V_{B\text{-}DC}$
230YY/460Y	GVE20	460 VAC	230 VAC	205 VDC

BR103C — 15
POWERED FROM MOTOR TERMINAL BLOCK
STANDARD RELEASE
FAST STOPPING (DC-SWITCHING)

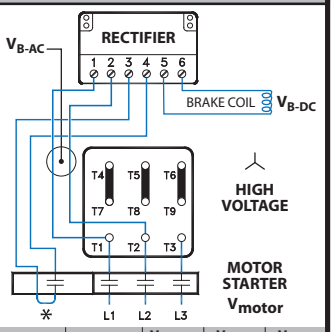

MOTOR	RECTIFIER	V_{motor}	$V_{B\text{-}AC}$	$V_{B\text{-}DC}$
230YY/460Y	GHE40	460 VAC	460 VAC	205 VDC

✻ The normally open contact/s (NO) is not supplied by NORD. It must close at the same time power is supplied to the brake. The contact must be capable of switching inductive loads and/or be rated IEC AC3.

= Braking Method

Typical Connection Diagrams

BR102A — 20 — SEPERATE POWER SOURCE, STANDARD RELEASE, NORMAL STOPPING (AC-SWITCHING)

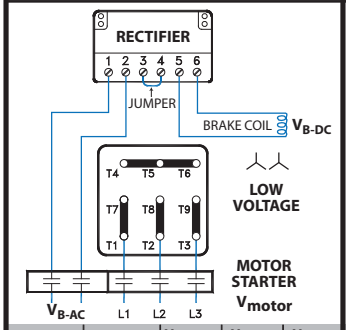

MOTOR	RECTIFIER	V_{motor}	V_{B-AC}	V_{B-DC}
208-230YY/460Y	GVE20	208 VAC	230 VAC	205 VDC
230YY/460Y	GVE20	230 VAC	105 VAC	115 VDC
230YY/460Y	GVE20	230 VAC	230 VAC	205 VDC
230YY/460Y	GHE40	230 VAC	230 VAC	105 VDC

BR102B — 20 — SEPERATE POWER SOURCE, STANDARD RELEASE, NORMAL STOPPING (AC-SWITCHING)

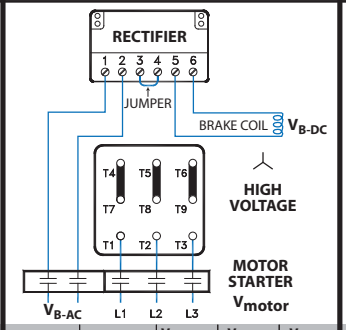

MOTOR	RECTIFIER	V_{motor}	V_{B-AC}	V_{B-DC}
230YY/460Y	GVE20	460 VAC	115 VAC	105 VDC
230YY/460Y	GHE40	460 VAC	460 VAC	205 VDC

BR602A — 20 — SEPERATE POWER SOURCE, STANDARD RELEASE, NORMAL STOPPING (AC-SWITCHING)

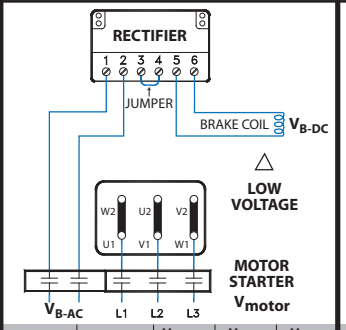

MOTOR	RECTIFIER	V_{motor}	V_{B-AC}	V_{B-DC}
208Δ/360Y	GVE20	208 VAC	208 VAC	180 VDC
230Δ/400Y	GVE20	230 VAC	230 VAC	205 VDC
400Δ/690Y	GHE40	400 VAC	400 VAC	180 VDC
460Δ/Y	GHE40	460 VAC	460 VAC	205 VDC

BR602B — 20 — SEPERATE POWER SOURCE, STANDARD RELEASE, NORMAL STOPPING (AC-SWITCHING)

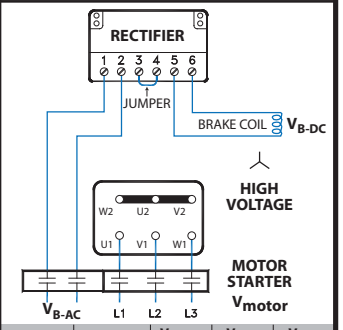

MOTOR	RECTIFIER	V_{motor}	V_{B-AC}	V_{B-DC}
230Δ/400Y	GHE40	400 VAC	400 VAC	180 VDC
332Δ/575Y	GHE50	575 VAC	575 VAC	250 VDC

BR104A — 25 — SEPERATE POWER SOURCE, STANDARD RELEASE, FAST STOPPING (DC-SWITCHING)

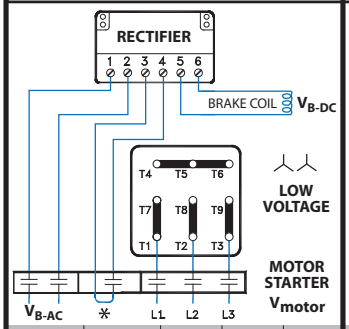

MOTOR	RECTIFIER	V_{motor}	V_{B-AC}	V_{B-DC}
208-230YY/460Y	GVE20	208 VAC	230 VAC	205 VDC
230YY/460Y	GVE20	230 VAC	115 VAC	105 VDC
230YY/460Y	GVE20	230 VAC	230 VAC	205 VDC
230YY/460Y	GHE40	230 VAC	230 VAC	105 VDC

BR104B — 25 — SEPERATE POWER SOURCE, STANDARD RELEASE, FAST STOPPING (DC-SWITCHING)

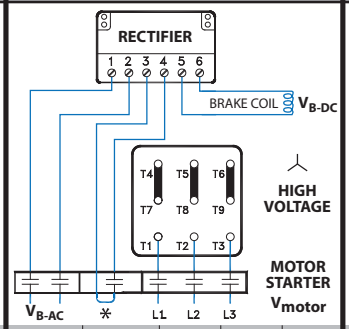

MOTOR	RECTIFIER	V_{motor}	V_{B-AC}	V_{B-DC}
230YY/460Y	GVE20	460 VAC	115 VAC	105 VDC
230YY/460Y	GHE40	460 VAC	460 VAC	205 VDC

BR604A — 25 — SEPERATE POWER SOURCE, STANDARD RELEASE, FAST STOPPING (DC-SWITCHING)

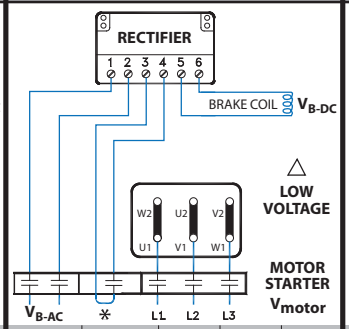

MOTOR	RECTIFIER	V_{motor}	V_{B-AC}	V_{B-DC}
208Δ/360Y	GHE20	208 VAC	208 VAC	105 VDC
230Δ/400Y	GHE20	230 VAC	230 VAC	105 VDC
400Δ/690Y	GHE40	400 VAC	400 VAC	180 VDC
460Δ/Y	GHE40	460 VAC	460 VAC	205 VDC

BR604B — 25 — SEPERATE POWER SOURCE, STANDARD RELEASE, FAST STOPPING (DC-SWITCHING)

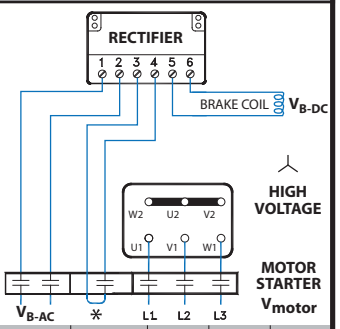

MOTOR	RECTIFIER	V_{motor}	V_{B-AC}	V_{B-DC}
230Δ/400Y	GHE20	400 VAC	230 VAC	105 VDC
332Δ/575Y	GHE40	575 VAC	332 VAC	180 VDC

✻ The normally open contact/s (NO) is not supplied by NORD. It must close at the same time power is supplied to the brake. The contact must be capable of switching inductive loads and/or be rated IEC AC3.

= Braking Method

Typical Connection Diagrams

PMG101A — POWERED FROM MOTOR TERMINAL BLOCK — 30
FAST-RELEASE (OVER EXCITATION)
NORMAL STOPPING (AC-SWITCHING)

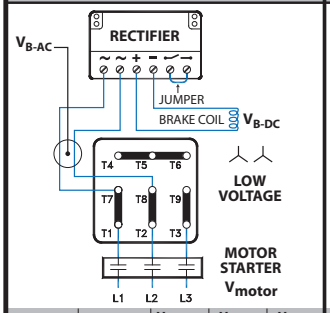

MOTOR	RECTIFIER	V_{motor}	V_{B-AC}	V_{B-DC}
230YY/460Y	PMG500	230 VAC	230 VAC	105 VDC

PMG101B — POWERED FROM MOTOR TERMINAL BLOCK — 30
FAST-RELEASE (OVER EXCITATION)
NORMAL STOPPING (AC-SWITCHING)

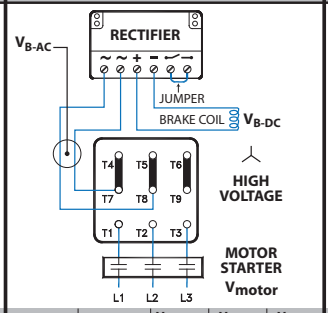

MOTOR	RECTIFIER	V_{motor}	V_{B-AC}	V_{B-DC}
230YY/460Y	PMG500	460 VAC	230 VAC	105 VDC

PMG101C — POWERED FROM MOTOR TERMINAL BLOCK — 30
FAST-RELEASE (OVER EXCITATION)
NORMAL STOPPING (AC-SWITCHING)

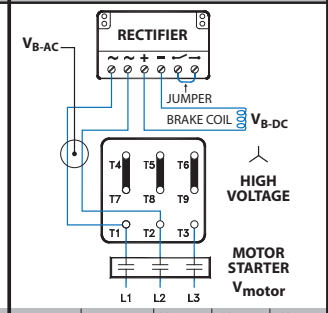

MOTOR	RECTIFIER	V_{motor}	V_{B-AC}	V_{B-DC}
230YY/460Y	PMG500	460 VAC	460 VAC	205 VDC

PMG101D — POWERED FROM MOTOR TERMINAL BLOCK — 30
FAST-RELEASE (OVER EXCITATION)
NORMAL STOPPING (AC-SWITCHING)

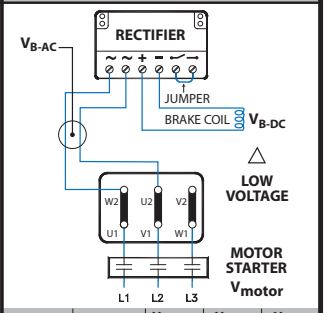

MOTOR	RECTIFIER	V_{motor}	V_{B-AC}	V_{B-DC}
208Δ/360Y	PMG500	208 VAC	208 VAC	105 VDC
230Δ/400Y	PMG500	230 VAC	230 VAC	105 VDC
400Δ/690Y	PMG500	400 VAC	400 VAC	180 VDC
460Δ/Y	PMG500	460 VAC	460 VAC	205 VDC

PMG101E — POWERED FROM MOTOR TERMINAL BLOCK — 30
FAST-RELEASE (OVER EXCITATION)
NORMAL STOPPING (AC-SWITCHING)

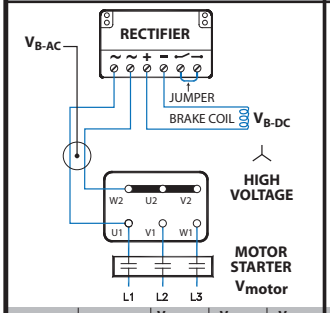

MOTOR	RECTIFIER	V_{motor}	V_{B-AC}	V_{B-DC}
230Δ/400Y	PMG500	400 VAC	230 VAC	105 VDC

PMG102A — POWERED FROM MOTOR TERMINAL BLOCK — 35
FAST-RELEASE (OVER EXCITATION)
FAST STOPPING (DC-SWITCHING)

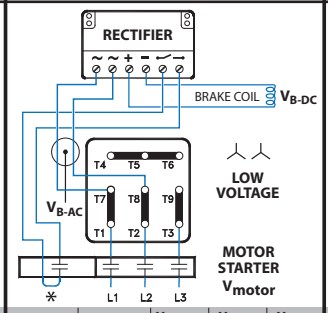

MOTOR	RECTIFIER	V_{motor}	V_{B-AC}	V_{B-DC}
230YY/460Y	PMG500	230 VAC	230 VAC	105 VDC

PMG102B — POWERED FROM MOTOR TERMINAL BLOCK — 35
FAST-RELEASE (OVER EXCITATION)
FAST STOPPING (DC-SWITCHING)

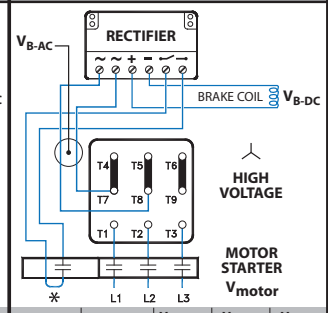

MOTOR	RECTIFIER	V_{motor}	V_{B-AC}	V_{B-DC}
230YY/460Y	PMG500	460 VAC	230 VAC	105 VDC

PMG102C — POWERED FROM MOTOR TERMINAL BLOCK — 35
FAST-RELEASE (OVER EXCITATION)
FAST STOPPING (DC-SWITCHING)

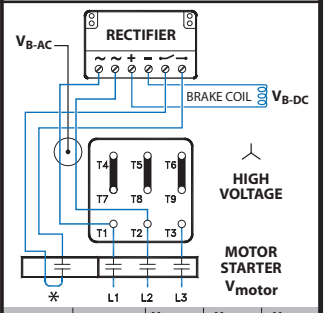

MOTOR	RECTIFIER	V_{motor}	V_{B-AC}	V_{B-DC}
230YY/460Y	PMG500	460 VAC	460 VAC	205 VDC

PMG102D — POWERED FROM MOTOR TERMINAL BLOCK — 35
FAST-RELEASE (OVER EXCITATION)
FAST STOPPING (DC-SWITCHING)

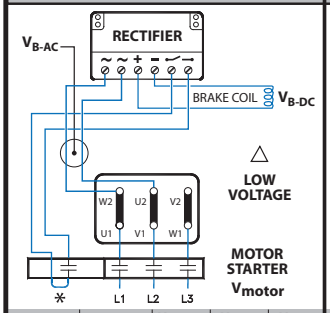

MOTOR	RECTIFIER	V_{motor}	V_{B-AC}	V_{B-DC}
208Δ/360Y	PMG500	208 VAC	208 VAC	105 VDC
230Δ/400Y	PMG500	230 VAC	230 VAC	105 VDC
400Δ/690Y	PMG500	400 VAC	400 VAC	180 VDC
460Δ/Y	PMG500	460 VAC	460 VAC	205 VDC

PMG102E — POWERED FROM MOTOR TERMINAL BLOCK — 35
FAST-RELEASE (OVER EXCITATION)
FAST STOPPING (DC-SWITCHING)

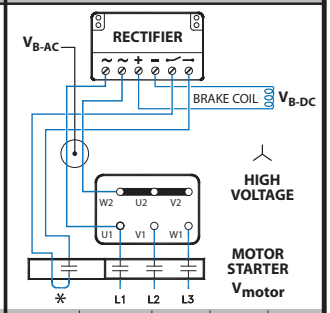

MOTOR	RECTIFIER	V_{motor}	V_{B-AC}	V_{B-DC}
230Δ/400Y	PMG500	400 VAC	230 VAC	105 VDC

✻ The normally open contact/s (NO) is not supplied by NORD. It must close at the same time power is supplied to the brake. The contact must be capable of switching inductive loads and/or be rated IEC AC3.

= Braking Method

Typical Connection Diagrams

PMG104A — 45

SEPERATE POWER SOURCE
FAST-RELEASE (OVER EXCITATION)
NORMAL STOPPING (AC-SWITCHING)

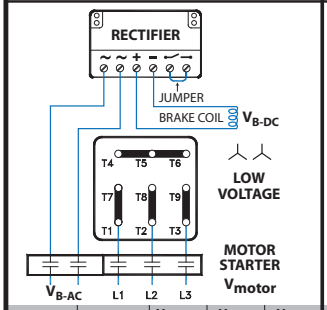

MOTOR	RECTIFIER	V_{motor}	V_{B-AC}	V_{B-DC}
230YY/460Y	PMG500	230 VAC	230 VAC	105 VDC

PMG104B — 45

SEPERATE POWER SOURCE
FAST-RELEASE (OVER EXCITATION)
NORMAL STOPPING (AC-SWITCHING)

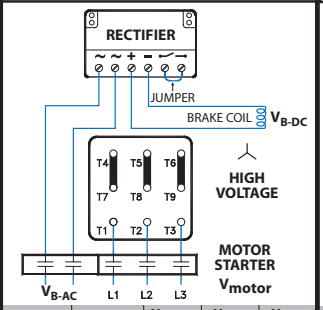

MOTOR	RECTIFIER	V_{motor}	V_{B-AC}	V_{B-DC}
230YY/460Y	PMG500	460 VAC	230 VAC	105 VDC

PMG104C — 45

SEPERATE POWER SOURCE
FAST-RELEASE (OVER EXCITATION)
NORMAL STOPPING (AC-SWITCHING)

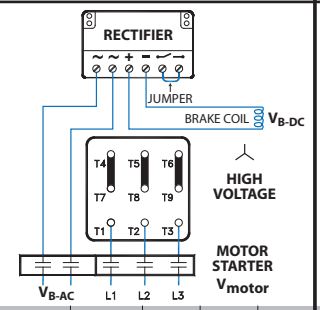

MOTOR	RECTIFIER	V_{motor}	V_{B-AC}	V_{B-DC}
230YY/460Y	PMG500	460 VAC	460 VAC	205 VDC

PMG104D — 45

SEPERATE POWER SOURCE
FAST-RELEASE (OVER EXCITATION)
NORMAL STOPPING (AC-SWITCHING)

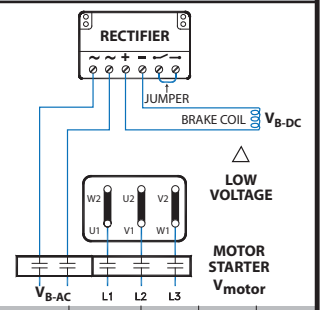

MOTOR	RECTIFIER	V_{motor}	V_{B-AC}	V_{B-DC}
208Δ/360Y	PMG500	208 VAC	208 VAC	105 VDC
230Δ/400Y	PMG500	230 VAC	230 VAC	105 VDC
400Δ/690Y	PMG500	400 VAC	400 VAC	180 VDC
460Δ/Y	PMG500	460 VAC	460 VAC	205 VDC

PMG104E — 45

SEPERATE POWER SOURCE
FAST-RELEASE (OVER EXCITATION)
NORMAL STOPPING (AC-SWITCHING)

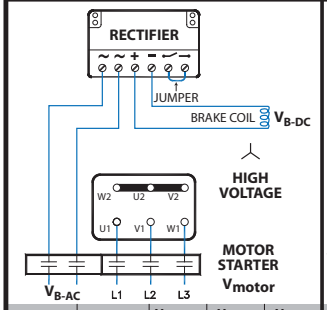

MOTOR	RECTIFIER	V_{motor}	V_{B-AC}	V_{B-DC}
230Δ/400Y	PMG500	400 VAC	230 VAC	105 VDC

PMG105A — 50

SEPERATE POWER SOURCE
FAST-RELEASE (OVER EXCITATION)
FAST STOPPING (DC-SWITCHING)

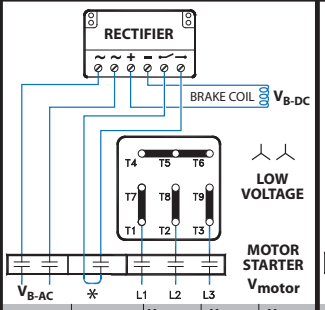

MOTOR	RECTIFIER	V_{motor}	V_{B-AC}	V_{B-DC}
230YY/460Y	PMG500	230 VAC	230 VAC	105 VDC

PMG105B — 50

SEPERATE POWER SOURCE
FAST-RELEASE (OVER EXCITATION)
FAST STOPPING (DC-SWITCHING)

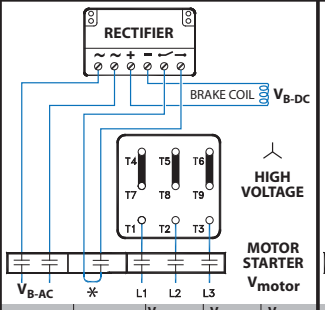

MOTOR	RECTIFIER	V_{motor}	V_{B-AC}	V_{B-DC}
230YY/460Y	PMG500	460 VAC	230 VAC	105 VDC

PMG105C — 50

SEPERATE POWER SOURCE
FAST-RELEASE (OVER EXCITATION)
FAST STOPPING (DC-SWITCHING)

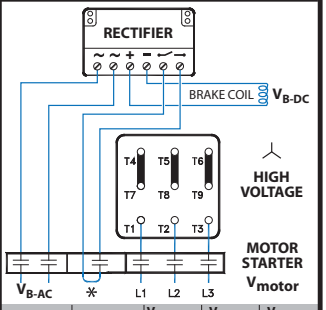

MOTOR	RECTIFIER	V_{motor}	V_{B-AC}	V_{B-DC}
230YY/460Y	PMG500	460 VAC	460 VAC	205 VDC

PMG105D — 50

SEPERATE POWER SOURCE
FAST-RELEASE (OVER EXCITATION)
FAST STOPPING (DC-SWITCHING)

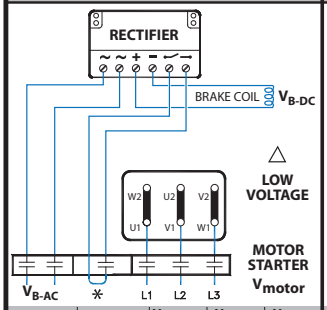

MOTOR	RECTIFIER	V_{motor}	V_{B-AC}	V_{B-DC}
208Δ/360Y	PMG500	208 VAC	208 VAC	105 VDC
230Δ/400Y	PMG500	230 VAC	230 VAC	105 VDC
400Δ/690Y	PMG500	400 VAC	400 VAC	180 VDC
460Δ/Y	PMG500	460 VAC	460 VAC	205 VDC

PMG105E — 50

SEPERATE POWER SOURCE
FAST-RELEASE (OVER EXCITATION)
FAST STOPPING (DC-SWITCHING)

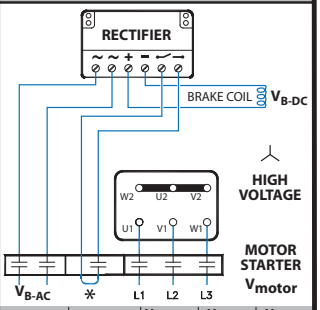

MOTOR	RECTIFIER	V_{motor}	V_{B-AC}	V_{B-DC}
230Δ/400Y	PMG500	400 VAC	230 VAC	105 VDC

✻ The normally open contact/s (NO) is not supplied by NORD. It must close at the same time power is supplied to the brake. The contact must be capable of switching inductive loads and/or be rated IEC AC3.

= Braking Method

Typical Connection Diagrams - Single Phase Motors

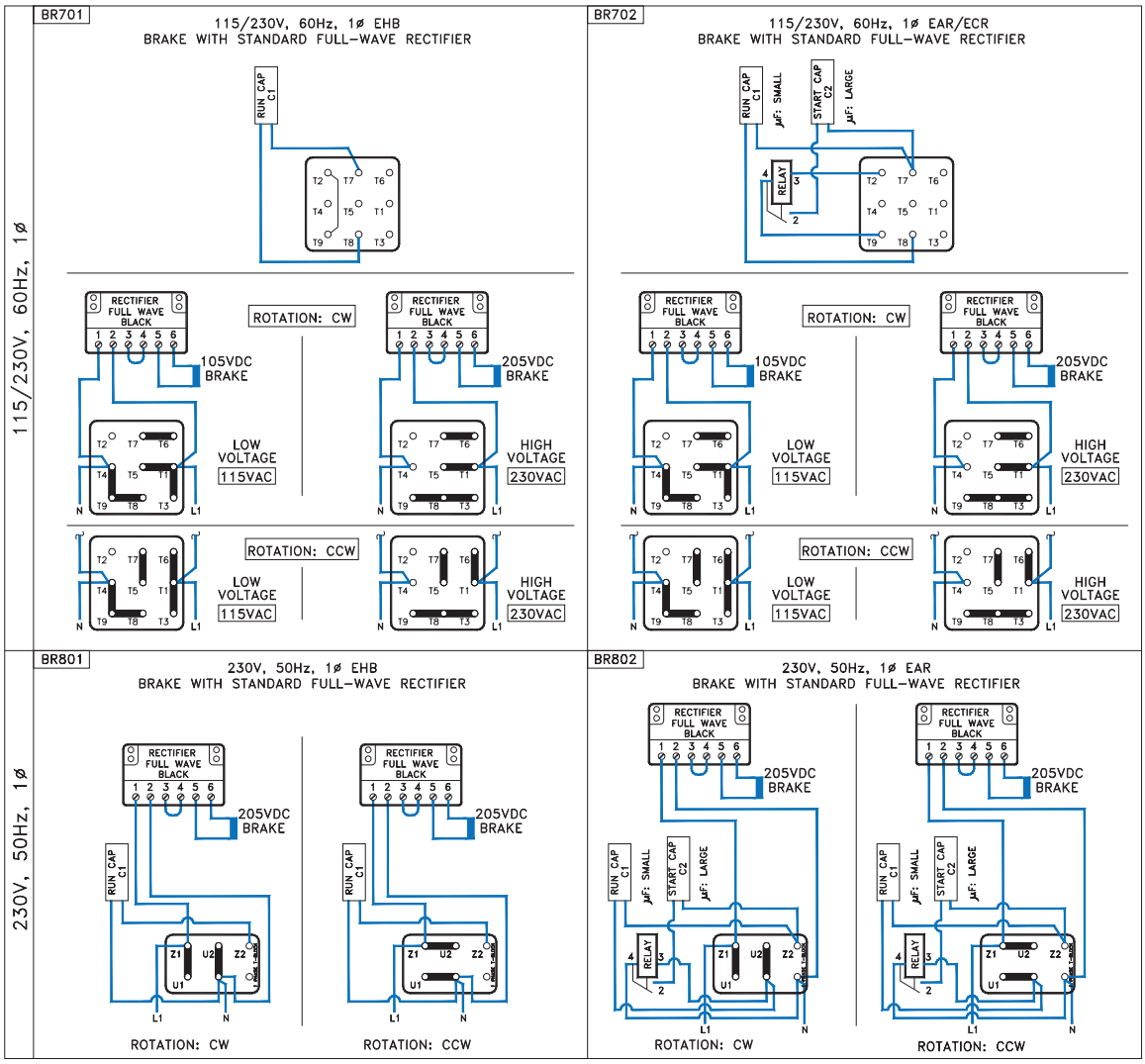

Troubleshooting Information

Troubleshooting	Cause	Remedy
Brake doesn't release	Air gap too large	Check air gap and adjust
	Brake not recieving electrical power	Check electrical connection
	Failed rectifier	Replace rectifier
	Brake is getting too warm	Use fast response (FR) rectifier
	Voltage to brake coil too small	Check connection voltageof brake coil
	Rectifier supply voltage from inverter	Rectifier voltage must be from seperate source. (Inverter output voltage varies)
Brake release is delayed	Air gap too large	Check air gap and adjust
	Voltage to brake coil too small	Check connection voltage of brake coil
Brake does not engage	Voltage to coil too large	Check connection voltages of brake windings
	Hand release is adjusted incorrectly	Adjust to correct air gap
	Anchor plate mechanically blocked	Remove mechanical blockage
Brake engagement is delayed	Voltage to coil too large	Check connection voltage of brake windings
	Brake is switched to AC side	Use DC switching

FAST ACTING BRAKE RECTIFIERS (GPE, GPU & PMG)

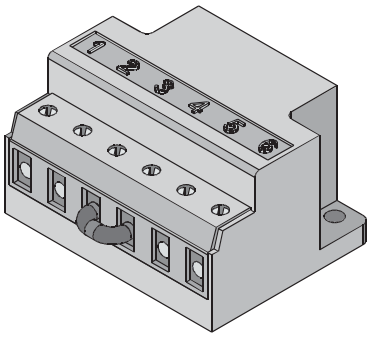

General Instructions

This manual provides general operating instructions for the "Fast Acting Brake Rectifiers type "GPE, GPU, and PMG" that are commonly offered by NORD in addition to the standard brake control rectifiers. Please feel free to contact NORD with any questions concerning the supplied brake rectifiers and brake components.

Safety Notice

Only qualified personnel should attempt installation, operation and maintenance of NORD brakes and brake rectifiers. If you have a question about a procedure or are uncertain about any detail, seek clarification and DO NOT PROCEED.

⚠ WARNING ⚠

- This equipment contains high electrical voltage. Remove and lockout all power from the electric motor and brake before any work is completed on the brake.
- The user is responsible for conforming to all national and local electrical and safety codes. Wiring practices, proper grounding, disconnects, and over current protection, are of particular importance.
- Make certain the load is supported when servicing the brake. Removing power from the brake or removing the brake from the motor will release the load, which may cause severe injury or death.
- Failure to follow proper procedures and precautions may result in severe bodily injury or death.

Brake Control Rectifiers

NORD brake control rectifiers convert AC voltage to DC voltage. Rectifiers are used because most applications require AC voltage to power the motor, but DC power is required to power the brake and DC power is not typically available. NORD brakemotors typically include the rectifier located inside the terminal box.

Rectifier Advantages

- Individual power source for each brake.
- Compact size, mounted inside the terminal box.
- Multiple types, voltage options and release/engagement modes available.
- Mountable in a separate control cabinet.
- Integral protection against voltage spikes.

Standard Rectifier Types

Full-Wave Rectifier

A rectifier in which both the positive and negative half-cycles of the AC input signal are rectified to produce a uni-directional DC current supply to the load or the brake. The output voltage is 90% of the input voltage ($V_{DC} = 0.90 \times V_{AC}$).

Half-Wave Rectifier

A rectifier in which only alternate half-cycles of the AC input signal are rectified to produce a uni-directional DC current supply to the load or the brake. The output voltage is 45% of the input voltage ($V_{DC} = 0.45 \times V_{AC}$).

Dual-Wave Rectifier

A rectifier that can be wired as either a full-wave rectifier or a half-wave rectifier depending upon how it is connected to the AC input signal.

IMPORTANT NOTE

This manual provides general operating instructions for NORD brakes with Fast-Acting brake Rectifiers. For additional brake and brake rectifier information please reference User Manual U35000.

Fast-Acting or Push-Hybrid Rectifiers [GPE, GPU & PMG]

A push-hybrid rectifier or fast-acting brake rectifier provides an initial "push" in the form of a timed full-wave brake-release function, which is then followed by a continuous half-wave brake-holding function. There are two ways to apply these rectifiers as follows:

- "Overexcitation" of the brake coil provides faster brake release or improved cycling capacity. The DC voltage of the brake coil is determined based upon using a half-wave rectifier. The output voltage is 45% of the input voltage ($V_{DC} = 0.45 \times V_{AC}$).
- "Reducer-Power Holding" of the brake coil maintains the brake in a released state by using only 25% of the power needed for the initial brake release. This results in very fast brake stopping. The DC voltage of the brake coil is determined based upon using a full-wave rectifier. The output voltage is 90% of the input voltage. ($V_{DC} = 0.90 \times V_{AC}$).

IMPORTANT NOTE

In order to prevent rapid wear, the PMG 500 rectifier is required when utilizing the larger 800 Nm (590 lb-ft) and 1200 Nm (885 lb-ft) twin-rotor brakes. The PMG500 rectifier is wired to "overexcite" the brake during its initial release.

Push-Hybrid Rectifiers External DC Switching (GPE)

Like the standard NORD brake control rectifiers, NORD's fast acting brake control rectifiers convert AC voltage to DC voltage. The "Fast Acting Brake Rectifiers"are utilized to improve brake performance and are often recommended in order to provide shorter brake release times or to provide faster stopping times.

The fast acting rectifiers are a two-stage "push" design, when power is first applied these rectifiers operate like a full-wave rectifier and then after a relatively short period of time they act like a half-wave rectifier. The GPE type rectifiers start out in full-wave mode when power is first applied and then after approximately 250 ms they switch to half-wave mode.

GPE rectifiers were designed for external control of the brake's DC-switching. GPE rectifiers are primarily used in across-the-line applications where the brake power is supplied by the motor terminals but they may also be used in situations where the brake power is supplied separately to the brake rectifier.

There are two ways to apply the fast acting rectifiers:

- The first method, known as "Overexcitation," provides fast brake release. The brake coil is selected like a half-wave system (45% of the AC supply voltage).
- The second method, known as "Reduced Power Holding," provides very fast brake stopping. The brake coil is selected like a full-wave system (90% of the AC supply voltage).

IMPORTANT NOTE

If the motor is connected to a frequency inverter, soft start, or is a two-speed motor, then seperate AC power must be supplied to the brake rectifier.

GPE Rectifier Dimensions

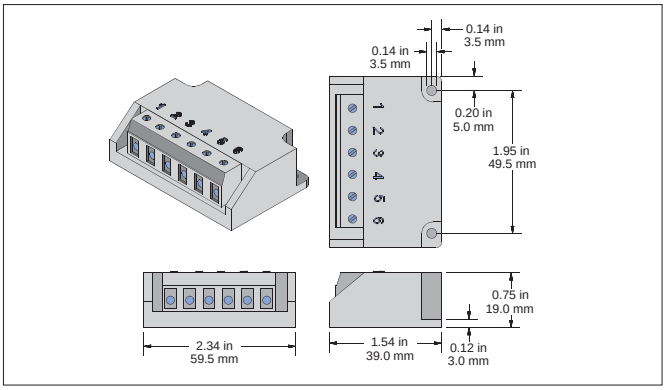

Ratings & Part Numbers

Model Type	GPE20L	GPE40L
Part Number	19140230	19140240
Protection (electronics)	Coated	Coated
Color	Black	
Input Voltage (V_{AC})	200V-275V	380V-480V
Output Voltage (V_{DC})	(V_{DC}=0.45 x V_{AC}) - As Half-Wave (V_{DC}=0.90 x V_{AC}) - As Full-Wave	
Rated Current @ 40°C	0.7 A	0.7A
Rated Current @ 75°C	0.5 A	0.5A
Temperature Range	-20°C to 75°C	
DC-Switching via	External Contact or IR Relay	

Braking Method

Braking Method	Break Release (Start)	Brake Engage (Stop)	Power Source
40	Standard	Very Fast (Reduced Power Holding)	Motor terminals
30	Fast (Overecitation)	Standard (AC Switching)	Motor terminals
35	Fast (Overecitation)	Fast (DC Switching)	Motor terminals

Basic Connection (AC & DC Switching)

The GPE brake system can be connected for standard stopping (AC-Switching), fast stopping (DC-Switching) and very fast stopping (Reduced power holding & DC-Switching). Fast brake release can also be achieved by selecting a different brake coil combination.

STANDARD STOPPING (AC-SWITCHING)

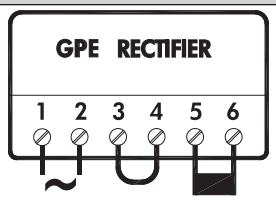

1 & 2	3 & 4	5 & 6
AC BRAKE VOLTAGE	JUMPER	DC BRAKE

FAST & VERY FAST STOPPING (DC-SWITCHING)

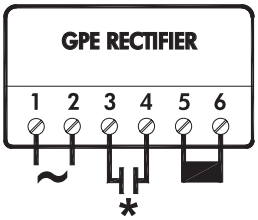

1 & 2	3 & 4	5 & 6
AC BRAKE VOLTAGE	NORMALLY OPEN CONTACT	DC BRAKE

* The normally open contact/s (NO) is not supplied by NORD it must close at the same time power is supplied to the brake. The contact must be capable of switching inductive loads and/or be rated at IEC AC3.

Push-Hybrid Rectifiers Integrated DC Switching (GPU)

Like the standard NORD brake control rectifiers, NORD's fast acting brake control rectifiers convert AC voltage to DC voltage. The "Fast Acting Brake Rectifiers"are utilized to improve brake performance and are often recommended in order to provide shorter brake release times or to provide faster stopping times.

The fast acting rectifiers are a two-stage "push" design. When power is first applied these rectifiers operate like a full-wave rectifier and then after a relatively short period of time they act like a half-wave rectifier. The GPU rectifiers start out in full-wave mode when power is first applied and then after approximately 250 ms they switch to half-wave mode.

GPU rectifiers were designed for integrated control of the brake's DC-switching and are voltage sensing. GPU rectifiers are primarily used in applications where there is a frequency inverter, soft start, or two-speed motor. Seperate AC power must be supplied to the brake rectifier.

There are two ways to apply the fast acting rectifiers:

- The first method, known as "Overexcitation," provides fast brake release. The brake coil is selected like a half-wave system (45% of the AC supply voltage).
- The second method, known as "Reduced Power Holding," provides very fast brake stopping. The brake coil is selected like a full-wave system (90% of the AC supply voltage).

IMPORTANT NOTE

The GPU rectifier may also be utilized for across-the-line applications; however it must always be powered separate from the motor and have its own pair of contactors or starters. It is unadvisable to use the motor terminal block to supply the GPU rectifier's AC power due to the motor's slow energy dissipation when switched off.

IMPORTANT NOTE

If the motor is connected to a frequency inverter, soft start, or is a two-speed motor, then seperate AC power must be supplied to the brake rectifier.

Braking Method

Braking Method	Break Release (Start)	Brake Engage (Stop)	Power Source
55	Standard	Very Fast (Reduced Power Holding)	Seperate power
45	Fast (Overecitation)	Standard (AC Switching)	Seperate power
50	Fast (Overecitation)	Fast (DC Switching)	Seperate power

GPU Rectifier Dimensions

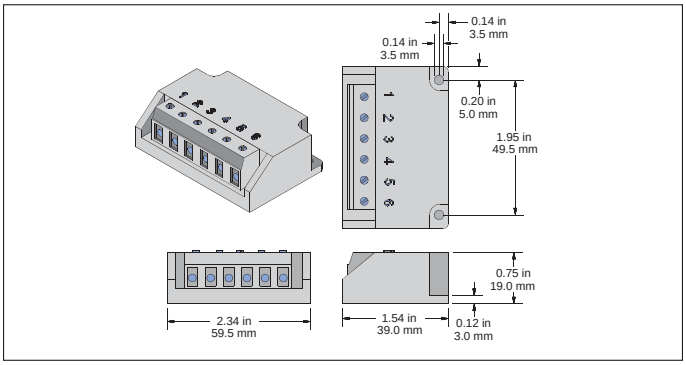

Ratings & Part Numbers

Model Type	GPU20L	GPU40L
Part Number	19140090	19140170
Protection (electronics)	Coated	Coated
Color	Black	
Input Voltage (V_{AC})	200V-275V	380V-480V
Output Voltage (V_{DC})	(V_{DC}=0.45 x V_{AC}) - As Half-Wave (V_{DC}=0.90 x V_{AC}) - As Full-Wave	
Rated Current @ 40°C	0.7A	0.7A
Rated Current @ 75°C	0.5A	0.5A
Temperature Range	-20°C to 75°C	
DC-Switching via	Internal Activation	

Basic Connection (AC & DC Switching)

The GPU brake system can be connected for standard stopping (AC-Switching), fast stopping (DC-Switching) and very fast stopping (Reduced power holding & DC-Switching). Fast brake release can also be achieved by selecting a different brake coil combination.

STANDARD STOPPING AC-SWITCHING

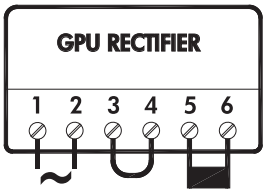

1 & 2	3 & 4	5 & 6
AC BRAKE VOLTAGE	JUMPER	DC BRAKE

FAST & VERY FAST STOPPING DC-SWITCHING

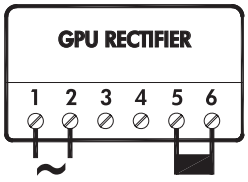

1 & 2	3 & 4	5 & 6
AC BRAKE VOLTAGE	-	DC BRAKE

Push-Hybrid Rectifiers External DC Switching (PMG)

Like the standard NORD brake control rectifiers, NORD's fast acting brake control rectifiers convert AC voltage to DC voltage. The "Fast Acting Brake Rectifiers"are utilized to improve brake performance and are often recommended in order to provide shorter brake release times or to provide faster stopping times.

The fast acting rectifiers are a two-stage "push" design. When power is first applied these rectifiers operate like a full-wave rectifier and then after a relatively short period of time they act like a half-wave rectifier. The PMG type rectifiers start out in full-wave mode when power is first applied and then after approximately 250 ms they switch to half-wave mode.

PMG rectifiers were designed for external control of the brake's DC-switching. PMG rectifiers are primarily used in across-the-line applications where the brake power is supplied by the motor terminals, but they may also be used in situations where the brake power is supplied separately from the brake rectifier.

There are two ways to apply the fast acting rectifiers:

- The first method, known as "Overexcitation," provides fast brake release. The brake coil is selected like a half-wave system (45% of the AC supply voltage).
- The second method, known as "Reduced Power Holding," provides very fast brake stopping. The brake coil is selected like a full-wave system (90% of the AC supply voltage).

IMPORTANT NOTE

If the motor is connected to a frequency inverter, soft start, or is a two-speed motor, then seperate AC power must be supplied to the brake rectifier.

PMG Rectifier Dimensions

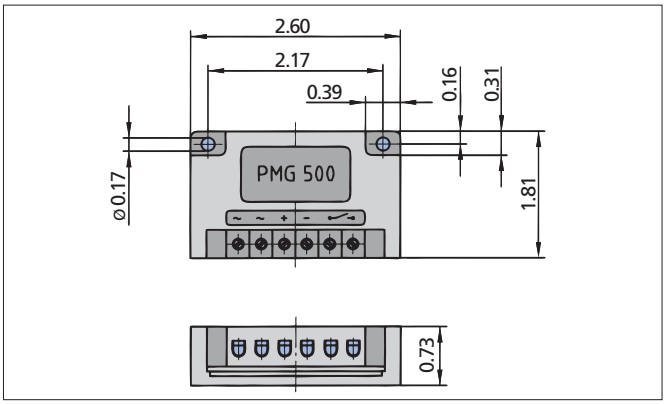

Ratings & Part Numbers

Model Type	PMG 500
Part Number	19140200
Protection (electronics)	Coated
Color	Black
Input Voltage (V_{AC})	200-500V_{AC} +/- 10%
Output Voltage (V_{DC})	(V_{DC}=0.45 x V_{AC}) - As Half-Wave (V_{DC}=0.90 x V_{AC}) - As Full-Wave
Rated Current @ 40°C	4.0 A
Rated Current @ 75°C	2.8 A
Temperature Range	-15°C to 80°C
DC-Switching via	External Contact

Braking Method

Braking Method	Break Release (Start)	Brake Engage (Stop)	Power Source
40	Standard	Very Fast (Reduced Power Holding)	Motor terminals
30	Fast (Overecitation)	Standard (AC Switching)	Motor terminals
35	Fast (Overecitation)	Fast (DC Switching)	Motor terminals
55	Standard	Very Fast (Reduced Power Holding)	Seperate power
45	Fast (Overecitation)	Standard (AC Switching)	Seperate power
50	Fast (Overecitation)	Fast (DC Switching)	Seperate power

Basic Connection (AC & DC Switching)

The PMG brake system can be connected for standard stopping (AC-Switching), fast stopping (DC-Switching) and very fast stopping (Reduced power holding & DC-Switching). Fast brake release can also be achieved by selecting a different brake coil combination.

STANDARD STOPPING (AC-SWITCHING)

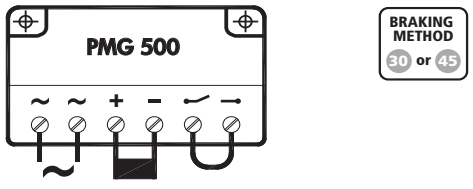

~ & ~	+ & -	⏜ & ⊸
AC BRAKE VOLTAGE	DC BRAKE	JUMPER

FAST & VERY FAST STOPPING (DC-SWITCHING)

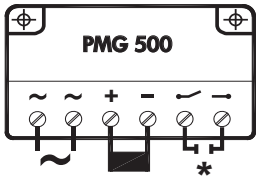

~ & ~	+ & -	⏜ & ⊸
AC BRAKE VOLTAGE	DC BRAKE	NORMALLY OPEN CONTACT

* The normally open contact/s (NO) is not supplied by NORD it must close at the same time power is supplied to the brake. The contact must be capable of switching inductive loads and/or be rated at IEC AC3.

Brake Times & Electrical Selection

Brake timing performance is critical in selecting the optimal brake system. NORD brakes can provide exceptional performance in terms of the release (start) times and engagement (stop) times. Use the following guidelines in order to select the correct brake control components and connections.

1) Determine if the brake needs to be wired directly from the motor terminal block or powered by a separate source.

- If you are using a frequency inverter, soft-start or a two speed motor you will need to supply the rectifier from a separate power source.

- If the motor is powered direct across-the-line the rectifier power can be supplied from the motor's terminal block.

2) What type of performance do I need?

- Is the standard brake performance OK?

- Is a higher performance required for fast brake release or very fast brake stopping?

3) Determine the brake supply voltage and check the rectifier compatability using the table on the page 6.

Selection Suggestions

When Fast or Very Fast Stopping is Recommended

Any applications that require quick stops and positive action at stand-still

Recommended Applications

- conveyors and inclined conveyors
- hoists and lifts
- bulk material handling equipment (bucket elevators, idler conveyor's).

⚠ *WARNING* ⚠

Hoisting (lifting/lowering) applications - must have the brake wired for fast response (DC-switching)

When Fast-Release is Recommended (Overexcitation)

Any application that is very high-cycling with frequent starts and stops. These applications require the brake to release very-quickly in order to avoid excessive heat build-up in the AC motor and brake coil.

Recommended Applications

- Index conveyors
- Diverters

Power Source	Brake Release (start)	Brake engagement (stop)	Braking Method *	Rectifier
Motor Terminal Block	Standard	Very Fast (Reduced power holding)	40	GPE or PMG 500
	Fast (Overexcitation)	Standard (AC switching)	30	GPE or PMG 500
	Fast (Overexcitation)	Fast (DC switching)	35	GPE or PMG 500
Seperate Power Source	Standard	Very Fast (Reduced power holding)	55	GPU or PMG 500
	Fast (Overexcitation)	Standard (AC switching)	45	GPU or PMG 500
	Fast (Overexcitation)	Fast (DC switching)	50	GPU or PMG 500

*** Braking methods referenced in connection diagrams on pages 7-11.**

Rectifier Supply Voltage (VAC)	Brake Coil Voltage (VDC)	Braking Method	Rectifier Type	Rectifier P/N	BRE 5	BRE 10	BRE 20	BRE 40	BRE 60	BRE 100	BRE 150	BRE 250	BRE 400	BRE 800	BRE 1200
208 (200-208)	105	30	GPE20L	19140230	X	X	X	X							
	105	30	PMG500	19140200					X	X	X	X	X	X	X
	105	35	GPE20L	19140230	X	X	X	X							
	105	35	PMG500	19140200					X	X	X	X	X	X	X
	180	40	GPE20L	19140230	X	X	X	X	X	X	X				
	180	40	PMG500	19140200								X	X	X	X
	105	45	GPU20L	19140090	X	X	X	X							
	105	45	PMG500	19140200					X	X	X	X	X	X	X
	105	50	GPU20L	19140090	X	X	X	X							
	105	50	PMG500	19140200					X	X	X	X	X	X	X
	180	55	GPU20L	19140090	X	X	X	X	X	X	X				
	180	55	PMG500	19140200								X	X	X	X
230 (220-240)	105	30	GPE20L	19140230	X	X	X	X							
	105	30	PMG500	19140200					X	X	X	X	X	X	X
	105	35	GPE20L	19140230	X	X	X	X	X	X	X				
	105	35	PMG500	19140200								X	X	X	X
	205	40	GPE20L	19140230	X	X	X	X	X	X	X				
	205	40	PMG500	19140200								X	X	X	X
	105	45	GPU20L	19140090	X	X	X	X							
	105	45	PMG500	19140200					X	X	X	X	X	X	X
	105	50	GPU20L	19140090	X	X	X	X							
	105	50	PMG500	19140200					X	X	X	X	X	X	X
	205	55	GPU20L	19140090	X	X	X	X	X	X	X				
	205	55	PMG500	19140200								X	X	X	X
332	180	30	GPE40L	19140240	X	X	X	X	X	X	X				
	180	30	PMG500	19140200								X	X	X	X
	180	35	GPE40L	19140240	X	X	X	X	X	X	X				
	180	35	PMG500	19140200								X	X	X	X
	180	45	GPU40L	19140170	X	X	X	X	X	X	X				
	180	50	GPU40L	19140170	X	X	X	X	X	X	X				
400 (380-415)	180	30	GPE40L	19140240	X	X	X	X	X	X	X				
	180	30	PMG500	19140200								X	X	X	X
	180	35	GPE40L	19140240	X	X	X	X	X	X	X				
	180	35	PMG500	19140200								X	X	X	X
	180	45	GPU20L	19140090	X	X	X	X	X	X	X				
	180	45	PMG500	19140200								X	X	X	X
	180	50	GPU20L	19140090	X	X	X	X	X	X	X				
	180	50	PMG500	19140200								X	X	X	X
460 (440-480)	205	30	GPE40L	19140240	X	X	X	X	X	X	X				
	205	30	PMG500	19140200								X	X	X	X
	205	35	GPE40L	19140240	X	X	X	X	X	X	X				
	205	35	PMG500	19140200								X	X	X	X
	205	45	GPU40L	19140170	X	X	X	X	X	X	X				
	205	45	PMG500	19140200								X	X	X	X
	205	50	GPU40L	19140170	X	X	X	X	X	X	X				
	205	50	PMG500	19140200								X	X	X	X

GP101A

POWERED FROM MOTOR TERMINAL BLOCK
FAST-RELEASE (OVER EXCITATION)
NORMAL STOPPING (AC-SWITCHING)

30

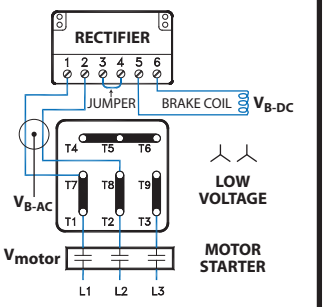

MOTOR	RECTIFIER	Vmotor	VB-AC	VB-DC
230YY/460Y	GPE20L	230 VAC	230 VAC	105 VDC

GP101B

POWERED FROM MOTOR TERMINAL BLOCK
FAST-RELEASE (OVER EXCITATION)
NORMAL STOPPING (AC-SWITCHING)

30

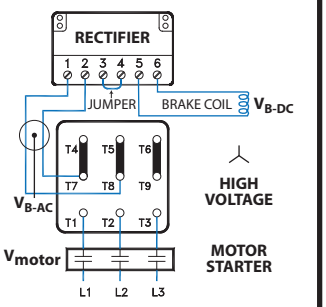

MOTOR	RECTIFIER	Vmotor	VB-AC	VB-DC
230YY/460Y	GPE20L	460 VAC	230 VAC	105 VDC

GP101C

POWERED FROM MOTOR TERMINAL BLOCK
FAST-RELEASE (OVER EXCITATION)
NORMAL STOPPING (AC-SWITCHING)

30

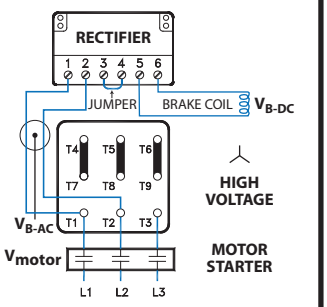

MOTOR	RECTIFIER	Vmotor	VB-AC	VB-DC
230YY/460Y	GPE40L	460 VAC	460 VAC	205 VDC

GP101D

POWERED FROM MOTOR TERMINAL BLOCK
FAST-RELEASE (OVER EXCITATION)
NORMAL STOPPING (AC-SWITCHING)

30

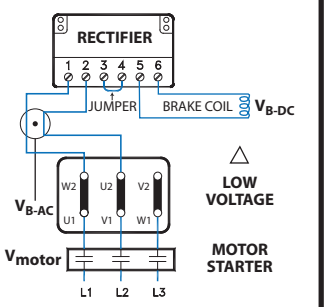

MOTOR	RECTIFIER	Vmotor	VB-AC	VB-DC
208Δ/360Y	GPE20L	208 VAC	208 VAC	105 VDC
230Δ/400Y	GPE20L	230 VAC	230 VAC	105 VDC
400Δ/690Y	GPE40L	400 VAC	400 VAC	180 VDC
460Δ/Y	GPE40L	460 VAC	460 VAC	205 VDC

GP101E

POWERED FROM MOTOR TERMINAL BLOCK
FAST-RELEASE (OVER EXCITATION)
NORMAL STOPPING (AC-SWITCHING)

30

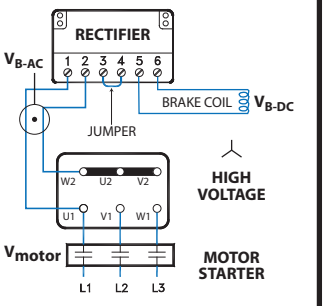

MOTOR	RECTIFIER	Vmotor	VB-AC	VB-DC
230Δ/400Y	GPE20L	400 VAC	230 VAC	105 VDC
332Δ/575Y	GPE40L	575 VAC	332 VAC	180 VDC

GP102A

POWERED FROM MOTOR TERMINAL BLOCK
FAST-RELEASE (OVER EXCITATION)
FAST STOPPING (DC-SWITCHING)

35

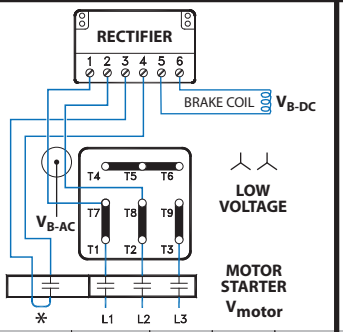

MOTOR	RECTIFIER	Vmotor	VB-AC	VB-DC
230YY/460Y	GPE20L	230 VAC	230 VAC	105 VDC

GP102B

POWERED FROM MOTOR TERMINAL BLOCK
FAST-RELEASE (OVER EXCITATION)
FAST STOPPING (DC-SWITCHING)

35

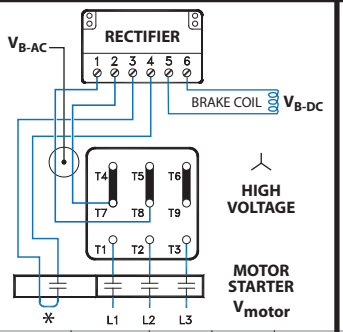

MOTOR	RECTIFIER	Vmotor	VB-AC	VB-DC
230YY/460Y	GPE20L	460 VAC	230 VAC	105 VDC

GP102C

POWERED FROM MOTOR TERMINAL BLOCK
FAST-RELEASE (OVER EXCITATION)
FAST STOPPING (DC-SWITCHING)

35

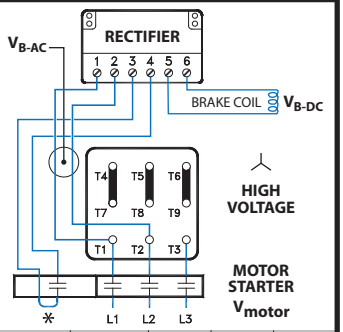

MOTOR	RECTIFIER	Vmotor	VB-AC	VB-DC
230YY/460Y	GPE40L	460 VAC	460 VAC	205 VDC

GP102D

POWERED FROM MOTOR TERMINAL BLOCK
FAST-RELEASE (OVER EXCITATION)
FAST STOPPING (DC-SWITCHING)

35

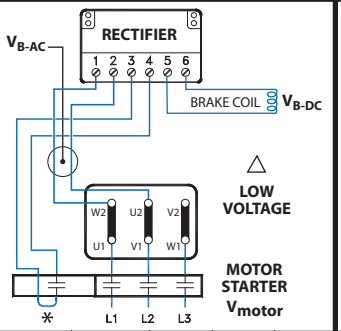

MOTOR	RECTIFIER	Vmotor	VB-AC	VB-DC
208Δ/360Y	GPE20L	208 VAC	208 VAC	105 VDC
230Δ/400Y	GPE20L	230 VAC	230 VAC	105 VDC
400Δ/690Y	GPE40L	400 VAC	400 VAC	180 VDC
460Δ/Y	GPE40L	460 VAC	460 VAC	205 VDC

GP102E

POWERED FROM MOTOR TERMINAL BLOCK
FAST-RELEASE (OVER EXCITATION)
FAST STOPPING (DC-SWITCHING)

35

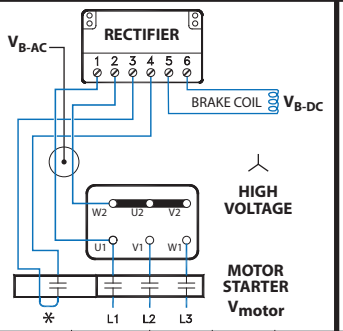

MOTOR	RECTIFIER	Vmotor	VB-AC	VB-DC
230Δ/400Y	GPE20L	400 VAC	230 VAC	105 VDC
332Δ/575Y	GPE40L	575 VAC	332 VAC	180 VDC

GP103A

POWERED FROM MOTOR TERMINAL BLOCK
STANDARD RELEASE
VERY FAST STOPPING
(DC-SWITCHING + REDUCED POWER HOLDING)

40

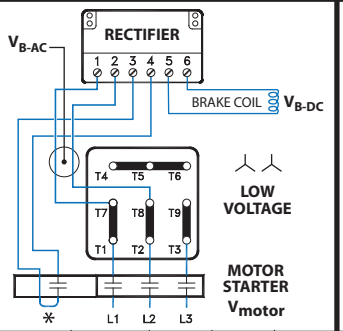

MOTOR	RECTIFIER	Vmotor	VB-AC	VB-DC
230YY/460Y	GPE20L	230 VAC	230 VAC	205 VDC

GP103B

POWERED FROM MOTOR TERMINAL BLOCK
STANDARD RELEASE
VERY FAST STOPPING
(DC-SWITCHING + REDUCED POWER HOLDING)

40

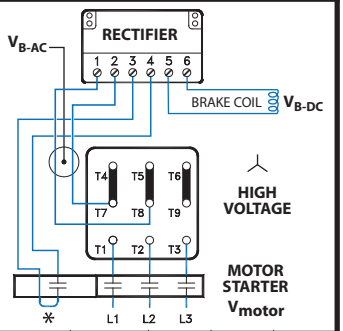

MOTOR	RECTIFIER	Vmotor	VB-AC	VB-DC
230YY/460Y	GPE20L	460 VAC	230 VAC	205 VDC

* The normally open contact/s (NO) is not supplied by NORD. It must close at the same time power is supplied to the brake. The contact must be capable of switching inductive loads and/or be rated IEC AC3.

= Braking Method

GP103C — POWERED FROM MOTOR TERMINAL BLOCK — STANDARD RELEASE — VERY FAST STOPPING (DC-SWITCHING + REDUCED POWER HOLDING) — 40

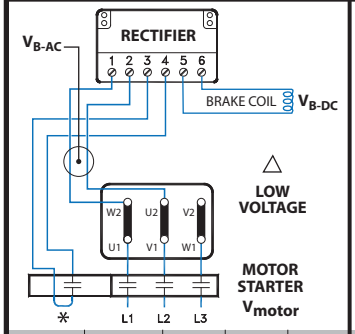

MOTOR	RECTIFIER	V_{motor}	V_{B-AC}	V_{B-DC}
208Δ/360Y	GPE20L	208 VAC	208 VAC	180 VDC
230Δ/400Y	GPE20L	230 VAC	230 VAC	205 VDC

GP103D — POWERED FROM MOTOR TERMINAL BLOCK — STANDARD RELEASE — VERY FAST STOPPING (DC-SWITCHING + REDUCED POWER HOLDING) — 40

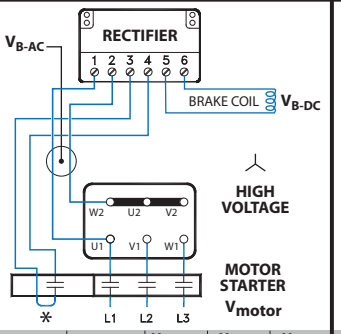

MOTOR	RECTIFIER	V_{motor}	V_{B-AC}	V_{B-DC}
230Δ/400Y	GPE20L	400 VAC	230 VAC	205 VDC

GP104A — SEPERATE POWER SOURCE — FAST-RELEASE (OVER EXCITATION) — NORMAL STOPPING (AC-SWITCHING) — 45

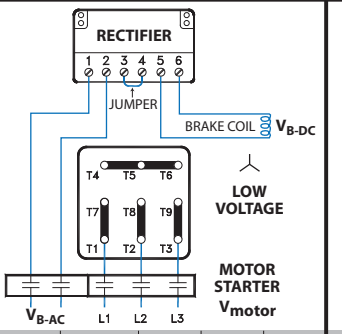

MOTOR	RECTIFIER	V_{motor}	V_{B-AC}	V_{B-DC}
230YY/460Y	GPU20L	230 VAC	230 VAC	105 VDC

GP104B — SEPERATE POWER SOURCE — FAST-RELEASE (OVER EXCITATION) — NORMAL STOPPING (AC-SWITCHING) — 45

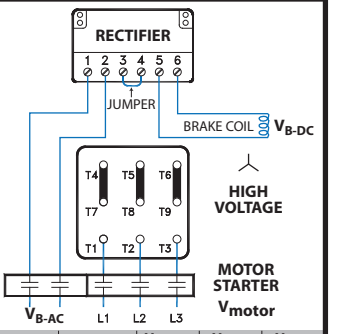

MOTOR	RECTIFIER	V_{motor}	V_{B-AC}	V_{B-DC}
230YY/460Y	GPU20L	460 VAC	230 VAC	105 VDC

GP104C — SEPERATE POWER SOURCE — FAST-RELEASE (OVER EXCITATION) — NORMAL STOPPING (AC-SWITCHING) — 45

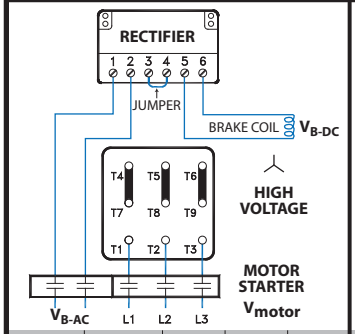

MOTOR	RECTIFIER	V_{motor}	V_{B-AC}	V_{B-DC}
230YY/460Y	GPU40L	460 VAC	460 VAC	205 VDC

GP104D — SEPERATE POWER SOURCE — FAST-RELEASE (OVER EXCITATION) — NORMAL STOPPING (AC-SWITCHING) — 45

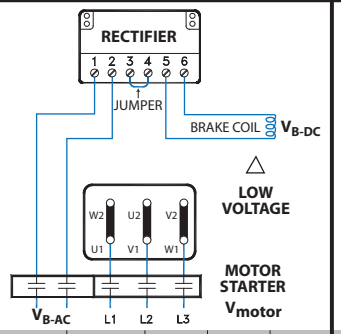

MOTOR	RECTIFIER	V_{motor}	V_{B-AC}	V_{B-DC}
208Δ/360Y	GPU20L	208 VAC	208 VAC	105 VDC
230Δ/400Y	GPU20L	230 VAC	230 VAC	105 VDC
400Δ/690Y	GPU40L	400 VAC	400 VAC	180 VDC
460Δ/Y	GPU40L	460 VAC	460 VAC	205 VDC

GP104E — SEPERATE POWER SOURCE — FAST-RELEASE (OVER EXCITATION) — NORMAL STOPPING (AC-SWITCHING) — 45

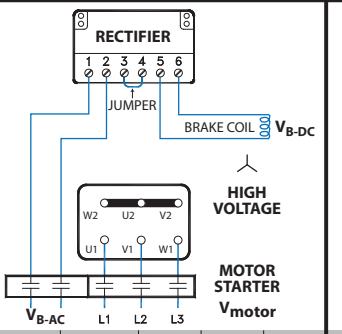

MOTOR	RECTIFIER	V_{motor}	V_{B-AC}	V_{B-DC}
230Δ/400Y	GPU20L	400 VAC	230 VAC	105 VDC
332Δ/575Y	GPU40L	575 VAC	332 VAC	180 VDC

GP105A — SEPERATE POWER SOURCE — FAST-RELEASE (OVER EXCITATION) — FAST STOPPING (DC-SWITCHING) — 50

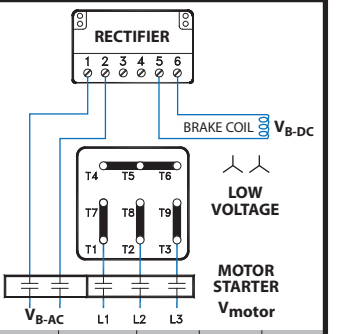

MOTOR	RECTIFIER	V_{motor}	V_{B-AC}	V_{B-DC}
230YY/460Y	GPU20L	230 VAC	230 VAC	105 VDC

GP105B — SEPERATE POWER SOURCE — FAST-RELEASE (OVER EXCITATION) — FAST STOPPING (DC-SWITCHING) — 50

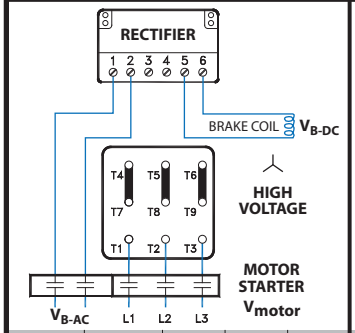

MOTOR	RECTIFIER	V_{motor}	V_{B-AC}	V_{B-DC}
230YY/460Y	GPU20L	460 VAC	230 VAC	105 VDC

GP105C — SEPERATE POWER SOURCE — FAST-RELEASE (OVER EXCITATION) — FAST STOPPING (DC-SWITCHING) — 50

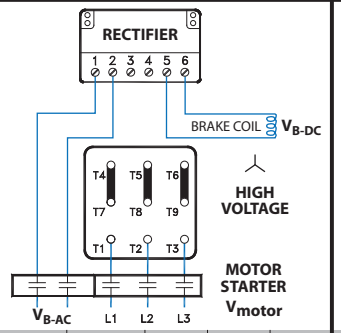

MOTOR	RECTIFIER	V_{motor}	V_{B-AC}	V_{B-DC}
230YY/460Y	GPU40L	460 VAC	460 VAC	205 VDC

GP105D — SEPERATE POWER SOURCE — FAST-RELEASE (OVER EXCITATION) — FAST STOPPING (DC-SWITCHING) — 50

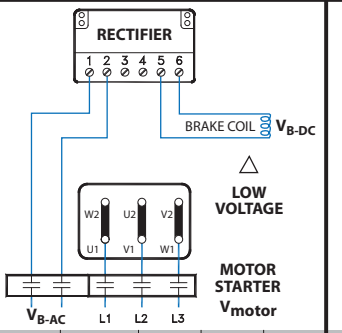

MOTOR	RECTIFIER	V_{motor}	V_{B-AC}	V_{B-DC}
208Δ/360Y	GPU20L	208 VAC	208 VAC	105 VDC
230Δ/400Y	GPU20L	230 VAC	230 VAC	105 VDC
400Δ/690Y	GPU40L	400 VAC	400 VAC	180 VDC
460Δ/Y	GPU40L	460 VAC	460 VAC	205 VDC

GP105E — SEPERATE POWER SOURCE — FAST-RELEASE (OVER EXCITATION) — FAST STOPPING (DC-SWITCHING) — 50

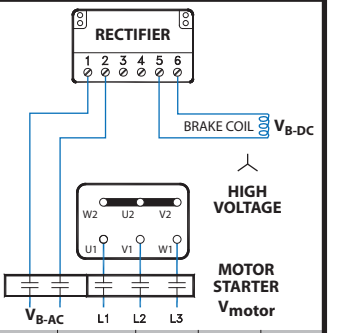

MOTOR	RECTIFIER	V_{motor}	V_{B-AC}	V_{B-DC}
230Δ/400Y	GPU20L	400 VAC	230 VAC	105 VDC
332Δ/575Y	GPU40L	575 VAC	332 VAC	180 VDC

✱ The normally open contact/s (NO) is not supplied by NORD. It must close at the same time power is supplied to the brake. The contact must be capable of switching inductive loads and/or be rated IEC AC3.

= Braking Method

FAST ACTING BRAKE RECTIFIERS (GPE, GPU & PMG)

GP106A — SEPERATE POWER SOURCE — STANDARD RELEASE — VERY FAST STOPPING (DC-SWITCHING + REDUCED POWER HOLDING) — 55

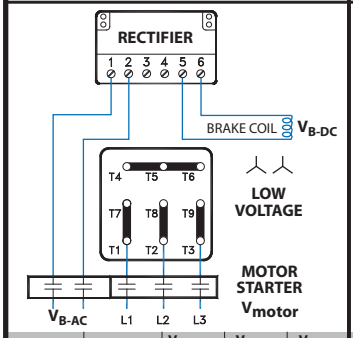

MOTOR	RECTIFIER	V_{motor}	V_{B-AC}	V_{B-DC}
230YY/460Y	GPU20L	230 VAC	230 VAC	205 VDC

GP106B — SEPERATE POWER SOURCE — STANDARD RELEASE — VERY FAST STOPPING (DC-SWITCHING + REDUCED POWER HOLDING) — 55

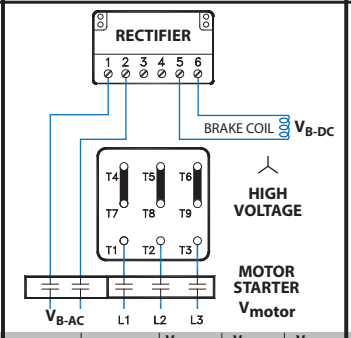

MOTOR	RECTIFIER	V_{motor}	V_{B-AC}	V_{B-DC}
230YY/460Y	GPU20L	460 VAC	230 VAC	205 VDC

GP106C — SEPERATE POWER SOURCE — STANDARD RELEASE — VERY FAST STOPPING (DC-SWITCHING + REDUCED POWER HOLDING) — 55

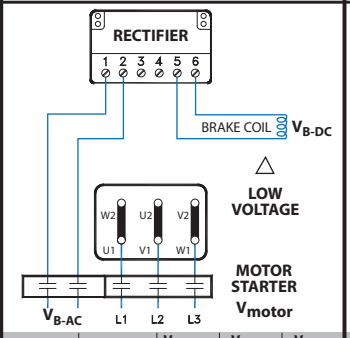

MOTOR	RECTIFIER	V_{motor}	V_{B-AC}	V_{B-DC}
208Δ/360Y	GPU20L	208 VAC	208 VAC	180 VDC
230Δ/400Y	GPU20L	230 VAC	230 VAC	205 VDC

GP106D — SEPERATE POWER SOURCE — STANDARD RELEASE — VERY FAST STOPPING (DC-SWITCHING + REDUCED POWER HOLDING) — 55

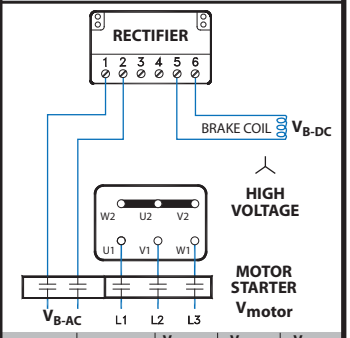

MOTOR	RECTIFIER	V_{motor}	V_{B-AC}	V_{B-DC}
230Δ/400Y	GPU20L	400 VAC	230 VAC	205 VDC

PMG101A — POWERED FROM MOTOR TERMINAL BLOCK — FAST-RELEASE (OVER EXCITATION) — NORMAL STOPPING (AC-SWITCHING) — 30

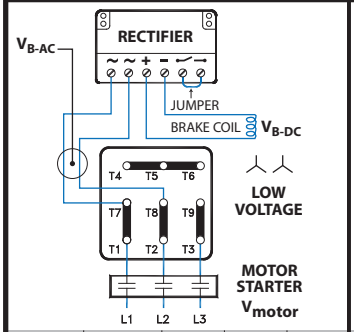

MOTOR	RECTIFIER	V_{motor}	V_{B-AC}	V_{B-DC}
230YY/460Y	PMG500	230 VAC	230 VAC	105 VDC

PMG101B — POWERED FROM MOTOR TERMINAL BLOCK — FAST-RELEASE (OVER EXCITATION) — NORMAL STOPPING (AC-SWITCHING) — 30

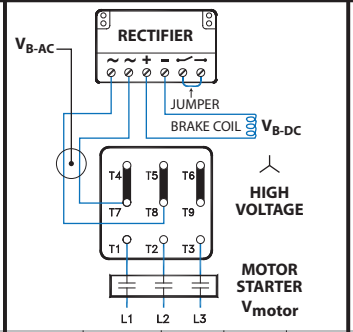

MOTOR	RECTIFIER	V_{motor}	V_{B-AC}	V_{B-DC}
230YY/460Y	PMG500	460 VAC	230 VAC	105 VDC

PMG101C — POWERED FROM MOTOR TERMINAL BLOCK — FAST-RELEASE (OVER EXCITATION) — NORMAL STOPPING (AC-SWITCHING) — 30

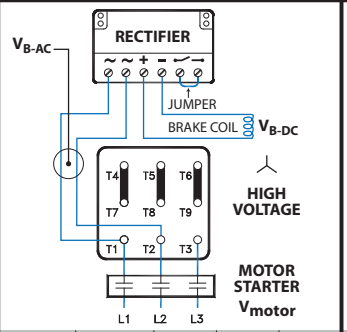

MOTOR	RECTIFIER	V_{motor}	V_{B-AC}	V_{B-DC}
230YY/460Y	PMG500	460 VAC	460 VAC	205 VDC

PMG101D — POWERED FROM MOTOR TERMINAL BLOCK — FAST-RELEASE (OVER EXCITATION) — NORMAL STOPPING (AC-SWITCHING) — 30

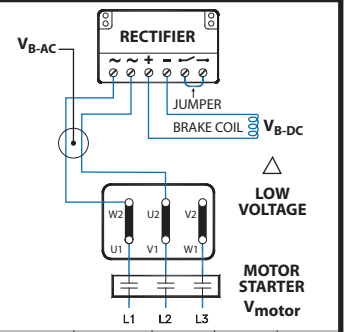

MOTOR	RECTIFIER	V_{motor}	V_{B-AC}	V_{B-DC}
208Δ/360Y	PMG500	208 VAC	208 VAC	105 VDC
230Δ/400Y	PMG500	230 VAC	230 VAC	105 VDC
400Δ/690Y	PMG500	400 VAC	400 VAC	180 VDC
460Δ/Y	PMG500	460 VAC	460 VAC	205 VDC

PMG101E — POWERED FROM MOTOR TERMINAL BLOCK — FAST-RELEASE (OVER EXCITATION) — NORMAL STOPPING (AC-SWITCHING) — 30

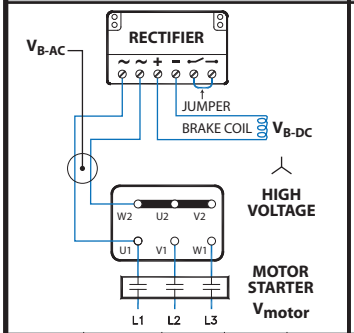

MOTOR	RECTIFIER	V_{motor}	V_{B-AC}	V_{B-DC}
230Δ/400Y	PMG500	400 VAC	230 VAC	105 VDC

PMG102A — POWERED FROM MOTOR TERMINAL BLOCK — FAST-RELEASE (OVER EXCITATION) — FAST STOPPING (DC-SWITCHING) — 35

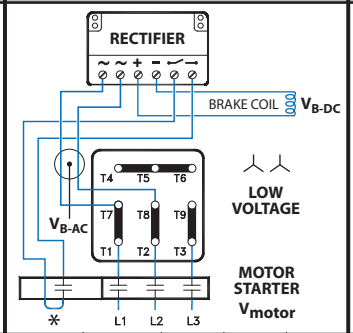

MOTOR	RECTIFIER	V_{motor}	V_{B-AC}	V_{B-DC}
230YY/460Y	PMG500	230 VAC	230 VAC	105 VDC

PMG102B — POWERED FROM MOTOR TERMINAL BLOCK — FAST-RELEASE (OVER EXCITATION) — FAST STOPPING (DC-SWITCHING) — 35

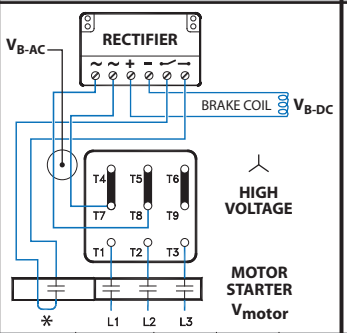

MOTOR	RECTIFIER	V_{motor}	V_{B-AC}	V_{B-DC}
230YY/460Y	PMG500	460 VAC	230 VAC	105 VDC

PMG102C — POWERED FROM MOTOR TERMINAL BLOCK — FAST-RELEASE (OVER EXCITATION) — FAST STOPPING (DC-SWITCHING) — 35

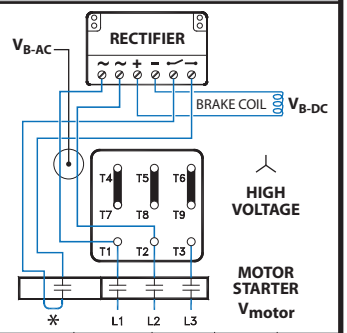

MOTOR	RECTIFIER	V_{motor}	V_{B-AC}	V_{B-DC}
230YY/460Y	PMG500	460 VAC	460 VAC	205 VDC

✻ The normally open contact/s (NO) is not supplied by NORD. It must close at the same time power is supplied to the brake. The contact must be capable of switching inductive loads and/or be rated IEC AC3.

= Braking Method

NORD Gear Limited
Toll Free in Canada: 800.668.4378

NORD Gear Corporation
Toll Free in the United States: 888.314.6673

FAST ACTING BRAKE RECTIFIERS (GPE, GPU & PMG)

PMG102D — POWERED FROM MOTOR TERMINAL BLOCK — FAST-RELEASE (OVER EXCITATION) — FAST STOPPING (DC-SWITCHING) — 35

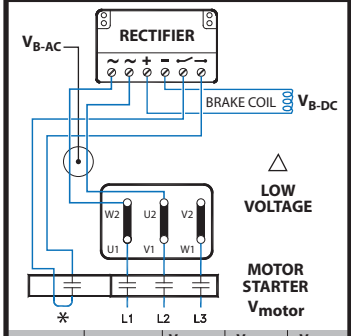

MOTOR	RECTIFIER	V_{motor}	V_{B-AC}	V_{B-DC}
208Δ/360Y	PMG500	208 VAC	208 VAC	105 VDC
230Δ/400Y	PMG500	230 VAC	230 VAC	105 VDC
400Δ/690Y	PMG500	400 VAC	400 VAC	180 VDC
460Δ/Y	PMG500	460 VAC	460 VAC	205 VDC

PMG102E — POWERED FROM MOTOR TERMINAL BLOCK — FAST-RELEASE (OVER EXCITATION) — FAST STOPPING (DC-SWITCHING) — 35

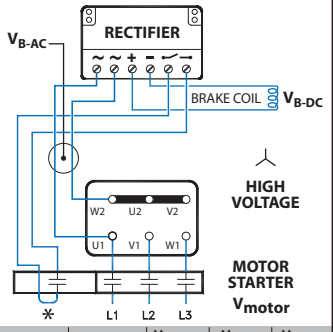

MOTOR	RECTIFIER	V_{motor}	V_{B-AC}	V_{B-DC}
230Δ/400Y	PMG500	400 VAC	230 VAC	105 VDC

PMG103A — POWERED FROM MOTOR TERMINAL BLOCK — STANDARD RELEASE — VERY FAST STOPPING (DC-SWITCHING + REDUCED POWER HOLDING) — 40

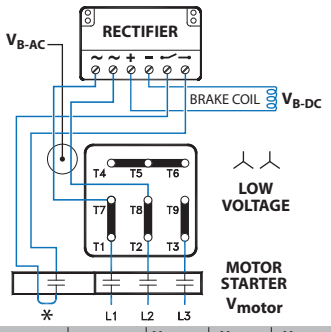

MOTOR	RECTIFIER	V_{motor}	V_{B-AC}	V_{B-DC}
230YY/460Y	PMG500	230 VAC	230 VAC	205 VDC

PMG103B — POWERED FROM MOTOR TERMINAL BLOCK — STANDARD RELEASE — VERY FAST STOPPING (DC-SWITCHING + REDUCED POWER HOLDING) — 40

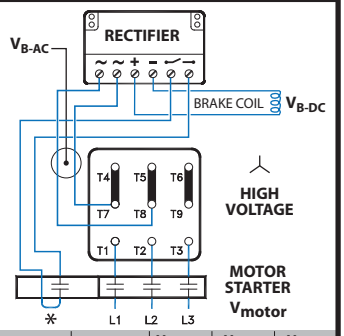

MOTOR	RECTIFIER	V_{motor}	V_{B-AC}	V_{B-DC}
230YY/460Y	PMG500	460 VAC	230 VAC	205 VDC

PMG103C — POWERED FROM MOTOR TERMINAL BLOCK — STANDARD RELEASE — VERY FAST STOPPING (DC-SWITCHING + REDUCED POWER HOLDING) — 40

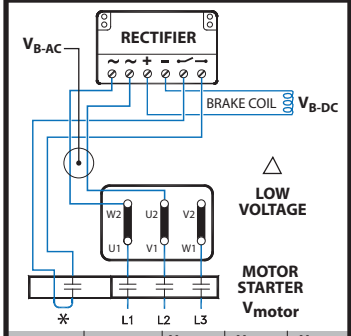

MOTOR	RECTIFIER	V_{motor}	V_{B-AC}	V_{B-DC}
208Δ/360Y	PMG500	208 VAC	208 VAC	180 VDC
230Δ/400Y	PMG500	230 VAC	230 VAC	205 VDC

PMG103D — POWERED FROM MOTOR TERMINAL BLOCK — STANDARD RELEASE — VERY FAST STOPPING (DC-SWITCHING + REDUCED POWER HOLDING) — 40

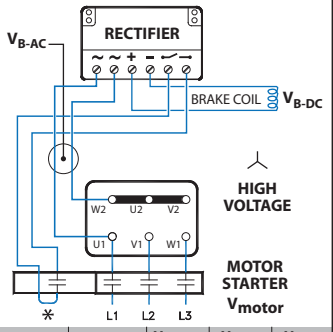

MOTOR	RECTIFIER	V_{motor}	V_{B-AC}	V_{B-DC}
230Δ/400Y	PMG500	400 VAC	230 VAC	205 VDC

PMG104A — SEPERATE POWER SOURCE — FAST-RELEASE (OVER EXCITATION) — NORMAL STOPPING (AC-SWITCHING) — 45

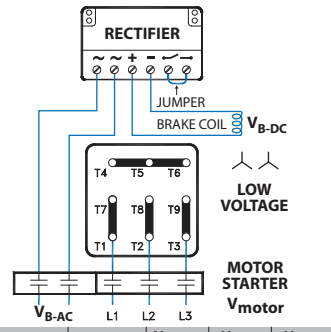

MOTOR	RECTIFIER	V_{motor}	V_{B-AC}	V_{B-DC}
230YY/460Y	PMG500	230 VAC	230 VAC	105 VDC

PMG104B — SEPERATE POWER SOURCE — FAST-RELEASE (OVER EXCITATION) — NORMAL STOPPING (AC-SWITCHING) — 45

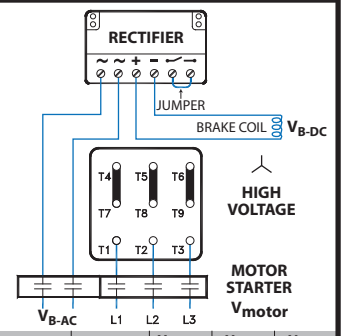

MOTOR	RECTIFIER	V_{motor}	V_{B-AC}	V_{B-DC}
230YY/460Y	PMG500	460 VAC	230 VAC	105 VDC

PMG104C — SEPERATE POWER SOURCE — FAST-RELEASE (OVER EXCITATION) — NORMAL STOPPING (AC-SWITCHING) — 45

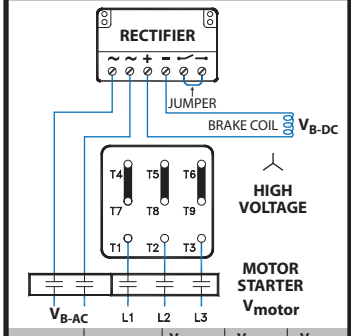

MOTOR	RECTIFIER	V_{motor}	V_{B-AC}	V_{B-DC}
230YY/460Y	PMG500	460 VAC	460 VAC	205 VDC

PMG104D — SEPERATE POWER SOURCE — FAST-RELEASE (OVER EXCITATION) — NORMAL STOPPING (AC-SWITCHING) — 45

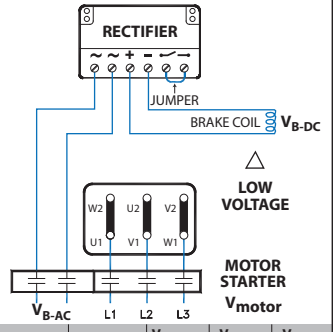

MOTOR	RECTIFIER	V_{motor}	V_{B-AC}	V_{B-DC}
208Δ/360Y	PMG500	208 VAC	208 VAC	105 VDC
230Δ/400Y	PMG500	230 VAC	230 VAC	105 VDC
400Δ/690Y	PMG500	400 VAC	400 VAC	180 VDC
460Δ/Y	PMG500	460 VAC	460 VAC	205 VDC

PMG104E — SEPERATE POWER SOURCE — FAST-RELEASE (OVER EXCITATION) — NORMAL STOPPING (AC-SWITCHING) — 45

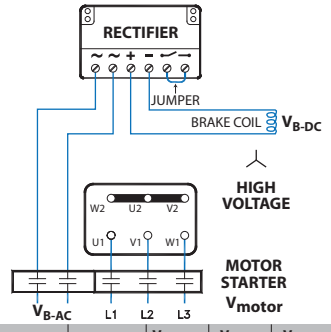

MOTOR	RECTIFIER	V_{motor}	V_{B-AC}	V_{B-DC}
230Δ/400Y	PMG500	400 VAC	230 VAC	105 VDC

PMG105A — SEPERATE POWER SOURCE — FAST-RELEASE (OVER EXCITATION) — FAST STOPPING (DC-SWITCHING) — 50

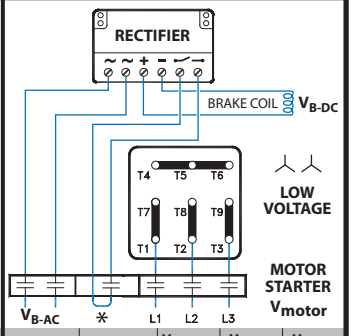

MOTOR	RECTIFIER	V_{motor}	V_{B-AC}	V_{B-DC}
230YY/460Y	PMG500	230 VAC	230 VAC	105 VDC

✱ The normally open contact/s (NO) is not supplied by NORD. It must close at the same time power is supplied to the brake. The contact must be capable of switching inductive loads and/or be rated IEC AC3.

= Braking Method

NORD Gear Limited
Toll Free in Canada: 800.668.4378

NORD Gear Corporation
Toll Free in the United States: 888.314.6673

PMG105B

SEPERATE POWER SOURCE
FAST-RELEASE (OVER EXCITATION)
FAST STOPPING (DC-SWITCHING)

50

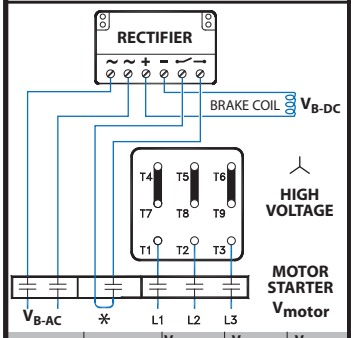

MOTOR	RECTIFIER	V_{motor}	V_{B-AC}	V_{B-DC}
230YY/460Y	PMG500	460 VAC	230 VAC	105 VDC

PMG105C

SEPERATE POWER SOURCE
FAST-RELEASE (OVER EXCITATION)
FAST STOPPING (DC-SWITCHING)

50

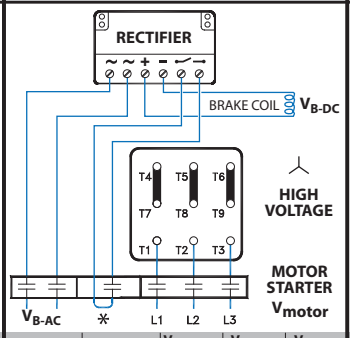

MOTOR	RECTIFIER	V_{motor}	V_{B-AC}	V_{B-DC}
230YY/460Y	PMG500	460 VAC	460 VAC	205 VDC

PMG105D

SEPERATE POWER SOURCE
FAST-RELEASE (OVER EXCITATION)
FAST STOPPING (DC-SWITCHING)

50

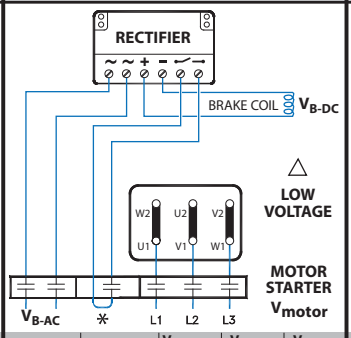

MOTOR	RECTIFIER	V_{motor}	V_{B-AC}	V_{B-DC}
208Δ/360Y	PMG500	208 VAC	208 VAC	105 VDC
230Δ/400Y	PMG500	230 VAC	230 VAC	105 VDC
400Δ/690Y	PMG500	400 VAC	400 VAC	180 VDC
460Δ/Y	PMG500	460 VAC	460 VAC	205 VDC

PMG105E

SEPERATE POWER SOURCE
FAST-RELEASE (OVER EXCITATION)
FAST STOPPING (DC-SWITCHING)

50

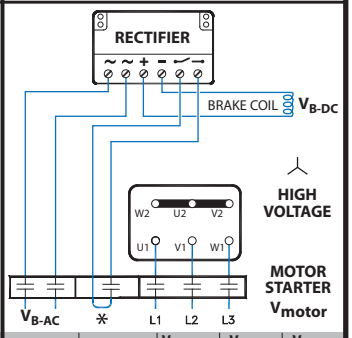

MOTOR	RECTIFIER	V_{motor}	V_{B-AC}	V_{B-DC}
230Δ/400Y	PMG500	400 VAC	230 VAC	105 VDC

PMG106A

SEPERATE POWER SOURCE
STANDARD RELEASE
VERY FAST STOPPING
(DC-SWITCHING + REDUCED POWER HOLDING)

55

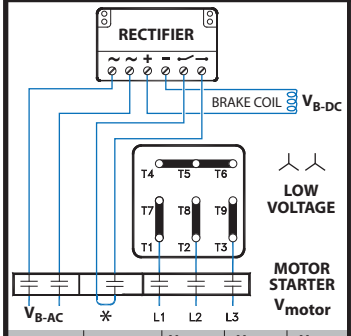

MOTOR	RECTIFIER	V_{motor}	V_{B-AC}	V_{B-DC}
230YY/460Y	PMG500	230 VAC	230 VAC	205 VDC

PMG106B

SEPERATE POWER SOURCE
STANDARD RELEASE
VERY FAST STOPPING
(DC-SWITCHING + REDUCED POWER HOLDING)

55

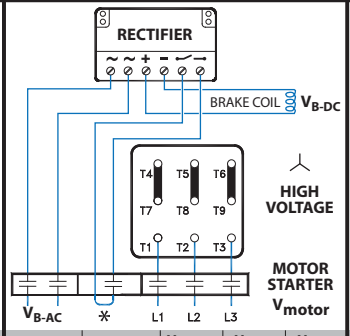

MOTOR	RECTIFIER	V_{motor}	V_{B-AC}	V_{B-DC}
230YY/460Y	PMG500	460 VAC	230 VAC	205 VDC

PMG106C

SEPERATE POWER SOURCE
STANDARD RELEASE
VERY FAST STOPPING
(DC-SWITCHING + REDUCED POWER HOLDING)

55

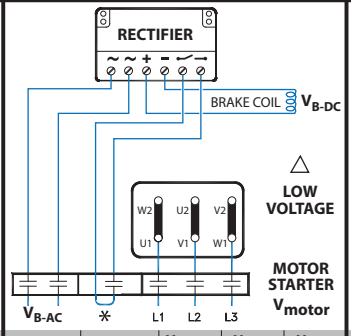

MOTOR	RECTIFIER	V_{motor}	V_{B-AC}	V_{B-DC}
208Δ/360Y	PMG500	208 VAC	208 VAC	180 VDC
230Δ/400Y	PMG500	230 VAC	230 VAC	205 VDC

PMG106D

SEPERATE POWER SOURCE
STANDARD RELEASE
VERY FAST STOPPING
(DC-SWITCHING + REDUCED POWER HOLDING)

55

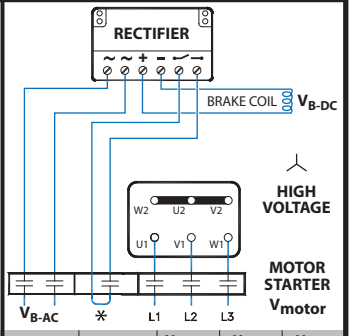

MOTOR	RECTIFIER	V_{motor}	V_{B-AC}	V_{B-DC}
230Δ/400Y	PMG500	400 VAC	230 VAC	205 VDC

✱ **The normally open contact/s (NO) is not supplied by NORD. It must close at the same time power is supplied to the brake. The contact must be capable of switching inductive loads and/or be rated IEC AC3.**

= Braking Method

CURRENT SENSING BRAKE RELAY (IR) INSTALLATION & MAINTENANCE

Motor Current Sensing Brake Relay (IR)

The current sensing relay, normally called the IR option, is used to achieve improved brake engagement or stopping time without the use of external control equipment or additional wiring. The relay is mounted directly onto the motor terminal box. The relay switch leads are connected to terminals 3 and 4 of the rectifier. When the power to the motor is shut off, the IR relay opens the brake circuit on the DC side; this allows the brake to demagnetize quickly.

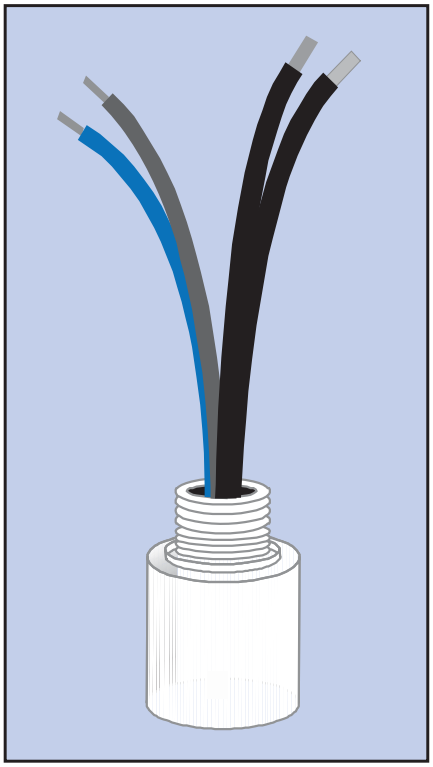

⚠ WARNING ⚠

- Motor must be powered across-the-line (not inverter powered or controlled with a soft-start)
- The brake power must be provided from the motor's terminal block (not separately powered)
- Motor must be a single-speed (not possible with two-speed motors)

Ratings

Part Number	18556010	18556020
Motor Frame Sizes	63S – 180M*	180L – 225M
Maximum Cycles per hour	500	500
Switching Voltage	42-550V_{DC}	42-550V_{DC}
AC input current – black/white wires	25 A_{AC} -75A_{AC} – 0.2 s	50 A_{AC} - 75A_{AC} – 0.2s
DC brake current – red and blue wires	1.0 A_{DC}	1.0 A_{DC}
Holding Current	0.7 A_{AC}	0.7 A_{AC}
Additional brake setting delay	18 ms	18 ms
Ambient temperature	- 25 to 90 °C - 40 to 167 °F	- 25 to 90 °C - 40 to 167 °F
Enclosure with o-ring mounted to a terminal box	IP65	IP65

* For the 180MX/4, 230/460V motor use part number 18556020

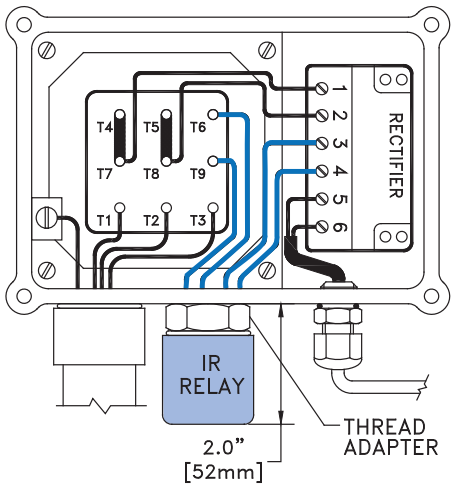

Connection Notes

Rectifier			IR Relay Wires To Rectifiers	
Type	Part Number	Design	Red	Blue
GVE20L	19141000	Full-Wave	3	4
GHE40L	19141010	Half-Wave	4	3
GHE50L	19141020	Half Wave	4	3
GPE20L	19140230	Push-Hybrid	4	3
GPE40L	19140240	Push-Hybrid	4	3

Conduit Box Thread Adapter

Thread	Motor Frame	Part number
M20	63-71	18542006*
M25	80-90	18522253
M32	100-132	18522320
M40	160-180	18522400 + 18522253

* Spacer

CURRENT SENSING BRAKE RELAY (IR) INSTALLATION & MAINTENANCE

Connection Diagrams

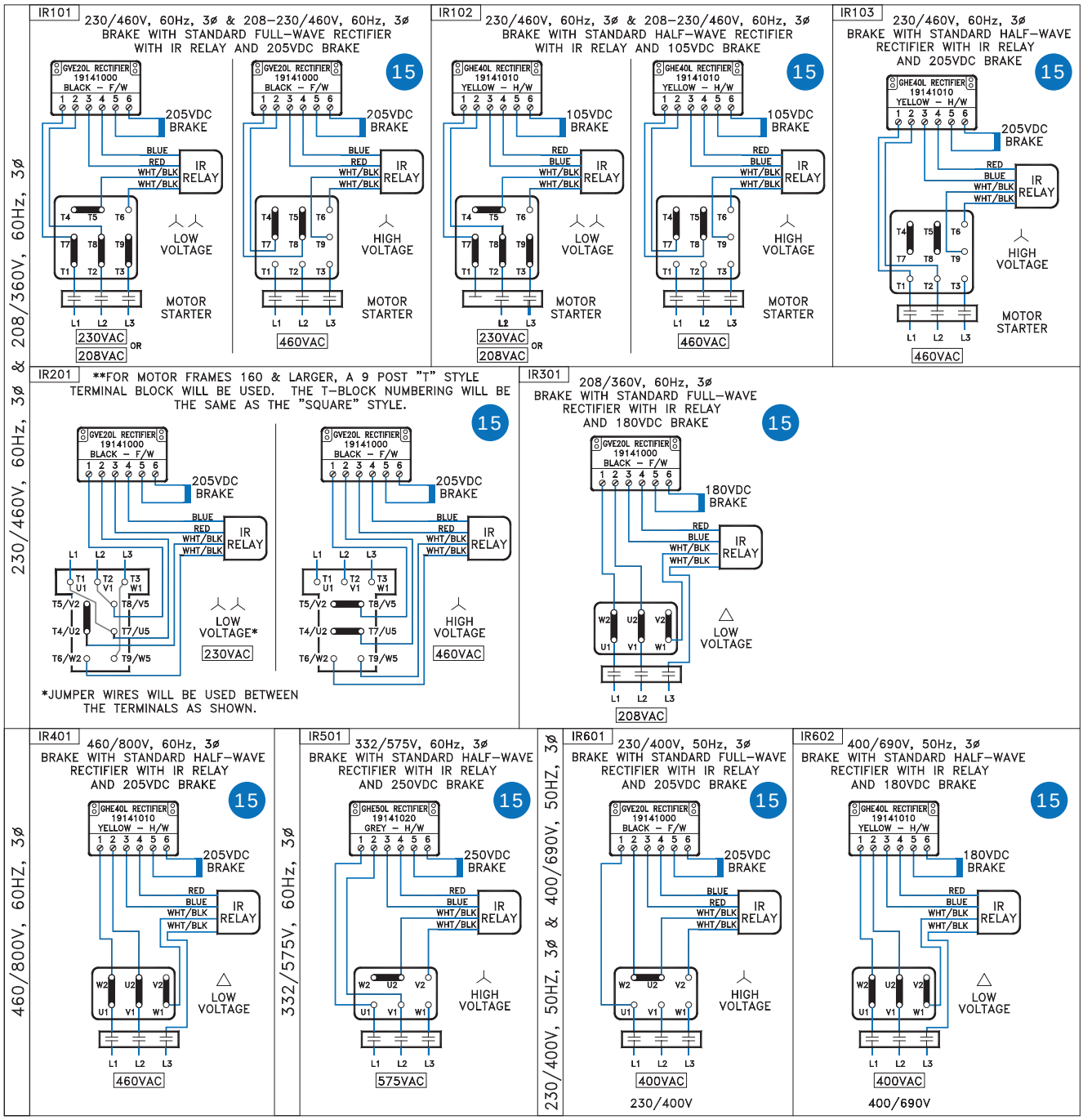

CURRENT SENSING BRAKE RELAY (IR) INSTALLATION & MAINTENANCE

Connection Diagrams
GPE Rectifier with IR Relay used for External DC-Switching

Method Operation

Start - Fast release (Overexcitation)
Stop - Fast stop (DC-Switching)

GPE type - External DC-Switching
Terminal 3 & 4 - Contact or IR-relay

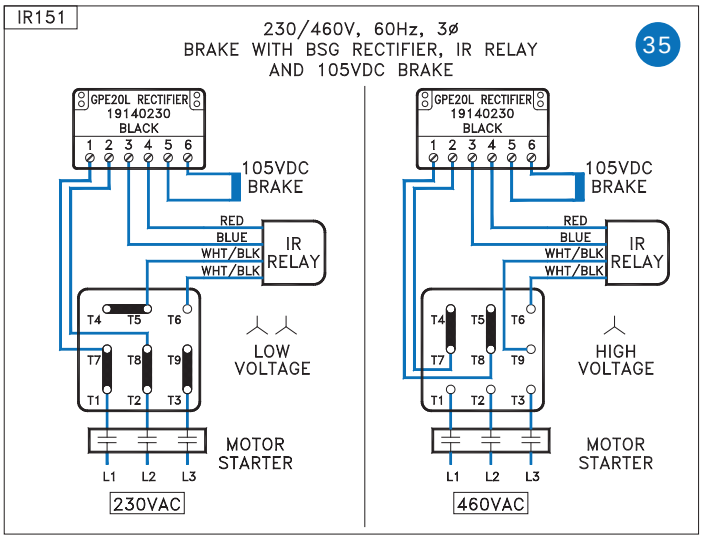

= Braking Method

Method Operation

Start - Standard Release
Stop - Very Fast stop (Reduced power Hold)

GPE type - External DC-Switching
Terminal 3 & 4 - Contact or IR-relay

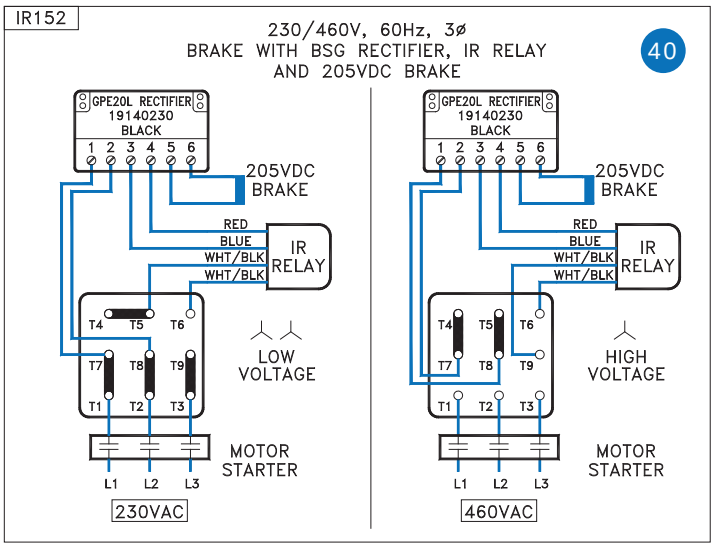

= Braking Method

Additional Reference - U_____ GP Brake Rectifier Installation and Maintenence

NEMA/IEC INPUT ADAPTERS & THEIR COUPLINGS

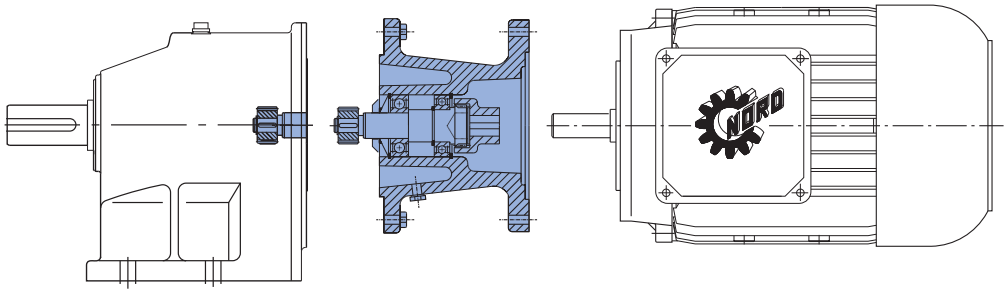

⚠ WARNING ⚠

LOCK OUT POWER before any maintenance is performed. Make absolutely sure that no voltage is applied while work is being done on the gearbox or input.

NEMA/ IEC Motor Adapters

Motor adapters allow for easy installation and removal of industry standard motors. Motor adapters consist of a coupling and an adapter housing that connects the motor to the gear reducer.

NORD Gear supplies a coupling that is to be mounted on the motor shaft. It is important that the coupling is properly positioned.

- For NEMA Input Adapters, follow the Motor Installation Instructions on pages 3-4.
- For IEC Input Adapters, the supplied coupling will mount directly against the motor shaft shoulder. No locating measurements need to be taken.

⚠ NOTE ⚠

Some of the larger IEC inputs will have a coupling spacer included to help locate the coupling. Slide the spacer against the motor shaft shoulder, slide the coupling against the spacer and tighten set screw(s).

⚠ NOTE ⚠

For the larger motor adapters (IEC160 / N250TC and larger), an Automatic Lubricator is supplied. This will need to be activated at the time of startup. For operation and activation instructions, refer to user manual U45200.

NEMA/IEC Motor Weight Limits

When mounting a motor to a NORD NEMA C-face motor adapter it is important to consider the motor's weight. Following is a table that includes the maximum motor weight the NEMA adapter can support. If the motor exceeds the listed weight is must be externally supported. When a C-face mounted motor is externally supported care must be taken to ensure that the support system does not impose additional pre-loads on the NEMA motor adapter.

NEMA Motor Weight Limit

Motor FRAME	56C	143TC	145TC	182TC	184TC	210TC
Max Weight [lb]	66	88	110	130	175	220
Motor FRAME	**250TC**	**280TC**	**324TC**	**326TC**	**365TC**	
Max Weight [lb]	440	550	770	1100	1540	

IEC Motor Weight Limit

Motor FRAME	63	71	80	90	100	112
Max Weight [lb]	55	66	88	110	130	175
Motor FRAME	**132**	**160**	**180**	**200**	**225**	**250**
Max Weight [lb]	220	440	550	770	1100	1540

Couplings

Couplings are made with tough abrasion resistant materials, which resist most chemicals and petroleum products. They are electrically isolated (prevent metal to metal contact) and require no lubrication or maintenance. Depending upon the size of the C-face input, NORD provides either a gear or a jaw type coupling.

NORD supplies three different types of couplings depending on the size of input: "J" style, "M" style and "Jaw" style coupling. Following are instructions on how to properly mount each type of coupling onto the motor.

NEMA/IEC INPUT ADAPTERS & THEIR COUPLINGS

Couplings for the NEMA and IEC Adapters

Depending on the size of the input adapter to the gearbox, NORD Gear supplies two styles of couplings - BoWex® (gear tooth) and Rotex® (jaw) couplings.

BoWex® Couplings

NORD C-face adapter input shafts have a machined spline on the end. NORD incorporates two styles of BoWex® couplings, the "J" and "M" styles. The "J" style is a one-piece coupling with a metal hub and nylon spline. The "M" style is a two-piece coupling – the metal hub and a nylon sleeve. Nylon and steel components allow them to operate in high ambient temperatures without lubrication or maintenance.

- Nylon sleeves resist dirt, moisture, most chemicals and petroleum products
- No lubrication required
- Operating Conditions: -22°F - 212°F (-30°C - 100°C)
- Higher temperature coupling sleeve available up to 250°F (120°C)
- Special bore available

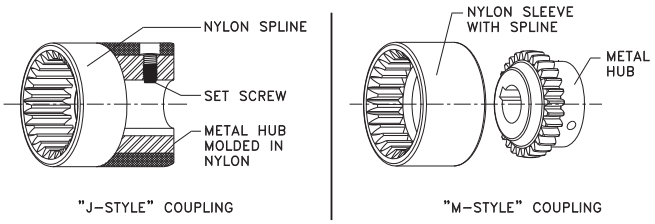

BoWex® Couplings Mechanical Ratings "J" Style

Coupling Type	Available Bore Sizes	Cont. / Peak Torque	Input
J14	11 mm,14 mm 5/8 in	10/20 Nm 89/117 lb-in	IEC 63, 71 NEMA 56C
J24	19 mm, 24 mm 5/8 in, 7/8 in	20/40 Nm 117/354 lb-in	IEC 80, 90 NEMA 56C, 140TC
J28	28 mm 1-1/8 in	45-90 Nm 399/797 lb-in	IEC 100-112 NEMA 180TC

BoWex® Couplings Mechanical Ratings "M" Style

Coupling Type	Available Bore Sizes	Cont. / Peak Torque	Input
M14, M24, M28	Same as "J" Style	Same as "J" Style	Same as "J" Style
M38	38 mm 1-1/8 in, 1-3/8 in	80/160 Nm 708/1,416 lb-in	IEC 132 NEMA 180TC, 210TC
M42	42 mm 1-5/8 in	100/200 Nm 885/1,770 lb-in	IEC 160 NEMA 250TC
M48	48 mm 1-7/8 in	140/280 Nm 1,240/2,478 lb-in	IEC 180 NEMA 280TC

Rotex® Couplings

The cast iron jaw type couplings have an integral urethane "spider" that provides smooth transmission of the motor torque. A set screw on the coupling prohibits axial movement along the motor shaft.

- Excellent shock and vibration dampening
- Excellent resistance to oils and most chemicals
- No metal-to-metal contact
- Operating Conditions: -22°F - 195°F (-30°C - 90°C)
- Higher temperature material (Hytrel) spider available up to 230°F (110°C)
- Low temperature materials available upon request
- Special bores available

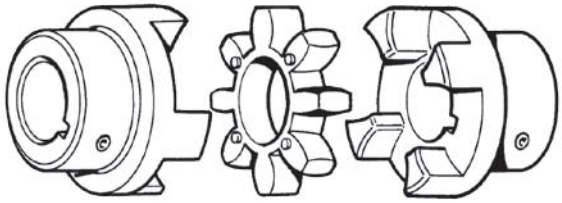

Rotex® Couplings Mechanical Ratings

Coupling Type	Available Bore Sizes	Cont. / Peak Torque	Input	Spider
R19	14 mm 19 mm	17/34 NM 150/300 lb-in	SEK/SEP 100	Urethane 98 Shore A Hardness Color: Red
R24	19 mm 24 mm	60/120 Nm 530/1,060 lb-in	SEK/SEP 100 SEK/SEP 130	
R28	32 mm 38 mm	95/190 Nm 840/1,680 lb-in	SEK/SEP 65 SEK/SEP 215	Urethane 92 Shore A Hardness Color: Yellow
R38	1.89" (48 mm) Max Bore	190/382 Nm 1,680/3,380 lb-in	-	
R42	2.44" (62 mm) Max Bore	310/620 Nm 2,740/5,480 lb-in	-	
R48	42, 48 mm 1-5/8, 1 7/8 in	310/620 Nm 2,740/5,480 lb-in	IEC 160, 180 NEMA 250T NEMA 280T SEK/SEP 300 SEK/SEP 215	
R65	60 mm 2-1/8, 2-3/8 in	625/1,250 Nm 5,530/11,060 lb-in	IEC 225 NEMA 320T NEMA 360T	
R90	65, 75, 80 mm 2-1/8, 2-3/8 in	2,400/4,800 Nm 24,240/42,480 lb-in	IEC 250, 280 IEC 315 NEMA 360TC NEMA 400TS NEMA 440TS	

NEMA/IEC INPUT ADAPTERS & THEIR COUPLINGS

"J" Style Coupling NEMA C-face Motor Installation

1. Measure the distance from the face of the input adapter to the face of the splined shaft and record that measurement as A in the equation below.
2. Measure depth of coupling engagement zone and record the measurement as "B" in the equation below.
3. Add "A" + "B" and subtract 0.08" (~2mm) from the distance. This needs to be done so that the coupling will not be preloaded after installation!
4. Use that measurement to locate the coupling from the face of the motor onto the shaft.
5. Once in place, tighten the set screw to lock the coupling in place. It is recommended that the key is staked or bonded (Loctite) in place to prohibit the key from vibrating out.
6. Mount the motor onto the input adapter with customer supplied bolts. Make sure that the coupling from the adapter and the motor engage securely. Use lock washers or Loctite to prohibit bolts from becoming loose from vibration.

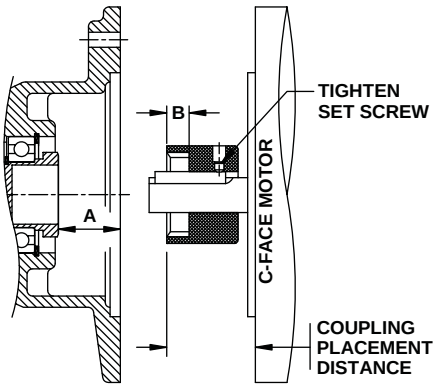

MEASURED DISTANCES A + B		SUBTRACT DISTANCE	COUPLING PLACEMENT DISTANCE
___ +	___	- 0.080" (2mm) =	_____

"M" Style Coupling NEMA C-face Motor Installation

1 Measure the distance from the face of the input adapter to the face of the splined shaft & record that measurement.
2. Subtract 0.31" (~8mm) from the distance. This needs to be done so that the coupling will not be preloaded after installation!
3. Use that measurement to locate the coupling from the face of the motor onto the shaft.
4. Once in place, tighten the set screw to lock the coupling in place. It is recommended that the key is staked or bonded (Loctite) in place to prohibit the key from vibrating out.
5. Mount the motor onto the input adapter with customer supplied bolts. Make sure that the coupling from the adapter and the motor engage securely. Use lock washers or Loctite to prohibit bolts from becoming loose from vibration.

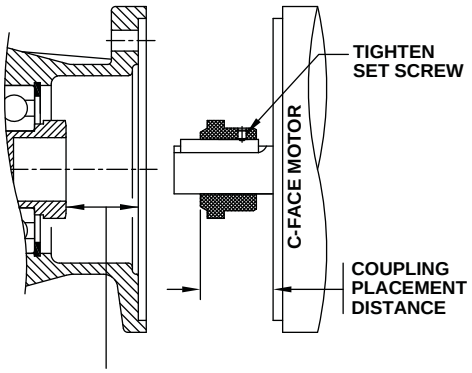

MEASURED DISTANCE	SUBTRACT DISTANCE	COUPLING PLACEMENT DISTANCE
_____	- 0.310" (8mm) =	_____

NEMA/IEC INPUT ADAPTERS & THEIR COUPLINGS

"Jaw" Style Coupling NEMA C-face Installation

1. Measure the distance from the face of the input adapter to the face of the coupling as shown and record that measurement.
2. Subtract the "X" dimension from the measured distance. This needs to be done so that the coupling will not be preloaded after installation!
3. Use that measurement to locate the coupling from the face of the motor onto the shaft.
4. The metal portion of the coupling should be heated up prior to assembly, generally 250°F to 300°F (120°C to 150°C).

⚠ *WARNING* ⚠
DO NOT HEAT THE URETHANE SPIDER.

5. Once in place, tighten the setscrew to lock coupling in place. Let the coupling cool down before placing the spider into the jaws. It is recommended that the key is staked or bonded (Loctite) in place to prohibit the key from vibrating out.
6. Mount the motor onto the input adapter with customer supplied bolts. Make sure that the coupling from the adapter and the motor engage securely. Use lock washers or Loctite to prohibit bolts from becoming loose from vibration.

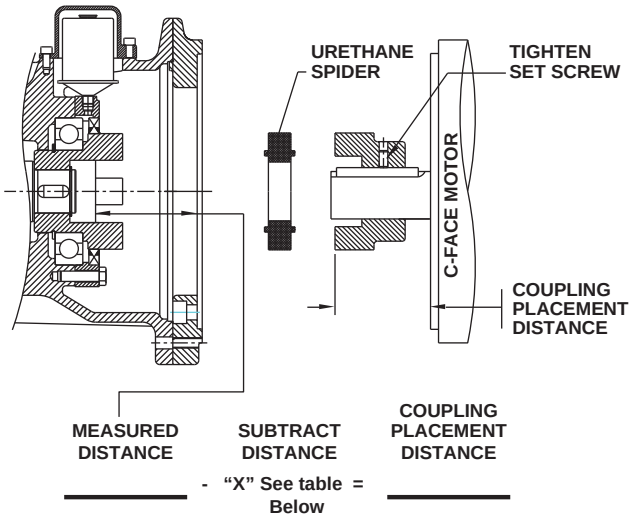

Coupling Size	"X" (Subtract this value from measured distance)
R14	0.06" (1.5 mm)
R19 & R24	0.08" (2.0 mm)
R28	0.10" (2.5 mm)
R38 & 42	0.12" (3.0 mm)
R48	0.14" (3.5 mm)
R65	0.18" (4.5 mm)
R90	0.22" (5.5 mm)

NEMA/IEC INPUT ADAPTERS & THEIR COUPLINGS

NEMA/IEC Parts List for UNICASE Gearboxes

NEMA 56C - 180TC

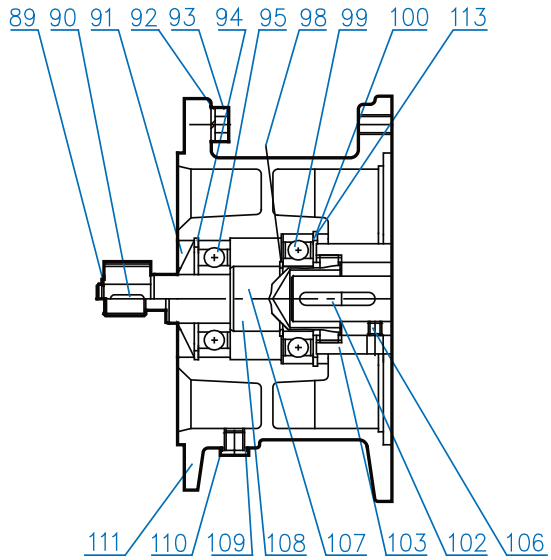

NEMA 180TC - 280TC

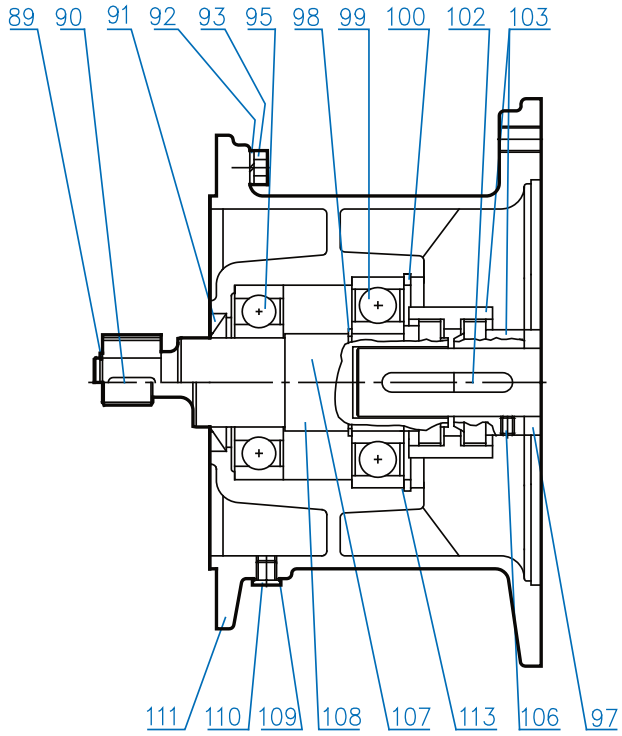

89	Circlip
90	Key
91	Shaft Seal
92	Washer
93	Hexagon Screw
94	Circlip
95	Clutch Shaft Bearing
97	Space
98	Circlip
99	Clutch Shaft Bearing
100	Circlip
101	Key
102	Key
103	Coupling
104	Coupling
105	Coupling
106	Set Screw
107	Clutch Shaft
108	Clutch Pinion Shaft
109	Seal
110	Oil-Plug
111	NEMA / IEC Adapter
112	Oil Flinger
113	Shim
140	Shim
141	Shim
142	Shim
143	Socket Head Screw
144	Cover
145	Automatic Lubricator*
146	Adapter
147	Bearing Cover
148	Hexagon Screw
149	Washer
150	Shaft Seal

* Please see U45250 for automatic lubricator Instructions.

NEMA 250TC - 400TC
IEC 160 - IEC 315

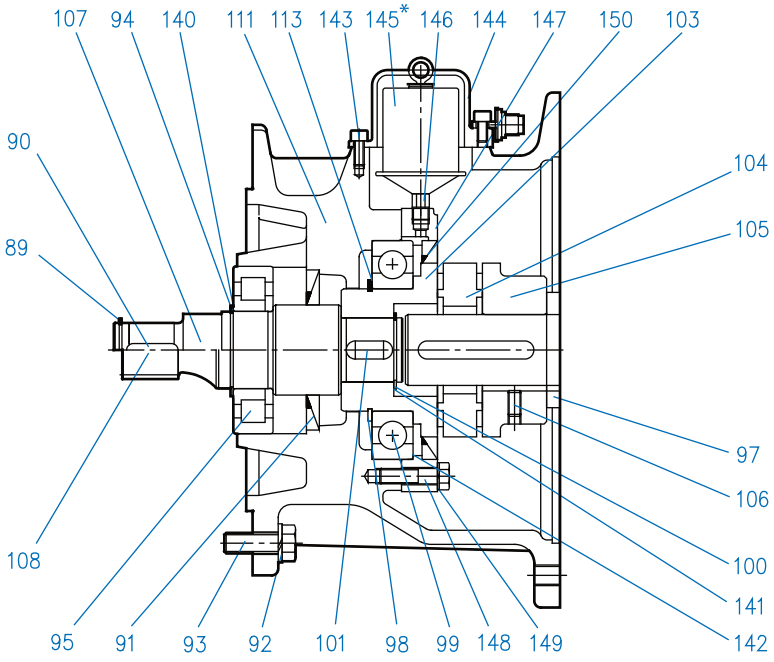

NEMA/IEC Parts List for Nordbloc Gearboxes

NEMA 56C - 180TC
IEC 63 - IEC 112

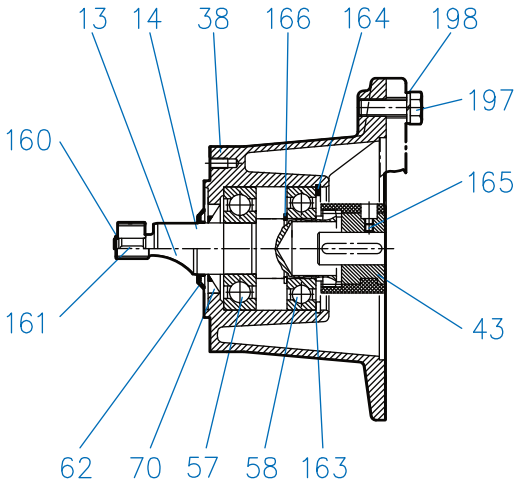

NEMA 210TC - 280TC
IEC 132-IEC 180

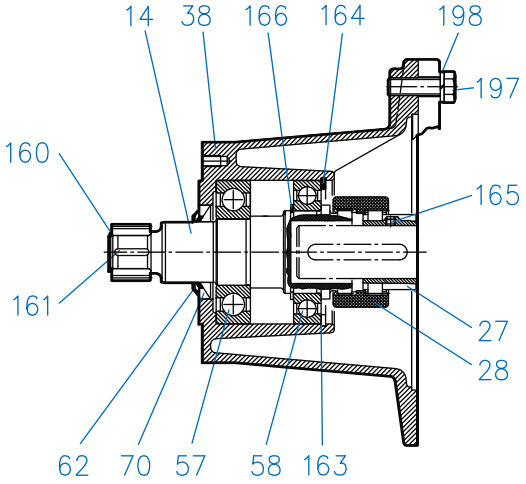

IEC 200

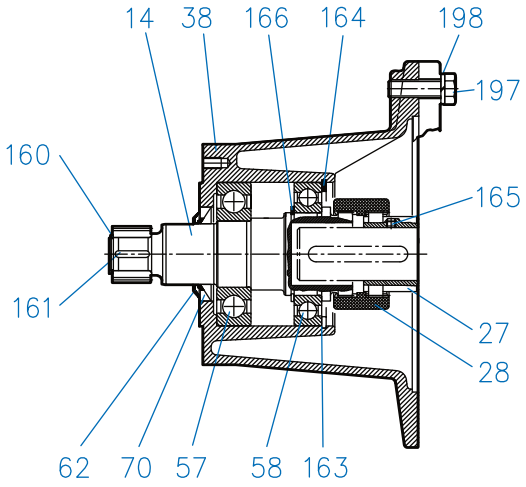

13	Clutch Pinion Shaft
14	Clutch Shaft
26	Coupling
27	Coupling
28	Coupling
38	IEC Adapter
43	Coupling
57	Clutch Shaft Bearing
58	Clutch Shaft Bearing
62	Oil Flinger
70	Shaft Seal
101	Key
160	Snap Ring
161	Key
163	Shim
164	Snap Ring
165	Set Screw
166	Snap Ring
197	Bolt
198	Spring Washer

Automatic Lubricator

Some NORD gear units with NEMA 250TC or IEC 160 and larger input adapters, have a PERMA® Classic automatic lubricator supplied to help dispense grease to the outboard bearing.

Helical Inline	SK62, SK72, SK73, SK82, SK83, SK92, SK93, SK102 and SK103
Parallel-Shaft Clincher™	SK6282, SK7282, SK7382 SK8282, SK8382, SK9282, SK9382, SK10282, SK10382, SK11282, SK11382, and SK12382
90.1 Series Helical-Bevel	SK9072.1, SK9082.1, SK9086.1, SK9092.1, and SK9096.1

Principle of Operation

The activation screw is secured into the top of the lubrication canister and tightened until the ring-eyelet reaches its breaking point. A zinc-molybdenum gas generator drops into a citric acid liquid electrolyte, that is contained within an elastic bladder. The gas generator starts an electrochemical reaction which gradually pressurizes the bladder by releasing hydrogen gas in very small amounts. The gas creates enough pressure (up to 4 bar or 58 psi) to expand the bladder and push the piston and the lubricant forward.

Lubricant is continuously injected into the lubrication point until the bearing cavity is full. Any back pressure from the bearing will cause the system to neutralize. The bladder inside the canister will continue to slowly build pressure so that once the equipment resumes normal operation, the lubricator will also resume its normal function. After 12 months of operation the PERMA® canister must be replaced.

The lubricator contains approximately 120 cm^3 or 120 ml (4.8 oz) of grease. For reference, a single stroke of a typical grease gun delivers approximately 1.0-1.2 cm^3 (0.03–0.04 oz) of grease. This means the canister contains approximately 100 strokes of grease. At the end of the lubrication period, the discharge indicator cap or piston becomes clearly visible through the clear nylon discharge indicator cap which is located at the bottom of the PERMA® canister; this helps indicate that the lubricant has been fully discharged.

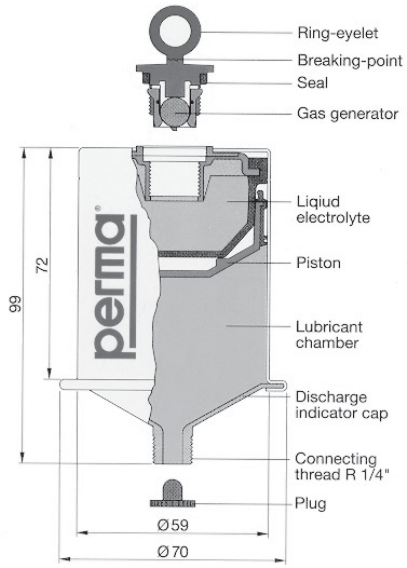

HARMFUL SITUATION

- To prevent premature bearing failure, the lubrication dispenser must be activated prior to commissioning the gear reducer.
- The lubricator must only be used once and should never be opened or taken apart or permanent damage will result.
- Never unscrew the PERMA® canister from the lubrication point after activation or during the discharge period. This would cause a permanent pressure loss in the lubricator and would justify replacing the lubricator.

WARNING

- Avoid swallowing the gas generator, the liquid electrolyte, and the lubricant.
- Avoid contact of, the liquid electrolyte, and the lubricant with the eyes, skin or clothing.
- Observe all applicable MSDS sheets.
- Follow applicable local laws and regulations concerning waste disposal.

PERMA® Classic – Options Supplied by NORD

NORD Part Number	28301000	28301010
Lubrication Option	Synthetic (standard)	Food Grade (optional)
PERMA® Classic Temperature Range ♦	0 to 40 °C (32 to 104 °F)	0 to 40 °C (32 to 104 °F)
Lubrication Volume	120 cm3 or 120 ml (4.8 oz)	120 cm3 or 120 ml (4.8 oz)
Grease Lubrication Mfg. / Type	Klüber / Petamo GHY 133	Lubriplate / FGL1
Lubrication Temperature Range ♦	-30 to 120 °C (-22 to 248 °F)	-18 to 120 °C (0 to 248 °F)

♦ The temperature range values shown do not apply to other components and/or lubricants within the gear reducer.

The lubricator contents will dispense for a 12 month period when the average temperature is 20 °C (68 °F).

Temperature Influences Discharge Rate

Discharge rate is based upon an ambient temperature of 20 °C (68 °F). The gray activating screw supplied by PERMA indicates that the lubricator contents will dispense for a 12 month period when the average temperature is 20 °C (68 °F).

- Lower ambient temperatures will lead to slower dispensing rates and higher ambient temperatures will lead to faster dispensing rates.
- Dispensing rates depend primarily on average ambient conditions and not extreme highs and lows.
- Discharge can also be influenced by type of lubricant, vibration, and the connecting parts and values shown are approximate, based upon supplier testing completed.

Average Ambient Temperature	Discharge Period Months ♦
0 °C (32 °F)	>18
10 °C (50 °F)	18
20 °C (68 °F)	12
30 °C (86 °F)	6
40 °C (104 °F)	3

♦ Values are approximate.

Attention!

Screw in the activation screw until the lug breaks off before commissioning the gear unit.

Dispensing time: 12 Months

Activation Date

Month 1 2 3 4 5 6 7 8 9 10 11 12

Year 11 12 13 14 15

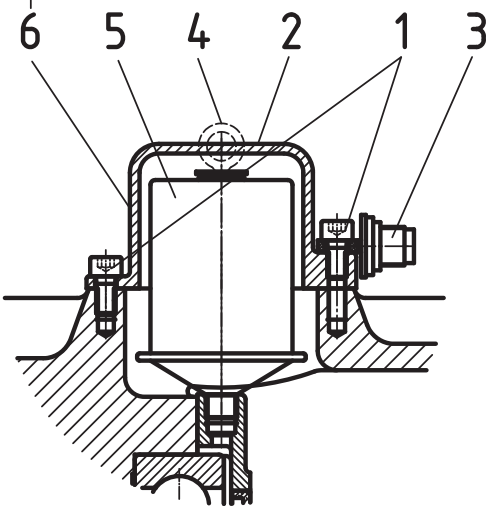

Initial Assembly Instructions

When first receiving the gear unit with motor adapter, the automatic lubricator is installed as shown in the figure below.

1. Loosen and remove the M8 x 16 socket head cap screws (1) and the protective cartridge case cover (2).
2. Insert the gray colored activation screw (3) into the lubrication dispenser (5) and tighten securely by hand.
3. Put a suitable tool through the ring-eyelet (4) and use it to turn the activator screw until the eyelet breaks off. The lubricator is now activated.
4. Refit the protective cartridge case cover (2) and tighten the M18 x 16 socket head screws.
5. Mark the activation date indicating on the reddish-orange adhesive label (6) by indicating the month and year.
6. Take note of the activation date and replace the canister again in twelve months.

Replacement Assembly Instructions

1. Loosen and remove the M8 x 16 socket head cap screws (1) and the protective cartridge case cover (2).
2. Remove the expired or old PERMA® canister from the bearing housing.
3. Remove the protective shipping plug from the thread-end of the New PERMA® canister.
4. Screw the canister into the reducer bearing housing by hand until it is snug and secure. Do not over tighten or the plastic threads on the canister can become damaged!
5. Put a suitable tool through the ring-eyelet (4) and use it to turn the activator screw until the eyelet breaks off. The lubricator is now activated.
6. Refit the protective cartridge case cover (2), tighten the M18 x 16 socket head screws (1)
7. Take note of the activation date and replace the canister again in twelve months.

NEMA OR IEC INPUT ADAPTER WITH GREASE FITTING

Application

NORD gear units listed in the table below that are supplied with a NEMA 250TC or IEC 160 and larger input adapter, may be supplied with an external grease fitting. The grease fitting allows the user to service the outboard bearing of the reducer's input assembly

Helical Inline	SK62, SK72, SK73, SK82, SK83, SK92, SK93, SK102 and SK103
Parallel-Shaft CLINCHER™	SK6282, SK7282, SK7382, SK8282, SK8382, SK9282, SK9382, SK10282, SK10382, SK11282, SK11382 & SK12382
90.1 Series Helical-Bevel	SK9072.1, SK9082.1, SK9086.1, SK9092.1 & SK9096.1

The grease fitting is an option which must be specified upon ordering, otherwise NORD will normally supply a PERMA Automatic Lubricator (See User Manual U45250).

Factory Supplied Grease

The bearing grease applied at the factory is as follows:

Brand	Mobil Polyrex EP 2
Thickener	Polyurea
NLGI Grade	2
Temperature Range	40°C to 120°C (-40°F to 250°F

IMPORTANT NOTE

It is the user's responsibility to ensure that if replacement grease is used, that it is fully compatible with the factory supplied grease.

Service Instructions

WARNING

- While working on the gear drive system, make sure the power from the prime mover is isolated or secured on "lock-out" to prevent accidental start-up and to safeguard against injury!
- Surfaces of motors and gear units may become hot during operation or shortly after start-up. In some instances additional protection against accidental contact may be necessary. Use caution to avoid burns or serious injury!

1. It is best to re-grease the bearing within a short period after the gear unit was operational because the old grease will be more viscous and will flow easier.
2. Ensure that the grease gun contains the right lubricant for the bearing to be re-greased.
3. Open the protective flip cover and clean the areas around the grease fitting to ensure that contaminants are not introduced into the bearing cavity.
4. Using a grease gun, apply 0.75 ounces (20-25 grams) of compatible bearing grease every 1,000 service hours.

IMPORTANT NOTE

Re-greasing should be carried out while the bearing is still warm from operation and/or while rotating (if it is safe).

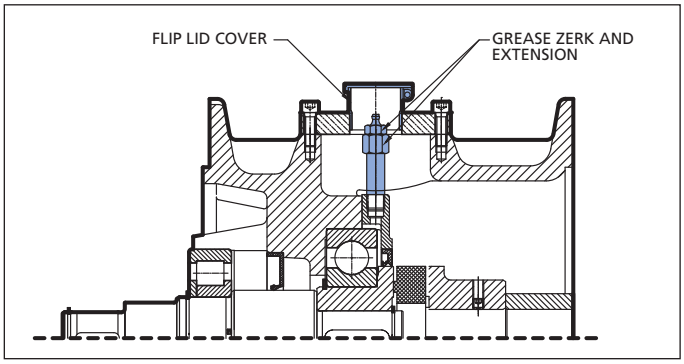

SOLID INPUT SHAFT (W)

1. Solid Input Shaft (W)

The shaft will be inch or metric, depending on how the unit was ordered. Measure and verify the shaft before mounting anything on the shaft. Below are the tolerances used for the solid shafts.

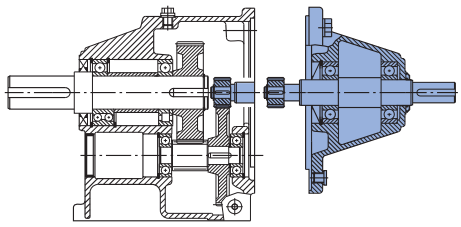

2. Solid shaft diameter tolerance

Reducer input shaft extensions have a diameter tolerance as specified in **Table 1**.

Table 1: Solid Shaft Diameter Tolerance

Above ø (in)	To & Including ø (in)	Tolerance (in)
0.375	1.750	+0.0000 / -0.0005
1.750	2.750	+0.0000 / -0.0010

Above ø (mm)	To & Including ø (mm)	Tolerance (mm)	ISO 286-2 Fit Class
10	18	+0.012 / +0.001	k6
18	30	+0.015 / +0.002	k6
30	50	+0.018 / +0.002	k6
50	70	+0.030 / +0.011	m6

3. Fitting drive elements onto the reducer solid shaft

Solid input shaft extensions are provided with a drill and tap feature as indicated in Table 2. When installing drive elements such as coupling hubs, pulleys, sprockets, or gears, NORD recommends using the threaded hole in the end of the shaft, along with a suitable assembly device fitted into the threaded hole.

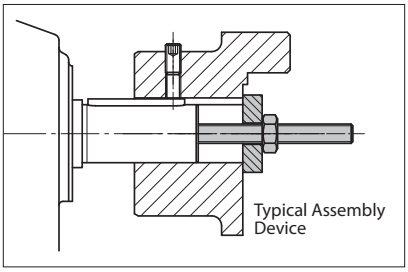

Table 2: Solid Input Shaft End - Threaded Holes

Above ø (in)	To & Including ø (in)	Tap size & Depth (in)
0.375	0.500	10-24 x 0.43 in
0.500	0.875	1/4-20 x 0.59 in
0.875	0.938	5/16-18 x 0.71 in
0.938	1.100	3/8-16 x 0.87 in
1.100	1.300	1/2-13 x 1.10 in
1.300	1.875	5/8-11 x 1.42 in
1.875	2.750	3/4-10 x 1.73 in

Above ø (mm)	To & Including ø (mm)	Tap Size & Depth (mm)
10	13	M4 x 10 mm
13	16	M5 x 12.5 mm
16	21	M6 x 16 mm
21	24	M8 x 19 mm
24	30	M10 x 22 mm
30	38	M12 x 28 mm
38	50	M16 x 36 mm
50	70	M20 x 42 mm

STOP *HARMFUL SITUATION* STOP

DO NOT DRIVE or **HAMMER** the coupling hub, pulley, sprocket, or gear into place. An endwise blow to the reducer shaft can generate damaging axial forces and cause damage to the reducer housing, bearings or internal components.

⚠ *WARNING* ⚠

To avoid serious injury the user must provide suitable safety guards for all rotating shafts and shaft components such as couplings, chain drives, belt drives, etc. All guarding must adhere to local regulations and safety standards.

4. Installing interference-fit hubs to the reducer shaft

Prior to installing any interference-fit hubs to the reducer shaft, consult with the manufacturer to determine proper assembly and fit. Interference-fits usually require heating the coupling, sprocket or gear hub, per the manufacturer's recommendations. Coupling hub installation typically follows ANSI/AGMA 9002-A86. Always make sure the reducer shaft seals are protected from the heat source. Apply uniform heat to the drive element hub to prevent distortion. NORD does not recommend heating the drive element hub beyond 212°F to 275°F (100°C to 135° C).

⚠ WARNING ⚠

When using heat to mount a drive element hub, do not use open flame in a combustible atmosphere or near flammable materials. Use suitable protection to avoid burns or serious injury.

STOP HARMFUL SITUATION STOP

When using external chain or belt drives, make sure the reducer is sized so that the shaft and bearings have adequate capacity. To avoid unnecessary bearing loads and additional shaft deflection, mount all power take-off devices (sprockets, pulleys, etc.) so that the applied load center is as close to the gear housing as possible and check component alignment and tension of any belts or chains per the manufacturer's recommendation. Do not over tighten the belts or chains.

5. Coupling installation

The performance and life of any coupling depends upon how well it is installed. Coupling hubs are typically mounted flush with the shaft ends, unless specifically ordered for overhung mounting. Shaft couplings should be installed according to the coupling manufacturer's recommendations for gap, angular and parallel alignment. To help obtain critical shaft alignment coupling hubs may be installed to the machine shafts prior to final shimming or tightening of the foundation bolts. Proper coupling alignment allows for thermal and mechanical shaft movement during operation and ensures that only torque (no radial load) is transmitted between the mating shafts.

Coupling gap and angular alignment

The shaft gap must be sufficient to accommodate any anticipated thermal or mechanical axial movement. When setting the coupling gap, insert a spacer or shim stock equal to the required spacing or gap between the coupling hub faces. Measure the clearance using feeler gauges at 90-degree intervals, to verify the angular alignment.

Parallel (or offset) alignment

Mount a dial indicator to one coupling hub, and rotate this hub, sweeping the outside diameter of the other hub. The parallel or offset misalignment is equal to one-half of the total indicator reading. Another method is to rest a straight edge squarely on the outside diameter of the hubs at 90° intervals and measure any gaps with feeler gauges. The maximum gap measurement is the parallel or offset misalignment.

Check alignment

After both angular and parallel alignments are within specified limits, tighten all foundation bolts securely and re-check critical alignment. If any of the specified limits for alignment are exceeded, realign the coupling.

6. Installing sheaves (pulleys), sprockets and gears

To avoid unnecessary bearing loads and additional shaft deflection, mount all power take-off devices (sprockets, pulleys, gears, etc.) so that the applied load center is as close to the gear housing as possible, as shown in **Figure 2**.

Figure 2: Pully or Sprocket Mounting

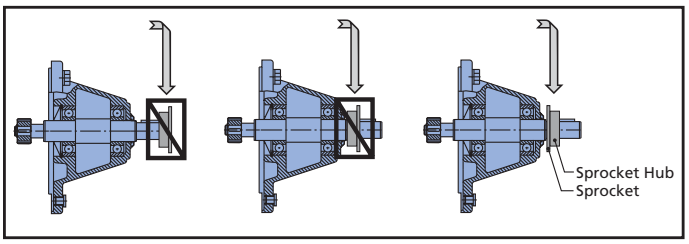

Align the driver sheave or sprocket with the driven sheave or sprocket by placing a straight-edge length-wise across the face of the sheaves or sprockets. Alignment of bushed sheaves and sprockets should be checked only after bushings have been tightened. Check horizontal shaft alignment by placing one leg of a square or a level vertically against the face of the sheave or sprocket.

Always check component alignment and tension any belts or chains per the manufacturer's recommendation. The ideal belt or chain tension allows proper wrap of the driver and driven wheels, while maintaining the lowest possible tension of the belts or chain, so that no slipping occurs under load conditions. Check belt or chain tension frequently over the first 24 to 48 hours of operation.

STOP HARMFUL SITUATION STOP

When using external chain or belt drives, make sure the reducer is sized so that the shaft and bearings have adequate capacity. To avoid unnecessary bearing loads and additional shaft deflection, mount all power take-off devices (sprockets, pulleys, etc.) so that the applied load center is as close the gear housing as possible and check component alignment and tension of any belts or chains per the manufacturer's recommendation. Do not over tension the belts or chains.

7. Service Guidelines for W-Shaft Input with Grease Fitting

On some solid shaft input (Type W) gear units, the outer roller bearing needs to be re-greased at regular service intervals. This is necessary for double-stage gearboxes sizes SK62 or SK6282 and larger, and triple-stage gearboxes from size SK73, SK7382 or SK9072.1 and larger.

To lubricate the bearing of the input shaft, approximately 0.75 to 1.0 ounces (20-25 grams) grease should be added by the grease fitting approximately after every 2,500 hours of service or at least every 6 months. The W-shaft input is factory assembled with the proper amount and type of grease. The type of grease supplied depends upon the type of oil specified at time of order.

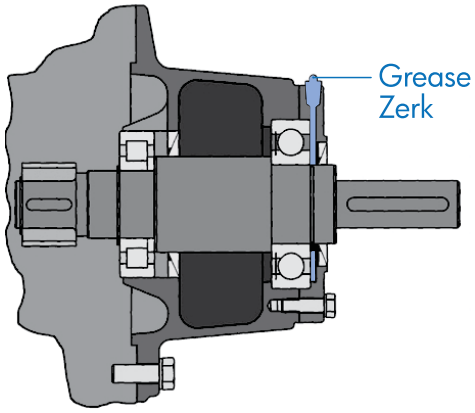

Reducer Oil Type	Grease Type/Thickener	NLGI Grade	Ambient Temperature Range	Manufacturer Brand/Type
Mineral	Standard (Li-Complex)	NLGI 2	-30 to 60°C (-22 to 140°F)	Mobil Grease XHP222
Synthetic	High Temp (Polyurea)	NLGI 2	-40 to 80°C (-40 to 176°F)	Mobil / Polyrex EP 2
Food-Grade	Food-Grade (Polyurea)	NLGI 2	-30 to 40°C (-22 to 104°F)	Mobil SHC Polyrex 222

STOP *HARMFUL SITUATION* STOP

Grease compatibility depends upon the type of thickener or soap complex used, the base oil type suspended within the thickener, and the type of additives used. The user should check with the lubrication supplier before making substitutions in brand and type in order to assure compatibility and to avoid causing damage to the extended bearing.

W-Type Input Parts List for UNICASE Gearboxes

SK 02 - SK 52
SK 03 - SK 63

SK 0182NB - SK 6382

SK 02040 - SK 42125
SK 13050 - SK 43125

SK 9012.1 - SK 9052.1
SK 9013.1 - SK 9053.1

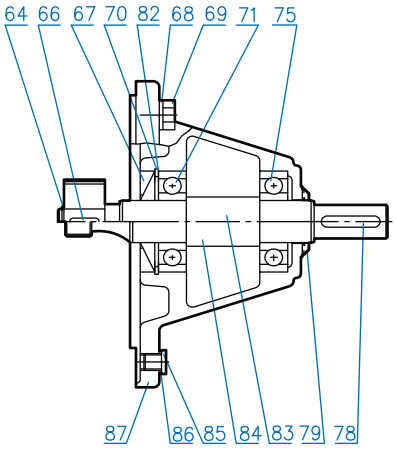

SK 62 - SK 72
SK 73 - SK 93

SK 6282 - SK 7282
SK 7382 - SK 9382

SK 9072.1

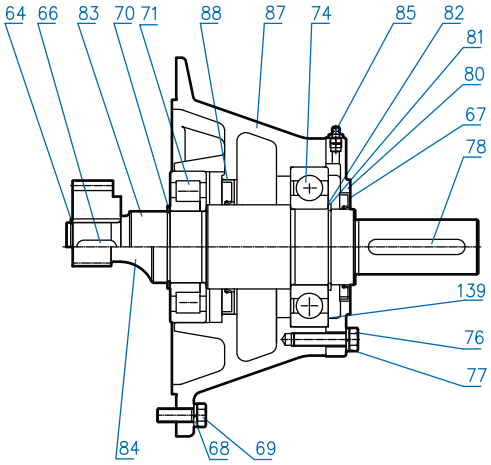

64	Circlip
66	Key
67	Shaft Seal
68	Washer
69	Hexagon Screw
70	Circlip
71	Input Shaft Bearing
74	Ball Bearing
75	Input Shaft Bearing
76	Washer
77	Hexagon Screw
78	Key
79	Oil Flinger
80	Bearing Cover
81	Circlip
82	Shim
83	Input Shaft, Plain
84	Input Shaft, Gearcut
85	Drain Plug
86	Seal
87	Input Bearing Housing
88	Shaft Seal (Oil Flinger)
139	Shim

SK 82 - SK 102
SK 103

SK 8282 - SK 9282

SK 9082.1 - SK 9092.1

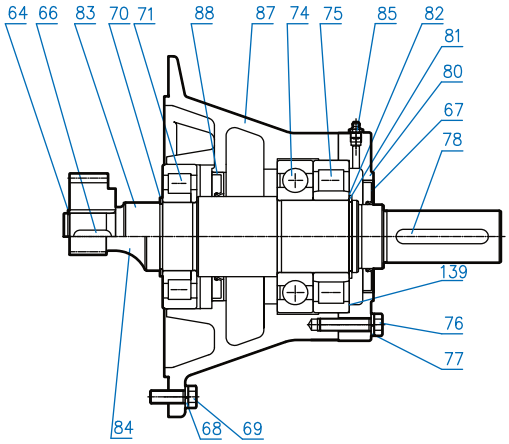

SK 10282 - SK 12382

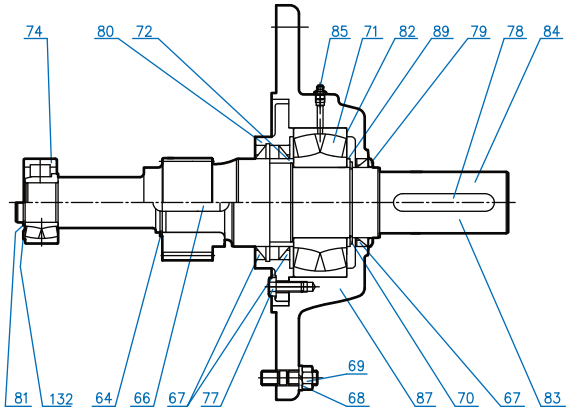

SOLID INPUT SHAFT (W)

W-Type Inputs for Parts List for Nordbloc / 92 Bevel Gearboxes

SK172 - SK673
SK92072 - SK92372

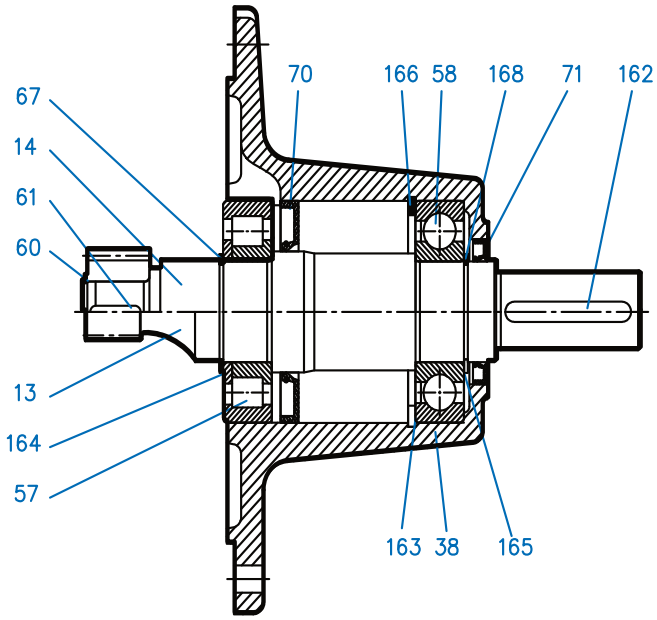

13	Pinion Shaft
14	InputShaft
38	IEC Adapter
57	Bearing
58	Bearing
62	Oil Flinger
70	Shaft Seal
71	Shaft Seal
160	Snap Ring
161	Key
162	Key
163	Shim
164	Snap Ring
165	Set Screw
166	Snap Ring
167	Snap Ring
168	Snap Ring

SK772 - SK973
SK92672 - SK92772

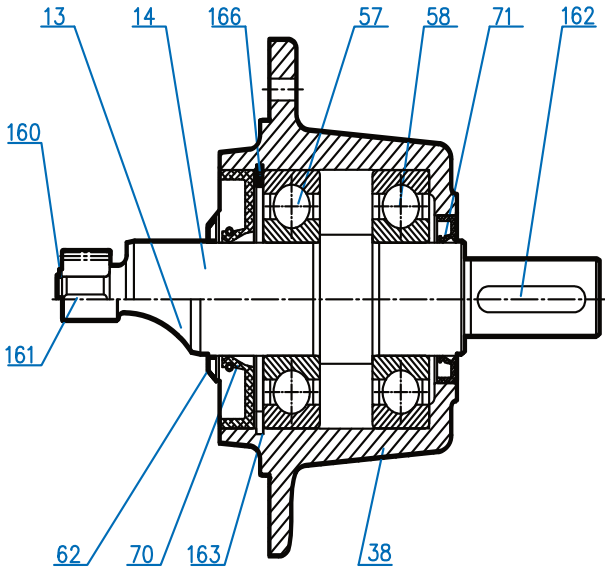

MOTOR MOUNT PLATFORM (MK)

Motor Mount Platform (MK)

For proper installation of the belt drive, consult the manufacturer. NORD MK motor mounts are adjustable in two ways. Slotted holes are provided at the input cylinder for the initial height adjustment. There are two fine adjustments at the yoke to increase/decrease tension. Two spanner head wrenches will be needed to tighten/loosen the fine adjustments. The four bolts holding the motor platform to the input cylinder must be loosened in order to use the fine adjustments.

The motor mounting platform has tapped holes to accept the foot pattern of the standard footed NEMA or IEC motor. All MK mounting input shaft diameters are metric.

Align the sheaves or sprockets square and parallel by placing a straight edge across their faces. Alignment of bushed sheaves and sprockets should be checked after bushings have been tightened. Check horizontal shaft alignment by placing a level vertically against the face of the sheave or sprocket. Adjust belt or chain tension per the manufacturer's specified procedure. After a period of operation, recheck alignment and adjust as required.

HARMFUL SITUATION

When using external chain or belt drives, make sure the reducer is sized so that the shaft and bearings have adequate capacity. To avoid unnecessary bearing loads and additional shaft deflection, mount all power take-off devices (sprockets, pulleys, etc.) so that the applied load center is as close to the gear housing as possible and check component alignment and tension of any belts or chains per the manufacturer's recommendation. Do not over tighten the belts or chains.

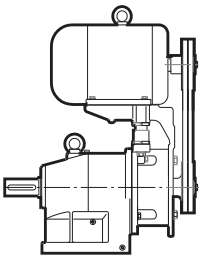

In-Line Unit

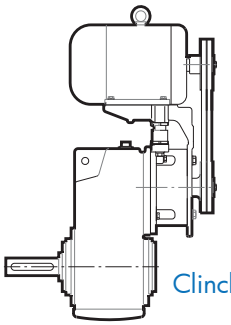

Clincher™ Unit

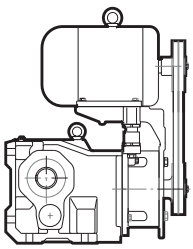

Bevel Unit

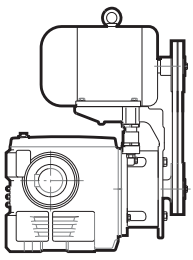

Worm Unit

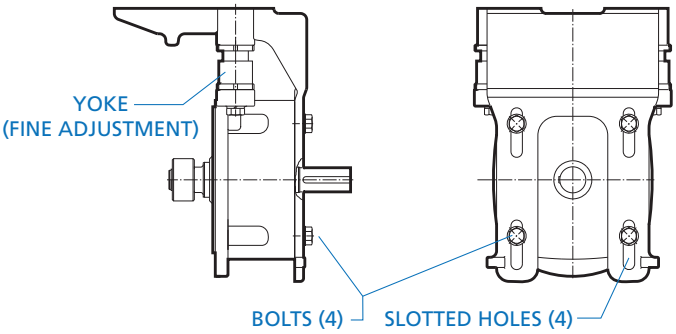

WARNING

NORD Gear does not furnish the safety guards for the belt drive. It is the responsibility of the customer to install a safety guard to conform to OSHA standards.

Sugar Scoop

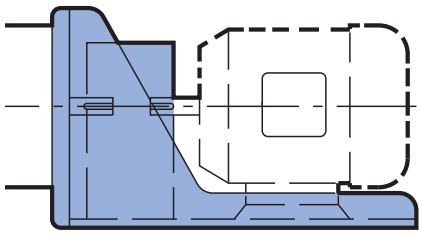

Each scoop bracket includes the coupling for the motor and the coupling guard.

- NORD's standard supplied coupling is the jaw-type coupling with elastomeric spider element.
- The reducer-side (driven) coupling hub is mounted by NORD.
- The motor-side (driver) coupling hub must be mounted by the party responsible for supplying or mounting the motor.
- The supplied coupling guard must be mounted after coupling installation.

Coupling Mounting Instructions

1. Make sure that the motor shaft is clean and free of burrs or defects.
2. Check the motor shaft, coupling hub bores, key and key seat dimensions to make sure they are the proper dimensions.
3. Mount the coupling onto the motor by placing the coupling so that the inside face is flush with the end of the motor shaft and tightening the set screws to hold it in place (Figure 1).

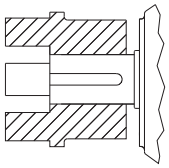

Figure 1. Place coupling flush with end of motor shaft and tighten setscrew.

IMPORTANT NOTE

Heating the coupling hub slightly, up to 176°F (80°C) will help facilitate installation onto the motor shaft.

WARNING

Wear appropriate safety gloves to handle the heated coupling hubs to avoid serious burns or injury.

HARMFUL SITUATION

DO NOT DRIVE or HAMMER coupling hubs into place. An endwise blow to the reducer or motor shaft can generate damaging axial forces and cause damage to the reducer or motor housing, bearings, or internal components.

4. Let the coupling cool down before mounting the spider into the jaws. The spider should not be under axial compression when installed.
5. Place the motor onto the scoop and engage the couplings together. The scoop has slotted holes to help accommodate axial alignment. Secure the motor to the scoop bracket but do not completely tighten the fasteners.

IMPORTANT NOTE

Before tightening the motor to the scoop bracket, the alignment of the coupling must be checked. Shimming of the motor feet may be needed to properly align the couplings. Careful coupling alignment extends the life of not only the coupling but all the components of the drive train.

6. Check the parallel alignment by placing a straight edge or level across the two coupling hubs, and measure the maximum offset at various points around the circumference of the coupling, without rotating the coupling. The maximum parallel alignment should not exceed 0.015 inches (4 mm).
7. Check the angular alignment of the coupling without rotating the hubs. The maximum angular displacement should not exceed 1.0°.
8. After both angular and parallel alignment is within specified limits, tighten all motor mounting hardware to the appropriate torque specification.
9. Re-check the critical alignment and repeat steps 6 and 7 if needed.
10. Mount the coupling guard to the scoop.

WARNING

It is the customer responsibility to properly guard the rotating shaft and coupling connection and make sure the system meets all local safety regulations.

IMPORTANT NOTE

After a period of operation, it is suggested that the system be checked to make sure coupling alignment is being maintained.

nsd tupH TOUCH-UP KIT

Items included in the touch-up kit

I. No Rinse Alodine® Touch-N-Prep pen.

II. Color matched sealer pen

⚠ WARNING ⚠

- Always wear Personal Protective Equipment (PPE), including gloves and safety glasses with side shields.
- When opening individual pens, pull safety caps straight out from pen. Do not twist or torque the cap to avoid damaging the applicator assembly.
- Do not use fingers to prime the applicator tip. Priming takes 15-30 seconds.
- Make sure the surface is clean and dry.

IMPORTANT NOTE

I. Metal temperature must be above 50° F

II. Do not excessively use abrasive pad while removing surface oxidation. Oxidation only needs to be removed from areas with exposed aluminum.

III. Use enough product to wet surface but avoid pooling.

IV. Do not rinse or wipe Alodine coating before the product is allowed to dry.

V. Allow to air dry or use a blow dryer. Do not use a heat gun. Maximum drying temperature is 140°F.

VI. Dry color will appear opaque.

Part I: Allodine® 871 Touch-N-Prep® Pen Instructions

Touch-N-Prep® pens are designed for easy and safe repair of clean, bare, or previously painted aluminum surfaces. It is a non-rinse, dry-in-place application that can be applied using the following steps:

1. Surface Preperation

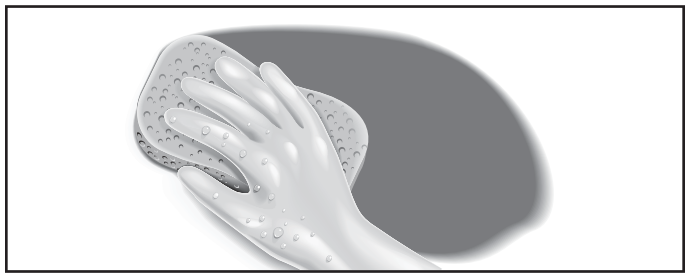

Before applying the coating, the treated surface must be cleaned using the following process:

- If the scratch is more than 24 hours old use a moistened abrasive pad to remove oxides from the surface of the metal.
- Wipe substrate with a damp lint-free cloth to ensure complete removal of soils and dislodged oxides generated from the previous step.
- Allow Surface to dry before Touch-N-Prep® application.

2. Prime Applicator Tip

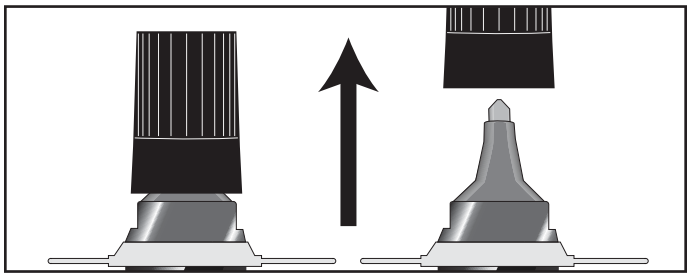

To activate, hold the Touch-N-Prep® pen upright and pop off the cap. Do not twist or turn to remove the cap, since this may result in the pen leaking. Hold the pen tip down onto a clean surface to begin the flow of solution to the tip.

3. Application

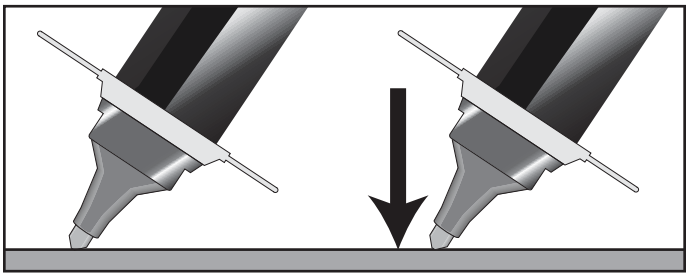

Press the pen tip down on the surface until solution fills the pen tip. Apply the Alodine® 871™ solution to the metal surface with firm, smooth, even strokes, covering all of the edges. Overlap each stroke and allow to dry.

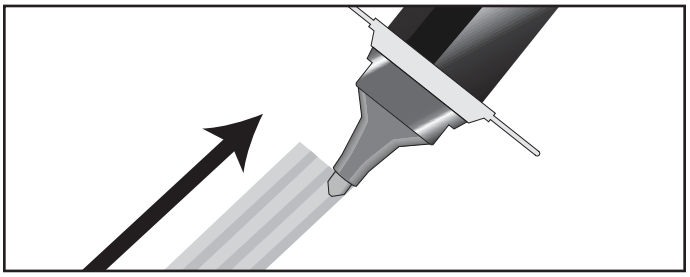

Frequent short jabs to re wet the application rip are preferred to maintain constant coating weights and avoid over-wetting the felt tip.

4. Re-Application

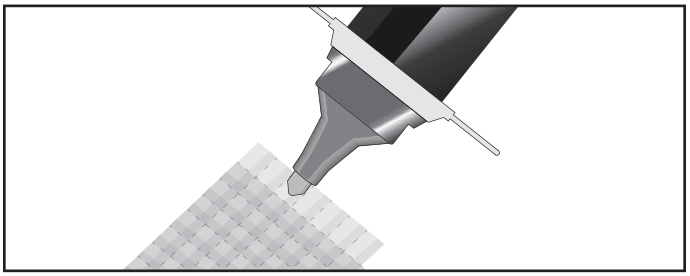

Within 5 minutes of the first coat, apply a second coat at a 90° angle to the first coat with the same smooth, firm stroke.

5. Prepare the Pen for Storage

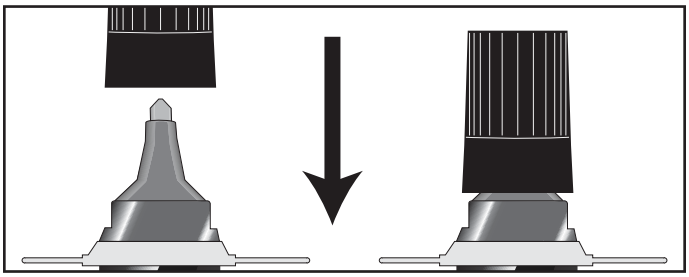

Always immediately replace the cap when not in use to avoid evaporation and contamination.

6. Drying

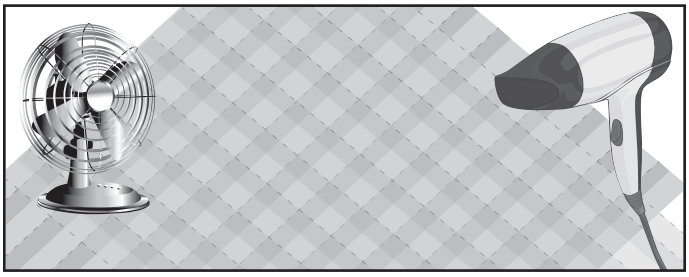

Allow the Alodine Touch-N-Prep® coating to air dry thoroughly.

Part II: Sealer Application

1. Prime Applicator Tip

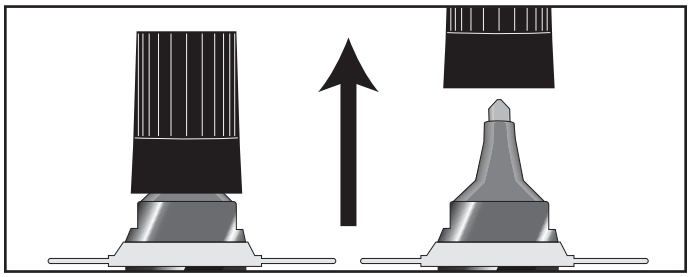

To activate, hold the pen upright and pop off the cap. Do not twist or turn to remove the cap, since this may result in the pen leaking. Hold the pen tip down onto a clean surface to begin the flow of solution to the tip.

2. Application

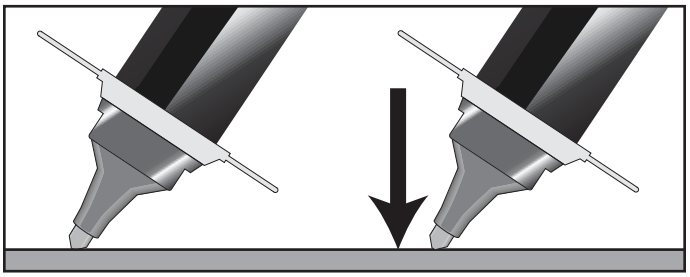

Press the pen tip down on the surface until solution fills the pen tip. Apply the sealer pen solution to the metal surface with firm, smooth, even strokes, covering all of the edges. Overlap each stroke and allow to dry.

3. Prepare the Pen for Storage

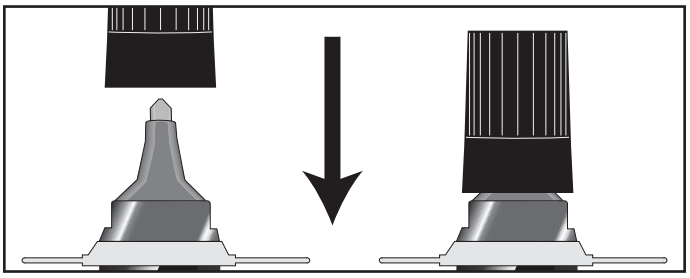

Always immediately replace the cap when not in use to avoid evaporation and contamination.

4. Drying

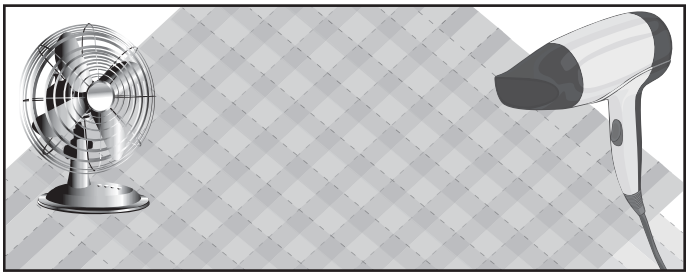

Allow the sealer pen coating to air dry thoroughly.

NORD GEAR CORPORATION

1. CONTRACT

Any contract between Nord Gear Corporation, hereinafter designated as Seller, and the Buyer is subject to the terms and conditions of sale hereinafter set forth. Any deviation from such terms and conditions must be specifically set forth in writing and consented to by Seller. Accordingly, the Buyer and Seller acknowledge and agree that the terms and conditions set forth below and on the face hereof shall govern Buyer's purchase of the goods described on the face hereof and shall take precedence over and represents the final agreement between Buyer and Seller, notwithstanding any inconsistent, contradictory or other prior or further conditions contained in any oral or written request or purchase order issued by Buyer or any other document furnished by Buyer in connection with its purchase of the Goods, regardless of whether such document or documents are exchanged simultaneously with this Invoice or prior or subsequent thereto. Any additional or different terms or conditions which may appear in any communicaiton, oral or written, from Seller, its officers, employees, agents or representatives, are hereby expressly rejected and shall not be effective or binding upon the Seller, unless specifically hereafter agreed to in writing by Seller and no such additional or different terms or conditions in any document submitted to Seller by Buyer shall become part of the contract between Buyer and Seller, unless such written acceptance by Seller specifically recognizes and assents to their inclusion. Any objection by Buyer to the terms and conditions hereof shall be ineffective unless Seller is advised in writing thereof within two (2) days of the date of this Invoice.

2. CONFIRMATION

An order shall be deemed accepted only when duly confirmed by Seller, at Nord Gear Corporation's home office in Waunakee, Wisconsin, and upon such confirmation the order shall become a contract binding upon the parties hereto, their successors and assigns.

3. PRICES

Prices shown are list prices and may be subject to applicable discounts. Unless otherwise agreed upon in writing, prices are FOB factory Waunakee, Wisconsin. Prices and discounts are subject to change without notice until order is accepted. Seller's prices do not include cost of any inspection permits required.

4. LIMITED WARRANTY

Seller hereby warrants that the goods sold hereunder shall be free from material defects in material and workmanship, if properly installed and used under normal operating conditions, for a period of twelve (12) months from the date of installation or eighteen (18) months from date of shipment, whichever comes first (the "Warranty Period"). With respect to gears and housings only, the Warranty Period is extended to thirty-six (36) months from the date of invoice or twenty-four (24) months from the date of installation, whichever comes first. The limited warranty shall not apply to any components or parts which are subject to normal operational wear and tear, including, but not limited to, belts and traction discs. Should any goods fail to comply with the foregoing limited warranty, Buyer shall provide written notice to Seller of the claimed defect and all relevant details within thirty (30) days of Buyer's discovery of the claimed defect. Buyer shall return the allegedly defective goods to Seller at its facilities in Waunakee, Wisconsin or to such other location within the USA as may be designated by Seller in its sole discretion, with all shipping and transportation charges prepaid by Buyer. Seller shall then examine the returned goods to determine if the claimed defect is covered by the limited warranty. If the claimed defect is covered by the limited warranty, Buyer's sole and exclusive remedy shall be to have Seller repair or replace, at Seller's option, the defective goods or components in accordance with the terms of this limited warranty. Seller shall have a commercially reasonable time to make such repairs or replacements and may use new or reconditioned components. Any repair or replacement shall not extend the Warranty Period unless otherwise agreed by Seller. Buyer shall pay all shipping costs and any costs of removal and re-installation of goods or components.

The foregoing limited warranty shall not apply with respect to any goods or components (i) which are not installed, used, operated, serviced or maintained in accordance with manufacturer's instructions or which are otherwise not properly installed, used, operated, serviced or maintained, or (ii) which are misused, neglected, damaged, altered, repaired, reconfigured or incorrectly wired. Seller makes no representations as to the specifications, capacity or performance of the goods sold hereunder, except as may be specifically set forth in the invoice's written specifications, and any such representations are expressly conditioned upon the accuracy and completeness of the data and information furnished by the buyer and upon the goods being properly installed, used, serviced and maintained by Buyer. Any description or model of the goods is for identification or illustrative purposes only and shall not be deemed to create any warranty, express or implied.

THE FOREGOING LIMITED WARRANTY SHALL EXTEND SOLELY TO BUYER AND NOT TO ANY OTHER PARTY. THE FOREGOING LIMITED WARRANTY IS IN LIEU OF ANY AND ALL OTHER WARRANTIES, WHETHER EXPRESS OR IMPLIED. SELLER HEREBY EXCLUDES AND DISCLAIMS ANY AND ALL OTHER WARRANTIES, WHETHER EXPRESS OR IMPLIED, INCLUDING, WITHOUT LIMITATION, ANY IMPLIED WARRANTIES OF MERCHANTABILITY OR FITNESS FOR A PARTICULAR PURPOSE. IF BUYER SHALL FAIL TO PAY WHEN DUE ANY PORTION OF THE PURCHASE PRICE OR ANY OTHER PAYMENT REQUIRED FROM BUYER TO SELLER UNDER THIS CONTRACT, ALL WARRANTIES AND REMEDIES SET FORTH HEREIN SHALL BE DEEMED NULL AND VOID, AB INITIO. THE PARTIES ACKNOWLEDGE AND AGREE THAT THE EXCLUSIVE REMEDY UNDER THE FOREGOING LIMITED WARRANTY SHALL NOT HAVE FAILED OF ITS ESSENTIAL PURPOSE (AS THAT TERM IS USED IN THE UNIFORM COMMERCIAL CODE) PROVIDED THAT SELLER REMAINS WILLING TO REPAIR OR REPLACE DEFECTIVE GOODS WITHIN A COMMERCIALLY REASONABLE TIME. BUYER SPECIFICALLY ACKNOWLEDGES AND AGREES THAT THE PRICE CHARGED BY SELLER FOR THE GOODS IS BASED UPON THE LIMITATIONS OF SELLER'S WARRANTY OBLIGATIONS AND OTHER LIABILITIES AS SET FORTH HEREIN.

LIMITATION OF LIABILITY. NOTWITHSTANDING ANY OTHER PROVISION HEREOF, IN NO EVENT SHALL SELLER BE LIABLE TO BUYER OR TO ANY OTHER PARTY FOR ANY INCIDENTAL, SPECIAL, INDIRECT OR CONSEQUENTIAL DAMAGES, LOST PROFITS, OR FOR ANY LOSSES, CLAIMS OR DAMAGES RELATING TO OR ARISING FROM THE USE OR OPERATION OF THE GOODS, AND IN NO EVENT SHALL ANY CLAIM OR RECOVERY OF ANY KIND EXCEED THE PURCHASE PRICE OF THE GOODS IDENTIFIED IN THE RELATED INVOICE.

5. SHORTAGE AND NONCONFORMITY

Any claim of shortage or that the goods do not conform with the specifications of the order or model must be made in writing within ten (10) days after delivery of the goods (as to which such claim is made) to Buyer or its nominees, but in no event shall the claim be later than within the time limit provided by the carrier or insurance company, otherwise such claim shall be deemed waived. Buyer may not return any goods claimed to be in non-conformity without Seller's prior written authorization. Goods returned without permission will not be accepted, including for credit, and will be returned to Buyer, F.O.B. Sellter's plant. Any claim based on the receipt of damaged Goods must be filed with the carrier which delivered the goods. The samples, measurements, dimensions and weights contained in the Seller's catalogs, sales manuals, photographs and drawings constitute only an approximate guide. The Seller reserves the right to make any change which the Seller, in its absolute discretion, considers necessary. While the goods will be delivered principally according to specifications or standards or quantities agreed upon, insignificant deviations or insignificant changes in construction are permissible. The same applies to partial deliveries, In the event that Buyer has a verified claim of shortage or nonconformity of the goods to the specifications of the order or the model, and if such claim has been submitted within the required time limit as set forth above, the Seller shall, at its own expense, make up for the shortage of the goods, or replace or repair the goods, as the case may be, but in no event shall Seller be or become liable to Buyer or to any other person or persons for any loss in damage, direct or indirect, arising out of or caused by such incidents or for the loss of profits, business or good will. The liability of the Seller to Buyer, if any hereunder, for breach of warranty, contract, negligence or otherwise, shall in no event exceed the amount of the purchase price of the goods sold with respect to which any damages are claimed. Shipping dates are estimates unless parties expressly agree on time of the essence.

6. FORCE MAJEURE

The obligation of the Seller shall be modified or excused, as the case may be, for reasons of Acts of God, war, governmental law regulations, strikes or lock-outs, fire, breakdown of machinery, whether in its own business enterprise, or if for any other cause beyond Seller's control, the goods cannot be delivered or their delivery becomes delayed in whole or in part. In the above instances time for delivery shall be extended for the period of the delay caused, with the proviso, however, that either party may cancel in writing the undelivered portion of the order or contract if the delay exceeds six (6) months from the delivery date originally confirmed by Seller. In no event shall Seller become liable in the aforesaid instances to Buyer or any third party for consequential damages or business loss.

7. SHIPMENT AS UNIT

Each shipment by Seller shall be treated as a separate and distinct unit with respect, but only with respect to forwarding, terms of payment, and the making of claims by the Buyer: provided, however, that if the Buyer defaults in the payment of any obligation to Seller or any installments thereof, under any agreement between Buyer and Seller, or if Buyer refuses to accept any goods when tendered for delivery, the Seller may, on fifteen (15) days written notice to the Buyer, without prejudice to Seller's other lawful remedies, either defer further performance until the defaulted payments are made in full, or make future deliveries for cash in advance only, or treat the entire contract or contracts with Buyer as breached by the Buyer and pursue its remedies for breach.

8. BUYER'S REFUSAL OF DELIVERY

If Buyer refuses to accept delivery of any goods tendered for delivery, then Seller, without prejudice to Seller's other lawful remedies, may either store or cause such goods to be stored in a warehouse, for buyer's account and at Buyer's cost, risk and expense, or sell such goods (without notice) to any purchases at public or private sale, and hold the Buyer liable for any difference between (a) the contract price of the goods, and (b) the price at which goods are resold less the costs and expense of such resale including brokerage commissions, or restocking charges.

9. GOODS IN TRANSIT

If prior to delivery or while the goods are in transit, Buyer or Seller becomes bankrupt or insolvent, or any petition in bankruptcy or for the reorganization or for a state court receivership is filed against Buyer or Seller, as the case may be, then the other party hereto may forthwith terminate this contract by giving written notice of such termination. Such termination shall not affect any claim for damages available to the Buyer, provided that if Buyer is then indebted to Seller, the amount of any such damage claim shall be abated to the extent that the indebtedness of Buyer to Seller, as actually paid in money, is abated by any order of judgement entered or any plan adopted in any bankruptcy, reorganization, receivership, or similar proceeding. Such termination shall not prejudice the Seller's rights to any amounts then due under the contract. If Buyer becomes bankrupt or insolvent or any petition in bankruptcy or for reorganizing or if a state court receivership is filed against Buyer, then, at its option Seller may take possession of any goods theretofore sold to Buyer, in connection with which the full purchase price has not been paid, analogous to the terms and provisions set forth in Paragraphs 11 and 12 hereinafter.

10. DELIVERY

(a) Any indicated dates of delivery are approximate only, but NORD Gear will attempt to meet them whenever possible. (b) NORD Gear will not be liable for any penalty clausess contained in any specifications or order submitted unless agreed to in writing by an authorized officer of NORD Gear Corporation. (c) Unless otherwise agreed, delivery of the goods to any carrier shall constitute delivery to the Buyer, and thereafter the risk of loss or damage to the goods shall be upon the Buyer. (d) If the Buyer does not give delivery instructions to the Seller at least (10) days prior to the delivery date ex factory confirmed by the Seller, the Seller may deliver the goods to a carrier of its own choosing, at Buyer's cost and risk, or, at Seller's option, may store the goods on the pier or any warehouse, at Buyer's cost and risk. Any purchase price in such event becomes due and payable within ten (10) days of such storage.

11. PAYMENT OF PURCHASE PRICE

Time of payment is of the essence under the contract. Unless otherwise provided, terms of payment are 30 days net from the date of invoice with a 1% discount if paid within 10 days of date of invoice. Upon default in any of the terms of the contract, or failure to comply with any of the conditions thereof, or upon seizure of the property under execution or other legal process, or if the Buyer becomes bankrupt or insolvent, or any petition for reorganization or for a state court receivership is filed against Buyer, or if the Buyer makes any assignment for the benefit of it's creditors or otherwise sells, encumbers or disposes of the goods, or if for any other reason the Seller should deem itself insecure, the full amount of the purchase price then remaining unpaid shall at once become due and payable at the option of the Seller.

12. BUYER'S DEFAULT

Upon the Buyer's default, the Seller may dispose of the merchandise in any manner that it deems fit and, if it desires to resell same, may do so at private or public sale, with or without notice, and with or without the property being at the place of sale, subject, however, to applicable laws. The Seller or its assigns shall have the right to bid at such sale and may become the purchaser of the property. The proceeds of the sale shall first be applied to the expenses incurred in retaking, repairing, storing and selling the goods, reasonable attorney's fees included, and then shall be applied to the payment of the balance due under the contract. Any surplus amount shall be paid to the Buyer. If a deficiency results after the resale, the Buyer agrees to pay such forthwith, together with reasonable attorney's fees, for the recovery of the goods incurred by the Seller. If upon the Buyer's default, the Seller elects not to resell any goods which it may repossess, then the cost of repossession, including reasonable attorney's fees, shall forthwith be due and payable from Buyer to Seller. Buyer agrees to pay all reasonable costs and reasonable attorneys' fees incurred by Seller in enforcing Seller's rights against Buyer, including Seller's right to payment of the purchase price of the goods and Buyer's payment of all other amounts owing to Seller required under this Invoice and Conditions of Sale.

13. SECURITY INTEREST AND TITLE

In states and localities which are governed by the Uniform Commercial Code, this contract shall serve as security agreement, reserving in Seller a security interest until full payment of purchase price. The provisions of the Uniform Commercial Code regarding security interest shall have preference and apply if inconsistent with other terms of the conditions of sale. In states and localities where the Uniform Commercial Code does not apply, title to the goods shall remain in the Seller or its assigns until full payment of the purchase price. Buyer agrees to execute forthwith any and all documents in such a way and form as Seller may need for filing or recording the security interest under the Uniform Commercial Code with the proper registers or offices, or for filing or recording the conditional sales contract.

14. SALES AND USE TAX

Buyer agrees to bear and pay any sales or use tax in connection with the purchase herein, and to hold the Seller harmless from payment. At the option the Seller, Buyer shall give evidence of payment or of exemption certificate.

15. INSURANCE

The Buyer shall keep the goods insured against damage by fire, water or other casualty as required by Seller, with a company acceptable to Seller, with loss payable to Seller for the total purchase price until the Seller is fully paid. Seller, if it so elects, may place said insurance at Buyer's expense; Seller may cancel such insurance at any time and without notice and may receive the return premium, if any.

16. MODIFICATION BY SELLER

Any contract may be assigned or transferred by the Seller, or the time for the making of any payment due by Buyer may be extended by Seller without derogation of any of the rights of the Seller or its assigns. Waiver by any party of any default shall not be deemed a waiver of any subsequent default.

17. RETURNED GOODS

No goods will be accepted for return unless authorized in writing by Seller. In all cases, transportation and restocking charges will be borne by Buyer.

18. PACKING

The Buyer will be charged for export packaging or other special packing desired. Cost for cartage to ship or transfer express will be added to the invoice. No credit will be allowed if no packing is required.

19. CHANGES/CANCELLATION

NORD Gear will not accept changes in specifications to a confirmed order unless such changes are requested in writing and confirmed back in writing. In addition, the purchaser must to agree to any additional charges that may arise from the change. Placing orders on hold or cancellation of orders require Seller's written approval, and are subject to cancellation and/or restocking charges.

20. BUYER'S RESPONSIBILITY AS TO MAINTENANCE

Buyer shall use and shall require its employees and agents to use all safety devices and guards and shall maintain the same in proper working order. Buyer shall use and require its employees and agents to use safe operation procedures in operating the equipment and shall further obey and have its employees and agents obey safety instructions given by Seller. If Buyer fails to meet the obligations herein, Buyer agrees to defend, indemnify and save Seller harmless from any liability or obligation with regard to any personal injuries or property damages directly or indirectly connected with the operation of the equipment. Buyer further agrees to notify Seller promptly and in any event not later than ten (10) days after notice or knowledge of any accident or malfunction involving Seller's equipment which has caused personal injury or property damages and to cooperate fully with Seller in investigating and determining the causes of such accident and malfunction. In the event that Buyer fails to give such notice to Seller or to cooperate with Seller, Buyer shall be obligated to defend, indemnify and save Seller harmless from any such claims arising from such accident.

21. MISCELLANEOUS PROVISIONS

(a) If for any reason a provision of a contract is legally invalid, then in such event the rest of the contract shall remain in full force and affect, except that the parties shall try to replace such invalid provision closest to their original mutual intentions. (b) This Invoice and these Conditions of Sale constitute the entire agreement between the parties regarding the subject matter hereof and supercedes all prior agreements, understandings and statements, whether oral or written, regarding such subject matter. No modification to, change in or departure from, the provisions of this Invoice and Conditions of Sale shall be valid or binding on Seller, unless approved in writing by Seller. No course of dealing or usage of trade shall be applicable unless expressly incorporated into this Invoice and Conditions of Sale. Any amendments to any contract or contracts between the parties shall be valid only upon the written consent of both parties.

22. NON ASSIGNMENT BY BUYER

Contract or contracts may not be assigned by the Buyer without prior written consent of the Seller.

23. APPLICABLE LAW AND VENUE

All contracts and their interpretation are governed by the applicable, substantive laws of the State of Wisconsin. Any litigation brought by the Buyer regarding this Invoice or goods purchased hereunder may only be brought in the Circuit Court for Dane County, Wisconsin.

NORD GEAR LIMITED

TERMS & CONDITIONS OF SALE

1. CONTRACT
Any contract between Nord Gear Limited, hereinafter designated as "Seller", and the party or parties accepting these terms and conditions of sale and any agent, officer, servant, employee or subcontractor of such party or parties, hereinafter designated as "Buyer", is subject to the terms and conditions of sale hereinafter set forth. Any deviation from such terms and conditions must be specifically set forth in writing and consented to by Seller.

2. CONFIRMATION
An order shall be deemed accepted only when duly confirmed by Seller, at Nord Gear Limited's home office in Brampton, Ontario, and upon such confirmation the orders shall become a contract binding upon the parties hereto, their successors and assigns.

3. PRICES
Prices shown are list prices and may be subject to applicable discounts. Unless otherwise agreed upon in writing, prices are FOB factory Brampton, Ontario. Prices and discounts are subject to change without notice until the order is accepted. Seller's prices do not include cost of any inspection permits required.

4. LIMITED WARRANTY
Seller warrants the goods sold hereunder to be free from defects in material and workmanship under normal use and service not arising from misuse, negligence, or accident, including but not limited to the use, installation, and transportation of the goods by Buyer, its agents, servants, employees, or by carriers. This warranty shall pertain to any part or parts of any goods to which Buyer or its assigns has within one year from date of delivery given written notice of claimed defects to Seller. Buyer shall be required to furnish Seller with details of such defects and this warranty shall be effective as to such goods which Seller's examination shall disclose to its satisfaction to have been defective and which at Seller's option shall promptly thereafter be returned to Seller or its nominees. EXCEPT FOR THE EXPRESS WARRANTIES SET FORTH ABOVE, SELLER HAS MADE NO WARRANTIES, EXPRESS, IMPLIED OR STATUTORY, AS TO THE GOODS SOLD HEREUNDER, INCLUDING, BUT NOT LIMITED TO THEIR MERCHANTABILITY OR FITNESS FOR ANY PARTICULAR PURPOSE. ANY DESCRIPTION OR MODEL OF THE GOODS IS FOR IDENTIFICATION OR ILLUSTRATIVE PURPOSES ONLY AND SHALL NOT BE DEEMED TO CREATE AN EXPRESS WARRANTY. The Buyer's exclusive remedy for claims arising from defective or nonconforming goods shall be limited to the repair or replacement thereof at the Seller's sole option. THE SELLER SHALL NOT BE RESPONSIBLE OR LIABLE FOR CONSEQUENTIAL DAMAGES ARISING OUT OF OR IN CONNECTION WITH THE SALE, DELIVERY, USE, PERFORMANCE, OR SERVICE OF THE GOODS SOLD UNDER THIS AGREEMENT. SELLER SHALL NOT BE LIABLE FOR ANY LOST PROFITS OR FOR ANY CLAIM OR DEMAND AGAINST SELLER BY ANY PARTY. IN NO EVENT WILL SELLER BE LIABLE FOR SPECIAL, INDIRECT OR CONSEQUENTIAL DAMAGES, EVEN IF SELLER HAS BEEN ADVISED OF THE POSSIBILITY OF SUCH DAMAGES. SELLER'S AGGREGATE LIABILITY FOR DAMAGES UNDER THIS AGREEMENT, WHETHER ARISING FROM OR BASED UPON BREACH OF WARRANTY, BREACH OF CONTRACT, TORT OR OTHER CAUSE OF ACTION, SHALL IN NO CASE EXCEED THE PURCHASE PRICE THAT BUYER PAYS FOR THE PARTICULAR GOODS INVOLVED. Seller shall in no event be liable to any person or firm (including any assignee or Buyer) except Buyer and its successors. Unless specifically authorized by Seller in writing, Seller shall not become responsible for any repair work done by Buyer or any other party on any goods sold. Any costs of the return of such goods to Seller shall be borne by Buyer. Goods sold but not manufactured by Seller are being warranted as to defects in material and workmanship consistent with the limited warranty policy of the original manufacturer of the goods and if there is not such a limited warranty policy, the warranty shall be limited to the provisions of Article 4 herein. Standards for the operating characteristics of the gearboxes and the gear motors are in conformity with Seller's tests. THIS WARRANTY IS IN LIEU OF ALL OTHER EXPRESS OR IMPLIED WARRANTIES, INCLUDING ANY IMPLIED WARRANTY OF MERCHANTABILITY OR FITNESS FOR ANY PARTICULAR PURPOSE SELLER DOES NOT ASSUME, NOR DOES IT AUTHORIZE ANY PERSON TO ASSUME, ON ITS BEHALF, ANY OTHER OBLIGATION OR LIABILITY.

5. SHORTAGE AND NONCONFORMITY
Any claim of shortage or that the goods do not conform with the specifications of the order or model must be made in writing within ten (10) days after delivery of the goods (as to which such claim is made) to Buyer or its nominees, but in no event shall the claim be later than within the time limit provided by the carrier or insurance company, otherwise such claim shall be deemed waived. The samples, measurements, dimensions and weights contained in Seller's catalogs, sales manuals, photographs and drawings constitute only an approximate guide. Seller reserves the right to make any changes which Seller, in its absolute discretion, considers necessary. While the goods will be delivered principally according to specifications of standards or quantities agreed upon, insignificant deviations or insignificant changes in construction are permissible. The same applies to partial deliveries. In the event that Buyer has a verified claim of shortage or nonconformity of the goods to the specifications of the order or the model, and if such claim has been submitted within the required time limit as set forth above, Seller shall, at its own expense, make up for the shortage of the goods, or replace or repair the goods, as the cause may be, but in no event shall Seller be or become liable to Buyer or to any other person or persons for any loss in damage, direct or indirect, arising out of or caused by such incidents or for the loss of profits, business of good will. Shipping dates are estimates unless parties expressly agree on time of the essence.

6. FORCE MAJEURE
The obligation of Seller shall be modified or excused, as the case may be, for reasons of Acts of God, war, governmental law regulations, strikes or lock-outs, fire, breakdown of machinery, whether in its own business enterprise, or if for any other cause beyond Seller's control, the goods cannot be delivered or their delivery becomes delayed in whole or in part. In the above instances time for delivery shall be extended for the period of the delay caused, with the proviso, however, that either party may cancel in writing the undelivered portion of the order of contract if the delay exceeds six (6) months from the delivery date originally confirmed by Seller. In no event shall Seller become liable in the aforesaid instances to Buyer or any third party for consequential damages or business loss.

7. SHIPMENT AS UNIT
Each shipment by Seller shall be treated as a separate and distinct unit with respect, but only with respect to forwarding, terms of payment, and the making of claims by Buyer; provided, however, that if Buyer defaults in the payment of any obligation to Seller or any installments thereof, under any agreement between Buyer and Seller, or if Buyer refuses to accept any goods when tendered for delivery, Seller may, on fifteen (15) days written notice to Buyer, without prejudice to Seller's other lawful remedies, either defer further performance until the defaulted payments are made in full, or make future deliveries for cash in advance only, or to treat the entire contract or contracts with Buyer as breached by Buyer and pursue its remedies for breach.

8. BUYER'S REFUSAL OF D ELIVERY
If Buyer refuses to accept delivery of any goods tendered for delivery, then Seller, without prejudice to Seller's other lawful remedies, may either store or cause such goods to be stored in a warehouse, for Buyer's account and at Buyer's cost, risk and expense, or sell such goods (without notice) to any purchaser at public or private sale, and hold Buyer liable for any difference between (A) the contract price of the goods, and (B) the price at which goods are resold less the costs and expense of such resale including brokerage commissions, or restocking charges.

9. GOODS IN TRANSIT
If prior to delivery or while the goods are in transit, Buyer or Seller becomes bankrupt or insolvent, or any petition in bankruptcy or for the reorganization or for appointment of a receiver is filed against Buyer or Seller, as the case may be, then the other party hereto may forthwith terminate this contract by giving written notice of such termination. Such termination shall not affect any claim for damages available to Buyer, to Seller, as actually paid in money, is abated by any order of judgment entered or any plan adopted in any bankruptcy, reorganization, receivership, or similar proceeding. Such termination shall not prejudice Seller's rights to any amounts then due under the contract. If Buyer becomes bankrupt or insolvent or any petition in bankruptcy or for reorganization or if a state court receivership is filed against Buyer, then, at its option, Seller may take possession of any goods theretofore sold to Buyer, in connection with which the full purchase price has not been paid, analogous to the terms and provisions set forth in Paragraphs 11 and 12 hereinafter.

10.DELIVERY
(A)Unless otherwise agreed, delivery of the goods to any carrier shall constitute delivery to Buyer, and thereafter the risk of loss or damage to the goods shall be upon Buyer. (B) If Buyer does not give delivery instructions to Seller at least ten (10) days prior to the delivery date ex factory confirmed by Seller, Seller may deliver the goods to a carrier of its own choosing, at Buyer's cost and risk, or, at Seller's option may store the goods on the pier or on any warehouse at Buyer's cost and risk. Any purchase price in such event becomes due and payable within ten (10) days of such storage.

11. PAYMENT OF PURCHASE PRICE
Time of payment is of the essence under the contract. Upon default in any of the terms of the contract, or failure to comply with any of the conditions thereof, or upon seizure of the property under execution or other legal process, or if Buyer becomes bankrupt or insolvent, or any petitions for reorganization or for appointment of a receiver is filed against Buyer, or if Buyer makes any assignment for the benefit of its creditors or otherwise sells, encumbers or disposes of the goods, or if for any other reason Seller should deem itself insecure, the full amount of the purchase price then remaining unpaid shall at once become due and payable at the option of Seller. Interest on the delinquent payment from the due date thereof until paid shall be at a rate of two (2%) percent per month.

12. BUYER'S DEFAULT
Upon Buyer's default, Seller may dispose of the merchandise in any manner that it deems fit and, if it desires to resell same, may do so at private or public sale, with or without notice, and with or without the property being at the place of sale, subject, however, to applicable laws. Seller or its assigns shall have the right to bid at such sale and may become the purchaser of the property. The proceeds of the sale shall first be applied to the expenses incurred in retaking, repairing, storing and selling the goods; reasonable solicitor's fees included, and then shall be applied to the payment of the balance due under the contract. Any surplus amount shall be paid to Buyer. If a deficiency results after the sale, Buyer agrees to pay such forthwith, together with reasonable solicitor's fees, for the recovery of the goods incurred by Seller. If upon Buyer's default, Seller elects not to resell any goods which it may repossess, then the cost of repossession, including reasonable solicitor's fees, shall forthwith be due and payable from Buyer to Seller.

13. SECURITY INTEREST AND TITLE
In provinces which are governed by a Personal Property Security Act, this contract shall serve as a security agreement, reserving in Seller a security interest until full payment of the purchase price. The provisions of the Personal Property Security Act regarding security interest shall have preference and apply if inconsistent with other terms of the conditions of sale herein. In provinces where a Personal Property Security Act does not apply, title to the goods shall remain in the Seller or its assigns until full payment of the purchase price. Buyer agrees to execute forthwith any and all documents in such a way and form as Seller may need for filing or recording the security interest under a Personal Property Security Act with the proper registers or offices, or for filing or recording the Conditional Sales Contract herein.

14. SALES AND USE TAX
Seller's prices do not include sales, use, excise or other taxes payable to any governmental authority in respect of the sale of Seller's goods. Buyer shall pay, in addition to Seller's price, the amount of any such taxes or shall reimburse Seller for the amount thereof that Seller may be required to pay. At the option of Seller, Buyer shall give evidence of payment or of exemption certificate.

15. INSURANCE
Buyer shall keep the goods insured against damage by fire, water or other casualty as required by Seller, with a company acceptable to Seller, with loss payable to Seller for the total purchase price until Seller is fully paid. Seller, if it so elects, may place said insurance at Buyer's expense; Seller may cancel such insurance at any time and without notice and may receive the return premium, if any.

16. MODIFICATION BY SELLER
Any contract may be assigned or transferred by Seller, or the time for the making of any payment due by Buyer may be extended by Seller without derogation of any of the rights of Seller or its assigns. Waiver by any party of any default shall not be deemed a waiver of any subsequent default.

17. RETURNED GOODS
No goods will be accepted for return unless authorized in writing by Seller. In all cases, transportation and restocking charges will be borne by Buyer.

18. PACKING
Seller does not charge for standard packaging for domestic shipment. Buyer will be charged, however, for export packaging or other special packing desired. Cost for cartage to ship or transfer express will be added to the invoice. No credit will be allowed if no packing is required.

19. EXPORT ORDER
Export orders are to be accompanied by a confirmed irrevocable Letter of Credit in Seller's favor, in Canadian currency, with an accredited Canadian bank, subject to Seller's draft, with shipping documents attached.

20. CANCELLATION
Placing orders on hold or cancellation of orders require Seller's written approval, and are subject to cancellation and/or restocking charges.

21. BUYER'S RESPONSIBILITY AS TO MAINTENANCE
Buyer shall use and shall require its employees and agents to use all safety devices and guards and shall maintain the same in proper working order. Buyer shall use and require its employees and agents to use safe operating procedures in operating the equipment and shall further obey and have its employees and agents obey safety instructions given by Seller. If Buyer fails to meet the obligations herein, Buyer agrees to indemnify and save Seller harmless from any liability or obligation with regard to any personal injuries or property damages directly or indirectly connected with the operation of the equipment. Buyer further agrees to notify Seller promptly and in any event not later than ten (10) days after notice or knowledge of any accident or malfunction involving Seller's equipment which has caused personal injury or property damages and to cooperate fully with Seller in investigating and determining the causes of such accident and malfunction. In the event that Buyer fails to give such notice to Seller or to cooperate with Seller, Buyer shall be obligated to indemnify and save Seller harmless from any such claims arising from such accident.

22. MISCELLANOUS PROVISIONS
(A)If for any reason a provision of a contract is legally invalid, then in such event the rest of the contract shall remain in full force and affect, except that the parties shall try to replace such invalid provision with a provision closest to their original mutual intentions. (B) Any amendments to any contract or contracts require the consent in writing by both parties. Headings in this document are for ease of reference only.

23. NON ASSIGNMENT BY BUYER
Contract or contracts may not be assigned by Buyer without prior written consent of Seller.

24. APPLICABLE LAW
This agreement shall be governed by the laws of the Province of Ontario and the applicable laws of Canada. Buyer and Seller agree that any judicial proceeding with respect to this agreement must be brought and maintained in the City of Toronto, In the Province of Ontario.

25.
This instrument sets forth the entire understanding and agreement of the parties hereto in respect of the subject matter hereof, and all prior undertaking between the parties hereto, together with all representations and obligations of such parties in respect of such subject matter, shall be superseded by and merged into this instrument.

26.
The provisions of this agreement shall bind and ensure to the benefit of the parties hereto and their respective heirs, executors, administrators, successors and (subject to any restrictions or assignment herein above set forth) assigns, as the case may be.

27.
The parties acknowledge that they have requested this document and all notices or other documents relating thereto be drafted in the English language.

Les parties reconnaissent qu'ils ont requis que ce contrat et tous les avis ou autres documents qui s'y rapportent soient rédiges en langue anglaise.

"Terms and Conditions in French available upon request."

Product Overview

We can match our NORDAC AC vector drives with our Inverter/Vector Duty Motors and UNICASE™ Speed Reducers to provide a total AC Motor Drive solution from one trusted source.

UNICASE™ SPEED REDUCERS

HELICAL IN-LINE
- Foot or Flange Mount
- Torque up to 205,000 lb-in
- Gear ratios – 1.82:1 to over 300,000:1

NORDBLOC® HELICAL IN-LINE
- Foot or Flange Mount
- Torque up to 26,550 lb-in
- Gear ratios – 1.88:1 to over 370:1

PARALLEL HELICAL CLINCHER™
- Shaft, Flange or Foot Mount
- Torque up to 797,000 lb-in
- Gear ratios – 4.26:1 to over 300,000:1

RIGHT ANGLE HELICAL-BEVEL 2-STAGE
- Foot, Flange or Shaft Mount
- Torque up to 5,840 lb-in
- Gear ratios – 4.1:1 to 72:1

RIGHT ANGLE HELICAL-BEVEL
- Foot, Flange or Shaft Mount
- Torque up to 283,000 lb-in
- Gear ratios – 8.04:1 to over 300,000:1

RIGHT ANGLE HELICAL-WORM
- Foot, Flange or Shaft Mount
- Torque up to 27,585 lb-in
- Gear ratios – 4.40:1 to over 300,000:1

MINICASE™ RIGHT ANGLE WORM
- Foot, Flange or Shaft Mount
- Torque up to 3,540 lb-in
- Gear ratios – 5:1 to 500:1

FLEXBLOC™ WORM
- Modular bolt-on options
- Torque up to 4,683 lb-in
- Gear ratios – 5:1 to 3,000:1

HIGH PERFORMANCE MOTORS & BRAKEMOTORS

INVERTER/VECTOR DUTY
- Standard or Energy Efficient
- Integral, NEMA or Metric IEC
- 1/6 to 250 hp

NORDAC AC VECTOR DRIVES

TRIO SK300E
- Motor or remote mounted
- IP55 – washdown
- 380-460V, 3-phase, to 5hp
- 200-240V, 3-phase, to 3hp

SK500/520/530E
- Compact, high performance
- 380-480V, 3-phase, to 10hp
- 200-240V, 3-phase, to 5hp
- 200-240V, 1-phase, to 3hp
- 110-120V, 1-phase, to 1.5hp

SK700E
- Flexible high performance
- 380-460V, 3-phase, to 200hp

NORD DRIVESYSTEMS

www.nord.com

NORD Gear Corporation
National Customer Service Toll-Free: 888.314.6673
info.us@nord.com

NORD Gear Limited
Toll-Free in Canada: 800.668.4378
info.ca@nord.com

WEST
Corona, CA (Los Angeles)
Phone: 608.849.0190

MIDWEST
Waunakee, WI (Madison)
Phone: 608.849.7300

EAST
Charlotte, NC
Phone: 608.849.0140

CANADA
Brampton, ON (Toronto)
Phone: 905.796.3606

10020010 4/0909

Installation, Operation and Maintenance Instructions

for AC Induction Motors
56- 6800 Frames (NEMA)
63 – 280 Frames (IEC)

MARATHON ELECTRIC
Contact Motor Customer Service at:
Phone: (715) 675-3311
www.marathonelectric.com

Form 5554E

INSTALLER: PLEASE LEAVE THIS MANUAL FOR THE OWNER'S USE
OWNER: READ AND SAVE THESE INSTRUCTIONS

SAFETY INSTRUCTIONS

⚠ This is the safety alert symbol. It is used to alert you to potential personal injury hazards. Obey all safety messages that follow this symbol to avoid possible injury or death.

⚠ WARNING
Before installing, using, or servicing this product, carefully read and fully understand the instructions including all warnings, cautions, & safety notice statements. To reduce risk of personal injury, death and/or property damage, follow all instructions for proper motor installation, operation and maintenance.

These instructions are not intended as a complete listing of all details for installation, operation, and maintenance. If you have any questions concerning any of the procedures, STOP, and call the appropriate Regal-Beloit motor company.

Table of Contents

1.0 INSTALLER / OWNER / OPERATOR RESPONSIBILITY
- 1.1 Electrical Safety
- 1.2 Mechanical Safety
- 1.3 Environmental Safety

2.0 RECEIVING & INSPECTION
- 2.1 Initial Inspection
  - 2.1.1 Packing List & Inspect
  - 2.1.2 Turn Motor Shaft
  - 2.1.3 Check Nameplate
- 2.2 Handling
  - 2.2.1 Correct Lifting Angles
- 2.3 Storage
  - 2.3.1 Bearing Lubrication
  - 2.3.2 Shaft Rotation
  - 2.3.3 Damp or Humid Storage Locations

3.0 INSTALLATION AND OPERATION
- 3.1 Location
  - 3.1.1 Selecting a Location
  - 3.1.2 Ambient Temperature Limits
  - 3.1.3 Construction Selection per Location
    - 3.1.3.1 Dripproof
    - 3.1.3.2 Totally Enclosed
    - 3.1.3.3 Hazardous Locations Motors
- 3.2 Mounting Motor
  - 3.2.1 Rigid Base (Footed)
  - 3.2.2 Rigid Base Hole Selection -6 or 8 Hole Bases
  - 3.2.3 Vertical
- 3.3 Application Assembly to Motor
  - 3.3.1 General: Proper Alignment
  - 3.3.2 Direct Coupling
  - 3.3.3 Direct Connected
  - 3.3.4 Belted
  - 3.3.5 VFD Operation
  - 3.3.6 Accessories
    - 3.3.6.1 General
    - 3.3.6.2 Brake Motors
    - 3.3.6.3 Space Heaters
    - 3.3.6.4 Thermal Protection General, Thermostats, Thermisters & RTDs
    - 3.3.6.5 RTD Alarm & Trip Settings
  - 3.3.7 Guards
- 3.4 Electrical Connections
  - 3.4.1 Power Supply / Branch Circuit
    - 3.4.1.1 Branch Circuit Supply
    - 3.4.1.2 Fuses, Breakers, Overload Relays
    - 3.4.1.3 AC Power Supply Limits
  - 3.4.2 Terminal Box
    - 3.4.2.1 Conduit opening
    - 3.4.2.2 Hazardous Locations
  - 3.4.3 Lead Connections
    - 3.4.3.1 Wire Size Requirements (Single Phase)
    - 3.4.3.2 Extension Cords (Single Phase)
  - 3.4.4 Ground Connections
  - 3.4.5 Start Up
    - 3.4.5.1 Start Up – No Load Procedure
    - 3.4.5.2 Start Up – Load Connected Procedure
    - 3.4.5.3 Jogging and/or repeated starts

4.0 MAINTENANCE
- 4.1 General Inspection

4.1.1 Ventilation
4.1.2 Insulation
4.1.3 Electrical Connections
4.2 Lubrication and Bearings
4.2.1 Grease Type
4.2.2 Bearing Operating Temperature
4.2.3 Lubrication Interval
4.2.4 Lubrication Procedure
4.2.5 Lubrication Example
4.3 Trouble Shooting
4.3.1 General Trouble-Shooting Warnings
4.3.2 Trouble-Shooting Cause / Corrective Action

motor is suitable for use on Pulse Width Modulated (PWM) type VFD power. In addition, the nameplate must be marked with the inverter rating; for example, "2:1 CT", "2 to 1 Constant Torque", etc.

1.0 INSTALLER/OWNER/OPERATOR RESPONSIBILITY:

1.1 ELECTRICAL SAFETY

⚠ WARNING: ELECTRICAL SHOCK HAZARD

Electrical connections shall be made by a qualified electrical personnel in accordance with all applicable codes, ordinances and sound practices. Failure to follow these instructions could result in serious personal injury, death and/or property damage. Only qualified personnel who are familiar with the applicable National Code (USA = NEC) and local codes should install or repair electrical motors and their accessories.

⚠ WARNING: ELECTRICAL LIVE CIRCUIT HAZARD

Do not touch electrically live parts. Disconnect, lockout and tag input power supply before installing or servicing motor (includes accessory devices). Use a voltmeter to verify that power is off before contacting conductors.

⚠ WARNING: ELECTRICAL GROUNDING HAZARD

Failure to properly ground motors, per the National Electrical Code (NEC) Article 430 and local codes may cause serious injury or death to personnel. For general information on grounding refer to NEC Article 250. (Also see "Ground Connections section 3.4.4").

⚠ WARNING: AUTOMATIC RESET PROTECTOR HAZARD

Do not use automatic reset protectors if automatically restarting the motor will place personnel or equipment at risk. . Failure to follow this instruction could result in serious personal injury, death and/or property damage

⚠ WARNING: MANUAL RESET PROTECTOR HAZARD

If a tripped manual reset thermal protector is exposed to a temperature less than –7°C (20°F) it may reset and restart the motor automatically. If an application requires a motor with a manual reset thermal protector that will be operated at temperatures less than –7°C (20°F) contact the manufacturer to review the application / motor requirements. Failure to follow this instruction could result in serious personal injury, death and/or property damage

1.2 MECHANICAL SAFETY

⚠ WARNING: LOOSE PARTS HAZARD

Before starting the motor, remove all unused shaft keys and loose rotating parts to prevent them from flying off. Failure to follow these instructions could result in serious personal injury, death and/or property damage.

⚠ WARNING: ROTATING PARTS HAZARD

Keep extremities, hair, jewelry and clothing away from moving parts. Failure to follow these instructions could result in serious personal injury, death and/or property damage.

1.3 ENVIRONMENTAL SAFETY

⚠ WARNING: HAZARDOUS LOCATIONS

(1) The NEC and the local authority having jurisdiction must be consulted concerning the installation and suitability of motors for use in Hazardous Locations. The local authority having jurisdiction must make the final determination of what type of motor is required. The application and operation is beyond the control of the motor manufacturer.
(2) Division 1 Hazardous Locations motors can only be modified or reworked by the manufacturer or a facility that is Listed under UL's category "Motors and Generators, Rebuilt for use in Hazardous Locations". Failure to follow these instructions could result in serious personal injury, death and/or property damage.
(3) Do not use a Hazardous Locations motor with a Variable Frequency Drive (VFD) unless the motor nameplate specifically states that the

2.0 RECEIVING AND INSPECTION

2.1 INITIAL INSPECTIONS

2.1.1 CHECK PACKING LIST AND INSPECT the packaging to make certain no damage has occurred in shipment. If there is visible damage to the packaging, unpack and inspect the motor immediately. Claims for any damage done in shipment must be made by the purchaser against the transportation company.

2.1.2 TURN MOTOR SHAFT by hand to be certain that it rotates freely. Note: Shaft seals and bearing seals may add drag.

2.1.3 CHECK NAMEPLATE for conformance with purchase order requirements and compliance with power supply and control equipment requirements.

2.2 HANDLING:

⚠ WARNING: FALLING OBJECT HAZARD

Eyebolts or lifting lugs, where provided, are intended for lifting only the motor and accessories mounted by the motor manufacturer (unless specifically stated otherwise on the motor). Utilizing the motor lifting provision to lift other components such as pumps and gear boxes could result in serious personal injury, death and/or property damage.

⚠ WARNING: FALLING OBJECT HAZARD

Before using the lifting provision, check the eyebolts and/or other lifting means to assure they are not bent or damaged and are completely threaded, seated & secured to the motor. Equipment to lift motor must have adequate lifting capacity. While lifting the motor DO NOT stand under or in the vicinity of the motor. Failure to follow these instructions could result in serious personal injury, death and/or property damage.

2.2.1 LIFTING ANGLE LIMITATIONS

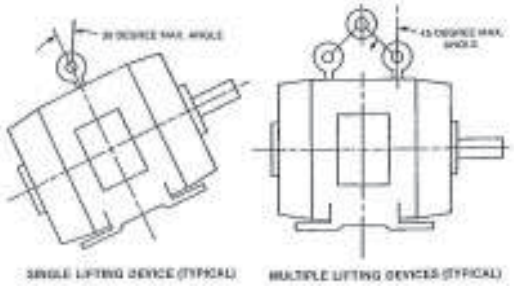

2.3 STORAGE: Motors, not put into service immediately, must be stored indoors in a clean, dry location. Avoid locations with large temperature swings that will result in condensation. Motors must be covered to eliminate airborne dust and dirt. If the storage location exhibits high vibration, place isolation pads under motor to minimize damage to motor bearings.

2.3.1 BEARING LUBRICATION: Bearings are grease packed at the factory; relubrication upon receipt of motor or while in storage is not necessary. If stored more than one year, add grease per lubrication instructions (Table 4-4) before start-up.

2.3.2 SHAFT ROTATION: It is recommended that the motor shaft be rotated 5 to 10 rotations every three months to distribute the grease in the bearings. This will reduce the chance for corrosion to form on the bearing rolling elements and raceways. Note: Shaft seals and bearing seals may add drag.

2.3.3 DAMP OR HUMID STORAGE LOCATIONS: Treat unpainted flanges, shafts, and fittings with a rust inhibitor. Apply appropriate power to the motor's space heaters (if so equipped)

3.0 INSTALLATION AND OPERATION

WARNING: Only qualified personnel who are familiar with the appropriate national code, local codes and sound practices should install or repair electrical motors and their accessories. Installation should conform to the appropriate national code as well as local codes and sound practices. Failure to follow these instructions could result in serious personal injury, death and/or property damage.

WARNING: ELECTRICAL LIVE CIRCUIT HAZARD

Do not touch electrically live parts. Disconnect, Lockout and Tag input power supply before installing or servicing motor (includes accessory devices). Use a voltmeter to verify that power is off before contacting conductors.

3.1 LOCATION

3.1.1 SELECTING A LOCATION: Consideration should be given to environment and ventilation. Motors should be installed in an area that is protected from direct sunlight, corrosives, harmful gases or liquids, dust, metallic particles, and vibration. A motor with the proper enclosure for the expected operating condition should be selected. Provide accessible clearance for cleaning, repair, service, and inspections (See section 3.1.3 for construction clearances). The location should be considered for possible future motor removal / handling. The free flow of air around the motor should not be obstructed.

3.1.2 AMBIENT TEMPERATURE LIMITS: The ambient temperatures of the air inlet to the motor should not exceed 40°C (104°F) or be less than -30°C (-22°F) unless the motor nameplate specifically states an ambient temperature outside of these limits. The ambient inside an enclosure built around the motor shall not exceed the nameplate ambient. For ambient temperatures outside of these limits consult the motor manufacturer.

CAUTION: INSULATION DEGRADATION WARNING

Insulation at high temperatures ages at an accelerated rate. Each 10°C increase in temperature reduces the insulation life by one half.

WARNING: HAZARDOUS LOCATIONS AMBIENT LIMIT: Division 1 Hazardous Locations motors shall **NOT** be operated below –25°C (-13°F) ambient. (Low temperatures reduce the component mechanical properties.)

3.1.3 CONSTRUCTION SELECTION per LOCATION:

3.1.3.1 DRIPPROOF (OPEN) MOTORS are intended for use indoors where the atmosphere is relatively clean, dry, and non-corrosive. Recommended a minimum clearance of ½ the shaft height between vent openings and the nearest obstruction.

3.1.3.2 TOTALLY ENCLOSED MOTORS are suitable for indoor or outdoor standard service applications.

TEAO or AOM (Totally Enclosed Air Over) motors must be mounted in the air stream. When the motor nameplate states a minimum airflow the motor must be mounted in an air stream meeting this minimum value.

TEFC (Totally Enclosed Fan Cooled) motors must meet a minimum distance of ½ the shaft height between the fan guard grill openings and the nearest obstruction.

3.1.3.3 HAZARDOUS LOCATIONS MOTORS: Hazardous Locations motors are intended for installations in accordance with NEC Article 500. For all installations involving Hazardous Locations motors, consult the applicable national codes, local codes, and the authority having jurisdiction.

Division 1 Installations – includes Class I & II: Use only motors that are UL Listed and CSA Certified or UL Listed and UL Certified for Canada. These motors bear a separate nameplate that includes the UL Listing Mark and CSA Certification Mark or includes the UL Listing Mark and the UL Mark for Canada. This plate also bears the phrase: " Electric motor for Hazardous Locations" and is marked with the Class, Group and Operating Temperature Code.

Division 2 Installations – Class I only: Use only motors that are CSA Certified and bear the CSA Certification Mark. These motors include a phrase on the main motor nameplate that indicates the motor is CSA Certified for Class I, Division 2 / Zone 2 locations.

Division 2 Installation – Class II only: Use only Class II motors as described above under "Division I Installations".

WARNING: EXPLOSION HAZARD

A motor should never be placed in an area with a hazardous process or where flammable gases or combustible materials may be present unless it is specifically designed and nameplated for this type of service. Hazardous Locations motors are intended for installations in accordance with NEC Article 500. For all installations involving Hazardous Locations motors, consult the NEC, local codes, and the authority having jurisdiction. Failure to follow these instructions could result in serious personal injury, death and/or property damage. (For other limitations see section 1.3)

3.2 MOUNTING MOTOR:

3.2.1 RIGID BASE (FOOTED): The motor must be securely installed to a rigid foundation or a mounting surface to minimize vibration and maintain alignment between the motor shaft and the load's shaft. The mounting surfaces of the four mounting pads must be flat within 0.01 inches for 210 frame & smaller; 0.015 inches for 250 frame & larger. [IEC 0.25 mm for 130 frame & smaller, 0.38 mm for 160 frame & larger]. This may be accomplished by shims under the motor feet. For special isolation mounting, contact manufacturer for assistance

3.2.2 RIGID BASE HOLE SELECTION -6 OR 8 HOLES

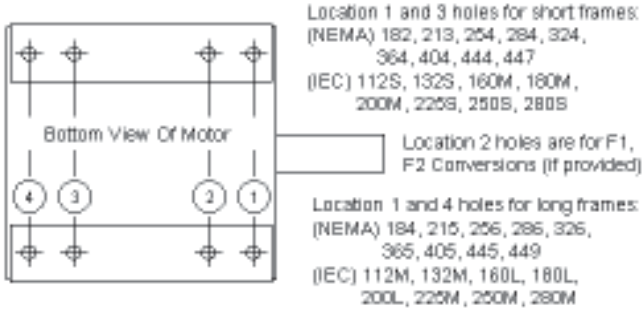

3.2.3 VERTICAL MOUNTING:

CAUTION: ENCLOSURE PROTECTION CAUTION: Most Dripproof rigid base (footed) motors do **NOT** meet "Dripproof" requirements when mounted vertically. If the motor is located in unprotected environments, the addition of a drip cover may be available. Drip covers not available for cast iron rigid base motors.

WARNING: FALLING OBJECT HAZARD

The lifting provision on standard horizontal footed motors is not designed for lifting the motor in a vertical shaft up or shaft down position. (see 2.2.1 lifting angles). Lifting method / provisions for

mounting a rigid base (footed) motor vertically is the responsibility of the installer.

VERTICAL SHAFT DOWN: Most standard horizontal motors thru 449 Fr. (excluding brake motors) can be mounted in a vertical shaft down orientation. For vertical brake motors see section 3.3.6.2.

VERTICAL SHAFT UP:

WARNING: HAZARDOUS LOCATIONS VERTICAL MOUNT: Hazardous locations motors must **NOT** be mounted vertically shaft up without approval by the motor manufacturer. Without proper retaining provisions the rotor may move axially and contact components, creating a spark hazard.

Belted or Radial Load when mounted vertically: The following frame sizes / constructions with applied (axial) down loads within the limit stated are acceptable when mounted vertical shaft up.

Table 3-1 Belted or Radial Load Applications (All speeds)

Frame Size	Enclosure	Construction	Shaft Up OK	Max Applied Down Load[3]
56	TEFC & ODP	Steel	Yes	25 lbs
140	TEFC	Steel & Cast Iron	Yes	25 lbs
	ODP	Steel	Yes	25 lbs
180	TEFC	All	Yes	35 lbs
	ODP	Steel	Yes	35 lbs
210	TEFC	All	Yes	40 lbs
	ODP	Steel	Yes	40 lbs
250	TEFC	All	Yes	40 lbs
	ODP	Steel	Yes	40 lbs
		Cast Iron	No[2]	N/A
280-320	320 TTFC models	Cast Iron	Eng[1]	N/A
	All Other TEFC	Cast Iron & Aluminum	Yes	30 lbs
	ODP	Cast Iron	No[2]	N/A
	TEFC & ODP	Steel	Build Up Only[4]	N/A
360 & Up	TEFC	Cast Iron	Build Up Only[4]	N/A
	ODP	Cast Iron	No[2]	N/A
	TEFC & ODP	Steel	Build Up Only[4]	N/A

Notes:

1 For TEFC model numbers beginning with 324TTFC or 326TTFC consult the motor manufacturer to determine if a build up motor is required.

2 The max applied down load is any applied load external to the motor, including such things as sheave weight, fan loads, axial belt force, pump load, etc. If the application is direct drive with no applied radial load, consult the motor manufacturer.

3 "Build-up only", refers to motors that are specifically ordered and built for shaft up applications. It does not imply that all build-up motors are suitable for shaft up applications.

3.3 APPLICATION ASSEMBLY TO MOTOR:

CAUTION: EQUIPMENT DAMAGE:
Do not connect or couple motor to load until correct rotational direction is established.

3.3.1 GENERAL: PROPER ALIGNMENT of the motor and driven equipment minimizes vibration levels, maximizes bearing life, and extends the overall life of the machinery. Consult the drive or equipment manufacturer for more information.

CAUTION: BEARING FAILURE
During assembly do NOT force components onto the shaft. Striking or hammering the component may result in bearing damage.

3.3.2 DIRECT COUPLING: Use flexible couplings if possible. For applications that apply radial, axial or moment loading on the motor shaft see section 3.3.3.

CAUTION: BEARING FAILURE
Unless approved by the motor manufacturer do **NOT** direct couple a vertical shaft up or roller bearing motor. Direct coupling a vertical shaft up motor or a motor with a roller bearing may result in bearing damage.

3.3.3 DIRECT CONNECTED: Radial loading for direct connected equipment (gears, fans etc.) must be approved by the motor manufacturer unless within the maximum overhung load limits (Table 3-2). Combined loading (axial, radial and/or moments) must be approved by motor manufacturer. For belted loads see section 3.3.4.

Table 3-2 Maximum Radial Load (lbf) @ Middle of the Shaft Extension Length

Frame Number	Motor Rated RPM			
	3600	1800	1200	900
143T	106	166	193	210
145T	109	170	199	218
182T	187	230	261	287
184T	193	237	273	301
213T	319	317	470	510
215T	327	320	480	533
254T	500	631	729	793
256T	510	631	736	820
284T	-	866	990	1100
286T	-	871	1005	1107
324T	-	950	1100	1215
326T	-	950	1113	1230
364T	-	1078	1365	1515
365T	-	1078	1380	1540
404T	-	1388	1590	1762
405T	-	1400	1610	1780
444T	-	1580	1795	2005
445T	-	1520	1795	1985
447T	-	1455	1765	1985
449T	-	1640	1885	2130

Values based on 26,280 hrs B-10 Life
For "End of Shaft" Load multiply value by 0.88
To convert from lbf to N multiply value by 4.4482.

3.3.4 BELTED:

The goal of any belted system is to efficiently transmit the required torque while minimizing the loads on the bearings and shafts of the motor and driven equipment. This can be accomplished by following four basic guidelines:

1. Use the largest practical sheave diameter.
2. Use the fewest number of belts possible.
3. Keep sheaves as close as possible to support bearings.
4. Tension the belts to the lowest tension that will still transmit the required torque without slipping. It is normal for V-belts to squeal initially when line starting a motor

3.3.4.1 Sheave Diameter Guidelines:

In general, smaller sheaves produce greater shaft stress and shaft deflection due to increased belt tension. See Table 3-3 for recommended minimum sheave diameters. Using larger sheaves increases the contact with belts which reduces the number of belts required. It also increases the belt speed, resulting in higher system efficiencies. When selecting sheaves, do not exceed the manufacturer's recommended maximum belt speed, typically 6,500 feet per minute for cast iron sheaves. Determine belt speed by the following formula:

Figure 1

$$\textbf{BELT SPEED (Ft/min)} = \frac{Shaft\ RPM\ x\ 3.14\ x\ Sheave\ Dia\ (inches)}{12}$$

3.3.4.2 Number of Belts

In general, use the fewest number of belts that will transmit the required torque without slipping. See Table 3-3 for recommended maximum number of belts. Each belt adds to the tension in the system, which increases load on the shafts and bearings. Belts are most efficient when operated at or near their rated horsepower.
If the sheaves have more grooves than the number of belts required, use the grooves closest to the motor.

3.3.4.3 Sheave Location

Install sheaves as close to the housing as possible to increase the bearing life of the motor and driven equipment

Figure 2

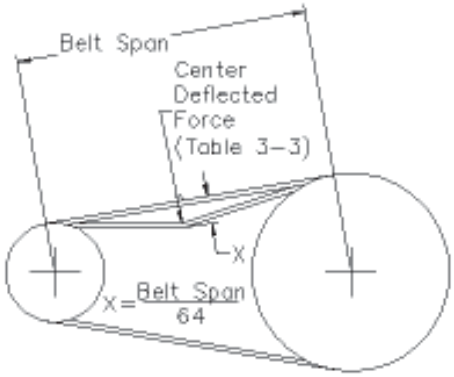

3.3.4.4 Belt Tension

CAUTION: Equipment Failure Caution
Belt tensioning by feel is **NOT** acceptable. Tensioning by "feel" can be very misleading, and can damage motor and equipment.
It is normal for V-belts to squeal initially when line starting a motor.

In general, belt tensions should be kept as loose as possible while still transmitting the required torque without slipping. Belt tensions must be measured with a belt tension gage. These inexpensive gages may be obtained through belt manufacturers, or distributors.

Proper belt tension is determined by measuring the force required to deflect the center of the belt a given distance. The proper deflection (in inches) is determined by dividing the belt span in inches by 64. Calculate the proper deflection and then see Table 3-3 for the required “Deflected Force” to achieve that deflection.
After tensioning the belt, rotate the sheaves for several rotations or operate the system for a few minutes to seat belts into the grooves, then re-tension the belts. New belts will stretch during use, and should be retensioned after the first eight hours of use.

Table 3-3 Recommended Minimum Sheave Diameters, Belt Type, Number of Belts and Deflected Force

Motor Hp	1200 rpm				1800 rpm				3600 rpm			
	Min Sheave Dia (in)	Belt Type	Max # of Belts	Avg. Deflected Force (lbs)	Min Sheave Dia (in)	Belt Type	Max # of Belts	Avg. Deflected Force (lbs)	Min Sheave Dia (in)	Belt Type	Max # of Belts	Avg. Deflected Force (lbs)
0.75	2.2	3VX	1	3.4	2.2	3VX	1	2.2	2.2	3VX	1	1.2
1	2.4	3VX	1	4.0	2.2	3VX	1	3.1	2.2	3VX	1	1.6
1.5	2.4	3VX	2	3.1	2.4	3VX	2	2.1	2.2	3VX	1	2.5
2	2.4	3VX	3	2.8	2.4	3VX	2	2.9	2.4	3VX	1	2.7
3	3.0	3VX	2	3.3	2.4	3VX	3	2.9	2.4	3VX	2	2.3
5	3.0	3VX	3	4.0	3.0	3VX	3	3.7	2.4	3VX	3	2.5
7.5	3.8	3VX	4	4.7	3.0	3VX	4	4.1	3.0	3VX	2	4.2
10	4.4	3VX	4	5.4	3.8	3VX	4	4.3	3.0	3VX	3	3.8
15	4.4	3VX	5	5.4	4.4	3VX	4	5.4	3.8	3VX	3	4.4
20	5.2	3VX	6	6.0	4.4	3VX	6	4.8	4.4	3VX	3	5.0
25	6.0	3VX	7	5.6	4.4	3VX	7	5.2	4.4	3VX	4	4.7
30	6.8	3VX	7	5.9	5.2	3VX	7	5.3				
40	6.8	5VX	4	11.6	6.0	3VX	7	6.0				
50	8.2	5VX	4	14.6	6.8	3VX	8	5.9				
60	8.2	5VX	5	14.1	7.4	5VX	4	13.3				
75	10.0	5VX	5	14.5	8.6	5VX	4	14.3				
100	10.0	5VX	6	16.0	8.6	5VX	6	13				
125	12.0	5V	7	14.1	10.5	5V	6	13.1				
150	13.2	5V	7	15.4	10.5	5V	7	13.4				
200	15.0	5V	8	16.0	13.2	5V	8	13.1				
250	15.0	8V	6	27.6	14.0	5V	9	13.8				
300	16.0	8V	7	27.1	14.0	5V/**8V**	11 / **7**	23.4				
350	16.5	8V	7	30.3	14.5	5V/**8V**	12 / **7**	26.0				
400	17.5	8V	8	29.1	15.0	5V/**8V**	13 / **8**	25.7				
450	18	8V	8	31.6	16.0	5V/**8V**	14 / **9**	25.2				
500	18.5	8V	9	30.7	16.5	5V/**8V**	15 / **9**	26.9				
600					17.5	8V	11	26.3				
700					19.0	8V	12	27.3				
800					20.0	8V	13	28.2				

Contact Motor Manufacturer when Belting 3600 rpm Motors Greater than 25 HP

Notes:

1. Horsepower is the nameplate motor horsepower, and RPM is the motor (driver) speed.
2. Minimum sheave diameters are from NEMA standards where applicable.
3. **For variable speed applications or values outside these recommendations, consult motor manufacturer.**
4. Selections are based on a 1.4 service factor, 5 to 1 speed ratio and various Power Transmission Manufacturers' catalogs.
5. These selections are for Narrow V-belt sections only. Consult manufacturer for details on conventional V-belt sections (A, B, C, D and E), or other belt types.
6. "Average Deflected Force is per section 3.3.4.4 of this document and is the force required to deflect the center of a belt 1/64 of the belt span distance. Tolerance on this force is ±1 lbf for forces ≤10 lbs, and ±2 lbs for forces >10 lbs as measured utilizing a belt tension gage.
7. When more than one belt is required the belts must be a matched set (matched for length).
8. If possible, the lower side of the belt should be the driving side to increase the length of wrap on the sheave).
9. For belted loads do not exceed 125% of 60 Hz operating RPM.

3.3.5 VFD (Variable Frequency Drives) OPERATION:

WARNING: VFD Motors with Reset Thermal Protectors
UL Recognition, UL Listing, or CSA certification does not apply to motors that are equipped with a manual or automatic reset thermal protector when the motor is operated on VFD power.

WARNING: Power Factor Correction Capacitors:
Power factor correction capacitors should never be installed between the drive and the motor.

CAUTION: VFD / Motor Setup:
It is the responsibility of the startup personnel during set up of the VFD / motor system to properly tune the drive to the motor for the specific application per the VFD user manual. The correct voltage boost and volts per hertz settings are application dependent and unique to each motor design. Failure to connect over temperature devices (when provided) will void the warranty.

3.3.5.1 Overspeed Capability:

Belted loads: Do not exceed 125% of 60 Hz operating RPM.

Table 3-4 Maximum Safe Continuous Speed (RPM) For Coupled and Direct Connected Loads

NEMA / [IEC] Frame Size	2-Pole	4, 6, or 8 Pole
56-180 [80-110]	7200 *	5400 *
210-250 [130-160]	5400 *	4200*
280 [180]	5400 *	3600
320 [200]	4500 *	3600
360 [225]	4500 *	2700
400-440 [250-280]	3600	2700
>440 [>280]	3600	1800

* = Fan cooled motors (Totally Enclosed & Hazardous Locations Motors) are limited to a maximum safe continuous speed of 4000 RPM **For higher speeds or shortened duty cycle contact motor manufacturer**

3.3.5.2 Cable Lengths: For optimum insulation life, limit VFD to motor cable lengths of general purpose motors

to Table 3-5 values. Definite purpose VFD motors may accommodate longer cable lengths. For additional information contact motor manufacturer.

Table 3-5 Max Cable Lengths General Purpose Motors
These values are based on 3 kHz carrier frequency. Add suitable VFD output-side filters when exceeding the listed values.

Frame Size	230V	460 V	575 V
NEMA 56-320	600 ft.	125 ft.	40 ft.
NEMA 360-5011	1000 ft.	225 ft.	60 ft.
IEC 80-200	180 m.	40 m.	12 m.
IEC 225-280.	300 m.	70 m.	18 m.

3.3.5.3 VFD Grounding: Equipment grounding conductors may be run in the same conduit as the AC motor power leads. This wire must be used as the equipment ground for the motor and not as the fourth current carrying wire of a "WYE" motor circuit. The grounded metal conduit carrying the output power conductors can provide EMI shielding, but the conduit does not provide an adequate ground for the motor; a separate grounding conductor must be used. Grounding the motor neutral (WYE) of a VFD powered motor may result in a VFD ground fault trip. Improper grounding of an inverter fed motor may result in frame voltages in excess of 500 Volts. Refer to Grounding section 3.4.4

3.3.5.4 VFD – Single Phase:

CAUTION: SINGLE PHASE MOTOR FAILURE:
Single Phase motors are **NOT** suitable for use on VFD power. Connecting a Single Phase Motor to a VFD voids the warranty.

3.3.5.5 Stray Voltage on Accessory Leads:

VFD's will couple stray (common-mode) voltage to motor-mounted RTDs, thermistors, thermostats and space heaters. The leads of these elements must be properly insulated and control input circuits must be designed to withstand this common-mode voltage.

3.3.6 ACCESSORIES / PROVISIONS:

3.3.6.1 General: Carefully read and understand the accessory manufacturer's instructions, supplied with motor. Contact the manufacturer for additional information.

3.3.6.2 Brake Motors:

CAUTION: Vertical Motor Premature Brake Failure
Motors with brakes that are designed for vertical applications are equipped with springs to support the brake pressure plate. Mounting a horizontal brake motor vertically shaft up or down may require a pressure plate spring modification. Failure to modify the brake for the vertical application may result in premature brake failure. If in question, consult brake literature or brake manufacturer.

Brake Solenoid Wiring: Do NOT connect the brake solenoid to the output of a VFD. The brake solenoids must be wired to 50/60 Hz line power

3.3.6.3 Space Heaters:

Motors provided with space heaters have two leads that are brought into the conduit box or into an auxiliary box. These leads are marked "H1", "H2" ("H3", "H4" if a second space heater is supplied). See the space heater nameplate on motor for heater rating.

WARNING: DIVISION 2 EXPLOSION HAZARD
The space heater temperature rating when used in Class I, Division 2 motors shall **NOT** exceed 80% of the auto ignition temperature of the hazardous gas or vapor. See the space heater nameplate on motor for heater Temperature Code and heater rating. Failure to follow this instruction could result in serious personal injury, death and/or property damage

3.3.6.4 Thermal Protection:

General Information: When thermal protection is provided, one of the following will be stamped on the nameplate:

1. **"THERMALLY PROTECTED**" This motor has built in thermal protection. Thermal protectors open the motor circuit electrically when the motor overheats or is overloaded. The protector cannot be reset until the motor cools. If the protector is automatic, it will reset itself. If the protector is manual, disconnect motor from power supply. After protector cools (five minutes or more) press the reset button and reapply power to the motor. In some cases a motor is marked "Auto" and the connection diagram on the motor will identify T'Stat leads – see "2 " below. (See warnings on Manual and Automatic reset protectors - section 1.1)

2. **"WITH OVERHEAT PROTECTIVE DEVICE**": This motor is provided with an overheat protective device that does not directly open the motor circuit. Motors nameplated with this phrase have either thermostats, thermisters or RTD's. The leads to these devices are routed into the motor conduit box or into an auxiliary box. The lead markings are defined on the nameplate (normally "P1", "P2") . The circuit controlled by the overheat protection device must be limited to a maximum of 600 volts and 360 volt-amps. See connection decal provided inside the terminal box cover. Failure to connect these over temperature devices (when provided) will void the warranty.

   WARNING: EXPLOSION HAZARD
   For Hazardous Locations motors provided with thermostats UL and the NEC require connection of thermostat leads into the control portion of a manual reset start circuit. Failure to follow this instruction could result in serious personal injury, death and/or property damage

Resistance Temperature Detectors (RTD): When winding and/or bearing RTDs are provided the RTD lead markings are defined on the nameplate. (Normally "R1", "R2", "R3" etc.)

3.3.6.5 RTD Alarm & Trip Settings:

Tables 3-6 & 3-7 are suggested initial RTD alarm and trip settings. For motors found to operate significantly below these values the settings may be reduced accordingly.

Table 3-6 Winding RTD – Temperature Limit (ºC) 40 ºC Max Ambient

Motor Load	Class B Temp Rise≤ 80ºC		Class F Temp Rise≤ 105ºC	
	Alarm	Trip	Alarm	Trip
Up to 1.0 SF	130	140	155	165
>1.0 to 1.15 SF	140	150	160	165

Table 3-7 Bearing RTD – Temperature Limit (ºC) 40 ºC Max Ambient

Ambient	Alarm	Trip
Up to 40ºC	95	100
> 40ºC	110	115
Bearings that are Heat Stabilized to 150 ºC	130	135

3.3.7 GUARDS:

WARNING: ROTATING PARTS HAZARD
When devices are assembled to the motor shaft, be sure to install protective devices such as belt guards, chain guards, and shaft covers. These devices must protect against accidental contact with extremities, hair, and clothing. Consider the application and provide guarding to protect personnel. Remove all unused shaft keys and loose rotating parts to prevent them from flying off and causing bodily injury. Failure to follow this warning could result in serious personal injury, death and/or property damage.

3.4 ELECTRICAL CONNECTIONS:

⚠ WARNING: ELECTRICAL HAZARDS

Before proceeding read Section 1-1 on Electrical Safety. Failure to follow the instructions in Section 1-1 could result in serious personal injury, death and/or property damage

3.4.1 POWER SUPPLY / BRANCH CIRCUIT

⚠ WARNING: POWER SUPPLY INCOMPATIBILITY HAZARD

Check power supply to make certain that voltage, frequency and current carrying capacity are in accordance with the motor nameplate. Failure to match motor nameplate values could result in serious personal injury, death and/or property damage

⚠ WARNING: BRANCH CIRCUIT SUPPLY HAZARD

Motor and control wiring, fusing, overload protection, disconnects, accessories and grounding must always conform to the applicable electrical codes as well as local codes and sound practices.

3.4.1.1 Branch Circuit Supply to a motor should include a disconnect switch, short circuit current fuse or breaker protection, motor starter (controller) and correctly sized thermal elements or overload relay protection.

3.4.1.2 Fuses, Breakers, Overload Relays

Short Circuit Current Fuses or Breakers are for the protection of the branch circuit. Starter or motor controller overload relays are for the protection of the motor. Each of these should be properly sized and installed per the applicable electrical codes as well as local codes and practices.

⚠ WARNING: PROTECTIVE DEVICE DISABLED HAZARD

DO NOT bypass or disable protective devices. Protection removal could result in serious personal injury, death and/or property damage

3.4.1.3 AC Power Supply Limits

Motors are designed to operate within the following limits at the motor terminals:

1- AC power is within +/- 10 % of rated voltage with rated frequency applied. (Verify with nameplate ratings) **OR**

2- AC power is within +/- 5% of rated frequency with rated voltage **OR**

3- A combined variation in voltage and frequency of +/- 10% (sum of absolute values) of rated values, provided the frequency variation does not exceed +/-5% of rated frequency.

4- For 3 phase motors the line to line full load voltage must be balanced within 1%.

5- If the motor is rated 208-230V, the voltage deviations must be calculated from 230V.

CAUTION: Reduced Motor Performance

Operation outside of these limits will degrade motor performance and increase operating temperature.

3.4.2 TERMINAL BOX:

3.4.2.1 Conduit Opening: For ease of connections, motors are typically provided with large terminal boxes. Most motors have conduit access in 90 degree increments, the terminal box conduit opening is typically provided via knockouts, holes with covers, or the terminal box is rotate-able. Fabricated conduit boxes may have a removable plate for the installer to provide correctly sized hole(s).

3.4.2.2 Hazardous Locations Motors:

⚠ WARNING: EXPLOSION HAZARDS

(1) Terminal Boxes mounted to motor with a pipe nipple: If a pipe nipple mounted terminal box is removed or rotated it must be reassembled with a minimum of five full threads of engagement.

(2) Component Removal: Do not set a terminal box component on its machined surfaces. Prior to component reassembly wipe clean all machined surfaces.

(3) Machined Surface Gap (Hazardous Locations Terminal Boxes): The gap between mating surfaces with the machined terminal box MUST BE LESS THAN 0.002 inches. This gap must be checked with a feeler gage along the entire perimeter. If there is visible damage to the mating surfaces, or if the gap between these surfaces exceeds 0.002 inches, DO NOT complete the installation and contact the motor manufacturer. Failure to follow these instructions could result in serious personal injury, death and/or property damage

3.4.3 LEAD CONNECTIONS

Electrical connections to be made per nameplate connection diagram or separate connection plate. In making connections follow the applicable electrical code as well as local codes and practices.

⚠ WARNING: ELECTRICAL CONNECTION HAZARD

Failure to correctly connect the motor leads and grounding conductor can result in injury or death. Motor lead connections can short and cause damage or injury if not well secured and insulated.

3.4.3.1 Wire Size (Single Phase) Requirements

The minimum wire size for Single Phase, 115 & 230 Volt Circuits must meet table 3-8 for a given distance between motor and either Fuse or Meter Box.

Table 3-8 Minimum Wire Gage Size Single Phase 115 & 230 Volt Circuits

Distance (Feet) - Motor to Fuse or Meter Box								
Motor	100 Ft.		200 Ft.		300 Ft.		500 Ft.	
HP	115	230	115	230	115	230	115	230
1/4	14	14	10	12	8	10	6	8
1/3	12	14	10	12	6	10	4	8
1/2	10	12	8	10	6	8	4	6
3/4	10	12	6	10	4	8	2	6
1	8	10	6	8	4	6		4
1 1/2	4	10	0	8		6		4
2		8		6		4		2
3		8		6		4		2
5		6		4		2		0

3.4.3.2 Extension Cords (Single Phase Motors):

Where an extension cord(s) is utilized to provide power to the motor the extension cord(s) must be…(1) the proper gauge size per table 3-8, (2) in good working condition (3) properly grounded.

3.4.4 GROUND CONNECTION(S):

⚠ WARNING: ELECTRICAL GROUNDING HAZARD

For general information on grounding (USA) refer to NEC Article 250. Improper grounding of an inverter fed motor may result in frame voltages in excess of 500 Volts. In making the ground connection, the installer must make certain that a good electrical connection is obtained between motor and grounding lead. Failure to properly ground motors, per the applicable national code (such as NEC Article 430) and local codes may cause serious injury or death to personnel.

Primary "Internal" Ground: A grounding conductor must be connected to the grounding terminal provided in the terminal housing. This grounding terminal is either a ground screw, ground lug, or a tapped hole to be used with a separately provided ground screw. The internal grounding feature is accessible inside the terminal housing and must be used as the primary grounding connection.

Secondary "External" Ground: Some motors are provided with a supplemental grounding terminal located on the external surface of the motor frame or feet. This external terminal is for supplemental bonding connections where local codes permit or require such connection

3.4.5 START UP:

⚠ WARNING: ELECTRICAL SHOCK HAZARD:

Be certain that all connections are secure and the conduit box cover is fastened in place before electrical power is connected. Failure to follow these instructions could result in serious personal injury, death, and/or property damage.

WARNING: LOOSE & ROTATING PARTS HAZARD
Before proceeding read Section 1-2 on Mechanical Safety. Failure to follow the instructions in Section 1-2 could result in serious personal injury, death and/or property damage

WARNING: EXCESSIVE SURFACE TEMPERATURE HAZARD
Motors with the temperature code stated on the nameplate are designed to operate within this limit. Improper application or operation can cause the maximum surface temperature to be exceeded. A motor operated in a Hazardous Location that exceeds this surface temperature limit increases the potential of igniting hazardous materials. *Therefore, motor selection, installation, operation, and maintenance must be carefully considered to ensure against the following conditions:* (1) Motor load exceeds service factor value, (2) Ambient temperature above nameplate value, (3) Voltages outside of limits (3.4.1.3), (4) Loss of proper ventilation, (5) VFD operation exceeding motor nameplate rating, (6) Altitude above 3300 feet / 1000 meters, (7) Severe duty cycles, (8) Repeated starts, (9) Motor stall, (10) Motor reversing, and (10) Single phase operation. Failure to follow these instructions could result in serious personal injury, death and/or property damage.

CAUTION: HOT SURFACE
Normal motor surface temperatures may exceed 90 ° C (194° F). Touching the motor frame may cause discomfort or injury. Surface temperatures should only be measured with suitable instruments and not estimated by hand touch.

3.4.5.1 Start Up - No Load Procedure

1. **Check Instructions:** Before startup carefully read and fully understand these instructions including all warnings, cautions, and safety notice statements.
2. **Motor out of storage after more than three months:** Check winding insulation integrity with a Megger. If winding resistance to ground is less than 1.5 Meg-ohms consult the local authorized service shop before energizing the motor.
3. **Check Installation: Mechanical** - Check tightness of all bolts and nuts. Manually rotate the motor shaft to ensure motor shaft rotates freely. Note: Shaft & bearing seals will add drag.
   Electrical - Inspect all electrical connections for proper terminations, clearance, mechanical tightness and electrical continuity. Be sure to verify connections are made per the nameplate connection diagram or separate connection plate. Replace all panels and covers that were removed during installation before energizing the motor.
4. **Energize Motor: Check Rotation**
   If practical check motor rotation before coupling to the load. Unlock the electrical system. Momentarily provide power to motor to verify direction of rotation. If opposite rotation is required, lock out power before reconnecting motor. If motor has a rotational arrow only operate the motor in the rotation identified. Reapply power to ensure proper operation.
5. **Record No Load Amps, Watts & Voltage:**
   Recommend - To establish a baseline value check and record the no load amps, watts, and voltage.

3.4.5.2 Start Up – Load Connected Procedure

1. **Check Instructions:** Before startup carefully read and fully understand these instructions including all warnings, cautions, & safety notice statements.
2. **Coupling Installation:** Check that the connected equipment is properly aligned and not binding. Check that all guards and protective devices are properly installed.
3. **Energize Motor:** When all personnel are clear of the machine, apply power and verify that the load is not transmitting excessive vibration back to the motor though the shaft or the foundation. Verify that motor amps are within nameplate rating. For repeated starts see 3.4.5.3. The equipment can now be fully loaded and operated within specified limits as stated on the nameplate.

3.4.5.3 Jogging and/or Repeated Starts

Do not start more than twice in succession under full load. Repeated starts and/or jogs of induction motors can cause overheating and immediate failure. Contact the motor manufacturer if it is necessary to repeatedly start or jog the motor.

4.0 MAINTENANCE:

WARNING: Hazardous Locations Motor Repair HAZARD:
Division 1 Hazardous Locations motors can only be modified or repaired by the manufacturer or a facility that is Listed under UL's category "Motors and Generators, Rebuilt for use in Hazardous Locations". Failure to follow these instructions could result in serious personal injury, death and/or property damage.

WARNING: ELECTRICAL SHOCK HAZARD
Electrical connections are to be made by qualified electrical personnel in accordance with all applicable codes, ordinances and sound practices. Failure to follow these instructions could result in serious personal injury, death and/or property damage. Only qualified personnel who are familiar with the applicable national codes, local codes and sound practices should install or repair electric motors and their accessories.

WARNING: ELECTRICAL LIVE CIRCUIT HAZARD
Do not touch electrically live parts. Disconnect, lockout and tag input power supply before installing or servicing motor (includes accessory devices).

4.1 GENERAL INSPECTION

Inspect the motor approximately every 500 hours of operation or every three months, whichever occurs first. Keep the motor clean and the ventilation and fin openings clear. The following steps should be performed at each inspection:

4.1.1 VENTILATION: Check that the ventilation openings and/or exterior of the motor is free of dirt, oil, grease, water, etc, which can accumulate and block motor ventilation. If the motor is not properly ventilated, overheating can occur and cause early motor failure.

4.1.2 INSULATION: Use a "Megger" periodically to ensure that the integrity of the winding insulation has been maintained. Record the Megger readings. If winding resistance to ground is less than 1.5 Meg-ohms consult the local authorized service shop before re-energizing the motor.

4.1.3 ELECTRICAL CONNECTIONS: Check all electrical connectors to be sure that they are tight.

4.2 LUBRICATION & BEARINGS:

The lubricating ability of grease (over time) depends primarily on the type of grease, the size of the bearing, the speed at which the bearing operates and the severity of the operating conditions. Longer bearing life can be obtained if the listed recommendations are followed:

NOTE: If lubrication instructions are provided on the motor nameplate, the nameplate instructions will supersede these instructions. Motors marked "Permanently Lubricated" do not require additional service.

CAUTION: BEARING / MOTOR DAMAGE WARNING
Lubricant should be added at a steady moderate pressure. If added under heavy pressure bearing shield(s) may collapse. Over greasing bearings greatly increases bearing friction and can cause premature bearing and/or motor failure.

4.2.1 GREASE TYPE (unless nameplate states otherwise):
Nameplate Ambient Temperature between -30°C (-22°F) to 65°C (150°F) inclusive: Recommended grease for standard service conditions is Mobil Polyrex ® EM. Equivalent and compatible greases include: Texaco Polystar RB, Rykon Premium #2, Pennzoil Pen 2 Lube, Chevron SRI & Mobil SHC 100.

Nameplate Ambient Temperature below -30°C (-22°F): Special low temperature grease is recommended, such as Aeroshell 7 or Beacon 325 for ball bearings and Mobil SHC 100 for roller bearings.

Nameplate Ambient Temperature above 65°C (150°F): Dow Corning DC44 or equivalent, a special high temperature grease is required. Note that Dow Corning DC44 grease does not mix with other grease types.

For RTD settings see Table 3-7.

4.2.2 BEARING OPERATING TEMPERATURE:

CAUTION: HOT SURFACE

The external surface temperature of the end shield (bracket) bearing hub may reach 100° C (212° F) during normal operation. Touching this surface may cause discomfort or injury. Surface temperatures should only be measured with suitable instruments and not estimated by hand touch.

4.2.3 LUBRICATION INTERVALS: (For motors with regreasing provisions)

Eq. 4.2 Lubrication Interval = [(Table 4-1) hrs] x [Interval Multiplier (Table 4-2)] x [Construction Multiplier (Table 4-3)]

Table 4-1 Lubrication Intervals (Hours) These values are based on average use.

NEMA / [IEC] Frame Size	Operating Speed – RPM (See Table 3.4 for Maximum Operating Speed)					
	<7200	<5400	<4500	<3600	<1800	<1200
56-180 [80-110]	2500 Hrs.	4000 Hrs	5000 Hrs	6000 Hrs.	17000 Hrs.	20000 Hrs.
210-250 [130-160]		2500 Hrs	4000 Hrs	5000 Hrs.	12000 Hrs.	16000 Hrs.
280 [180]		2000 Hrs	3000 Hrs	4000 Hrs.	10000 Hrs.	14000 Hrs.
320 [200]			2000 Hrs	3000 Hrs.	9000 Hrs.	12000 Hrs.
360 [225]			1500 Hrs	2000 Hrs.	8000 Hrs.	10000 Hrs.
400-440 [250 – 280]				1500 Hrs.	4000 Hrs.	7000 Hrs.
>440 [>280]				1000 Hrs.	3000 Hrs.	5000 Hrs.

Seasonal Service: If motor remains idle for more than six months, Lubricate at the beginning of the season, then follow lubrication interval.

Do not exceed maximum safe operating speed Table 3-4 without manufacturer's approval

Table 4-2 Service Conditions

Use highest level Multiplier: Maximum Ambient Temperature and Contamination are independent factors

Severity of Service	Maximum Ambient Temperature	Atmospheric Contamination	Multiplier
Standard	Less than 40° C (104° F)	Clean, Slight Corrosion, indoors, less than 16 hrs per day	1.0
Severe	Above 40° C (104° F) to 50° C	Moderate dirt or Corrosion or outdoors or more than 16 hrs per day	0.5
Extreme	Greater than 50° C or Class H Insulation	Severe dirt or Abrasive dust or Corrosion	0.2

Table 4-3 Construction Multiplier

Construction	Multiplier
Angular Contact or Roller Bearing	0.5
Vertical Motor	0.5
All others	1.0

Table 4-4 Relubrication Amounts

Frame Size		Volume		
NEMA	IEC	Cu. In.	Fluid oz	ml
48-56	80	0.25	0.14	4.0
143-145	90	0.25	0.14	4.0
182-184	110	0.50	0.28	8.0
213-215	130	0.75	0.42	12.5
254-256	160	1.00	0.55	16.0
284-286	180	1.50	0.83	25.0
324-326	200	2.00	1.11	33.0
364-365	225	3.00	1.66	50.0
404-405	250	3.80	2.11	62.0
444-449	280	4.10	2.27	67.0
>449	>280	4.50	2.50	74.0

For regreasing while operating multiply volume by 125%.

4.2.4 LUBRICATION PROCEDURE: (For Motors with Regreasing Provisions)

CAUTION: BEARING DAMAGE WARNING
Added grease must be compatible with the original equipment's grease. If a grease other than those stated in 4.2.1 is to be utilized contact the motor manufacturer. Nameplate information supersedes section 4.2.1 (GREASE TYPE). New grease must be free of dirt. Failure to follow these instructions and procedure below may result in bearing and/or motor damage.

For an extremely dirty environment, contact the motor manufacturer for additional information.

LUBRICATION PROCEDURE:

1. Clean the grease inlet plug or zerk fittings prior to regreasing.
2. (If present) Remove grease drain plug and clear outlet hole blockage.

CAUTION: GREASE DRAIN PLUGGED:
Old grease may completely block the drain opening and must be mechanically removed prior to regreasing. Forcing a blocked drain open by increased greasing pressure may collapse bearing shields and / or force excess grease through the bearings and into the motor.

3. Add grease per Table 4-4
4. Re-install grease inlet and drain plugs (if removed).

WARNING: EXPLOSION HAZARD
Do NOT energize a Hazardous Locations motor without all grease fittings properly installed.

4.2.5 EXAMPLE: LUBRICATION
Assume - NEMA 286T (IEC 180), 1750 RPM Vertical motor driving an exhaust fan in an ambient temperature of 43° C and the atmosphere is moderately corrosive.

1. Table 4-1 list 10,000 hours for standard conditions.
2. Table 4-2 classifies severity of service as "Severe" with a multiplier of 0.5.
3. Table 4-3 lists a multiplier value of 0.5 for "Vertical"
4. (Eq. 4.2) Interval = 10,000 hrs x 0.5 x 0.5 = 2500 hrs

Table 4-4 shows that 1.5 in^3 of grease is to be added.

Relubricate every 2,500 hrs of service with 1.5 in^3 of recommended grease.

4.3 TROUBLE-SHOOTING

WARNING: READ INSTRUCTIONS:
Before trouble-shooting a motor, carefully read and fully understand the warnings, cautions, & safety notice statements in this manual.

WARNING: Hazardous Locations Motor Repair:
Motors nameplated for use in Division 1 Hazardous Locations can only be disassembled, modified or repaired by the plant of manufacturer or a facility that is Listed under UL's category "Motors and Generators, Rebuilt for use in Hazardous Locations". Failure to follow these instructions could result in serious personal injury, death and/or property damage

CAUTION: DISASSEMBLY APPROVAL REQUIRED:
Motor disassembly must be performed by a party approved by the motor manufacturer. To disassemble the motor without approval voids the warranty.

4.3.1 GENERAL TROUBLE-SHOOTING WARNINGS

1. **DISCONNECT POWER TO THE MOTOR BEFORE PERFORMING SERVICE OR MAINTENANCE.**
2. **Discharge all capacitors before servicing motor.**
3. **Always keep hands and clothing away from moving parts.**
4. **Be sure required safety guards are in place before starting equipment.**
5. **If the problem persists contact the manufacturer.**

4.3.2 Motor Trouble-shooting Cause / Corrective Action - Table 4-5

Issue:		Likely Cause:	Corrective Action:
Motor fails to start upon initial installation:			
	A.)	Supply voltage is too low or is severely unbalanced (one phase is low or missing).	(1) Check power supply fuses (2) Match motor lead wiring to nameplate connection diagram and supply voltage (3) Ensure that steady state supply voltage at motor terminals is within limits (see section 3.4.1.3). Correct as needed (4) Obtain correct motor to match actual supply voltage.
	B.)	Motor leads are miswired at conduit box.	
	C.)	Driven load exceeds motor capacity	(1) Verify that motor & load turn freely (2) Disconnect motor from load & ensure motor turns freely. Note: Roller bearings make noise when motor is uncoupled and shaft is rotated (3) Verify that motor starts when disconnected from load (4) Remove excessive / binding load if present.
	D.)	Load is jammed.	
	E.)	Fan guard is bent and making contact with fan	Replace fan guard & fan (if blades are damaged)
	F.)	VFD with power factor capacitors installed	Remove power factor correction capacitors if equipped
	G.)	VFD with motor neutral lead grounded	Ensure that motor neutral lead is ungrounded
	H.)	VFD programmed incorrectly	(1) Repeat checks listed above (2) Verify that VFD current limit and starting boost are set correctly (5) Double-check motor and feedback parameter settings and VFD permissives (6) Repeat autotune (for vector drives) procedure (7) Consult VFD supplier.
Motor has been running, then slow down, stalls, or fails to restart:			
	A.)	Supply voltage has drooped or has become severely unbalanced	(1) Replace fuse or reset circuit breaker. Allow motor to cool down before resetting manual protector on motor. **Warnings** - See section 1.1 for automatic and manual reset protector warnings (2) Verify that rated and balanced supply voltage has been restored before restarting motor. Measure voltage during restart. Ensure that steady state supply voltage at motor terminals is within limits (see section 3.4.1.3).
	B.)	Motor is overloaded	(1) Verify that motor & load turn freely. Repair binding components as needed (2) Reduce driven load to match motor capacity or increase motor size to match load requirements.
	C.)	Motor bearings are seized	
	D.)	Load Is jammed.	
	E.)	VFD will not restart motor after tripping	(1) Check fault codes on VFD and follow VFD troubleshooting procedures (2) Verify that VFD input voltage is balanced and within limits (3) Remove excessive mechanical load if present.
	F.)	Capacitor failure on single phase motor (if equipped)	**Warning: Potential Shock Hazard**: Contact service shop to check capacitor.
Motor takes too long to accelerate:			
	A.)	Motor leads are not connected correctly	Match motor lead wiring to nameplate diagram.
	B.)	Supply voltage has drooped or become severely unbalanced.	(1) Ensure that steady state supply voltage at motor terminals is within limits (see section 3.4.1.3). Correct as needed (2) Obtain correct motor to match actual supply voltage.
	C.)	Load exceeds motor capability	Determine correct motor size and contact motor representative to obtain replacement motor.
	D.)	Faulty start capacitor (Single Phase)	Motor may be too small for load. Record acceleration time. Start capacitors may fail if acceleration time exceeds 3 seconds.
	E.)	Mechanical Failure	(1) Check to make sure motor & load turn freely (2) Disconnect motor from load & ensure motor turns freely
Motor rotates in the wrong direction:			
	A.)	Incorrect wiring connection at motor	[Single Phase] Reconnect motor according to wiring schematic provided. Note: Some motors are non-reversible
			[Three Phase] Interchange any two power supply (phase) leads.
Motor overheats or overload protector repeatedly trips			
	A.)	Driven Load is excessive	(1) If motor current exceeds nameplate value, ensure that driven load has not increased. Correct as needed. (2) If new motor is a replacement, verify that the rating is the same as the old motor. If previous motor was a special design, a general purpose motor may not have the correct performance.
	B.)	Ambient temperature too high	Most motors are designed to operate in an ambient up to 40 °C. (See section 4.2.2 Hot Surface Caution)
	C.)	Motor cooling fins and/or vent openings blocked	Remove foreign materials – clear vent openings, fan guard air inlets and frame fins (TEFC motors)
	D.)	Insufficient Air Flow	TEAO (Totally Enclosed Air Over) motors: Measure airflow next to motor surface and obtain minimum requirements from motor manufacturer.

	E.)	Motor is started too frequently	See section 3.4.5.3
	F.)	Supply voltage too low, too high, or unbalanced	(1) Ensure that steady state supply voltage at motor terminals is within limits (see section 3.4.1.3) Correct as needed (2) Reconnect motor per input voltage (3) Obtain correct motor to match power supply.

Motor Vibrates

	A.)	Motor misaligned to load.	Realign load
	B.)	Load out of balance (Direct drive application)	(1) Ensure that load is dynamically balanced: (2) Remove motor from load and inspect motor by itself. Verify that motor shaft is not bent. Rule of thumb is 0.002" runout for shafts extension lengths up to 3.00". Add 0.0005" per every additional inch of shaft length beyond 3.00".
	C.)	Uneven tension on multiple belts	Mixing new with used belts. Replace multiple belt applications with a complete set of matched belts.
	D.)	Driven load operating at resonant point / natural frequency.	(1) De-energize motor and record vibration as load coasts from 100% speed to 0 RPM. If vibration drops immediately, vibration source is electrical. If levels do not drop immediately, source is mechanical (2) Redesign system to operate below the resonant point (3) On VFD-driven loads, program skip frequencies to bypass resonant points (4) Increase carrier frequency to obtain <3% THD current (5) On variable torque loads reduce volts/hertz below base speed.
	E.)	VFD torque pulsations	(1) Adjust VFD to obtain <3% THD current @ rated motor current (2) Adjust VFD stability for smooth operation. Vector drives may be unstable at light load.
	F.)	Motor miswired at terminal box	Match motor lead wiring to nameplate connection diagram.
	G.)	Uneven, weak or loose mounting support.	Shim, strengthen or tighten where required.
	H.)	Motor bearings defective	Test motor by itself. If bearings are bad, you will hear noise or feel roughness. Roller bearings are normally noisy when operated without load. If sleeve bearing, add oil per nameplate instructions. For motors with regreasing provisions, add grease per relubricating instructions (see section 4.2.3). If noise persists contact warranty service.
	I.)	Motor out of balance	Disconnect from load. Set motor on rubber pads on solid floor. Secure a ½ height key in shaft keyway and energize from balanced power supply @ rated voltage. Record vibration levels and compare with appropriate standards. If excessive vibration persists contact motor manufacturer.

Bearings repeatedly fail.

	A.)	Load to motor may be excessive or unbalanced	(1) If belt drive check system per section 3.3.4. (2) Other than belting, check loading on motor shaft. An unbalanced load will also cause the bearings to fail. (3) Check runouts of mating components, such as a C-face and pump flange.
	B.)	Bearings contaminated.	Motor enclosure not suitable for environment. Replace with correct enclosure construction
	C.)	Incorrect grease or bearings for ambient extremes.	See section 4.2.1
	D.)	VFD bearing damage	Ground brush, common mode filter, or insulated bearings must be added. Contact motor manufacturer.

Motor, at start up, makes a loud rubbing, grinding, or squealing noise.

	A.)	Contact between rotating and stationary components	Belt squeal during across the line starting is normal: (1) Verify that supply voltage is within limits (see section 3.4.1.3). (2) Ensure that motor lead wiring matches nameplate connection diagram: (3) Isolate motor from load. (4) To locate point of contact turn motor shaft by hand. (5) If point of contact is not located contact motor service shop.

Start capacitors repeatedly fail.

	A.)	The motor acceleration time is too long	Motor may be too small for load. Record acceleration time. Start capacitors may fail if acceleration time exceeds 3 seconds.
	B.)	Motor is being started too frequently	Excessive starting will damage motor capacitors. Contact motor manufacturer if motor is started more than 20 times/hour or if acceleration time exceeds 3 seconds.
	C.)	Motor voltage low	Verify that voltage at the motor terminals is within limits (see section 3.4.1.3).
	D.)	Defective start switch inside motor	Motor internal switch failure overheats start capacitor. Contact service shop or motor manufacturer.

Run capacitor fails.

	A.)	High ambient temperature	Verify that the ambient does not exceed motor's nameplate value

	B.)	Input voltage exceeds limit	Verify that voltage to the motor terminals is within limits (see section 3.4.1.3).
	C.)	Power surge to motor (caused by lightning strike or other high transient voltage).	If a common problem, install surge protector.

SEEPEX.
ALL THINGS FLOW

SEEPEX GmbH
Scharnhölzstraße 344
46240 Bottrop
Postfach 10 15 64
46215 Bottrop
Germany

Tel +49.2041.996-0
Fax +49.2041.996-400
info@seepex.com
www.seepex.com

Great Britain

SEEPEX UK Ltd.
3 Armtech Row
Houndstone Business Park
Yeovil Somerset BA22 8RW
Tel +44.1935.472376
Fax +44.1935.479836
sales@seepex.co.uk

Austria

SEEPEX GmbH
Vertriebsbüro Österreich
Obermüllergasse 18
3003 Gablitz
Tel +43.2231.61085
Fax +43.2231.6108520
hfriedl@seepex.com

Belgium

SEEPEX GmbH
Bureau België
Industriezone Klein Gent-Link 21
Welvaartstraat 14-1 bus 15
2200 Herentals
Tel +32.14.501471
Fax +32.14.501461
seepex.be@seepex.com

Denmark

SEEPEX Nordic A/S
Krakasvej 7C
3400 Hillerød
Tel +45.49.192200
Fax + 45.49.193200
info.nordic@seepex.com

France

SEEPEX France SARL
1, Rue Pelloutier
77183 Croissy Beaubourg
Tel +33.1.64114450
Fax + 33.1.64114489
info.fr@seepex.com

Hungary

SEEPEX GmbH
Magyarországi iroda
Hecskó Tamás okl.vill.mérn.
Éva utca 5.
7632 Pécs
Tel +36.205806134
Fax +36.72952587
thecsko@seepex.com

Irland

SEEPEX UK Ltd.
Branch Office Ireland
29 Lackenfune
Dungarvan
Co. Waterford
Tel +353.860450439
sales@seepex.co.uk

Italy

SEEPEX Italia S.r.l.
Via Alberto da Giussano 23
20145 Milano (MI)
Tel +39.02.36569360
Fax +39.02.92877855
info.it@seepex.com

Poland

SEEPEX GmbH
Przedstawicielstwo w Polsce
ul. Romana Maya 1
61-371 Poznan
Tel +48.61.6469270
Fax +48.61.6469271
info.pl@seepex.com

Sweden

SEEPEX Nordic A/S
Hamndalsvägen 58
61633 Åby
Tel +46.1166940
Fax +46.1166941
info.nordic@seepex.com

Spain

SEEPEX GmbH
Officina de Representación en España
C/Copenhague, 12
Edif. Tifan Oficina 207
28232 La Rozas
Madrid
Tel +34.91.6361353
Fax +34.91.6409371
info.es@seepex.com

The Netherlands

SEEPEX GmbH
Bureau Nederland
Visbystraat 13
7418 BE Deventer
Tel +31.570.516644
Fax +31.570.516077
seepex.nl@seepex.com

Russia

SEEPEX Ltd. Ugreshskaya
Str. 2 Bldg. 23
115088 Moscow
Tel +7.495.2874830
Fax +7.495.2874830
info.cis@seepex.com

USA

SEEPEX Inc.
511 Speedway Drive
Enon
Ohio 45323
Tel +1.937.8647150
Fax + 1.937.8647157
sales.us@seepex.com

China

SEEPEX Pumps (Shanghai) Co., Ltd.
Xuanzhong Rd. 399, Building 13
Nanhui Industrial Area
201300 Shanghai
Tel +86.21.38108888
Fax +86.21.38108899
info.cn@seepex.com

India

SEEPEX India Pvt. Ltd.
Office No. 305.
Raheja Arcade Building
Sector 11, C.B.D. Belapur
Navi Mumbai 400614
Tel +91.22.40240434/35
Fax +91.22.40240436
info.ind@seepex.com

Japan

日本シーペックス株式会社
German Industry Park
1-18-2 Hakusan, Midori-ku
Yokohama 226-0006
Tel +81.46.2595931
Fax +81.46.2595941
info.jp@seepex.com

Malaysia

SEEPEX (M) Sdn. Bhd.
No. 2, Jalan 51/203A
Kaw. Perindustrian Tiong
Nam Seksyen 51
46050 Petaling Jaya Selengor
Darul Ehsan
Tel +60.3.88009988
seepex.m@seepex.com

Australia

SEEPEX Australia Pty. Ltd.
Unit 3, 4 Bounty Close
Tuggerah Business Park
NSW 2259
Tel +61.2.43554500
Fax +61.2.43554022
info.au@seepex.com

More SEEPEX sales partnes in Europe, America, Asia, Africa and Oceania you willl find on our website.

* 8 6 8 8 0 6 *

LEFT BLANK

SEEPEX

SERIES BN 05-12, PROGRESSIVE CAVITY PUMP (ANIONIC POLYMER) (P9-524/525/526)

LEFT BLANK

SEEPEX.
ALL THINGS FLOW

Operating and Assembly Instruction
Progressive Cavity Pump

Commission-no.
868809 - 868811

Type
BN 05-12

Read instructions before beginning any work!

Always keep instructions handy on the worksite.

Original Instructions

Issue 04.06.2018

1 Safety 1
1.1 General notes
1.2 Safety and warning notes
1.2.1 Warning notes
1.2.2 Danger symbols
1.2.3 Information symbols
1.3 Dangers that can be caused by the machine
1.4 Qualification of the personnel
1.5 Authorized people
1.5.1 Tasks and information for the owner/operators
1.5.2 Safety notes for maintenance, inspection and assembly work
1.6 Personal protective equipment
1.7 Safety and protective devices
1.8 Foreseeable misuse
1.9 Designated use
1.10 Warranty

2 Description of the pump 5
2.1 General description
2.2 Mode of action and pumping principle of the pump
2.3 Constructive design

3 Technical Data 6
3.1 Data sheet 8
3.2 Characteristic Curves 11

4 Transport, Intermediate storage, Disposal 14
4.1 Safety
4.2 Transport
4.2.1 Dimensions, weight and center of gravity
4.2.2 Symbol
4.2.3 Lashing points (AP) for lifting devices
4.2.4 Unpacking the machine
4.3 Temporary storage/corrosion protection
4.4 Disposal

5 Assembly / Installation 17
5.1 Mounting tools / lifting gear
5.2 Space requirement
5.2.1 Dimension for stator replacement
5.3 Assembly of the complete mounted pump
5.4 Power supply of the pump
5.5 Pipelines
5.5.1 Suction and pressure connection
5.5.2 Pipeline dimensions
5.5.3 Residue-free pipelines
5.5.4 Tension-free assembly
5.6 Dimensional Drawing 19

6 Commissioning / De-Commissioning 20
6.1 Commissioning report 20
6.2 Measures before commissioning 22
6.2.1 Checking pipelines
6.2.2 Protective devices on the pump
6.2.3 Electrical / hydraulic connections
6.2.4 Direction of rotation check
6.2.5 Additional devices - optional
6.3 Initial commissioning/repeated commissioning
6.3.1 Avoiding dry running of the pump
6.3.2 Pressure in the suction and pressure connection
6.4 De-commissioning
6.4.1 Switching off the pump
6.4.2 Emptying the pump
6.4.3 Dismantling the pump
6.4.4 Preservation/storage of the pump

7 Maintenance 27
7.1 Preventative measures
7.1.1 Pump down-time
7.2 Lubrication
7.2.1 Joint grease
7.3 Inspection

8 Malfunctions, causes, rectification 29

9 Pump Dismantling / Reassembly 31
9.1 Pump Dismantling / Reassembly 31
9.1.1 Prepare the pump for dismantling
9.1.2 Dismantling
9.1.3 Reassembly

9.2 Rotating unit – individual parts 37
9.2.1 Dismantling
9.2.2 Rotating unit (RTE) - prepare individual parts for reassembly
9.2.3 Rotating unit (RTE) - individual parts - reassembly
9.3 Holding band - assembly 41
9.3.1 Prepare the holding band
9.3.2 Check the holding band
9.3.3 Assembling the holding band
9.3.4 Correct tension for the holding band (HBD)
9.3.5 Cant up the holding band
9.3.6 Shear the holding band
9.3.7 Check the holding band after assembly
9.4 Single acting mechanical seal 43
9.4.1 Safety
9.4.2 Application conditions and material version
9.4.3 Design
9.4.4 Commissioning
9.4.5 Monitoring during operation
9.4.6 Dismantling of mechanical seal
9.4.7 Reassembly of mechanical seal
9.6 Sectional drawing shaft sealing 44

10 Spare parts 46
10.1 Order template for spare parts 48
10.2 Sectional drawing 51
10.2.1 Parts list 52

11 Special tools 54

12 Related documents 56
12.1 Accessories 58
12.1.1 Accessorie TSE 58
12.1.2 Drawing TSE
12.1.3 Part list TSE
12.2 Technical Information 74
12.4 Warranty Card 79
12.5 Terms and Conditions 80

13 Appendix 83
13.1 Manufacturer's documents / suppliers
13.1.1 Gearbox 84

Subsidiaries

1.1 General notes

- ➢ Always keep the operating and maintenance instructions close by the machine.
- ➢ If problems cannot be solved with reference to the operating and maintenance instructions, please contact the manufacturer.

Observe the following points in addition to these operating and maintenance instructions:

- Prohibition, warning and mandatory signs, warning notes on the machine
- Relevant laws and ordinances
- Statutory provisions on accident prevention
- Corresponding harmonized standards and regulations

1.2 Safety and warning notes

- ➢ Comply with safety and warning notes for safe and efficient use of the product.

Signal words for specific dangers and (possible) consequences are explained below. These are supplemented by symbols (pictograms) if necessary.

1.2.1 Warning notes

NOTICE
Caution for machine! Possible danger. Material damage can occur.

⚠ **CAUTION**
Caution for people and machine! Possible danger. Minor injury or damage to property can occur.

⚠ **WARNING**
Warning for people! Possible danger. Death or serious injury can occur.

⚠ **DANGER**
Danger for people! Possible danger. Immediate risk of sever or fatal injury.

1.2.2 Danger symbols

Warning: Suspended load.

Warning: Tipping over.

Warning: Hand injuries.

Warning: Dangerous electrical voltage.

Warning: Pull-in hazard.

Warning: Excess pressure.

Warning: Risk to the environment.

Warning: Hot surfaces.

1.2.3 Information symbols

NOTICE

Observe operating and maintenance instructions.

Ensure environmental protection.

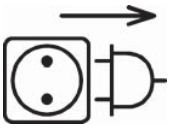

Disconnect power plug before opening.

Wear eye protection.

Wear gloves.

➢ Instruction to act/take measures

• List item

1.3 Dangers that can be caused by the machine

SEEPEX machines are built in accordance with the state of the art.

Nevertheless, there is a residual risk, because the machine works with:

- Mechanical movements that pose a danger
- Electrical voltages and currents

We have used design measures and applied safety technology to minimize the risk to the health of people posed by this danger.

1.4 Qualification of the personnel

This handbook is intended for:

- Owner
- Operators
- Setters
- Maintenance personnel

1.5 Authorized people

People authorized to undertake operation, set up and maintenance are instructed and trained specialists employed by the owner/manufacturer.

Detailed technical knowledge is essential for performing any work on the machine.

The owner is responsible for:

- Personnel training
- Compliance with safety regulations
- Compliance with operating and maintenance instructions

The operator must:

- Have received instruction
- Read and understood the relevant parts of the operating instructions before starting work
- Know the safety devices and regulations

1.5.1 Tasks and information for the owner/operators

- ➢ Regularly check and maintain the machine, replacing all parts in good time which no longer guarantee safe operation.
- ➢ It is essential to comply with the procedure described in the operating instructions for shutting down the machine.
- On completion of work, attach all safety and protective devices and make sure they are functioning.

1.5.2 Safety notes for maintenance, inspection and assembly work

- ➢ Do not work on the machine or system unless it is stationary and depressurised.
- ➢ Switch off the master switch and pull out the power plug before starting work on live components.
- ➢ Comply with the procedure for shutting down the machine as described in the Shut-down chapter.
- ➢ Decontaminate (de-toxify) machines that are used for pumping media that can be harmful to health.
- ➢ Refer to the Initial start-up chapter before repeated start-up of the machine.

1.6 Personal protective equipment

- ➢ Wear personal protective equipment and/or additional equipment for your own safety.
- ➢ Avoid/limit risks by the use of collective technical protective equipment or by organisational measures at work.

1.7 Safety and protective devices

- ➢ Prior to start-up, bolt SEEPEX machines onto a concrete foundation so as to ensure stability.
- ➢ Starting and stopping devices must be clearly recognisable. Take appropriate measures to avoid defects.
- No protective device is necessary for checking and/or setting the shaft seal.
- Hot surfaces are identified with a danger symbol on the machine.

1.8 Foreseeable misuse

Serious personal injury and damage to property can be caused by:

- Incorrect use
- Incorrect installation or operation of the machine
- Impermissible removal of necessary protective equipment

1.9 Designated use

- Only use SEEPEX machines if they are in perfect condition and in compliance with the oper-ating and maintenance instructions.
- Do not start up the machine unless the system in which the machine is installed is in accor-dance with the provisions of the applicable guidelines and statutory regulations.
- Equivalent sustained sound pressure level at workplaces of operating personnel C75 dB (A). Cavitation-free operation of the machine and screwed connection to concrete founda-tion are essential.
- SEEPEX machines are components that are exclusively intended for pumping media in accordance with the technical data (chapter 3.0). Written approval must be obtained from the manufacturer before other media are pumped.
- Refer to the information on the type plate and the operating instructions for technical data (chapter 3.0), and comply with them.
- The operating instructions are assigned to the SEEPEX machine based on the commission number.

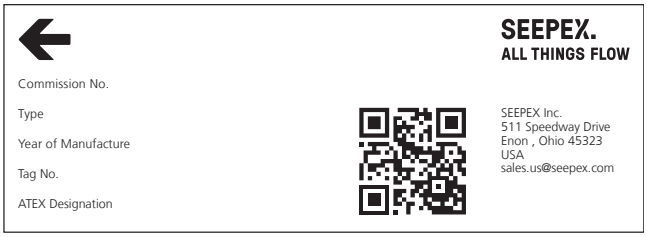

Similar illustration

1.10 Warranty

- Warranty in accordance with our terms and conditions of delivery and order confirmation.
- It is a condition of the machine warranty that the machine must correspond to the listed operating instructions in accordance with the type plate/data sheet.
- All wearing parts are excluded from the warranty.
- These operating instructions are subject to copyright. Reproduction is not permitted and will be punished. Contravention will be pursued through the courts.

2.1 General description

seepex pumps are members of the group of rotating displacement pumps.

- Characteristic features
  - Special configuration/arrangement of the rotor and stator pumping elements.
  - Motion sequence

2.2 Mode of action and pumping principle of the seepex pump

- Seal lines are created by the geometrical configuration/contact between both pumping elements.
- Seal lines provide total separation between the suction and pressure sides.
  Result:
  - Increased suction lift capability of the pump
  - High pressure build-up irrespective of the rotation speed

2.3 Constructive design

No.	Designation
ANT	Drive
200	Lantern
307	Plug-in shaft
400	Coupling rod
SEA	Shaft seal
500	Suction casing
600	Rotor
RTE	Rotating unit
601	Stator
700	Pressure branch

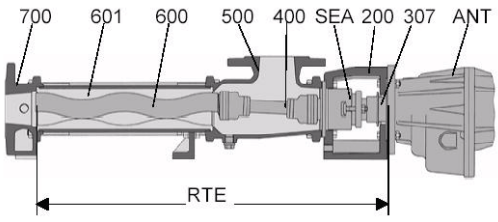

3.1 Data sheet

3.2 Characteristic Curves

Progressive cavity pump

BN 05-12 / A6-J0-J0-F0-LA

Application data

U 495 XXX001

Conveyed product	Polymer
Flowability	flowable
Viscosity	low viscosity (<500 cP/mPas)
Solids content	not specified
Size of solids	not specified
Specific gravity	unknown, 1 kg/dm³ assumed
Product temperature	32°F - 113°F
pH value	5-9
Kind of operation	continuous
Operating hours	8h/day
Location	indoor, dry atmosphere
Altitude of installation	up to 1000 m assumed
Surrounding temperature	normal (32-113°F)

Performance data

	Capacity	**Pressure**	**Speed**	
	0.26 USGPM	80 psi	41 rpm	min
	3 USGPM	80 psi	390 rpm	max
Starting torque	30 lb.ft			
Req. power at pump shaft	0.75 HP			
Inlet pressure	flooded suction (up to 0,5bar)			
NPSHr	6.23 ft			

Tolerances according to SEEPEX standards.

Materials and executions

Installation	vertical, drive on top
Direction of rotation	clockwise (right)
Lantern - Design	with cover plates
Lantern - Material	EN-JL 1040 (gci-25)
Lantern - Flange diameter	160 mm
Suction casing - Design	standard
Suction casing - Material	1.4408 / ASTM A351 grade CF8M
Pressure branch - Design	standard
Pressure branch - Material	1.4408 / ASTM A351 grade CF8M
Position of branch	position 3
Pressure connection	1 1/2" NPT
Suction connection	1 1/4" NPT
Joint - Design	pin joint with joint sleeve, grease filled
Joint - Material	standard
Joint - Universal joint sleeve: material	NBR - Perbunan
Joint - Joint Grease	joint grease SEEPEX 30321
Coupling rod - Design	standard
Coupling rod - Material	1.6582 encapsulated
Rotor - Design	standard
Rotor - Material	1.4404 / AISI 316L
Rotor - Coating	ductile chromium coating
Stator - Design	standard with TSE, sensor sleeve 1.4404
Stator - Material	NBR - Perbunan
Shaft sealing	mechanical seal
Code	back-to-back GLRD - LA
Shaft diameter	30 mm
Make	Burgmann
Type	MG1-G60 Q1Q1 VGG
Casing - material	1.4404 / AISI 316L
Casing - connection standard	NPT
Plug-in Shaft - Design	standard
Plug-in Shaft - Material	1.4404 / AISI 316L
Plug-in Shaft - Drilling diameter	24
Plug-in Shaft - Drilling depth	45
Bolting - Design	completely stainless steel
Painting - Number of colors	single-colored standard
Painting - Painted components	1 complete combination

Painting - Color	Standard Enamel (SEEPEX Blue)

Drive

Drive Type	Gear & Motor at freq. inv.
Type	Gear
Make	Nord
Model	SK02F/56C
Mounting position	M4
Ratio (i)	4.82
Flange diameter	160 mm
Shaft diameter	24 mm
Shaft length	45 mm
Shaft drawing	716/M500-003B4

	Norm	**Min**	**Max**
Speed	401 rpm	40 rpm	389 rpm
Motor speed	1800 rpm	195 rpm	1880 rpm
Frequency	60 Hz	7 Hz	65 Hz

Type	Motor
Make	Marathon Motors
Model	56H17T5312
Rated output	1 HP
Rated speed	1800 rpm
Mounting position	V1/V5
Starting	direct on frequency inverter
Explosion proof	Weatherproof
Efficiency class	IE1
Winding protection	Thermostats
Voltage	rated voltage 575V
Frequency	60Hz
Thermal class	F
Enclosure	TENV

Baseplate

Design	1/2" thick plate, 10" width
Material	steel, painted
GPU Type Code	B-ST

TSE

Design	standard design, complete - sensor sleeve fitted to the stator of the pump with integrated temperature sensor - connection head (IP55) - separate TSE control device suitable for mounting inside a control panel
Voltage	110-115V/50-60Hz
Temperature coefficient	NTC
Material sensor sleeve	1.4404
Material connection head	aluminium

Packing

Type of packing	crate (US)

Miscellaneous

Design	Tag each: P9-524, P9-525, P9-526 Tag all: PI014, 98343

Documentation

Characteristic Curves
Size
05–12

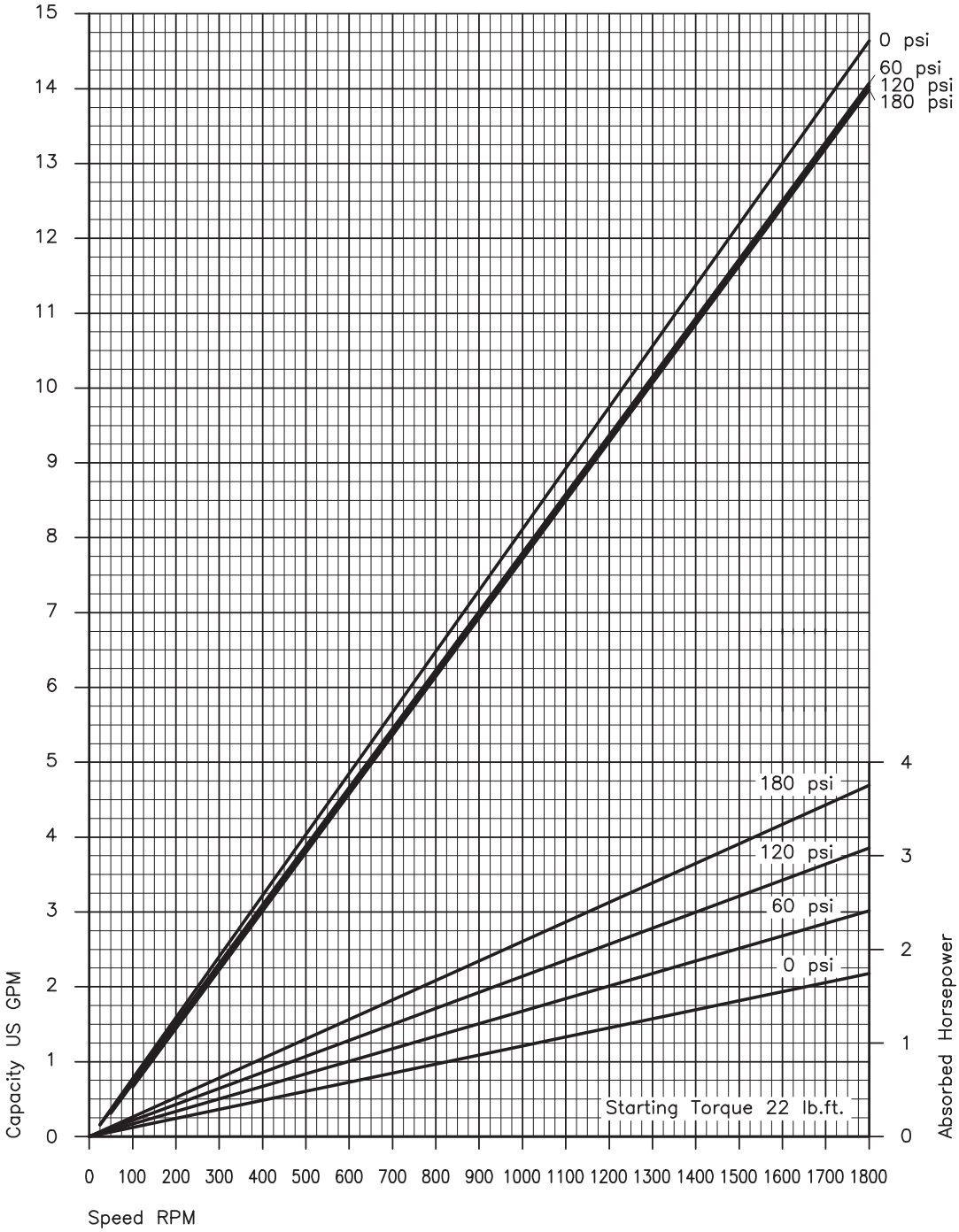

Values based upon water 68°F ; For notes on drive selection refer to PER

CHA.05–12 D 01.14us

Characteristic Curves
Size
05–12

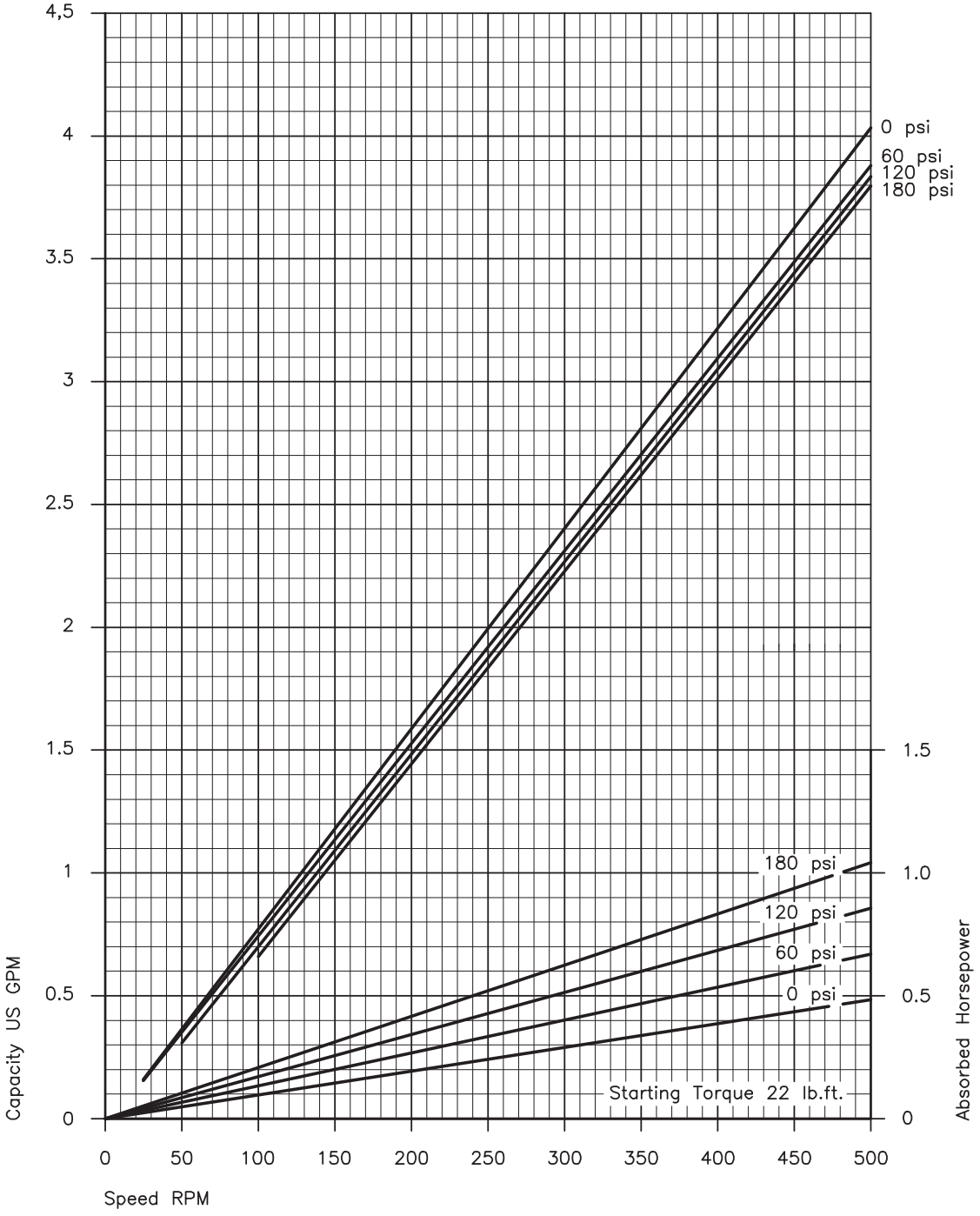

Values based upon water 68°F ; For notes on drive selection refer to PER

CHA.05–12.s D 01.14us

4.1 Safety

CAUTION

Damage to property/injuries due to incorrect transport.
Slight injury or damage to property can occur.

- ➢ Comply with the safety notes and transport notes on the packaging.
- ➢ Use suitable means of transport, lifting devices and tools.
- ➢ Use protective equipment.

4.2 Transport

4.2.1 Dimensions, weight and centre of gravity

- ➢ Note the dimensional drawing (chapter 5.6).

4.2.2 Symbol

- Meaning of symbol

Top	Fragile item	Against moisture protect	Centre of gravity	Lashing points

4.2.3 Lashing points (AP) for lifting devices

WARNING

Warning of suspended load.
Death or serious injury can occur.

- ➢ Use the lashing points (AP) for lifting devices.
- ➢ Note the centre of gravity (dimensional drawing chapter 5.6).

Lifting machine	Industrial trucks

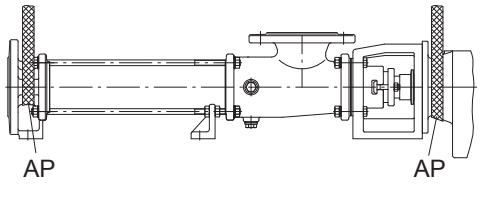

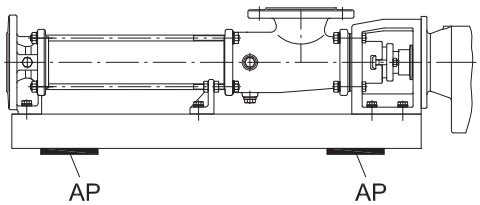

4.2.4 Unpacking the machine

- ➢ Comply with the symbols and notices on the packaging.
- ➢ Remove the screwed connection between the machine and packaging.
- ➢ Remove the machine with a lifting machine/industrial truck.

4.3 Temporary storage/corrosion protection

- All SEEPEX machines have corrosion protection applied as standard prior to transport.

NOTICE
Damage to property if corrosion protection is missing. Property damage can occur due to corrosion. ➢ Temporary storage must be in a dry, enclosed, frost-free room in order to provide protection against ambient influences. ➢ Contact SEEPEX regarding the necessary corrosion protection for temporary storage.

4.4 Disposal

NOTICE
Environmental protection. Material damage can occur. ➢ Drain the pumping medium and dispose of it in accordance with the regulations. ➢ Dispose of the machine with regard to its composition and existing regulations.

5.1 Mounting tools / lifting gear

CAUTION

Pump falling over.
Slight injury or damage to property can occur.

- ➢ Adhere to the lifting tool's starting point.
- ➢ Pay attention to the dimensions, weight and centre of gravity of the pump.
- ➢ Use suitable mounting tools/lifting gear.

5.2 Space requirement

The required space should be determined by considering the following factors:

- Dimensions and weight.
- Requisite transport and lifting equipment.
- Pipe routing – dismantling (dimension for stator replacement).

5.2.1 Dimension for stator replacement (P)

- ➢ Refer to the dimensional drawing.

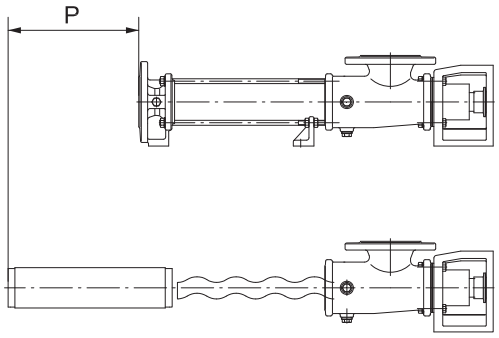

5.3 Assembly of the complete mounted pump

- ➢ Assemble according to technical data (chapter 3.).
- ➢ Note dimensional drawing.

Tension-free mounting of the pump

- ➢ Balance unevenness with suitable supports.
- Applies to mounting on foundations/load-bearing elements.
- Total areas of all pump bearing areas are resting on the surface.

Correct position of the drives

- All drives are set up ready for operation and mounted.
- Correct displacements of the drive during transport/installation of the pump by adjusting/fixing the drive.

CAUTION

Safety protection devices.
Slight injury or damage to property may result.

- ➢ Connect safety protection devices and activate.

5.4 Power supply of the SEEPEX pump

DANGER

Line voltage and line frequency.
Death or serious injury can occur.

- ➢ Note type plate on the pump.
- ➢ Pay attention to manufacturer's directions (chapter 13.).
- ➢ Pay attention to safety regulations.

5.5 Pipelines

5.5.1 Suction and pressure connection

- Refer to the dimensional drawing for the position, nominal width and standard.
- Note direction of rotation/flow direction.

5.5.2 Pipeline dimensions

- Adhere to specifications regarding pressure in the pressure respectively suction connection.
- Note technical data (chapter 3.).
- Nominal width of suction pipe = nominal width of suction connection of pumps.

5.5.3 Residue-free pipelines

NOTICE

Damage to property through assembly residue.
No claims under guarantee if violated.

- ➢ Keep all pipelines free of foreign objects.
- ➢ Remove weld spatters, screws, steel chips etc.

5.5.4 Tension-free assembly

- ➢ Assemble pipelines and other components in a tension-free manner on the pump.

Copyright: This drawing is our property and patented for us according to the law of copyright and associated rights !

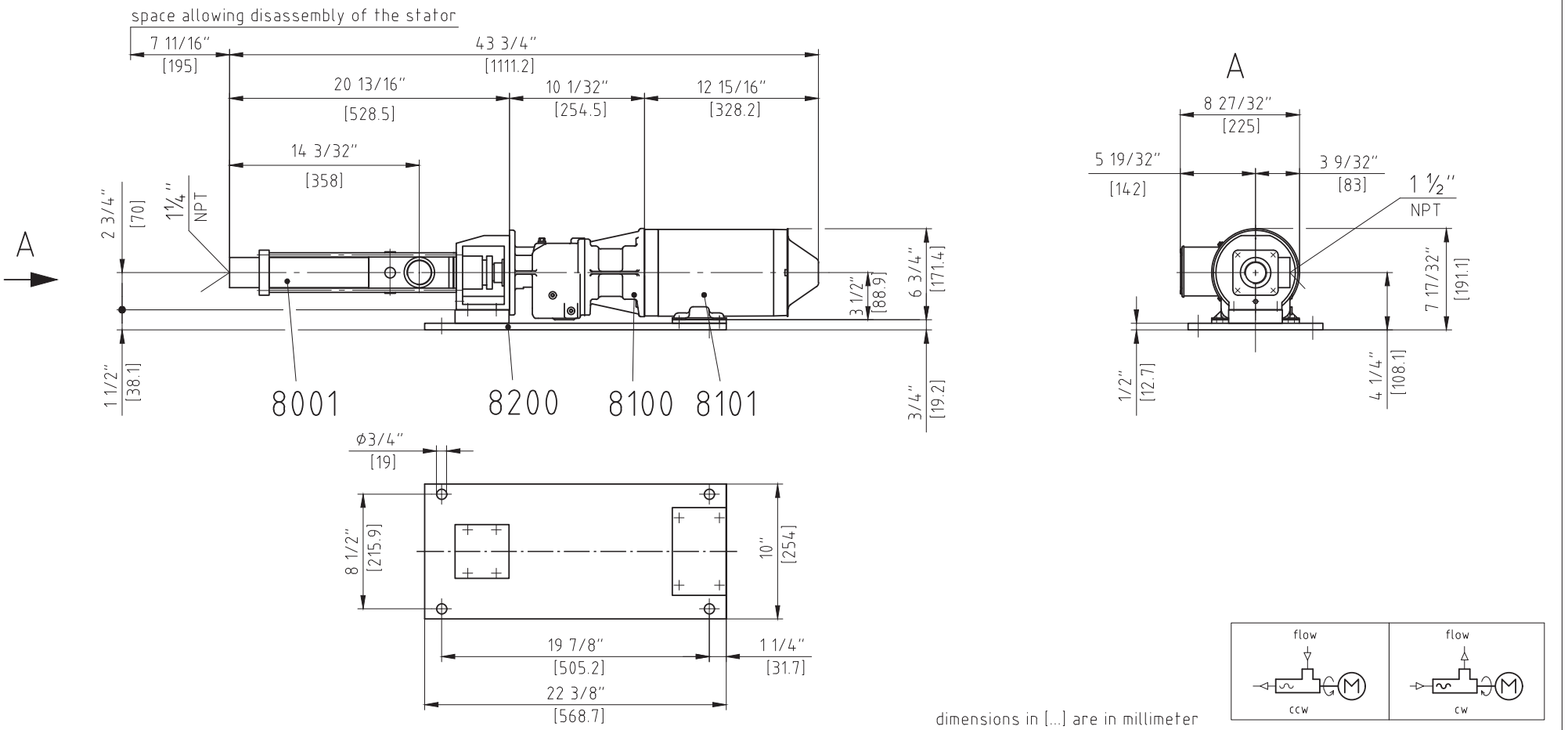

dimensions in [...] are in millimeter

Quant.	Denomination	Item	Material	Note	Weight / kg
1	baseplate:	8200		Var.: 801-200/M500-C-738	19
1	motor: Marathon 056H17T5312	8101			18
1	gear: Nord SK02F-56C	8100			14
1	pump: BN 05-12 / 1-6L	8001			14

	2018	Name	Day	Scale	Weight	Denomination
SEEPEX. ALL THINGS FLOW	Drawn	cbo	30.05.	1:10	65 kg	dimensional drawing
	Checked	lsh	31.05.	EDP-No. 172720.dwg		Drawing-no. 262-C65/M500-C-740A4

General tolerances for dimensions without specified tolerances acc. to DIN ISO 2768-v

Master Copy

6.1 Commissioning report

Send commissioning report online to www.seepex.com\ **Must be specified with every order!**			**From:**
Commission: _____	**Model:** _____		Contact person: ..... Tel.: ..... Fax: ..... E-mail: .....
Customer Service: SEEPEX Inc. 511 Speedway Drive Enon, Ohio 45323 service@seepex.com			**Address of plant:** ....

Delivery date:		
Date of installation:		
Assembly check carried out on:		
Please enter operational data:		
Conveying liquid:		
Temperature:		
Fuse level/motor protection or power consumption		
Frequency control	☐ no	
	☐ yes	If yes:
		☐ Supplied by SEEPEX
		☐ Supplied by customer
		Frequency:
		Speed:
		Power consumption:

Place, date

Signature / company stamp

6.2 Measures before commissioning

➢ Note the technical data (chapter 3.).

6.2.1 Checking pipelines

➢ Check flange screwed connections (SCH).

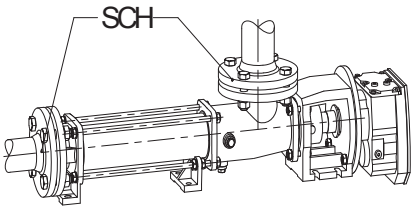

➢ Check threaded connections (G).

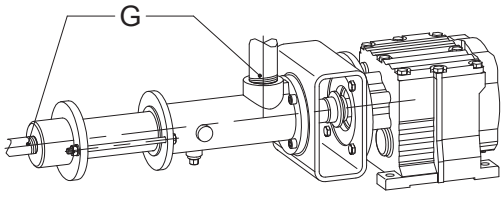

NOTICE

Ensure the liquid can flow through without obstruction.
Malfunction and/or irreparable damage to the pump.

➢ Open all shut-off elements before switching on the pump.

6.2.2 Protective devices on the pump

DANGER

Missing protective device.
Danger of pulling in and crushing.

➢ Equip the pump with a protective device. Protective devices provided for preventing contact with surfaces or moving parts must be regarded as suitable if contact is not possible in a test involving a test finger, with regard to the penetration possibility, strength and shock resistance.

➢ Comply with national protection regulations.

➢ In pumps with an open suction flange/feed hopper, attach touch protection. These safety clearances protect those persons who are attempting to reach danger areas without additional help and under the conditions defined for various situations of reaching up, reaching under or reaching through

In shaft seals, touch protection is only necessary if there are components on the rotating shaft.

6.2.3 Electrical/hydraulic connections

DANGER

Dangerous voltage.
Death or serious injury can occur.

➢ Observe safety regulations.

➢ Disconnect the pump from all sources of energy.

➢ Prevent electrical connections from being switched on again.

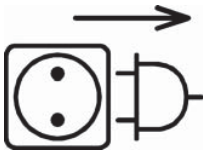

6.2.4 Direction of rotation check

- The pump direction of rotation determines the flow direction of the pumping medium.
- Note the direction of rotation arrow on the type plate.

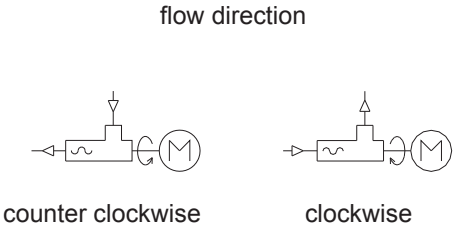

6.2.5 Additional devices - optional

- Refer to additional devices (chapter 12.1).

6.3 Initial commissioning/repeated commissioning

- Start up the pump.

NOTICE
Dry running of the pump. Malfunction and/or irreparable damage to the pump. ➢ Fill the suction casing with liquid in order to lubricate the pumping elements.

6.3.1 Avoid dry running of the pump

NOTICE
High temperature between rotor and stator. Stator material burned. Complete failure of the pump ➢ Make sure that the suction-side conveying capacity does not cavitate. ➢ If this cannot be guaranteed on the machine side, assemble a SEEPEX dry running protection (DRP).

6.3.2 Pressure in the suction and pressure connection

⚠ **CAUTION**
High pressure. Malfunction and/or irreparable damage to the shaft seal or pump. ➢ Maintain pressure in the suction connection in accordance with the technical data (chapter 3.). ➢ Assemble an oil-filled contact pressure gauge to monitor and deactivate the pump.

6.4 De-commissioning

Protect the pump and additional devices against the following:

- Frost
- Deposit of solids
- Sedimentation from the liquid
- Corrosion of parts that come into contact with the medium

6.4.1 Switching off the pump

DANGER

Dangerous voltage.
Death or serious injury can occur.

- Observe safety regulations.
- Disconnect the pump from all sources of energy.
- Prevent electrical connections from being switched on again.

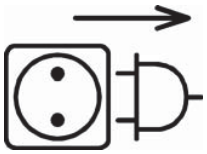

6.4.2 Emptying the pump

CAUTION

Liquid draining out.
Minor injury or damage to property can occur.

- Wear suitable protective clothing.
- Refer to the technical data (chapter 3.) for the corresponding configuration of the pump housing.

To drain the pump:

- If the pump housing has screwed plugs, remove the screwed plugs.
- Drain using a connection branch (suction casing, pressure branch) if the pump housing is coated or the housing does not have screwed plugs.
- Drain the residual liquid from the pump housing.
- Drain the pipelines on the suction and pressure sides, or shut off behind the pump connections.

6.4.3 Removing the pump

WARNING

Risk of pump tipping or falling.
Death or serious injury can occur.

- Support the drive unit to guarantee stability.

Pipeline dismantling

- Remove flange bolts (SCH) and flange seals (DFL).

with/without base plate

- Remove bolts (SCH) from the pump feet.

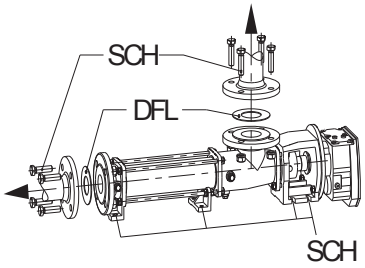

Pipeline dismantling

- Remove threaded connections (G).

with/without base plate

- Remove bolts (SCH) from the pump feet.

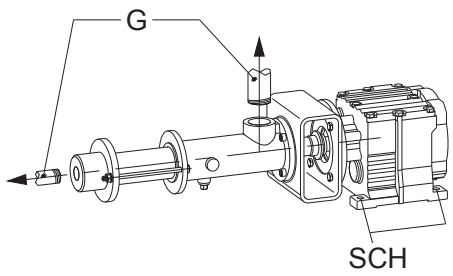

6.4.4 Preservation/storage of the pump

NOTICE
Damage to property due to lack of corrosion protection. Property damage can occur due to corrosion. ➢ Contact SEEPEX to discuss suitable preservation measures. – State the commission number of the pump.

7.1 Preventive measures

The maintenance personnel must have these operating instructions, follow them and also require corresponding qualifications.

DANGER

Dangerous voltage.
Death or serious injury can occur.

- ➢ Observe safety regulations.
- ➢ Disconnect the pump from all sources of energy.
- ➢ Prevent electrical connections from being switched on again.

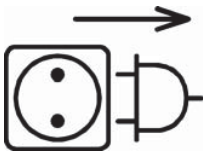

7.1.1 Pump down-time

NOTICE

Pump down-time.
Production failure due to wear.

- ➢ Acquisition of a set of wearing parts and a set of gaskets.

7.2 Lubrication

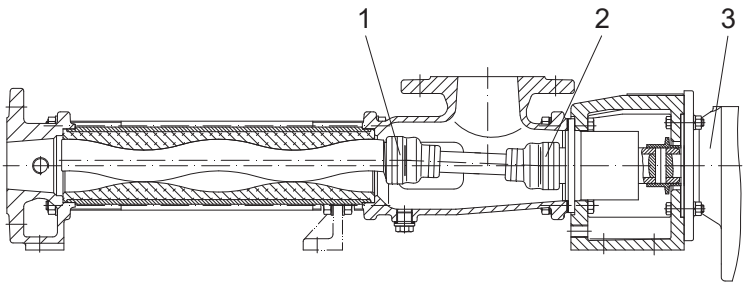

No.	Denomination	Lubricant	Lubricant change in operating hours	Fill volume
1	Pin joint	SEEPEX special grease (30321)	10,000 h	7 cm^3
2	Pin joint	SEEPEX special grease (30321)	10,000 h	7 cm^3
3	Drive	Refer to manufacturer's documentation (chapter 13._)		
Rotor/stator		Conveying medium	---	---
Shaft seal		Conveying medium	---	---

7.2.1 Joint grease

NOTICE

Other grease types.
Malfunction and/or irreparable damage to the joints or the pump.

- ➢ Exclusively use SEEPEX special grease.

7.3 Inspection

Component	Interval	Action
Joints	Every 10,000 operating hours	Renew joint grease
Shaft seal	Every week	Visual check for leaks
Drive unit	Every 3,000 operating hours, at least every 6 months	Comply with manufacturer's documentation

Refer to technical data (chapter 3.) for application range of the pump.

Malfunction										Causes	Rectification
Pump is not sucking	Pump pumping unevenly	Conveying capacity is not achieved	Pressure head is not reached	Pump does not start up	Pump seized / pump does not pump	Pump is loud when running	Motor gets too hot	Premature stator wear	Shaft seal is leaky		
				X			X		X	Static friction between stator/rotor too great.	Apply lubricant (liquid soap) between stator and rotor.
X										Incorrect direction of rotation.	Check direction of rotation and swap over motor connections if necessary.
X	X	X			X	X				Suction pipe or shaft seal leaking.	Eliminate leaks.
X	X	X				X				Suction head too great.	Check the suction head, if necessary increase pipe cross section on suction pipe and use a larger filter, open suction-side valve fully.
X	X	X								Viscosity of conveying product too great.	Check/adapt (data sheet).
		X		X			X			Pump rotation speed incorrect.	Correct rotation speed (data sheet).
	X	X									Avoid air bubbles in the conveying product.
		X		X	X		X	X		Pressure head too great.	Check pressure head with pressure gauge, reduce pressure head by using larger pressure pipe crossed section or shortening the pressure pipe.
X	X	X			X			X		Pump running partially/ completely dry.	Check there is adequate conveying product available on the suction side. Dry running protection DRP.
						X	X			Check coupling.	If necessary, move pump in relation to drive, check wear on coupling gear, re-adjust coupling if necessary.
X		X								Rotation speed too low.	Increase rotation speed for low-viscosity media/large suction volume.

Malfunction										Causes	Rectification
Pump is not sucking	Pump pumping unevenly	Conveying capacity is not achieved	Pressure head is not reached	Pump does not start up	Pump seized / pump does not pump	Pump is loud when running	Motor gets too hot	Premature stator wear	Shaft seal is leaky		
X	X					X				Rotation speed too high.	Reduce rotation speed for high-viscosity media, risk of cavitation.
						X				Joint play too large.	Check mounting of coupling rod bushing.
X		X		X	X			X		Foreign objects in pump.	Dismantle pump, remove foreign bodies, replace defective parts.
X		X	X		X					Stator/rotor worn.	Dismantle pump and renew defective parts.
X		X			X	X				Joint parts worn.	Renew joint parts, use SEEPEX pin joint grease.
X		X			X			X		Suction pipe blocked.	Clean the suction pipe.
X				X	X		X	X		Temperature of pumping liquid too high.	Check temperature, use an undersize rotor.
X		X		X			X		X	Gland packing too firm/ worn.	Loosen packing gland or tighten. Renew unusable packing rings.
X				X	X			X		Solid content and/or grain size too great.	Reduce pump speed, install screen with permitted mesh width. Increase liquid proportion.
X				X				X	X	Sedimentation/gumming of solids when pump stationary.	Rinse through and clean the pump immediately.
X				X	X			X	X	Conveying product hardens when the temperature drops below a certain limit.	Heat the pump.
				X	X		X	X		Stator swollen and unable to withstand conveying product.	Select a suitable stator material, use an undersize rotor.
						X			X	Bearings in pump drive housing or drive unit defective.	Renew bearings.
									X	Mechanical seal defective.	Check sliprings and O-rings for wear/resistance, renew if necessary.

9.1 Pump Dismantling/Reassembly

Range: BN

Size: 025-12 up to 1-6L

9.1.1 Preparing the pump for dismantling

DANGER

Dangerous voltage.
Death or serious injury can occur.

- Note safety regulations.
- Disconnect motor from all sources of energy.
- Secure electrical connections against restarting.

- Empty pipelines.
- Allow pipelines to cool down.
- Remove pipeline connections (suction side/pressure side).
- Note decommissioning (→ chapter 6.4).

9.1.2 Dismantling

WARNING

Risk of pump tipping or falling.
Death or serious injury can occur.

- Fasten the lantern **(200)** to secure the pump.

9.1.2.1 Pressure branch (700) - Dismantling

- Prop up stator **(601)** with a support **(S)**.
- Remove screw fitting **(604, 606)**.
- Remove pressure branch **(700)**.
- Remove tie bolt **(602)**.

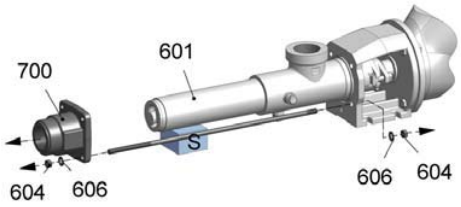

9.1.2.2 Stator (601) - Dismantling

- Raise/move splash ring **(310)**.
- Remove the plug-in shaft pins **(309)**.
- Insert tool **(WS)**.
- Turn tool **(WS)** upwards.

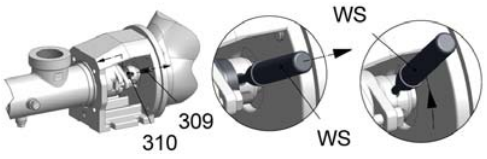

Tool (**W2**/chain wrench)

- Add lubricant **(GM)** to the opening on pressure branch side between the rotor **(600)** and the stator **(601)**.
- Turn the stator **(601)** in the “left” rotating direction and remove.
  - Use tool **(W2)**.
- Prop up the rotor **(600)** with support **(S)**.

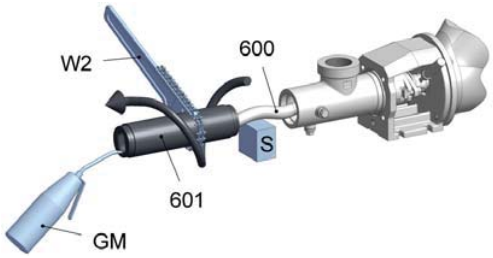

9.1.2.3 Suction casing (500) - Dismantling

- Provide rotor **(600)** with protective cover **(SH)**.
- Prop up rotor **(600)** with support **(S)**.
- Dismantle the suction casing **(500)**.
- Remove tool **(WS)**.

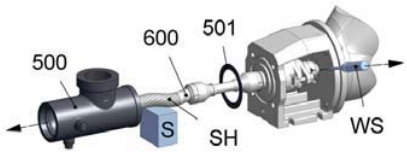

9.1.2.4 Rotating unit (RTE) - Dismantling

Tool (**W10**/dismantling tool)

Tool (**W9**/mounting lever)

with flush connection

- Remove the flush connection **(SSÜ)** on the shaft seal casing **(SEA)**.

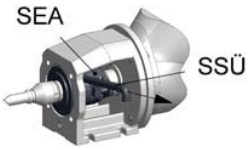

- Assemble tool (**W10**/dismantling tool).

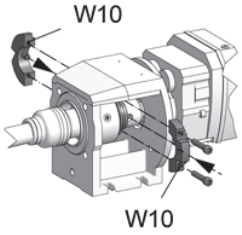

- Pull the rotating unit **(RTE)** with shaft seal **(SEA)** off from the output shaft of the drive **(ANT)**.
  - Use tool (**W9**/mounting lever).

- Dismantle tool (**W10**/dismantling tool).

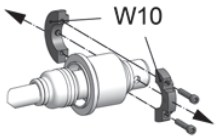

- Pull off the splash ring **(310)**.
- Pull off the shaft seal casing **(SEA)**.
  - Note dismantling shaft seal (→ chapter 9.4).

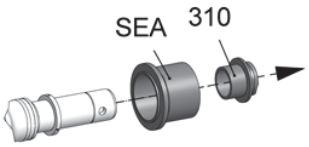

without flush connection

- Assemble tool (**W10**/dismantling tool).

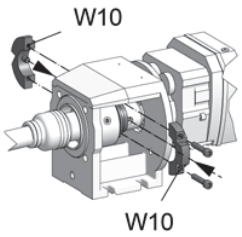

- Pull the rotating unit **(RTE)** with shaft seal **(SEA)** off from the output shaft of the drive **(ANT)**.
  - Use tool (**W9**/mounting lever).

- Dismantle tool (**W10**/dismantling tool).

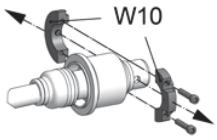

- Pull off the splash ring **(310)**.
- Pull off the shaft seal casing **(SEA)**.
  - Note dismantling shaft seal (→ chapter 9.4).

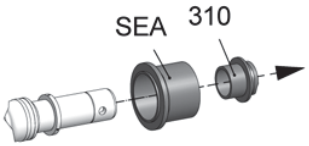

9.1.2.5 Rotor (600), coupling rod (400), plug-in shaft (307) - Dismantling

- Joint **(G)** dismantling note rotating unit - individual parts (→ chapter 9.2).

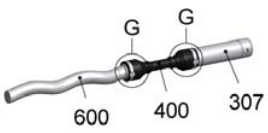

9.1.2.6 Lantern (200)/drive (ANT) - Dismantling

CAUTION

Falling or tilting drive.
Slight injury can occur.

- Secure the drive **(ANT)**.

- Remove the screw fitting **(210, 212, 213)**.
- Remove the drive **(ANT)**.

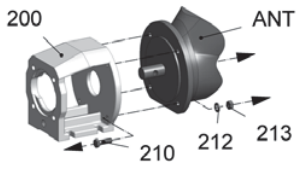

9.1.3 Reassembly

WARNING

Risk of pump tipping or falling.
Death or serious injury can occur.

- Fasten the lantern **(200)** to secure the pump.

9.1.3.1 Lantern (200)/drive (ANT) - Reassembly

- Clean the flange bearing surfaces **(FLS),** bolt circle **(ZD)** and the output shaft of the drive unit **(ANT)**.
- Mount the drive **(ANT)** to the lantern **(200)** with screw fittings **(210, 212, 213)**.

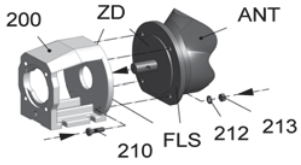

9.1.3.2 Rotor (600), coupling rod (400), plug-in shaft (307) - Reassembly

- Joint **(G)** reassembly note rotating unit - individual parts (→ chapter 9.2).

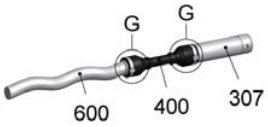

9.1.3.3 Rotating unit (RTE) - Reassembly

- Slide on shaft seal casing **(SEA)**.
  - Note reassembly shaft seal (→ chapter 9.4).
- Moisten splash ring **(310)** and plug-in shaft **(307)** with antiseize graphite petroleum.
- Slide splash ring **(310)** onto plug-in shaft **(307)**.
  - Observe fitting position of splash ring (see lettering).

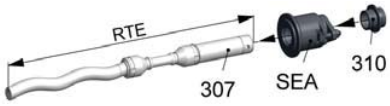

- Apply antiseize graphite petroleum to the output shaft of drive **(ANT)**.
- Slide on rotating unit **(RTE)**.

with flush connection

- Mount the flush connection **(SSÜ)**.

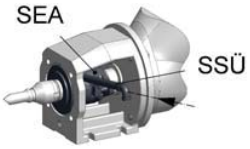

9.1.3.4 Suction casing (500) - Reassembly

- Provide rotor **(600)** with protective cover **(SH)**.
- Prop up rotor **(600)** with support **(S)**.
- Slide on casing gasket **(501)**.
- Assemble suction casing **(500)** and adjust.
  - Use spirit level **(W)**.
- Remove protective cover **(SH)**.

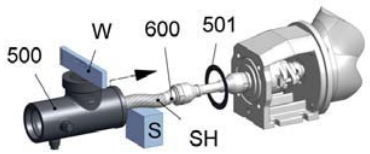

9.1.3.5 Stator (601) - Reassembly

- Insert tool **(WS)**.
- Turn tool **(WS)** down.

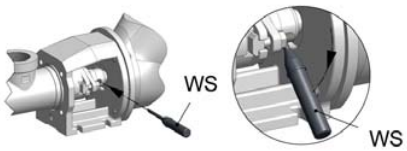

Tool (**W2**/chain wrench)

- Moisten outer surface of the rotor **(600)** with lubricant **(GM)**.
- Moisten inner surface of the stator **(601)** with lubricant **(GM)**.
- Prop up stator **(601)** with support **(S)**.
- Turn stator **(601)** in the “right” rotating direction and slide onto rotor **(600)**.
  - Use tool **(W2)**.

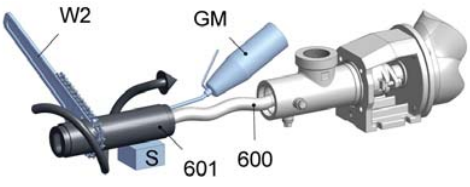

- Remove tool **(WS)**.
- Slide in plug-in shaft pin **(309)**.

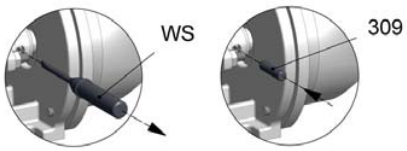

- Pay attention to the position of the splash ring **(310)**.
- Insert the splash ring collar at a distance of 0.5 mm from the lantern **(200)**.

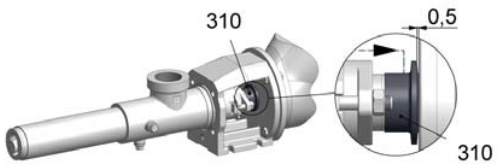

9.1.3.6 Pressure branch (700) - Reassembly

- Prop up stator **(601)** with a support **(S)**.
- Insert tie bolts **(602)** loosely into the lantern **(200)**.

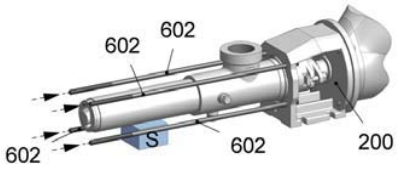

- Push pressure branch **(700)** on to the stator **(601)**.
- Insert tie bolts **(602)** loosely in the pressure branch **(700)**.
- Remove the support **(S)**.

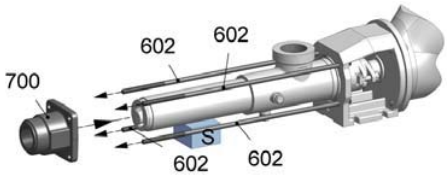

- Mount screw fitting **(604, 606)**.
- Tighten tie bolts **(602)** equally.

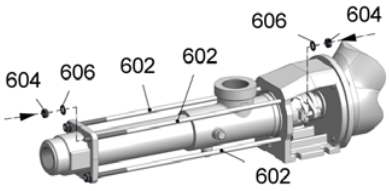

9.2 Rotating unit individual parts

9.2.1 Dismantling

9.2.1.1 Holding band (406) - dismantling

CAUTION

Risk of injury.
Possibility of parts spinning out.

➢ Wear protective goggles.

➢ Detach holding band loop (SCL).
  – Use suitable tool (WM).
➢ Push out parts of holding band loop (SCL).
➢ Remove holding band (406).

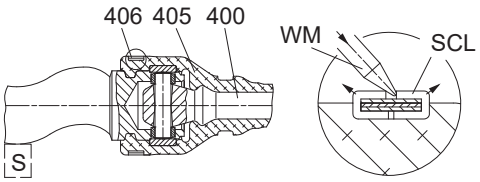

Tool (W15/mounting plate)

➢ Pull back universal joint sleeve (405).
➢ Secure tool (W15).

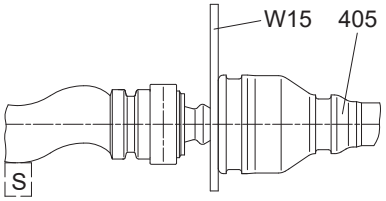

9.2.1.2 Retaining sleeve (401) - dismantling

➢ Knock back retaining sleeve (401).
  – Use suitable tool (WM).

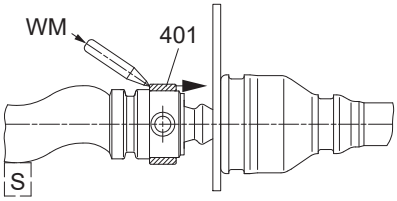

9.2.1.3 Detach joint

- Eject coupling rod pin (402)
- Remove coupling rod (400).

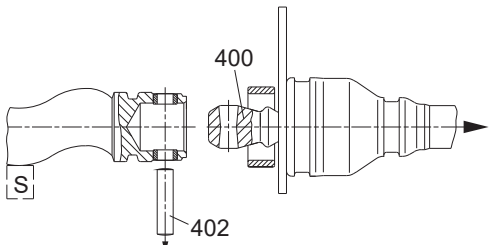

Tool (W4/assembly mandrel)

- Knock out guide bushings (403) using tool (W4).

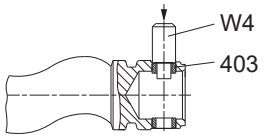

9.2.2 Rotating unit (RTE) - prepare individual parts for reassembly

9.2.2.1 Rotor (600)

- Remove any damage.
- Clean rotor (600).

Tool (W4/assembly mandrel)

- Press in guide bushings (403) (depth = 2/3).
  - Use tool (W4).

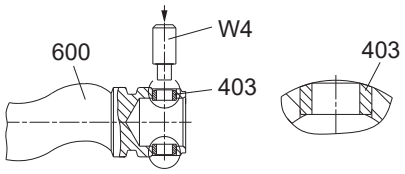

9.2.2.2 Coupling rod (400)

- Clean coupling rod (400).
- Check bore head for wear.
  - If wearing is detec on the bore head, renew coupling rod (400).

9.2.2.3 Plug-in shaft (307)

- Remove any damage.
- Clean plug-in shaft (307).

Tool (W4/assembly mandrel)

- Press in guide bushings (403) (depth = 2/3).
  - Use tool (W4).

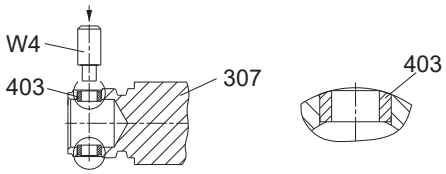

9.2.3 Rotating unit (RTE) - individual parts - reassembly

NOTICE

Malfunction of the joints.
Malfunction and/or destruction of joints.

➢ Replace coupling rod pins (402) and guide bushings (403) jointly.

9.2.3.1 Coupling rod (400) - reassembly

➢ Slide the universal joint sleeve (405) and holding bands (406) onto coupling rod (400).
➢ Adapt diameter and width of the holding band to the universal joint sleeve.
➢ Fill the joint head with SEEPEX joint grease.

Rotor (600)

➢ Insert coupling rod pins (402).
➢ Slide on retaining sleeve (401).
➢ Connect rotor/coupling rod.
➢ Slide in coupling rod pins (402).

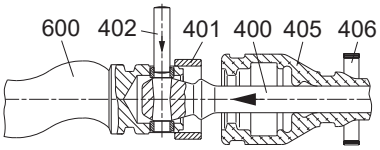

Plug-in shaft (307)

➢ Insert coupling rod pins (402).
➢ Slide on retaining sleeve (401).
➢ Connect plug-in shaft/coupling rod.
➢ Slide in coupling rod pins (402).

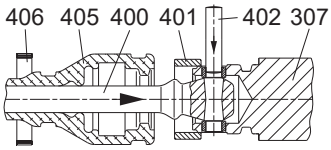

9.2.3.2 Retaining sleeve (401) - reassembly

Tool (W4/assembly mandrel)

➢ Knock back retaining sleeve (401).
  – Use tool (W4).

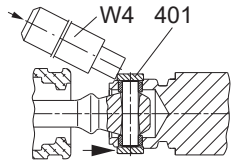

➢ Secure retaining sleeve (401) in a displaced manner (2x180°).
  – Use suitable tool (WK).

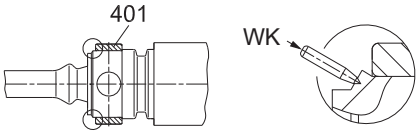

9.2.3.3 Universal joint sleeve (405) - reassembly

- Moisten the surface of coupling rod (400) / inner surface of universal joint sleeve (405) with joint grease (maintenance chapter 7.).
- Slide on universal joint sleeve (405).
- Vent the interior of the joint.
  - Use suitable tool (WS).

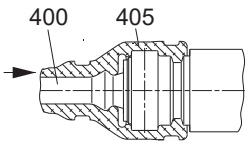

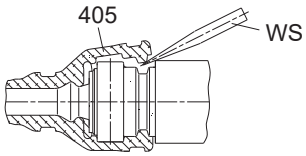

- Assemble the holding band.
  - Holding band assembly (chapter 9._).

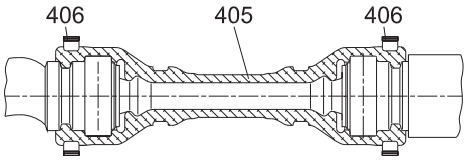

9.3 Holding band - assembly

9.3.1 Prepare the holding band

➢ Only use prefabricated double-band holding bands.

9.3.2 Check the holding band

- Bent-over holding band (HBD) is in contact with holding band loop (SCL) to avoid damaging universal joint sleeve.

➢ Press on holding band (HBD) using tool (WZ) if necessary.

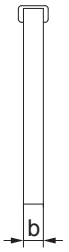

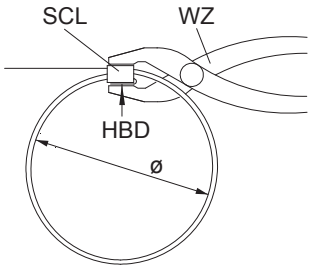

9.3.3 Assemble the holding band

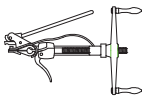

➢ Use tool (W3/mounting tool)

➢ Feed holding band into tool (W3).

➢ Hold ends of holding band with the eccentric lever (EX).

➢ Turn the crank (KU) until the holding band is strained and lies against the holding band loop (SCL).

➢ Carefully pull the holing band together until it is in contact with the circular groove of universal joint sleeve.

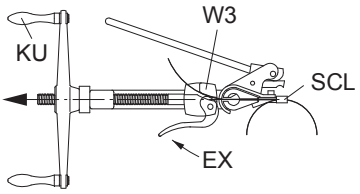

9.3.4 Correct tension of the holding band (HBD)

Correct

The holding band (HBD) has drawn in the out shape of the universal joint sleeve and is firmly seated.

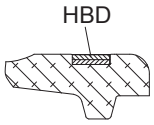

Incorrect

The holding band (HBD) is too loose, can slip off.

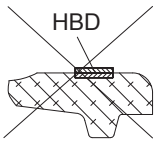

Incorrect

The holding band (HBD) is too tight, universal joint sleeve will be damaged/sheared off.

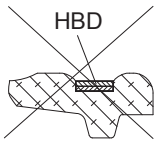

9.3.5 Cant up the holding band

- Swivel mounting tool (W3) approx. 60° upwards.
- Loosen crank (KU) by a half turn.
- Swivel cutting lever (SH) forward until the pressure piece is lying behind the holding band loop (SCL).

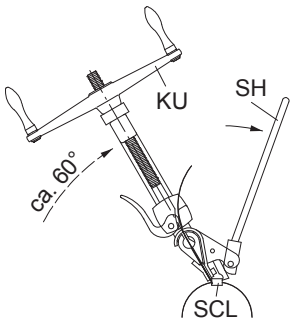

9.3.6 Shear the holding band (material: 1.4301; 1.4571)

- Hit the cutting lever (SH) with the inside of your hand.
  - Cant up and shear the end of the holding band behind the loop (SCL).
  - Carefully straighten up the holding band if it rises up on the sheared side.

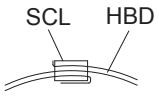

NOTICE
Universal joint sleeve damage. Pin joint grease can emerge. ➢ Avoid hammering or knocking.

9.3.7 Check the holding band after assembly

- The holding band must lie in the groove of the universal joint sleeve.
- Replace the holding band if the holding band slips back through the loop.

9.4 Mechanical seal general

9.4.1 Safety

WARNING

Shaft seal is leaky.
Leakage may escape into the atmosphere.

- ➢ Take safety measures to protect persons and the environment.
- ➢ Wear suitable protective clothing.
- ➢ Dispose of leakage appropriately.
- ➢ Note applicable regulations when handling hazardous substances.

9.4.2 Operating conditions and material combination

- Adjust to the relevant application
  - – Refer to technical data (chapter 3).

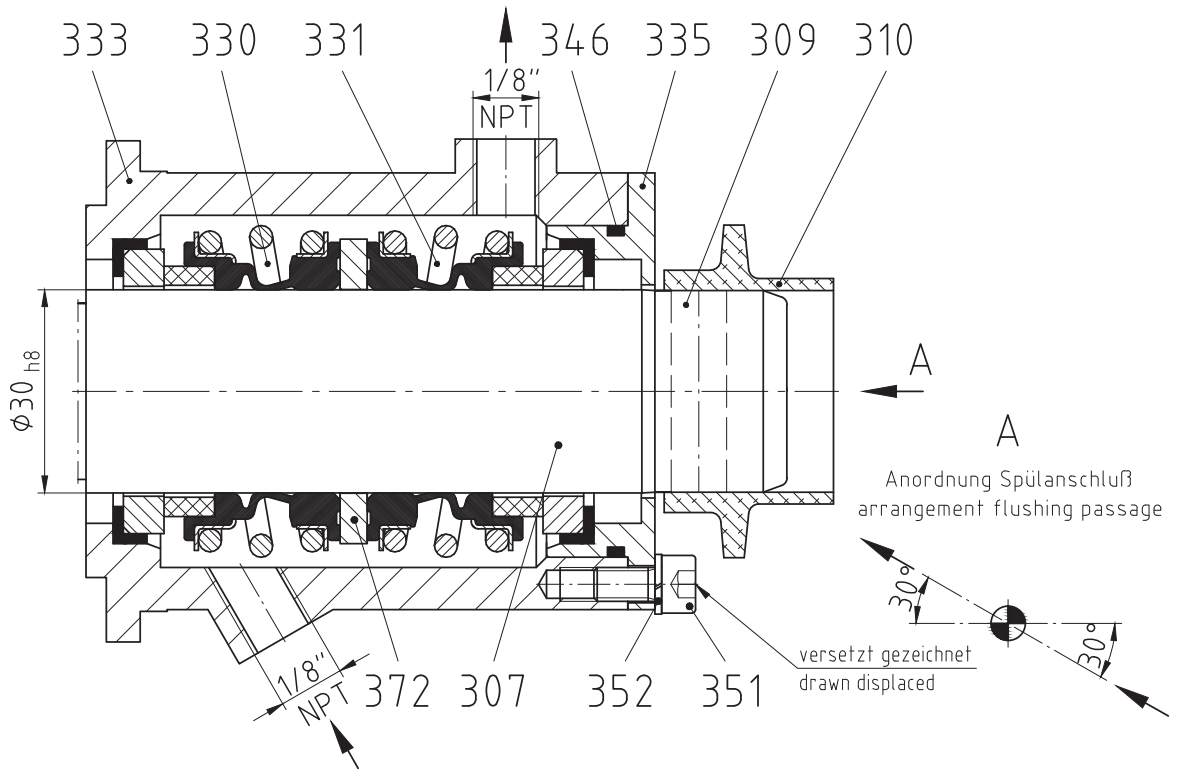

Stück Unit	Norm Standard	Pos./Item	Benennung/Denomination Zeichnungs–Nummer/Drawing–Number	Werkstoff/Material	Bemerkung/Remark	Gewicht Weight kg
1		372	Stützring / support ring 062-372/M500-0-040_4			
2		352	Federring / spring washer		B5	
2		351	Zylinderschraube / socket screw		M5 x 10	
1		346	O-Ring / o-ring		ϕ42 x 2	
1		335	Gehäusedeckel / casing cover 262-335/M500-0-001_4			
1		333	GLRD-Gehäuse / mechanical seal casing 262-333/M500-0-011_4			
1		331	GLRD / mechanical seal MG1-ϕ30-G60		Fabrikat / make : Burgmann	
1		330	GLRD / mechanical seal MG1-ϕ30-G60		Fabrikat / make : Burgmann	
1		310	Spritzring / splash ring 062-310/M500-0-002_4		gekürzt / shorted	
1		309	Steckwellenbolzen / plug-in shaft pin 062-309/M500-0-001_4			
1		307	Steckwelle / plug-in shaft 262-307/M500-0-030_3			

SEEPEX.
ALL THINGS FLOW

Allgemeintoleranzen für Maße ohne einzelne Toleranzeintragung DIN ISO 2768–mittel General tolerances for mass without individual tolerance entry DIN ISO 2768–average	Aus–gabe Issue	Änderung Modification	Name Name	Datum Date	Maßstab/Scale 1:1	Werkstoff/Material	Gewicht/Weight
					Bezeichnung/Denomination GLRD-Schnittzeichnung mechanical seal sectional drawing Burgmann MG1-ϕ30-G60 Ausführung/design back-to-back, Spülanschlüsse/flushing connection 1/8"NPT		
Rauheit für Oberflächenzeichen DIN ISO 1302 Reihe 2 Roughness for surface finish indication DIN ISO 1302 Reihe 2			Name Name	Datum Date	Zeichnungs–Nummer/Drawing–Number 262-0GB/M500-0-091A4		
		Bearbeitet/Drawn	hgg	27.03.2000			
		Geprüft/Checked	kno	27.03.2000	EDV–Nr./EDP–No. 38256.dwg		
		Normiert/Standard			Ersatz für/Replacement for:	Ersetzt durch/Replacement by:	
		Gedruckt/Printed					

Urheberrechtsschutz: Diese Zeichnung ist unser Eigentum und uns nach dem Gesetz über Urheberrecht und verwandte Schutzrechte geschützt.
Protection of Copyright: This drawing is our property and is protected acc. to the law referring to copyright and related protective laws.

10.1 Spare parts list

10.2 Sectional drawing and parts list

Version for copying

10.1 Spare parts list

Spare parts can be ordered online or requested from
www.seepex.com\

Type: BN 025-12 to 1-6L

☐ Request ☐ Order

Must be included in every order or enquiry!

Commission:

Type:

Sender:

Contact: .....
Tel.: .....
Fax: .....
E-mail: .....

Customer Service:
SEEPEX Inc.
511 Speedway Drive
Enon, Ohio 45323
service.us@seepex.com

Delivery address:
.....
.....
.....
.....
.....

No.	Quantity	Component	Material	Comment
Minor set of wearing parts ☐				
301	1	Set of packing rings		according to data sheet (chapter 3.1)
330	1	Mechanical seal		according to data sheet (chapter 3.1)
601	1	Stator		
Major set of wearing parts ☐				
301	1	Set of packing rings		according to data sheet (chapter 3.1)
307	1	Plug-in shaft		
330	1	Mechanical seal		according to data sheet (chapter 3.1)
400	1	Coupling rod with coupling rod bushings		
402	2	Coupling rod pin		
403	4	Guide bushing		
405	2	Universal joint sleeve		
406	2	Holding band, large		
600	1	Rotor		
601	1	Stator		

Place, date

Signature / company stamp

Version for copying

No.	Quantity	Component	Material	Comment
Set of gaskets			☐	
301	1	Set of packing rings		according to data sheet (chapter 3.1)
310	1	Splash ring		according to data sheet (chapter 3.1)
330	1	Mechanical seal		
501	1	Casing gasket		
503	3	Sealing ring		
Plug-in shaft & shaft seal			☐	
301		Set of packing rings		according to data sheet (chapter 3.1)
307		Plug-in shaft		
309		Plug-in shaft pin		
310		Splash ring		according to data sheet (chapter 3.1)
330		Mechanical seal		according to data sheet (chapter 3.1)
Coupling rod & joint parts			☐	
400		Coupling rod with coupling rod bushings		
401		Retaining sleeve		
402		Coupling rod pin		
403		Guide bushing		
405		Universal joint sleeve		
406		Holding band, large		
401-406		Complete set of joint parts		
Conveying elements			☐	
600		Rotor		
601		Stator		
Miscellaneous parts			☐	
501		Casing gasket		
098		Pin joint grease		1 cartridge = 300 g (approx. 315 cm³) Grease quantity according to maintenance (chapter 7.0)

Place, date

Signature / company stamp

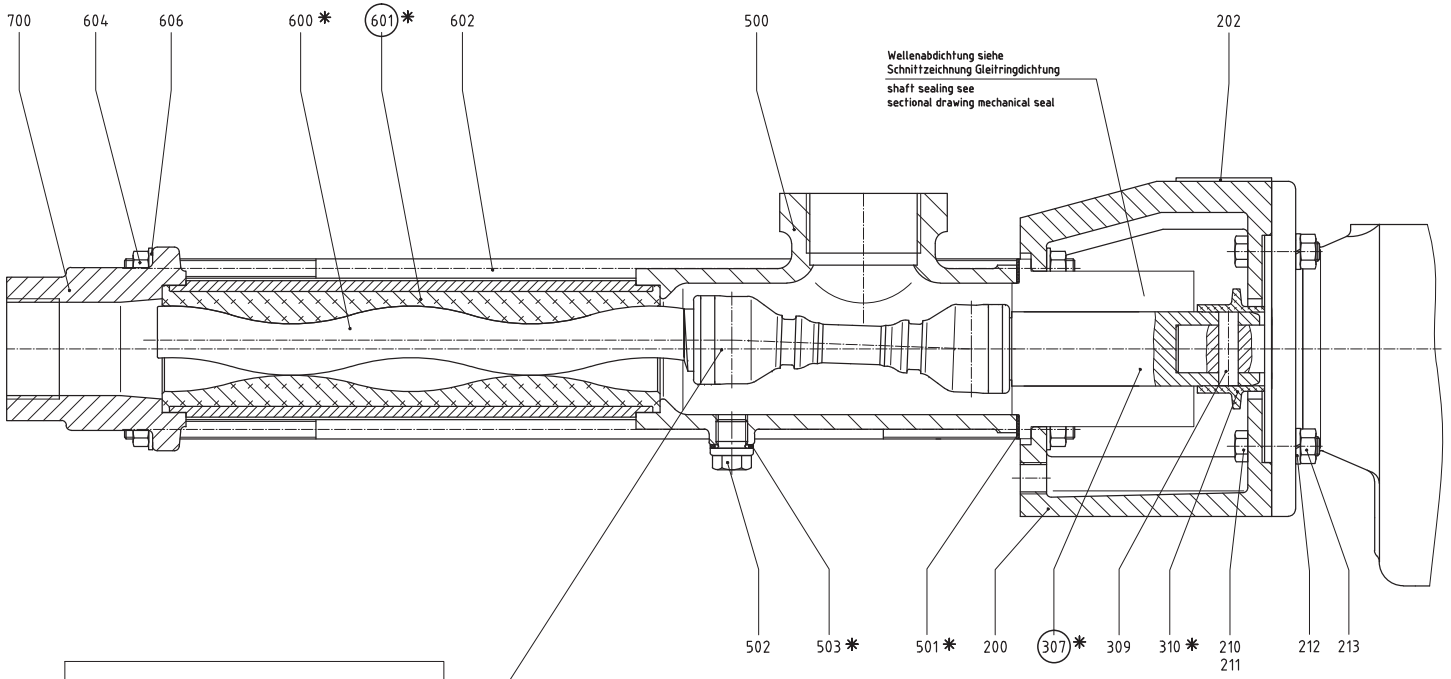

098 *

SEEPEX Gelenkfett

Typ und Füllmenge:
Betriebs- und Montageanleitung
entnehmen

SEEPEX joint grease

type and filling quantity:
see operating and
assembly instruction

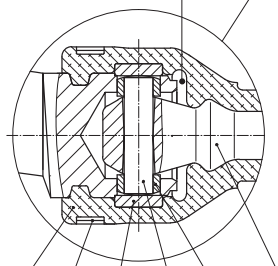

405 * 406 * 401 402 * 403 * 400 *

○ Werkzeuge
Betriebs- und Montageanleitung
entnehmen

Tools
see operating and
assembly instruction

* Verschleißteile und Dichtungen
Betriebs- und Montageanleitung
entnehmen

Wearing parts and sealings
see operating and
assembly instruction

Stück Unit	Norm Standard	Pos./Item	Benennung/Denomination Zeichnungs-Nummer/Drawing-Number	Werkstoff/Material	Bemerkung/Remark	Gewicht Weight kg

SEEPEX.
ALL THINGS FLOW

Allgemeintoleranzen für Maße ohne einzelne Toleranzeintragung DIN ISO 2768-mittel	ABC Änderung Modification	Name Name	Datum Date	Maßstab/Scale	Werkstoff/Material	Gewicht/Weight

Bezeichnung/Denomination

General tolerances for mass without individual tolerance entry DIN ISO 2768-average

Schnittzeichnung Baureihe "BN"
sectional drawing range "BN"

Rauheit für Oberflächenzeichen DIN ISO 1302 Reihe 2		Name Name	Datum Date	Zeichnungs-Nummer/Drawing-Number
	Bearbeitet/Drawn	hof	22.06.1995	062-013A1
Roughness for surface finish indication DIN ISO 1302 Reihe 2	Geprüft/Checked	hue	22.06.1995	EDV-Nr./EDP-No. 13031.dwg
	Normiert/Standard			Ersatz für/Replacement for: Ersetzt durch/Replacement by:
	Gedruckt/Printed	hof	14.10.1998	

Urheberrechtsschutz: Diese Zeichnung ist unser Eigentum und uns nach dem Gesetz über Urheberrecht und verwandte Schutzrechte geschützt.
Protection of Copyright: This drawing is our property and is protected acc. to the law referring to copyright and related protective laws.

Stückliste
Parts List
Liste des pièces

SEEPEX.
ALL THINGS FLOW

Stck.	Pos.	DE **Baureihe BN** **Schnittzeichnung Nr. 062-013A1** **Benennung Stck. / Pos.**	EN **range BN** **sectional drawing no. 062-013A1** **denomination Qty. / Item**	FR **série BN** **plan no. 062-013A1** **désignation Qté. / Poste**
1	200	Laterne	lantern	lanterne
1	202	Typenschild	type plate	plaque signalitique
4	210	6kt-Schraube	hexagon bolt	vis
	211	6kt-Schraube	hexagon bolt	vis
4	212	Federring	spring washer	rondelle frein
4	213	6kt-Mutter	hexagon nut	écrou
1	307	Steckwelle	plug-in shaft	arbre à broche
1	309	Steckwellenbolzen	plug-in shaft pin	cheville pour arbre à broche
1	310	Spritzring	splash ring	bague de projection
1	400	Kuppelstange	coupling rod	barre d'accouplement
2	401	Gelenkhülse	retaining sleeve	douille d'articulation
2	402	Kuppelstangenbolzen	coupling rod pin	axe d'articulation
4	403	Führungsbuchse	guide bushing	douille de guidage
1	405	Manschette	universal joint sleeve	manchette
2	406	Halteband	holding band	collier de serrage
1	500	Sauggehäuse	suction casing	carter d'aspiration
1	501	Sauggehäusedichtung	casing gasket	étanchéité du carter d'aspiration
3	502	Verschlussschraube	screwed plug	bouchon de vidange
3	503	Dichtring	sealing ring	joint d'étanchéité
1	600	Rotor	rotor	rotor
1	601	Stator	stator	stator
4	602	Spannschraube	tie bolt	tirant
8	604	6kt-Mutter	hexagon nut	écrou
8	606	Scheibe	washer	rondelle
1	700	Druckstutzen	pressure branch	bride de refoulement
	098	SEEPEX Gelenkfett Typ und Füllmenge: Betriebs- und Montageanleitung entnehmen	SEEPEX joint grease type and filling quantity: see Operating and Assembly Instruction	SEEPEX graisse d' articulations sommaire pour type et quantité: voir instructions de montage et de fonctionnement
		Verschleißteile und Dichtungen: Betriebs- und Montageanleitung entnehmen	Wearing parts and sealings: see Operating and Assembly Instruction	pièces d'usure et étanchéités: voir instructions de montage et de fonctionnement
		Werkzeuge: Betriebs- und Montageanleitung entnehmen	Tools: see Operating and Assembly Instruction	Outils: voir instructions de montage et de fonctionnement
		Wellenabdichtung siehe Schnittzeichnung Gleitringdichtung	shaft sealing see sectional drawing mechanical seal	dispositif d' etanchéité voir vue éclatée garniture mécanique

Version for copying

Spare parts can be ordered online or requested from
www.seepex.com\

Must be specified with every order!

Sender:

Contact: .....
Tel.: .....
Fax: .....
E-mail: .....

Commission:

_____

Mark tool!

X

Customer Service:
SEEPEX Inc.
511 Speedway Drive
Enon, Ohio 45323
service.us@seepex.com

Delivery address:
.....
.....
.....
.....
.....

For installation of:	Packing gland	Stator	Universal joint sleeve	
Tool no.	**W1** ☐	**W2** ☐	**W15** ☐	
Denomination:	Packing puller	Chain wrench plus spare chain	Mounting plate	
Order no.	PKZ	KRZ	MTP	
		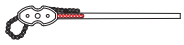	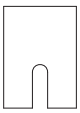	

For installation of:	**Rotating unit**			
	Holding band	Joint	Plug-in shaft	
Tool no.	**W3** ☐	**W4** ☐	**W10** ☐	
Denomination:	Mounting tool	Drift	Dismantling tool	
Order no.	MHB	MTD	AZV	
	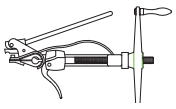		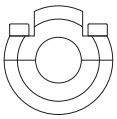	

12.1 Additional components

12.2 Technical information

12.3 Manufacturer's documents shaft seal

1. General

	NOTICE
	Dry-running of the pump/temperature increase in the stator Damage to property and malfunction can be caused. ➢ Adhere to max. permissible operating temperature. ➢ Install dry-running protection device (TSE).

Functional principle:

- continuous monitoring of the temperature in the stator (temperature sensor)
- Shut off the pump when reaching the set category temperature.

Operating mode:

- existing temperature at the stator is compared to the category temperature in the TSE control device.
- Two relays switch within the TSE control device when reaching the shut-off value.
- The drive motor is shut off through potential-free alternating contacts.
- An alert is triggered.
- A required acknowledgement of the alert prevents an automatic reactivation of the pump.

2. Technical Data

2.1 Temperature sensor

- The temperature is measured at the stator through an NTC resistor with a protective sleeve.

Permissible temperature range: 0-150°C

Standard resistor: 10 kOhm at 25°C

Temp °C	0	10	20	25	30	40	50	60
Resistor Ohm	32,650	19,900	12,490	10,000	8,057	5,327	3,603	2,488

Temp °C	70	80	90	100	110	120	130	140
Resistor Ohm	1.752	1.255	915	678	510	389	301	235

2.2 Technical data - TSE control device

- The TSE control device is suitable for cabinet installation or wall mounting.

Types:	SGRTSE 230V ACB
	SGRTSE 115V ACB
	SGRTSE 24V ACB
	SGRTSE 24V DCB
Temperature range:	0-150°C
Input:	NTC temperature sensor 10 kOhm (at 25°C) with sensor breakage guard at -25°C
Relay output:	2 potential-free changeover contacts (K1, K2), switching capacity 500 VA at 110-230 V resistive load
Available operating voltage:	24V, 115V, 230V AC; 24V DC
Power drain:	max. 4 VA
Sensor circuit:	Open-circuit voltage max. 2.5 VDC Short-circuit current max. 0.5 mA DC
Display at the device:	Malfunction/dry-running Shut-off temperature
Operation at the device:	Setup shut-off temperature Reset alert
Housing material:	ABS
Fastening:	Installation on standard bar 35 mm in accordance with standard or screw connection in accordance with standard.
Protection:	Casing IP 40; terminals IP 20
Ambient temp.:	0-50!
Dimensions:	45x75x110 mm (WxHxD)
EMV (2004/108/EG):	CE conform in accordance with standard

2.3 Dimensions and wall mounting

- Installation depth = 110 mm

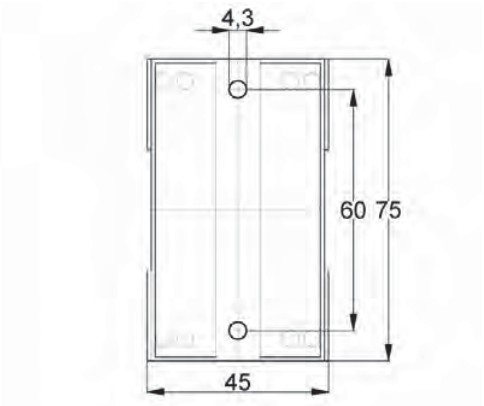

3. Electrical connection

3.1 Installation instructions

Check line voltage

➢ Check line voltage/nominal voltage against information on type plate before connection and commissioning.
  – Permissible mains voltage variations of the nominal equipment voltage +/-10%

➢ Electrical connections are in accordance with the connection map, the provisions of the local utility or the relevant VDE regulations.

Mains power failure

➢ Initiate appropriate measures to prevent the failures.
  – Filter failures through external mains filter.
  – Equip device internally with mains filter.
  – Install sensor leads shielded.
  – Ground shield on one side.

3.2 Connection diagram TSE control device

- Terminal assignment

1 + 3	Operating voltage
11 + 13	Operating hour counter potential-free contact
12 + 13	external potential-free contact
14 +15	Temperature sensor
5, 6, 7	Relay output K1
8, 9, 10	Relay output K2

- The TSE control device can be released after dry-running by a button (closer) at terminals 12+13.

➢ Install button (closer).

3.3 Relay function

Actual temperature > shut-off temperature	**(Malfunction/dry-running)**
Contact 6-5 and 9-8	closed
Contact 6-7 and 9-10	open

- Relays K1 and K2 are in parallel and they work together.
  - K1: Switch-off condition integrated in motor contactor control.
  - K2: optional connection to the fault sensor or process computer (reserve).

4. Measures before commissioning

4.1 Check position of temperature control point at pump

➢ At the factory, the temperature sensor is always installed at the liquid inlet side.

➢ Check the specified installation position of the temperature control point when changing the direction of rotation and exchanging the stator.

4.1.1 Pump with "anti-clockwise rotation" - standard design

➢ Check suction casing side fitting position.

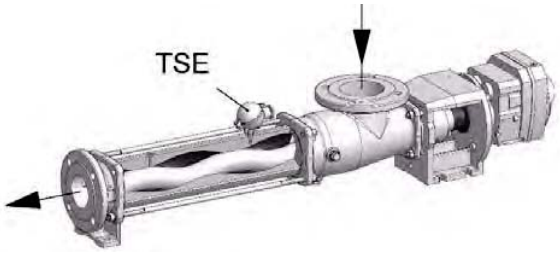

4.1.2 Pump with "clockwise rotation" - special design.

➢ Pressure branch side fitting position.

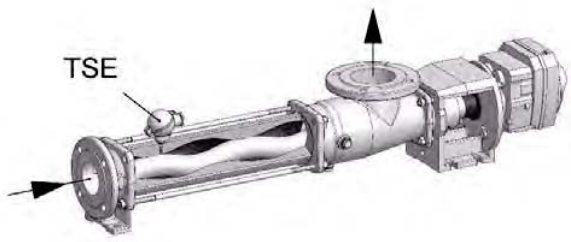

4.1.3 Performance check

➢ Execute performance check before first commissioning.
➢ Switch on control voltage at terminals 1+3.
– Digital display at TSE control device is illuminated.

➢ Keep "stator temp" button depressed and read temperature value.

• The function exists if the display is in accordance with the existing temperature.
➢ Observe deviations in case of functional failures.
– Find malfunctions, causes and remedies (→ see chapter 8) in the operating and assembly instructions.

5. Commissioning and control

5.1 Set the switch-off temperature

➢ Set the switch-off temperature at the TSE control device as low as possible.
– Shorter shut-off times after the dry-running occurs.
– optimum stator protection

5.1.1 Coarse setting of the shut-off temperature

• When delivered, the shut-off temperature is factory-set to 50°C.
• Maintain factory settings during commissioning or, in case of higher medium temperatures, set a value of 20-30°C above the temperature of the pumped medium.

➢ After the coarse setting, commission the pump for a max time of 60 min.
– Subsequently, perform the fine adjustment of the shut-off temperature (→ chapter 5.1.2).

5.1.2 Fine adjustment of the shut-off temperature

➢ Start pump until the operating temperature in the stator is stabilized (approx. 30-60 min.).

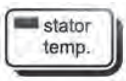

- This will be shown on the display of the TSE control device when the pump is running and by pressing the button "stator temp.".

➢ Set the final shut-off temperature (→ chapter 5.1.3).
  – The shut-off temperature is 10°C higher than the operating temperature displayed.
  – Adhere to chapter 5.1.3.
  – Consider maximum medium temperature that can occur during operation.

➢ Check information in the data sheet for a medium temperature > 40°C.

➢ Rotor/stator - consider sizing.

➢ A consultation with the manufacturer is required if the temperature information in the data sheet and the actual value do not conform.

5.1.3 Adjust shut-off temperature at the control unit.

➢ Switch control voltage on.
  – After a self-test at the control unit, the currently set shut-off temperature will be shown on the display.

➢ Press briefly
  – Setup mode is displayed.
  – The display shows alternating "SET" and the shut-off temperature set last.

➢ Increase shut-off value.
  – The value changes initially by +1° each.
  – After approx. 3 sec. in +10° steps.

➢ Decrease shut-off value.
  – The value changes initially by -1° each.
  – After approx. 3 sec. in -10° steps.

➢ Press briefly
  – Operating mode is displayed.
  – Adjusted shut-off temperature was transmitted to the permanent memory and will be shown on the display.

- In setup mode, the device changes - without saving possibly changed settings - after 10 sec. into the operating mode.

5.2 Switch display from °C to °F

➢ Press button 10 seconds until the display changes.

- The selected temperature unit will be displayed next to the °C or °F symbol.

5.3 Release control unit after the dry-running

- The installed relays switch-off and remain locked in this position if the set temperature at the TSE control unit is exceeded.
  - Red LED appears (alert).

➢ Acknowledge alert/release relay in accordance with the following options:

➢ actuate "reset" button at the TSE control unit for at least 1 sec.
➢ Shut-off operating voltage at the TSE control unit (terminals 1-3).
➢ Actuate external contact ("reset" button, closed for at least 1 sec.).

5.4 Call operating hour counter

- The TSE control unit includes an operating hour counter. This value can be called on the service level. The transition to the service level is only possible after a code number has been entered.

➢ Press approx. 5 sec until the "Cod" is displayed.
  – The display shows alternating "Cod" and 100.

➢ Press button sequence.
➢ Enter code "33".

➢ Press briefly
  – Code will be acknowledged.
  – Transfer to the service level.

Display alternating: "¯Hi¯" and #value# • No function

➢ Press briefly
  – Transfer to next parameter/display value.

Display alternating: "bh.Hi" and #value# • Operating hour counter (displayed value x 10,000)

➢ Press briefly
  – Transfer to next parameter/display value.

Display alternating: "bh.Lo" and #value# • Operating hour counter (displayed value x 1)

➢ Return to the operating mode.

6. Stator change

6.1 General

➢ List the material of the installed TSE sensor sleeve when ordering a replacement stator.
➢ Do not readjust the sensor sleeve installed at the factory.

6.2 Dismantling/reassembly connection head and temperature sensor

- Adherence to associated drawing required.

6.2.1 Dismantling

- Do not reuse sensor sleeve after dismantling.

- Open cover of connection head.
- Remove connection wires at the temperature sensor.
- After loosening the screw at the side, pull off connection head from the threaded sleeve.
- Rotate threaded sleeve out of the stator.
- Remove clamp screw, rubber ring and temperature sensor from sensor sleeve.

6.2.2 Reassembly

- Do not readjust the sensor sleeve installed at the factory.
- Install threaded sleeve in the stator.
- Install sensor sleeve.
- Open cover of connection head.
- Install connection wires at the temperature sensor.
- Remove protective tube (transport guard of sensor sleeve).
- Slide thermistor sensor with clamp screw and rubber ring up to the base of the sensor sleeve and fixate.
- Screw threaded sleeve with two O-rings into threaded hole at the stator.
- When installing the connection head, route connection cable at the thermistor sensor from below through the hole in the terminal board.
- After fixating the connection head on the threaded sleeve, fasten connection cable at existing terminals and close connection head.

7. Functional failure

Causes for alerts and shut-offs of the pump without dry-running:

- Sensor or wire break
- Short-circuit sensor/wire
- Overshooting or undershooting of the measuring range (-25...150°C)

We recommend the following approach for checking the TSE control device and the sensor circuit incl. temperature sensor.

7.1 Performance check sensor circuit

➢ Remove the temperature sensor supply line at the TSE control device terminals 14+15.
➢ Connect resistor measuring unit (multimeter/ohmmeter).
➢ Determine electrical resistance with using the table (→ chapter 2.1) and compare with the temperature at the pump.
➢ Proceed as follows in case of resistor value deviations >10% from the target value:
➢ disconnect connecting wire to the control unit at the connection head of the pump
➢ Repeat measurement at the connection head of the TSE.
  – A defect at the temperature sensor exists in case of identical deviations.
➢ Exchange the temperature sensor.
  – Observe chapters 6.2 - 6.3.
• In case of correct values, a defect of the connection cable or the connection terminals exists.

7.2 Performance check TSE control device

• A defect at the TSE control device is probable if the sensor circuit is functioning properly.
➢ To check, disconnect terminal 14+15 of the sensor supply line.
➢ Connect commercially available carbon film or metal film resistor in accordance with the following array:

Resistor Ohm	10,000	5,600	2,200	1,000	560	220
Switch temp. °C	25	39	63	87	107	143

➢ Switch on control voltage at terminals 1+3.
  – Digital display at TSE control device is illuminated.

➢ Keep "stator temp" button depressed and read temperature value.
  – Read value must be in accordance with the switching temperature allocated to the resistor used.
➢ Return TSE control unit for repair in case of display deviations of more than 5-10°C or in case of no display.

1 Area of application

Conveying liquids with the following properties

- aggressive, toxic
- sticky, highly viscous
- polymerising
- tendency to leave deposits
- high vapour pressure or gaseous
- high pressure, high temperature

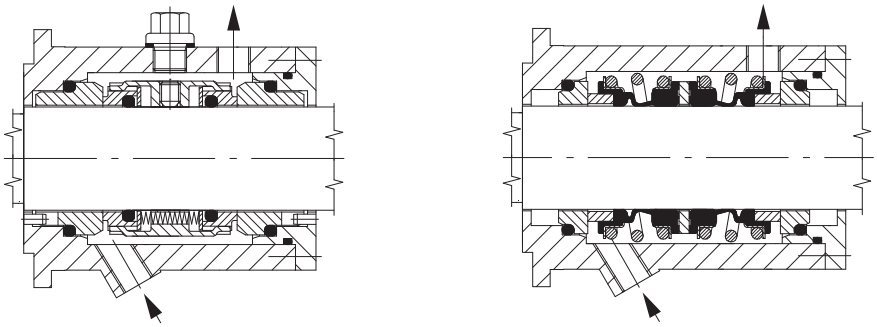

medium side atmospheric side

double acting back-to-back

2 Buffer fluid

2.1 General

The buffer fluid fills the space between the set of mechanical seals on the medium side and the atmosperic side

2.2 Task

- to dissipate the corresponding frictional heat.
- to avoid infiltration of the product into the sealing gap.

2.3 Medium

- clean, cold and stable liquid is used, e.g. water.
- it must be compatible with the product and free of solids.
- it must not have a tendency to leave deposits.
- it should have low viscosity and a good thermal conductivity.
- Bear in mind the resistance to corrosion of all acontact parts.

2.4 Pressure

The buffer fluid pressure must always be 1,5-2 bar greater than the maximum product pressure. This ensures that infiltration of the product in the mechanical seal (GLRD) sealing gap is prevented.

3 Buffer system in accordance with API 610, Plan 53 and Plan 54

Functions

- Pressure build-up in the buffer area
- Leakage compensation
- Agitation of the buffer fluid
- Colling of the buffer fluid

3.1 Buffer system natural circulation (thermosyphon principle) API Plan 53

Thermosyphon vessel (TS)

Agitation - natural circulation

Cooling and leakage compensation in the TS vessels

Pressure function:

with nitrogen (N2)

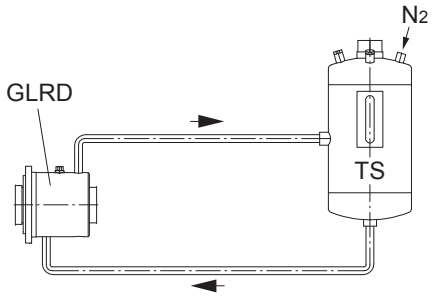

➢ Requisite buffer pressure in the mechanical seal (GLRD)
– at least 1,5-2 bar above the maximum pressure in the pump suction casing.

3.2 Seal flush supply from an external system API Plan 54

1	Pressure reducing valve
2	Shut-off valve
3	Pressure manometer
4	Shut-off valve
GLRD	mechanical seal

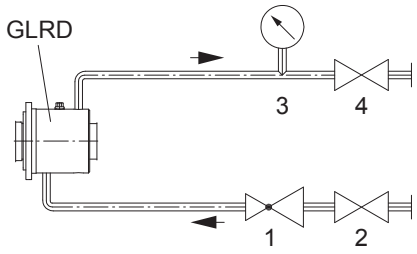

➢ Requisite buffer pressure in the mechanical seal (GLRD)
– at least 1,5-2 bar above the maximum pressure in the pump suction casing.

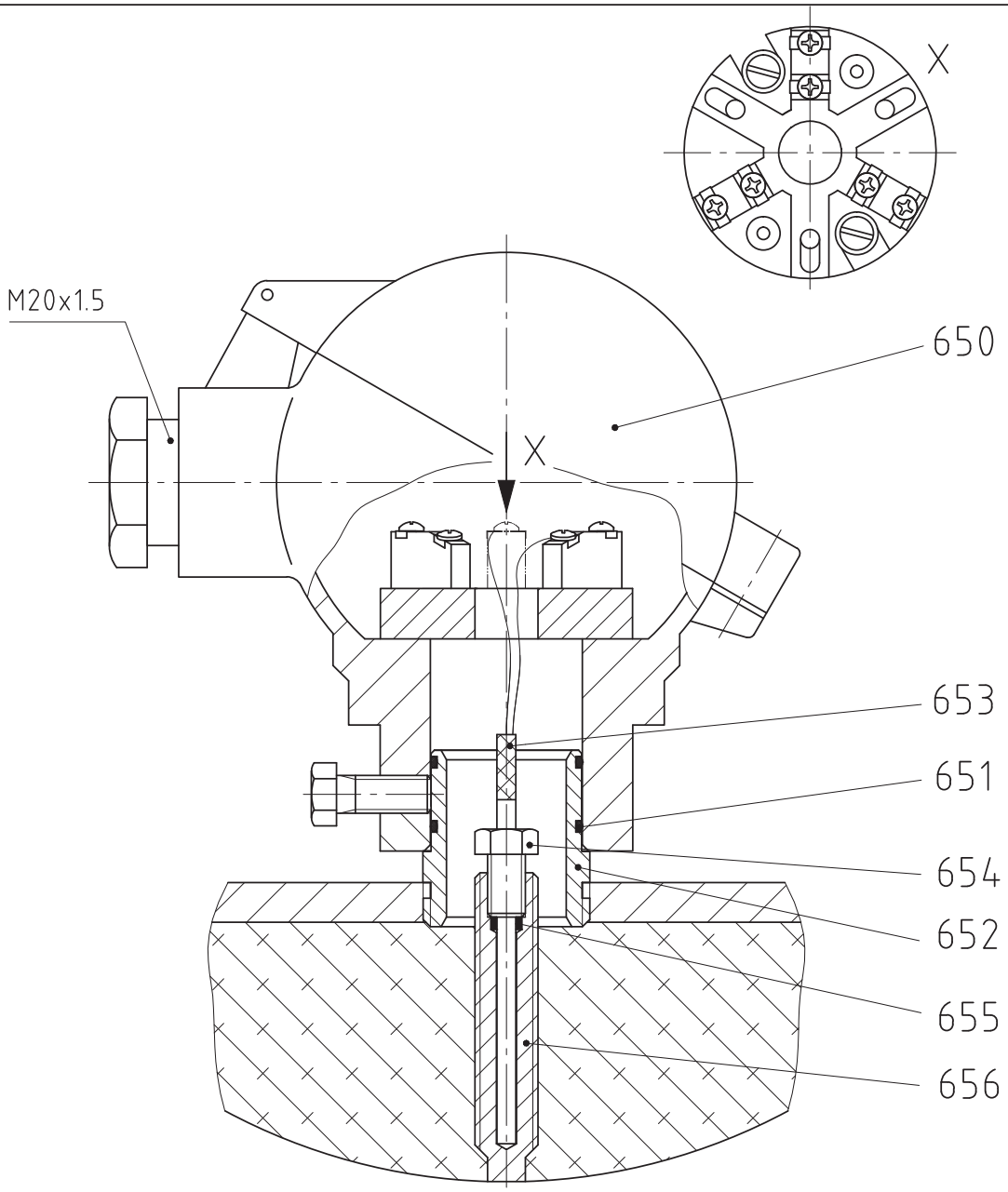

Stück Unit	Norm Standard	Pos./Item	Benennung/Denomination Zeichnungs–Nummer/Drawing–Number	Werkstoff/Material	Bemerkung/Remark	Gewicht Weight kg

SEEPEX.
ALL THINGS FLOW

Allgemeintoleranzen für Maße ohne einzelne Toleranzeintragung DIN ISO 2768–mittel General tolerances for dimensions without specified tolerances DIN ISO 2768–average	Aus–gabe Issue	Änderung Modification	Name Name	Datum Date	Maßstab/Scale %	Werkstoff/Material	Gewicht/Weight
					Bezeichnung/Denomination Schnittzeichnung TSE Anschlusskopf sectional drawing TSE connection head		

Oberflächenzeichen für Rauheit nach DIN EN ISO 1302 Symbol for surface roughness acc. to DIN EN ISO 1302		Name Name	Datum Date	Zeichnungs–Nummer/Drawing–Number	
	Bearbeitet/Drawn	hof	20.11.2008	702-006A4	
	Geprüft/Checked	pj	20.11.2008	EDV–Nr./EDP–No. L:\Lfdzchng.965\96587.dwg	
	Normiert/Standard			Ersatz für/Replacement for:	Ersetzt durch/Replaced by:
	Gedruckt/Printed				

Urheberrechtsschutz: Diese Zeichnung ist unser Eigentum und uns nach dem Gesetz über Urheberrecht und verwandte Schutzrechte geschützt.
Protection of Copyright: This drawing is our property and is protected acc. to the law referring to copyright and related protective laws.

Stck.	Pos.	DE	EN	FR
		TSE-Anschlusskopf	**TSE connection head**	**TSE tête de connexion**
		Schnittzeichnung Nr. 702-006A4	**sectional drawing No. 702-006A4**	**plan no. 702-006A4**
Stck.	**Pos.**	**Benennung Stck. / Pos.**	**denomination Qty. / Item**	**désignation Qté. / Poste**
1	650	Anschlusskopf	connection head	tête de connexion
2	651	O-Ring	o-ring	joint torique
1	652	Gewindehülse	screw socket	douille filetée
1	653	Thermistorfühler	thermistor sensor	thermistance
1	654	Klemmschraube	clamping screw	vis de blocage
1	655	Gummiring	rubber ring	anneau de caoutchouc
1	656	Fühlerhülse	sensor sleeve	fourreau de sonde

SEEPEX.
ALL THINGS FLOW

Technical data:

- NTC-resistance sensor fitted in stainless steel protection sleeve.
- Standard resistance: 10 kΩ at 25°C.

temp. °C	resistance Ω	temp. °C	resistance Ω	temp. °C	resistance Ω	temp. °C	resistance Ω
-20	97.080	23	10.920	66	2.011,0	109	525,00
-19	91.610	24	10.450	67	1.942,0	110	510,30
-18	86.490	**25**	**10.000**	68	1.876,0	111	496,70
-17	81.690	26	9.573,0	69	1.813,0	112	483,00
-16	77.180	27	9.167,0	70	1.752,0	113	470,00
-15	72.950	28	8.777,0	71	1.693,0	114	457,30
-14	68.980	29	8.407,0	72	1.636,0	115	445,00
-13	65.240	30	8.057,0	73	1.582,0	116	433,30
-12	61.730	31	7.723,0	74	1.530,0	117	421,70
-11	58.430	32	7.403,0	75	1.479,0	118	410,70
-10	55.330	33	7.097,0	76	1.431,0	119	400,00
-9	52.400	34	6.807,0	77	1.384,0	120	389,30
-8	49.650	35	6.530,0	78	1.340,0	121	379,30
-7	47.060	36	6.267,0	79	1.297,0	122	369,70
-6	44.620	37	6.017,0	80	1.255,0	123	360,00
-5	42.330	38	5.777,0	81	1.215,0	124	350,60
-4	40.160	39	5.547,0	82	1.177,0	125	341,70
-3	38.110	40	5.327,0	83	1.140,0	126	333,10
-2	36.190	41	5.117,0	84	1.104,0	127	324,70
-1	34.370	42	4.917,0	85	1.070,0	128	316,50
0	32.650	43	4.727,0	86	1.036,0	129	308,60
1	31.030	44	4.543,0	87	1.004,0	130	300,93
2	29.500	45	4.370,0	88	973,70	131	293,47
3	28.050	46	4.200,0	89	944,00	132	286323
4	26.690	47	4.040,0	90	915,30	133	279,17
5	25.390	48	3.890,0	91	887,70	134	272,03
6	24.170	49	3.743,0	92	861,00	135	265,70
7	23.010	50	3.603,0	93	835,30	136	259,30
8	21.920	51	3.467,0	94	810,30	137	253,00
9	20.880	52	3.340,0	95	786,70	138	246,93
10	19.900	53	3.217,0	96	763,30	139	241,03
11	18.970	54	3.099,0	97	741,00	140	235,27
12	18.090	55	2.986,0	98	719,30	141	229,70
13	17.250	56	2.878,0	99	698,70	142	224,30
14	16.460	57	2.774,0	100	678,30	143	219,00
15	15.710	58	2.675,0	101	659,00	144	213,90
16	15.000	59	2.579,0	102	640,30	145	208,87
17	14.320	60	2.488,0	103	622,00	146	204,03
18	13.680	61	2.400,0	104	604,30	147	199,33
19	13.070	62	2.316,0	105	587,00	148	194,77
20	12.490	63	2.235,0	106	571,00	149	190,33
21	11.940	64	2.157,0	107	555,00	150	185,97
22	11.420	65	2.083,0	108	539,70		

1.0 Connection of the drive motor to a frequency inverter

	NOTICE
	➢ Heed the technical information and information in the manufacturer's operating instructions when installing and commissioning the frequency inverter.

➢ Perform the connection of the frequency inverter and motor in accordance with the table.

- An incorrect motor connection causes considerable reduction in motor performance. The pump may possibly not start, or it might cause the drive to overheat.

Details motor type place (nominal motor voltage / circuit arrangement)	Line voltage of the frequency inverter	Output voltage of the frequency inverter	Motor connection
230 V ▲ / 400 V Y	1 x 230 V AC	3 x 0 to 230 V	Delta ▲
230 V ▲ / 400 V Y	3 x 400 V AC	3 x 0 to 400 V	Star Y
400 V ▲ / 690 V Y	3 x 400 V AC	3 x 0 to 400 V	Delta ▲

1.1 Standard three phase current squirrel cage motors with PTC thermistors

Delta connection (▲)

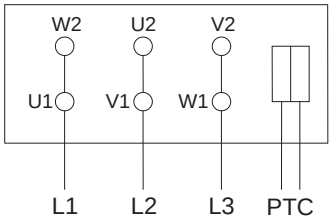

Motor terminal board

Star connection (Y)

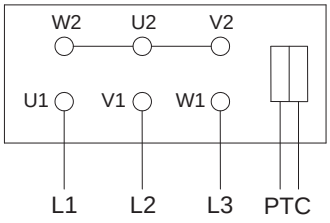

Motor terminal board

1.2 Self ventilated and force ventilated motors

➢ Self ventilated motors must be equipped with a PTC temperature monitoring device for speed control by means of a frequency inverter.
➢ Force ventilated motors may be loaded with nominal torque for the complete speed range.
➢ Connect force ventilators to a separate terminal board on the fan cover.
➢ Heed type plate details of the force ventilator or see separate terminal connection diagram.

1.3 Setting up the frequency inverter

➢ The power output of the frequency inverter must correspond to the motor power.
  - Where applicable the power of the inverter can be customized to the motor rating by adjusting the parameters.
➢ The pump requires a higher torque to start (breakaway torque).
  - This required torque can only be achieved by frequency inverters, which make 1.5 times the rated current for the motor available for at least 30s.
  - The operating torque is approximately constant throughout the whole speed range where the conveying pressure remains constant.
➢ Head the following frequency inverter characteristic curves (Item 1.3.1, 1.3.2).
  - The quadratic characteristic curve, which is frequently designated the pump and ventilator characteristic curve, is **not** suitable for progressive cavity pumps

1.3.1 Linear voltage / frequency characteristic curve up to mains frequency

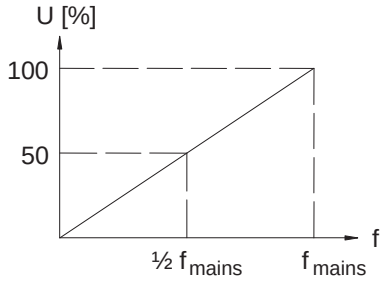

(f Mains = 50/60 Hz)

1.3.2 Linear voltage / frequency characteristic curve up to levels above the mains frequency

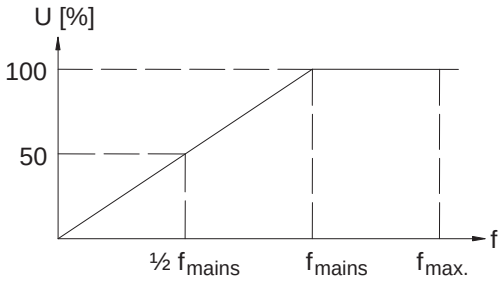

(f mains = 50/60 Hz)

1.3.3 Linear voltage / frequency characteristic curve with the installation of a magnetic bias (StartBoost)

- If problems arise when starting the pump which make a higher breakaway torque necessary, these should be resolved by the adjustment of a magnetic bias. In the case of the magnetic bias the drive is supplied with current by the frequency inverter at just 0Hz.

NOTICE
Magnetisation current set too high Damage to the motor due to overheating. ➢ Heed the frequency inverter manufacturer's instructions when setting the magnetic bias.

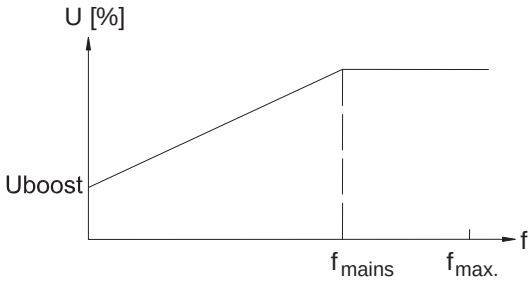

(f_{mains} = 50/60 Hz)

Warranty Card

Complete and return to validate warranty

Please complete this card and return it to seepex Inc. By using this card, the valid warranty period will commence at the pump “start-up” date. If this card is not completed the warranty coverage period will commence on the date the pump is shipped from the seepex factory. This card must be completed and mailed no later than one year from the date of shipment.

Client

User Entity:	.....	Address of plant:	.....
Contact Person:	.....		.....
Phone Number:	.....		.....
Fax Number:	.....		.....
E-mail Address:	.....		.....

Technical Pump Data

Pump Model:	.....
Pump Commission:	.....

Performance Data

Pumped Product:	.....		
Diff. Pressure:	.....	Flow Rate:	.....
Temperature:	.....	Viscosity:	.....
Solids Size:	.....	Solids %:	.....

Inquiry

Was the appearance of the pump acceptable?		..... Yes	..... No
Did the pump suffer any freight damage?		..... Yes	..... No
Did the pump perform as expected?		..... Yes	..... No
Did you receive:	- Data Sheets?	..... Yes	..... No
	- O&M Manuals?	..... Yes	..... No
Did you local seepex distributor contact your to arrange a start-up?		..... Yes	..... No

other comments

.....

.....

Name of person completing card (please print)

Date:	.....	Signature:	.....

TERMS & CONDITIONS OF SALE AND/OR REPAIR 01.16

The following terms and conditions shall apply to an order for all or any part of the articles covered by the accompanying offer unless a specific exception in included therein. Acceptance of any order by SEEPEX Inc. is expressly made conditional upon Buyer's acceptance of SEEPEX Inc. Terms and Conditions of Sale and/or Repair. All prior or future terms, conditions or negotiations (whether written or oral) by Buyer will therefore be considered void and inapplicable, unless otherwise agreed in writing. SEEPEX Inc. reserves the right, in its sole discretion, to refuse any order, unconditionally, for any reason, including but not limited to: expiration of the validity of the offer, errors in the offer, unacceptable payment risks, conflicts with contractual commitments made to other potential customers and the chance that a customer may try to enforce an implied warranty or merchantability of the products offered.

1. PRICES

1.1.
Any prices quoted shall only be valid for orders placed within 30 days from the date of issue of the offer. Prices are Ex-Works SEEPEX Inc. plant (Enon, Ohio USA) in U.S. dollars, unless otherwise agreed. SEEPEX Inc. reserves the right to correct typographical or clerical errors.

2. TERMS

2.1.
All orders are subject to approval by the SEEPEX Inc. Credit Department. Unless otherwise agreed, if payment for the invoice due is not made in full within thirty (30) days after shipment, late fees of eighteen percent (18%) per year (equivalent to a nominal monthly interest rate of 1.5%) will be applied on the unpaid balance until paid in full. The terms and conditions herein set forth are based upon tariffs, taxes, foreign exchange rates, delivery, and other conditions in effect on the date of the customer's order. In the event that such tariffs, taxes, foreign exchange rates, delivery, and/or other conditions should change prior to delivery of the goods, SEEPEX Inc. reserves the right to charge such increased duties, taxes, or charges to the customer.

2.2.
Unless the order includes the appropriate exemption certificates and/or licenses, duties and taxes levied by Federal, State, or other governments are required to be charged automatically at the rate imposed at time of importation/shipment. Any change in law, regulations, or Government practice which causes a variation of any kind in the applicable charges from the amounts stated in the offer shall result in an equivalent change in the price quoted.

2.3.
Until payment is made in full, SEEPEX Inc. shall retain the right, without notice, to repossess and/or retain the items, and/or dispose of them, for its benefit and hold the customer responsible for any loss. Customer agrees to enter into any agreements, contracts, or notices required confirming such rights.

3. SECURITY

3.1.
In order to secure any obligations due to SEEPEX Inc. from the customer the customer grants to SEEPEX Inc. a security interest in:
a) The merchandise covered by the customer's order (s), and
b) All property and funds of the customer now or hereafter in SEEPEX Inc.'s possession, and in all additions and proceeds of such merchandise and/or property. The customer hereby authorizes SEEPEX Inc. to sign alone any financing statement or statements and to do all and any other things which may be necessary to perfect such security interest.

4. CANCELLATION

4.1.
After acceptance, orders may be canceled only with the express approval of SEEPEX Inc. In the event of an approved cancellation, the customer shall remain responsible for payment for all work performed and/or material expenses incurred by SEEPEX Inc. as of the time of cancellation. SEEPEX Inc. reserves the right to cancel the order if SEEPEX Inc. determines, in its sole discretion, that the customer's financial condition renders the customer unable or unlikely to pay for the order as agreed.

5. RETURN

5.1.
No credit will be allowed for returns unless SEEPEX Inc. has authorized such returns in writing in advance. A copy of this authorization must be returned with the item as the packing slip. All returns are subject to restocking charges and to the SEEPEX Inc. Return Goods Authorization (RGA) Policy, which is available on www.seepex.com, and is incorporated herein by reference. SEEPEX Inc. will only issue credits for items that can be resold. Items that are special for a specific customer, including but not limited to: special hoppers, baseplates, electrical panels, gear reducers and electric motors are specifically excluded from consideration for credit. Any items not received in good condition or items that cannot be put back into stock will not be accepted. Any elastomer material with over three (3) years of fabrication will not be accepted for return and/or credit. Customers must pay for all freight associated with any return, including parts or equipment that may be considered to be covered by the limited warranty protection clause below. Outstanding RGA's that have declined repair will be scrapped automatically after ninety (90) days if no other written instructions are provided.

6. SHIPMENT

6.1.
a) Handling Charge: Customer shall be responsible for making all arrangements for shipment of the order with a suitable carrier. In the event that customer requests that SEEPEX Inc. make arrangements for shipment, then customer agrees to pay to SEEPEX Inc., in addition to the applicable shipping charges, a handling charge in the amount of 10% of the shipping charges with a minimum $5.00 to a maximum charge of $150.00, with special services requiring additional charges.
b) New Articles: Where shipping instructions dictate no specific routing, SEEPEX Inc. will utilize its best judgement in determining routing but shall not be liable for any charges once the goods have reached their agreed upon point of delivery. If changes are made at customer's request in a) the agreed upon point of delivery, or b) in the routing selected by SEEPEX Inc. and if such changes involve additional costs to be incurred, such costs shall be borne exclusively by the customer, unless otherwise agreed in writing.
c) Repair Work: All items for which the customer requests repair or other services by SEEPEX Inc. shall be delivered to and picked up from the SEEPEX Inc. plant (Enon, Ohio USA) unless otherwise agreed in writing. All costs of delivery shall be paid by the customer unless otherwise agreed to in writing prior to shipment.
d) All Orders: On collect freight shipments, cartage charges from plant to carrier are the responsibility of the customer. Title to articles passes to customer upon delivery to carrier acting as customer's agent subject to any right of retention by SEEPEX Inc. All claims for shortage in, and damages in, shipment or otherwise must be reported to carrier immediately upon receipt with copy or report to ourselves within five (5) business days.

7. WARRANTIES & LIABILITY LIMITATIONS

7.1.
a) New Articles: SEEPEX Inc. warrants articles of our manufacture against defects in material and/or workmanship for a period of three (3) years from date of delivery, provided that the articles have been installed, maintained, and operated in strict accordance with SEEPEX Inc. recommendations and instructions.
b) Repair Work: Defined herein as work and services performed by SEEPEX Inc. SEEPEX Inc. warrants all repair work and services that it performs against defects in workmanship and/or materials for a period of three (3) years from the date of delivery of the repaired articles.
c) All Orders: All warranty claims shall be submitted promptly in writing to SEEPEX Inc. Any warranty replacement and/or repair shall be made Ex-Works SEEPEX Inc. plant (Enon, Ohio USA). SEEPEX Inc.'s warranty obligation shall be limited to the replacement and/or repair only of defective material and/or workmanship.

7.2.
In no event shall SEEPEX Inc. be liable for any incidental or consequential loss or damage of whatever kind of nature including but not limited to loss of business income or profits, or damage resulting from delay in manufacture or delivery, loss of use or damage to any installation into which the article may be installed, whether arising out of contract or tort.

SEEPEX Inc.
511 Speedway Drive
Enon, Ohio 45323
USA

T +1 937 864-7150
sales.us@seepex.com
www.seepex.com

7.3.

SEEPEX Inc. shall not be liable for any loss or damage resulting from delay and/or late delivery due to causes beyond our reasonable control. Notwithstanding anything herein to the contrary, SEEPEX Inc.'s liability to customer on any cause of action shall be limited to the amount paid by the customer on the subject order. SEEPEX Inc. makes no warranties, express or implied, with respect to articles or products manufactured or provided by any party other than SEEPEX Inc., except to transfer to the customer, where permissible, any warranty provided to SEEPEX Inc. by the original manufacturer. On any claims for repairs and/or replacement under such warranty, all costs incurred by SEEPEX Inc. which are not underwritten by the original manufacturers shall be borne by the customer. Except as provided herein, SEEPEX Inc. expressly disclaims all representations, promises, or warranties, express or implied with respect to any products, articles, work, or services, including any warranties of merchantability and of fitness for a particular purpose. All warranties made by SEEPEX Inc. shall be void where the goods have been subject to misuse, neglect, damage or alteration. SEEPEX Inc. shall be held free and harmless from any dispute or claim anywhere arising from and relating to infringement of patent, design, trademark, or copyright of items, sold or repaired under this contract.

8. PROPERTY RIGHTS AND RISKS

8.1.

SEEPEX Inc. disclaims any liability or responsibility whatsoever with regard to loss or damages to the customer's property while in the possession, custody or control of SEEPEX Inc. for requested repairs or other services, and the customer expressly agrees to indemnify and hold SEEPEX Inc. harmless against any and all claims for such loss or damage.

9. HAZARDOUS MATERIALS

9.1.

Any hazardous materials or the existence of any hazards relative to the condition of any product tendered to SEEPEX Inc. for service or repair work must be disclosed by customer in writing in the RGA Request Form, whether or not required to be disclosed per federal law on the MSDS sheet. **Customer shall defend, indemnify and hold SEEPEX Inc. harmless from and against any and all claims of injury or damage, including attorney's fees, caused by any hazardous condition or material on or about products accepted for service/repair. This obligation includes but is not limited to claims of bodily injury or death suffered by SEEPEX Inc. employees, or by other parties.**

13.1 Manufacturer's documents / suppliers

- available

Intelligent Drivesystems

B1000

Operating & Instruction Manuals For Gear Units

B1000

NORD DRIVESYSTEMS

TABLE OF CONTENTS

TITLE	Document Number & Hyperlink
General Instructions	U10000
Safety Notes	U10020
Storage & Commissioning	U10040
Unit Installation	U10060
Solid Shaft Connections	U10250
Keyed Hollow Shaft	U10270
Shaft Fixing Kit	U10280
Hollow Shaft With Shrink Disc	U10290
NORD GRIPMAXX™	U10310
Reducer Mounting Footed & Flange Mount Gear Units	U10500
Clincher™ Shaft-Mount With Rubber Buffers	U10580
Right Angle Shaft-Mount with Torque Arm (D)	U10600
90.1 Helical-Bevel Shaft-Mount with Bottom Mount Torque Arm (K)	U10620
Helical & Bevel Reducer Lubrication	U10750
VL2 & VL3 Extended Bearing Lubrication	U10760
Helical Worm Reducer Lubrication	U10770
Minicase™ (SM) Worm Reducer Lubrication	U10790
Minicase™ (SMI/SMID) Worm Reducer Lubrication	U10800
FLEXBLOC™ Worm Reducer Lubrication	U10810
Expansion Chambers Installation & Maintenance Manual	U10830
Helical & Bevel Reducer Lubrication Types	U11000
Helical Worm Reducer Lubrication Types	U11020
Minicase™ (SM) Worm Reducer Lubrication Types	U11040
Minicase™ (SMI/SMID) Worm Reducer Lubrication Types	U11050
FLEXBLOC™ Worm Reducer Lubrication Types	U11060
Standard In-Line Footed Oil Fill Quantities	U11500
Standard In-Line Flanged Oil Fill Quantities	U11600
Helical In-Line Footed Oil Fill Quantities	U11700
Helical In-Line Flanged Oil Fill Quantities	U11800
CLINCHER™ Oil Fill Quantities	U11900
90.1 Helical-Bevel Footed Oil Fill Quantities	U12000
90.1 Helical-Bevel Flanged Oil Fill Quantities	U12100
92 Series Helical-Bevel Footed Oil Fill Quantities	U12200
92.1/93.1 Series Helical Bevel Oil Fill Quantities	U12205
92 Series Helical-Bevel Flanged Oil Fill Quantities	U12300
Helical-Worm Footed Oil Fill Quantities	U12400
Helical-Worm Solid Shaft/Flanged Oil Fill Quantities	U12500
Helical-Worm Hollow Shaft Oil Fill Quantities	U12600
Nordbloc Footed Oil Fill Quantities	U12700
Nordbloc Flanged Oil Fill Quantities	U12800

TABLE OF CONTENTS

TITLE	Document Number & Hyperlink
Nordbloc.1 Footed Oil Fill Quantities	U12900
Nordbloc.1 Flanged Oil Fill Quantities	U13000
Minicase™ (SM) Footed Oil Fill Quantities	U13100
Minicase™ (SMI) Footed Oil Fill Quantities	U13150
Minicase™ Flanged (SM) Oil Fill Quantities	U13200
Minicase™ Flanged (SMI) Oil Fill Quantities	U13250
FLEXBLOC™ Oil Fill Quantities	U13300
Standard In-Line Oil Plug & Vent Locations	U14000
Helical In-Line Oil Plug & Vent Locations	U14100
CLINCHER™ Oil Plug & Vent Locations	U14200
92 Series Helical-Bevel Oil Plug & Vent Locations	U14300
92.1/93.1 Series Helical-Bevel Oil Plug & Vent Locations	U14305
90.1 Helical-Bevel Oil Plug & Vent Locations	U14400
Helical-Worm Oil Plug & Vent Locations	U14500
Nordbloc Oil Plug & Vent Locations	U14600
Nordbloc.1 Oil Plug & Vent Locations	U14700
Minicase™ (SMI) Worm Oil Plug & Vent Locations	U14750
FLEXBLOC™ Vent Locations	U14800
Standard In-Line Parts List Drawings	U15000
Helical In-Line Parts List Drawings	U15100
CLINCHER™ Parts List Drawings	U15200
CLINCHER™ VL2 & VL3 Parts List Drawings	U15210
90.1 Helical-Bevel Parts List Drawings	U15300
90.1 Helical-Bevel VL2 & VL3 Parts List Drawings	U15310
92 Series Helical-Bevel Parts List Drawings	U15400
Helical-Worm Parts List Drawings	U15500
Nordbloc™ Parts List Drawings	U15600
Troubleshooting	U19000
Motors - AC Induction, Single and Polyphase	U30000
Motor Brakes Installation & Maintenance	U35000
Fast Acting Brake Rectifiers [GPE, GPU & PMG]	U35100
Current Sensing Brake Relay [IR] Installation & Maintenance	U35200
NEMA/IEC Inputs Adapters & Their Couplings	U45100
NEMA or IEC Input Adapter Lubrication Options	U45250
NEMA or IEC Input Adapter with Grease Fitting	U45255
Solid Input Shaft [W]	U45300
Motor Mount Platform [MK]	U45400
Sugar Scoop	U45500
NSD tuph Touch-Up Kit	U65100
Terms & Conditions of Sale	Terms

BIM TO USER MANUAL CROSS REFERENCE

Old BIM TITLE (No Longer Available)	New User Manual Document Numbers & Hyperlinks
BIM 1010 - Unicase Helical In-Line Gearboxes Installation & Maintenance Instructions	U10000 - General Instructions U10020 - Safety Notes U10040 - Storage & Commissioning U10060 - Unit Installation U10250 - Solid Shaft Connections U10500 - Reducer Mounting Footed & Flange Mount Gear Units U10750 - Helical & Bevel Reducer Lubrication U11000 - Helical & Bevel Reducer Lubrication Types U11700 - Helical In-Line Footed Oil Fill Quantities U11800 - Helical In-Line Flanged Oil Fill Quantities U14100 - Helical In-Line Oil Plugs & Vent Locations U15100 - Helical In-Line Parts Lists Drawings
BIM 1011 - NORDBLOC Helical Gearboxes Installation & Maintenance Instructions	U10000 - General Instructions U10020 - Safety Notes U10040 - Storage & Commissioning U10060 - Unit Installation U10250 - Solid Shaft Connections U10500 - Reducer Mounting Footed & Flange Mount Gear Units U10750 - Helical & Bevel Reducer Lubrication U11000 - Helical & Bevel Reducer Lubrication Types U12700 - Nordbloc™ Footed Oil Fill Quantities U12800 - Nordbloc™ Flanged Oil Fill Quantities U14600 - Nordbloc™ Oil Plugs & Vent Locations U15600 - Nordbloc™ Parts Lists Drawings
BIM 1012 - Standard Helical In-Line Gearboxes Installation & Maintenance Instructions	U10000 - General Instructions U10020 - Safety Notes U10040 - Storage & Commissioning U10060 - Unit Installation U10250 - Solid Shaft Connections U10500 - Reducer Mounting Footed & Flange Mount Gear Units U10750 - Helical & Bevel Reducer Lubrication U11000 - Helical & Bevel Reducer Lubrication Types U11500 - Standard In-Line Footed Oil Fill Quantities U11600 - Standard In-Line Flanged Oil Fill Quantities U14000 - Standard In-Line Oil Plugs & Vent Locations U15000 - Standard In-Line Parts Lists Drawings
BIM 1013 - NORDBLOC.1 Helical Gearboxes Installation & Maintenance Instructions	U10000 - General Instructions U10020 - Safety Notes U10040 - Storage & Commissioning U10060 - Unit Installation U10250 - Solid Shaft Connections U10500 - Reducer Mounting Footed & Flange Mount Gear Units U10750 - Helical & Bevel Reducer Lubrication U11000 - Helical & Bevel Reducer Lubrication Types U12900 - Nordbloc.1™ Footed Oil Fill Quantities U13000 - Nordbloc.1™ Flanged Oil Fill Quantities U14700 - Nordbloc.1™ Oil Plugs & Vent Locations
BIM 1020 - Unicase Shaft Mount Gearboxes Installation & Maintenance Instructions	U10000 - General Instructions U10020 - Safety Notes U10040 - Storage & Commissioning U10060 - Unit Installation U10250 - Solid Shaft Connections U10500 - Reducer Mounting Footed & Flange Mount Gear Units U10580 - CLINCHER™ w/ Rubber Buffer U10750 - Helical & Bevel Reducer Lubrication U11000 - Helical & Bevel Reducer Lubrication Types U11900 - CLINCHER™ Oil Fill Quantities U14200 - CLINCHER™ Oil Plugs & Vent Locations U15200 - CLINCHER™ Parts Lists Drawings

BIM TO USER MANUAL CROSS REFERENCE

Old BIM TITLE (No Longer Available)	New User Manual Document Numbers & Hyperlinks
BIM 1030 - Unicase Helical Worm Gearboxes Installation & Maintenance Instructions	U10000 - General Instructions U10020 - Safety Notes U10040 - Storage & Commissioning U10250 - Solid Shaft Connections U10500 - Reducer Mounting Footed & Flange Mount Gear Units U10770 - Helical-Worm Reducer Lubrication U11020 - Helical-Worm Reducer Lubrication Types U12400 - Helical-Worm Footed Oil Fill Quantities U12500 - Helical-Worm Solid Shaft/Flanged Oil Fill Quantities U12600 - Helical-Worm Hollow Shaft Oil Fill Quantities U14500 - Helical-Worm Oil Plugs & Vent Locations U15500 - Helical-Worm Parts LIsts Drawings
BIM 1031 - MINICASE Worm Gearboxes Installation & Maintenance Instructions	U10000 - General Instructions U10020 - Safety Notes U10040 - Storage & Commissioning U10250 - Solid Shaft Connections U10500 - Reducer Mounting Footed & Flange Mount Gear Units U10770 - Helical Worm Reducer Lubrication U11040 - Minicase™ Worm Reducer Lubrication Types U13100 - Minicase™ Foot Mount Oil Fill Quantities U13200 - Minicase™ Flange Mount Oil Fill Quantities
BIM 1033 - SI Design FLEXBLOC Worm Gearboxes Installation & Maintenance Instructions	U10000 - General Instructions U10020 - Safety Notes U10040 - Storage & Commissioning U10250 - Solid Shaft Connections U10500 - Reducer Mounting Footed & Flange Mount Gear Units U10770 - Helical Worm Reducer Lubrication U11060 - FLEXBLOC™ Worm Reducer Lubrication Types U13300 - FLEXBLOC™ Oil Fill Quantities U14800 - FLEXBLOC™ Oil Plugs & Vent Locations
BIM 1040 - 92 & 90.1 Helical-Bevel Installation & Maintenance Instructions	U10000 - General Instructions U10020 - Safety Notes U10040 - Storage & Commissioning U10060 - Unit Installation U10250 - Solid Shaft Connections U10500 - Reducer Mounting Footed & Flange Mount Gear Units U10750 - Helical & Bevel Reducer Lubrication U11000 - Helical & Bevel Reducer Lubrication Types U12000 - Bevel Footed Oil Fill Quantities U12100 - Bevel Flanged Oil Fill Quantities U12200 - 92 Series Helical-Bevel Footed Oil Fill Quantities U12300 - 92 Series Helical-Bevel Flanged Oil Fill Quantities U14300 - 92 Series Helical-Bevel Oil Plugs & Vent Locations U14400 - 90.1 Helical-Bevel Oil Plugs & Vent Locations U15300 - 90.1 Helical-Bevel Parts Lists U15400 - 92 Series Helical-Bevel Parts Lists Drawings
BIM 1001 - Hollow Shrink Disc Shaft Installation & Maintenance Instructions	U10290 - Hollow Shaft with Shrink Disc
BIM 1002 - Keyed Shaft & Fixing Element Installation & Maintenance Instructions	U10270 - Keyed Hollow Shaft U10280 - Shaft Fixing Kit
BIM 1003 - Expansion Chambers Installation & Maintenance Instructions	U10830 - Expansion Chambers Installation & Maintenance Manual
BIM 1009 - Inputs	U45100 - NEMA IEC Inputs & Their Couplings U45250 - NEMA or IEC Input Adapter Lubrication Options U45300 - Solid Input Shaft [W] U45400 - Motor Mount Platform U45500 - Sugar Scoop
BIM 1004 - Motors	U30000 - Motors - AC Induction, Single and Polyphase
BIM 1014 - Motor Brakes	U35000 - Motor Brakes Installation & Maintenance
BIM 1092 - Current Sensing Brake Relay [IR]	U35195 - Identification of Recifier U35200 - Current Sensing Relay U35205 - Current Sensing Relay
BIM 1095 - Fast Brake Rectifier [GPE & GPU]	U35100 - Fast Brake Rectifier
BIM 9002 - GRIPMAXX™	U10310 - NORD GRIPMAXX™

1. Importance of the operating instructions

These operating instructions are intended to provide general information and safety guidelines. It is the responsibility of the buyer, machine builder, installer and user of the NORD product to make sure that all the proper safetynotes and operating instructions have been reviewed and understood. If the contents of this instruction or any applicable operating instructions are not understood, please consult NORD.

⚠ *WARNING* ⚠

Electric motors, gearmotors, electrical brakes, variable frequency drives, and gear reducers contain potentially dangerous high-voltage, rotating-components and surfaces that may become hot during operation. All work involved in the transport, connection, commissioning and maintenance of any NORD product must be carried out by qualified and responsible technicians.

2. Inspect incoming freight

Before accepting shipment from the freight company, thoroughly inspect the NORD equipment for any shipping and handling damage. If any goods called for in the bill of lading or express receipt are damaged, or if the quantity is short, do not accept until the freight express agent makes an appropriate notation on your freight bill or express receipt. If any concealed loss or damage is discovered later, notify your freight carrier or express agent at once, and request a formal review of your claim.

Claims for loss or damage in shipment must not be deducted from the NORD invoice, nor should payment of the NORD invoice be withheld awaiting adjustment of such claims, as the carrier guarantees safe delivery. NORD will try to assist in collecting claims for loss or damage during shipment; however, this willingness on our part does not remove the transportation company's responsibility in reimbursing you for collection of claims or replacement of material.

3. Obtaining detailed operating instructions

One can receive the detailed installation and maintenance instructions by entering a serial number (or NORD order number) at the appropriate location on the NORD web site.

i. Record the serial number from your gearmotor, gear reducer, or motor nameplate, or record the serial number found on your order confirmation.

ii. Go to **www.nord.com/docs** to download the appropriate operating instructions.

EXAMPLE: www.nord.com/docs

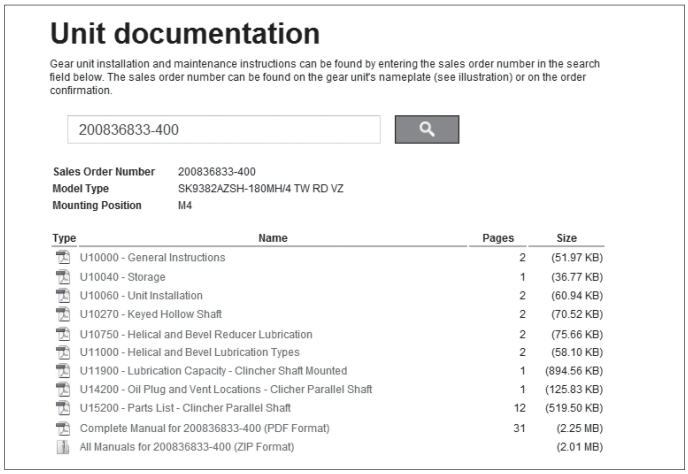

4. Intended use

NORD is a supplier of electric motors, gearmotors, reducers, electromechanical brakes, mechanical variators, and electrical variable frequency drives that are intended for commercial installations on larger systems and machines.

⚠ *WARNING* ⚠

NORD does not accept any liability for damage or injury caused by:

- Inappropriate use, operation or adaptation of the drive system.
- Unauthorized removal of housing covers, safety and inspection covers, guarding, etc.
- Unauthorized modifications to the drive system.
- Improper servicing or repair work on the drive system.
- Damage caused during shipment or transportation.
- Disregard of the important Safety Notes or Operating Instructions.

5. Notes concerning warranty and liability

All units are supplied according to the terms described in our standard "Conditions of Sale." The unit limited warranty is also defined in our "Conditions of Sale" and is located in the back of our product catalogs as well as the back of your order invoice.

All NORD Safety Notes and all related NORD Operating instructions shall be considered up-to-date at the time in which they were compiled by the buyer, machine builder, installer or user. NORD reserves the right to incorporate technical modifications and information updates to any safety/operating instructions that are within the scope of providing additional knowledge or clarification, communicating design changes, or product enhancements. Information updates may include any NORD product, or subsequent products purchased and supplied by NORD; No specific claims can be derived from the information or illustrations and descriptions contained in the safety notes or related operating instructions.

⚠ *WARNING* ⚠

NORD assumes no liability for personal injury, equipment damage or malfunctions resulting from failure to comply with any installation safety notes. The applicable national, regional, and local work regulations and safety requirements must also be complied with. Failure to comply with any safety notes or regulations may result in serious injury, damage to property, or even death.

6. Checklist for installation and operation

☑ Verify that the purchased NORD product has been supplied with the expected accessories & options. Check the received goods and packing slip to make sure items are properly received.

☑ Make sure that you have all of the required Operating Instructions for your NORD electric motor, gearmotor, reducer, electromechanical brake, mechanical variable speed drives, or electrical variable frequency drives.

☑ Consult NORD if you feel you are missing any documentation or if you have questions.

1. Safety & information symbols

All work including transportation, storage, installation, electrical connection, commissioning, servicing, maintenance and repair must be performed **only by qualified specialists or personnel**. It is recommended that repairs to NORD Products are carried out by the NORD Service Department. Instructions related to operational safety will be emphasized as shown.

Symbol	Meaning
⚠	**General Warning or Hazard -** Severe risk or danger of personal injury or death by working around dangerously high electrical voltage or moving machinery. Proper safety precautions must be taken.
STOP	**Possible Harmful Situation -** Care must be taken to avoid the possibility of damaging the drive unit, driven machine, or the environment.
i	**Important Note -** Useful note or tip to help assure trouble-free operation.
♻	**Material Disposal Note -** Important note concerning suggested material disposal.

2. Safety warnings

⚠ GENERAL WARNINGS ⚠

- All work involved in the transport, connection, commissioning and maintenance of any NORD product must be carried out by qualified and responsible technicians. All applicable national, regional, and local work regulations and safety requirements must also be complied with. **NORD assumes no liability for personal injury, accidental death, or equipment damage and malfunctions resulting from failure to comply with installation or operating instructions, safety notes, or any work regulations and laws!**
- Gear unit installation and maintenance work may only be performed when no power is available to the prime mover or motor. Electric motors, electrical brakes, and variable frequency drives, contain potentially dangerous high-voltage. Prior to installation or maintenance, shut down the power at the circuit breaker or power switch. **While working on the drive, make sure the power from the prime mover is isolated or secured on "lock-out" to prevent accidental start-up and to safeguard against injury!**
- Surfaces of motors and gear units may become hot during operation or shortly after start-up. In some instances additional protection against accidental contact may be necessary. **Use caution to avoid burns or serious injury!**

3. Observe published performance range & nameplate data

STOP HARMFUL SITUATION STOP

Observe the data on all reducer nameplates and verify published ratings for the NORD item/s in question. Do not operate any NORD equipment outside the published performance range. Failure to comply may result in damage to the drive unit, driven machine, or the environment.

U.S. Nameplate

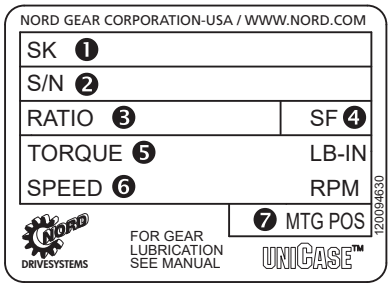

❶ Model/Type
❷ Serial Number
❸ Gear Ratio
❹ Service Factor
❺ Torque Rating
❻ Output Speed RPM
❼ Mounting Position

European Nameplate

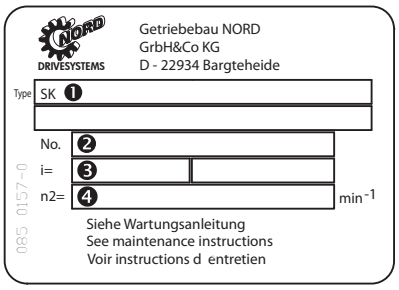

❶ Model/Type
❷ Serial Number
❸ Gear Ratio
❹ Speed

4. Transportation and handling

Make sure that all eyebolts and lifting lugs are tight and lift only at designed points. Protect the mounting surface from possible damage during transportation.

⚠ WARNING ⚠

Do not attach other machinery or loads to the NORD assembly, since the supplied lifting bolts are not designed for this purpose.

If the gearmotor or assembly is equipped with two suspension eye bolts, then both locations should be used for transportation and placement of the unit; in this case the tension force of the slings must not exceed a 45° angle.

In some instances it may be appropriate to use additional lifting straps or slings in order to assure safe transportation of the assembly. Always use sufficiently rated handling equipment and ensure that adequate safety measures are taken to protect personnel from injury during transportation. Once the NORD assembly is properly installed, remove the transportation fixtures.

7. DISPOSAL

MATERIAL DISPOSAL

Properly dispose of all used gear units and internal parts in accordance with all local regulations. In particular, all lubricants must be properly collected and disposed.

For confirmation of specific materials used in a specific reducer or gearmotor assembly, please consult NORD with the appropriate unit identification or serial number.

Components	Material
Gear wheels, shafts, rolling bearings, parallel keys, snap rings, spacers, shims, etc.	Steel
Gear housing and housing components	Cast iron or Aluminum (depending on type and size)
Worm gears	Bronze alloy
Radial seals, sealing caps, and rubber components	Elastomers with some steel
Coupling components	Plastic or Elastomer with Steel
Housing gaskets and flat oil seals	Asbestos-free sealing or gasket material (various types used)
Gear Oil	Mineral, SHC-Synthetic or PG-Synthetic (can vary)

1. Storage

IMPORTANT NOTE

For storage periods longer than 9 months, or for storage in less than desirable conditions, please consult NORD for recommendations.

Storage for up to 9 months is possible, so long as the following conditions are observed:

- Store the gear unit in its actual mounting position in accordance with the specified oil fill-level, in a clean and dry temperature controlled area. Avoid temperature fluctuations within the range of 0°C and 40°C (32°F to 104°F) and avoid relative humidity conditions in excess of 60%.
- Protect all exposed or unpainted shaft and flange surfaces with an anti-corrosion agent or grease.
- Store in a location free from shock and vibration, to avoid false brinelling of bearing elements and raceways.
- Whenever possible, rotate the shafts periodically, by hand if necessary, to help prevent brinelling (bearing damage) and to help keep the shaft seals pliable.
- Avoid direct exposure to the sun or UV light and aggressive or corrosive materials in the environment (ozone, gases, solvents, acids, caustic solutions, salts, radioactivity, etc.

2. Commissioning

Prior to gear unit start-up, complete the following:

• Please check your gear unit for a vent and if applicable to your product, remove the sealing plug to activate.

WARNING

To prevent build-up of excessive pressure, sealed vents must be activated as shown prior to gear unit start up.

Sealed vent

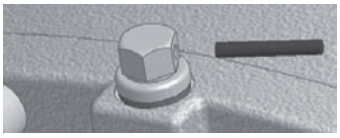

Activated vent

- Check the lubricant and be sure the gear unit is filled with the proper oil type, to the proper level, as determined by the mounting position.

IMPORTANT NOTE

Some smaller gear units are supplied as maintenance free/ lubricated for life gear units. Oil level may not be checked on some of these units.

- Check the condition of all shaft seals and all assembled flange gasket areas. If any change is detected in the shape, color, hardness or permeability, or if any leaks are detected, the corresponding shaft seals and/or gaskets must be replaced.
- Remove all anti-corrosive metal protectant from otherwise bare metal surfaces. Follow product manufacturers directions and warnings during surface protection removal.
- Check the resistance of all motor and brake windings to verify the integrity of the winding insulation and inspect all terminal box openings and wire connection areas to verify that all components are dry and free of corrosion.

3. Long-Term Storage

By taking special precautions, problems such as seal leakage and reducer failure due to the lack of lubrication, improper lubrication quantity, or contamination can be avoided. The following precautions will protect gear reducers during periods of extended storage:

- Store the gear unit in its actual mounting position in accordance with the specified oil fill-level, in a clean and dry temperature controlled area. Avoid temperature fluctuations within the range of 0°C and 40°C (32°F to 104°F) and avoid relative humidity conditions in excess of 60%.
- Fill the reducer full with oil that is compatible with the product normally used or recommended during service.
- Apply grease to all unpainted or unprotected shafts, bores, keyways, flange surfaces, tapped holes, and to the exterior of all oil seals.
- Store in a location free from shock and vibration, to avoid false brinelling of bearing elements and raceways.
- Once every few months rotate the input shaft approximately 10-20 revolutions to redistribute the weight of gears and shafts and to prevent brinnelling of the bearings and drying of the seal track.
- Avoid direct exposure to the sun or UV light and aggressive or corrosive materials in the environment (ozone, gases, solvents, acids, caustic solutions, salts, radioactivity, etc.)

4. Commissioning After Long-Term Storage

• Please check your gear unit for a vent and if applicable to your product, remove the sealing plug to activate.

⚠ *WARNING* ⚠

To prevent build-up of excessive pressure, sealed vents must be activated as shown prior to gear unit start up.

Sealed vent

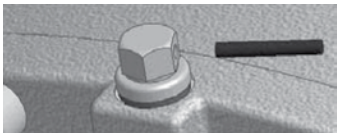

Activated vent

- Remove all anti-corrosive metal protectant from otherwise bare metal surfaces. Follow product manufacturers directions and warnings during surface protection removal.
- Drain the reducer and refill it with the proper type and amount of lubricant.
- Observe start-up and initial operation to make sure there are no seal or gasket leaks, or unusual sounds, vibration or heat rise during operation.
- Check the resistance of all motor and brake windings to verify the integrity of the winding insulation and inspect all terminal box openings and wire connection areas to verify that all components are dry and free of corrosion.

1. Installation site

Drives must be properly installed if they are to produce the rated torque. Improper installation may lead to oil leaks, reduced life, or even catastrophic failure. NORD gear drives and motors are intended to be installed at a suitable mounting site under the following conditions:

- Unimpeded airflow to and around the units.
- Accessibility to oil drain, level and breather plugs.
- On brakemotors, allow adequate space for removing the fan guard and replacing and adjusting the brake.
- Mounting surfaces must be flat, torsionally rigid, and dampened against vibration.
- Unless special measures are taken, the immediate vicinity around the gear drive or motor should not be exposed to any aggressive or corrosive substances, contaminated air, ozone, gases, solvents, acids, alkalis, salts, radioactivity, etc.

2. Mounting position

Reducer mounting position charts illustrate the standard mounting positions for horizontal and vertical mounting. All gear units are assembled with the oil fill-level, oil-drain and vent plugs installed in their proper locations, **according to the customer-specified mounting position**. For mounting orientations other than shown consult NORD Gear.

STOP *HARMFUL SITUATION* STOP

The gear reducer may not receive proper lubrication if the unit is not mounted in the position for which it is designed. Observe the mounting position designated on the reducer nameplate, or specified in the order acknowledgement. Consult NORD prior to changing mounting position in the field. While it is often possible to simply relocate the oil fill-level and vent locations, and adjust the oil fill amount, in some cases, different mounting positions may lend themselves to different internal construction features.

3. Reducer mounting

- The support foundation must be straight, level and flat. Whether the gear unit is foot-mounted or flange-mounted, NORD recommends that the straightness and flatness of the customer-supplied support foundation follow **Table 1**.
- The gear unit must be properly aligned with the driven shaft of the machine in order to prevent additional stress or load forces from being imposed upon the gear unit.
- To facilitate oil drainage it may be desirable to elevate the gear box foundation above the surrounding support structure.
- All bolting surfaces must be clean and free from contamination and corrosion.

Table 1: Recommended Straightness and Flatness of Customer-Supplied Support Foundation

Above (in)	To & Including (in)	General Tolerance on Straigtness & Flatness ISO 2768-2, Tolerance Class K
0.00	0.39	+/- 0.002 in
0.39	1.18	+/- 0.004 in
1.18	3.9	+/- 0.008 in
3.9	11.8	+/- 0.016 in
11.8	39	+/- 0.024 in
39	118	+/- 0.031 in

Above (mm)	To & Including (mm)	General Tolerance on Straigtness & Flatness ISO 2768-2, Tolerance Class K
0	10	+/- 0.05 mm
10	30	+/- 0.1 mm
30	100	+/- 0.2 mm
100	300	+/- 0.4 mm
300	1000	+/- 0.6 mm
1000	3000	+/- 0.8 mm

Straightness: Based upon the length of the corresponding line.

Flatness: Based upon the longer lateral surface or the diameter of the circular surface.

STOP *HARMFUL SITUATION* STOP

The responsibility for the design and construction of the support foundation is with the user. The foundation must be adequate to withstand normal operating loads and possible overloads while maintaining alignment to attached system components under such loads. ***Motors and drive components mounted on prefabricated base plates can become misaligned during shipment. Always check alignment after installation.***

4. Steel foundation

An engineered structural steel foundation should be designed to provide adequate rigidity and prevent loads from distorting the housing or causing misalignment of internal gears and shafts. When foot-mounting the gear reducer, a base plate or sole plate with suitable thickness (generally equal or greater than the thickness of the drive feet) should be securely bolted to steel supports and extend under the entire gear drive assembly. When flange-mounting the gear unit, the bulk head plate must be engineered to minimize buckling distortions and support the cantilevered weight of the gear unit or gear motor.

STOP *HARMFUL SITUATION* STOP

Do not weld on the gear unit or use the gear unit as an earth or ground connection for any welding procedure as this may cause permanent damage to the bearings and gears.

5. Concrete foundation

If a concrete foundation is used, allow the concrete to set firmly before bolting down the gear drive. Grout structural steel mounting pads and bolts of sufficient size into the concrete, to adequately distribute the load stress onto the concrete foundation.

Figure 1: Concrete Foundation

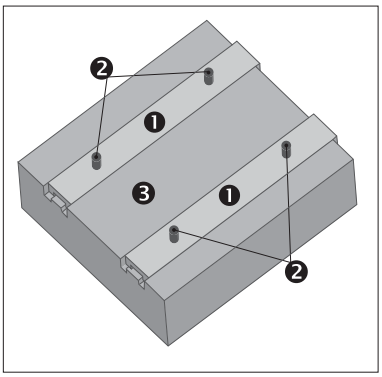

❶ Grouted Structural Steel Mounting Pads
❷ Mounting Bolts
❸ Concrete Foundation

6. Bolt connections for footed & flange mounted units

NORD footed reducers and flange-mount reducers (with B5 flange) have clearance designed into the mounting holes to allow for some minor adjustments in alignment. Bolt size, strength and quantity should be verified to insure proper torque reaction capacity whatever the mounting arrangement. Tightening torque for gear reducer mounting bolts, and recommended fastener grades, are provided in Table 2.

Table 2A: Tightening Torque for Inch Reducer Mounting Bolts

Thread Size	Grade SAE 5 / ASTM A449		Grade SAE 8	
(in)	(lb-ft)	(Nm)	(lb-ft)	(Nm)
1/4-20	7.1	9.6	10.0	13.6
5/16-18	16	21	22	30
3/8-16	28	37	39	53
1/2-13	69	93	98	132
5/8-11	138	188	195	264
3/4-10	247	334	348	472
7/8-9	396	537	558	757
1-8	592	802	833	1,130
1 1/8-7	-	-	1,233	1,672
1 1/4-7	-	-	1,717	2,327
1 3/8-6	-	-	2,267	3,073
1 1/2-6	-	-	2,983	4,045
1 3/4-5	-	-	4,458	6,045

- Calculated tightening torques are based a conventional 60°, clean and dry (un-lubricated) thread, with thread-friction and head-friction equal to 0.15.
- When using inch-fasteners, NORD recommends a minimum Grade SAE 5 (ASTM A-449) for sizes up to 1-8 UNC, and Grade SAE 8 for all larger sizes.

Table 2B: Tightening Torque for Metric Reducer Mounting Bolts

Above	ISO Grade 8.8		ISO Grade 10.9		ISO Grade 12.9	
(mm)	(lb-ft)	(Nm)	(lb-ft)	(Nm)	(lb-ft)	(Nm)
M4	2.4	3.2	3.5	4.7	4.1	5.5
M5	4.7	6.4	6.9	9.3	8.1	11
M6	8	11	12	16	14	19
M8	20	27	29	39	34	46
M10	39	53	58	78	67	91
M12	68	92	100	135	110	155
M14	107	145	159	215	180	250
M16	170	230	247	335	290	390
M18	240	325	343	465	400	540
M20	339	460	487	660	570	770
M22	465	630	664	900	770	1,050
M24	583	790	848	1,150	960	1,300
M27	848	1,150	1,217	1,650	1,440	1,950
M30	1,180	1,600	1,660	2,250	1,950	2,650
M36	2,050	2,780	2,884	3,910	3,470	4,710
M42	3,297	4,470	4,639	6,290	5,560	7,540
M48	4,940	6,700	7,010	9,500	8,260	11,200

- Calculated tightening torques are based on a conventional 60°, clean and dry (un-lubricated) thread, with thread-friction and head-friction equal to 0.15.
- When using metric-fasteners, NORD recommends a minimum ISO Grade 8.8 bolt.

7. Mounting the prime mover

When the motor is not flange mounted or integrally mounted to the gearbox, it is important to properly secure and align the gear drive with respect to the driven machine before attempting to align the prime mover or motor.

A. After the main gear drive is properly aligned and bolted in place, align the prime mover with respect to the reducer input shaft.

B. Use shims under the feet of the prime mover as needed, and secure in place with the proper mounting bolts. Dowel pins may be field-installed to help prevent misalignment and ensure proper realignment if removed for service.

IMPORTANT NOTE

When using a high speed coupling connection between the prime mover and the reducer, check alignment per the coupling manufacturers recommendations. If the coupling is misaligned, the reducer alignment or shimming is incorrect. Re-align the gear reducer and re-check the high-speed coupling alignment before re-aligning the motor.

1. Solid shaft diameter tolerance

Reducer input and output shaft extensions have a diameter tolerance as specified in **Table 1**.

Table 1: Solid Shaft Diameter Tolerance

Above ø (in)	To & Including ø (in)	Tolerance (in)
0.375	1.750	+0.0000 / -0.0005
1.750	7.500	+0.0000 / -0.0010

Above ø (mm)	To & Including ø (mm)	Tolerance (mm)	ISO 286-2 Fit Class
10	18	+0.012 / +0.001	k6
18	30	+0.015 / +0.002	k6
30	50	+0.018 / +0.002	k6
50	80	+0.030 / +0.011	m6
80	120	+0.035 / +0.013	m6
120	180	+0.040 / +0.015	m6
180	190	+0.046 / +0.017	m6

2. Fitting drive elements onto the reducer solid shaft

Solid input and output shaft extensions are provided with a drill and tap feature as indicated in Table 2. When installing drive elements such as coupling hubs, pulleys, sprockets, or gears, NORD recommends using the threaded hole in the end of the shaft, along with a suitable assembly device fitted into the threaded hole.

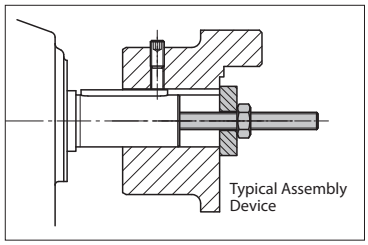

Table 2: Solid Shaft End - Threaded Holes

Above ø (in)	To & Including ø (in)	Tap size & Depth (in)
0.375	0.500	10-24 x 0.43 in
0.500	0.875	1/4-20 x 0.59 in
0.875	0.938	5/16-18 x 0.71 in
0.938	1.100	3/8-16 x 0.87 in
1.100	1.300	1/2-13 x 1.10 in
1.300	1.875	5/8-11 x 1.42 in
1.875	3.500	3/4-10 x 1.73 in
3.500	5.125	1-8 x 2.63 in
5.125	7.500	1 1/4 - 7 x 3.15

Above ø (mm)	To & Including ø (mm)	Tap Size & Depth (mm)
10	13	M4 x 10 mm
13	16	M5 x 12.5 mm
16	21	M6 x 16 mm
21	24	M8 x 19 mm
24	30	M10 x 22 mm
30	38	M12 x 28 mm
38	50	M16 x 36 mm
50	85	M20 x 42 mm
85	130	M24 x 50 mm
130	190	M30 x 60 mm

HARMFUL SITUATION

DO NOT DRIVE or **HAMMER** the coupling hub, pulley, sprocket, or gear into place. An endwise blow to the reducer shaft can generate damaging axial forces and cause damage to the reducer housing, bearings or internal components.

WARNING

To avoid serious injury the user must provide suitable safety guards for all rotating shafts and shaft components such as couplings, chain drives, belt drives, etc. All guarding must adhere to local regulations and safety standards.

3. Installing interference-fit hubs to the reducer shaft

Prior to installing any interference-fit hubs to the reducer shaft, consult with the manufacturer to determine proper assembly and fit. Interference-fits usually require heating the coupling, sprocket or gear hub, per the manufacturer's recommendations. Coupling hub installation typically follows ANSI/AGMA 9002-A86. Always make sure the reducer shaft seals are protected from the heat source. Apply uniform heat to the drive element hub to prevent distortion. NORD does not recommend heating the drive element hub beyond 212°F to 275°F (100°C to 135° C).

WARNING

When using heat to mount a drive element hub, do not use open flame in a combustible atmosphere or near flammable materials. Use suitable protection to avoid burns or serious injury.

HARMFUL SITUATION

When using external chain or belt drives, make sure the reducer is sized so that the shaft and bearings have adequate capacity. To avoid unnecessary bearing loads and additional shaft deflection, mount all power take-off devices (sprockets, pulleys, etc.) so that the applied load center is as close to the gear housing as possible and check component alignment and tension of any belts or chains per the manufacturer's recommendation. Do not over tighten the belts or chains.

4. Coupling installation

The performance and life of any coupling depends upon how well it is installed. Coupling hubs are typically mounted flush with the shaft ends, unless specifically ordered for overhung mounting. Shaft couplings should be installed according to the coupling manufacturer's recommendations for gap, angular and parallel alignment. To help obtain critical shaft alignment coupling hubs may be installed to the machine shafts prior to final shimming or tightening of the foundation bolts. Proper coupling alignment allows for thermal and mechanical shaft movement during operation and ensures that only torque (no radial load) is transmitted between the mating shafts.

Coupling gap and angular alignment

The shaft gap must be sufficient to accommodate any anticipated thermal or mechanical axial movement. When setting the coupling gap, insert a spacer or shim stock equal to the required spacing or gap between the coupling hub faces. Measure the clearance using feeler gauges at 90-degree intervals, to verify the angular alignment.

Parallel (or offset) alignment

Mount a dial indicator to one coupling hub, and rotate this hub, sweeping the outside diameter of the other hub. The parallel or offset misalignment is equal to one-half of the total indicator reading. Another method is to rest a straight edge squarely on the outside diameter of the hubs at 90° intervals and measure any gaps with feeler gauges. The maximum gap measurement is the parallel or offset misalignment.

Check alignment

After both angular and parallel alignments are within specified limits, tighten all foundation bolts securely and re-check critical alignment. If any of the specified limits for alignment are exceeded, realign the coupling.

5. Installing sheaves (pulleys), sprockets and gears

To avoid unnecessary bearing loads and additional shaft deflection, mount all power take-off devices (sprockets, pulleys, gears, etc.) so that the applied load center is as close to the gear housing as possible, as shown in **Figure 2**.

Figure 2: Sprocket or Gear Mounting

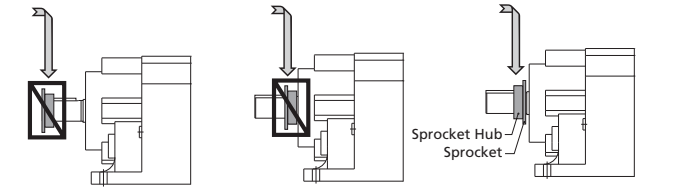

Preferred Mounting of Sprocket or Gear

Align the driver sheave or sprocket with the driven sheave or sprocket by placing a straight-edge length-wise across the face of the sheaves or sprockets. Alignment of bushed sheaves and sprockets should be checked only after bushings have been tightened. Check horizontal shaft alignment by placing one leg of a square or a level vertically against the face of the sheave or sprocket.

Always check component alignment and tension any belts or chains per the manufacturer's recommendation. The ideal belt or chain tension allows proper wrap of the driver and driven wheels, while maintaining the lowest possible tension of the belts or chain, so that no slipping occurs under load conditions. Check belt or chain tension frequently over the first 24 to 48 hours of operation.

STOP *HARMFUL SITUATION* STOP

When using external chain or belt drives, make sure the reducer is sized so that the shaft and bearings have adequate capacity. To avoid unnecessary bearing loads and additional shaft deflection, mount all power take-off devices (sprockets, pulleys, etc.) so that the applied load center is as close the gear housing as possible and check component alignment and tension of any belts or chains per the manufacturer's recommendation. Do not over tension the belts or chains.

6. Outboard pinion gear alignment

Align outboard pinion gears and adjust the gear tooth clearance according to the manufacturer's recommendations, checking for acceptable outboard pinion tooth contact. The foundation bolts may have to be loosened and the gear unit moved slightly to obtain proper gear tooth contact. After the unit is moved to correct tooth contact, the prime mover may need to be realigned.

KEYED HOLLOW SHAFT

1. Keyed hollow shaft design

NORD uses high quality carbon steel to manufacture hollow-shafts. Upon request, NORD can provide alternate materials, such as stainless steel. NORD hollow shafts are designed with a bore relief (reduced contact area) between the mating shafts.

The bore relief provides a cavity to hold an anti-seize assembly paste. It also acts as a design feature intended to help prevent corrosion and to facilitate gearbox removal from the solid shaft.

NORD furnishes dual keys designed to be used in each of the bore land areas, as opposed to supplying a single long key. The dual keys are intended to simplify assembly onto the machine's solid shaft.

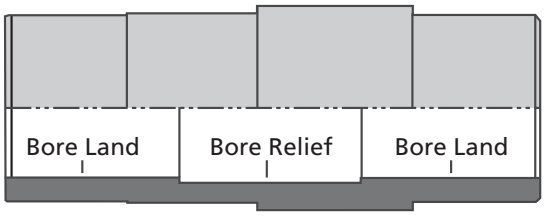

IMPORTANT NOTE

If a single shaft key or dual shaft keys are supplied by others, the key/s must engage the full bore-land length at each end of the hollow shaft.

2. Key and keyway dimensions

Unless otherwise indicated, inch keys and keyways follow the ANSI B17.1 standard and metric keys and keyways follow the DIN6885-1 standard. Inch bores will typically utilize square keys but in some instances the larger hollow shaft bore sizes utilize the alternate rectangular key shown in the ANSI B17.1 standard.

Key slots for the solid machine shaft should be made with a Class 2, transitional-fit class (slightly loose to slightly tight). Key slots in the female shaft are designed to be a low clearance fit. These suggested practices should allow for easier assembly with the mating solid shaft, without allowing excessive clearance which could cause keys to work loose during reducer operation.

IMPORTANT NOTE

If the key fit is too tight, light filing of the key sides and hand-fitting of the keys may be required.

3. Keyed hollow-shaft bore tolerances

Standard keyed hollow-shaft bore tolerances are shown in the following table.

Table 1 - Keyed hollow bore tolerances

Above ø [in]	To and Including ø [in]	Bore Diameter Tolerance ø [in]
0.4375	1.6250	+0.0010 / -0.0000
1.6250	3.2500	+0.0012 / -0.0000
3.2500	7.0000	+0.0014 / -0.0000

Above ø [mm]	To and Including ø [mm]	Bore Diameter Tolerance ø [mm]
10	18	+0.018 / -0.000
18	30	+0.021 / -0.000
30	50	+0.025 / -0.000
50	80	+0.030 / -0.000
80	120	+0.035 / -0.000
120	180	+0.040 / -0.000
180	190	+0.035 / -0.000

Metric hollow bore tolerances per ISO286-2, Class H7

4. Suggested solid shaft (machine shaft) tolerances

NORD recommends a close fit of the customer-supplied solid shaft or machine-shaft, for the following reasons:

- To help minimize the potential for fretting and corrosion.
- To help prevent excessive free play in the shaft connection that could lead to excessive load stress on the driven system, the gear drive, or both.

Table 2 - Suggested solid shaft tolerances

Above ø [in]	To and Including ø [in]	Shaft Diameter Tolerance Uniform Load ø [in]	Shaft Diameter Tolerance Shock Load ø [in]
0.4375	0.8750	+0.0000 / -0.0005	+0.0000 / +0.0005
0.8750	4.5000	+0.0000 / -0.0010	+0.0000 / +0.0010
4.5000	7.0000	+0.0000 / -0.0012	+0.0000 / +0.0015

Above ø [mm]	To and Including ø [mm]	Shaft Diameter Tolerance Uniform Load ❶ ø [mm]	Shaft Diameter Tolerance Shock Load ❷ ø [mm]
10	18	+0.000 / -0.011	+0.012 / +0.001
18	30	+0.000 / -0.013	+0.015 / +0.002
30	50	+0.000 / -0.016	+0.018 / +0.002
50	80	+0.000 / -0.019	+0.021 / +0.002
80	120	+0.000 / -0.022	+0.025 / +0.003
120	180	+0.000 / -0.025	+0.028 / +0.003
180	190	+0.000 / -0.029	+0.033 / +0.004

❶ **Uniform load: Mating shaft diameter tolerance per ISO286-2, class h6**

❷ **Shock load: Mating shaft diameter tolerance per ISO286-2, class k6**

As indicated in Table 2, different solid shaft tolerances are suggested depending upon the load type.

- If the machine load conditions are considered "Uniform" a clearance fit is allowed.
- If the machine load conditions are considered to have "Shock Load" a light clearance to interference fit condition is suggested.

Typically the machine builder will have good knowledge as to the load type. As an alternate method to classify load type, one could follow the "Mass Acceleration Factor Selection Method" that is discussed in NORD's product catalog/s.

Straightness, roundness, and diameter tolerance variations of both shafts should be controlled as accurately as possible. When mating, solid shaft design features are not controlled, reducer installation may be very difficult without ordering special hollow-bore design features to accomodate.

STOP	*HARMFUL SITUATION*	STOP
The supporting solid shaft or driven machine shaft must be of adequate size and strength to withstand normal operating loads and peak loads without damage to itself or any of the system components.		

5. Suggested solid-shaft mating shaft surface finish

Controlling the mating shaft surface finish helps to assure proper fit and assembly while minimizing the possibility of corrosion and fretting. NORD recommends that the mating solid shaft surface should be at least 125 micro-inches (3.2 microns) or smoother.

6. Assembly to the machine shaft

A. Clean and remove any dirt, grease, or rust-preventative coatings from both the reducer hollow shaft and the machine shaft.

B. Make sure the edges of both the reducer hollow shaft and machine shaft are free from any nicks or burrs. If nicks or burrs are present remove them using an abrasive material such as an emery cloth.

C. Before installing the gear reducer onto the machine shaft, apply an anti-seize compound or anti-corrosive lubricant to the mating shafts as shown in Figure 1. Assembly and subsequent dismantling will be aided by the anti-seize agent.

Figure 1 – Application of anti-seize to the mating shafts

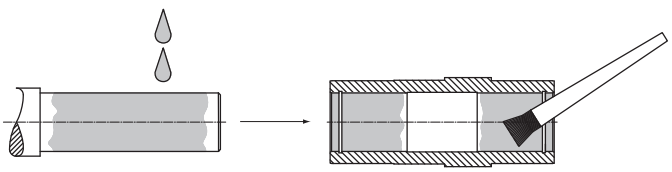

Apply to machine shaft Apply to bore land area

D. Fit the shaft key/s into place on the machine shaft. Depending upon the key slot design on the machine shaft, it may be necessary to stake or Loctite® the key/s into place so they do not slide axially while fitting the reducer to the shaft.

E. Lift the gear unit assembly into place and align it carefully with respect to the machine shaft.

F. Fit the gear unit assembly onto the machine shaft using a suitable pulling device.

G. Secure the reducer onto the machine shaft in an axial direction, to prevent the reducer from shifting or walking out of place during operation.

STOP	*HARMFUL SITUATION*	STOP
Do not use excessive force or try to hammer the gear unit into place. The housing, shafting, bearings or gear wheels may become damaged.		

7. Securing the reducer onto the machine shaft

There are slight shaft oscillations during operation in any rotating shaft equipment or any shaft-mounted reducer assembly. Therefore it is important to secure the reducer in an axial direction onto the machine shaft, to prevent the reducer from shifting or walking out of place during operation.

Possible methods to secure the reducer axially to the machine shaft include:

- Using commercial set collars, retaining rings, or snap rings.
- Using the optional "NORD Fixing Element Kit" (see U10280).

The NORD Fixing Element Kit includes all of the necessary parts to secure the shaft by using a tapped hole in the end of the mating male shaft.

Loctite® is a registered trademark of Loctite Corporation U.S.A. and Henkel.

1. Shaft fixing kit - basic design

The NORD Fixing Kit provides a method for securing the reducer in an axial direction, after the keyed-hollow shaft reducer is mounted onto the machine shaft. The fixing kit prevents the reducer from shifting or walking out of place during operation. NORD offers a variety of standard fixing kits, based upon bore size, as shown on Page 2 of this manual.

Figure 1 – Fixing kit components

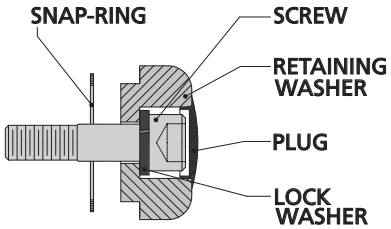

IMPORTANT NOTE

For installation of the keyed-hollow bore reducer to the machine-shaft, see user manual U10270.

2. Assembly types

There are two types of assembly methods commonly used for securing the fixing kit.

Figure 2 – Fixing kit assembly methods

Type 1

The machine-shaft is located against a fixed snap-ring located inside the bore of the reducer.

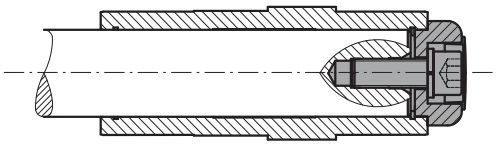

Type 2

The machine shaft is shouldered and is pulled tight against the hollow-shaft; the snap-ring is no longer required.

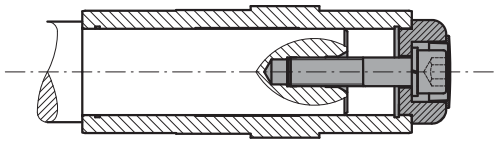

HARMFUL SITUATION

The maximum edge break on the solid machine shaft must not exceed the values shown on Page 2 of this manual. Otherwise the load-bearing capacity of the snap-ring will be reduced and may result in failure.

3. Assembly

A. If using a Type 1 assembly, secure the appropriate snap-ring into the bore of the reducer. With Type 2 assembly, no snap-ring is required.

B. Draw the hollow bore gear reducer onto the machine shaft as instructed in U10270. Remember to apply a suitable assembly paste or anti-seize compound to the mating shafts.

C. Install the retaining washer over the end of the hollow bore.

D. Secure the appropriate cap-screw into the machine shaft and tighten the screw based upon the assembly type, as noted below. Then install the protective plug over the screw hole.

Type 1 - Screw tightening

Tighten until lightly snug and secure the screw with a thread-locking compound to prevent the screw from backing out.

HARMFUL SITUATION

Over tightening the retaining screw may cause the snap ring to be pulled out of its seating groove, causing damage to the hollow-bore or snap ring.

Type 2 - Screw tightening

Follow the cap screw manufactures guidelines and tighten the screw to the proper torque, based upon the bolt grade and material. For reference tightening torque values, also see manual U10060, Table 2.

4. Disassembly

When using Type 2 assembly, it is possible to design a simple disassembly tool to allow easier removal of the hollow-bore reducer. The solid shaft is shouldered to rest against the hollow-bore of the reducer. The machine shaft is supported in both of the hollow bore land areas, but the overall length is reduced compared to Type 1 assembly.

Figure 3 – Disassembly Tool

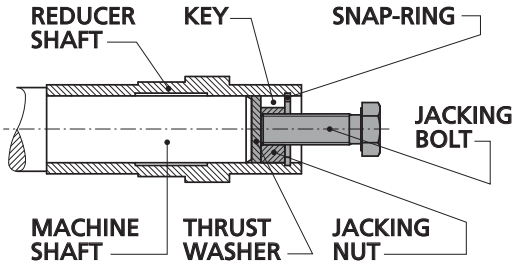

IMPORTANT NOTE

For suggestions on how to construct a disassembly tool for a particular reducer and bore size, please consult NORD's application engineering department.

5. Standard fixing kit size offerings

NORD offers a variety of standard fixing kit sizes as shown by the following tables.

Table 1 - Standard fixing kit size offerings

Shaft Bore [in]	Bolt Size	Allowable Thrust Groove ❷ lb [N]	Allowable Thrust Ring ❸ lb [N]	Max. Edge Break ❹ in [mm]
0.500	10-32	730 [3255]	520 [2300]	0.02 [0.5]
0.750	1/4-20	1800 [7905]	560 [2500]	0.04 [1]
1.000	3/8-16	2900 [13020]	1000 [4600]	0.04 [1]
1.188	7/16-14	5100 [22630]	1000 [4700]	0.04 [1]
1.250	7/16-14	5100 [22630]	1000 [4700]	0.04 [1]
1.375	5/8-11	6500 [29140]	1400 [6400]	0.06 [1.5]
1.438	5/8-11	6900 [30690]	1500 [6500]	0.06 [1.5]
1.500	5/8-11	7800 [34875]	1500 [6700]	0.06 [1.5]
1.625	5/8-11	9900 [44020]	1900 [8400]	0.08 [2]
1.688	5/8-11	10500 [46810]	1800 [8200]	0.08 [2]
1.938	5/8-11	11100 [49600]	1900 [8400]	0.08 [2]
2.000	5/8-11	14100 [62775]	2700 [12100]	0.08 [2]
2.063	5/8-11	14100 [62775]	2700 [12100]	0.08 [2]
2.188	5/8-11	16800 [74865]	2900 [13000]	0.08 [2]
2.375	3/4-10	17400 [77190]	2900 [13000]	0.08 [2]
2.438	3/4-10	17400 [77190]	2900 [13000]	0.08 [2]
2.750	3/4-10	19600 [87110]	4700 [21000]	0.10 [2.5]
2.938	3/4-10	20900 [93000]	4700 [21000]	0.10 [2.5]
3.188	3/4-10	27700 [123225]	7000 [31200]	0.12 [3]
3.438	3/4-10	29300 [130200]	7000 [31400]	0.12 [3]
3.625	3/4-10	30900 [137330]	7000 [31400]	0.12 [3]
3.938	7/8-9	32400 [144305]	6900 [30800]	0.12 [3]
4.000	7/8-9	39000 [173600]	16400 [73000]	0.12 [3]
4.063	7/8-9	39000 [173600]	16400 [73000]	0.12 [3]
4.375	7/8-9	41500 [184450]	16200 [72000]	0.12 [3]
4.438	7/8-9	41500 [184450]	16200 [72000]	0.12 [3]
4.750	7/8-9	44200 [196850]	15700 [70000]	0.12 [3]
4.938	7/8-9	48000 [213900]	15500 [69000]	0.12 [3]

Upon request, additional hollow-bore sizes & fixing kit sizes may be offered.

Shaft Bore [mm]	Bolt Size	Allowable Thrust Groove ❷ N [lb]	Allowable Thrust Ring ❸ N [lb]	Max. Edge Break ❹ mm [in]
16	M5	Not applicable ❶		
20	M6	8370 [1900]	5600 [1300]	1.0 [0.04]
25	M10	12400 [2800]	7300 [1600]	1.0 [0.04]
30	M10	17515 [3900]	7200 [1600]	1.0 [0.04]
35	M12	29140 [6500]	8700 [1900]	1.5 [0.06]
40	M16	41850 [9400]	10900 [2400]	2.0 [0.08]
45	M16	46810 [10500]	10700 [2400]	2.0 [0.08]
50	M16	62775 [14100]	19000 [4300]	2.0 [0.08]
60	M20	74865 [16800]	29200 [6600]	2.0 [0.08]
70	M20	87110 [19600]	30300 [6800]	2.5 [0.10]
80	M20	115630 [26000]	56000 [12600]	2.5 [0.10]
90	M24	130200 [29300]	56000 [12600]	3.0 [0.12]
100	M24	144305 [32400]	55000 [12400]	3.0 [0.12]
110	M24	181350 [40800]	71000 [16000]	3.0 [0.12]
120	M24	196850 [44300]	70000 [15700]	3.0 [0.12]

Upon request, additional hollow-bore sizes and fixing kit sizes may be offered.

❶ This fixing kit is not supplied with a snap-ring. A Type 2 machine shaft is required.

❷ Thrust load-bearing capacity of the groove is based upon using a hollow-shaft material with a yield-strength of at least 45,000 psi (310 N/mm²).

❸ Thrust load-bearing capacity of the snap-ring is based upon a typical snap-ring material with a yield-strength of at least 30,500 psi (210 N/mm²).

❹ On the solid machine shaft, observe the maximum edge break (radius or chamfer) shown. A larger edge break will result in reduced load-bearing capacity of the snap-ring.

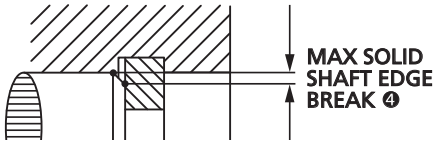

HOLLOW SHAFT WITH SHRINK DISC

1. Shrink disc design concept

A shrink disc option is adaptable to many NORD hollow-bore reducers. The shrink disc applies a high-capacity, zero backlash, interference fit to the driven machine shaft. The double tapered inner ring converts most all of the screw clamping load into radial contact pressure, as the outer clamping discs are pulled together by proper tightening of the locking screws. As the inner ring is contracted, the clearance between the customer solid shaft and reducer shaft is absorbed.

- In their relaxed state, shrink discs provide a generous assembly clearance, thus eliminating the typical assembly and disassembly challenges of using interference fits.
- Shrink discs also reduce solid machine shaft stresses by eliminating the need for shaft keys and keyways.
- When properly applied, high shrink fits help eliminate shaft fretting corrosion and allow for easier shaft mounting and dismounting.

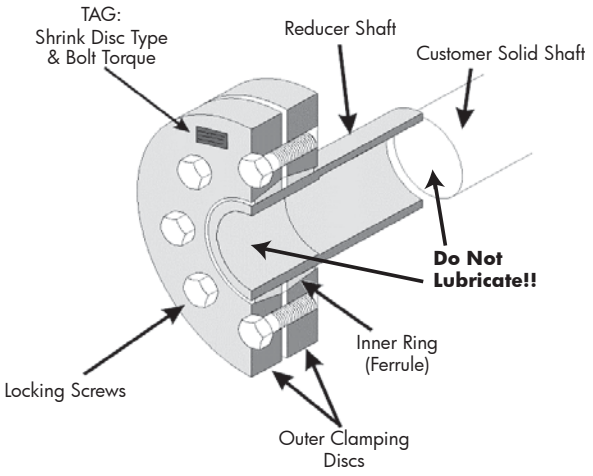

2. Solid (machine) shaft design guidelines

Always use a solid shaft material of adequate strength and apply proper shaft fits in order to establish adequate clamping force during assembly and assure proper shaft release during disassembly.

- Use solid shaft material with yield strength of at least 52,260 psi (360 N/mm²).
- The solid machine shaft should be machined according to ISO 286-2, Class h6 fit tolerances, with a shaft finish of 125 micro inches (3.2 µm) or smoother, per Table 1.
- The solid machine shaft must extend the full length of the reducer hollow shaft.

STOP *HARMFUL SITUATION* **STOP**

Contact NORD when using a shrink disc in an application where the shrink disc connection must simultaneously transmit torque and thrust.

3. Safety

⚠ *WARNING* ⚠

- The supporting solid shaft or driven machine shaft must be of adequate size and strength to withstand normal operating loads and peak loads without damage to itself or any of the system components.
- The transmissible torque and the gripping capacity of the shrink disc may be reduced if shaft tolerances or clearances are larger than specified.
- Excessive tightening torque can result in permanent deformation of the inner ring and the reducer hollow bore, making disassembly very difficult. Do not over tighten the shrink disc to compensate for excessive clearance between the machine shaft and reducer bore.
- Observe the published ratings and safety factors for both the reducer and shrink disc. Overload conditions or excessively high torque can cause the shrink disc connection to slip. In extreme cases localized galling or welding of components may occur.

4. Shrink disc shaft tolerances

Recommended solid shaft tolerances and reducer bore tolerances are shown in the table below.

Table 1: Shrink disc shaft tolerances

Above & Including ø [in]	To & Including ø [in]	Solid Shaft Tolerance ø [in]	Reducer Bore Tolerance ø [in]	Max. Assembly Clearance [in]
0.7500	1.1250	+0.0000 / -0.0005	+0.0008 / -0.0000	0.0013
1.1250	1.9375	+0.0000 / -0.0006	+0.0009 / -0.0000	0.0015
2.0000	3.1250	+0.0000 / -0.0007	+0.0011 / -0.0000	0.0018
3.1875	4.6875	+0.0000 / -0.0008	+0.0013 / -0.0000	0.0021
4.7500	7.0625	+0.0000 / -0.0009	+0.0015 / -0.0000	0.0024
7.1250	7.5000	+0.0000 / -0.0011	+0.0018 / -0.0000	0.0029

Above ø [mm]	To & Including ø [mm]	Solid Shaft Tolerance ø [mm]	Reducer Bore Tolerance ø [mm]	Max. Assembly Clearance [mm]
18	30	+0.000 / -0.013	+0.021 / -0.000	0.034
30	50	+0.000 / -0.016	+0.025 / -0.000	0.041
50	80	+0.000 / -0.019	+0.030 / -0.000	0.049
80	120	+0.000 / -0.022	+0.035 / -0.000	0.057
120	180	+0.000 / -0.025	+0.040 / -0.000	0.065
180	190	+0.000 / -0.029	+0.046 / -0.000	0.075

Shaft/bore tolerances per ISO 282-6, Class h6/H7.

Solid shaft finish should be 125 micro inches (3.2 micro meters) or smoother.

HOLLOW SHAFT WITH SHRINK DISC

5. Installation

⚠ WARNING ⚠

Disconnect all power sources from the equipment before beginning this installation procedure. Handle the components with care and avoid all sharp machined edges to prevent personal injury.

STOP HARMFUL SITUATION STOP

Do not tighten any of the shrink disc locking screws prior to installing the reducer with shrink disc onto the machine shaft. The inner ring of the shrink disc can become permanently contracted or damaged at relatively low tightening torque.

A. Inspect the gear unit received. Make sure the shrink disc and extended hollow shaft projection is on the side of the reducer where it was specified or ordered.

B. Loosen the shrink disc locking screws but do not take the shrink disc completely apart. Remove and discard any packaging material or transportation spacers that come with the shrink disc.

C. Remove all burrs, rust, corrosion, lubricants, and foreign matter from the surfaces of the solid shaft and hollow-bore.

D. Make sure the shrink disk is positioned onto the hollow shaft until the outer clamping ring is flush with the edge of the hollow shaft.

E. To aid in assembly, it is acceptable to lightly grease the solid shaft, only in the area that will come in contact with the bronze-bushing side of the reducer hollow-shaft. ***The reducer hollow shaft must be completely de-greased and free of lubricant, especially in the area of the shrink disc.***

F. Position the gear reducer onto the solid machine shaft and make certain the area under the shrink disc is completely supported by the solid shaft.

G. After confirming the proper positioning of gear reducer and the shrink disc, hand tighten (3) or (4) equally spaced locking screws to make sure the outer collars of the shrink disc are drawn together in a parallel fashion. Then hand-tighten the remaining screws.

H. Refer to Table 2 for the specified tightening torques for the shrink disc locking screws. Using a properly set torque wrench using approximately ¼ (90°) turns; tighten the locking screws, by working in a circular clockwise or counterclockwise sequence around the shrink disc.

I. Continue the tightening sequence (Step H.) even if some locking screws initially require very low tightening torque to achieve ¼ turns; do this for several passes until ¼ turns can no longer be achieved.

J. Reset the torque wrench to approximately 3-5% over-torque and tighten the locking screws for 1 or 2 more passes. This procedure will compensate for relaxation of the locking screws, since tightening of a given screw will always tend to relax the adjacent screw. Without a slight overtorquing of the screws, an infinite number of passes would be required to reach the desired tightening torque.

Table 2 - Shrink Disc Locking Screw Torque

Screw Size	Wrench Size [mm]	Tightening Torque [Nm]	[lb-in]	[lb-ft]
M5	8	7	62	5.2
M6	10	12	106	8.9
M8	13	30	266	22
M10	17	59	522	44
M12	19	100	885	74
M16	24	250	2213	184
M20	30	490	4337	361
M24	36	840	7435	620
M30	46	1700	15050	1254

BOLT TIGHTENING PATTERN

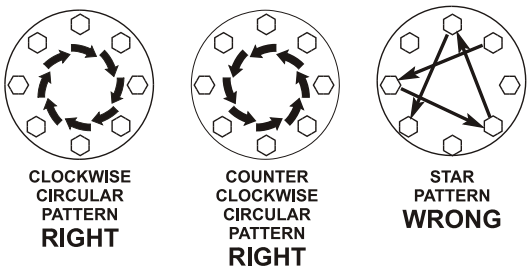

K. Reset the torque wrench to the correct tightening torque as indicated in Table 2. Make sure each locking screw has been properly tightened until the screws are no longer turning at the specified torque wrench setting. If necessary repeat Steps G. & H.

6. Removal

A. Loosen the shrink disc locking screws in a circular pattern by using ½ (180°) turns, until the shrink disc hub can be moved or until the shrink disc hub and reducer shaft will return to their original fits.

⚠ WARNING ⚠

Do not completely remove the locking screws before the outer clamping disks of the shrink disc are disengaged from the inner ring. A sudden release of the outer collars will create high separating forces and could result in injury or even death.

B. Loosen the outer collars of the shrink disc from the tapered inner ring. This may require tapping the bolts with a **soft faced** hammer or prying lightly between the outer collars.

C. Remove the gear reducer from the machine shaft.

7. Re-installation

A. It may be possible to re-use the shrink disc. However the shrink disk should not be re-used if it becomes damaged during removal, or excessively rusty or corroded. Shrink discs must always be disassembled and thoroughly cleaned before re-using.

B. After cleaning the shrink disc, lubricate between the taper of the outer clamping disks and the outside of the inner ring using MOLYKOTE® G-Rapid Plus Paste (product of Dow Corning) or equivalent. In addition, grease screw threads and head contact area with multi-purpose grease.

NORD GRIPMAXX™

1. General information

The NORD GRIPMAXX™ keyless bushing system is adaptable to most all NORD shaft-mounted reducers. The bushing system offers interchangeable bushings to accommodate a large range of driven machine-shaft sizes.

The unique design of the NORD GRIPMAXX™ bushing system offers a number of distinct advantages as follows:

- The NORD GRIPMAXX™ allows the machine builder to utilize standard cold finished shaft stock, without the need for additional shaft machining or shaft keys.
- It uses a NORD shrink disc to apply a high-capacity, zero backlash, interference fit to the driven machine shaft, while eliminating the typical assembly and disassembly challenges of using interference fits.
- The built in clearance between the customer shaft and the bushing system helps to ensure easy installation and removal of the gearbox. To help ensure easy removal, the NORD GRIPMAXX™ bushings are prepared with a special low-wear, corrosion-resistant hardened surface treatment, that minimizes the formation of shaft corrosion and fretting.
- The NORD GRIPMAXX™ is ideal for start-stop operation and bi-directional loading because it does not depend on keys or keyways that transmit torque, which can also can become loose or deform when subjected to these loading conditions.
- Unlike the typical conical or tapered bushing kits, the NORD GRIPMAXX™ design allows a tight fit against a shouldered machine shaft.
- The torque bushing and support bushing are the same part and are fully interchangeable with one another.

2. GRIPMAXX™ assembly detail

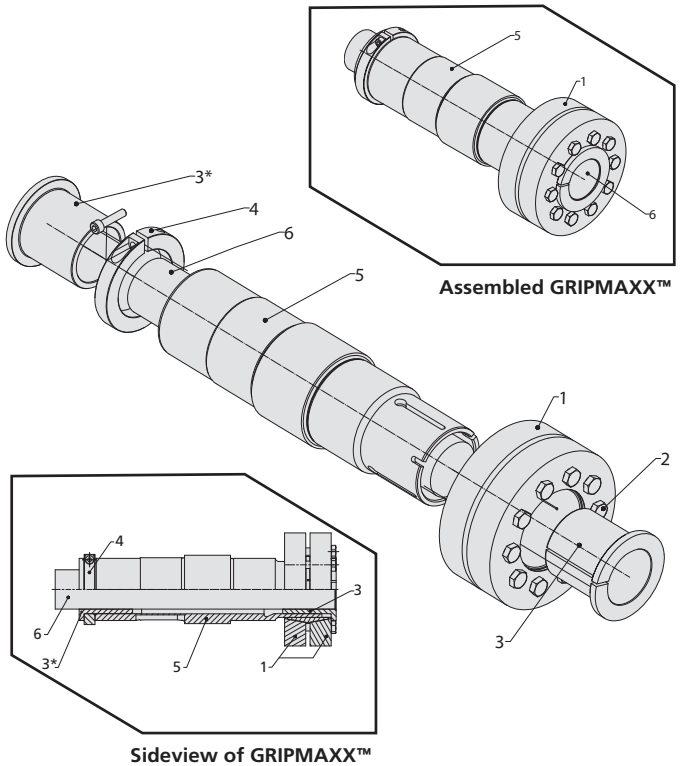

Assembled GRIPMAXX™

Sideview of GRIPMAXX™

[1] NORD Shrink Disc
[2] Locking Screw
[3] Bushing (Torque Side)
[3*] Bushing (Support Side)
[4] Clamp Ring
[5] Gear Reducer Hollow Shaft
[6] Machine Shaft

IMPORTANT NOTE

NORD recommends that the machine shaft have a yield strength of at least 52,260psi (360N/mm^2)

IMPORTANT NOTE

Observe the recommended machine shaft tolerances in table 1, page 2.

WARNING

The supporting solid shaft or driven machine shaft must be of adequate size and strength to withstand normal operating loads and peak loads without damage to itself or any of the system components.

3. Installation

⚠ WARNING ⚠

Disconnect all power sources from the equipment before beginning this installation procedure. Handle the components with care and avoid all sharp or machined edges to prevent personal injury.

STOP HARMFUL SITUATION STOP

Do not tighten any of the shrink disc locking screws prior to installing the reducer with shrink disc onto the machine shaft. The inner ring of the shrink disc can become permanently contracted or damaged at a relatively low tightening torque.

Table 1 - Required Machined Shaft Tolerance

Inch Machine Shaft			Metric Machine Shaft		
From ø [in]	To ø [in]	ISO 286-2 Tolerance h11(-) [in]	Over ø [mm]	Including ø [mm]	ISO 286-2 Tolerance h11(-) [mm]
0.4375	0.6875	- 0.004	10	18	- 0.11
0.7500	1.0625	- 0.005	18	30	- 0.13
1.1250	1.9375	- 0.006	30	50	- 0.16
2.0000	3.1250	- 0.007	50	80	- 0.19
3.1875	4.6875	-0.008	80	120	-0.22
4.7500	4.7500	-0.009	120	125	-0.25

A. Carefully inspect the machine shaft [6] and remove all burrs, rust, corrosion, lubricants, and foreign matter from the shaft surface. Verify that the diameter is within the dimensional tolerances shown in Table 1.

B. Inspect the gear unit received to confirm the correct position of the shrink disc [1]. Make sure the hollow shaft [5] projection is on the side of the reducer where it was specified or ordered.

C. In addition to cleaning the machine shaft [6], remove all dirt, grease or oils from the reducer hollow shaft [5], bushings [3], clamp ring [4], and shrink disk [1]. ***Do not apply lubricants, corrosion preventatives, anti-sieze compounds or coatings to the mating surfaces of the shaft, bushings, clamp collars or shrink disc.***

D. Position the clamp ring [4] and support bushing [3*] over the machine shaft [6], making sure the support bushing is in its desired location. Then secure the support bushing [3*] with the clamp ring [4] and tighten the clamp ring screw.

E. Slide the gear reducer onto the machine shaft [6] until the gear reducer stops against the secured support bushing [3*].

F. Without taking the shrink disc [1] apart, loosen the shrink disc locking screws [2]. Slide the shrink disk over the reducer shaft [5] and slide the torque bushing [3] onto the machine shaft, making sure it is seated completely.

G. Confirm the positioning of the shrink disc [1] and torque bushing [3]. ***Do not tighten the shrink disc until the machine shaft and torque bushing are in proper position, or the reducer shaft will be damaged.*** Hand-tighten 3 or 4 or locking screws [2] and make sure the outer collars of the shrink disc are drawn together in a parallel fashion and then hand-tighten the remaining screws.

H. Refer to Table 2 for the specified tightening torques for the shrink disc locking screws. Using a properly set torque wrench using approximately ¼ (90°) turns; tighten the locking screws, by working in a circular clockwise or counterclockwise sequence around the shrink disc.

I. Continue the tightening sequence (Step H.) even if some locking screws initially require very low tightening torque to achieve ¼ turns; do this for several passes until ¼ turns can no longer be achieved.

J. Reset the torque wrench to approximately 3-5% over-torque and tighten the locking screws for 1 or 2 more passes. This procedure will compensate for relaxation of the locking screws, since tightening of a given screw will always tend to relax the adjacent screw. Without a slight overtorquing of the screws, an infinite number of passes would be required to reach the desired tightening torque.

Table 2 - Shrink Disc Locking Screw Torque

Screw Size	Wrench Size [mm]	Tightening Torque [Nm]	[lb-in]	[ft-lb]
M5	8	7	62	5.2
M6	10	12	106	8.9
M8	13	30	266	22
M10	17	59	522	44
M12	19	100	885	74
M16	24	250	2213	184
M20	30	490	4337	361

BOLT TIGHTENING PATTERN

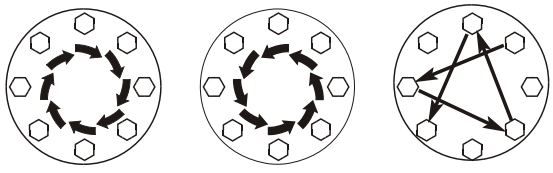

K. Reset the torque wrench to the correct tightening torque as indicated in Table 2. Make sure each locking screw has been properly tightened until the screws are no longer turning at the specified torque wrench setting. If necessary repeat Steps G. & H.

5. Bushing kit removal

A. Loosen the shrink disc locking screws [2] in circular pattern by using ½ (180°) turns, until the shrink disc hub can be moved or until the shrink disc hub and reducer shaft will return to their original fits.

> ⚠ *WARNING* ⚠
>
> Do not completely remove the locking screws before the outer clamping disks of the shrink disc are disengaged from the inner ring. A sudden release of the outer collars will create high separating forces and could result in injury or even death.

B. Loosen the outer collars of the shrink disc from the tapered inner ring. This may require tapping the bolts with a **soft faced** hammer or prying lightly between the outer collars.

C. Remove the gear reducer from the machine shaft.

6. Re-installation

A. It may be possible to re-use the bushings and shrink disc that are part of the NORD bushing system. However these components should not be re-used if they are damaged during removal, or excessively rusty or corroded.

B. Never re-use any of the bushing kit components without prior cleaning. Shrink discs must always be disassembled and thoroughly cleaned before re-using.

C. After cleaning the shrink disc, lubricate between the taper of the outer clamping disks and the outside of the inner ring using MOLYKOTE® G-Rapid Plus Paste (product of Dow Corning) or equivalent. In addition, grease screw threads and head contact area with multipurpose grease.

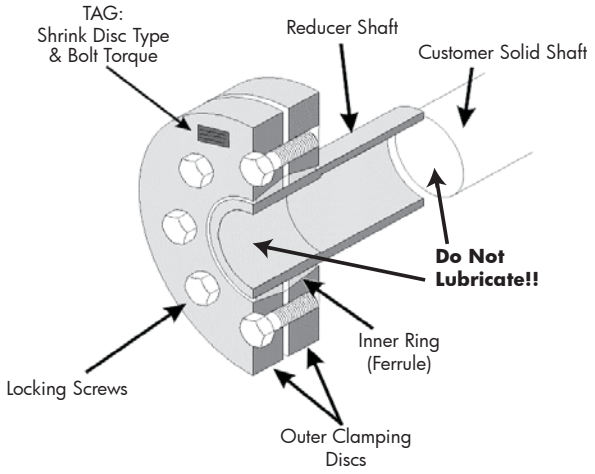

1. Foot-mounted reducers

When installing the foot-mounted gear unit, observe the flatness specifications and bolt tightening torque guidelines provided in U10060 and make sure the mating mounting surface and reducer feet are clean and free of debris. Use of shims under the feet of the gear unit may be required in order to align the output shaft to the driven equipment. Make sure that all feet are supported so that the housing will not distort when it is bolted down. Improper shimming will cause mis-alignment and may reduce the life of the gear unit or cause component failure. Dowel pins may be field-installed to help prevent misalignment and ensure proper realignment if removed for service.

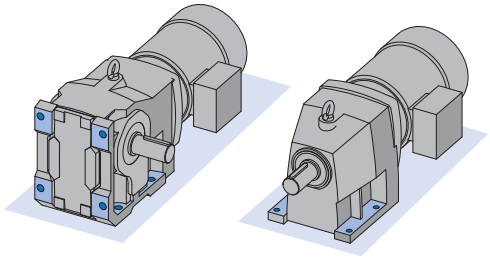

IMPORTANT NOTE

Gear units may be subjected to radial loads or side pull, caused by external chain drives or belt drives. In these instances it is recommended that the mounting base be designed with a slide-plate adjustment to accommodate extra slack in the chain or the belt after the feet are loosened. When using an external chain or belt drive, make sure the reducer is sized so that the shaft and bearings have adequate capacity.

2. Flange-mounted reducers (with B5 flange)

When using the B5 flange to mount the gear unit, the bulk head plate must be engineered to minimize buckling distortions and support the cantilevered weight of the gear reducer or gearmotor. On the B5 mounting flange NORD provides a pilot register or and the flange pilot tolerance as listed per Table 1. When the mating hole is designed with the proper fit, the flange pilot tenon provides a means of accurately positioning the reducer while the hold-down bolts are properly secured; once the reducer is secured, the tenon helps prevent movement of the reducer and it helps locate the center of the reducer output shaft.

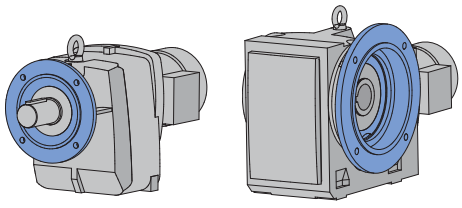

Table : Flange Pilot Tolerance

Above ø (in)	To & Including ø (in)	Tolerance (in)	ISO 286-2 Fit Class
1.969	3.150	+0.0005 / -0.0003	j6
3.150	4.724	+0.0005 / -0.0004	j6
4.724	7.087	+0.0006 / -0.0004	j6
7.087	9.055	+0.0000 / -0.0005	h6
9.055	9.843	+0.0000 / -0.0011	h6
9.843	12.402	+0.0000 / -0.0013	h6
12.402	15.748	+0.0000 / -0.0014	h6
15.748	19.685	+0.0000 / -0.0016	h6

Above ø (mm)	To & Including ø (mm)	Tolerance (mm)	ISO 286-2 Fit Class
50	80	+0.012 / -0.007	j6
80	120	+0.013 / -0.009	j6
120	180	+0.014 / -0.011	j6
180	230	+0.000 / -0.013	h6
230	250	+0.000 / -0.029	h6
250	315	+0.000 / -0.032	h6
315	400	+0.000 / -0.036	h6
400	500	+0.000 / -0.040	h6

When installing the flange mounted gear unit, observe the flatness specifications and bolt tightening torque guidelines provided in U10060. Make sure the mating mounting surface and reducer flange are clean and free of debris. Use a straight edge or parallel bar to check for high spots on the mating mounting surface and remove any raised material around the mounting holes.

Set the gear unit into place and tighten the bolts until they are snug. Before final bolt-tightening check for any material gaps between the mating surfaces and if shimming is required, use "U" shaped shims at least 2 times the width of the bolt. Avoid over shimming a very irregular surface as this will make it very difficult to achieve proper alignment.

IMPORTANT NOTE

For heavy shock applications, it is advisable to field-install dowel pins through the mounting flange connection (in addition to the mounting bolts). This will help control flange movement or flange rotation and relieve the mounting bolts from this additional stress.

3. Flange-mounted reducers (with B14 flange)

When using the B14 flange to mount the gear unit, the bulk head plate must be engineered to minimize buckling distortions and support the cantilevered weight of the gear reducer or gearmotor. When properly installed, the output flange of the reducer housing is designed to enable the permissible torques and radial forces to be reliably transmitted by the bolt connections.

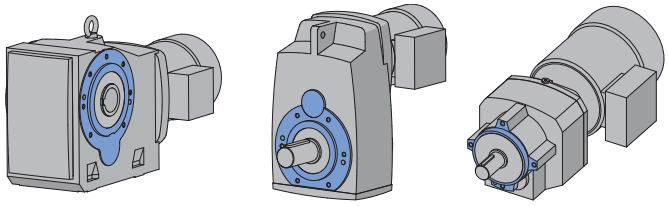

IMPORTANT NOTE

When using the B14 flange-face for mounting, if dowel pin holes are provided in addition to the threaded holes, then it is advisable to also use the proper dowel pins, to help control flange movement or flange rotation and relieve the mounting bolts from this additional stress This is especially important for heavy shock applications.

4. Foot & flange reducer housings

Some gear reducer housings are available with a foot and an output flange. Units with a foot and a B5 Flange are designated with the suffix XF after the primary model number and units with a B14 face-flange are designated with the suffix XZ after the primary model number. When a gear unit is provided with both a foot and a flange, the foot is consider the primary mounting surface. The flange is generally considered to be the secondary mounting option and it is intended that this surface be used for auxiliary add on elements that place minimal load stress on the reducer housing.

HARMFUL SITUATION

To prevent overstress on the main gear unit housing, never tighten the reducer mounting feet and the mounting flange against one-another. Auxiliary add-on elements that are mounted to the reducer flange, must not transmit excessive force, torque or vibration to the main gear housing.

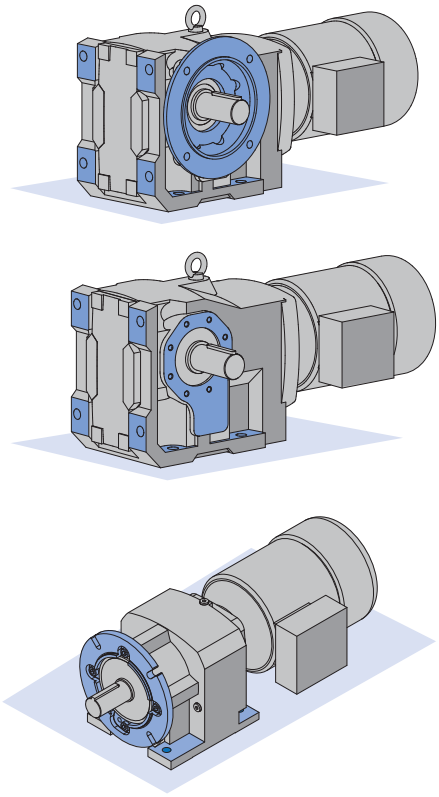

CLINCHER™ SHAFT-MOUNT WITH RUBBER BUFFERS

1. Purpose of the built-in torque arm lug

The preferred method of installing a shaft-mounted Clincher™ reducer is to support the weight of the gear unit or gearmotor assembly from the driven solid machine shaft. In order to restrain the gearbox, react the torque, and keep the gear unit from spinning around the shaft, the Clincher™ gear units have a built-in torque arm lug or tab cast into the reducer housing. This torque tab is intended to be used in conjunction with the NORD Rubber Buffers.

Figure 1: Built-in torque lug

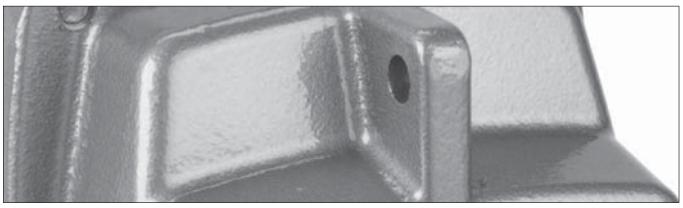

2. Rubber buffers

When specified, NORD provides two rubber buffers that are installed on either side of the gear unit's integral torque lug.

When properly used in tandem, on either side of the torque-arm lug, the rubber buffers help isolate and absorb the load forces present in the system and increase the reducer's service life by reducing cumulative torsional shock loads.

- The primary load force acts in the direction of driven shaft rotation, reacts the torque of the reducer, keeping the gearbox from spinning on the shaft.
- Additional forces present themselves in the direction opposite of the shaft rotation, due to the typical slight out-of-round condition present in the machine shaft. This condition is the reason most shaft mounted-reducers have a slight shaft-wobble, which is normal.

For further dampening it is possible to combine several rubber buffers in a row, on either side of the torque lug.

IMPORTANT NOTE

Please reference Table 1 on page 2 of this manual for dimensional information.

HARMFUL SITUATION

Always mount at least one rubber buffer on either side of the reducer's torque-arm lug. When using rubber buffers in tandem, make sure equal numbers are used on both sides of the torque tab. Failure to do so will not properly cushion the reducer and can result in excessive binding, bearing stress, and damage to the reducer.

3. Machine support

WARNING

It is the responsibility of the machine builder to design a support bracket of adequate strength and rigidity, and supply an appropriate tightening bolt assembly. Failure to do so may result in injury caused from a damaged or broken torque-reaction assembly.

A single customer-supplied machine support bracket, of adequate strength and rigidity, can provide adequate restraint for both directions. This is because when the rubber buffer system is used, the applied load forces are always parallel to the retaining bolt and there are no twisting forces induced onto the bolt in either the clockwise or counter-clockwise direction. In some cases the customer may desire to supply a rigid support on either side of the rubber buffers. In these instances, longer assembly hardware is required.

4. Installation of the rubber buffers

A. Install the Clincher™ hollow bore reducer onto the machine shaft. Line up the hole in the reducer's torque-arm lug with the hole in the machine's support bracket and temporarily hold the reducer in place.

B. Properly secure the gear unit assembly to the driven shaft in an axial direction. If using the NORD Shaft Fixing Kit, follow the instructions in User Manual U10280.

C. Install the rubber buffers on either side of the gear unit's torque-arm lug. Apply a thread locking compound to the end of the fixing bolt. Then place the fixing bolt through the rubber buffers, torque-arm lug and rigid machine support bracket and loosely secure the nut onto the end of the bolt.

D. Tighten the fixing bolt and nut until lightly snug until all of the free play is eliminated from the rubber buffer assembly. Then snug the fixing bolt assembly by tightening an additional 1/4 to 1/2 turn.

WARNING

To help prevent damage to the rubber buffers, avoid over-tightening.

IMPORTANT NOTE

- A min. of (2) rubber buffers are required for each unit.
- For larger size CLINCHER'S™, NORD offers the heavy-duty rubber buffer (Option VG).
- A metric fixing bolt is preferred for rubber buffer assembly. NORD recommends a minimum ISO Grade 8.8 fixing bolt.

CLINCHER™ SHAFT-MOUNT WITH RUBBER BUFFERS

Table 1: Rubber buffer assembly/typical dimensions

Standard Rubber Buffer Assembly Option **(G)**

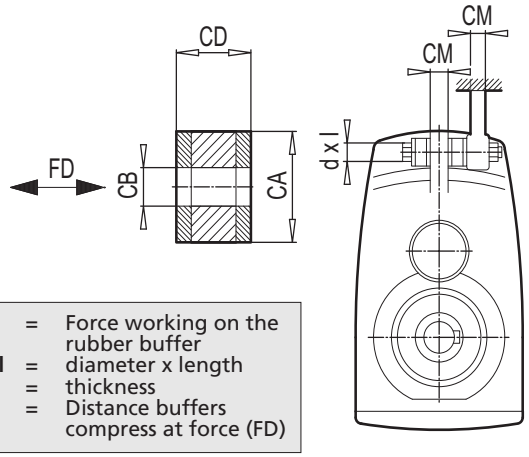

FD = Force working on the rubber buffer
d x l = diameter x length
c = thickness
S_{FD} = Distance buffers compress at force (FD)

Heavy Duty Rubber Buffer Assembly Option **(VG)**

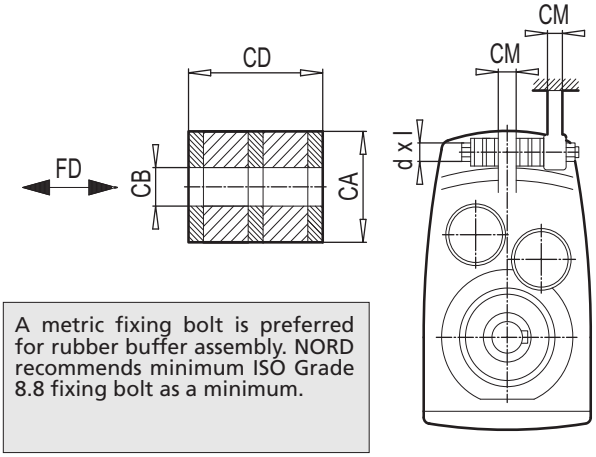

A metric fixing bolt is preferred for rubber buffer assembly. NORD recommends minimum ISO Grade 8.8 fixing bolt as a minimum.

Type	Rubber Buffer P/N	CB inch [mm]	CA inch [mm]	CD inch [mm]	CM inch [mm]	Bolt d x l [metric]	FD lb [kN]	SFD inch [mm]
SK0182NB..G	29603000	0.43 [11]	1.18 [30]	0.59 [15]	0.39 [10]	M10 x 70	217 [0.967]	0.06 [1.5]
SK0282NB..G	29603000	0.43 [11]	1.18 [30]	0.59 [15]	0.47 [12]	M10 x 70	234 [1.04]	0.07 [1.7]
SK1282..G	29603000	0.43 [11]	1.18 [30]	0.59 [15]	0.55 [14]	M10 x 80	504 [2.24]	0.14 [3.6]
SK1382NB..G	29603000	0.43 [11]	1.18 [30]	0.59 [15]	0.55 [14]	M10 x 80	402 [1.79]	0.11 [2.8]
SK2282..G SK2382..G	29604000	0.49 [12.5]	1.57 [40]	0.59 [15]	0.63 [16]	M12 x 90	600 [2.67]	0.07 [1.8]
SK3282..G SK3382..G	29604000	0.49 [12.5]	1.57 [40]	0.59 [15]	0.71 [18]	M12 x 90	935 [4.16]	0.11 [2.9]
SK4282..G SK4382..G	29606000	0.83 [21]	2.36 [60]	1.18 [30]	0.87 [22]	M20 x 150	1661 [7.39]	0.29 [7.3]
SK5282..G SK5382..G	29606000	0.83 [21]	2.36 [60]	1.18 [30]	1.1 [28]	M20 x 150	2133 [9.49]	0.37 [9.4]
SK6282..G SK6382..G	29608000	0.98 [25]	3.15 [80]	1.57 [40]	1.38 [35]	M24 x 190	3779 [16.81]	0.36 [9.2]
SK7282..G SK7382..G	29608000	0.98 [25]	3.15 [80]	1.57 [40]	1.57 [40]	M24 x 200	4676 [20.8]	0.45 [11.4]
SK8282..G SK8382..G	29610000	1.22 [31]	3.94 [100]	1.97 [50]	1.97 [50]	M30 x 260	6382 [28.39]	0.64 [16.3]
SK9282..G SK9382..G	29610000	1.22 [31]	3.94 [100]	1.97 [50]	2.17 [55]	M30 x 260	9777 [43.49]	0.98 [24.9]

Type	Rubber Buffer P/N	CB inch [mm]	CA inch [mm]	CD inch [mm]	CM inch [mm]	Bolt d x l [metric]	FD lb [kN]	SFD inch [mm]
SK7282.VG SK7382.VG	29620850	0.98 [25]	3.35 [85]	2.36 [60]	1.57 [40]	M24 x 240	4676 [20.8]	0.48 [12.2]
SK8282.VG SK8382.VG	29621100	1.22 [31]	4.33 [110]	3.54 [90]	1.97 [50]	M30 x 340	6382 [28.39]	0.76 [19.3]
SK9282.VG SK9382.VG	29621400	1.22 [31]	5.51 [140]	4.33 [110]	2.17 [55]	M30 x 380	9777 [43.49]	0.83 [21.2]
SK10282.VG SK10382.VG	29621800	1.22 [31]	5.51 [140]	4.33 [110]	3.15 [80]	M30 x 430	12670 [56.36]	1.08 [27.4]
SK11282.VG SK11382.VG	29621800	1.93 [49]	7.09 [180]	5.91 [150]	3.54 [90]	M48 x 550	18185 [80.89]	1.52 [38.5]
SK12382.VG	29621800	1.93 [49]	7.09 [180]	5.91 [150]	3.54 [90]	M48 x 550	23720 [105.51]	1.98 [50.2]

RIGHT-ANGLE SHAFT-MOUNT WITH TORQUE ARM (D)

1. Torque arm (D)

The preferred method of installing a shaft-mounted reducer is to support the weight of the gear unit or gearmotor assembly from the driven solid machine shaft. A torque arm is required in order to restrain the gearbox, react the load torque, and keep the gear unit from spinning around the shaft.

The Torque-Arm (D) bracket is mounted to either side of the right-angle gear unit using mounting screws that thread into the B14 flange-face of the reducer. The anchor hole of the torque-arm bracket is supplied with a resilient rubber bushing.

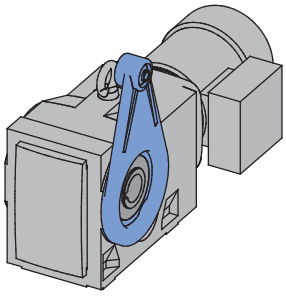

IMPORTANT NOTE

The side of the reducer that the torque arm is mounted on, and the angular position can be specified at time of order. Consult the appropriate NORD catalog for specific Torque Arm (D) mounting options and ordering guidelines.

2. Purpose of the built-in resilient rubber bushing

The resilient rubber bushing installed into the anchor hole end of the torque-arm helps isolate and absorb all the load forces present in the system and increase the reducer's service life by reducing cumulative torsional shock loads.

- The primary load force acts in the direction of driven shaft rotation, reacts the load torque of the reducer, and prevents the gearbox from spinning on the shaft.
- Additional forces present themselves in the direction opposite of the shaft rotation, due to the typical slight out-of-round condition present in the machine shaft. This condition is the reason most shaft mounted-reducers have a slight shaft-wobble, which is normal.

HARMFUL SITUATION

Always make sure that the Torque Arm (D) has the resilient rubber bushing installed into the anchor hole end of the torque arm. Failure to do so will not properly cushion the reducer and can result in excessive binding, bearing stress, and damage to the reducer.

3. Machine support

The user must supply a suitably strong and rigid mating machine support that provides load bearing capacity on both sides of the torque-arm bracket.

WARNING

It is the responsibility of the machine builder to design a support bracket of adequate strength and rigidity, and supply an appropriate tightening bolt assembly. Failure to do so may result in injury caused from a damaged or broken torque-reaction assembly.

4. Installation of a right-angle reducer with torque arm

A. Make sure the Torque-Arm (D) is mounted in the correct position on the reducer. Assembled screw heads should always sit flush with the torque arm.
   - To reposition the torque-arm, remove the mounting screws, relocate the torque-arm, and reassemble the mounting screws as noted above.
   - If the torque-arm was shipped loose, position the torque-arm in the correct location on the gear unit, and secure the torque-arm as noted above.

IMPORTANT NOTES

- Torque arm mounting screws should be secured with a thread locking product (ex. Loctite® 242 or Loxeal® 54-03) and tightened per the table on page 2.
- Assembled screw heads should always sit flush with the torque arm.
- The support bracket should provide support on both sides of the torque arm or be in the form of a U-shape.
- Do not force the torque-arm. The torque arm must remain at a right angle to the gear unit.
- If mounting holes do not align properly the machine support may need to be moved.

B. Install the right-angle hollow bore reducer onto the machine shaft. Then line up the hole in the reducer's torque-arm with the hole in the machine's support bracket, and temporarily hold the reducer in place.

C. Apply a thread locking compound such as Loctite® 242 or Loxeal® 54-03 to the end of the anchor bolt that is used to secure the torque arm in place.

D. Place the anchor bolt through the support bracket and the reducer torque-arm. Attach the mating nut to the bolt and tighten the assembly until snug. At least one bolt diameter should protrude from the nut after assembly.

WARNING

Do not force misalignment of the torque-arm. The torque arm must remain at a right angle to the gear unit or excessive load may be placed on the reducer shaft and bearings.

E. Properly secure the gear unit assembly to the driven shaft in an axial direction.

Table 1 - Torque Arm (D) with rubber buffer

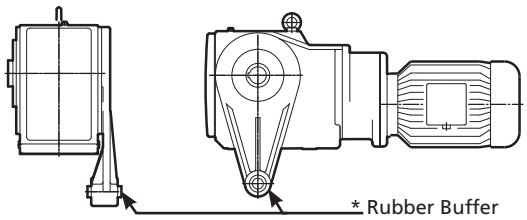

- For all 90.1 Series Helical-Bevel gear units, NORD also offers a bottom mount Torque Arm (K). See User Manual U10620.
- For the large 90.1 Series Helical-Bevel gear units sizes: SK9082.1, SK9086.1, SK9092.1, and SK9096.1, please use the Torque Arm (K).
- A metric fixing bolt is preferred for fastening the Torque-Arm(D) to the machine support bracket.

Gear Unit Series	Torque Arm				Torque Arm Mounting Screw					
	Type	Rubber Buffer P/N	Anchor Hole Size	Anchor Bolt Size	Qty	Size	Grade	Torque (Nm)	Torque (lb-ft)	Torque (lb-in)
92.1/93.1 Series Helical-Bevel	SK92072.1AD/SK93072.1AD	29602505	10.5 mm [0.41 in]	M10	4	M8 x 25	8.8	27	20	35
	SK92172.1AD/SK93172.1AD	29602505	10.5 mm [0.41 in]	M10	4	M8 x 25	8.8	27	20	35
	SK92372.1AD/SK93372.1AD	29602505	10.5 mm [0.41 in]	M10	4	M10 x 30	8.8	53	39	35
	SK92672.1AD/SK93672.1AD	29602505	10.5 mm [0.41 in]	M10	4	M10 x 30	8.8	53	39	35
	SK92772.1AD/SK93772.1AD	29603605	16.5 mm [0.65 in]	M16	4	M12 x 30	8.8	92	68	35
92 Series Helical-Bevel	SK92172AZD	29602505	10.5 mm [0.41 in]	M10	8	M6 x 16	8.8	11	8	71
	SK92372AZD	29602505	10.5 mm [0.41 in]	M10	8	M8 x 25	8.8	27	20	71
	SK92672AZD	29602505	10.5 mm [0.41 in]	M10	8	M8 x 25	8.8	27	20	71
	SK92772AZD	29603605	16.5 mm [0.65 in]	M16	8	M8 x 25	8.8	27	20	71
90.1 Series Helical-Bevel	SK9012.1AZD/SK9013.1AZD	29602505	10.5 mm [0.41 in]	M10	7	M8 x 20	8.8	27	20	62
	SK9016.1AZD/SK9017.1AZD	29602505	10.5 mm [0.41 in]	M10	7	M8 x 20	8.8	27	20	62
	SK9022.1AZD/SK9023.1AZD	29603605	16.5 mm [0.65 in]	M16	7	M8 x 25	8.8	27	20	62
	SK9032.1AZD/SK9033.1AZD	29603605	16.5 mm [0.65 in]	M16	7	M10 x 30	8.8	53	39	62
	SK9042.1AZD/SK9043.1AZD	29605205	25 mm [0.98 in]	M24	7	M12 x 35	8.8	92	68	62
	SK9052.1AZD/SK9053.1AZD	29605205	25 mm [0.98 in]	M24	7	M12 x 35	8.8	92	68	62
	SK9072.1AZD	29605205	25 mm [0.98 in]	M24	7	M16 x 45	8.8	230	170	62
Helical-Worm	SK02040AZD	29602505	10.5 mm [0.41 in]	M10	4	M6 x 20	8.8	11	8	35
	SK02050AZD/SK13050AZD	29602505	10.5 mm [0.41 in]	M10	4	M8 x 20	8.8	27	20	35
	SK12063AZD/SK13063AZD	29602505	10.5 mm [0.41 in]	M10	7	M8 x 22	8.8	27	20	62
	SK12080AZD/SK13080AZD	29602505	10.5 mm [0.41 in]	M10	7	M10 x 25	8.8	53	39	62
	SK32100AZD/SK33100AZD	29603605	16.5 mm [0.65 in]	M16	7	M12 x 30	8.8	92	68	62
	SK42125AZD/SK43125AZD	29603605	16.5 mm [0.65 in]	M16	7	M12 x 30	8.8	92	68	62
MINICASE® SMI Series Worm	SK1SMI31AZD	29602505	10.5 mm [0.41 in]	M10	4	M6 x 16	8.8	11	8	35
	SK1SMI40AZD/SK2SMI40AZD	29602505	10.5 mm [0.41 in]	M10	4	M8 x 22	8.8	27	20	35
	SK1SMI50AZD/SK2SMI50AZD	29602505	10.5 mm [0.41 in]	M10	4	M8 x 22	8.8	27	20	35
	SK1SMI50AZD/SK2SMI50AZD	29602505	10.5 mm [0.41 in]	M10	4	M8 x 22	8.8	27	20	35
	SK1SMI63AZD/SK2SMI63AZD	29602505	10.5 mm [0.41 in]	M10	4	M10 x 25	8.8	53	39	35
	SK1SMI75AZD	29602505	10.5 mm [0.41 in]	M10	4	M12 x 30	8.8	92	68	35
MINICASE® SM Series Worm	SK1SM31AZD	29602505	10.5 mm [0.41 in]	M10	4	M6 x 20	8.8	11	8	35
	SK1SM40AZD/SK2SM40AZD	29602505	10.5 mm [0.41 in]	M10	4	M8 x 20	8.8	27	20	35
	SK1SM50AZD/SK2SM50AZD	29602505	10.5 mm [0.41 in]	M10	4	M8 x 20	8.8	27	20	35
	SK1SM63AZD/SK2SM63AZD	29602505	10.5 mm [0.41 in]	M10	4	M8 x 20	8.8	27	20	35
"FLECBLOC™ SI Series Worm"	SK1SI31D	29602505	10.5 mm [0.41 in]	M10	4	M6 x 16	8.8	11	8	35
	SK1SI40D	29602505	10.5 mm [0.41 in]	M10	4	M8 x 22	8.8	27	20	35
	SK1SI50D	29602505	10.5 mm [0.41 in]	M10	4	M8 x 22	8.8	27	20	35
	SK1SI63D	29602505	10.5 mm [0.41 in]	M10	4	M10 x 25	8.8	53	39	35
	SK1SMI75D	29602505	10.5 mm [0.41 in]	M10	4	M12 x 30	8.8	92	68	35

90.1 HELICAL-BEVEL SHAFT-MOUNT WITH BOTTOM MOUNT TORQUE ARM (K)

1. Torque arm (K)

The preferred method of installing a shaft-mounted reducer is to support the weight of the gear unit or gearmotor assembly from the driven solid machine shaft. A torque arm is required in order to restrain the gearbox, react to the load torque, and keep the gear unit from spinning around the shaft.

Table 1 (Page 2) provides a list of Torque-Arm (K) part numbers available for the 90.1 Series Helical-Bevel gear units. The Torque Arm (K) is secured to the base of the reducer. On most sizes there is an integral resilient rubber bushing located at the fastening hole-end of the torque arm. On the larger sizes, rubber buffers are used in conjunction with the torque arm and when properly used they are applied in tandem, on either side of the torque arm lug.

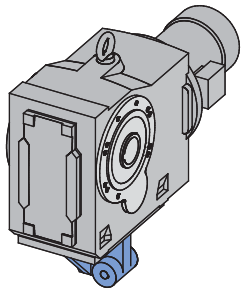

IMPORTANT NOTE

When ordering the Torque Arm (K) one can specify which side of the reducer to mount the fastening hole that bolts to the machine support bracket. Consult the appropriate NORD catalog for specific Torque Arm (K) mounting options and ordering guidelines.

2. Purpose of the rubber bushing or rubber buffers

Regardless if the Torque Arm (K) is supplied with the integral rubber bushing or whether separate rubber buffers are required, the bushing/buffers help isolate and absorb all the load forces present in the system and increase the reducer's service life by reducing cumulative torsional shock loads.

- The primary load force acts in the direction of driven shaft rotation, reacts the load torque of the reducer, and prevents the gearbox from spinning on the shaft.
- Additional forces present themselves in the direction opposite of the shaft rotation, due to the typical slight out-of-round condition present in the machine shaft. This condition is the reason most shaft mounted-reducers have a slight shaft-wobble, which is normal.

HARMFUL SITUATION

Always make sure that the Torque Arm (K) is used in conjunction with the required rubber bushing/s. Failure to do so will not properly cushion the reducer and can result in excessive binding, bearing stress, and damage to the reducer.

3. Machine support

The user must supply a suitably strong and rigid mating machine support that provides load bearing capacity on both sides of the machine support bracket.

WARNING

It is the responsibility of the machine builder to design a support bracket of adequate strength and rigidity, and supply an appropriate tightening bolt assembly. Failure to do so may result in injury caused from a damaged or broken torque-reaction assembly.

4. Installation of the right-angle reducer with torque arm (K)

A. Make sure the Torque-Arm (K) is mounted so that the machine fastening hole is on the correct side of the reducer.
   - The torque-arm can be repositioned on the as-received unit by removing the fixing screws, re-position the torque-arm in the correct location, and re-securing the fixing screws to the proper tightening torque, as indicated in Table 2 (Page 2).
   - If the torque-arm was shipped loose, position the torque-arm in the correct location on the gear unit, and secure the torque-arm with the proper fixing screws & tightening torque, as indicated in Table 2 (Page 2).

B. Install the right-angle hollow bore reducer onto the machine shaft. Line up the hole in the reducer's torque-arm with the hole in the machine's support bracket ,and temporarily hold the reducer in place

C. Properly secure the gear unit assembly to the driven shaft in an axial direction.

D. Apply thread locking compound to the end of the fixing bolt, then place the fastening bolt through the rigid machine support bracket and reducer torque-arm and loosely secure the nut onto the end of the bolt.

E. If the torque arm has an integral rubber bushing follow step F and skip steps G-H. If the torque arm uses rubber buffers skip forward to steps G-H.

F. Tighten the fixing bolt to the proper tightening torque as indicated in Table 2 (Page 2).

G. Install the rubber buffers on either side of the gear unit's torque-arm lug and place the fixing bolt through the rubber buffers and torque-arm lug and into the rigid machine support bracket.

H. Tighten the fixing bolt and nut lightly snug, until all the free-play is eliminated from the rubber buffer assembly. Then snug the fixing bolt assembly by tightening an additional ¼ to ½ turn.

WARNING

To prevent damage to the rubber buffers, avoid over-tightening.

90.1 HELICAL-BEVEL SHAFT-MOUNT WITH BOTTOM MOUNT TORQUE ARM (K)

Torque Arm (K) with integrated bushing

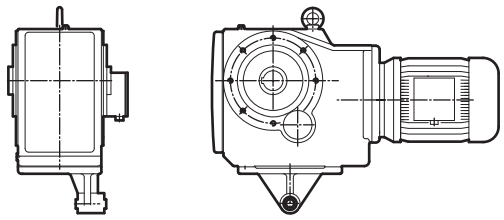

Available for Sizes SK9012.1 - SK9072.1

- For most all 90.1 series Helical-Bevel gear units, an optional tear-drop shaped side -mounted torque arm (D) is available. See user manual U10600.

Torque Arm (K) with rubber buffer

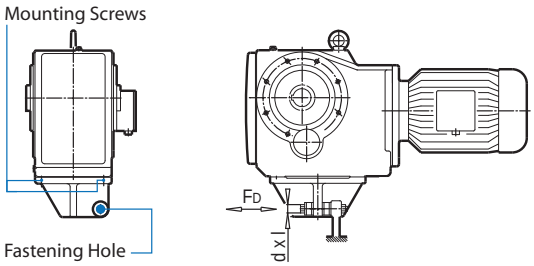

Available for Sizes SK9082.1 - SK90906.1

- A metric fixing bolt is preferred for fastening the torque arm (K) to the machine support bracket.

Type	Torque Arm P/N	Reducer Hardware Hex Head Cap Screws + Lock Washer	Mounting Screw P/N	Lock Washer P/N	Rubber Buffer P/N	Fastening Hole In [mm]	Fastening Bolt Size	Bolt d x l [metric]	FD lb [N]	SFD inch [mm]
SK9012.1...K SK9013.1...K	68190600	M10 X 30 + A10 (Qty 3 Ea.)	22010300	28560106	N/A	0.41 [10.5]	M10	N/A	N/A	N/A
SK9016.1...K SK9017.1...K	68190600	M10 X 30 + A10 (Qty 3 Ea.)	22010300	28560106	N/A	0.41 [10.5]	M10	N/A	N/A	N/A
SK9022.1...K SK9023.1...K	68290610	M12 X 35 + A12 (Qty 3 Ea.)	22012350	28560126	N/A	0.65 [16.5]	M16	N/A	N/A	N/A
SK9032.1...K SK9033.1...K	68390610	M12 X 35 + A12 (Qty 3 Ea.)	22012350	28560126	N/A	0.65 [16.5]	M16	N/A	N/A	N/A
SK9042.1...K SK9043.1...K	68490610	M16 X 40 + A16 (Qty 3 Ea.)	22016400	28560166	N/A	0.98 [25]	M24	N/A	N/A	N/A
SK9052.1...K SK9053.1...K	68590620	M16 X 40 + A16 (Qty 3 Ea.)	22016450	28560166	N/A	0.98 [25]	M24	N/A	N/A	N/A
SK9072.1...K	68690620	M24 X 60 + A24 (Qty 4 Ea.)	22024060	28560246	N/A	0.98 [25]	M24	N/A	N/A	N/A
SK9082.1...K SK9082.1...SHK	68819010	M24 x 65 + A24 (Qty 4 Ea.)	22024650	22024650	29610000	1.22 [31]	M30	M30 x 260	5300 [23.64]	0.53 [13.5]
SK9086.1...K SK9086.1...SHK	68819010	M24 x 65 + A24 (Qty 4 Ea.)	22024650	22024650	29610000	1.22 [31]	M30	M30 x 260	6900 [30.77]	0.69 [17.6]
SK9092.1...SHK	68919010	M36 x 90 + A36 (Qty 4 Ea.)	22036900	28560366	29610000	1.22 [31]	M30	M30 x 260	10300 [45.71]	1.03 [26.2]
SK9096.1...SHK	69019000	M42 x 120 + A42 (Qty 4 Ea.)	22042120	28560426	29621800	1.93 [49]	M48	M48 x 550	12,500 [55.56]	1.06 [27.0]

HELICAL & BEVEL REDUCER LUBRICATION

1. Importance of proper lubrication

Proper gearbox lubrication is essential in order to reduce friction, heat, and component wear. Lubricants reduce heat and wear by inserting a protective "fluid boundary" between mating parts and preventing direct metal to metal contact. Lubricants also help prevent corrosion and oxidation, minimize foam, improve heat transfer, optimize reducer efficiency, absorb shock loads and reduce noise.

Most NORD reducers are shipped from the factory with a pre-determined oil fill level in accordance to the specified reducer size and mounting position.

2. Standard oil type

The following tables indicate the standard oil fill type used. Please see user manual U11000 for more specific information and for optional helical and bevel gear lubricants:

Serviceable Gear Units	
Helical In-line	Standard Oil Fill: ISO VG 220, Mineral Oil
Clincher Parallel-Shaft	
Right-Angle Bevel	
NORDBLOC® Series In-line	
NORDBLOC®.1 Series In-line	
Standard Series In-line	

IMPORTANT NOTE

For shipping purposes, the following large Clincher™ gear units are supplied without oil:
• Clincher™ Sizes SK11282, SK11382 and SK12382

Maintenance-free / Lubricated For Life Gear Units	
Clincher™ sizes SK0182NB, SK0282NB & SK1382NB	Standard Oil Fill: ISO VG220 SHC/PAO Synthetic Oil
NORDBLOC® Sizes SK172, SK272, SK371F, SK372, SK373, SK320	

IMPORTANT NOTE

Maintenance-free units are supplied as sealed units with no vent-plug. Consult NORD prior to ordering if interested in ordering any of the above sizes as serviceable gear units.

IMPORTANT NOTE

Consult the sticker adjacent to the fill plug to determine the type of lubricant installed at the factory. Some units have special lubricants designed to operate in certain environments or intended to extend the service life or service temperature range of the lubricant. If in doubt about which lubricant is needed for a certain application, please contact NORD Gear.

3. Lubrication replacement

If the gear unit is filled with mineral oil, the lubricant should be replaced at least after every 10,000 operating hours or after every two years. If the gear unit is filled with synthetic oil, the lubricant should be replaced at least after every 20,000 operating hours or after every four years. Often gear reducers are exposed to extreme ambient conditions, hostile environments, wet conditions, or dirty and dusty operating areas. Especially in these situations, it is important to establish a condition-based oil service interval.

4. Oil viscosity

Viscosity, or the oil's resistance to shear under load, is often considered the single most important property of any gear oil.

- Often one will consider making a viscosity correction to the oil to improve the performance when operating the gear unit at low temperature or high temperature.
- In cases of extreme load conditions, gear pairs and antifriction bearings may be more susceptible to sliding or scuffing wear. In these operating conditions, it may also be beneficial to consider an increased lubrication viscosity and/or a lubrication with improved antiwear additive packages.

IMPORTANT NOTE

The user should consult with their primary lubrication supplier before considering changes in oil type or viscosity.

5. Maximum oil sump temperature limit

To prevent reducer overheating, the reducer's maximum oil sump temperature limit must not be exceeded for prolonged periods of operation (up to 3 hours continuous operation depending upon reducer size).

Oil Type	Maximum Oil Temperature Limit	
	NORD	AGMA 9005-D94
Mineral	80-85°C (176-185°F)	95°C (203°F)
Synthetic	105°C (220°F)	107°C (225°F)

IMPORTANT NOTE

Use caution when specifying gear reducers for high temperature service. If there is concern about exceeding the allowable safe operating temperatures, please consult NORD to discuss alternatives.

6. The importance of routine oil analysis

Routine oil analysis, sound lubrication practices, and good tracking of oil performance trends will help establish proper lubrication maintenance and change-out intervals. To maximize equipment reliability, NORD Gear generally recommends a condition-based lubrication maintenance program. One may take exceptions to this general recommendation on sealed-for-life or maintenance-free gear units or smaller and less costly gear units. In these instances, the replacement cost of the gear unit is often small compared to the costs associated with this type of oil analysis program.

STOP *HARMFUL SITUATION* **STOP**

NORD suggests replacing the gear oil if oil analysis indicates any of the following:

- Viscosity has changed by approximately 10% or more.
- Debris particles (silicon, dust, dirt or sand) exceed 25 ppm.
- Iron content exceeds 150-200 ppm.
- Water content is greater than 0.05% (500 ppm).
- The total acid number (TAN) tests indicate a significant level of oxidative break-down of the oil, and a critical reduction in performance; If the TAN number measured changes by more than 5% over the new oil, then an oil change would be recommended.

7. Mounting position and oil fill quantity

All NORD Gear reducers are shipped from the factory with a pre-determined oil fill level in accordance to the specified reducer size and mounting position. ***For additional information, please see the seperate mounting position diagrams and the corresponding oil fill quantity tables for the specified gear unit.***

The gearbox nametag will indicate the mounting position that was provided. ***For mounting orientations other than shown in the mounting position charts, please consult NORD Gear.***

STOP *HARMFUL SITUATION* **STOP**

Actual oil volume can vary slightly depending upon the gear case size, mounting and ratio. Prior to commissioning the reducer, check the oil-fill level using the reducer's oil-level plug and drain or add additional oil as needed. The minimum acceptable oil level is 0.15 in (4mm) below the oil level hole.

8. Oil plug locations

All gear units are assembled with the oil fill-level, oil-drain and vent plugs installed in their proper locations, according to the specified mounting position. All standard plugs are metric and utilize sealing gaskets between the head of the plug and the reducer housing.

9. Drain and fill-level plugs

All reducer drain plugs are metric socket head cap screws. For easier identification, it is NORD's standard practice to provide a hex-head screw for the fill-level plug. For ease of draining the used oil from the gear reducer, use the socket head screw located at the lowest part of the gearbox.

Drain Plug

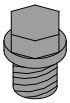

Fill Level Plug

10. Vent plug locations

Reducer venting allows for air pressure differences that occur during operation, between the inner space of the reducer and the atmosphere, while ensuring leak-free operation. The AUTOVENT™ is standard for all vented gear units, unless otherwise noted.

AUTOVENT™ - The AUTOVENT™ helps prevent bearing and gear damage by behaving like a check valve to block the entry of foreign material (water, dust, corrosives, etc.). The breather opens at approximately 2-3 psi during operation and closes tightly as the gearbox cools. This option is perfect for humid conditions and wash-down environments, helping to maintain proper oil cleanliness, and reducing foaming and oxidation. NORD may choose to offer one of two style options as shown in Figure 1. The Type 2 AUTOVENT™ comes closed upon delivery with a transportation sealing plug (see Warning).

Figure 1 AUTOVENT™ Types

Type 1

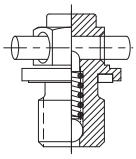

Type 2 with transportation plug

Open Vent - An optional open vent can be supplied by NORD. The open vent comes closed upon delivery with a transportation sealing plug (see Warning).

⚠ *WARNING* ⚠

To prevent build-up of excessive pressure, sealed vents must be activated as shown prior to gear unit start up.

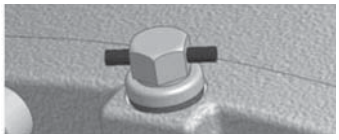

Sealed vent

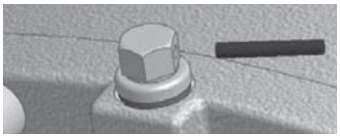

Activated vent

Filtered Vent - NORD may offer an optional filtered vent, which allows gases to permeate, but does not allow dust and debris to pass through the vent.

VL2 & VL3
EXTENDED BEARING LUBRICATION

1. VL2 – Spread Bearing Design

NORD offers reinforced output shaft bearings with increased bearing distance. The lower bearing is a oversized, double row spherical bearing, which absorbs high overhung and thrust loads while providing a longer bearing service life. The spherical roller bearing is especially useful in compensating for alignment errors in long agitator shafts. The VL2 spread bearing design is commonly used for shredders, mixers, overhead conveyors or applications requiring increased bearing load carrying capacities. Included with the VL2 design is a grease fitting for the lower bearing and a removable plug to allow excess grease to purge from the bearing cavity.

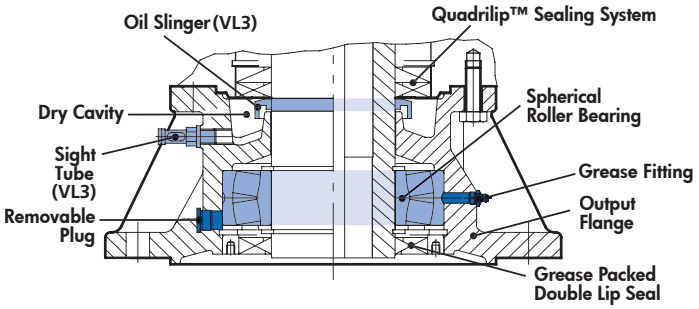

2. VL3 – Spread Bearing Design with Oil Safe Dry Cavity

The VL3 dry cavity design adds additional oil leak protective measures to the VL2 spread bearing design. NORD's Quadralip™ sealing system prevents oil from leaking from the gearbox into the VL2 flange. If in any case oil does leak past the Quadralip™ seals, it would flow down to the oil slinger mounted onto the shaft. As the shaft rotates, the oil will sling off into the dry cavity. A sight tube is provided for dry cavity inspection. At the bottom of the spread bearing flange is greased packed, double lip seal.

3. Service Guidelines for the Extended Bearing Flange

The spherical roller bearing on the extended bearing housing should be re-greased with 0.75 to 1.0 ounces (20-25 grams) of grease after every 2,500 hours of service or at least every 6 months. Prior to re-greasing the screw plug located opposite to the grease nipple should be unscrewed. After re-greasing the screw plug must be reinstalled and tightened. The extended bearing is factory assembled with the proper amount and type of grease. The type of grease supplied depends upon the type of oil specified at time of order.

Bearing Grease Options

Reducer Oil Type	Grease Type	Thickener Type	NLGI Grade	Ambient Temperature Range	Manufacture Brand / Type
Mineral	Standard	Li-Complex	NLGI 2	-30 to 60 °C (-22 to 140 °F)	Mobil Grease XHP222
Synthetic	High-Temperature	Polyurea	NLGI 2	-25 to 80 °C (-13 to 176 °F)	Mobil / Polyrex EP 2
Food-Grade	Food-Grade	Al-Complex	NLGI 2	-25 to 40 °C (-13 to 104 °F)	Mobil / FM222

STOP *HARMFUL SITUATION* STOP

Grease compatibility depends upon the type of thickener or soap complex used, the base oil type suspended within the thickener, and the type of additives used. The user should check with the lubrication supplier before making substitutions in brand and type in order to assure compatibility and to avoid causing possible damage to the extended bearing.

HELICAL-WORM REDUCER LUBRICATION

1. Importance of proper lubrication

Proper gearbox lubrication is essential in order to reduce friction, heat, and component wear. Lubricants reduce heat and wear by inserting a protective "fluid boundary" between mating parts and preventing direct metal to metal contact. Lubricants also help prevent corrosion and oxidation, minimize foam, improve heat transfer, optimize reducer efficiency, absorb shock loads and reduce noise.

NORD helical-worm reducers are shipped from the factory with a pre-determined oil fill level in accordance to the specified reducer size and mounting position.

2. Standard oil type

NORD helical worm gear reducers are filled with ISO VG 680 synthetic-hydrocarbon/polyalphaolefin (SHC/PAO) worm gear oil.

- SHC/PAO worm gear oils have good high and low temperature stability, are compatible with most paint and seal types, and are miscible with mineral oils.
- SHC/PAO worm gear oils also contain a small amount of organic ester and other antiwear (AW) packages to offer improved lubrication conditions, especially in the worm mesh, where a sideways sliding motion prevails.

Please see user manual U11020 for more specific information and for optional helical worm lubricants.

HARMFUL SITUATION

In worm gears avoid using extreme pressure (EP) gear oils containing sulfur-phosphorous chemistries; these additives can react adversely with bronze worm gears, and accelerate wear.

IMPORTANT NOTE

Consult the sticker adjacent to the fill plug to determine the type of lubricant installed at the factory. Some units have special lubricants designed to operate in certain environments or intended to extend the service life or service temperature range of the lubricant. If in doubt about which lubricant is needed for a certain application, please contact NORD Gear.

3. Lubrication replacement

The helical-worm gear oil should be replaced at least after every 20,000 operating hours or after every four years. Often gear reducers are exposed to extreme ambient conditions, hostile environments, wet conditions, or dirty and dusty operating areas. Especially in these situations, it is important to establish a condition-based oil service interval.

4. Efficiency

Helical worm gears reach efficiencies up to 92% and are generally much more efficient than worm-only gear units. However, it is important to consider the following, when using worm gears.

- Worm gears reach their peak rated efficiency, after they undergo a natural run-in process (up to 25 hours operating time at maximum rated load). Catalog published power and torque figures are based upon the rated efficiency after the run-in is complete.
- Worm gears have naturally lower startup efficiencies compared to operating efficiencies. As input speed increases the enhanced hydrodynamic effects of the oil result in less tooth friction and increased worm gear efficiency.

IMPORTANT NOTE

Worm gear reducers applied in cold temperature service, may require increased motor power for the following reasons:

- Lower operating temperatures, cause lubrication viscosity to increase in both the gearbox and in the moving areas of the driven machine.
- Worm-gears have naturally lower start-up efficiencies compared to operating efficiencies.
- In extreme cases, one might need to consider increasing the motor power and lowering the oil viscosity

5. Oil Viscosity

Viscosity, or the oil's resistance to shear under load, is often considered the single most important property of any gear oil.

- Often one will consider making a viscosity correction to the oil to improve the performance when operating the gear unit at low temperature or high temperature.
- In cases of extreme load conditions, gear pairs and antifriction bearings may be more susceptible to sliding or scuffing wear. In these operating conditions, it may also be beneficial to consider an increased lubrication viscosity and/or a lubrication with improved antiwear additive packages.

IMPORTANT NOTE

The user should consult with their primary lubrication supplier before considering changes in oil type or viscosity.

6. Maximum oil sump temperature limit

To prevent reducer overheating, the reducer's maximum oil sump temperature limit must not be exceeded for prolonged periods of operation (up to 3 hours continuous operation depending upon reducer size).

Oil Type	Maximum Oil Temperature Limit	
	NORD	AGMA 9005-D94
Synthetic	105°C (220°F)	107°C (225°F)

IMPORTANT NOTE

Use caution when specifying gear reducers for high temperature service. If there is concern about exceeding the allowable safe operating temperatures, please consult NORD to discuss alternatives.

HELICAL-WORM REDUCER LUBRICATION

7. The importance of routine oil analysis

Routine oil analysis, sound lubrication practices, and good tracking of oil performance trends will help establish proper lubrication maintenance and change-out intervals. To maximize equipment reliability, NORD Gear generally recommends a condition-based lubrication maintenance program. One may take exceptions to this general recommendation on sealed-for-life or maintenance-free gear units or smaller and less costly gear units. In these instances, the replacement cost of the gear unit is often small compared to the costs associated with this type of oil analysis program.

STOP *HARMFUL SITUATION* **STOP**

NORD suggests replacing the gear oil if oil analysis indicates any of the following:

- Viscosity has changed by approximately 10% or more.
- Debris particles (silicon, dust, dirt or sand) exceed 25 ppm.
- Iron content exceeds 150-200 ppm.
- Water content is greater than 0.05% (500 ppm).
- The total acid number (TAN) tests indicate a significant level of oxidative break-down of the oil, and a critical reduction in performance; If the TAN number measured changes by more than 5% over the new oil, then an oil change would be recommended.

8. Mounting position and oil fill quantity

All NORD Gear reducers are shipped from the factory with a pre-determined oil fill level in accordance to the specified reducer size and mounting position. ***For additional information, please see the seperate mounting position diagrams and the corresponding oil fill quantity tables for the specified gear unit.***

The gearbox nametag will indicate the mounting position that was provided. ***For mounting orientations other than shown in the mounting position charts, please consult NORD Gear.***

STOP *HARMFUL SITUATION* **STOP**

Actual oil volume can vary slightly depending upon the gear case size, mounting and ratio. Prior to commissioning the reducer, check the oil-fill level using the reducer's oil-level plug and drain or add additional oil as needed. The minimum acceptable oil level is 0.15 in (4mm) below the oil level hole.

9. Oil plug locations

All gear units are assembled with the oil fill-level, oil-drain and vent plugs installed in their proper locations, according to the specified mounting position. All standard plugs are metric and utilize sealing gaskets between the head of the plug and the reducer housing.

10. Drain and fill-level plugs

All reducer drain plugs are metric socket head cap screws. For easier identification, it is NORD's standard practice to provide a hex-head screw for the fill-level plug. For ease of draining the used oil from the gear reducer, use the socket head screw located at the lowest part of the gearbox.

Drain Plug

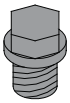

Fill Level Plug

11. Vent plug locations

Reducer venting allows for air pressure differences that occur during operation, between the inner space of the reducer and the atmosphere, while ensuring leak-free operation. The AUTOVENT™ is standard for all vented gear units, unless otherwise noted.

AUTOVENT™ - The AUTOVENT™ helps prevent bearing and gear damage by behaving like a check valve to block the entry of foreign material (water, dust, corrosives, etc.). The breather opens at approximately 2-3 psi during operation and closes tightly as the gearbox cools. This option is perfect for humid conditions and wash-down environments, helping to maintain proper oil cleanliness, and reducing foaming and oxidation. NORD may choose to offer one of two style options as shown in Figure 1. The Type 2 AUTOVENT™ comes closed upon delivery with a transportation sealing plug (see Warning).

Figure 1 AUTOVENT™ Types

Type 1

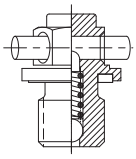

Type 2 with transportation plug

Open Vent - An optional open vent can be supplied by NORD. The open vent comes closed upon delivery with a transportation sealing plug (see Warning).

⚠ *WARNING* ⚠

To prevent build-up of excessive pressure, sealed vents must be activated as shown prior to gear unit start up.

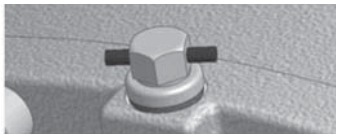

Sealed vent

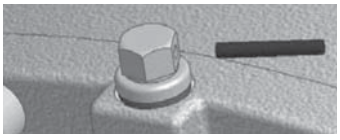

Activated vent

Filtered Vent - NORD may offer an optional filtered vent, which allows gases to permeate, but does not allow dust and debris to pass through the vent.

MINICASE® (SM SERIES) WORM GEAR LUBRICATION GUIDELINES

1. Importance of proper gearbox lubrication

Proper gearbox lubrication is essential in order to reduce friction, heat, and component wear. Lubricants reduce heat and wear by inserting a protective "fluid boundary" between mating parts and preventing direct metal to metal contact. Lubricants also help prevent corrosion and oxidation, minimize foam, improve heat transfer, optimize reducer efficiency, absorb shock loads and reduce noise.

2. Maintenance free design

MINICASE® (SM series) worm gear reducers are designed to be maintenance-free and are supplied completely sealed. They are factory oil-filled with a pre-determined oil fill amount in accordance to the specified reducer size and mounting position. The synthetic lubrication used is suitable for the life of the product so the MINICASE™ is inherently maintenance free.

3. Standard oil type

The standard factory oil fill for MINICASE® (SM) worm gear reducers is ISO viscosity VG synthetic hydrocarbon/polyalphaolefin (SHC/PAO oil) food grade oil suitable for NSF-H1 incidental contact and is a factory stocked lubricant. Food grade oil suitable for NSF-H1 incidental contact is a factory stocked option.

See user manual U11040 for specific information and for optional MINICASE® (SM) worm lubrication types and options.

HARMFUL SITUATION

In worm gears avoid using extreme pressure (EP) gear oils containing sulfur-phosphorous chemistries; these additives can react adversely with bronze worm gears, and accelerate wear.

4. Efficiency

It is important to consider the following, when using worm gears.

- Worm gears reach their peak rated efficiency, after they undergo a natural run-in process (up to 25 hours operating time at maximum rated load). Catalog published power and torque figures are based upon the rated efficiency after the run-in is complete.
- Worm gears have naturally lower startup efficiencies compared to operating efficiencies. As input speed increases the enhanced hydrodynamic effects of the oil result in less tooth friction and increased worm gear efficiency.

IMPORTANT NOTE

Worm gear reducers applied in cold temperature service, may require increased motor power for the following reasons:

- Lower operating temperatures, cause lubrication viscosity to increase in both the gearbox and in the moving areas of the driven machine.
- Worm-gears have naturally lower start-up efficiencies compared to operating efficiencies.
- In extreme cases, one might need to consider increasing the motor power and/or lowering the oil viscosity.

5. Maximum oil sump temperature limit

To prevent reducer overheating, the reducer's maximum oil sump temperature limit must not be exceeded for prolonged periods of operation (up to 3 hours continuous operation depending upon reducer size).

Oil Type	Maximum Oil Temperature Limit	
	NORD	AGMA 9005-D94
Synthetic	105°C (220°F)	107°C (225°F)

IMPORTANT NOTE

Use caution when specifying gear reducers for high temperature service. If there is concern about exceeding the allowable safe operating temperatures, please consult NORD to discuss alternatives.

MINICASE® (SM SERIES) WORM GEAR LUBRICATION GUIDELINES

6. Oil Viscosity

The viscosity rating determines the operating oil's resistance to shear under load conditions. Some important viscosity considerations include the following:

- Lightly loaded gears require lower viscosity oils than highly loaded gears.
- Lower viscosity will provide thin oil film, lower friction, higher mechanical efficiency, and better heat removal conditions.
- Higher viscosity will provide thicker oil film, and better resistance to sliding wear, scuffing wear, and galling at high pressure.
- Higher operating temperatures will cause a reduction in viscosity and lower operating temperatures, cause an increase in viscosity or a thickening of the oil.

The standard oil-fill is considered acceptable for most applications. In certain situations an oil viscosity change may be beneficial.

- If the gear unit is exposed to frequent high load conditions. A higher viscosity oil will have a higher film thickness offering better overall resistance to oil shear, sliding wear and scuffing wear in gears and roller element bearings.
- An oil viscosity correction or lubrication change may improve the overall performance when operating the gear unit at very low or high ambient temperature conditions.

IMPORTANT NOTE

The user should consult with their primary lubrication supplier before considering changes in oil type or viscosity.

7. Viscosity Index

Viscosity index helps quantify the rate of oil viscosity change with respect to temperature changes. Oils with a reasonably high viscosity index tend to be more stable in a changing temperature environment. The ability of an oil to maintain a small viscosity differential over the operating range of the gearbox provides a more consistent lubricating film and better wear performance.

Synthetic oils typically have a higher viscosity index than mineral oils and polyglycol oils tend to have an exceptionally high viscosity index compared to other synthetic oils like polyalphaolefin or ester based products.

MINICASE® (SMI/SMID) WORM GEAR LUBRICATION GUIDELINES

1. Importance of proper gearbox lubrication

Proper gearbox lubrication is essential in order to reduce friction, heat, and component wear. Lubricants reduce heat and wear by inserting a protective "fluid boundary" between mating parts and preventing direct metal to metal contact. Lubricants also help prevent corrosion and oxidation, minimize foam, improve heat transfer, optimize reducer efficiency, absorb shock loads and reduce noise.

2. Factory Oil-Filled / Maintence-Free

NORD modular worm gear units are inherently maintence-free, factory oil filled, and supplied with a high-quality, long-life, synthetic oil which is intend to be suitable for the life of the gear unit.

MINICASE® (SMI/SMID) worm gear units are assembled at the factory from stocked component parts. They are filled at time of assembly in accordance to the specified reducer mounting position. See user manuals U13150 and U13250 for more info.

3. Standard Oil Types

MINICASE® (SMI/SMID) worm gear units are factory filled with synthetic poly glycol oil. Food-grade polyglycol oil is optional. The specific oil type and viscosity grade are displayed on the reducer nameplate. See user manual 11050 for specific MINICASE® (SMI/SMID) worm lubrication types and options.

STOP *HARMFUL SITUATION* **STOP**

In worm gears avoid using extreme pressure (EP) gear oils containing sulfur-phosphorous chemistries; these additives can react adversely with bronze worm gears, and accelerate wear.

4. Efficiency

It is important to consider the following, when ordering worm gears.

- Worm gears reach their peak rated efficiency, after they undergo a natural run-in process (up to 25 hours operating time at maximum rated load). Catalog published power and torque figures are based upon the rated efficiency after the run-in is complete.
- Worm gears have naturally lower startup efficiencies compared to operating efficiencies. As input speed increases the enhanced hydrodynamic effects of the oil result in less tooth friction and increased worm gear efficiency.

IMPORTANT NOTE

Worm gear reducers applied in cold temperature service, may require increased motor power for the following reasons:

- Lower operating temperatures, cause lubrication viscosity to increase in both the gearbox and in the moving areas of the driven machine.
- Worm-gears have naturally lower start-up efficiencies compared to operating efficiencies.
- In extreme cases, one might need to consider increasing the motor power and lowering the oil viscosity

5. Optional Vent Kits

MINICASE® (SMI/SMID) worm gear units are designed to operate sealed or vented. As a standard the modular worm gear units are factory oil filled and supplied with oil plugs in the housing, making vent plugs optional. See user manual U14750.

NORD can supply an AUTOVENT™ or an open vent with each gear unit size. If a vent is desired the type must be specified at the time of order. Reducer vents are sealed with a transportation plug that must be removed prior to gear unit start-up.

Type	Transportation Seal	Installation	Part Number
AUTOVENT™	Included	Factory or Field site	66093510
Open Vent	None	Field Only	60693500
Open Vent	Included	Factory or Field site	22008004 (vent) 25308120 (gasket)

Unless noted by a seperate part number, vent kits include the housing gasket

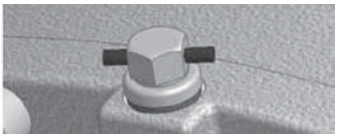

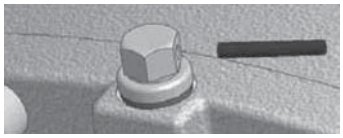

WARNING

To prevent build-up of excessive pressure, sealed vents must be activated as shown prior to gear unit start-up.

6. AUTOVENT™

The AUTOVENT™ helps prevent bearing and gear damage by behaving like a check valve to block the entry of foreign material (water, dust, corrosives, etc.). The breather opens at approximately 2-3 psi during operation and closes tightly as the gearbox cools. This option is perfect for humid conditions and wash-down environments, helping to maintain proper oil cleanliness, while reducing foaming and oxidation.

7. Open Vent

A typical gearbox industry open vent option can also be supplied by NORD. This option allows free exchange of air and does not build-up any back pressure inside the gear unit. This option is ideal for many operating conditions where the geared product is used in relatively clean and moisture-free environment.

8. When to Use a Sealed or a Vented Unit

There are many conditions that should be considered when deciding whether to use a sealed or vented unit.

1. If the duty cycle is intermittent, the run times are short, and any build-up of internal pressure or temperature is relatively low, the sealed unit option may be used.
2. If running continuous and under moderate to high load conditions, worm gears can generate higher operating temperatures and a build-up of internal pressure. In these instances a vent is strongly recommended. Consult NORD if operation at high load conditions is required.
3. If running continuous at 4-pole electric motor speeds (1800 rpm at 60 Hz) or higher, then a vent option is usually recommended. Consult NORD if operation at higher speeds is required.
4. Radial shaft seals produce a hydrodynamic pumping action to help push lubricant back into the gear unit, causing a small amount of ingested air and a small pressure increase (1-2 psi) that does not normally require a reducer vent; however when combined with continuous operation under high load (Condition 2), additional operating pressures will result and a vent should be used.
5. When the environment is contaminated with water, dirt, or other objects that may be ingested into the breather, increased wear of bearings, gearing, and lubrication breakdown can result. In these instances the sealed option or an AUTOVENT™ should be considered.

9. Maximum Oil Sump Temperature Limit

To prevent reducer overheating, the reducer's maximum oil-sump temperature limit must not be exceeded for prolonged periods of operation.

Oil Type	Maximum Oil Temperature Limit	
	NORD	AGMA 9005-D94
Synthetic	105°C (220°F)	107°C (225°F)

IMPORTANT NOTE

Use caution when specifying gear reducers for high temperature service. If there is concern about exceeding the safe operating temperature limit, please consult NORD to discuss alternatives.

10. Oil Viscosity

The viscosity rating determines the operating oil's resistance to shear under load conditions. Some important viscosity considerations include the following:

- Lightly loaded gears require lower viscosity oils than highly loaded gears.
- Lower viscosity will provide thin oil film, lower friction, higher mechanical efficiency, and better heat removal conditions.
- Higher viscosity will provide thicker oil film, and a better resistance to sliding wear, scuffing wear, and galling at high pressure.
- Higher operating temperatures will cause a reduc-tion in viscosity and lower operating temperatures, cause an increase in viscosity or a thickening of the oil.

The standard oil-fill is considered acceptable for most applications. In certain situations an oil viscosity change may be beneficial.

- If the gear unit is exposed to frequent high load conditions. A higher viscosity oil will have a higher film thickness offering better overall resistance to oil shear, sliding wear and scuffing wear in gears and roller element bearings.
- An oil viscosity correction or lubrication change may improve the overall performance when operating the gear unit at very low or high ambient temperature conditions.

IMPORTANT NOTE

The user should consult with their primary lubrication supplier before considering changes in oil type or viscosity.

11. Viscosity Index

Viscosity index helps quantify the rate of oil viscosity change with respect to temperature changes. Oils with a reasonably high viscosity index tend to be more stable in a changing temperature environment. The ability of an oil to maintain a small viscosity differential over the operating range of the gearbox provides a more consistent lubricating film and better wear performance.

Synthetic oils typically have a higher viscosity index than mineral oils and polyglycol oils tend to have an exceptionally high viscosity index compared to other synthetic oils like polyalphaolefin or ester based products.

FLEXBLOC™ (SI/SID SERIES) WORM GEAR LUBRICATION GUIDELINES

1. Importance of Proper Lubrication

Proper gearbox lubrication is essential in order to reduce friction, heat, and component wear. Lubricants reduce heat and wear by inserting a protective "fluid boundary" between mating parts and preventing direct metal to metal contact. Lubricants also help prevent corrosion and oxidation, minimize foam, improve heat transfer, optimize reducer efficiency, absorb shock loads and reduce noise.

2. Factory Oil-Filled / Maintence-Free

NORD modular worm gear units are inherently maintence-free, factory oil filled, and supplied with a high-quality, long-life, synthetic oil which is intend to be suitable for the life of the gear unit.

FLEXBLOC™ SI worm gear units are filled at time of assembly to a universal oil fill, allowing for many mounting position possibilities. See user manual U13300.

3. Standard oil type

FLEXBLOC™ (SI/SID) worm gear units are factory filled with synthetic poly glycol oil. Food-grade polyglycol oil is optional. The specific oil type and viscosity grade are displayed on the reducer nameplate. See user manual 11060 for specific FLEXBLOC™ (SI/SID) worm lubrication types and options.

STOP *HARMFUL SITUATION* **STOP**

In worm gears avoid using extreme pressure (EP) gear oils containing sulfur-phosphorous chemistries; these additives can react adversely with bronze worm gears, and accelerate wear.

4. Efficiency

It is important to consider the following, when ordering worm gears.

- Worm gears reach their peak rated efficiency, after they undergo a natural run-in process (up to 25 hours operating time at maximum rated load). Catalog published power and torque figures are based upon the rated efficiency after the run-in is complete.
- Worm gears have naturally lower startup efficiencies compared to operating efficiencies. As input speed increases the enhanced hydrodynamic effects of the oil result in less tooth friction and increased worm gear efficiency.

IMPORTANT NOTE

Worm gear reducers applied in cold temperature service, may require increased motor power for the following reasons:

- Lower operating temperatures, cause lubrication viscosity to increase in both the gearbox and in the moving areas of the driven machine.
- Worm-gears have naturally lower start-up efficiencies compared to operating efficiencies.
- In extreme cases, one might need to consider increasing the motor power and lowering the oil viscosity

5. Optional Vent Kits

FLEXBLOC™ (SI) worm gear units are designed to operate sealed or vented. As a standard the modular worm gear units are factory oil filled and supplied with oil plugs in the housing, making vent plugs optional. See user manual U14800 for vent locations.

NORD can supply an AUTOVENT™ or an open vent with each gear unit size. If a vent is desired the type must be specified at the time of order. Reducer vents are sealed with a transportation plug that must be removed prior to gear unit start-up.

Type	Transportation Seal	Installation	Part Number
AUTOVENT™	Included	Factory or Field site	66093510
Open Vent	None	Field Only	60693500
Open Vent	Included	Factory or Field site	22008004 (vent) 25308120 (gasket)

Unless noted by a seperate part number, vent kits include the housing gasket

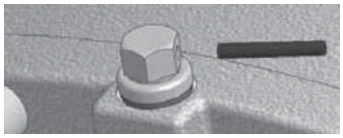

WARNING

To prevent build-up of excessive pressure, sealed vents must be activated as shown prior to gear unit start-up.

6. AUTOVENT™

The AUTOVENT™ helps prevent bearing and gear damage by behaving like a check valve to block the entry of foreign material (water, dust, corrosives, etc.). The breather opens at approximately 2-3 psi during operation and closes tightly as the gearbox cools. This option is perfect for humid conditions and wash-down environments, helping to maintain proper oil cleanliness, while reducing foaming and oxidation.

7. Open Vent

A typical gearbox industry open vent option can also be supplied by NORD. This option allows free exchange of air and does not build-up any back pressure inside the gear unit. This option is ideal for many operating conditions where the geared product is used in relatively clean and moisture-free environment.

FLEXBLOC™ (SI/SID SERIES) WORM GEAR LUBRICATION GUIDELINES

8. When to Use a Sealed or a Vented Unit

There are many conditions that should be considered when deciding whether to use a sealed or vented unit.

1. If the duty cycle is intermittent, the run times are short, and any build-up of internal pressure or temperature is relatively low, the sealed unit option may be used.
2. If running continuous and under moderate to high load conditions, worm gears can generate higher operating temperatures and a build-up of internal pressure. In these instances a vent is strongly recommended. Consult NORD if operation at high load conditions is required.
3. If running continuous at 4-pole electric motor speeds (1800 rpm at 60 Hz) or higher, then a vent option is usually recommended. Consult NORD if operation at higher speeds is required.
4. Radial shaft seals produce a hydrodynamic pumping action to help push lubricant back into the gear unit, causing a small amount of ingested air and a small pressure increase (1-2 psi) that does not normally require a reducer vent; however when combined with continuous operation under high load (Condition 2), additional operating pressures will result and a vent should be used.
5. When the environment is contaminated with water, dirt, or other objects that may be ingested into the breather, increased wear of bearings, gearing, and lubrication breakdown can result. In these instances the sealed option or an AUTOVENT™ should be considered.

9. Maximum Oil Sump Temperature Limit

To prevent reducer overheating, the reducer's maximum oil-sump temperature limit must not be exceeded for prolonged periods of operation.

Oil Type	Maximum Oil Temperature Limit	
	NORD	AGMA 9005-D94
Synthetic	105°C (220°F)	107°C (225°F)

IMPORTANT NOTE

Use caution when specifying gear reducers for high temperature service. If there is concern about exceeding the allowable safe operating temperatures, please consult NORD to discuss alternatives.

10. Oil Viscosity

The viscosity rating determines the operating oil's resistance to shear under load conditions. Some important viscosity considerations include the following:

- Lightly loaded gears require lower viscosity oils than highly loaded gears.
- Lower viscosity will provide thin oil film, lower friction, higher mechanical efficiency, and better heat removal conditions.
- Higher viscosity will provide thicker oil film, and better resistance to sliding wear, scuffing wear, and galling at high pressure.
- Higher operating temperatures will cause a reduction in viscosity and lower operating temperatures, cause an increase in viscosity or a thickening of the oil.

The standard oil-fill is considered acceptable for most applications. In certain situations an oil viscosity change may be beneficial.

- If the gear unit is exposed to frequent high load conditions. A higher viscosity oil will have a higher film thickness offering better overall resistance to oil shear, sliding wear and scuffing wear in gears and roller element bearings.
- An oil viscosity correction or lubrication change may improve the overall performance when operating the gear unit at very low or high ambient temperature conditions.

IMPORTANT NOTE

The user should consult with their primary lubrication supplier before considering changes in oil type or viscosity.

11. Viscosity Index

Viscosity index helps quantify the rate of oil viscosity change with respect to temperature changes. Oils with a reasonably high viscosity index tend to be more stable in a changing temperature environment. The ability of an oil to maintain a small viscosity differential over the operating range of the gearbox provides a more consistent lubricating film and better wear performance.

Synthetic oils typically have a higher viscosity index than mineral oils and polyglycol oils tend to have an exceptionally high viscosity index compared to other synthetic oils like polyalphaolefin or ester based products.

Installation Instructions

Sometimes NORD requires the use of an oil expansion chamber when the motor or reducer input is mounted vertically. Consult your NORD catalog for additional information and application considerations.

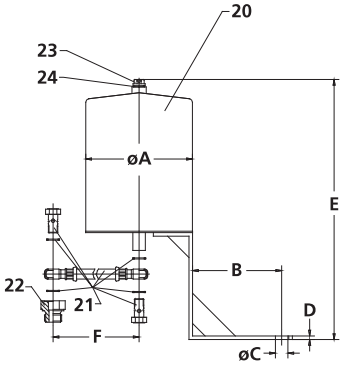

1. Secure the gear reducer in the proper mounting position for the application and remove the vent plug from the gear reducer. The hose assembly kit (21) will be fitted to the reducer using the housing port provided.
2. When using the larger 2.7 and 5.4 liter chambers, screw the adapter fitting (22) into the reducer housing port. Use all sealing gaskets provided.
3. Mount the overflow tank (20) at the highest location from the reducer, as permitted by the hose assembly kit (21). Typical mounting configurations are represented below. Use one of the input cover's mounting bolts, to mount the chamber support leg to the reducer.

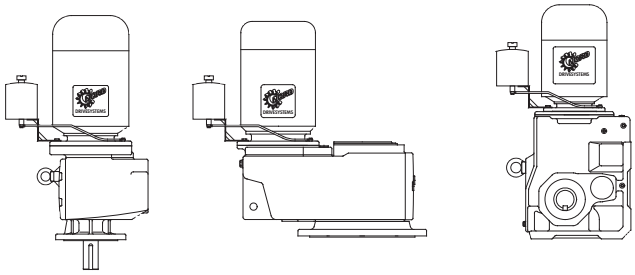

4. Be sure to use the proper fittings. Assemble one end of the vent-hose assembly (21) to bottom of the chamber and one-end to the reducer.
5. Secure the vent-plug (23) and gasket (24) that is supplied with the kit to the top of the expansion chamber.

STOP *HARMFUL SITUATION* STOP

Remove the protective "rubber element" from the supplied vent prior to use so that an open-vent is formed on top of the overflow tank. Avoid using a pressurized AUTOVENT™ breather on the overflow tank since this may create an undesired pressure-vacuum in the overflow tank.

Expansion Chamber Kit Dimensions & Parts List

Kit Part Number: 28390390 - 0.7 Liter Oil Expansion Chamber

Kit P/N	Ø A	B	Ø C	D	E	F	Units
28390390 (0.7 Liter)	3.94	1.97	0.53	0.20	8.50	19.69	inch
	100	50	13.5	5	216	500	mm

Item	Part Number	Description
20	28300390	Overflow Tank - 0.7 Liter
21	28310020	Flexible Vent Hose Assembly - Includes: Hose, metal gaskets & 2 Hollow Bolts (1 Bolt. - M12 X 1.5 and 1 Pc. - G1/4)
22	None	Adapter Fitting
23	22012004	Normal Style Vent Plug (M12 X 1.5, DIN 910)
24	25312150	Vent Plug Gasket (12 X 15.5 X 1.5)

Kit Part Number: 28390400 - 2.7 Liter Oil Expansion Chamber

Kit P/N	Ø A	B	Ø C	D	E	F	Units
28390400 (2.7 Liter)	5.91	4.92	0.69	0.20	15.22	27.56	inch
	150	125	17.5	5	386.5	700	mm

Item	Part Number	Description
20	28300400	Overflow Tank - 2.7 Liter
21	28310030	Flexible Vent Hose Assy - Includes: Hose, metal gaskets & 2 Hollow Bolts (2 Pcs. - G1/4)
22	22024030	Adapter Fitting (M24 X 1.5 to G1/4)
23	22012004	Normal Style Vent Plug (M12 X 1.5, DIN 910)
24	25312150	Vent Plug Gasket (12 X 15.5 X 1.5)

Kit Part Number: 28390410 - 5.4 Liter Oil Expansion Chamber

Kit P/N	Ø A	B	Ø C	D	E	F	Units
28390410 (5.4 Liter)	7.09	3.54	0.69	0.20	15.18	31.50	inch
	180	90	17.5	5	385.5	800	mm

Item	Part Number	Description
20	28300410	Overflow Tank - 5.4 Liter
21	28310040	Flexible Vent Hose Assy - Includes: Hose, metal gaskets & 2 Hollow Bolts (2 Pcs. - G1/4)
22	22030030	Adapter Fitting (M30 X 1.5 to G1/4)
23	22012004	Normal Style Vent Plug (M12 X 1.5, DIN 910)
24	25312150	Vent Plug Gasket (12 X 15.5 X 1.5)

Please see page 2 for gearbox compatability

Expansion Chamber Compatability Chart

Helical In-line	NORDBLOC™	NORDBLOC.1™	Clincher™	Helical-Bevel	Part Number	[lb]
SK 42/43 SK 52/53 SK 63	SK472/473 SK572/573 SK672/673 SK772/773 SK872/873 SK972/973	SK572.1/573.1* SK672.1/673.1*	SK 4282/4382 SK 5282/5382 SK 6382	SK 9042.1/9043.1 SK 9052.1/9053.1	28390390	11.0
SK 62 SK 72/73			SK 6282 SK 7282/7382	SK 9072.1 SK 9082.1	28390400	13.2
SK 82/83 SK 92/93 SK 102/103			SK 8282/8382	SK 9086.1 SK 9092.1 SK 9096.1	28390410	15.4

* Need to additionally order part #28390380 which is sub-assembly shown below.

Sub-Assembly P/N 28390380 for NORDBLOC®.1 gear units with M10x1 air vent.

❶	❷	❸	❹
1x DIN 7643 M10x1 283 00380	1x DIN 7603A Cu 10x16x1 253 10166	1x Ring 10x14x5 283 00370	1xDIN 9021 ø8,4 227 10840

Assembly of the expansion unit at the gear unit. Types SK 572.1/573.1, SK 672.1/673.1

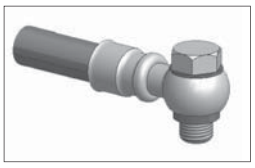

Vent Hose Sub-Assembly

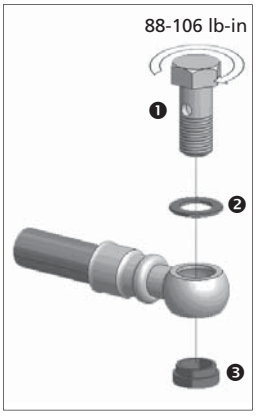

❹ For motor sizes 63, 71, 80, 90, 100 & 112

• Motor attachment bolt

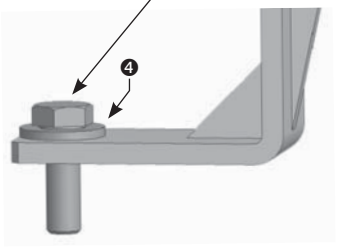

Motor Sizes 63, 71 & 80:
Assembly vent-hose to port as shown.

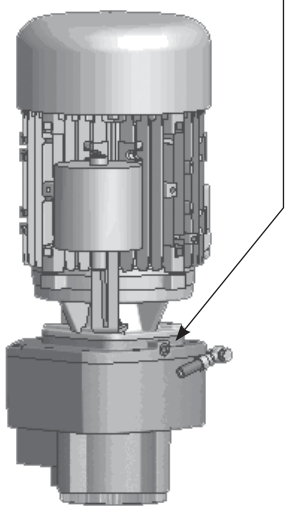

Motor Sizes 90,100 & 112:
Assembly vent-hose to port as shown.

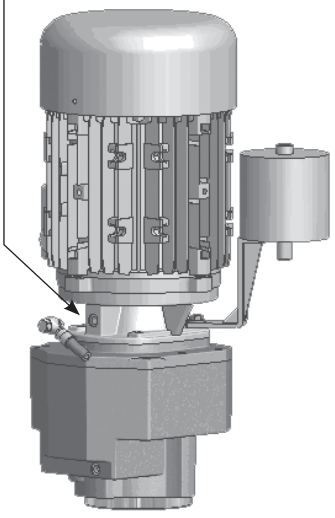

HELICAL & BEVEL REDUCER LUBRICATION TYPES

Lubrication Tables – Helical and Bevel Gear Units

Standard Oil Lubricants

ISO Viscosity	Oil Type	Ambient Temperature Range	Manufacturer Brand/Type	Notes
VG220	MIN-EP	0 to 40°C (32 to 104°)	Mobilgear 600XP220	♦❶
	PAO	-35 to 60°C (-31 to 140°F)	Mobil SHC630	♦❷
	FG	-5 to 40°C (23 to 104°F)	Fuchs FM220	♦

Optional Oil Lubricants

ISO Viscosity	Oil Type	Ambient Temperature Range	Manufacturer Brand/Type	Notes
VG460	PAO	-35 to 80°C (-31 to 176°F)	Mobil SHC 634	-
	FG-PAO	-35 to 80°C (-31 to 176°F)	Mobil SHC Cibus 460	-
VG220	FG-PAO	-35 to 60°C (-31 to 140°F)	Mobil SHC Cibus 220	-
VG150	PAO	-35 to 25°C (-31 to 77°F)	Mobil SHC629	-

Grease Options (applied to greased bearings and seal cavities)

NLGI Grade	Grease Type/Thickener	Ambient Temperature Range	Manufacturer Brand/Type	Notes
NLGI 2	Standard (Li-Complex)	-30 to 60°C (-22 to 140°F)	Mobil Grease XHP222	♦❶
	High Temp (Polyurea)	-40 to 80°C (-40 to 176°F)	Mobil / Polyrex EP 2	♦❷
	Food-Grade (Polyurea)	-30 to 40°C (-22 to 104°F)	Mobil SHC Polyrex 222	♦

♦ Stocked Lubricants

❶ Standard product on serviceable gear units

❷ Standard product on maintenance free gear units

IMPORTANT NOTES

- The "Ambient Temperature" is intended to be an operation guideline based upon the typical properties of all the lubricant. The viscosity and other properties of the lubricant change based upon load, speed, ambient conditions, and reducer operating temperatures. The user should consult with their lubrication supplier & NORD gear before considering changes in oil type or viscosity.
- To prevent reducer overheating, observe the maximum operating oil temperature limits:
  Mineral Oil: 80-85 °C (176 – 180 °F).
  Synthetic Oil: 105 °C (225 °F).
- In the following instances, please consult NORD for specific recommendations:
  - √ Gear units will operate in high ambient temperature conditions exceeding 40 °C (104 °F).
  - √ Gear units will operate in cold ambient temperature conditions approaching 0 °C (32 °F) or lower.
  - √ Lower than an ISO VG100 viscosity oil is being considered for a cold-temperature service.
  - √ Fluid grease is required for lubricating the gear unit.
- Observe the general lubrication guidelines outlined in user manual U10750.

Oil Formulation Codes

MIN-EP - Mineral Oil with EP Additive
PAO-EP - Synthetic Polyalphaolefin Oil with EP Additive
PAO - Synthetic Polyalphaolefin Oil
PG - Synthetic Polyglycol Oil
FG - Food-Grade Oil
FG-PAO - Food-Grade, Synthetic Poyalphaolefin Oil
FG-PG - Food-Grade, Synthetic Polyglycol Oil

Lubrication Notes

- Avoid using (EP) gear oils in worm gears that contain sulfur-phosphorous chemistries, as these additives can react adversely with bronze worm gears and accelerate wear.
- Food grade lubricants must be in compliance with FDA 212 CFR 178.3570 and qualify as a NSF-H1 lubricant. Please consult with lubrication manufacturer for more information.
- When making a lubrication change, check with the lubrication supplier to assure compatibility and to obtain recommended cleaning or flushing procedures.
- Do not to mix different oils with different additive packages or different base oil formulation types. Polyglycol (PG) oils are not miscible with other oil types and should never be mixed with mineral oil or polyalphaolefin (PAO) synthetic oil.

HELICAL & BEVEL REDUCER LUBRICATION TYPES

Oil Cross-reference Chart

ISO Viscosity	Oil Type	Ambient Temperature Range	Mobil	Shell	Castrol	FUCHS	KLÜBER LUBRICATION
VG150	MIN-EP	0 to 25°C (32 to 77°F)	Mobilgear 600XP150	Omala 150	Alpha SP150	Renolin EP150	Klüberoil GEM 1-150N
	PAO-EP	-30 to 25 °C (-22 to 77 °F)	Mobilgear SHC150	Omala HD 150	Alphasyn EP150	Gearmaster SYN150/NA	Klübersynth EG 4-150
	PAO	-30 to 25°C (-22 to 77°F)	Mobil SHC629	Omala RL 150	Alphasyn T150	N/A	Klübersynth GEM 4-150N
	PG	-25 to 25°C (-13 to 77°F)	Mobil Glygoyle 150	Tivela S150	Alphasyn PG150	Renolin PG150	Klübersynth GH 6-150
	FG	0 to 25°C (32 to 77°F)	Mobil DTE FM 150	N/A	N/A	N/A	N/A
	FG-PAO	-15 to 25°C (5 to 77°F)	Mobil SHC Cibus 150	N/A	N/A	Cassida GL150	Klüberoil 4 UH 1-150N
	FG-PG	-25 to 25°C (-13 to 77°F)	Mobil Glygoyle 150	N/A	N/A	N/A	Klübersynth UH1 6-150
VG220	MIN-EP	0 to 40°C (32 to 104°)	Mobilgear 600XP220	Omala 220	Alpha SP220	Renolin EP220	Klüberoil GEM 1-220N
	PAO-EP	-30 to 60 °C (-22 to 140 °F)	Mobilgear SHC220	Omala HD220	Alphasyn EP220	Gearmaster SYN220/NA	Klübersynth EG 4-220
	PAO	-30 to 60°C (-22 to 140°F)	Mobil SHC630	Omala RL220	Alphasyn T220	N/A	Klübersynth GEM 4-220N
	PG	-25 to 60°C (-13 to 140°F)	Mobil Glygoyle 220	Tivela S220	Alphasyn PG220	Renolin PG220	Klübersynth GH 6-220
	FG	0 to 40°C (32 to 104°F)	Mobil DTE FM 220	N/A	N/A	Fuchs FM220	N/A
	FG-PAO	-25 to 60°C (-13 to 140°F)	Mobil SHC Cibus 220	N/A	N/A	Cassida GL220	Klüberoil 4 UH 1-220N
	FG-PG	-25 to 60°C (-13 to 140°F)	Mobil Glygoyle 220	N/A	N/A	Cassida WG220	Klübersynth UH1 6-220
VG460	MIN-EP	0 to 40°C (32 to 104°F)	Mobilgear 600XP460	Omala 460	Alpha SP460	Renolin EP460	Klüberoil GEM 1-460N
	PAO-EP	-20 to 80°C (-4 to 176°F)	Mobilgear SHC460	Omala HD460	Alphasyn EP460	Gearmaster SYN460/NA	Klübersynth EG 4-460
	PAO	-20 to 80°C (-4 to 176°F)	Mobil SHC 634	Omala RL460	Alphasyn T460	N/A	Klübersynth GEM 4-460N
	PG	-20 to 80°C (-4 to 176°F)	Mobil Glygoyle 460	Tivela S460	Alphasyn PG460	N/A	Klübersynth GH 6-460
	FG	0 to 40°C (32 to 104°F)	Mobil DTE FM460	N/A	N/A	Fuchs FM460	N/A
	FG-PAO	-20 to 80°C (-4 to 176°F)	Mobil SHC Cibus 460	N/A	N/A	Cassida GL460	Klüberoil 4 UH 1-460N
	FG-PG	-20 to 80°C (-4 to 176°F)	Mobil Glygoyle 460	N/A	N/A	Cassida WG460	Klübersynth UH1 6-460

Low-end service temperature limit may vary for a specific lubricant; Please also see the important notes on Page 1.

HELICAL-WORM REDUCER LUBRICATION TYPES

Lubrication Tables – Helical Worm Gear Units

Standard Oil Lubricants

ISO Viscosity	Oil Type	Ambient Temperature Range	Manufacturer Brand/Type	Notes
VG680	PAO	0 to 60°C (32 to 140°F)	Mobil SHC636	♦

Optional Oil Lubricants

ISO Viscosity	Oil Type	Ambient Temperature Range	Manufacturer Brand/Type	Notes
VG460	PAO	0 to50°C (32 to 122°F)	Mobil SHC 634	-
	FG-PAO	0 to50°C (32 to 122°F)	Mobil SHC Cibus 460	-

Grease Options (applied to greased bearings and seal cavities)

NLGI Grade	Grease Type/Thickener	Ambient Temperature Range	Manufacturer Brand/Type	Notes
NLGI 2	Standard (Li-Complex)	-30 to 60°C (-22 to 140°F)	Mobil Grease XHP222	♦
	High Temp (Polyurea)	-40 to 80°C (-40 to 176°F)	Mobil / Polyrex EP 2	♦
	Food-Grade (Polyurea)	-30 to 40°C (-22 to 104°F)	Mobil SHC Polyrex 222	♦

♦ **Stocked Lubricants**

IMPORTANT NOTES

- The "Ambient Temperature" is intended to be an operation guideline based upon the typical properties of all the lubricant. The viscosity and other properties of the lubricant change based upon load, speed, ambient conditions, and reducer operating temperatures. The user should consult with their lubrication supplier & NORD Gear before considering changes in oil type or viscosity.
- To prevent reducer overheating, observe the maximum operating oil temperature limits:

  Synthetic Oil: 105 °C (225 °F).
- In the following instances, please consult NORD for specific recommendations:

√ Gear units will operate in high ambient temperature conditions exceeding 40 °C (104 °F).
√ Gear units will operate in cold ambient temperature conditions approaching 0 °C (32 °F) or lower.
√ Lower than an ISO VG100 viscosity oil is being considered for a cold-temperature service.
√ Fluid grease is required for lubricating the gear unit.

- Observe the general lubrication guidelines outlined in user manual U10770.

Oil Formulation Codes

PAO - Synthetic Polyalphaolefin Oil
PG - Synthetic Polyglycol Oil
FG-PAO - Food-Grade, Synthetic Poyalphaolefin Oil
FG-PG - Food-Grade, Synthetic Polyglycol Oil

Lubrication Notes

- Avoid using (EP) gear oils in worm gears that contain sulfur-phosphorous chemistries, as these additives can react adversely with bronze worm gears and accelerate wear.
- Food grade lubricants must be in compliance with FDA 212 CFR 178.3570 and qualify as a NSF-H1 lubricant. Please consult with lubrication manufacturer for more information.
- When making a lubrication change, check with the lubrication supplier to assure compatibility and to obtain recommended cleaning or flushing procedures.
- Do not to mix different oils with different additive packages or different base oil formulation types. Polyglycol (PG) oils are not miscible with other oil types and should never be mixed with mineral oil or polyalphaolefin (PAO) synthetic oil.

HELICAL-WORM REDUCER LUBRICATION TYPES

Oil Cross-reference Chart

ISO Viscosity	Oil Type	Ambient Temperature Range	Mobil	Shell	Castrol	FUCHS	KLÜBER LUBRICATION
VG 100	PAO	-35 to 25°C (-31 to 77°F)	Mobil SHC627	N/A	N/A	N/A	Klübersynth GEM 4-100N
	PG	-25 to 25°C (-13 to 77°F)	Mobil Glygoyle 100	N/A	N/A	N/A	Klübersynth GH 6-100
	FG-PAO	-35 to 25°C (-31 to 77°F)	Mobil SHC Cibus 100	N/A	N/A	N/A	Klüberoil 4 UH 1-100N
	FG-PG	-25 to 25°C (-13 to 77°F)	Mobil Glygoyle 100	N/A	N/A	N/A	Klübersynth UH1 6-100
VG150	PAO	-35 to 25°C (-31 to 77°F)	Mobil SHC629	Omala RL 150	Alphasyn T150	N/A	Klübersynth GEM 4-150N
	PG	-25 to 25°C (-13 to 77°F)	Mobil Glygoyle 150	Tivela S150	Alphasyn PG150	Renolin PG150	Klübersynth GH 6-150
	FG-PAO	-15 to 25°C (5 to 77°F)	Mobil SHC Cibus 150	N/A	N/A	Cassida GL150	Klüberoil 4 UH 1-150N
	FG-PG	-25 to 25°C (-13 to 77°F)	Mobil Glygoyle 150	N/A	N/A	N/A	Klübersynth UH1 6-150
VG220	PAO	-15 to 40°C (5 to 104°F)	Mobil SHC630	Omala RL220	Alphasyn T220	N/A	Klübersynth GEM 4-220N
	PG	-25 to 40°C (-13 to 104°F)	Mobil Glygoyle 220	Tivela S220	Alphasyn PG220	Renolin PG220	Klübersynth GH 6-220
	FG-PAO	-25 to 40°C (-13 to 104°F)	Mobil SHC Cibus 220	N/A	N/A	Cassida GL220	Klüberoil 4 UH 1-220N
	FG-PG	-25 to 40°C (-13 to 104°F)	Mobil Glygoyle 220	N/A	N/A	Cassida WG220	Klübersynth UH1 6-220
VG460	PAO	0 to50°C (32 to 122°F)	Mobil SHC 634	Omala RL460	Alphasyn T460	N/A	Klübersynth GEM 4-460N
	PG	0 to50°C (32 to 122°F)	Mobil Glygoyle 460	Tivela S460	Alphasyn PG460	N/A	Klübersynth GH 6-460
	FG-PAO	0 to50°C (32 to 122°F)	Mobil SHC Cibus 460	N/A	N/A	Cassida GL460	Klüberoil 4 UH 1-460N
	FG-PG	0 to50°C (32 to 122°F)	Mobil Glygoyle 460	N/A	N/A	Cassida WG460	Klübersynth UH1 6-460
VG680	PAO	0 to 60°C (32 to 140°F)	Mobil SHC636	Omala RL680	N/A	N/A	Klübersynth GEM 4-680N
	PG	0 to 60°C (32 to 140°F)	Mobil Glygoyle 680	Tivela S680	N/A	N/A	Klübersynth GH 6-680
	FG-PAO	0 to 60°C (32 to 140°F)	N/A	N/A	N/A	Cassida GL680	Klüberoil 4 UH1-680N
	FG-PG	0 to 60°C (32 to 140°F)	Mobil Glygoyle 680	N/A	N/A	Cassida WG680	Klübersynth UH1 6-680

Low-end service temperature limit may vary for a specific lubricant; Please also see the important notes on Page 1.

MINICASE® (SM SERIES) WORM GEAR LUBRICATION TYPES

Lubrication Tables – MINICASE® (SM series) Worm Gear Units

Standard Oil Lubricants

ISO Viscosity	Oil Type	Ambient Temperature Range	Manufacturer Brand/Type	Notes
VG680	PG	-20 to 40°C (-4 to 104°F)	Klübersynth GH 6-680	♦

Optional Oil Lubricants

ISO Viscosity	Oil Type	Ambient Temperature Range	Manufacturer Brand/Type	Notes
VG680	FG-PG	-25 to 80°C (-13 to 176°F)	Klübersynth UH1 6-680	♦

Grease Options (applied to greased bearings and seal cavities)

NLGI Grade	Grease Type/Thickener	Ambient Temperature Range	Manufacturer Brand/Type	Notes
NLGI 2	High Temp (Polyurea)	-25 to 80°C (-13 to 176°F)	Kluber / Petamo GHY133N	♦
	Food-Grade (Aluminum Complex)	-25 to 40°C (-13 to 104°F)	Kluber / Klubersynth UH1 14-151	♦

♦ **Stocked Lubricants**

IMPORTANT NOTES

- Observe the general lubrication guidelines in User Manual U17900.
- Ambient temperature range is a guideline only. The allowed operating temperature range for the gear unit is dependent upon assembly components used, their individual temperature limits, and the actual operating conditions.
- The selected oil type and viscosity is considered appropriate for most applications utilizing the specified NORD gear unit type. Different oil types or viscosity grades may be recommended if the gear unit is exposed to frequent high load conditions or operating under extreme low or high ambient temperature conditions.
- To prevent reducer overheating, observe the maximum operating oil temperature limits:
  Synthetic oil: 105 °C (225 °F).
- Consult NORD for recommendations in the following instances:
  √ The gear unit is exposed to frequent high load conditions.
  √ Ambient temperature conditions exceed 40 °C (104 °F) or approach 0 °C (32 °F) or lower.
  √ Fluid grease is being considered or specified for lubricating the gear unit.
  √ Lower than an ISO VG100 viscosity oil is being considered for a cold-temperature service.

Oil Formulation Codes

PAO - Synthetic Polyalphaolefin Oil
PG - Synthetic Polyglycol Oil
FG-PAO - Food-Grade, Synthetic Poyalphaolefin Oil
FG-PG - Food-Grade, Synthetic Polyglycol Oil

WARNING

- Avoid using (EP) gear oils in worm gears that contain sulfur-phosphorous chemistries, as these additives can react adversely with bronze worm gears and accelerate wear.
- Food grade lubricants must be in compliance with FDA 212 CFR 178.3570 and qualify as a NSF-H1 lubricant. Please consult with lubrication manufacturer for more information.
- When making a lubrication change, check with the lubrication supplier to assure compatibility and to obtain recommended cleaning or flushing procedures.
- Do not to mix different oils with different additive packages or different base oil formulation types. Polyglycol (PG) oils are not miscible with other oil types and should never be mixed with mineral or polyaolphaolefin (PAO) oils.

MINICASE® (SM SERIES) WORM GEAR LUBRICATION TYPES

Oil Cross-reference Chart

ISO Viscosity	Oil Type	Ambient Temperature Range	Mobil	Shell	Castrol	FUCHS	KLÜBER LUBRICATION
VG 100	PAO	-35 to 25°C (-31 to 77°F)	Mobil SHC627	N/A	N/A	N/A	Klübersynth GEM 4-100N
	PG	-25 to 25°C (-13 to 77°F)	Mobil Glygoyle 100	N/A	N/A	N/A	Klübersynth GH 6-100
	FG-PAO	-30 to 25°C (-22 to 77°F)	Mobil SHC Cibus 100	N/A	N/A	N/A	Klüberoil 4 UH 1-100N
	FG-PG	-25 to 25°C (-13 to 77°F)	Mobil Glygoyle 100	N/A	N/A	N/A	Klübersynth UH1 6-100
VG150	PAO	-35 to 25°C (-31 to 77°F)	Mobil SHC629	Omala RL 150	Alphasyn T150	N/A	Klübersynth GEM 4-150N
	PG	-25 to 25°C (-13 to 77°F)	Mobil Glygoyle 150	Tivela S150	Alphasyn PG150	Renolin PG150	Klübersynth GH 6-150
	FG-PAO	-15 to 25°C (5 to 77°F)	Mobil SHC Cibus 150	N/A	N/A	Cassida GL150	Klüberoil 4 UH 1-150N
	FG-PG	-25 to 25°C (-13 to 77°F)	Mobil Glygoyle 150	N/A	N/A	N/A	Klübersynth UH1 6-150
VG220	PAO	-35 to 40°C (-31 to 104°F)	Mobil SHC630	Omala RL220	Alphasyn T220	N/A	Klübersynth GEM 4-220N
	PG	-25 to 40°C (-13 to 104°F)	Mobil Glygoyle 220	Tivela S220	Alphasyn PG220	Renolin PG220	Klübersynth GH 6-220
	FG-PAO	-25 to 40°C (-13 to 104°F)	Mobil SHC Cibus 220	N/A	N/A	Cassida GL220	Klüberoil 4 UH 1-220N
	FG-PG	-25 to 40°C (-13 to 104°F)	Mobil Glygoyle 220	N/A	N/A	Cassida WG220	Klübersynth UH1 6-220
VG460	PAO	-20 to 40°C (-4 to 104°F)	Mobil SHC 634	Omala RL460	Alphasyn T460	N/A	Klübersynth GEM 4-460N
	PG	-20 to 40°C (-4 to 104°F)	Mobil Glygoyle 460	Tivela S460	Alphasyn PG460	N/A	Klübersynth GH 6-460
	FG-PAO	-5 to 40°C (23 to 104°F)	Mobil SHC Cibus 460	N/A	N/A	Cassida GL460	Klüberoil 4 UH 1-460N
	FG-PG	-5 to 40°C (23 to 104°F)	Mobil Glygoyle 460	N/A	N/A	Cassida WG460	Klübersynth UH1 6-460
VG680	PAO	-20 to 40°C (-4 to 104°F)	Mobil SHC636	Omala RL680	N/A	N/A	Klübersynth GEM 4-680N
	PG	-20 to 40°C (-4 to 104°F)	Mobil Glygoyle 680	Tivela S680	N/A	N/A	Klübersynth GH 6-680
	FG-PAO	-5 to 40°C (23 to 104°F)	N/A	N/A	N/A	Cassida GL680	Klüberoil 4 UH1-680N
	FG-PG	-25 to 80°C (-13 to 176°F)	Mobil Glygoyle 680	N/A	N/A	Cassida WG680	Klübersynth UH1 6-680

Low-end service temperature limit may vary for a specific lubricant; Please also see the important notes on Page 1.

MINICASE® (SMI/SMID) WORM GEAR LUBRICATION TYPES

Lubrication Tables – MINICASE® (SMI/SMID series) Worm Gear Units

Standard Oil Lubricants

ISO Viscosity	Oil Type	Ambient Temperature Range	Manufacturer Brand/Type	Notes
VG680	PG	-20 to 40°C (-4 to 104°F)	Klübersynth GH 6-680	♦

Optional Oil Lubricants

ISO Viscosity	Oil Type	Ambient Temperature Range	Manufacturer Brand/Type	Notes
VG680	FG-PG	-25 to 80°C (-13 to 176°F)	Klübersynth UH1 14-151	♦

Grease Options (applied to greased bearings and seal cavities)

NLGI Grade	Grease Type/Thickener	Ambient Temperature Range	Manufacturer Brand/Type	Notes
NLGI 2	High Temp (Polyurea)	-25 to 80°C (-13 to 176°F)	Kluber / Petamo GHY133N	♦
	Food-Grade (Aluminum Complex)	-25 to 40°C (-13 to 104°F)	Kluber / Klubersynth UH1 14-151	♦

♦ **Stocked Lubricants**

IMPORTANT NOTES

- Observe the general lubrication guidelines in User Manual U10800.
- Ambient temperature range is a guideline only. The allowed operating temperature range for the gear unit is dependent upon assembly components used, their individual temperature limits, and the actual operating conditions.
- The selected oil type and viscosity is considered appropriate for most applications utilizing the specified NORD gear unit type. Different oil types or viscosity grades may be recommended if the gear unit is exposed to frequent high load conditions or operating under extreme low or high ambient temperature conditions.
- To prevent reducer overheating, observe the maximum operating oil temperature limits:
  Synthetic oil: 105 °C (225 °F).
- Consult NORD for recommendations in the following instances:
  √ The gear unit is exposed to frequent high load conditions.
  √ Ambient temperature conditions exceed 40 °C (104 °F) or approach 0 °C (32 °F) or lower.
  √ Fluid grease is being considered or specified for lubricating the gear unit.
  √ Lower than an ISO VG100 viscosity oil is being considered for a cold-temperature service.

Oil Formulation Codes

PAO - Synthetic Polyalphaolefin Oil
PG - Synthetic Polyglycol Oil
FG-PAO - Food-Grade, Synthetic Poyalphaolefin Oil
FG-PG - Food-Grade, Synthetic Polyglycol Oil

WARNING

- Avoid using (EP) gear oils in worm gears that contain sulfur-phosphorous chemistries, as these additives can react adversely with bronze worm gears and accelerate wear.
- Food grade lubricants must be in compliance with FDA 212 CFR 178.3570 and qualify as a NSF-H1 lubricant. Please consult with lubrication manufacturer for more information.
- When making a lubrication change, check with the lubrication supplier to assure compatibility and to obtain recommended cleaning or flushing procedures.
- Do not to mix different oils with different additive packages or different base oil formulation types. Polyglycol (PG) oils are not miscible with other oil types and should never be mixed with mineral or polyaolphaolefin (PAO) oils.

MINICASE® (SMI/SMID) WORM GEAR LUBRICATION TYPES

Oil Cross-reference Chart

ISO Viscosity	Oil Type	Ambient Temperature Range	Mobil	Shell	Castrol	FUCHS	KLÜBER LUBRICATION
VG 100	PAO	-35 to 25°C (-31 to 77°F)	Mobil SHC627	N/A	N/A	N/A	Klübersynth GEM 4-100N
	PG	-25 to 25°C (-13 to 77°F)	Mobil Glygoyle 100	N/A	N/A	N/A	Klübersynth GH 6-100
	FG-PAO	-30 to 25°C (-22 to 77°F)	Mobil SHC Cibus 100	N/A	N/A	N/A	Klüberoil 4 UH 1-100N
	FG-PG	-25 to 25°C (-13 to 77°F)	Mobil Glygoyle 100	N/A	N/A	N/A	Klübersynth UH1 6-100
VG150	PAO	-35 to 25°C (-31 to 77°F)	Mobil SHC629	Omala RL 150	Alphasyn T150	N/A	Klübersynth GEM 4-150N
	PG	-25 to 25°C (-13 to 77°F)	Mobil Glygoyle 150	Tivela S150	Alphasyn PG150	Renolin PG150	Klübersynth GH 6-150
	FG-PAO	-15 to 25°C (5 to 77°F)	Mobil SHC Cibus 150	N/A	N/A	Cassida GL150	Klüberoil 4 UH 1-150N
	FG-PG	-25 to 25°C (-13 to 77°F)	Mobil Glygoyle 150	N/A	N/A	N/A	Klübersynth UH1 6-150
VG220	PAO	-35 to 40°C (-31 to 104°F)	Mobil SHC630	Omala RL220	Alphasyn T220	N/A	Klübersynth GEM 4-220N
	PG	-25 to 40°C (-13 to 104°F)	Mobil Glygoyle 220	Tivela S220	Alphasyn PG220	Renolin PG220	Klübersynth GH 6-220
	FG-PAO	-25 to 40°C (-13 to 104°F)	Mobil SHC Cibus 220	N/A	N/A	Cassida GL220	Klüberoil 4 UH 1-220N
	FG-PG	-25 to 40°C (-13 to 104°F)	Mobil Glygoyle 220	N/A	N/A	Cassida WG220	Klübersynth UH1 6-220
VG460	PAO	-20 to 40°C (-4 to 104°F)	Mobil SHC 634	Omala RL460	Alphasyn T460	N/A	Klübersynth GEM 4-460N
	PG	-20 to 40°C (-4 to 104°F)	Mobil Glygoyle 460	Tivela S460	Alphasyn PG460	N/A	Klübersynth GH 6-460
	FG-PAO	-5 to 40°C (23 to 104°F)	Mobil SHC Cibus 460	N/A	N/A	Cassida GL460	Klüberoil 4 UH 1-460N
	FG-PG	-5 to 40°C (23 to 104°F)	Mobil Glygoyle 460	N/A	N/A	Cassida WG460	Klübersynth UH1 6-460
VG680	PAO	-20 to 40°C (-4 to 104°F)	Mobil SHC636	Omala RL680	N/A	N/A	Klübersynth GEM 4-680N
	PG	-20 to 40°C (-4 to 104°F)	Mobil Glygoyle 680	Tivela S680	N/A	N/A	Klübersynth GH 6-680
	FG-PAO	-5 to 40°C (23 to 104°F)	N/A	N/A	N/A	Cassida GL680	Klüberoil 4 UH1-680N
	FG-PG	-25 to 80°C (-13 to 176°F)	Mobil Glygoyle 680	N/A	N/A	Cassida WG680	Klübersynth UH1 14-151

Low-end service temperature limit may vary for a specific lubricant; Please also see the important notes on Page 1.

FLEXBLOC™ (SI/SID SERIES) WORM GEAR LUBRICATION TYPES

Lubrication Tables – FLEXBLOC™ (SI/SID Series) Worm Gear Units

Standard Oil Lubricants

NORD uses a semi automated assembly process to produce the FLEXBLOC™ gear unit assemblies. During this process the gear units are factory filled in accordance with the following table.

Standard Oil Lubricants

ISO Viscosity	Oil Type	Ambient Temperature Range	Manufacturer Brand/Type	Notes
VG680	FG-PG	-25 to 80°C (-13 to 176°F)	Klübersynth UH1 6-680	Inch
	PG	-20 to 40°C (-4 to 104°F)	Klübersynth GH 6-680	Metric
VG220	FG-PG	-25 to 40°C (-13 to 104°F)	Klübersynth UH1 6-220	Inch
	PG	-25 to 40°C (-13 to 104°F)	Klübersynth GH 6-220	Metric

Grease Options (applied to greased bearings and seal cavities)

NLGI Grade	Grease Type/Thickener	Ambient Temperature Range	Manufacturer Brand/Type	Notes
NLGI 2	High Temp (Polyurea)	-25 to 80°C (-13 to 176°F)	Kluber / Petamo GHY133N	♦
	Food-Grade (Aluminum Complex)	-25 to 40°C (-13 to 104°F)	Kluber / Klubersynth UH1 14-151	♦

♦ **Stocked Lubricants**

IMPORTANT NOTES

- Observe the general lubrication guidelines in User Manual U10800.
- Ambient temperature range is a guideline only. The allowed operating temperature range for the gear unit is dependent upon assembly components used, their individual temperature limits, and the actual operating conditions.
- The selected oil type and viscosity is considered appropriate for most applications utilizing the specified NORD gear unit type. Different oil types or viscosity grades may be recommended if the gear unit is exposed to frequent high load conditions or operating under extreme low or high ambient temperature conditions.
- To prevent reducer overheating, observe the maximum operating oil temperature limits:
  Synthetic oil: 105 °C (225 °F).
- Consult NORD for recommendations in the following instances:
  √ The gear unit is exposed to frequent high load conditions.
  √ Ambient temperature conditions exceed 40 °C (104 °F) or approach 0 °C (32 °F) or lower.
  √ Fluid grease is being considered or specified for lubricating the gear unit.
  √ Lower than an ISO VG100 viscosity oil is being considered for a cold-temperature service.

Oil Formulation Codes

PAO - Synthetic Polyalphaolefin Oil
PG - Synthetic Polyglycol Oil
FG-PAO - Food-Grade, Synthetic Poyalphaolefin Oil
FG-PG - Food-Grade, Synthetic Polyglycol Oil

WARNING

- Avoid using (EP) gear oils in worm gears that contain sulfur-phosphorous chemistries, as these additives can react adversely with bronze worm gears and accelerate wear.
- Food grade lubricants must be in compliance with FDA 212 CFR 178.3570 and qualify as a NSF-H1 lubricant. Please consult with lubrication manufacturer for more information.
- When making a lubrication change, check with the lubrication supplier to assure compatibility and to obtain recommended cleaning or flushing procedures.
- Do not to mix different oils with different additive packages or different base oil formulation types. Polyglycol (PG) oils are not miscible with other oil types and should never be mixed with mineral or polyaolphaolefin (PAO) oils.

FLEXBLOC™ (SI/SID SERIES) WORM GEAR LUBRICATION TYPES

Oil Cross-reference Chart

ISO Viscosity	Oil Type	Ambient Temperature Range	Mobil	Shell	Castrol	FUCHS	KLÜBER LUBRICATION
VG 100	PAO	-35 to 25°C (-31 to 77°F)	Mobil SHC627	N/A	N/A	N/A	Klübersynth GEM 4-100N
	PG	-25 to 25°C (-13 to 77°F)	Mobil Glygoyle 100	N/A	N/A	N/A	Klübersynth GH 6-100
	FG-PAO	-30 to 25°C (-22 to 77°F)	Mobil SHC Cibus 100	N/A	N/A	N/A	Klüberoil 4 UH 1-100N
	FG-PG	-25 to 25°C (-13 to 77°F)	Mobil Glygoyle 100	N/A	N/A	N/A	Klübersynth UH1 6-100
VG150	PAO	-35 to 25°C (-31 to 77°F)	Mobil SHC629	Omala RL 150	Alphasyn T150	N/A	Klübersynth GEM 4-150N
	PG	-25 to 25°C (-13 to 77°F)	Mobil Glygoyle 150	Tivela S150	Alphasyn PG150	Renolin PG150	Klübersynth GH 6-150
	FG-PAO	-15 to 25°C (5 to 77°F)	Mobil SHC Cibus 150	N/A	N/A	Cassida GL150	Klüberoil 4 UH 1-150N
	FG-PG	-25 to 25°C (-13 to 77°F)	Mobil Glygoyle 150	N/A	N/A	N/A	Klübersynth UH1 6-150
VG220	PAO	-35 to 40°C (-31 to 104°F)	Mobil SHC630	Omala RL220	Alphasyn T220	N/A	Klübersynth GEM 4-220N
	PG	-25 to 40°C (-13 to 104°F)	Mobil Glygoyle 220	Tivela S220	Alphasyn PG220	Renolin PG220	Klübersynth GH 6-220
	FG-PAO	-25 to 40°C (-13 to 104°F)	Mobil SHC Cibus 220	N/A	N/A	Cassida GL220	Klüberoil 4 UH 1-220N
	FG-PG	-25 to 40°C (-13 to 104°F)	Mobil Glygoyle 220	N/A	N/A	Cassida WG220	Klübersynth UH1 6-220
VG460	PAO	-20 to 40°C (-4 to 104°F)	Mobil SHC 634	Omala RL460	Alphasyn T460	N/A	Klübersynth GEM 4-460N
	PG	-20 to 40°C (-4 to 104°F)	Mobil Glygoyle 460	Tivela S460	Alphasyn PG460	N/A	Klübersynth GH 6-460
	FG-PAO	-5 to 40°C (23 to 104°F)	Mobil SHC Cibus 460	N/A	N/A	Cassida GL460	Klüberoil 4 UH 1-460N
	FG-PG	-5 to 40°C (23 to 104°F)	Mobil Glygoyle 460	N/A	N/A	Cassida WG460	Klübersynth UH1 6-460
VG680	PAO	-20 to 40°C (-4 to 104°F)	Mobil SHC636	Omala RL680	N/A	N/A	Klübersynth GEM 4-680N
	PG	-20 to 40°C (-4 to 104°F)	Mobil Glygoyle 680	Tivela S680	N/A	N/A	Klübersynth GH 6-680
	FG-PAO	-5 to 40°C (23 to 104°F)	N/A	N/A	N/A	Cassida GL680	Klüberoil 4 UH1-680N
	FG-PG	-25 to 80°C (-13 to 176°F)	Mobil Glygoyle 680	N/A	N/A	Cassida WG680	Klübersynth UH1 6-680

Low-end service temperature limit may vary for a specific lubricant; Please also see the important notes on Page 1.

STANDARD IN-LINE FOOTED OIL FILL QUANTITIES

Standard In-line footed lubrication

All Standard In-line reducers are shipped from NORD with a pre-determined oil fill level in accordance to the specified reducer size and mounting position. When filling these gear units the oil must be measured and added until one establishes the proper fill quantity. For additional information please refer to the "Oil & vent plug locations" documentation for your specified gear unit

STOP *HARMFUL SITUATION* **STOP**

For mounting orientations other than shown please consult NORD Gear. Reducer modifications may be required.

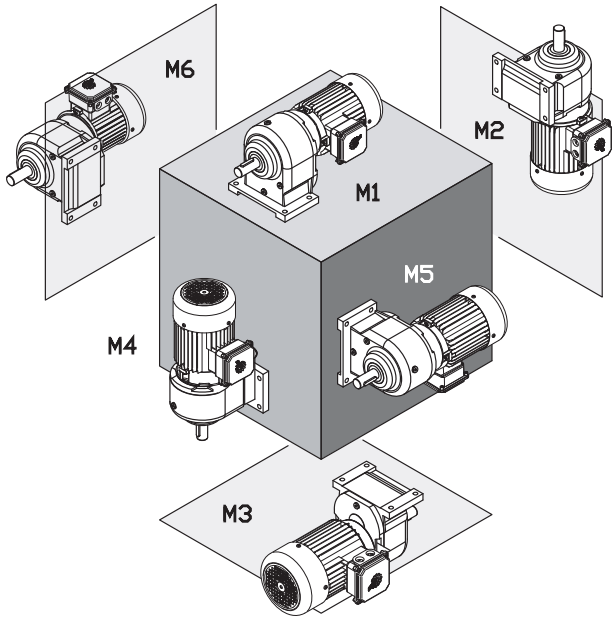

Type	M1		M2		M3		M4		M5		M6	
	Quarts	Liters	Quarts	Liters	Quarts	Liters	Quarts	Liters	Quarts	Liters	Quarts	Liters
SK0 / SK05	0.14	0.13	0.23	0.22	0.14	0.13	0.23	0.22	0.14	0.13	0.14	0.13
SK000	0.25	0.24	0.42	0.40	0.25	0.24	0.42	0.40	0.25	0.24	0.25	0.24
SK01 / SK015	0.23	0.22	0.40	0.38	0.23	0.22	0.40	0.38	0.23	0.22	0.23	0.22
SK010 / SK0105	0.40	0.38	0.63	0.60	0.40	0.38	0.63	0.60	0.40	0.38	0.40	0.38
SK20 / SK205	0.58	0.55	1.06	1.00	0.58	0.55	1.06	1.00	0.58	0.55	0.58	0.55
SK200 / SK2005	0.85	0.80	1.37	1.30	0.85	0.80	1.37	1.30	0.85	0.80	0.85	0.80
SK25 / SK255	0.53	0.50	1.06	1.00	0.53	0.50	1.06	1.00	0.53	0.50	0.53	0.50
SK250 / SK2505	1.27	1.20	1.59	1.50	1.27	1.20	1.59	1.50	1.27	1.20	1.27	1.20
SK30 / SK305	0.95	0.90	1.37	1.30	0.95	0.90	1.37	1.30	0.95	0.90	0.95	0.90
SK300 / SK3005	1.27	1.20	2.11	2.00	1.27	1.20	2.11	2.00	1.27	1.20	1.27	1.20
SK33 / SK335	1.06	1.00	1.69	1.60	1.06	1.00	1.69	1.60	1.06	1.00	1.06	1.00
SK330 / SK3305	1.90	1.80	2.96	2.80	1.90	1.80	2.96	2.80	1.90	1.80	1.90	1.80

STANDARD IN-LINE FLANGED OIL FILL QUANTITIES

Standard In-line flanged lubrication

All Standard In-line reducers are shipped from NORD with a pre-determined oil fill level in accordance to the specified reducer size and mounting position. When filling these gear units the oil must be measured and added until one establishes the proper fill quantity. For additional information please refer to the "Oil & vent plug locations" documentation for your specified gear unit

STOP *HARMFUL SITUATION* STOP

For mounting orientations other than shown please consult NORD Gear. Reducer modifications may be required.

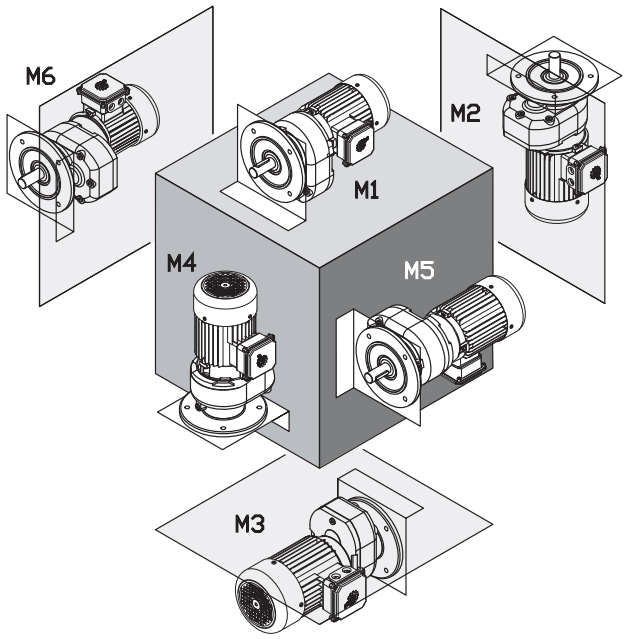

Type	M1		M2		M3		M4		M5		M6	
	Quarts	Liters	Quarts	Liters	Quarts	Liters	Quarts	Liters	Quarts	Liters	Quarts	Liters
SK0 F / SK05 F	0.14	0.13	0.23	0.22	0.14	0.13	0.23	0.22	0.14	0.13	0.14	0.13
SK000 F	0.25	0.24	0.43	0.41	0.25	0.24	0.43	0.41	0.25	0.24	0.25	0.24
SK01 F	0.23	0.22	0.40	0.38	0.23	0.22	0.40	0.38	0.23	0.22	0.23	0.22
SK010 F / SK0105 F	0.37	0.35	0.69	0.65	0.37	0.35	0.78	0.74	0.37	0.35	0.37	0.35
SK20 F	0.37	0.35	0.63	0.60	0.37	0.35	0.63	0.60	0.37	0.35	0.37	0.35
SK200 F / SK2005 F	0.69	0.65	1.00	0.95	0.69	0.65	1.16	1.10	0.69	0.65	0.69	0.65
SK25 F	0.53	0.50	1.06	1.00	0.53	0.50	1.06	1.00	0.53	0.50	0.53	0.50
SK250 F / SK2505 F	0.95	0.90	1.48	1.40	0.95	0.90	1.69	1.60	0.95	0.90	0.95	0.90
SK30 F	0.74	0.70	1.16	1.10	0.74	0.70	1.16	1.10	0.74	0.70	0.74	0.70
SK300 F / SK3005 F	1.32	1.25	1.59	1.50	1.32	1.25	1.90	1.80	1.32	1.25	1.32	1.25
SK33 F / SK335F	1.06	1.00	1.59	1.50	1.06	1.00	1.59	1.50	1.06	1.00	1.06	1.00
SK330 F / SK3305 F	1.69	1.60	2.64	2.50	1.69	1.60	3.06	2.90	1.69	1.60	1.69	1.60

HELICAL IN-LINE FOOTED OIL FILL QUANTITIES

Helical In-line footed lubrication

The following NORD Gear reducers are shipped from the factory with a pre-determined oil fill level in accordance to the specified reducer size and mounting position. For additional information, please refer to the "Oil Plug & Vent Locations" documentation for your gear unit.

STOP *HARMFUL SITUATION* **STOP**

Actual oil volume can vary slightly depending upon the gear case size, mounting and ratio. Prior to commissioning the reducer, check the oil-fill level using the reducer's oil level plug and drain or add addition oil as needed. The minimum acceptable oil level is 0.15 in (4mm) below the oil level hole.

For mounting orientations other than shown please consult NORD Gear. Reducer modifications may be required.

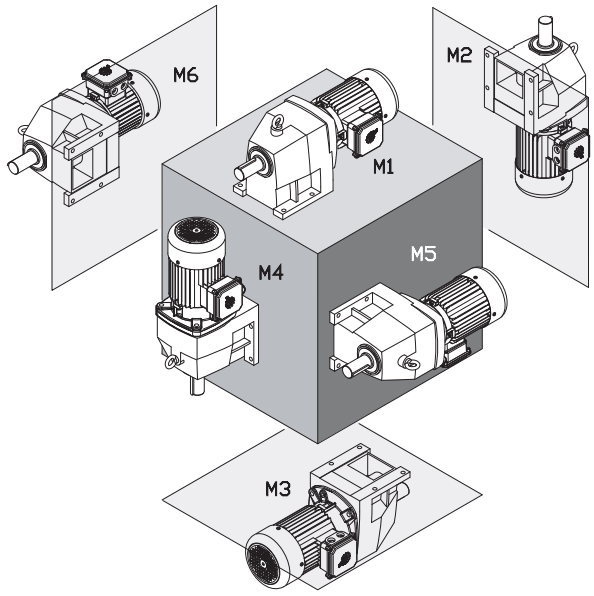

Type	M1		M2		M3		M4		M5		M6	
	Quarts	Liters	Quarts	Liters	Quarts	Liters	Quarts	Liters	Quarts	Liters	Quarts	Liters
SK02	0.21	0.20	0.79	0.75	0.79	0.75	0.69	0.65	0.63	0.60	0.63	0.60
SK 03	0.37	0.35	1.27	1.20	0.85	0.80	1.06	1.00	0.74	0.70	0.74	0.70
SK11E	0.26	0.25	0.53	0.50	0.69	0.65	0.53	0.50	0.42	0.40	0.42	0.40
SK12	0.26	0.25	0.85	0.80	0.90	0.85	0.79	0.75	0.58	0.55	0.58	0.55
SK 13	0.79	0.75	1.37	1.30	1.37	1.30	1.27	1.20	0.79	0.75	0.79	0.75
SK21E	0.63	0.60	1.27	1.20	1.37	1.30	1.06	1.00	1.06	1.00	1.06	1.00
SK22	0.53	0.50	2.01	1.90	2.22	2.10	1.90	1.80	1.48	1.40	1.48	1.40
SK 23	1.27	1.20	2.11	2.00	2.01	1.90	2.54	2.40	1.69	1.60	1.69	1.60
SK31E	1.16	1.10	2.11	2.00	2.32	2.20	1.80	1.70	1.59	1.50	1.59	1.50
SK32	0.95	0.90	2.64	2.50	3.28	3.10	3.28	3.10	2.11	2.00	2.11	2.00
SK 33N	1.85	1.75	3.17	3.00	3.59	3.40	4.23	4.00	2.43	2.30	2.43	2.30
SK41E	1.69	1.60	2.75	2.60	3.49	3.30	2.96	2.80	2.43	2.30	2.43	2.30
SK42	1.48	1.40	4.76	4.50	4.76	4.50	4.54	4.30	3.38	3.20	3.38	3.20
SK 43	3.17	3.00	5.92	5.60	5.49	5.20	6.97	6.60	3.80	3.60	3.80	3.60
SK51E	1.90	1.80	3.70	3.50	4.33	4.10	4.23	4.00	4.02	3.80	4.02	3.80
SK52	2.64	2.50	7.40	7.00	7.19	6.80	7.19	6.80	5.39	5.10	5.39	5.10
SK 53	4.76	4.50	9.19	8.70	8.14	7.70	9.19	8.70	6.34	6.00	6.34	6.00
SK62	6.87	6.50	15.9	15.0	13.7	13.0	16.9	16.0	15.9	15.0	15.9	15.0
SK 63	13.7	13.0	15.3	14.5	15.3	14.5	16.9	16.0	13.7	13.0	13.7	13.0
SK72	10.6	10.0	24.3	23.0	19.0	18.0	27.5	26.0	24.3	23.0	24.3	23.0
SK 73	21.7	20.5	21.1	20.0	23.8	22.5	28.5	27.0	21.1	20.0	21.1	20.0
SK82	14.8	14.0	37.0	35.0	28.5	27.0	46.5	44.0	33.8	32.0	33.8	32.0
SK 83	31.7	30.0	32.8	31.0	35.9	34.0	39.1	37.0	34.9	33.0	34.9	33.0
SK92	26.4	25.0	77.0	73.0	49.7	47.0	80.0	76.0	55.0	52.0	55.0	52.0
SK 93	56.0	53.0	74.0	70.0	62.0	59.0	76.0	72.0	52.0	49.0	52.0	49.0
SK102	38.0	36.0	84.0	79.0	70.0	66.0	108	102	75.0	71.0	75.0	71.0
SK 103	78.0	74.0	75.0	71.0	78.0	74.0	102	97.0	71.0	67.0	71.0	67.0

HELICAL IN-LINE FLANGED OIL FILL QUANTITIES

Helical In-line flanged lubrication

The following NORD Gear reducers are shipped from the factory with a pre-determined oil fill level in accordance to the specified reducer size and mounting position. For additional information, please refer to the "Oil Plug & Vent Locations" documentation for your gear unit.

STOP *HARMFUL SITUATION* **STOP**

Actual oil volume can vary slightly depending upon the gear case size, mounting and ratio. Prior to commissioning the reducer, check the oil-fill level using the reducer's oil level plug and drain or add addition oil as needed. The minimum acceptable oil level is 0.15 in (4mm) below the oil level hole.

For mounting orientations other than shown please consult NORD Gear. Reducer modifications may be required.

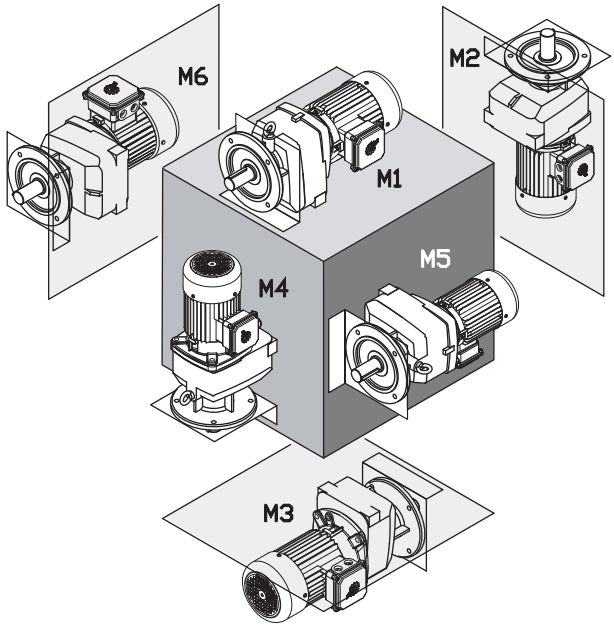

Type	M1		M2		M3		M4		M5		M6	
	Quarts	Liters	Quarts	Liters	Quarts	Liters	Quarts	Liters	Quarts	Liters	Quarts	Liters
SK02F	0.26	0.25	0.74	0.70	0.74	0.70	0.74	0.70	0.53	0.50	0.53	0.50
SK 03 F	0.58	0.55	1.00	0.95	0.95	0.90	1.27	1.20	0.95	0.90	0.95	0.90
SK11E F	0.32	0.30	0.53	0.50	0.53	0.50	0.48	0.45	0.42	0.40	0.42	0.40
SK12F	0.37	0.35	0.90	0.85	0.95	0.90	0.95	0.90	0.74	0.70	0.74	0.70
SK 13 F	1.06	1.00	1.37	1.30	1.37	1.30	1.27	1.20	1.06	1.00	1.06	1.00
SK21E F	0.53	0.50	1.27	1.20	1.37	1.30	0.63	0.60	0.95	0.90	0.95	0.90
SK22F	0.74	0.70	1.90	1.80	1.90	1.80	1.90	1.80	1.48	1.40	1.48	1.40
SK 23 F	1.48	1.40	2.75	2.60	2.43	2.30	2.96	2.80	2.96	2.80	2.96	2.80
SK31E F	0.95	0.90	1.90	1.80	1.74	1.65	1.37	1.30	1.32	1.25	1.32	1.25
SK32F	1.27	1.20	2.96	2.80	3.28	3.10	3.28	3.10	2.32	2.20	2.32	2.20
SK 33N F	2.32	2.20	3.17	3.00	3.59	3.40	4.44	4.20	2.43	2.30	2.43	2.30
SK41E F	1.27	1.20	2.43	2.30	2.85	2.70	2.11	2.00	2.01	1.90	2.01	1.90
SK42F	1.90	1.80	4.65	4.40	4.76	4.50	4.23	4.00	3.91	3.70	3.91	3.70
SK 43 F	3.70	3.50	6.02	5.70	5.28	5.00	6.45	6.10	4.33	4.10	4.33	4.10
SK51E F	1.90	1.80	3.70	3.50	4.33	4.10	3.17	3.00	4.02	3.80	4.02	3.80
SK52F	3.17	3.00	7.19	6.80	6.55	6.20	7.82	7.40	5.92	5.60	5.92	5.60
SK 53 F	5.49	5.20	8.88	8.40	7.40	7.00	9.40	8.90	7.08	6.70	7.08	6.70
SK 62 F	7.40	7.00	15.9	15.0	14.8	14.0	19.5	18.5	16.9	16.0	16.9	16.0
SK 63 F	14.3	13.5	14.8	14.0	16.4	15.5	19.0	18.0	14.8	14.0	14.8	14.0
SK 72 F	10.6	10.0	24.3	23.0	19.5	18.5	29.6	28.0	24.3	23.0	24.3	23.0
SK 73 F	23.2	22.0	23.8	22.5	24.3	23.0	29.1	27.5	21.1	20.0	21.1	20.0
SK 82 F	15.9	15.0	39.1	37.0	30.6	29.0	47.6	45.0	36.5	34.5	36.5	34.5
SK 83 F	32.8	31.0	35.9	34.0	37.0	35.0	42.3	40.0	35.9	34.0	35.9	34.0
SK 92 F	27.5	26.0	77.0	73.0	49.7	47.0	82.0	78.0	55.0	52.0	55.0	52.0
SK 93 F	56.0	53.0	74.0	70.0	62.0	59.0	78.0	74.0	52.0	49.0	52.0	49.0
SK 102 F	42.3	40.0	86.0	81.0	70.0	66.0	110	104	76.0	72.0	76.0	72.0
SK 103 F	73.0	69.0	82.0	78.0	82.0	78.0	105	99.0	71.0	67.0	71.0	67.0

CLINCHER™ OIL FILL QUANTITIES

CLINCHER™ lubrication

Unless otherwise noted below, the following NORD Gear reducers are shipped from the factory with a pre-determined oil fill level in accordance to the specified reducer size and mounting position. For additional information, please refer to the "Oil Plug & Vent Locations" documentation for your gear unit.

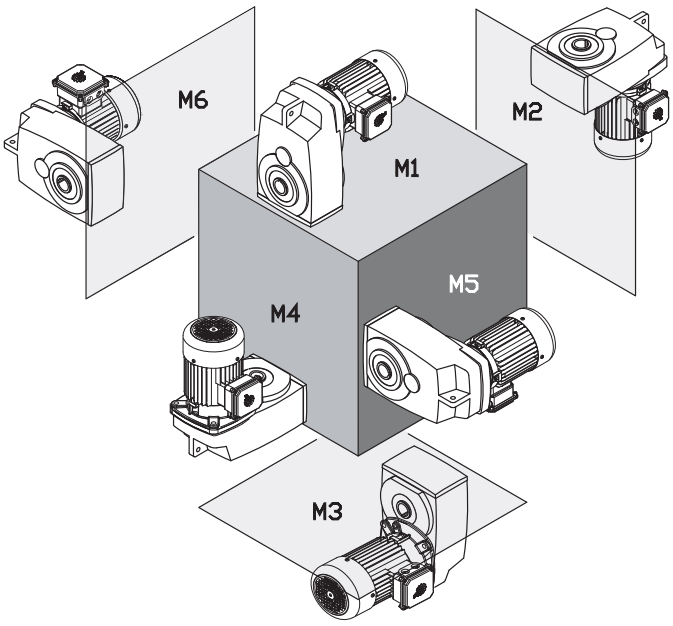

STOP *HARMFUL SITUATION* **STOP**

Actual oil volume can vary slightly depending upon the gear case size, mounting and ratio. Prior to commissioning the reducer, check the oil-fill level using the reducer's oil level plug and drain or add addition oil as needed. The minimum acceptable oil level is 0.15 in (4mm) below the oil level hole.

For mounting orientations other than shown please consult NORD Gear. Reducer modifications may be required.

Type	M1		M2		M3		M4		M5		M6	
	Quarts	Liters	Quarts	Liters	Quarts	Liters	Quarts	Liters	Quarts	Liters	Quarts	Liters
SK 0182NB	0.42	0.40	0.58	0.55	0.58	0.55	0.42	0.40	0.42	0.40	0.42	0.40
SK 0282NB	0.74	0.70	1.16	1.10	0.85	0.80	1.16	1.10	0.95	0.90	0.95	0.90
SK 1282	1.00	0.95	1.37	1.30	0.95	0.90	1.37	1.30	1.06	1.00	1.06	1.00
SK 1382NB	1.48	1.40	2.43	2.30	2.32	2.20	2.32	2.20	2.11	2.00	2.11	2.00
SK 1382	1.53	1.45	1.69	1.60	1.22	1.15	1.80	1.70	1.16	1.10	1.16	1.10
SK 2282	1.80	1.70	2.43	2.30	1.80	1.70	2.32	2.20	2.01	1.90	2.01	1.90
SK 2382	2.43	2.30	2.85	2.70	2.22	2.10	3.38	3.20	2.11	2.00	2.11	2.00
SK 3282	2.96	2.80	4.23	4.00	3.49	3.30	4.02	3.80	3.17	3.00	3.17	3.00
SK 3382	4.02	3.80	4.54	4.30	3.17	3.00	5.81	5.50	3.17	3.00	3.17	3.00
SK 4282	4.44	4.20	5.71	5.40	4.65	4.40	5.28	5.00	4.44	4.20	4.44	4.20
SK 4382	6.45	6.10	7.29	6.90	5.18	4.90	8.88	8.40	5.28	5.00	5.28	5.00
SK 5282	7.93	7.50	9.30	8.80	7.93	7.50	9.30	8.80	7.61	7.20	7.61	7.20
SK 5382	13.2	12.5	12.7	12.0	7.08	6.70	14.8	14.0	8.77	8.30	8.77	8.30
SK 6282	18.0	17.0	16.4	15.5	13.2	12.5	18.5	17.5	11.6	11.0	14.8	14.0
SK 6382	16.9	16.0	13.7	13.0	10.6	10.0	19.0	18.0	14.8	14.0	13.2	12.5
SK 7282	26.9	25.5	22.2	21.0	21.7	20.5	28.5	27.0	16.9	16.0	22.2	21.0
SK 7382	23.2	22.0	22.2	21.0	16.9	16.0	26.4	25.0	24.3	23.0	23.2	22.0
SK 8282	39.6	37.5	34.9	33.0	32.2	30.5	46.5	44.0	32.8	31.0	32.8	31.0
SK 8382	36.5	34.5	34.3	32.5	26.4	25.0	40.2	38.0	37.0	35.0	31.7	30.0
SK 9282	79.0	75.0	74.0	70.0	59.0	56.0	85.0 †	80.0 †	69.0	65.0	62.0	59.0
SK 9382	78.0	74.0	74.0	70.0	45.4	43.0	79.0 †	75.0 †	69.0	65.0	63.0	60.0
SK 10282	95.0	90.0	95.0	90.0	42.3	40.0	95.0 †	90.0 †	63.0	60.0	87.0	82.0
SK 10382	90.0	85.0	95.0	90.0	77.0	73.0	106 †	100 †	85	80.0	85.0	80.0
SK 11282*	174	165	169	160	153	145	206 †	195 †	106	100	148	140
SK 11382*	169	160	164	155	148	140	222 †	210 †	164	155	143	135
SK 12382*	169	160	164	155	148	140	**222 †**	**210 †**	164	155	143	135

*** For shipping purposes the larger Clincher™ gear units are supplied without oil.**

† Oil quantities shown are for the gearbox only. When the OT (oil tank) option is used, the oil must be filled to the level shown on the dipstick which is located inside of the oil tank. Even when the gear unit is filled by NORD, the user MUST add more oil untill the oil is filled to the proper level.

90.1 HELICAL-BEVEL FOOTED OIL FILL QUANTITIES

90.1 Helical-bevel footed lubrication

Unless otherwise noted below, the following NORD Gear reducers are shipped from the factory with a pre-determined oil fill level in accordance to the specified reducer size and mounting position. For additional information, please refer to the "Oil Plug & Vent Locations" documentation for your gear unit.

HARMFUL SITUATION

Actual oil volume can vary slightly depending upon the gear case size, mounting and ratio. Prior to commissioning the reducer, check the oil-fill level using the reducer's oil level plug and drain or add addition oil as needed. The minimum acceptable oil level is 0.15 in (4mm) below the oil level hole.

For mounting orientations other than shown please consult NORD Gear. Reducer modifications may be required.

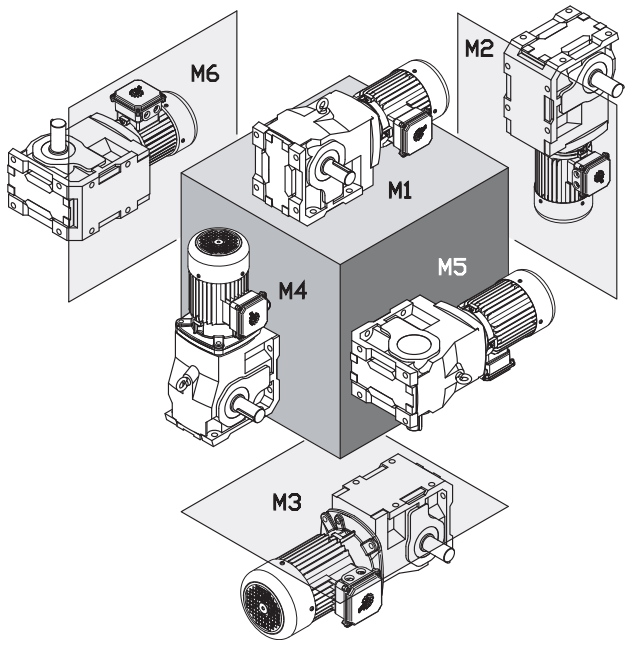

Type	M1		M2		M3		M4		M5		M6	
	Quarts	Liters	Quarts	Liters	Quarts	Liters	Quarts	Liters	Quarts	Liters	Quarts	Liters
SK 9012.1	0.74	0.70	1.80	1.70	2.01	1.90	2.22	2.10	1.16	1.10	1.59	1.50
SK 9013.1	1.43	1.35	2.22	2.10	2.27	2.15	2.91	2.75	1.06	1.00	1.90	1.80
SK 9016.1	0.74	0.70	1.80	1.70	2.01	1.90	2.22	2.10	1.16	1.10	1.59	1.50
SK 9017.1	1.37	1.30	2.11	2.00	2.22	2.10	2.85	2.70	1.06	1.00	1.80	1.70
SK 9022.1	1.37	1.30	3.06	2.90	3.49	3.30	4.02	3.80	1.80	1.70	2.96	2.80
SK 9023.1	2.32	2.20	3.38	3.20	3.80	3.60	4.97	4.70	2.32	2.20	3.06	2.90
SK 9032.1	1.90	1.80	5.71	5.40	6.45	6.10	7.19	6.80	3.17	3.00	4.86	4.60
SK 9033.1	3.28	3.10	6.02	5.70	6.66	6.30	8.45	8.00	3.59	3.40	5.07	4.80
SK 9042.1	2.85	2.70	9.51	9.00	10.6	10.0	11.3	10.7	5.49	5.20	8.14	7.70
SK 9043.1	5.28	5.00	10.7	10.1	11.6	11.0	14.1	13.3	6.02	5.70	8.56	8.10
SK 9052.1	6.87	6.50	16.9	16.0	20.1	19.0	22.7	21.5	11.6	11.0	16.4	15.5
SK 9053.1	10.6	10.0	18.0	17.0	21.1	20.0	25.9	24.5	12.2	11.5	17.4	16.5
SK 9062.1	10.6	10.0	29.1	27.5	33.8	32.0	38.0	36.0	19.0	18.0	25.4	24.0
SK 9072.1	10.6	10.0	29.1	27.5	33.8	32.0	38.0	36.0	19.0	18.0	25.4	24.0
SK 9082.1	18.0	17.0	54.0	52.0	66.0	63.0	76.0	72.0	34.9	33.0	49.1	46.5
SK 9086.1	30.6	29.0	77.0	73.0	90.0	85.0	108	102	51.0	48.0	66.0	62.0
SK 9092.1	43.3	41.0	166	157	180	170	182	172	85.0	80.0	95.0	90.0
SK 9096.1	74.0	70.0	198	187	205	194	268	254	115	109	161	152

Oil Levels shown apply to base models and gear units ending in LX, AX, & VX.

90.1 HELICAL-BEVEL FLANGED OIL FILL QUANTITIES

90.1 Helical-bevel flanged lubrication

Unless otherwise noted below, the following NORD Gear reducers are shipped from the factory with a pre-determined oil fill level in accordance to the specified reducer size and mounting position. For additional information, please refer to the "Oil Plug & Vent Locations" documentation for your gear unit.

STOP *HARMFUL SITUATION* **STOP**

Actual oil volume can vary slightly depending upon the gear case size, mounting and ratio. Prior to commissioning the reducer, check the oil-fill level using the reducer's oil level plug and drain or add addition oil as needed. The minimum acceptable oil level is 0.15 in (4mm) below the oil level hole.

For mounting orientations other than shown please consult NORD Gear. Reducer modifications may be required.

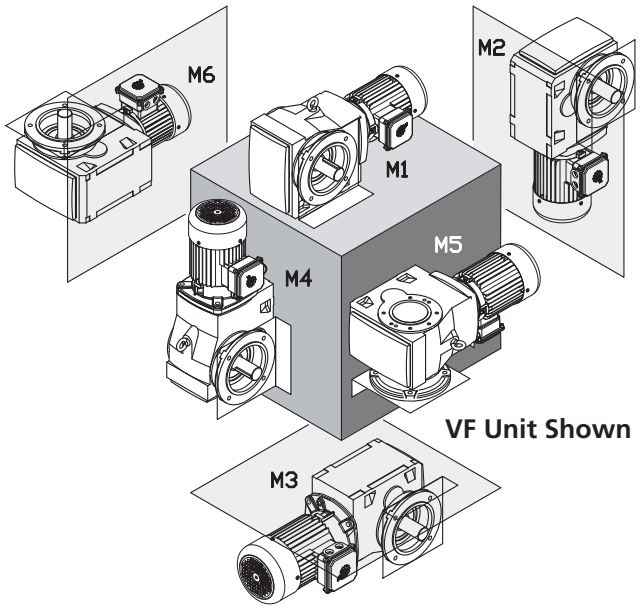

VF Unit Shown

Type	M1		M2		M3		M4		M5		M6	
	Quarts	Liters	Quarts	Liters	Quarts	Liters	Quarts	Liters	Quarts	Liters	Quarts	Liters
SK 9012.1	1.06	1.00	2.01	1.90	2.01	1.90	2.32	2.20	1.27	1.20	1.80	1.70
SK 9013.1	1.53	1.45	2.43	2.30	2.22	2.10	2.96	2.80	1.11	1.05	1.90	1.80
SK 9016.1	1.06	1.00	2.01	1.90	2.01	1.90	2.32	2.20	1.27	1.20	1.80	1.70
SK 9017.1	1.53	1.45	2.43	2.30	2.22	2.10	2.96	2.80	1.11	1.05	1.90	1.80
SK 9022.1	1.69	1.60	3.70	3.50	3.70	3.50	4.44	4.20	2.43	2.30	2.96	2.80
SK 9023.1	2.43	2.30	3.70	3.50	4.02	3.80	5.60	5.30	2.32	2.20	3.59	3.40
SK 9032.1	2.22	2.10	5.07	4.80	6.76	6.40	7.50	7.10	3.49	3.30	5.39	5.10
SK 9033.1	3.91	3.70	6.02	5.70	7.08	6.70	9.09	8.60	3.80	3.60	5.60	5.30
SK 9042.1	4.76	4.50	10.6	10.0	10.6	10.0	12.2	11.5	6.87	6.50	8.66	8.20
SK 9043.1	6.87	6.50	11.1	10.5	12.6	11.9	15.5	14.7	7.08	6.70	9.83	9.30
SK 9052.1	7.93	7.50	17.4	16.5	21.1	20.0	24.8	23.5	12.2	11.5	19.0	18.0
SK 9053.1	13.7	13.0	19.0	18.0	22.7	21.5	28.0	26.5	13.7	13.0	18.0	17.0
SK 9062.1	12.7	12.0	29.1	27.5	34.9	33.0	40.7	38.5	20.1	19.0	27.5	26.0
SK 9072.1	12.7	12.0	29.1	27.5	34.9	33.0	40.7	38.5	20.1	19.0	27.5	26.0
SK 9082.1	22.2	21.0	57.0	54.0	70.0	66.0	85.0	80.0	40.2	38.0	55.0	52.0
SK 9086.1	38.0	36.0	82.0	78.0	96.0	91.0	113	107	56.0	53.0	80.0	76.0
SK 9092.1	42.3	40.0	137	130	163	154	185	175	87.0	82.0	96.0	91.0
SK 9096.1	85.0	80.0	198	187	204	193	272	257	119	113	165	156

Oil Levels shown apply to base models and gear units ending in AZ, AF, VZ, & VF.

92 SERIES HELICAL-BEVEL FOOTED OIL FILL QUANTITIES

92 Helical-bevel footed lubrication

The following NORD Gear reducers are shipped from the factory with a pre-determined oil fill level in accordance to the specified reducer size and mounting position. For additional information, please refer to the "Oil Plug & Vent Locations" documentation for your gear unit.

STOP *HARMFUL SITUATION* **STOP**

Actual oil volume can vary slightly depending upon the gear case size, mounting and ratio. Prior to commissioning the reducer, check the oil-fill level using the reducer's oil level plug and drain or add addition oil as needed. The minimum acceptable oil level is 0.15 in (4mm) below the oil level hole.

For mounting orientations other than shown please consult NORD Gear. Reducer modifications may be required.

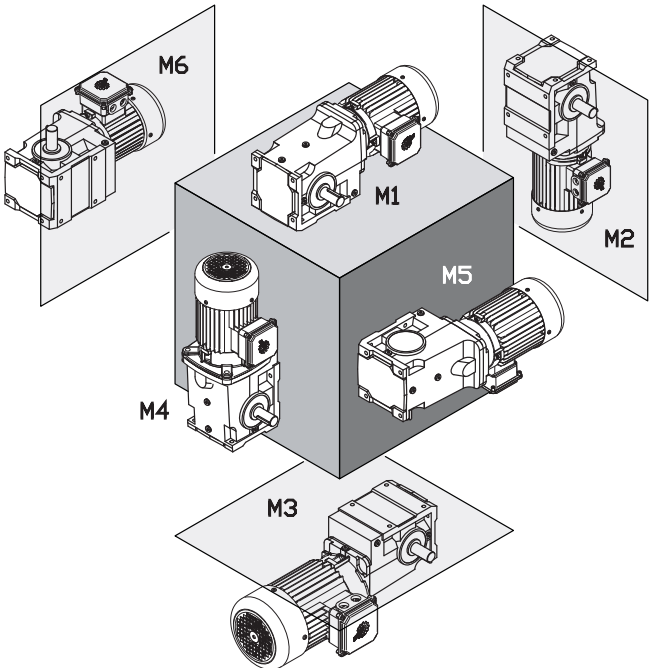

Type	M1		M2		M3		M4		M5		M6	
	Quarts	Liters	Quarts	Liters	Quarts	Liters	Quarts	Liters	Quarts	Liters	Quarts	Liters
SK 92072	0.42	0.40	0.63	0.60	0.53	0.50	0.58	0.55	0.42	0.40	0.42	0.40
SK 92172	0.63	0.60	0.95	0.90	1.06	1.00	1.16	1.10	1.16	1.10	0.85	0.80
SK 92372	0.95	0.90	1.69	1.60	1.59	1.50	2.01	1.90	1.59	1.50	0.95	0.90
SK 92672	1.90	1.80	3.70	3.50	3.80	3.60	3.59	3.40	2.75	2.60	2.75	2.60
SK 92772	2.43	2.30	4.76	4.50	4.86	4.60	5.60	5.30	4.33	4.10	4.33	4.10

Oil Levels shown apply to base models and gear units ending in LX, AX, & VX.

92.1/93.1 SERIES HELICAL-BEVEL OIL FILL QUANTITIES

92.1/93.1 Helical-bevel lubrication

All NORD Gear reducers are shipped from the factory with a pre-determined oil fill level in accordance to the specified reducer size & mounting position. For additional information, please refer to the "Oil Plug & Vent Locations" documentation for your gear unit.

STOP *HARMFUL SITUATION* **STOP**

Actual oil volume can vary slightly depending upon the gear case size, mounting and ratio. Prior to commissioning the reducer, check the oil-fill level using the reducer's oil level plug and drain or add addition oil as needed.

For mounting orientations other than shown please consult NORD Gear. Reducer modifications may be required.

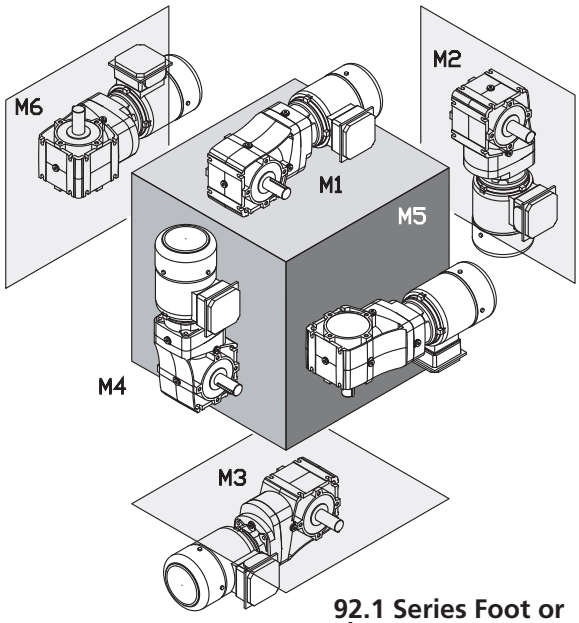

92.1 Series Foot or Flange Mount

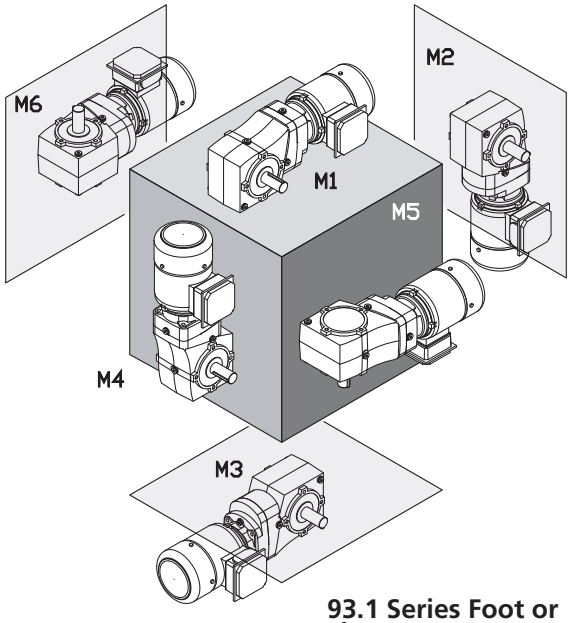

93.1 Series Foot or Flange Mount

92.1 Series Oil Fill

	M1		M2		M3		M4		M5		M6	
	Quarts	Liters	Quarts	Liters	Quarts	Liters	Quarts	Liters	Quarts	Liters	Quarts	Liters
SK 92072.1	0.28	0.26	0.52	0.49	0.44	0.42	0.57	0.54	0.31	0.29	0.33	0.31
SK 92172.1	0.36	0.34	0.65	0.61	0.55	0.52	0.71	0.67	0.44	0.42	0.51	0.48
SK 92372.1	0.45	0.43	0.97	0.92	0.77	0.73	0.88	0.83	0.58	0.55	0.65	0.61
SK 92672.1	0.90	0.85	1.69	1.60	1.27	1.20	1.59	1.50	1.08	1.02	1.08	1.02
SK 92772.1	1.37	1.30	2.80	2.65	1.97	1.86	2.59	2.45	1.69	1.60	1.69	1.60

Oil levels shown apply to all foot & flange mounted units.

93.1 Series Oil Fill

	M1		M2		M3		M4		M5		M6	
	Quarts	Liters	Quarts	Liters	Quarts	Liters	Quarts	Liters	Quarts	Liters	Quarts	Liters
SK 93072.1	0.41	0.39	0.98	0.93	0.84	0.79	1.08	1.02	0.52	0.49	0.66	0.62
SK 93172.1	0.63	0.60	1.24	1.17	0.99	0.94	1.29	1.22	0.69	0.65	0.90	0.85
SK 93372.1	1.06	1.00	2.08	1.97	1.74	1.65	2.26	2.14	1.18	1.12	1.42	1.34
SK 93672.1	1.90	1.80	3.41	3.23	2.86	2.71	4.44	4.20	2.13	2.02	2.59	2.45
SK 93772.1	2.87	2.72	4.89	4.63	3.91	3.70	5.71	5.40	3.10	2.93	3.43	3.25

Oil levels shown apply to all foot & flange mounted units.

92 SERIES HELICAL-BEVEL FLANGED OIL FILL QUANTITIES

92 Helical-bevel flanged lubrication

The following NORD Gear reducers are shipped from the factory with a pre-determined oil fill level in accordance to the specified reducer size and mounting position. For additional information, please refer to the "Oil Plug & Vent Locations" documentation for your gear unit.

STOP *HARMFUL SITUATION* **STOP**

Actual oil volume can vary slightly depending upon the gear case size, mounting and ratio. Prior to commissioning the reducer, check the oil-fill level using the reducer's oil level plug and drain or add addition oil as needed. The minimum acceptable oil level is 0.15 in (4mm) below the oil level hole.

For mounting orientations other than shown please consult NORD Gear. Reducer modifications may be required.

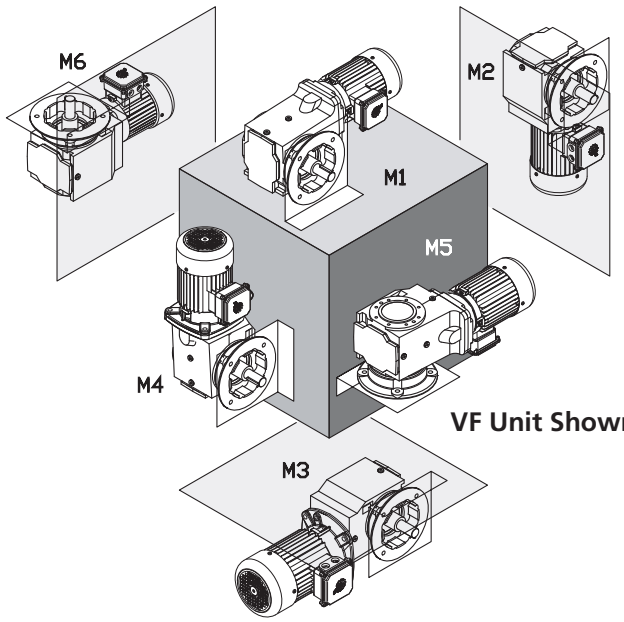

VF Unit Shown

Type	M1		M2		M3		M4		M5		M6	
	Quarts	Liters	Quarts	Liters	Quarts	Liters	Quarts	Liters	Quarts	Liters	Quarts	Liters
SK 92072	0.42	0.40	0.63	0.60	0.58	0.55	0.58	0.55	0.42	0.40	0.42	0.40
SK 92172	0.53	0.50	1.06	1.00	0.95	0.90	1.11	1.05	0.95	0.90	0.63	0.60
SK 92372	1.27	1.20	1.69	1.60	1.59	1.50	2.01	1.90	1.37	1.30	1.37	1.30
SK 92672	1.69	1.60	2.96	2.80	2.64	2.50	3.49	3.30	2.54	2.40	2.54	2.40
SK 92772	2.96	2.80	4.65	4.40	4.76	4.50	5.81	5.50	3.70	3.50	3.70	3.50

Oil Levels shown apply to gear units ending in AZ, AF, VZ, & VF.

HELICAL-WORM FOOTED OIL FILL QUANTITIES

Helical-worm footed lubrication

The following NORD Gear reducers are shipped from the factory with a pre-determined oil fill level in accordance to the specified reducer size and mounting position. For additional information, please refer to the "Oil Plug & Vent Locations" documentation for your gear unit.

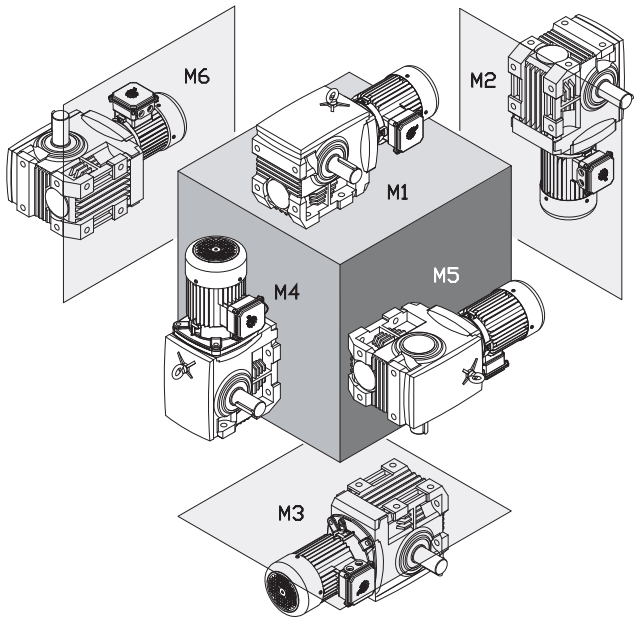

STOP *HARMFUL SITUATION* STOP

Actual oil volume can vary slightly depending upon the gear case size, mounting and ratio. Prior to commissioning the reducer, check the oil-fill level using the reducer's oil level plug and drain or add addition oil as needed. The minimum acceptable oil level is 0.15 in (4mm) below the oil level hole.

For mounting orientations other than shown please consult NORD Gear. Reducer modifications may be required.

Type	M1		M2		M3		M4		M5		M6	
	Quarts	Liters	Quarts	Liters	Quarts	Liters	Quarts	Liters	Quarts	Liters	Quarts	Liters
SK 02040	0.42	0.40	0.85	0.80	0.79	0.75	0.69	0.65	0.53	0.50	0.53	0.50
SK 02050	0.42	0.40	1.48	1.40	1.16	1.10	1.37	1.30	0.74	0.70	0.74	0.70
SK 13050	0.79	0.75	1.85	1.75	1.37	1.30	1.85	1.75	0.79	0.75	0.79	0.75
SK 12063	0.63	0.60	1.90	1.80	1.27	1.20	1.69	1.60	1.06	1.00	1.06	1.00
SK 13063	1.06	1.00	2.43	2.30	1.59	1.50	2.32	2.20	1.16	1.10	1.16	1.10
SK 12080	0.95	0.90	3.28	3.10	2.54	2.40	3.17	3.00	1.90	1.80	1.90	1.80
SK 13080	1.80	1.70	3.70	3.50	3.70	3.50	3.70	3.50	2.11	2.00	2.11	2.00
SK 32100	1.59	1.50	6.66	6.30	5.92	5.60	5.81	5.50	3.80	3.60	3.80	3.60
SK 33100	2.54	2.40	6.76	6.40	5.71	5.40	6.87	6.50	3.59	3.40	3.59	3.40
SK 42125	2.96	2.80	12.5	11.8	10.8	10.2	10.6	10.0	6.55	6.20	6.55	6.20
SK 43125	4.49	4.25	13.7	13.0	11.1	10.5	14.3	13.5	7.61	7.20	7.61	7.20

HELICAL-WORM SOLID SHAFT/FLANGED OIL FILL QUANTITIES

Helical-worm solid shaft/flanged lubrication

The following NORD Gear reducers are shipped from the factory with a pre-determined oil fill level in accordance to the specified reducer size and mounting position. For additional information, please refer to the "Oil Plug & Vent Locations" documentation for your gear unit.

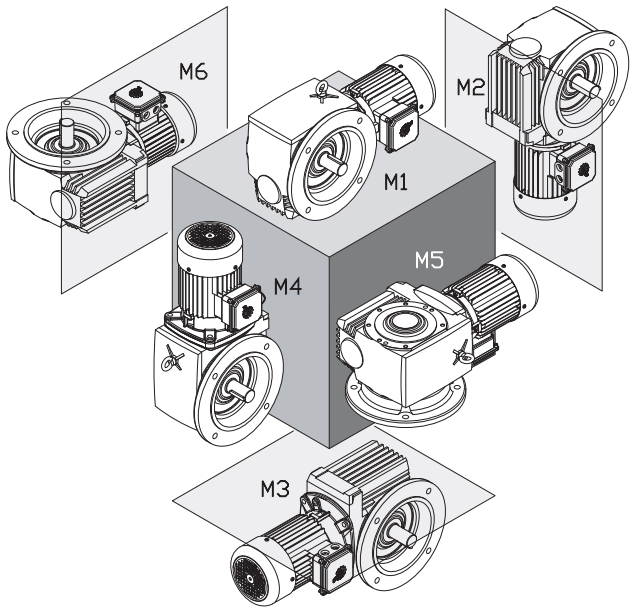

STOP *HARMFUL SITUATION* STOP

Actual oil volume can vary slightly depending upon the gear case size, mounting and ratio. Prior to commissioning the reducer, check the oil-fill level using the reducer's oil level plug and drain or add addition oil as needed. The minimum acceptable oil level is 0.15 in (4mm) below the oil level hole.

For mounting orientations other than shown please consult NORD Gear. Reducer modifications may be required.

Type	M1		M2		M3		M4		M5		M6	
	Quarts	Liters	Quarts	Liters	Quarts	Liters	Quarts	Liters	Quarts	Liters	Quarts	Liters
SK 02040 VF	0.53	0.50	0.85	0.80	0.79	0.75	0.63	0.60	0.53	0.50	0.53	0.50
SK 02050 VF	0.42	0.40	1.59	1.50	1.32	1.25	1.27	1.20	0.95	0.90	0.79	0.75
SK 13050 VF	0.79	0.75	1.90	1.80	1.59	1.50	1.80	1.70	1.11	1.05	0.95	0.90
SK 12063 VF	0.53	0.50	2.06	1.95	1.80	1.70	1.85	1.75	1.27	1.20	1.00	0.95
SK 13063 VF	1.06	1.00	2.43	2.30	2.01	1.90	2.32	2.20	1.43	1.35	1.16	1.10
SK 12080 VF	0.95	0.90	3.91	3.70	3.38	3.20	3.59	3.40	2.64	2.50	2.43	2.30
SK 13080 VF	1.69	1.60	4.02	3.80	3.70	3.50	4.12	3.90	2.85	2.70	2.64	2.50
SK 32100 VF	1.48	1.40	6.66	6.30	6.45	6.10	6.45	6.10	4.23	4.00	3.80	3.60
SK 33100 VF	2.80	2.65	7.61	7.20	6.76	6.40	8.03	7.60	4.54	4.30	4.02	3.80
SK 42125 VF	3.17	3.00	12.2	11.5	12.2	11.5	11.6	11.0	8.88	8.40	7.71	7.30
SK 43125 VF	4.97	4.70	15.9	15.0	13.7	13.0	16.9	16.0	9.51	9.00	8.14	7.70

HELICAL-WORM HOLLOW SHAFT OIL FILL QUANTITIES

Helical-worm hollow shaft lubrication

The following NORD Gear reducers are shipped from the factory with a pre-determined oil fi ll level in accordance to the specifi ed reducer size and mounting position. For additional information, please refer to the "Oil Plug & Vent Locations" documentation for your gear unit.

STOP *HARMFUL SITUATION* **STOP**

Actual oil volume can vary slightly depending upon the gear case size, mounting and ratio. Prior to commissioning the reducer, check the oil-fi ll level using the reducer's oil level plug and drain or add addition oil as needed. The minimum acceptable oil level is 0.15 in (4mm) below the oil level hole.

For mounting orientations other than shown please consult NORD Gear. Reducer modifications may be required.

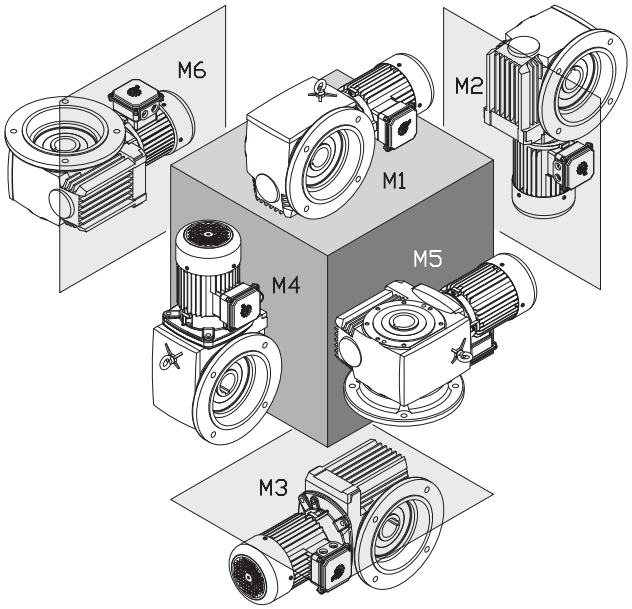

AF Unit Shown

Type	M1		M2		M3		M4		M5		M6	
	Quarts	Liters	Quarts	Liters	Quarts	Liters	Quarts	Liters	Quarts	Liters	Quarts	Liters
SK 02040	0.42	0.40	0.74	0.70	0.69	0.65	0.69	0.65	0.58	0.55	0.58	0.55
SK 02050	0.48	0.45	1.48	1.40	1.22	1.15	1.16	1.10	0.79	0.75	0.79	0.75
SK 13050	0.95	0.90	1.90	1.80	1.37	1.30	1.74	1.65	1.37	1.30	1.37	1.30
SK 12063	0.58	0.55	1.53	1.45	1.69	1.60	1.69	1.60	1.16	1.10	1.16	1.10
SK 13063	1.11	1.05	2.22	2.10	1.90	1.80	2.22	2.10	1.48	1.40	1.48	1.40
SK 12080	0.85	0.80	3.28	3.10	3.38	3.20	2.96	2.80	1.90	1.80	1.90	1.80
SK 13080	1.69	1.60	3.80	3.60	3.06	2.90	3.96	3.75	2.11	2.00	2.11	2.00
SK 32100	1.59	1.50	5.92	5.60	5.92	5.60	5.60	5.30	4.23	4.00	4.23	4.00
SK 33100	2.75	2.60	6.34	6.00	6.13	5.80	6.34	6.00	3.70	3.50	3.70	3.50
SK 42125	3.17	3.00	13.2	12.5	11.4	10.8	11.4	10.8	6.87	6.50	6.87	6.50
SK 43125	4.86	4.60	14.4	13.6	12.0	11.4	15.1	14.3	8.03	7.60	8.03	7.60

Oil Levels shown apply to gear units ending in AZ, AF.

NORDBLOC® FOOTED OIL FILL QUANTITIES

NORDBLOC® footed lubrication

The following NORD Gear reducers are shipped from the factory with a pre-determined oil fill level in accordance to the specified reducer size and mounting position. For additional information, please refer to the "Oil Plug & Vent Locations" documentation for your gear unit.

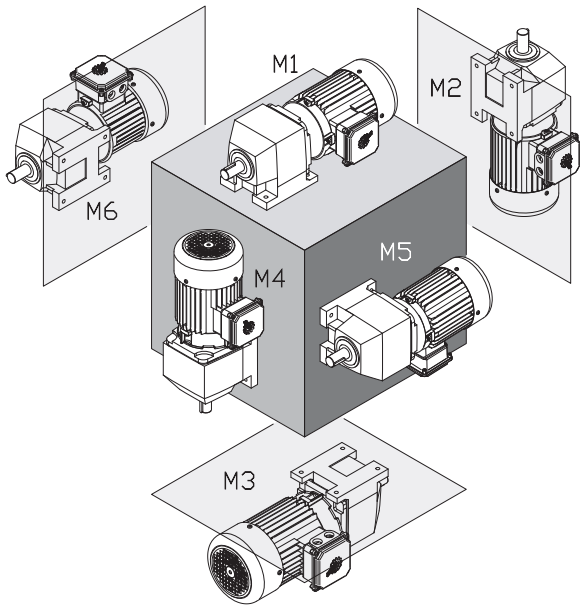

STOP *HARMFUL SITUATION* **STOP**

Actual oil volume can vary slightly depending upon the gear case size, mounting and ratio. Prior to commissioning the reducer, check the oil-fill level using the reducer's oil level plug and drain or add addition oil as needed. The minimum acceptable oil level is 0.15 in (4mm) below the oil level hole.

For mounting orientations other than shown please consult NORD Gear. Reducer modifications may be required.

Type	M1		M2		M3		M4		M5		M6	
	Quarts	Liters	Quarts	Liters	Quarts	Liters	Quarts	Liters	Quarts	Liters	Quarts	Liters
SK 172	0.37	0.35	0.53	0.50	0.53	0.50	0.53	0.50	0.53	0.50	0.53	0.50
SK 272	0.63	0.60	1.06	1.00	1.06	1.00	1.06	1.00	1.06	1.00	1.06	1.00
SK 273	0.66	0.62	1.16	1.10	1.16	1.10	1.16	1.10	1.16	1.10	1.16	1.10
SK 372	0.63	0.60	1.06	1.00	1.06	1.00	1.06	1.00	1.06	1.00	1.06	1.00
SK 373	0.58	0.55	1.16	1.10	1.16	1.10	1.16	1.10	1.16	1.10	1.16	1.10
SK 472	1.06	1.00	2.01	1.90	2.01	1.90	2.11	2.00	1.90	1.80	1.90	1.80
SK 473	1.37	1.30	2.64	2.50	2.22	2.10	2.54	2.40	2.22	2.10	2.22	2.10
SK 572	1.06	1.00	2.01	1.90	2.01	1.90	2.11	2.00	1.90	1.80	1.90	1.80
SK 573	1.37	1.30	2.64	2.50	2.22	2.10	2.54	2.40	2.22	2.10	2.22	2.10
SK 672	1.48	1.40	3.59	3.40	3.28	3.10	3.33	3.15	1.53	1.45	3.33	3.15
SK 673	1.90	1.80	4.02	3.80	3.38	3.20	3.59	3.40	3.06	2.90	3.17	3.00
SK 772	2.11	2.00	3.49	3.30	3.70	3.50	4.44	4.20	2.85	2.70	3.49	3.30
SK 773	2.64	2.50	4.76	4.50	3.91	3.70	4.86	4.60	3.49	3.30	3.49	3.30
SK 872	3.91	3.70	10.1	9.60	9.62	9.10	7.71	7.30	4.97	4.70	8.45	8.00
SK 873	6.55	6.20	8.88	8.40	7.93	7.50	9.62	9.10	7.93	7.50	7.93	7.50
SK 972	6.87	6.50	16.9	16.0	16.6	15.7	15.5	14.7	8.98	8.50	14.8	14.0
SK 973	11.6	11.0	16.7	15.8	13.7	13.0	16.9	16.0	14.1	13.3	13.7	13.0

NORDBLOC® FLANGED OIL FILL QUANTITIES

NORDBLOC® flanged lubrication

The following NORD Gear reducers are shipped from the factory with a pre-determined oil fill level in accordance to the specified reducer size and mounting position. For additional information, please refer to the "Oil Plug & Vent Locations" documentation for your gear unit.

STOP *HARMFUL SITUATION* **STOP**

Actual oil volume can vary slightly depending upon the gear case size, mounting and ratio. Prior to commissioning the reducer, check the oil-fill level using the reducer's oil level plug and drain or add addition oil as needed. The minimum acceptable oil level is 0.15 in (4mm) below the oil level hole.

For mounting orientations other than shown please consult NORD Gear. Reducer modifications may be required.

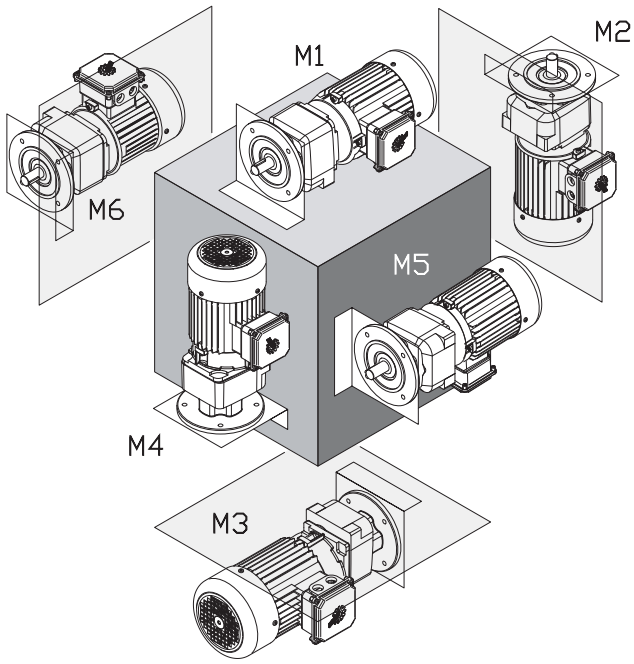

Mounting Position	M1		M2		M3		M4		M5		M6	
	Quarts	Liters	Quarts	Liters	Quarts	Liters	Quarts	Liters	Quarts	Liters	Quarts	Liters
SK 172 F	0.37	0.35	0.53	0.50	0.53	0.50	0.53	0.50	0.53	0.50	0.53	0.50
SK 272 F	0.63	0.60	1.06	1.00	1.06	1.00	1.06	1.00	1.06	1.00	1.06	1.00
SK 273 F	0.66	0.62	1.16	1.10	1.16	1.10	1.16	1.10	1.16	1.10	1.16	1.10
SK 372 F	0.63	0.60	1.06	1.00	1.06	1.00	1.06	1.00	1.06	1.00	1.06	1.00
SK 373 F	0.58	0.55	1.16	1.10	1.16	1.10	1.16	1.10	1.16	1.10	1.16	1.10
SK 472 F	1.06	1.00	2.01	1.90	2.01	1.90	2.01	1.90	2.01	1.90	1.59	1.50
SK 473 F	1.32	1.25	2.54	2.40	2.22	2.10	2.64	2.50	2.22	2.10	2.22	2.10
SK 572 F	1.06	1.00	2.01	1.90	2.01	1.90	2.01	1.90	2.01	1.90	1.59	1.50
SK 573 F	1.32	1.25	2.54	2.40	2.22	2.10	2.64	2.50	2.22	2.10	2.22	2.10
SK 672 F	1.22	1.15	3.59	3.40	2.85	2.70	2.96	2.80	1.32	1.25	2.85	2.70
SK 673 F	1.80	1.70	4.02	3.80	3.17	3.00	3.38	3.20	3.17	3.00	3.17	3.00
SK 772 F	1.69	1.60	3.49	3.30	3.70	3.50	3.49	3.30	3.28	3.10	3.28	3.10
SK 773 F	2.43	2.30	5.28	5.00	3.80	3.60	4.76	4.50	4.12	3.90	4.12	3.90
SK 872 F	3.70	3.50	9.51	9.00	8.35	7.90	8.14	7.70	4.12	3.90	7.61	7.20
SK 873 F	5.28	5.00	9.30	8.80	8.03	7.60	8.45	8.00	8.45	8.00	8.45	8.00
SK 972 F	6.87	6.50	15.9	15.0	13.7	13.0	14.3	13.5	6.87	6.50	12.7	12.0
SK 973 F	10.9	10.3	17.4	16.5	13.7	13.0	16.9	16.0	14.8	14.0	14.8	14.0

NORDBLOC®.1 FOOTED OIL FILL QUANTITIES

NORDBLOC®.1 footed lubrication

The following NORD Gear reducers are shipped from the factory with a pre-determined oil fill level in accordance to the specified reducer size and mounting position. For additional information, please refer to the "Oil Plug & Vent Locations" documentation for your gear unit.

STOP *HARMFUL SITUATION* **STOP**

Actual oil volume can vary slightly depending upon the gear case size, mounting and ratio. Prior to commissioning the reducer, check the oil-fill level using the reducer's oil level plug and drain or add addition oil as needed. The minimum acceptable oil level is 0.15 in (4mm) below the oil level hole.

For mounting orientations other than shown please consult NORD Gear. Reducer modifications may be required.

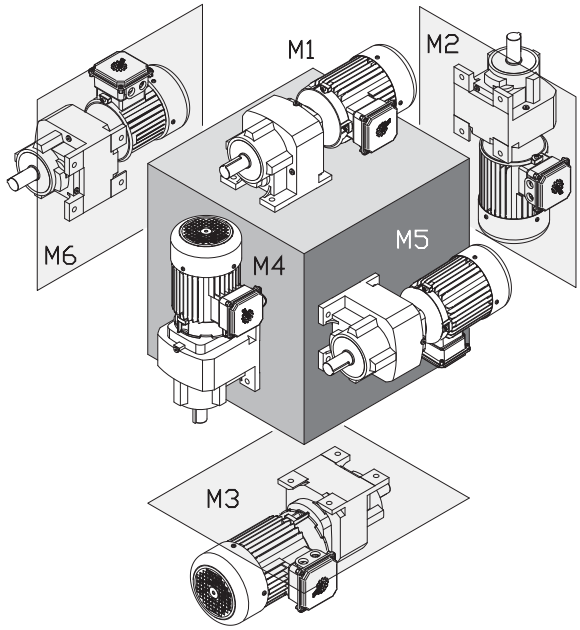

Type	M1		M2		M3		M4		M5		M6	
	Quarts	Liters	Quarts	Liters	Quarts	Liters	Quarts	Liters	Quarts	Liters	Quarts	Liters
SK072.1	0.17	0.16	0.34	0.32	0.22	0.21	0.24	0.23	0.19	0.18	0.21	0.20
SK172.1	0.29	0.27	0.62	0.59	0.44	0.42	0.48	0.45	0.34	0.32	0.41	0.39
SK372.1	0.48	0.45	1.11	1.05	0.79	0.75	1.06	1.00	0.63	0.60	0.69	0.65
SK373.1	0.48	0.45	1.11	1.05	0.79	0.75	1.06	1.00	0.63	0.60	0.69	0.65
SK572.1	0.79	0.75	2.01	1.90	1.59	1.50	2.11	2.00	1.16	1.10	1.22	1.15
SK573.1	0.79	0.75	2.01	1.90	1.59	1.50	2.11	2.00	1.16	1.10	1.22	1.15
SK672.1	1.16	1.10	2.75	2.60	2.27	2.15	2.85	2.70	1.64	1.55	1.74	1.65
SK673.1	1.16	1.10	2.75	2.60	2.27	2.15	2.85	2.70	1.64	1.55	1.74	1.65
SK772.1	1.37	1.30	4.02	3.80	2.54	2.40	3.38	3.20	1.69	1.60	2.64	2.50
SK773.1	2.43	2.30	4.02	3.80	3.49	3.30	3.38	3.20	2.54	2.40	3.28	3.10
SK872.1	3.06	2.90	8.24	7.80	4.86	4.60	6.76	6.40	2.64	2.50	4.23	4.00
SK873.1	4.44	4.20	8.24	7.80	6.23	5.90	6.76	6.40	4.33	4.10	6.23	5.90
SK972.1	4.76	4.50	12.7	12.0	7.93	7.50	12.2	11.5	4.44	4.20	7.93	7.50
SK973.1	7.93	7.50	12.7	12.0	11.1	10.5	12.2	11.5	7.93	7.50	11.1	10.5
SK772.1VL	2.11	2.00	4.02	3.80	2.54	2.40	3.38	3.20	1.69	1.60	2.64	2.50
SK773.1VL	2.43	2.30	4.02	3.80	3.49	3.30	3.38	3.20	2.54	2.40	3.28	3.10
SK872.1VL	5.28	5.00	8.24	7.80	4.86	4.60	6.76	6.40	2.64	2.50	4.23	4.00
SK873.1VL	4.44	4.20	8.24	7.80	6.23	5.90	6.76	6.40	4.33	4.10	6.23	5.90
SK972.1VL	8.98	8.50	12.7	12.0	7.93	7.50	12.2	11.5	4.44	4.20	7.93	7.50
SK973.1VL	7.93	7.50	12.7	12.0	11.1	10.5	12.2	11.5	7.93	7.50	11.1	10.5

NORDBLOC®.1 FLANGED OIL FILL QUANTITIES

NORDBLOC®.1 flanged lubrication

The following NORD Gear reducers are shipped from the factory with a pre-determined oil fill level in accordance to the specified reducer size and mounting position. For additional information, please refer to the "Oil Plug & Vent Locations" documentation for your gear unit.

STOP *HARMFUL SITUATION* **STOP**

Actual oil volume can vary slightly depending upon the gear case size, mounting and ratio. Prior to commissioning the reducer, check the oil-fill level using the reducer's oil level plug and drain or add addition oil as needed. The minimum acceptable oil level is 0.15 in (4mm) below the oil level hole.

For mounting orientations other than shown please consult NORD Gear. Reducer modifications may be required.

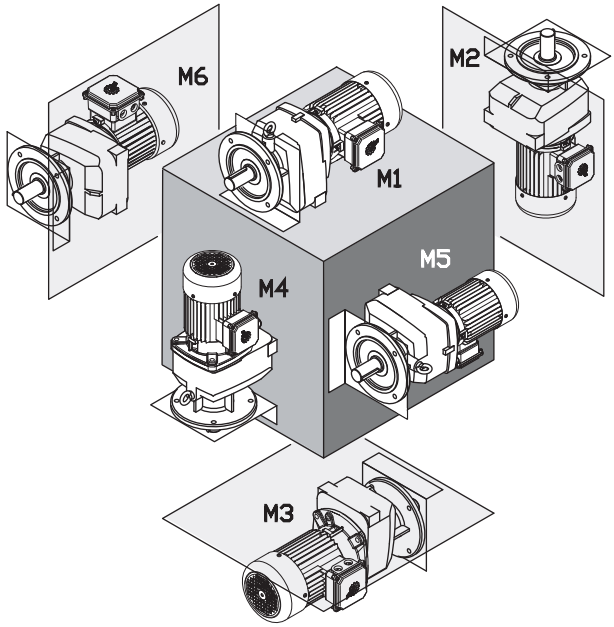

Type	M1		M2		M3		M4		M5		M6	
	Quarts	Liters	Quarts	Liters	Quarts	Liters	Quarts	Liters	Quarts	Liters	Quarts	Liters
SK072.1 F	0.17	0.16	0.34	0.32	0.22	0.21	0.24	0.23	0.19	0.18	0.21	0.20
SK172.1 F	0.29	0.27	0.62	0.59	0.44	0.42	0.48	0.45	0.34	0.32	0.41	0.39
SK372.1 F	0.48	0.45	1.11	1.05	0.79	0.75	1.06	1.00	0.63	0.60	0.69	0.65
SK373.1 F	0.48	0.45	1.11	1.05	0.79	0.75	1.06	1.00	0.63	0.60	0.69	0.65
SK572.1 F	0.79	0.75	2.01	1.90	1.59	1.50	2.11	2.00	1.16	1.10	1.22	1.15
SK573.1 F	0.79	0.75	2.01	1.90	1.59	1.50	2.11	2.00	1.16	1.10	1.22	1.15
SK672.1 F	1.16	1.10	2.75	2.60	2.27	2.15	2.85	2.70	1.64	1.55	1.74	1.65
SK673.1 F	1.16	1.10	2.75	2.60	2.27	2.15	2.85	2.70	1.64	1.55	1.74	1.65
SK772.1 F	1.37	1.30	4.02	3.80	2.54	2.40	3.49	3.30	1.80	1.70	2.54	2.40
SK773.1 F	2.11	2.00	3.70	3.50	3.38	3.20	3.06	2.90	2.43	2.30	3.17	3.00
SK872.1 F	3.06	2.90	7.93	7.50	5.39	5.10	7.08	6.70	2.75	2.60	4.54	4.30
SK873.1 F	4.33	4.10	8.03	7.60	7.29	6.90	6.97	6.60	5.28	5.00	6.97	6.60
SK973.1 F	7.82	7.40	12.9	12.2	11.7	11.1	12.3	11.6	8.45	8.00	11.5	10.9
SK972.1 F	4.76	4.50	13.2	12.5	8.45	8.00	13.2	12.5	4.76	4.50	8.14	7.70
SK772.1F VL	2.11	2.00	4.02	3.80	2.54	2.40	3.49	3.30	1.80	1.70	2.54	2.40
SK773.1F VL	2.11	2.00	3.70	3.50	3.38	3.20	3.06	2.90	2.43	2.30	3.17	3.00
SK872.1F VL	5.28	5.00	7.93	7.50	5.39	5.10	7.08	6.70	2.75	2.60	4.54	4.30
SK873.1F VL	4.33	4.10	8.03	7.60	7.29	6.90	6.97	6.60	5.28	5.00	6.97	6.60
SK972.1F VL	8.98	8.50	13.2	12.5	8.45	8.00	13.2	12.5	4.76	4.50	8.14	7.70
SK973.1F VL	7.82	7.40	12.9	12.2	11.7	11.1	12.3	11.6	8.45	8.00	11.5	10.9

MINICASE® (SM SERIES) WORM GEAR OIL FILL QUANTITIES - FOOT HOUSING

MINICASE® (SM Series) Lubrication

NORD MINICASE® (SM Series) worm gear reducers and worm gearmotors are inherently maintence free, factory oil filled, and supplied with a high quality, long life synthetic gear oil intended to be suitable for the life of the product. These gear units are also supplied without oil service plugs or vents.

Related User Manuals

U10790 MINICASE® (SM Series) Worm – Lubrication Guidelines.
U11040 MINICASE® (SM Series) Worm – Lubrication Types.

STOP *HARMFUL SITUATION* STOP

For mounting orientations other than shown please consult NORD Gear. Reducer modifications may be required.

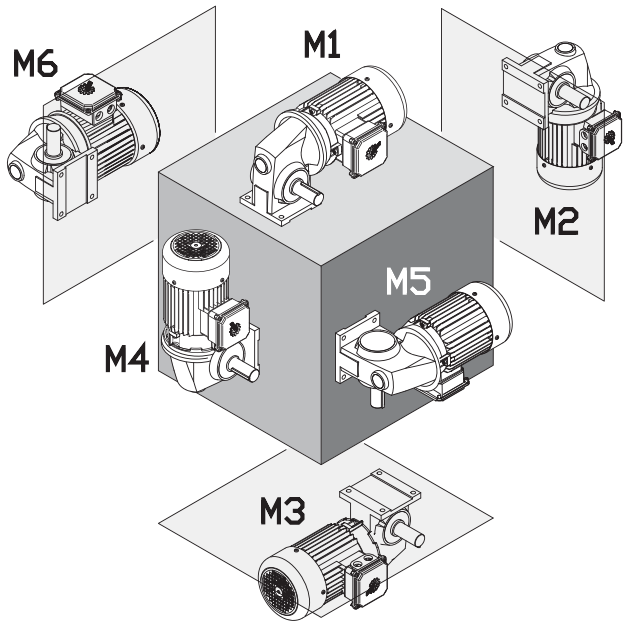

Type	M1		M2		M3		M4		M5		M6	
	oz	ml	oz	ml	oz	ml	oz	ml	oz	ml	oz	ml
SK 1SM31	4.1	120	4.1	120	4.1	120	4.1	120	4.1	120	4.1	120
SK 1SM40	7.4	220	7.4	220	7.4	220	7.4	220	7.4	220	7.4	220
SK 2SM40	11.2	330	11.2	330	11.2	330	12.2	360	11.2	330	11.2	330
SK 1SM50	8.5	250	8.5	250	8.5	250	8.5	250	8.5	250	8.5	250
SK 2SM50	11.8	350	11.8	350	11.8	350	14.2	420	11.8	350	11.8	350
SK 1SM63	14.2	420	14.2	420	14.2	420	14.2	420	14.2	420	14.2	420
SK 2SM63	17.9	530	17.9	530	17.9	530	21.3	630	17.9	530	17.9	530

Oil levels shown apply to any foot-mount gear housings including those ending with no suffix or ending with LX or AX.

MINICASE® (SMI/SMID) WORM GEAR OIL FILL QUANTITIES - FOOT HOUSING

MINICASE® (SMI/SMID Series) Lubrication

NORD MINICASE® (SMI/SMID Series) worm gear reducers and worm gearmotors are inherently maintence free, factory oil filled, and supplied with a high quality, long life synthetic gear oil intended to be suitable for the life of the product. For lubrication types see user manual U11050.

NORD MINICASE® (SMI/SMID Series) worm gear reducers and worm gearmotors are equipped with oil plugs. Venting the gear unit is optional as discussed in user manual U14750.

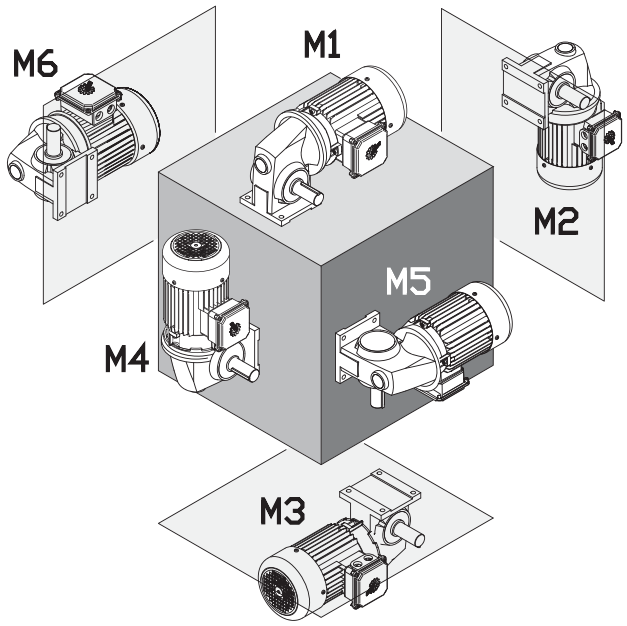

Related User Manuals

U10800 - MINICASE® (SMI/SMID Series) Worm – Lubrication Guidelines.
U11050 - MINICASE® (SMI/SMID Series) Worm – Lubrication Types
U14750 - MINICASE® (SMI/SMID Series) Worm – Oil Plug Locations

STOP *HARMFUL SITUATION* **STOP**

For mounting orientations other than shown please consult NORD Gear. Reducer modifications may be required.

MINICASE® (SMI Series) Gear Reducer Oil Fill - Foot Housing

Type	M1		M2		M3		M4		M5		M6	
	oz	ml	oz	ml	oz	ml	oz	ml	oz	ml	oz	ml
SK 1SMI31	1.5	45	1.5	45	1.5	45	1.5	45	1.5	45	1.5	45
SK 1SMI40	2.7	80	2.7	80	2.7	80	2.7	80	2.7	80	2.7	80
SK 1SMI50	4.4	130	4.4	130	4.4	130	4.4	130	4.4	130	4.4	130
SK 1SMI63	9.1	270	9.1	270	9.1	270	9.1	270	9.1	270	9.1	270
SK 1SMI75	14.2	420	14.2	420	14.2	420	14.2	420	14.2	420	14.2	420

Oil fill level is universal and independent of mounting position
Oil levels shown apply to any foot-mount gear housings including those ending with no-suffix or LX or AX.

MINICASE® (SMID Series) Integral Gearmotor Oil Fill - Foot Housing

Type	M1		M2		M3		M4		M5		M6	
	oz	ml	oz	ml	oz	ml	oz	ml	oz	ml	oz	ml
SK 1SMID31	2.0	60	3.6	105	2.4	70	1.7	50	2.4	70	2.4	70
SK 1SMID40	3.4	100	5.6	165	4.1	120	3.0	90	4.1	120	4.1	120
SK 1SMID50	5.9	175	8.8	260	6.6	195	5.4	160	6.6	195	6.6	195
SK 1SMID63	9.6	285	14.4	425	11.0	325	9.1	270	11.0	325	11.0	325

Oil levels shown apply to any foot-mount gear housings including those ending with no-suffix or LX or AX.

MINICASE® (SM SERIES) WORM GEAR OIL FILL QUANTITIES - FLANGE HOUSING

MINICASE® (SM Series) Lubrication

NORD MINICASE® (SM Series) worm gear reducers and worm gearmotors are inherently maintence free, factory oil filled, and supplied with a high quality, long life synthetic gear oil intended to be suitable for the life of the product. These gear units are also supplied without oil service plugs or vents.

Related User Manuals

U10790 MINICASE® (SM Series) Worm – Lubrication Guidelines.
U11040 MINICASE® (SM Series) Worm – Lubrication Types.

STOP *HARMFUL SITUATION* STOP

For mounting orientations other than shown please consult NORD Gear. Reducer modifications may be required.

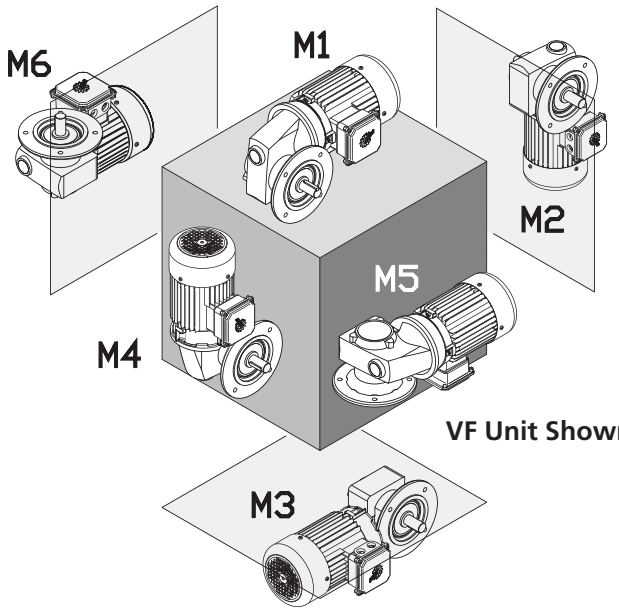

VF Unit Shown

Type	M1		M2		M3		M4		M5		M6	
	oz	ml	oz	ml	oz	ml	oz	ml	oz	ml	oz	ml
SK 1SM31	4.4	130	4.4	130	4.4	130	4.4	130	4.4	130	4.4	130
SK 1SM40	8.1	240	8.1	240	8.1	240	8.1	240	8.1	240	8.1	240
SK 2SM40	11.5	340	11.5	340	11.5	340	12.8	380	11.5	340	11.5	340
SK 1SM50	9.1	270	9.1	270	9.1	270	9.1	270	9.1	270	9.1	270
SK 2SM50	12.5	370	12.5	370	12.5	370	15.2	450	12.5	370	12.5	370
SK 1SM63	15.2	450	15.2	450	15.2	450	15.2	450	15.2	450	15.2	450
SK 2SM63	20.3	600	20.3	600	20.3	600	24.7	730	20.3	600	20.3	600

Oil Levels shown apply to flange-mount gear housings with model type ending in AZ, AF, VZ or VF.

MINICASE® (SMI/SMID) WORM GEAR OIL FILL QUANTITIES - FLANGE HOUSING

MINICASE® (SMI/SMID Series) Lubrication

NORD MINICASE® (SMI/SMID Series) worm gear reducers and worm gearmotors are inherently maintence free, factory oil filled, and supplied with a high quality, long life synthetic gear oil intended to be suitable for the life of the product. For lubrication types see user manual U11050.

NORD MINICASE® (SMI/SMID Series) worm gear reducers and worm gearmotors are equipped with oil plugs. Venting the gear unit is optional as discussed in user manual U14750.

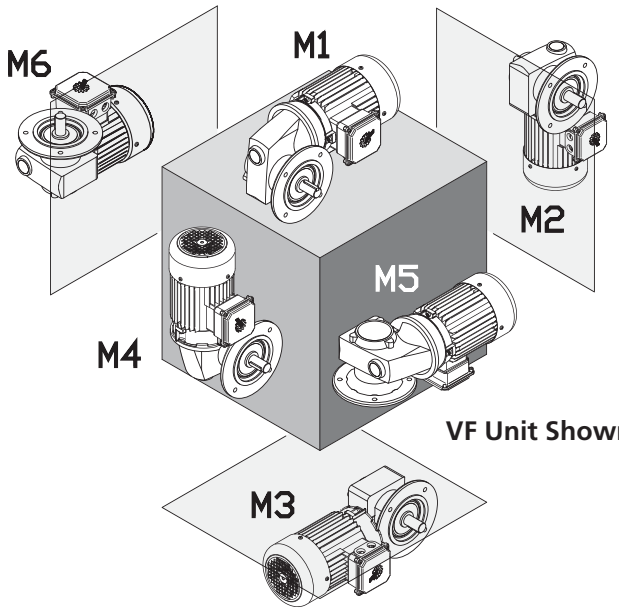

VF Unit Shown

Related User Manuals

U10800 - MINICASE® (SMI/SMID Series) Worm – Lubrication Guidelines.
U11050 - MINICASE® (SMI/SMID Series) Worm – Lubrication Types
U14750 - MINICASE® (SMI/SMID Series) Worm – Oil Plug Locations

STOP *HARMFUL SITUATION* **STOP**

For mounting orientations other than shown please consult NORD Gear. Reducer modifications may be required.

MINICASE® (SMI Series) Gear Reducer Oil Fill - Flange Housing

Type	M1		M2		M3		M4		M5		M6	
	oz	ml	oz	ml	oz	ml	oz	ml	oz	ml	oz	ml
SK 1SMI31	1.5	45	1.5	45	1.5	45	1.5	45	1.5	45	1.5	45
SK 1SMI40	2.7	80	2.7	80	2.7	80	2.7	80	2.7	80	2.7	80
SK 1SMI50	4.4	130	4.4	130	4.4	130	4.4	130	4.4	130	4.4	130
SK 1SMI63	9.1	270	9.1	270	9.1	270	9.1	270	9.1	270	9.1	270
SK 1SMI75	14.2	420	14.2	420	14.2	420	14.2	420	14.2	420	14.2	420

Oil Fill is universal and independent of mounting position.
Oil Levels shown apply to flange-mount gear housings with model type ending in AZ, AF, VZ or VF.

MINICASE® (SMID Series) Integral Gearmotor Oil Fill - Flange Housing

Type	M1		M2		M3		M4		M5		M6	
	oz	ml	oz	ml	oz	ml	oz	ml	oz	ml	oz	ml
SK 1SMID31	2.0	60	3.6	105	2.4	70	1.7	50	2.4	70	2.4	70
SK 1SMID40	3.4	100	5.6	165	4.1	120	3.0	90	4.1	120	4.1	120
SK 1SMID50	5.9	175	8.8	260	6.6	195	5.4	160	6.6	195	6.6	195
SK 1SMID63	9.6	285	14.4	425	11.0	325	9.1	270	11.0	325	11.0	325

Oil Levels shown apply to flange-mount gear housings with model type ending in AZ, AF, VZ or VF.

FLEXBLOC™ (SI/SID SERIES) WORM GEAR OIL FILL QUANTITIES

FLEXBLOC™ (SI/SID Series) Lubrication

NORD FLEXBLOC™ worm gear reducers are inherently maintence free, factory oil filled, and supplied with a high quality, long life synthetic gear oil intended to be suitable for the life of the product. For lubrication types see User Manual U11060.

NORD FLEXBLOC™ worm gear reducers are equipped with oil plugs. Venting the gear unit is optional as discussed in User Manual U14800.

Related User Manuals

U10810 FLEXBLOC™ (SI/SID Series) Worm – Lubrication Guidelines
U11060 FLEXBLOC™ Worm (SI/SID Series) – Lubrication Types
U14800 FLEXBLOC™ Worm (SI/SID Series) – Oil Plug Locations

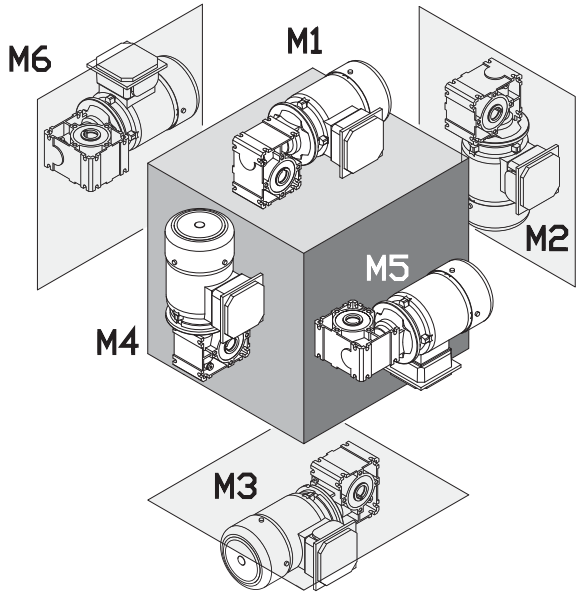

FLEXBLOC™ (SI Series) Gear Reducer Oil Fill

Type	M1		M2		M3		M4		M5		M6	
	oz	ml	oz	ml	oz	ml	oz	ml	oz	ml	oz	ml
SK 1SI31	1.0	30	1.0	30	1.0	30	1.0	30	1.0	30	1.0	30
SK 1SI40	1.9	55	1.9	55	1.9	55	1.9	55	1.9	55	1.9	55
SK 1SI50	3.2	95	3.2	95	3.2	95	3.2	95	3.2	95	3.2	95
SK 1SI63	6.1	180	6.1	180	6.1	180	6.1	180	6.1	180	6.1	180
SK 1SI75	12.2	360	12.2	360	12.2	360	12.2	360	12.2	360	12.2	360

Oil Fill is universal and independent of mounting position.

FLEXBLOC™ (SID Series) Gear Reducer Oil Fill

Type	M1		M2		M3		M4		M5		M6	
	oz	ml	oz	ml	oz	ml	oz	ml	oz	ml	oz	ml
SK 1SID31	1.7	50	3.0	90	2.4	70	1.7	50	2.4	70	2.4	70
SK 1SID40	3.0	90	5.1	150	3.7	110	2.7	80	4.1	120	4.1	120
SK 1SID50	5.7	170	6.8	200	5.7	170	5.1	150	6.1	180	6.1	180
SK 1SID63	9.8	280	12.2	360	9.8	290	8.1	240	10.5	310	10.5	310

Integral gear motors only available upon special request.

STANDARD IN-LINE OIL PLUG & VENT LOCATIONS

Oil plug connections

All reducers are shipped from the factory with a pre-determined oil fill level in accordance to the specified reducer size and mounting position. ***For mounting orientations other than shown please consult NORD Gear. New plug locations may be required.***

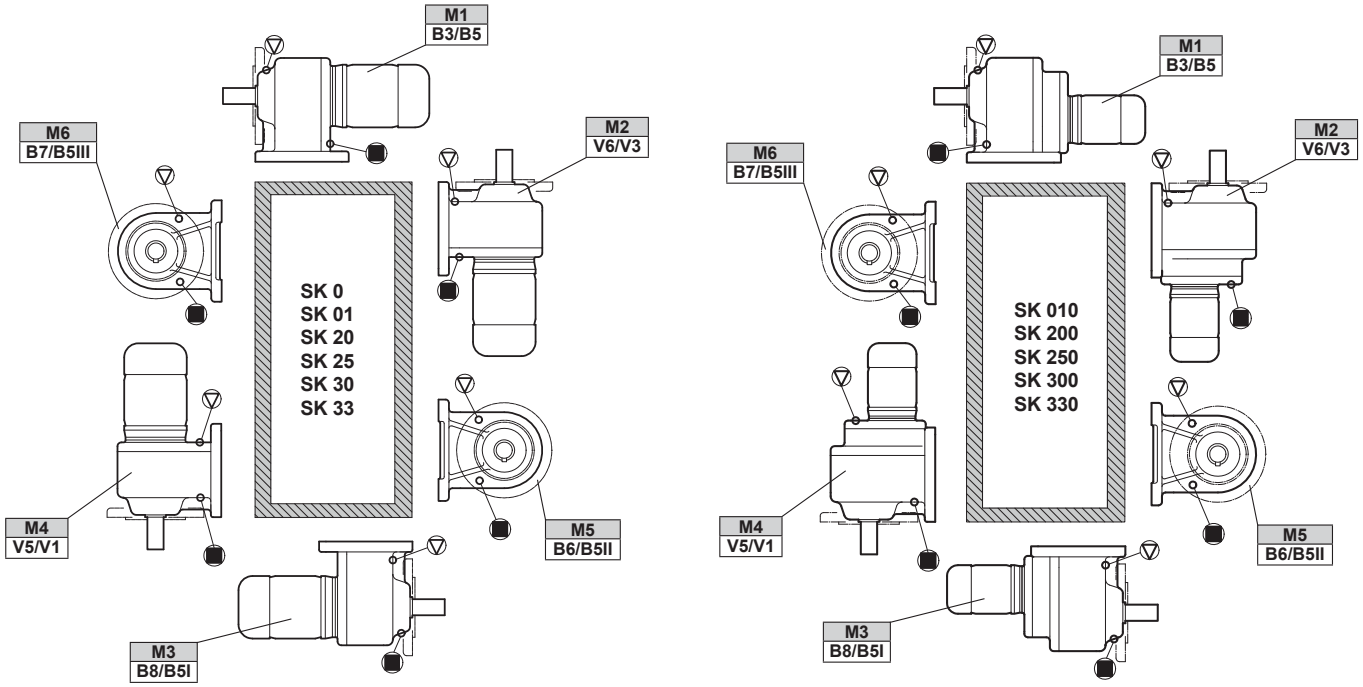

HELICAL IN-LINE
OIL PLUG & VENT LOCATIONS

Oil plug connections

Prior to commissioning the reducer, check the oil-fill level using the reducer's oil-level plug and drain or add additional oil as needed. The minimum acceptable oil level is 0.15 in (4mm) below the oil level hole. ***For mounting orientations other than shown please consult NORD Gear. New plug locations may be required.***

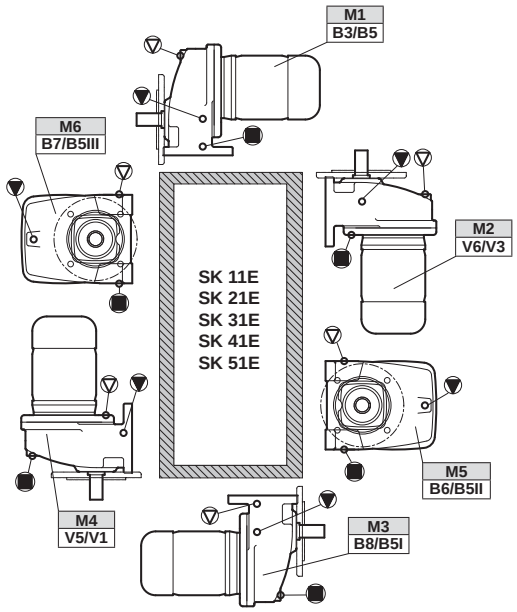

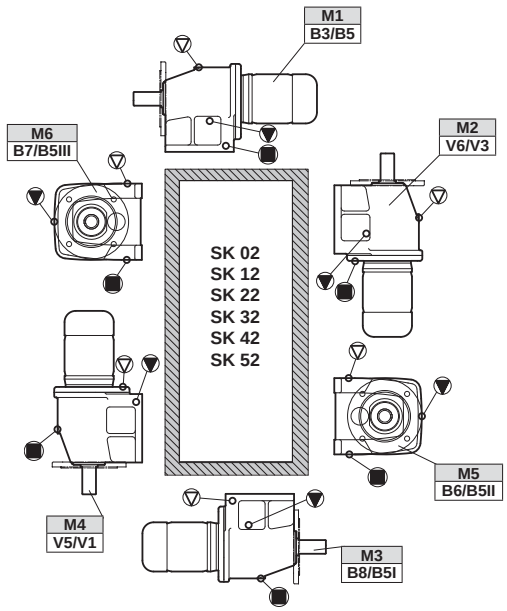

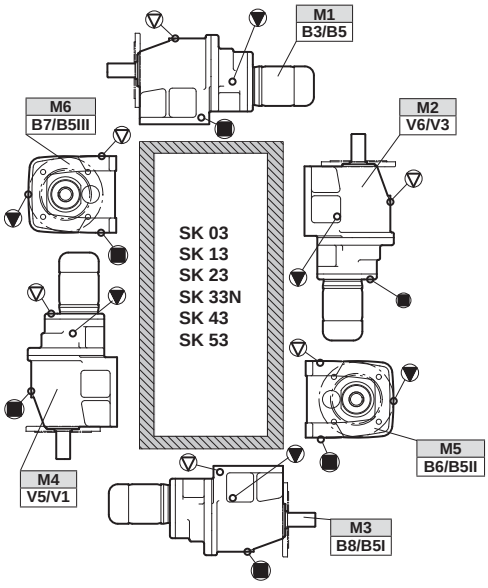

▽ = Vent

▼ = Oil Level

■ = Oil Plug

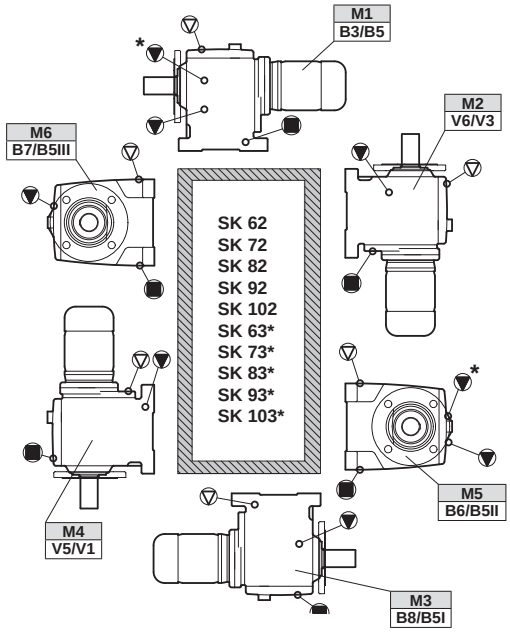

*** Oil level for 3 stage gear units.**

CLINCHER™ OIL PLUG & VENT LOCATIONS

Oil plug connections

Prior to commissioning the reducer, check the oil-fill level using the reducer's oil-level plug and drain or add additional oil as needed. The minimum acceptable oil level is 0.15 in (4mm) below the oil level hole. ***For mounting orientations other than shown please consult NORD Gear. New plug locations may be required.***

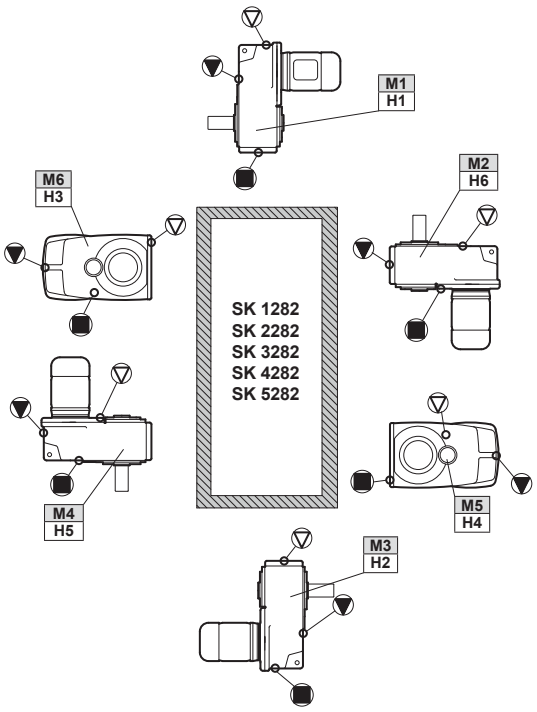

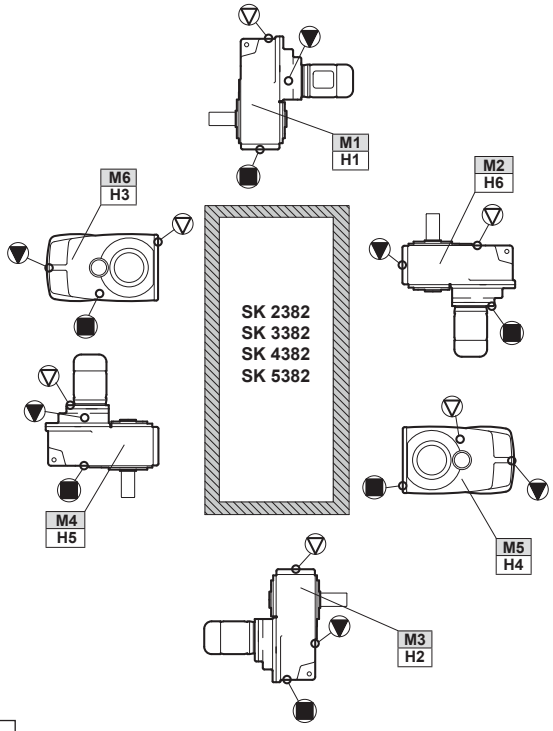

▽ = Vent

▼ = Oil Level

■ = Oil Plug

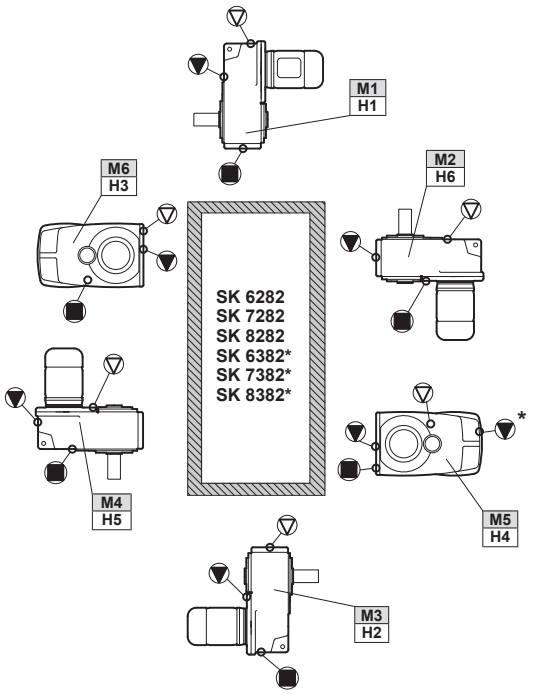

* Oil level for 3 stage gear units

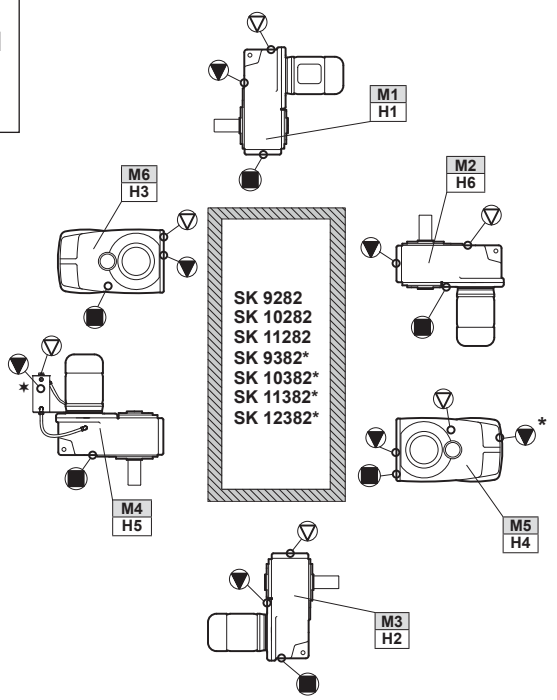

* Oil level for 3 stage gear units

∗ Oil fill level should be verified using the dip stick located in the oil tank for the M4/H5 position.

92 SERIES HELICAL-BEVEL OIL PLUG & VENT LOCATIONS

Oil plug connections

Prior to commissioning the reducer, check the oil-fill level using the reducer's oil-level plug and drain or add additional oil as needed. The minimum acceptable oil level is 0.15 in (4mm) below the oil level hole. ***For mounting orientations other than shown please consult NORD Gear. New plug locations may be required.***

Foot Mount

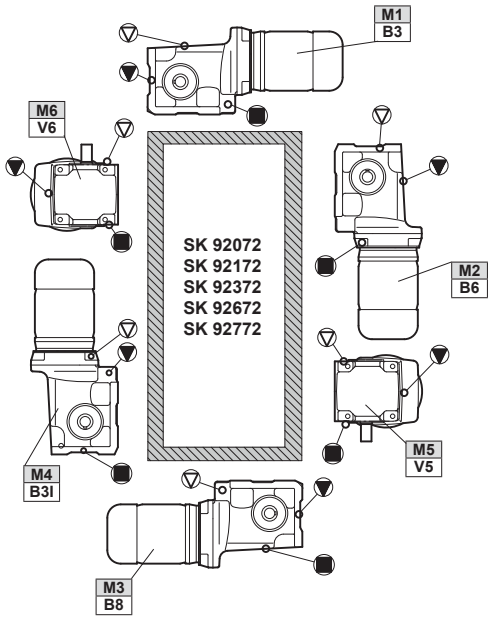

Shaft/Flange Mount

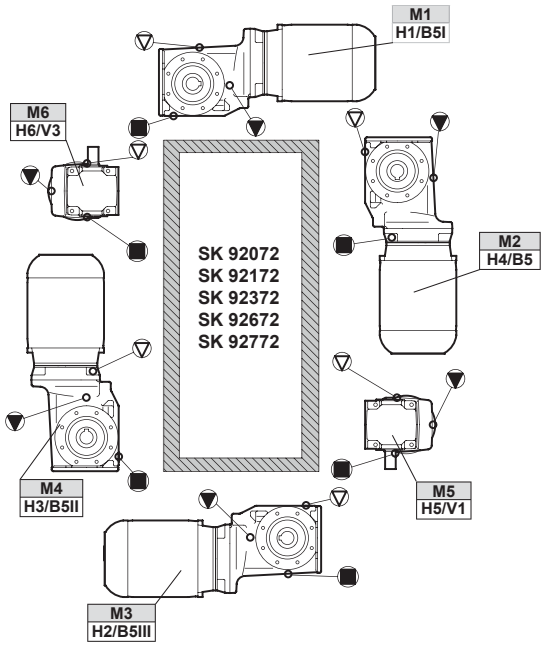

▽ = Vent

▼ = Oil Level

■ = Oil Plug

92.1/93.1 SERIES HELICAL-BEVEL OIL PLUG & VENT LOCATIONS

Oil plug locations

Prior to commissioning the reducer, check the oil-fill level using the reducer's oil-level plug and drain or add additional oil as needed. ***For mounting orientations other than shown please consult NORD Gear. New plug locations may be required.***

92.1 Series

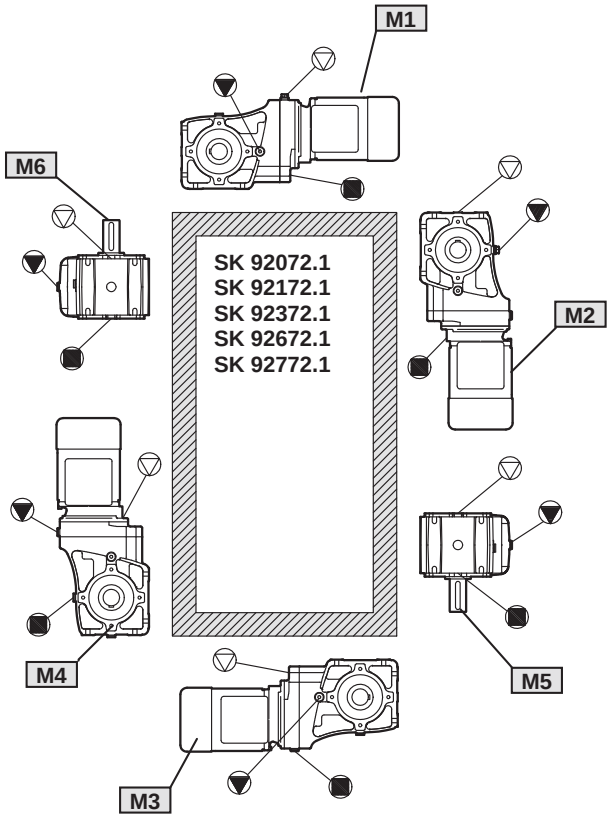

93.1 Series

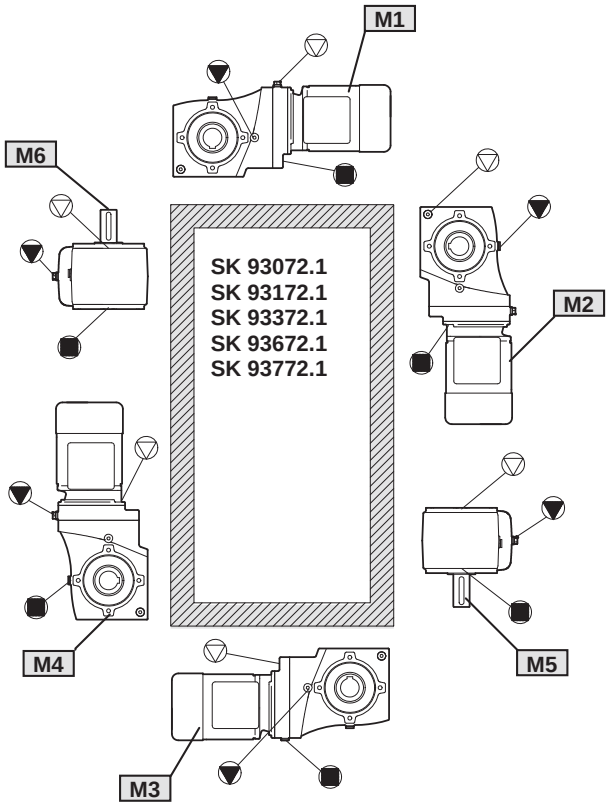

▽ = Vent

▼ = Oil Level

■ = Oil Plug

90.1 HELICAL-BEVEL OIL PLUG & VENT LOCATIONS

Oil plug connections

Prior to commissioning the reducer, check the oil-fill level using the reducer's oil-level plug and drain or add additional oil as needed. The minimum acceptable oil level is 0.15 in (4mm) below the oil level hole. ***For mounting orientations other than shown please consult NORD Gear. New plug locations may be required.***

Foot Mount

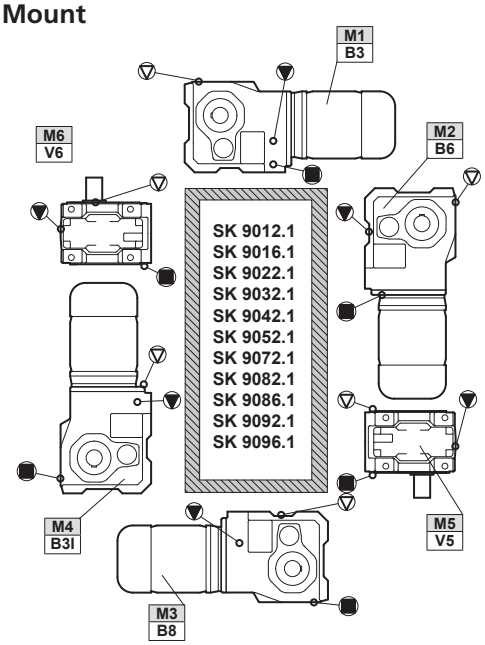

Foot Mount

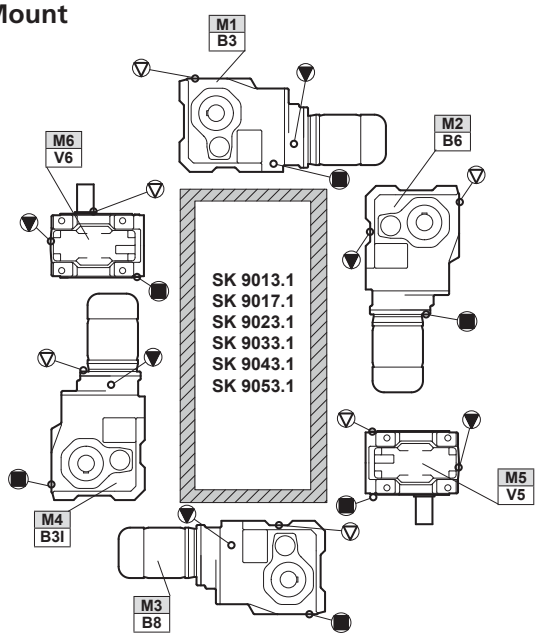

Shaft/Flange Mount

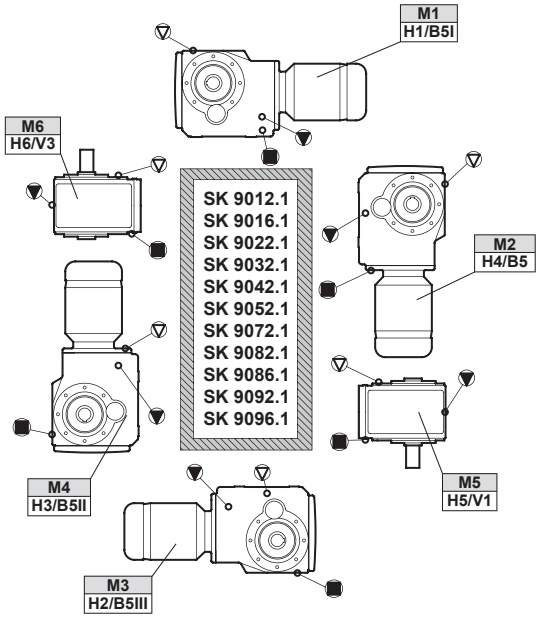

Shaft/Flange Mount

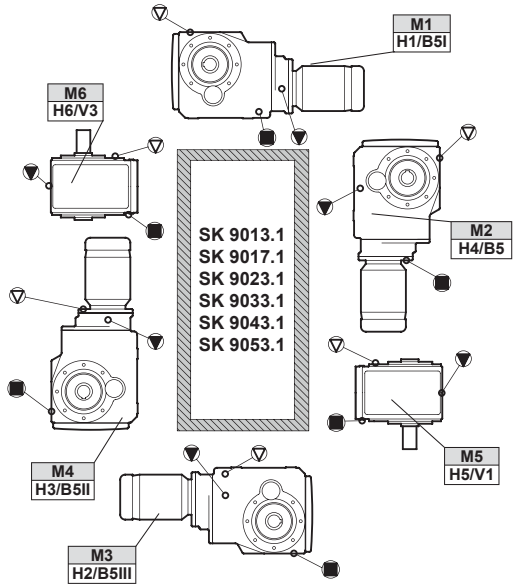

▽ = Vent

▼ = Oil Level

■ = Oil Plug

NORD Gear Limited
Toll Free in Canada: 800.668.4378

NORD Gear Corporation
Toll Free in the United States: 888.314.6673

HELICAL-WORM
OIL PLUG & VENT LOCATIONS

Oil plug connections

Prior to commissioning the reducer, check the oil-fill level using the reducer's oil-level plug and drain or add additional oil as needed. The minimum acceptable oil level is 0.15 in (4mm) below the oil level hole. ***For mounting orientations other than shown please consult NORD Gear. New plug locations may be required.***

Foot Mount

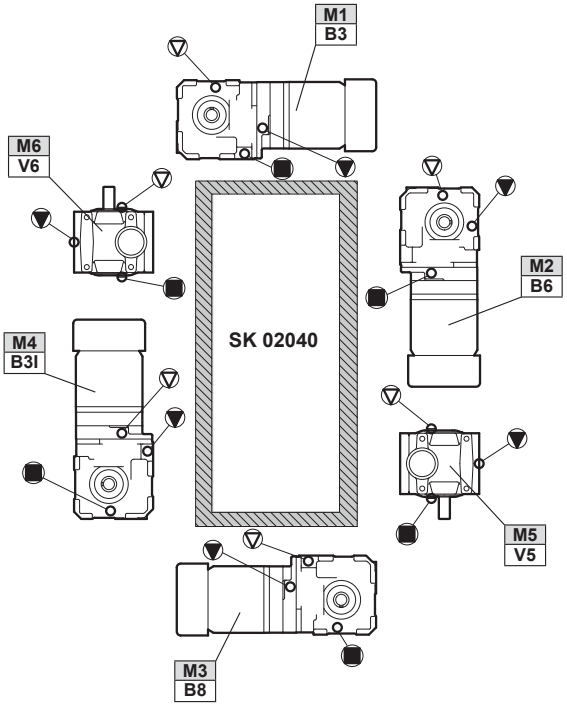

Shaft/Flange Mount

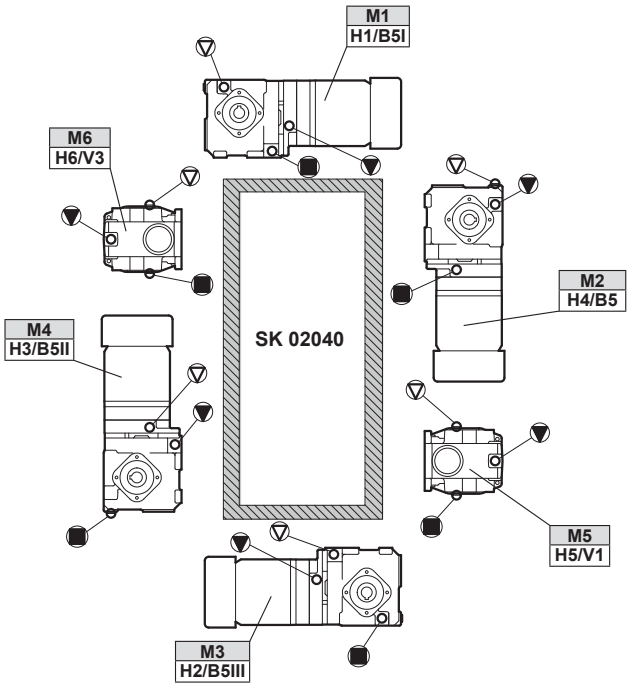

▽ = Vent

▼ = Oil Level

■ = Oil Plug

HELICAL-WORM
OIL PLUG & VENT LOCATIONS

Foot Mount

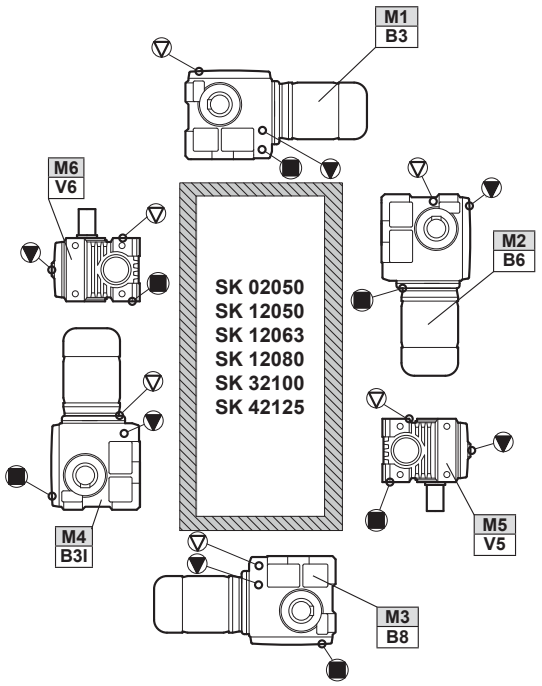

Foot Mount

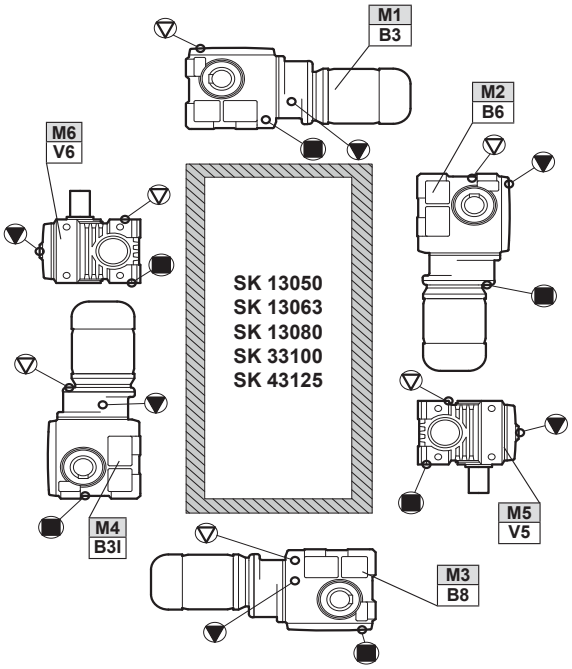

Shaft/Flange Mount

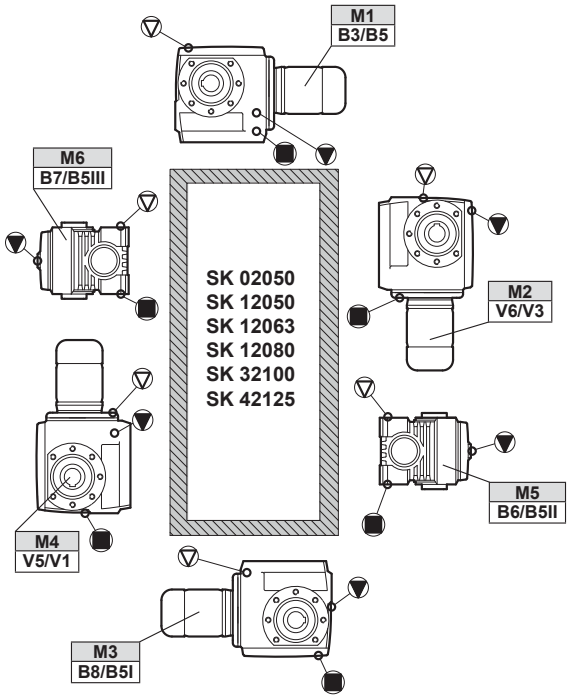

Shaft/Flange Mount

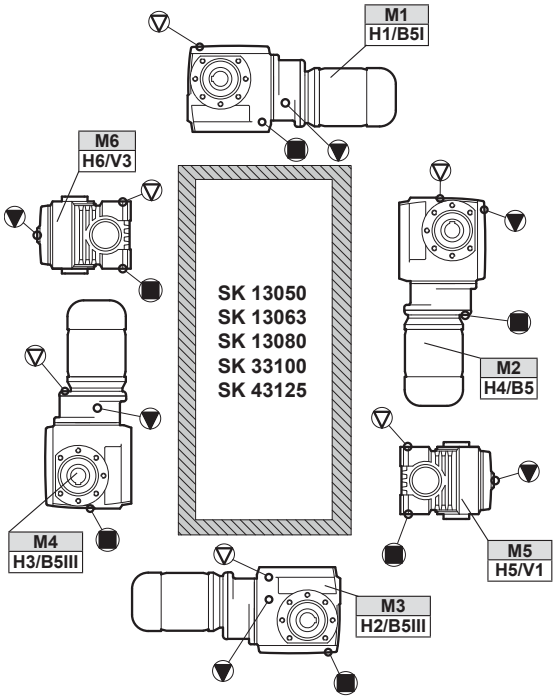

▽ = Vent

▼ = Oil Level

■ = Oil Drain

NORD Gear Limited
Toll Free in Canada: 800.668.4378

NORD Gear Corporation
Toll Free in the United States: 888.314.6673

NORDBLOC®
OIL PLUG & VENT LOCATIONS

Oil plug connections

Prior to commissioning the reducer, check the oil-fill level using the reducer's oil-level plug and drain or add additional oil as needed. The minimum acceptable oil level is 0.15 in (4mm) below the oil level hole. ***For mounting orientations other than shown please consult NORD Gear. New plug locations may be required.***

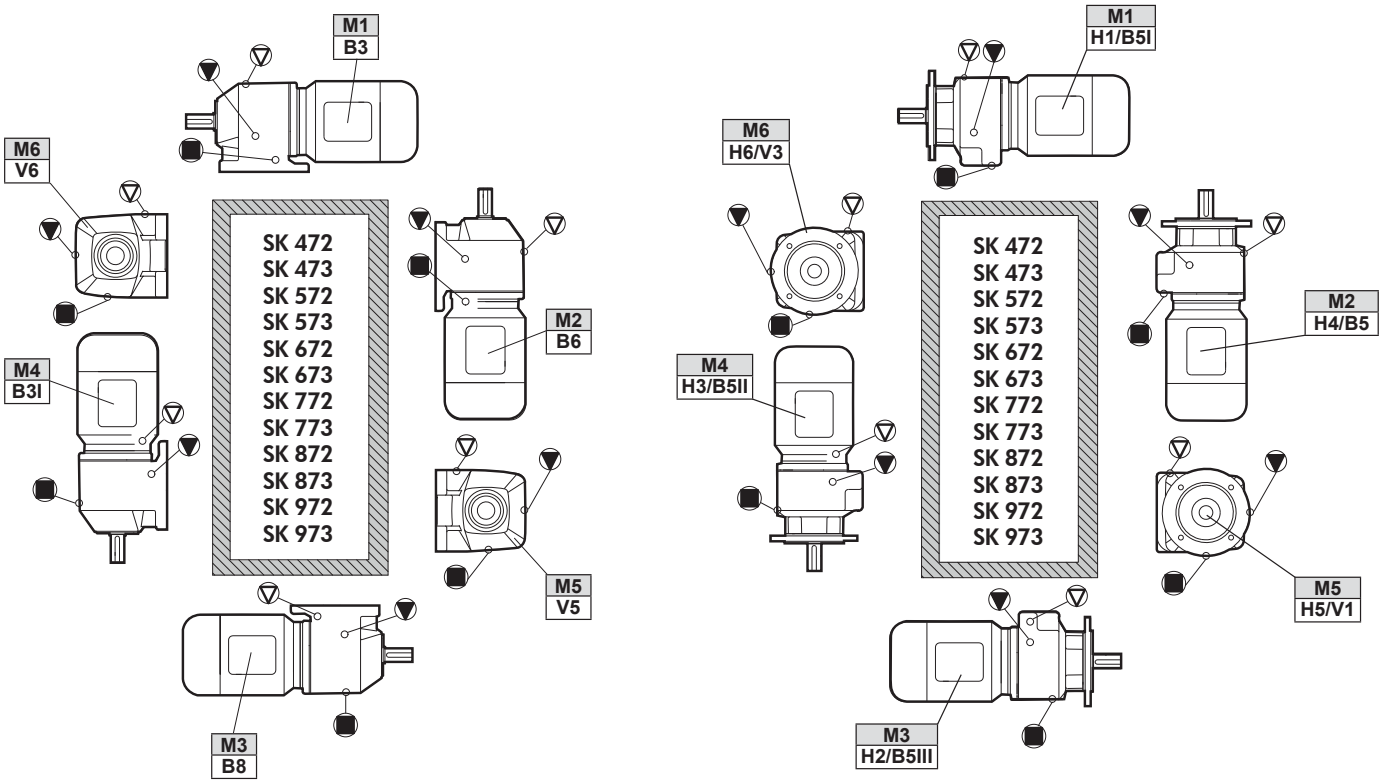

NORDBLOC®.1
OIL PLUG & VENT LOCATIONS

Oil plug connections

Prior to commissioning the reducer, check the oil-fill level using the reducer's oil-level plug and drain or add additional oil as needed. The minimum acceptable oil level is 0.15 in (4mm) below the oil level hole. ***For mounting orientations other than shown please consult NORD Gear. New plug locations may be required.***

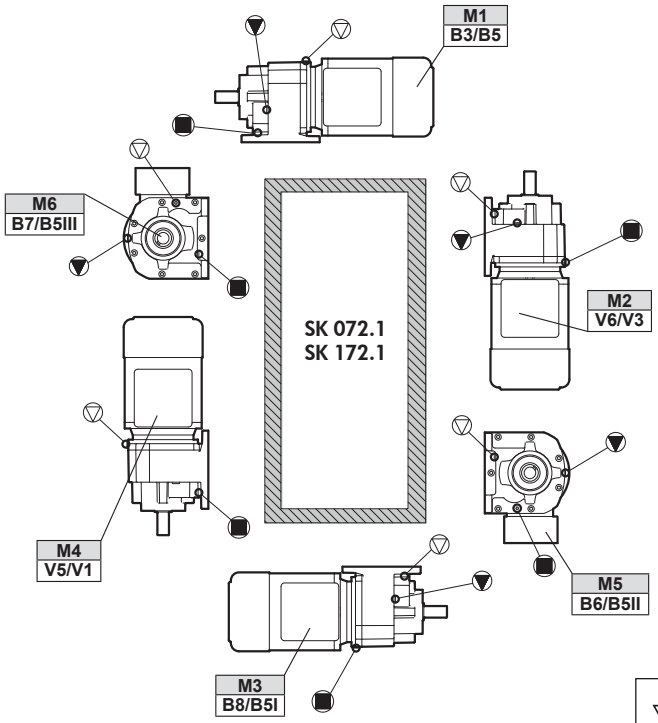

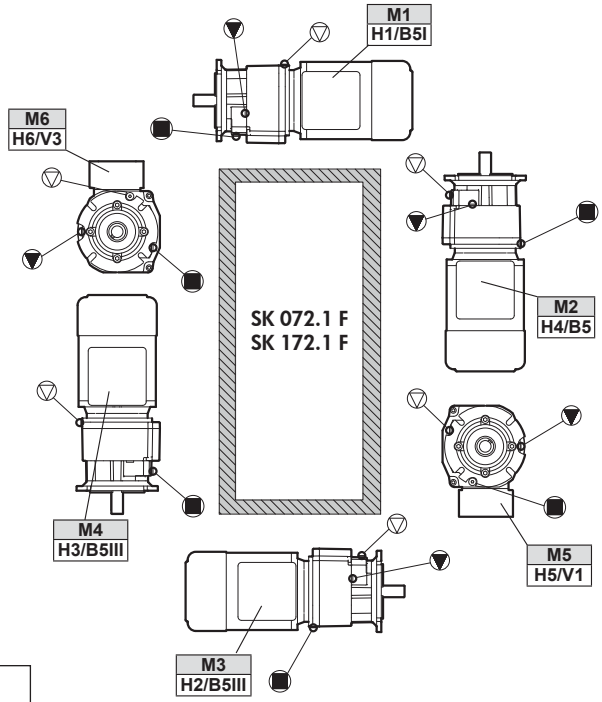

▽ = Vent
▼ = Oil Level
■ = Oil Plug

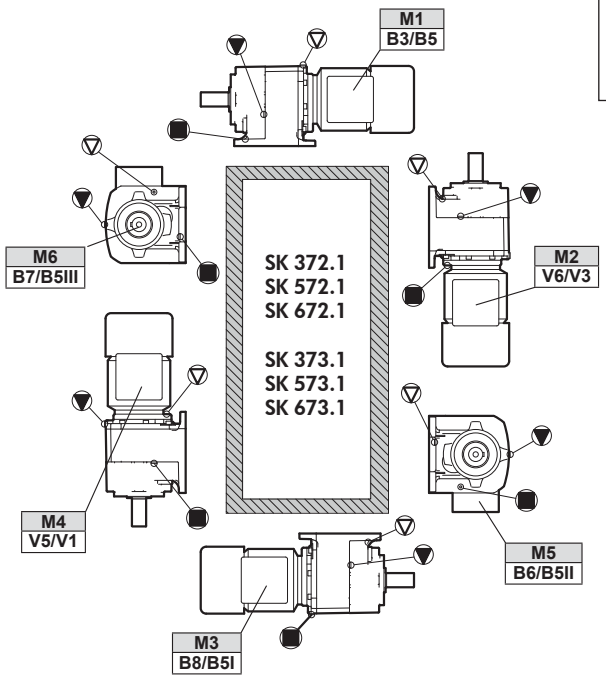

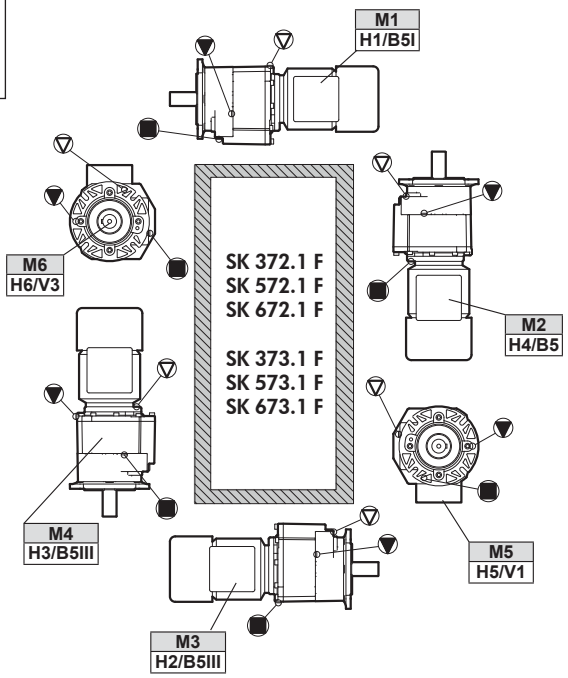

NORDBLOC®.1
OIL PLUG & VENT LOCATIONS

Oil plug connections

Prior to commissioning the reducer, check the oil-fill level using the reducer's oil-level plug and drain or add additional oil as needed. The minimum acceptable oil level is 0.15 in (4mm) below the oil level hole. ***For mounting orientations other than shown please consult NORD Gear. New plug locations may be required.***

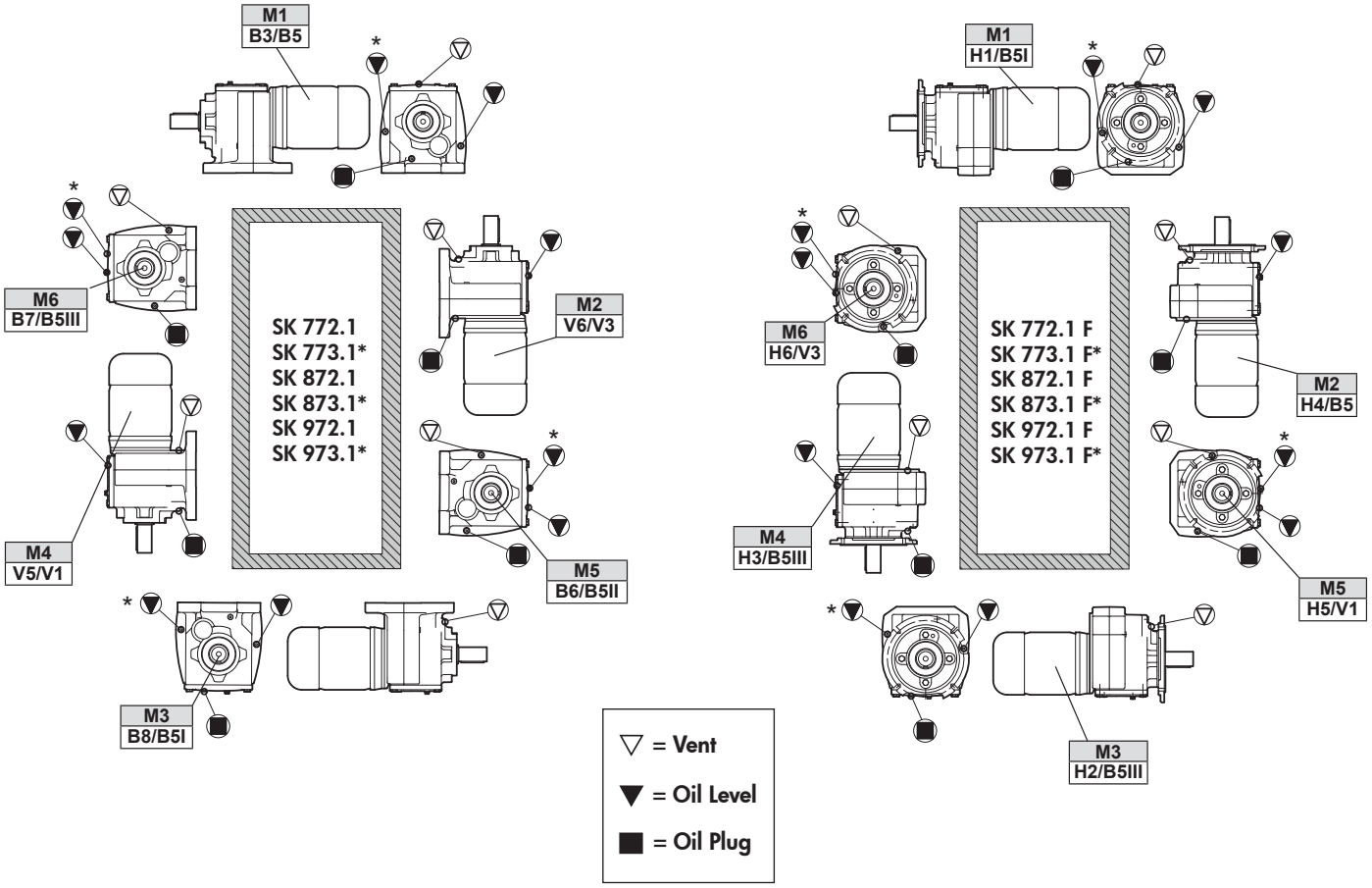

*** Oil fill level for three stage gear units.**

MINICASE® (SMI/SMID) WORM GEAR OIL PLUG & VENT LOCATIONS

DRIVESYSTEMS — RETAIN FOR FUTURE USE — U14750 - 1 of 1

Oil Plug and Vent Locations

MINICASE® (SMI/SMID) reducers and gear motors are fitted with oil plugs to allow for optional venting of the gear unit. NORD can supply either an AUTOVENT™ (valve-type) vent or an open vent. Vent options are available for most gear unit sizes and positions as indicated by the table below. For more complete details on vent options and when to consider reducer venting, see user manual U10800.

Vent Compatability by Unit Size & Mounting Position

	M1	M2	M3	M4	M5	M6
SMI/SMID 31		✓	✓	✓		✓
SMI/SMID 40		✓	✓	✓		✓
SMI/SMID 50	✓	✓	✓	✓		✓
SMI/SMID 63	✓	✓	✓	✓	✓	✓
SMI/SMID 75	✓	✓	✓	✓		✓

Continuous Input speed ≤ 1800 rpm

Vent Kit Part Numbers

Type	Transportation Seal	Installation	Part Number
AUTOVENT™	Included	Factory or Field site	66093510
Open Vent	None	Field Only	60693500
Open Vent	Included	Factory or Field site	22008004 (vent) 25308120 (gasket)

Unless noted by a seperate part number, vent kits include the housing gasket

Optional Vent Locations

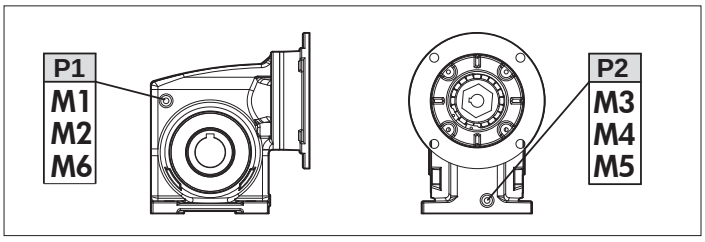

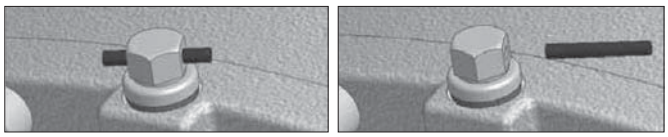

WARNING

To prevent build-up of excessive pressure, sealed vents must be activated as shown prior to gear unit start-up.

MINICASE® (SMI/SMID) Foot Housing

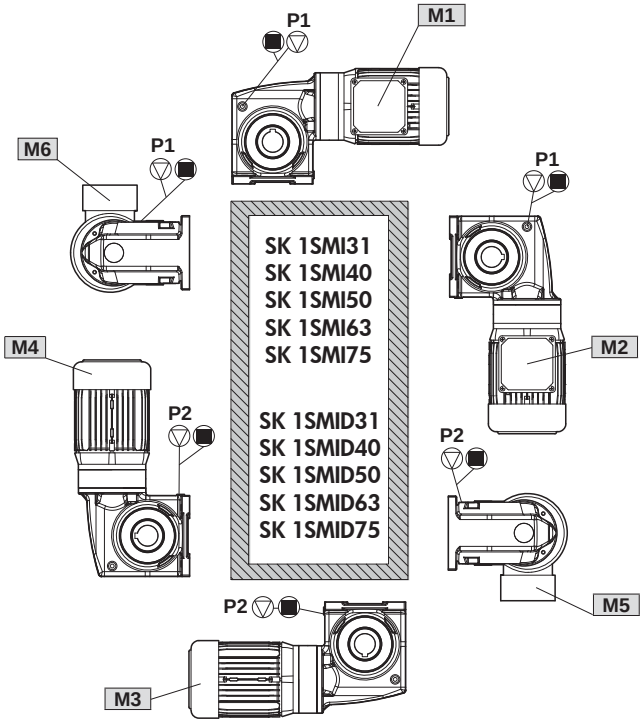

MINICASE® (SMI/SMID) Flange Housing

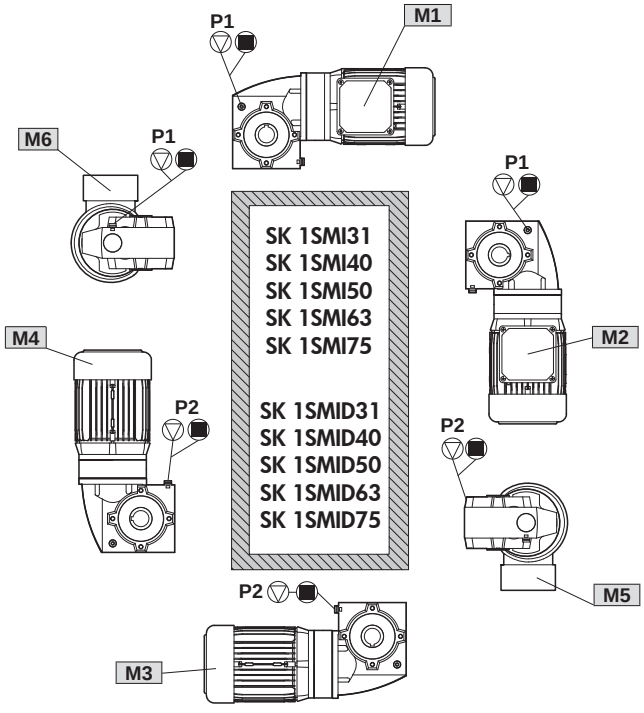

▽ = Vent
■ = Oil Plug

NORD Gear Limited
Toll Free in Canada: 800.668.4378

NORD Gear Corporation
Toll Free in the United States: 888.314.6673

FLEXBLOC™ (SI/SID SERIES) WORM GEAR OIL PLUG & VENT LOCATIONS

Vent locations

FLEXBLOC™ (SI?SID SERIES) reducers are fitted with oil plugs to allow for optional venting of the gear unit. NORD can supply either an AUTOVENT™ (valve-type) vent or an open vent. Vent options are available for most gear unit sizes and positions as indicated by the table below. For more complete details on vent options and when to consider reducer venting, see user manual U10810.

Vent Compatability by Unit Size & Mounting Position

	M1	M2	M3	M4	M5	M6
SI/SID 31		✓	✓	✓		✓
SI/SID 40		✓	✓	✓		✓
SI/SID 50	✓	✓	✓	✓		✓
SI/SID 63	✓	✓	✓	✓	✓	✓
SI/SID 75	✓	✓	✓	✓		✓

Continuous Input speed ≤ 1800 rpm

Vent Kit Part Numbers

Type	Transportation Seal	Installation	Part Number
AUTOVENT™	Included	Factory or Field site	66093510
Open Vent	None	Field Only	60693500
Open Vent	Included	Factory or Field site	22008004 (vent) 25308120 (gasket)

Unless noted by a seperate part number, vent kits include the housing gasket

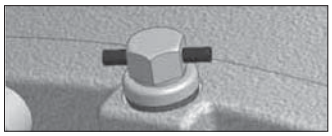

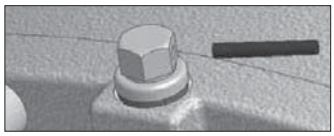

Optional Vent Locations

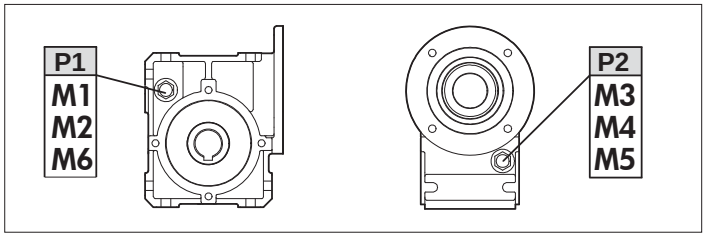

WARNING

To prevent build-up of excessive pressure, sealed vents must be activated as shown prior to gear unit start-up.

FLEXBLOC™ (SI Series) Universal Housing

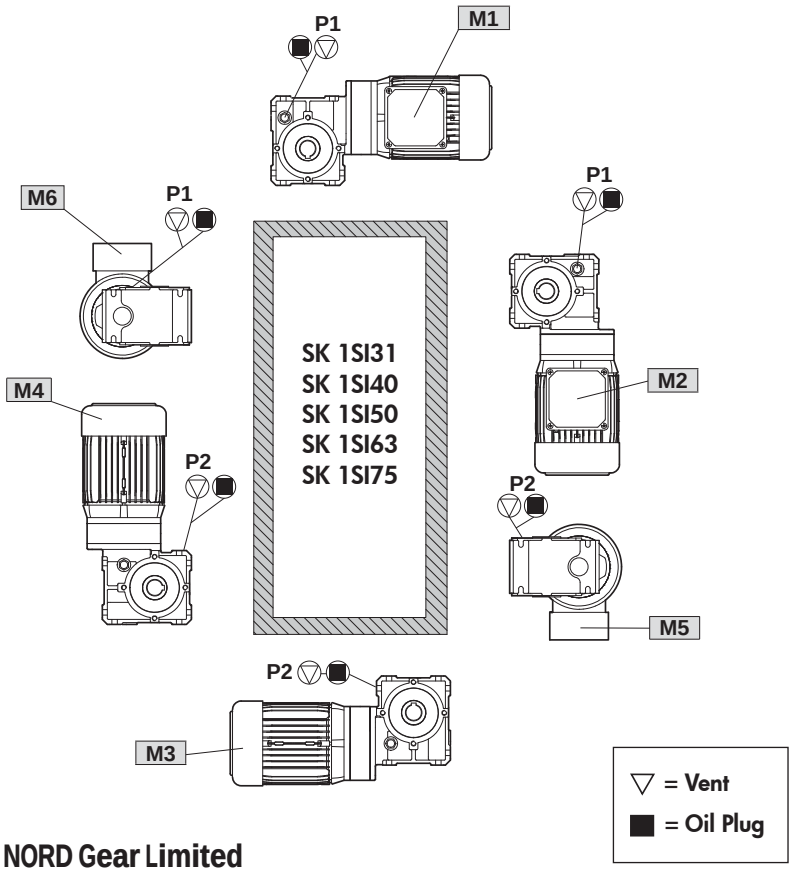

NORD Gear Limited
Toll Free in Canada: 800.668.4378

NORD Gear Corporation
Toll Free in the United States: 888.314.6673

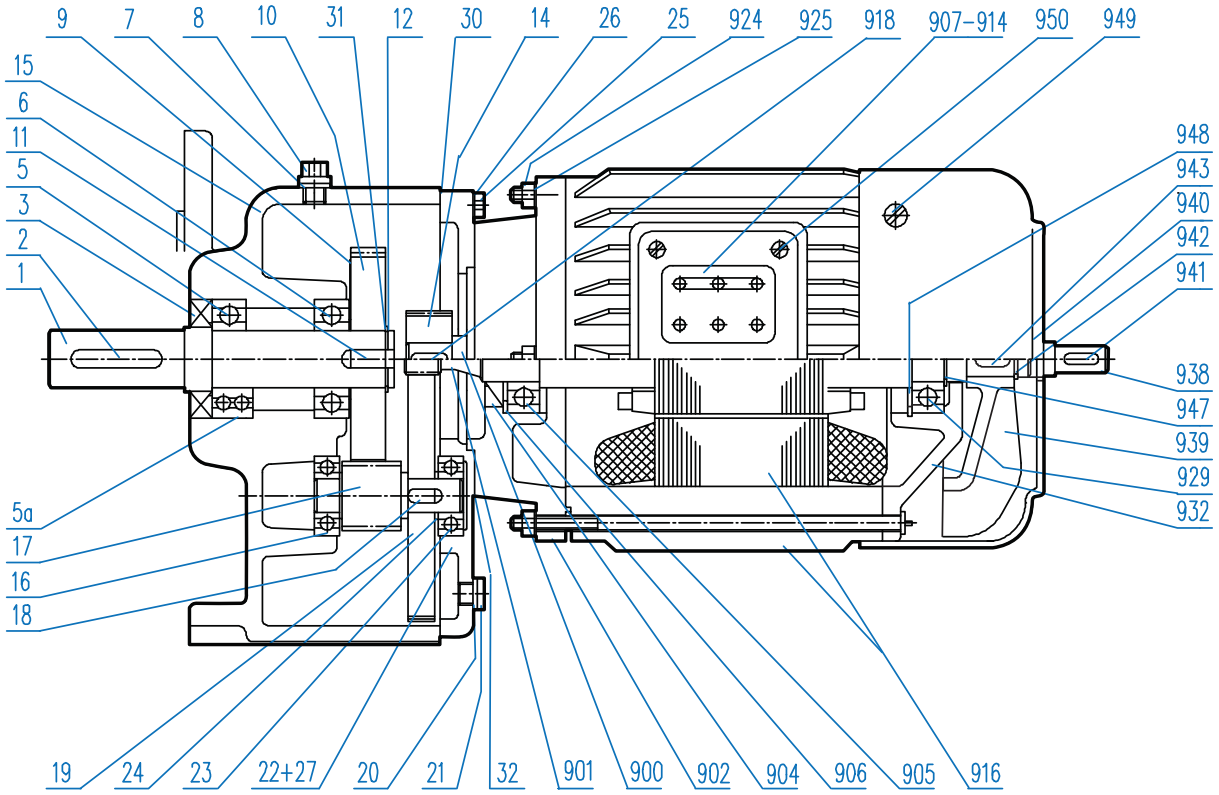

SK 0 - SK 33 Helical Gear Unit

1	Output shaft	21	Plug	910	Terminal box cover gasket
2	Key	22	Gear case cover	911	Terminal board
3	Shaft seal	23	Pinion shaft bearing	914	Cable entry gland
5	Output shaft bearing, normal	24	Shim	916	Stator case
5A	Output shaft bearing, reinforced	25	Hexagon bolt	918	Key
6	Output shaft bearing	26	Washer	924	Collar bolt
7	Seal	27	Spiral pin	925	Hexagonal nut
8	Vent screw	30	Seal	929	Bearing B
9	Shim	31	Shim	932	Endshield B
10	Driven gear	32	Seal	938	Second motor shaft end*
11	Key	900	Rotor with shaft,plain	939	Fan
12	Circlip	901	Rotor with shaft,gearcut	940	Fan cover
14	Driving pinion	902	End shield A	941	Key
15	Gear case	904	Shaft seal	942	Circlip
16	Pinion shaft, bearing	905	Bearing A	943	Key
17	Driven pinion	906	Bearing shim	947	Circlip
18	Key	907	Terminal box frame	948	Circlip
19	Driving gear	908	Terminal box cover	949	Oval flat-head bolt
20	Seal	909	Terminal box frame gasket	950	Oval flat-head bolt

* Optional Part

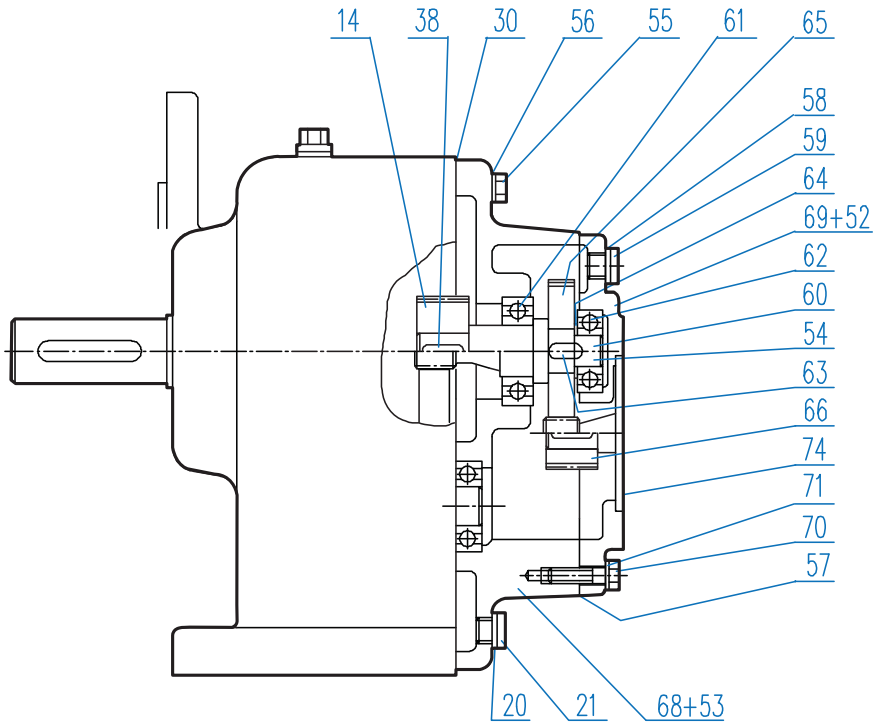

SK 010 - SK 330 Third Stage Reduction Gear

14	Driving pinion	55	Hexagon bolt	64	Shim
20	Seal	56	Washer	65	Driving gear
21	Plug	57	Seal	66	Driving pinion
27	Spiral pin	58	Seal	68	Gear case 3rd.-red.
30	Seal	59	Plug	69	Gear case cover
38	Key	60	Intermediate shaft, plain	70	Hexagon bolt
52	Spiral pin	61	Grooved ball bearing	71	Washer
53	Spiral pin	62	Grooved ball bearing	74	Seal
54	Intermediate shaft, gearcut	63	Key		

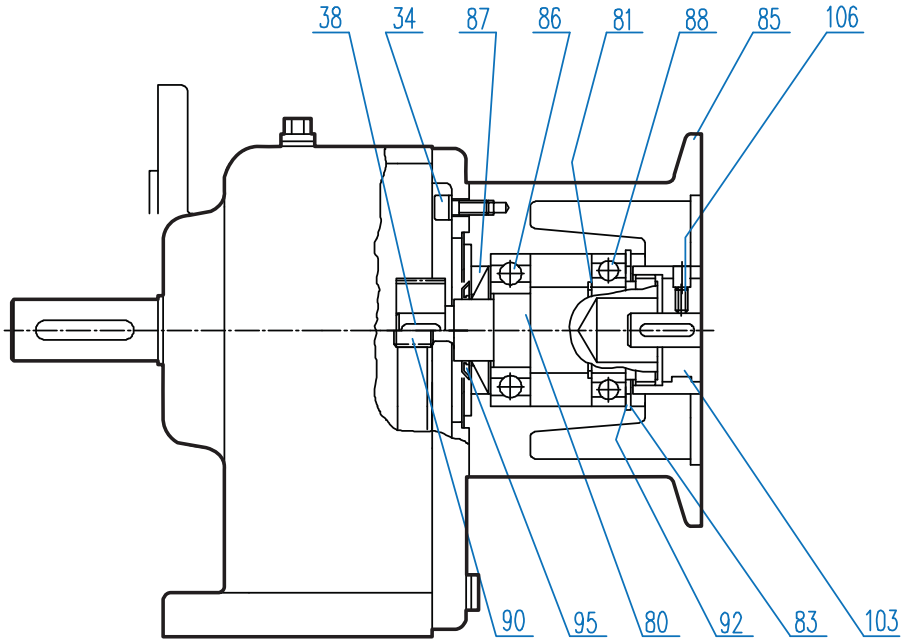

SK 0 - SK 330 IEC Input

34	Socket head bolt	85	IEC adaptor	92	Shim
38	Key	86	Input shaft bearing	103	Coupling
80	Input shaft	87	Shaft seal	106	Set screw
81	Circlip	88	Input shaft bearing		
83	Circlip	90	Pinion shaft		

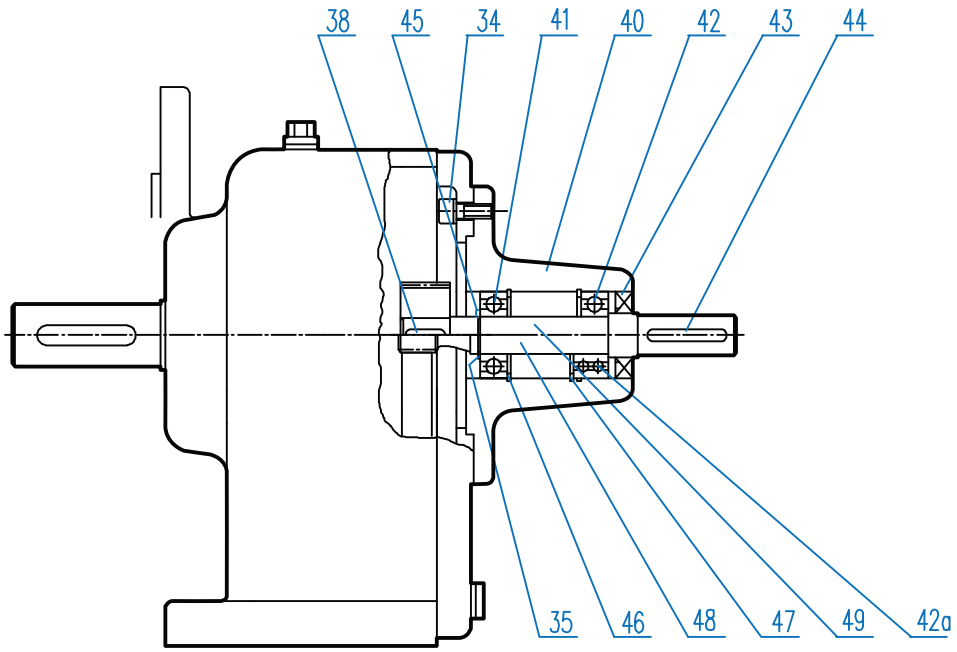

SK 0 - SK 330 Solid Shaft Input (W)

34	Socket head bolt	42	Grooved ball bearing, normal	46	Circlip
35	Shim	42A	Grooved ball bearing, reinforced	47	Circlip
38	Key	43	Shaft seal	48	Input shaft, gearcut
40	Input bearing housing	44	Key	49	input shaft, plain
41	Grooved ball bearing	45	Circlip		

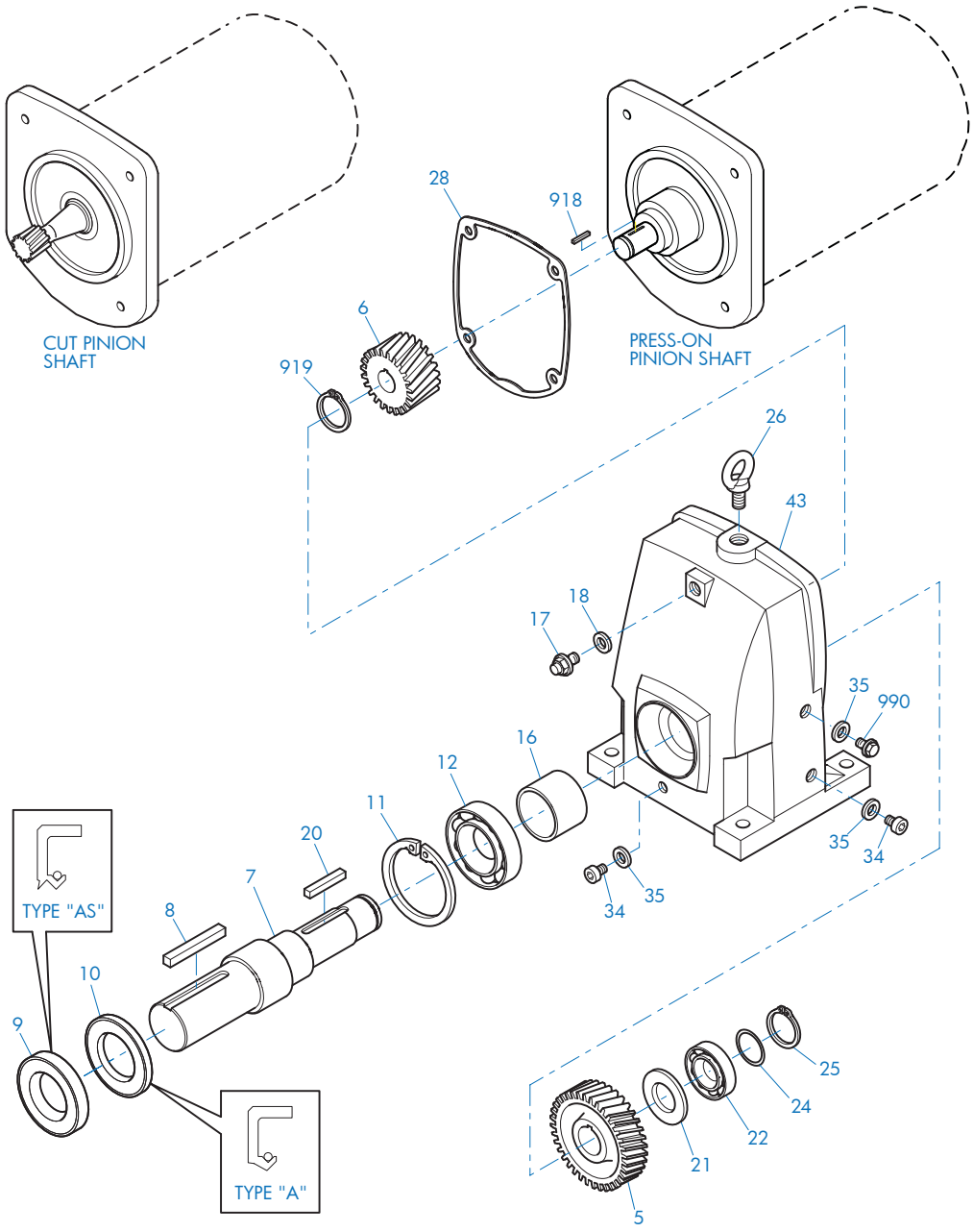

SK 11E - SK 51E Foot Mount

5	Gear	16	Spacer	26	Flanged Eye Bolt
6	Pinion	17	Vent Plug	28	Gasket
7	Output Shaft	18	Seal	34	Drain Plug
8	Key	20	Key	35	Gasket
9	Oil Seal	21	Spacer	43	Gearcase
10	Oil Seal	22	Anti-Friction Bearing	918	Key
11	Snap Ring	24	Shim	919	Snap Ring
12	Anti-Friction Bearing	25	Snap Ring	990	Oil Level Plug

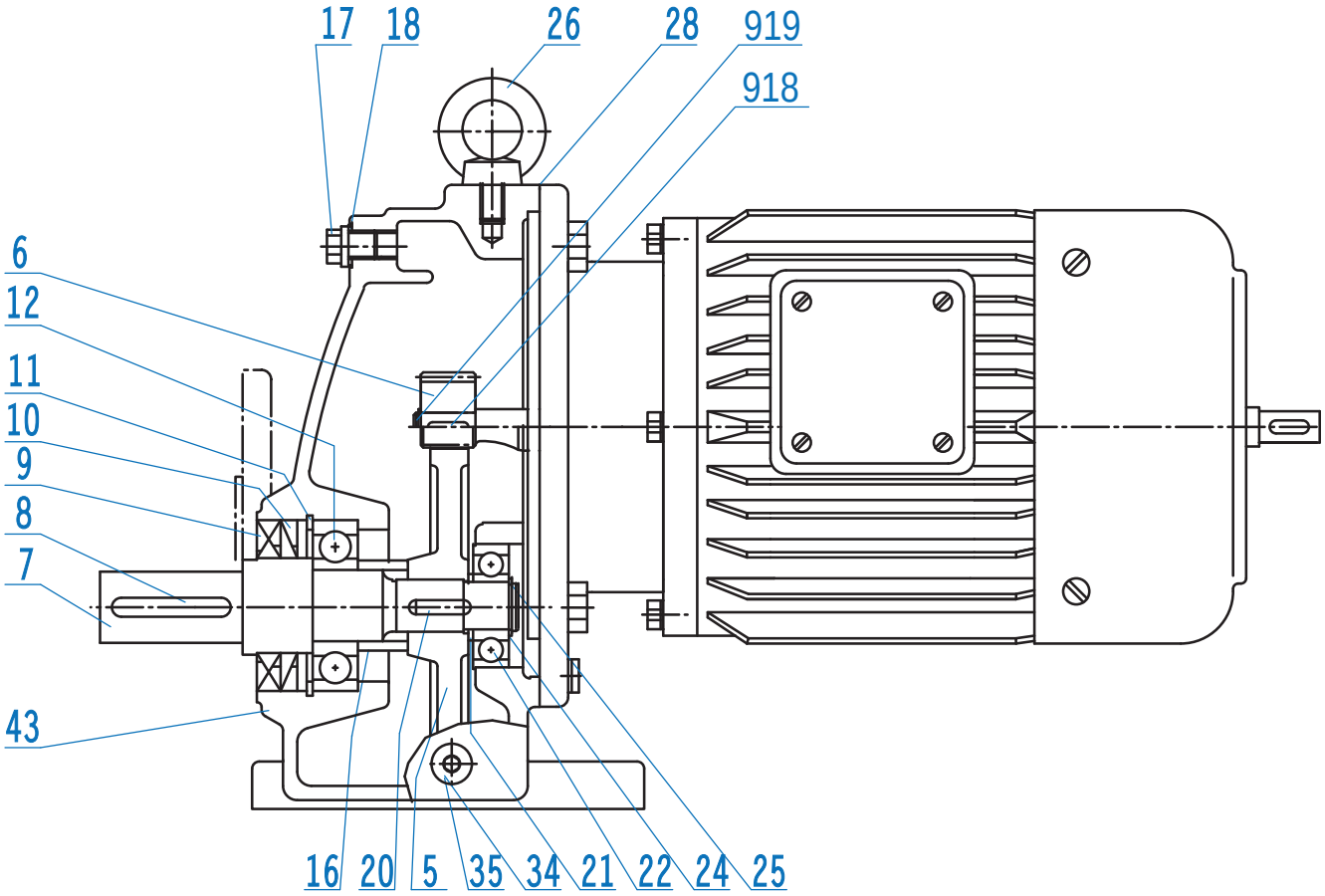

SK 11E - SK 51E Foot Mount

5	Gear	16	Spacer	26	Flanged Eye Bolt
6	Pinion	17	Vent Plug	28	Gasket
7	Output Shaft	18	Seal	34	Drain Plug
8	Key	20	Key	35	Gasket
9	Oil Seal	21	Spacer	43	Gearcase
10	Oil Seal	22	Anti-Friction Bearing	918	Key
11	Snap Ring	24	Shim	919	Snap Ring
12	Anti-Friction Bearing	25	Snap Ring		

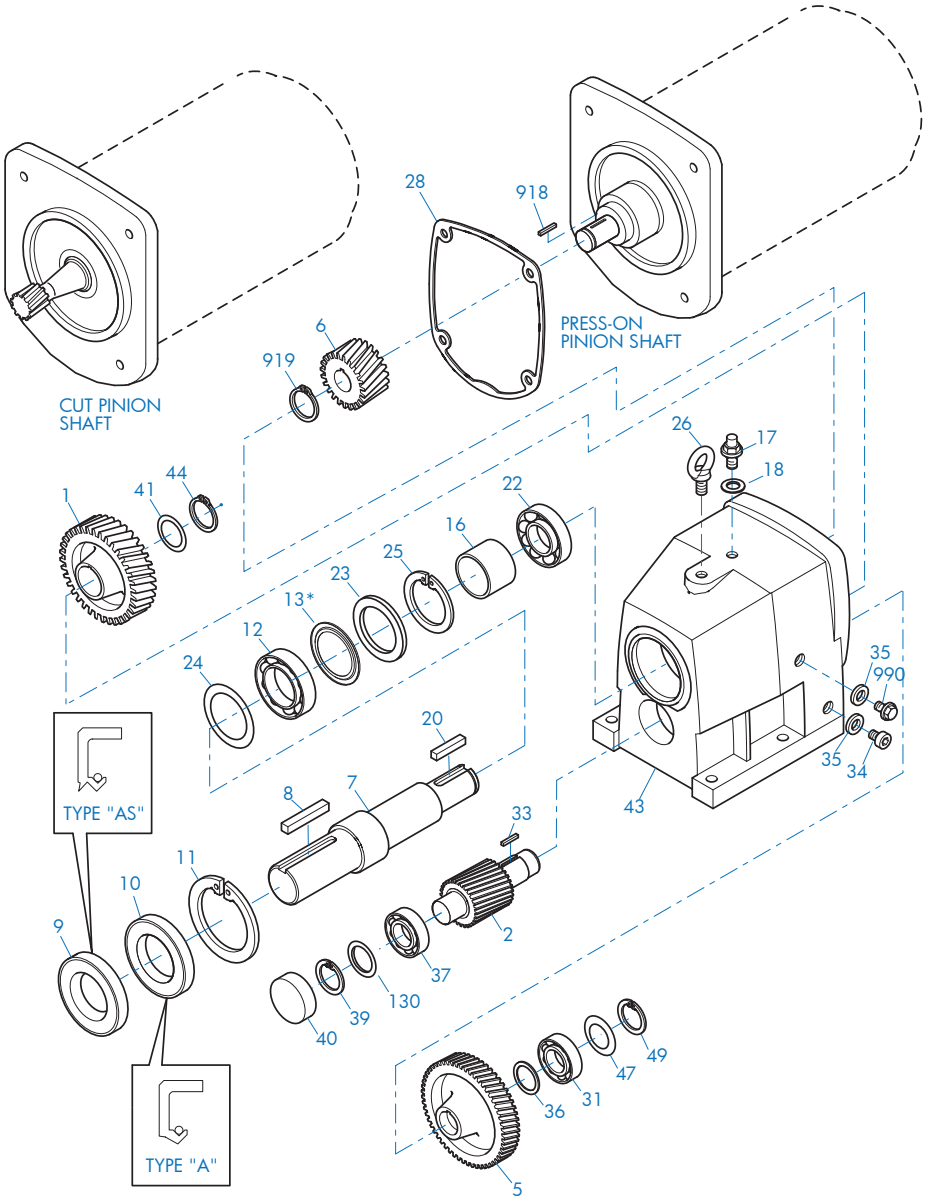

SK02 - SK52 Foot Mount

1	Gear	18	Seal	37	Anti-Friction Bearing
2	Pinion Shaft	20	Key	39	Snap Ring
5	Gear	22	Anti-Friction Bearing	40	Bore Plug
6	Pinion	23	Thrust Washer	41	Shim
7	Output Shaft	24	Shim	43	Gearcase
8	Key	25	Snap Ring	44	Snap Ring
9	Oil Seal	26	Flanged Eye Bolt	47	Shim
10	Oil Seal	28	Gasket	49	Snap Ring
11	Snap Ring	31	Anti-Friction Bearing	130	Shim
12	Anti-Friction Bearing	33	Key	918	Key
13	NILOS Ring*	34	Drain Plug	919	Snap Ring
16	Spacer	35	Gasket	990	Oil Level Plug
17	Vent Plug	36	Spacer		

* Conditionally used part

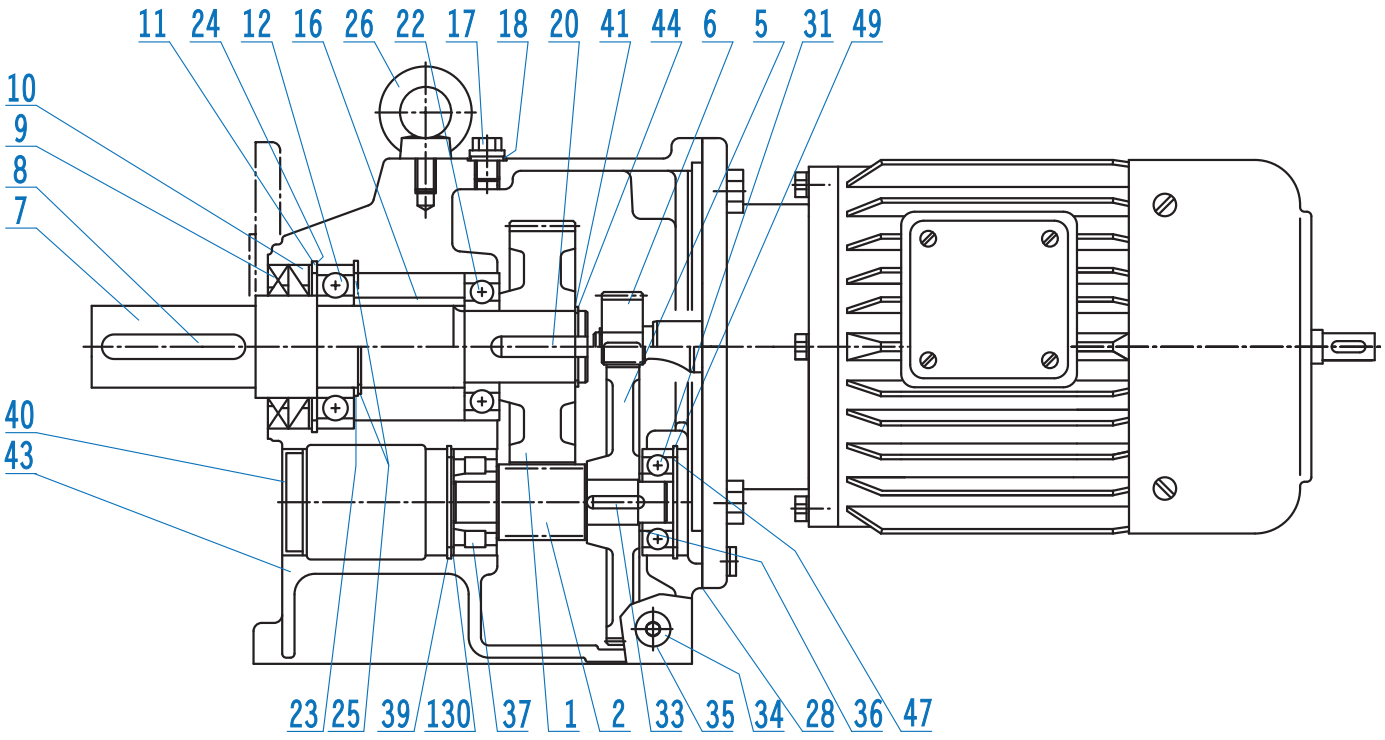

SK02 - SK52 Foot Mount

1	Gear	18	Seal	37	Anti-Friction Bearing
2	Pinion Shaft	20	Key	39	Snap Ring
5	Gear	22	Anti-Friction Bearing	40	Bore Plug
6	Pinion	23	Thrust Washer	41	Shim
7	Output Shaft	24	Shim	43	Gearcase
8	Key	25	Snap Ring	44	Snap Ring
9	Oil Seal	26	Flanged Eye Bolt	47	Shim
10	Oil Seal	28	Gasket	49	Snap Ring
11	Snap Ring	31	Anti-Friction Bearing	130	Shim
12	Anti-Friction Bearing	33	Key	918	Key
13	NILOS Ring*	34	Drain Plug	919	Snap Ring
16	Spacer	35	Gasket		
17	Vent Plug	36	Spacer		

* Conditionally used part

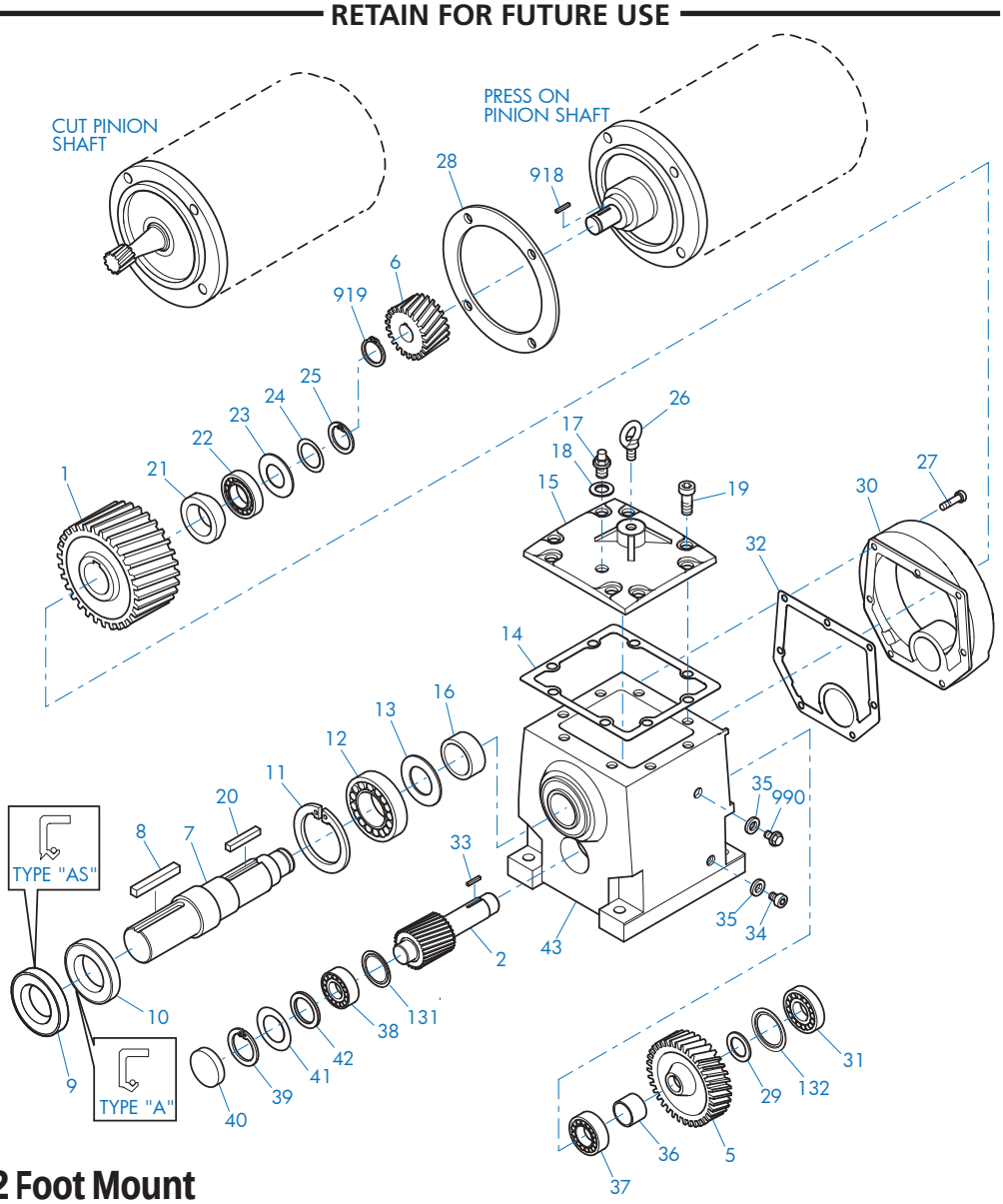

SK62 - SK102 Foot Mount

1	Gear	19	Bolt	35	Gasket
2	Pinion Shaft	20	Key	36	Spacer
5	Gear	21	Spacer	37	Anti-Friction Bearing
6	Pinion	22	Anti-Friction Bearing	38	Anti-Friction Bearing
7	Output Shaft	23	Thrust Washer	39	Snap Ring
8	Key	24	Shim	40	Bore Plug
9	Oil Seal	25	Snap Ring	41	Shim
10	Oil Seal	26	Flanged Eye Bolt	42	Thrust Washer
11	Snap Ring	27	Bolt	43	Gearcase
12	Anti-Friction Bearing	28	Gasket	131	NILOS Ring
13	NILOS ring	29	Spacer	132	NILOS Ring
14	Gasket	30	Input Cover	918	Key
15	Inspection Cover	31	Anti-Friction Bearing	919	Snap Ring
16	Spacer	32	Gasket	990	Oil Level Plug
17	Vent Plug	33	Key		
18	Seal	34	Drain Plug		

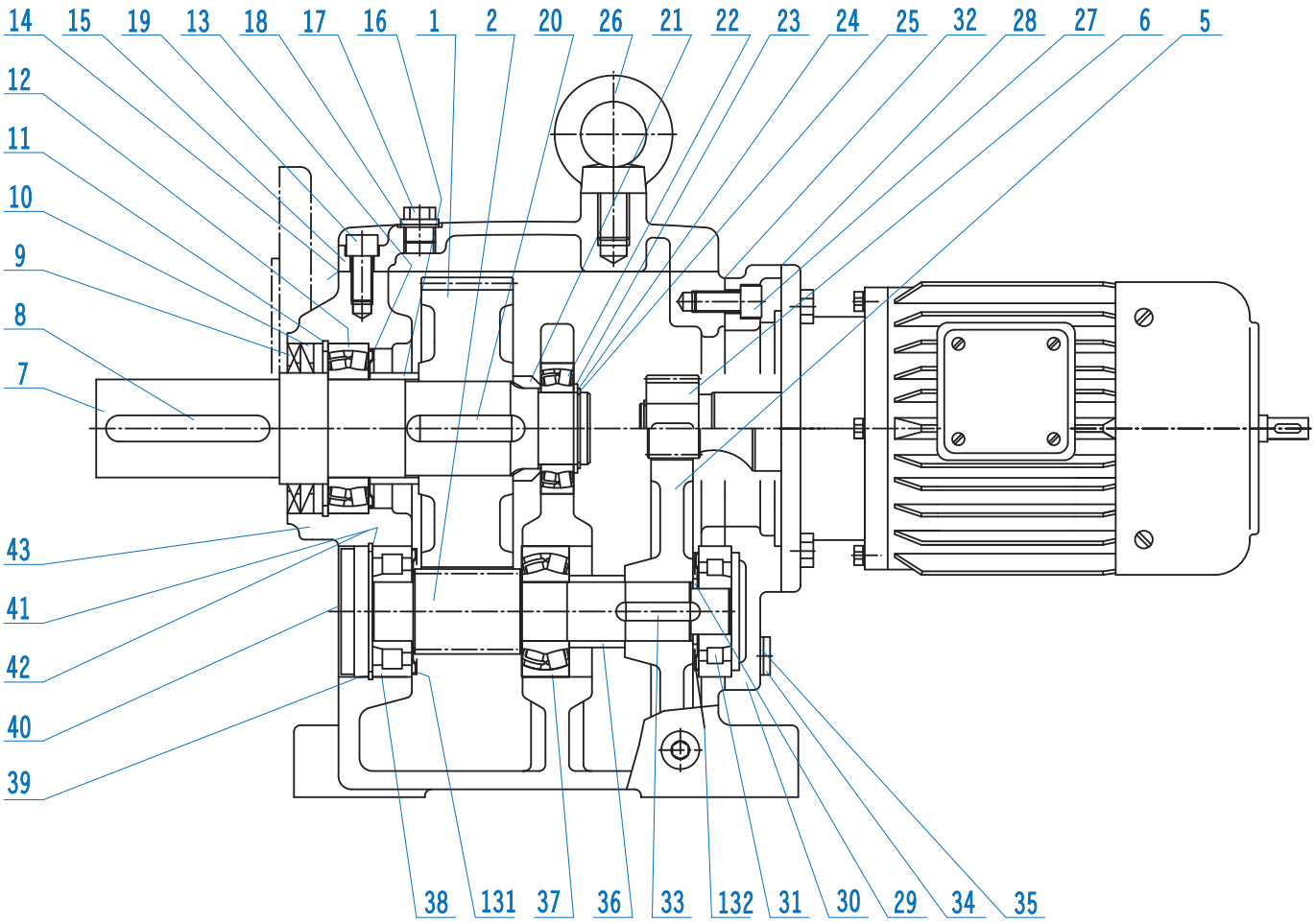

SK62 - SK102 Foot Mount

1	Gear	18	Seal	33	Key
2	Pinion Shaft	19	Bolt	34	Drain Plug
5	Gear	20	Key	35	Gasket
6	Pinion	21	Spacer	36	Spacer
7	Output Shaft	22	Anti-Friction Bearing	37	Anti-Friction Bearing
8	Key	23	Thrust Washer	38	Anti-Friction Bearing
9	Oil Seal	24	Shim	39	Snap Ring
10	Oil Seal	25	Snap Ring	40	Bore Plug
11	Snap Ring	26	Flanged Eye Bolt	41	Shim
12	Anti-Friction Bearing	27	Bolt	42	Thrust Washer
13	NILOS ring*	28	Gasket	43	Gearcase
14	Gasket	29	Spacer	131	NILOS Ring*
15	Inspection Cover	30	Input Cover	132	NILOS Ring*
16	Spacer	31	Anti-Friction Bearing	918	Key
17	Vent Plug	32	Gasket	919	Snap Ring

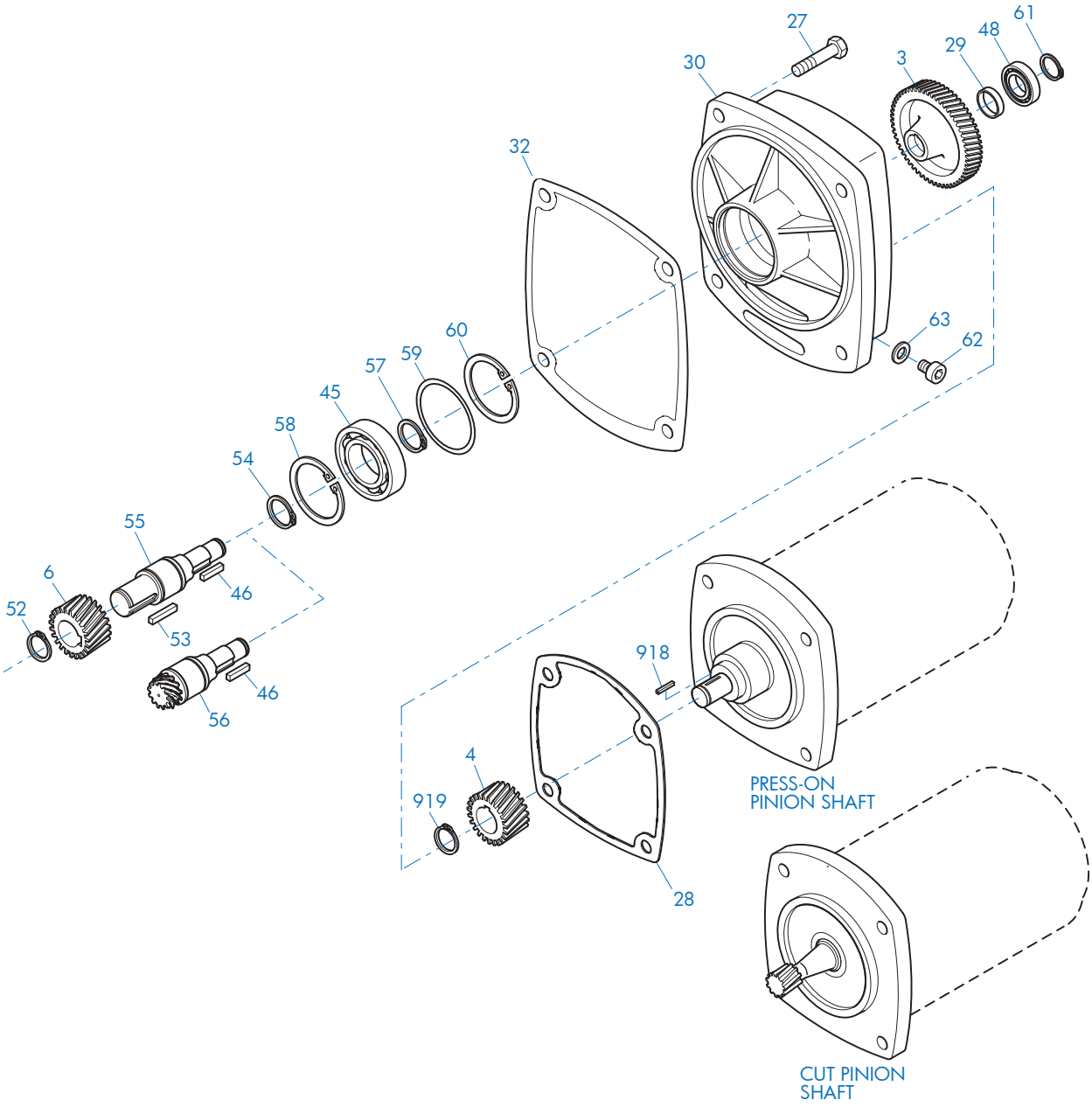

SK03 - SK53 Third Stage Reduction Gear

3	Gear	46	Key	59	Shim
4	Pinion	48	Anti-Friction Bearing	60	Snap Ring
6	Pinion	52	Snap Ring	61	Snap Ring
27	Bolt	53	Key	62	Oil Plug
28	Gasket	54	Snap Ring	63	Gasket
29	Spacer	55	Intermediate Shaft, Plain	918	Key
30	Third Reduction Gearcase	56	Intermediate Shaft, Gearcut	919	Snap Ring
32	Gasket	57	Snap Ring		
45	Anti-Friction Bearing	58	Snap Ring		

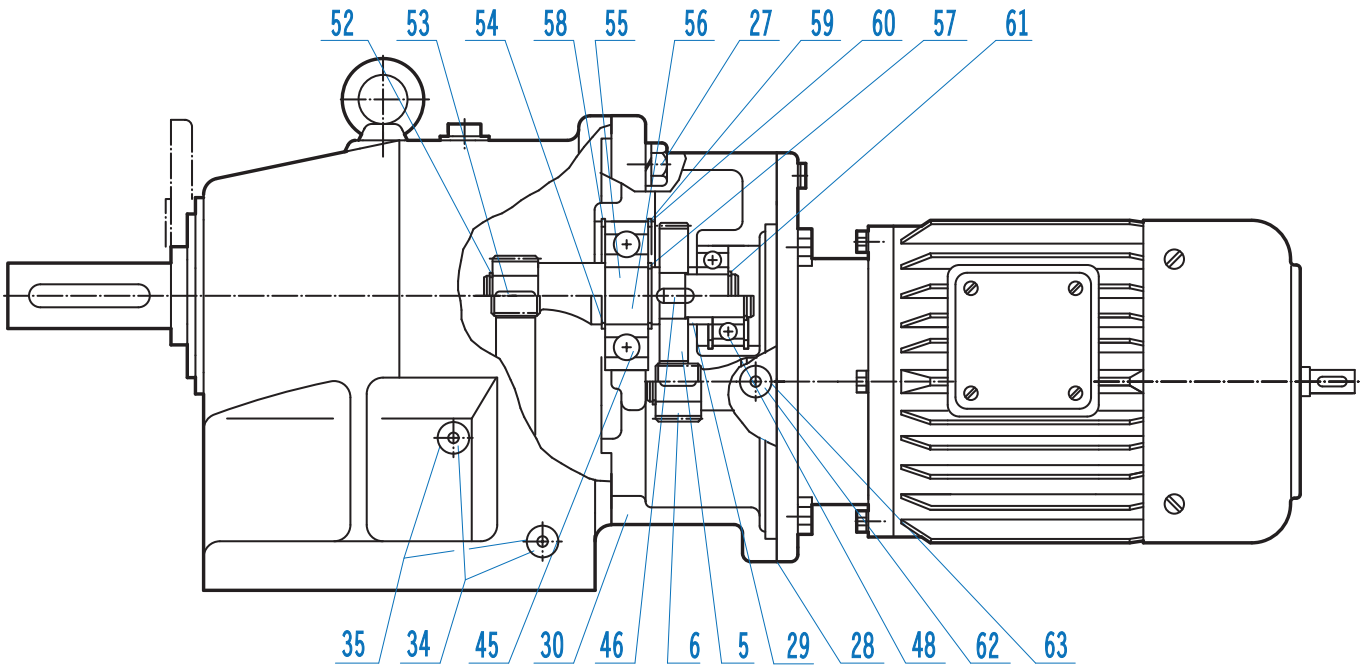

SK03 - SK53 Using Third Stage Reduction Gear

3	Gear	46	Key	59	Shim
4	Pinion	48	Anti-Friction Bearing	60	Snap Ring
6	Pinion	52	Snap Ring	61	Snap Ring
27	Bolt	53	Key	62	Oil Plug
28	Gasket	54	Snap Ring	63	Gasket
29	Spacer	55	Intermediate Shaft, Plain	918	Key
30	Third Reduction Gearcase	56	Intermediate Shaft, Gearcut	919	Snap Ring
32	Gasket	57	Snap Ring		
45	Anti-Friction Bearing	58	Snap Ring		

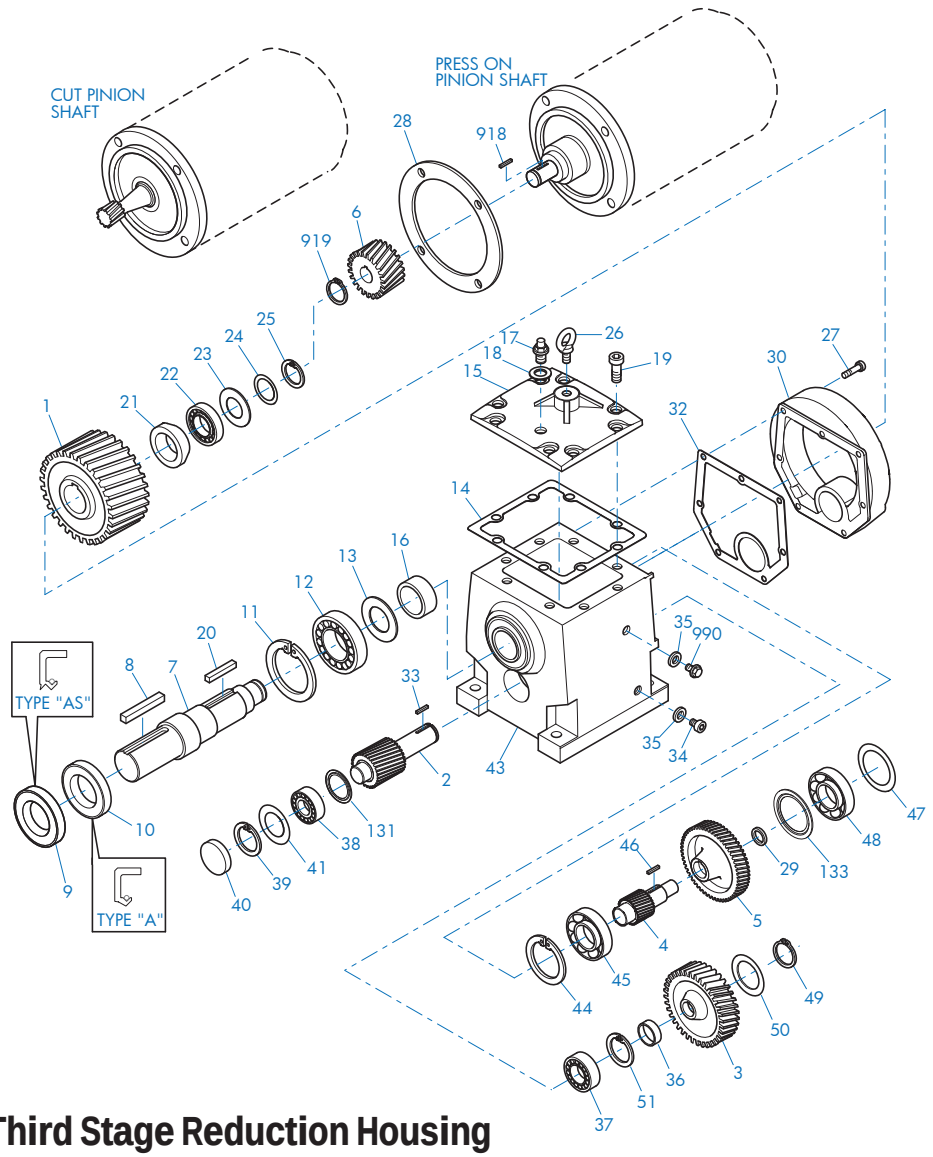

SK63 - SK103 Third Stage Reduction Housing

1	Gear	19	Bolt	38	Anti-Friction Bearing
2	Pinion Shaft	20	Key	39	Snap Ring
3	Gear	21	Spacer	40	Bore Plug
4	Pinion Shaft	22	Anti-Friction Bearing	41	Shim
5	Gear	23	Thrust Washer	43	Gearcase
6	Pinion	24	Shim	44	Snap Ring
7	Output Shaft	25	Snap Ring	45	Anti-Friction Bearing
8	Key	26	Flanged Eye Bolt	46	Key
9	Oil Seal	27	Bolt	47	Shim
10	Oil Seal	28	Gasket	48	Bearing
11	Snap Ring	29	Spacer	49	Snap Ring
12	Anti-Friction Bearing	30	Input Cover	50	Thrust Washer
13	NILOS Ring	32	Gasket	51	Snap Ring
14	Gasket	33	Key	131	NILOS Ring
15	Inspection Cover	34	Drain plug	133	NILOS Ring
16	Spacer	35	Gasket	918	Key
17	Vent Plug	36	Spacer	919	Snap Ring
18	Seal	37	Anti-Friction Bearing	990	Oil Level Plug

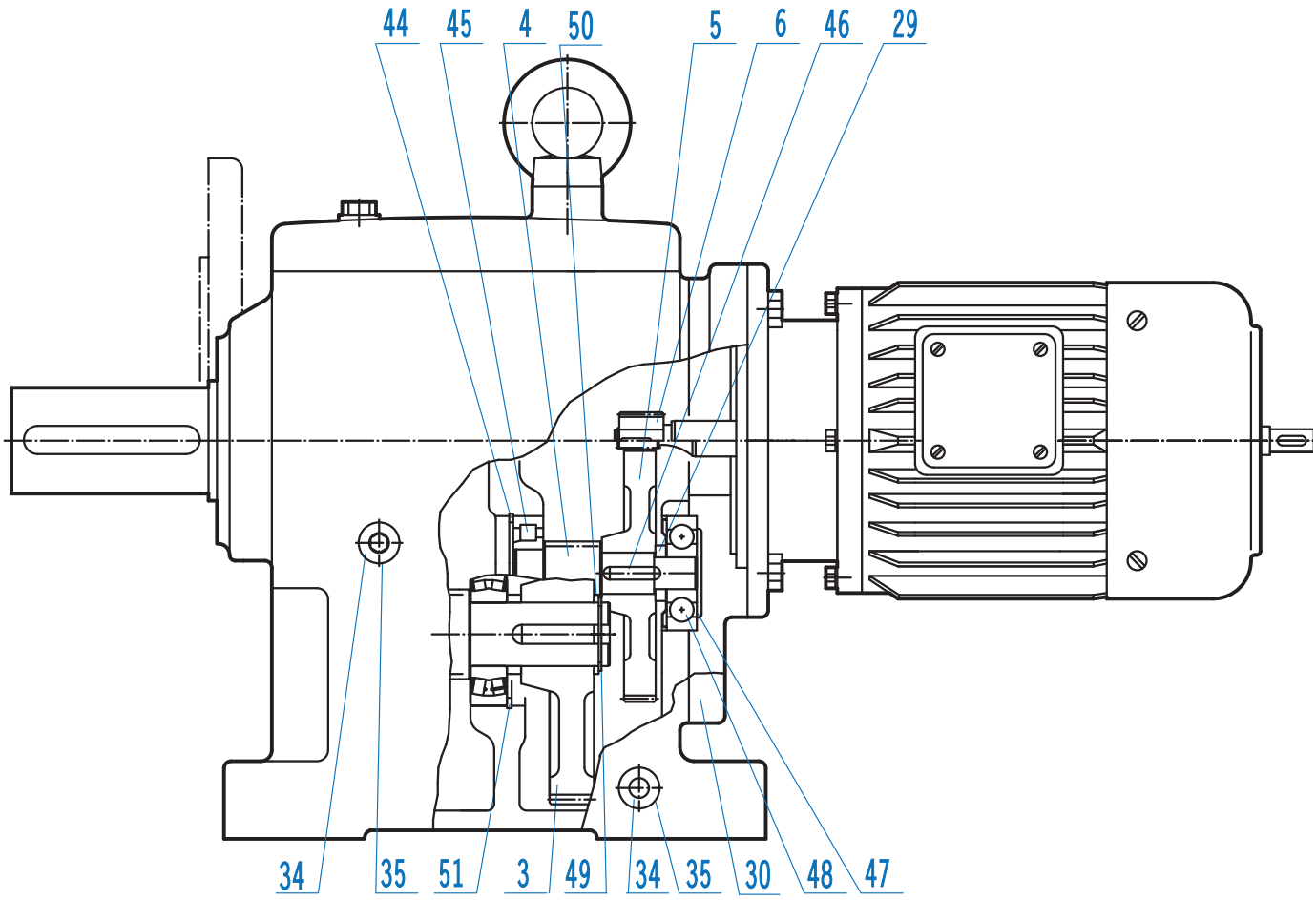

SK63 - SK103 Foot Mount

3	Gear	32	Gasket	47	Shim
4	Pinion Shaft	33	Key	48	Bearing
5	Gear	34	Drain plug	49	Snap Ring
6	Pinion	35	Gasket	50	Thrust Washer
28	Gasket	44	Snap Ring	51	Snap Ring
29	Spacer	45	Anti-Friction Bearing	133	NILOS Ring
30	Input Cover	46	Key		

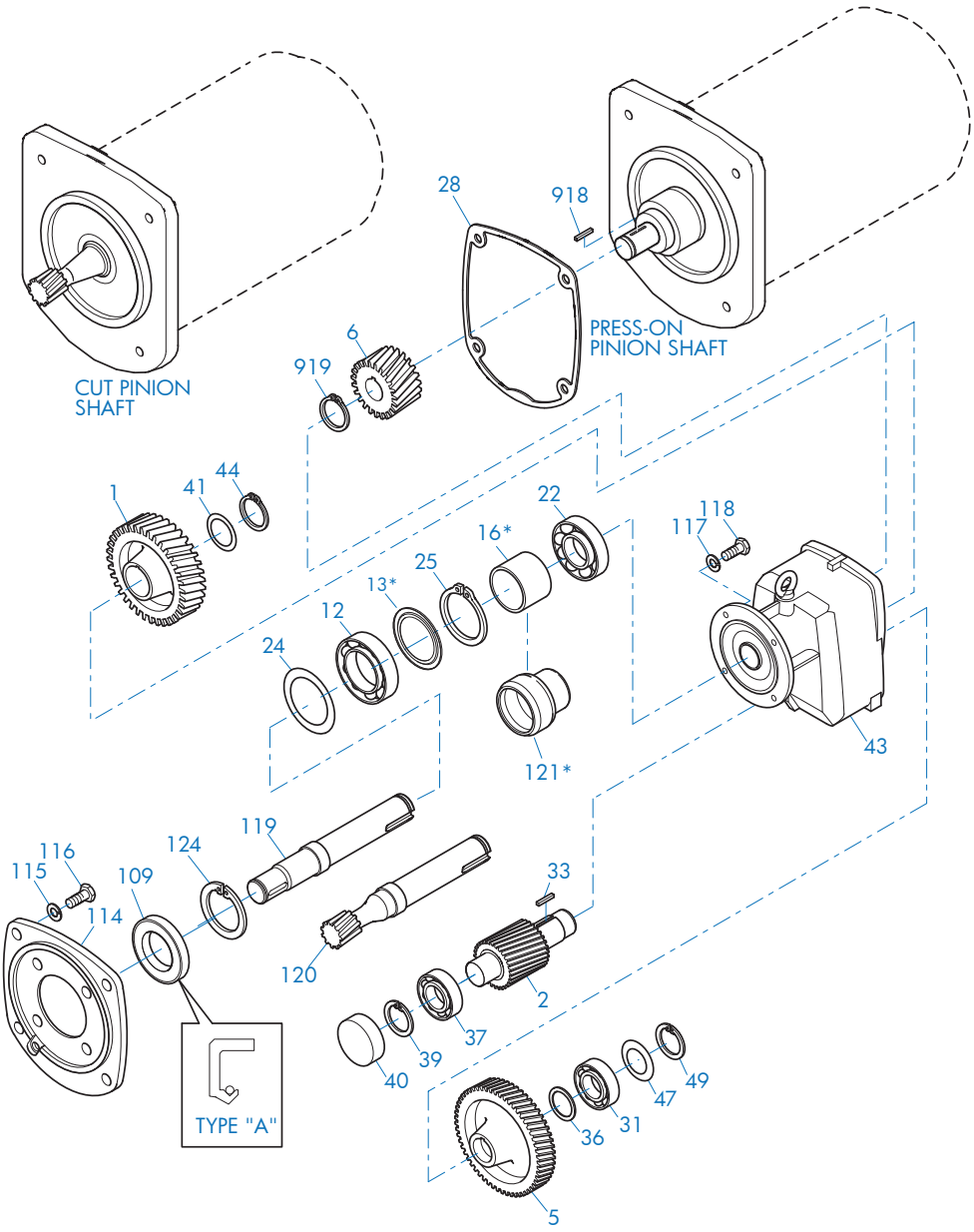

SK12/02 - SK103/52 Input Compound Reduction

1	Gear	33	Key	115	Lock Washer
2	Pinion Shaft	36	Spacer	116	Bolt
5	Gear	37	Anti-Friction Bearing	117	Lock Washer
6	Pinion	39	Snap Ring	118	Bolt
12	Anti-Friction Bearing	40	Bore Plug	119	Intermediate Shaft, Plain
13	Nilos Ring*	41	Shim	120	Intermediate Shaft, Gearcut
16	Spacer*	43	Gearcase	121	Bearing Sleeve*
22	Anti-Friction Bearing	44	Snap Ring	124	Snap Ring
24	Shim	47	Shim	918	Key
25	Snap Ring	49	Snap Ring	919	Snap Ring
28	Gasket	109	Oil Seal		
31	Anti-Friction Bearing	114	Intermediate Flange		

* Conditionally used part

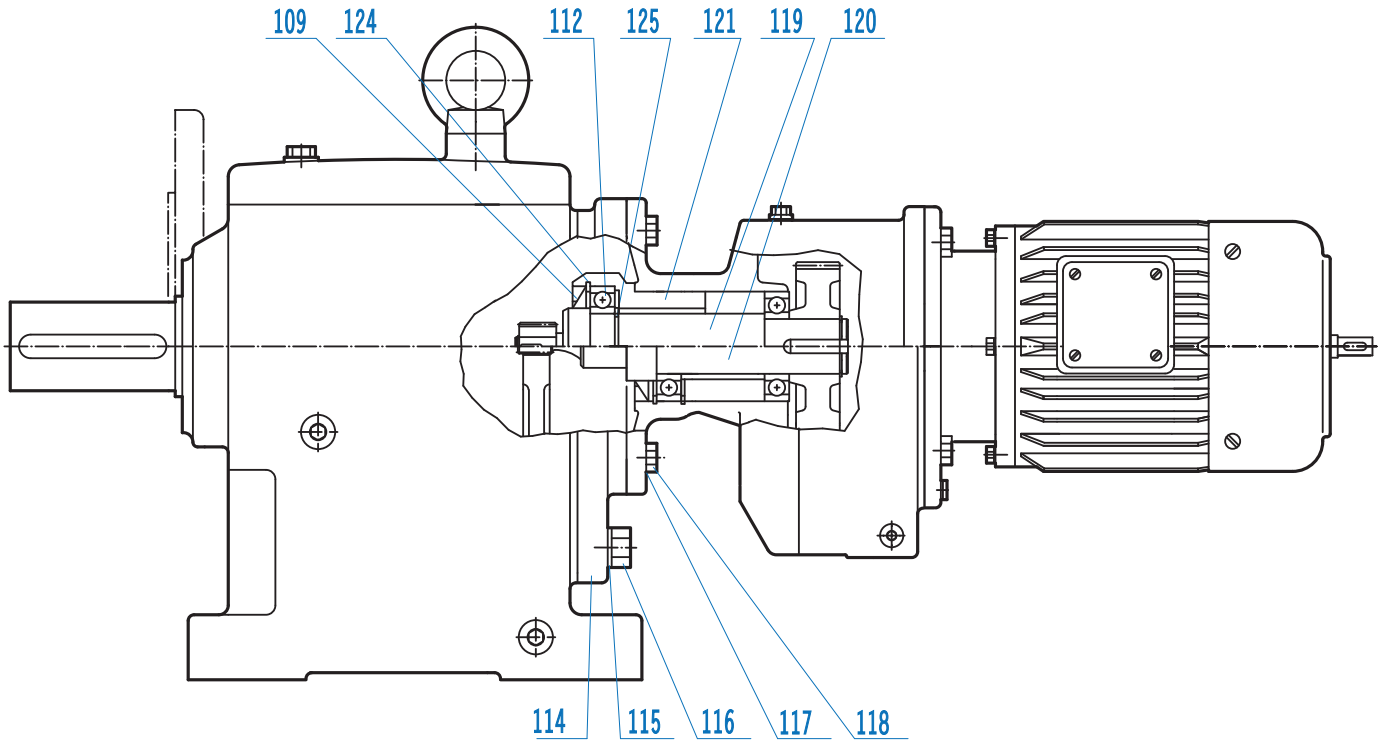

SK12/02 - SK103/52 Input Compound Reduction

12	Anti-Friction Bearing	115	Lock Washer	120	Intermediate Shaft, Gearcut
13	Nilos Ring*	116	Bolt	121	Bearing Sleeve*
16	Spacer*	117	Lock Washer	124	Snap Ring
25	Snap Ring	118	Bolt		
109	Oil Seal	119	Intermediate Shaft, Plain		
114	Intermediate Flange				

* Conditionally used part

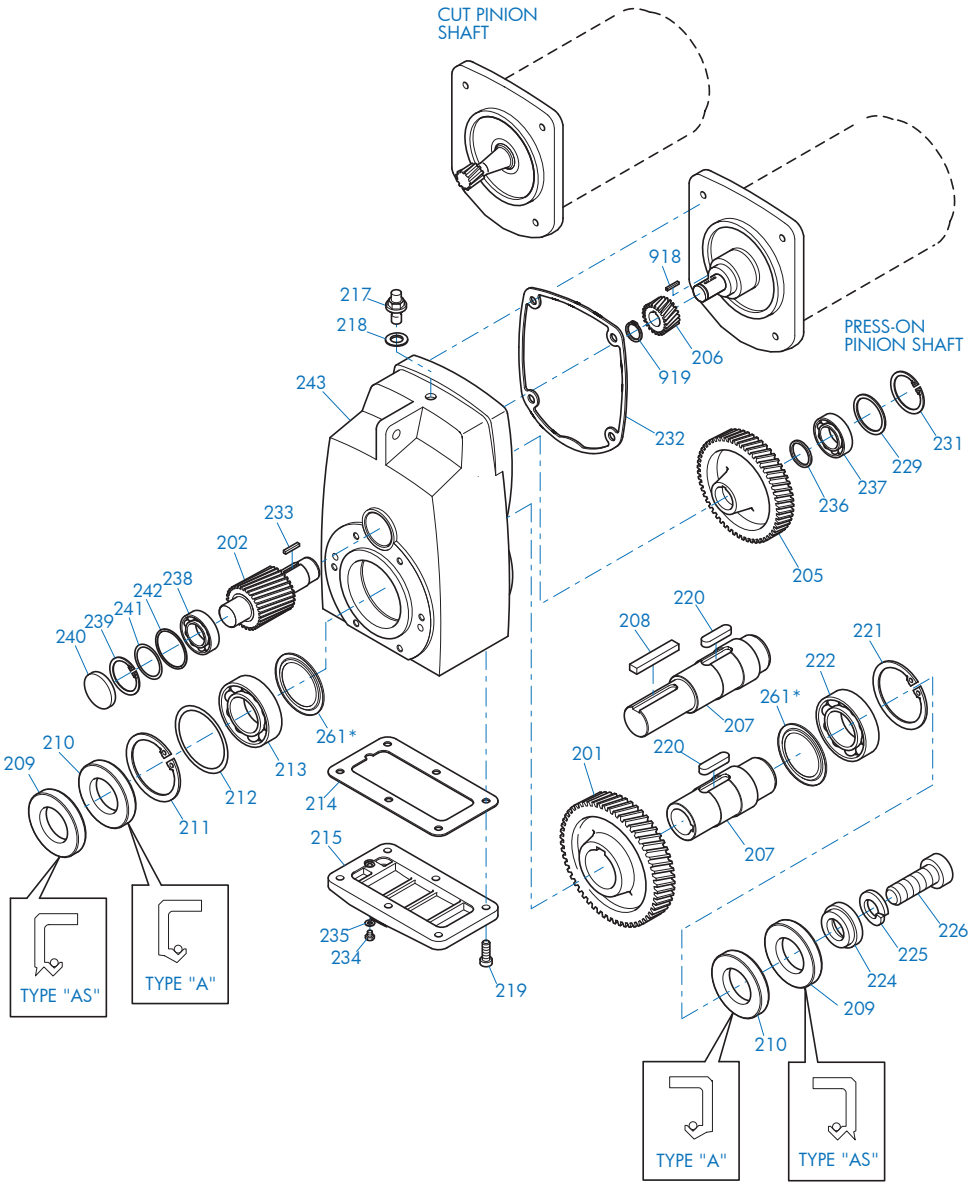

SK 0182NB - SK 5282

201 Gear	217 Vent Plug	234 Drain Plug
202 Pinion Shaft	218 Gasket	235 Gasket
205 Gear	219 Bolt	236 Thrust Washer
206 Pinion	220 Key	237 Anti-Friction Bearing
207 Output Shaft	221 Snap Ring	238 Anti-Friction Bearing
208 Key	222 Anti-Friction Bearing	239 Snap Ring
209 Oil Seal	224 Retaining Washer	240 Bore Plug
210 Oil Seal	225 Lock Washer	241 Shim
211 Snap Ring	226 Bolt	242 Thrust Washer
212 Shim	229 Thrust Washer	243 Gearcase
213 Anti-Friction Bearing	231 Snap Ring	261 Nilos Ring*
214 Gasket	232 Gasket	918 Key
215 Inspection Cover	233 Key	919 Snap Ring

* Conditionally used part

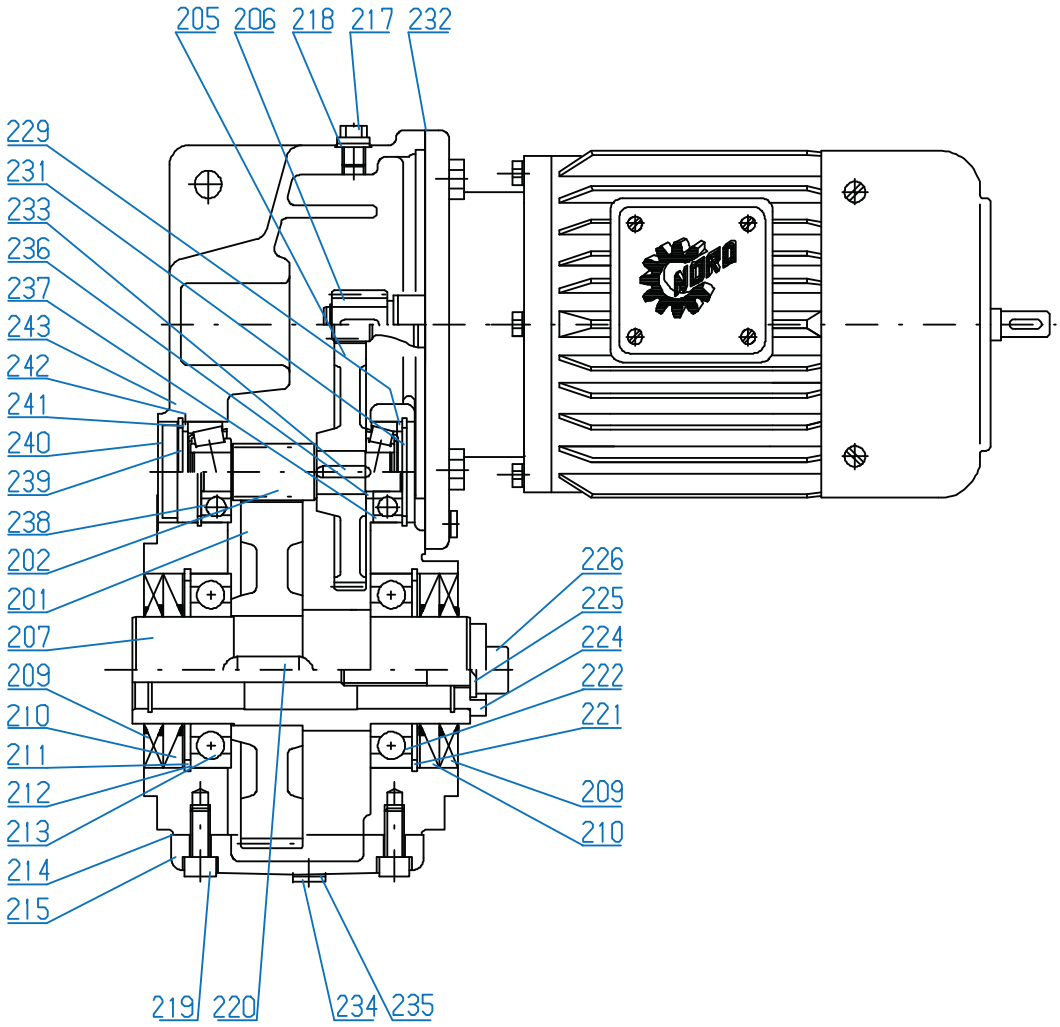

SK 0182NB - SK 5282

201 Gear	217 Vent Plug	233 Key
202 Pinion Shaft	218 Gasket	234 Drain Plug
205 Gear	219 Bolt	235 Gasket
206 Pinion	220 Key	236 Thrust Washer
207 Output Shaft	221 Snap Ring	237 Anti-Friction Bearing
209 Oil Seal	222 Anti-Friction Bearing	238 Anti-Friction Bearing
210 Oil Seal	224 Retaining Washer	239 Snap Ring
211 Snap Ring	225 Lock Washer	240 Bore Plug
212 Shim	226 Bolt	241 Shim
213 Anti-Friction Bearing	229 Thrust Washer	242 Thrust Washer
214 Gasket	231 Snap Ring	243 Gearcase
215 Inspection Cover	232 Gasket	261 Nilos Ring*

* Conditionally used part

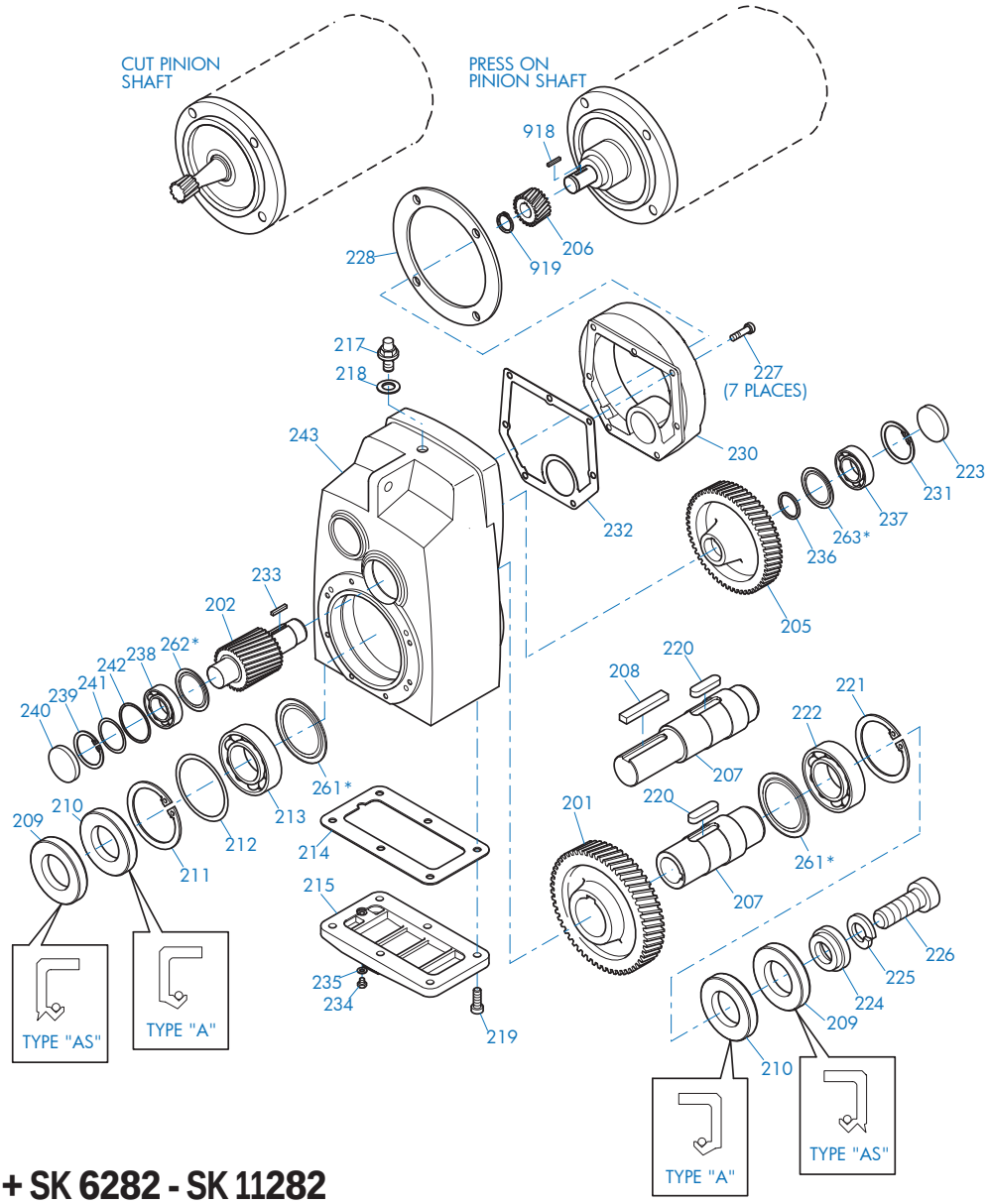

SK 0282NB + SK 6282 - SK 11282

201 Gear	219 Bolt	236 Thrust Washer
202 Pinion Shaft	220 Key	237 Anti-Friction Bearing
205 Gear	221 Snap Ring	238 Anti-Friction Bearing
206 Pinion	222 Anti-Friction Bearing	239 Snap Ring
207 Output Shaft	224 Retaining Washer	240 Bore Plug
208 Key	225 Lock Washer	241 Shim
209 Oil Seal	226 Bolt	242 Thrust Washer
210 Oil Seal	227 Bolt	243 Gear case
211 Snap Ring	228 Gasket	261 Nilos Ring*
212 Shim	230 Input Cover	262 Nilos Ring*
213 Anti-Friction Bearing	231 Snap Ring	263 Nilos Ring*
214 Gasket	232 Gasket	918 Key
215 Inspection Cover	233 Key	919 Snap Ring
217 Vent Plug	234 Drain Plug	
218 Gasket	235 Gasket	

* Conditionally used part

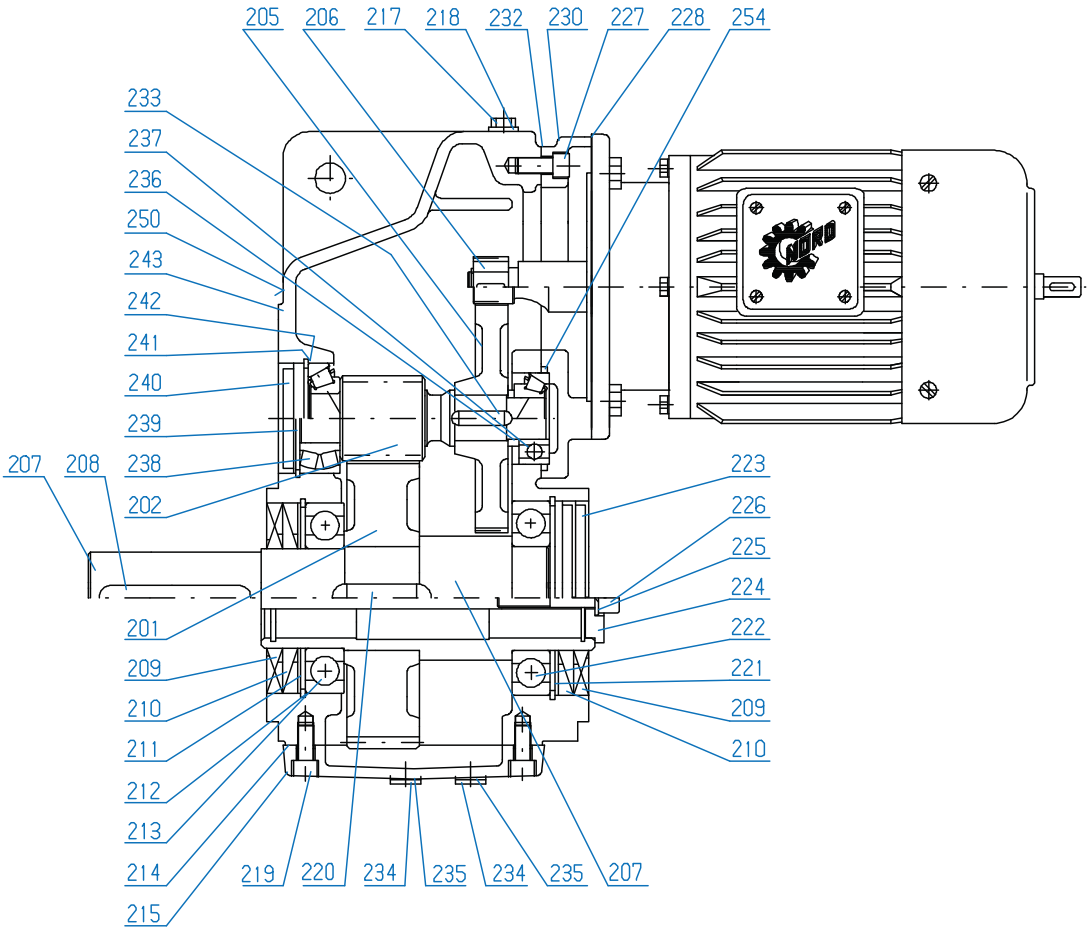

SK 0282NB + SK 6282 - SK 11282

201 Gear
202 Pinion Shaft
205 Gear
206 Pinion
207 Output Shaft
208 Key
209 Oil Seal
210 Oil Seal
211 Snap Ring
212 Shim
213 Anti-Friction Bearing
214 Gasket
215 Inspection Cover
217 Vent Plug
218 Gasket
219 Bolt
220 Key
221 Snap Ring
222 Anti-Friction Bearing
223 Bore Plug
224 Retaining Washer
225 Lock Washer
226 Bolt
227 Bolt
228 Gasket
230 Input Cover
232 Gasket
233 Key
234 Drain Plug
235 Gasket
236 Thrust Washer
237 Anti-Friction Bearing
238 Anti-Friction Bearing
239 Snap Ring
240 Bore Plug
241 Shim
242 Thrust Washer
243 Gear case
250 Bore Plug
261 Nilos Ring*
262 Nilos Ring*
263 Nilos Ring*

* Conditionally used part

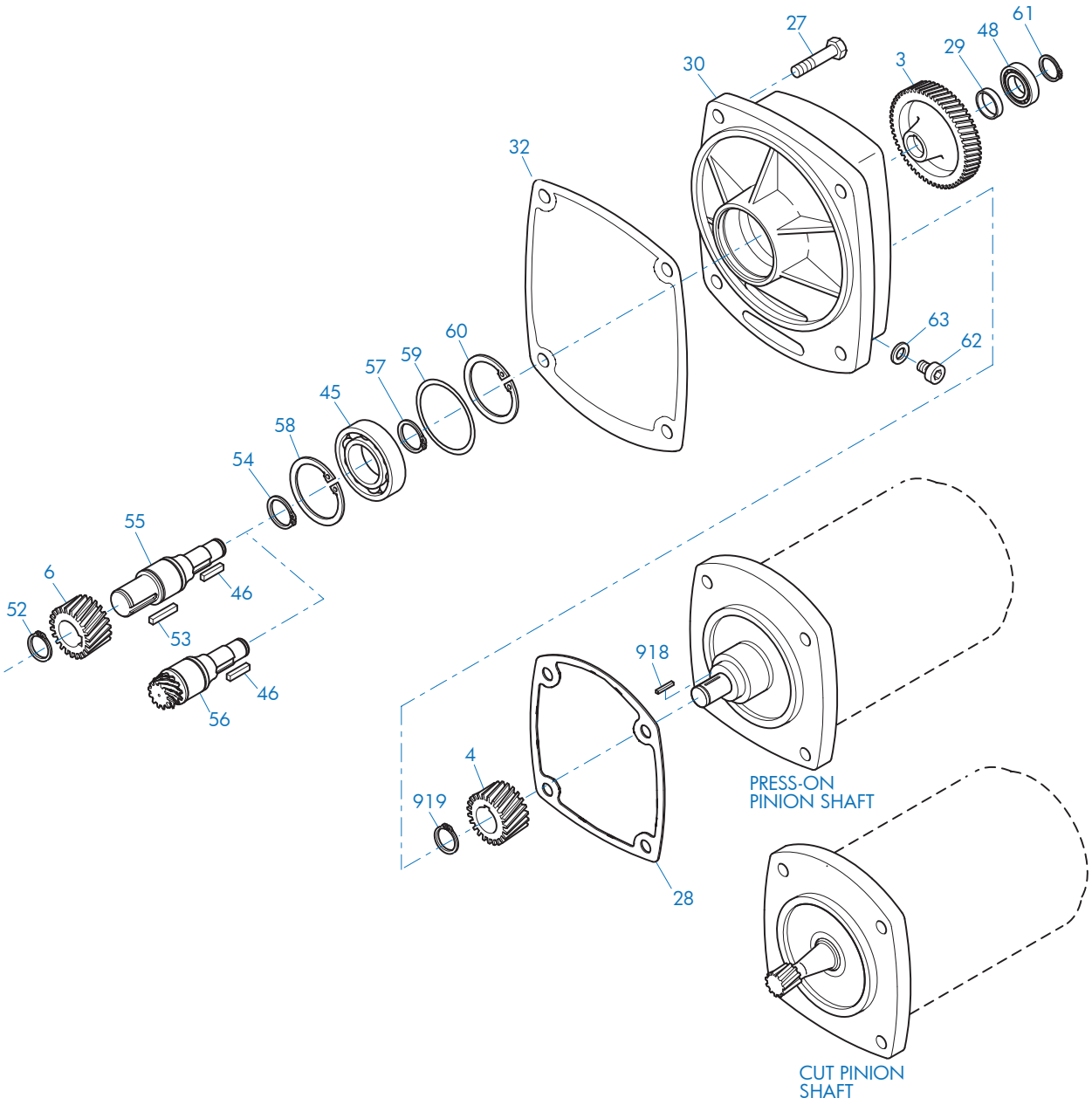

SK 2382 - SK 5382 Third Stage Reduction Housing

3	Gear	46	Key	59	Shim
4	Pinion	48	Anti-Friction Bearing	60	Snap Ring
6	Pinion	52	Snap Ring	61	Snap Ring
27	Bolt	53	Key	62	Oil Plug
28	Gasket	54	Snap Ring	63	Gasket
29	Spacer	55	Intermediate Shaft, Plain	918	Key
30	Third Reduction Gearcase	56	Intermediate Shaft, Gearcut	919	Snap Ring
32	Gasket	57	Snap Ring		
45	Anti-Friction Bearing	58	Snap Ring		

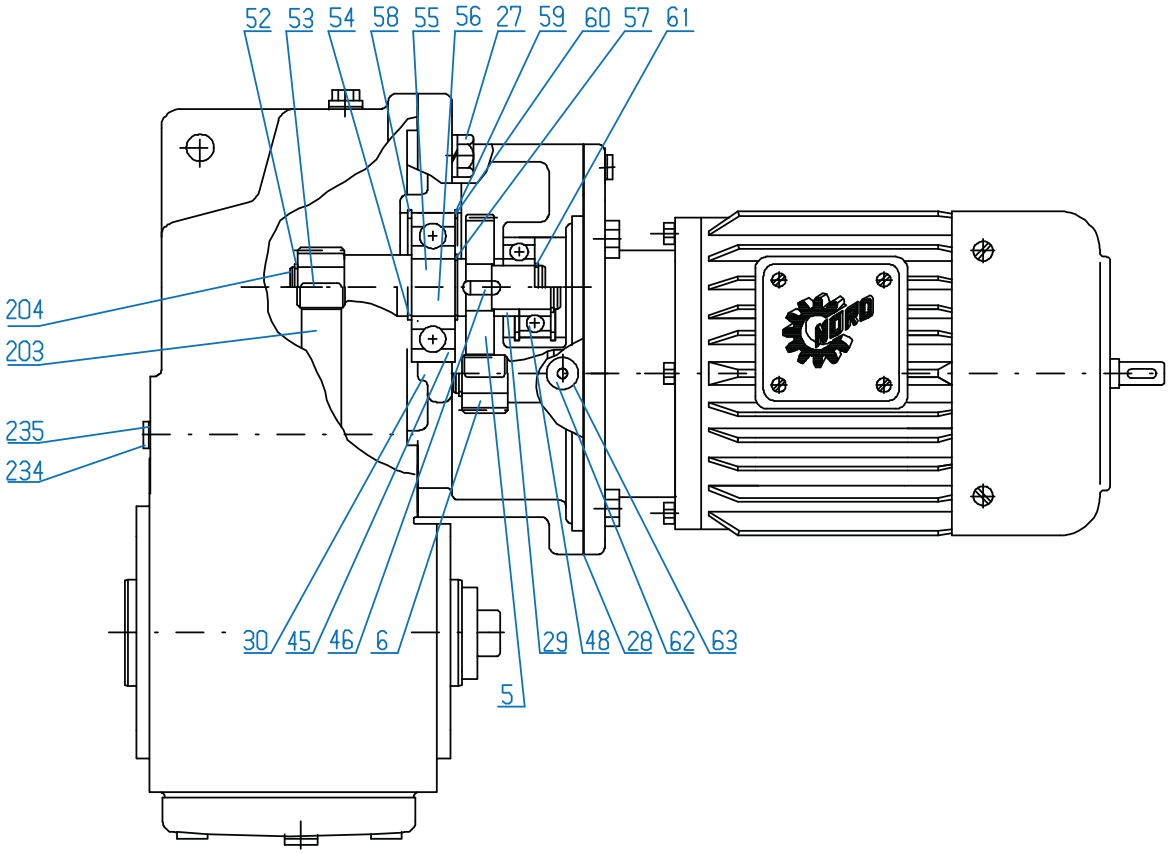

SK 2382 - SK 5382 Third Stage Reduction Housing

3	Gear	46	Key	59	Shim
4	Pinion	48	Anti-Friction Bearing	60	Snap Ring
6	Pinion	52	Snap Ring	61	Snap Ring
27	Bolt	53	Key	62	Oil Plug
28	Gasket	54	Snap Ring	63	Gasket
29	Spacer	55	Intermediate Shaft, Plain	203	Gear
32	Gasket	56	Intermediate Shaft, Gearcut	204	Pinion Shaft
30	Third Reduction Gearcase	57	Snap Ring	234	Oil Plug
45	Anti-Friction Bearing	58	Snap Ring	235	Gasket

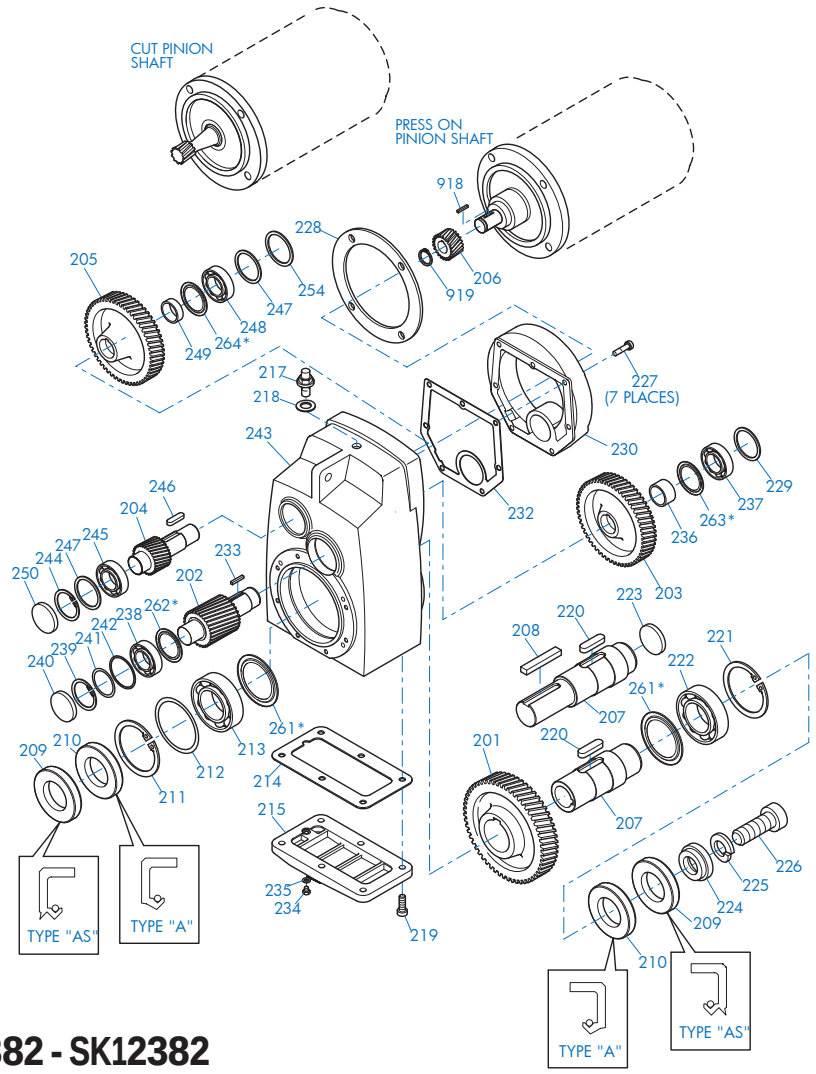

SK 1382 NB + SK 6382 - SK12382

201 Gear	221 Snap Ring	241 Shim
202 Pinion Shaft	222 Anti-Friction Bearing	242 Thrust Washer
203 Gear	223 Bore Plug	243 Gearcase
204 Pinion Shaft	224 Retaining Washer	244 Snap Ring
205 Gear	225 Lock Washer	245 Anti-Friction Bearing
206 Pinion	226 Bolt	246 Key
207 Output Shaft	227 Bolt	247 Shim
208 Key	228 Gasket	248 Anti-Friction Bearing
209 Oil Seal	229 Thrust Washer	249 Spacer
210 Oil Seal	230 Input Cover	250 Bore Plug
211 Snap Ring	232 Gasket	254 Thrust Washer
212 Shim	233 Key	261 Nilos Ring*
213 Anti-Friction Bearing	234 Drain Plug	262 Nilos Ring*
214 Gasket	235 Gasket	263 Nilos Ring*
215 Inspection Cover	236 Thrust Washer	264 Nilos Ring*
217 Vent Plug	237 Anti-Friction Bearing	918 Key
218 Gasket	238 Anti-Friction Bearing	919 Snap Ring
219 Bolt	239 Snap Ring	
220 Key	240 Bore Plug	

* Conditionally used part

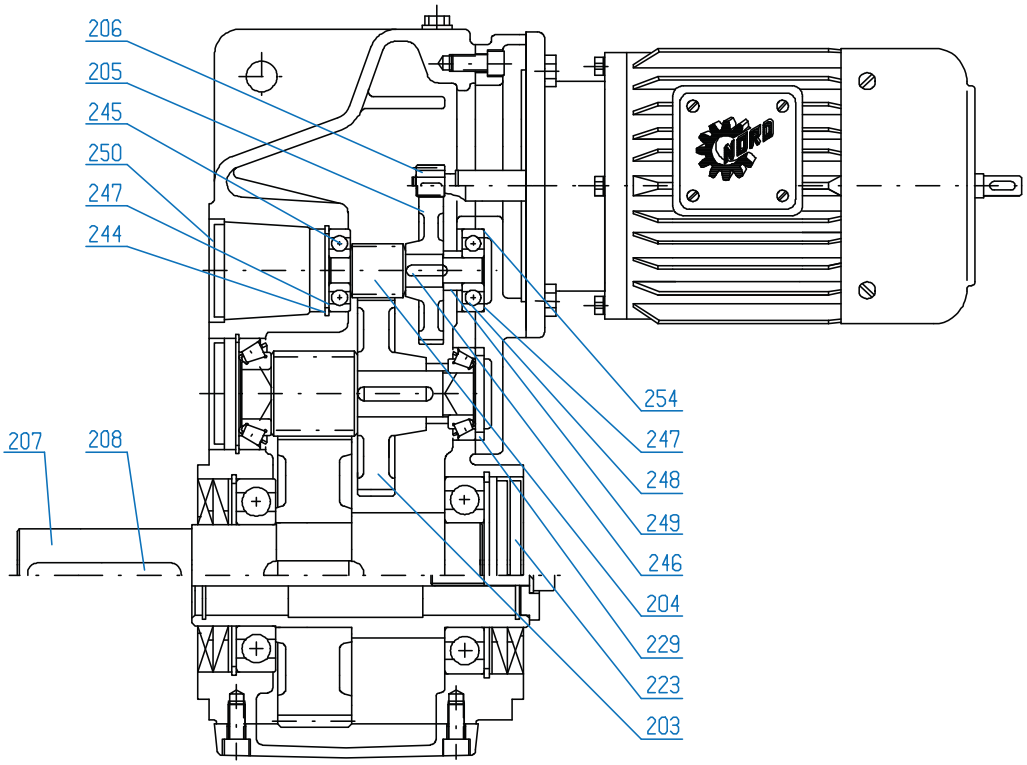

SK 1382 NB + SK 6382 - SK12382

203 Gear	229 Thrust Washer	250 Bore Plug
204 Pinion Shaft	244 Snap Ring	254 Thrust Washer
205 Gear	245 Anti-Friction Bearing	261 Nilos Ring*
206 Pinion	246 Key	262 Nilos Ring*
207 Output Shaft	247 Shim	263 Nilos Ring*
208 Key	248 Anti-Friction Bearing	264 Nilos Ring*
223 Bore Plug	249 Spacer	

* Conditionally used part

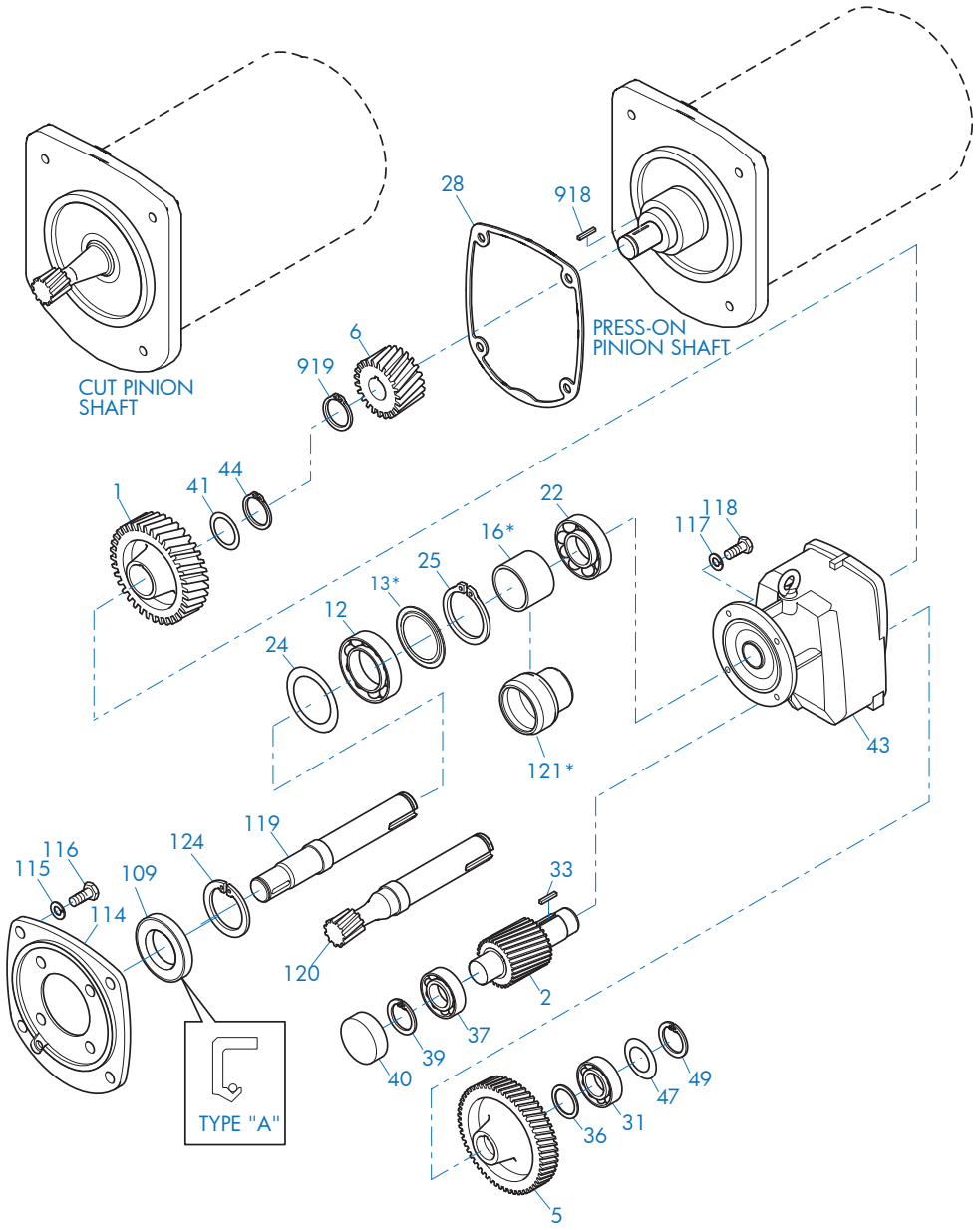

SK1282/02 - SK11382/52 Multi-stage Reduction Unit

1	Gear	33	Key	115	Lock Washer
2	Pinion Shaft	36	Spacer	116	Bolt
5	Gear	37	Anti-Friction Bearing	117	Lock Washer
6	Pinion	39	Snap Ring	118	Bolt
12	Anti-Friction Bearing	40	Bore Plug	119	Intermediate Shaft, Plain
13	Nilos Ring*	41	Shim	120	Intermediate Shaft, Gearcut
16	Spacer*	43	Gearcase	121	Bearing Sleeve*
22	Anti-Friction Bearing	44	Snap Ring	124	Snap Ring
24	Shim	47	Shim	918	Key
25	Snap Ring	49	Snap Ring	919	Snap Ring
28	Gasket	109	Oil Seal		
31	Anti-Friction Bearing	114	Intermediate Flange		

* Conditionally used part

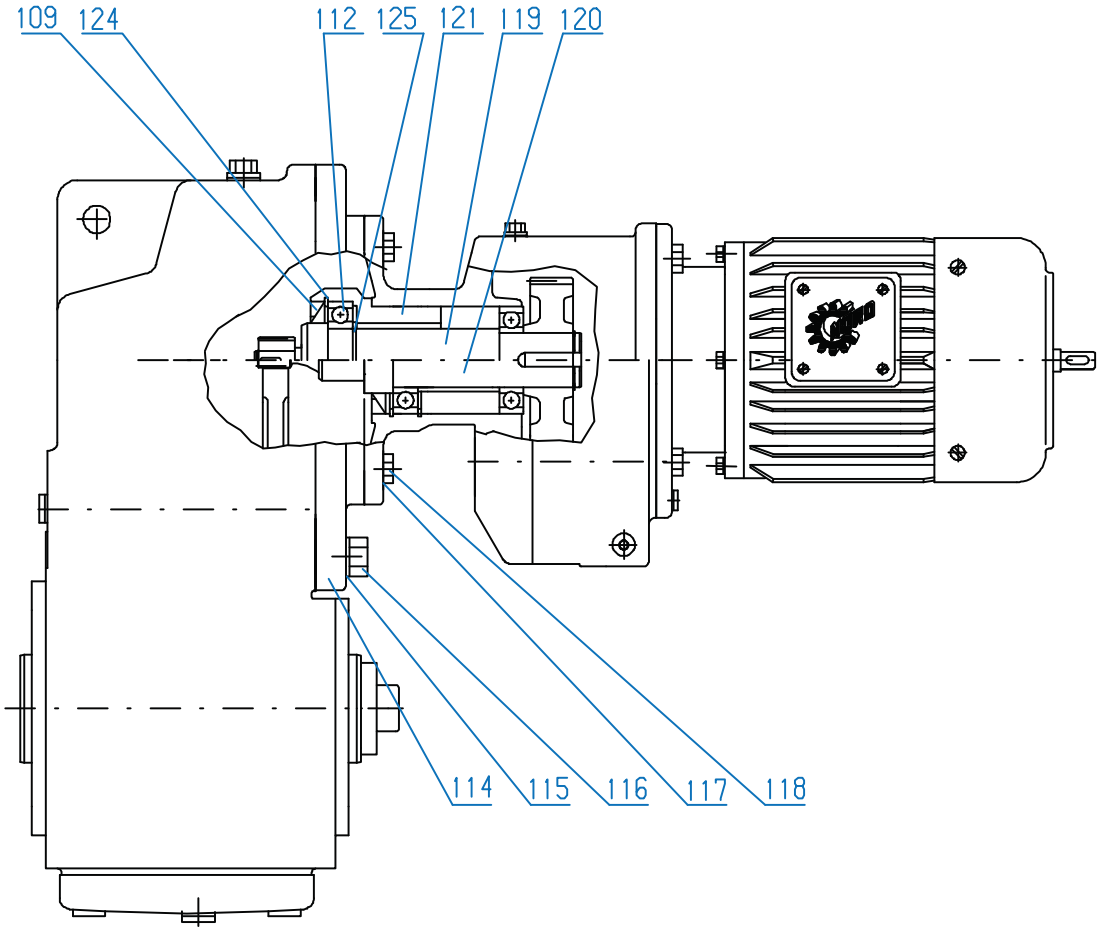

SK 1282/02 - SK 11382/52

12 Anti-friction Bearing	114 Intermediate Flange	119 Intermediate Shaft, Plain
13 Nilos Ring*	115 Lock Washer	120 Intermediate Shaft, Gearcut
16 Spacer	116 Bolt	121 Bearing Sleeve
25 Snap Ring	117 Lock Washer	124 Snap Ring
109 Oil Seal	118 Bolt	

* Conditionally used part

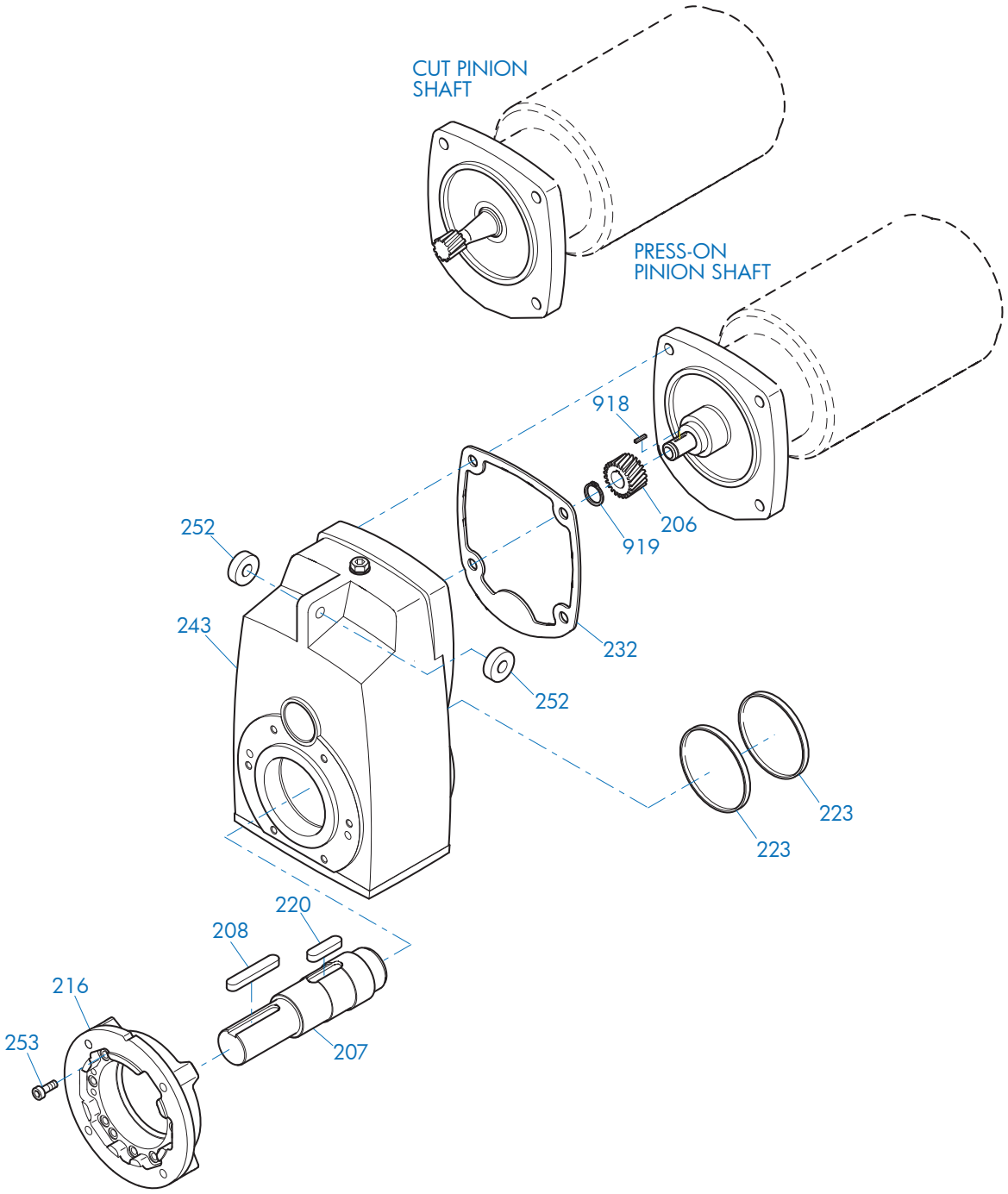

SK 0182NB - SK 11282 & SK 1382 - SK 11382

206 Pinion	220 Key	252 Rubber Buffer
207 Output Shaft	223 Bore Plug	253 Bolt
208 Key	232 Gasket	918 Key
216 Flange	243 Gearcase	919 Snap Ring

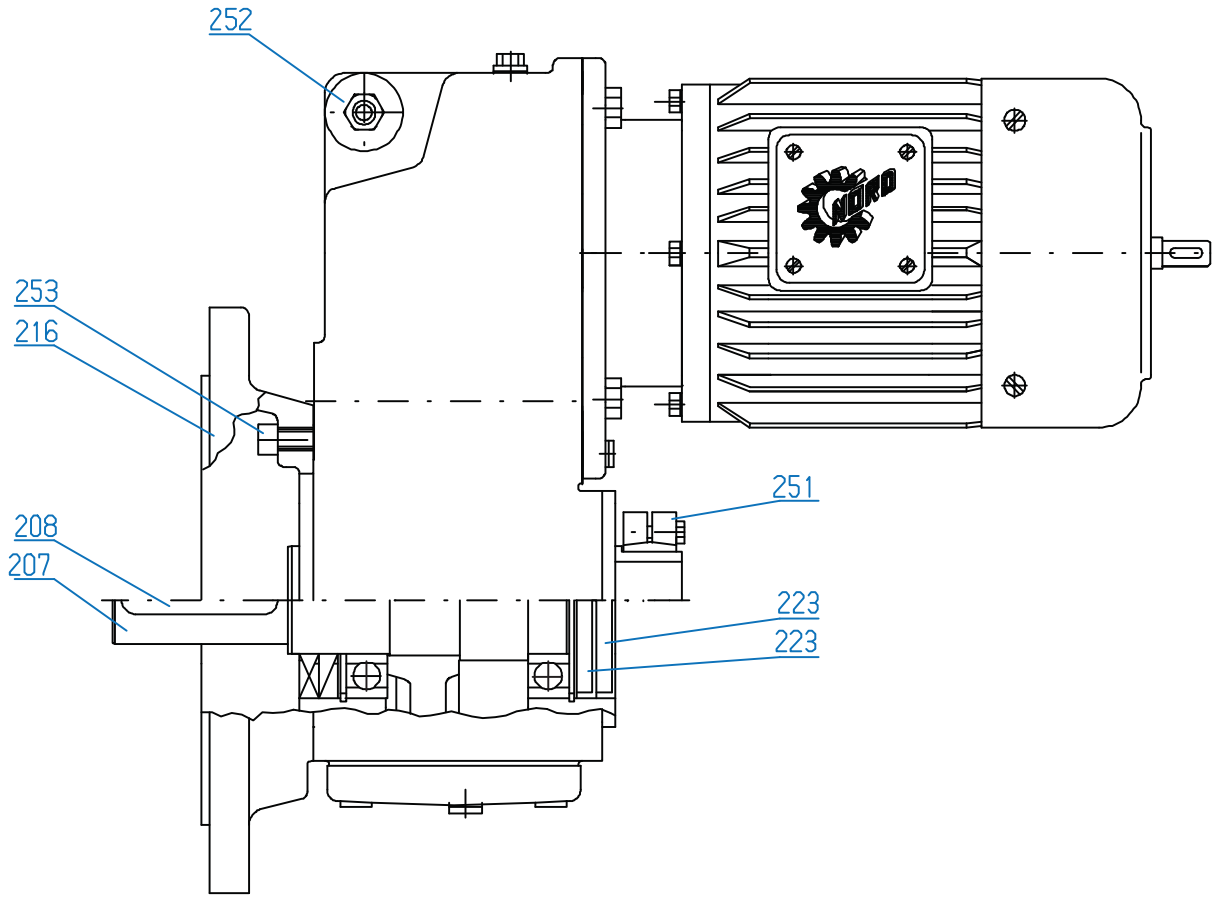

SK 0182NB - SK 11282 & SK 1382 - SK 11382

207 Output Shaft	223 Bore Plug	253 Bolt
208 Key	251 Shrink Disc	
216 Flange	252 Rubber Buffer	

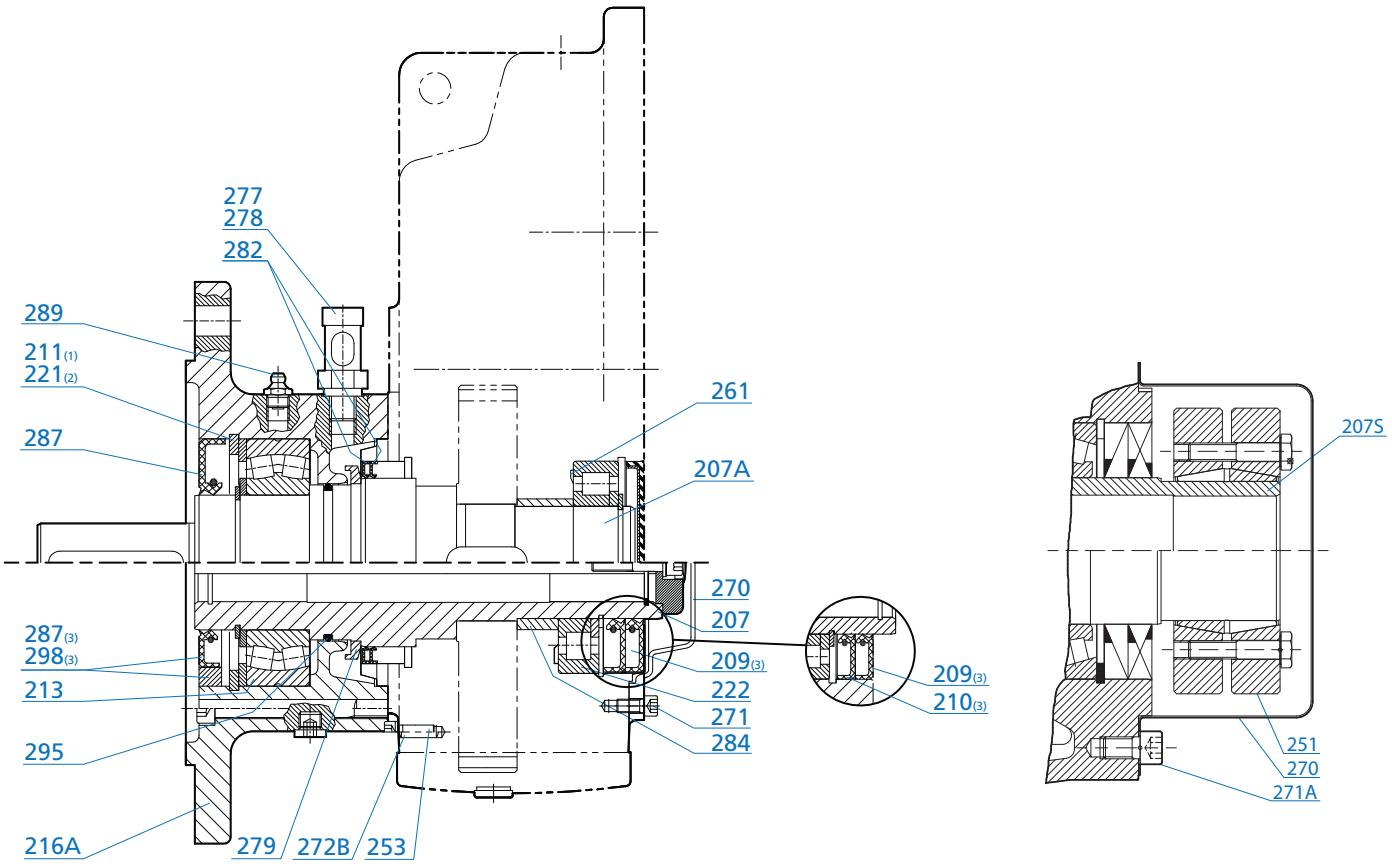

Parallel Helical Clincher VL2 & VL3

207A	Hollow Output Shaft	222	Bearing	278	Plug Gasket
207	Solid Output Shaft	251	Shrink Disk	279	Oil Slinger (VL3)
207S	Shrink Disk Hollow Shaft	253	Screw	282	Seal
209 (3)	Seal	261	NILOS Ring	284	Spacer
210 (3)	Seal	270	Shaft Cover	287 (3)	Seal
211 (1)	Snap Ring	271	Shaft Cover Screw	289	Grease Fitting
213	Bearing	272B	Dowel Pin	295	O-Ring
216A	Flange	277	Drain Plug (VL2)	298 (3)	Bushing
221(3)	Snap Ring	277	Oil Level Indicator (VL3)		

(1) = Needed for 2282/3282 **(3) = Varies By Unit**
(2) = Needed for 3282/3382

90.1 HELICAL-BEVEL PARTS LIST DRAWINGS

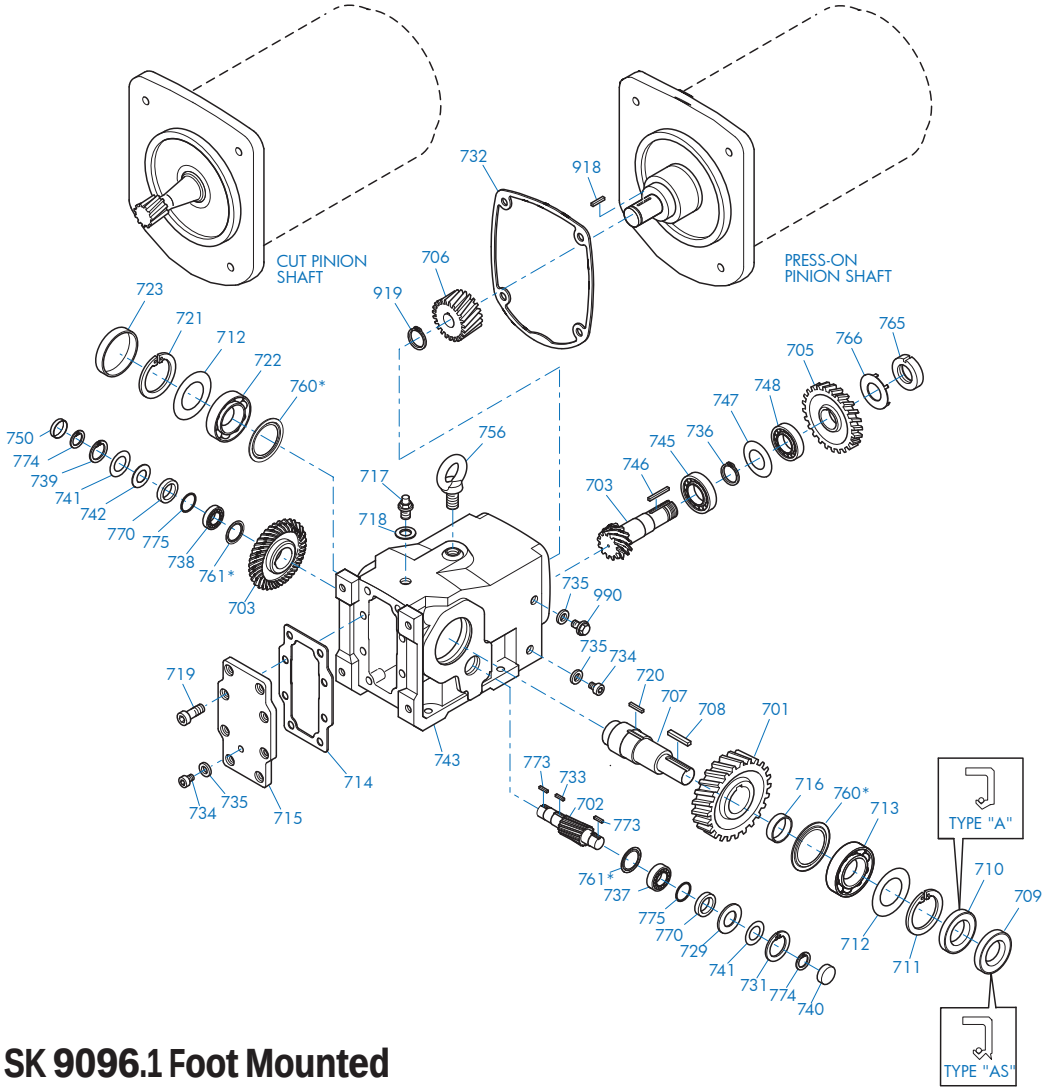

SK 9012.1 - SK 9096.1 Foot Mounted

701 Output Gear
702 Pinion Shaft
703 Bevel Gearset
705 Gear
706 Pinion
707 Output Shaft
708 Key
709 Oil Seal
710 Oil Seal
711 Snap Ring
712 Shim
713 Anti-Friction Bearing
714 Gasket
715 Inspection Cover
716 Spacer
717 Vent screw
718 Gasket
719 Bolt
720 Key
721 Snap Ring
722 Anti-Friction Bearing
723 Bore Plug
729 Thrust Washer
731 Snap Ring
732 Gasket
733 Key
734 Oil Plug
735 Gasket
736 Snap Ring
737 Anti-Friction Bearing
738 Anti-Friction Bearing
739 Snap Ring
740 Bore Plug
741 Shim
742 Thrust Washer
743 Gearcase
745 Anti-Friction Bearing
746 Key
747 Shim
748 Anti-Friction Bearing
750 Bore Plug
756 Flanged Eye Bolt
760 Nilos Ring*
761 Nilos Ring*
765 Slotted Round Nut
766 Tab Lock Washer
770 Backstop (If Equipped)
773 Key (w/Backstop)
774 Snap Ring (w/Backstop)
775 Thrust Washer (w/Backstop)
918 Key
919 Snap Ring
990 Oil Level Plug

* Conditionally used part

NORD Gear Limited
Toll Free in Canada: 800.668.4378

NORD Gear Corporation
Toll Free in the United States: 888.314.6673

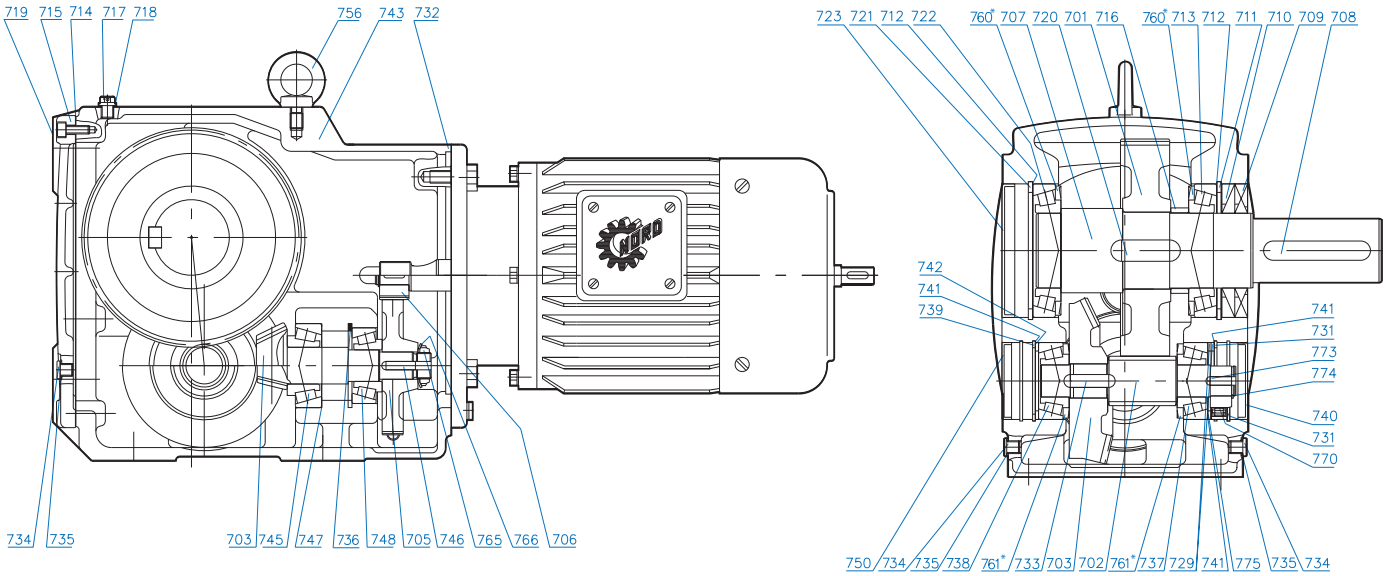

SK 9012.1 - SK 9096.1 Foot Mounted

701 Output Gear
702 Pinion Shaft
703 Bevel Gearset
705 Gear
706 Pinion
707 Output Shaft
708 Key
709 Oil Seal
710 Oil Seal
711 Snap Ring
712 Shim
713 Anti-Friction Bearing
714 Gasket
715 Inspection Cover
716 Spacer
717 Vent
718 Gasket
719 Bolt
720 Key
721 Snap Ring
722 Anti-Friction Bearing
723 Bore Plug
729 Thrust Washer
731 Snap Ring
732 Gasket
733 Key
734 Oil Plug
735 Gasket
736 Snap Ring
737 Anti-Friction Bearing
738 Anti-Friction Bearing
739 Snap Ring
740 Bore Plug
741 Shim
742 Thrust Washer
743 Gearcase
745 Anti-Friction Bearing
746 Key
747 Shim
748 Anti-Friction Bearing
750 Bore Plug
756 Flanged Eye Bolt
760 Nilos Ring*
761 Nilos Ring*
765 Slotted Round Nut
766 Tab Lock Washer
770 Backstop (If Equipped)
773 Key (w/Backstop)
774 Snap Ring (w/Backstop)
775 Thrust Washer (w/Backstop)

* Conditionally used part

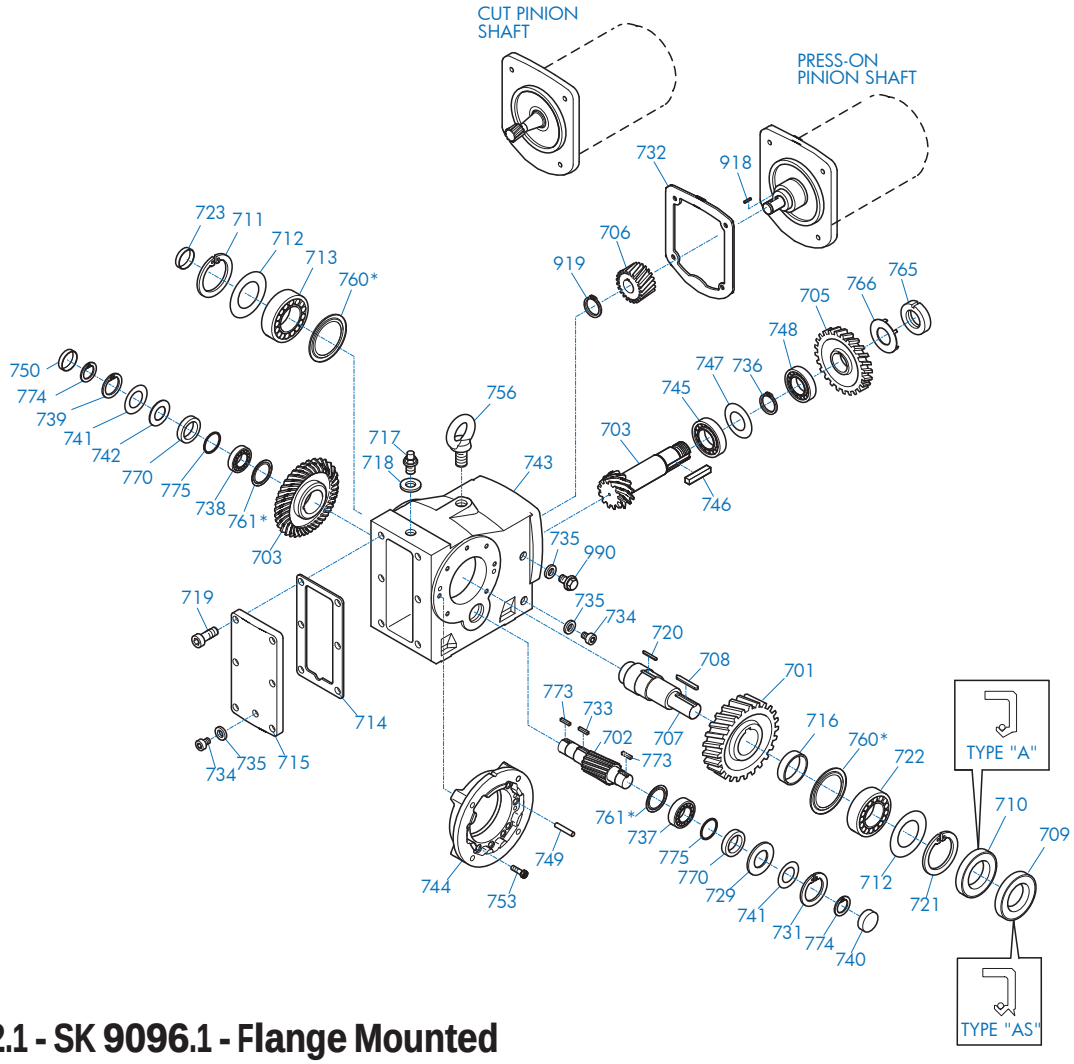

SK 9012.1 - SK 9096.1 - Flange Mounted

701 Output Gear
702 Pinion Shaft
703 Bevel Gearset
705 Gear
706 Pinion
707 Output Shaft
708 Key
709 Oil Seal
710 Oil Seal
711 Snap Ring
712 Shim
713 Anti-Friction Bearing
714 Gasket
715 Inspection Cover
716 Spacer
717 Vent Plug
718 Gasket
719 Bolt
720 Key
721 Snap Ring
722 Anti-Friction Bearing
723 Bore Plug
729 Thrust Washer
731 Snap Ring
732 Gasket
733 Key
734 Oil plug
735 Gasket
736 Snap Ring
737 Anti-Friction Bearing
738 Anti-Friction Bearing
739 Snap Ring
740 Bore Plug
741 Shim
742 Thrust Washer
743 Gearcase
744 Flange
745 Anti-Friction Bearing
746 Key
747 Shim
748 Anti-Friction Bearing
749 Dowel Pin
750 Bore Plug
753 Bolt
756 Flanged Eye Bolt
760 Nilos Ring*
761 Nilos Ring*
765 Slotted Round Nut
766 Tab Lock Washer
770 Backstop (If Equipped)
773 Key (w/Backstop)
774 Snap Ring (w/Backstop)
775 Thrust Washer (w/Backstop)
918 Key
919 Snap Ring
990 Oil Level Plug

* Conditionally used part

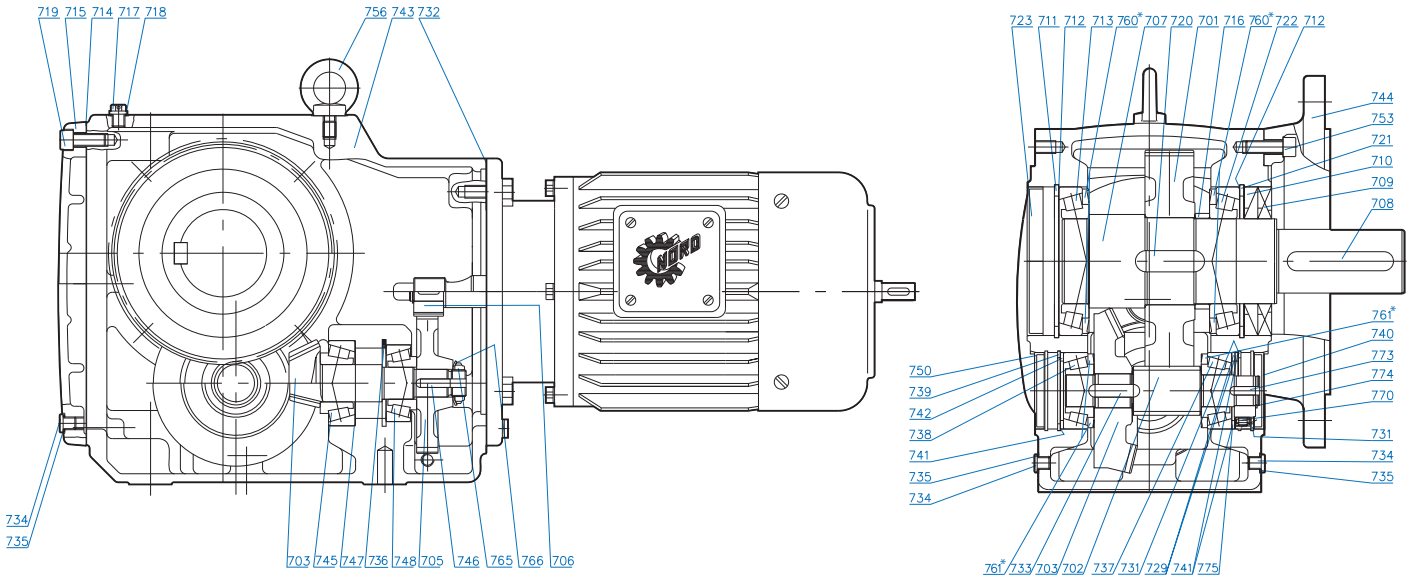

SK 9012.1 - SK 9096.1 - Flange Mounted

701 Output Gear
702 Pinion Shaft
703 Bevel Gearset
705 Gear
706 Pinion
707 Output Shaft
708 Key
709 Oil Seal
710 Oil Seal
711 Snap Ring
712 Shim
713 Anti-Friction Bearing
714 Gasket
715 Inspection Cover
716 Spacer
717 Vent Plug
718 Gasket
719 Bolt
720 Key
721 Snap Ring
722 Anti-Friction Bearing
723 Bore Plug
729 Thrust Washer
731 Snap Ring
732 Gasket
733 Key
734 Oil plug
735 Gasket
736 Snap Ring
737 Anti-Friction Bearing
738 Anti-Friction Bearing
739 Snap Ring
740 Bore Plug
741 Shim
742 Thrust Washer
743 Gearcase
744 Flange
745 Anti-Friction Bearing
746 Key
747 Shim
748 Anti-Friction Bearing
750 Bore Plug
753 Bolt
756 Flanged Eye Bolt
760 Nilos Ring*
761 Nilos Ring*
765 Slotted Round Nut
766 Tab Lock Washer
770 Backstop*
773 Key (w/Backstop)
774 Snap Ring (w/Backstop)
775 Thrust Washer (w/Backstop)

* Conditionally used part

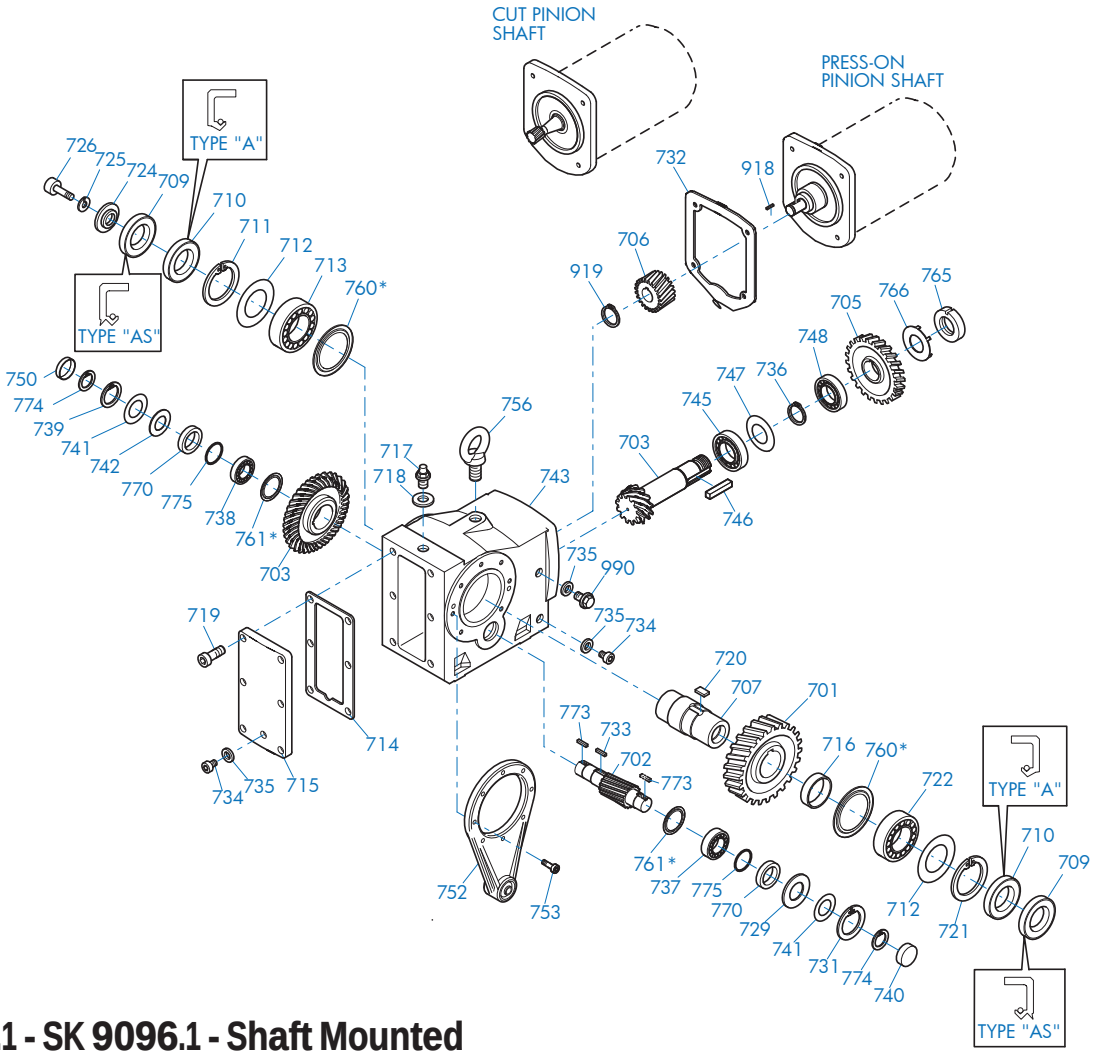

SK 9012.1 - SK 9096.1 - Shaft Mounted

701 Gear
702 Pinion Shaft
703 Bevel Gearset
705 Gear
706 Pinion
707 Output Shaft
709 Oil Seal
710 Oil Seal
711 Snap Ring
712 Shim
713 Anti-Friction Bearing
714 Gasket
715 Inspection Cover
716 Spacer
717 Vent Plug
718 Gasket
719 Bolt
720 Key
721 Snap Ring
722 Anti-Friction Bearing
724 Retaining Washer
725 Lock Washer
726 Bolt
729 Thrust Washer
731 Snap Ring
732 Gasket
733 Key
734 Oil plug
735 Gasket
736 Snap Ring
737 Anti-Friction Bearing
738 Anti-Friction Bearing
739 Snap Ring
740 Bore Plug
741 Shim
742 Thrust Washer
743 Gearcase
745 Anti-Friction Bearing
746 Key
747 Shim
748 Anti-Friction Bearing
750 Bore Plug
752 Torque Arm
753 Bolt
756 Flanged Eye Bolt
760 Nilos Ring*
761 Nilos Ring*
765 Slotted Round Nut
766 Tab Lock Washer
770 Backstop (If Equipped)
773 Key (w/Backstop)
774 Snap Ring (w/Backstop)
775 Thrust Washer (w/Backstop)
918 Key
919 Snap Ring
990 Oil Level Plug

* Conditionally used part

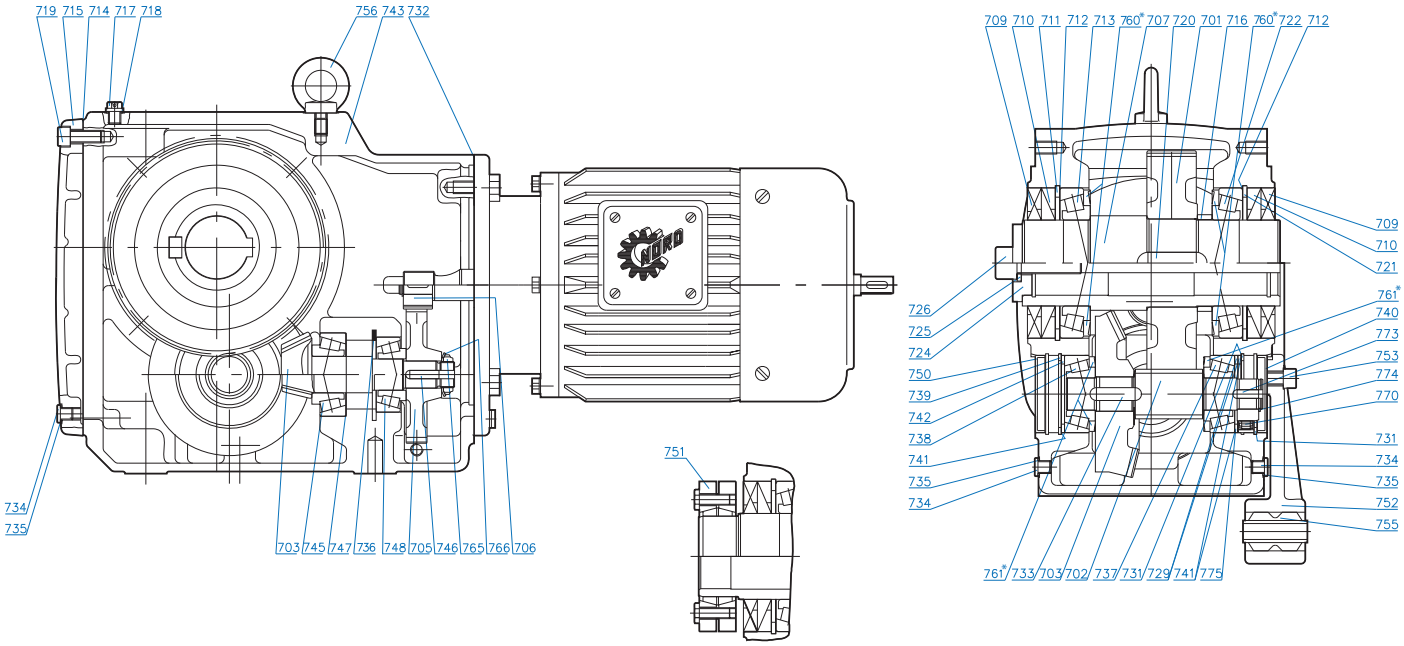

SK 9012.1 - SK 9096.1 - Shaft Mounted

701 Gear
702 Pinion Shaft
703 Bevel Gearset
705 Gear
706 Pinion
707 Output Shaft
709 Oil Seal
710 Oil Seal
711 Snap Ring
712 Shim
713 Anti-Friction Bearing
714 Gasket
715 Inspection Cover
716 Spacer
717 Vent Plug
718 Seal
719 Bolt
720 Key
721 Snap Ring
722 Anti-Friction Bearing
724 Washer
725 Lock Washer
726 Bolt
729 Thrust Washer
731 Snap Ring
732 Gasket
733 Key
734 Oil plug
735 Gasket
736 Snap Ring
737 Anti-Friction Bearing
738 Anti-Friction Bearing
739 Snap Ring
740 Bore Plug
741 Shim
742 Thrust Washer
743 Gearcase
745 Anti-Friction Bearing
746 Key
747 Shim
748 Anti-Friction Bearing
750 Bore Plug
751 Shrink Disc
752 Torque Arm
753 Bolt
755 Rubber Buffer
756 Flanged Eye Bolt
760 Nilos Ring*
761 Nilos Ring*
765 Slotted Round Nut
766 Tab Lock Washer
770 Backstop*
773 Key (w/Backstop)
774 Snap Ring (w/Backstop)
775 Thrust Washer (w/Backstop)

* Conditionally used part

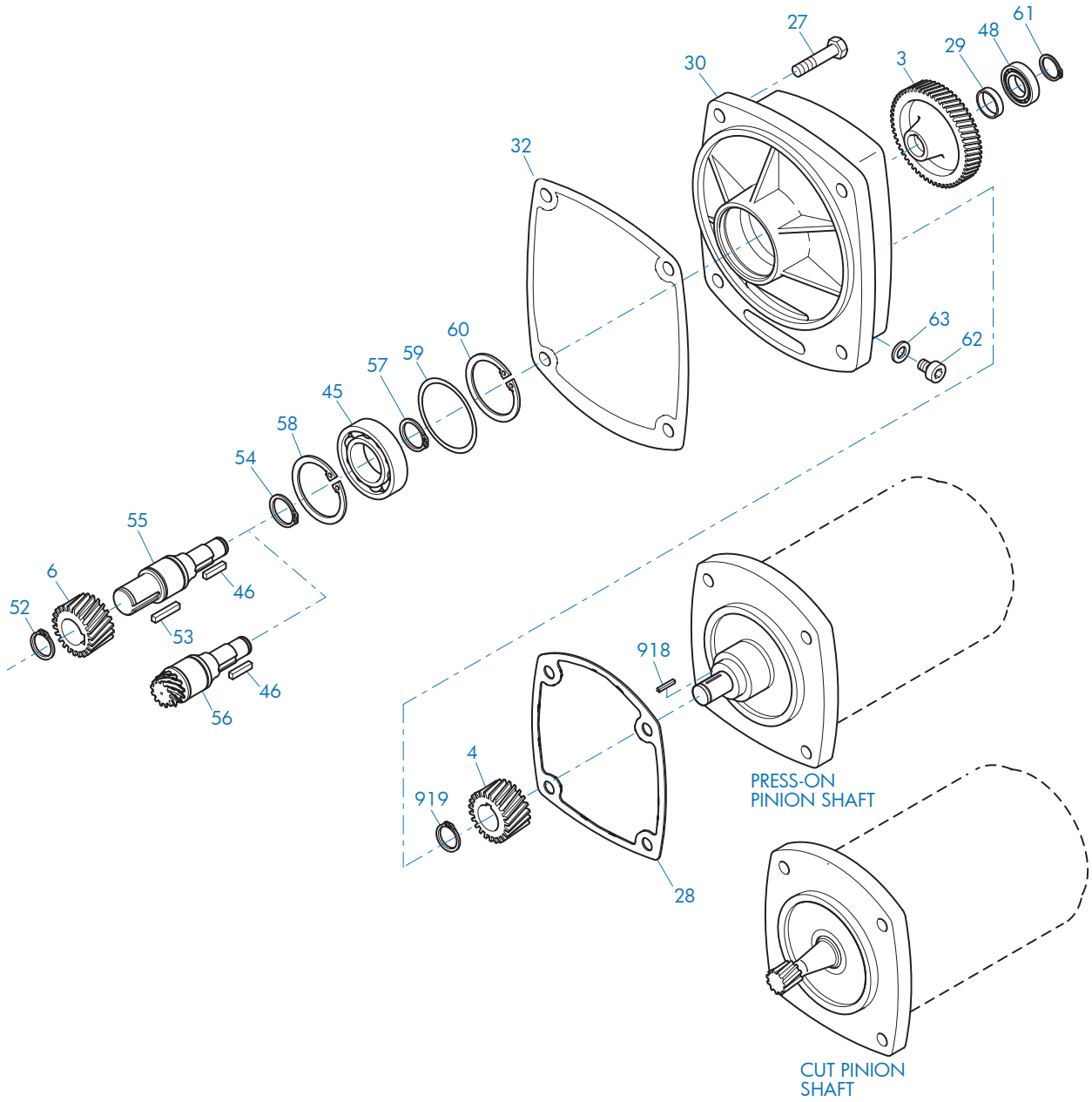

SK9013.1 - SK9053.1 Third Stage Reduction Gear

3	Gear	46	Key	59	Shim
4	Pinion	48	Anti-Friction Bearing	60	Snap Ring
6	Pinion	52	Snap Ring	61	Snap Ring
27	Bolt	53	Key	62	Oil Plug
28	Gasket	54	Snap Ring	63	Gasket
29	Spacer	55	Intermediate Shaft, Plain	918	Key
30	Third Reduction Gearcase	56	Intermediate Shaft, Gearcut	919	Snap Ring
32	Gasket	57	Snap Ring		
45	Anti-Friction Bearing	58	Snap Ring		

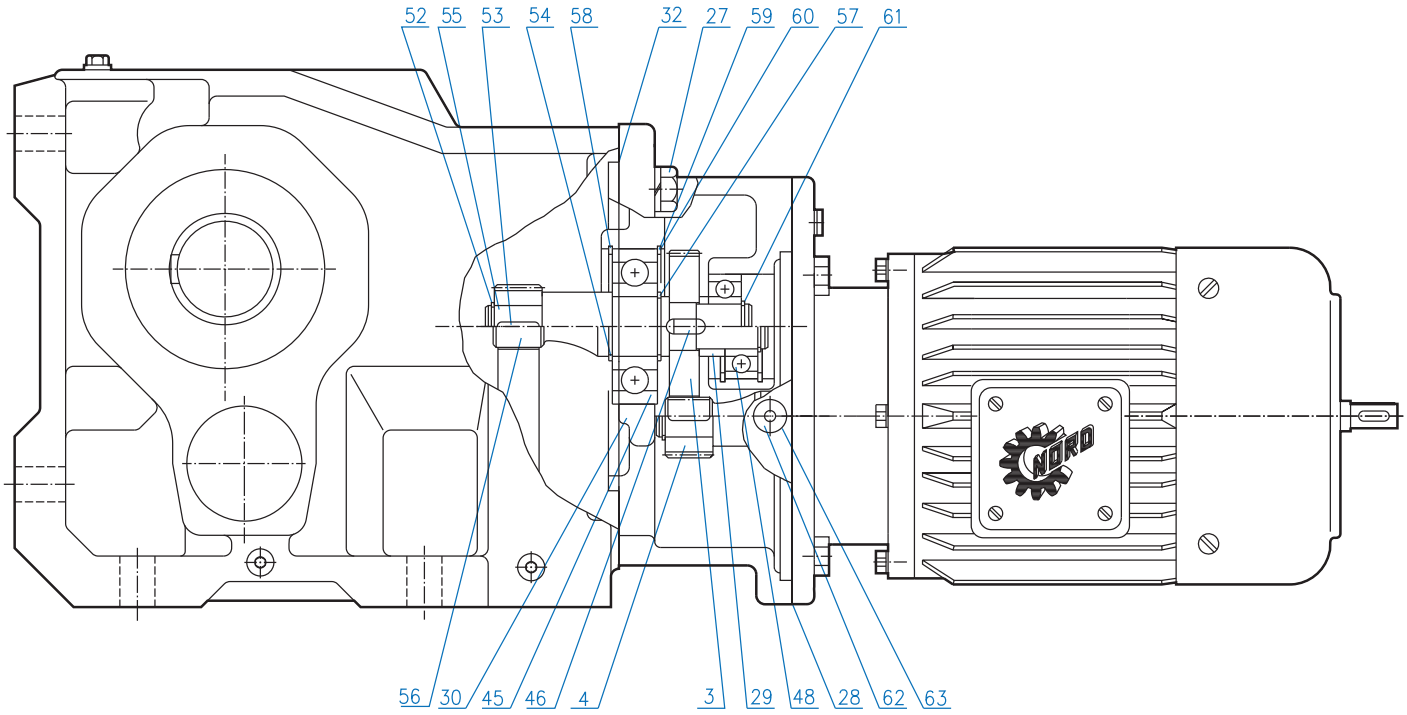

SK9013.1 - SK9053.1 Third Stage Reduction Gear

3	Gear	46	Key	58	Snap Ring
4	Pinion	48	Anti-Friction Bearing	59	Shim
27	Bolt	52	Snap Ring	60	Snap Ring
28	Gasket	53	Key	61	Snap Ring
29	Spacer	54	Snap Ring	62	Oil Plug
30	Third Reduction Gearcase	55	Intermediate Shaft, Plain	63	Gasket
32	Gasket	56	Intermediate Shaft, Gearcut		
45	Anti-Friction Bearing	57	Snap Ring		

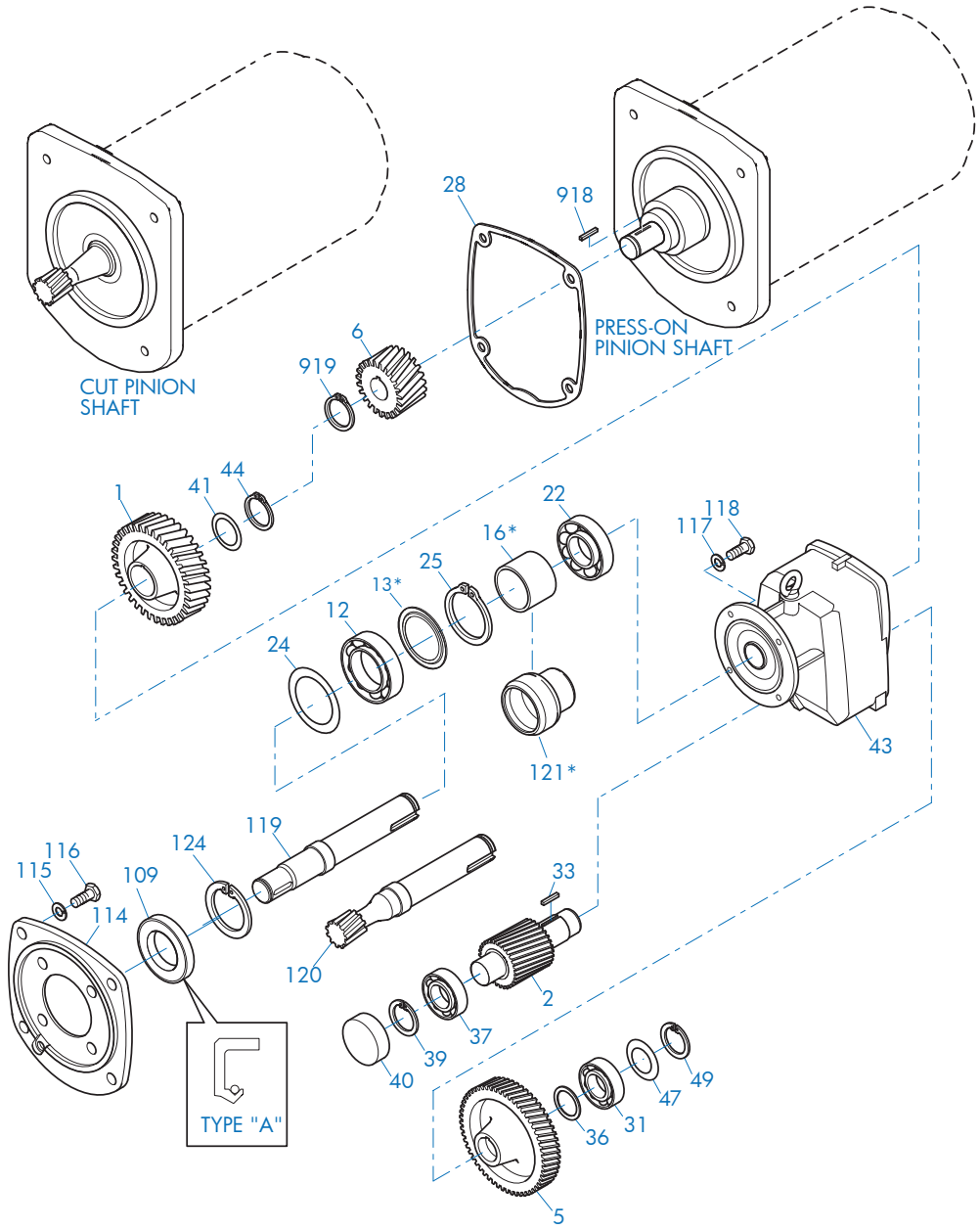

SK9062.1/32 - SK9092.1/52 Input Compound Reduction

1	Gear	33	Key	115	Lock Washer
2	Pinion Shaft	36	Spacer	116	Bolt
5	Gear	37	Anti-Friction Bearing	117	Lock Washer
6	Pinion	39	Snap Ring	118	Bolt
12	Anti-Friction Bearing	40	Bore Plug	119	Intermediate Shaft, Plain
13	Nilos Ring*	41	Shim	120	Intermediate Shaft, Gearcut
16	Spacer*	43	Gearcase	121	Bearing Sleeve*
22	Anti-Friction Bearing	44	Snap Ring	124	Snap Ring
24	Shim	47	Shim	918	Key
25	Snap Ring	49	Snap Ring	919	Snap Ring
28	Gasket	109	Oil Seal		
31	Anti-Friction Bearing	114	Intermediate Flange		

* Conditionally used part

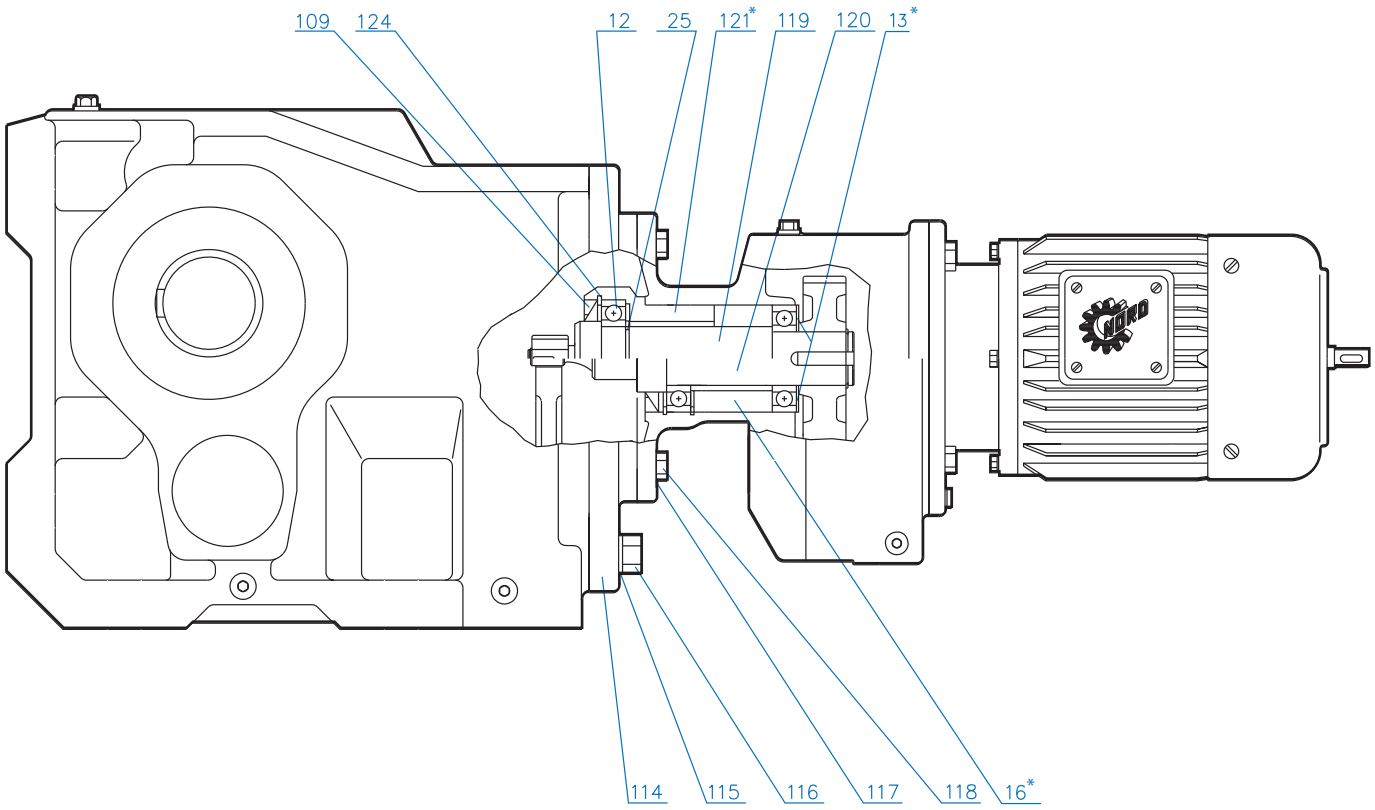

SK9062.1/32 - SK9092.1/52 Input Compound Reduction

11 Bearing	114 Intermediate Flange	119 Intermediate Shaft, Plain
13 Nilos Ring*	115 Lock Washer	120 Intermediate Shaft, Gearcut
16 Spacer*	116 Bolt	121 Bearing Sleeve *
25 Snap Ring	117 Lock Washer	124 Snap Ring
109 Oil Seal	118 Bolt	

* Conditionally used part

Helical Bevel VL2 & VL3
PARTS LIST DRAWINGS

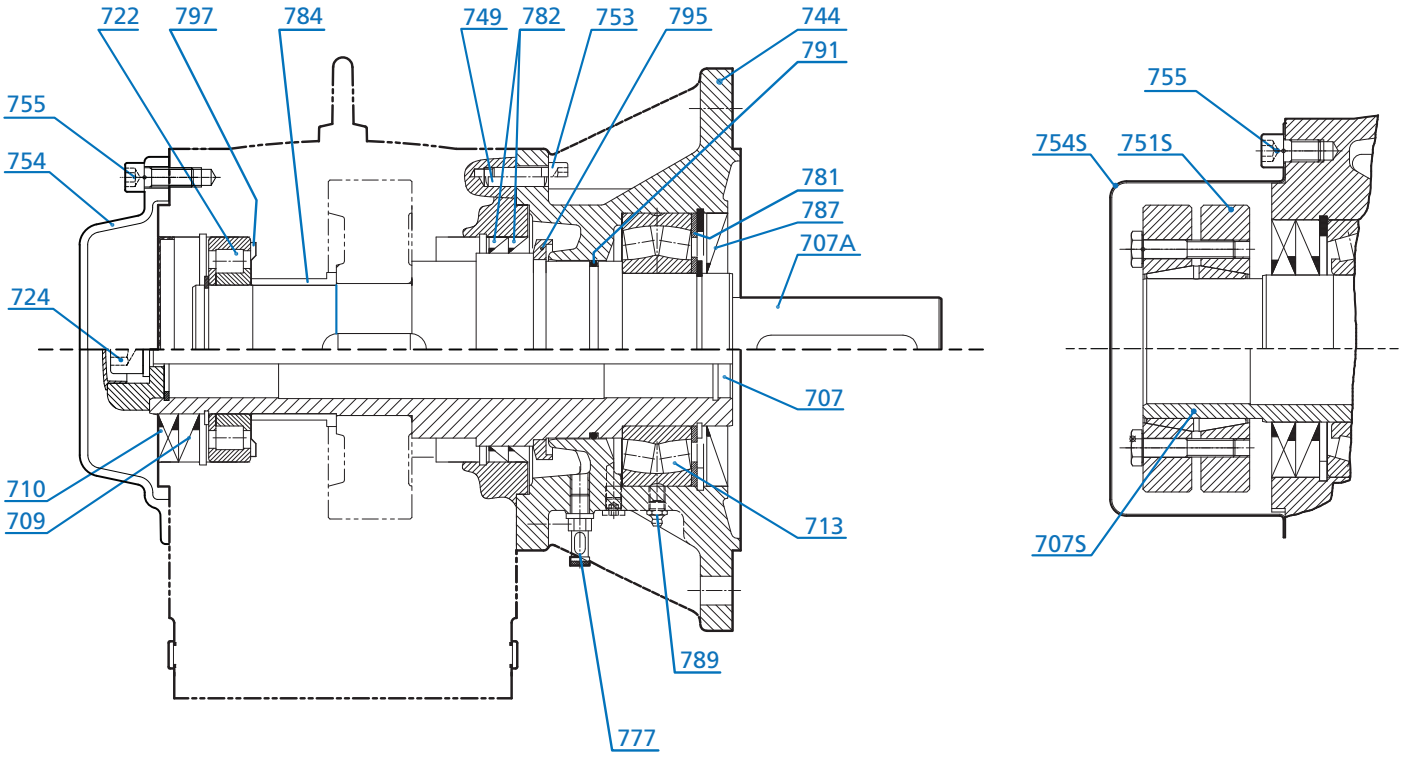

Helical Bevel VL2 & VL3

707	Hollow Output Shaft	744	Flange VLII & VLIII	782	Seal
707A	Output Shaft	749	Dowel Pin	784	Spacer VLIII
707S	Shrink Disk Hollow Shaft	751S	Shrink Disk	787	Seal
709	Seal	753	Screw	789	Grease Fitting
710	Seal	754	Shaft Cover	791	O-Ring
711	Snap Ring	755	Shaft Cover Screw	795	Oil Slinger (VLIII Only)
713	Bearing	777	Drain Plug (VLII)	797	NILOS Ring
722	Bearing	777	Oil Indicator (VLIII Only)		
724	Fixing Kit	781	Axial Shim		

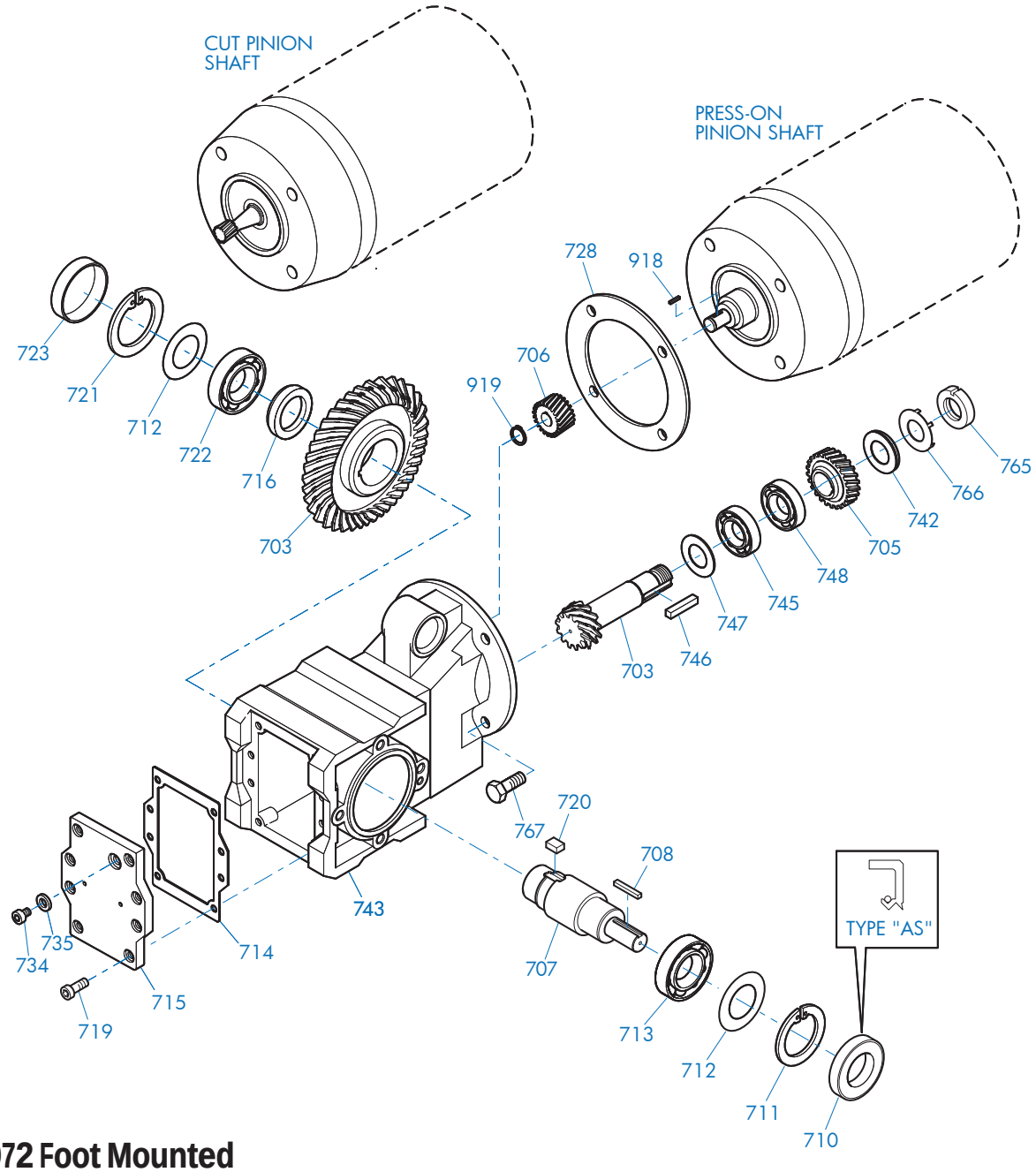

SK 92072 Foot Mounted

703 Bevel Gearset	716 Spacer	745 Anti-Friction Bearing
705 Gear	719 Bolt	746 Key
706 Pinion	720 Key	747 Shim
707 Output Shaft	721 Snap Ring	748 Anti-Friction Bearing
708 Key	722 Anti-Friction Bearing	765 Slotted Nut
710 Oil Seal	723 Bore Plug	766 Tab Lock Washer
711 Snap Ring	728 Gasket	767 Bolt
712 Shim	734 Oil Plug	918 Key
713 Anti-Friction Bearing	735 Gasket	919 Snap Ring
714 Gasket	742 Thrust Washer	
715 Inspection Cover	743 Gear case	

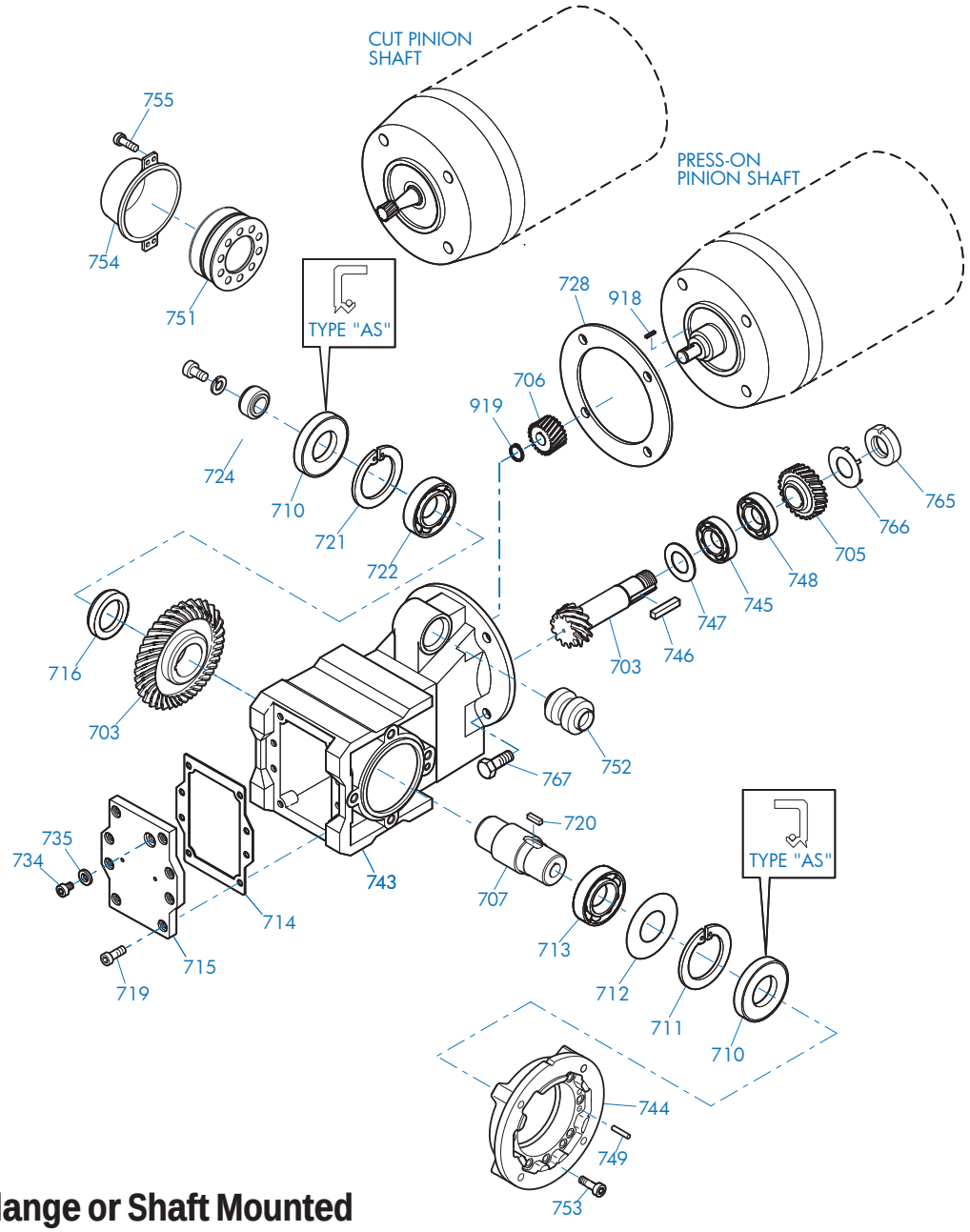

SK 92072 Flange or Shaft Mounted

703 Bevel Gearset
705 Gear
706 Pinion
707 Output Shaft
710 Oil Seal
711 Snap Ring
712 Shim
713 Anti-Friction Bearing
714 Gasket
715 Inspection Cover
716 Spacer
719 Bolt
720 Key
721 Snap Ring
722 Anti-Friction Bearing
724 Fixing Element Kit
728 Gasket
734 Oil Plug
735 Gasket
743 Gearcase
744 Flange
745 Anti-Friction Bearing
746 Key
747 Shim
748 Anti-Friction Bearing
749 Grooved Pin
751 Shrink Disc
752 Rubber Buffer
753 Bolt
754 Cover
755 Bolt
765 Slotted Round Nut
766 Tab Lock Washer
767 Bolt
918 Key
919 Snap Ring

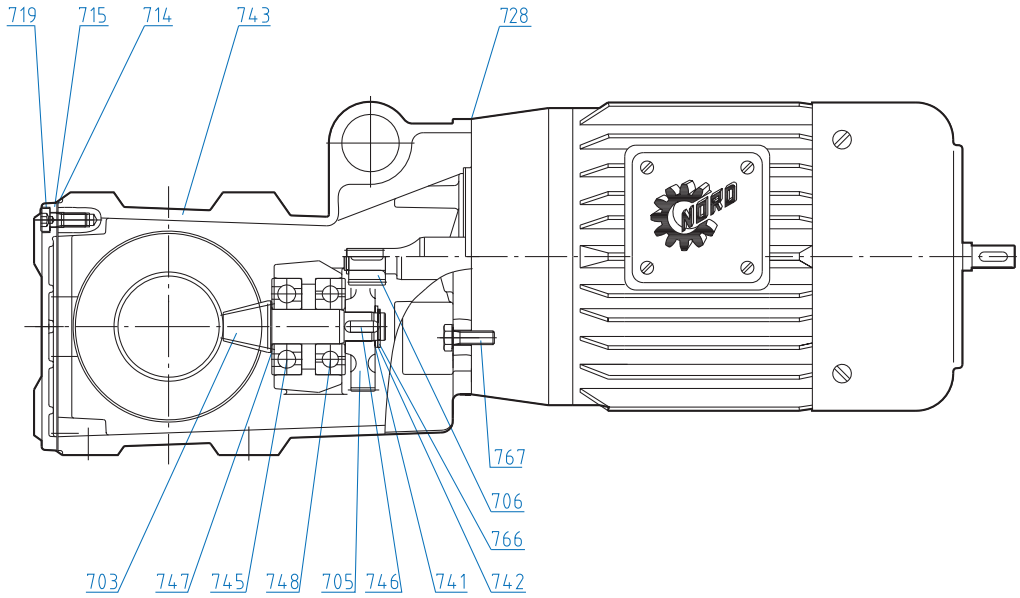

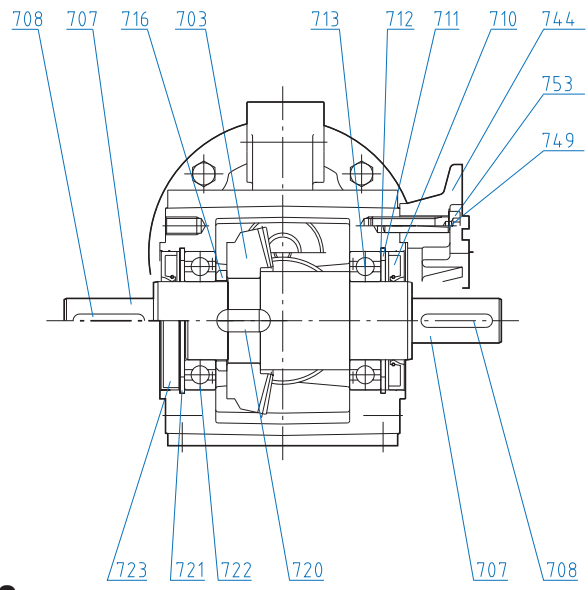

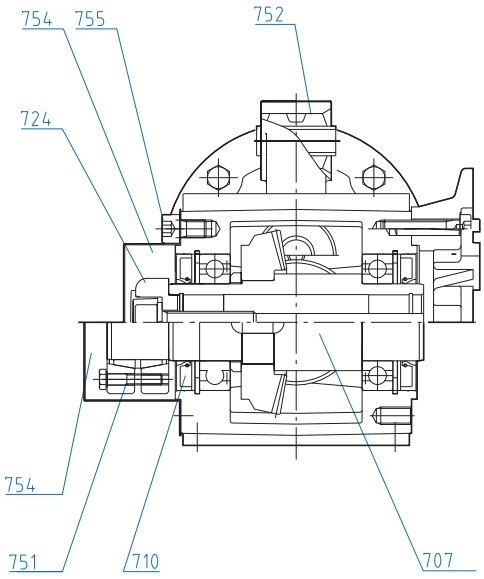

SK 92072

703 Bevel Gearset
705 Gear
706 Pinion
707 Output Shaft
708 Key
710 Oil Seal
711 Snap Ring
712 Shim
713 Anti-Friction Bearing
714 Gasket
715 Inspection Cover
716 Spacer
719 Bolt
720 Key
721 Snap Ring
722 Anti-Friction Bearing
723 Bore Plug
724 Fixing Element Kit
728 Gasket
741 Shim
742 Thrust Washer
743 Gear case
744 Flange
745 Anti-Friction Bearing
746 Key
747 Shim
748 Anti-Friction Bearing
749 Grooved Pin
751 Shrink Disc Connector
752 Rubber Buffer
753 Socket Head Screw
754 Shrink Disc Cover
755 Socket Head Screw
766 Tab Lock Washer
767 Bolt

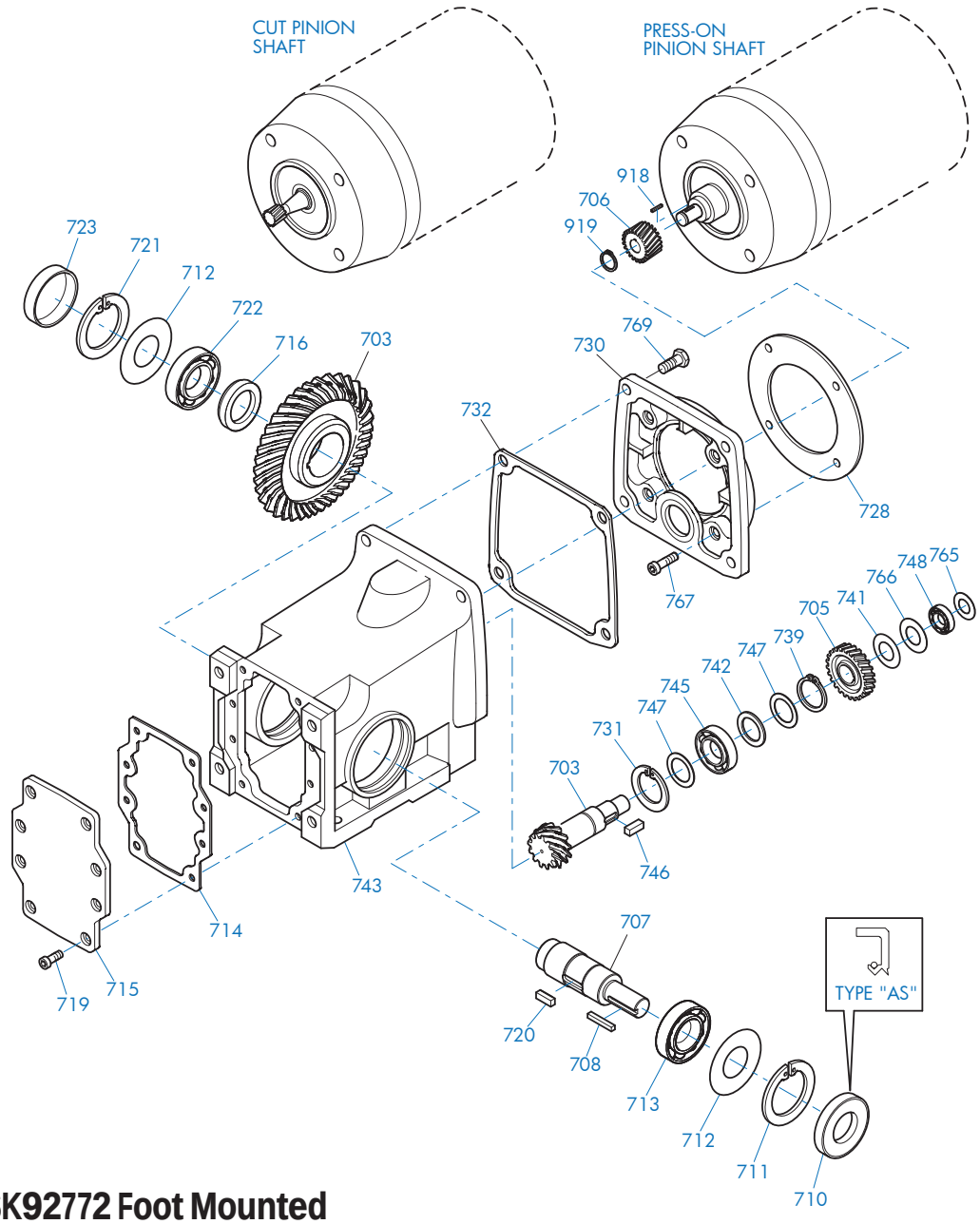

SK 92172 - SK92772 Foot Mounted

703 Bevel Gearset
705 Gear
706 Pinion
707 Output Shaft
708 Key
710 Oil Seal
711 Snap Ring
712 Shim
713 Anti-Friction Bearing
714 Gasket
715 Inspection Cover
716 Spacer
719 Bolt
720 Key
721 Snap Ring
722 Anti-Friction Bearing
723 Bore Plug
728 Gasket
730 Input Cover
731 Snap Ring
732 Gasket
739 Snap Ring
741 Shim
742 Thrust Washer
743 Gearcase
745 Anti-Friction Bearing
746 Key
747 Shim
748 Anti-Friction Bearing
765 Shim
766 Snap Ring
767 Bolt
769 Bolt
918 Key
919 Snap Ring

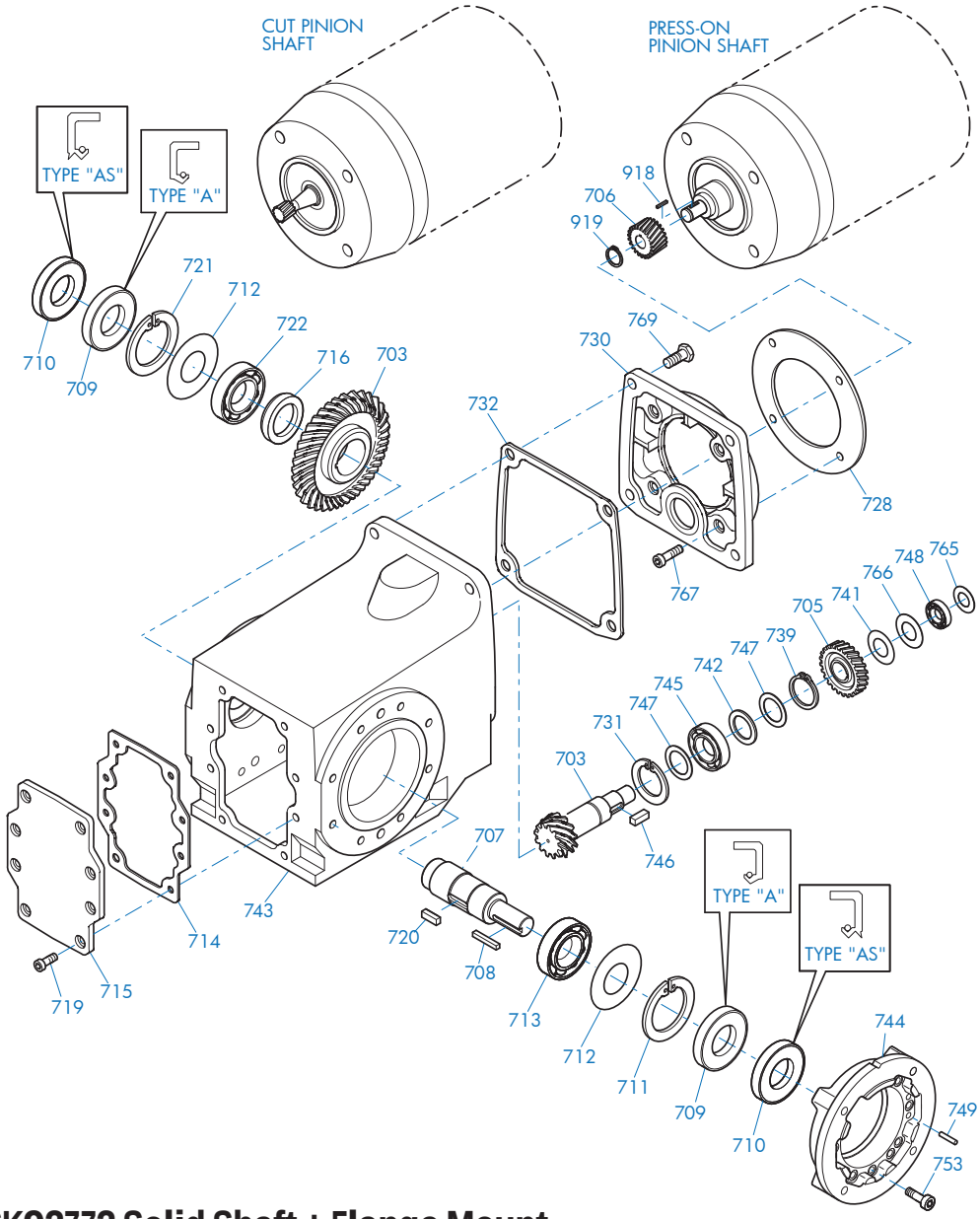

SK 92172 - SK92772 Solid Shaft + Flange Mount

703 Bevel Gearset
705 Gear
706 Pinion
707 Output Shaft
708 Key
709 Oil Seal
710 Oil Seal
711 Snap Ring
712 Shim
713 Anti-Friction Bearing
714 Gasket
715 Inspection Cover
716 Spacer
719 Bolt
720 Key
721 Snap Ring
722 Anti-Friction Bearing
728 Gasket
730 Input Cover
731 Snap Ring
732 Gasket
739 Snap Ring
741 Shim
742 Thrust Washer
743 Gearcase
744 Flange
745 Anti-Friction Bearing
746 Key
747 Shim
748 Anti-Friction Bearing
749 Grooved Pin
753 Bolt
765 Shim
766 Snap Ring
767 Bolt
769 Bolt
918 Key
919 Snap Ring

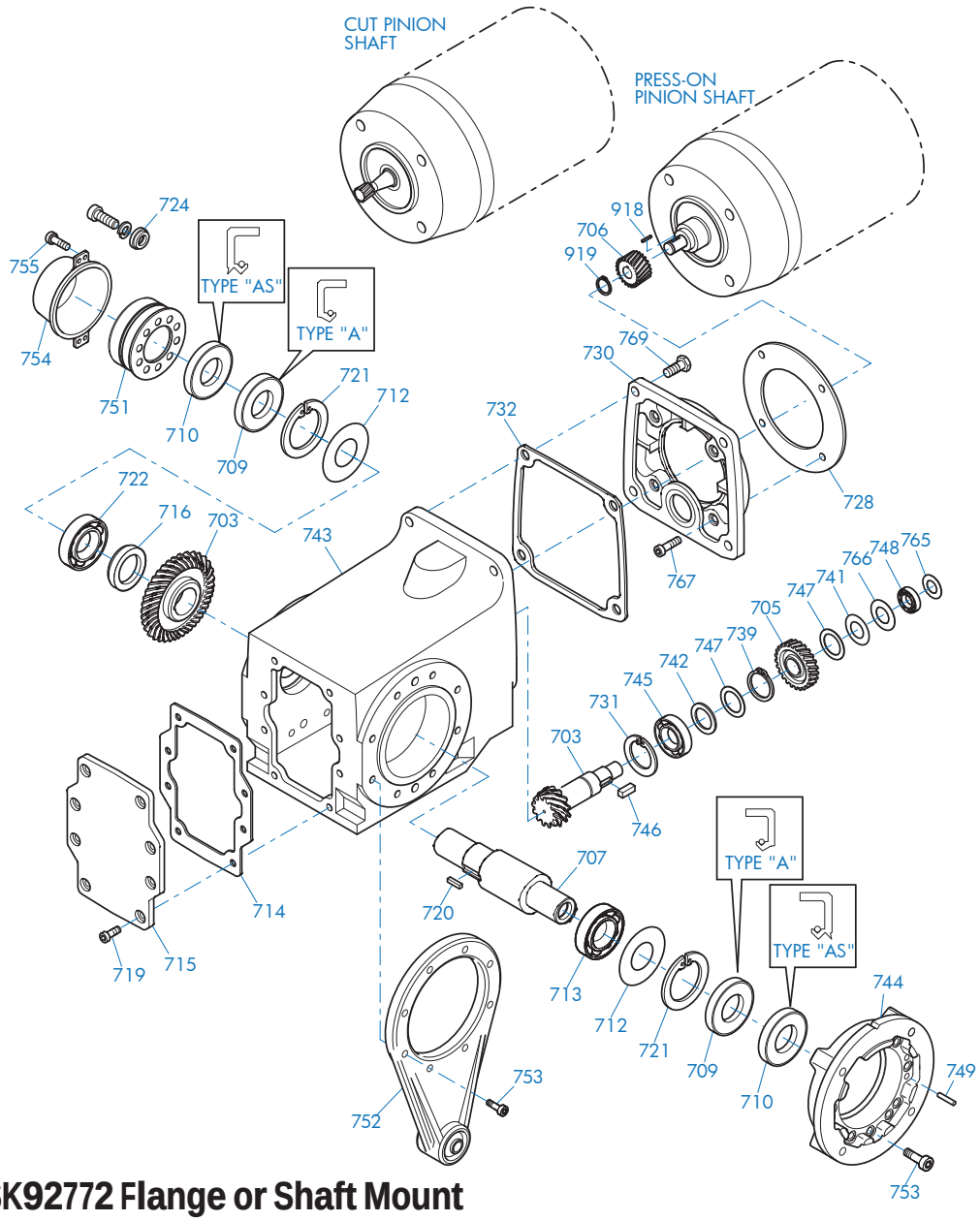

SK 92172 - SK92772 Flange or Shaft Mount

703 Bevel Gearset	722 Anti-Friction Bearing	748 Anti-Friction Bearing
705 Gear	724 Fixing Element Kit	749 Grooved Pin
706 Pinion	728 Gasket	751 Shrink Disc Connector
707 Output Shaft	730 Input Cover	752 Torque Arm
709 Oil Seal	731 Snap Ring	753 Bolt
710 Oil Seal	732 Gasket	754 Cover
712 Shim	739 Snap Ring	755 Bolt
713 Anti-Friction Bearing	741 Shim	765 Shim
714 Gasket	742 Thrust Washer	766 Snap Ring
715 Inspection Cover	743 Gearcase	767 Bolt
716 Spacer	744 Flange	769 Bolt
719 Bolt	745 Anti-Friction Bearing	918 Key
720 Key	746 Key	919 Snap Ring
721 Snap Ring	747 Shim	

92 SERIES HELICAL-BEVEL PARTS LIST DRAWINGS

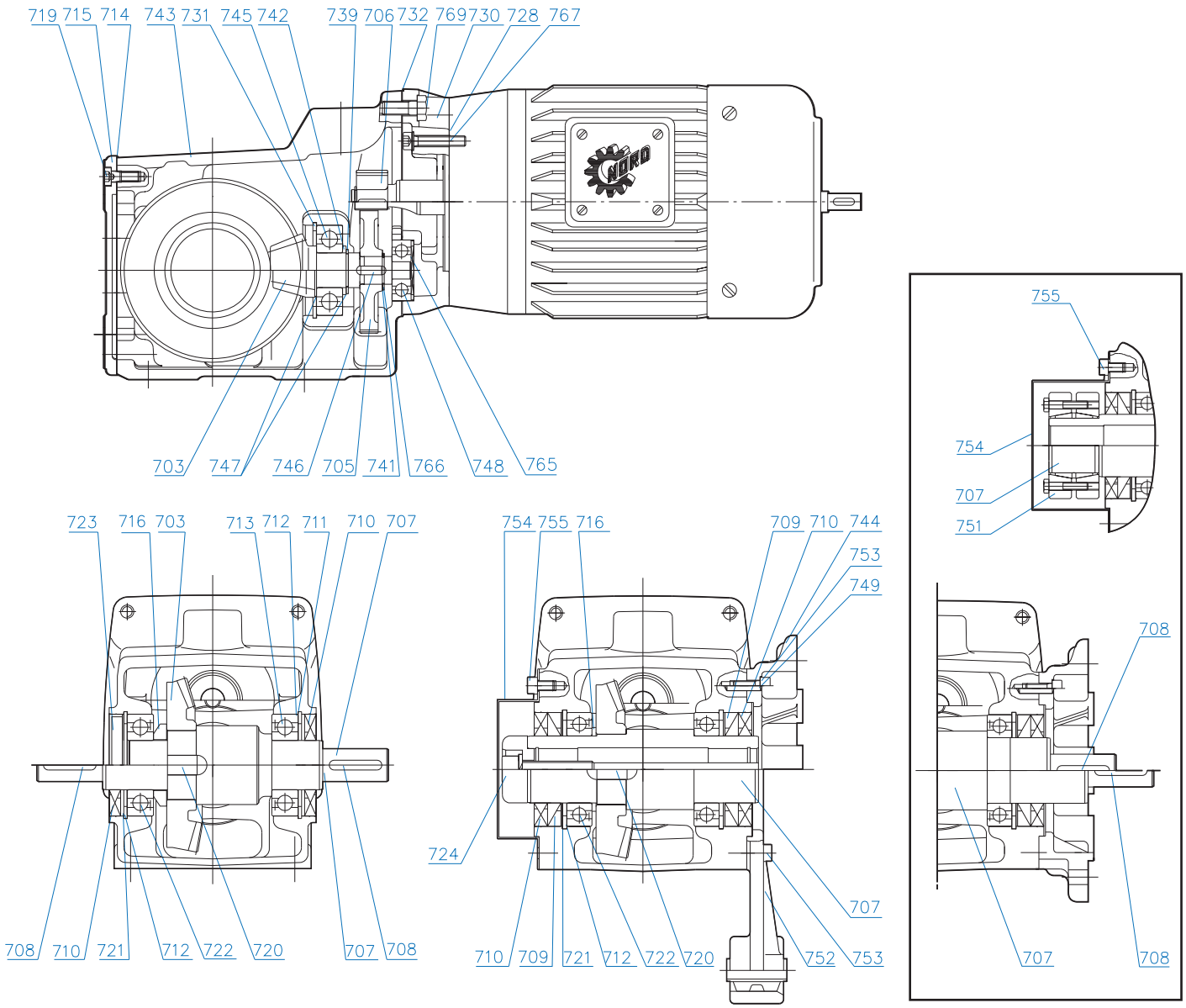

SK 92172 - SK 92772

703 Bevel Gearset
705 Gear
706 Pinion
707 Output Shaft
708 Key
709 Oil Seal
710 Oil Seal
711 Snap Ring
712 Shim
713 Anti-Friction Bearing
714 Gasket
715 Inspection Cover
716 Spacer
719 Bolt
720 Key
721 Snap Ring
722 Anti-Friction Bearing
723 Sealing Plug
724 Fixing Element Kit
728 Gasket
730 Gearbox Cover
731 Snap Ring
732 Gasket
739 Snap Ring
741 Shim
742 Thrust Washer
743 Gearcase
744 Flange
745 Anti-Friction Bearing
746 Key
747 Shim
748 Anti-Friction Bearing
749 Grooved Pin
751 Shrink Disc Connector
752 Torque Arm
753 Bolt
754 Cover
755 Bolt
765 Slotted Round Nut
766 Tab Lock Washer
767 Bolt
769 Hexagonal Screw

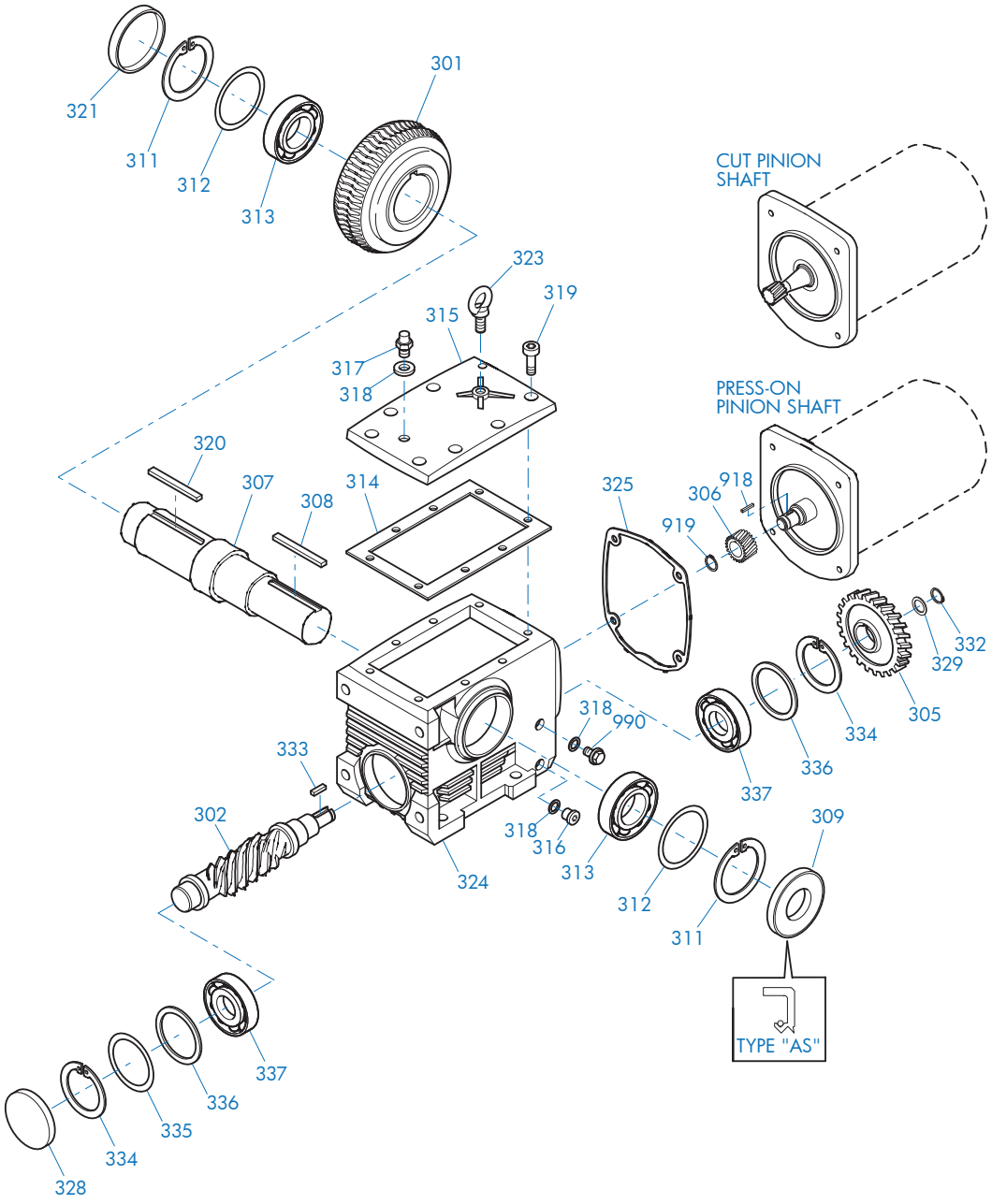

SK 02040 - SK 42125 Foot Mounted

301 Worm Wheel	315 Inspection Cover	329 Thrust Washer
302 Worm	316 Drain Plug	332 Snap Ring
305 Gear	317 Vent Plug	333 Key
306 Pinion	318 Gasket	334 Snap Ring
307 Output Shaft	319 Socket Head Screw	335 Shim
308 Key	320 Key	336 Thrust Washer
309 Oil Seal	321 Bore Plug	337 Anti-Friction Bearing
311 Snap Ring	323 Flanged Eye Bolt	918 Key
312 Shim	324 Gearcase	919 Snap Ring
313 Anti-Friction Bearing	325 Gasket	990 Oil Level Plug
314 Gasket	328 Bore Plug	

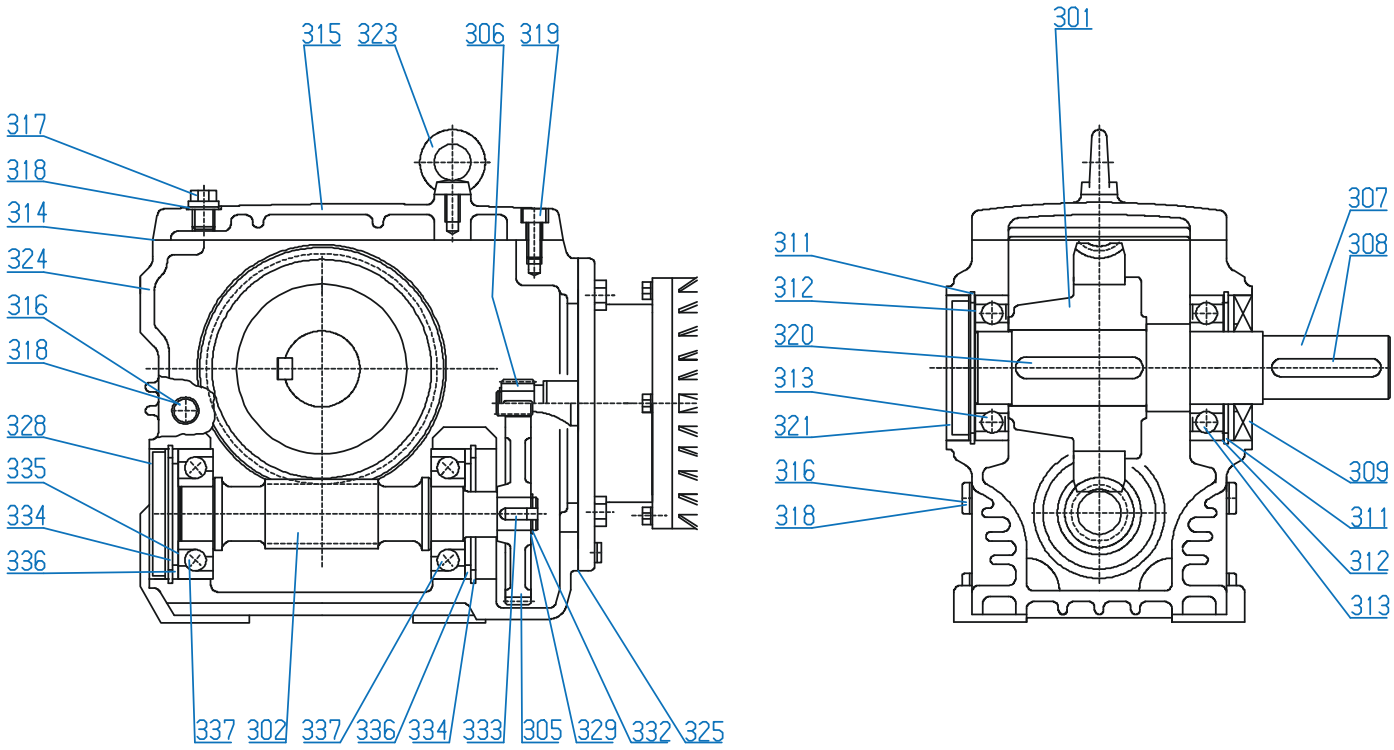

SK 02040 - SK 42125 Foot Mounted

301 Worm Wheel	314 Gasket	325 Gasket
302 Worm	315 Inspection Cover	328 Bore Plug
305 Gear	316 Drain Plug	329 Thrust Washer
306 Pinion	317 Vent Plug	332 Snap Ring
307 Output Shaft	318 Gasket	333 Key
308 Key	319 Socket Head Screw	334 Snap Ring
309 Oil Seal	320 Key	335 Shim
311 Snap Ring	321 Bore Plug	336 Thrust Washer
312 Shim	323 Flanged Eye Bolt	337 Anti-Friction Bearing
313 Anti-Friction Bearing	324 Gearcase	

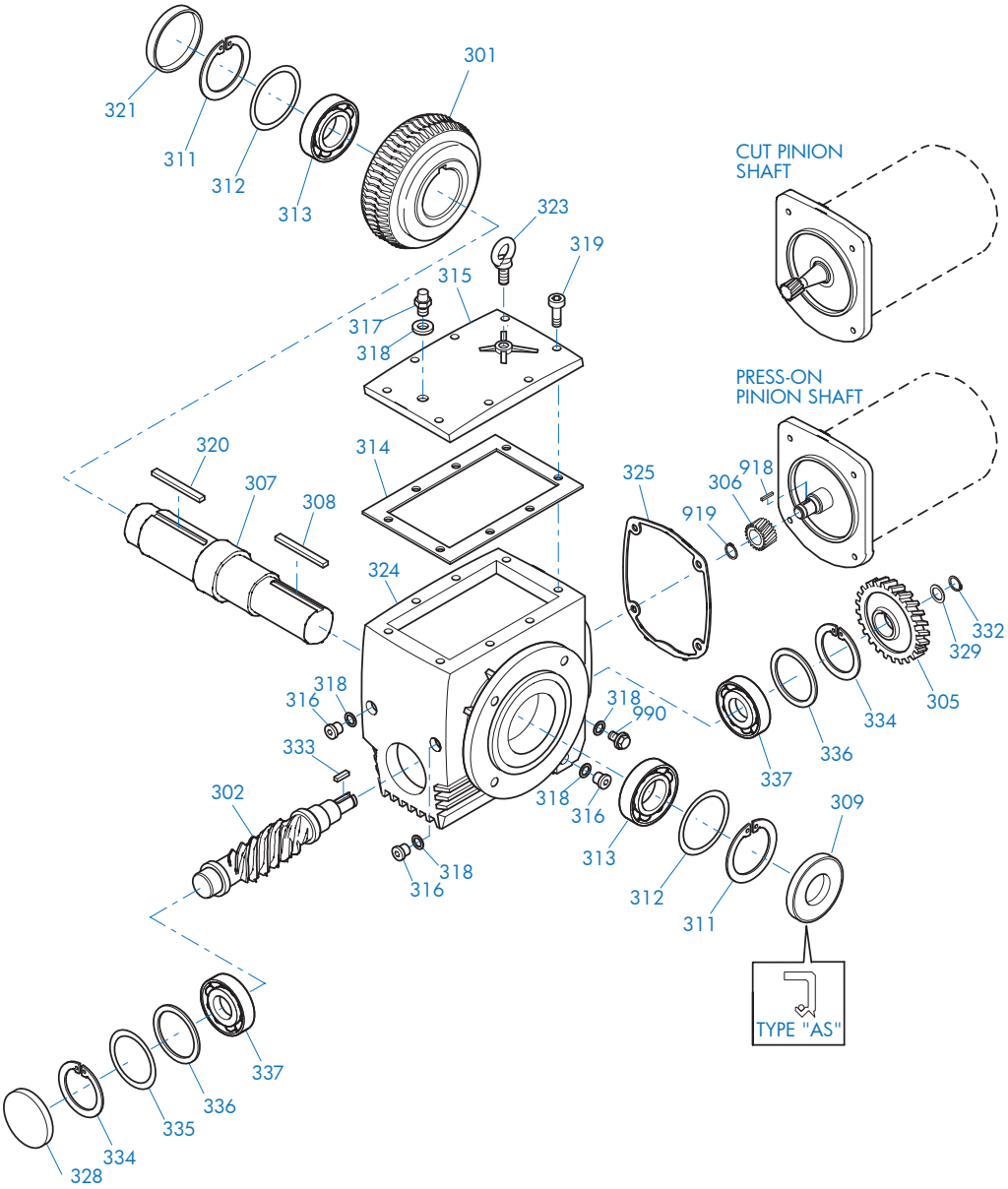

SK 02040 - SK 42125 Flange Mounted

301 Worm Wheel	315 Inspection Cover	329 Thrust Washer
302 Worm	316 Drain Plug	332 Snap Ring
305 Gear	317 Vent Plug	333 Key
306 Pinion	318 Gasket	334 Snap Ring
307 Output Shaft	319 Socket Head Screw	335 Shim
308 Key	320 Key	336 Thrust Washer
309 Oil Seal	321 Bore Plug	337 Anti-Friction Bearing
311 Snap Ring	323 Flanged Eye Bolt	918 Key
312 Shim	324 Gearcase	919 Snap Ring
313 Anti-Friction Bearing	325 Gasket	990 Oil Level Plug
314 Gasket	328 Bore Plug	

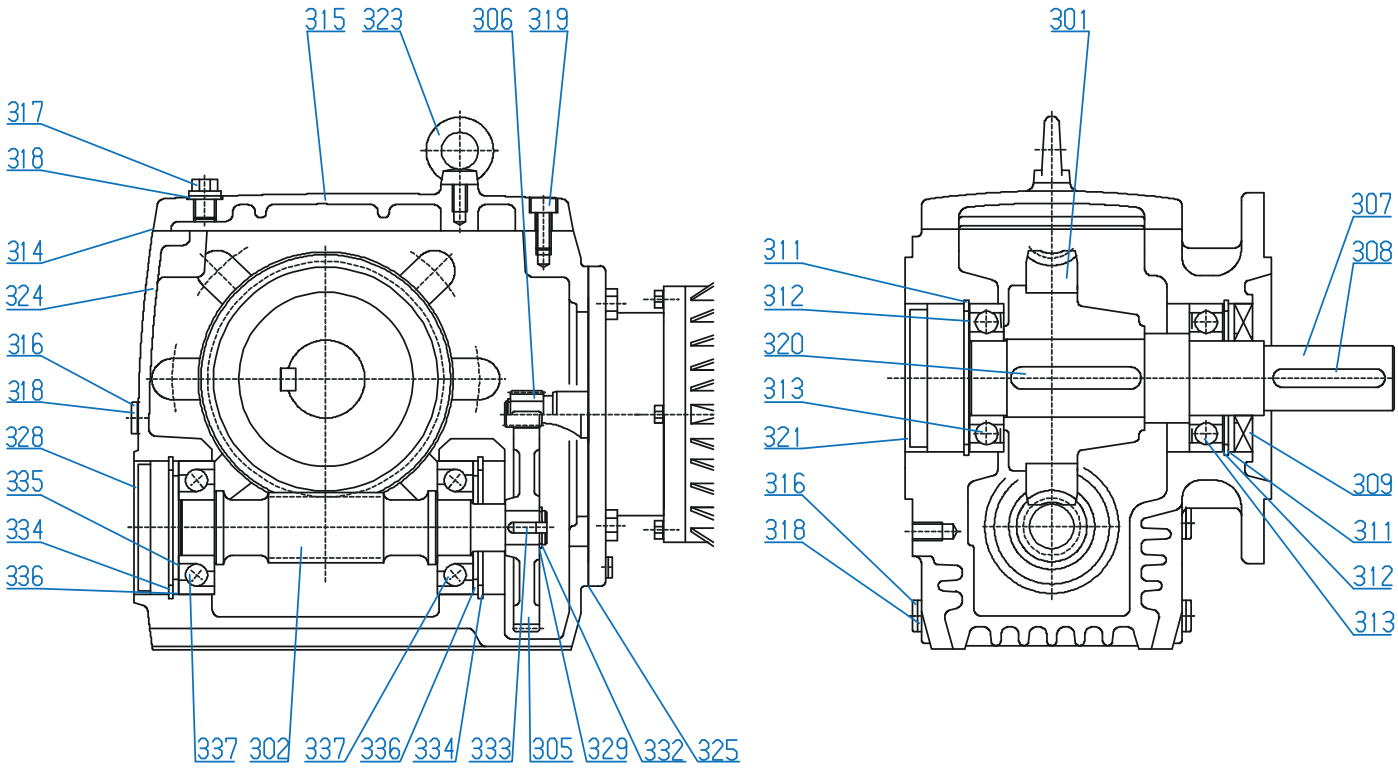

SK 02040 - SK 42125 Flange Mounted

301 Worm Wheel	314 Gasket	325 Gasket
302 Worm	315 Inspection Cover	328 Bore Plug
305 Gear	316 Drain Plug	329 Thrust Washer
306 Pinion	317 Vent Plug	332 Snap Ring
307 Output Shaft	318 Gasket	333 Key
308 Key	319 Socket Head Screw	334 Snap Ring
309 Oil Seal	320 Key	335 Shim
311 Snap Ring	321 Bore Plug	336 Thrust Washer
312 Shim	323 Flanged Eye Bolt	337 Anti-Friction Bearing
313 Anti-Friction Bearing	324 Gearcase	

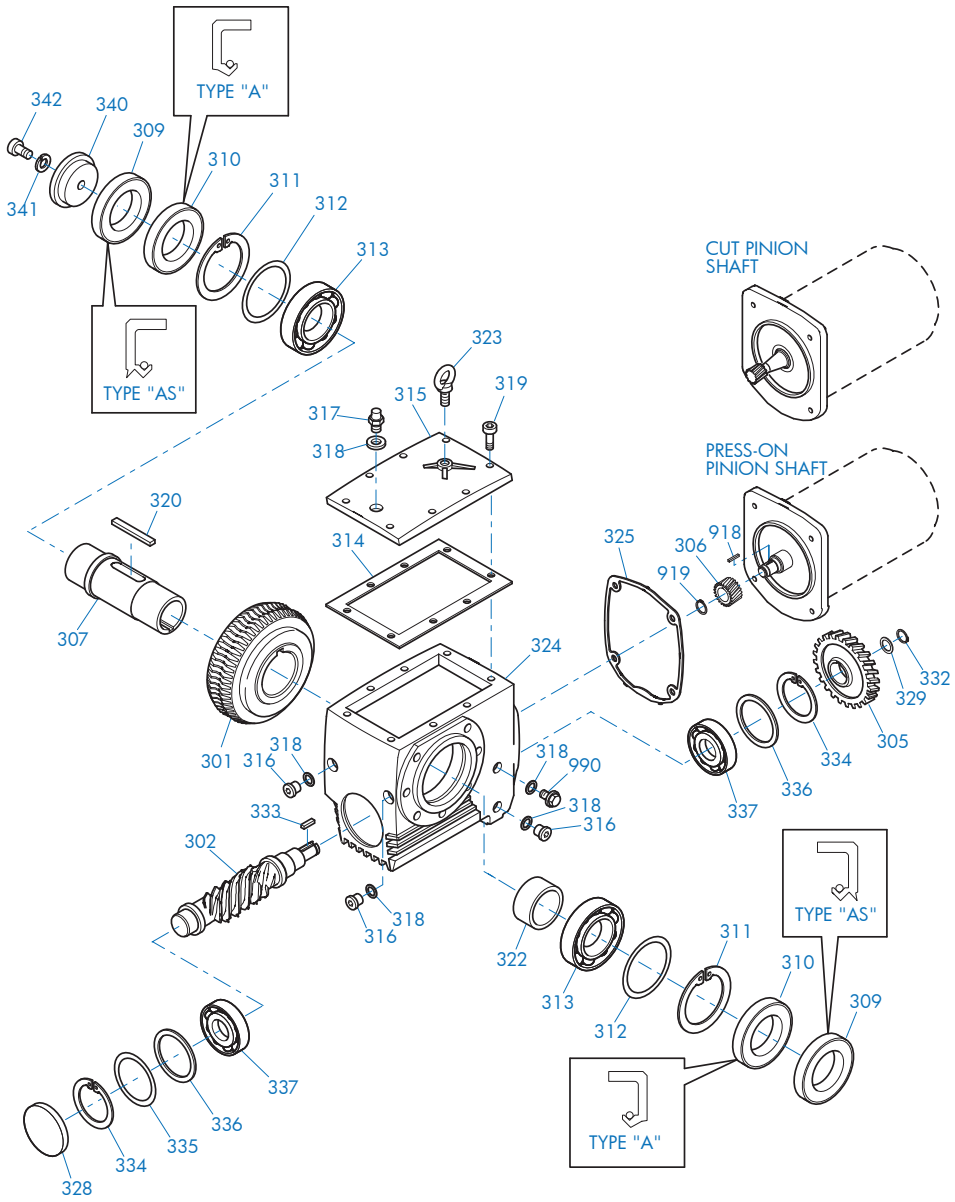

SK 02040 - SK 42125 Shaft Mounted

301 Worm Wheel
302 Worm
305 Gear
306 Pinion
307 Output Shaft
309 Oil Seal
310 Oil Seal
311 Snap Ring
312 Shim
313 Anti-Friction Bearing
314 Gasket
315 Inspection Cover
316 Drain Plug
317 Vent Plug
318 Gasket
319 Socket Head Screw
320 Key
322 Spacer
323 Flanged Eye Bolt
324 Gearcase
325 Gasket
328 Bore Plug
329 Thrust Washer
332 Snap Ring
333 Key
334 Snap Ring
335 Shim
336 Thrust Washer
337 Anti-Friction Bearing
340 Retaining Washer
341 Lock Washer
342 Bolt
350 Flange
351 Bolt
918 Key
919 Snap Ring
990 Oil Level Plug

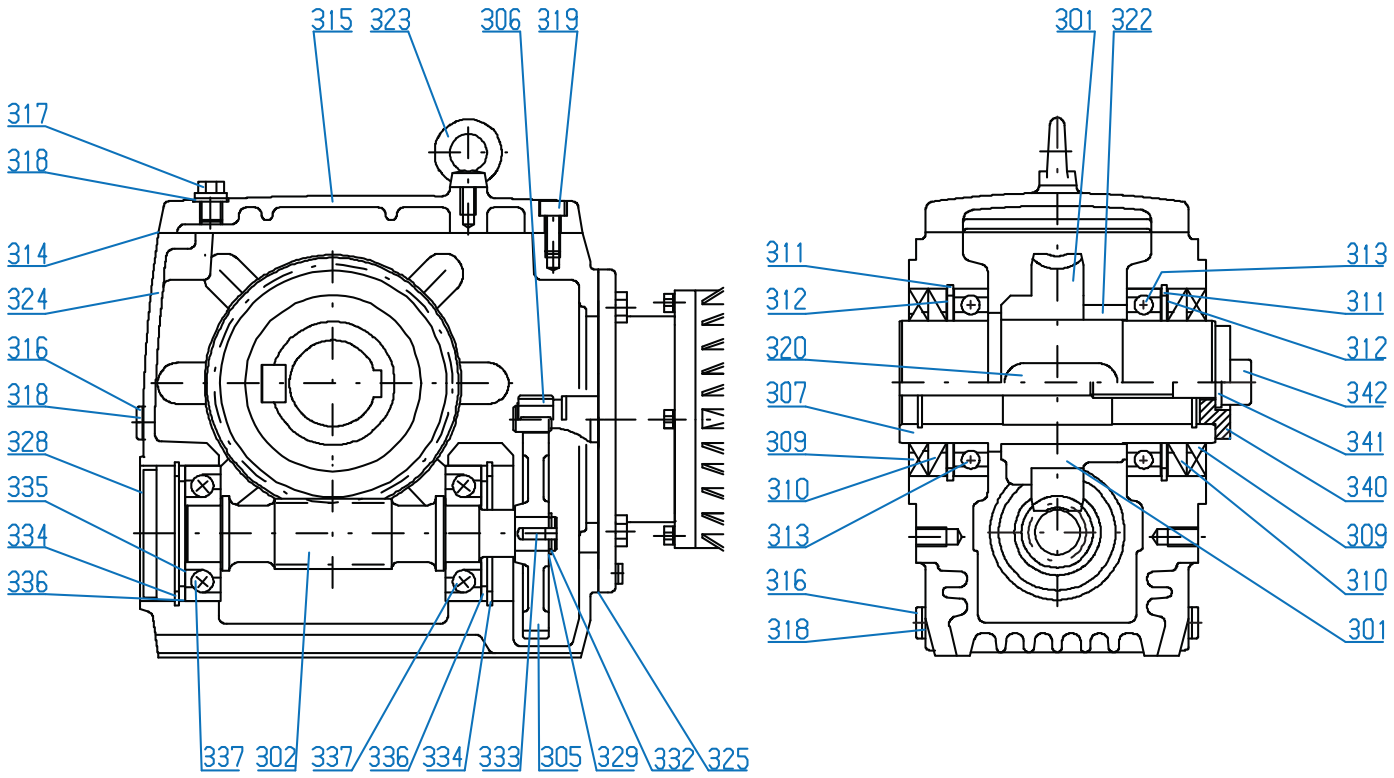

SK 02040 - SK 42125 Shaft Mounted

301 Worm Wheel	316 Drain Plug	333 Key
302 Worm	317 Vent Plug	334 Snap Ring
305 Gear	318 Gasket	335 Shim
306 Pinion	319 Socket Head Screw	336 Thrust Washer
307 Output Shaft	320 Key	337 Anti-Friction Bearing
309 Oil Seal	322 Spacer	340 Retaining Washer
310 Oil Seal	323 Flanged Eye Bolt	341 Lock Washer
311 Snap Ring	324 Gearcase	342 Bolt
312 Shim	325 Gasket	350 Flange
313 Anti-Friction Bearing	328 Bore Plug	351 Bolt
314 Gasket	329 Thrust Washer	
315 Inspection Cover	332 Snap Ring	

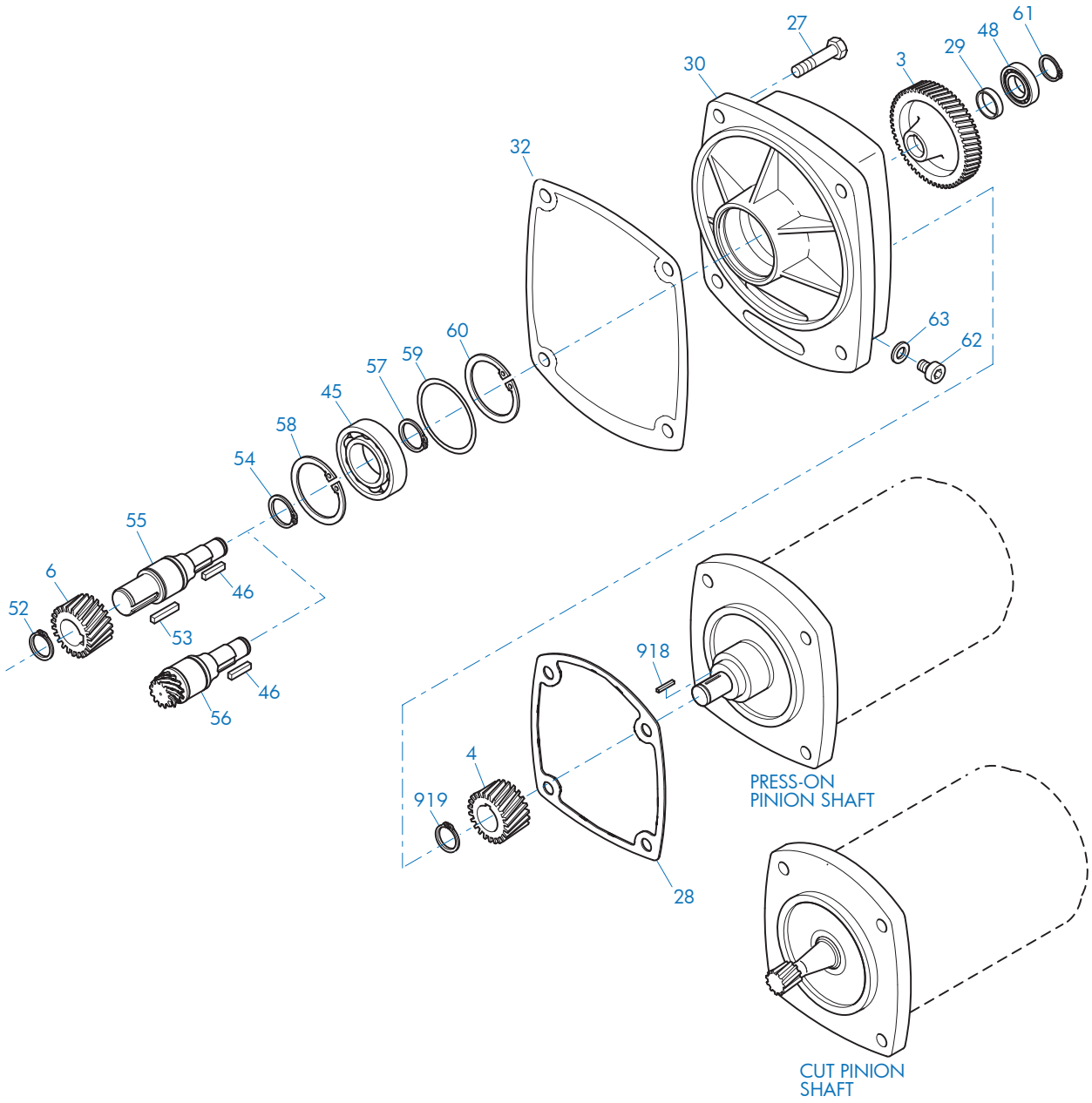

SK13050 - SK43125 Third Stage Reduction Gear

3	Gear	46	Key	59	Shim
4	Pinion	48	Anti-Friction Bearing	60	Snap Ring
6	Pinion	52	Snap Ring	61	Snap Ring
27	Bolt	53	Key	62	Oil Plug
28	Gasket	54	Snap Ring	63	Gasket
29	Spacer	55	Intermediate Shaft, Plain	918	Key
30	Third Reduction Gearcase	56	Intermediate Shaft, Gearcut	919	Snap Ring
32	Gasket	57	Snap Ring		
45	Anti-Friction Bearing	58	Snap Ring		

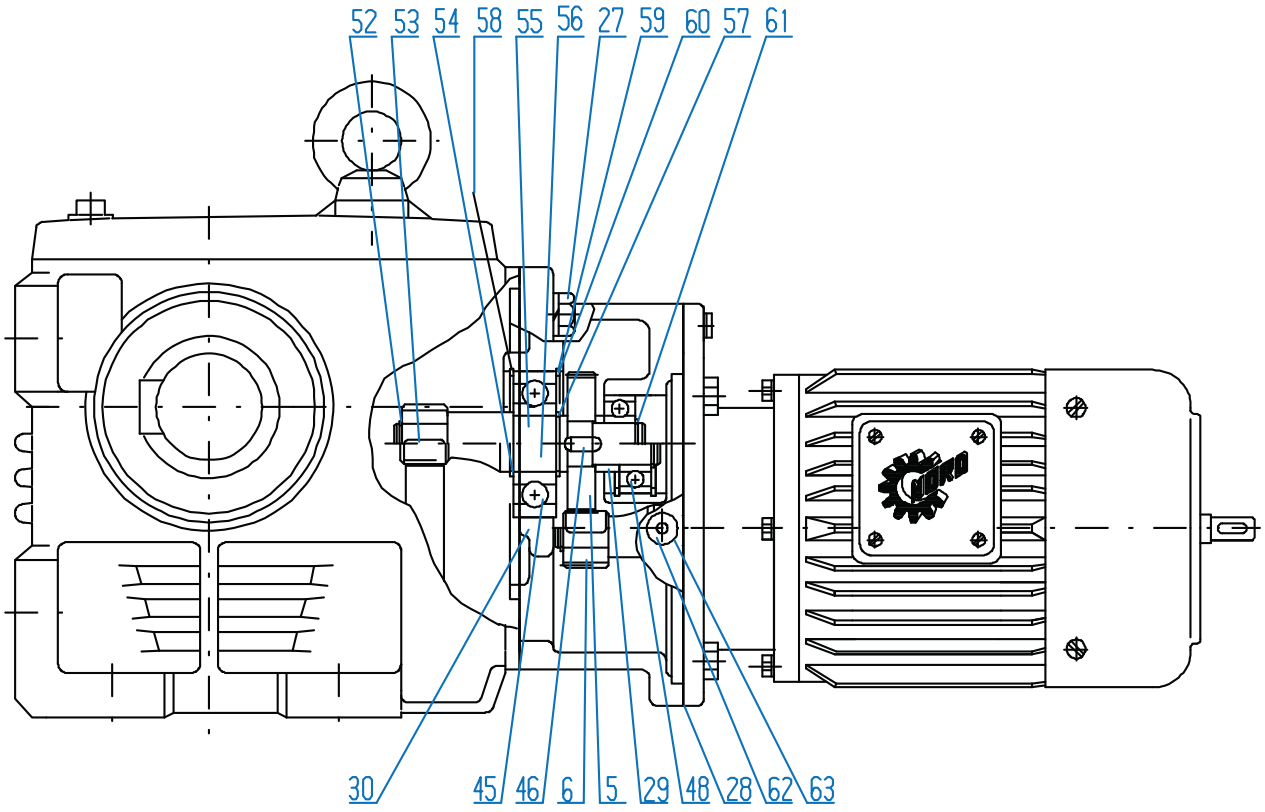

SK13050 - SK43125 Third Stage Reduction Gear

3	Gear	46	Key	58	Snap Ring
4	Pinion	48	Anti-Friction Bearing	59	Shim
27	Bolt	52	Snap Ring	60	Snap Ring
28	Gasket	53	Key	61	Snap Ring
29	Spacer	54	Snap Ring	62	Oil Plug
30	Third Reduction Gearcase	55	Intermediate Shaft, Plain	63	Gasket
32	Gasket	56	Intermediate Shaft, Gearcut		
45	Anti-Friction Bearing	57	Snap Ring		

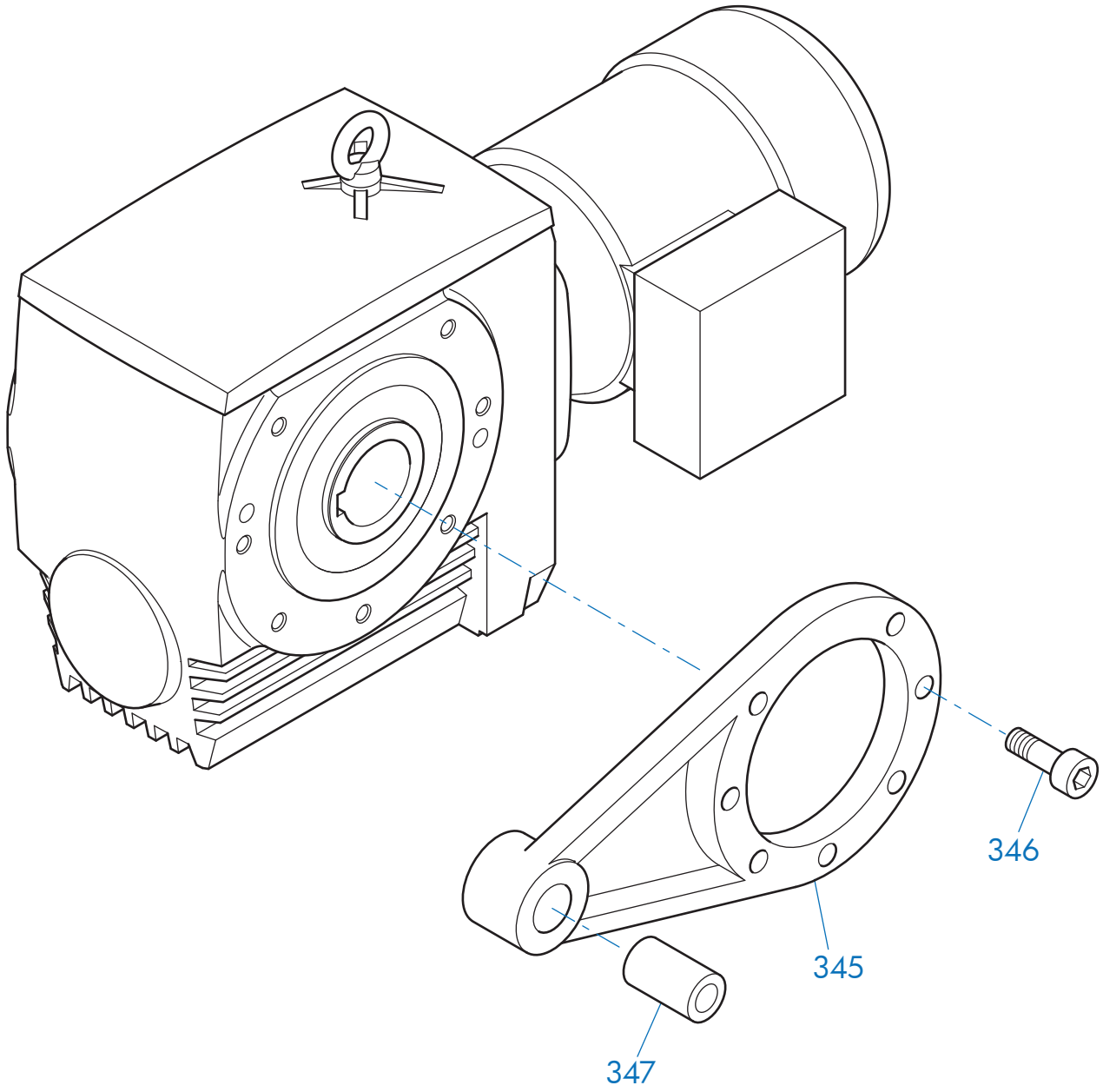

SK13050 - SK43125 Torque Arm

345 Torque Arm	346 Bolt	347 Bushing

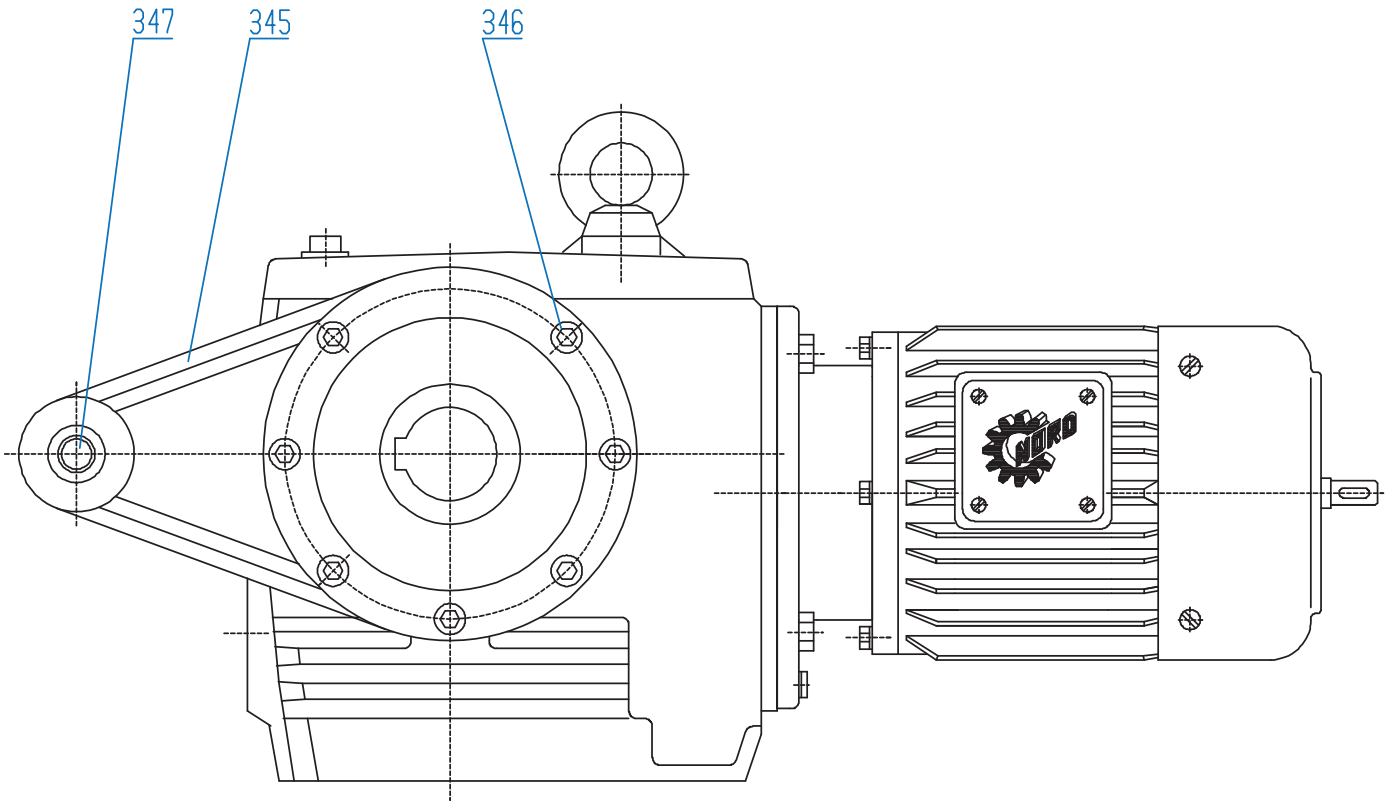

SK13050 - SK43125 Torque Arm

345 Torque Arm	346 Bolt	347 Bushing

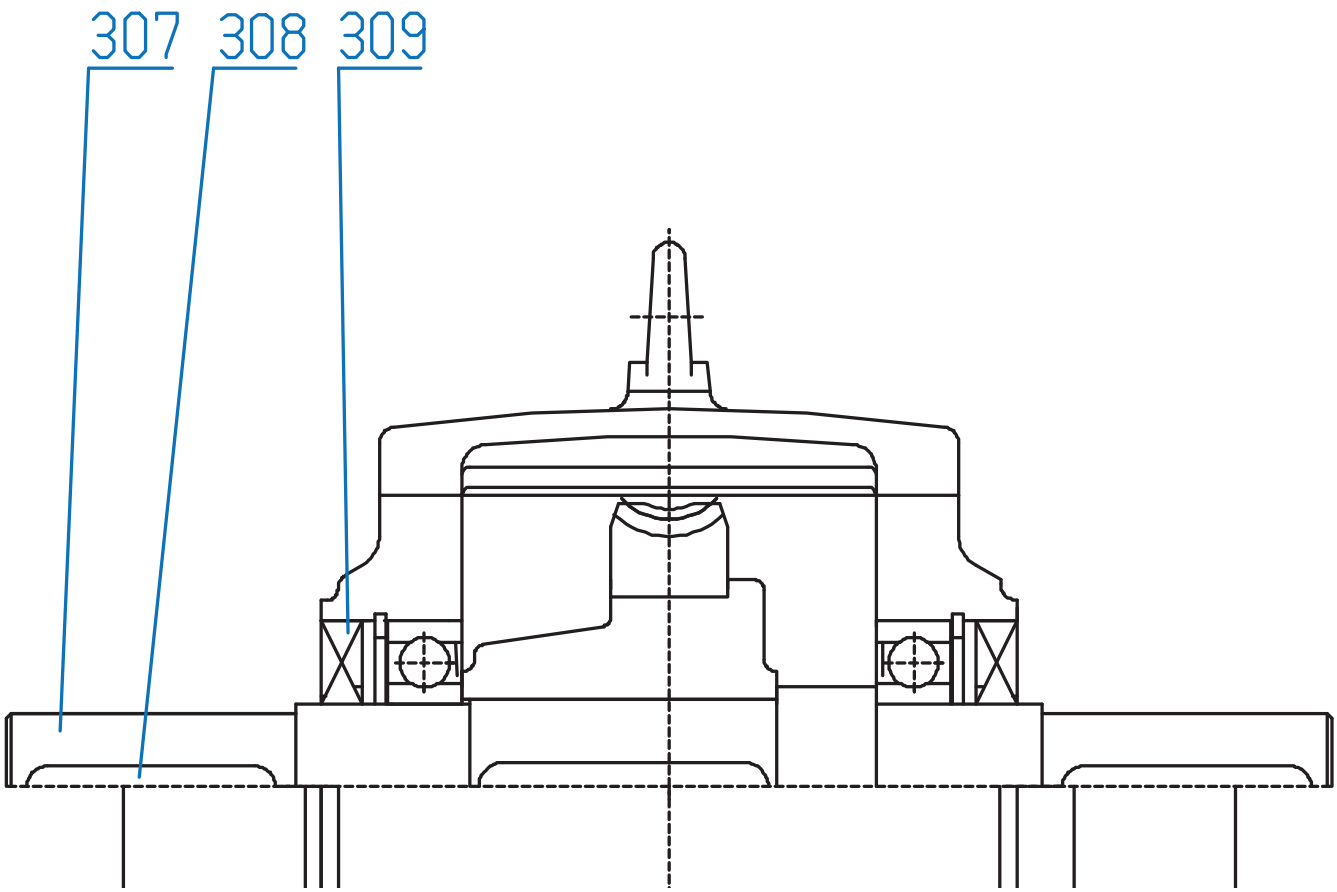

SK13050 - SK43125

307 Output Shaft	309 Oil Seal	350 Flange
308 Key	346 Screw	354 Shrink Disc Connector

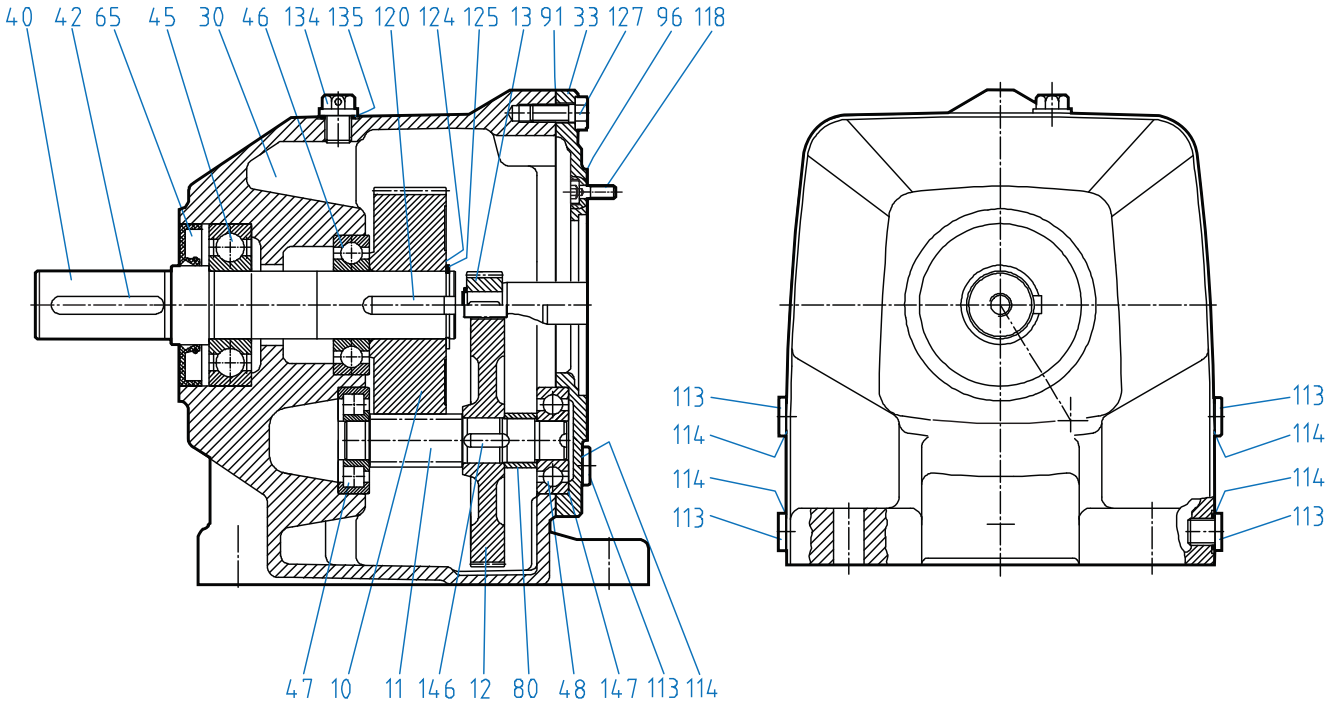

SK 172 - SK 972 Foot Mounted

10	Driven gear	46	Output shaft bearing	118	Bolt
11	Pinion shaft	47	Pinion shaft bearing	120	Key
12	Driving gear	48	Pinion shaft bearing	124	Shim
13	Driving pinion	65	Shaft seal	125	Snap ring
30	Gearcase	80	Spacer	127	Bolt
33	Input cover	91	Gasket	134	Vent plug
40	Output shaft	96	Gasket	135	Gasket
42	Key	113	Oil plug	146	Key
45	Output shaft bearing	114	Gasket	147	Shim

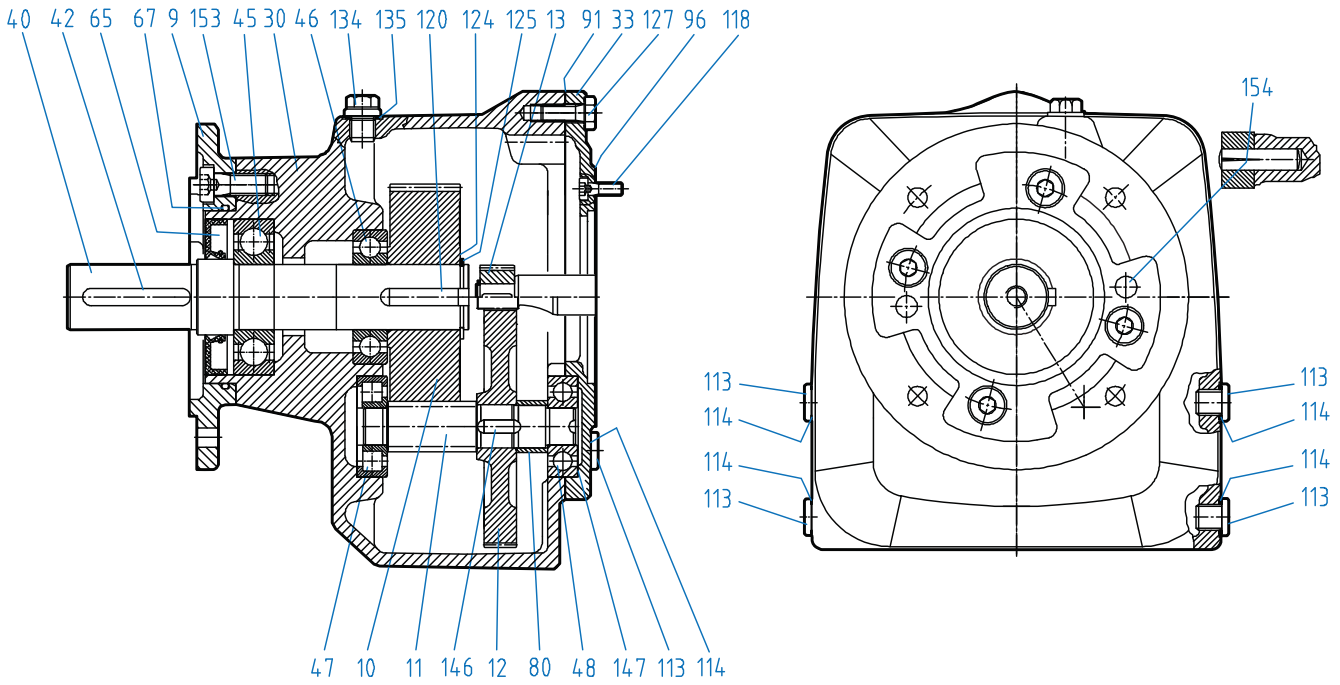

SK 172 - SK 972 Flange Mounted

9	Flange	47	Pinion shaft bearing	124	Shim
10	Driven gear	48	Pinion shaft bearing	125	Snap ring
11	Pinion shaft	65	Shaft seal	127	Bolt
12	Driving gear	67	O-Ring	134	Vent plug
13	Driving pinion	80	Spacer	135	Gasket
30	Gearcase	91	Gasket	146	Key
33	Input cover	96	Gasket	147	Shim
40	Output shaft	113	Oil plug	153	Bolt
42	Key	114	Gasket	154	Grooved dowel pin
45	Output shaft bearing	118	Bolt		
46	Output shaft bearing	120	Key		

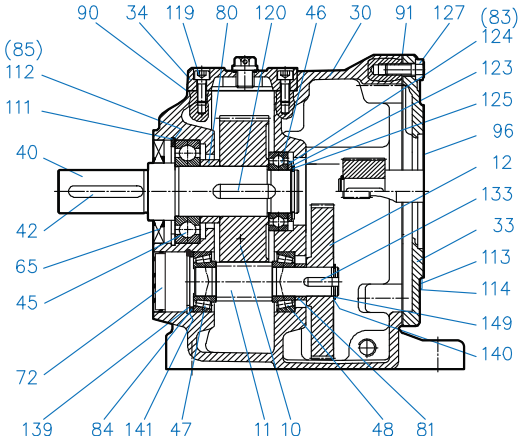

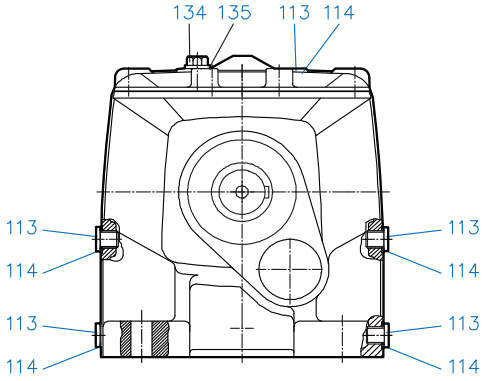

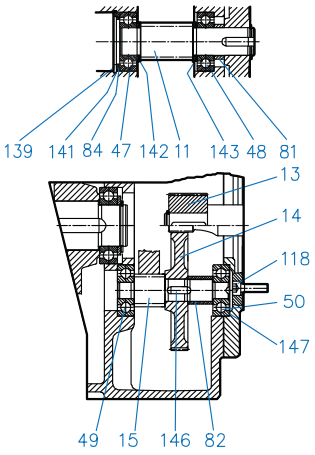

SK 273 - SK 973 Foot Mounted

10	Driven gear	65	Shaft seal	120	Key
11	Pinion shaft	72	Bore plug	123	Thrust washer
12	Driving gear	80	Spacer	124	Shim
13	Driving pinion	81	Spacer	125	Snap ring
14	Driving gear	82	Spacer	127	Bolt
15	Pinion shaft	83	Thrust washer	133	Key
30	Gearcase	84	Thrust washer	134	Vent plug
33	Input cover	85	Thrust washer	135	Gasket
34	Gear case cover	90	Gasket	139	Snap ring
40	Output shaft	91	Gasket	140	Shim
42	Key	96	Gasket	141	Shim
45	Output shaft bearing	111	Snap ring	142	Thrust washer
46	Output shaft bearing	112	Shim	143	Thrust washer
47	Pinion shaft bearing	113	Oil plug	146	Key
48	Pinion shaft bearing	114	Gasket	147	Shim
49	Pinion shaft bearing	118	Bolt	149	Snap ring
50	Pinion shaft bearing	119	Bolt		

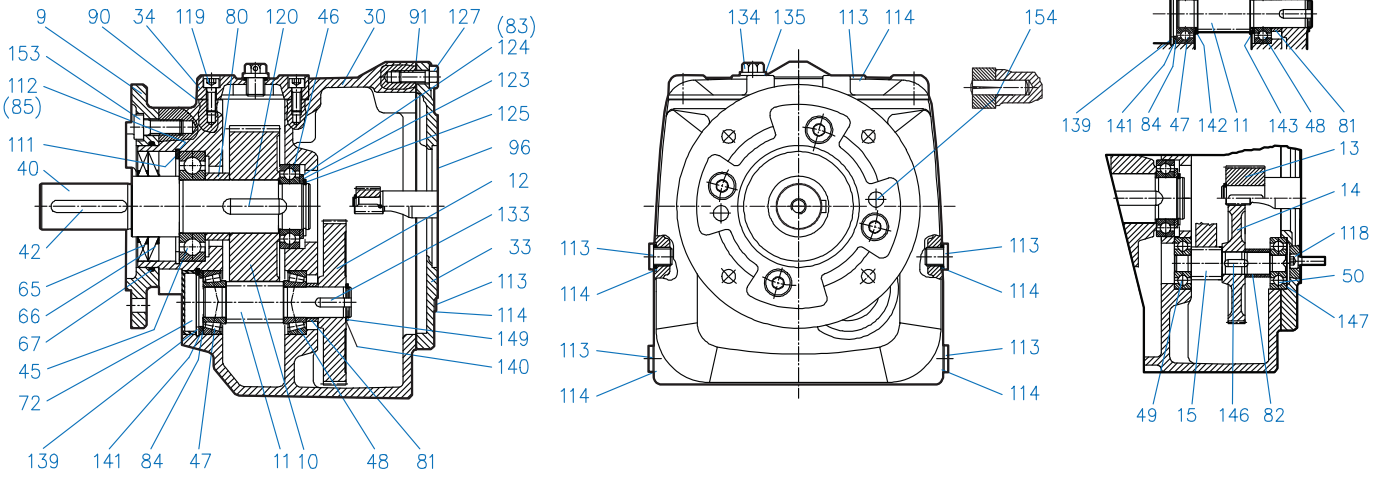

SK 273 - SK 973 Flange Mounted

9	Flange	66	Shaft seal	123	Thrust washer
10	Driven gear	67	O-Ring	124	Shim
11	Pinion shaft	72	Bore plug	125	Snap ring
12	Driving gear	80	Spacer	127	Bolt
13	Driving pinion	81	Spacer	133	Key
14	Driving gear	82	Spacer	134	Vent plug
15	Pinion shaft	83	Thrust washer	135	Gasket
30	Gearcase	84	Thrust washer	139	Snap ring
33	Input cover	85	Thrust washer	140	Shim
34	Gearcase cover	90	Gasket	141	Shim
40	Output shaft	91	Gasket	142	Thrust washer
42	Key	96	Gasket	143	Thrust washer
45	Output shaft bearing	111	Snap ring	146	Key
46	Output shaft bearing	112	Shim	147	Shim
47	Pinion shaft bearing	113	Oil plug	149	Snap ring
48	Pinion shaft bearing	114	Gasket	153	Bolt
49	Pinion shaft bearing	118	Bolt	154	Grooved dowel pin
50	Pinion shaft bearing	119	Bolt		
65	Shaft seal	120	Key		

TROUBLESHOOTING

Troubleshooting

This section identifies some of the most common issues involved with NORD Gear speed reducers , and provides recommendations to assist you in defining and answering your questions as you work with our products. You may also contact our Engineering/Application departments if your questions are not answered in the table below.

Problem With the Reducer		Possible Causes	Suggested Remedy
Runs Hot	Overloading	Load exceeds the capacity of the reducer	Check rated capacity of reducer, replace with unit of sufficient capacity or reduce the load.
	Improper lubrication	Insufficient lubrication	Check lubricant level and adjust up to recommended levels
		Excessive lubrication	Check lubricant level and adjust down to recommended levels.
		Wrong lubrication	Flush out and refill with correct lubricant as recommended
Runs Noisy	Loose foundation bolts	Weak mounting structure	Inspect mounting of reducer. Tighten loose bolts and/or reinforce mounting and structure.
		Loose hold down bolts	Tighten bolts
	Failure of bearings	May be due to lack of lubricant	Replace bearing. Clean and flush reducer and fill with recommended lubricant.
		Overload	Check rated capacity of reducer.
	Insufficient lubricant	Level of lubricant in reducer not properly maintained.	Check lubricant level and adjust to factory recommended level.
Output shaft does not turn	Internal parts are broken or missing	Overloading of reducer can cause damage	Replace broken parts. Check rated capacity of reducer.
		Key missing or sheared off on input shaft.	Replace key.
		Coupling loose or disconnected	Properly allign reducer and coupling. Tighten coupling.
Oil Leakage	Worn seals	Caused by dirt or grit entering seal.	Replace seals. Autovent may be clogged. Replace or clean.
	Unit runs hot or leaks	Overfilled reducer	Check lubricant level and adjust to recommended level.
		Vent clogged.	Clean or replace, being sure to prevent any dirt from falling into the reducer.
	Incorrect fill level	Improper mounting position, such as wall or ceiling mount of horizontal reducer.	Check mounting position on the name tag & verify with mounting chart in manual.

1. Overview

This user manual applies to NORD Motor products and it provides general information for motor operation, installation, maintenance, inspection, repair, and trouble shooting, which is relevant to most of the motor products shipped by NORD. Information and instructions provided in this manual, safety and commissioning information and all other manuals applicable to any items supplied by NORD must be observed.

This instruction manual is not intended to include comprehensive details and information related to all possible design variations or accessories options available with NORD motors. If there is any uncertainty about specific procedures, instructions or motor details, then please refer these questions to NORD for additional information or clarification.

Before installing, operating, or performing maintenance on any electrical motor become familiar with the following:

- The detailed operating instructions and wiring diagrams.
- All applicable national, local and system-specific regulations, codes and practices.
- The national / regional regulations governing safety and accident prevention.
- The proper use of any tools, transportation or hoisting equipment, and safety equipment needed to complete the installation.
- To avoid serious injury or possible damage to the equipment or machine, compliance with all safety and information notes is mandatory!

⚠ *WARNING* ⚠

All work involved in the transport, connection, commissioning and maintenance of any NORD product must be carried out by qualified and responsible technicians. All applicable national, regional, and local work regulations and safety requirements must also be complied with. NORD assumes no liability for personal injury, accidental death, or equipment damage and malfunctions resulting from failure to comply with installation or operating instructions, safety notes, or any work regulations and laws!

⚠ *WARNING* ⚠

To avoid electrocution, injury or death, make certain the motor is properly grounded, completely de-energized and brought to a no-voltage condition prior to working on any electrical connections.

2. Motor Types

NORD AC electric induction motors described in this manual generally include the following types:

- Single speed or two-speed design.
- Three phase alternating current or single phase design.
- Enclosure types: TEFC, TENV, and TEBC.

3. Enclosure Types

Totally enclosed fan cooled (TEFC).

TEFC motor designs rely on fan that is mounted on the motor's rotor shaft so the cooling capacity can vary based upon the motor's operating speed.

Totally enclosed, non-ventilated (TENV)

The TENV motor designs rely purely on convection cooling and they have no fan. Often TENV designs are labeled for intermittent or periodic duty or at a lower power rating than is typical for the given motor frame size.

Totally enclosed, blower cooled (TEBC)

The TEBC design uses separate blower or ventilator fan, with its own low wattage motor and a separate power supply, to provide continuous airflow and cooling. The blower can be used to extend the speed range of the motor and allow extreme slow speed operation without causing a concern for overheating. Blower data is provided in Table 6, page 11.

4. Voltage and Frequency Variation

Voltage and frequency variations are based upon the assumption that the nameplate horsepower will not be exceeded and that the motor temperature may increase. Standard allowable deviations are based upon the type of motor labeling.

NEMA and CSA Labeled Motors

Variations are based upon the nominal utilization voltage, and not the service (supply) voltage as per ANSI C84.1.

Service Voltages	Utilization Voltages
120V, 208V, 240V, 480V, 600V	115V, 200V, 230V, 460V, 575V

- Voltage variation at rated frequency = ±10%.
- Frequency variations at rated voltage = ±5%.
- Combined voltage/frequency variation = ±5%.

CE Labeled Motors

Per IEC 60038, allowable service voltage variations on in the current system, compared to the previous system, are as indicated.

Previous Service Voltages	Current Service Voltages
220V, 380V, 660V	230V, 400V, 690V +6/-10%
240V, 415V	230V, 400V +10/-6%

- Per EN 60034-1 a ±5% voltage variation and a ±2% frequency variation can be tolerated.
- The allowed variations are based upon the voltage (or voltage range) indicated on the motor nameplate.

5. Motor Nameplate Information

The motor nameplate and the display of technical information may vary slightly depending upon the global standard/s that the motor conforms to and the efficiency level. Please reference the examples below.

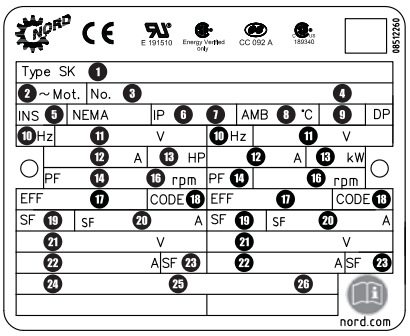

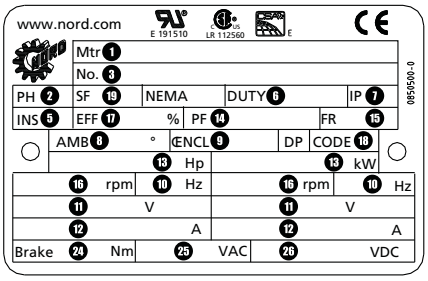

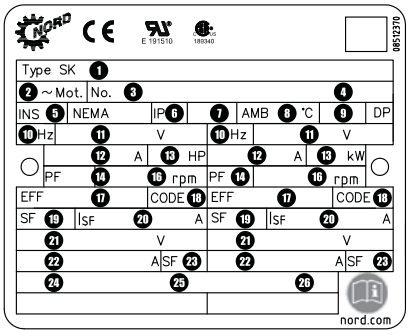

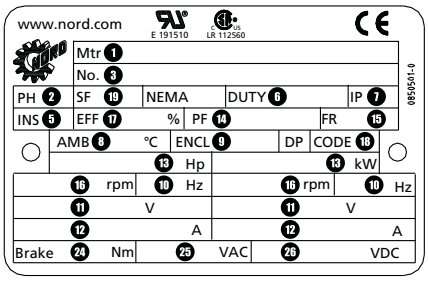

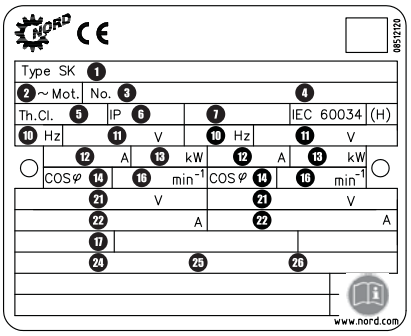

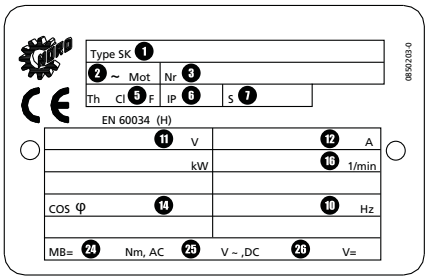

Table 1. Nameplate Data

Field	Definition
1	Model / Type
2	Number of Phases
3	Order Number
4	Serial Number
5	Insulation Class
6	IP (Ingress Protection) Enclosure Rating
7	Duty Cycle
8	Ambient Temperature Rating (°C)
9	Enclosure Type
10	Motor Frequency (Hz)
11	Voltage Rating (V)
12	Current Rating (A)
13	Rated Power (HP or kW)

Field	Definition
14	Power Factor
15	Motor Frame Size
16	Full Load Speed (rpm or 1/min^2)
17	Efficiency
18	NEMA Code Letter
19	Service Factor
20	Current Rating (If Service Factor ≥ 1.15)
21	Operating Voltage Rage (A)
22	Current Rating at Operating Voltage Range (A)
23	Service Factor at Operating Voltage Range (A)
24	Brake Rating (Nm)
25	Brake Supply Voltage (VAC)
26	Brake Coil Voltage (VDC)

6. Motor Options And Nomenclature

NORD offers many options for its motors. The option code will be shown in the motor nomenclature. Below are commonly used options.

Code	Description
AICM	Additional Internal Insulation Coating Applied
BRE	With Brake
EAR	Single Phase, Start Cap/Run Cap
ECR	Single Phase, Start Cap/Run Cap Increased SF
EHB	Single Phase, Run Capacitor Only
EP	Epoxy Dipped Windings
F	Blower Cooling Fan - 3ph & 1ph
FC	Blower Cooling Fan - 1ph
FHL	Brake – Lockable Manual Release
H	Energy Efficient
HL	Brake – Manual Hand Release
IG	Incremental Encoder
IP66	IP66 Environmental Protection
IR	Brake – Current Sensing Relay
KB	Condensation Holes - Removable Plugs
KD	Condensation Holes - Open
MIK	Brake – Microswitch
MS	Power Plug Connector

Code	Description
OL	TENV Motor – Without Fan / With Cover
OL/H	TENV Motor - Without Fan & Cover
P	Premium Efficient Motors
RD	Canopy Cover
RDD	Double Canopy Cover
RG	Brake – Corrosion Protected
RLS	Backstop
SH	Motor Space Heater
SR	Brake – Dust Protected
TF	Thermistor
TW	Thermostat
VN	10:1 Constant Torque Rated Motor
VR	5:1 Constant Torque Rated Motor
VW	20:1 Constant Torque Rated Motor
VZ-F	1000+:1 Constant Torque Rated Motor
WE	2nd Motor Shaft End
WU	High Slip Rotor
Z	High Inertia Motor Fan

Motor Nomenclature

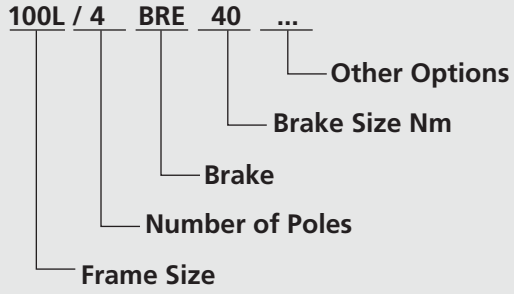

Ordering Examples

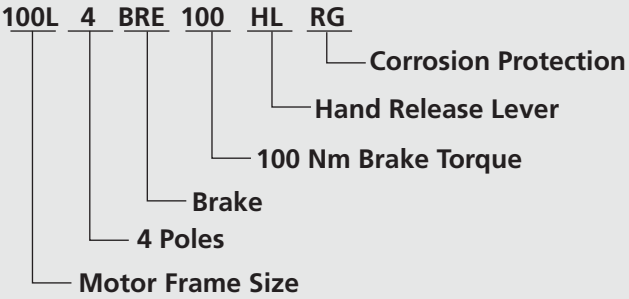

100 Frame Motor with 4 poles, Brake, 100 Nm with a hand release lever, corrosion protected brake, and a current sensing relay.

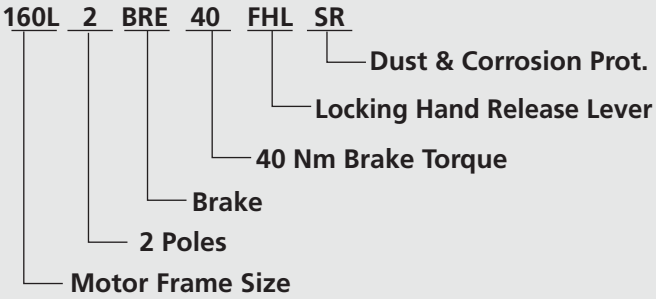

63 Frame Energy efficient motor with 4 poles, Brake, 40 Nm with a locking hand release lever and dust & corrosion protection.

7. Application Conditions

Standard NORD motors are designed to operate in dusty or moist environments and have anti-fungal, thermal class F insulation.

- Enclosure Protection Rating = IP55 (minimum).
- Maximum Installation Height = 3300 ft (1000 m).
- Ambient Temperature = -4 to 104°F (-20 to 40 °C).
- Tropical-proof, Thermal Class F insulation.

The protection level and maximum ambient temperature are stated on the motor nameplate.

IMPORTANT NOTE

NORD can provide motors for an expanded range of applications and service conditions including higher protection levels, extreme ambient conditions and, higher altitudes.

WARNING

Consult NORD for recommendations if motors are operated under extreme loading conditions, exposed to high inertia loads, or need to operate under unusually high cycling conditions with high starting and stopping frequency.

WARNING

Special design and assembly considerations are needed if NORD motors are subject to any of the following conditions:

- Outdoor installation with motor in a vertical position.
- Direct contact with aggressive or corrosive materials (acids, bases, salts, certain gases, etc.).
- Exposure to extreme high or low temperatures, high relative humidity, condensation moisture or very wet environments.
- Subject to extreme material build-up on the unit (dirt, dust, sand, etc.).
- Hazardous Locations (risk of fire or explosion).

8. Transportation

During transportation observe the following:

- Make sure that all eyebolts and lifting lugs are tight and firmly against their supporting surface.
- Use all the lifting eyes that are intentionally supplied with the motor.
- Lift only at designed points.
- Protect the mounting surface from possible damage during transportation.
- Always use sufficiently rated handling equipment, lift mechanisms and lifting straps.
- With heavier objects or unbalanced loads, it may be appropriate to use more than one lifting point or an additional strap or sling to assure safe transportation of the assembly. This is especially true of assembled gearmotors and motorized reducers.
- Once the NORD motor or assembly is properly installed, remove the transportation fixtures completely or make certain they are properly re-secured and tightened.

WARNING

Transportation – Use of Lifting Devices

To avoid death, serious injury or equipment damage…

- Hoisting lugs or lifting eyes attached to the motor are designed for the weight of the motor only! Do not attach any additional loads!
- The motor must only be transported and lifted using the lifting eyes, in a position that is appropriate for its type of construction. Otherwise, it could fall over or slip in the lifting tackle.
- During suspended transport, two straps must be able to carry the entire load weight safely.
- When required use additional, suitable means of support for transportation, installation or removal.
- Always secure the support equipment to prevent it from slipping.

9. Storage

If the motor is not in service, store it according to the following conditions:

- Store the motor in a clean, dry, dirt-free, vibration free area.
- Storage temperatures of 10°C (50°F) to 50°C (120°F) must be maintained.
- Relative humidity must not exceed 60%.
- If vibration in the area exceeds 0.002 inch (0.05 mm) at 60 hertz, then vibration isolation pads are suggested to prevent brinelling of the bearings.
- Treat the unprotected shaft end and mating flange surfaces with a corrosion inhibitor that can be cleaned off prior to commissioning.
- Before placing the motor into service, visually inspect the motor exterior for evidence of deterioration during storage. Turn the motor shaft by hand to make sure the shaft turns freely.
- Motor space heaters, when provided, are to be connected and energized whenever there is a possibility that the storage ambient conditions will reach the dew point. Space heaters are optional. Remove motor from the storage container when the heater is energized.
- If the motor needs to be stored for extended periods, or if it is stored in less than favorable conditions, it is recommend that the winding insulation resistance be checked prior to commissioning (page 7).
- Even if stored in favorable conditions, the antifriction motor bearings and motor shaft seals may need to be replaced if the storage period is more than 4 years.

10. Safety Considerations

When installing, servicing or replacing electric motors it is important to be working in a “voltage-free” state. Observe the following safety rules.

Five Safety Rules

1. Disconnect the system. Disconnect the auxiliary circuits (brakes, space heaters, etc.).
2. Prevent reconnection (follow safe lock-out/tag-out practices).
3. Make sure that the equipment is at zero voltage.
4. Make certain the equipment is properly grounded and short-circuited.
5. Cover or isolate nearby components that are still electrically live.

To energize the system, apply the measures in reverse order.

Qualified Personnel

All work involved in the transport, connection, commissioning and maintenance of any NORD product must be carried out by qualified and responsible technicians.

For the purpose of this documentation, a qualified personnel is taken to mean a person or people who fulfill the following requirements:

- Through appropriate training and experience, they are able to recognize and avoid risks and potential dangers in their particular field of activity.
- They have been instructed to carry out work on the machine by the appropriate person responsible.
- They are responsible for knowing and complying with all applicable national, regional, and local work regulations and safety requirements.

10. Safety Considerations Ctd.

General Warnings and Cautions

⚠ *WARNING* ⚠

To avoid electrocution, injury or death, make certain all electrical devices (motors, brakes, variable frequency drives, etc.) are properly grounded, completely de-energized, and brought to a no-voltage condition prior to working on any electrical connections. Remember that most of these devices carry potentially dangerous energy levels for a period of time after power is removed. Always follow proper lock-out/tag-out procedures.

⚠ *WARNING* ⚠

Electrical machines contain dangerous voltage levels, electrically live parts, rotating surfaces and hot surfaces. To prevent injury, death or possible equipment damage always observe the following:

- Keep all safety covers and guards in place during operation. Remove and replace covers in compliance with the applicable safety regulations.
- Allow the machine to cool down before starting any work on it.
- Operate the machines properly.
- Perform regular maintenance on the machine.
- Secure and guard free-standing shaft extensions.

⚠ *WARNING* ⚠

Electrically Live Parts

Electrical machines contain electrically live parts. Fatal or severe injuries and substantial material damage can occur if the required covers are removed or if the machines are not handled, operated, or maintained properly.

⚠ *WARNING* ⚠

Rotating Parts

Electrical machines contain dangerous rotating parts. Fatal or severe injuries and substantial material damage can occur if the required covers are removed or if the machines are not handled, operated, or maintained properly.

⚠ *WARNING* ⚠

Hot Surfaces

Electrical machines have hot surfaces. Fatal or severe injuries and substantial material damage can occur if the required covers are removed or if the machines are not handled, operated, or maintained properly. Allow the machine to cool down before starting any work on it.

⚠ *WARNING* ⚠

Maintain Proper Cooling

Operating the motor without the intended cooling fan may cause overheating and result in very hot surfaces, personal injury and material damage. Never commission a motor intended to be fan cooled when it is missing the shaft-driven fan or external blower assembly.

⚠ *WARNING* ⚠

Condensation Drain Holes (Optional)

Inserting objects into the condensation drain holes can damage the winding and can result in death, serious injury and damage to property!

- Before opening sealed drain holes, make sure the motor is in a no-voltage condition. Close the condensation drain holes before re-commissioning.
- Exercise caution around drain holes that are intended to be left open, especially when the motor is energized.

STOP *HARMFUL SITUATION* STOP

Before start-up check the following:

- All electrical connections are secure, well grounded and properly made.
- The motor is rotating in the correct direction (when de-coupled from the driven load).
- There are no temperature-sensitive parts (cables etc.), in contact with motor enclosure.
- Condensation drain holes are always located at the lowest point of the motor.

11. Checking the Insulation

Before putting the motor into operation for the first time, after a lengthy period of storage or standstill (approx. 6 months), the insulation resistance of the winding should be checked.

⚠ WARNING ⚠

During and directly after measurement the motor connection terminals carry hazardous voltages.

A. Control

The insulation resistance of new, cleaned, or repaired motor windings against the grounded housing and against one another should be > 200 Mega-Ohms.

B. Measurement

Using a Mega-Ohm meter apply a DC voltage of 500 VDC to the motor winding for a period of 60 seconds and record the winding insulation resistance compared to ground.

- The 500 VDC test voltage is applicable to low voltage motors up to 1000 VAC.
- When performing this test the temperature of the windings should be 25°C ± 15°C (77°F ± 27°F).

C. Verification

- If the insulation resistance of the winding is less than 50 Mega-Ohms, the cause may be moisture. The windings should be dried and the test should be repeated.
- After any lengthy period of operation the insulation resistance may drop. So long as the measured value does not fall below the critical value of 50 Mega-Ohm, the motor may continue to be operated.
- If the measured value falls below the critical 50 Mega-Ohm level, the cause must be established and the windings or winding sections must be cleaned, dried, repaired, or replaced as needed.

12. Bearing Lubrication

NORD motor frame sizes 63 up to and including 225 are normally supplied with internally grease lubricated bearings and require no lubrication during normal operation.

NORD motor frame sizes 250 and larger are supplied with grease fittings for re-greasing the motor bearings.

IMPORTANT NOTE

Motors with grease fittings are normally supplied with a label indicating the grease type used, the suggested re-lubrication interval, and the amount of new grease to be applied. General bearing maintence guidelines are listed in Table 3.

Typical motor bearing grease is an NLGI No. 2 consistency, high grade product with a polyurea base thickener, synthetic or blended mineral/synthetic oil, and stabilizing agents to protect against heat and oxidation.

Table 3 – Motor Bearing Maintence Guidelines

Frame Size	Power	Poles	Re-greasing Interval
63-225	0.16-60 HP (0.12-45 kW)	All	Maintence Free
250 to 280	75-125 HP (55-75 kW)	2	4000 h
		4 to 8	8000 h
315	150-250 HP (132-200 kW)	2	3000 h
		4 to 8	6000 h

STOP HARMFUL SITUATION STOP

When re-greasing motor bearings do not to mix different greases without verifying the compatibility with a reputable grease lubrication supplier. Mixing incompatible products can lead to bearing failure.

13. Mechanical Installation

Integral motors, NEMA C-face motors, and IEC flange mounted motors must be rigidly secured to their mating connection surface using all fastening screws tightened to the proper bolt torque. It is good practice to apply a medium strength thread- locking agent (Loctite® 242) to the mounting screws.

Foot mounted motors must be securely installed to a rigid and level foundation or mounting surface to minimize vibration and maintain alignment between the motor and shaft load. All mounting hole locations must be utilized. Tighten all hold down screws or bolts to the proper bolt torque.

STOP HARMFUL SITUATION STOP

Failure to provide a proper mounting surface may cause vibration, misalignment and bearing damage.

Accurate alignment and proper balancing of output devices (couplings, belts, pulleys, etc.) is required to assure quite, low vibration, trouble free operation. When the motor is directly coupled to a gear drive or a driven machine make sure that the motor shaft and driven machine shaft are aligned with one another axially.

STOP HARMFUL SITUATION STOP

Inaccurate alignment may lead to bearing damage, excessive vibrations and shaft breakage.

IMPORTANT NOTE

For motor replacement guidelines see section 20 on page 15 and section 21 on page 16.

14. Electrical Connections

⚠ WARNING ⚠

To avoid electrocution, injury or death, make certain all electrical devices (motors, brakes, variable frequency drives, etc.) are properly grounded, completely de-energized, and brought to a no-voltage condition prior to working on any electrical connections. Remember that most of these devices potentially dangerous energy levels for a period of time after power is removed. Always follow proper lock-out/tag-out procedures.

IMPORTANT NOTE

External motor brakes have their own connection requirements as indicated in the appropriate brake instruction manuals.

⚠ WARNING ⚠

If the motor has an integral brake, make certain there is no load connected to the driven equipment before releasing the brake. Otherwise serious injury, death, or damage to the equipment may result.

- The supply voltage and frequency must agree with the motor nameplate data.
- Always feed the connecting leads into the terminal box using appropriate mating cable glands. The mating connection cables and cable glands should be suitable for temperatures ≥ 194°F (90°C).
- Provide the ends of the connecting leads and ground lead with cable lugs or curved ring eyelets before connecting them to the terminal board.
- Make certain that the wiring connections and arrangement of the terminal board jumpers conform to the appropriate wiring diagram as provided in the motor terminal box and/or page 9 of this manual.
- Tighten the terminal board screw connections on the on the main terminal board per the table below.

Table 4 – Tightening Torque: Terminal Board and Grounding Screws

Thread Size	Nut Size [mm]	Tightening Torque [lb-ft]	Tightening Torque [N-m]
M4	7	0.6-0.9	0.8-1.2
M5	8	1.3-1.8	1.8-2.5
M6	10	2.0-3.0	2.7-4
M8	13	4.0-5.9	5.5-8
M10	17	6.6-9.6	9-13
M12	19	11.8-14.8	16-20

- Upon final assembly, the terminal box cover must be sealed so that it is dust-tight and water-tight.

Table 5 – Tightening Torque: Terminal Box Cover Screws

Thread Size	Tightening Torque [lb-ft]	Tightening Torque [N-m]
M4	0.6-0.9	0.8-1.2
M5	0.9-1.3	1.2-1.8
M6	1.1-1.8	1.5-2.5
M8	2.2-3.7	3.0-5.0

15. Wiring Diagrams

NORD Frames 63-225
230 / 460V, 60Hz, 3Ø | 200 / 400V, 50Hz, 3Ø

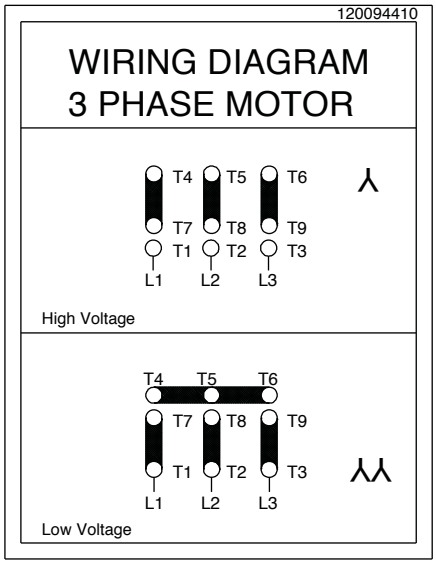

NORD mfg by Siemens - Frames 200 +
230 / 460V, 60Hz, 3Ø | 200 / 400V, 50Hz, 3Ø
190 / 380V, 60Hz, 3Ø

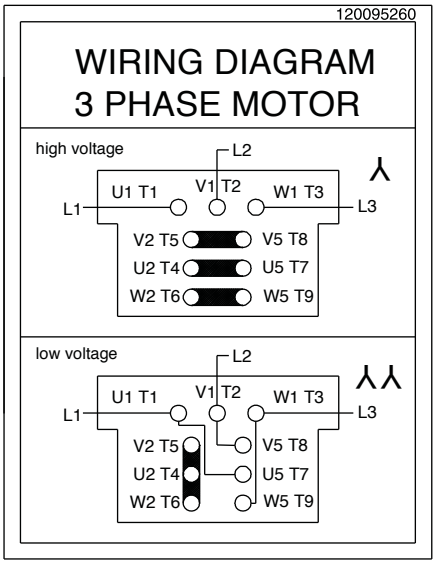

NORD mfg by Siemens - Frames 200 +
230 / 460V, 60Hz, 3Ø | 200 / 400V, 50Hz, 3Ø
190 / 380V, 60Hz, 3Ø

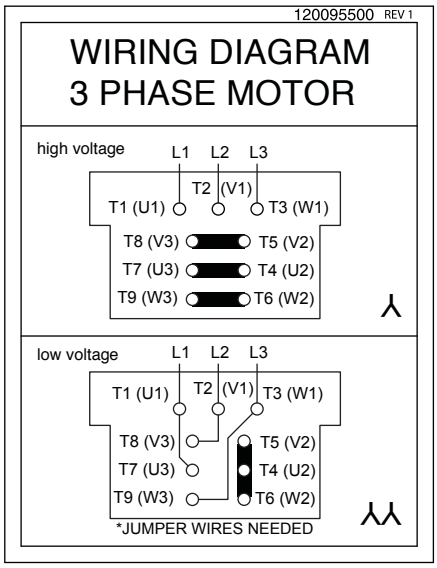

NORD Frames 63 - 225
460 / 800V, 60Hz, 3Ø | 230 / 400V, 50Hz, 3Ø
208 / 360V, 60Hz, 3Ø | 400 / 690V, 50Hz, 3Ø
332 / 575V, 60Hz, 3Ø

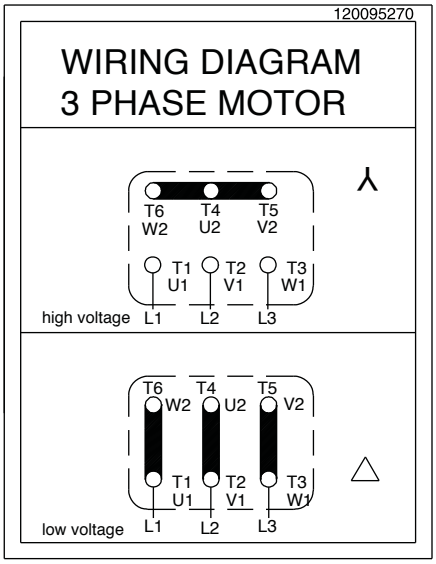

NORD - 2 - SPEED MOTORS
SINGLE WINDING (4-2 & 8-4 POLE)

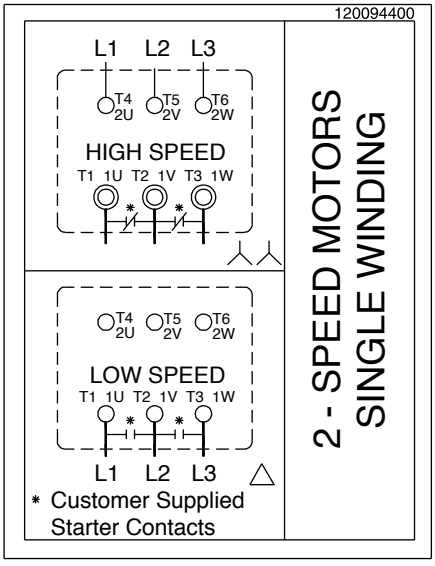

NORD - 2 - SPEED MOTORS
DUAL WINDING (8-2 POLE)

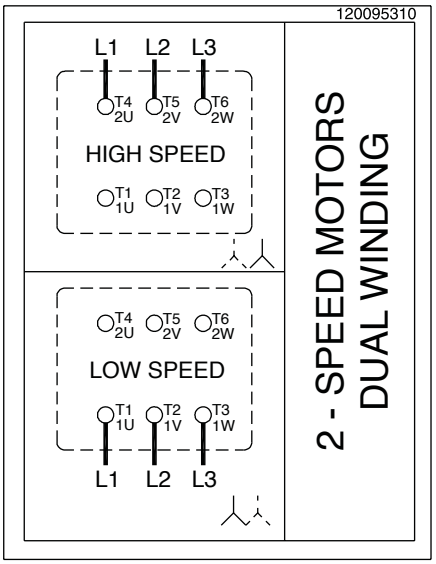

15. Wiring Diagrams Ctd.

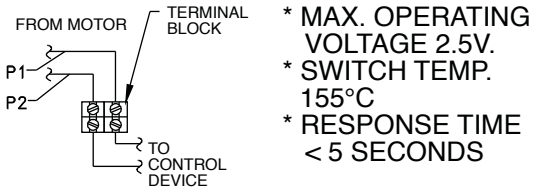

THERMISTOR
"TF" OPTION

120095240

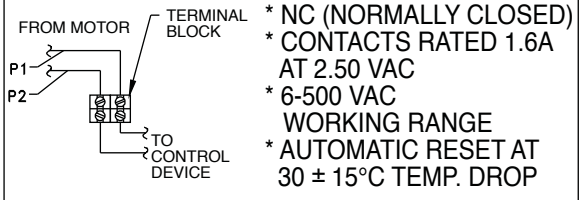

THERMISTATS
"TW" OPTION

120095230

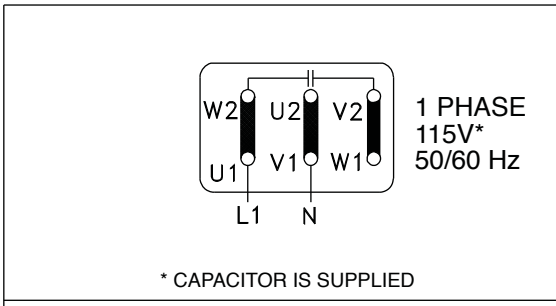

BLOWER COOLING FAN
"FC" OPTION

120095450

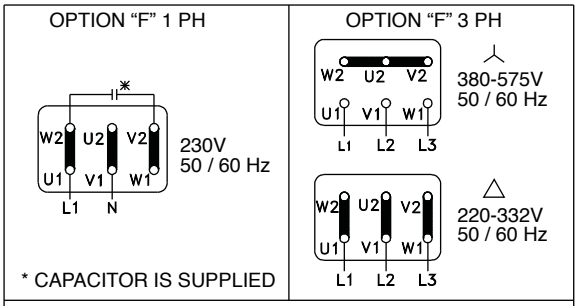

BLOWER COOLING FAN
"F" OPTION

120095250

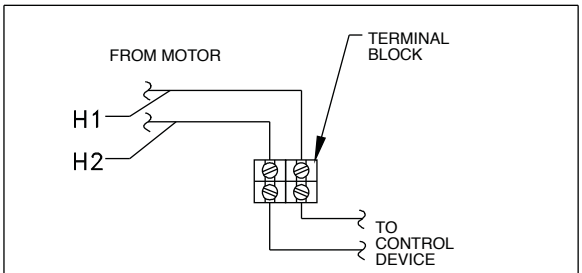

SPACE HEATER
"SH" OPTION

120095220

16. Motor Accessories

Blower Cooling Fan (Option F & FC)

- Connection Diagram Shown on page 10
- Option FC is 1-phase, 115V
- Option F has capability of 1 phase by connecting a supplied capacitor

Option F – 3ph & 1ph 220-575V 50/60Hz

Motor Frame	60Hz Ratings			50Hz Ratings		
	Voltage [V]	Current [A]	Power [W]	Voltage [V]	Current [A]	Power [W]
Single phase connection - ⊥ (Delta)						
63	230 – 277	0.11	38	230 – 277	0.10	27
71	230 – 277	0.12	41	230 – 277	0.10	28
80	230 – 277	0.13	44	230 – 277	0.11	29
90	230 – 277	0.25	88	230 – 277	0.26	72
100	230 – 277	0.28	88	230 – 277	0.26	70
112	230 – 277	0.31	107	230 – 277	0.26	73
132	230 – 277	0.27	89	230 – 277	0.29	82
160 - 225	230 – 277	0.41	140	230 – 277	0.45	128
Three phase low-voltage connection - (Delta)						
63	220 – 332	0.08	23	220 – 290	0.10	27
71	220 – 332	0.08	24	220 – 290	0.10	30
80	220 – 332	0.08	25	220 – 290	0.01	29
90	220 – 332	0.21	64	220 – 290	0.28	86
100	220 – 332	0.21	66	220 – 290	0.27	86
112	220 – 332	0.23	70	220 – 290	0.27	85
132	220 – 332	0.25	74	220 – 290	0.32	96
160 - 225	220 – 322	0.49	165	220 – 290	0.52	155
Three phase high-voltage connection - (Y)						
63	380 – 575	0.04	23	380 – 500	0.05	29
71	380 – 575	0.04	25	380 – 500	0.05	30
80	380 – 575	0.04	26	380 – 500	0.05	29
90	380 – 575	0.12	62	380 – 500	0.16	82
100	380 – 575	0.12	66	380 – 500	0.16	83
112	380 – 575	0.13	70	380 – 500	0.16	82
132	380 – 575	0.14	75	380 – 500	0.18	96
160 - 225	380 – 575	0.28	165	380 – 500	0.29	155

Option FC – 115V 50/60Hz 1ph

Motor Frame	60Hz Ratings			50Hz Ratings		
	Voltage [V]	Current [A]	Power [W]	Voltage [V]	Current [A]	Power [W]
Single Phase Connection - ⊥ (Delta)						
63	100 – 135	0.23	42	100 – 135	0.30	42
71	100 – 135	0.23	47	100 – 135	0.30	44
80	100 – 135	0.27	57	100 – 135	0.30	43
90	100 – 135	0.46	102	100 – 135	0.57	78
100	100 – 135	0.53	105	100 – 135	0.54	78
112	100 – 135	0.60	115	100 – 135	0.55	80

Table 6 – Option F & FC

16. Motor Accessories Ctd.

Thermostats (Option TW and Option 2TW)

Standard connection	Series connected, one per phase
Contact	NC (Normally Closed)/ Auto Re-setting
Response Temperature (Option TW)	311 °F (155 °C) Shut-Off Device
Response Temperature (Option 2TW)	311 °F (155 °C) Shut-Off Device + 266°F (130 °C) Alarm Device
Nominal Current	1.6 Amp at 250 V
Resistance	< 50 mΩ
Switch Rebound	< 1ms
Insulation Rating	2000 VAC
Cycles	10,000 max
Lead Identification (inside terminal box)	P1 and P2 or TB1 and TB2 / 2TB1 and 2TB2

Motor thermostats or bi-metallic switches can be wired directly into the control circuit without a separate control module or tripping device. Thermostats operate on a relatively high control voltage so they are much less sensitive to voltage interference from the main power supply. Often one can run thermostat leads and motor power leads next to each other when using the appropriate shielded cable. The installer is responsible to wire the thermostats into the motor control circuit. The leads may be labeled in a variety of ways as indicated.

Thermistors (Option TF)

Standard Connection	Three devices, series connected, one per phase
Type	Positive temperature coefficient (PTC)
Transition Temperature	150°C±5 °C
Resistance	20… 500Ω (below transition) > 4 kΩ (above transition)
Reed Current	< 1mA
Max Voltage	30V
Lead Identification (inside terminal box)	P1 and P2 or TP1 and TP2

With a separate control module or tripping device (ex. Kirwan INT69) thermistors are used to sense motor overload/ over temperature conditions by converting the critical operating temperature limit into large internal resistance change. Due to their small size, heat sink construction, and high change in resistance value, minor resistance variations caused by relatively long lead runs can be tolerated. This feature also allows for one controller to be used for several temperature sensing locations. Many variable frequency drives come with on-board thermistor inputs. NORD does not supply the thermistor control module.

⚠ WARNING ⚠

Thermostats and Thermistors will automatically reset.

⚠ WARNING ⚠

All wiring must be completed by qualified personal and adhere to all local codes.

Space Heaters (Option SH)

- Connection Diagram shown on Page 9
- Space Heaters are mounted directly on the motor winding
- The leads are brought into the terminal box and labeled H1 and H2
- They require a separate voltage supply and must not be energized when the motor is energized
- The heaters will keep the winding of the motor approximately 5°C above the surrounding ambient

Table 5. Space Heater Data

Frame Size	Wattage	Voltages	Heater Strips/MTR
63 & 71	18W	110V	1
		230V	
		460V	
80	25W	110V	1
		230V	
		460V	
90 – 112	50W	110V	2
		230V	
		460V	
132-180	100W	110V	2
		230V	
		460V	
200 & 225	120W	110V	2
		230V	
		460V	

Encoder (Option IG)

- Most standard encoders will be enclosed inside the fan cover
- Incremental, Quadrature, Differential, Marker Channel
- IP66 Protection
- IG1 = 1024PPR, IG2 = 2048PPR, IG4 = 4096PPR
- TTL/RS422, HTL/Push-Pull, Line Driver.
- 5V or 10-30V available.
- Absolute encoders also available.
- Seperate encoder wiring instructions are provided by NORD.

17. Inspection

Inspect the motor after every 500 operating hours.

> ⚠ *WARNING* ⚠
>
> If it is necessary to clean the motor exterior, do not use shop air. Shop air can force contaminents into the motor and may cause parts damage or result in blowing debris causing injury.

Table 8 - Inspection Guidelines

Inspect	Check	Action
Motor Exterior	Check the external surfaces for contamination. Accumulation of dirt and fibrous deposits must be removed.	Clean the motor external surfaces using clean, lint-free cloths.
		Clean deposits from between cooling fins using a vacuum cleaner and a stiff-bristled nylon brush.
	Check the external surfaces for oil film and greasy deposits.	Clean the oil film and greasy deposits from the motor surface using clean, lint-free cloths.
		If necessary, moisten the cloth with an approved non-flammable, residue-free solvent. Do not pour solvent on the motor.
	Check for evidence of damage or overheating.	If the motor has physical damage, replace the motor.
Motor Mountings	Make sure the mounting hardware is secure.	If the mounting hardware is not secure, check the motor/gearbox alignment, and tighten the mounting hardware.
Motor Electrical Connections	Check that all electrical connections are secure.	If the electrical connections are not secure, tighten them.
	Check the electrical connections for evidence of arcing.	Loose electrical connections can cause arcing, which is evident by discoloration and charring. If you find evidence of arcing, replace the damaged connections.
Insulation Resistance	Using an ohmmeter, check and record the resistance of motor winding insulation.	Compare the current resistance reading to previous readings. If the resistance drops significantly, perform an internal inspection for insulation damage or deterioration.
Motor Brake	On motors that have a brake, use a feeler gauge to check the air gap in between the brake pad and the rotor according to the appropriate user manual.	If the air gap exceeds the maximum allowed for that brake configuration provided in the manual, adjust the air gap or replace the brake pad according to user manual U35000.

18. Parts List

If you are ordering a part, provide the model and order number (table 1, page 2) of your motor. This will determine the specific part number you need.

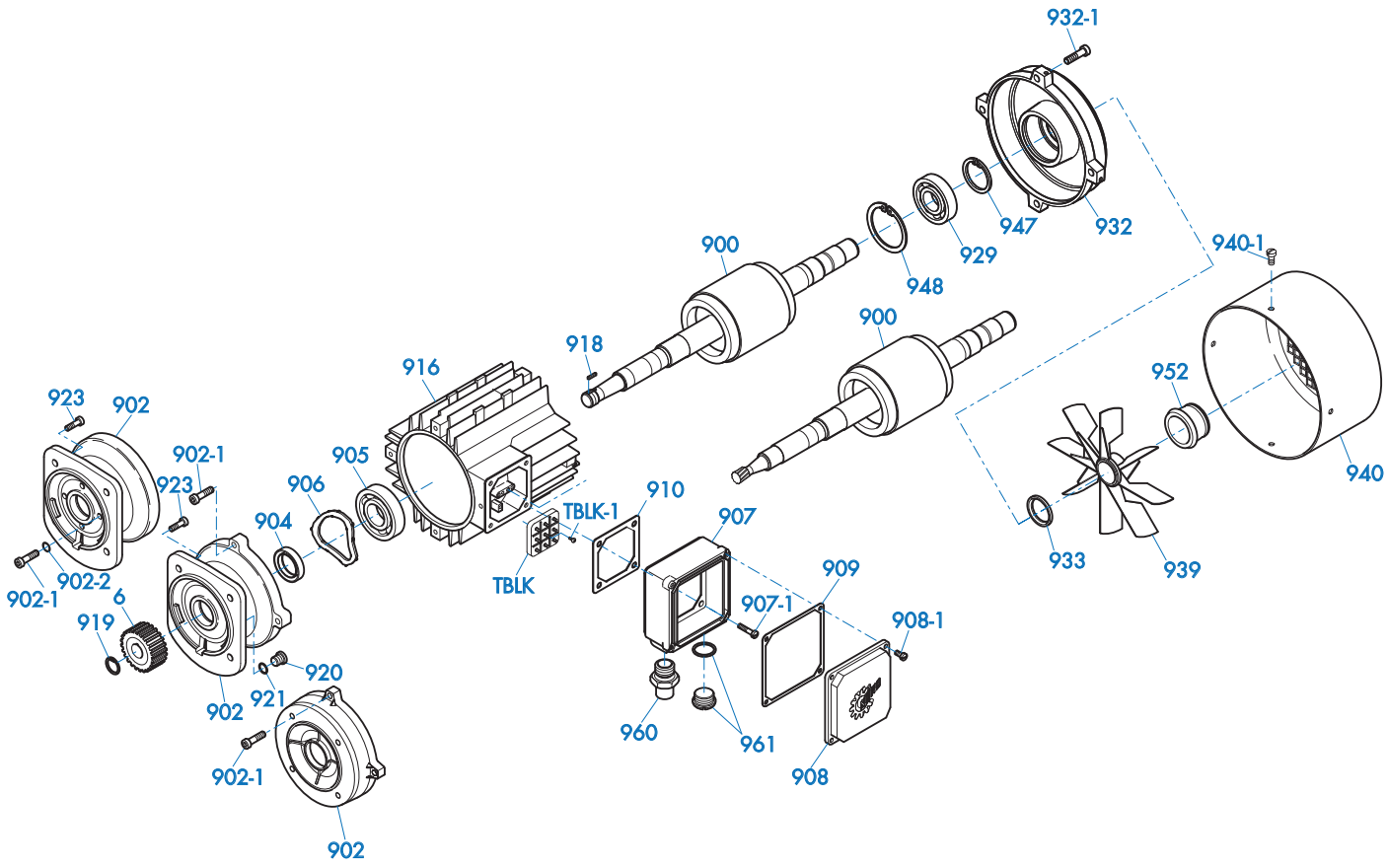

Part Number	Part Description	Qty per Assembly
6	Input Pinion	1
900	Rotor Assembly	1
902	A-Endbell	1
902-1	Screw	4
902-2	Dubo Seal	4
904	Oil Seal	1
905	Bearing	1
906	Preload Spring	1
907	Terminal Box Frame	1
907-1	Screw	4
908	Terminal Box Cover	1
908-1	Screw	4
909	Gasket - Terminal Box Frame	1
910	Gasket - Terminal Box Cover	1
916	Stator	1
918	Key	1
919	Retaining Ring	1
920	Oil Plug	1

Part Number	Part Description	Qty per Assembly
921	Gasket	1
923	Screw	4
929	Bearing	1
932	B-Endbell	1
932-1	Screw	4
933	Oil Seal	1
939	Fan	1
940	Fan Cover	1
940-1	Screw	4
947	Retaining Ring	1
948	Retaining Ring	1
952	Fan Clip	1
960	NPT Thread Adapter	1
961	Plug (includes O-ring)	1
TBLK	Terminal Block	1
TBLK-1	Screw, Terminal Block Mounting	2
	Jumper Bar (not illustrated)	AR

19. Repair

Reference the parts list drawing on page 14 for clarification.

A. Disassemble the motor according to the general exploded view in PARTS INFORMATION. Disassemble only as far as necessary to replace the failed parts.

B. Whenever the motor is disassembled, clean all dust and contamination from the motor interior using a vacuum cleaner and a soft-bristled nylon brush.

C. The following parts must be replaced if they are removed:

- Oil seal (904), Oil seal (933)
- Gasket (909), Gasket (910), Gasket (921)
- Gasket on plug (961)
- Self-locking screws (907-1, 908-1, 923, 932-1, 940-1)
- Dubo Seals (902-2)

D. If the following parts are removed, inspect them, and replace them if they are deformed or damaged:

- Retaining ring (919), Retaining ring (947), Retaining ring (948)
- Fan clip (952)

20. Removing and Replacing Integral Motors

Reference the parts list on Page 14 for clarification.

A. Disconnect the power to the electric motor. Make certain the motor is properly grounded, de-energized and secured with a lock-out/tag-out device.

B. Drain the oil from the mating gearbox, or rotate the motor/gearbox assembly so that the motor is up, to prevent oil from spilling from the gearbox when the motor is removed.

C. Support the motor and prepare it for removal. Steady the motor and support it. For larger motors, use of mechanical lifting or support devices to may be appropriate.

D. Remove the fastening screws that hold the motor to the reducer input.

IMPORTANT NOTE

Most integral motor installations have mounting bolts accessible from the motor exterior. If the bolts are not clearly visible, unbolt the input flange from the gearbox. Remove the bolts securing the motor to the reducer input flange, and discard the old DUBO sealing rings that were under the screw heads.

E. Maintain motor shaft alignment and move the motor directly away from its mounting surface until the motor shaft and mating input gear clear both the internal gear mesh and reducer input.

F. Remove and discard the old flange gasket.

G. Clean the gasket faces on the motor and gearbox, making sure no cleaning debris enters the gearbox.

H. Check the replacement motor to make sure the motor flange, motor shaft, and motor pinion are identical to the motor that was removed.

I. Place a new gasket between the gearbox and new motor.

J. Position the motor on the gearbox, making sure the input pinion meshes with the input gear. Rotate the motor as necessary to align the bolt holes and seat the motor flange. Make sure the gasket remains properly aligned and seated

K. Apply a medium strength thread locking compound to the bolt threads. Install the bolts and tighten them to the appropriate torque.

IMPORTANT NOTE

If the motor/gearbox installation uses an input flange, first mount the input flange to the motor using the four mounting bolts and NEW DUBO sealing rings under the head of each fastening screw. Make sure the fastening screws are clean and apply new thread sealant if necessary.

L. Check the gearbox oil level in accordance with the appropriate User Manual/s. If necessary fill or add oil to the gearbox.

HARMFUL SITUATION

Do not mix different types of oil!

M. Re-establish the electrical connection to the motor.

N. Observe the subsequent start-up closely to make certain the equipment is operating properly and there are no seal or gasket leaks.

21. Removing and Replacing NEMA C-Face or IEC Fange-Mounted Motors

For further clarification of these instructions, reference the parts list on Page 14 of this manual.

A. Disconnect the power to the electric motor. Make certain the motor is properly grounded, de-energized and secured with a lock-out/tag-out device.

B. Support the motor and prepare it for removal. Steady the motor and support it. For larger motors, use of mechanical lifting or support devices to may be appropriate.

C. Remove the fastening screws that hold the motor to the C-face or IEC mounting flange.

D. Maintain motor shaft alignment, and move the motor directly away from its mounting surface until the motor shaft and mating coupling clear the mounting flange surface of the driven equipment.

E. Measure and record the proper placement of the motor shaft coupling prior to removing it from the old motor.

F. Make sure the new motor shaft, key and key slot are free of all nicks, burrs, and lubrication or grease.

G. Install the new shaft key on the new motor. If the shaft key is not captured or if an open-ended key slot is utilized it is good practice to secure the key into the key slot with a medium strength thread locking agent or alternatively one may stake the key in place.

H. Re-install the coupling on the new motor shaft, making sure the placement of the coupling is in the same location as it was on the old motor (See Step E).

I. Clean all old gasket material, sealants, contamination, and corrosion from the flange surface on the driven equipment.

J. If the motor is utilized in a wet or wash down environment apply a sealing gasket or gasket eliminating compound to the mating flange surface, as would seem most appropriate for the application.

K. Support the new motor and mount it flush against the mating flange surface of the driven equipment.

L. Apply a medium strength thread locking agent to the bolt threads.

M. Install the bolts and tighten them to the appropriate torque.

N. Re-establish the electrical connection to the motor.

O. Observe the subsequent start-up closely to make certain the equipment is operating properly.

22. Testing

IMPORTANT NOTE

NORD electric motors do not require periodic testing. However, if a motor is removed from its installation, NORD recommends that the motor be checked according to the following static and dynamic testing procedures before it is reinstalled. Finding a condition that will require future repair before the motor is reinstalled decreases the overall maintenance time.

This section provides general test information and functional checks for the types of motors covered by this manual. Read and understand the tests and checks before performing them on your motor.

Record and date all measurements taken.

If the motor fails any of the test procedures provided below, use the troubleshooting guide to determine the motor problem.

Static Testing

A. The motor can only be static tested if it is disconnected from the component it drives and securely mounted on a fixture or mounting plate. These tests are usually conducted when a motor has been removed for any reason other than failure

B. Turn the motor shaft slowly by hand. Feel and listen for evidence of a failed bearing, which is indicated by a rough feel as the shaft rotates, and by noise.

C. Check for smooth rotation, with no evidence of binding or catching. If the shaft does not rotate smoothly, or binds or catches, the bearings are worn or failing, lack lubrication, or are contaminated.

D. Check the motor shaft for side play by applying pressure at right angles to the shaft in several places around the circumference. If the shaft moves perceptibly, the front bearing may be worn.

Dynamic Testing

A. Find the motor voltage and rated load current values as listed on the motor nameplate.

B. Using a volt-ohmmeter, verify that the motor power supply is in the correct range.

C. Run the motor with no load. As the motor is operating, listen for unusual motor noise and check for excessive vibration. Vibration and motor noise are indications of bearing contamination, lack of lubrication, damage, or failure.

D. Use an ammeter to measure the no-load current. Record the no-load current for comparison with previous readings, and for reference during future testing.

E. If the motor passes the no-load test, operate the motor at rated load and check and record the current.

F. Check the motor operating temperature at rated load. If the motor operates at a higher than normal temperature, the motor may be damaged, overloaded or failing.

23. Troubleshooting

Fault	Likely Cause	Corrective Action
Motor fails to start.	• Motor is mis-wired • Brake is may not be releasing. • Fan guard damaged and contacting fan. • Motor protection device has tripped or does not switch • 1-Ph Capacitor or start switch has failed.	• Verify and correct motor wiring. • Troubleshoot brake per User Manual U35000. • Replace damaged fan guard. • Check motor protection device for correct setting and correct error. • Discharge capacitor and use a volt-ohm meter to check the capacitor for an open circuit - replace if needed. Inspect switch and connections. Replace if contacts look burned or pitted.
Fuses blow or motor protection faults immediately.	• Short circuit in line. • Lines connected incorrectly. • Fuse or circuit breaker tripped. • Motor is overloaded or equipment jammed. • Stator is shorted or went to ground.	• Rectify short circuit. • Check circuit diagram and make corrections. • Replace fuse or circuit breaker. • Make sure load is free. Verify motor amp draw compared to nameplate rating. • A damaged or blown stator will show a burn mark. Stator must be repaired or replaced.
Motor hums and has high current consumption	• Brake may not be releasing. • Rotor may be rubbing stator. • Defective or incorrect stator winding.	• Troubleshoot brake per User Manual U35000. • Send motor to a repair specialist.
Severe speed loss under load or excessive acceleration time.	• Overload. • Excessive voltage drop. • Damaged or failing motor bearings. • Damaged or worn gear unit. • 1-Ph Capacitor or start switch has failed.	• Check load conditions and make certain system is unobstructed. Reduce load or consider a larger motor. • Verify service voltage is within specification. Check if nearby equipment is affecting incoming power. Make sure connection harness and wiring is adequate. • Replace motor bearings. • Replace or repair damaged gear unit. • See instructions under "Motor fails to start".
Motor runs the incorrect direction.	• Incorrect wiring.	• Rewire motor according to system schematic and/or switch two incoming motor phases.
Motor heats up excessively or thermal overload protection trips	• Overload. • Ambient temperature is too high. • Inadequate cooling. • Operation is outside the allowed duty cycle. • Motor protection device may be defective. • Excessive supply voltage. • System short or damaged stator.	• Make sure load is free. Verify motor amp draw compared to nameplate rating. Reduce load or consider a larger motor. • Do not operate above the rated conditions. • Correct cooling air supply. Open and clear cooling air passages. Retrofit with forced ventilator fan if needed. • Adjust operating duty cycle or contact a specialist to select a suitable motor or drive. • Replace motor protection device. • Adapt motor supply voltage. • Check for loose, cut or damaged wires. Check stator winding for defects or burn damage.
Excessive Noise or Vibration	• Motor bearings contaminated or damaged. • Excessive motor shaft end play. • Misaligned or imbalanced load.	• Test motor by itself. If bearings are bad noise may be heard or roughness detected. Replace bearings. Add lubrication if bearings have grease fittings. • Check shaft endplay with motor and system power disconnected. If shaft movement is excessive replace motor shaft bearings. • Check all mating shaft connections for proper alignment and correct all imbalanced load conditions.
1 Ph Start Capacitor Failures	• Motor is not coming up to speed quickly enough. • Motor is being cycled frequently • Start switch is defective or damaged.	• Verify motor size to load conditions. Motor should come up to speed in no more than 2-3 seconds. • Verify duty cycle and consult specialist for recommendations. • Replace start switch.
1 Ph Run Capacitor Failures	• Possible power surge to motor caused by transient voltage or lightening. • Excessive ambient temperature.	• Install proper surge protection. • Verify ambient conditions do not exceed nameplate value.

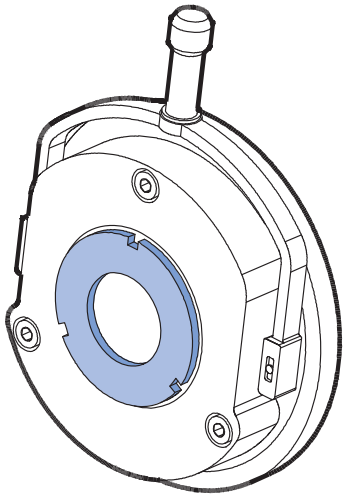

General Instructions

This manual describes general operating and maintenance guidelines for a majority of brake products shipped by NORD Gear. This instruction manual is not intended to include a comprehensive listing of all details or procedures required for installation, operation and maintenance.

Brakes covered in this manual are manufactured by PRECIMA. Please feel free to contact NORD with any questions about the supplied brake components.

Safety Notice

Only qualified personnel should attempt installation, operation and maintenance of NORD brakes. Read this manual in its entirety before operating, commissioning, servicing, or assembling the motor brake. If you have a question about a procedure or are uncertain about any detail, seek clarification and DO NOT PROCEED!

⚠ *WARNING* ⚠

- This equipment contains high electrical voltage. Remove and lockout all power from the electric motor and brake before any work is completed on the brake.
- The user is responsible for conforming to all national and local electrical and safety codes. Wiring practices, proper grounding, disconnects, and over current protection, are of particular importance.
- Make certain the load is supported when servicing the brake. Removing power from the brake or removing the brake from the motor will release the load, which may cause severe injury or death.
- Failure to follow proper procedures and precautions may result in severe bodily injury or death.

Brake Operation

The standard NORD motor brake is “spring-set”. When power is removed and the brake is de-energized (power-off), the brake springs exert a force against the armature plate in turn preventing the brake rotor (or brake disc) from rotating. When the brake coil is energized (power-on), a magnetic field builds and pulls the armature plate across the air gap to the brake casing, which releases the brake rotor and allows the motor shaft to rotate.

Figure 1: Basic Brake Operation

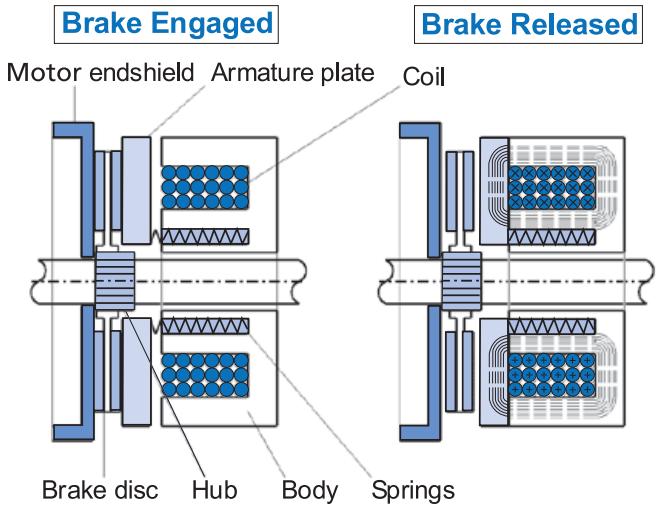

NORD brakes are DC voltage brakes and in most instances are supplied with a motor mounted brake rectifier for easy connections to AC power. AC power is taken directly from the power line or from the terminal block of the motor and converted to DC by the supplied rectifier.

ⓘ *IMPORTANT NOTE* ⓘ

If the motor is connected to a frequency inverter, soft start, or is a two-speed motor, the AC power must be supplied to the brake rectifier separately from the motor power.

Advantages

- Each NORD motor frame size has a number of brake sizes available, with different torque capacities.
- Brake torque adjustments are possible by changing the brake spring combinations. In addition, brake sizes from 5-40 Nm (3.7-30 lb-ft) are typically supplied with an additional spanner-nut adjustment on the back of the brake.
- NORD brakes provide a high degree of safety because when power is removed the brake will automatically set to hold the load.
- The brake rotor or brake disc is environmentally safe and asbestos-free.
- The connection between the rectifier and the brake coil is completed at the factory and the brake air-gap is factory-set but can be adjusted in the event of wear.

General Selection Considerations

As indicated in the NORD catalog, each NORD motor can be supplied with a number of brake torque sizes.

NORD relies on the equipment builder to specify appropriate brake sizing for their application, while giving consideration to the following:

- For most applications, we advise sizing the brake to 1.5 - 2 times the motor rated torque.
- For vertical applications, it may be advisable to size the brake size up to 3 times the motor rated torque.
- For some applications, it may be necessary to specify a reduced brake torque setting to prevent excessive peak load conditions developed at the reducer output.
- On travel drive applications, excessive brake torque may lead to wheel skid; in addition on crane applications excess hoist-cable swing can result.

⚠ CAUTIONS ⚠

- **Brake torque -** The brake torque is measured with a mean friction radius of the brake pad surface with a circumferential speed of 1m/sec (197 fpm).
- **Brake torque tolerance -** For different applications and operating conditions, brake torque can vary from +40/-20% compared to the rated brake torque.
- **Hoisting (lifting/lowering) applications -** must have the brake wired for fast response (DC-switching)
- **Initial operation & wear-in period -** In new condition, the brake will have a reduced torque of up to 30%. In order to achieve full rated brake torque, a short run-in period is required. The run in time will vary depending on system loads.
- **The brake rotor or brake pad -** must be protected against foreign matter, oil and grease. Contaminants of this type can greatly influence wear and reduce breaking torque.

Brake Torque Adjustment

Brake torque adjustments are possible by changing the brake spring combinations or by removing springs (Table 1).

In addition, brake sizes from 5-40 Nm (3.7-30 lb-ft) are typically supplied with a threaded adjustment nut or spanner nut to allow for additional fine torque adjustments of the brake. The braking torque can be adjusted by unscrewing the spanner nut a number of turns or "clicks" with a spanner wrench (Table 2).

Table 1a: Brake Torque Reduction - Spring Removal

"Brake Size"	7 Springs		5 Springs		3 Springs	
	[Nm]	[lb-ft]	[Nm]	[lb-ft]	[Nm]	[lb-ft]
BRE 5	5	3.7	3.5	2.6	2	1.5
BRE10	10	7.4	7	5.2	4	3.0
BRE20	20	14.8	14	10.3	8	5.9
BRE40	40	29.5	28	20.7	17	12.5
BRE60	60	44.3	43	31.7	26	19.2
BRE100	100	73.8	70	51.6	42	31.0
BRE150	150	111	107	78.9	65	47.9

On brake sizes 5-150 Nm (3.7-111 lb-ft) full brake torque is achieved with all (7) springs. The brake springs are placed in such a manner where there are (3) inner and (4) outer springs. When adjusting the brake torque, start by removing the outer springs at opposite corners to prevent uneven brake wear.

Table 1b: Brake Torque Reduction - Spring Removal

"Brake Size"	8 Springs		6 Springs		4 Springs	
	[Nm]	[lb-ft]	[Nm]	[lb-ft]	[Nm]	[lb-ft]
BRE250	250	184	187	138	125	92
BRE400	400	295	300	221	200	148
BRE800	800	590	600	443	400	295
BRE1200	1200	885	900	664	600	443

On brake sizes 250-1200 Nm (184-885 lb-ft) full brake torque is achieved with all (8) springs. The brake springs are placed in such a manner where there are (4) inner and (4) outer springs. When adjusting the brake torque, start by removing the outer springs at opposite corners to prevent uneven brake wear.

Table 2: Spanner Nut Adjustment

"Brake Size"	Torque Reduction*		Max. Turns	Minimum Torque✹	
	[Nm]	[lb-ft]		[Nm]	[lb-ft]
BRE 5	0.2	0.15	6	0.8	0.59
BRE10	0.2	0.15	12	1.6	1.18
BRE20	0.3	0.22	12	4.4	3.25
BRE40	1	0.74	9	8.0	5.90

✹ **With the minimum number of springs and maximum number of turns to the spanner nut.**

* **Per each turn of the spanner nut**

Brake sizes from 5-40 Nm (3.7-30 lb-ft) are typically supplied with a threaded adjustment nut or spanner nut. Additional fine torque adjustment can be made by unscrewing the spanner nut a number of turns or "clicks" with a spanner wrench.

Brake Control Rectifiers

NORD brake control rectifiers convert AC voltage to DC voltage. Rectifiers are used because most applications require AC voltage to power the motor, but DC power is required to power the brake and DC power is not typically available. NORD brake motors typically include the rectifier located inside the terminal box.

Rectifier Advantages

- Individual power source for each brake.
- Compact size, mounted inside the terminal box.
- Multiple types, voltage options and release/engagement modes available.
- Mountable in a separate control cabinet.
- Integral protection against voltage spikes.

Model	Type	Part No.	Color	Input Voltage V_{AC} ± 10%	Rated Current A_{DC} (40°C)	Rated Current A_{DC} (75°C)
GVE20L	Full-wave	19141000	Black	110-275	1.5	1.0
GVE20V	Full-wave	19141030	Black	110-275	1.5	1.0
GHE40L	Half-wave	19141010	Yellow	200-480	2.0	1.0
GHE40V	Half-wave	19141040	Yellow	200-480	2.0	1.0
GHE50L	Half-wave	19141020	Gray	200-575	2.0	1.0
GHE50V	Half-wave	19141050	Gray	200-575	2.0	1.0
GUE40V	Dual-wave	19140300	Black	230-460	0.7	0.5
PMG500	Push-Hybrid	19140200	Black	200-500	4.0	2.8

Rectifier electronics are sealed for moisture-protection; electronics on models ending with the suffix "V" are resin-encapsulated to provide added protection if water should get into the motor terminal box.

Rectifier Types

Full-wave rectifier [GVE]:
A rectifier in which both the positive and negative half-cycles of the AC input signal are rectified to produce a uni-directional DC current supply to the load or the brake. The output voltage is 90% of the input voltage ($V_{DC} = 0.90 \times V_{AC}$).

Half-wave rectifier [GHE]:
A rectifier in which only alternate half-cycles of the AC input signal are rectified to produce a uni-directional DC current supply to the load or the brake. The output voltage is 45% of the input voltage ($V_{DC} = 0.45 \times V_{AC}$).

Dual Wave Rectifier [GUE]
A rectifier that can be wired as either a full-wave rectifier or a half-wave rectifier depending upon how it is connected to the AC input signal.

IMPORTANT NOTE

If the motor is connected to a frequency inverter, soft start, or is a two-speed motor, then seperate AC power must be supplied to the brake rectifier.

Rectifier Types [Ctd.]

PMG 500 Push-Hybrid rectifier [PMG]:
A fast-acting or push-hybrid brake rectifier provides an initial "push" in the form of a timed full-wave brake-release function, which is then followed by a continuous half-wave brake-holding function. There are two ways to apply these rectifiers as follows:

- "Overexcitation" of the brake coil provides faster brake release or improved cycling capacity. The DC voltage of the brake coil is determined based upon using a half-wave rectifier. The output voltage is 45% of the input voltage ($V_{DC} = 0.45 \times V_{AC}$).
- "Reducer-Power Holding" of the brake coil maintains the brake in a released state by using only 25% of the power needed for the initial brake release. This results in very fast brake stopping. The DC voltage of the brake coil is determined based upon using a full-wave rectifier. The output voltage is 90% of the input voltage. ($V_{DC} = 0.90 \times V_{AC}$).

NORD offers additional fast-acting rectifiers besides the PMG 500. For additional details please reference User Manual U35100 – Fast Acting Brake Rectifiers.

IMPORTANT NOTE

In order to prevent rapid wear, the PMG 500 rectifier is required when utilizing the larger 800 Nm (590 lb-ft) and 1200 Nm (885 lb-ft) twin-rotor brakes. The PMG 500 rectifier is wired to "overexcite" the brake during its initial release.

Brake Switching Options

The rectifiers discussed in this manual can be wired to allow brake switching at either the AC power source (input) or the DC power source (output).

- AC switching allows the brake rectifier to be powered directly from the motor's terminal block with no additional wiring. However, this provides a slower brake stopping time due to the additional time needed to de-energize or collapse the motor's magnetic field.
- DC switching directly interrupts the current flow in the DC circuit of the brake rectifier. This method of brake switching guarantees faster brake stopping or brake engagement times.

WARNING

When the moving system undergoes a change in height (such as in a lift or incline conveyor application) or if the system tends to speed up or overhaul during normal operation, then DC-switching of the brake is required in order to prevent excessive load movement, drift or falling loads during stopping.

Figure 2.1: GVE/GHE Dimensions

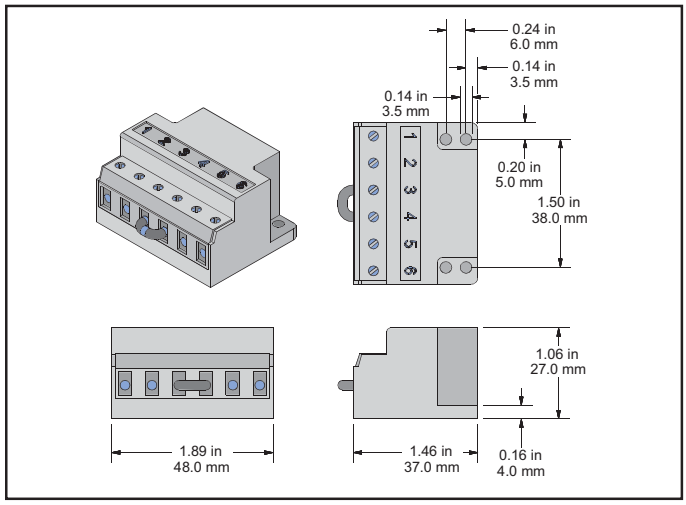

Figure 3.1: GUE Dimensions

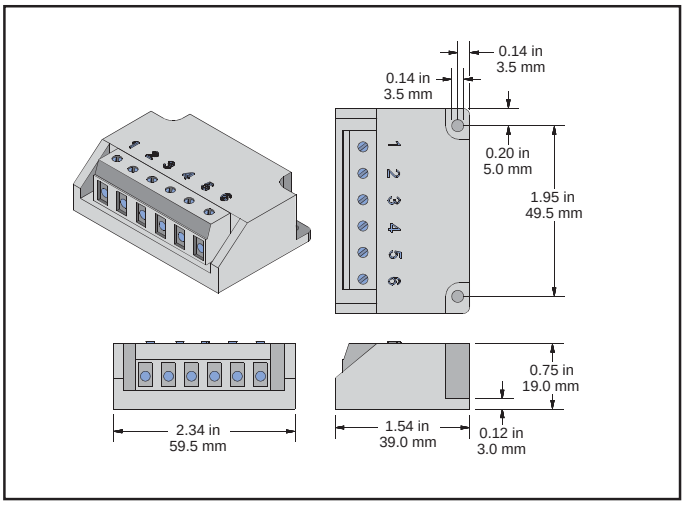

Figure 2.2: GVE/GHE Braking Methods

STANDARD STOPPING AC-SWITCHING

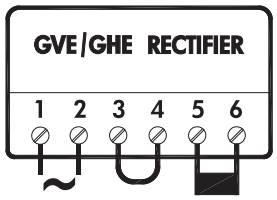

1 & 2	3 & 4	5 & 6
AC BRAKE VOLTAGE	JUMPER	DC BRAKE

FAST STOPPING DC-SWITCHING

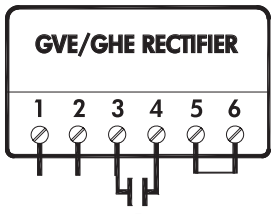

1 & 2	3 & 4	5 & 6
AC BRAKE VOLTAGE	NORMALLY OPEN CONTACT	DC BRAKE

* The normally open contact/s (NO) is not supplied by NORD it must close at the same time power is supplied to the brake. The contact must be capable of switching inductive loads and/or be rated at IEC AC3.

Braking Method	Break Release (Start)	Brake Engage (Stop)	Power Source
10	Standard	Standard (AC-Switching)	Motor terminals
15	Standard	Fast (DC-switching)	Motor terminals
20	Standard	Standard (AC-Switching)	Separate power
25	Standard	Fast (DC-switching)	Separate power

Figure 3.2: GVE/GHE Braking Methods

STANDARD STOPPING AC-SWITCHING

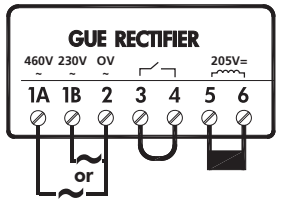

1B & 2	3 & 4	5 & 6
AC BRAKE VOLTAGE	JUMPER	DC BRAKE

FAST STOPPING DC-SWITCHING

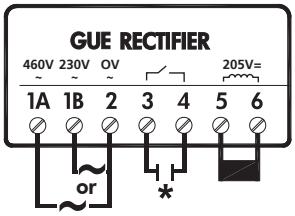

1 & 2	3 & 4	5 & 6
AC BRAKE VOLTAGE	NORMALLY OPEN CONTACT	DC BRAKE

* The normally open contact/s (NO) is not supplied by NORD it must close at the same time power is supplied to the brake. The contact must be capable of switching inductive loads and/or be rated at IEC AC3.

Braking Method	Break Release (Start)	Brake Engage (Stop)	Power Source
10	Standard	Standard (AC-Switching)	Motor terminals
15	Standard	Fast (DC-switching)	Motor terminals
20	Standard	Standard (AC-Switching)	Separate power
25	Standard	Fast (DC-switching)	Separate power

Figure 4.1: PMG 500 Dimensions

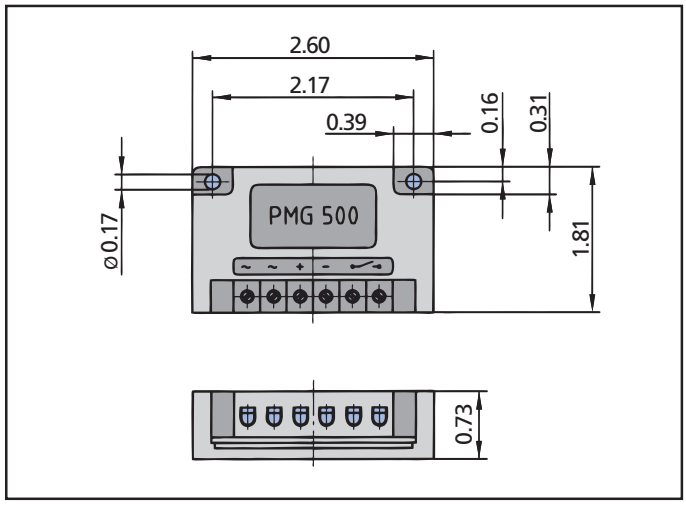

PMG 500 Push-Hybrid Rectifier

The PMG 500 rectifier provides an initial "push" the form of a timed full-wave brake-release function, which is then followed by a continuous half-wave brake-holding function.

- In order to prevent rapid wear, the PMG 500 rectifier is required when utilizing the larger 800 Nm (590 lb-ft) - and 1200 Nm (885 lb-ft) twin-rotor brakes.
- The PMG 500 rectifier is wired to "overexcite" the brake during its initial release. The DC voltage of the brake coil is determined based upon using a half-wave rectifier.

In some applications the PMG rectifier may be used for "Reduced Power Holding" or very fast brake engagement (See user manual U35100 for details).

IMPORTANT NOTE

If the motor is connected to an AC drive, soft start, or is a two-speed motor, the AC power must be supplied to the brake rectifier seperately from the motor power.

Figure 4.2: PMG 500 Braking Methods

STANDARD STOPPING (AC-SWITCHING)

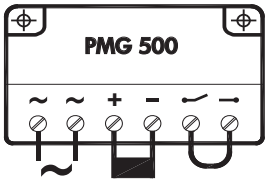

~ & ~	+ & -	⊷ & ⊸
AC BRAKE VOLTAGE	DC BRAKE	JUMPER

FAST & VERY FAST STOPPING (DC-SWITCHING)

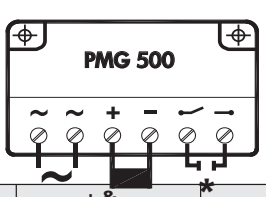

~ & ~	+ & -	⊷ & ⊸
AC BRAKE VOLTAGE	DC BRAKE	NORMALLY OPEN CONTACT

* The normally open contact/s (NO) is not supplied by NORD it must close at the same time power is supplied to the brake. The contact must be capable of switching inductive loads and/or be rated at IEC AC3.

Braking Method	Break Release (Start)	Brake Engage (Stop)	Power Source
30	Fast (Overecitation)	Standard (AC Switching)	Motor terminals
35	Fast (Overecitation)	Fast (DC Switching)	Motor terminals
45	Fast (Overecitation)	Standard (AC Switching)	Seperate power
50	Fast (Overecitation)	Fast (DC Switching)	Seperate power

BRAKE SIZE: BRE 5 **BRAKE TORQUE: 5 Nm (3.7 lb-ft) max.**

NORD Brake P/N	Half-Wave [V_{AC}]	Half-Wave [A_{AC}]	Full-Wave [V_{AC}]	Full-Wave [A_{AC}]	P_C [W]	V_C [V_{DC}]	I_C [A_{DC}]	R_C [Ω]
19010212	-	-	-	-	22	24	0.92	26.0
19010912	230	0.09	115	0.19	22	105	0.21	500
19011902	400	0.05	200	0.11	22	180	0.12	1475
19011912	460	0.05	230	0.10	22	205	0.11	1900
19012212	500	0.04	250	0.08	21	225	0.09	2450
19012512	575	0.04	-	-	22	250	0.09	2850

BRAKE SIZE: BRE20 **BRAKE TORQUE: 20 Nm (15 lb-ft) max.**

NORD Brake P/N	Half-Wave [V_{AC}]	Half-Wave [A_{AC}]	Full-Wave [V_{AC}]	Full-Wave [A_{AC}]	P_C [W]	V_C [V_{DC}]	I_C [A_{DC}]	R_C [Ω]
19030222	-	-	-	-	34	24	1.42	16.9
19030922	230	0.18	115	0.35	41	105	0.39	270
19031922	400	0.09	200	0.17	34	180	0.19	950
19031932	460	0.07	230	0.13	30	205	0.15	1391
19032222	500	0.07	250	0.15	36	225	0.16	1391
19032522	575	0.06	-	-	35	250	0.14	1780

BRAKE SIZE: BRE 60 **BRAKE TORQUE: 60 Nm (44 lb-ft) max.**

NORD Brake P/N	Half-Wave [V_{AC}]	Half-Wave [A_{AC}]	Full-Wave [V_{AC}]	Full-Wave [A_{AC}]	P_C [W]	V_C [V_{DC}]	I_C [A_{DC}]	R_C [Ω]
19050252	-	-	-	-	52	24	2.18	11.0
19050952	230	0.27	115	0.54	63	105	0.60	174
19051902	400	0.13	200	0.27	54	180	0.30	602
19051952	460	0.12	230	0.25	57	205	0.28	740
19052252	500	0.10	250	0.20	50	225	0.22	1004
19052552	575	0.09	-	-	48	250	0.19	1300

BRAKE SIZE: BRE 150 **BRAKE TORQUE: 150 Nm (110 lb-ft) max.**

NORD Brake P/N	Half-Wave [V_{AC}]	Half-Wave [A_{AC}]	Full-Wave [V_{AC}]	Full-Wave [A_{AC}]	P_C [W]	V_C [V_{DC}]	I_C [A_{DC}]	R_C [Ω]
19070252	-	-	-	-	77	24	3.20	7.5
19070952	230	0.39	115	0.79	92	105	0.88	120
19071902	400	0.18	200	0.36	73	180	0.40	445
19071952	460	0.15	230	0.31	70	205	0.34	600
19072252	500	0.15	250	0.30	76	225	0.34	670
19072552	575	0.14	-	-	76	250	0.30	825

BRAKE SIZE: BRE 400 **BRAKE TORQUE: 400 Nm (295 lb-ft) max.**

NORD Brake P/N	Half-Wave [V_{AC}]	Half-Wave [A_{AC}]	Full-Wave [V_{AC}]	Full-Wave [A_{AC}]	P_C [W]	V_C [V_{DC}]	I_C [A_{DC}]	R_C [Ω]
19092252	-	-	-	-	144	24	6.00	4.0
19092952	230	0.62	115	1.24	145	105	1.38	76
19093902	400	0.35	200	0.70	141	180	0.78	230
19093952	460	0.31	230	0.62	140	205	0.68	300
19093962	500	0.29	250	0.57	143	225	0.63	355
19093972	575	0.26	-	-	142	250	0.57	440

BRAKE SIZE: BRE 1200 **BRAKE TORQUE: 1200 Nm (885 lb-ft) max. ❷**

NORD Brake P/N	Half-Wave [V_{AC}]	Half-Wave [A_{AC}]	Full-Wave [V_{AC}]	Full-Wave [A_{AC}]	P_C [W]	V_C [V_{DC}]	I_C [A_{DC}]	R_C [Ω]
19099802	230	0.62	-	-	145	105	1.38	76
19099902	400	0.27	-	-	108	180	0.60	300
19099902	460	0.31	-	-	140	205	0.68	300

BRAKE SIZE: BRE 10 **BRAKE TORQUE: 10 Nm (7.4 lb-ft) max.**

NORD Brake P/N	Half-Wave [V_{AC}]	Half-Wave [A_{AC}]	Full-Wave [V_{AC}]	Full-Wave [A_{AC}]	P_C [W]	V_C [V_{DC}]	I_C [A_{DC}]	R_C [Ω]
19020222	-	-	-	-	28	24	1.17	20.6
19020922	230	0.14	115	0.28	33	105	0.32	332
19021902	400	0.07	200	0.15	29	180	0.16	1100
19021922	460	0.06	230	0.11	26	205	0.13	1620
19022222	500	0.06	250	0.12	30	225	0.13	1700
19022522	575	0.05	-	-	27	250	0.11	2323

BRAKE SIZE: BRE40 **BRAKE TORQUE: 40 Nm (30 lb-ft) max.**

NORD Brake P/N	Half-Wave [V_{AC}]	Half-Wave [A_{AC}]	Full-Wave [V_{AC}]	Full-Wave [A_{AC}]	P_C [W]	V_C [V_{DC}]	I_C [A_{DC}]	R_C [Ω]
19040232	-	-	-	-	41	24	1.69	14.2
19040932	230	0.21	115	0.42	49	105	0.46	226
19041902	400	0.11	200	0.22	45	180	0.25	723
19041922	460	0.11	230	0.22	50	205	0.24	840
19042232	500	0.09	250	0.18	44	225	0.20	1150
19042532	575	0.08	-	-	44	250	0.18	1425

BRAKE SIZE: BRE 100 **BRAKE TORQUE: 100 Nm (74 lb-ft) max.**

NORD Brake P/N	Half-Wave [V_{AC}]	Half-Wave [A_{AC}]	Full-Wave [V_{AC}]	Full-Wave [A_{AC}]	P_C [W]	V_C [V_{DC}]	I_C [A_{DC}]	R_C [Ω]
19060252	-	-	-	-	80	24	3.33	7.2
19060952	230	0.39	115	0.79	92	105	0.88	120
19061902	400	0.21	200	0.42	83	180	0.46	390
19061952	460	0.20	230	0.40	91	205	0.44	464
19062252	500	0.16	250	0.32	79	225	0.35	643
19062552	575	0.14	-	-	79	250	0.31	795

BRAKE SIZE: BRE 250 **BRAKE TORQUE: 250 Nm (185 lb-ft) max.**

NORD Brake P/N	Half-Wave [V_{AC}]	Half-Wave [A_{AC}]	Full-Wave [V_{AC}]	Full-Wave [A_{AC}]	P_C [W]	V_C [V_{DC}]	I_C [A_{DC}]	R_C [Ω]
19080252	-	-	-	-	99	24	4.14	5.8
19080952	230	0.51	115	1.03	120	105	1.14	92
19081902	400	0.27	200	0.54	108	180	0.60	300
19081952	460	0.24	230	0.49	111	205	0.54	380
19082252	500	0.20	250	0.40	100	225	0.44	507
19081962	575	0.17	-	-	95	250	0.38	655

BRAKE SIZE: BRE 800 **BRAKE TORQUE: 800 Nm (590 lb-ft) max. ❶**

NORD Brake P/N	Half-Wave [V_{AC}]	Half-Wave [A_{AC}]	Full-Wave [V_{AC}]	Full-Wave [A_{AC}]	P_C [W]	V_C [V_{DC}]	I_C [A_{DC}]	R_C [Ω]
19094252	-	-	-	-	144	24	6.00	4.0
19094952	230	0.62	-	-	145	105	1.38	76
19095902	400	0.27	-	-	108	180	0.60	300
19095902	460	0.31	-	-	140	205	0.68	300
19095962	500	0.29	-	-	143	225	0.63	355

IMPORTANT NOTE

The PMG500 rectifier is required when utilizing the larger 800 Nm (590 lb-ft) - and 1200 Nm (885 lb-ft) twin-rotor brakes. In order to prevent rapid wear, NORD recommends using the PMG500 rectifier to "overexcite" the brake during its release. The brake coil should be sized utilizing the PMG rectifier like a half-wave rectifier.

Half-Wave [V_{AC}] = AC supply voltage with half-wave rectifier

Half-Wave [A_{AC}] = AC supply current to half-wave rectifier

Full-Wave [V_{AC}] = DC supply voltage with full-wave rectifier

Full-Wave [A_{AC}] = AC supply current to full-wave rectifier

Pc [W] = Power to brake coil

Vc [V_{DC}] = DC brake coil voltage (range -30% to +10%)

Ic [A_{DC}] = DC current top brake coil

Rc [V] = Brake coil resistance (±5%)

❶ When used as a stopping brake, evaluation of brake work is essential.

❷ Designed as a holding brake or emergency stop brake only.

Brake coil data based upon ambient conditions of 20°C (68°F).

General Maintenance

Brake Air Gap

In order to obtain optimal brake performance and maximum brake life, it is necessary to periodically check and reset the brake air gap. As the brake rotor wears and decreases in thickness, the air gap will increase. If the air gap is too large, the brake coil may not have enough magnetic force to pull the metal armature disc across the gap and the brake will drag.

IMPORTANT NOTE

When a complete brake motor is supplied by NORD, the air gap is already set at the factory. If the brake is ordered as a part, the air gap must be set in the field. All brake air gap adjustments must be made with the brake assembled onto the motor and power off (brake engaged).

Hand Release Lever (HL)

It is common to supply the NORD brake with a hand release lever assembly. The hand release lever allows the brake to be manually released without requiring that the brake be energized with voltage. The lever has a spring return that allows the brake to be hand released and returned automatically to its set position. The handle of the hand release lever can be unscrewed for easy removal.

Figure 5

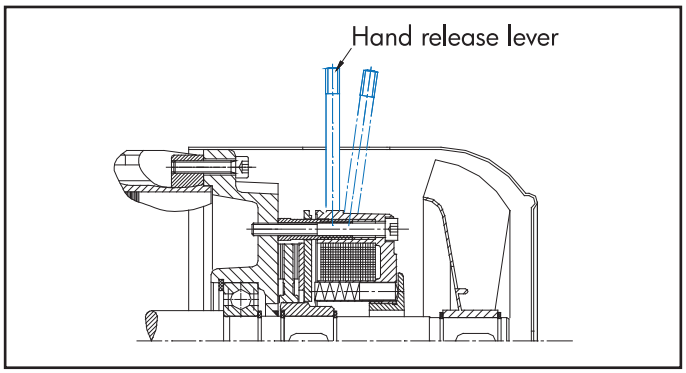

IMPORTANT NOTE

When a brake motor with hand-lever is supplied by NORD, both the hand lever air gap and brake air gap are set at the factory. When ordered as parts, proper hand-lever and air gap adjustments must be made in the field. Hand-lever adjustments must always be made prior to assembling the brake to the motor. All brake air gap adjustments must be made with the brake assembled to the motor and the power off (brake engaged).

Brake Hand-Lever Installation and Adjustment

Figure 6

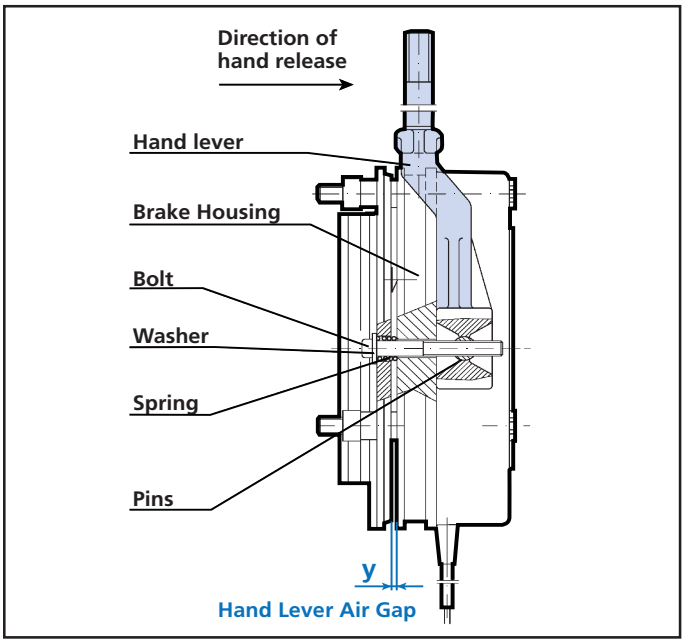

1. Place the hand-lever over the brake housing (as shown) and align the pins.
2. Screw the bolts with washer and spring into the pins.
3. Using a feeler gage, adjust the hand-lever air gap per Table 5.

Table 5: Hand-Lever Air Gap Setting

Brake Size	Dimension "y" ❶ [mm]	[in]
BRE 5	1	0.040
BRE 10	1	0.040
BRE 20	1	0.040
BRE 40	1	0.040
BRE 60	1	0.040

Brake Size	Dimension "y" ❶ [mm]	[in]
BRE 100	1.2	0.047
BRE 150	1.2	0.047
BRE 250	1.5	0.059
BRE 400	1.5	0.059
BRE 800	1.5	0.059
BRE 1200	1.5	0.059

❶ Tolerance: + 0.008 in [+ 0.2 mm]

IMPORTANT NOTE

When setting the hand-lever gap or dimension "y" the magnetic brake coil housing and the anchor plate must be kept uniform all around.

WARNING

- To assure proper assembly and proper functioning of the brake, the hand-lever must be assembled to the brake, and the hand-lever air gap must be adjusted, before the brake is assembled to the motor.
- Once adjusted properly, the hand-lever air gap setting should not be altered, even when readjusting the air gap setting.

Setting the Brake Air Gap

NORD spring-loaded brakes are virtually maintenance free. However, the air-gap of the brake rotor or brake disc must be periodically checked and adjusted. If necessary, the worn brake rotor must be replaced. Table 6 serves as guide to check and set the brake air gap as needed.

IMPORTANT NOTE

When a complete brake motor is supplied by NORD, the air gap is already set at the factory. If the brake is ordered as a part, the air gap must be set in the field. All brake air gap adjustments must be made with the brake assembled to the motor and the power off (brake engaged).

The brake air gap is checked by placing a feeler gage between metal anchor plate and the brake coil housing as shown in Figure 6. This procedure is identical even for the larger BRE800 and BRE1200 twin rotor brakes.

Figure 7 – Setting the Brake Air Gap

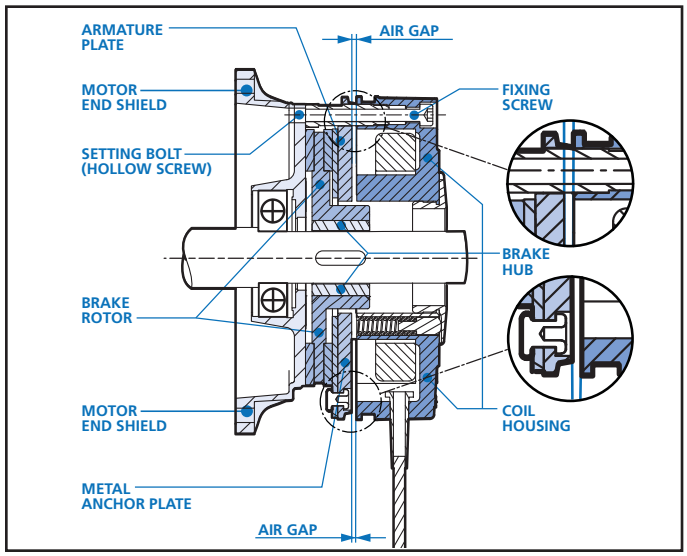

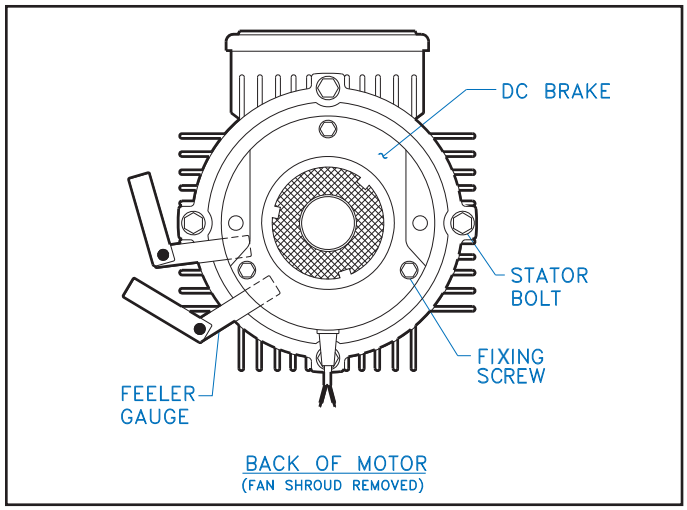

Procedure

1. Loosen the fixing screws that attach the brake to the motor's end-shield by approximately half a turn.
2. If required, the brake assembly may be loosened slightly from the motor's end shield by turning the threaded setting bolts (hollow screws) that surround the fixing screws, counter clockwise, into the brake coil housing.
3. Depending upon whether or not the air gap needs to be decreased or increased, turn the fixing screws accordingly until the desired nominal air gap (Table 6) is reached, as measured using the appropriate feeler gauge.
   - Turning the fixing screws clockwise allows the brake coil housing to be moved towards the anchor plate and reduces the air gap.
   - Turning the fixing screws counter-clockwise allows the brake coil housing to be moved away from the anchor plate and increases the air gap.
4. If the setting bolts (hollow screws) were adjusted as suggested in Step 2, re-secure the brake coil housing firmly against the motor's end shield by turning the setting bolts (hollow screws) clockwise, out of the brake coil housing.
5. Tighten the fixing screws to the appropriate torque.
6. Re-check and measure the air gap in multiple locations to check for appropriate spacing. Repeat the steps as needed until the desired air gap spacing is uniform and consistent all the way around the brake.

Table 6: Brake Air Gap Settings

Brake Size	Fixing Screw Tightening Torque		Nominal Air Gap Setting ❶		Maximum Air Gap ❷	
	[lb-ft]	[Nm]	[in]	[mm]	[in]	[mm]
BRE 5	2.2	3	0.008	0.2	0.024	0.6
BRE10	4.4	6	0.008	0.2	0.028	0.7
BRE20	7.4	10	0.012	0.3	0.031	0.8
BRE40	7.4	10	0.012	0.3	0.035	0.9
BRE60	18	25	0.012	0.3	0.039	1.0
BRE100 ❸	18	25	0.016	0.4	0.043	1.1
BRE150 ❸	18	25	0.016	0.4	0.043	1.1
BRE250	37	50	0.020	0.5	0.047	1.2
BRE400	37	50	0.020	0.5	0.047	1.2
BRE800	37	50	0.028	0.7	0.047	1.2
BRE1200	37	50	0.028	0.7	0.047	1.2

❶ Tolerance: + 0.004 in [+ 0.1 mm]

❷ Brake air gap must be re-adjusted before the stated value.

❸ When using the stainless steel friction plate (RG) increase the nominal air gap to 0.6 mm (0.024 in.).

Brake Rotor (Brake Disc) Wear Assessment

Periodically the brake rotor or brake disc must also be checked for wear. If the brake rotors wear approaches the minimum allowed thickness, then the part should be replaced. Use Table 7 to determine whether or not the brake rotor requires replacement.

Table 7: Brake Rotor Thickness

Brake Size	Nominal Brake Rotor Thickness ❶		Minimum Brake Rotor Thickness ❷	
	[in]	[mm]	[in]	[mm]
BRE 5	0.295	7.5	0.177	4.5
BRE10	0.335	8.5	0.217	5.5
BRE20	0.406	10.3	0.295	7.5
BRE40	0.492	12.5	0.374	9.5
BRE60	0.571	14.5	0.453	11.5
BRE100	0.630	16	0.492	12.5
BRE150	0.709	18	0.571	14.5
BRE250	0.787	20	0.650	16.5
BRE400	0.787	20	0.650	16.5
BRE800	0.787	20	0.650	16.5
BRE1200	0.866	22	0.689	17.5

❶ As new condition.

❷ Worn condition - brake rotor replacement is required!

Brake Pad Replacement (reference to parts list on page 8)

When the brake pad is worn the pad should be replaced to maintain proper brake operation and ensure safety.

Required Tools

- Phillips head screw drivers (fan shroud removal)
- External snap ring pliers (fan and brake hub removal).
- Large flat head screw driver or small pry bar (fan removal)
- Metric T-handle wrenches and open-end wrenches.

Procedure

1. Remove the fixing screws (946) securing the fan cover (940) to the motor end-shield (932). If the brake has a hand release (937), the lever arm should be removed by unscrewing it.
2. Remove the fan cover (940) and note the position of the hand release slot if applicable.
3. Remove the snap ring holding the cooling fan (939) and carefully remove the cooling fan (939), key and second snap ring (997).
4. If the brake is equipped with a dust boot (992), remove it.
5. Remove the socket head cap screws holding the brake coil (936) to the motor end-shield (932).
6. Remove the brake coil (936), noting the hand release (937) and power cable locations.
7. Slide the brake rotor (993) off the brake hub (938) which is secured to the motor shaft.
8. Clean the brake, install the new brake rotor pad and reassemble the brake in reverse order of the steps outlined.

Optional Brake Accessories

NORD can supply a variety of brake options and accessories, of which some of the most common are noted below.

Hand Release Lever (HL)

The hand release lever allows the brake to be manually released without requiring that the brake be energized with voltage. The lever has a spring return that allows the brake to be hand released and returned automatically to its set position. The handle of the hand release lever can be unscrewed for easy removal.

Figure 8

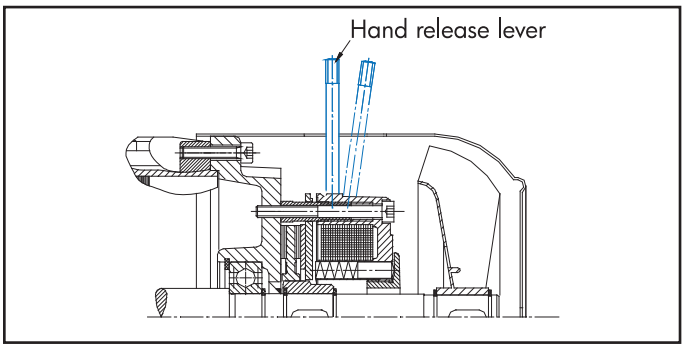

Locking Hand Release Lever (FHL)

This option allows the brake to be manually released and locked off without requiring voltage to the brake. The lock mechanism prevents the spring from returning the brake to a closed state without manual action by the user. The hand release lever can be unscrewed for easy removal.

Figure 9

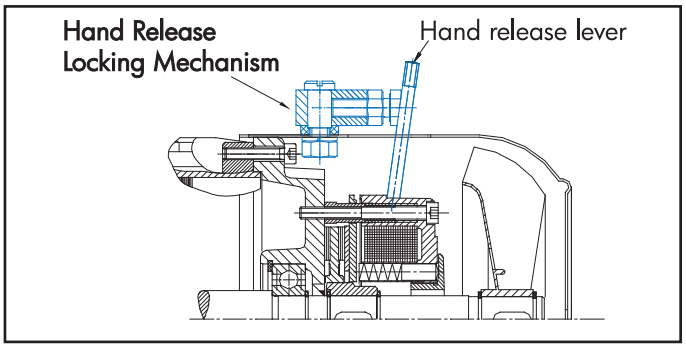

Corrosion Protected Brake (RG)

The brake is fitted with a stainless steel brake plate to provide additional corrosion protection in severe and wet environments.

Dust & Corrosion Protected Brake (SR)

A rubber-sealing boot is installed on the brake to provide additional protection in dusty environments. This feature includes the stainless steel brake plate (RG).

IP66 Brake (IP66)

NORD can also provide an IP66 brake option designed for a bigger degree of protection against severe environments.

Parts List - Precima Brakes

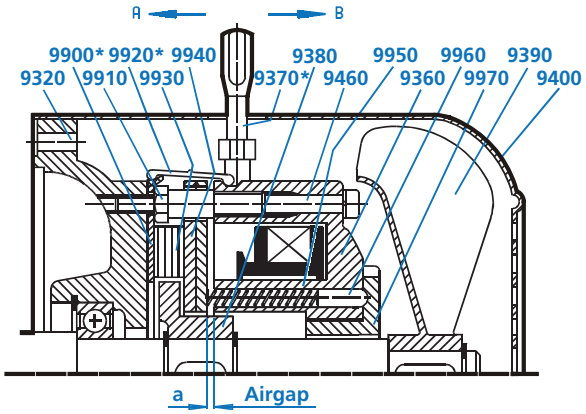

Normal Design, Enclosure IP55 with following options:

RG – Stainless Steel Disc (Item 9900)
SR – Dust Boot-includes Option RG (Item 9920)
HL – Hand Release (Item 9370)

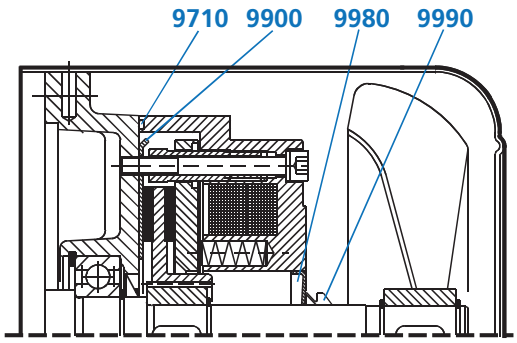

Optional Brake with optional IP66 enclosure

9320	Non-drive end shield	9710	O-ring - optional	9960	Pressure plate adjustment**
9360	Brake coil	9900	Friction plate - optional	9970	Adjustable ring **
9370	Manual brake lever – optional	9910	Setting bolt	9980	Bushing/seal - optional
9380	Brake hub	9920	Dust protection ring	9990	V-ring - optional
9390	Fan	9930	Brake rotor		
9400	Fan cover	9940	Armature plate		
9460	Fixing screw	9950	Spring		

***** Only for brakes that are 5 Nm to 40 Nm***

Table 8: Spare Parts

Brake Size	NORD Motor Frame	Brake Rotor [Item 9930]	Brake Hub [Item 9380]	Brake Hub Bore / (Style)	Hand Release (HL) [Item 9370]	Stainless Disc (RG) [Item 9900]	Dust Boot (SR) [Item 9920]
BRE5	63/71/80	19120042	19100112	15 mm (hex)	19150042	19130042	19110042
BRE10	63/71	19120082	19100212	15 mm (hex)	19150082	19130082	19110082
BRE10	80/90	19120082	19100222	20 mm (hex)	19150082	19130082	19110082
BRE20	80/90/112	19120162	19100322	20 mm (hex)	19150162	19130162	19110162
BRE20	100	19120162	19100332	25 mm (hex)	19150162	19130162	19110162
BRE40	90/100	19120322	19100452	25 mm (spline)	19150322	19130322	19110402
BRE40	112	19120402	19100442	30 mm (hex)	19150322	19130322	19110402
BRE60	100	19120602	19100532	25 mm (spline)	19150602	19130602	19110602
BRE60	112	19120602	19100542	30 mm (spline)	19150602	19130602	19110602
BRE60	132	19120602	19100552	35 mm (spline)	19150602	19130602	19110602
BRE100	132/160	19120802	19100652	35 mm (spline)	19150802	19130802	19110802
BRE150	132	19121502	19100752	35 mm (spline)	19151502	19131502	19111502
BRE150	160/180	19121502	19100772	45 mm (spline)	19151502	19131502	19111502
BRE250	160/180	19122402	19100872	45 mm (spline)	19152402	19132500	19112502
BRE250	200	19122402	19100882	50 mm (spline)	19152402	19132500	19112502
BRE400	200/225	19124002	19100912	60 mm (spline)	19154003	10114020	19114002

IMPORTANT NOTES

- For brake coil part numbers, listed by brake size and coil voltage, please see page 4.
- The large BRE 800 and BRE 1200 twin rotor brakes are supplied to NORD pre-assembled and complete. For parts list details and spare parts information please contact NORD.

Brake Times & Electrical Selection

Brake timing performance is critical in selecting the optimal brake system. NORD brakes can provide exceptional performance in terms of the release (start) times and engagement (stop) times. Use the following guidelines in order to select the correct brake control components and connections.

1) Determine if the brake needs to be wired directly from the motor terminal block or powered by a separate power source.

- If you are using a frequency inverter, soft-start or a two speed motor you will need to supply the rectifier from a separate power source.

- If the motor is powered direct across-the-line the rectifier power can be supplied from the motor's terminal block.

2) What type of performance do I need?

- Is the standard brake performance OK?

- Is a higher performance required for fast brake release or very fast brake stopping?

3) Determine the brake supply voltage and check the rectifier compatability using the table on page 10?

Selection Suggestions

When Fast Stopping is Recommended

Any applications that require quick stops and positive action at stand-still

Recommended Applications

- conveyors and inclined conveyors
- hoists and lifts
- bulk material handling equipment (bucket elevators, idler conveyor's).

⚠ *CAUTION* ⚠

- **Hoisting (lifting/lowering) applications** - must have the brake wired for fast response.

When Fast-Release is Recommended (Overexcitation)

Fast Release is recommended in any application that is very high-cycling with frequent starts and stops. These applications require the brake to release very-quickly in order to avoid excessive heat build-up in the AC motor and brake coil.

Recommended Applications

- Index conveyors
- Diverters
- Storage and retrieval crane systems

Power Source	Brake Release (start)	Brake engagement (stop)	Braking Method *	Rectifier
Motor Terminal Block	Standard	Standard (AC switching)	10	GVE/GHE/GUE
	Standard	Fast (DC switching)	15	GVE/GHE/GUE
	❶ Fast (Overexcitation)	Standard (AC switching)	30	PMG 500
	❶ Fast (Overexcitation)	Fast (DC switching)	35	PMG 500
Separate Power Source	Standard	Standard (AC switching)	20	GVE/GHE/GUE
	Standard	Fast (DC switching)	25	GVE/GHE/GUE
	❶ Fast (Overexcitation)	Standard (AC switching)	45	PMG 500
	❶ Fast (Overexcitation)	Fast (DC switching)	50	PMG 500

*** Braking methods referenced in connection diagrams on pages 11-15.**

❶ Please see important note below:

IMPORTANT NOTE

The PMG500 rectifier is required when utilizing the larger 800 Nm (590 lb-ft) - and 1200 Nm (885 lb-ft) twin-rotor brakes. In order to prevent rapid wear, NORD recommends using the PMG500 rectifier to "overexcite" the brake during its release. The brake coil should be sized utilizing the PMG rectifier like a half-wave rectifier.

The table below determines the rectifier and DC brake voltage required, based on the AC supply voltage & braking method.

Rectifier Supply Voltage (VAC)	Brake Coil Voltage (VDC)	Braking Method	Rectifier Type	Rectifier P/N	BRE 5	BRE 10	BRE 20	BRE 40	BRE 60	BRE 100	BRE 150	BRE 250	BRE 400	BRE 800	BRE 1200
115 (105-120)	105	20	GVE20L	19141000	X	X	X	X	X	X	X				
	105	25	GVE20L	19141000	X	X	X	X	X	X	X				
208 (200-208)	180	10	GVE20L	19141000	X	X	X	X	X	X	X	X	X		
	180	15	GVE20L	19141000	X	X	X	X	X	X	X	X	X		
	180	20	GVE20L	19141000	X	X	X	X	X	X	X	X	X		
	105	25	GHE40L	19141010	X	X	X	X	X	X	X				
	105	25	GHE50L	19141020	X	X	X	X	X	X	X				
	180	25	GVE20L	19141000	X	X	X	X	X	X	X	X	X		
	105	30	PMG500	19140200										X	X
	105	35	PMG500	19140200										X	X
	105	45	PMG500	19140200										X	X
	105	50	PMG500	19140200										X	X
	180	55	PMG500	19140200										X	X
230 (220-240)	105	10	GHE40L	19141010	X	X	X	X	X	X	X				
	205	10	GVE20L	19141000	X	X	X	X	X	X	X	X	X		
	105	15	GHE40L	19141010	X	X	X	X	X	X	X				
	205	15	GVE20L	19141000	X	X	X	X	X	X	X	X	X		
	105	20	GHE40L	19141010	X	X	X	X	X	X	X				
	205	20	GUE40V	19140300	X	X	X	X	X	X	X				
	205	20	GVE20L	19141000	X	X	X	X	X	X	X	X	X		
	105	25	GHE40L	19141010	X	X	X	X	X	X	X				
	205	25	GUE40V	19140300	X	X	X	X	X	X	X				
	205	25	GVE20L	19141000	X	X	X	X	X	X	X	X	X		
	105	30	PMG500	19140200										X	X
	105	35	PMG500	19140200										X	X
	105	45	PMG500	19140200										X	X
	105	50	PMG500	19140200										X	X
332	180	30	PMG500	19140200										X	X
	180	35	PMG500	19140200										X	X
400 (380-415)	180	10	GHE40L	19141010	X	X	X	X	X	X	X	X	X		
	180	15	GHE40L	19141010	X	X	X	X	X	X	X	X	X		
	180	20	GHE40L	19141010	X	X	X	X	X	X	X	X	X		
	180	25	GHE40L	19141010	X	X	X	X	X	X	X	X	X		
	180	30	PMG500	19140200										X	X
	180	35	PMG500	19140200										X	X
	180	45	PMG500	19140200										X	X
	180	50	PMG500	19140200										X	X
460 (440-480)	205	10	GHE40L	19141010	X	X	X	X	X	X	X	X	X		
	205	15	GHE40L	19141010	X	X	X	X	X	X	X	X	X		
	205	20	GHE40L	19141010	X	X	X	X	X	X	X	X	X		
	205	20	GUE40V	19140300	X	X	X	X	X	X	X				
	205	25	GHE40L	19141010	X	X	X	X	X	X	X	X	X		
	205	25	GUE40V	19140300	X	X	X	X	X	X	X				
	205	30	PMG500	19140200										X	X
	205	35	PMG500	19140200										X	X
	205	45	PMG500	19140200										X	X
	205	50	PMG500	19140200										X	X
575 (550-600)	250	10	GHE50L	19141020	X	X	X	X	X	X	X	X	X		
	250	15	GHE50L	19141020	X	X	X	X	X	X	X	X	X		
	250	20	GHE50L	19141020	X	X	X	X	X	X	X	X	X		
	250	25	GHE50L	19141020	X	X	X	X	X	X	X	X	X		

? Specify Rectifier Model Type _____ And DC Brake Voltage _____

Typical Connection Diagrams

BR101A — 10
POWERED FROM MOTOR TERMINAL BLOCK
STANDARD RELEASE
NORMAL STOPPING (AC-SWITCHING)

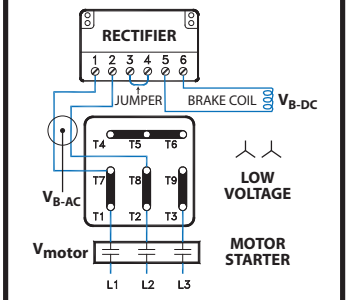

MOTOR	RECTIFIER	V_{motor}	$V_{B\text{-}AC}$	$V_{B\text{-}DC}$
208-230YY/460Y	GVE20	208 VAC	230 VAC	205 VDC
230YY/460Y	GVE20	230 VAC	230 VAC	205 VDC
230YY/460Y	GHE40	230 VAC	230 VAC	105 VDC

BR101B — 10
POWERED FROM MOTOR TERMINAL BLOCK
STANDARD RELEASE
NORMAL STOPPING (AC-SWITCHING)

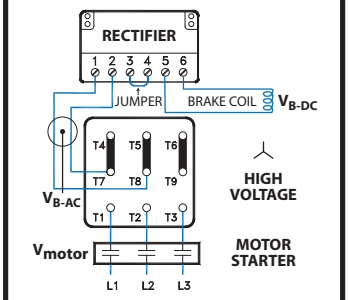

MOTOR	RECTIFIER	V_{motor}	$V_{B\text{-}AC}$	$V_{B\text{-}DC}$
230YY/460Y	GVE20	460 VAC	230 VAC	205 VDC

GP101C — 10
POWERED FROM MOTOR TERMINAL BLOCK
STANDARD RELEASE
NORMAL STOPPING (AC-SWITCHING)

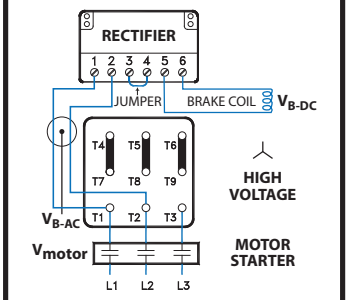

MOTOR	RECTIFIER	V_{motor}	$V_{B\text{-}AC}$	$V_{B\text{-}DC}$
230YY/460Y	GHE40	460 VAC	460 VAC	205 VDC

BR601A — 10
POWERED FROM MOTOR TERMINAL BLOCK
STANDARD RELEASE
NORMAL STOPPING (AC-SWITCHING)

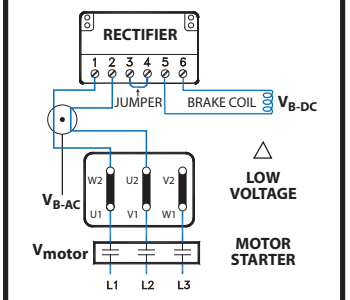

MOTOR	RECTIFIER	V_{motor}	$V_{B\text{-}AC}$	$V_{B\text{-}DC}$
208Δ/360Y	GVE20	208 VAC	208 VAC	180 VDC
230Δ/400Y	GVE20	230 VAC	230 VAC	205 VDC
400Δ/690Y	GHE40	400 VAC	400 VAC	180 VDC
460Δ/Y	GHE40	460 VAC	460 VAC	205 VDC

BR601B — 10
POWERED FROM MOTOR TERMINAL BLOCK
STANDARD RELEASE
NORMAL STOPPING (AC-SWITCHING)

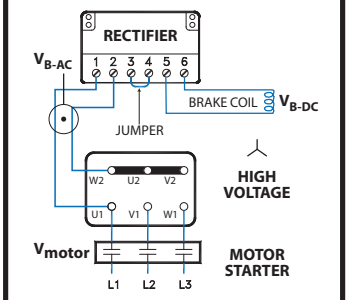

MOTOR	RECTIFIER	V_{motor}	$V_{B\text{-}AC}$	$V_{B\text{-}DC}$
230Δ/400Y	GVE20	400 VAC	230 VAC	205 VDC

BR601C — 10
POWERED FROM MOTOR TERMINAL BLOCK
STANDARD RELEASE
NORMAL STOPPING (AC-SWITCHING)

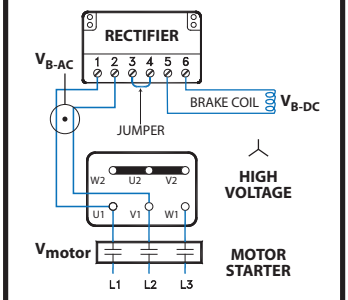

MOTOR	RECTIFIER	V_{motor}	$V_{B\text{-}AC}$	$V_{B\text{-}DC}$
332Δ/575Y	GHE50	575 VAC	575 VAC	250 VDC

BR603A — 15
POWERED FROM MOTOR TERMINAL BLOCK
STANDARD RELEASE
FAST STOPPING (DC-SWITCHING)

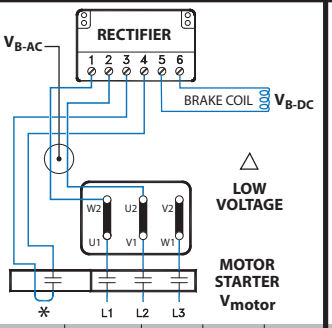

MOTOR	RECTIFIER	V_{motor}	$V_{B\text{-}AC}$	$V_{B\text{-}DC}$
208Δ/360Y	GVE20	208 VAC	208 VAC	180 VDC
230Δ/400Y	GVE20	230 VAC	230 VAC	205 VDC
400Δ/690Y	GHE40	400 VAC	400 VAC	180 VDC
460Δ/Y	GHE40	460 VAC	460 VAC	205 VDC

BR603B — 15
POWERED FROM MOTOR TERMINAL BLOCK
STANDARD RELEASE
FAST STOPPING (DC-SWITCHING)

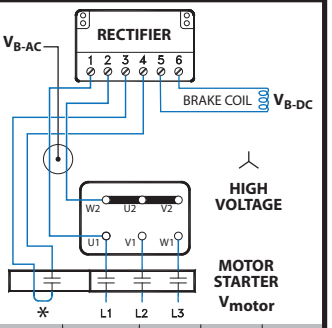

MOTOR	RECTIFIER	V_{motor}	$V_{B\text{-}AC}$	$V_{B\text{-}DC}$
230Δ/400Y	GVE20	400 VAC	230 VAC	105 VDC

BR603C — 15
POWERED FROM MOTOR TERMINAL BLOCK
STANDARD RELEASE
FAST STOPPING (DC-SWITCHING)

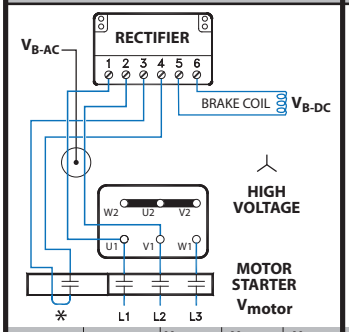

MOTOR	RECTIFIER	V_{motor}	$V_{B\text{-}AC}$	$V_{B\text{-}DC}$
332Δ/575Y	GHE50	575 VAC	575 VAC	250 VDC

BR103A — 15
POWERED FROM MOTOR TERMINAL BLOCK
STANDARD RELEASE
FAST STOPPING (DC-SWITCHING)

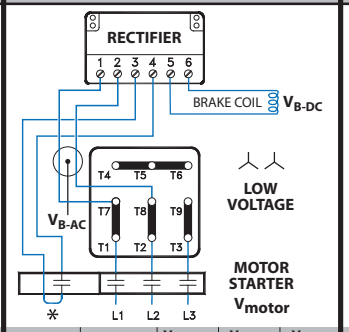

MOTOR	RECTIFIER	V_{motor}	$V_{B\text{-}AC}$	$V_{B\text{-}DC}$
208-230YY/460Y	GVE20	208 VAC	230 VAC	205 VDC
230YY/460Y	GVE20	230 VAC	230 VAC	205 VDC
230YY/460Y	GHE40	230 VAC	230 VAC	105 VDC

BR103B — 15
POWERED FROM MOTOR TERMINAL BLOCK
STANDARD RELEASE
FAST STOPPING (DC-SWITCHING)

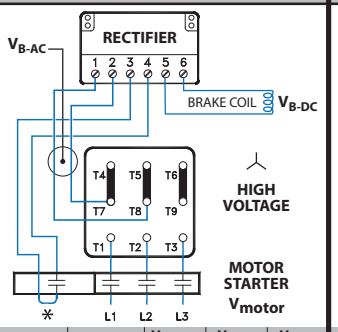

MOTOR	RECTIFIER	V_{motor}	$V_{B\text{-}AC}$	$V_{B\text{-}DC}$
230YY/460Y	GVE20	460 VAC	230 VAC	205 VDC

BR103C — 15
POWERED FROM MOTOR TERMINAL BLOCK
STANDARD RELEASE
FAST STOPPING (DC-SWITCHING)

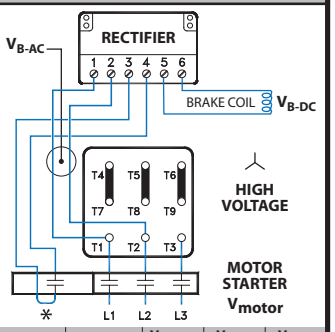

MOTOR	RECTIFIER	V_{motor}	$V_{B\text{-}AC}$	$V_{B\text{-}DC}$
230YY/460Y	GHE40	460 VAC	460 VAC	205 VDC

✻ The normally open contact/s (NO) is not supplied by NORD. It must close at the same time power is supplied to the brake. The contact must be capable of switching inductive loads and/or be rated IEC AC3.

= Braking Method

Typical Connection Diagrams

BR102A — 20 — SEPERATE POWER SOURCE, STANDARD RELEASE, NORMAL STOPPING (AC-SWITCHING)

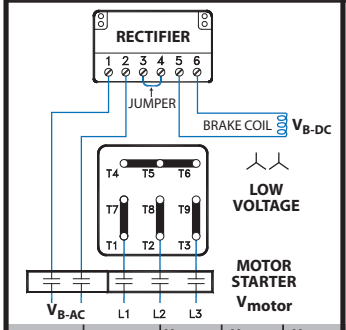

MOTOR	RECTIFIER	V_{motor}	V_{B-AC}	V_{B-DC}
208-230YY/460Y	GVE20	208 VAC	230 VAC	205 VDC
230YY/460Y	GVE20	230 VAC	105 VAC	115 VDC
230YY/460Y	GVE20	230 VAC	230 VAC	205 VDC
230YY/460Y	GHE40	230 VAC	230 VAC	105 VDC

BR102B — 20 — SEPERATE POWER SOURCE, STANDARD RELEASE, NORMAL STOPPING (AC-SWITCHING)

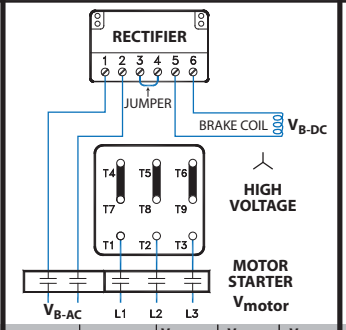

MOTOR	RECTIFIER	V_{motor}	V_{B-AC}	V_{B-DC}
230YY/460Y	GVE20	460 VAC	115 VAC	105 VDC
230YY/460Y	GHE40	460 VAC	460 VAC	205 VDC

BR602A — 20 — SEPERATE POWER SOURCE, STANDARD RELEASE, NORMAL STOPPING (AC-SWITCHING)

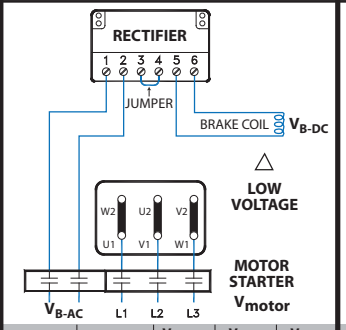

MOTOR	RECTIFIER	V_{motor}	V_{B-AC}	V_{B-DC}
208Δ/360Y	GVE20	208 VAC	208 VAC	180 VDC
230Δ/400Y	GVE20	230 VAC	230 VAC	205 VDC
400Δ/690Y	GHE40	400 VAC	400 VAC	180 VDC
460Δ/Y	GHE40	460 VAC	460 VAC	205 VDC

BR602B — 20 — SEPERATE POWER SOURCE, STANDARD RELEASE, NORMAL STOPPING (AC-SWITCHING)

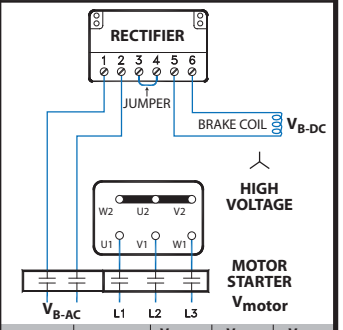

MOTOR	RECTIFIER	V_{motor}	V_{B-AC}	V_{B-DC}
230Δ/400Y	GHE40	400 VAC	400 VAC	180 VDC
332Δ/575Y	GHE50	575 VAC	575 VAC	250 VDC

BR104A — 25 — SEPERATE POWER SOURCE, STANDARD RELEASE, FAST STOPPING (DC-SWITCHING)

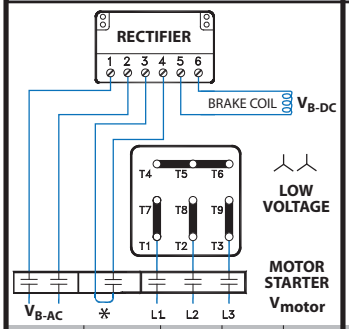

MOTOR	RECTIFIER	V_{motor}	V_{B-AC}	V_{B-DC}
208-230YY/460Y	GVE20	208 VAC	230 VAC	205 VDC
230YY/460Y	GVE20	230 VAC	115 VAC	105 VDC
230YY/460Y	GVE20	230 VAC	230 VAC	205 VDC
230YY/460Y	GHE40	230 VAC	230 VAC	105 VDC

BR104B — 25 — SEPERATE POWER SOURCE, STANDARD RELEASE, FAST STOPPING (DC-SWITCHING)

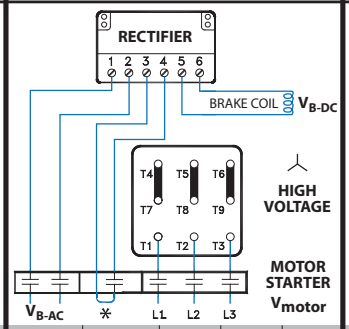

MOTOR	RECTIFIER	V_{motor}	V_{B-AC}	V_{B-DC}
230YY/460Y	GVE20	460 VAC	115 VAC	105 VDC
230YY/460Y	GHE40	460 VAC	460 VAC	205 VDC

BR604A — 25 — SEPERATE POWER SOURCE, STANDARD RELEASE, FAST STOPPING (DC-SWITCHING)

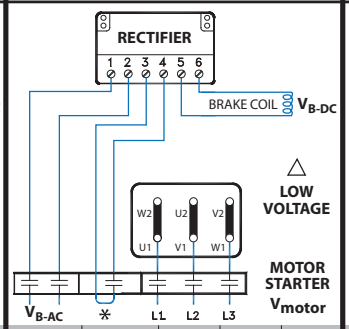

MOTOR	RECTIFIER	V_{motor}	V_{B-AC}	V_{B-DC}
208Δ/360Y	GHE20	208 VAC	208 VAC	105 VDC
230Δ/400Y	GHE20	230 VAC	230 VAC	105 VDC
400Δ/690Y	GHE40	400 VAC	400 VAC	180 VDC
460Δ/Y	GHE40	460 VAC	460 VAC	205 VDC

BR604B — 25 — SEPERATE POWER SOURCE, STANDARD RELEASE, FAST STOPPING (DC-SWITCHING)

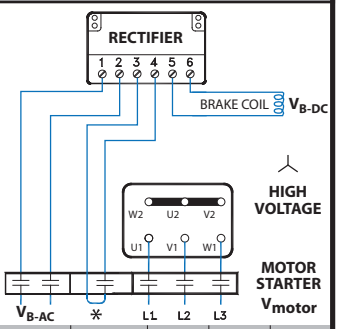

MOTOR	RECTIFIER	V_{motor}	V_{B-AC}	V_{B-DC}
230Δ/400Y	GHE20	400 VAC	230 VAC	105 VDC
332Δ/575Y	GHE40	575 VAC	332 VAC	180 VDC

✻ The normally open contact/s (NO) is not supplied by NORD. It must close at the same time power is supplied to the brake. The contact must be capable of switching inductive loads and/or be rated IEC AC3.

= Braking Method

Typical Connection Diagrams

PMG101A — POWERED FROM MOTOR TERMINAL BLOCK — 30
FAST-RELEASE (OVER EXCITATION)
NORMAL STOPPING (AC-SWITCHING)

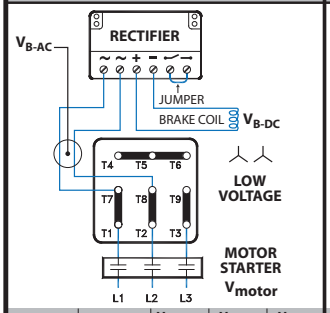

MOTOR	RECTIFIER	V_{motor}	V_{B-AC}	V_{B-DC}
230YY/460Y	PMG500	230 VAC	230 VAC	105 VDC

PMG101B — POWERED FROM MOTOR TERMINAL BLOCK — 30
FAST-RELEASE (OVER EXCITATION)
NORMAL STOPPING (AC-SWITCHING)

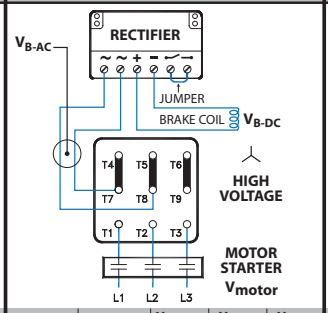

MOTOR	RECTIFIER	V_{motor}	V_{B-AC}	V_{B-DC}
230YY/460Y	PMG500	460 VAC	230 VAC	105 VDC

PMG101C — POWERED FROM MOTOR TERMINAL BLOCK — 30
FAST-RELEASE (OVER EXCITATION)
NORMAL STOPPING (AC-SWITCHING)

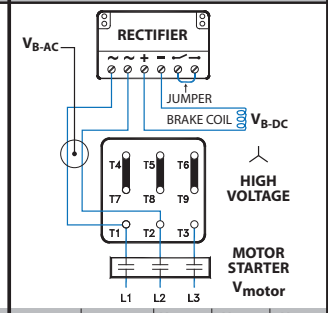

MOTOR	RECTIFIER	V_{motor}	V_{B-AC}	V_{B-DC}
230YY/460Y	PMG500	460 VAC	460 VAC	205 VDC

PMG101D — POWERED FROM MOTOR TERMINAL BLOCK — 30
FAST-RELEASE (OVER EXCITATION)
NORMAL STOPPING (AC-SWITCHING)

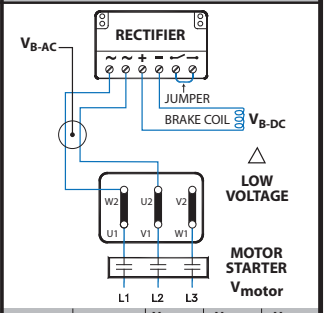

MOTOR	RECTIFIER	V_{motor}	V_{B-AC}	V_{B-DC}
208Δ/360Y	PMG500	208 VAC	208 VAC	105 VDC
230Δ/400Y	PMG500	230 VAC	230 VAC	105 VDC
400Δ/690Y	PMG500	400 VAC	400 VAC	180 VDC
460Δ/Y	PMG500	460 VAC	460 VAC	205 VDC

PMG101E — POWERED FROM MOTOR TERMINAL BLOCK — 30
FAST-RELEASE (OVER EXCITATION)
NORMAL STOPPING (AC-SWITCHING)

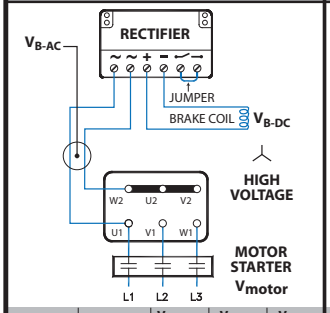

MOTOR	RECTIFIER	V_{motor}	V_{B-AC}	V_{B-DC}
230Δ/400Y	PMG500	400 VAC	230 VAC	105 VDC

PMG102A — POWERED FROM MOTOR TERMINAL BLOCK — 35
FAST-RELEASE (OVER EXCITATION)
FAST STOPPING (DC-SWITCHING)

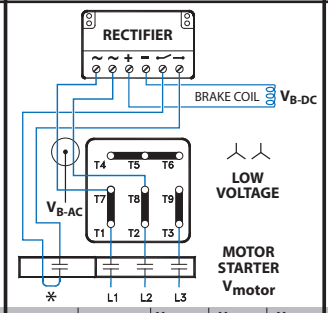

MOTOR	RECTIFIER	V_{motor}	V_{B-AC}	V_{B-DC}
230YY/460Y	PMG500	230 VAC	230 VAC	105 VDC

PMG102B — POWERED FROM MOTOR TERMINAL BLOCK — 35
FAST-RELEASE (OVER EXCITATION)
FAST STOPPING (DC-SWITCHING)

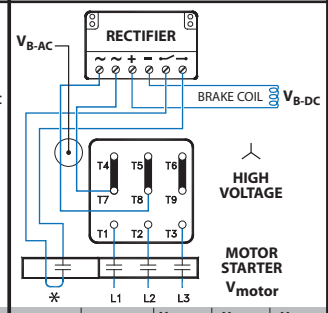

MOTOR	RECTIFIER	V_{motor}	V_{B-AC}	V_{B-DC}
230YY/460Y	PMG500	460 VAC	230 VAC	105 VDC

PMG102C — POWERED FROM MOTOR TERMINAL BLOCK — 35
FAST-RELEASE (OVER EXCITATION)
FAST STOPPING (DC-SWITCHING)

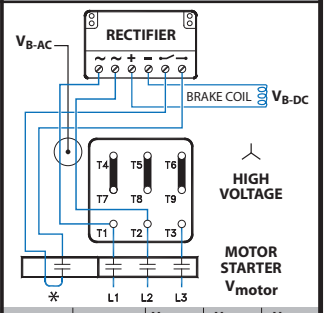

MOTOR	RECTIFIER	V_{motor}	V_{B-AC}	V_{B-DC}
230YY/460Y	PMG500	460 VAC	460 VAC	205 VDC

PMG102D — POWERED FROM MOTOR TERMINAL BLOCK — 35
FAST-RELEASE (OVER EXCITATION)
FAST STOPPING (DC-SWITCHING)

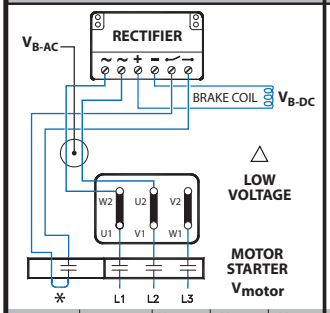

MOTOR	RECTIFIER	V_{motor}	V_{B-AC}	V_{B-DC}
208Δ/360Y	PMG500	208 VAC	208 VAC	105 VDC
230Δ/400Y	PMG500	230 VAC	230 VAC	105 VDC
400Δ/690Y	PMG500	400 VAC	400 VAC	180 VDC
460Δ/Y	PMG500	460 VAC	460 VAC	205 VDC

PMG102E — POWERED FROM MOTOR TERMINAL BLOCK — 35
FAST-RELEASE (OVER EXCITATION)
FAST STOPPING (DC-SWITCHING)

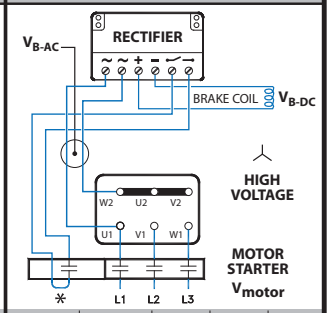

MOTOR	RECTIFIER	V_{motor}	V_{B-AC}	V_{B-DC}
230Δ/400Y	PMG500	400 VAC	230 VAC	105 VDC

✻ The normally open contact/s (NO) is not supplied by NORD. It must close at the same time power is supplied to the brake. The contact must be capable of switching inductive loads and/or be rated IEC AC3.

= Braking Method

Typical Connection Diagrams

PMG104A — 45

SEPERATE POWER SOURCE
FAST-RELEASE (OVER EXCITATION)
NORMAL STOPPING (AC-SWITCHING)

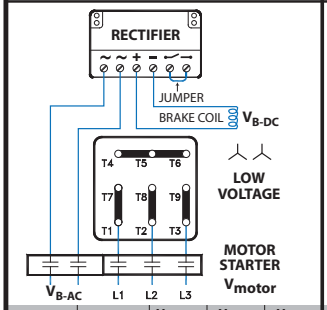

MOTOR	RECTIFIER	V_{motor}	V_{B-AC}	V_{B-DC}
230YY/460Y	PMG500	230 VAC	230 VAC	105 VDC

PMG104B — 45

SEPERATE POWER SOURCE
FAST-RELEASE (OVER EXCITATION)
NORMAL STOPPING (AC-SWITCHING)

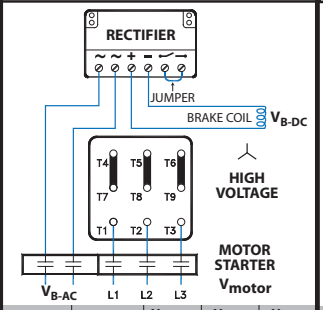

MOTOR	RECTIFIER	V_{motor}	V_{B-AC}	V_{B-DC}
230YY/460Y	PMG500	460 VAC	230 VAC	105 VDC

PMG104C — 45

SEPERATE POWER SOURCE
FAST-RELEASE (OVER EXCITATION)
NORMAL STOPPING (AC-SWITCHING)

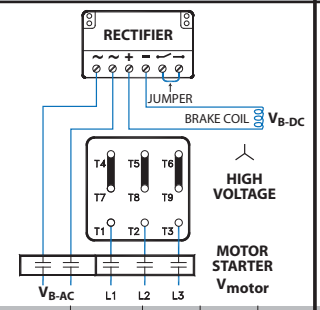

MOTOR	RECTIFIER	V_{motor}	V_{B-AC}	V_{B-DC}
230YY/460Y	PMG500	460 VAC	460 VAC	205 VDC

PMG104D — 45

SEPERATE POWER SOURCE
FAST-RELEASE (OVER EXCITATION)
NORMAL STOPPING (AC-SWITCHING)

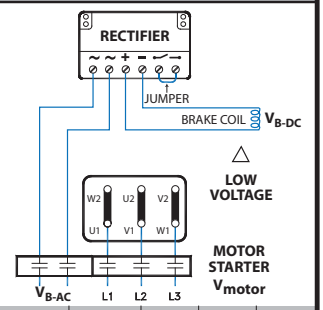

MOTOR	RECTIFIER	V_{motor}	V_{B-AC}	V_{B-DC}
208Δ/360Y	PMG500	208 VAC	208 VAC	105 VDC
230Δ/400Y	PMG500	230 VAC	230 VAC	105 VDC
400Δ/690Y	PMG500	400 VAC	400 VAC	180 VDC
460Δ/Y	PMG500	460 VAC	460 VAC	205 VDC

PMG104E — 45

SEPERATE POWER SOURCE
FAST-RELEASE (OVER EXCITATION)
NORMAL STOPPING (AC-SWITCHING)

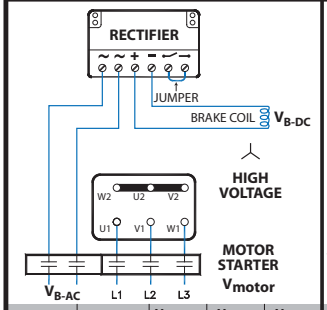

MOTOR	RECTIFIER	V_{motor}	V_{B-AC}	V_{B-DC}
230Δ/400Y	PMG500	400 VAC	230 VAC	105 VDC

PMG105A — 50

SEPERATE POWER SOURCE
FAST-RELEASE (OVER EXCITATION)
FAST STOPPING (DC-SWITCHING)

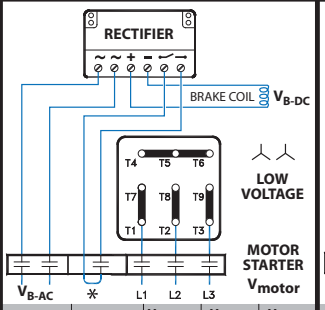

MOTOR	RECTIFIER	V_{motor}	V_{B-AC}	V_{B-DC}
230YY/460Y	PMG500	230 VAC	230 VAC	105 VDC

PMG105B — 50

SEPERATE POWER SOURCE
FAST-RELEASE (OVER EXCITATION)
FAST STOPPING (DC-SWITCHING)

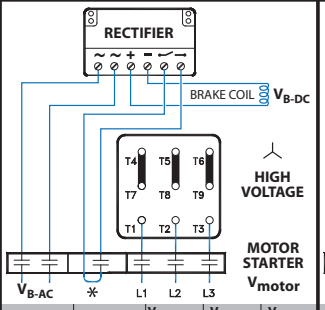

MOTOR	RECTIFIER	V_{motor}	V_{B-AC}	V_{B-DC}
230YY/460Y	PMG500	460 VAC	230 VAC	105 VDC

PMG105C — 50

SEPERATE POWER SOURCE
FAST-RELEASE (OVER EXCITATION)
FAST STOPPING (DC-SWITCHING)

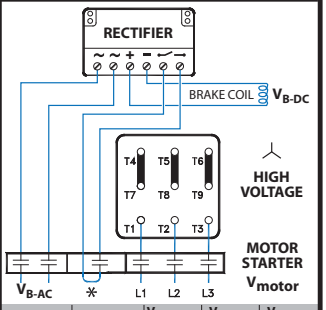

MOTOR	RECTIFIER	V_{motor}	V_{B-AC}	V_{B-DC}
230YY/460Y	PMG500	460 VAC	460 VAC	205 VDC

PMG105D — 50

SEPERATE POWER SOURCE
FAST-RELEASE (OVER EXCITATION)
FAST STOPPING (DC-SWITCHING)

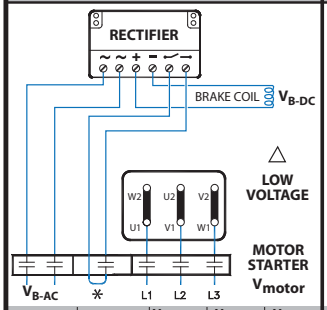

MOTOR	RECTIFIER	V_{motor}	V_{B-AC}	V_{B-DC}
208Δ/360Y	PMG500	208 VAC	208 VAC	105 VDC
230Δ/400Y	PMG500	230 VAC	230 VAC	105 VDC
400Δ/690Y	PMG500	400 VAC	400 VAC	180 VDC
460Δ/Y	PMG500	460 VAC	460 VAC	205 VDC

PMG105E — 50

SEPERATE POWER SOURCE
FAST-RELEASE (OVER EXCITATION)
FAST STOPPING (DC-SWITCHING)

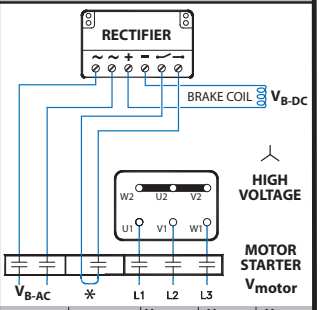

MOTOR	RECTIFIER	V_{motor}	V_{B-AC}	V_{B-DC}
230Δ/400Y	PMG500	400 VAC	230 VAC	105 VDC

✻ The normally open contact/s (NO) is not supplied by NORD. It must close at the same time power is supplied to the brake. The contact must be capable of switching inductive loads and/or be rated IEC AC3.

= Braking Method

Typical Connection Diagrams - Single Phase Motors

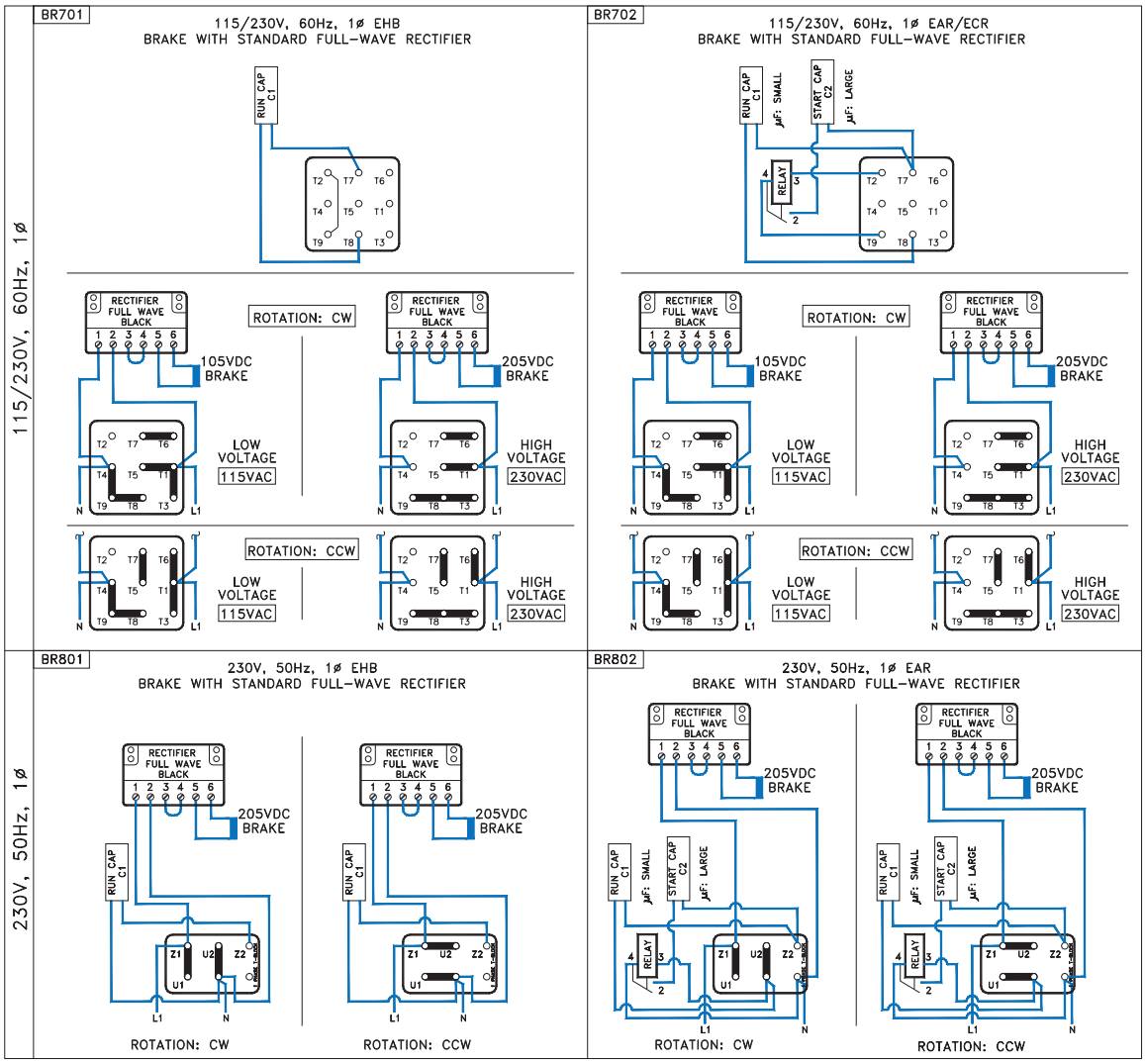

Troubleshooting Information

Troubleshooting	Cause	Remedy
Brake doesn't release	Air gap too large	Check air gap and adjust
	Brake not recieving electrical power	Check electrical connection
	Failed rectifier	Replace rectifier
	Brake is getting too warm	Use fast response (FR) rectifier
	Voltage to brake coil too small	Check connection voltageof brake coil
	Rectifier supply voltage from inverter	Rectifier voltage must be from seperate source. (Inverter output voltage varies)
Brake release is delayed	Air gap too large	Check air gap and adjust
	Voltage to brake coil too small	Check connection voltage of brake coil
Brake does not engage	Voltage to coil too large	Check connection voltages of brake windings
	Hand release is adjusted incorrectly	Adjust to correct air gap
	Anchor plate mechanically blocked	Remove mechanical blockage
Brake engagement is delayed	Voltage to coil too large	Check connection voltage of brake windings
	Brake is switched to AC side	Use DC switching

FAST ACTING BRAKE RECTIFIERS (GPE, GPU & PMG)

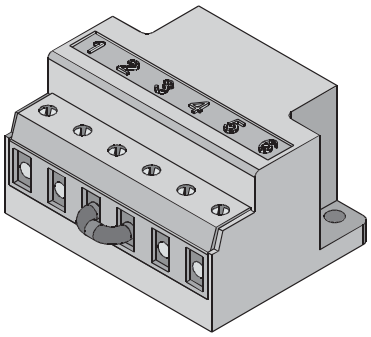

General Instructions

This manual provides general operating instructions for the "Fast Acting Brake Rectifiers type "GPE, GPU, and PMG" that are commonly offered by NORD in addition to the standard brake control rectifiers. Please feel free to contact NORD with any questions concerning the supplied brake rectifiers and brake components.

Safety Notice

Only qualified personnel should attempt installation, operation and maintenance of NORD brakes and brake rectifiers. If you have a question about a procedure or are uncertain about any detail, seek clarification and DO NOT PROCEED.

⚠ WARNING ⚠

- This equipment contains high electrical voltage. Remove and lockout all power from the electric motor and brake before any work is completed on the brake.
- The user is responsible for conforming to all national and local electrical and safety codes. Wiring practices, proper grounding, disconnects, and over current protection, are of particular importance.
- Make certain the load is supported when servicing the brake. Removing power from the brake or removing the brake from the motor will release the load, which may cause severe injury or death.
- Failure to follow proper procedures and precautions may result in severe bodily injury or death.

Brake Control Rectifiers

NORD brake control rectifiers convert AC voltage to DC voltage. Rectifiers are used because most applications require AC voltage to power the motor, but DC power is required to power the brake and DC power is not typically available. NORD brakemotors typically include the rectifier located inside the terminal box.

Rectifier Advantages

- Individual power source for each brake.
- Compact size, mounted inside the terminal box.
- Multiple types, voltage options and release/engagement modes available.
- Mountable in a separate control cabinet.
- Integral protection against voltage spikes.

Standard Rectifier Types

Full-Wave Rectifier

A rectifier in which both the positive and negative half-cycles of the AC input signal are rectified to produce a uni-directional DC current supply to the load or the brake. The output voltage is 90% of the input voltage ($V_{DC} = 0.90 \times V_{AC}$).

Half-Wave Rectifier

A rectifier in which only alternate half-cycles of the AC input signal are rectified to produce a uni-directional DC current supply to the load or the brake. The output voltage is 45% of the input voltage ($V_{DC} = 0.45 \times V_{AC}$).

Dual-Wave Rectifier

A rectifier that can be wired as either a full-wave rectifier or a half-wave rectifier depending upon how it is connected to the AC input signal.

IMPORTANT NOTE

This manual provides general operating instructions for NORD brakes with Fast-Acting brake Rectifiers. For additional brake and brake rectifier information please reference User Manual U35000.

Fast-Acting or Push-Hybrid Rectifiers [GPE, GPU & PMG]

A push-hybrid rectifier or fast-acting brake rectifier provides an initial "push" in the form of a timed full-wave brake-release function, which is then followed by a continuous half-wave brake-holding function. There are two ways to apply these rectifiers as follows:

- "Overexcitation" of the brake coil provides faster brake release or improved cycling capacity. The DC voltage of the brake coil is determined based upon using a half-wave rectifier. The output voltage is 45% of the input voltage ($V_{DC} = 0.45 \times V_{AC}$).
- "Reducer-Power Holding" of the brake coil maintains the brake in a released state by using only 25% of the power needed for the initial brake release. This results in very fast brake stopping. The DC voltage of the brake coil is determined based upon using a full-wave rectifier. The output voltage is 90% of the input voltage. ($V_{DC} = 0.90 \times V_{AC}$).

IMPORTANT NOTE

In order to prevent rapid wear, the PMG 500 rectifier is required when utilizing the larger 800 Nm (590 lb-ft) and 1200 Nm (885 lb-ft) twin-rotor brakes. The PMG500 rectifier is wired to "overexcite" the brake during its initial release.

Push-Hybrid Rectifiers External DC Switching (GPE)

Like the standard NORD brake control rectifiers, NORD's fast acting brake control rectifiers convert AC voltage to DC voltage. The "Fast Acting Brake Rectifiers"are utilized to improve brake performance and are often recommended in order to provide shorter brake release times or to provide faster stopping times.

The fast acting rectifiers are a two-stage "push" design, when power is first applied these rectifiers operate like a full-wave rectifier and then after a relatively short period of time they act like a half-wave rectifier. The GPE type rectifiers start out in full-wave mode when power is first applied and then after approximately 250 ms they switch to half-wave mode.

GPE rectifiers were designed for external control of the brake's DC-switching. GPE rectifiers are primarily used in across-the-line applications where the brake power is supplied by the motor terminals but they may also be used in situations where the brake power is supplied separately to the brake rectifier.

There are two ways to apply the fast acting rectifiers:

- The first method, known as "Overexcitation," provides fast brake release. The brake coil is selected like a half-wave system (45% of the AC supply voltage).
- The second method, known as "Reduced Power Holding," provides very fast brake stopping. The brake coil is selected like a full-wave system (90% of the AC supply voltage).

IMPORTANT NOTE

If the motor is connected to a frequency inverter, soft start, or is a two-speed motor, then seperate AC power must be supplied to the brake rectifier.

GPE Rectifier Dimensions

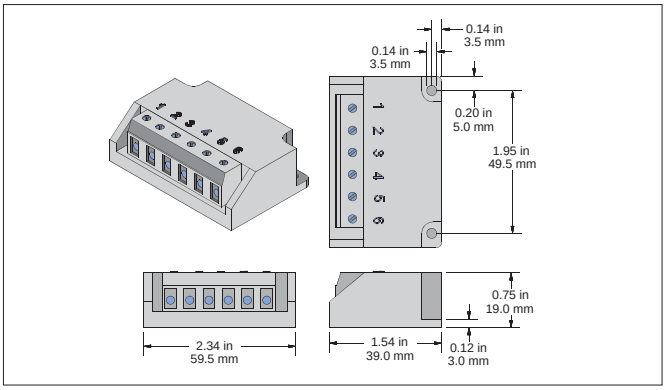

Ratings & Part Numbers

Model Type	GPE20L	GPE40L
Part Number	19140230	19140240
Protection (electronics)	Coated	Coated
Color	Black	
Input Voltage (V_{AC})	200V-275V	380V-480V
Output Voltage (V_{DC})	(V_{DC}=0.45 x V_{AC}) - As Half-Wave (V_{DC}=0.90 x V_{AC}) - As Full-Wave	
Rated Current @ 40°C	0.7 A	0.7A
Rated Current @ 75°C	0.5 A	0.5A
Temperature Range	-20°C to 75°C	
DC-Switching via	External Contact or IR Relay	

Braking Method

Braking Method	Break Release (Start)	Brake Engage (Stop)	Power Source
40	Standard	Very Fast (Reduced Power Holding)	Motor terminals
30	Fast (Overecitation)	Standard (AC Switching)	Motor terminals
35	Fast (Overecitation)	Fast (DC Switching)	Motor terminals

Basic Connection (AC & DC Switching)

The GPE brake system can be connected for standard stopping (AC-Switching), fast stopping (DC-Switching) and very fast stopping (Reduced power holding & DC-Switching). Fast brake release can also be achieved by selecting a different brake coil combination.

STANDARD STOPPING (AC-SWITCHING)

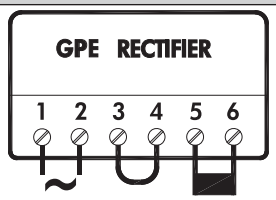

1 & 2	3 & 4	5 & 6
AC BRAKE VOLTAGE	JUMPER	DC BRAKE

FAST & VERY FAST STOPPING (DC-SWITCHING)

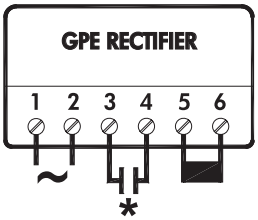

1 & 2	3 & 4	5 & 6
AC BRAKE VOLTAGE	NORMALLY OPEN CONTACT	DC BRAKE

* The normally open contact/s (NO) is not supplied by NORD it must close at the same time power is supplied to the brake. The contact must be capable of switching inductive loads and/or be rated at IEC AC3.

Push-Hybrid Rectifiers Integrated DC Switching (GPU)

Like the standard NORD brake control rectifiers, NORD's fast acting brake control rectifiers convert AC voltage to DC voltage. The "Fast Acting Brake Rectifiers"are utilized to improve brake performance and are often recommended in order to provide shorter brake release times or to provide faster stopping times.

The fast acting rectifiers are a two-stage "push" design. When power is first applied these rectifiers operate like a full-wave rectifier and then after a relatively short period of time they act like a half-wave rectifier. The GPU rectifiers start out in full-wave mode when power is first applied and then after approximately 250 ms they switch to half-wave mode.

GPU rectifiers were designed for integrated control of the brake's DC-switching and are voltage sensing. GPU rectifiers are primarily used in applications where there is a frequency inverter, soft start, or two-speed motor. Seperate AC power must be supplied to the brake rectifier.

There are two ways to apply the fast acting rectifiers:

- The first method, known as "Overexcitation," provides fast brake release. The brake coil is selected like a half-wave system (45% of the AC supply voltage).
- The second method, known as "Reduced Power Holding," provides very fast brake stopping. The brake coil is selected like a full-wave system (90% of the AC supply voltage).

IMPORTANT NOTE

The GPU rectifier may also be utilized for across-the-line applications; however it must always be powered separate from the motor and have its own pair of contactors or starters. It is unadvisable to use the motor terminal block to supply the GPU rectifier's AC power due to the motor's slow energy dissipation when switched off.

IMPORTANT NOTE

If the motor is connected to a frequency inverter, soft start, or is a two-speed motor, then seperate AC power must be supplied to the brake rectifier.

Braking Method

Braking Method	Break Release (Start)	Brake Engage (Stop)	Power Source
55	Standard	Very Fast (Reduced Power Holding)	Seperate power
45	Fast (Overecitation)	Standard (AC Switching)	Seperate power
50	Fast (Overecitation)	Fast (DC Switching)	Seperate power

GPU Rectifier Dimensions

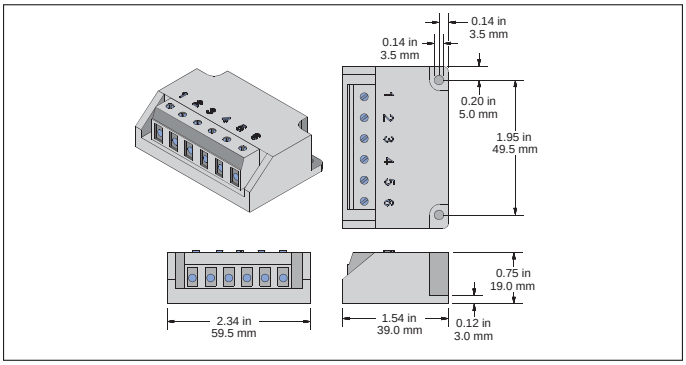

Ratings & Part Numbers

Model Type	GPU20L	GPU40L
Part Number	19140090	19140170
Protection (electronics)	Coated	Coated
Color	Black	
Input Voltage (V_{AC})	200V-275V	380V-480V
Output Voltage (V_{DC})	(V_{DC}=0.45 x V_{AC}) - As Half-Wave (V_{DC}=0.90 x V_{AC}) - As Full-Wave	
Rated Current @ 40°C	0.7A	0.7A
Rated Current @ 75°C	0.5A	0.5A
Temperature Range	-20°C to 75°C	
DC-Switching via	Internal Activation	

Basic Connection (AC & DC Switching)

The GPU brake system can be connected for standard stopping (AC-Switching), fast stopping (DC-Switching) and very fast stopping (Reduced power holding & DC-Switching). Fast brake release can also be achieved by selecting a different brake coil combination.

STANDARD STOPPING AC-SWITCHING

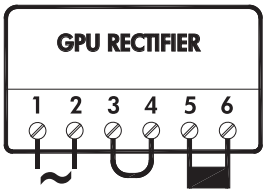

1 & 2	3 & 4	5 & 6
AC BRAKE VOLTAGE	JUMPER	DC BRAKE

FAST & VERY FAST STOPPING DC-SWITCHING

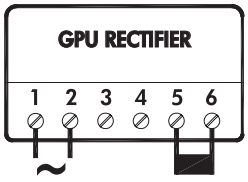

1 & 2	3 & 4	5 & 6
AC BRAKE VOLTAGE	-	DC BRAKE

Push-Hybrid Rectifiers External DC Switching (PMG)

Like the standard NORD brake control rectifiers, NORD's fast acting brake control rectifiers convert AC voltage to DC voltage. The "Fast Acting Brake Rectifiers"are utilized to improve brake performance and are often recommended in order to provide shorter brake release times or to provide faster stopping times.

The fast acting rectifiers are a two-stage "push" design. When power is first applied these rectifiers operate like a full-wave rectifier and then after a relatively short period of time they act like a half-wave rectifier. The PMG type rectifiers start out in full-wave mode when power is first applied and then after approximately 250 ms they switch to half-wave mode.

PMG rectifiers were designed for external control of the brake's DC-switching. PMG rectifiers are primarily used in across-the-line applications where the brake power is supplied by the motor terminals, but they may also be used in situations where the brake power is supplied separately from the brake rectifier.

There are two ways to apply the fast acting rectifiers:

- The first method, known as "Overexcitation," provides fast brake release. The brake coil is selected like a half-wave system (45% of the AC supply voltage).
- The second method, known as "Reduced Power Holding," provides very fast brake stopping. The brake coil is selected like a full-wave system (90% of the AC supply voltage).

IMPORTANT NOTE

If the motor is connected to a frequency inverter, soft start, or is a two-speed motor, then seperate AC power must be supplied to the brake rectifier.

PMG Rectifier Dimensions

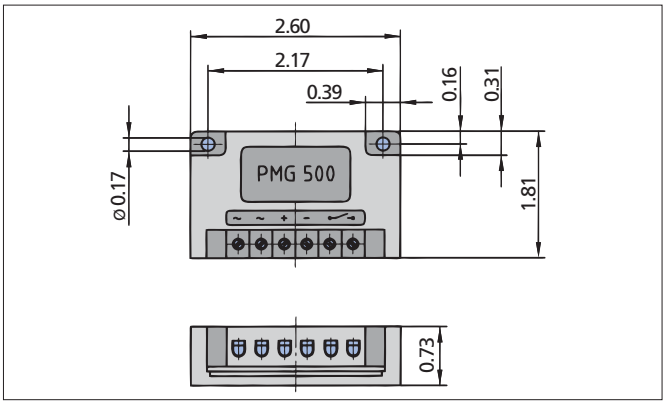

Ratings & Part Numbers

Model Type	PMG 500
Part Number	19140200
Protection (electronics)	Coated
Color	Black
Input Voltage (V_{AC})	200-500V_{AC} +/- 10%
Output Voltage (V_{DC})	(V_{DC}=0.45 x V_{AC}) - As Half-Wave (V_{DC}=0.90 x V_{AC}) - As Full-Wave
Rated Current @ 40°C	4.0 A
Rated Current @ 75°C	2.8 A
Temperature Range	-15°C to 80°C
DC-Switching via	External Contact

Braking Method

Braking Method	Break Release (Start)	Brake Engage (Stop)	Power Source
40	Standard	Very Fast (Reduced Power Holding)	Motor terminals
30	Fast (Overecitation)	Standard (AC Switching)	Motor terminals
35	Fast (Overecitation)	Fast (DC Switching)	Motor terminals
55	Standard	Very Fast (Reduced Power Holding)	Seperate power
45	Fast (Overecitation)	Standard (AC Switching)	Seperate power
50	Fast (Overecitation)	Fast (DC Switching)	Seperate power

Basic Connection (AC & DC Switching)

The PMG brake system can be connected for standard stopping (AC-Switching), fast stopping (DC-Switching) and very fast stopping (Reduced power holding & DC-Switching). Fast brake release can also be achieved by selecting a different brake coil combination.

STANDARD STOPPING (AC-SWITCHING)

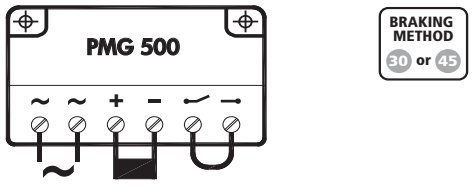

~ & ~	+ & -	⏜ & ⊸
AC BRAKE VOLTAGE	DC BRAKE	JUMPER

FAST & VERY FAST STOPPING (DC-SWITCHING)

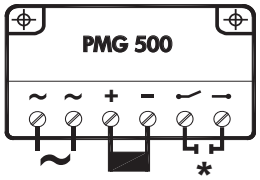

~ & ~	+ & -	⏜ & ⊸
AC BRAKE VOLTAGE	DC BRAKE	NORMALLY OPEN CONTACT

* The normally open contact/s (NO) is not supplied by NORD it must close at the same time power is supplied to the brake. The contact must be capable of switching inductive loads and/or be rated at IEC AC3.

Brake Times & Electrical Selection

Brake timing performance is critical in selecting the optimal brake system. NORD brakes can provide exceptional performance in terms of the release (start) times and engagement (stop) times. Use the following guidelines in order to select the correct brake control components and connections.

1) Determine if the brake needs to be wired directly from the motor terminal block or powered by a separate source.

- If you are using a frequency inverter, soft-start or a two speed motor you will need to supply the rectifier from a separate power source.

- If the motor is powered direct across-the-line the rectifier power can be supplied from the motor's terminal block.

2) What type of performance do I need?

- Is the standard brake performance OK?

- Is a higher performance required for fast brake release or very fast brake stopping?

3) Determine the brake supply voltage and check the rectifier compatability using the table on the page 6.

Selection Suggestions

When Fast or Very Fast Stopping is Recommended

Any applications that require quick stops and positive action at stand-still

Recommended Applications

- conveyors and inclined conveyors
- hoists and lifts
- bulk material handling equipment (bucket elevators, idler conveyor's).

⚠ *WARNING* ⚠

Hoisting (lifting/lowering) applications - must have the brake wired for fast response (DC-switching)

When Fast-Release is Recommended (Overexcitation)

Any application that is very high-cycling with frequent starts and stops. These applications require the brake to release very-quickly in order to avoid excessive heat build-up in the AC motor and brake coil.

Recommended Applications

- Index conveyors
- Diverters

Power Source	Brake Release (start)	Brake engagement (stop)	Braking Method *	Rectifier
Motor Terminal Block	Standard	Very Fast (Reduced power holding)	40	GPE or PMG 500
	Fast (Overexcitation)	Standard (AC switching)	30	GPE or PMG 500
	Fast (Overexcitation)	Fast (DC switching)	35	GPE or PMG 500
Seperate Power Source	Standard	Very Fast (Reduced power holding)	55	GPU or PMG 500
	Fast (Overexcitation)	Standard (AC switching)	45	GPU or PMG 500
	Fast (Overexcitation)	Fast (DC switching)	50	GPU or PMG 500

*** Braking methods referenced in connection diagrams on pages 7-11.**

Rectifier Supply Voltage (VAC)	Brake Coil Voltage (VDC)	Braking Method	Rectifier Type	Rectifier P/N	BRE 5	BRE 10	BRE 20	BRE 40	BRE 60	BRE 100	BRE 150	BRE 250	BRE 400	BRE 800	BRE 1200
208 (200-208)	105	30	GPE20L	19140230	X	X	X	X							
	105	30	PMG500	19140200					X	X	X	X	X	X	X
	105	35	GPE20L	19140230	X	X	X	X							
	105	35	PMG500	19140200					X	X	X	X	X	X	X
	180	40	GPE20L	19140230	X	X	X	X	X	X	X				
	180	40	PMG500	19140200								X	X	X	X
	105	45	GPU20L	19140090	X	X	X	X							
	105	45	PMG500	19140200					X	X	X	X	X	X	X
	105	50	GPU20L	19140090	X	X	X	X							
	105	50	PMG500	19140200					X	X	X	X	X	X	X
	180	55	GPU20L	19140090	X	X	X	X	X	X	X				
	180	55	PMG500	19140200								X	X	X	X
230 (220-240)	105	30	GPE20L	19140230	X	X	X	X							
	105	30	PMG500	19140200					X	X	X	X	X	X	X
	105	35	GPE20L	19140230	X	X	X	X	X	X	X				
	105	35	PMG500	19140200								X	X	X	X
	205	40	GPE20L	19140230	X	X	X	X	X	X	X				
	205	40	PMG500	19140200								X	X	X	X
	105	45	GPU20L	19140090	X	X	X	X							
	105	45	PMG500	19140200					X	X	X	X	X	X	X
	105	50	GPU20L	19140090	X	X	X	X							
	105	50	PMG500	19140200					X	X	X	X	X	X	X
	205	55	GPU20L	19140090	X	X	X	X	X	X	X				
	205	55	PMG500	19140200								X	X	X	X
332	180	30	GPE40L	19140240	X	X	X	X	X	X	X				
	180	30	PMG500	19140200								X	X	X	X
	180	35	GPE40L	19140240	X	X	X	X	X	X	X				
	180	35	PMG500	19140200								X	X	X	X
	180	45	GPU40L	19140170	X	X	X	X	X	X	X				
	180	50	GPU40L	19140170	X	X	X	X	X	X	X				
400 (380-415)	180	30	GPE40L	19140240	X	X	X	X	X	X	X				
	180	30	PMG500	19140200								X	X	X	X
	180	35	GPE40L	19140240	X	X	X	X	X	X	X				
	180	35	PMG500	19140200								X	X	X	X
	180	45	GPU20L	19140090	X	X	X	X	X	X	X				
	180	45	PMG500	19140200								X	X	X	X
	180	50	GPU20L	19140090	X	X	X	X	X	X	X				
	180	50	PMG500	19140200								X	X	X	X
460 (440-480)	205	30	GPE40L	19140240	X	X	X	X	X	X	X				
	205	30	PMG500	19140200								X	X	X	X
	205	35	GPE40L	19140240	X	X	X	X	X	X	X				
	205	35	PMG500	19140200								X	X	X	X
	205	45	GPU40L	19140170	X	X	X	X	X	X	X				
	205	45	PMG500	19140200								X	X	X	X
	205	50	GPU40L	19140170	X	X	X	X	X	X	X				
	205	50	PMG500	19140200								X	X	X	X

GP101A

POWERED FROM MOTOR TERMINAL BLOCK
FAST-RELEASE (OVER EXCITATION)
NORMAL STOPPING (AC-SWITCHING)

30

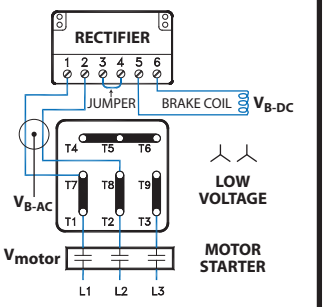

MOTOR	RECTIFIER	Vmotor	VB-AC	VB-DC
230YY/460Y	GPE20L	230 VAC	230 VAC	105 VDC

GP101B

POWERED FROM MOTOR TERMINAL BLOCK
FAST-RELEASE (OVER EXCITATION)
NORMAL STOPPING (AC-SWITCHING)

30

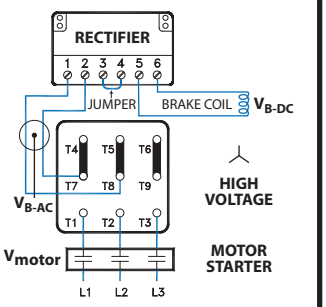

MOTOR	RECTIFIER	Vmotor	VB-AC	VB-DC
230YY/460Y	GPE20L	460 VAC	230 VAC	105 VDC

GP101C

POWERED FROM MOTOR TERMINAL BLOCK
FAST-RELEASE (OVER EXCITATION)
NORMAL STOPPING (AC-SWITCHING)

30

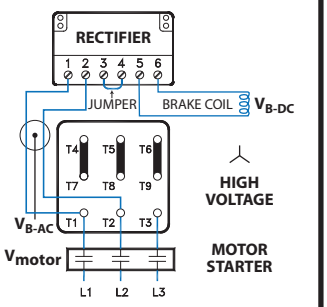

MOTOR	RECTIFIER	Vmotor	VB-AC	VB-DC
230YY/460Y	GPE40L	460 VAC	460 VAC	205 VDC

GP101D

POWERED FROM MOTOR TERMINAL BLOCK
FAST-RELEASE (OVER EXCITATION)
NORMAL STOPPING (AC-SWITCHING)

30

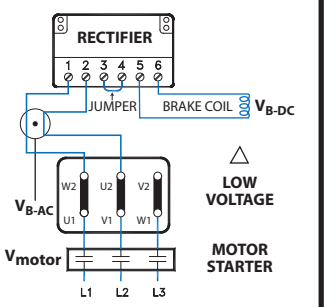

MOTOR	RECTIFIER	Vmotor	VB-AC	VB-DC
208Δ/360Y	GPE20L	208 VAC	208 VAC	105 VDC
230Δ/400Y	GPE20L	230 VAC	230 VAC	105 VDC
400Δ/690Y	GPE40L	400 VAC	400 VAC	180 VDC
460Δ/Y	GPE40L	460 VAC	460 VAC	205 VDC

GP101E

POWERED FROM MOTOR TERMINAL BLOCK
FAST-RELEASE (OVER EXCITATION)
NORMAL STOPPING (AC-SWITCHING)

30

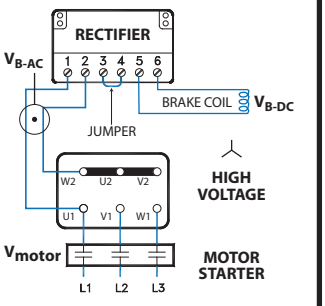

MOTOR	RECTIFIER	Vmotor	VB-AC	VB-DC
230Δ/400Y	GPE20L	400 VAC	230 VAC	105 VDC
332Δ/575Y	GPE40L	575 VAC	332 VAC	180 VDC

GP102A

POWERED FROM MOTOR TERMINAL BLOCK
FAST-RELEASE (OVER EXCITATION)
FAST STOPPING (DC-SWITCHING)

35

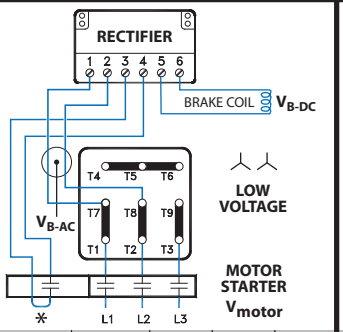

MOTOR	RECTIFIER	Vmotor	VB-AC	VB-DC
230YY/460Y	GPE20L	230 VAC	230 VAC	105 VDC

GP102B

POWERED FROM MOTOR TERMINAL BLOCK
FAST-RELEASE (OVER EXCITATION)
FAST STOPPING (DC-SWITCHING)

35

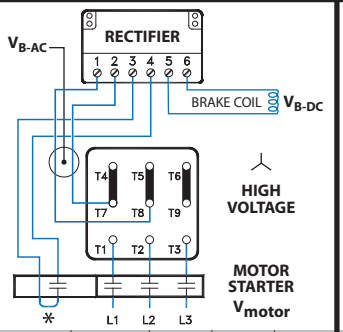

MOTOR	RECTIFIER	Vmotor	VB-AC	VB-DC
230YY/460Y	GPE20L	460 VAC	230 VAC	105 VDC

GP102C

POWERED FROM MOTOR TERMINAL BLOCK
FAST-RELEASE (OVER EXCITATION)
FAST STOPPING (DC-SWITCHING)

35

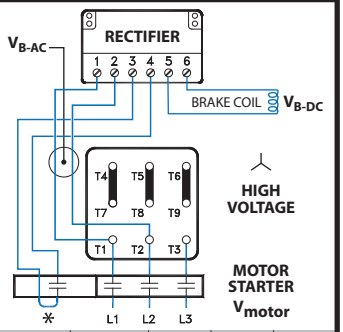

MOTOR	RECTIFIER	Vmotor	VB-AC	VB-DC
230YY/460Y	GPE40L	460 VAC	460 VAC	205 VDC

GP102D

POWERED FROM MOTOR TERMINAL BLOCK
FAST-RELEASE (OVER EXCITATION)
FAST STOPPING (DC-SWITCHING)

35

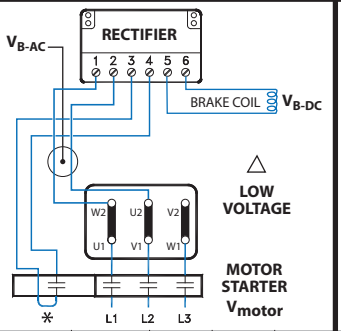

MOTOR	RECTIFIER	Vmotor	VB-AC	VB-DC
208Δ/360Y	GPE20L	208 VAC	208 VAC	105 VDC
230Δ/400Y	GPE20L	230 VAC	230 VAC	105 VDC
400Δ/690Y	GPE40L	400 VAC	400 VAC	180 VDC
460Δ/Y	GPE40L	460 VAC	460 VAC	205 VDC

GP102E

POWERED FROM MOTOR TERMINAL BLOCK
FAST-RELEASE (OVER EXCITATION)
FAST STOPPING (DC-SWITCHING)

35

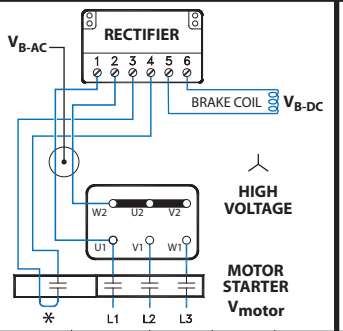

MOTOR	RECTIFIER	Vmotor	VB-AC	VB-DC
230Δ/400Y	GPE20L	400 VAC	230 VAC	105 VDC
332Δ/575Y	GPE40L	575 VAC	332 VAC	180 VDC

GP103A

POWERED FROM MOTOR TERMINAL BLOCK
STANDARD RELEASE
VERY FAST STOPPING
(DC-SWITCHING + REDUCED POWER HOLDING)

40

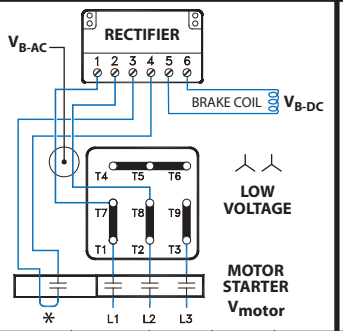

MOTOR	RECTIFIER	Vmotor	VB-AC	VB-DC
230YY/460Y	GPE20L	230 VAC	230 VAC	205 VDC

GP103B

POWERED FROM MOTOR TERMINAL BLOCK
STANDARD RELEASE
VERY FAST STOPPING
(DC-SWITCHING + REDUCED POWER HOLDING)

40

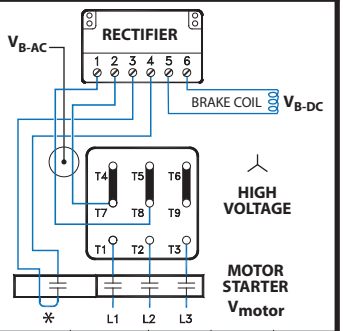

MOTOR	RECTIFIER	Vmotor	VB-AC	VB-DC
230YY/460Y	GPE20L	460 VAC	230 VAC	205 VDC

* The normally open contact/s (NO) is not supplied by NORD. It must close at the same time power is supplied to the brake. The contact must be capable of switching inductive loads and/or be rated IEC AC3.

= Braking Method

GP103C — POWERED FROM MOTOR TERMINAL BLOCK — STANDARD RELEASE — VERY FAST STOPPING (DC-SWITCHING + REDUCED POWER HOLDING) — 40

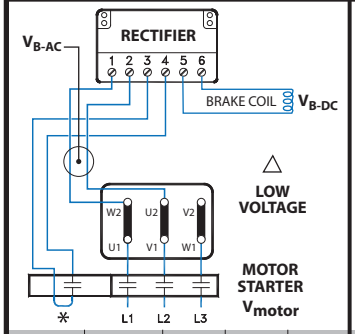

MOTOR	RECTIFIER	V_{motor}	V_{B-AC}	V_{B-DC}
208Δ/360Y	GPE20L	208 VAC	208 VAC	180 VDC
230Δ/400Y	GPE20L	230 VAC	230 VAC	205 VDC

GP103D — POWERED FROM MOTOR TERMINAL BLOCK — STANDARD RELEASE — VERY FAST STOPPING (DC-SWITCHING + REDUCED POWER HOLDING) — 40

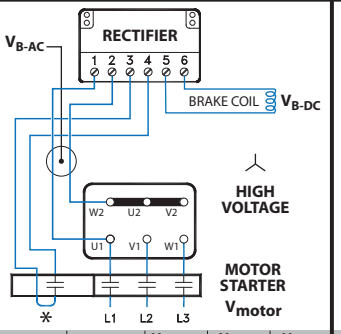

MOTOR	RECTIFIER	V_{motor}	V_{B-AC}	V_{B-DC}
230Δ/400Y	GPE20L	400 VAC	230 VAC	205 VDC

GP104A — SEPERATE POWER SOURCE — FAST-RELEASE (OVER EXCITATION) — NORMAL STOPPING (AC-SWITCHING) — 45

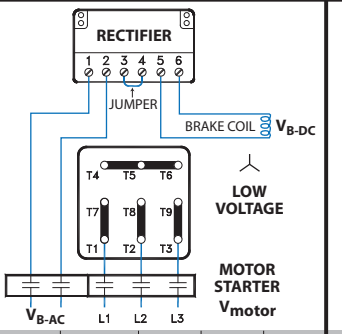

MOTOR	RECTIFIER	V_{motor}	V_{B-AC}	V_{B-DC}
230YY/460Y	GPU20L	230 VAC	230 VAC	105 VDC

GP104B — SEPERATE POWER SOURCE — FAST-RELEASE (OVER EXCITATION) — NORMAL STOPPING (AC-SWITCHING) — 45

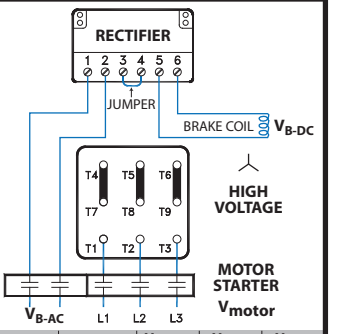

MOTOR	RECTIFIER	V_{motor}	V_{B-AC}	V_{B-DC}
230YY/460Y	GPU20L	460 VAC	230 VAC	105 VDC

GP104C — SEPERATE POWER SOURCE — FAST-RELEASE (OVER EXCITATION) — NORMAL STOPPING (AC-SWITCHING) — 45

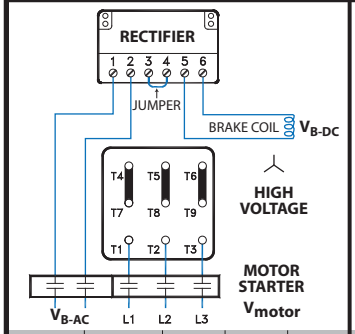

MOTOR	RECTIFIER	V_{motor}	V_{B-AC}	V_{B-DC}
230YY/460Y	GPU40L	460 VAC	460 VAC	205 VDC

GP104D — SEPERATE POWER SOURCE — FAST-RELEASE (OVER EXCITATION) — NORMAL STOPPING (AC-SWITCHING) — 45

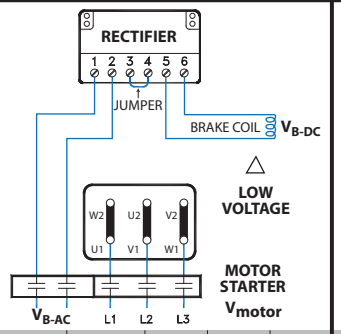

MOTOR	RECTIFIER	V_{motor}	V_{B-AC}	V_{B-DC}
208Δ/360Y	GPU20L	208 VAC	208 VAC	105 VDC
230Δ/400Y	GPU20L	230 VAC	230 VAC	105 VDC
400Δ/690Y	GPU40L	400 VAC	400 VAC	180 VDC
460Δ/Y	GPU40L	460 VAC	460 VAC	205 VDC

GP104E — SEPERATE POWER SOURCE — FAST-RELEASE (OVER EXCITATION) — NORMAL STOPPING (AC-SWITCHING) — 45

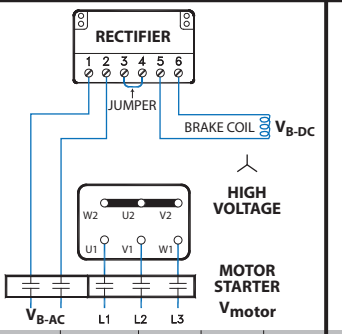

MOTOR	RECTIFIER	V_{motor}	V_{B-AC}	V_{B-DC}
230Δ/400Y	GPU20L	400 VAC	230 VAC	105 VDC
332Δ/575Y	GPU40L	575 VAC	332 VAC	180 VDC

GP105A — SEPERATE POWER SOURCE — FAST-RELEASE (OVER EXCITATION) — FAST STOPPING (DC-SWITCHING) — 50

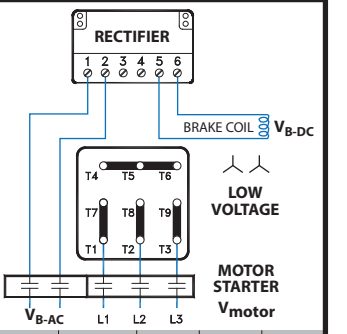

MOTOR	RECTIFIER	V_{motor}	V_{B-AC}	V_{B-DC}
230YY/460Y	GPU20L	230 VAC	230 VAC	105 VDC

GP105B — SEPERATE POWER SOURCE — FAST-RELEASE (OVER EXCITATION) — FAST STOPPING (DC-SWITCHING) — 50

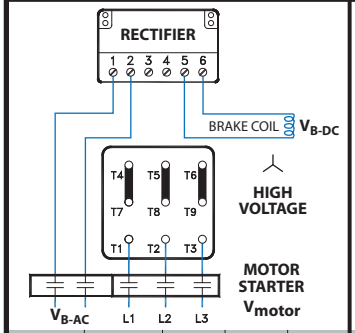

MOTOR	RECTIFIER	V_{motor}	V_{B-AC}	V_{B-DC}
230YY/460Y	GPU20L	460 VAC	230 VAC	105 VDC

GP105C — SEPERATE POWER SOURCE — FAST-RELEASE (OVER EXCITATION) — FAST STOPPING (DC-SWITCHING) — 50

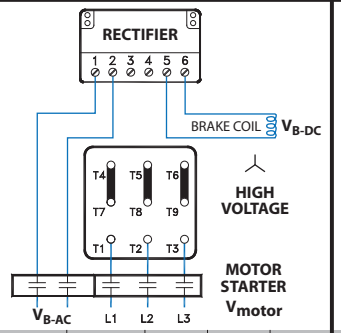

MOTOR	RECTIFIER	V_{motor}	V_{B-AC}	V_{B-DC}
230YY/460Y	GPU40L	460 VAC	460 VAC	205 VDC

GP105D — SEPERATE POWER SOURCE — FAST-RELEASE (OVER EXCITATION) — FAST STOPPING (DC-SWITCHING) — 50

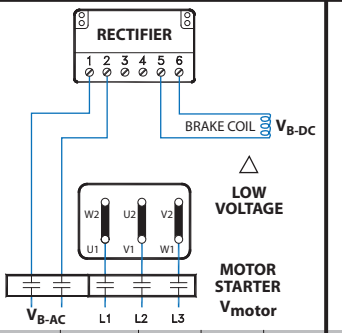

MOTOR	RECTIFIER	V_{motor}	V_{B-AC}	V_{B-DC}
208Δ/360Y	GPU20L	208 VAC	208 VAC	105 VDC
230Δ/400Y	GPU20L	230 VAC	230 VAC	105 VDC
400Δ/690Y	GPU40L	400 VAC	400 VAC	180 VDC
460Δ/Y	GPU40L	460 VAC	460 VAC	205 VDC

GP105E — SEPERATE POWER SOURCE — FAST-RELEASE (OVER EXCITATION) — FAST STOPPING (DC-SWITCHING) — 50

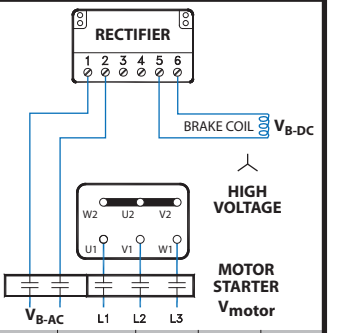

MOTOR	RECTIFIER	V_{motor}	V_{B-AC}	V_{B-DC}
230Δ/400Y	GPU20L	400 VAC	230 VAC	105 VDC
332Δ/575Y	GPU40L	575 VAC	332 VAC	180 VDC

✱ The normally open contact/s (NO) is not supplied by NORD. It must close at the same time power is supplied to the brake. The contact must be capable of switching inductive loads and/or be rated IEC AC3.

= Braking Method

FAST ACTING BRAKE RECTIFIERS (GPE, GPU & PMG)

GP106A — SEPERATE POWER SOURCE — STANDARD RELEASE — VERY FAST STOPPING (DC-SWITCHING + REDUCED POWER HOLDING) — 55

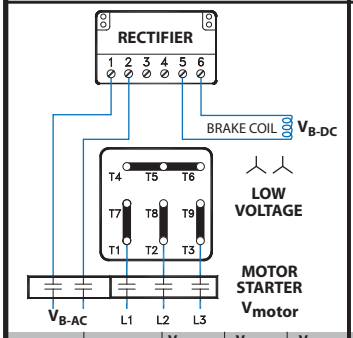

MOTOR	RECTIFIER	V_{motor}	V_{B-AC}	V_{B-DC}
230YY/460Y	GPU20L	230 VAC	230 VAC	205 VDC

GP106B — SEPERATE POWER SOURCE — STANDARD RELEASE — VERY FAST STOPPING (DC-SWITCHING + REDUCED POWER HOLDING) — 55

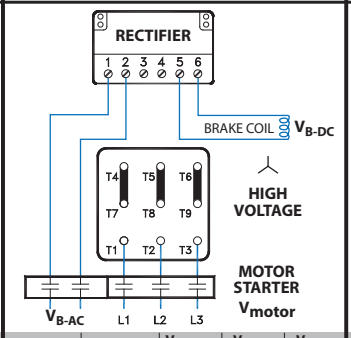

MOTOR	RECTIFIER	V_{motor}	V_{B-AC}	V_{B-DC}
230YY/460Y	GPU20L	460 VAC	230 VAC	205 VDC

GP106C — SEPERATE POWER SOURCE — STANDARD RELEASE — VERY FAST STOPPING (DC-SWITCHING + REDUCED POWER HOLDING) — 55

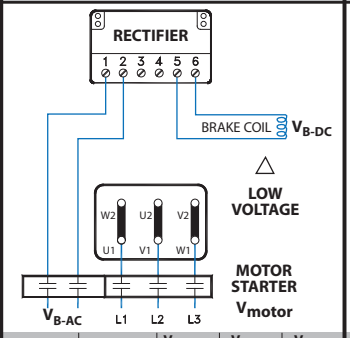

MOTOR	RECTIFIER	V_{motor}	V_{B-AC}	V_{B-DC}
208Δ/360Y	GPU20L	208 VAC	208 VAC	180 VDC
230Δ/400Y	GPU20L	230 VAC	230 VAC	205 VDC

GP106D — SEPERATE POWER SOURCE — STANDARD RELEASE — VERY FAST STOPPING (DC-SWITCHING + REDUCED POWER HOLDING) — 55

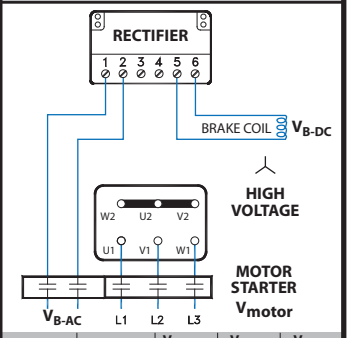

MOTOR	RECTIFIER	V_{motor}	V_{B-AC}	V_{B-DC}
230Δ/400Y	GPU20L	400 VAC	230 VAC	205 VDC

PMG101A — POWERED FROM MOTOR TERMINAL BLOCK — FAST-RELEASE (OVER EXCITATION) — NORMAL STOPPING (AC-SWITCHING) — 30

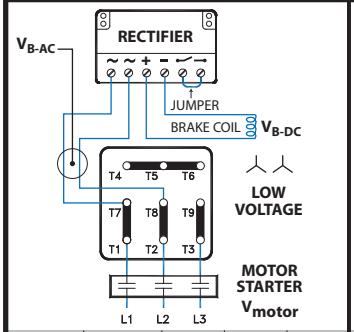

MOTOR	RECTIFIER	V_{motor}	V_{B-AC}	V_{B-DC}
230YY/460Y	PMG500	230 VAC	230 VAC	105 VDC

PMG101B — POWERED FROM MOTOR TERMINAL BLOCK — FAST-RELEASE (OVER EXCITATION) — NORMAL STOPPING (AC-SWITCHING) — 30

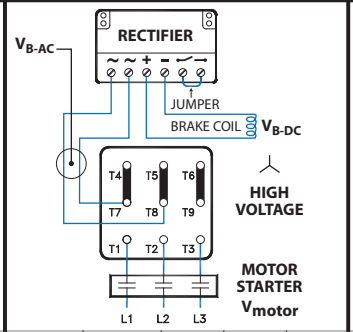

MOTOR	RECTIFIER	V_{motor}	V_{B-AC}	V_{B-DC}
230YY/460Y	PMG500	460 VAC	230 VAC	105 VDC

PMG101C — POWERED FROM MOTOR TERMINAL BLOCK — FAST-RELEASE (OVER EXCITATION) — NORMAL STOPPING (AC-SWITCHING) — 30

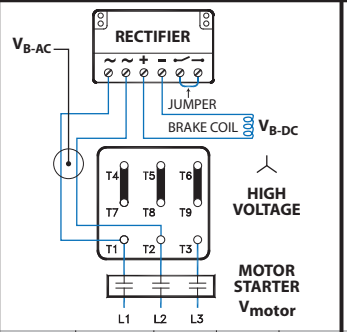

MOTOR	RECTIFIER	V_{motor}	V_{B-AC}	V_{B-DC}
230YY/460Y	PMG500	460 VAC	460 VAC	205 VDC

PMG101D — POWERED FROM MOTOR TERMINAL BLOCK — FAST-RELEASE (OVER EXCITATION) — NORMAL STOPPING (AC-SWITCHING) — 30

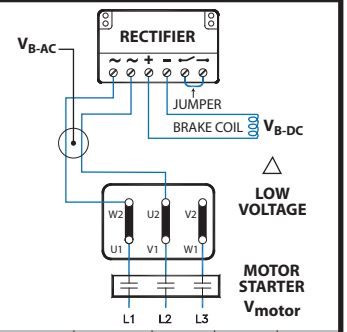

MOTOR	RECTIFIER	V_{motor}	V_{B-AC}	V_{B-DC}
208Δ/360Y	PMG500	208 VAC	208 VAC	105 VDC
230Δ/400Y	PMG500	230 VAC	230 VAC	105 VDC
400Δ/690Y	PMG500	400 VAC	400 VAC	180 VDC
460Δ/Y	PMG500	460 VAC	460 VAC	205 VDC

PMG101E — POWERED FROM MOTOR TERMINAL BLOCK — FAST-RELEASE (OVER EXCITATION) — NORMAL STOPPING (AC-SWITCHING) — 30

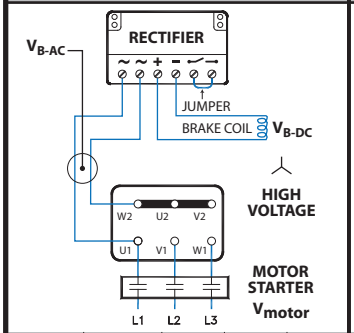

MOTOR	RECTIFIER	V_{motor}	V_{B-AC}	V_{B-DC}
230Δ/400Y	PMG500	400 VAC	230 VAC	105 VDC

PMG102A — POWERED FROM MOTOR TERMINAL BLOCK — FAST-RELEASE (OVER EXCITATION) — FAST STOPPING (DC-SWITCHING) — 35

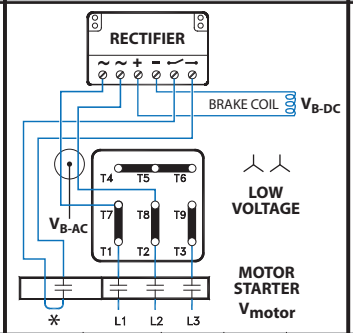

MOTOR	RECTIFIER	V_{motor}	V_{B-AC}	V_{B-DC}
230YY/460Y	PMG500	230 VAC	230 VAC	105 VDC

PMG102B — POWERED FROM MOTOR TERMINAL BLOCK — FAST-RELEASE (OVER EXCITATION) — FAST STOPPING (DC-SWITCHING) — 35

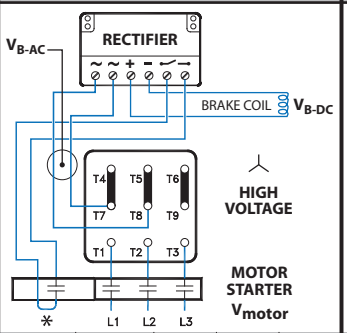

MOTOR	RECTIFIER	V_{motor}	V_{B-AC}	V_{B-DC}
230YY/460Y	PMG500	460 VAC	230 VAC	105 VDC

PMG102C — POWERED FROM MOTOR TERMINAL BLOCK — FAST-RELEASE (OVER EXCITATION) — FAST STOPPING (DC-SWITCHING) — 35

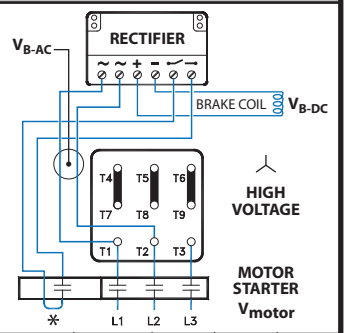

MOTOR	RECTIFIER	V_{motor}	V_{B-AC}	V_{B-DC}
230YY/460Y	PMG500	460 VAC	460 VAC	205 VDC

✻ The normally open contact/s (NO) is not supplied by NORD. It must close at the same time power is supplied to the brake. The contact must be capable of switching inductive loads and/or be rated IEC AC3.

= Braking Method

NORD Gear Limited
Toll Free in Canada: 800.668.4378

NORD Gear Corporation
Toll Free in the United States: 888.314.6673

FAST ACTING BRAKE RECTIFIERS (GPE, GPU & PMG)

PMG102D — POWERED FROM MOTOR TERMINAL BLOCK — FAST-RELEASE (OVER EXCITATION) — FAST STOPPING (DC-SWITCHING) — 35

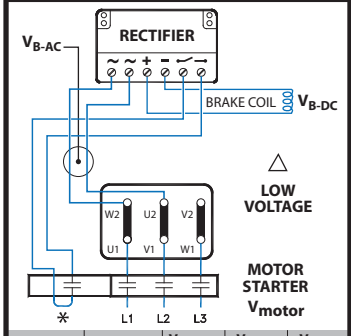

MOTOR	RECTIFIER	V_{motor}	V_{B-AC}	V_{B-DC}
208Δ/360Y	PMG500	208 VAC	208 VAC	105 VDC
230Δ/400Y	PMG500	230 VAC	230 VAC	105 VDC
400Δ/690Y	PMG500	400 VAC	400 VAC	180 VDC
460Δ/Y	PMG500	460 VAC	460 VAC	205 VDC

PMG102E — POWERED FROM MOTOR TERMINAL BLOCK — FAST-RELEASE (OVER EXCITATION) — FAST STOPPING (DC-SWITCHING) — 35

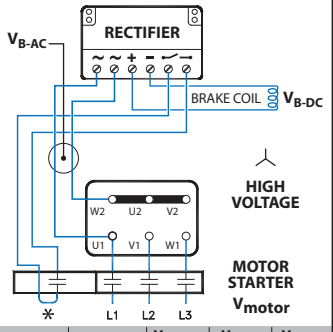

MOTOR	RECTIFIER	V_{motor}	V_{B-AC}	V_{B-DC}
230Δ/400Y	PMG500	400 VAC	230 VAC	105 VDC

PMG103A — POWERED FROM MOTOR TERMINAL BLOCK — STANDARD RELEASE — VERY FAST STOPPING (DC-SWITCHING + REDUCED POWER HOLDING) — 40

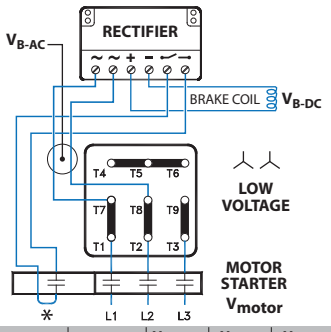

MOTOR	RECTIFIER	V_{motor}	V_{B-AC}	V_{B-DC}
230YY/460Y	PMG500	230 VAC	230 VAC	205 VDC

PMG103B — POWERED FROM MOTOR TERMINAL BLOCK — STANDARD RELEASE — VERY FAST STOPPING (DC-SWITCHING + REDUCED POWER HOLDING) — 40

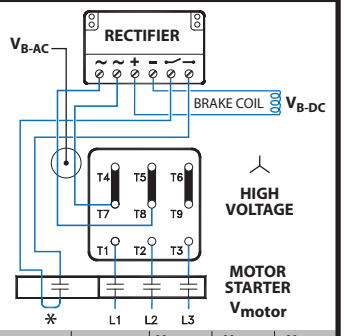

MOTOR	RECTIFIER	V_{motor}	V_{B-AC}	V_{B-DC}
230YY/460Y	PMG500	460 VAC	230 VAC	205 VDC

PMG103C — POWERED FROM MOTOR TERMINAL BLOCK — STANDARD RELEASE — VERY FAST STOPPING (DC-SWITCHING + REDUCED POWER HOLDING) — 40

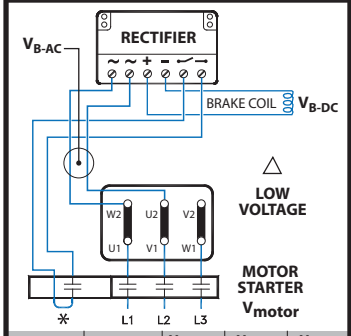

MOTOR	RECTIFIER	V_{motor}	V_{B-AC}	V_{B-DC}
208Δ/360Y	PMG500	208 VAC	208 VAC	180 VDC
230Δ/400Y	PMG500	230 VAC	230 VAC	205 VDC

PMG103D — POWERED FROM MOTOR TERMINAL BLOCK — STANDARD RELEASE — VERY FAST STOPPING (DC-SWITCHING + REDUCED POWER HOLDING) — 40

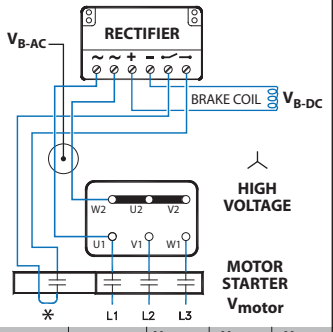

MOTOR	RECTIFIER	V_{motor}	V_{B-AC}	V_{B-DC}
230Δ/400Y	PMG500	400 VAC	230 VAC	205 VDC

PMG104A — SEPERATE POWER SOURCE — FAST-RELEASE (OVER EXCITATION) — NORMAL STOPPING (AC-SWITCHING) — 45

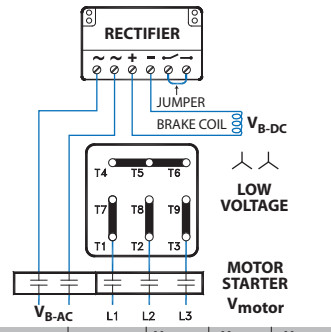

MOTOR	RECTIFIER	V_{motor}	V_{B-AC}	V_{B-DC}
230YY/460Y	PMG500	230 VAC	230 VAC	105 VDC

PMG104B — SEPERATE POWER SOURCE — FAST-RELEASE (OVER EXCITATION) — NORMAL STOPPING (AC-SWITCHING) — 45

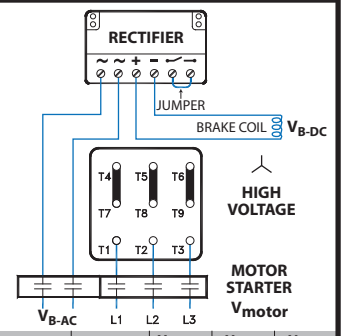

MOTOR	RECTIFIER	V_{motor}	V_{B-AC}	V_{B-DC}
230YY/460Y	PMG500	460 VAC	230 VAC	105 VDC

PMG104C — SEPERATE POWER SOURCE — FAST-RELEASE (OVER EXCITATION) — NORMAL STOPPING (AC-SWITCHING) — 45

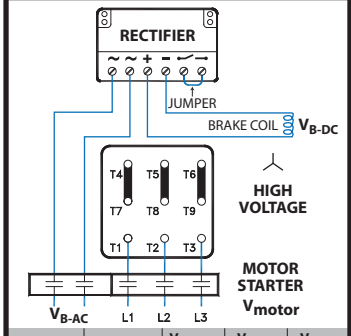

MOTOR	RECTIFIER	V_{motor}	V_{B-AC}	V_{B-DC}
230YY/460Y	PMG500	460 VAC	460 VAC	205 VDC

PMG104D — SEPERATE POWER SOURCE — FAST-RELEASE (OVER EXCITATION) — NORMAL STOPPING (AC-SWITCHING) — 45

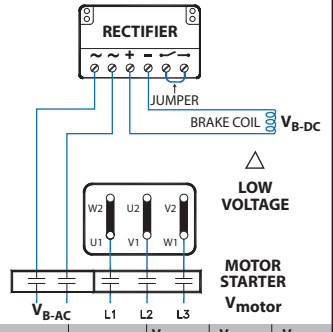

MOTOR	RECTIFIER	V_{motor}	V_{B-AC}	V_{B-DC}
208Δ/360Y	PMG500	208 VAC	208 VAC	105 VDC
230Δ/400Y	PMG500	230 VAC	230 VAC	105 VDC
400Δ/690Y	PMG500	400 VAC	400 VAC	180 VDC
460Δ/Y	PMG500	460 VAC	460 VAC	205 VDC

PMG104E — SEPERATE POWER SOURCE — FAST-RELEASE (OVER EXCITATION) — NORMAL STOPPING (AC-SWITCHING) — 45

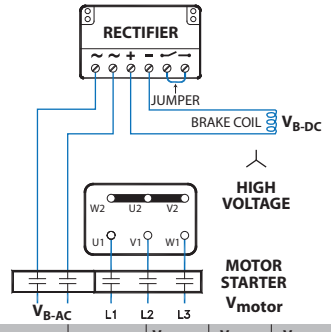

MOTOR	RECTIFIER	V_{motor}	V_{B-AC}	V_{B-DC}
230Δ/400Y	PMG500	400 VAC	230 VAC	105 VDC

PMG105A — SEPERATE POWER SOURCE — FAST-RELEASE (OVER EXCITATION) — FAST STOPPING (DC-SWITCHING) — 50

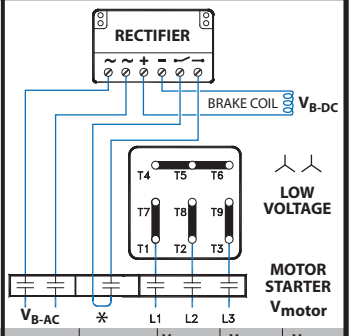

MOTOR	RECTIFIER	V_{motor}	V_{B-AC}	V_{B-DC}
230YY/460Y	PMG500	230 VAC	230 VAC	105 VDC

✱ The normally open contact/s (NO) is not supplied by NORD. It must close at the same time power is supplied to the brake. The contact must be capable of switching inductive loads and/or be rated IEC AC3.

= Braking Method

NORD Gear Limited
Toll Free in Canada: 800.668.4378

NORD Gear Corporation
Toll Free in the United States: 888.314.6673

PMG105B

SEPERATE POWER SOURCE
FAST-RELEASE (OVER EXCITATION)
FAST STOPPING (DC-SWITCHING)

50

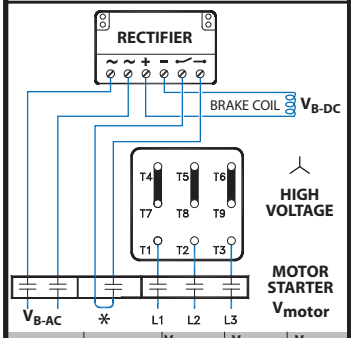

MOTOR	RECTIFIER	V_{motor}	V_{B-AC}	V_{B-DC}
230YY/460Y	PMG500	460 VAC	230 VAC	105 VDC

PMG105C

SEPERATE POWER SOURCE
FAST-RELEASE (OVER EXCITATION)
FAST STOPPING (DC-SWITCHING)

50

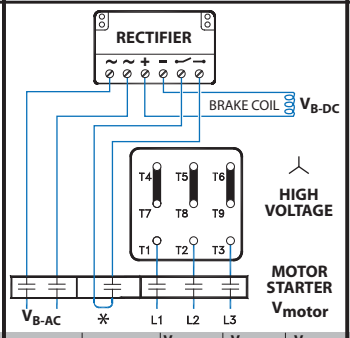

MOTOR	RECTIFIER	V_{motor}	V_{B-AC}	V_{B-DC}
230YY/460Y	PMG500	460 VAC	460 VAC	205 VDC

PMG105D

SEPERATE POWER SOURCE
FAST-RELEASE (OVER EXCITATION)
FAST STOPPING (DC-SWITCHING)

50

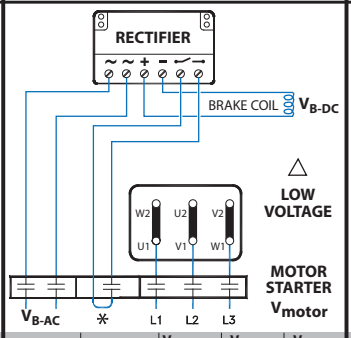

MOTOR	RECTIFIER	V_{motor}	V_{B-AC}	V_{B-DC}
208Δ/360Y	PMG500	208 VAC	208 VAC	105 VDC
230Δ/400Y	PMG500	230 VAC	230 VAC	105 VDC
400Δ/690Y	PMG500	400 VAC	400 VAC	180 VDC
460Δ/Y	PMG500	460 VAC	460 VAC	205 VDC

PMG105E

SEPERATE POWER SOURCE
FAST-RELEASE (OVER EXCITATION)
FAST STOPPING (DC-SWITCHING)

50

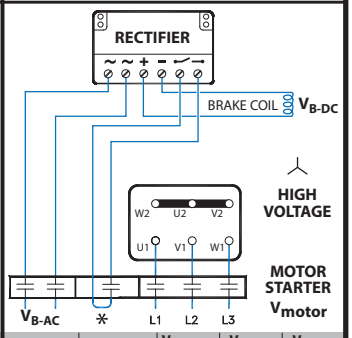

MOTOR	RECTIFIER	V_{motor}	V_{B-AC}	V_{B-DC}
230Δ/400Y	PMG500	400 VAC	230 VAC	105 VDC

PMG106A

SEPERATE POWER SOURCE
STANDARD RELEASE
VERY FAST STOPPING
(DC-SWITCHING + REDUCED POWER HOLDING)

55

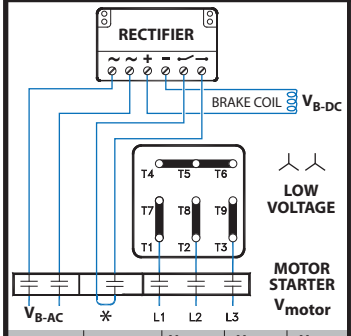

MOTOR	RECTIFIER	V_{motor}	V_{B-AC}	V_{B-DC}
230YY/460Y	PMG500	230 VAC	230 VAC	205 VDC

PMG106B

SEPERATE POWER SOURCE
STANDARD RELEASE
VERY FAST STOPPING
(DC-SWITCHING + REDUCED POWER HOLDING)

55

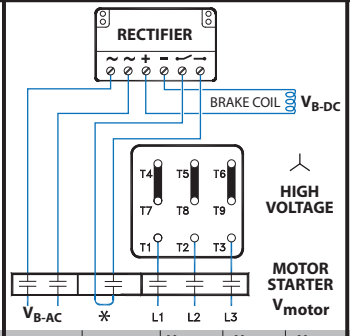

MOTOR	RECTIFIER	V_{motor}	V_{B-AC}	V_{B-DC}
230YY/460Y	PMG500	460 VAC	230 VAC	205 VDC

PMG106C

SEPERATE POWER SOURCE
STANDARD RELEASE
VERY FAST STOPPING
(DC-SWITCHING + REDUCED POWER HOLDING)

55

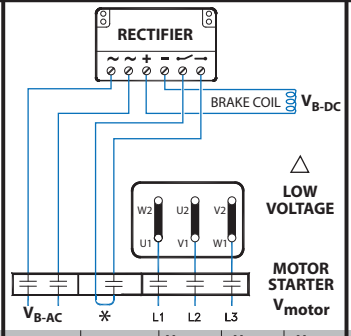

MOTOR	RECTIFIER	V_{motor}	V_{B-AC}	V_{B-DC}
208Δ/360Y	PMG500	208 VAC	208 VAC	180 VDC
230Δ/400Y	PMG500	230 VAC	230 VAC	205 VDC

PMG106D

SEPERATE POWER SOURCE
STANDARD RELEASE
VERY FAST STOPPING
(DC-SWITCHING + REDUCED POWER HOLDING)

55

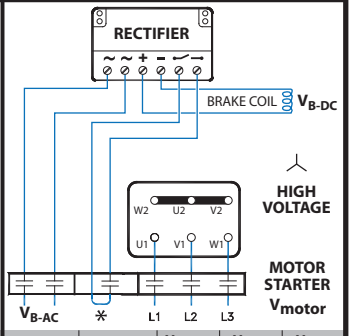

MOTOR	RECTIFIER	V_{motor}	V_{B-AC}	V_{B-DC}
230Δ/400Y	PMG500	400 VAC	230 VAC	205 VDC

✱ **The normally open contact/s (NO) is not supplied by NORD. It must close at the same time power is supplied to the brake. The contact must be capable of switching inductive loads and/or be rated IEC AC3.**

= Braking Method

CURRENT SENSING BRAKE RELAY (IR) INSTALLATION & MAINTENANCE

Motor Current Sensing Brake Relay (IR)

The current sensing relay, normally called the IR option, is used to achieve improved brake engagement or stopping time without the use of external control equipment or additional wiring. The relay is mounted directly onto the motor terminal box. The relay switch leads are connected to terminals 3 and 4 of the rectifier. When the power to the motor is shut off, the IR relay opens the brake circuit on the DC side; this allows the brake to demagnetize quickly.

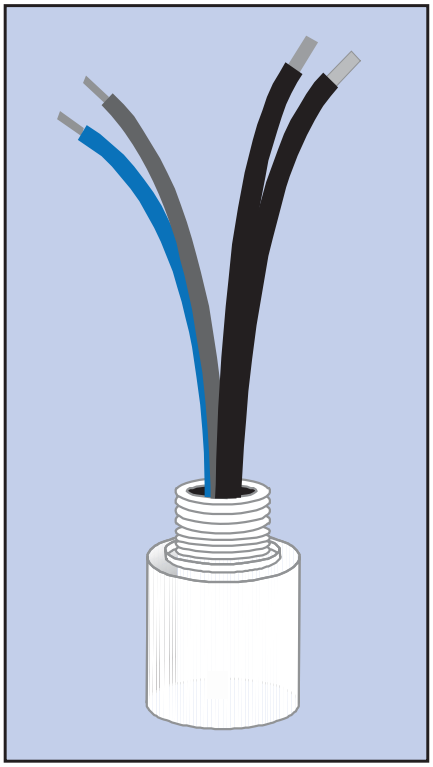

⚠ WARNING ⚠

- Motor must be powered across-the-line (not inverter powered or controlled with a soft-start)
- The brake power must be provided from the motor's terminal block (not separately powered)
- Motor must be a single-speed (not possible with two-speed motors)

Ratings

Part Number	18556010	18556020
Motor Frame Sizes	63S – 180M*	180L – 225M
Maximum Cycles per hour	500	500
Switching Voltage	42-550V_{DC}	42-550V_{DC}
AC input current – black/white wires	25 A_{AC} -75A_{AC} – 0.2 s	50 A_{AC} - 75A_{AC} – 0.2s
DC brake current – red and blue wires	1.0 A_{DC}	1.0 A_{DC}
Holding Current	0.7 A_{AC}	0.7 A_{AC}
Additional brake setting delay	18 ms	18 ms
Ambient temperature	- 25 to 90 °C - 40 to 167 °F	- 25 to 90 °C - 40 to 167 °F
Enclosure with o-ring mounted to a terminal box	IP65	IP65

* For the 180MX/4, 230/460V motor use part number 18556020

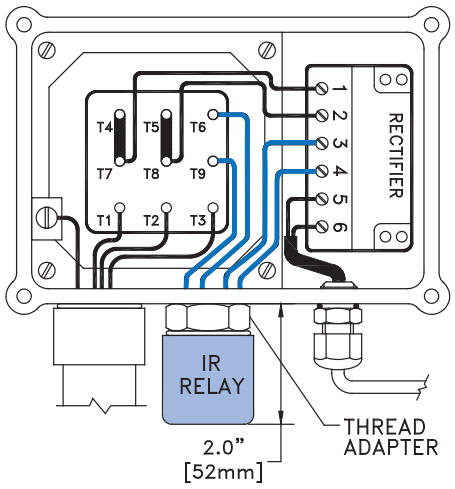

Connection Notes

Rectifier			IR Relay Wires To Rectifiers	
Type	Part Number	Design	Red	Blue
GVE20L	19141000	Full-Wave	3	4
GHE40L	19141010	Half-Wave	4	3
GHE50L	19141020	Half Wave	4	3
GPE20L	19140230	Push-Hybrid	4	3
GPE40L	19140240	Push-Hybrid	4	3

Conduit Box Thread Adapter

Thread	Motor Frame	Part number
M20	63-71	18542006*
M25	80-90	18522253
M32	100-132	18522320
M40	160-180	18522400 + 18522253

* Spacer

CURRENT SENSING BRAKE RELAY (IR) INSTALLATION & MAINTENANCE

Connection Diagrams

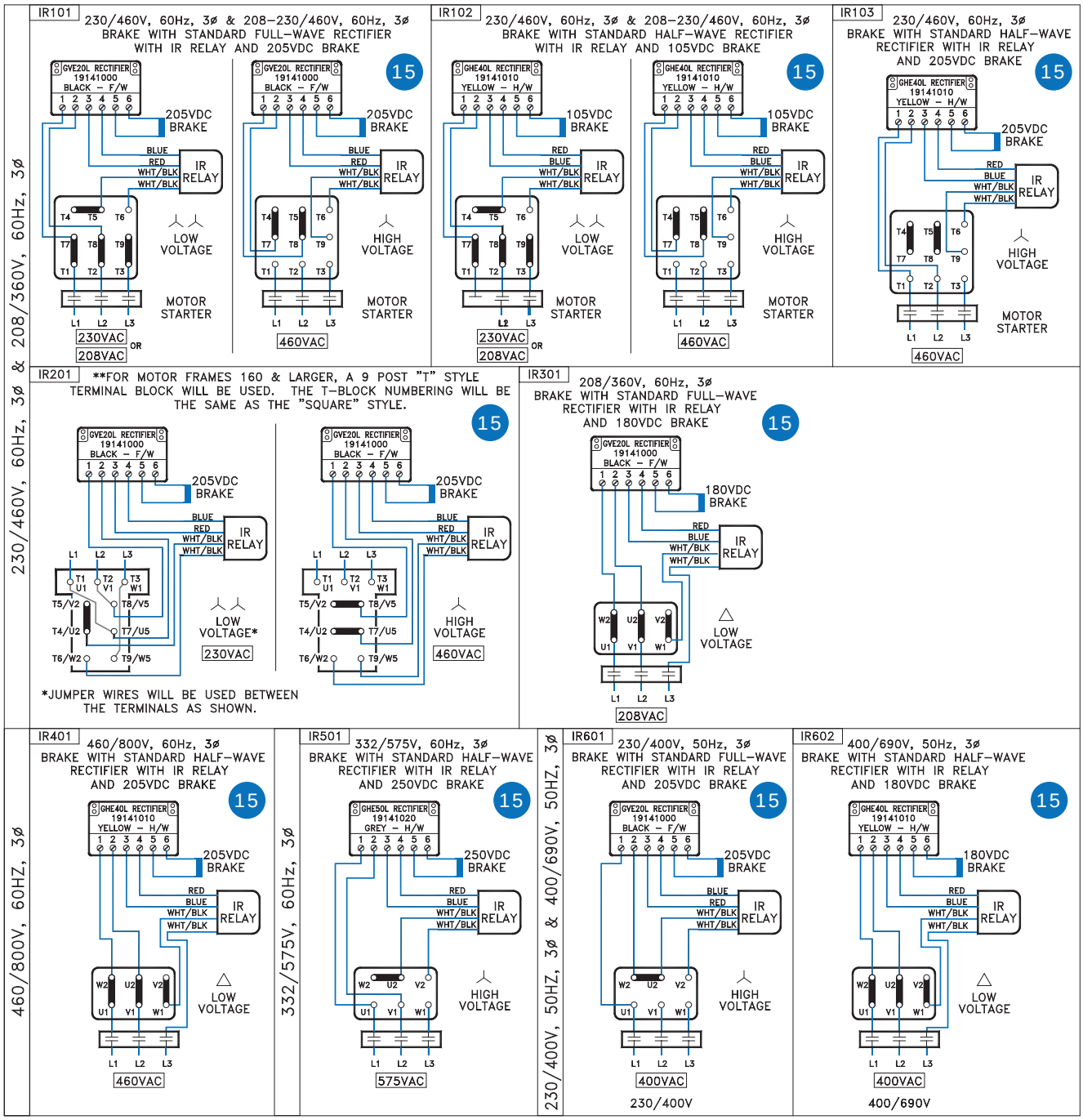

CURRENT SENSING BRAKE RELAY (IR) INSTALLATION & MAINTENANCE

Connection Diagrams
GPE Rectifier with IR Relay used for External DC-Switching

Method Operation

Start - Fast release (Overexcitation)
Stop - Fast stop (DC-Switching)

GPE type - External DC-Switching
Terminal 3 & 4 - Contact or IR-relay

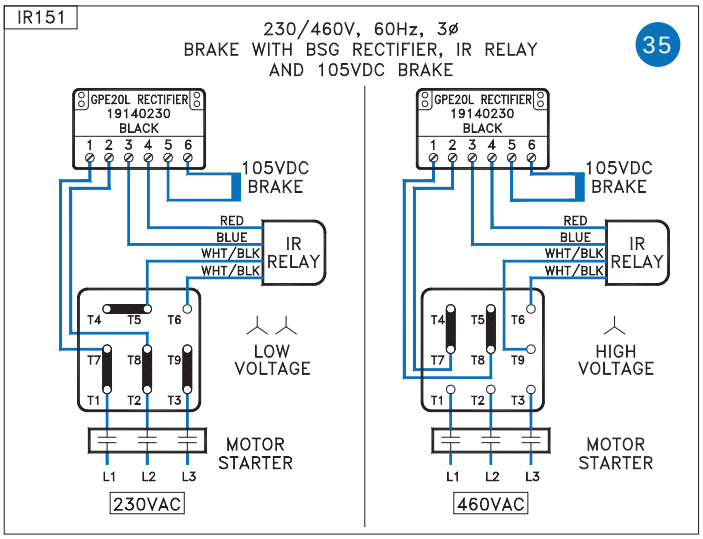

= Braking Method

Method Operation

Start - Standard Release
Stop - Very Fast stop (Reduced power Hold)

GPE type - External DC-Switching
Terminal 3 & 4 - Contact or IR-relay

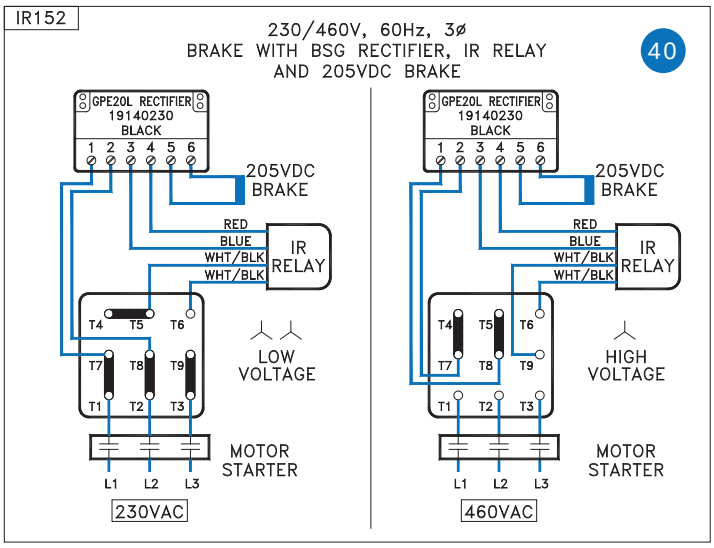

= Braking Method

Additional Reference - U_____ GP Brake Rectifier Installation and Maintenence

NEMA/IEC INPUT ADAPTERS & THEIR COUPLINGS

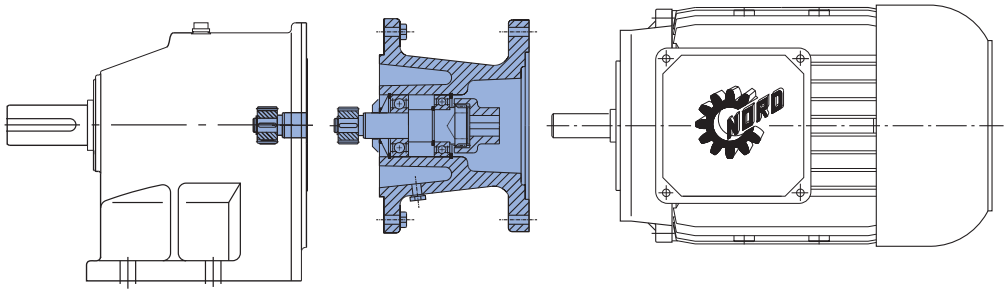

⚠ WARNING ⚠

LOCK OUT POWER before any maintenance is performed. Make absolutely sure that no voltage is applied while work is being done on the gearbox or input.

NEMA/ IEC Motor Adapters

Motor adapters allow for easy installation and removal of industry standard motors. Motor adapters consist of a coupling and an adapter housing that connects the motor to the gear reducer.

NORD Gear supplies a coupling that is to be mounted on the motor shaft. It is important that the coupling is properly positioned.

- For NEMA Input Adapters, follow the Motor Installation Instructions on pages 3-4.
- For IEC Input Adapters, the supplied coupling will mount directly against the motor shaft shoulder. No locating measurements need to be taken.

⚠ NOTE ⚠

Some of the larger IEC inputs will have a coupling spacer included to help locate the coupling. Slide the spacer against the motor shaft shoulder, slide the coupling against the spacer and tighten set screw(s).

⚠ NOTE ⚠

For the larger motor adapters (IEC160 / N250TC and larger), an Automatic Lubricator is supplied. This will need to be activated at the time of startup. For operation and activation instructions, refer to user manual U45200.

NEMA/IEC Motor Weight Limits

When mounting a motor to a NORD NEMA C-face motor adapter it is important to consider the motor's weight. Following is a table that includes the maximum motor weight the NEMA adapter can support. If the motor exceeds the listed weight is must be externally supported. When a C-face mounted motor is externally supported care must be taken to ensure that the support system does not impose additional pre-loads on the NEMA motor adapter.

NEMA Motor Weight Limit

Motor FRAME	56C	143TC	145TC	182TC	184TC	210TC
Max Weight [lb]	66	88	110	130	175	220
Motor FRAME	**250TC**	**280TC**	**324TC**	**326TC**	**365TC**	
Max Weight [lb]	440	550	770	1100	1540	

IEC Motor Weight Limit

Motor FRAME	63	71	80	90	100	112
Max Weight [lb]	55	66	88	110	130	175
Motor FRAME	**132**	**160**	**180**	**200**	**225**	**250**
Max Weight [lb]	220	440	550	770	1100	1540

Couplings

Couplings are made with tough abrasion resistant materials, which resist most chemicals and petroleum products. They are electrically isolated (prevent metal to metal contact) and require no lubrication or maintenance. Depending upon the size of the C-face input, NORD provides either a gear or a jaw type coupling.

NORD supplies three different types of couplings depending on the size of input: "J" style, "M" style and "Jaw" style coupling. Following are instructions on how to properly mount each type of coupling onto the motor.

NEMA/IEC INPUT ADAPTERS & THEIR COUPLINGS

Couplings for the NEMA and IEC Adapters

Depending on the size of the input adapter to the gearbox, NORD Gear supplies two styles of couplings - BoWex® (gear tooth) and Rotex® (jaw) couplings.

BoWex® Couplings

NORD C-face adapter input shafts have a machined spline on the end. NORD incorporates two styles of BoWex® couplings, the "J" and "M" styles. The "J" style is a one-piece coupling with a metal hub and nylon spline. The "M" style is a two-piece coupling – the metal hub and a nylon sleeve. Nylon and steel components allow them to operate in high ambient temperatures without lubrication or maintenance.

- Nylon sleeves resist dirt, moisture, most chemicals and petroleum products
- No lubrication required
- Operating Conditions: -22°F - 212°F (-30°C - 100°C)
- Higher temperature coupling sleeve available up to 250°F (120°C)
- Special bore available

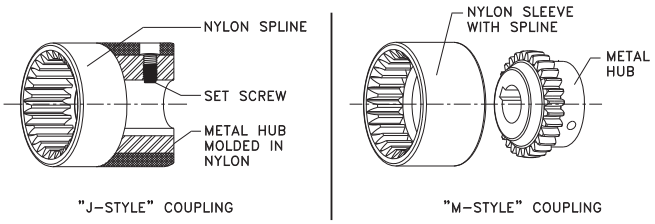

BoWex® Couplings Mechanical Ratings "J" Style

Coupling Type	Available Bore Sizes	Cont. / Peak Torque	Input
J14	11 mm,14 mm 5/8 in	10/20 Nm 89/117 lb-in	IEC 63, 71 NEMA 56C
J24	19 mm, 24 mm 5/8 in, 7/8 in	20/40 Nm 117/354 lb-in	IEC 80, 90 NEMA 56C, 140TC
J28	28 mm 1-1/8 in	45-90 Nm 399/797 lb-in	IEC 100-112 NEMA 180TC

BoWex® Couplings Mechanical Ratings "M" Style

Coupling Type	Available Bore Sizes	Cont. / Peak Torque	Input
M14, M24, M28	Same as "J" Style	Same as "J" Style	Same as "J" Style
M38	38 mm 1-1/8 in, 1-3/8 in	80/160 Nm 708/1,416 lb-in	IEC 132 NEMA 180TC, 210TC
M42	42 mm 1-5/8 in	100/200 Nm 885/1,770 lb-in	IEC 160 NEMA 250TC
M48	48 mm 1-7/8 in	140/280 Nm 1,240/2,478 lb-in	IEC 180 NEMA 280TC

Rotex® Couplings

The cast iron jaw type couplings have an integral urethane "spider" that provides smooth transmission of the motor torque. A set screw on the coupling prohibits axial movement along the motor shaft.

- Excellent shock and vibration dampening
- Excellent resistance to oils and most chemicals
- No metal-to-metal contact
- Operating Conditions: -22°F - 195°F (-30°C - 90°C)
- Higher temperature material (Hytrel) spider available up to 230°F (110°C)
- Low temperature materials available upon request
- Special bores available

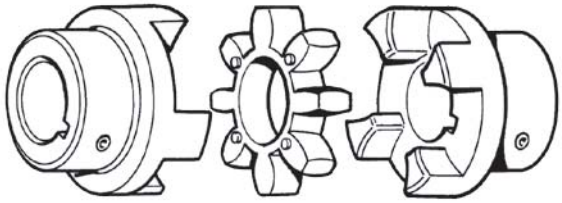

Rotex® Couplings Mechanical Ratings

Coupling Type	Available Bore Sizes	Cont. / Peak Torque	Input	Spider
R19	14 mm 19 mm	17/34 NM 150/300 lb-in	SEK/SEP 100	Urethane 98 Shore A Hardness Color: Red
R24	19 mm 24 mm	60/120 Nm 530/1,060 lb-in	SEK/SEP 100 SEK/SEP 130	
R28	32 mm 38 mm	95/190 Nm 840/1,680 lb-in	SEK/SEP 65 SEK/SEP 215	Urethane 92 Shore A Hardness Color: Yellow
R38	1.89" (48 mm) Max Bore	190/382 Nm 1,680/3,380 lb-in	-	
R42	2.44" (62 mm) Max Bore	310/620 Nm 2,740/5,480 lb-in	-	
R48	42, 48 mm 1-5/8, 1 7/8 in	310/620 Nm 2,740/5,480 lb-in	IEC 160, 180 NEMA 250T NEMA 280T SEK/SEP 300 SEK/SEP 215	
R65	60 mm 2-1/8, 2-3/8 in	625/1,250 Nm 5,530/11,060 lb-in	IEC 225 NEMA 320T NEMA 360T	
R90	65, 75, 80 mm 2-1/8, 2-3/8 in	2,400/4,800 Nm 24,240/42,480 lb-in	IEC 250, 280 IEC 315 NEMA 360TC NEMA 400TS NEMA 440TS	

NEMA/IEC INPUT ADAPTERS & THEIR COUPLINGS

"J" Style Coupling NEMA C-face Motor Installation

1. Measure the distance from the face of the input adapter to the face of the splined shaft and record that measurement as A in the equation below.
2. Measure depth of coupling engagement zone and record the measurement as "B" in the equation below.
3. Add "A" + "B" and subtract 0.08" (~2mm) from the distance. This needs to be done so that the coupling will not be preloaded after installation!
4. Use that measurement to locate the coupling from the face of the motor onto the shaft.
5. Once in place, tighten the set screw to lock the coupling in place. It is recommended that the key is staked or bonded (Loctite) in place to prohibit the key from vibrating out.
6. Mount the motor onto the input adapter with customer supplied bolts. Make sure that the coupling from the adapter and the motor engage securely. Use lock washers or Loctite to prohibit bolts from becoming loose from vibration.

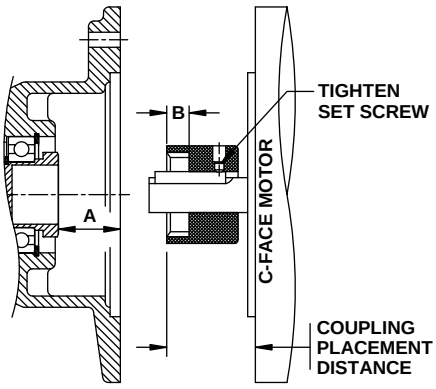

MEASURED DISTANCES A + B		SUBTRACT DISTANCE	COUPLING PLACEMENT DISTANCE
___ +	___	- 0.080" (2mm) =	_____

"M" Style Coupling NEMA C-face Motor Installation

1 Measure the distance from the face of the input adapter to the face of the splined shaft & record that measurement.
2. Subtract 0.31" (~8mm) from the distance. This needs to be done so that the coupling will not be preloaded after installation!
3. Use that measurement to locate the coupling from the face of the motor onto the shaft.
4. Once in place, tighten the set screw to lock the coupling in place. It is recommended that the key is staked or bonded (Loctite) in place to prohibit the key from vibrating out.
5. Mount the motor onto the input adapter with customer supplied bolts. Make sure that the coupling from the adapter and the motor engage securely. Use lock washers or Loctite to prohibit bolts from becoming loose from vibration.

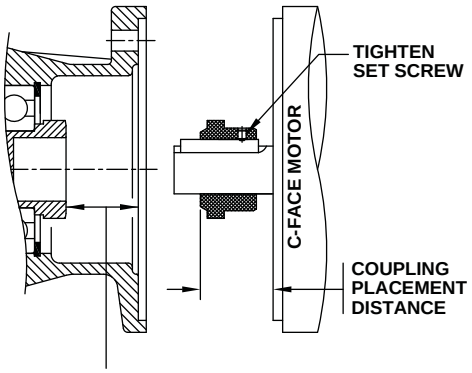

MEASURED DISTANCE	SUBTRACT DISTANCE	COUPLING PLACEMENT DISTANCE
_____	- 0.310" (8mm) =	_____

NEMA/IEC INPUT ADAPTERS & THEIR COUPLINGS

"Jaw" Style Coupling NEMA C-face Installation

1. Measure the distance from the face of the input adapter to the face of the coupling as shown and record that measurement.
2. Subtract the "X" dimension from the measured distance. This needs to be done so that the coupling will not be preloaded after installation!
3. Use that measurement to locate the coupling from the face of the motor onto the shaft.
4. The metal portion of the coupling should be heated up prior to assembly, generally 250°F to 300°F (120°C to 150°C).

⚠ *WARNING* ⚠
DO NOT HEAT THE URETHANE SPIDER.

5. Once in place, tighten the setscrew to lock coupling in place. Let the coupling cool down before placing the spider into the jaws. It is recommended that the key is staked or bonded (Loctite) in place to prohibit the key from vibrating out.
6. Mount the motor onto the input adapter with customer supplied bolts. Make sure that the coupling from the adapter and the motor engage securely. Use lock washers or Loctite to prohibit bolts from becoming loose from vibration.

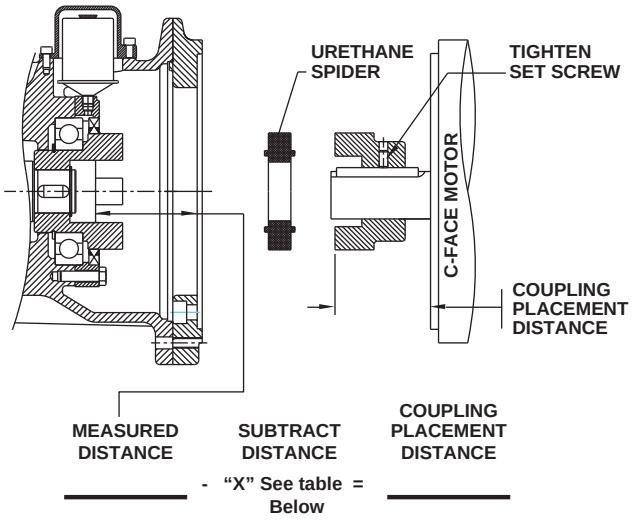

Coupling Size	"X" (Subtract this value from measured distance)
R14	0.06" (1.5 mm)
R19 & R24	0.08" (2.0 mm)
R28	0.10" (2.5 mm)
R38 & 42	0.12" (3.0 mm)
R48	0.14" (3.5 mm)
R65	0.18" (4.5 mm)
R90	0.22" (5.5 mm)

NEMA/IEC INPUT ADAPTERS & THEIR COUPLINGS

NEMA/IEC Parts List for UNICASE Gearboxes

NEMA 56C - 180TC

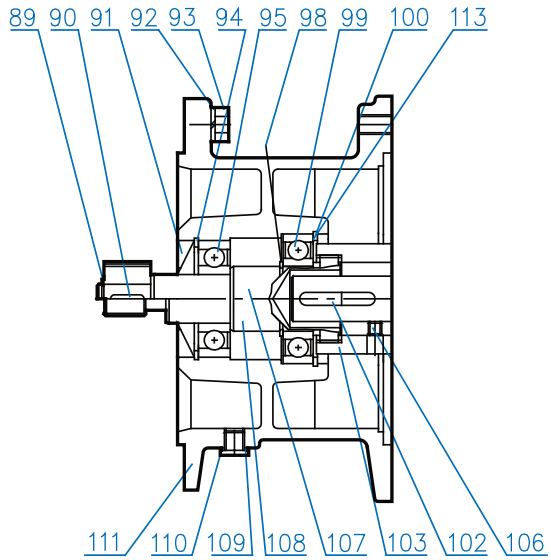

NEMA 180TC - 280TC

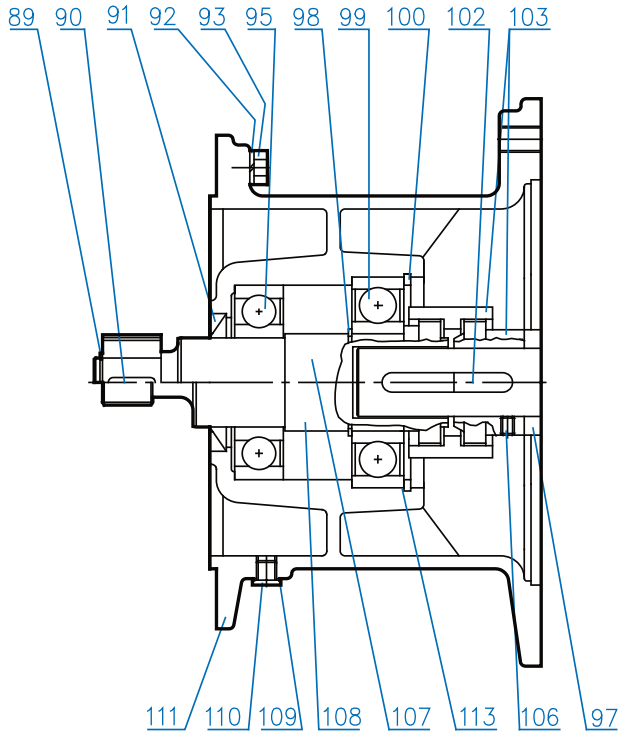

89	Circlip
90	Key
91	Shaft Seal
92	Washer
93	Hexagon Screw
94	Circlip
95	Clutch Shaft Bearing
97	Space
98	Circlip
99	Clutch Shaft Bearing
100	Circlip
101	Key
102	Key
103	Coupling
104	Coupling
105	Coupling
106	Set Screw
107	Clutch Shaft
108	Clutch Pinion Shaft
109	Seal
110	Oil-Plug
111	NEMA / IEC Adapter
112	Oil Flinger
113	Shim
140	Shim
141	Shim
142	Shim
143	Socket Head Screw
144	Cover
145	Automatic Lubricator*
146	Adapter
147	Bearing Cover
148	Hexagon Screw
149	Washer
150	Shaft Seal

* Please see U45250 for automatic lubricator Instructions.

NEMA 250TC - 400TC
IEC 160 - IEC 315

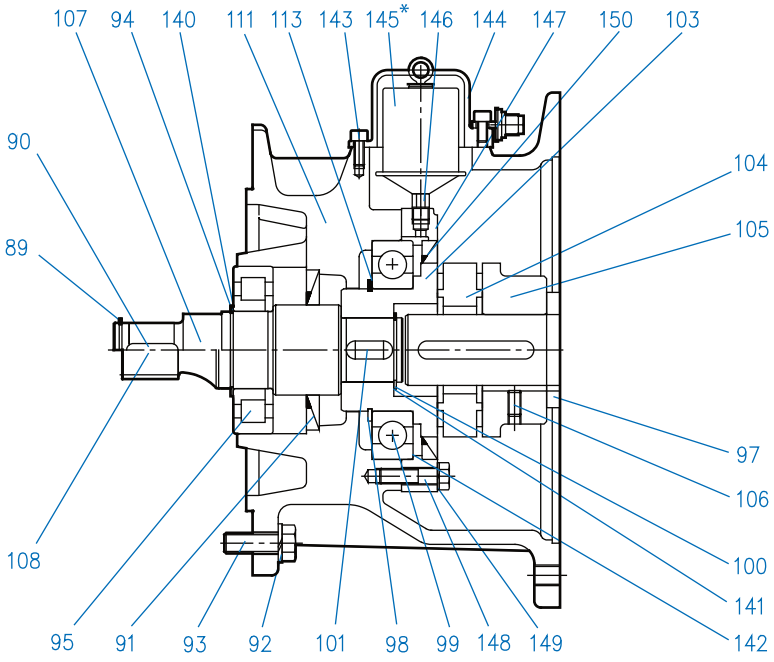

NEMA/IEC Parts List for Nordbloc Gearboxes

NEMA 56C - 180TC
IEC 63 - IEC 112

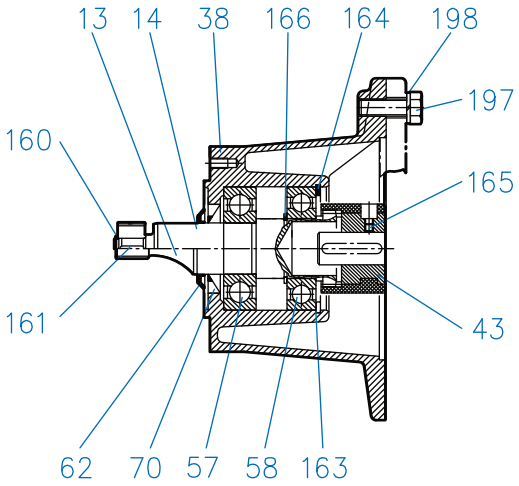

NEMA 210TC - 280TC
IEC 132-IEC 180

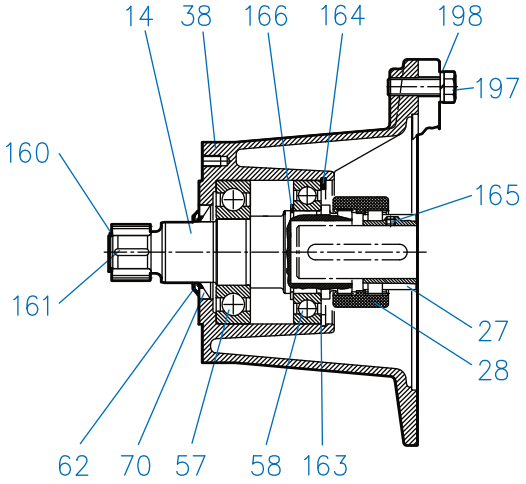

IEC 200

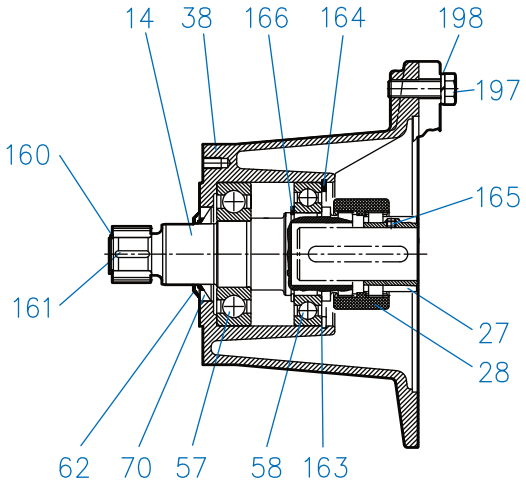

13	Clutch Pinion Shaft
14	Clutch Shaft
26	Coupling
27	Coupling
28	Coupling
38	IEC Adapter
43	Coupling
57	Clutch Shaft Bearing
58	Clutch Shaft Bearing
62	Oil Flinger
70	Shaft Seal
101	Key
160	Snap Ring
161	Key
163	Shim
164	Snap Ring
165	Set Screw
166	Snap Ring
197	Bolt
198	Spring Washer

Automatic Lubricator

Some NORD gear units with NEMA 250TC or IEC 160 and larger input adapters, have a PERMA® Classic automatic lubricator supplied to help dispense grease to the outboard bearing.

Helical Inline	SK62, SK72, SK73, SK82, SK83, SK92, SK93, SK102 and SK103
Parallel-Shaft Clincher™	SK6282, SK7282, SK7382 SK8282, SK8382, SK9282, SK9382, SK10282, SK10382, SK11282, SK11382, and SK12382
90.1 Series Helical-Bevel	SK9072.1, SK9082.1, SK9086.1, SK9092.1, and SK9096.1

Principle of Operation

The activation screw is secured into the top of the lubrication canister and tightened until the ring-eyelet reaches its breaking point. A zinc-molybdenum gas generator drops into a citric acid liquid electrolyte, that is contained within an elastic bladder. The gas generator starts an electrochemical reaction which gradually pressurizes the bladder by releasing hydrogen gas in very small amounts. The gas creates enough pressure (up to 4 bar or 58 psi) to expand the bladder and push the piston and the lubricant forward.

Lubricant is continuously injected into the lubrication point until the bearing cavity is full. Any back pressure from the bearing will cause the system to neutralize. The bladder inside the canister will continue to slowly build pressure so that once the equipment resumes normal operation, the lubricator will also resume its normal function. After 12 months of operation the PERMA® canister must be replaced.

The lubricator contains approximately 120 cm^3 or 120 ml (4.8 oz) of grease. For reference, a single stroke of a typical grease gun delivers approximately 1.0-1.2 cm^3 (0.03–0.04 oz) of grease. This means the canister contains approximately 100 strokes of grease. At the end of the lubrication period, the discharge indicator cap or piston becomes clearly visible through the clear nylon discharge indicator cap which is located at the bottom of the PERMA® canister; this helps indicate that the lubricant has been fully discharged.

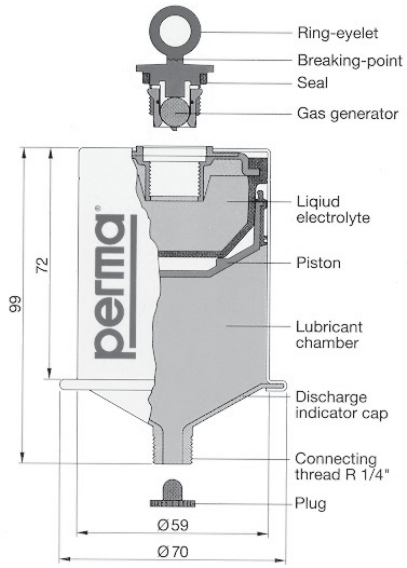

HARMFUL SITUATION

- To prevent premature bearing failure, the lubrication dispenser must be activated prior to commissioning the gear reducer.
- The lubricator must only be used once and should never be opened or taken apart or permanent damage will result.
- Never unscrew the PERMA® canister from the lubrication point after activation or during the discharge period. This would cause a permanent pressure loss in the lubricator and would justify replacing the lubricator.

WARNING

- Avoid swallowing the gas generator, the liquid electrolyte, and the lubricant.
- Avoid contact of, the liquid electrolyte, and the lubricant with the eyes, skin or clothing.
- Observe all applicable MSDS sheets.
- Follow applicable local laws and regulations concerning waste disposal.

PERMA® Classic – Options Supplied by NORD

NORD Part Number	28301000	28301010
Lubrication Option	Synthetic (standard)	Food Grade (optional)
PERMA® Classic Temperature Range ♦	0 to 40 °C (32 to 104 °F)	0 to 40 °C (32 to 104 °F)
Lubrication Volume	120 cm3 or 120 ml (4.8 oz)	120 cm3 or 120 ml (4.8 oz)
Grease Lubrication Mfg. / Type	Klüber / Petamo GHY 133	Lubriplate / FGL1
Lubrication Temperature Range ♦	-30 to 120 °C (-22 to 248 °F)	-18 to 120 °C (0 to 248 °F)

♦ The temperature range values shown do not apply to other components and/or lubricants within the gear reducer.

The lubricator contents will dispense for a 12 month period when the average temperature is 20 °C (68 °F).

Temperature Influences Discharge Rate

Discharge rate is based upon an ambient temperature of 20 °C (68 °F). The gray activating screw supplied by PERMA indicates that the lubricator contents will dispense for a 12 month period when the average temperature is 20 °C (68 °F).

- Lower ambient temperatures will lead to slower dispensing rates and higher ambient temperatures will lead to faster dispensing rates.
- Dispensing rates depend primarily on average ambient conditions and not extreme highs and lows.
- Discharge can also be influenced by type of lubricant, vibration, and the connecting parts and values shown are approximate, based upon supplier testing completed.

Average Ambient Temperature	Discharge Period Months ♦
0 °C (32 °F)	>18
10 °C (50 °F)	18
20 °C (68 °F)	12
30 °C (86 °F)	6
40 °C (104 °F)	3

♦ Values are approximate.

Attention!

Screw in the activation screw until the lug breaks off before commissioning the gear unit.

Dispensing time: 12 Months

Activation Date

Month 1 2 3 4 5 6 7 8 9 10 11 12

Year 11 12 13 14 15

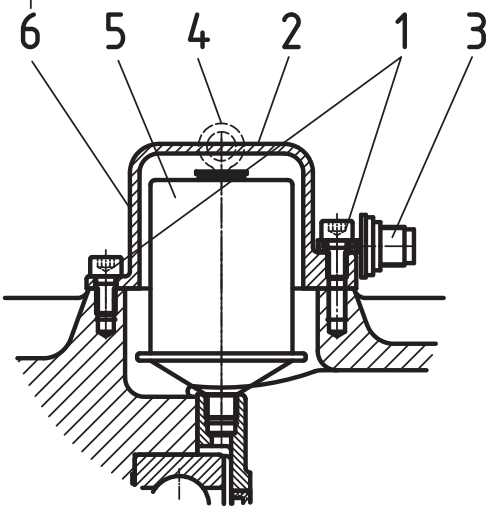

Initial Assembly Instructions

When first receiving the gear unit with motor adapter, the automatic lubricator is installed as shown in the figure below.

1. Loosen and remove the M8 x 16 socket head cap screws (1) and the protective cartridge case cover (2).
2. Insert the gray colored activation screw (3) into the lubrication dispenser (5) and tighten securely by hand.
3. Put a suitable tool through the ring-eyelet (4) and use it to turn the activator screw until the eyelet breaks off. The lubricator is now activated.
4. Refit the protective cartridge case cover (2) and tighten the M18 x 16 socket head screws.
5. Mark the activation date indicating on the reddish-orange adhesive label (6) by indicating the month and year.
6. Take note of the activation date and replace the canister again in twelve months.

Replacement Assembly Instructions

1. Loosen and remove the M8 x 16 socket head cap screws (1) and the protective cartridge case cover (2).
2. Remove the expired or old PERMA® canister from the bearing housing.
3. Remove the protective shipping plug from the thread-end of the New PERMA® canister.
4. Screw the canister into the reducer bearing housing by hand until it is snug and secure. Do not over tighten or the plastic threads on the canister can become damaged!
5. Put a suitable tool through the ring-eyelet (4) and use it to turn the activator screw until the eyelet breaks off. The lubricator is now activated.
6. Refit the protective cartridge case cover (2), tighten the M18 x 16 socket head screws (1)
7. Take note of the activation date and replace the canister again in twelve months.

NEMA OR IEC INPUT ADAPTER WITH GREASE FITTING

Application

NORD gear units listed in the table below that are supplied with a NEMA 250TC or IEC 160 and larger input adapter, may be supplied with an external grease fitting. The grease fitting allows the user to service the outboard bearing of the reducer's input assembly

Helical Inline	SK62, SK72, SK73, SK82, SK83, SK92, SK93, SK102 and SK103
Parallel-Shaft CLINCHER™	SK6282, SK7282, SK7382, SK8282, SK8382, SK9282, SK9382, SK10282, SK10382, SK11282, SK11382 & SK12382
90.1 Series Helical-Bevel	SK9072.1, SK9082.1, SK9086.1, SK9092.1 & SK9096.1

The grease fitting is an option which must be specified upon ordering, otherwise NORD will normally supply a PERMA Automatic Lubricator (See User Manual U45250).

Factory Supplied Grease

The bearing grease applied at the factory is as follows:

Brand	Mobil Polyrex EP 2
Thickener	Polyurea
NLGI Grade	2
Temperature Range	40°C to 120°C (-40°F to 250°F

IMPORTANT NOTE

It is the user's responsibility to ensure that if replacement grease is used, that it is fully compatible with the factory supplied grease.

Service Instructions

WARNING

- While working on the gear drive system, make sure the power from the prime mover is isolated or secured on "lock-out" to prevent accidental start-up and to safeguard against injury!
- Surfaces of motors and gear units may become hot during operation or shortly after start-up. In some instances additional protection against accidental contact may be necessary. Use caution to avoid burns or serious injury!

1. It is best to re-grease the bearing within a short period after the gear unit was operational because the old grease will be more viscous and will flow easier.
2. Ensure that the grease gun contains the right lubricant for the bearing to be re-greased.
3. Open the protective flip cover and clean the areas around the grease fitting to ensure that contaminants are not introduced into the bearing cavity.
4. Using a grease gun, apply 0.75 ounces (20-25 grams) of compatible bearing grease every 1,000 service hours.

IMPORTANT NOTE

Re-greasing should be carried out while the bearing is still warm from operation and/or while rotating (if it is safe).

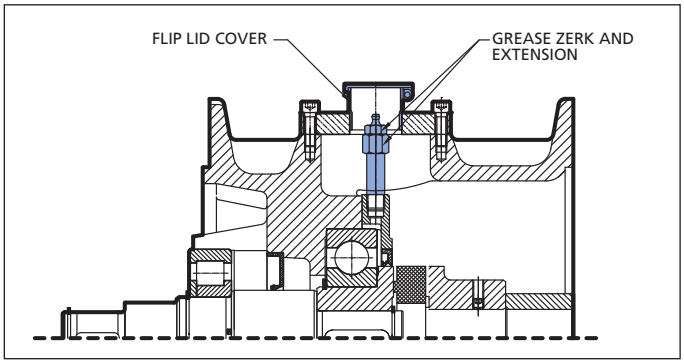

SOLID INPUT SHAFT (W)

1. Solid Input Shaft (W)

The shaft will be inch or metric, depending on how the unit was ordered. Measure and verify the shaft before mounting anything on the shaft. Below are the tolerances used for the solid shafts.

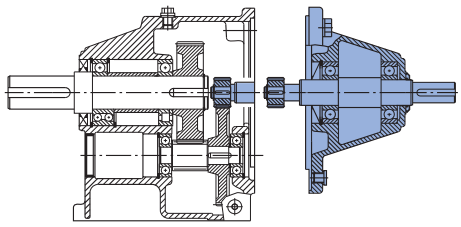

2. Solid shaft diameter tolerance

Reducer input shaft extensions have a diameter tolerance as specified in **Table 1**.

Table 1: Solid Shaft Diameter Tolerance

Above ø (in)	To & Including ø (in)	Tolerance (in)
0.375	1.750	+0.0000 / -0.0005
1.750	2.750	+0.0000 / -0.0010

Above ø (mm)	To & Including ø (mm)	Tolerance (mm)	ISO 286-2 Fit Class
10	18	+0.012 / +0.001	k6
18	30	+0.015 / +0.002	k6
30	50	+0.018 / +0.002	k6
50	70	+0.030 / +0.011	m6

3. Fitting drive elements onto the reducer solid shaft

Solid input shaft extensions are provided with a drill and tap feature as indicated in Table 2. When installing drive elements such as coupling hubs, pulleys, sprockets, or gears, NORD recommends using the threaded hole in the end of the shaft, along with a suitable assembly device fitted into the threaded hole.

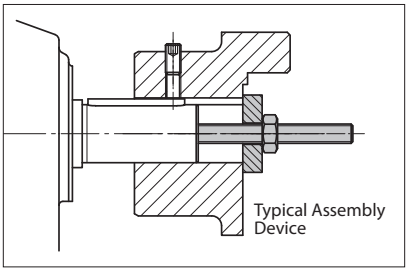

Table 2: Solid Input Shaft End - Threaded Holes

Above ø (in)	To & Including ø (in)	Tap size & Depth (in)
0.375	0.500	10-24 x 0.43 in
0.500	0.875	1/4-20 x 0.59 in
0.875	0.938	5/16-18 x 0.71 in
0.938	1.100	3/8-16 x 0.87 in
1.100	1.300	1/2-13 x 1.10 in
1.300	1.875	5/8-11 x 1.42 in
1.875	2.750	3/4-10 x 1.73 in

Above ø (mm)	To & Including ø (mm)	Tap Size & Depth (mm)
10	13	M4 x 10 mm
13	16	M5 x 12.5 mm
16	21	M6 x 16 mm
21	24	M8 x 19 mm
24	30	M10 x 22 mm
30	38	M12 x 28 mm
38	50	M16 x 36 mm
50	70	M20 x 42 mm

STOP *HARMFUL SITUATION* STOP

DO NOT DRIVE or **HAMMER** the coupling hub, pulley, sprocket, or gear into place. An endwise blow to the reducer shaft can generate damaging axial forces and cause damage to the reducer housing, bearings or internal components.

⚠ *WARNING* ⚠

To avoid serious injury the user must provide suitable safety guards for all rotating shafts and shaft components such as couplings, chain drives, belt drives, etc. All guarding must adhere to local regulations and safety standards.

4. Installing interference-fit hubs to the reducer shaft

Prior to installing any interference-fit hubs to the reducer shaft, consult with the manufacturer to determine proper assembly and fit. Interference-fits usually require heating the coupling, sprocket or gear hub, per the manufacturer's recommendations. Coupling hub installation typically follows ANSI/AGMA 9002-A86. Always make sure the reducer shaft seals are protected from the heat source. Apply uniform heat to the drive element hub to prevent distortion. NORD does not recommend heating the drive element hub beyond 212°F to 275°F (100°C to 135° C).

⚠ WARNING ⚠

When using heat to mount a drive element hub, do not use open flame in a combustible atmosphere or near flammable materials. Use suitable protection to avoid burns or serious injury.

STOP HARMFUL SITUATION STOP

When using external chain or belt drives, make sure the reducer is sized so that the shaft and bearings have adequate capacity. To avoid unnecessary bearing loads and additional shaft deflection, mount all power take-off devices (sprockets, pulleys, etc.) so that the applied load center is as close to the gear housing as possible and check component alignment and tension of any belts or chains per the manufacturer's recommendation. Do not over tighten the belts or chains.

5. Coupling installation

The performance and life of any coupling depends upon how well it is installed. Coupling hubs are typically mounted flush with the shaft ends, unless specifically ordered for overhung mounting. Shaft couplings should be installed according to the coupling manufacturer's recommendations for gap, angular and parallel alignment. To help obtain critical shaft alignment coupling hubs may be installed to the machine shafts prior to final shimming or tightening of the foundation bolts. Proper coupling alignment allows for thermal and mechanical shaft movement during operation and ensures that only torque (no radial load) is transmitted between the mating shafts.

Coupling gap and angular alignment

The shaft gap must be sufficient to accommodate any anticipated thermal or mechanical axial movement. When setting the coupling gap, insert a spacer or shim stock equal to the required spacing or gap between the coupling hub faces. Measure the clearance using feeler gauges at 90-degree intervals, to verify the angular alignment.

Parallel (or offset) alignment

Mount a dial indicator to one coupling hub, and rotate this hub, sweeping the outside diameter of the other hub. The parallel or offset misalignment is equal to one-half of the total indicator reading. Another method is to rest a straight edge squarely on the outside diameter of the hubs at 90° intervals and measure any gaps with feeler gauges. The maximum gap measurement is the parallel or offset misalignment.

Check alignment

After both angular and parallel alignments are within specified limits, tighten all foundation bolts securely and re-check critical alignment. If any of the specified limits for alignment are exceeded, realign the coupling.

6. Installing sheaves (pulleys), sprockets and gears

To avoid unnecessary bearing loads and additional shaft deflection, mount all power take-off devices (sprockets, pulleys, gears, etc.) so that the applied load center is as close to the gear housing as possible, as shown in **Figure 2**.

Figure 2: Pully or Sprocket Mounting

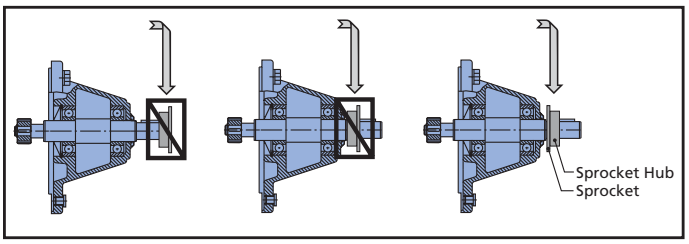

Align the driver sheave or sprocket with the driven sheave or sprocket by placing a straight-edge length-wise across the face of the sheaves or sprockets. Alignment of bushed sheaves and sprockets should be checked only after bushings have been tightened. Check horizontal shaft alignment by placing one leg of a square or a level vertically against the face of the sheave or sprocket.

Always check component alignment and tension any belts or chains per the manufacturer's recommendation. The ideal belt or chain tension allows proper wrap of the driver and driven wheels, while maintaining the lowest possible tension of the belts or chain, so that no slipping occurs under load conditions. Check belt or chain tension frequently over the first 24 to 48 hours of operation.

STOP HARMFUL SITUATION STOP

When using external chain or belt drives, make sure the reducer is sized so that the shaft and bearings have adequate capacity. To avoid unnecessary bearing loads and additional shaft deflection, mount all power take-off devices (sprockets, pulleys, etc.) so that the applied load center is as close the gear housing as possible and check component alignment and tension of any belts or chains per the manufacturer's recommendation. Do not over tension the belts or chains.

7. Service Guidelines for W-Shaft Input with Grease Fitting

On some solid shaft input (Type W) gear units, the outer roller bearing needs to be re-greased at regular service intervals. This is necessary for double-stage gearboxes sizes SK62 or SK6282 and larger, and triple-stage gearboxes from size SK73, SK7382 or SK9072.1 and larger.

To lubricate the bearing of the input shaft, approximately 0.75 to 1.0 ounces (20-25 grams) grease should be added by the grease fitting approximately after every 2,500 hours of service or at least every 6 months. The W-shaft input is factory assembled with the proper amount and type of grease. The type of grease supplied depends upon the type of oil specified at time of order.

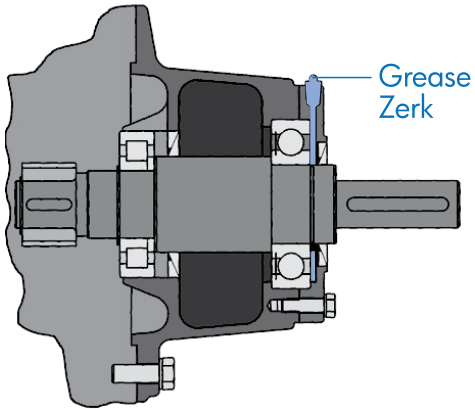

Reducer Oil Type	Grease Type/Thickener	NLGI Grade	Ambient Temperature Range	Manufacturer Brand/Type
Mineral	Standard (Li-Complex)	NLGI 2	-30 to 60°C (-22 to 140°F)	Mobil Grease XHP222
Synthetic	High Temp (Polyurea)	NLGI 2	-40 to 80°C (-40 to 176°F)	Mobil / Polyrex EP 2
Food-Grade	Food-Grade (Polyurea)	NLGI 2	-30 to 40°C (-22 to 104°F)	Mobil SHC Polyrex 222

STOP *HARMFUL SITUATION* STOP

Grease compatibility depends upon the type of thickener or soap complex used, the base oil type suspended within the thickener, and the type of additives used. The user should check with the lubrication supplier before making substitutions in brand and type in order to assure compatibility and to avoid causing damage to the extended bearing.

W-Type Input Parts List for UNICASE Gearboxes

SK 02 - SK 52
SK 03 - SK 63

SK 0182NB - SK 6382

SK 02040 - SK 42125
SK 13050 - SK 43125

SK 9012.1 - SK 9052.1
SK 9013.1 - SK 9053.1

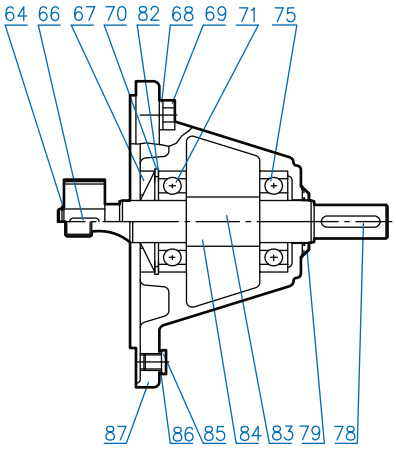

SK 62 - SK 72
SK 73 - SK 93

SK 6282 - SK 7282
SK 7382 - SK 9382

SK 9072.1

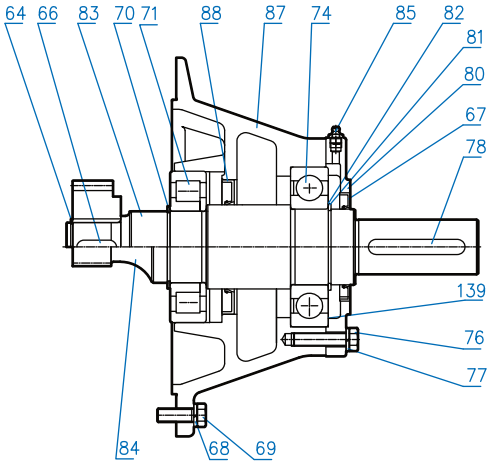

64	Circlip
66	Key
67	Shaft Seal
68	Washer
69	Hexagon Screw
70	Circlip
71	Input Shaft Bearing
74	Ball Bearing
75	Input Shaft Bearing
76	Washer
77	Hexagon Screw
78	Key
79	Oil Flinger
80	Bearing Cover
81	Circlip
82	Shim
83	Input Shaft, Plain
84	Input Shaft, Gearcut
85	Drain Plug
86	Seal
87	Input Bearing Housing
88	Shaft Seal (Oil Flinger)
139	Shim

SK 82 - SK 102
SK 103

SK 8282 - SK 9282

SK 9082.1 - SK 9092.1

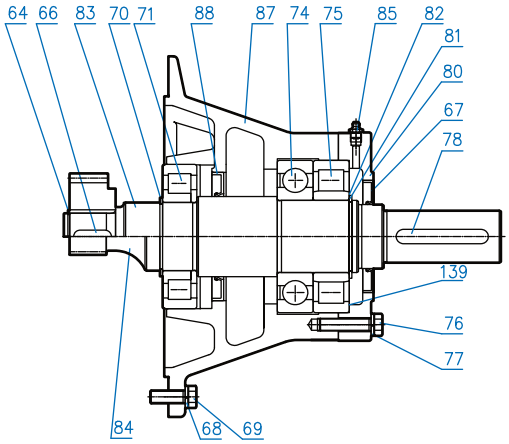

SK 10282 - SK 12382

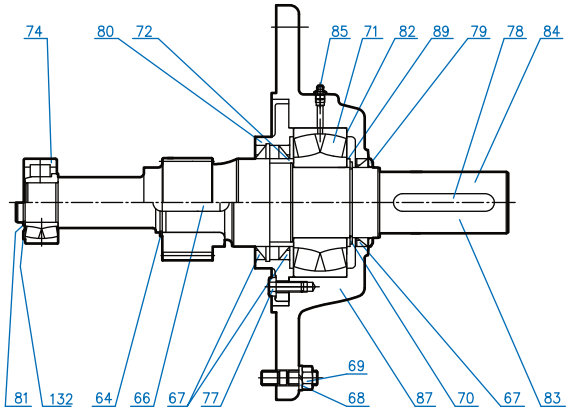

SOLID INPUT SHAFT (W)

W-Type Inputs for Parts List for Nordbloc / 92 Bevel Gearboxes

SK172 - SK673
SK92072 - SK92372

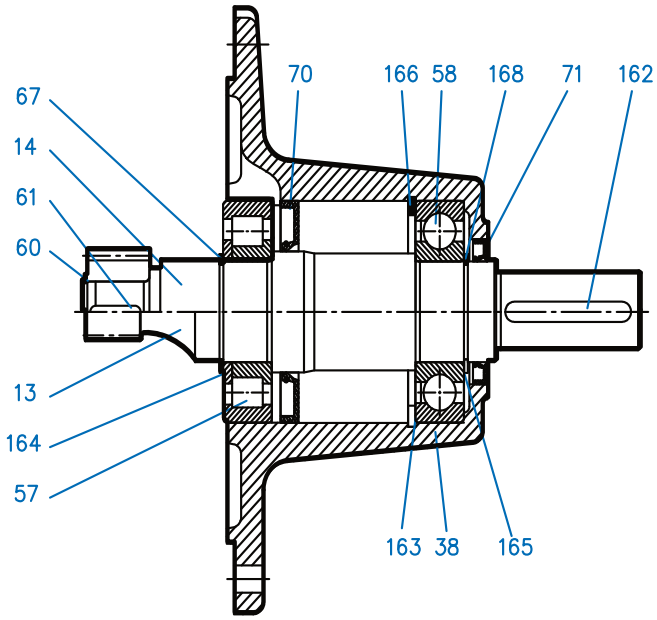

13	Pinion Shaft
14	InputShaft
38	IEC Adapter
57	Bearing
58	Bearing
62	Oil Flinger
70	Shaft Seal
71	Shaft Seal
160	Snap Ring
161	Key
162	Key
163	Shim
164	Snap Ring
165	Set Screw
166	Snap Ring
167	Snap Ring
168	Snap Ring

SK772 - SK973
SK92672 - SK92772

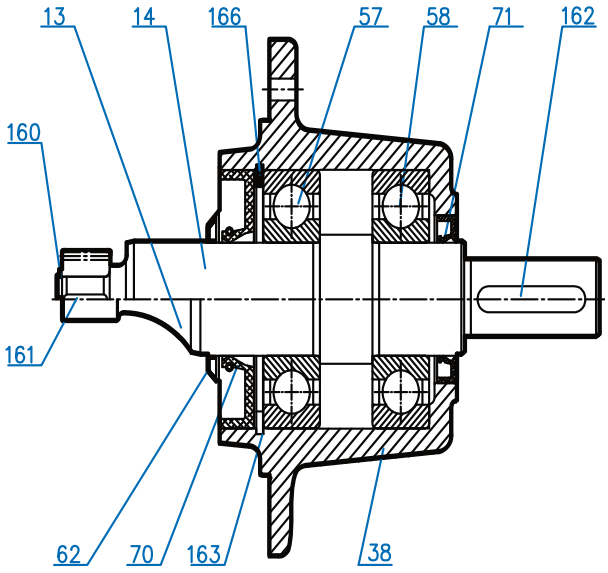

MOTOR MOUNT PLATFORM (MK)

Motor Mount Platform (MK)

For proper installation of the belt drive, consult the manufacturer. NORD MK motor mounts are adjustable in two ways. Slotted holes are provided at the input cylinder for the initial height adjustment. There are two fine adjustments at the yoke to increase/decrease tension. Two spanner head wrenches will be needed to tighten/loosen the fine adjustments. The four bolts holding the motor platform to the input cylinder must be loosened in order to use the fine adjustments.

The motor mounting platform has tapped holes to accept the foot pattern of the standard footed NEMA or IEC motor. All MK mounting input shaft diameters are metric.

Align the sheaves or sprockets square and parallel by placing a straight edge across their faces. Alignment of bushed sheaves and sprockets should be checked after bushings have been tightened. Check horizontal shaft alignment by placing a level vertically against the face of the sheave or sprocket. Adjust belt or chain tension per the manufacturer's specified procedure. After a period of operation, recheck alignment and adjust as required.

HARMFUL SITUATION

When using external chain or belt drives, make sure the reducer is sized so that the shaft and bearings have adequate capacity. To avoid unnecessary bearing loads and additional shaft deflection, mount all power take-off devices (sprockets, pulleys, etc.) so that the applied load center is as close to the gear housing as possible and check component alignment and tension of any belts or chains per the manufacturer's recommendation. Do not over tighten the belts or chains.

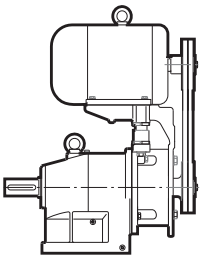

In-Line Unit

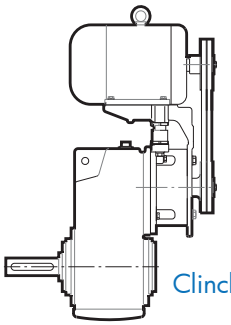

Clincher™ Unit

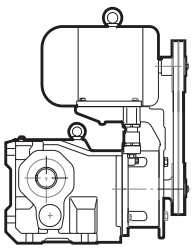

Bevel Unit

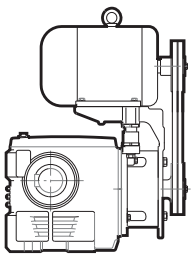

Worm Unit

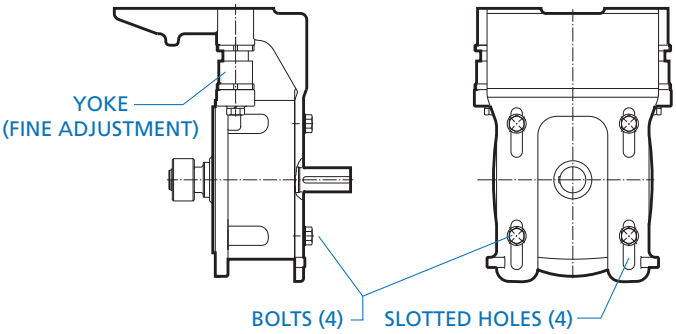

WARNING

NORD Gear does not furnish the safety guards for the belt drive. It is the responsibility of the customer to install a safety guard to conform to OSHA standards.

Sugar Scoop

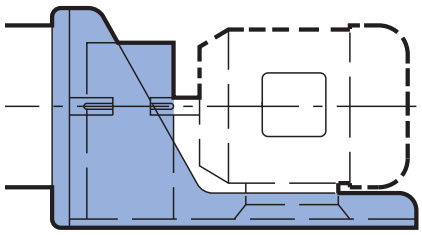

Each scoop bracket includes the coupling for the motor and the coupling guard.

- NORD's standard supplied coupling is the jaw-type coupling with elastomeric spider element.
- The reducer-side (driven) coupling hub is mounted by NORD.
- The motor-side (driver) coupling hub must be mounted by the party responsible for supplying or mounting the motor.
- The supplied coupling guard must be mounted after coupling installation.

Coupling Mounting Instructions

1. Make sure that the motor shaft is clean and free of burrs or defects.
2. Check the motor shaft, coupling hub bores, key and key seat dimensions to make sure they are the proper dimensions.
3. Mount the coupling onto the motor by placing the coupling so that the inside face is flush with the end of the motor shaft and tightening the set screws to hold it in place (Figure 1).

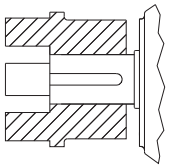

Figure 1. Place coupling flush with end of motor shaft and tighten setscrew.

IMPORTANT NOTE

Heating the coupling hub slightly, up to 176°F (80°C) will help facilitate installation onto the motor shaft.

WARNING

Wear appropriate safety gloves to handle the heated coupling hubs to avoid serious burns or injury.

HARMFUL SITUATION

DO NOT DRIVE or HAMMER coupling hubs into place. An endwise blow to the reducer or motor shaft can generate damaging axial forces and cause damage to the reducer or motor housing, bearings, or internal components.

4. Let the coupling cool down before mounting the spider into the jaws. The spider should not be under axial compression when installed.
5. Place the motor onto the scoop and engage the couplings together. The scoop has slotted holes to help accommodate axial alignment. Secure the motor to the scoop bracket but do not completely tighten the fasteners.

IMPORTANT NOTE

Before tightening the motor to the scoop bracket, the alignment of the coupling must be checked. Shimming of the motor feet may be needed to properly align the couplings. Careful coupling alignment extends the life of not only the coupling but all the components of the drive train.

6. Check the parallel alignment by placing a straight edge or level across the two coupling hubs, and measure the maximum offset at various points around the circumference of the coupling, without rotating the coupling. The maximum parallel alignment should not exceed 0.015 inches (4 mm).
7. Check the angular alignment of the coupling without rotating the hubs. The maximum angular displacement should not exceed 1.0°.
8. After both angular and parallel alignment is within specified limits, tighten all motor mounting hardware to the appropriate torque specification.
9. Re-check the critical alignment and repeat steps 6 and 7 if needed.
10. Mount the coupling guard to the scoop.

WARNING

It is the customer responsibility to properly guard the rotating shaft and coupling connection and make sure the system meets all local safety regulations.

IMPORTANT NOTE

After a period of operation, it is suggested that the system be checked to make sure coupling alignment is being maintained.

nsd tupH TOUCH-UP KIT

Items included in the touch-up kit

I. No Rinse Alodine® Touch-N-Prep pen.

II. Color matched sealer pen

⚠ WARNING ⚠

- Always wear Personal Protective Equipment (PPE), including gloves and safety glasses with side shields.
- When opening individual pens, pull safety caps straight out from pen. Do not twist or torque the cap to avoid damaging the applicator assembly.
- Do not use fingers to prime the applicator tip. Priming takes 15-30 seconds.
- Make sure the surface is clean and dry.

IMPORTANT NOTE

I. Metal temperature must be above 50° F

II. Do not excessively use abrasive pad while removing surface oxidation. Oxidation only needs to be removed from areas with exposed aluminum.

III. Use enough product to wet surface but avoid pooling.

IV. Do not rinse or wipe Alodine coating before the product is allowed to dry.

V. Allow to air dry or use a blow dryer. Do not use a heat gun. Maximum drying temperature is 140°F.

VI. Dry color will appear opaque.

Part I: Allodine® 871 Touch-N-Prep® Pen Instructions

Touch-N-Prep® pens are designed for easy and safe repair of clean, bare, or previously painted aluminum surfaces. It is a non-rinse, dry-in-place application that can be applied using the following steps:

1. Surface Preperation

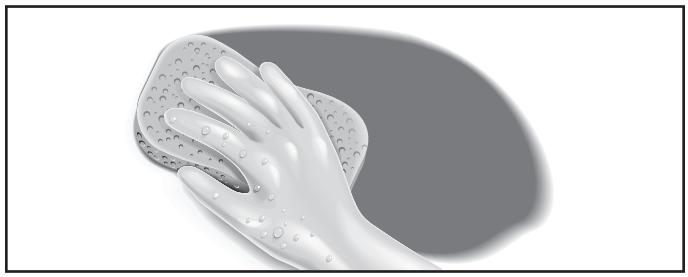

Before applying the coating, the treated surface must be cleaned using the following process:

- If the scratch is more than 24 hours old use a moistened abrasive pad to remove oxides from the surface of the metal.
- Wipe substrate with a damp lint-free cloth to ensure complete removal of soils and dislodged oxides generated from the previous step.
- Allow Surface to dry before Touch-N-Prep® application.

2. Prime Applicator Tip

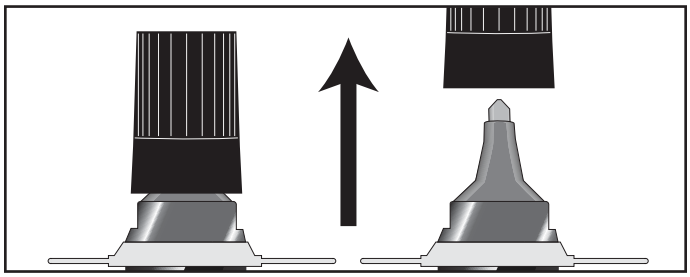

To activate, hold the Touch-N-Prep® pen upright and pop off the cap. Do not twist or turn to remove the cap, since this may result in the pen leaking. Hold the pen tip down onto a clean surface to begin the flow of solution to the tip.

3. Application

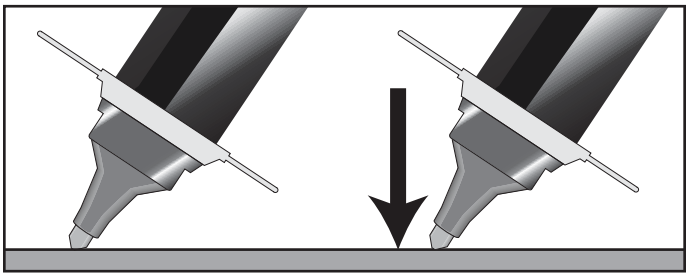

Press the pen tip down on the surface until solution fills the pen tip. Apply the Alodine® 871™ solution to the metal surface with firm, smooth, even strokes, covering all of the edges. Overlap each stroke and allow to dry.

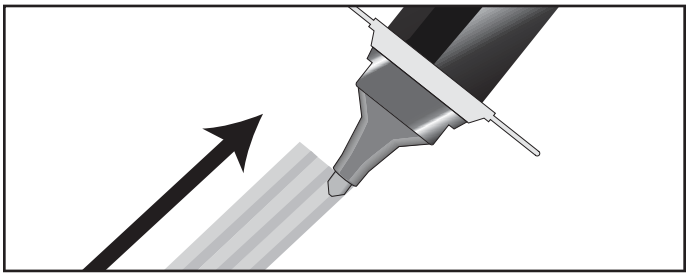

Frequent short jabs to re wet the application rip are preferred to maintain constant coating weights and avoid over-wetting the felt tip.

4. Re-Application

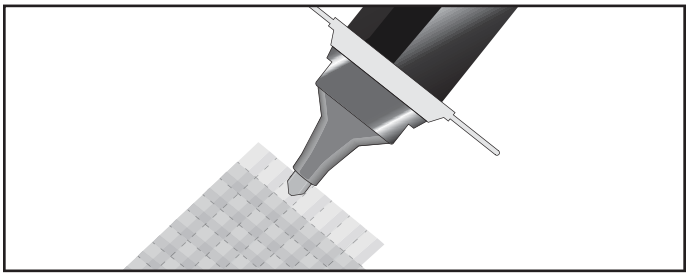

Within 5 minutes of the first coat, apply a second coat at a 90° angle to the first coat with the same smooth, firm stroke.

5. Prepare the Pen for Storage

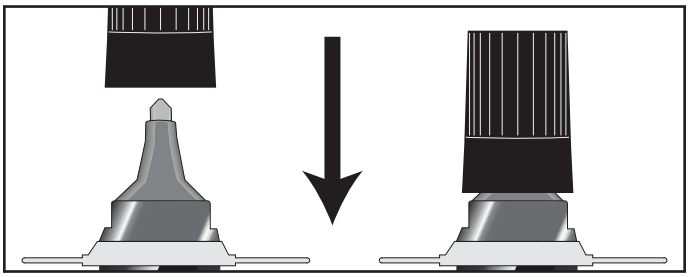

Always immediately replace the cap when not in use to avoid evaporation and contamination.

6. Drying

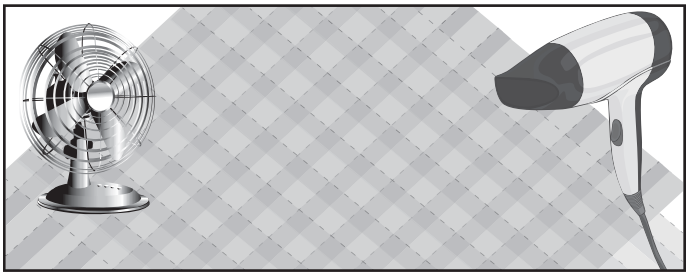

Allow the Alodine Touch-N-Prep® coating to air dry thoroughly.

Part II: Sealer Application

1. Prime Applicator Tip

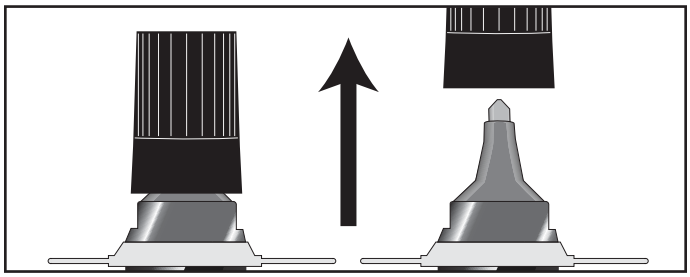

To activate, hold the pen upright and pop off the cap. Do not twist or turn to remove the cap, since this may result in the pen leaking. Hold the pen tip down onto a clean surface to begin the flow of solution to the tip.

2. Application

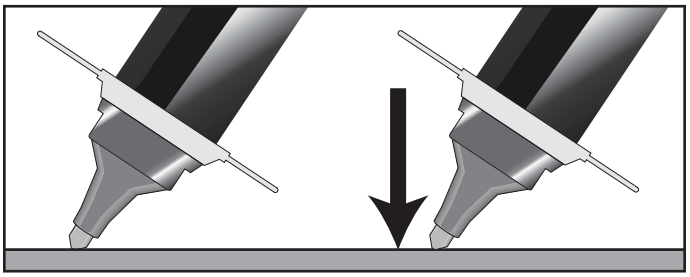

Press the pen tip down on the surface until solution fills the pen tip. Apply the sealer pen solution to the metal surface with firm, smooth, even strokes, covering all of the edges. Overlap each stroke and allow to dry.

3. Prepare the Pen for Storage

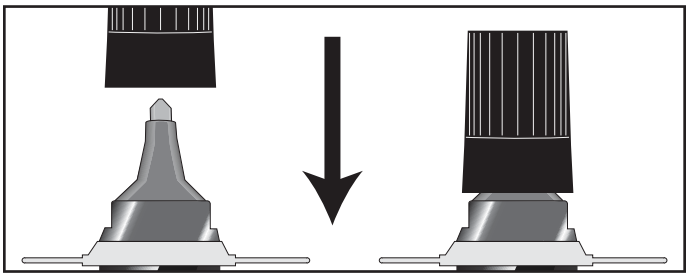

Always immediately replace the cap when not in use to avoid evaporation and contamination.

4. Drying

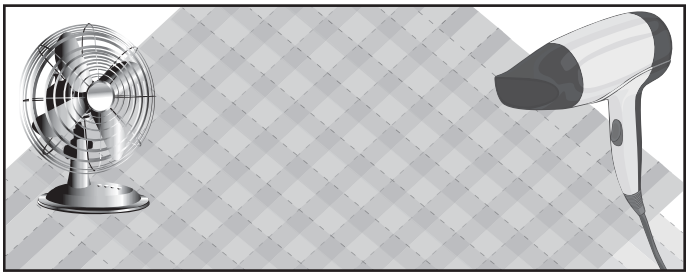

Allow the sealer pen coating to air dry thoroughly.

NORD GEAR CORPORATION

1. CONTRACT

Any contract between Nord Gear Corporation, hereinafter designated as Seller, and the Buyer is subject to the terms and conditions of sale hereinafter set forth. Any deviation from such terms and conditions must be specifically set forth in writing and consented to by Seller. Accordingly, the Buyer and Seller acknowledge and agree that the terms and conditions set forth below and on the face hereof shall govern Buyer's purchase of the goods described on the face hereof and shall take precedence over and represents the final agreement between Buyer and Seller, notwithstanding any inconsistent, contradictory or other prior or further conditions contained in any oral or written request or purchase order issued by Buyer or any other document furnished by Buyer in connection with its purchase of the Goods, regardless of whether such document or documents are exchanged simultaneously with this Invoice or prior or subsequent thereto. Any additional or different terms or conditions which may appear in any communicaiton, oral or written, from Seller, its officers, employees, agents or representatives, are hereby expressly rejected and shall not be effective or binding upon the Seller, unless specifically hereafter agreed to in writing by Seller and no such additional or different terms or conditions in any document submitted to Seller by Buyer shall become part of the contract between Buyer and Seller, unless such written acceptance by Seller specifically recognizes and assents to their inclusion. Any objection by Buyer to the terms and conditions hereof shall be ineffective unless Seller is advised in writing thereof within two (2) days of the date of this Invoice.

2. CONFIRMATION

An order shall be deemed accepted only when duly confirmed by Seller, at Nord Gear Corporation's home office in Waunakee, Wisconsin, and upon such confirmation the order shall become a contract binding upon the parties hereto, their successors and assigns.

3. PRICES

Prices shown are list prices and may be subject to applicable discounts. Unless otherwise agreed upon in writing, prices are FOB factory Waunakee, Wisconsin. Prices and discounts are subject to change without notice until order is accepted. Seller's prices do not include cost of any inspection permits required.

4. LIMITED WARRANTY

Seller hereby warrants that the goods sold hereunder shall be free from material defects in material and workmanship, if properly installed and used under normal operating conditions, for a period of twelve (12) months from the date of installation or eighteen (18) months from date of shipment, whichever comes first (the "Warranty Period"). With respect to gears and housings only, the Warranty Period is extended to thirty-six (36) months from the date of invoice or twenty-four (24) months from the date of installation, whichever comes first. The limited warranty shall not apply to any components or parts which are subject to normal operational wear and tear, including, but not limited to, belts and traction discs. Should any goods fail to comply with the foregoing limited warranty, Buyer shall provide written notice to Seller of the claimed defect and all relevant details within thirty (30) days of Buyer's discovery of the claimed defect. Buyer shall return the allegedly defective goods to Seller at its facilities in Waunakee, Wisconsin or to such other location within the USA as may be designated by Seller in its sole discretion, with all shipping and transportation charges prepaid by Buyer. Seller shall then examine the returned goods to determine if the claimed defect is covered by the limited warranty. If the claimed defect is covered by the limited warranty, Buyer's sole and exclusive remedy shall be to have Seller repair or replace, at Seller's option, the defective goods or components in accordance with the terms of this limited warranty. Seller shall have a commercially reasonable time to make such repairs or replacements and may use new or reconditioned components. Any repair or replacement shall not extend the Warranty Period unless otherwise agreed by Seller. Buyer shall pay all shipping costs and any costs of removal and re-installation of goods or components.

The foregoing limited warranty shall not apply with respect to any goods or components (i) which are not installed, used, operated, serviced or maintained in accordance with manufacturer's instructions or which are otherwise not properly installed, used, operated, serviced or maintained, or (ii) which are misused, neglected, damaged, altered, repaired, reconfigured or incorrectly wired. Seller makes no representations as to the specifications, capacity or performance of the goods sold hereunder, except as may be specifically set forth in the invoice's written specifications, and any such representations are expressly conditioned upon the accuracy and completeness of the data and information furnished by the buyer and upon the goods being properly installed, used, serviced and maintained by Buyer. Any description or model of the goods is for identification or illustrative purposes only and shall not be deemed to create any warranty, express or implied.

THE FOREGOING LIMITED WARRANTY SHALL EXTEND SOLELY TO BUYER AND NOT TO ANY OTHER PARTY. THE FOREGOING LIMITED WARRANTY IS IN LIEU OF ANY AND ALL OTHER WARRANTIES, WHETHER EXPRESS OR IMPLIED. SELLER HEREBY EXCLUDES AND DISCLAIMS ANY AND ALL OTHER WARRANTIES, WHETHER EXPRESS OR IMPLIED, INCLUDING, WITHOUT LIMITATION, ANY IMPLIED WARRANTIES OF MERCHANTABILITY OR FITNESS FOR A PARTICULAR PURPOSE. IF BUYER SHALL FAIL TO PAY WHEN DUE ANY PORTION OF THE PURCHASE PRICE OR ANY OTHER PAYMENT REQUIRED FROM BUYER TO SELLER UNDER THIS CONTRACT, ALL WARRANTIES AND REMEDIES SET FORTH HEREIN SHALL BE DEEMED NULL AND VOID, AB INITIO. THE PARTIES ACKNOWLEDGE AND AGREE THAT THE EXCLUSIVE REMEDY UNDER THE FOREGOING LIMITED WARRANTY SHALL NOT HAVE FAILED OF ITS ESSENTIAL PURPOSE (AS THAT TERM IS USED IN THE UNIFORM COMMERCIAL CODE) PROVIDED THAT SELLER REMAINS WILLING TO REPAIR OR REPLACE DEFECTIVE GOODS WITHIN A COMMERCIALLY REASONABLE TIME. BUYER SPECIFICALLY ACKNOWLEDGES AND AGREES THAT THE PRICE CHARGED BY SELLER FOR THE GOODS IS BASED UPON THE LIMITATIONS OF SELLER'S WARRANTY OBLIGATIONS AND OTHER LIABILITIES AS SET FORTH HEREIN.

LIMITATION OF LIABILITY. NOTWITHSTANDING ANY OTHER PROVISION HEREOF, IN NO EVENT SHALL SELLER BE LIABLE TO BUYER OR TO ANY OTHER PARTY FOR ANY INCIDENTAL, SPECIAL, INDIRECT OR CONSEQUENTIAL DAMAGES, LOST PROFITS, OR FOR ANY LOSSES, CLAIMS OR DAMAGES RELATING TO OR ARISING FROM THE USE OR OPERATION OF THE GOODS, AND IN NO EVENT SHALL ANY CLAIM OR RECOVERY OF ANY KIND EXCEED THE PURCHASE PRICE OF THE GOODS IDENTIFIED IN THE RELATED INVOICE.

5. SHORTAGE AND NONCONFORMITY

Any claim of shortage or that the goods do not conform with the specifications of the order or model must be made in writing within ten (10) days after delivery of the goods (as to which such claim is made) to Buyer or its nominees, but in no event shall the claim be later than within the time limit provided by the carrier or insurance company, otherwise such claim shall be deemed waived. Buyer may not return any goods claimed to be in non-conformity without Seller's prior written authorization. Goods returned without permission will not be accepted, including for credit, and will be returned to Buyer, F.O.B. Sellter's plant. Any claim based on the receipt of damaged Goods must be filed with the carrier which delivered the goods. The samples, measurements, dimensions and weights contained in the Seller's catalogs, sales manuals, photographs and drawings constitute only an approximate guide. The Seller reserves the right to make any change which the Seller, in its absolute discretion, considers necessary. While the goods will be delivered principally according to specifications or standards or quantities agreed upon, insignificant deviations or insignificant changes in construction are permissible. The same applies to partial deliveries, In the event that Buyer has a verified claim of shortage or nonconformity of the goods to the specifications of the order or the model, and if such claim has been submitted within the required time limit as set forth above, the Seller shall, at its own expense, make up for the shortage of the goods, or replace or repair the goods, as the case may be, but in no event shall Seller be or become liable to Buyer or to any other person or persons for any loss in damage, direct or indirect, arising out of or caused by such incidents or for the loss of profits, business or good will. The liability of the Seller to Buyer, if any hereunder, for breach of warranty, contract, negligence or otherwise, shall in no event exceed the amount of the purchase price of the goods sold with respect to which any damages are claimed. Shipping dates are estimates unless parties expressly agree on time of the essence.

6. FORCE MAJEURE

The obligation of the Seller shall be modified or excused, as the case may be, for reasons of Acts of God, war, governmental law regulations, strikes or lock-outs, fire, breakdown of machinery, whether in its own business enterprise, or if for any other cause beyond Seller's control, the goods cannot be delivered or their delivery becomes delayed in whole or in part. In the above instances time for delivery shall be extended for the period of the delay caused, with the proviso, however, that either party may cancel in writing the undelivered portion of the order or contract if the delay exceeds six (6) months from the delivery date originally confirmed by Seller. In no event shall Seller become liable in the aforesaid instances to Buyer or any third party for consequential damages or business loss.

7. SHIPMENT AS UNIT

Each shipment by Seller shall be treated as a separate and distinct unit with respect, but only with respect to forwarding, terms of payment, and the making of claims by the Buyer: provided, however, that if the Buyer defaults in the payment of any obligation to Seller or any installments thereof, under any agreement between Buyer and Seller, or if Buyer refuses to accept any goods when tendered for delivery, the Seller may, on fifteen (15) days written notice to the Buyer, without prejudice to Seller's other lawful remedies, either defer further performance until the defaulted payments are made in full, or make future deliveries for cash in advance only, or treat the entire contract or contracts with Buyer as breached by the Buyer and pursue its remedies for breach.

8. BUYER'S REFUSAL OF DELIVERY

If Buyer refuses to accept delivery of any goods tendered for delivery, then Seller, without prejudice to Seller's other lawful remedies, may either store or cause such goods to be stored in a warehouse, for buyer's account and at Buyer's cost, risk and expense, or sell such goods (without notice) to any purchases at public or private sale, and hold the Buyer liable for any difference between (a) the contract price of the goods, and (b) the price at which goods are resold less the costs and expense of such resale including brokerage commissions, or restocking charges.

9. GOODS IN TRANSIT

If prior to delivery or while the goods are in transit, Buyer or Seller becomes bankrupt or insolvent, or any petition in bankruptcy or for the reorganization or for a state court receivership is filed against Buyer or Seller, as the case may be, then the other party hereto may forthwith terminate this contract by giving written notice of such termination. Such termination shall not affect any claim for damages available to the Buyer, provided that if Buyer is then indebted to Seller, the amount of any such damage claim shall be abated to the extent that the indebtedness of Buyer to Seller, as actually paid in money, is abated by any order of judgement entered or any plan adopted in any bankruptcy, reorganization, receivership, or similar proceeding. Such termination shall not prejudice the Seller's rights to any amounts then due under the contract. If Buyer becomes bankrupt or insolvent or any petition in bankruptcy or for reorganizing or if a state court receivership is filed against Buyer, then, at its option Seller may take possession of any goods theretofore sold to Buyer, in connection with which the full purchase price has not been paid, analogous to the terms and provisions set forth in Paragraphs 11 and 12 hereinafter.

10. DELIVERY

(a) Any indicated dates of delivery are approximate only, but NORD Gear will attempt to meet them whenever possible. (b) NORD Gear will not be liable for any penalty clausess contained in any specifications or order submitted unless agreed to in writing by an authorized officer of NORD Gear Corporation. (c) Unless otherwise agreed, delivery of the goods to any carrier shall constitute delivery to the Buyer, and thereafter the risk of loss or damage to the goods shall be upon the Buyer. (d) If the Buyer does not give delivery instructions to the Seller at least (10) days prior to the delivery date ex factory confirmed by the Seller, the Seller may deliver the goods to a carrier of its own choosing, at Buyer's cost and risk, or, at Seller's option, may store the goods on the pier or any warehouse, at Buyer's cost and risk. Any purchase price in such event becomes due and payable within ten (10) days of such storage.

11. PAYMENT OF PURCHASE PRICE

Time of payment is of the essence under the contract. Unless otherwise provided, terms of payment are 30 days net from the date of invoice with a 1% discount if paid within 10 days of date of invoice. Upon default in any of the terms of the contract, or failure to comply with any of the conditions thereof, or upon seizure of the property under execution or other legal process, or if the Buyer becomes bankrupt or insolvent, or any petition for reorganization or for a state court receivership is filed against Buyer, or if the Buyer makes any assignment for the benefit of it's creditors or otherwise sells, encumbers or disposes of the goods, or if for any other reason the Seller should deem itself insecure, the full amount of the purchase price then remaining unpaid shall at once become due and payable at the option of the Seller.

12. BUYER'S DEFAULT

Upon the Buyer's default, the Seller may dispose of the merchandise in any manner that it deems fit and, if it desires to resell same, may do so at private or public sale, with or without notice, and with or without the property being at the place of sale, subject, however, to applicable laws. The Seller or its assigns shall have the right to bid at such sale and may become the purchaser of the property. The proceeds of the sale shall first be applied to the expenses incurred in retaking, repairing, storing and selling the goods, reasonable attorney's fees included, and then shall be applied to the payment of the balance due under the contract. Any surplus amount shall be paid to the Buyer. If a deficiency results after the resale, the Buyer agrees to pay such forthwith, together with reasonable attorney's fees, for the recovery of the goods incurred by the Seller. If upon the Buyer's default, the Seller elects not to resell any goods which it may repossess, then the cost of repossession, including reasonable attorney's fees, shall forthwith be due and payable from Buyer to Seller. Buyer agrees to pay all reasonable costs and reasonable attorneys' fees incurred by Seller in enforcing Seller's rights against Buyer, including Seller's right to payment of the purchase price of the goods and Buyer's payment of all other amounts owing to Seller required under this Invoice and Conditions of Sale.

13. SECURITY INTEREST AND TITLE

In states and localities which are governed by the Uniform Commercial Code, this contract shall serve as security agreement, reserving in Seller a security interest until full payment of purchase price. The provisions of the Uniform Commercial Code regarding security interest shall have preference and apply if inconsistent with other terms of the conditions of sale. In states and localities where the Uniform Commercial Code does not apply, title to the goods shall remain in the Seller or its assigns until full payment of the purchase price. Buyer agrees to execute forthwith any and all documents in such a way and form as Seller may need for filing or recording the security interest under the Uniform Commercial Code with the proper registers or offices, or for filing or recording the conditional sales contract.

14. SALES AND USE TAX

Buyer agrees to bear and pay any sales or use tax in connection with the purchase herein, and to hold the Seller harmless from payment. At the option the Seller, Buyer shall give evidence of payment or of exemption certificate.

15. INSURANCE

The Buyer shall keep the goods insured against damage by fire, water or other casualty as required by Seller, with a company acceptable to Seller, with loss payable to Seller for the total purchase price until the Seller is fully paid. Seller, if it so elects, may place said insurance at Buyer's expense; Seller may cancel such insurance at any time and without notice and may receive the return premium, if any.

16. MODIFICATION BY SELLER

Any contract may be assigned or transferred by the Seller, or the time for the making of any payment due by Buyer may be extended by Seller without derogation of any of the rights of the Seller or its assigns. Waiver by any party of any default shall not be deemed a waiver of any subsequent default.

17. RETURNED GOODS

No goods will be accepted for return unless authorized in writing by Seller. In all cases, transportation and restocking charges will be borne by Buyer.

18. PACKING

The Buyer will be charged for export packaging or other special packing desired. Cost for cartage to ship or transfer express will be added to the invoice. No credit will be allowed if no packing is required.

19. CHANGES/CANCELLATION

NORD Gear will not accept changes in specifications to a confirmed order unless such changes are requested in writing and confirmed back in writing. In addition, the purchaser must to agree to any additional charges that may arise from the change. Placing orders on hold or cancellation of orders require Seller's written approval, and are subject to cancellation and/or restocking charges.

20. BUYER'S RESPONSIBILITY AS TO MAINTENANCE

Buyer shall use and shall require its employees and agents to use all safety devices and guards and shall maintain the same in proper working order. Buyer shall use and require its employees and agents to use safe operation procedures in operating the equipment and shall further obey and have its employees and agents obey safety instructions given by Seller. If Buyer fails to meet the obligations herein, Buyer agrees to defend, indemnify and save Seller harmless from any liability or obligation with regard to any personal injuries or property damages directly or indirectly connected with the operation of the equipment. Buyer further agrees to notify Seller promptly and in any event not later than ten (10) days after notice or knowledge of any accident or malfunction involving Seller's equipment which has caused personal injury or property damages and to cooperate fully with Seller in investigating and determining the causes of such accident and malfunction. In the event that Buyer fails to give such notice to Seller or to cooperate with Seller, Buyer shall be obligated to defend, indemnify and save Seller harmless from any such claims arising from such accident.

21. MISCELLANEOUS PROVISIONS

(a) If for any reason a provision of a contract is legally invalid, then in such event the rest of the contract shall remain in full force and affect, except that the parties shall try to replace such invalid provision closest to their original mutual intentions. (b) This Invoice and these Conditions of Sale constitute the entire agreement between the parties regarding the subject matter hereof and supercedes all prior agreements, understandings and statements, whether oral or written, regarding such subject matter. No modification to, change in or departure from, the provisions of this Invoice and Conditions of Sale shall be valid or binding on Seller, unless approved in writing by Seller. No course of dealing or usage of trade shall be applicable unless expressly incorporated into this Invoice and Conditions of Sale. Any amendments to any contract or contracts between the parties shall be valid only upon the written consent of both parties.

22. NON ASSIGNMENT BY BUYER

Contract or contracts may not be assigned by the Buyer without prior written consent of the Seller.

23. APPLICABLE LAW AND VENUE

All contracts and their interpretation are governed by the applicable, substantive laws of the State of Wisconsin. Any litigation brought by the Buyer regarding this Invoice or goods purchased hereunder may only be brought in the Circuit Court for Dane County, Wisconsin.

NORD GEAR LIMITED

TERMS & CONDITIONS OF SALE

1. CONTRACT
Any contract between Nord Gear Limited, hereinafter designated as "Seller", and the party or parties accepting these terms and conditions of sale and any agent, officer, servant, employee or subcontractor of such party or parties, hereinafter designated as "Buyer", is subject to the terms and conditions of sale hereinafter set forth. Any deviation from such terms and conditions must be specifically set forth in writing and consented to by Seller.

2. CONFIRMATION
An order shall be deemed accepted only when duly confirmed by Seller, at Nord Gear Limited's home office in Brampton, Ontario, and upon such confirmation the orders shall become a contract binding upon the parties hereto, their successors and assigns.

3. PRICES
Prices shown are list prices and may be subject to applicable discounts. Unless otherwise agreed upon in writing, prices are FOB factory Brampton, Ontario. Prices and discounts are subject to change without notice until the order is accepted. Seller's prices do not include cost of any inspection permits required.

4. LIMITED WARRANTY
Seller warrants the goods sold hereunder to be free from defects in material and workmanship under normal use and service not arising from misuse, negligence, or accident, including but not limited to the use, installation, and transportation of the goods by Buyer, its agents, servants, employees, or by carriers. This warranty shall pertain to any part or parts of any goods to which Buyer or its assigns has within one year from date of delivery given written notice of claimed defects to Seller. Buyer shall be required to furnish Seller with details of such defects and this warranty shall be effective as to such goods which Seller's examination shall disclose to its satisfaction to have been defective and which at Seller's option shall promptly thereafter be returned to Seller or its nominees. EXCEPT FOR THE EXPRESS WARRANTIES SET FORTH ABOVE, SELLER HAS MADE NO WARRANTIES, EXPRESS, IMPLIED OR STATUTORY, AS TO THE GOODS SOLD HEREUNDER, INCLUDING, BUT NOT LIMITED TO THEIR MERCHANTABILITY OR FITNESS FOR ANY PARTICULAR PURPOSE. ANY DESCRIPTION OR MODEL OF THE GOODS IS FOR IDENTIFICATION OR ILLUSTRATIVE PURPOSES ONLY AND SHALL NOT BE DEEMED TO CREATE AN EXPRESS WARRANTY. The Buyer's exclusive remedy for claims arising from defective or nonconforming goods shall be limited to the repair or replacement thereof at the Seller's sole option. THE SELLER SHALL NOT BE RESPONSIBLE OR LIABLE FOR CONSEQUENTIAL DAMAGES ARISING OUT OF OR IN CONNECTION WITH THE SALE, DELIVERY, USE, PERFORMANCE, OR SERVICE OF THE GOODS SOLD UNDER THIS AGREEMENT. SELLER SHALL NOT BE LIABLE FOR ANY LOST PROFITS OR FOR ANY CLAIM OR DEMAND AGAINST SELLER BY ANY PARTY. IN NO EVENT WILL SELLER BE LIABLE FOR SPECIAL, INDIRECT OR CONSEQUENTIAL DAMAGES, EVEN IF SELLER HAS BEEN ADVISED OF THE POSSIBILITY OF SUCH DAMAGES. SELLER'S AGGREGATE LIABILITY FOR DAMAGES UNDER THIS AGREEMENT, WHETHER ARISING FROM OR BASED UPON BREACH OF WARRANTY, BREACH OF CONTRACT, TORT OR OTHER CAUSE OF ACTION, SHALL IN NO CASE EXCEED THE PURCHASE PRICE THAT BUYER PAYS FOR THE PARTICULAR GOODS INVOLVED. Seller shall in no event be liable to any person or firm (including any assignee or Buyer) except Buyer and its successors. Unless specifically authorized by Seller in writing, Seller shall not become responsible for any repair work done by Buyer or any other party on any goods sold. Any costs of the return of such goods to Seller shall be borne by Buyer. Goods sold but not manufactured by Seller are being warranted as to defects in material and workmanship consistent with the limited warranty policy of the original manufacturer of the goods and if there is not such a limited warranty policy, the warranty shall be limited to the provisions of Article 4 herein. Standards for the operating characteristics of the gearboxes and the gear motors are in conformity with Seller's tests. THIS WARRANTY IS IN LIEU OF ALL OTHER EXPRESS OR IMPLIED WARRANTIES, INCLUDING ANY IMPLIED WARRANTY OF MERCHANTABILITY OR FITNESS FOR ANY PARTICULAR PURPOSE SELLER DOES NOT ASSUME, NOR DOES IT AUTHORIZE ANY PERSON TO ASSUME, ON ITS BEHALF, ANY OTHER OBLIGATION OR LIABILITY.

5. SHORTAGE AND NONCONFORMITY
Any claim of shortage or that the goods do not conform with the specifications of the order or model must be made in writing within ten (10) days after delivery of the goods (as to which such claim is made) to Buyer or its nominees, but in no event shall the claim be later than within the time limit provided by the carrier or insurance company, otherwise such claim shall be deemed waived. The samples, measurements, dimensions and weights contained in Seller's catalogs, sales manuals, photographs and drawings constitute only an approximate guide. Seller reserves the right to make any changes which Seller, in its absolute discretion, considers necessary. While the goods will be delivered principally according to specifications of standards or quantities agreed upon, insignificant deviations or insignificant changes in construction are permissible. The same applies to partial deliveries. In the event that Buyer has a verified claim of shortage or nonconformity of the goods to the specifications of the order or the model, and if such claim has been submitted within the required time limit as set forth above, Seller shall, at its own expense, make up for the shortage of the goods, or replace or repair the goods, as the cause may be, but in no event shall Seller be or become liable to Buyer or to any other person or persons for any loss in damage, direct or indirect, arising out of or caused by such incidents or for the loss of profits, business of good will. Shipping dates are estimates unless parties expressly agree on time of the essence.

6. FORCE MAJEURE
The obligation of Seller shall be modified or excused, as the case may be, for reasons of Acts of God, war, governmental law regulations, strikes or lock-outs, fire, breakdown of machinery, whether in its own business enterprise, or if for any other cause beyond Seller's control, the goods cannot be delivered or their delivery becomes delayed in whole or in part. In the above instances time for delivery shall be extended for the period of the delay caused, with the proviso, however, that either party may cancel in writing the undelivered portion of the order of contract if the delay exceeds six (6) months from the delivery date originally confirmed by Seller. In no event shall Seller become liable in the aforesaid instances to Buyer or any third party for consequential damages or business loss.

7. SHIPMENT AS UNIT
Each shipment by Seller shall be treated as a separate and distinct unit with respect, but only with respect to forwarding, terms of payment, and the making of claims by Buyer; provided, however, that if Buyer defaults in the payment of any obligation to Seller or any installments thereof, under any agreement between Buyer and Seller, or if Buyer refuses to accept any goods when tendered for delivery, Seller may, on fifteen (15) days written notice to Buyer, without prejudice to Seller's other lawful remedies, either defer further performance until the defaulted payments are made in full, or make future deliveries for cash in advance only, or to treat the entire contract or contracts with Buyer as breached by Buyer and pursue its remedies for breach.

8. BUYER'S REFUSAL OF D ELIVERY
If Buyer refuses to accept delivery of any goods tendered for delivery, then Seller, without prejudice to Seller's other lawful remedies, may either store or cause such goods to be stored in a warehouse, for Buyer's account and at Buyer's cost, risk and expense, or sell such goods (without notice) to any purchaser at public or private sale, and hold Buyer liable for any difference between (A) the contract price of the goods, and (B) the price at which goods are resold less the costs and expense of such resale including brokerage commissions, or restocking charges.

9. GOODS IN TRANSIT
If prior to delivery or while the goods are in transit, Buyer or Seller becomes bankrupt or insolvent, or any petition in bankruptcy or for the reorganization or for appointment of a receiver is filed against Buyer or Seller, as the case may be, then the other party hereto may forthwith terminate this contract by giving written notice of such termination. Such termination shall not affect any claim for damages available to Buyer, to Seller, as actually paid in money, is abated by any order of judgment entered or any plan adopted in any bankruptcy, reorganization, receivership, or similar proceeding. Such termination shall not prejudice Seller's rights to any amounts then due under the contract. If Buyer becomes bankrupt or insolvent or any petition in bankruptcy or for reorganization or if a state court receivership is filed against Buyer, then, at its option, Seller may take possession of any goods theretofore sold to Buyer, in connection with which the full purchase price has not been paid, analogous to the terms and provisions set forth in Paragraphs 11 and 12 hereinafter.

10.DELIVERY
(A)Unless otherwise agreed, delivery of the goods to any carrier shall constitute delivery to Buyer, and thereafter the risk of loss or damage to the goods shall be upon Buyer. (B) If Buyer does not give delivery instructions to Seller at least ten (10) days prior to the delivery date ex factory confirmed by Seller, Seller may deliver the goods to a carrier of its own choosing, at Buyer's cost and risk, or, at Seller's option may store the goods on the pier or on any warehouse at Buyer's cost and risk. Any purchase price in such event becomes due and payable within ten (10) days of such storage.

11. PAYMENT OF PURCHASE PRICE
Time of payment is of the essence under the contract. Upon default in any of the terms of the contract, or failure to comply with any of the conditions thereof, or upon seizure of the property under execution or other legal process, or if Buyer becomes bankrupt or insolvent, or any petitions for reorganization or for appointment of a receiver is filed against Buyer, or if Buyer makes any assignment for the benefit of its creditors or otherwise sells, encumbers or disposes of the goods, or if for any other reason Seller should deem itself insecure, the full amount of the purchase price then remaining unpaid shall at once become due and payable at the option of Seller. Interest on the delinquent payment from the due date thereof until paid shall be at a rate of two (2%) percent per month.

12. BUYER'S DEFAULT
Upon Buyer's default, Seller may dispose of the merchandise in any manner that it deems fit and, if it desires to resell same, may do so at private or public sale, with or without notice, and with or without the property being at the place of sale, subject, however, to applicable laws. Seller or its assigns shall have the right to bid at such sale and may become the purchaser of the property. The proceeds of the sale shall first be applied to the expenses incurred in retaking, repairing, storing and selling the goods; reasonable solicitor's fees included, and then shall be applied to the payment of the balance due under the contract. Any surplus amount shall be paid to Buyer. If a deficiency results after the sale, Buyer agrees to pay such forthwith, together with reasonable solicitor's fees, for the recovery of the goods incurred by Seller. If upon Buyer's default, Seller elects not to resell any goods which it may repossess, then the cost of repossession, including reasonable solicitor's fees, shall forthwith be due and payable from Buyer to Seller.

13. SECURITY INTEREST AND TITLE
In provinces which are governed by a Personal Property Security Act, this contract shall serve as a security agreement, reserving in Seller a security interest until full payment of the purchase price. The provisions of the Personal Property Security Act regarding security interest shall have preference and apply if inconsistent with other terms of the conditions of sale herein. In provinces where a Personal Property Security Act does not apply, title to the goods shall remain in the Seller or its assigns until full payment of the purchase price. Buyer agrees to execute forthwith any and all documents in such a way and form as Seller may need for filing or recording the security interest under a Personal Property Security Act with the proper registers or offices, or for filing or recording the Conditional Sales Contract herein.

14. SALES AND USE TAX
Seller's prices do not include sales, use, excise or other taxes payable to any governmental authority in respect of the sale of Seller's goods. Buyer shall pay, in addition to Seller's price, the amount of any such taxes or shall reimburse Seller for the amount thereof that Seller may be required to pay. At the option of Seller, Buyer shall give evidence of payment or of exemption certificate.

15. INSURANCE
Buyer shall keep the goods insured against damage by fire, water or other casualty as required by Seller, with a company acceptable to Seller, with loss payable to Seller for the total purchase price until Seller is fully paid. Seller, if it so elects, may place said insurance at Buyer's expense; Seller may cancel such insurance at any time and without notice and may receive the return premium, if any.

16. MODIFICATION BY SELLER
Any contract may be assigned or transferred by Seller, or the time for the making of any payment due by Buyer may be extended by Seller without derogation of any of the rights of Seller or its assigns. Waiver by any party of any default shall not be deemed a waiver of any subsequent default.

17. RETURNED GOODS
No goods will be accepted for return unless authorized in writing by Seller. In all cases, transportation and restocking charges will be borne by Buyer.

18. PACKING
Seller does not charge for standard packaging for domestic shipment. Buyer will be charged, however, for export packaging or other special packing desired. Cost for cartage to ship or transfer express will be added to the invoice. No credit will be allowed if no packing is required.

19. EXPORT ORDER
Export orders are to be accompanied by a confirmed irrevocable Letter of Credit in Seller's favor, in Canadian currency, with an accredited Canadian bank, subject to Seller's draft, with shipping documents attached.

20. CANCELLATION
Placing orders on hold or cancellation of orders require Seller's written approval, and are subject to cancellation and/or restocking charges.

21. BUYER'S RESPONSIBILITY AS TO MAINTENANCE
Buyer shall use and shall require its employees and agents to use all safety devices and guards and shall maintain the same in proper working order. Buyer shall use and require its employees and agents to use safe operating procedures in operating the equipment and shall further obey and have its employees and agents obey safety instructions given by Seller. If Buyer fails to meet the obligations herein, Buyer agrees to indemnify and save Seller harmless from any liability or obligation with regard to any personal injuries or property damages directly or indirectly connected with the operation of the equipment. Buyer further agrees to notify Seller promptly and in any event not later than ten (10) days after notice or knowledge of any accident or malfunction involving Seller's equipment which has caused personal injury or property damages and to cooperate fully with Seller in investigating and determining the causes of such accident and malfunction. In the event that Buyer fails to give such notice to Seller or to cooperate with Seller, Buyer shall be obligated to indemnify and save Seller harmless from any such claims arising from such accident.

22. MISCELLANOUS PROVISIONS
(A)If for any reason a provision of a contract is legally invalid, then in such event the rest of the contract shall remain in full force and affect, except that the parties shall try to replace such invalid provision with a provision closest to their original mutual intentions. (B) Any amendments to any contract or contracts require the consent in writing by both parties. Headings in this document are for ease of reference only.

23. NON ASSIGNMENT BY BUYER
Contract or contracts may not be assigned by Buyer without prior written consent of Seller.

24. APPLICABLE LAW
This agreement shall be governed by the laws of the Province of Ontario and the applicable laws of Canada. Buyer and Seller agree that any judicial proceeding with respect to this agreement must be brought and maintained in the City of Toronto, In the Province of Ontario.

25.
This instrument sets forth the entire understanding and agreement of the parties hereto in respect of the subject matter hereof, and all prior undertaking between the parties hereto, together with all representations and obligations of such parties in respect of such subject matter, shall be superseded by and merged into this instrument.

26.
The provisions of this agreement shall bind and ensure to the benefit of the parties hereto and their respective heirs, executors, administrators, successors and (subject to any restrictions or assignment herein above set forth) assigns, as the case may be.

27.
The parties acknowledge that they have requested this document and all notices or other documents relating thereto be drafted in the English language.

Les parties reconnaissent qu'ils ont requis que ce contrat et tous les avis ou autres documents qui s'y rapportent soient rédiges en langue anglaise.

"Terms and Conditions in French available upon request."

Product Overview

We can match our NORDAC AC vector drives with our Inverter/Vector Duty Motors and UNICASE™ Speed Reducers to provide a total AC Motor Drive solution from one trusted source.

UNICASE™ SPEED REDUCERS

HELICAL IN-LINE
- Foot or Flange Mount
- Torque up to 205,000 lb-in
- Gear ratios – 1.82:1 to over 300,000:1

NORDBLOC® HELICAL IN-LINE
- Foot or Flange Mount
- Torque up to 26,550 lb-in
- Gear ratios – 1.88:1 to over 370:1

PARALLEL HELICAL CLINCHER™
- Shaft, Flange or Foot Mount
- Torque up to 797,000 lb-in
- Gear ratios – 4.26:1 to over 300,000:1

RIGHT ANGLE HELICAL-BEVEL 2-STAGE
- Foot, Flange or Shaft Mount
- Torque up to 5,840 lb-in
- Gear ratios – 4.1:1 to 72:1

RIGHT ANGLE HELICAL-BEVEL
- Foot, Flange or Shaft Mount
- Torque up to 283,000 lb-in
- Gear ratios – 8.04:1 to over 300,000:1

RIGHT ANGLE HELICAL-WORM
- Foot, Flange or Shaft Mount
- Torque up to 27,585 lb-in
- Gear ratios – 4.40:1 to over 300,000:1

MINICASE™ RIGHT ANGLE WORM
- Foot, Flange or Shaft Mount
- Torque up to 3,540 lb-in
- Gear ratios – 5:1 to 500:1

FLEXBLOC™ WORM
- Modular bolt-on options
- Torque up to 4,683 lb-in
- Gear ratios – 5:1 to 3,000:1

HIGH PERFORMANCE MOTORS & BRAKEMOTORS

INVERTER/VECTOR DUTY
- Standard or Energy Efficient
- Integral, NEMA or Metric IEC
- 1/6 to 250 hp

NORDAC AC VECTOR DRIVES

TRIO SK300E
- Motor or remote mounted
- IP55 – washdown
- 380-460V, 3-phase, to 5hp
- 200-240V, 3-phase, to 3hp

SK500/520/530E
- Compact, high performance
- 380-480V, 3-phase, to 10hp
- 200-240V, 3-phase, to 5hp
- 200-240V, 1-phase, to 3hp
- 110-120V, 1-phase, to 1.5hp

SK700E
- Flexible high performance
- 380-460V, 3-phase, to 200hp

NORD DRIVESYSTEMS

www.nord.com

NORD Gear Corporation
National Customer Service Toll-Free: 888.314.6673
info.us@nord.com

NORD Gear Limited
Toll-Free in Canada: 800.668.4378
info.ca@nord.com

WEST
Corona, CA (Los Angeles)
Phone: 608.849.0190

MIDWEST
Waunakee, WI (Madison)
Phone: 608.849.7300

EAST
Charlotte, NC
Phone: 608.849.0140

CANADA
Brampton, ON (Toronto)
Phone: 905.796.3606

10020010 4/0909

Installation, Operation and Maintenance Instructions

for AC Induction Motors
56- 6800 Frames (NEMA)
63 – 280 Frames (IEC)

MARATHON ELECTRIC
Contact Motor Customer Service at:
Phone: (715) 675-3311
www.marathonelectric.com

Form 5554E

INSTALLER: PLEASE LEAVE THIS MANUAL FOR THE OWNER'S USE
OWNER: READ AND SAVE THESE INSTRUCTIONS

SAFETY INSTRUCTIONS

⚠ This is the safety alert symbol. It is used to alert you to potential personal injury hazards. Obey all safety messages that follow this symbol to avoid possible injury or death.

⚠ WARNING
Before installing, using, or servicing this product, carefully read and fully understand the instructions including all warnings, cautions, & safety notice statements. To reduce risk of personal injury, death and/or property damage, follow all instructions for proper motor installation, operation and maintenance.

These instructions are not intended as a complete listing of all details for installation, operation, and maintenance. If you have any questions concerning any of the procedures, STOP, and call the appropriate Regal-Beloit motor company.

Table of Contents

1.0 INSTALLER / OWNER / OPERATOR RESPONSIBILITY
- 1.1 Electrical Safety
- 1.2 Mechanical Safety
- 1.3 Environmental Safety

2.0 RECEIVING & INSPECTION
- 2.1 Initial Inspection
  - 2.1.1 Packing List & Inspect
  - 2.1.2 Turn Motor Shaft
  - 2.1.3 Check Nameplate
- 2.2 Handling
  - 2.2.1 Correct Lifting Angles
- 2.3 Storage
  - 2.3.1 Bearing Lubrication
  - 2.3.2 Shaft Rotation
  - 2.3.3 Damp or Humid Storage Locations

3.0 INSTALLATION AND OPERATION
- 3.1 Location
  - 3.1.1 Selecting a Location
  - 3.1.2 Ambient Temperature Limits
  - 3.1.3 Construction Selection per Location
    - 3.1.3.1 Dripproof
    - 3.1.3.2 Totally Enclosed
    - 3.1.3.3 Hazardous Locations Motors
- 3.2 Mounting Motor
  - 3.2.1 Rigid Base (Footed)
  - 3.2.2 Rigid Base Hole Selection -6 or 8 Hole Bases
  - 3.2.3 Vertical
- 3.3 Application Assembly to Motor
  - 3.3.1 General: Proper Alignment
  - 3.3.2 Direct Coupling
  - 3.3.3 Direct Connected
  - 3.3.4 Belted
  - 3.3.5 VFD Operation
  - 3.3.6 Accessories
    - 3.3.6.1 General
    - 3.3.6.2 Brake Motors
    - 3.3.6.3 Space Heaters
    - 3.3.6.4 Thermal Protection General, Thermostats, Thermisters & RTDs
    - 3.3.6.5 RTD Alarm & Trip Settings
  - 3.3.7 Guards
- 3.4 Electrical Connections
  - 3.4.1 Power Supply / Branch Circuit
    - 3.4.1.1 Branch Circuit Supply
    - 3.4.1.2 Fuses, Breakers, Overload Relays
    - 3.4.1.3 AC Power Supply Limits
  - 3.4.2 Terminal Box
    - 3.4.2.1 Conduit opening
    - 3.4.2.2 Hazardous Locations
  - 3.4.3 Lead Connections
    - 3.4.3.1 Wire Size Requirements (Single Phase)
    - 3.4.3.2 Extension Cords (Single Phase)
  - 3.4.4 Ground Connections
  - 3.4.5 Start Up
    - 3.4.5.1 Start Up – No Load Procedure
    - 3.4.5.2 Start Up – Load Connected Procedure
    - 3.4.5.3 Jogging and/or repeated starts

4.0 MAINTENANCE
- 4.1 General Inspection

4.1.1 Ventilation
4.1.2 Insulation
4.1.3 Electrical Connections
4.2 Lubrication and Bearings
4.2.1 Grease Type
4.2.2 Bearing Operating Temperature
4.2.3 Lubrication Interval
4.2.4 Lubrication Procedure
4.2.5 Lubrication Example
4.3 Trouble Shooting
4.3.1 General Trouble-Shooting Warnings
4.3.2 Trouble-Shooting Cause / Corrective Action

motor is suitable for use on Pulse Width Modulated (PWM) type VFD power. In addition, the nameplate must be marked with the inverter rating; for example, "2:1 CT", "2 to 1 Constant Torque", etc.

1.0 INSTALLER/OWNER/OPERATOR RESPONSIBILITY:

1.1 ELECTRICAL SAFETY

⚠ WARNING: ELECTRICAL SHOCK HAZARD

Electrical connections shall be made by a qualified electrical personnel in accordance with all applicable codes, ordinances and sound practices. Failure to follow these instructions could result in serious personal injury, death and/or property damage. Only qualified personnel who are familiar with the applicable National Code (USA = NEC) and local codes should install or repair electrical motors and their accessories.

⚠ WARNING: ELECTRICAL LIVE CIRCUIT HAZARD

Do not touch electrically live parts. Disconnect, lockout and tag input power supply before installing or servicing motor (includes accessory devices). Use a voltmeter to verify that power is off before contacting conductors.

⚠ WARNING: ELECTRICAL GROUNDING HAZARD

Failure to properly ground motors, per the National Electrical Code (NEC) Article 430 and local codes may cause serious injury or death to personnel. For general information on grounding refer to NEC Article 250. (Also see "Ground Connections section 3.4.4").

⚠ WARNING: AUTOMATIC RESET PROTECTOR HAZARD

Do not use automatic reset protectors if automatically restarting the motor will place personnel or equipment at risk. . Failure to follow this instruction could result in serious personal injury, death and/or property damage

⚠ WARNING: MANUAL RESET PROTECTOR HAZARD

If a tripped manual reset thermal protector is exposed to a temperature less than –7°C (20°F) it may reset and restart the motor automatically. If an application requires a motor with a manual reset thermal protector that will be operated at temperatures less than –7°C (20°F) contact the manufacturer to review the application / motor requirements. Failure to follow this instruction could result in serious personal injury, death and/or property damage

1.2 MECHANICAL SAFETY

⚠ WARNING: LOOSE PARTS HAZARD

Before starting the motor, remove all unused shaft keys and loose rotating parts to prevent them from flying off. Failure to follow these instructions could result in serious personal injury, death and/or property damage.

⚠ WARNING: ROTATING PARTS HAZARD

Keep extremities, hair, jewelry and clothing away from moving parts. Failure to follow these instructions could result in serious personal injury, death and/or property damage.

1.3 ENVIRONMENTAL SAFETY

⚠ WARNING: HAZARDOUS LOCATIONS

(1) The NEC and the local authority having jurisdiction must be consulted concerning the installation and suitability of motors for use in Hazardous Locations. The local authority having jurisdiction must make the final determination of what type of motor is required. The application and operation is beyond the control of the motor manufacturer.
(2) Division 1 Hazardous Locations motors can only be modified or reworked by the manufacturer or a facility that is Listed under UL's category "Motors and Generators, Rebuilt for use in Hazardous Locations". Failure to follow these instructions could result in serious personal injury, death and/or property damage.
(3) Do not use a Hazardous Locations motor with a Variable Frequency Drive (VFD) unless the motor nameplate specifically states that the

2.0 RECEIVING AND INSPECTION

2.1 INITIAL INSPECTIONS

2.1.1 CHECK PACKING LIST AND INSPECT the packaging to make certain no damage has occurred in shipment. If there is visible damage to the packaging, unpack and inspect the motor immediately. Claims for any damage done in shipment must be made by the purchaser against the transportation company.

2.1.2 TURN MOTOR SHAFT by hand to be certain that it rotates freely. Note: Shaft seals and bearing seals may add drag.

2.1.3 CHECK NAMEPLATE for conformance with purchase order requirements and compliance with power supply and control equipment requirements.

2.2 HANDLING:

⚠ WARNING: FALLING OBJECT HAZARD

Eyebolts or lifting lugs, where provided, are intended for lifting only the motor and accessories mounted by the motor manufacturer (unless specifically stated otherwise on the motor). Utilizing the motor lifting provision to lift other components such as pumps and gear boxes could result in serious personal injury, death and/or property damage.

⚠ WARNING: FALLING OBJECT HAZARD

Before using the lifting provision, check the eyebolts and/or other lifting means to assure they are not bent or damaged and are completely threaded, seated & secured to the motor. Equipment to lift motor must have adequate lifting capacity. While lifting the motor DO NOT stand under or in the vicinity of the motor. Failure to follow these instructions could result in serious personal injury, death and/or property damage.

2.2.1 LIFTING ANGLE LIMITATIONS

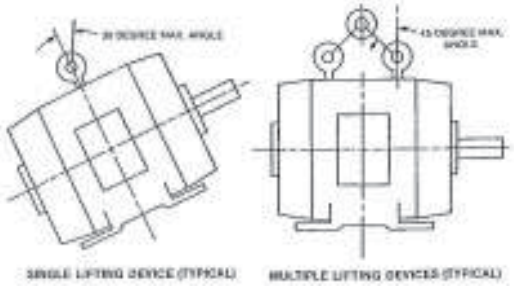

2.3 STORAGE: Motors, not put into service immediately, must be stored indoors in a clean, dry location. Avoid locations with large temperature swings that will result in condensation. Motors must be covered to eliminate airborne dust and dirt. If the storage location exhibits high vibration, place isolation pads under motor to minimize damage to motor bearings.

2.3.1 BEARING LUBRICATION: Bearings are grease packed at the factory; relubrication upon receipt of motor or while in storage is not necessary. If stored more than one year, add grease per lubrication instructions (Table 4-4) before start-up.

2.3.2 SHAFT ROTATION: It is recommended that the motor shaft be rotated 5 to 10 rotations every three months to distribute the grease in the bearings. This will reduce the chance for corrosion to form on the bearing rolling elements and raceways. Note: Shaft seals and bearing seals may add drag.

2.3.3 DAMP OR HUMID STORAGE LOCATIONS: Treat unpainted flanges, shafts, and fittings with a rust inhibitor. Apply appropriate power to the motor's space heaters (if so equipped)

3.0 INSTALLATION AND OPERATION

WARNING: Only qualified personnel who are familiar with the appropriate national code, local codes and sound practices should install or repair electrical motors and their accessories. Installation should conform to the appropriate national code as well as local codes and sound practices. Failure to follow these instructions could result in serious personal injury, death and/or property damage.

WARNING: ELECTRICAL LIVE CIRCUIT HAZARD

Do not touch electrically live parts. Disconnect, Lockout and Tag input power supply before installing or servicing motor (includes accessory devices). Use a voltmeter to verify that power is off before contacting conductors.

3.1 LOCATION

3.1.1 SELECTING A LOCATION: Consideration should be given to environment and ventilation. Motors should be installed in an area that is protected from direct sunlight, corrosives, harmful gases or liquids, dust, metallic particles, and vibration. A motor with the proper enclosure for the expected operating condition should be selected. Provide accessible clearance for cleaning, repair, service, and inspections (See section 3.1.3 for construction clearances). The location should be considered for possible future motor removal / handling. The free flow of air around the motor should not be obstructed.

3.1.2 AMBIENT TEMPERATURE LIMITS: The ambient temperatures of the air inlet to the motor should not exceed 40°C (104°F) or be less than -30°C (-22°F) unless the motor nameplate specifically states an ambient temperature outside of these limits. The ambient inside an enclosure built around the motor shall not exceed the nameplate ambient. For ambient temperatures outside of these limits consult the motor manufacturer.

CAUTION: INSULATION DEGRADATION WARNING

Insulation at high temperatures ages at an accelerated rate. Each 10°C increase in temperature reduces the insulation life by one half.

WARNING: HAZARDOUS LOCATIONS AMBIENT LIMIT: Division 1 Hazardous Locations motors shall **NOT** be operated below –25°C (-13°F) ambient. (Low temperatures reduce the component mechanical properties.)

3.1.3 CONSTRUCTION SELECTION per LOCATION:

3.1.3.1 DRIPPROOF (OPEN) MOTORS are intended for use indoors where the atmosphere is relatively clean, dry, and non-corrosive. Recommended a minimum clearance of ½ the shaft height between vent openings and the nearest obstruction.

3.1.3.2 TOTALLY ENCLOSED MOTORS are suitable for indoor or outdoor standard service applications.

TEAO or AOM (Totally Enclosed Air Over) motors must be mounted in the air stream. When the motor nameplate states a minimum airflow the motor must be mounted in an air stream meeting this minimum value.

TEFC (Totally Enclosed Fan Cooled) motors must meet a minimum distance of ½ the shaft height between the fan guard grill openings and the nearest obstruction.

3.1.3.3 HAZARDOUS LOCATIONS MOTORS: Hazardous Locations motors are intended for installations in accordance with NEC Article 500. For all installations involving Hazardous Locations motors, consult the applicable national codes, local codes, and the authority having jurisdiction.

Division 1 Installations – includes Class I & II: Use only motors that are UL Listed and CSA Certified or UL Listed and UL Certified for Canada. These motors bear a separate nameplate that includes the UL Listing Mark and CSA Certification Mark or includes the UL Listing Mark and the UL Mark for Canada. This plate also bears the phrase: " Electric motor for Hazardous Locations" and is marked with the Class, Group and Operating Temperature Code.

Division 2 Installations – Class I only: Use only motors that are CSA Certified and bear the CSA Certification Mark. These motors include a phrase on the main motor nameplate that indicates the motor is CSA Certified for Class I, Division 2 / Zone 2 locations.

Division 2 Installation – Class II only: Use only Class II motors as described above under "Division I Installations".

WARNING: EXPLOSION HAZARD

A motor should never be placed in an area with a hazardous process or where flammable gases or combustible materials may be present unless it is specifically designed and nameplated for this type of service. Hazardous Locations motors are intended for installations in accordance with NEC Article 500. For all installations involving Hazardous Locations motors, consult the NEC, local codes, and the authority having jurisdiction. Failure to follow these instructions could result in serious personal injury, death and/or property damage. (For other limitations see section 1.3)

3.2 MOUNTING MOTOR:

3.2.1 RIGID BASE (FOOTED): The motor must be securely installed to a rigid foundation or a mounting surface to minimize vibration and maintain alignment between the motor shaft and the load's shaft. The mounting surfaces of the four mounting pads must be flat within 0.01 inches for 210 frame & smaller; 0.015 inches for 250 frame & larger. [IEC 0.25 mm for 130 frame & smaller, 0.38 mm for 160 frame & larger]. This may be accomplished by shims under the motor feet. For special isolation mounting, contact manufacturer for assistance

3.2.2 RIGID BASE HOLE SELECTION -6 OR 8 HOLES

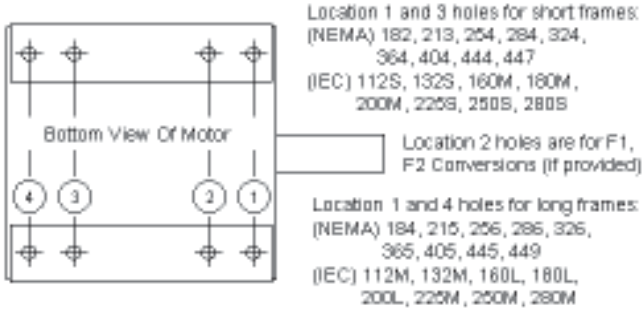

3.2.3 VERTICAL MOUNTING:

CAUTION: ENCLOSURE PROTECTION CAUTION: Most Dripproof rigid base (footed) motors do **NOT** meet "Dripproof" requirements when mounted vertically. If the motor is located in unprotected environments, the addition of a drip cover may be available. Drip covers not available for cast iron rigid base motors.

WARNING: FALLING OBJECT HAZARD

The lifting provision on standard horizontal footed motors is not designed for lifting the motor in a vertical shaft up or shaft down position. (see 2.2.1 lifting angles). Lifting method / provisions for

mounting a rigid base (footed) motor vertically is the responsibility of the installer.

VERTICAL SHAFT DOWN: Most standard horizontal motors thru 449 Fr. (excluding brake motors) can be mounted in a vertical shaft down orientation. For vertical brake motors see section 3.3.6.2.

VERTICAL SHAFT UP:

WARNING: HAZARDOUS LOCATIONS VERTICAL MOUNT: Hazardous locations motors must **NOT** be mounted vertically shaft up without approval by the motor manufacturer. Without proper retaining provisions the rotor may move axially and contact components, creating a spark hazard.

Belted or Radial Load when mounted vertically: The following frame sizes / constructions with applied (axial) down loads within the limit stated are acceptable when mounted vertical shaft up.

Table 3-1 Belted or Radial Load Applications (All speeds)

Frame Size	Enclosure	Construction	Shaft Up OK	Max Applied Down Load[3]
56	TEFC & ODP	Steel	Yes	25 lbs
140	TEFC	Steel & Cast Iron	Yes	25 lbs
	ODP	Steel	Yes	25 lbs
180	TEFC	All	Yes	35 lbs
	ODP	Steel	Yes	35 lbs
210	TEFC	All	Yes	40 lbs
	ODP	Steel	Yes	40 lbs
250	TEFC	All	Yes	40 lbs
	ODP	Steel	Yes	40 lbs
		Cast Iron	No[2]	N/A
280-320	320 TTFC models	Cast Iron	Eng[1]	N/A
	All Other TEFC	Cast Iron & Aluminum	Yes	30 lbs
	ODP	Cast Iron	No[2]	N/A
	TEFC & ODP	Steel	Build Up Only[4]	N/A
360 & Up	TEFC	Cast Iron	Build Up Only[4]	N/A
	ODP	Cast Iron	No[2]	N/A
	TEFC & ODP	Steel	Build Up Only[4]	N/A

Notes:

1 For TEFC model numbers beginning with 324TTFC or 326TTFC consult the motor manufacturer to determine if a build up motor is required.

2 The max applied down load is any applied load external to the motor, including such things as sheave weight, fan loads, axial belt force, pump load, etc. If the application is direct drive with no applied radial load, consult the motor manufacturer.

3 "Build-up only", refers to motors that are specifically ordered and built for shaft up applications. It does not imply that all build-up motors are suitable for shaft up applications.

3.3 APPLICATION ASSEMBLY TO MOTOR:

CAUTION: EQUIPMENT DAMAGE:
Do not connect or couple motor to load until correct rotational direction is established.

3.3.1 GENERAL: PROPER ALIGNMENT of the motor and driven equipment minimizes vibration levels, maximizes bearing life, and extends the overall life of the machinery. Consult the drive or equipment manufacturer for more information.

CAUTION: BEARING FAILURE
During assembly do NOT force components onto the shaft. Striking or hammering the component may result in bearing damage.

3.3.2 DIRECT COUPLING: Use flexible couplings if possible. For applications that apply radial, axial or moment loading on the motor shaft see section 3.3.3.

CAUTION: BEARING FAILURE
Unless approved by the motor manufacturer do **NOT** direct couple a vertical shaft up or roller bearing motor. Direct coupling a vertical shaft up motor or a motor with a roller bearing may result in bearing damage.

3.3.3 DIRECT CONNECTED: Radial loading for direct connected equipment (gears, fans etc.) must be approved by the motor manufacturer unless within the maximum overhung load limits (Table 3-2). Combined loading (axial, radial and/or moments) must be approved by motor manufacturer. For belted loads see section 3.3.4.

Table 3-2 Maximum Radial Load (lbf) @ Middle of the Shaft Extension Length

Frame Number	Motor Rated RPM			
	3600	1800	1200	900
143T	106	166	193	210
145T	109	170	199	218
182T	187	230	261	287
184T	193	237	273	301
213T	319	317	470	510
215T	327	320	480	533
254T	500	631	729	793
256T	510	631	736	820
284T	-	866	990	1100
286T	-	871	1005	1107
324T	-	950	1100	1215
326T	-	950	1113	1230
364T	-	1078	1365	1515
365T	-	1078	1380	1540
404T	-	1388	1590	1762
405T	-	1400	1610	1780
444T	-	1580	1795	2005
445T	-	1520	1795	1985
447T	-	1455	1765	1985
449T	-	1640	1885	2130

Values based on 26,280 hrs B-10 Life
For "End of Shaft" Load multiply value by 0.88
To convert from lbf to N multiply value by 4.4482.

3.3.4 BELTED:

The goal of any belted system is to efficiently transmit the required torque while minimizing the loads on the bearings and shafts of the motor and driven equipment. This can be accomplished by following four basic guidelines:

1. Use the largest practical sheave diameter.
2. Use the fewest number of belts possible.
3. Keep sheaves as close as possible to support bearings.
4. Tension the belts to the lowest tension that will still transmit the required torque without slipping. It is normal for V-belts to squeal initially when line starting a motor

3.3.4.1 Sheave Diameter Guidelines:

In general, smaller sheaves produce greater shaft stress and shaft deflection due to increased belt tension. See Table 3-3 for recommended minimum sheave diameters. Using larger sheaves increases the contact with belts which reduces the number of belts required. It also increases the belt speed, resulting in higher system efficiencies. When selecting sheaves, do not exceed the manufacturer's recommended maximum belt speed, typically 6,500 feet per minute for cast iron sheaves. Determine belt speed by the following formula:

Figure 1

$$\textbf{BELT SPEED (Ft/min)} = \frac{Shaft\ RPM\ x\ 3.14\ x\ Sheave\ Dia\ (inches)}{12}$$

3.3.4.2 Number of Belts

In general, use the fewest number of belts that will transmit the required torque without slipping. See Table 3-3 for recommended maximum number of belts. Each belt adds to the tension in the system, which increases load on the shafts and bearings. Belts are most efficient when operated at or near their rated horsepower.
If the sheaves have more grooves than the number of belts required, use the grooves closest to the motor.

3.3.4.3 Sheave Location

Install sheaves as close to the housing as possible to increase the bearing life of the motor and driven equipment

Figure 2

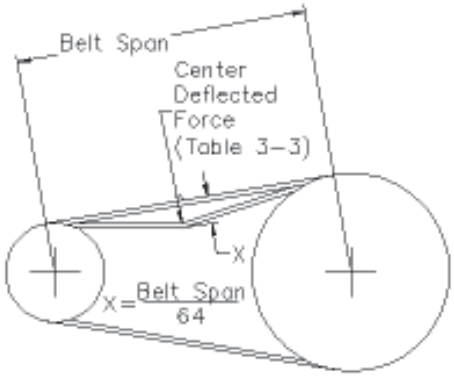

3.3.4.4 Belt Tension

CAUTION: Equipment Failure Caution
Belt tensioning by feel is **NOT** acceptable. Tensioning by "feel" can be very misleading, and can damage motor and equipment.
It is normal for V-belts to squeal initially when line starting a motor.

In general, belt tensions should be kept as loose as possible while still transmitting the required torque without slipping. Belt tensions must be measured with a belt tension gage. These inexpensive gages may be obtained through belt manufacturers, or distributors.

Proper belt tension is determined by measuring the force required to deflect the center of the belt a given distance. The proper deflection (in inches) is determined by dividing the belt span in inches by 64. Calculate the proper deflection and then see Table 3-3 for the required “Deflected Force” to achieve that deflection.
After tensioning the belt, rotate the sheaves for several rotations or operate the system for a few minutes to seat belts into the grooves, then re-tension the belts. New belts will stretch during use, and should be retensioned after the first eight hours of use.

Table 3-3 Recommended Minimum Sheave Diameters, Belt Type, Number of Belts and Deflected Force

Motor Hp	1200 rpm				1800 rpm				3600 rpm			
	Min Sheave Dia (in)	Belt Type	Max # of Belts	Avg. Deflected Force (lbs)	Min Sheave Dia (in)	Belt Type	Max # of Belts	Avg. Deflected Force (lbs)	Min Sheave Dia (in)	Belt Type	Max # of Belts	Avg. Deflected Force (lbs)
0.75	2.2	3VX	1	3.4	2.2	3VX	1	2.2	2.2	3VX	1	1.2
1	2.4	3VX	1	4.0	2.2	3VX	1	3.1	2.2	3VX	1	1.6
1.5	2.4	3VX	2	3.1	2.4	3VX	2	2.1	2.2	3VX	1	2.5
2	2.4	3VX	3	2.8	2.4	3VX	2	2.9	2.4	3VX	1	2.7
3	3.0	3VX	2	3.3	2.4	3VX	3	2.9	2.4	3VX	2	2.3
5	3.0	3VX	3	4.0	3.0	3VX	3	3.7	2.4	3VX	3	2.5
7.5	3.8	3VX	4	4.7	3.0	3VX	4	4.1	3.0	3VX	2	4.2
10	4.4	3VX	4	5.4	3.8	3VX	4	4.3	3.0	3VX	3	3.8
15	4.4	3VX	5	5.4	4.4	3VX	4	5.4	3.8	3VX	3	4.4
20	5.2	3VX	6	6.0	4.4	3VX	6	4.8	4.4	3VX	3	5.0
25	6.0	3VX	7	5.6	4.4	3VX	7	5.2	4.4	3VX	4	4.7
30	6.8	3VX	7	5.9	5.2	3VX	7	5.3				
40	6.8	5VX	4	11.6	6.0	3VX	7	6.0				
50	8.2	5VX	4	14.6	6.8	3VX	8	5.9				
60	8.2	5VX	5	14.1	7.4	5VX	4	13.3				
75	10.0	5VX	5	14.5	8.6	5VX	4	14.3				
100	10.0	5VX	6	16.0	8.6	5VX	6	13				
125	12.0	5V	7	14.1	10.5	5V	6	13.1				
150	13.2	5V	7	15.4	10.5	5V	7	13.4				
200	15.0	5V	8	16.0	13.2	5V	8	13.1				
250	15.0	8V	6	27.6	14.0	5V	9	13.8				
300	16.0	8V	7	27.1	14.0	5V/**8V**	11 / **7**	23.4				
350	16.5	8V	7	30.3	14.5	5V/**8V**	12 / **7**	26.0				
400	17.5	8V	8	29.1	15.0	5V/**8V**	13 / **8**	25.7				
450	18	8V	8	31.6	16.0	5V/**8V**	14 / **9**	25.2				
500	18.5	8V	9	30.7	16.5	5V/**8V**	15 / **9**	26.9				
600					17.5	8V	11	26.3				
700					19.0	8V	12	27.3				
800					20.0	8V	13	28.2				

Contact Motor Manufacturer when Belting 3600 rpm Motors Greater than 25 HP

Notes:

1. Horsepower is the nameplate motor horsepower, and RPM is the motor (driver) speed.
2. Minimum sheave diameters are from NEMA standards where applicable.
3. **For variable speed applications or values outside these recommendations, consult motor manufacturer.**
4. Selections are based on a 1.4 service factor, 5 to 1 speed ratio and various Power Transmission Manufacturers' catalogs.
5. These selections are for Narrow V-belt sections only. Consult manufacturer for details on conventional V-belt sections (A, B, C, D and E), or other belt types.
6. "Average Deflected Force is per section 3.3.4.4 of this document and is the force required to deflect the center of a belt 1/64 of the belt span distance. Tolerance on this force is ±1 lbf for forces ≤10 lbs, and ±2 lbs for forces >10 lbs as measured utilizing a belt tension gage.
7. When more than one belt is required the belts must be a matched set (matched for length).
8. If possible, the lower side of the belt should be the driving side to increase the length of wrap on the sheave).
9. For belted loads do not exceed 125% of 60 Hz operating RPM.

3.3.5 VFD (Variable Frequency Drives) OPERATION:

WARNING: VFD Motors with Reset Thermal Protectors
UL Recognition, UL Listing, or CSA certification does not apply to motors that are equipped with a manual or automatic reset thermal protector when the motor is operated on VFD power.

WARNING: Power Factor Correction Capacitors:
Power factor correction capacitors should never be installed between the drive and the motor.

CAUTION: VFD / Motor Setup:
It is the responsibility of the startup personnel during set up of the VFD / motor system to properly tune the drive to the motor for the specific application per the VFD user manual. The correct voltage boost and volts per hertz settings are application dependent and unique to each motor design. Failure to connect over temperature devices (when provided) will void the warranty.

3.3.5.1 Overspeed Capability:

Belted loads: Do not exceed 125% of 60 Hz operating RPM.

Table 3-4 Maximum Safe Continuous Speed (RPM) For Coupled and Direct Connected Loads

NEMA / [IEC] Frame Size	2-Pole	4, 6, or 8 Pole
56-180 [80-110]	7200 *	5400 *
210-250 [130-160]	5400 *	4200*
280 [180]	5400 *	3600
320 [200]	4500 *	3600
360 [225]	4500 *	2700
400-440 [250-280]	3600	2700
>440 [>280]	3600	1800

* = Fan cooled motors (Totally Enclosed & Hazardous Locations Motors) are limited to a maximum safe continuous speed of 4000 RPM **For higher speeds or shortened duty cycle contact motor manufacturer**

3.3.5.2 Cable Lengths: For optimum insulation life, limit VFD to motor cable lengths of general purpose motors

to Table 3-5 values. Definite purpose VFD motors may accommodate longer cable lengths. For additional information contact motor manufacturer.

Table 3-5 Max Cable Lengths General Purpose Motors
These values are based on 3 kHz carrier frequency. Add suitable VFD output-side filters when exceeding the listed values.

Frame Size	230V	460 V	575 V
NEMA 56-320	600 ft.	125 ft.	40 ft.
NEMA 360-5011	1000 ft.	225 ft.	60 ft.
IEC 80-200	180 m.	40 m.	12 m.
IEC 225-280.	300 m.	70 m.	18 m.

3.3.5.3 VFD Grounding: Equipment grounding conductors may be run in the same conduit as the AC motor power leads. This wire must be used as the equipment ground for the motor and not as the fourth current carrying wire of a "WYE" motor circuit. The grounded metal conduit carrying the output power conductors can provide EMI shielding, but the conduit does not provide an adequate ground for the motor; a separate grounding conductor must be used. Grounding the motor neutral (WYE) of a VFD powered motor may result in a VFD ground fault trip. Improper grounding of an inverter fed motor may result in frame voltages in excess of 500 Volts. Refer to Grounding section 3.4.4

3.3.5.4 VFD – Single Phase:

CAUTION: SINGLE PHASE MOTOR FAILURE:
Single Phase motors are **NOT** suitable for use on VFD power. Connecting a Single Phase Motor to a VFD voids the warranty.

3.3.5.5 Stray Voltage on Accessory Leads:

VFD's will couple stray (common-mode) voltage to motor-mounted RTDs, thermistors, thermostats and space heaters. The leads of these elements must be properly insulated and control input circuits must be designed to withstand this common-mode voltage.

3.3.6 ACCESSORIES / PROVISIONS:

3.3.6.1 General: Carefully read and understand the accessory manufacturer's instructions, supplied with motor. Contact the manufacturer for additional information.

3.3.6.2 Brake Motors:

CAUTION: Vertical Motor Premature Brake Failure
Motors with brakes that are designed for vertical applications are equipped with springs to support the brake pressure plate. Mounting a horizontal brake motor vertically shaft up or down may require a pressure plate spring modification. Failure to modify the brake for the vertical application may result in premature brake failure. If in question, consult brake literature or brake manufacturer.

Brake Solenoid Wiring: Do NOT connect the brake solenoid to the output of a VFD. The brake solenoids must be wired to 50/60 Hz line power

3.3.6.3 Space Heaters:

Motors provided with space heaters have two leads that are brought into the conduit box or into an auxiliary box. These leads are marked "H1", "H2" ("H3", "H4" if a second space heater is supplied). See the space heater nameplate on motor for heater rating.

WARNING: DIVISION 2 EXPLOSION HAZARD
The space heater temperature rating when used in Class I, Division 2 motors shall **NOT** exceed 80% of the auto ignition temperature of the hazardous gas or vapor. See the space heater nameplate on motor for heater Temperature Code and heater rating. Failure to follow this instruction could result in serious personal injury, death and/or property damage

3.3.6.4 Thermal Protection:

General Information: When thermal protection is provided, one of the following will be stamped on the nameplate:

1. **"THERMALLY PROTECTED**" This motor has built in thermal protection. Thermal protectors open the motor circuit electrically when the motor overheats or is overloaded. The protector cannot be reset until the motor cools. If the protector is automatic, it will reset itself. If the protector is manual, disconnect motor from power supply. After protector cools (five minutes or more) press the reset button and reapply power to the motor. In some cases a motor is marked "Auto" and the connection diagram on the motor will identify T'Stat leads – see "2 " below. (See warnings on Manual and Automatic reset protectors - section 1.1)

2. **"WITH OVERHEAT PROTECTIVE DEVICE**": This motor is provided with an overheat protective device that does not directly open the motor circuit. Motors nameplated with this phrase have either thermostats, thermisters or RTD's. The leads to these devices are routed into the motor conduit box or into an auxiliary box. The lead markings are defined on the nameplate (normally "P1", "P2") . The circuit controlled by the overheat protection device must be limited to a maximum of 600 volts and 360 volt-amps. See connection decal provided inside the terminal box cover. Failure to connect these over temperature devices (when provided) will void the warranty.

   WARNING: EXPLOSION HAZARD
   For Hazardous Locations motors provided with thermostats UL and the NEC require connection of thermostat leads into the control portion of a manual reset start circuit. Failure to follow this instruction could result in serious personal injury, death and/or property damage

Resistance Temperature Detectors (RTD): When winding and/or bearing RTDs are provided the RTD lead markings are defined on the nameplate. (Normally "R1", "R2", "R3" etc.)

3.3.6.5 RTD Alarm & Trip Settings:

Tables 3-6 & 3-7 are suggested initial RTD alarm and trip settings. For motors found to operate significantly below these values the settings may be reduced accordingly.

Table 3-6 Winding RTD – Temperature Limit (ºC) 40 ºC Max Ambient

Motor Load	Class B Temp Rise≤ 80ºC		Class F Temp Rise≤ 105ºC	
	Alarm	Trip	Alarm	Trip
Up to 1.0 SF	130	140	155	165
>1.0 to 1.15 SF	140	150	160	165

Table 3-7 Bearing RTD – Temperature Limit (ºC) 40 ºC Max Ambient

Ambient	Alarm	Trip
Up to 40ºC	95	100
> 40ºC	110	115
Bearings that are Heat Stabilized to 150 ºC	130	135

3.3.7 GUARDS:

WARNING: ROTATING PARTS HAZARD
When devices are assembled to the motor shaft, be sure to install protective devices such as belt guards, chain guards, and shaft covers. These devices must protect against accidental contact with extremities, hair, and clothing. Consider the application and provide guarding to protect personnel. Remove all unused shaft keys and loose rotating parts to prevent them from flying off and causing bodily injury. Failure to follow this warning could result in serious personal injury, death and/or property damage.

3.4 ELECTRICAL CONNECTIONS:

⚠ WARNING: ELECTRICAL HAZARDS

Before proceeding read Section 1-1 on Electrical Safety. Failure to follow the instructions in Section 1-1 could result in serious personal injury, death and/or property damage

3.4.1 POWER SUPPLY / BRANCH CIRCUIT

⚠ WARNING: POWER SUPPLY INCOMPATIBILITY HAZARD

Check power supply to make certain that voltage, frequency and current carrying capacity are in accordance with the motor nameplate. Failure to match motor nameplate values could result in serious personal injury, death and/or property damage

⚠ WARNING: BRANCH CIRCUIT SUPPLY HAZARD

Motor and control wiring, fusing, overload protection, disconnects, accessories and grounding must always conform to the applicable electrical codes as well as local codes and sound practices.

3.4.1.1 Branch Circuit Supply to a motor should include a disconnect switch, short circuit current fuse or breaker protection, motor starter (controller) and correctly sized thermal elements or overload relay protection.

3.4.1.2 Fuses, Breakers, Overload Relays

Short Circuit Current Fuses or Breakers are for the protection of the branch circuit. Starter or motor controller overload relays are for the protection of the motor. Each of these should be properly sized and installed per the applicable electrical codes as well as local codes and practices.

⚠ WARNING: PROTECTIVE DEVICE DISABLED HAZARD

DO NOT bypass or disable protective devices. Protection removal could result in serious personal injury, death and/or property damage

3.4.1.3 AC Power Supply Limits

Motors are designed to operate within the following limits at the motor terminals:

1- AC power is within +/- 10 % of rated voltage with rated frequency applied. (Verify with nameplate ratings) **OR**

2- AC power is within +/- 5% of rated frequency with rated voltage **OR**

3- A combined variation in voltage and frequency of +/- 10% (sum of absolute values) of rated values, provided the frequency variation does not exceed +/-5% of rated frequency.

4- For 3 phase motors the line to line full load voltage must be balanced within 1%.

5- If the motor is rated 208-230V, the voltage deviations must be calculated from 230V.

CAUTION: Reduced Motor Performance

Operation outside of these limits will degrade motor performance and increase operating temperature.

3.4.2 TERMINAL BOX:

3.4.2.1 Conduit Opening: For ease of connections, motors are typically provided with large terminal boxes. Most motors have conduit access in 90 degree increments, the terminal box conduit opening is typically provided via knockouts, holes with covers, or the terminal box is rotate-able. Fabricated conduit boxes may have a removable plate for the installer to provide correctly sized hole(s).

3.4.2.2 Hazardous Locations Motors:

⚠ WARNING: EXPLOSION HAZARDS

(1) Terminal Boxes mounted to motor with a pipe nipple: If a pipe nipple mounted terminal box is removed or rotated it must be reassembled with a minimum of five full threads of engagement.

(2) Component Removal: Do not set a terminal box component on its machined surfaces. Prior to component reassembly wipe clean all machined surfaces.

(3) Machined Surface Gap (Hazardous Locations Terminal Boxes): The gap between mating surfaces with the machined terminal box MUST BE LESS THAN 0.002 inches. This gap must be checked with a feeler gage along the entire perimeter. If there is visible damage to the mating surfaces, or if the gap between these surfaces exceeds 0.002 inches, DO NOT complete the installation and contact the motor manufacturer. Failure to follow these instructions could result in serious personal injury, death and/or property damage

3.4.3 LEAD CONNECTIONS

Electrical connections to be made per nameplate connection diagram or separate connection plate. In making connections follow the applicable electrical code as well as local codes and practices.

⚠ WARNING: ELECTRICAL CONNECTION HAZARD

Failure to correctly connect the motor leads and grounding conductor can result in injury or death. Motor lead connections can short and cause damage or injury if not well secured and insulated.

3.4.3.1 Wire Size (Single Phase) Requirements

The minimum wire size for Single Phase, 115 & 230 Volt Circuits must meet table 3-8 for a given distance between motor and either Fuse or Meter Box.

Table 3-8 Minimum Wire Gage Size Single Phase 115 & 230 Volt Circuits

Distance (Feet) - Motor to Fuse or Meter Box								
Motor	100 Ft.		200 Ft.		300 Ft.		500 Ft.	
HP	115	230	115	230	115	230	115	230
1/4	14	14	10	12	8	10	6	8
1/3	12	14	10	12	6	10	4	8
1/2	10	12	8	10	6	8	4	6
3/4	10	12	6	10	4	8	2	6
1	8	10	6	8	4	6		4
1 1/2	4	10	0	8		6		4
2		8		6		4		2
3		8		6		4		2
5		6		4		2		0

3.4.3.2 Extension Cords (Single Phase Motors):

Where an extension cord(s) is utilized to provide power to the motor the extension cord(s) must be…(1) the proper gauge size per table 3-8, (2) in good working condition (3) properly grounded.

3.4.4 GROUND CONNECTION(S):

⚠ WARNING: ELECTRICAL GROUNDING HAZARD

For general information on grounding (USA) refer to NEC Article 250. Improper grounding of an inverter fed motor may result in frame voltages in excess of 500 Volts. In making the ground connection, the installer must make certain that a good electrical connection is obtained between motor and grounding lead. Failure to properly ground motors, per the applicable national code (such as NEC Article 430) and local codes may cause serious injury or death to personnel.

Primary "Internal" Ground: A grounding conductor must be connected to the grounding terminal provided in the terminal housing. This grounding terminal is either a ground screw, ground lug, or a tapped hole to be used with a separately provided ground screw. The internal grounding feature is accessible inside the terminal housing and must be used as the primary grounding connection.

Secondary "External" Ground: Some motors are provided with a supplemental grounding terminal located on the external surface of the motor frame or feet. This external terminal is for supplemental bonding connections where local codes permit or require such connection

3.4.5 START UP:

⚠ WARNING: ELECTRICAL SHOCK HAZARD:

Be certain that all connections are secure and the conduit box cover is fastened in place before electrical power is connected. Failure to follow these instructions could result in serious personal injury, death, and/or property damage.

WARNING: LOOSE & ROTATING PARTS HAZARD
Before proceeding read Section 1-2 on Mechanical Safety. Failure to follow the instructions in Section 1-2 could result in serious personal injury, death and/or property damage

WARNING: EXCESSIVE SURFACE TEMPERATURE HAZARD
Motors with the temperature code stated on the nameplate are designed to operate within this limit. Improper application or operation can cause the maximum surface temperature to be exceeded. A motor operated in a Hazardous Location that exceeds this surface temperature limit increases the potential of igniting hazardous materials. *Therefore, motor selection, installation, operation, and maintenance must be carefully considered to ensure against the following conditions:* (1) Motor load exceeds service factor value, (2) Ambient temperature above nameplate value, (3) Voltages outside of limits (3.4.1.3), (4) Loss of proper ventilation, (5) VFD operation exceeding motor nameplate rating, (6) Altitude above 3300 feet / 1000 meters, (7) Severe duty cycles, (8) Repeated starts, (9) Motor stall, (10) Motor reversing, and (10) Single phase operation. Failure to follow these instructions could result in serious personal injury, death and/or property damage.

CAUTION: HOT SURFACE
Normal motor surface temperatures may exceed 90 ° C (194° F). Touching the motor frame may cause discomfort or injury. Surface temperatures should only be measured with suitable instruments and not estimated by hand touch.

3.4.5.1 Start Up - No Load Procedure

1. **Check Instructions:** Before startup carefully read and fully understand these instructions including all warnings, cautions, and safety notice statements.
2. **Motor out of storage after more than three months:** Check winding insulation integrity with a Megger. If winding resistance to ground is less than 1.5 Meg-ohms consult the local authorized service shop before energizing the motor.
3. **Check Installation: Mechanical** - Check tightness of all bolts and nuts. Manually rotate the motor shaft to ensure motor shaft rotates freely. Note: Shaft & bearing seals will add drag.
   Electrical - Inspect all electrical connections for proper terminations, clearance, mechanical tightness and electrical continuity. Be sure to verify connections are made per the nameplate connection diagram or separate connection plate. Replace all panels and covers that were removed during installation before energizing the motor.
4. **Energize Motor: Check Rotation**
   If practical check motor rotation before coupling to the load. Unlock the electrical system. Momentarily provide power to motor to verify direction of rotation. If opposite rotation is required, lock out power before reconnecting motor. If motor has a rotational arrow only operate the motor in the rotation identified. Reapply power to ensure proper operation.
5. **Record No Load Amps, Watts & Voltage:**
   Recommend - To establish a baseline value check and record the no load amps, watts, and voltage.

3.4.5.2 Start Up – Load Connected Procedure

1. **Check Instructions:** Before startup carefully read and fully understand these instructions including all warnings, cautions, & safety notice statements.
2. **Coupling Installation:** Check that the connected equipment is properly aligned and not binding. Check that all guards and protective devices are properly installed.
3. **Energize Motor:** When all personnel are clear of the machine, apply power and verify that the load is not transmitting excessive vibration back to the motor though the shaft or the foundation. Verify that motor amps are within nameplate rating. For repeated starts see 3.4.5.3. The equipment can now be fully loaded and operated within specified limits as stated on the nameplate.

3.4.5.3 Jogging and/or Repeated Starts

Do not start more than twice in succession under full load. Repeated starts and/or jogs of induction motors can cause overheating and immediate failure. Contact the motor manufacturer if it is necessary to repeatedly start or jog the motor.

4.0 MAINTENANCE:

WARNING: Hazardous Locations Motor Repair HAZARD:
Division 1 Hazardous Locations motors can only be modified or repaired by the manufacturer or a facility that is Listed under UL's category "Motors and Generators, Rebuilt for use in Hazardous Locations". Failure to follow these instructions could result in serious personal injury, death and/or property damage.

WARNING: ELECTRICAL SHOCK HAZARD
Electrical connections are to be made by qualified electrical personnel in accordance with all applicable codes, ordinances and sound practices. Failure to follow these instructions could result in serious personal injury, death and/or property damage. Only qualified personnel who are familiar with the applicable national codes, local codes and sound practices should install or repair electric motors and their accessories.

WARNING: ELECTRICAL LIVE CIRCUIT HAZARD
Do not touch electrically live parts. Disconnect, lockout and tag input power supply before installing or servicing motor (includes accessory devices).

4.1 GENERAL INSPECTION

Inspect the motor approximately every 500 hours of operation or every three months, whichever occurs first. Keep the motor clean and the ventilation and fin openings clear. The following steps should be performed at each inspection:

4.1.1 VENTILATION: Check that the ventilation openings and/or exterior of the motor is free of dirt, oil, grease, water, etc, which can accumulate and block motor ventilation. If the motor is not properly ventilated, overheating can occur and cause early motor failure.

4.1.2 INSULATION: Use a "Megger" periodically to ensure that the integrity of the winding insulation has been maintained. Record the Megger readings. If winding resistance to ground is less than 1.5 Meg-ohms consult the local authorized service shop before re-energizing the motor.

4.1.3 ELECTRICAL CONNECTIONS: Check all electrical connectors to be sure that they are tight.

4.2 LUBRICATION & BEARINGS:

The lubricating ability of grease (over time) depends primarily on the type of grease, the size of the bearing, the speed at which the bearing operates and the severity of the operating conditions. Longer bearing life can be obtained if the listed recommendations are followed:

NOTE: If lubrication instructions are provided on the motor nameplate, the nameplate instructions will supersede these instructions. Motors marked "Permanently Lubricated" do not require additional service.

CAUTION: BEARING / MOTOR DAMAGE WARNING
Lubricant should be added at a steady moderate pressure. If added under heavy pressure bearing shield(s) may collapse. Over greasing bearings greatly increases bearing friction and can cause premature bearing and/or motor failure.

4.2.1 GREASE TYPE (unless nameplate states otherwise):
Nameplate Ambient Temperature between -30°C (-22°F) to 65°C (150°F) inclusive: Recommended grease for standard service conditions is Mobil Polyrex ® EM. Equivalent and compatible greases include: Texaco Polystar RB, Rykon Premium #2, Pennzoil Pen 2 Lube, Chevron SRI & Mobil SHC 100.

Nameplate Ambient Temperature below -30°C (-22°F): Special low temperature grease is recommended, such as Aeroshell 7 or Beacon 325 for ball bearings and Mobil SHC 100 for roller bearings.

Nameplate Ambient Temperature above 65°C (150°F): Dow Corning DC44 or equivalent, a special high temperature grease is required. Note that Dow Corning DC44 grease does not mix with other grease types.

For RTD settings see Table 3-7.

4.2.2 BEARING OPERATING TEMPERATURE:

CAUTION: HOT SURFACE

The external surface temperature of the end shield (bracket) bearing hub may reach 100° C (212° F) during normal operation. Touching this surface may cause discomfort or injury. Surface temperatures should only be measured with suitable instruments and not estimated by hand touch.

4.2.3 LUBRICATION INTERVALS: (For motors with regreasing provisions)

Eq. 4.2 Lubrication Interval = [(Table 4-1) hrs] x [Interval Multiplier (Table 4-2)] x [Construction Multiplier (Table 4-3)]

Table 4-1 Lubrication Intervals (Hours) These values are based on average use.

NEMA / [IEC] Frame Size	Operating Speed – RPM (See Table 3.4 for Maximum Operating Speed)					
	<7200	<5400	<4500	<3600	<1800	<1200
56-180 [80-110]	2500 Hrs.	4000 Hrs	5000 Hrs	6000 Hrs.	17000 Hrs.	20000 Hrs.
210-250 [130-160]		2500 Hrs	4000 Hrs	5000 Hrs.	12000 Hrs.	16000 Hrs.
280 [180]		2000 Hrs	3000 Hrs	4000 Hrs.	10000 Hrs.	14000 Hrs.
320 [200]			2000 Hrs	3000 Hrs.	9000 Hrs.	12000 Hrs.
360 [225]			1500 Hrs	2000 Hrs.	8000 Hrs.	10000 Hrs.
400-440 [250 – 280]				1500 Hrs.	4000 Hrs.	7000 Hrs.
>440 [>280]				1000 Hrs.	3000 Hrs.	5000 Hrs.

Seasonal Service: If motor remains idle for more than six months, Lubricate at the beginning of the season, then follow lubrication interval.

Do not exceed maximum safe operating speed Table 3-4 without manufacturer's approval

Table 4-2 Service Conditions

Use highest level Multiplier: Maximum Ambient Temperature and Contamination are independent factors

Severity of Service	Maximum Ambient Temperature	Atmospheric Contamination	Multiplier
Standard	Less than 40° C (104° F)	Clean, Slight Corrosion, indoors, less than 16 hrs per day	1.0
Severe	Above 40° C (104° F) to 50° C	Moderate dirt or Corrosion or outdoors or more than 16 hrs per day	0.5
Extreme	Greater than 50° C or Class H Insulation	Severe dirt or Abrasive dust or Corrosion	0.2

Table 4-3 Construction Multiplier

Construction	Multiplier
Angular Contact or Roller Bearing	0.5
Vertical Motor	0.5
All others	1.0

Table 4-4 Relubrication Amounts

Frame Size		Volume		
NEMA	IEC	Cu. In.	Fluid oz	ml
48-56	80	0.25	0.14	4.0
143-145	90	0.25	0.14	4.0
182-184	110	0.50	0.28	8.0
213-215	130	0.75	0.42	12.5
254-256	160	1.00	0.55	16.0
284-286	180	1.50	0.83	25.0
324-326	200	2.00	1.11	33.0
364-365	225	3.00	1.66	50.0
404-405	250	3.80	2.11	62.0
444-449	280	4.10	2.27	67.0
>449	>280	4.50	2.50	74.0

For regreasing while operating multiply volume by 125%.

4.2.4 LUBRICATION PROCEDURE: (For Motors with Regreasing Provisions)

CAUTION: BEARING DAMAGE WARNING
Added grease must be compatible with the original equipment's grease. If a grease other than those stated in 4.2.1 is to be utilized contact the motor manufacturer. Nameplate information supersedes section 4.2.1 (GREASE TYPE). New grease must be free of dirt. Failure to follow these instructions and procedure below may result in bearing and/or motor damage.

For an extremely dirty environment, contact the motor manufacturer for additional information.

LUBRICATION PROCEDURE:

1. Clean the grease inlet plug or zerk fittings prior to regreasing.
2. (If present) Remove grease drain plug and clear outlet hole blockage.

CAUTION: GREASE DRAIN PLUGGED:
Old grease may completely block the drain opening and must be mechanically removed prior to regreasing. Forcing a blocked drain open by increased greasing pressure may collapse bearing shields and / or force excess grease through the bearings and into the motor.

3. Add grease per Table 4-4
4. Re-install grease inlet and drain plugs (if removed).

WARNING: EXPLOSION HAZARD
Do NOT energize a Hazardous Locations motor without all grease fittings properly installed.

4.2.5 EXAMPLE: LUBRICATION
Assume - NEMA 286T (IEC 180), 1750 RPM Vertical motor driving an exhaust fan in an ambient temperature of 43° C and the atmosphere is moderately corrosive.

1. Table 4-1 list 10,000 hours for standard conditions.
2. Table 4-2 classifies severity of service as "Severe" with a multiplier of 0.5.
3. Table 4-3 lists a multiplier value of 0.5 for "Vertical"
4. (Eq. 4.2) Interval = 10,000 hrs x 0.5 x 0.5 = 2500 hrs

Table 4-4 shows that 1.5 in^3 of grease is to be added.

Relubricate every 2,500 hrs of service with 1.5 in^3 of recommended grease.

4.3 TROUBLE-SHOOTING

WARNING: READ INSTRUCTIONS:
Before trouble-shooting a motor, carefully read and fully understand the warnings, cautions, & safety notice statements in this manual.

WARNING: Hazardous Locations Motor Repair:
Motors nameplated for use in Division 1 Hazardous Locations can only be disassembled, modified or repaired by the plant of manufacturer or a facility that is Listed under UL's category "Motors and Generators, Rebuilt for use in Hazardous Locations". Failure to follow these instructions could result in serious personal injury, death and/or property damage

CAUTION: DISASSEMBLY APPROVAL REQUIRED:
Motor disassembly must be performed by a party approved by the motor manufacturer. To disassemble the motor without approval voids the warranty.

4.3.1 GENERAL TROUBLE-SHOOTING WARNINGS

1. **DISCONNECT POWER TO THE MOTOR BEFORE PERFORMING SERVICE OR MAINTENANCE.**
2. **Discharge all capacitors before servicing motor.**
3. **Always keep hands and clothing away from moving parts.**
4. **Be sure required safety guards are in place before starting equipment.**
5. **If the problem persists contact the manufacturer.**

4.3.2 Motor Trouble-shooting Cause / Corrective Action - Table 4-5

Issue:		Likely Cause:	Corrective Action:
Motor fails to start upon initial installation:			
	A.)	Supply voltage is too low or is severely unbalanced (one phase is low or missing).	(1) Check power supply fuses (2) Match motor lead wiring to nameplate connection diagram and supply voltage (3) Ensure that steady state supply voltage at motor terminals is within limits (see section 3.4.1.3). Correct as needed (4) Obtain correct motor to match actual supply voltage.
	B.)	Motor leads are miswired at conduit box.	
	C.)	Driven load exceeds motor capacity	(1) Verify that motor & load turn freely (2) Disconnect motor from load & ensure motor turns freely. Note: Roller bearings make noise when motor is uncoupled and shaft is rotated (3) Verify that motor starts when disconnected from load (4) Remove excessive / binding load if present.
	D.)	Load is jammed.	
	E.)	Fan guard is bent and making contact with fan	Replace fan guard & fan (if blades are damaged)
	F.)	VFD with power factor capacitors installed	Remove power factor correction capacitors if equipped
	G.)	VFD with motor neutral lead grounded	Ensure that motor neutral lead is ungrounded
	H.)	VFD programmed incorrectly	(1) Repeat checks listed above (2) Verify that VFD current limit and starting boost are set correctly (5) Double-check motor and feedback parameter settings and VFD permissives (6) Repeat autotune (for vector drives) procedure (7) Consult VFD supplier.
Motor has been running, then slow down, stalls, or fails to restart:			
	A.)	Supply voltage has drooped or has become severely unbalanced	(1) Replace fuse or reset circuit breaker. Allow motor to cool down before resetting manual protector on motor. **Warnings** - See section 1.1 for automatic and manual reset protector warnings (2) Verify that rated and balanced supply voltage has been restored before restarting motor. Measure voltage during restart. Ensure that steady state supply voltage at motor terminals is within limits (see section 3.4.1.3).
	B.)	Motor is overloaded	(1) Verify that motor & load turn freely. Repair binding components as needed (2) Reduce driven load to match motor capacity or increase motor size to match load requirements.
	C.)	Motor bearings are seized	
	D.)	Load Is jammed.	
	E.)	VFD will not restart motor after tripping	(1) Check fault codes on VFD and follow VFD troubleshooting procedures (2) Verify that VFD input voltage is balanced and within limits (3) Remove excessive mechanical load if present.
	F.)	Capacitor failure on single phase motor (if equipped)	**Warning: Potential Shock Hazard**: Contact service shop to check capacitor.
Motor takes too long to accelerate:			
	A.)	Motor leads are not connected correctly	Match motor lead wiring to nameplate diagram.
	B.)	Supply voltage has drooped or become severely unbalanced.	(1) Ensure that steady state supply voltage at motor terminals is within limits (see section 3.4.1.3). Correct as needed (2) Obtain correct motor to match actual supply voltage.
	C.)	Load exceeds motor capability	Determine correct motor size and contact motor representative to obtain replacement motor.
	D.)	Faulty start capacitor (Single Phase)	Motor may be too small for load. Record acceleration time. Start capacitors may fail if acceleration time exceeds 3 seconds.
	E.)	Mechanical Failure	(1) Check to make sure motor & load turn freely (2) Disconnect motor from load & ensure motor turns freely
Motor rotates in the wrong direction:			
	A.)	Incorrect wiring connection at motor	[Single Phase] Reconnect motor according to wiring schematic provided. Note: Some motors are non-reversible
			[Three Phase] Interchange any two power supply (phase) leads.
Motor overheats or overload protector repeatedly trips			
	A.)	Driven Load is excessive	(1) If motor current exceeds nameplate value, ensure that driven load has not increased. Correct as needed. (2) If new motor is a replacement, verify that the rating is the same as the old motor. If previous motor was a special design, a general purpose motor may not have the correct performance.
	B.)	Ambient temperature too high	Most motors are designed to operate in an ambient up to 40 °C. (See section 4.2.2 Hot Surface Caution)
	C.)	Motor cooling fins and/or vent openings blocked	Remove foreign materials – clear vent openings, fan guard air inlets and frame fins (TEFC motors)
	D.)	Insufficient Air Flow	TEAO (Totally Enclosed Air Over) motors: Measure airflow next to motor surface and obtain minimum requirements from motor manufacturer.

	E.)	Motor is started too frequently	See section 3.4.5.3
	F.)	Supply voltage too low, too high, or unbalanced	(1) Ensure that steady state supply voltage at motor terminals is within limits (see section 3.4.1.3) Correct as needed (2) Reconnect motor per input voltage (3) Obtain correct motor to match power supply.

Motor Vibrates

	A.)	Motor misaligned to load.	Realign load
	B.)	Load out of balance (Direct drive application)	(1) Ensure that load is dynamically balanced: (2) Remove motor from load and inspect motor by itself. Verify that motor shaft is not bent. Rule of thumb is 0.002" runout for shafts extension lengths up to 3.00". Add 0.0005" per every additional inch of shaft length beyond 3.00".
	C.)	Uneven tension on multiple belts	Mixing new with used belts. Replace multiple belt applications with a complete set of matched belts.
	D.)	Driven load operating at resonant point / natural frequency.	(1) De-energize motor and record vibration as load coasts from 100% speed to 0 RPM. If vibration drops immediately, vibration source is electrical. If levels do not drop immediately, source is mechanical (2) Redesign system to operate below the resonant point (3) On VFD-driven loads, program skip frequencies to bypass resonant points (4) Increase carrier frequency to obtain <3% THD current (5) On variable torque loads reduce volts/hertz below base speed.
	E.)	VFD torque pulsations	(1) Adjust VFD to obtain <3% THD current @ rated motor current (2) Adjust VFD stability for smooth operation. Vector drives may be unstable at light load.
	F.)	Motor miswired at terminal box	Match motor lead wiring to nameplate connection diagram.
	G.)	Uneven, weak or loose mounting support.	Shim, strengthen or tighten where required.
	H.)	Motor bearings defective	Test motor by itself. If bearings are bad, you will hear noise or feel roughness. Roller bearings are normally noisy when operated without load. If sleeve bearing, add oil per nameplate instructions. For motors with regreasing provisions, add grease per relubricating instructions (see section 4.2.3). If noise persists contact warranty service.
	I.)	Motor out of balance	Disconnect from load. Set motor on rubber pads on solid floor. Secure a ½ height key in shaft keyway and energize from balanced power supply @ rated voltage. Record vibration levels and compare with appropriate standards. If excessive vibration persists contact motor manufacturer.

Bearings repeatedly fail.

	A.)	Load to motor may be excessive or unbalanced	(1) If belt drive check system per section 3.3.4. (2) Other than belting, check loading on motor shaft. An unbalanced load will also cause the bearings to fail. (3) Check runouts of mating components, such as a C-face and pump flange.
	B.)	Bearings contaminated.	Motor enclosure not suitable for environment. Replace with correct enclosure construction
	C.)	Incorrect grease or bearings for ambient extremes.	See section 4.2.1
	D.)	VFD bearing damage	Ground brush, common mode filter, or insulated bearings must be added. Contact motor manufacturer.

Motor, at start up, makes a loud rubbing, grinding, or squealing noise.

	A.)	Contact between rotating and stationary components	Belt squeal during across the line starting is normal: (1) Verify that supply voltage is within limits (see section 3.4.1.3). (2) Ensure that motor lead wiring matches nameplate connection diagram: (3) Isolate motor from load. (4) To locate point of contact turn motor shaft by hand. (5) If point of contact is not located contact motor service shop.

Start capacitors repeatedly fail.

	A.)	The motor acceleration time is too long	Motor may be too small for load. Record acceleration time. Start capacitors may fail if acceleration time exceeds 3 seconds.
	B.)	Motor is being started too frequently	Excessive starting will damage motor capacitors. Contact motor manufacturer if motor is started more than 20 times/hour or if acceleration time exceeds 3 seconds.
	C.)	Motor voltage low	Verify that voltage at the motor terminals is within limits (see section 3.4.1.3).
	D.)	Defective start switch inside motor	Motor internal switch failure overheats start capacitor. Contact service shop or motor manufacturer.

Run capacitor fails.

	A.)	High ambient temperature	Verify that the ambient does not exceed motor's nameplate value

	B.)	Input voltage exceeds limit	Verify that voltage to the motor terminals is within limits (see section 3.4.1.3).
	C.)	Power surge to motor (caused by lightning strike or other high transient voltage).	If a common problem, install surge protector.

SEEPEX.
ALL THINGS FLOW

SEEPEX GmbH
Scharnhölzstraße 344
46240 Bottrop
Postfach 10 15 64
46215 Bottrop
Germany

Tel +49.2041.996-0
Fax +49.2041.996-400
info@seepex.com
www.seepex.com

Great Britain

SEEPEX UK Ltd.
3 Armtech Row
Houndstone Business Park
Yeovil Somerset BA22 8RW
Tel +44.1935.472376
Fax +44.1935.479836
sales@seepex.co.uk

Austria

SEEPEX GmbH
Vertriebsbüro Österreich
Obermüllergasse 18
3003 Gablitz
Tel +43.2231.61085
Fax +43.2231.6108520
hfriedl@seepex.com

Belgium

SEEPEX GmbH
Bureau België
Industriezone Klein Gent-Link 21
Welvaartstraat 14-1 bus 15
2200 Herentals
Tel +32.14.501471
Fax +32.14.501461
seepex.be@seepex.com

Denmark

SEEPEX Nordic A/S
Krakasvej 7C
3400 Hillerød
Tel +45.49.192200
Fax + 45.49.193200
info.nordic@seepex.com

France

SEEPEX France SARL
1, Rue Pelloutier
77183 Croissy Beaubourg
Tel +33.1.64114450
Fax + 33.1.64114489
info.fr@seepex.com

Hungary

SEEPEX GmbH
Magyarországi iroda
Hecskó Tamás okl.vill.mérn.
Éva utca 5.
7632 Pécs
Tel +36.205806134
Fax +36.72952587
thecsko@seepex.com

Irland

SEEPEX UK Ltd.
Branch Office Ireland
29 Lackenfune
Dungarvan
Co. Waterford
Tel +353.860450439
sales@seepex.co.uk

Italy

SEEPEX Italia S.r.l.
Via Alberto da Giussano 23
20145 Milano (MI)
Tel +39.02.36569360
Fax +39.02.92877855
info.it@seepex.com

Poland

SEEPEX GmbH
Przedstawicielstwo w Polsce
ul. Romana Maya 1
61-371 Poznan
Tel +48.61.6469270
Fax +48.61.6469271
info.pl@seepex.com

Sweden

SEEPEX Nordic A/S
Hamndalsvägen 58
61633 Åby
Tel +46.1166940
Fax +46.1166941
info.nordic@seepex.com

Spain

SEEPEX GmbH
Officina de Representación en España
C/Copenhague, 12
Edif. Tifan Oficina 207
28232 La Rozas
Madrid
Tel +34.91.6361353
Fax +34.91.6409371
info.es@seepex.com

The Netherlands

SEEPEX GmbH
Bureau Nederland
Visbystraat 13
7418 BE Deventer
Tel +31.570.516644
Fax +31.570.516077
seepex.nl@seepex.com

Russia

SEEPEX Ltd. Ugreshskaya
Str. 2 Bldg. 23
115088 Moscow
Tel +7.495.2874830
Fax +7.495.2874830
info.cis@seepex.com

USA

SEEPEX Inc.
511 Speedway Drive
Enon
Ohio 45323
Tel +1.937.8647150
Fax + 1.937.8647157
sales.us@seepex.com

China

SEEPEX Pumps (Shanghai) Co., Ltd.
Xuanzhong Rd. 399, Building 13
Nanhui Industrial Area
201300 Shanghai
Tel +86.21.38108888
Fax +86.21.38108899
info.cn@seepex.com

India

SEEPEX India Pvt. Ltd.
Office No. 305.
Raheja Arcade Building
Sector 11, C.B.D. Belapur
Navi Mumbai 400614
Tel +91.22.40240434/35
Fax +91.22.40240436
info.ind@seepex.com

Japan

日本シーペックス株式会社
German Industry Park
1-18-2 Hakusan, Midori-ku
Yokohama 226-0006
Tel +81.46.2595931
Fax +81.46.2595941
info.jp@seepex.com

Malaysia

SEEPEX (M) Sdn. Bhd.
No. 2, Jalan 51/203A
Kaw. Perindustrian Tiong
Nam Seksyen 51
46050 Petaling Jaya Selengor
Darul Ehsan
Tel +60.3.88009988
seepex.m@seepex.com

Australia

SEEPEX Australia Pty. Ltd.
Unit 3, 4 Bounty Close
Tuggerah Business Park
NSW 2259
Tel +61.2.43554500
Fax +61.2.43554022
info.au@seepex.com

More SEEPEX sales partnes in Europe, America, Asia, Africa and Oceania you willl find on our website.

* 8 6 8 8 0 9 *

LEFT BLANK

SEEPEX

SERIES BN 17-06, PROGRESSIVE CAVITY PUMP (SLUDGE TREATMENT) (P5-011/012)

LEFT BLANK

SEEPEX.
ALL THINGS FLOW

Operating and Assembly Instruction
Progressive Cavity Pump

Commission-no.
868812 - 868813

Type
BN 17-6L

Read instructions before beginning any work!

Always keep instructions handy on the worksite.

Original Instructions

Issue 04.06.2018

1 Safety 1
1.1 General notes
1.2 Safety and warning notes
1.2.1 Warning notes
1.2.2 Danger symbols
1.2.3 Information symbols
1.3 Dangers that can be caused by the machine
1.4 Qualification of the personnel
1.5 Authorized people
1.5.1 Tasks and information for the owner/operators
1.5.2 Safety notes for maintenance, inspection and assembly work
1.6 Personal protective equipment
1.7 Safety and protective devices
1.8 Foreseeable misuse
1.9 Designated use
1.10 Warranty

2 Description of the pump 5
2.1 General description
2.2 Mode of action and pumping principle of the pump
2.3 Constructive design

3 Technical Data 6
3.1 Data sheet 8
3.2 Characteristic Curves 11

4 Transport, Intermediate storage, Disposal 12
4.1 Safety
4.2 Transport
4.2.1 Dimensions, weight and center of gravity
4.2.2 Symbol
4.2.3 Lashing points (AP) for lifting devices
4.2.4 Unpacking the machine
4.3 Temporary storage/corrosion protection
4.4 Disposal

5 Assembly / Installation 15
5.1 Mounting tools / lifting gear
5.2 Space requirement
5.2.1 Dimension for stator replacement
5.3 Assembly of the complete mounted pump
5.4 Power supply of the pump
5.5 Pipelines
5.5.1 Suction and pressure connection
5.5.2 Pipeline dimensions
5.5.3 Residue-free pipelines
5.5.4 Tension-free assembly
5.6 Dimensional Drawing 17

6 Commissioning / De-Commissioning 18
6.1 Commissioning report 18
6.2 Measures before commissioning 20
6.2.1 Checking pipelines
6.2.2 Protective devices on the pump
6.2.3 Electrical / hydraulic connections
6.2.4 Direction of rotation check
6.2.5 Additional devices - optional
6.3 Initial commissioning/repeated commissioning
6.3.1 Avoiding dry running of the pump
6.3.2 Pressure in the suction and pressure connection
6.4 De-commissioning
6.4.1 Switching off the pump
6.4.2 Emptying the pump
6.4.3 Dismantling the pump
6.4.4 Preservation/storage of the pump

7 Maintenance 25
7.1 Preventative measures
7.1.1 Pump down-time
7.2 Lubrication
7.2.1 Joint grease
7.3 Inspection

8 Malfunctions, causes, rectification 27

9 Pump Dismantling / Reassembly 29
9.1 Pump Dismantling / Reassembly 29
9.1.1 Prepare the pump for dismantling
9.1.2 Dismantling
9.1.3 Reassembly

9.2 Rotating unit – individual parts 35
9.2.1 Dismantling
9.2.2 Rotating unit (RTE) - prepare individual parts for reassembly
9.2.3 Rotating unit (RTE) - individual parts - reassembly
9.3 Holding band - assembly 39
9.3.1 Prepare the holding band
9.3.2 Check the holding band
9.3.3 Assembling the holding band
9.3.4 Correct tension for the holding band (HBD)
9.3.5 Cant up the holding band
9.3.6 Shear the holding band
9.3.7 Check the holding band after assembly
9.4 Single acting mechanical seal 41
9.4.1 Safety
9.4.2 Application conditions and material version
9.4.3 Design
9.4.4 Commissioning
9.4.5 Monitoring during operation
9.4.6 Dismantling of mechanical seal
9.4.7 Reassembly of mechanical seal
9.6 Sectional drawing shaft sealing 44

10 Spare parts 46
10.1 Order template for spare parts 48
10.2 Sectional drawing 51
10.2.1 Parts list 52

11 Special tools 54

12 Related documents 56
12.1 Accessories 58
12.1.1 Accessorie TSE 58
12.1.2 Drawing TSE
12.1.3 Part list TSE
12.2 Technical Information 72
12.4 Warranty Card 74
12.5 Terms and Conditions 76

13 Appendix 79
13.1 Manufacturer's documents / suppliers
13.1.1 Gearbox 80

Subsidiaries

1.1 General notes

- ➢ Always keep the operating and maintenance instructions close by the machine.
- ➢ If problems cannot be solved with reference to the operating and maintenance instructions, please contact the manufacturer.

Observe the following points in addition to these operating and maintenance instructions:

- Prohibition, warning and mandatory signs, warning notes on the machine
- Relevant laws and ordinances
- Statutory provisions on accident prevention
- Corresponding harmonized standards and regulations

1.2 Safety and warning notes

- ➢ Comply with safety and warning notes for safe and efficient use of the product.

Signal words for specific dangers and (possible) consequences are explained below. These are supplemented by symbols (pictograms) if necessary.

1.2.1 Warning notes

NOTICE
Caution for machine! Possible danger. Material damage can occur.

⚠ **CAUTION**
Caution for people and machine! Possible danger. Minor injury or damage to property can occur.

⚠ **WARNING**
Warning for people! Possible danger. Death or serious injury can occur.

⚠ **DANGER**
Danger for people! Possible danger. Immediate risk of sever or fatal injury.

1.2.2 Danger symbols

Warning: Suspended load.

Warning: Tipping over.

Warning: Hand injuries.

Warning: Dangerous electrical voltage.

Warning: Pull-in hazard.

Warning: Excess pressure.

Warning: Risk to the environment.

Warning: Hot surfaces.

1.2.3 Information symbols

NOTICE

Observe operating and maintenance instructions.

Ensure environmental protection.

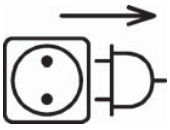

Disconnect power plug before opening.

Wear eye protection.

Wear gloves.

➢ Instruction to act/take measures

• List item

1.3 Dangers that can be caused by the machine

SEEPEX machines are built in accordance with the state of the art.

Nevertheless, there is a residual risk, because the machine works with:

- Mechanical movements that pose a danger
- Electrical voltages and currents

We have used design measures and applied safety technology to minimize the risk to the health of people posed by this danger.

1.4 Qualification of the personnel

This handbook is intended for:

- Owner
- Operators
- Setters
- Maintenance personnel

1.5 Authorized people

People authorized to undertake operation, set up and maintenance are instructed and trained specialists employed by the owner/manufacturer.

Detailed technical knowledge is essential for performing any work on the machine.

The owner is responsible for:

- Personnel training
- Compliance with safety regulations
- Compliance with operating and maintenance instructions

The operator must:

- Have received instruction
- Read and understood the relevant parts of the operating instructions before starting work
- Know the safety devices and regulations

1.5.1 Tasks and information for the owner/operators

- ➢ Regularly check and maintain the machine, replacing all parts in good time which no longer guarantee safe operation.
- ➢ It is essential to comply with the procedure described in the operating instructions for shutting down the machine.
- On completion of work, attach all safety and protective devices and make sure they are functioning.

1.5.2 Safety notes for maintenance, inspection and assembly work

- ➢ Do not work on the machine or system unless it is stationary and depressurised.
- ➢ Switch off the master switch and pull out the power plug before starting work on live components.
- ➢ Comply with the procedure for shutting down the machine as described in the Shut-down chapter.
- ➢ Decontaminate (de-toxify) machines that are used for pumping media that can be harmful to health.
- ➢ Refer to the Initial start-up chapter before repeated start-up of the machine.

1.6 Personal protective equipment

- ➢ Wear personal protective equipment and/or additional equipment for your own safety.
- ➢ Avoid/limit risks by the use of collective technical protective equipment or by organisational measures at work.

1.7 Safety and protective devices

- ➢ Prior to start-up, bolt SEEPEX machines onto a concrete foundation so as to ensure stability.
- ➢ Starting and stopping devices must be clearly recognisable. Take appropriate measures to avoid defects.
- No protective device is necessary for checking and/or setting the shaft seal.
- Hot surfaces are identified with a danger symbol on the machine.

1.8 Foreseeable misuse

Serious personal injury and damage to property can be caused by:

- Incorrect use
- Incorrect installation or operation of the machine
- Impermissible removal of necessary protective equipment

1.9 Designated use

- Only use SEEPEX machines if they are in perfect condition and in compliance with the oper-ating and maintenance instructions.
- Do not start up the machine unless the system in which the machine is installed is in accor-dance with the provisions of the applicable guidelines and statutory regulations.
- Equivalent sustained sound pressure level at workplaces of operating personnel C75 dB (A). Cavitation-free operation of the machine and screwed connection to concrete founda-tion are essential.
- SEEPEX machines are components that are exclusively intended for pumping media in accordance with the technical data (chapter 3.0). Written approval must be obtained from the manufacturer before other media are pumped.
- Refer to the information on the type plate and the operating instructions for technical data (chapter 3.0), and comply with them.
- The operating instructions are assigned to the SEEPEX machine based on the commission number.

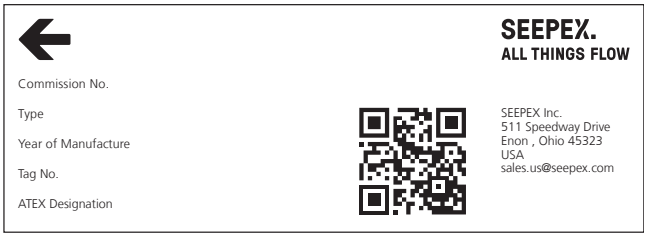

Similar illustration

1.10 Warranty

- Warranty in accordance with our terms and conditions of delivery and order confirmation.
- It is a condition of the machine warranty that the machine must correspond to the listed operating instructions in accordance with the type plate/data sheet.
- All wearing parts are excluded from the warranty.
- These operating instructions are subject to copyright. Reproduction is not permitted and will be punished. Contravention will be pursued through the courts.

2.1 General description

seepex pumps are members of the group of rotating displacement pumps.

- Characteristic features
  - Special configuration/arrangement of the rotor and stator pumping elements.
  - Motion sequence

2.2 Mode of action and pumping principle of the seepex pump

- Seal lines are created by the geometrical configuration/contact between both pumping elements.
- Seal lines provide total separation between the suction and pressure sides.
  Result:
  - Increased suction lift capability of the pump
  - High pressure build-up irrespective of the rotation speed

2.3 Constructive design

No.	Designation
ANT	Drive
200	Lantern
307	Plug-in shaft
400	Coupling rod
SEA	Shaft seal
500	Suction casing
600	Rotor
RTE	Rotating unit
601	Stator
700	Pressure branch

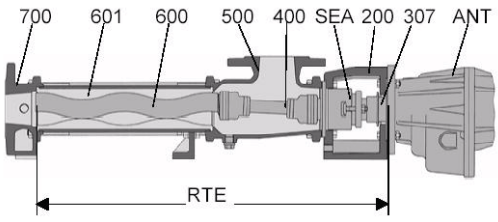

3.1 Data sheet

3.2 Characteristic Curves

Progressive cavity pump

BN 17-6L / A1-J0-L8-F0-GA

Application data

U 495 XXX001

Conveyed product	sludge
Flowability	flowable
Viscosity	low viscosity (<500 cP/mPas)
Solids content	not specified
Size of solids	not specified
Specific gravity	unknown, 1 kg/dm³ assumed
Product temperature	32°F - 113°F
pH value	5-9
Kind of operation	continuous
Operating hours	8h/day
Location	indoor, dry atmosphere
Altitude of installation	up to 1000 m assumed
Surrounding temperature	normal (32-113°F)

Performance data

	Capacity	**Pressure**	**Speed**	
	88 USGPM	50 psi	369 rpm	norm
Starting torque	160 lb.ft			
Req. power at pump shaft	4.8 HP			
Inlet pressure	flooded suction (up to 0,5bar)			
NPSHr	10.58 ft			

Tolerances according to SEEPEX standards.

Materials and executions

Installation	horizontal
Direction of rotation	counter clockwise (left)
Lantern - Design	with cover plates
Lantern - Material	EN-JL 1040 (gci-25)
Lantern - Flange diameter	250 mm
Suction casing - Design	standard
Suction casing - Material	EN-JL 1040 (gci-25)
Pressure branch - Design	standard
Pressure branch - Material	EN-JL 1040 (gci-25)
Position of branch	position 1
Suction connection	DN 4" ANSI B16.5 Class 150
Pressure connection	DN 3" ANSI B16.5 Class 150
Joint - Design	pin joint with joint sleeve, grease filled
Joint - Material	standard
Joint - Universal joint sleeve: material	NBR - Perbunan
Joint - Joint Grease	joint grease SEEPEX 30321
Coupling rod - Design	standard
Coupling rod - Material	1.4404 / AISI 316L
Rotor - Design	standard
Rotor - Material	1.0503 (C45) / AISI 1045
Rotor - Coating	ductile chromium coating
Stator - Design	standard with TSE, sensor sleeve 1.4404
Stator - Material	NBR - Perbunan
Shaft sealing	mechanical seal
Code	single acting mech. seal - GA
Shaft diameter	55 mm
Make	Burgmann
Type	MG1-G60 Q1Q1 VGG
Casing - material	1.4408 / ASTM A351 grade CF8M
Casing - connection standard	NPT
Plug-in Shaft - Design	standard
Plug-in Shaft - Material	1.4404 / AISI 316L
Plug-in Shaft - Drilling diameter	40
Plug-in Shaft - Drilling depth	75
Bolting - Design	standard
Painting - Number of colors	single-colored standard
Painting - Painted components	1 complete combination
Painting - Color	Standard Enamel (SEEPEX Blue)

Drive

Drive Type	Gear & Motor
Type	Gear
Make	Nord
Model	SK32ALF-210TC
Mounting position	B5
Ratio (i)	4.43
Flange diameter	250 mm
Shaft diameter	40 mm
Shaft length	80 mm
Shaft drawing	716/0100-003B4
	Norm
Speed	406 rpm
Frequency	60 Hz
Type	Motor
Make	Marathon Motors
Model	213THTL7736
Rated output	7.5 HP
Rated speed	1800 rpm
Mounting position	B3/B5
Starting	DOL (direct on line)
Explosion proof	Weatherproof
Efficiency class	IE1
Winding protection	Thermostats
Voltage	rated voltage 575V
Frequency	60Hz
Thermal class	F
Enclosure	TENV

Baseplate

Design	baseplate for block pump, design with side feet
Material	steel, painted
GPU Type Code	B-ST-LS

TSE

Design	standard design, complete - sensor sleeve fitted to the stator of the pump with integrated temperature sensor - connection head (IP55) - separate TSE control device suitable for mounting inside a control panel
Voltage	110-115V/50-60Hz
Temperature coefficient	NTC
Material sensor sleeve	1.4404
Material connection head	aluminium

Packing

Type of packing	crate (US)

Miscellaneous

Design	Tag each: P5-011, P5-012 Tag both: PI005

Documentation

Characteristic Curves
Size
17–6L

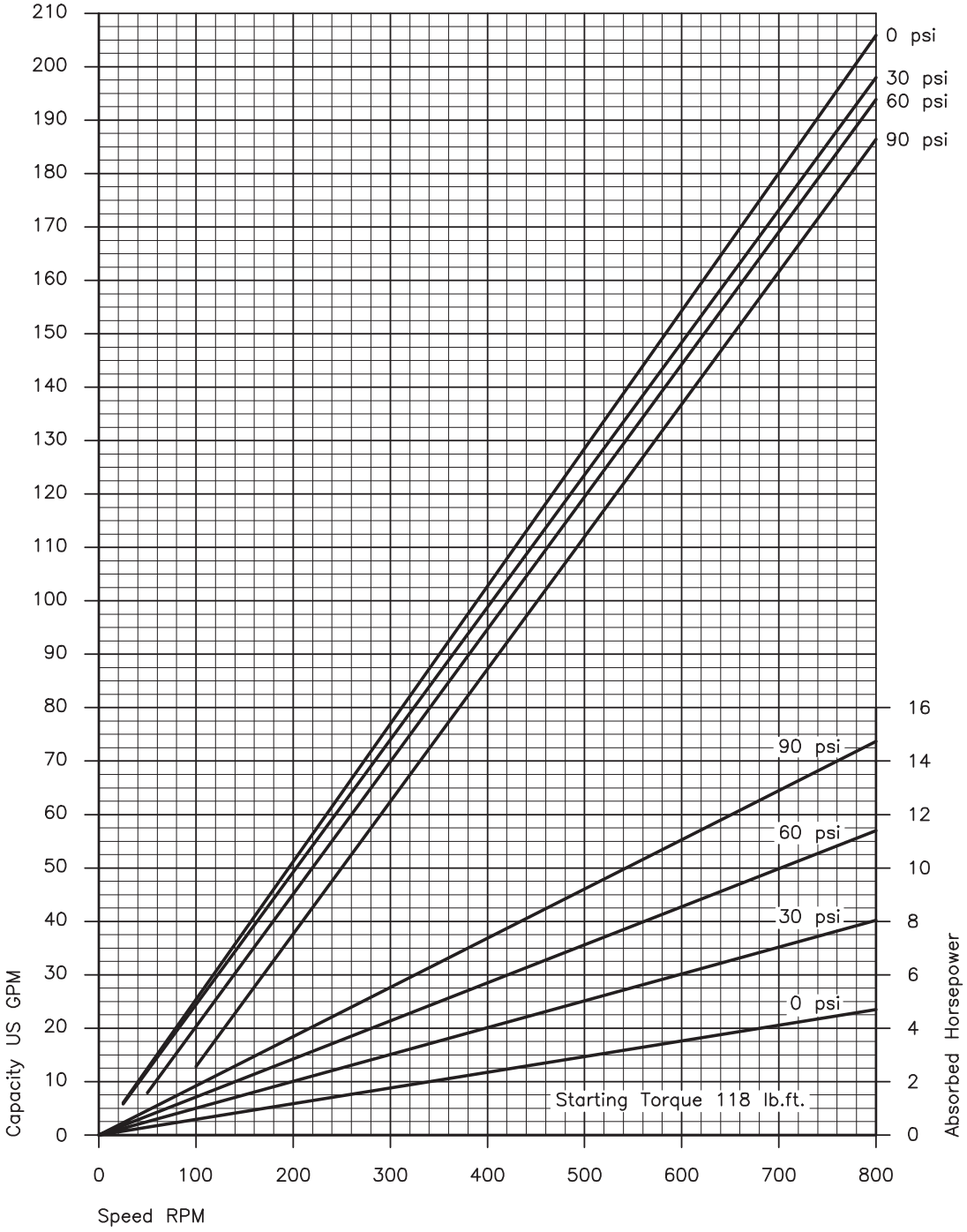

Values based upon water 68°F ; For notes on drive selection refer to PER

CHA.17–6L_6, B 12.02us

4.1 Safety

CAUTION

Damage to property/injuries due to incorrect transport.
Slight injury or damage to property can occur.

- ➢ Comply with the safety notes and transport notes on the packaging.
- ➢ Use suitable means of transport, lifting devices and tools.
- ➢ Use protective equipment.

4.2 Transport

4.2.1 Dimensions, weight and centre of gravity

- ➢ Note the dimensional drawing (chapter 5.6).

4.2.2 Symbol

- Meaning of symbol

Top	Fragile item	Against moisture protect	Centre of gravity	Lashing points

4.2.3 Lashing points (AP) for lifting devices

WARNING

Warning of suspended load.
Death or serious injury can occur.

- ➢ Use the lashing points (AP) for lifting devices.
- ➢ Note the centre of gravity (dimensional drawing chapter 5.6).

Lifting machine	Industrial trucks

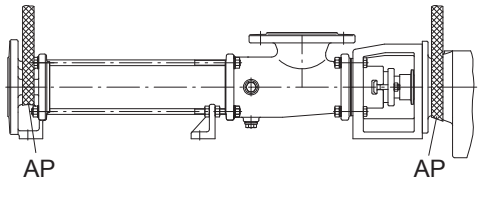

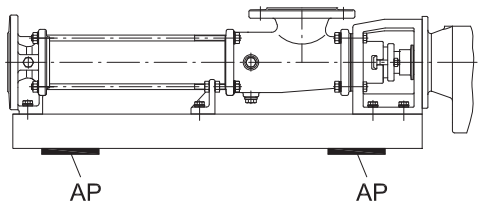

4.2.4 Unpacking the machine

- ➢ Comply with the symbols and notices on the packaging.
- ➢ Remove the screwed connection between the machine and packaging.
- ➢ Remove the machine with a lifting machine/industrial truck.

4.3 Temporary storage/corrosion protection

- All SEEPEX machines have corrosion protection applied as standard prior to transport.

NOTICE
Damage to property if corrosion protection is missing. Property damage can occur due to corrosion. ➢ Temporary storage must be in a dry, enclosed, frost-free room in order to provide protection against ambient influences. ➢ Contact SEEPEX regarding the necessary corrosion protection for temporary storage.

4.4 Disposal

NOTICE
Environmental protection. Material damage can occur. ➢ Drain the pumping medium and dispose of it in accordance with the regulations. ➢ Dispose of the machine with regard to its composition and existing regulations.

5.1 Mounting tools / lifting gear

CAUTION

Pump falling over.
Slight injury or damage to property can occur.

- ➢ Adhere to the lifting tool's starting point.
- ➢ Pay attention to the dimensions, weight and centre of gravity of the pump.
- ➢ Use suitable mounting tools/lifting gear.

5.2 Space requirement

The required space should be determined by considering the following factors:

- Dimensions and weight.
- Requisite transport and lifting equipment.
- Pipe routing – dismantling (dimension for stator replacement).

5.2.1 Dimension for stator replacement (P)

- ➢ Refer to the dimensional drawing.

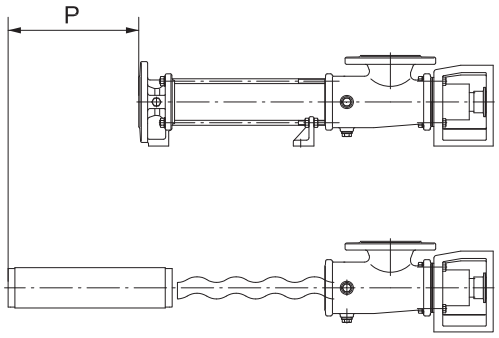

5.3 Assembly of the complete mounted pump

- ➢ Assemble according to technical data (chapter 3.).
- ➢ Note dimensional drawing.

Tension-free mounting of the pump

- ➢ Balance unevenness with suitable supports.
- Applies to mounting on foundations/load-bearing elements.
- Total areas of all pump bearing areas are resting on the surface.

Correct position of the drives

- All drives are set up ready for operation and mounted.
- Correct displacements of the drive during transport/installation of the pump by adjusting/fixing the drive.

CAUTION

Safety protection devices.
Slight injury or damage to property may result.

- ➢ Connect safety protection devices and activate.

5.4 Power supply of the SEEPEX pump

DANGER

Line voltage and line frequency.
Death or serious injury can occur.

- ➢ Note type plate on the pump.
- ➢ Pay attention to manufacturer's directions (chapter 13.).
- ➢ Pay attention to safety regulations.

5.5 Pipelines

5.5.1 Suction and pressure connection

- Refer to the dimensional drawing for the position, nominal width and standard.
- Note direction of rotation/flow direction.

5.5.2 Pipeline dimensions

- Adhere to specifications regarding pressure in the pressure respectively suction connection.
- Note technical data (chapter 3.).
- Nominal width of suction pipe = nominal width of suction connection of pumps.

5.5.3 Residue-free pipelines

NOTICE

Damage to property through assembly residue.
No claims under guarantee if violated.

- ➢ Keep all pipelines free of foreign objects.
- ➢ Remove weld spatters, screws, steel chips etc.

5.5.4 Tension-free assembly

- ➢ Assemble pipelines and other components in a tension-free manner on the pump.

Copyright: This drawing is our property and patented for us according to the law of copyright and associated rights !

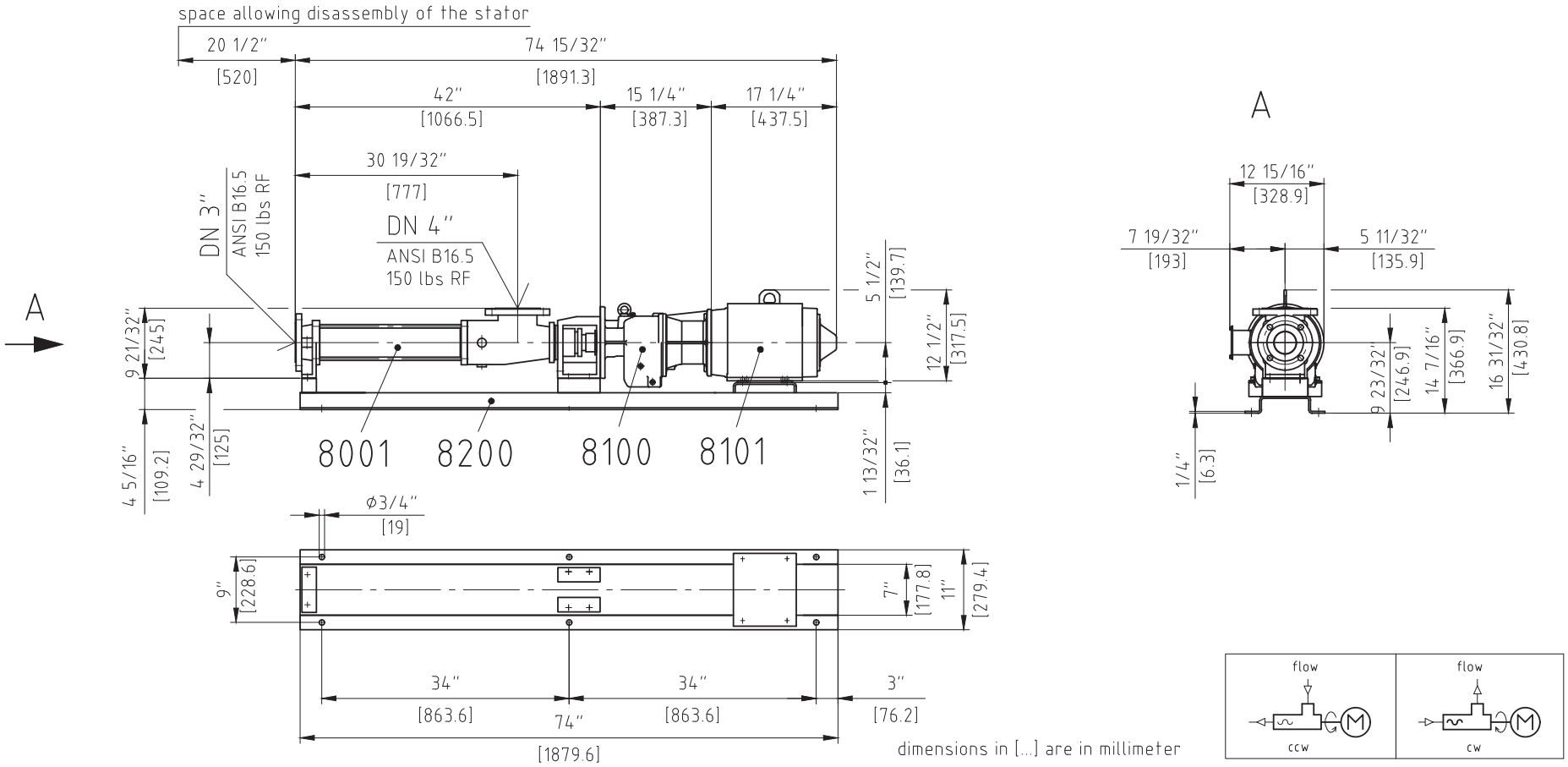

dimensions in [...] are in millimeter

Quant.	Denomination	Item	Material	Note	Weight / kg
1	baseplate:	8200		Var.: 801-200/0100-C-753	52
1	motor: Marathon 213THTL7736	8101			67
1	gear: Nord SK32F-210TC	8100			46
1	pump: BN 10-12 / 17-6L / 30-6LT / 15-12T	8001			57

	2018	Name	Day	Scale	Weight	Denomination
SEEPEX. ALL THINGS FLOW	Drawn	cbo	30.04.	1:20	222 kg	dimensional drawing
	Checked	lsh	01.05.	EDP-No. 172018.dwg		Drawing-no. 262-C65/0100-C-746A4

General tolerances for dimensions without specified tolerances acc. to DIN ISO 2768-v

Master Copy

6.1 Commissioning report

Send commissioning report online to www.seepex.com\ **Must be specified with every order!**			**From:**
Commission: _____	**Model:** _____		Contact person: ..... Tel.: ..... Fax: ..... E-mail: .....
Customer Service: SEEPEX Inc. 511 Speedway Drive Enon, Ohio 45323 service@seepex.com			**Address of plant:** ....

Delivery date:		
Date of installation:		
Assembly check carried out on:		
Please enter operational data:		
Conveying liquid:		
Temperature:		
Fuse level/motor protection or power consumption		
Frequency control	☐ no	
	☐ yes	If yes:
		☐ Supplied by SEEPEX
		☐ Supplied by customer
		Frequency:
		Speed:
		Power consumption:

Place, date

Signature / company stamp

6.2 Measures before commissioning

➢ Note the technical data (chapter 3.).

6.2.1 Checking pipelines

➢ Check flange screwed connections (SCH).

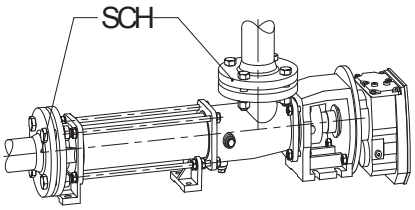

➢ Check threaded connections (G).

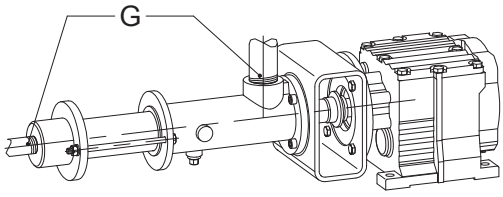

NOTICE

Ensure the liquid can flow through without obstruction.
Malfunction and/or irreparable damage to the pump.

➢ Open all shut-off elements before switching on the pump.

6.2.2 Protective devices on the pump

DANGER

Missing protective device.
Danger of pulling in and crushing.

➢ Equip the pump with a protective device. Protective devices provided for preventing contact with surfaces or moving parts must be regarded as suitable if contact is not possible in a test involving a test finger, with regard to the penetration possibility, strength and shock resistance.

➢ Comply with national protection regulations.

➢ In pumps with an open suction flange/feed hopper, attach touch protection. These safety clearances protect those persons who are attempting to reach danger areas without additional help and under the conditions defined for various situations of reaching up, reaching under or reaching through

In shaft seals, touch protection is only necessary if there are components on the rotating shaft.

6.2.3 Electrical/hydraulic connections

DANGER

Dangerous voltage.
Death or serious injury can occur.

➢ Observe safety regulations.

➢ Disconnect the pump from all sources of energy.

➢ Prevent electrical connections from being switched on again.

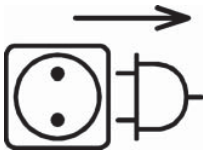

6.2.4 Direction of rotation check

- The pump direction of rotation determines the flow direction of the pumping medium.
- Note the direction of rotation arrow on the type plate.

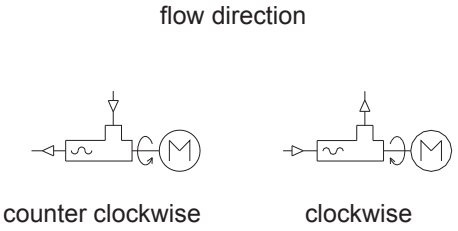

6.2.5 Additional devices - optional

- Refer to additional devices (chapter 12.1).

6.3 Initial commissioning/repeated commissioning

- Start up the pump.

NOTICE
Dry running of the pump. Malfunction and/or irreparable damage to the pump. ➢ Fill the suction casing with liquid in order to lubricate the pumping elements.

6.3.1 Avoid dry running of the pump

NOTICE
High temperature between rotor and stator. Stator material burned. Complete failure of the pump ➢ Make sure that the suction-side conveying capacity does not cavitate. ➢ If this cannot be guaranteed on the machine side, assemble a SEEPEX dry running protection (DRP).

6.3.2 Pressure in the suction and pressure connection

⚠ CAUTION
High pressure. Malfunction and/or irreparable damage to the shaft seal or pump. ➢ Maintain pressure in the suction connection in accordance with the technical data (chapter 3.). ➢ Assemble an oil-filled contact pressure gauge to monitor and deactivate the pump.

6.4 De-commissioning

Protect the pump and additional devices against the following:

- Frost
- Deposit of solids
- Sedimentation from the liquid
- Corrosion of parts that come into contact with the medium

6.4.1 Switching off the pump

DANGER

Dangerous voltage.
Death or serious injury can occur.

- Observe safety regulations.
- Disconnect the pump from all sources of energy.
- Prevent electrical connections from being switched on again.

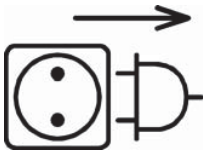

6.4.2 Emptying the pump

CAUTION

Liquid draining out.
Minor injury or damage to property can occur.

- Wear suitable protective clothing.
- Refer to the technical data (chapter 3.) for the corresponding configuration of the pump housing.

To drain the pump:

- If the pump housing has screwed plugs, remove the screwed plugs.
- Drain using a connection branch (suction casing, pressure branch) if the pump housing is coated or the housing does not have screwed plugs.
- Drain the residual liquid from the pump housing.
- Drain the pipelines on the suction and pressure sides, or shut off behind the pump connections.

6.4.3 Removing the pump

WARNING

Risk of pump tipping or falling.
Death or serious injury can occur.

- Support the drive unit to guarantee stability.

Pipeline dismantling

- Remove flange bolts (SCH) and flange seals (DFL).

with/without base plate

- Remove bolts (SCH) from the pump feet.

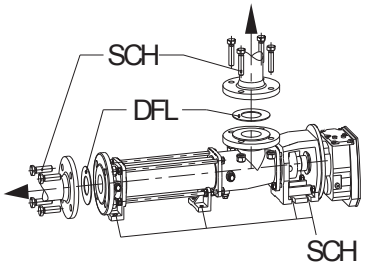

Pipeline dismantling

- Remove threaded connections (G).

with/without base plate

- Remove bolts (SCH) from the pump feet.

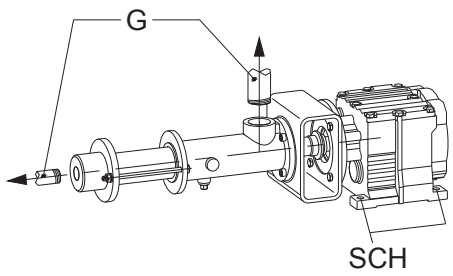

6.4.4 Preservation/storage of the pump

NOTICE
Damage to property due to lack of corrosion protection. Property damage can occur due to corrosion. ➢ Contact SEEPEX to discuss suitable preservation measures. – State the commission number of the pump.

7.1 Preventive measures

The maintenance personnel must have these operating instructions, follow them and also require corresponding qualifications.

DANGER

Dangerous voltage.
Death or serious injury can occur.

- ➢ Observe safety regulations.
- ➢ Disconnect the pump from all sources of energy.
- ➢ Prevent electrical connections from being switched on again.

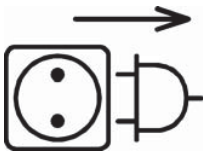

7.1.1 Pump down-time

NOTICE

Pump down-time.
Production failure due to wear.

- ➢ Acquisition of a set of wearing parts and a set of gaskets.

7.2 Lubrication

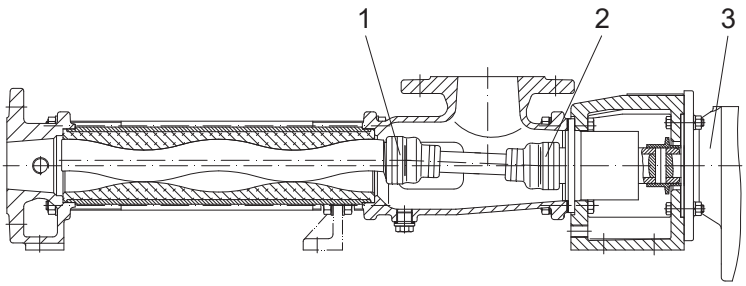

No.	Denomination	Lubricant	Lubricant change in operating hours	Fill volume
1	Pin joint	SEEPEX special grease (30321)	10,000 h	32 cm^3
2	Pin joint	SEEPEX special grease (30321)	10,000 h	32 cm^3
3	Drive	Refer to manufacturer's documentation (chapter 13._)		
Rotor/stator		Conveying medium	---	---
Shaft seal		Conveying medium	---	---

7.2.1 Joint grease

NOTICE

Other grease types.
Malfunction and/or irreparable damage to the joints or the pump.

- ➢ Exclusively use SEEPEX special grease.

7.3 Inspection

Component	Interval	Action
Joints	Every 10,000 operating hours	Renew joint grease
Shaft seal	Every week	Visual check for leaks
Drive unit	Every 3,000 operating hours, at least every 6 months	Comply with manufacturer's documentation

Refer to technical data (chapter 3.) for application range of the pump.

Malfunction										Causes	Rectification
Pump is not sucking	Pump pumping unevenly	Conveying capacity is not achieved	Pressure head is not reached	Pump does not start up	Pump seized / pump does not pump	Pump is loud when running	Motor gets too hot	Premature stator wear	Shaft seal is leaky		
				X			X		X	Static friction between stator/rotor too great.	Apply lubricant (liquid soap) between stator and rotor.
X										Incorrect direction of rotation.	Check direction of rotation and swap over motor connections if necessary.
X	X	X			X	X				Suction pipe or shaft seal leaking.	Eliminate leaks.
X	X	X				X				Suction head too great.	Check the suction head, if necessary increase pipe cross section on suction pipe and use a larger filter, open suction-side valve fully.
X	X	X								Viscosity of conveying product too great.	Check/adapt (data sheet).
		X		X			X			Pump rotation speed incorrect.	Correct rotation speed (data sheet).
	X	X									Avoid air bubbles in the conveying product.
		X		X	X		X	X		Pressure head too great.	Check pressure head with pressure gauge, reduce pressure head by using larger pressure pipe crossed section or shortening the pressure pipe.
X	X	X			X			X		Pump running partially/ completely dry.	Check there is adequate conveying product available on the suction side. Dry running protection DRP.
						X	X			Check coupling.	If necessary, move pump in relation to drive, check wear on coupling gear, re-adjust coupling if necessary.
X		X								Rotation speed too low.	Increase rotation speed for low-viscosity media/large suction volume.

Malfunction										Causes	Rectification
Pump is not sucking	Pump pumping unevenly	Conveying capacity is not achieved	Pressure head is not reached	Pump does not start up	Pump seized / pump does not pump	Pump is loud when running	Motor gets too hot	Premature stator wear	Shaft seal is leaky		
X	X					X				Rotation speed too high.	Reduce rotation speed for high-viscosity media, risk of cavitation.
						X				Joint play too large.	Check mounting of coupling rod bushing.
X		X		X	X			X		Foreign objects in pump.	Dismantle pump, remove foreign bodies, replace defective parts.
X		X	X		X					Stator/rotor worn.	Dismantle pump and renew defective parts.
X		X			X	X				Joint parts worn.	Renew joint parts, use SEEPEX pin joint grease.
X		X			X			X		Suction pipe blocked.	Clean the suction pipe.
X				X	X		X	X		Temperature of pumping liquid too high.	Check temperature, use an undersize rotor.
X		X		X			X		X	Gland packing too firm/ worn.	Loosen packing gland or tighten. Renew unusable packing rings.
X				X	X			X		Solid content and/or grain size too great.	Reduce pump speed, install screen with permitted mesh width. Increase liquid proportion.
X				X				X	X	Sedimentation/gumming of solids when pump stationary.	Rinse through and clean the pump immediately.
X				X	X			X	X	Conveying product hardens when the temperature drops below a certain limit.	Heat the pump.
				X	X		X	X		Stator swollen and unable to withstand conveying product.	Select a suitable stator material, use an undersize rotor.
						X			X	Bearings in pump drive housing or drive unit defective.	Renew bearings.
									X	Mechanical seal defective.	Check sliprings and O-rings for wear/resistance, renew if necessary.

9.1 Pump Dismantling/Reassembly

Range: BN

Size: 05-24 up to 300-6L

9.1.1 Preparing the pump for dismantling

DANGER

Dangerous voltage.
Death or serious injury can occur.

- Note safety regulations.
- Disconnect motor from all sources of energy.
- Secure electrical connections against restarting.

- Empty pipelines.
- Allow pipelines to cool down.
- Remove pipeline connections (suction side/pressure side).
- Note decommissioning (→ chapter 6.4).

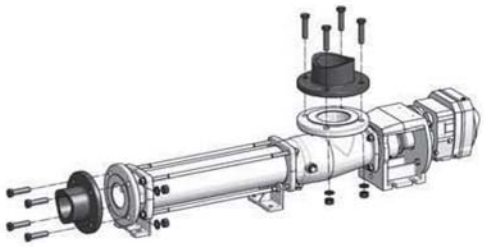

9.1.2 Dismantling

WARNING

Risk of pump tipping or falling.
Death or serious injury can occur.

- Fasten the lantern **(200)** to secure the pump.

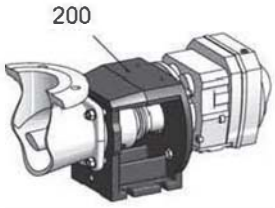

9.1.2.1 Pressure branch (700) - Dismantling

- Prop up stator **(601)** with a support **(S)**.
- Remove screw fitting **(604, 606)**.
- Remove pressure branch **(700)**.
- Remove tie bolt **(602)**.

9.1.2.2 Stator (601) - Dismantling

- Raise/move splash ring **(310)**.
- Remove the plug-in shaft pins **(309)**.
- Insert tool **(WS)**.
- Turn tool **(WS)** upwards.

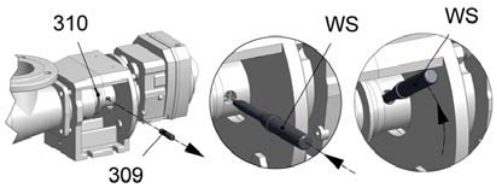

Tool (**W2**/chain wrench)

- Add lubricant **(GM)** to the opening on pressure branch side between the rotor **(600)** and the stator **(601)**.
- Turn the stator **(601)** in the “left” rotating direction and remove.
  - Use tool **(W2)**.
- Prop up the rotor **(600)** with support **(S)**.

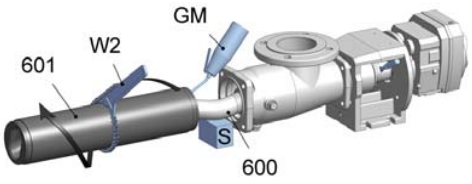

9.1.2.3 Suction casing (500) - Dismantling

- Put a protective cover **(SH)** on the rotor **(600)**.
- Prop up rotor **(600)** with a support **(S)**.
- Remove screw fitting **(506, 507, 509)**.
- Remove suction casing **(500)** and casing gasket **(501)**.
- Remove tool **(WS)**.

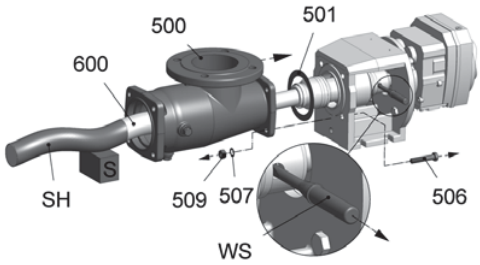

9.1.2.4 Rotating unit (RTE) - Dismantling

Tool (**W10**/dismantling tool)

Tool (**W9**/mounting lever)

with flush connection

- Remove the flush connection **(SSÜ)** on the shaft seal casing **(SEA)**.

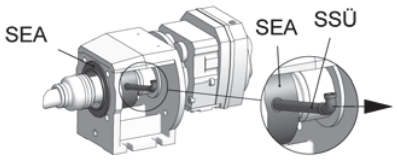

➢ Assemble tool (**W10**/dismantling tool).

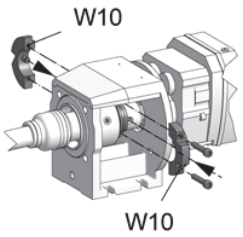

➢ Pull the rotating unit **(RTE)** with shaft seal **(SEA)** off from the output shaft of the drive **(ANT)**.
  – Use tool (**W9**/mounting lever).

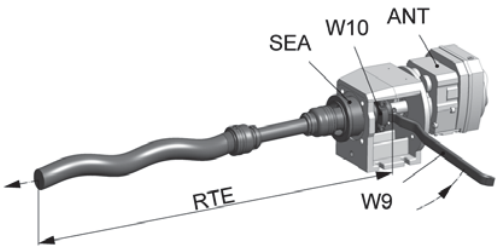

➢ Dismantle tool (**W10**/dismantling tool).

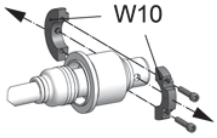

➢ Pull off the splash ring **(310)**.
➢ Pull off the shaft seal casing **(SEA)**.
  – Note dismantling shaft seal (→ chapter 9.4).

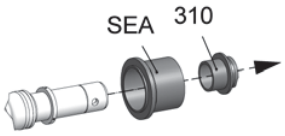

without flush connection

➢ Assemble tool (**W10**/dismantling tool).

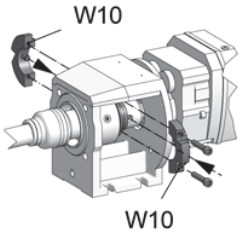

➢ Pull the rotating unit **(RTE)** with shaft seal **(SEA)** off from the output shaft of the drive **(ANT)**.
  – Use tool (**W9**/mounting lever).

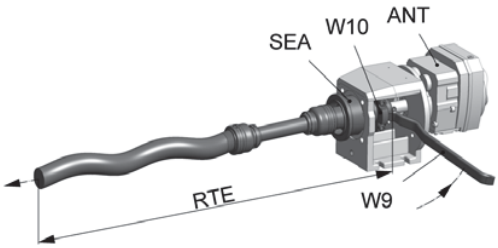

➢ Dismantle tool (**W10**/dismantling tool).

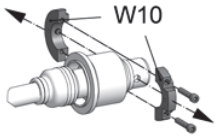

- ➢ Pull off the splash ring **(310)**.
- ➢ Pull off the shaft seal casing **(SEA)**.
  - – Note dismantling shaft seal (→ chapter 9.4).

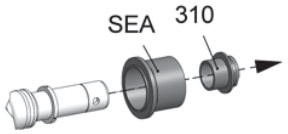

9.1.2.5 Rotor (600), coupling rod (400), plug-in shaft (307) - Dismantling

- ➢ Joint **(G)** dismantling note rotating unit - individual parts (→ chapter 9.2).

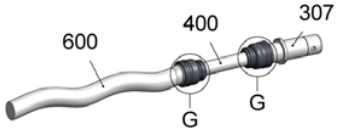

9.1.2.6 Lantern (200)/drive (ANT) - Dismantling

CAUTION

Falling or tilting drive.
Slight injury can occur.

- ➢ Secure the drive **(ANT)**.

- ➢ Remove the screw fitting **(210, 212, 213)**.
- ➢ Remove the drive **(ANT)**.

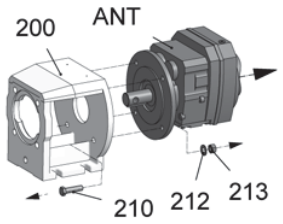

9.1.3 Reassembly

WARNING

Risk of pump tipping or falling.
Death or serious injury can occur.

- ➢ Fasten the lantern **(200)** to secure the pump.

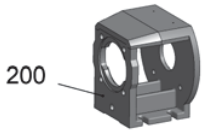

9.1.3.1 Lantern (200)/drive (ANT) - Reassembly

- ➢ Clean the flange bearing surfaces **(FLS)**, bolt circle **(ZD)** and the output shaft of the drive unit **(ANT)**.
- ➢ Mount the drive **(ANT)** to the lantern **(200)** with screw fittings **(210, 212, 213)**.

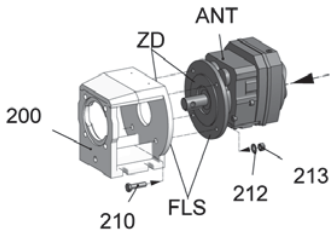

9.1.3.2 Rotor (600), coupling rod (400), plug-in shaft (307) - Reassembly

- Joint **(G)** reassembly note rotating unit - individual parts (→ chapter 9.2).

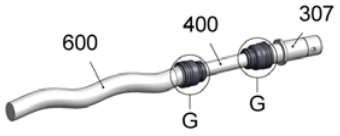

9.1.3.3 Rotating unit (RTE) - Reassembly

- Slide on shaft seal casing **(SEA)**.
  - Note reassembly shaft seal (→ chapter 9.4).
- Moisten splash ring **(310)** and plug-in shaft **(307)** with antiseize graphite petroleum.
- Slide splash ring **(310)** onto plug-in shaft **(307)**.
  - Observe fitting position of splash ring (see lettering).

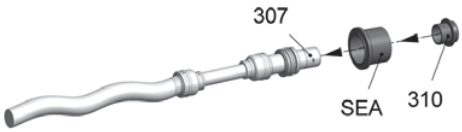

- Apply antiseize graphite petroleum to the output shaft of drive **(ANT)**.
- Slide on rotating unit **(RTE)**.

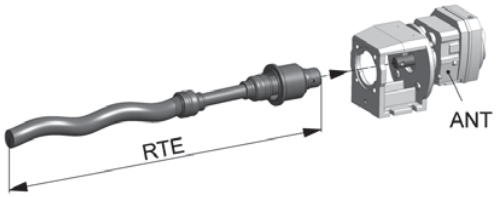

with flush connection

- Mount the flush connection **(SSÜ)**.

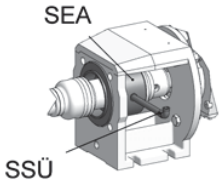

9.1.3.4 Suction casing (500) - Reassembly

- Put a protective cover **(SH)** on the rotor **(600)**.
- Prop up rotor **(600)** with a support **(S)**.
- Push on the casing gasket **(501)**.
- Mount and align the suction casing **(500)** with screw fitting **(506, 507, 509)**.
  - Use spirit level **(W)**.
- Remove the protective cover **(SH)**.

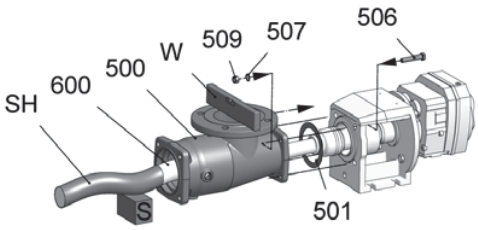

9.1.3.5 Stator (601) - Reassembly

- Insert tool **(WS)**.
- Turn tool **(WS)** down.

Tool (**W2**/chain wrench)

- Moisten outer surface of the rotor **(600)** with lubricant **(GM)**.
- Moisten inner surface of the stator **(601)** with lubricant **(GM)**.
- Prop up stator **(601)** with support **(S)**.
- Turn stator **(601)** in the “right” rotating direction and slide onto rotor **(600)**.
  - Use tool **(W2)**.

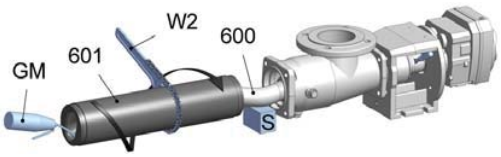

- Remove tool **(WS)**.
- Slide in plug-in shaft pin **(309)**.

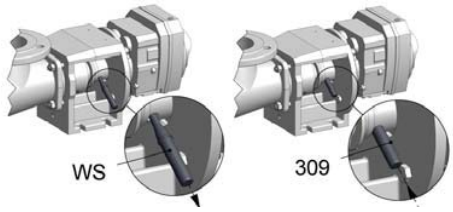

- Pay attention to the position of the splash ring **(310)**.
- Insert the splash ring collar at a distance of 0.5 mm from the lantern **(200)**.

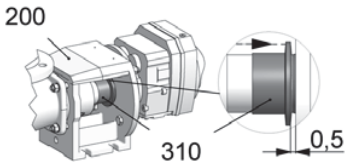

9.1.3.6 Pressure branch (700) - Reassembly

- Prop up stator **(601)** with a support **(S)**.
- Insert tie bolts **(602)** loosely into the suction casing **(500)**.

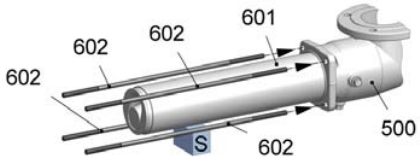

- Push pressure branch **(700)** on to the stator **(601)**.
- Insert tie bolts **(602)** loosely in the pressure branch **(700)**.
- Remove the support **(S)**.

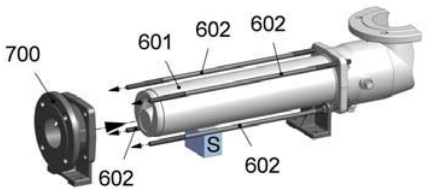

- Mount screw fitting **(604, 606)**.
- Tighten tie bolts **(602)** equally.

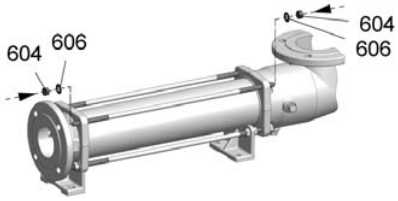

9.2 Rotating unit individual parts

9.2.1 Dismantling

9.2.1.1 Holding band (406, 407) - dismantling

CAUTION

Risk of injury.
Possibility of parts spinning out.

➢ Wear protective goggles.

➢ Detach holding band loop (SCL).
  – Use suitable tool (WM).
➢ Push out parts of holding band loop (SCL).
➢ Remove holding band (406, 407).
➢ Pull back universal joint sleeve (405).

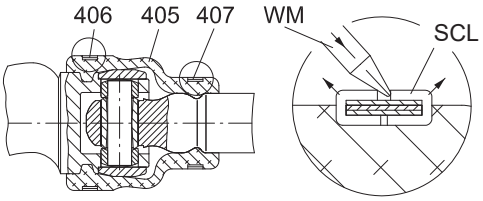

9.2.1.2 Retaining sleeve (401) - dismantling

➢ Knock back retaining sleeve (401).
  – Use suitable tool (WM).

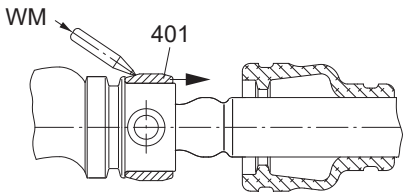

9.2.1.3 Detach joint

Tool (W5/drift)

➢ Eject coupling rod pins (402).
➢ Bend (A) the coupling rod (400). Knock guide bushing (403) out with tool (W5).
➢ Remove coupling rod (400).

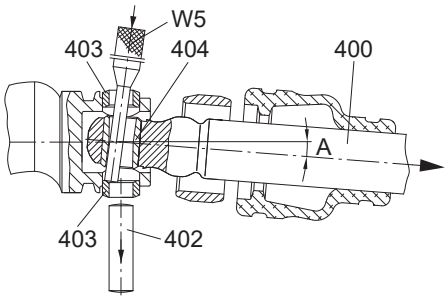

9.2.2 Rotating unit (RTE) - prepare individual parts for reassembly

9.2.2.1 Rotor (600)

- ➢ Remove any damage.
- ➢ Clean the rotor (600).

Tool (W4/assembly mandrel)

- ➢ Press in the guide bushing (403) (depth = 2/3).
  - – Use tool (W4).

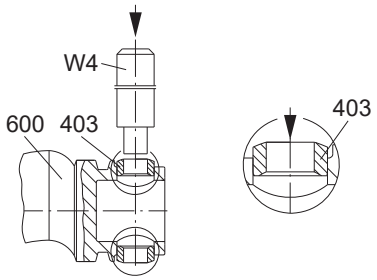

9.2.2.2 Coupling rod (400)

- ➢ Clean the coupling rod (400).
- ➢ Examine bore head for wear.
  - – If wearing is detected on the bore head, replace the coupling rod (400).

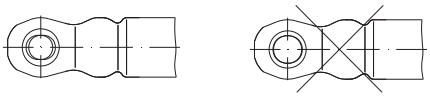

9.2.2.3 Plug-in shaft (307)

- ➢ Remove any damage.
- ➢ Clean the plug-in shaft (307).

Tool (W4/assembly mandrel)

- ➢ Press in the guide bushing (403) (depth = 2/3).
  - – Use tool (W4).

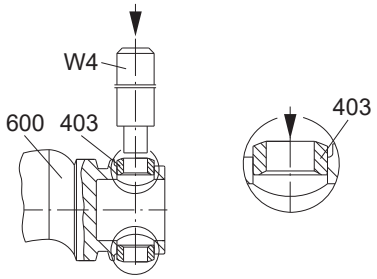

9.2.3 Rotating unit (RTE) - individual parts - reassembly

NOTICE

Malfunction of the joints.
Malfunction and/or destruction of joints.

- ➢ Replace the coupling rod pins (402) and guide bushings (403) jointly.

9.2.3.4 Coupling rod (400) – reassembly

- Slide the universal joint sleeve (405) and holding bands (406, 407) onto coupling rod (400).
- Fit the diameter and width of the holding band of the universal joint sleeve.
- Fill the joint head with SEEPEX joint grease.

Rotor (600)

- Insert coupling rod pins (402).
- Slide on retaining sleeve (401).
- Connect the rotor/coupling rod.

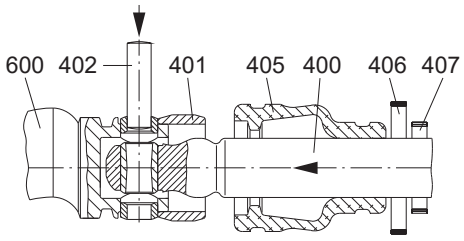

Tool (W5/drift)

- Slide in the coupling rod pins (402).
- Knock the guide bushings (403) in.

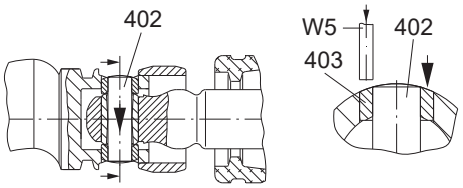

Plug-in shaft (307)

- Insert coupling rod pins (402).
- Slide on retaining sleeve (401).
- Connect the plug-in shaft/coupling rod.

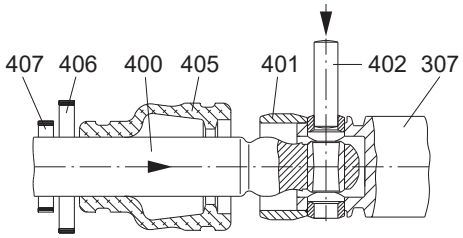

Tool (W5/drift)

- Slide in the coupling rod pins (402).
- Knock the guide bushings (403) in.

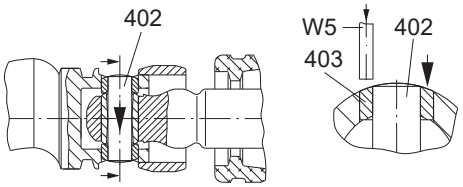

9.2.3.5 Retaining sleeve (401) - reassembly

Tool (W4/assembly mandrel)

➢ Knock back retaining sleeve (401).
  – Use tool (W4).

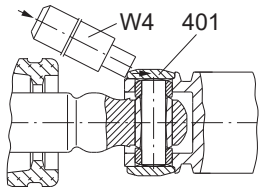

Rotor (600) unhardened material

➢ Secure retaining sleeve (401) in a displaced manner (2x180°).
  – Use suitable tool (WK).

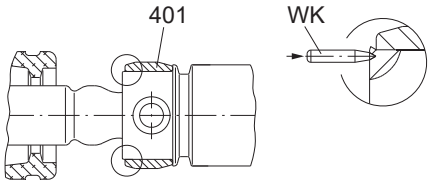

Rotor (600) hardened material

➢ Secure retaining sleeve (401) in a displaced manner (2x180°).
  – Use suitable tool (WK).

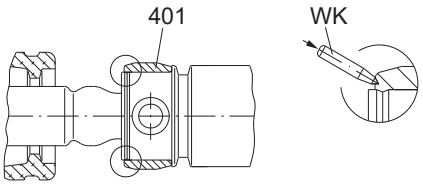

9.2.3.6 Universal joint sleeve (405) - reassembly

➢ Moisten the surface of the coupling rod (400)/ inner surface of the universal joint sleeve (405) with joint grease (maintenance, chapter 7.0).

➢ Slide on the universal joint sleeve (405).

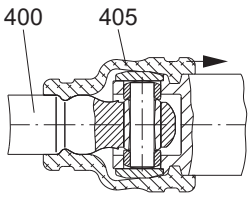

➢ Vent the interior of the joint.
  – Use suitable tool (WS).

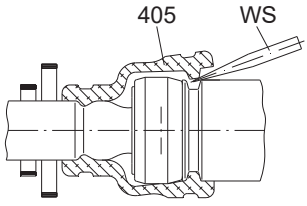

➢ Assemble holding band.
  – Holding band assembly (chapter 9._).

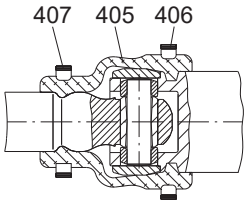

9.3 Holding band - assembly

9.3.1 Prepare the holding band

➢ Only use prefabricated double-band holding bands.

9.3.2 Check the holding band

- Bent-over holding band (HBD) is in contact with holding band loop (SCL) to avoid damaging universal joint sleeve.

➢ Press on holding band (HBD) using tool (WZ) if necessary.

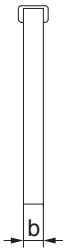

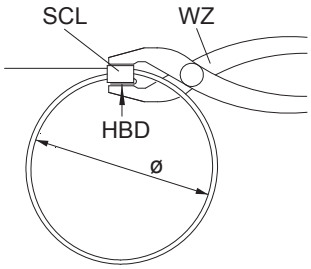

9.3.3 Assemble the holding band

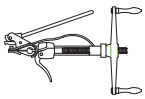

➢ Use tool (W3/mounting tool)

➢ Feed holding band into tool (W3).

➢ Hold ends of holding band with the eccentric lever (EX).

➢ Turn the crank (KU) until the holding band is strained and lies against the holding band loop (SCL).

➢ Carefully pull the holing band together until it is in contact with the circular groove of universal joint sleeve.

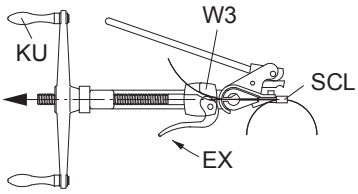

9.3.4 Correct tension of the holding band (HBD)

Correct

The holding band (HBD) has drawn in the out shape of the universal joint sleeve and is firmly seated.

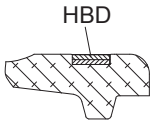

Incorrect

The holding band (HBD) is too loose, can slip off.

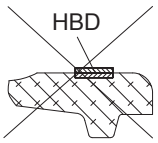

Incorrect

The holding band (HBD) is too tight, universal joint sleeve will be damaged/sheared off.

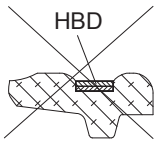

9.3.5 Cant up the holding band

- Swivel mounting tool (W3) approx. 60° upwards.
- Loosen crank (KU) by a half turn.
- Swivel cutting lever (SH) forward until the pressure piece is lying behind the holding band loop (SCL).

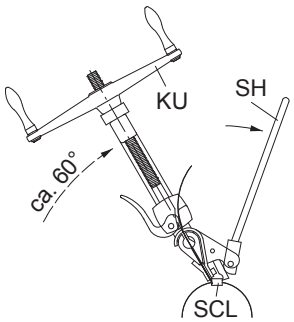

9.3.6 Shear the holding band (material: 1.4301; 1.4571)

- Hit the cutting lever (SH) with the inside of your hand.
  - Cant up and shear the end of the holding band behind the loop (SCL).
  - Carefully straighten up the holding band if it rises up on the sheared side.

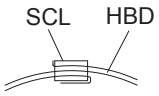

NOTICE
Universal joint sleeve damage. Pin joint grease can emerge. ➢ Avoid hammering or knocking.

9.3.7 Check the holding band after assembly

- The holding band must lie in the groove of the universal joint sleeve.
- Replace the holding band if the holding band slips back through the loop.

9.4 Single acting mechanical seal

9.4.1 Safety

WARNING

Shaft seal is leaky.
Leakage may escape into the atmosphere.

- ➢ Take safety measures to protect persons and the environment.
- ➢ Wear suitable protective clothing.
- ➢ Dispose of leakage appropriately.
- ➢ Note applicable regulations when handling hazardous substances.

9.4.2 Operating conditions and material combination

- Adjust to the relevant application
  - – Refer to technical data (chapter 3).

9.4.3 Design

- Single acting mechanical seal

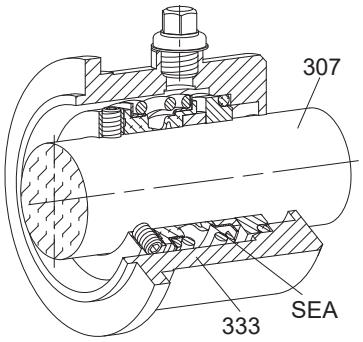

9.4.4 Commissioning

NOTICE

Dry running of the mechanical seal.
Damage to property may result.

- ➢ The mechanical seal must be laid in liquid medium before being commissioned.

Circulation, flushing and/or flushing pipe

- Additional flushing or circulation pipes are not required where shaft sealing lies in medium.
- Flushing pipes may be possible under special circumstances and after speaking to SEEPEX.

NOTICE

Shaft seal is not leakage free.
Damage to property through leakage.

- ➢ Components which come into contact with leakage must be corrosion-resistant or otherwise suitably protected.

Adjust shaft seal

- ➢ It is absolutely vital to adjust at the application site in a manner appropriate for the operating conditions.
- ➢ Refer to the sectional drawing of the shaft seal for setting measurements.
- ➢ Set the setting measurements of the shaft seal to the plug-in shaft (307).

9.4.5 Monitoring during operation

NOTICE

Shaft wear.
Damage to property may result.

- Conduct a daily visual inspection.
- Install a new shaft seal (SEA).
- Possibly replace the plug-in shaft (307).

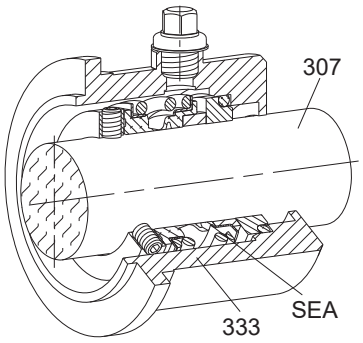

9.4.6 Dismantling of the mechanical seal

Refer to data sheet (chapter 3.1) and sectional drawing of the shaft seal (chapter 9._) for design.

With axial locking device

- Clean plug-in shaft (307), remove edges/ burrs.
- Moisten plug-in shaft (307) with lubricant (thinned liquid soap).
- Pull mechanical seal casing (333) from the plug-in shaft (307).
- Loosen the axial locking device of the mechanical seal (330/372); pull mechanical seal (330) from the plug-in shaft (307).
- Push counter ring of the mechanical seal (330G) with seal out of the mechanical seal casing (333).

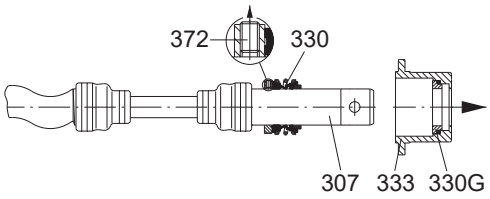

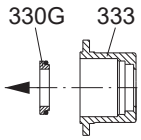

Without axial locking device

- Clean plug-in shaft (307), remove edges/ burrs.
- Moisten plug-in shaft (307) with lubricant (thinned liquid soap).
- Pull mechanical seal casing (333) from the plug-in shaft (307).
- Pull the mechanical seal (330) from the plug-in shaft (307).
- Push counter ring of the mechanical seal (330G) with seal out of the mechanical seal casing (333).

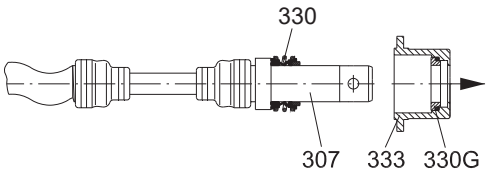

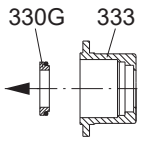

9.4.7 Reassembly of mechanical seal

Shaft sealings are high-quality precision parts.

Their installation is therefore to be undertaken with care.

Careful handling and the utmost of cleanliness are prerequisites.

➢ Assembly aids such as oil/grease are not permitted.

With axial locking device

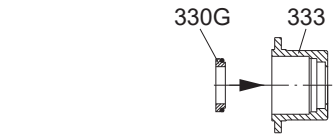

➢ Clean the mechanical seal casing (333).

➢ Moisten the seal with lubricant (thinned liquid soap).

➢ Attach the counter ring and seal using even pressure into the mechanical seal casing (333).

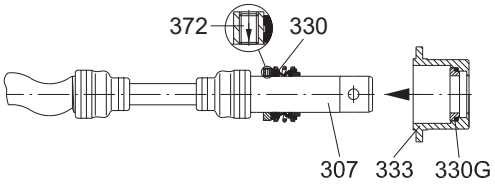

➢ Clean the plug-in shaft (307), remove edges/burrs.

➢ Adjust the set collar (372) in accordance with sectional drawing of shaft seal (chapter 9._).

➢ Stick the set screw in and determine.
  – Use "medium-strength" adhesive.

➢ Moisten plug-in shaft (307) and elastomer parts of the mechanical seal (330) with lubricant (thinned liquid soap).

➢ Slide mechanical seal (330) onto the plug-in shaft (307) until the installation edge has been reached.

Without axial locking device

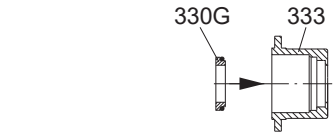

➢ Clean the mechanical seal casing (333).

➢ Moisten the seal with lubricant (thinned liquid soap).

➢ Attach the counter ring and seal using even pressure into the mechanical seal casing (333).

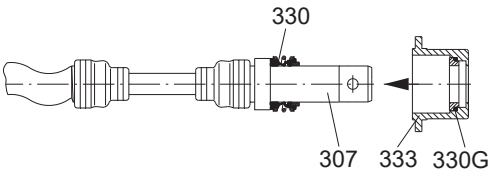

➢ Clean the plug-in shaft (307), remove edges/burrs.

➢ Adjust mechanical seal (330).
  – Note sectional drawing of shaft seal (chapter 9._).

➢ Moisten plug-in shaft (307) and elastomer parts of the mechanical seal (330) with lubricant (thinned liquid soap).

➢ Slide mechanical seal (330) onto the plug-in shaft (307) until the installation edge has been reached.

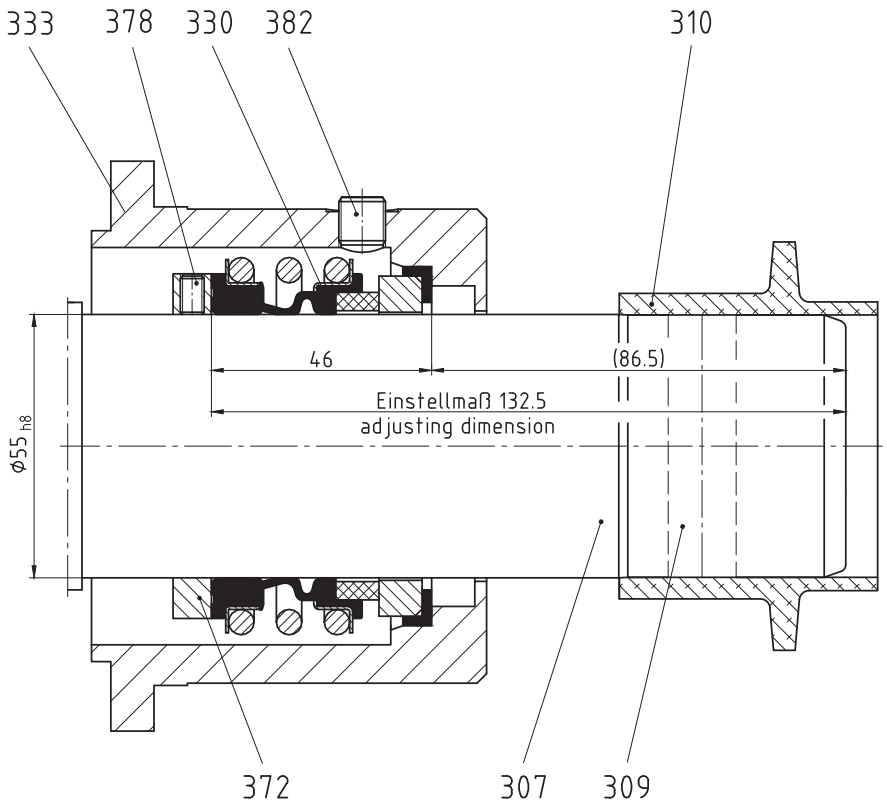

Stück Unit	Norm Standard	Pos./Item	Benennung/Denomination Zeichnungs-Nummer/Drawing-Number	Werkstoff/Material	Bemerkung/Remark	Gewicht Weight kg
1		382	Verschlußschraube / screwed plug		G 1/8"	
3		378	Gewindestift / set screw		M5 x 8	
1		372	Stellring / set collar 062-372/0100-0-001A4			
1		333	GLRD-Gehäuse / mechanical seal casing 262-333/0100-0-043C4			
1		330	GLRD / mechanical seal MG1-Ø55-G60		Fabrikat / make : Burgmann	
1		310	Spritzring / splash ring 062-310/0100-0-001A3			
1		309	Steckwellenbolzen / plug-in shaft pin 062-309/0100-0-001A4			
1		307	Steckwelle / plug-in shaft 262-307/0100-0-001F3			

SEEPEX.
ALL THINGS FLOW

Allgemeintoleranzen für Maße ohne einzelne Toleranzeintragung DIN ISO 2768-mittel
General tolerances for mass without individual tolerance entry DIN ISO 2768-average
Rauheit für Oberflächenzeichen DIN ISO 1302 Reihe 2
Roughness for surface finish indication DIN ISO 1302 Reihe 2

Ausgabe Issue	Änderung Modification	Name Name	Datum Date

	Name Name	Datum Date
Bearbeitet/Drawn	hgg	27.03.2000
Geprüft/Checked	kno	27.03.2000
Normiert/Standard		
Gedruckt/Printed		

Maßstab/Scale 1:1 | Werkstoff/Material | Gewicht/Weight

Bezeichnung/Denomination
GLRD-Schnittzeichnung
mechanical seal sectional drawing
Burgmann MG1-Ø55-G60
spülanschluss / flushing connection 1/8"NPT

Zeichnungs-Nummer/Drawing-Number
262-0GB/0100-0-084A3

EDV-Nr./EDP-No. 38257.dwg

Ersatz für/Replacement for:

Ersetzt durch/Replacement by:

Urheberrechtsschutz: Diese Zeichnung ist unser Eigentum und uns nach dem Gesetz über Urheberrecht und verwandte Schutzrechte geschützt.
Protection of Copyright: This drawing is our property and is protected acc. to the law referring to copyright and related protective laws.

10.1 Spare parts list

10.2 Sectional drawing and parts list

Version for copying

10.1 Spare parts list

Spare parts can be ordered online or requested from
www.seepex.com\

Type: BN 05-24 to 300-6L

☐ Request ☐ Order

Must be included in every order or enquiry!

Commission:

Type:

Sender:

Contact: .....
Tel.: .....
Fax: .....
E-mail: .....

Customer Service:
SEEPEX Inc.
511 Speedway Drive
Enon, Ohio 45323
service.us@seepex.com

Delivery address:
.....
.....
.....
.....
.....

No.	Quantity	Component	Material	Comment
Minor set of wearing parts			☐	
301	1	Set of packing rings		according to data sheet (chapter 3.1)
311	1	Rinse ring		
330	1	Mechanical seal		according to data sheet (chapter 3.1)
601	1	Stator		
Major set of wearing parts			☐	
301	1	Set of packing rings		according to data sheet (chapter 3.1)
307	1	Plug-in shaft		
330	1	Mechanical seal		according to data sheet (chapter 3.1)
400	1	Coupling rod with coupling rod bushings		
402	2	Coupling rod pin		
403	4	Guide bushing		
405	2	Universal joint sleeve		
406	2	Holding band, large		
407	2	Holding band, small		
600	1	Rotor		
601	1	Stator		

Place, date

Signature / company stamp

Version for copying

No.	Quantity	Component	Material	Comment
Set of gaskets			☐	
301	1	Set of packing rings		according to data sheet (chapter 3.1)
310	1	Splash ring		according to data sheet (chapter 3.1)
330	1	Mechanical seal		
501	1	Casing gasket		
503	3	Sealing ring		
511	2	O-ring/cleaning cover		
517	2	Sealing ring		
706	1	Sealing ring		
Plug-in shaft & shaft seal			☐	
301		Set of packing rings		according to data sheet (chapter 3.1)
307		Plug-in shaft		
309		Plug-in shaft pin		
310		Splash ring		according to data sheet (chapter 3.1)
330		Mechanical seal		according to data sheet (chapter 3.1)
Coupling rod & joint parts			☐	
400		Coupling rod with coupling rod bushings		
401		Retaining sleeve		
402		Coupling rod pin		
403		Guide bushing		
405		Universal joint sleeve		
406		Holding band, large		
407		Holding band, small		
401-407		Complete set of joint parts		
Conveying elements			☐	
600		Rotor		
601		Stator		
Miscellaneous parts			☐	
501		Casing gasket		
098		Pin joint grease		1 cartridge = 300 g (approx. 315 cm³) Grease quantity according to maintenance (chapter 7._)

Place, date

Signature / company stamp

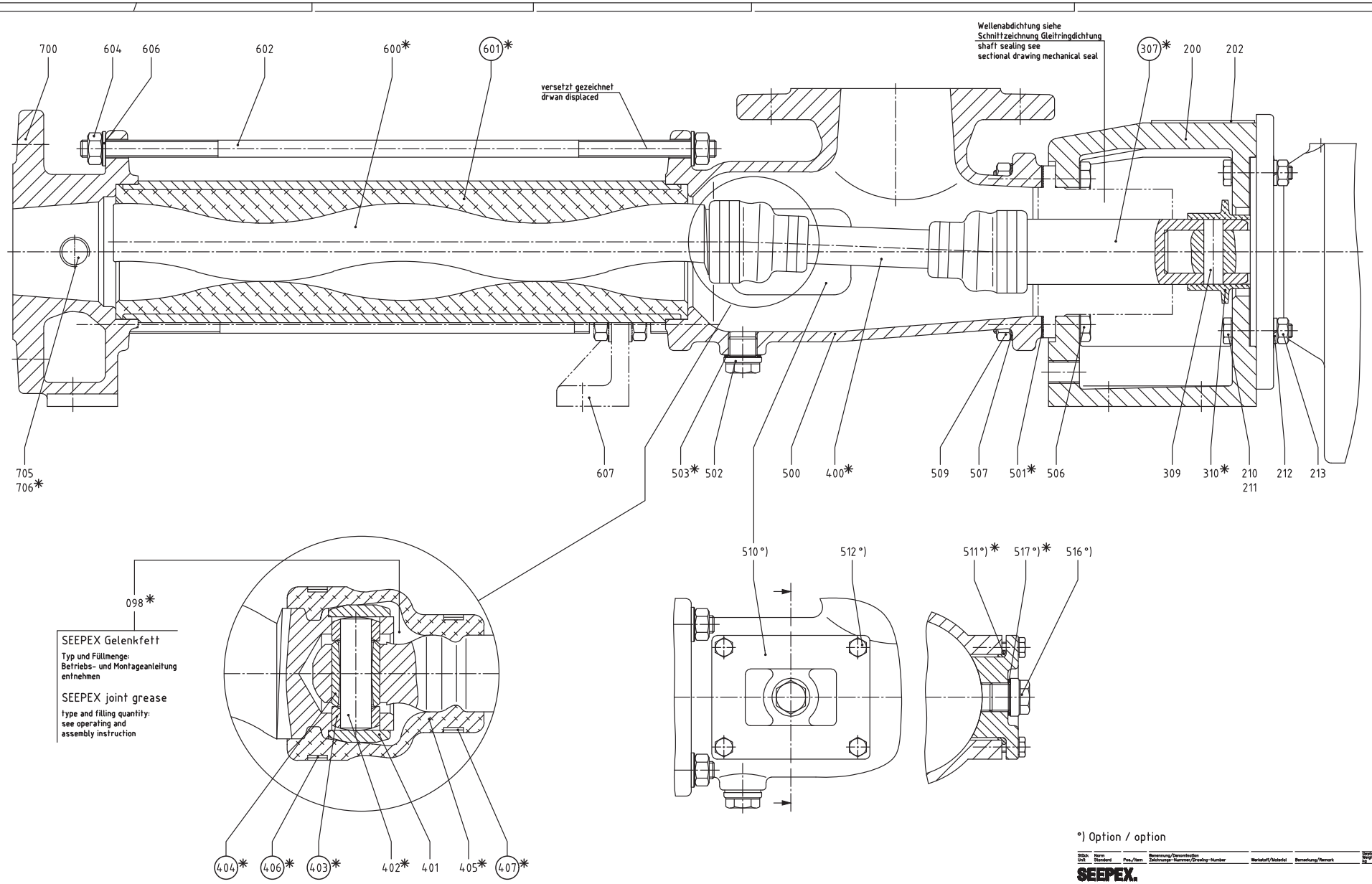

°) Option / option

Werkzeuge
Betriebs- und Montageanleitung
entnehmen

Tools
see operating and
assembly instruction

* Verschleißteile und Dichtungen
Betriebs- und Montageanleitung
entnehmen

Wearing parts and sealings
see operating and
assembly instruction

SEEPEX.
ALL THINGS FLOW

Stück Unit	Norm Standard	Pos./Item	Benennung/Denomination Zeichnungs-Nummer/Drawing-Number	Werkstoff/Material	Bemerkung/Remark	Gewicht/ Weight kg

Allgemeintoleranzen für Maße ohne einzelne Toleranzeintragung DIN ISO 2768-mittel	Änd. Ident.	Änderung Modification	Name Name	Datum Date	Maßstab/Scale	Werkstoff/Material	Gewicht/Weight
	B	Bohrungsmaß	dl	08.11.2002	%		

Bezeichnung/Denomination
Schnittzeichnung Baureihe "BN"
sectional drawing range "BN"

Oberflächenzeichen für Rauheit nach DIN EN ISO 1302		Name Name	Datum Date	Zeichnungs-Nummer/Drawing-Number
	Bearbeitet/Drawn	hof	14.02.1995	062-004B1
Symbol for surface roughness acc. to DIN EN ISO 1302	Gepr.Dt./Checked	hue	14.02.1995	EDV-Nr./EDP-No. 10859.dwg
	Normkont./Standard			Ersatz für/Replacement for: Ersetzt durch/Replaced by:
	Gedruckt/Printed			

Urheberrechtsschutz: Diese Zeichnung ist unser Eigentum und wie nach dem Gesetz über Urheberrecht und verwandte Schutzrechte geschützt.
Protection of Copyright: This drawing is our property and is protected acc. to the law referring to copyright and related protective laws.

Qty.	Item	US range BN sectional drawing no. 062-004B1 denomination Qty. / Item	ES serie BN Plano seccional nº 062-004B1 Denominación Ud. / Pos.	FR série BN plan no. 062-004B1 désignation Qté. / Poste
1	200	lantern	linterna	lanterne
1	202	type plate	placa de características	plaque signalétique
4	210	hexagon bolt	tornillo hexagonal	vis
	211	hexagon bolt	tornillo hexagonal	vis
4	212	spring washer	arandela grower	rondelle frein
4	213	hexagon nut	tuerca hexagonal	écrou
1	307	plug-in shaft	eje enchufable	arbre à broche
1	309	plug-in shaft pin	pasador eje enchufable	cheville pour arbre à broche
1	310	splash ring	aro deflector	bague de projection
1	400	coupling rod	tornillo alimentador	barre d' accouplement
2	401	retaining sleeve	casquillo cardan	douille d' articulation
2	402	coupling rod pin	pasador del eje cardan	axe d' articulation
4	403	guide bushing	casquillo director	douille de guidage
2	404	coupling rod bushing	casquillo del cardan	chemise d' axe
2	405	universal joint sleeve	mangón	manchette
2	406	holding band	abrazadera	collier de serrage
2	407	holding band	abrazadera	collier de serrage
1	500	suction casing	cuerpo de aspiración	carter d' aspiration
1	501	casing gasket	junta del cuerpo	étanchéité du carter d' aspiration
3	502	screwed plug	tapón roscado	bouchon de vidange
3	503	sealing ring	anillo retén	joint d' étanchéité
4	506	hexagon bolt	tornillo hexagonal	vis
4	507	fan type lock washer	arandela blocante	rondelle à dents chevauchantes extérieures
4	509	hexagon nut	tuerca hexagonal	écrou
2	°) 510	cleanout	tapa de registro	couvercle de nettoyage
2	°) 511	gasket	junta	étanchéité
8	°) 512	hexagon bolt	tornillo hexagonal	vis
2	°) 516	screwed plug	tapón roscado	bouchon de vidange
2	°) 517	sealing ring	anillo retén	joint d' étanchéité
1	600	rotor	rotor	rotor
1	601	stator	estator	stator
4	602	tie bolt	tornillo de sujección	tirant
8	604	hexagon nut	tuerca hexagonal	écrou
8	606	washer	arandela	rondelle
1	607	trestle	soporte intermedio	pied
1	700	pressure branch	brida de presión	bride de refoulement
1	705	screwed plug	tapón roscado	bouchon de vidange
1	706	sealing ring	anillo retén	joint d' étanchéité
	098	SEEPEX joint grease type and filling quantity: see operating and assembly instruction	SEEPEX grasa de articulaciones Tipo y cantidad de llenado : Ver el manual de operacion y montaje.	SEEPEX graisse d' articulations sommaire pour type et quantité: voir instructions de montage et de fonctionnement
		Wearing parts and sealings: see operating and assembly instruction	Partes de desgaste y sellado Ver el manual de operacion y montaje.	pièces d'usure et étanchéités: voir instructions de montage et de fonctionnement
		Tools: see operating and assembly instruction	Herramientas: Ver el manual de operacion y montaje.	Outils: voir instructions de montage et de fonctionnement
		shaft sealing see sectional drawing mechanical seal	para sellado de eje ver plano seccional del cierre mecánico.	dispositif d' etanchéité voir vue éclatée garniture mécanique
		drawn displaced	proyección detallada	plan separé
	°)	option	Opcional	option

Version for copying

Spare parts can be ordered online or requested from
www.seepex.com\

Must be specified with every order!

Commission:

_____

Mark tool!

X

Sender:

Contact: .....
Tel.: .....
Fax: .....
E-mail: .....

Customer Service:
SEEPEX Inc.
511 Speedway Drive
Enon, Ohio 45323
service.us@seepex.com

Delivery address:
.....
.....
.....
.....
.....

For installation of:	Packing gland	Stator	Coupling rod bushings	
Tool no.	**W1** ☐	**W2** ☐	**W14** ☐	
Denomination:	Packing lever	Chain pipe wrench + replacment chain	Pressing tool	
Order no.	PKZ	KRZ	PWZ	
	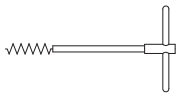		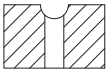	

For installation of:	**Rotating unit**			
	Holding band	Joint	Joint	Plug-in shaft
Tool no.	**W3** ☐	**W4** ☐	**W5** ☐	**W10** ☐
Denomination:	Mounting tool	Assembly mandrel	Drift	Dismantling tool
Order no.	MHB	MTD	DHS	AZV
	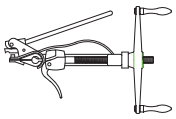	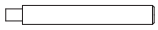		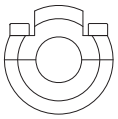

For installation of:	General			
Tool no.	**W9** ☐			
Denomination:	Mounting lever			
Order no.	MHL			

12.1 Additional components

12.2 Technical information

12.3 Manufacturer's documents shaft seal

1. General

	NOTICE
	Dry-running of the pump/temperature increase in the stator Damage to property and malfunction can be caused. ➢ Adhere to max. permissible operating temperature. ➢ Install dry-running protection device (TSE).

Functional principle:

- continuous monitoring of the temperature in the stator (temperature sensor)
- Shut off the pump when reaching the set category temperature.

Operating mode:

- existing temperature at the stator is compared to the category temperature in the TSE control device.
- Two relays switch within the TSE control device when reaching the shut-off value.
- The drive motor is shut off through potential-free alternating contacts.
- An alert is triggered.
- A required acknowledgement of the alert prevents an automatic reactivation of the pump.

2. Technical Data

2.1 Temperature sensor

- The temperature is measured at the stator through an NTC resistor with a protective sleeve.

Permissible temperature range: 0-150°C

Standard resistor: 10 kOhm at 25°C

Temp °C	0	10	20	25	30	40	50	60
Resistor Ohm	32,650	19,900	12,490	10,000	8,057	5,327	3,603	2,488

Temp °C	70	80	90	100	110	120	130	140
Resistor Ohm	1.752	1.255	915	678	510	389	301	235

2.2 Technical data - TSE control device

- The TSE control device is suitable for cabinet installation or wall mounting.

Types:	SGRTSE 230V ACB
	SGRTSE 115V ACB
	SGRTSE 24V ACB
	SGRTSE 24V DCB
Temperature range:	0-150°C
Input:	NTC temperature sensor 10 kOhm (at 25°C) with sensor breakage guard at -25°C
Relay output:	2 potential-free changeover contacts (K1, K2), switching capacity 500 VA at 110-230 V resistive load
Available operating voltage:	24V, 115V, 230V AC; 24V DC
Power drain:	max. 4 VA
Sensor circuit:	Open-circuit voltage max. 2.5 VDC Short-circuit current max. 0.5 mA DC
Display at the device:	Malfunction/dry-running Shut-off temperature
Operation at the device:	Setup shut-off temperature Reset alert
Housing material:	ABS
Fastening:	Installation on standard bar 35 mm in accordance with standard or screw connection in accordance with standard.
Protection:	Casing IP 40; terminals IP 20
Ambient temp.:	0-50!
Dimensions:	45x75x110 mm (WxHxD)
EMV (2004/108/EG):	CE conform in accordance with standard

2.3 Dimensions and wall mounting

- Installation depth = 110 mm

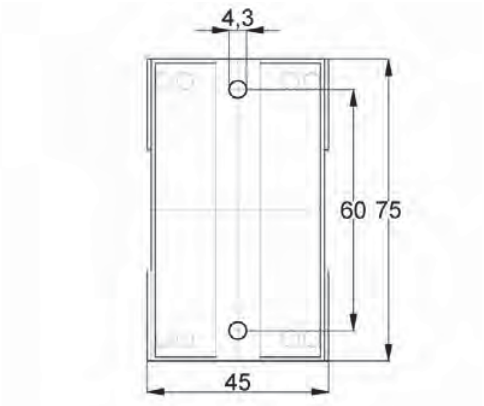

3. Electrical connection

3.1 Installation instructions

Check line voltage

➢ Check line voltage/nominal voltage against information on type plate before connection and commissioning.
  – Permissible mains voltage variations of the nominal equipment voltage +/-10%

➢ Electrical connections are in accordance with the connection map, the provisions of the local utility or the relevant VDE regulations.

Mains power failure

➢ Initiate appropriate measures to prevent the failures.
  – Filter failures through external mains filter.
  – Equip device internally with mains filter.
  – Install sensor leads shielded.
  – Ground shield on one side.

3.2 Connection diagram TSE control device

- Terminal assignment

1 + 3	Operating voltage
11 + 13	Operating hour counter potential-free contact
12 + 13	external potential-free contact
14 +15	Temperature sensor
5, 6, 7	Relay output K1
8, 9, 10	Relay output K2

- The TSE control device can be released after dry-running by a button (closer) at terminals 12+13.

➢ Install button (closer).

3.3 Relay function

Actual temperature > shut-off temperature	**(Malfunction/dry-running)**
Contact 6-5 and 9-8	closed
Contact 6-7 and 9-10	open

- Relays K1 and K2 are in parallel and they work together.
  - K1: Switch-off condition integrated in motor contactor control.
  - K2: optional connection to the fault sensor or process computer (reserve).

4. Measures before commissioning

4.1 Check position of temperature control point at pump

➢ At the factory, the temperature sensor is always installed at the liquid inlet side.

➢ Check the specified installation position of the temperature control point when changing the direction of rotation and exchanging the stator.

4.1.1 Pump with "anti-clockwise rotation" - standard design

➢ Check suction casing side fitting position.

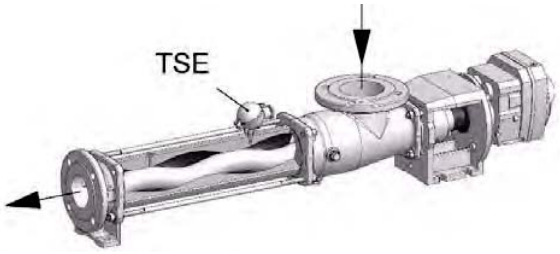

4.1.2 Pump with "clockwise rotation" - special design.

➢ Pressure branch side fitting position.

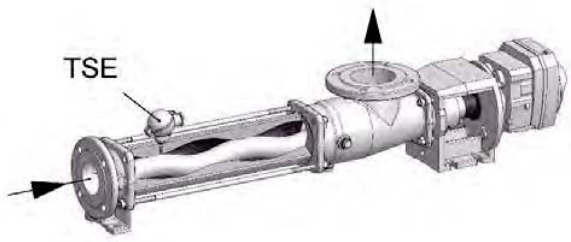

4.1.3 Performance check

➢ Execute performance check before first commissioning.
➢ Switch on control voltage at terminals 1+3.
– Digital display at TSE control device is illuminated.

➢ Keep "stator temp" button depressed and read temperature value.

• The function exists if the display is in accordance with the existing temperature.
➢ Observe deviations in case of functional failures.
– Find malfunctions, causes and remedies (→ see chapter 8) in the operating and assembly instructions.

5. Commissioning and control

5.1 Set the switch-off temperature

➢ Set the switch-off temperature at the TSE control device as low as possible.
– Shorter shut-off times after the dry-running occurs.
– optimum stator protection

5.1.1 Coarse setting of the shut-off temperature

• When delivered, the shut-off temperature is factory-set to 50°C.
• Maintain factory settings during commissioning or, in case of higher medium temperatures, set a value of 20-30°C above the temperature of the pumped medium.

➢ After the coarse setting, commission the pump for a max time of 60 min.
– Subsequently, perform the fine adjustment of the shut-off temperature (→ chapter 5.1.2).

5.1.2 Fine adjustment of the shut-off temperature

➢ Start pump until the operating temperature in the stator is stabilized (approx. 30-60 min.).

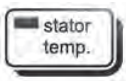

- This will be shown on the display of the TSE control device when the pump is running and by pressing the button "stator temp.".

➢ Set the final shut-off temperature (→ chapter 5.1.3).
  – The shut-off temperature is 10°C higher than the operating temperature displayed.
  – Adhere to chapter 5.1.3.
  – Consider maximum medium temperature that can occur during operation.

➢ Check information in the data sheet for a medium temperature > 40°C.

➢ Rotor/stator - consider sizing.

➢ A consultation with the manufacturer is required if the temperature information in the data sheet and the actual value do not conform.

5.1.3 Adjust shut-off temperature at the control unit.

➢ Switch control voltage on.
  – After a self-test at the control unit, the currently set shut-off temperature will be shown on the display.

➢ Press briefly
  – Setup mode is displayed.
  – The display shows alternating "SET" and the shut-off temperature set last.

➢ Increase shut-off value.
  – The value changes initially by +1° each.
  – After approx. 3 sec. in +10° steps.

➢ Decrease shut-off value.
  – The value changes initially by -1° each.
  – After approx. 3 sec. in -10° steps.

➢ Press briefly
  – Operating mode is displayed.
  – Adjusted shut-off temperature was transmitted to the permanent memory and will be shown on the display.

- In setup mode, the device changes - without saving possibly changed settings - after 10 sec. into the operating mode.

5.2 Switch display from °C to °F

➢ Press button 10 seconds until the display changes.

- The selected temperature unit will be displayed next to the °C or °F symbol.

5.3 Release control unit after the dry-running

- The installed relays switch-off and remain locked in this position if the set temperature at the TSE control unit is exceeded.
  - Red LED appears (alert).

➢ Acknowledge alert/release relay in accordance with the following options:

➢ actuate "reset" button at the TSE control unit for at least 1 sec.
➢ Shut-off operating voltage at the TSE control unit (terminals 1-3).
➢ Actuate external contact ("reset" button, closed for at least 1 sec.).

5.4 Call operating hour counter

- The TSE control unit includes an operating hour counter. This value can be called on the service level. The transition to the service level is only possible after a code number has been entered.

➢ Press approx. 5 sec until the "Cod" is displayed.
  – The display shows alternating "Cod" and 100.

➢ Press button sequence.
➢ Enter code "33".

➢ Press briefly
  – Code will be acknowledged.
  – Transfer to the service level.

Display alternating: "¯Hi¯" and #value# • No function

➢ Press briefly
  – Transfer to next parameter/display value.

Display alternating: "bh.Hi" and #value# • Operating hour counter (displayed value x 10,000)

➢ Press briefly
  – Transfer to next parameter/display value.

Display alternating: "bh.Lo" and #value# • Operating hour counter (displayed value x 1)

➢ Return to the operating mode.

6. Stator change

6.1 General

➢ List the material of the installed TSE sensor sleeve when ordering a replacement stator.
➢ Do not readjust the sensor sleeve installed at the factory.

6.2 Dismantling/reassembly connection head and temperature sensor

- Adherence to associated drawing required.

6.2.1 Dismantling

- Do not reuse sensor sleeve after dismantling.

- Open cover of connection head.
- Remove connection wires at the temperature sensor.
- After loosening the screw at the side, pull off connection head from the threaded sleeve.
- Rotate threaded sleeve out of the stator.
- Remove clamp screw, rubber ring and temperature sensor from sensor sleeve.

6.2.2 Reassembly

- Do not readjust the sensor sleeve installed at the factory.
- Install threaded sleeve in the stator.
- Install sensor sleeve.
- Open cover of connection head.
- Install connection wires at the temperature sensor.
- Remove protective tube (transport guard of sensor sleeve).
- Slide thermistor sensor with clamp screw and rubber ring up to the base of the sensor sleeve and fixate.
- Screw threaded sleeve with two O-rings into threaded hole at the stator.
- When installing the connection head, route connection cable at the thermistor sensor from below through the hole in the terminal board.
- After fixating the connection head on the threaded sleeve, fasten connection cable at existing terminals and close connection head.

7. Functional failure

Causes for alerts and shut-offs of the pump without dry-running:

- Sensor or wire break
- Short-circuit sensor/wire
- Overshooting or undershooting of the measuring range (-25...150°C)

We recommend the following approach for checking the TSE control device and the sensor circuit incl. temperature sensor.

7.1 Performance check sensor circuit

➢ Remove the temperature sensor supply line at the TSE control device terminals 14+15.
➢ Connect resistor measuring unit (multimeter/ohmmeter).
➢ Determine electrical resistance with using the table (→ chapter 2.1) and compare with the temperature at the pump.
➢ Proceed as follows in case of resistor value deviations >10% from the target value:
➢ disconnect connecting wire to the control unit at the connection head of the pump
➢ Repeat measurement at the connection head of the TSE.
  – A defect at the temperature sensor exists in case of identical deviations.
➢ Exchange the temperature sensor.
  – Observe chapters 6.2 - 6.3.
• In case of correct values, a defect of the connection cable or the connection terminals exists.

7.2 Performance check TSE control device

• A defect at the TSE control device is probable if the sensor circuit is functioning properly.
➢ To check, disconnect terminal 14+15 of the sensor supply line.
➢ Connect commercially available carbon film or metal film resistor in accordance with the following array:

Resistor Ohm	10,000	5,600	2,200	1,000	560	220
Switch temp. °C	25	39	63	87	107	143

➢ Switch on control voltage at terminals 1+3.
  – Digital display at TSE control device is illuminated.

➢ Keep "stator temp" button depressed and read temperature value.
  – Read value must be in accordance with the switching temperature allocated to the resistor used.
➢ Return TSE control unit for repair in case of display deviations of more than 5-10°C or in case of no display.

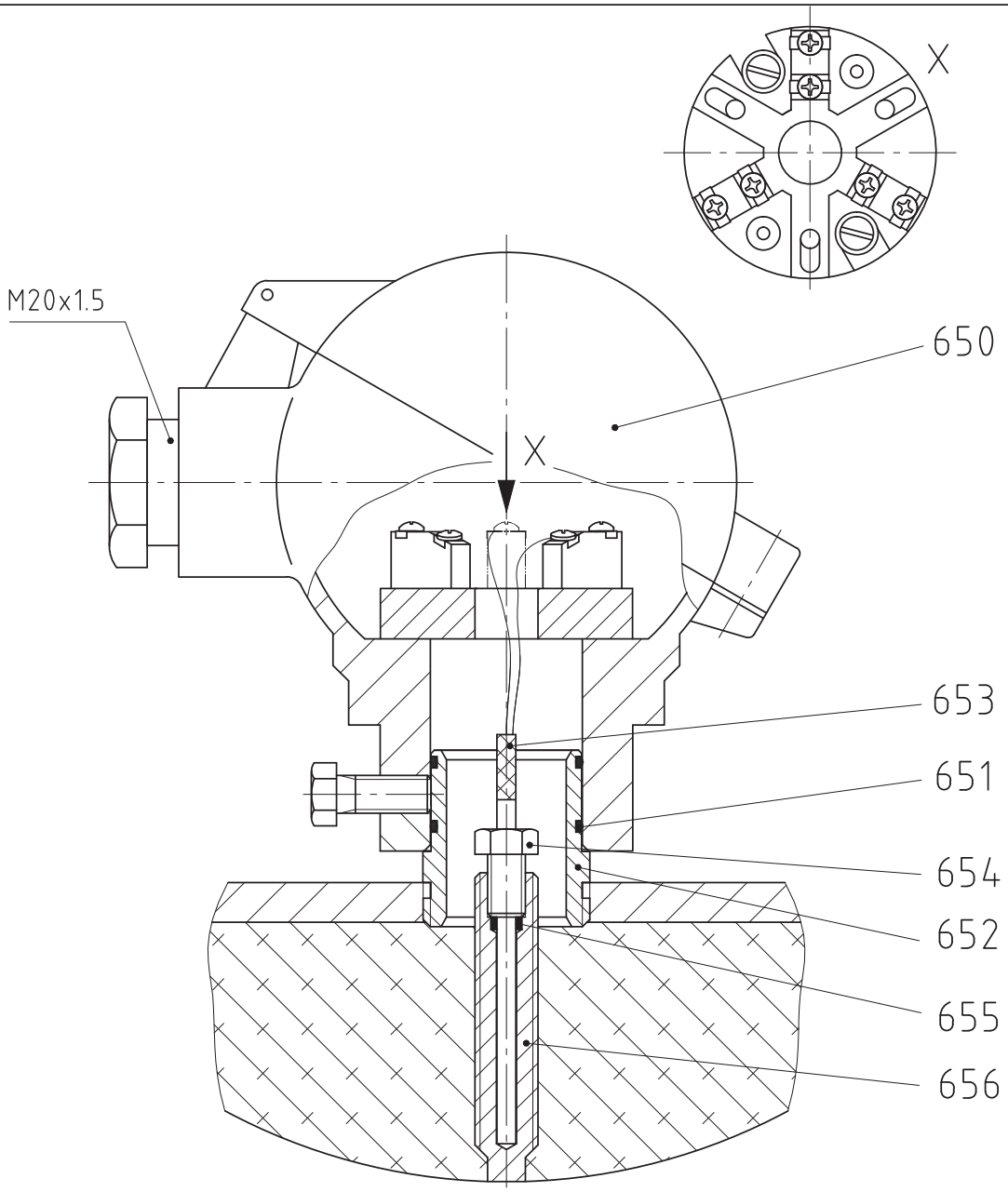

Stück Unit	Norm Standard	Pos./Item	Benennung/Denomination Zeichnungs–Nummer/Drawing–Number	Werkstoff/Material	Bemerkung/Remark	Gewicht Weight kg

SEEPEX.
ALL THINGS FLOW

Allgemeintoleranzen für Maße ohne einzelne Toleranzeintragung DIN ISO 2768–mittel

General tolerances for dimensions without specified tolerances DIN ISO 2768–average

Oberflächenzeichen für Rauheit nach DIN EN ISO 1302

Symbol for surface roughness acc. to DIN EN ISO 1302

Aus–gabe Issue	Änderung Modification	Name Name	Datum Date

Maßstab/Scale: %

Werkstoff/Material

Gewicht/Weight

Bezeichnung/Denomination

Schnittzeichnung TSE Anschlusskopf
sectional drawing TSE connection head

	Name Name	Datum Date
Bearbeitet/Drawn	hof	20.11.2008
Geprüft/Checked	pj	20.11.2008
Normiert/Standard		
Gedruckt/Printed		

Zeichnungs–Nummer/Drawing–Number: 702-006A4

EDV–Nr./EDP–No. L:\Lfdzchng.965\96587.dwg

Ersatz für/Replacement for:

Ersetzt durch/Replaced by:

Urheberrechtsschutz: Diese Zeichnung ist unser Eigentum und uns nach dem Gesetz über Urheberrecht und verwandte Schutzrechte geschützt.
Protection of Copyright: This drawing is our property and is protected acc. to the law referring to copyright and related protective laws.

Stck.	Pos.	DE	EN	FR
		TSE-Anschlusskopf	**TSE connection head**	**TSE tête de connexion**
		Schnittzeichnung Nr. 702-006A4	**sectional drawing No. 702-006A4**	**plan no. 702-006A4**
Stck.	**Pos.**	**Benennung Stck. / Pos.**	**denomination Qty. / Item**	**désignation Qté. / Poste**
1	650	Anschlusskopf	connection head	tête de connexion
2	651	O-Ring	o-ring	joint torique
1	652	Gewindehülse	screw socket	douille filetée
1	653	Thermistorfühler	thermistor sensor	thermistance
1	654	Klemmschraube	clamping screw	vis de blocage
1	655	Gummiring	rubber ring	anneau de caoutchouc
1	656	Fühlerhülse	sensor sleeve	fourreau de sonde

SEEPEX.
ALL THINGS FLOW

Technical data:

- NTC-resistance sensor fitted in stainless steel protection sleeve.
- Standard resistance: 10 kΩ at 25°C.

temp. °C	resistance Ω	temp. °C	resistance Ω	temp. °C	resistance Ω	temp. °C	resistance Ω
-20	97.080	23	10.920	66	2.011,0	109	525,00
-19	91.610	24	10.450	67	1.942,0	110	510,30
-18	86.490	**25**	**10.000**	68	1.876,0	111	496,70
-17	81.690	26	9.573,0	69	1.813,0	112	483,00
-16	77.180	27	9.167,0	70	1.752,0	113	470,00
-15	72.950	28	8.777,0	71	1.693,0	114	457,30
-14	68.980	29	8.407,0	72	1.636,0	115	445,00
-13	65.240	30	8.057,0	73	1.582,0	116	433,30
-12	61.730	31	7.723,0	74	1.530,0	117	421,70
-11	58.430	32	7.403,0	75	1.479,0	118	410,70
-10	55.330	33	7.097,0	76	1.431,0	119	400,00
-9	52.400	34	6.807,0	77	1.384,0	120	389,30
-8	49.650	35	6.530,0	78	1.340,0	121	379,30
-7	47.060	36	6.267,0	79	1.297,0	122	369,70
-6	44.620	37	6.017,0	80	1.255,0	123	360,00
-5	42.330	38	5.777,0	81	1.215,0	124	350,60
-4	40.160	39	5.547,0	82	1.177,0	125	341,70
-3	38.110	40	5.327,0	83	1.140,0	126	333,10
-2	36.190	41	5.117,0	84	1.104,0	127	324,70
-1	34.370	42	4.917,0	85	1.070,0	128	316,50
0	32.650	43	4.727,0	86	1.036,0	129	308,60
1	31.030	44	4.543,0	87	1.004,0	130	300,93
2	29.500	45	4.370,0	88	973,70	131	293,47
3	28.050	46	4.200,0	89	944,00	132	286323
4	26.690	47	4.040,0	90	915,30	133	279,17
5	25.390	48	3.890,0	91	887,70	134	272,03
6	24.170	49	3.743,0	92	861,00	135	265,70
7	23.010	50	3.603,0	93	835,30	136	259,30
8	21.920	51	3.467,0	94	810,30	137	253,00
9	20.880	52	3.340,0	95	786,70	138	246,93
10	19.900	53	3.217,0	96	763,30	139	241,03
11	18.970	54	3.099,0	97	741,00	140	235,27
12	18.090	55	2.986,0	98	719,30	141	229,70
13	17.250	56	2.878,0	99	698,70	142	224,30
14	16.460	57	2.774,0	100	678,30	143	219,00
15	15.710	58	2.675,0	101	659,00	144	213,90
16	15.000	59	2.579,0	102	640,30	145	208,87
17	14.320	60	2.488,0	103	622,00	146	204,03
18	13.680	61	2.400,0	104	604,30	147	199,33
19	13.070	62	2.316,0	105	587,00	148	194,77
20	12.490	63	2.235,0	106	571,00	149	190,33
21	11.940	64	2.157,0	107	555,00	150	185,97
22	11.420	65	2.083,0	108	539,70		

Warranty Card

Complete and return to validate warranty

Please complete this card and return it to seepex Inc. By using this card, the valid warranty period will commence at the pump “start-up” date. If this card is not completed the warranty coverage period will commence on the date the pump is shipped from the seepex factory. This card must be completed and mailed no later than one year from the date of shipment.

Client

User Entity:	.....	Address of plant:	.....
Contact Person:	.....		.....
Phone Number:	.....		.....
Fax Number:	.....		.....
E-mail Address:	.....		.....

Technical Pump Data

Pump Model:	.....
Pump Commission:	.....

Performance Data

Pumped Product:	.....		
Diff. Pressure:	.....	Flow Rate:	.....
Temperature:	.....	Viscosity:	.....
Solids Size:	.....	Solids %:	.....

Inquiry

Was the appearance of the pump acceptable?		..... Yes	..... No
Did the pump suffer any freight damage?		..... Yes	..... No
Did the pump perform as expected?		..... Yes	..... No
Did you receive:	- Data Sheets?	..... Yes	..... No
	- O&M Manuals?	..... Yes	..... No
Did you local seepex distributor contact your to arrange a start-up?		..... Yes	..... No

other comments

.....

.....

Name of person completing card (please print)

Date:	.....	Signature:	.....

TERMS & CONDITIONS OF SALE AND/OR REPAIR 01.16

The following terms and conditions shall apply to an order for all or any part of the articles covered by the accompanying offer unless a specific exception in included therein. Acceptance of any order by SEEPEX Inc. is expressly made conditional upon Buyer's acceptance of SEEPEX Inc. Terms and Conditions of Sale and/or Repair. All prior or future terms, conditions or negotiations (whether written or oral) by Buyer will therefore be considered void and inapplicable, unless otherwise agreed in writing. SEEPEX Inc. reserves the right, in its sole discretion, to refuse any order, unconditionally, for any reason, including but not limited to: expiration of the validity of the offer, errors in the offer, unacceptable payment risks, conflicts with contractual commitments made to other potential customers and the chance that a customer may try to enforce an implied warranty or merchantability of the products offered.

1. PRICES

1.1.
Any prices quoted shall only be valid for orders placed within 30 days from the date of issue of the offer. Prices are Ex-Works SEEPEX Inc. plant (Enon, Ohio USA) in U.S. dollars, unless otherwise agreed. SEEPEX Inc. reserves the right to correct typographical or clerical errors.

2. TERMS

2.1.
All orders are subject to approval by the SEEPEX Inc. Credit Department. Unless otherwise agreed, if payment for the invoice due is not made in full within thirty (30) days after shipment, late fees of eighteen percent (18%) per year (equivalent to a nominal monthly interest rate of 1.5%) will be applied on the unpaid balance until paid in full. The terms and conditions herein set forth are based upon tariffs, taxes, foreign exchange rates, delivery, and other conditions in effect on the date of the customer's order. In the event that such tariffs, taxes, foreign exchange rates, delivery, and/or other conditions should change prior to delivery of the goods, SEEPEX Inc. reserves the right to charge such increased duties, taxes, or charges to the customer.

2.2.
Unless the order includes the appropriate exemption certificates and/or licenses, duties and taxes levied by Federal, State, or other governments are required to be charged automatically at the rate imposed at time of importation/shipment. Any change in law, regulations, or Government practice which causes a variation of any kind in the applicable charges from the amounts stated in the offer shall result in an equivalent change in the price quoted.

2.3.
Until payment is made in full, SEEPEX Inc. shall retain the right, without notice, to repossess and/or retain the items, and/or dispose of them, for its benefit and hold the customer responsible for any loss. Customer agrees to enter into any agreements, contracts, or notices required confirming such rights.

3. SECURITY

3.1.
In order to secure any obligations due to SEEPEX Inc. from the customer the customer grants to SEEPEX Inc. a security interest in:
a) The merchandise covered by the customer's order (s), and
b) All property and funds of the customer now or hereafter in SEEPEX Inc.'s possession, and in all additions and proceeds of such merchandise and/or property. The customer hereby authorizes SEEPEX Inc. to sign alone any financing statement or statements and to do all and any other things which may be necessary to perfect such security interest.

4. CANCELLATION

4.1.
After acceptance, orders may be canceled only with the express approval of SEEPEX Inc. In the event of an approved cancellation, the customer shall remain responsible for payment for all work performed and/or material expenses incurred by SEEPEX Inc. as of the time of cancellation. SEEPEX Inc. reserves the right to cancel the order if SEEPEX Inc. determines, in its sole discretion, that the customer's financial condition renders the customer unable or unlikely to pay for the order as agreed.

5. RETURN

5.1.
No credit will be allowed for returns unless SEEPEX Inc. has authorized such returns in writing in advance. A copy of this authorization must be returned with the item as the packing slip. All returns are subject to restocking charges and to the SEEPEX Inc. Return Goods Authorization (RGA) Policy, which is available on www.seepex.com, and is incorporated herein by reference. SEEPEX Inc. will only issue credits for items that can be resold. Items that are special for a specific customer, including but not limited to: special hoppers, baseplates, electrical panels, gear reducers and electric motors are specifically excluded from consideration for credit. Any items not received in good condition or items that cannot be put back into stock will not be accepted. Any elastomer material with over three (3) years of fabrication will not be accepted for return and/or credit. Customers must pay for all freight associated with any return, including parts or equipment that may be considered to be covered by the limited warranty protection clause below. Oustanding RGA's that have declined repair will be scrapped automatically after ninety (90) days if no other written instructions are provided.

6. SHIPMENT

6.1.
a) Handling Charge: Customer shall be responsible for making all arrangements for shipment of the order with a suitable carrier. In the event that customer requests that SEEPEX Inc. make arrangements for shipment, then customer agrees to pay to SEEPEX Inc., in addition to the applicable shipping charges, a handling charge in the amount of 10% of the shipping charges with a minimum $5.00 to a maximum charge of $150.00, with special services requiring additional charges.
b) New Articles: Where shipping instructions dictate no specific routing, SEEPEX Inc. will utilize its best judgement in determining routing but shall not be liable for any charges once the goods have reached their agreed upon point of delivery. If changes are made at customer's request in a) the agreed upon point of delivery, or b) in the routing selected by SEEPEX Inc. and if such changes involve additional costs to be incurred, such costs shall be borne exclusively by the customer, unless otherwise agreed in writing.
c) Repair Work: All items for which the customer requests repair or other services by SEEPEX Inc. shall be delivered to and picked up from the SEEPEX Inc. plant (Enon, Ohio USA) unless otherwise agreed in writing. All costs of delivery shall be paid by the customer unless otherwise agreed to in writing prior to shipment.
d) All Orders: On collect freight shipments, cartage charges from plant to carrier are the responsibility of the customer. Title to articles passes to customer upon delivery to carrier acting as customer's agent subject to any right of retention by SEEPEX Inc. All claims for shortage in, and damages in, shipment or otherwise must be reported to carrier immediately upon receipt with copy or report to ourselves within five (5) business days.

7. WARRANTIES & LIABILITY LIMITATIONS

7.1.
a) New Articles: SEEPEX Inc. warrants articles of our manufacture against defects in material and/or workmanship for a period of three (3) years from date of delivery, provided that the articles have been installed, maintained, and operated in strict accordance with SEEPEX Inc. recommendations and instructions.
b) Repair Work: Defined herein as work and services performed by SEEPEX Inc. SEEPEX Inc. warrants all repair work and services that it performs against defects in workmanship and/or materials for a period of three (3) years from the date of delivery of the repaired articles.
c) All Orders: All warranty claims shall be submitted promptly in writing to SEEPEX Inc. Any warranty replacement and/or repair shall be made Ex-Works SEEPEX Inc. plant (Enon, Ohio USA). SEEPEX Inc.'s warranty obligation shall be limited to the replacement and/or repair only of defective material and/or workmanship.

7.2.
In no event shall SEEPEX Inc. be liable for any incidental or consequential loss or damage of whatever kind of nature including but not limited to loss of business income or profits, or damage resulting from delay in manufacture or delivery, loss of use or damage to any installation into which the article may be installed, whether arising out of contract or tort.

SEEPEX Inc.
511 Speedway Drive
Enon, Ohio 45323
USA

T +1 937 864-7150
sales.us@seepex.com
www.seepex.com

7.3.

SEEPEX Inc. shall not be liable for any loss or damage resulting from delay and/or late delivery due to causes beyond our reasonable control. Notwithstanding anything herein to the contrary, SEEPEX Inc.'s liability to customer on any cause of action shall be limited to the amount paid by the customer on the subject order. SEEPEX Inc. makes no warranties, express or implied, with respect to articles or products manufactured or provided by any party other than SEEPEX Inc., except to transfer to the customer, where permissible, any warranty provided to SEEPEX Inc. by the original manufacturer. On any claims for repairs and/or replacement under such warranty, all costs incurred by SEEPEX Inc. which are not underwritten by the original manufacturers shall be borne by the customer. Except as provided herein, SEEPEX Inc. expressly disclaims all representations, promises, or warranties, express or implied with respect to any products, articles, work, or services, including any warranties of merchantability and of fitness for a particular purpose. All warranties made by SEEPEX Inc. shall be void where the goods have been subject to misuse, neglect, damage or alteration. SEEPEX Inc. shall be held free and harmless from any dispute or claim anywhere arising from and relating to infringement of patent, design, trademark, or copyright of items, sold or repaired under this contract.

8. PROPERTY RIGHTS AND RISKS

8.1.

SEEPEX Inc. disclaims any liability or responsibility whatsoever with regard to loss or damages to the customer's property while in the possession, custody or control of SEEPEX Inc. for requested repairs or other services, and the customer expressly agrees to indemnify and hold SEEPEX Inc. harmless against any and all claims for such loss or damage.

9. HAZARDOUS MATERIALS

9.1.

Any hazardous materials or the existence of any hazards relative to the condition of any product tendered to SEEPEX Inc. for service or repair work must be disclosed by customer in writing in the RGA Request Form, whether or not required to be disclosed per federal law on the MSDS sheet. **Customer shall defend, indemnify and hold SEEPEX Inc. harmless from and against any and all claims of injury or damage, including attorney's fees, caused by any hazardous condition or material on or about products accepted for service/repair. This obligation includes but is not limited to claims of bodily injury or death suffered by SEEPEX Inc. employees, or by other parties.**

13.1 Manufacturer's documents / suppliers

- available

Intelligent Drivesystems

B1000

Operating & Instruction Manuals For Gear Units

B1000

NORD DRIVESYSTEMS

TABLE OF CONTENTS

TITLE	Document Number & Hyperlink
General Instructions	U10000
Safety Notes	U10020
Storage & Commissioning	U10040
Unit Installation	U10060
Solid Shaft Connections	U10250
Keyed Hollow Shaft	U10270
Shaft Fixing Kit	U10280
Hollow Shaft With Shrink Disc	U10290
NORD GRIPMAXX™	U10310
Reducer Mounting Footed & Flange Mount Gear Units	U10500
Clincher™ Shaft-Mount With Rubber Buffers	U10580
Right Angle Shaft-Mount with Torque Arm (D)	U10600
90.1 Helical-Bevel Shaft-Mount with Bottom Mount Torque Arm (K)	U10620
Helical & Bevel Reducer Lubrication	U10750
VL2 & VL3 Extended Bearing Lubrication	U10760
Helical Worm Reducer Lubrication	U10770
Minicase™ (SM) Worm Reducer Lubrication	U10790
Minicase™ (SMI/SMID) Worm Reducer Lubrication	U10800
FLEXBLOC™ Worm Reducer Lubrication	U10810
Expansion Chambers Installation & Maintenance Manual	U10830
Helical & Bevel Reducer Lubrication Types	U11000
Helical Worm Reducer Lubrication Types	U11020
Minicase™ (SM) Worm Reducer Lubrication Types	U11040
Minicase™ (SMI/SMID) Worm Reducer Lubrication Types	U11050
FLEXBLOC™ Worm Reducer Lubrication Types	U11060
Standard In-Line Footed Oil Fill Quantities	U11500
Standard In-Line Flanged Oil Fill Quantities	U11600
Helical In-Line Footed Oil Fill Quantities	U11700
Helical In-Line Flanged Oil Fill Quantities	U11800
CLINCHER™ Oil Fill Quantities	U11900
90.1 Helical-Bevel Footed Oil Fill Quantities	U12000
90.1 Helical-Bevel Flanged Oil Fill Quantities	U12100
92 Series Helical-Bevel Footed Oil Fill Quantities	U12200
92.1/93.1 Series Helical Bevel Oil Fill Quantities	U12205
92 Series Helical-Bevel Flanged Oil Fill Quantities	U12300
Helical-Worm Footed Oil Fill Quantities	U12400
Helical-Worm Solid Shaft/Flanged Oil Fill Quantities	U12500
Helical-Worm Hollow Shaft Oil Fill Quantities	U12600
Nordbloc Footed Oil Fill Quantities	U12700
Nordbloc Flanged Oil Fill Quantities	U12800

TABLE OF CONTENTS

TITLE	Document Number & Hyperlink
Nordbloc.1 Footed Oil Fill Quantities	U12900
Nordbloc.1 Flanged Oil Fill Quantities	U13000
Minicase™ (SM) Footed Oil Fill Quantities	U13100
Minicase™ (SMI) Footed Oil Fill Quantities	U13150
Minicase™ Flanged (SM) Oil Fill Quantities	U13200
Minicase™ Flanged (SMI) Oil Fill Quantities	U13250
FLEXBLOC™ Oil Fill Quantities	U13300
Standard In-Line Oil Plug & Vent Locations	U14000
Helical In-Line Oil Plug & Vent Locations	U14100
CLINCHER™ Oil Plug & Vent Locations	U14200
92 Series Helical-Bevel Oil Plug & Vent Locations	U14300
92.1/93.1 Series Helical-Bevel Oil Plug & Vent Locations	U14305
90.1 Helical-Bevel Oil Plug & Vent Locations	U14400
Helical-Worm Oil Plug & Vent Locations	U14500
Nordbloc Oil Plug & Vent Locations	U14600
Nordbloc.1 Oil Plug & Vent Locations	U14700
Minicase™ (SMI) Worm Oil Plug & Vent Locations	U14750
FLEXBLOC™ Vent Locations	U14800
Standard In-Line Parts List Drawings	U15000
Helical In-Line Parts List Drawings	U15100
CLINCHER™ Parts List Drawings	U15200
CLINCHER™ VL2 & VL3 Parts List Drawings	U15210
90.1 Helical-Bevel Parts List Drawings	U15300
90.1 Helical-Bevel VL2 & VL3 Parts List Drawings	U15310
92 Series Helical-Bevel Parts List Drawings	U15400
Helical-Worm Parts List Drawings	U15500
Nordbloc™ Parts List Drawings	U15600
Troubleshooting	U19000
Motors - AC Induction, Single and Polyphase	U30000
Motor Brakes Installation & Maintenance	U35000
Fast Acting Brake Rectifiers [GPE, GPU & PMG]	U35100
Current Sensing Brake Relay [IR] Installation & Maintenance	U35200
NEMA/IEC Inputs Adapters & Their Couplings	U45100
NEMA or IEC Input Adapter Lubrication Options	U45250
NEMA or IEC Input Adapter with Grease Fitting	U45255
Solid Input Shaft [W]	U45300
Motor Mount Platform [MK]	U45400
Sugar Scoop	U45500
NSD tuph Touch-Up Kit	U65100
Terms & Conditions of Sale	Terms

BIM TO USER MANUAL CROSS REFERENCE

Old BIM TITLE (No Longer Available)	New User Manual Document Numbers & Hyperlinks
BIM 1010 - Unicase Helical In-Line Gearboxes Installation & Maintenance Instructions	U10000 - General Instructions U10020 - Safety Notes U10040 - Storage & Commissioning U10060 - Unit Installation U10250 - Solid Shaft Connections U10500 - Reducer Mounting Footed & Flange Mount Gear Units U10750 - Helical & Bevel Reducer Lubrication U11000 - Helical & Bevel Reducer Lubrication Types U11700 - Helical In-Line Footed Oil Fill Quantities U11800 - Helical In-Line Flanged Oil Fill Quantities U14100 - Helical In-Line Oil Plugs & Vent Locations U15100 - Helical In-Line Parts Lists Drawings
BIM 1011 - NORDBLOC Helical Gearboxes Installation & Maintenance Instructions	U10000 - General Instructions U10020 - Safety Notes U10040 - Storage & Commissioning U10060 - Unit Installation U10250 - Solid Shaft Connections U10500 - Reducer Mounting Footed & Flange Mount Gear Units U10750 - Helical & Bevel Reducer Lubrication U11000 - Helical & Bevel Reducer Lubrication Types U12700 - Nordbloc™ Footed Oil Fill Quantities U12800 - Nordbloc™ Flanged Oil Fill Quantities U14600 - Nordbloc™ Oil Plugs & Vent Locations U15600 - Nordbloc™ Parts Lists Drawings
BIM 1012 - Standard Helical In-Line Gearboxes Installation & Maintenance Instructions	U10000 - General Instructions U10020 - Safety Notes U10040 - Storage & Commissioning U10060 - Unit Installation U10250 - Solid Shaft Connections U10500 - Reducer Mounting Footed & Flange Mount Gear Units U10750 - Helical & Bevel Reducer Lubrication U11000 - Helical & Bevel Reducer Lubrication Types U11500 - Standard In-Line Footed Oil Fill Quantities U11600 - Standard In-Line Flanged Oil Fill Quantities U14000 - Standard In-Line Oil Plugs & Vent Locations U15000 - Standard In-Line Parts Lists Drawings
BIM 1013 - NORDBLOC.1 Helical Gearboxes Installation & Maintenance Instructions	U10000 - General Instructions U10020 - Safety Notes U10040 - Storage & Commissioning U10060 - Unit Installation U10250 - Solid Shaft Connections U10500 - Reducer Mounting Footed & Flange Mount Gear Units U10750 - Helical & Bevel Reducer Lubrication U11000 - Helical & Bevel Reducer Lubrication Types U12900 - Nordbloc.1™ Footed Oil Fill Quantities U13000 - Nordbloc.1™ Flanged Oil Fill Quantities U14700 - Nordbloc.1™ Oil Plugs & Vent Locations
BIM 1020 - Unicase Shaft Mount Gearboxes Installation & Maintenance Instructions	U10000 - General Instructions U10020 - Safety Notes U10040 - Storage & Commissioning U10060 - Unit Installation U10250 - Solid Shaft Connections U10500 - Reducer Mounting Footed & Flange Mount Gear Units U10580 - CLINCHER™ w/ Rubber Buffer U10750 - Helical & Bevel Reducer Lubrication U11000 - Helical & Bevel Reducer Lubrication Types U11900 - CLINCHER™ Oil Fill Quantities U14200 - CLINCHER™ Oil Plugs & Vent Locations U15200 - CLINCHER™ Parts Lists Drawings

BIM TO USER MANUAL CROSS REFERENCE

Old BIM TITLE (No Longer Available)	New User Manual Document Numbers & Hyperlinks
BIM 1030 - Unicase Helical Worm Gearboxes Installation & Maintenance Instructions	U10000 - General Instructions U10020 - Safety Notes U10040 - Storage & Commissioning U10250 - Solid Shaft Connections U10500 - Reducer Mounting Footed & Flange Mount Gear Units U10770 - Helical-Worm Reducer Lubrication U11020 - Helical-Worm Reducer Lubrication Types U12400 - Helical-Worm Footed Oil Fill Quantities U12500 - Helical-Worm Solid Shaft/Flanged Oil Fill Quantities U12600 - Helical-Worm Hollow Shaft Oil Fill Quantities U14500 - Helical-Worm Oil Plugs & Vent Locations U15500 - Helical-Worm Parts LIsts Drawings
BIM 1031 - MINICASE Worm Gearboxes Installation & Maintenance Instructions	U10000 - General Instructions U10020 - Safety Notes U10040 - Storage & Commissioning U10250 - Solid Shaft Connections U10500 - Reducer Mounting Footed & Flange Mount Gear Units U10770 - Helical Worm Reducer Lubrication U11040 - Minicase™ Worm Reducer Lubrication Types U13100 - Minicase™ Foot Mount Oil Fill Quantities U13200 - Minicase™ Flange Mount Oil Fill Quantities
BIM 1033 - SI Design FLEXBLOC Worm Gearboxes Installation & Maintenance Instructions	U10000 - General Instructions U10020 - Safety Notes U10040 - Storage & Commissioning U10250 - Solid Shaft Connections U10500 - Reducer Mounting Footed & Flange Mount Gear Units U10770 - Helical Worm Reducer Lubrication U11060 - FLEXBLOC™ Worm Reducer Lubrication Types U13300 - FLEXBLOC™ Oil Fill Quantities U14800 - FLEXBLOC™ Oil Plugs & Vent Locations
BIM 1040 - 92 & 90.1 Helical-Bevel Installation & Maintenance Instructions	U10000 - General Instructions U10020 - Safety Notes U10040 - Storage & Commissioning U10060 - Unit Installation U10250 - Solid Shaft Connections U10500 - Reducer Mounting Footed & Flange Mount Gear Units U10750 - Helical & Bevel Reducer Lubrication U11000 - Helical & Bevel Reducer Lubrication Types U12000 - Bevel Footed Oil Fill Quantities U12100 - Bevel Flanged Oil Fill Quantities U12200 - 92 Series Helical-Bevel Footed Oil Fill Quantities U12300 - 92 Series Helical-Bevel Flanged Oil Fill Quantities U14300 - 92 Series Helical-Bevel Oil Plugs & Vent Locations U14400 - 90.1 Helical-Bevel Oil Plugs & Vent Locations U15300 - 90.1 Helical-Bevel Parts Lists U15400 - 92 Series Helical-Bevel Parts Lists Drawings
BIM 1001 - Hollow Shrink Disc Shaft Installation & Maintenance Instructions	U10290 - Hollow Shaft with Shrink Disc
BIM 1002 - Keyed Shaft & Fixing Element Installation & Maintenance Instructions	U10270 - Keyed Hollow Shaft U10280 - Shaft Fixing Kit
BIM 1003 - Expansion Chambers Installation & Maintenance Instructions	U10830 - Expansion Chambers Installation & Maintenance Manual
BIM 1009 - Inputs	U45100 - NEMA IEC Inputs & Their Couplings U45250 - NEMA or IEC Input Adapter Lubrication Options U45300 - Solid Input Shaft [W] U45400 - Motor Mount Platform U45500 - Sugar Scoop
BIM 1004 - Motors	U30000 - Motors - AC Induction, Single and Polyphase
BIM 1014 - Motor Brakes	U35000 - Motor Brakes Installation & Maintenance
BIM 1092 - Current Sensing Brake Relay [IR]	U35195 - Identification of Recifier U35200 - Current Sensing Relay U35205 - Current Sensing Relay
BIM 1095 - Fast Brake Rectifier [GPE & GPU]	U35100 - Fast Brake Rectifier
BIM 9002 - GRIPMAXX™	U10310 - NORD GRIPMAXX™

1. Importance of the operating instructions

These operating instructions are intended to provide general information and safety guidelines. It is the responsibility of the buyer, machine builder, installer and user of the NORD product to make sure that all the proper safetynotes and operating instructions have been reviewed and understood. If the contents of this instruction or any applicable operating instructions are not understood, please consult NORD.

⚠ *WARNING* ⚠

Electric motors, gearmotors, electrical brakes, variable frequency drives, and gear reducers contain potentially dangerous high-voltage, rotating-components and surfaces that may become hot during operation. All work involved in the transport, connection, commissioning and maintenance of any NORD product must be carried out by qualified and responsible technicians.

2. Inspect incoming freight

Before accepting shipment from the freight company, thoroughly inspect the NORD equipment for any shipping and handling damage. If any goods called for in the bill of lading or express receipt are damaged, or if the quantity is short, do not accept until the freight express agent makes an appropriate notation on your freight bill or express receipt. If any concealed loss or damage is discovered later, notify your freight carrier or express agent at once, and request a formal review of your claim.

Claims for loss or damage in shipment must not be deducted from the NORD invoice, nor should payment of the NORD invoice be withheld awaiting adjustment of such claims, as the carrier guarantees safe delivery. NORD will try to assist in collecting claims for loss or damage during shipment; however, this willingness on our part does not remove the transportation company's responsibility in reimbursing you for collection of claims or replacement of material.

3. Obtaining detailed operating instructions

One can receive the detailed installation and maintenance instructions by entering a serial number (or NORD order number) at the appropriate location on the NORD web site.

i. Record the serial number from your gearmotor, gear reducer, or motor nameplate, or record the serial number found on your order confirmation.

ii. Go to **www.nord.com/docs** to download the appropriate operating instructions.

EXAMPLE: www.nord.com/docs

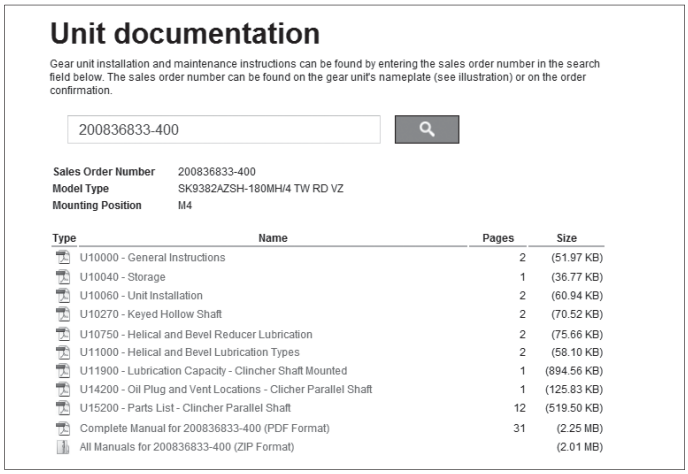

Unit documentation

Gear unit installation and maintenance instructions can be found by entering the sales order number in the search field below. The sales order number can be found on the gear unit's nameplate (see illustration) or on the order confirmation.

200836833-400

Sales Order Number	200836833-400
Model Type	SK9382AZSH-180MH/4 TW RD VZ
Mounting Position	M4

Type	Name	Pages	Size
	U10000 - General Instructions	2	(51.97 KB)
	U10040 - Storage	1	(36.77 KB)
	U10060 - Unit Installation	2	(60.94 KB)
	U10270 - Keyed Hollow Shaft	2	(70.52 KB)
	U10750 - Helical and Bevel Reducer Lubrication	2	(75.66 KB)
	U11000 - Helical and Bevel Lubrication Types	2	(58.10 KB)
	U11900 - Lubrication Capacity - Clincher Shaft Mounted	1	(894.56 KB)
	U14200 - Oil Plug and Vent Locations - Clicher Parallel Shaft	1	(125.83 KB)
	U15200 - Parts List - Clincher Parallel Shaft	12	(519.50 KB)
	Complete Manual for 200836833-400 (PDF Format)	31	(2.25 MB)
	All Manuals for 200836833-400 (ZIP Format)		(2.01 MB)

4. Intended use

NORD is a supplier of electric motors, gearmotors, reducers, electromechanical brakes, mechanical variators, and electrical variable frequency drives that are intended for commercial installations on larger systems and machines.

⚠ *WARNING* ⚠

NORD does not accept any liability for damage or injury caused by:

- Inappropriate use, operation or adaptation of the drive system.
- Unauthorized removal of housing covers, safety and inspection covers, guarding, etc.
- Unauthorized modifications to the drive system.
- Improper servicing or repair work on the drive system.
- Damage caused during shipment or transportation.
- Disregard of the important Safety Notes or Operating Instructions.

5. Notes concerning warranty and liability

All units are supplied according to the terms described in our standard "Conditions of Sale." The unit limited warranty is also defined in our "Conditions of Sale" and is located in the back of our product catalogs as well as the back of your order invoice.

All NORD Safety Notes and all related NORD Operating instructions shall be considered up-to-date at the time in which they were compiled by the buyer, machine builder, installer or user. NORD reserves the right to incorporate technical modifications and information updates to any safety/operating instructions that are within the scope of providing additional knowledge or clarification, communicating design changes, or product enhancements. Information updates may include any NORD product, or subsequent products purchased and supplied by NORD; No specific claims can be derived from the information or illustrations and descriptions contained in the safety notes or related operating instructions.

⚠ *WARNING* ⚠

NORD assumes no liability for personal injury, equipment damage or malfunctions resulting from failure to comply with any installation safety notes. The applicable national, regional, and local work regulations and safety requirements must also be complied with. Failure to comply with any safety notes or regulations may result in serious injury, damage to property, or even death.

6. Checklist for installation and operation

☑ Verify that the purchased NORD product has been supplied with the expected accessories & options. Check the received goods and packing slip to make sure items are properly received.

☑ Make sure that you have all of the required Operating Instructions for your NORD electric motor, gearmotor, reducer, electromechanical brake, mechanical variable speed drives, or electrical variable frequency drives.

☑ Consult NORD if you feel you are missing any documentation or if you have questions.

1. Safety & information symbols

All work including transportation, storage, installation, electrical connection, commissioning, servicing, maintenance and repair must be performed **only by qualified specialists or personnel**. It is recommended that repairs to NORD Products are carried out by the NORD Service Department. Instructions related to operational safety will be emphasized as shown.

Symbol	Meaning
⚠	**General Warning or Hazard -** Severe risk or danger of personal injury or death by working around dangerously high electrical voltage or moving machinery. Proper safety precautions must be taken.
STOP	**Possible Harmful Situation -** Care must be taken to avoid the possibility of damaging the drive unit, driven machine, or the environment.
i	**Important Note -** Useful note or tip to help assure trouble-free operation.
♻	**Material Disposal Note -** Important note concerning suggested material disposal.

2. Safety warnings

⚠ GENERAL WARNINGS ⚠

- All work involved in the transport, connection, commissioning and maintenance of any NORD product must be carried out by qualified and responsible technicians. All applicable national, regional, and local work regulations and safety requirements must also be complied with. **NORD assumes no liability for personal injury, accidental death, or equipment damage and malfunctions resulting from failure to comply with installation or operating instructions, safety notes, or any work regulations and laws!**
- Gear unit installation and maintenance work may only be performed when no power is available to the prime mover or motor. Electric motors, electrical brakes, and variable frequency drives, contain potentially dangerous high-voltage. Prior to installation or maintenance, shut down the power at the circuit breaker or power switch. **While working on the drive, make sure the power from the prime mover is isolated or secured on "lock-out" to prevent accidental start-up and to safeguard against injury!**
- Surfaces of motors and gear units may become hot during operation or shortly after start-up. In some instances additional protection against accidental contact may be necessary. **Use caution to avoid burns or serious injury!**

3. Observe published performance range & nameplate data

STOP HARMFUL SITUATION STOP

Observe the data on all reducer nameplates and verify published ratings for the NORD item/s in question. Do not operate any NORD equipment outside the published performance range. Failure to comply may result in damage to the drive unit, driven machine, or the environment.

U.S. Nameplate

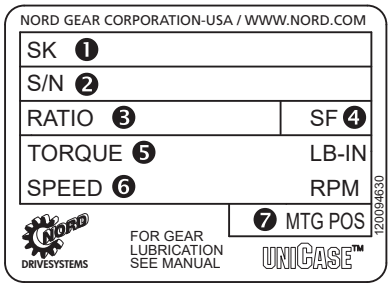

❶ Model/Type
❷ Serial Number
❸ Gear Ratio
❹ Service Factor
❺ Torque Rating
❻ Output Speed RPM
❼ Mounting Position

European Nameplate

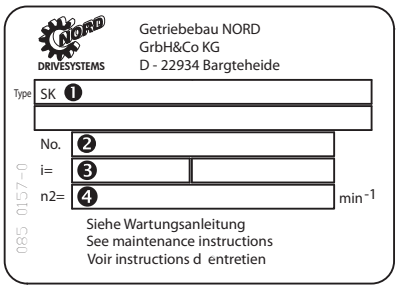

❶ Model/Type
❷ Serial Number
❸ Gear Ratio
❹ Speed

4. Transportation and handling

Make sure that all eyebolts and lifting lugs are tight and lift only at designed points. Protect the mounting surface from possible damage during transportation.

⚠ WARNING ⚠

Do not attach other machinery or loads to the NORD assembly, since the supplied lifting bolts are not designed for this purpose.

If the gearmotor or assembly is equipped with two suspension eye bolts, then both locations should be used for transportation and placement of the unit; in this case the tension force of the slings must not exceed a 45° angle.

In some instances it may be appropriate to use additional lifting straps or slings in order to assure safe transportation of the assembly. Always use sufficiently rated handling equipment and ensure that adequate safety measures are taken to protect personnel from injury during transportation. Once the NORD assembly is properly installed, remove the transportation fixtures.

7. DISPOSAL

MATERIAL DISPOSAL

Properly dispose of all used gear units and internal parts in accordance with all local regulations. In particular, all lubricants must be properly collected and disposed.

For confirmation of specific materials used in a specific reducer or gearmotor assembly, please consult NORD with the appropriate unit identification or serial number.

Components	Material
Gear wheels, shafts, rolling bearings, parallel keys, snap rings, spacers, shims, etc.	Steel
Gear housing and housing components	Cast iron or Aluminum (depending on type and size)
Worm gears	Bronze alloy
Radial seals, sealing caps, and rubber components	Elastomers with some steel
Coupling components	Plastic or Elastomer with Steel
Housing gaskets and flat oil seals	Asbestos-free sealing or gasket material (various types used)
Gear Oil	Mineral, SHC-Synthetic or PG-Synthetic (can vary)

1. Storage

IMPORTANT NOTE

For storage periods longer than 9 months, or for storage in less than desirable conditions, please consult NORD for recommendations.

Storage for up to 9 months is possible, so long as the following conditions are observed:

- Store the gear unit in its actual mounting position in accordance with the specified oil fill-level, in a clean and dry temperature controlled area. Avoid temperature fluctuations within the range of 0°C and 40°C (32°F to 104°F) and avoid relative humidity conditions in excess of 60%.
- Protect all exposed or unpainted shaft and flange surfaces with an anti-corrosion agent or grease.
- Store in a location free from shock and vibration, to avoid false brinelling of bearing elements and raceways.
- Whenever possible, rotate the shafts periodically, by hand if necessary, to help prevent brinelling (bearing damage) and to help keep the shaft seals pliable.
- Avoid direct exposure to the sun or UV light and aggressive or corrosive materials in the environment (ozone, gases, solvents, acids, caustic solutions, salts, radioactivity, etc.

2. Commissioning

Prior to gear unit start-up, complete the following:

• Please check your gear unit for a vent and if applicable to your product, remove the sealing plug to activate.

WARNING

To prevent build-up of excessive pressure, sealed vents must be activated as shown prior to gear unit start up.

Sealed vent

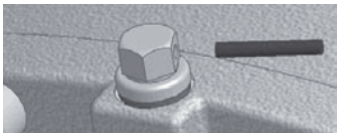

Activated vent

- Check the lubricant and be sure the gear unit is filled with the proper oil type, to the proper level, as determined by the mounting position.

IMPORTANT NOTE

Some smaller gear units are supplied as maintenance free/ lubricated for life gear units. Oil level may not be checked on some of these units.

- Check the condition of all shaft seals and all assembled flange gasket areas. If any change is detected in the shape, color, hardness or permeability, or if any leaks are detected, the corresponding shaft seals and/or gaskets must be replaced.
- Remove all anti-corrosive metal protectant from otherwise bare metal surfaces. Follow product manufacturers directions and warnings during surface protection removal.
- Check the resistance of all motor and brake windings to verify the integrity of the winding insulation and inspect all terminal box openings and wire connection areas to verify that all components are dry and free of corrosion.

3. Long-Term Storage

By taking special precautions, problems such as seal leakage and reducer failure due to the lack of lubrication, improper lubrication quantity, or contamination can be avoided. The following precautions will protect gear reducers during periods of extended storage:

- Store the gear unit in its actual mounting position in accordance with the specified oil fill-level, in a clean and dry temperature controlled area. Avoid temperature fluctuations within the range of 0°C and 40°C (32°F to 104°F) and avoid relative humidity conditions in excess of 60%.
- Fill the reducer full with oil that is compatible with the product normally used or recommended during service.
- Apply grease to all unpainted or unprotected shafts, bores, keyways, flange surfaces, tapped holes, and to the exterior of all oil seals.
- Store in a location free from shock and vibration, to avoid false brinelling of bearing elements and raceways.
- Once every few months rotate the input shaft approximately 10-20 revolutions to redistribute the weight of gears and shafts and to prevent brinnelling of the bearings and drying of the seal track.
- Avoid direct exposure to the sun or UV light and aggressive or corrosive materials in the environment (ozone, gases, solvents, acids, caustic solutions, salts, radioactivity, etc.)

4. Commissioning After Long-Term Storage

• Please check your gear unit for a vent and if applicable to your product, remove the sealing plug to activate.

⚠ *WARNING* ⚠

To prevent build-up of excessive pressure, sealed vents must be activated as shown prior to gear unit start up.

Sealed vent

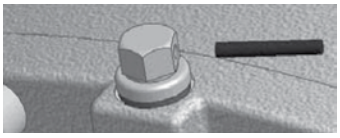

Activated vent

- Remove all anti-corrosive metal protectant from otherwise bare metal surfaces. Follow product manufacturers directions and warnings during surface protection removal.
- Drain the reducer and refill it with the proper type and amount of lubricant.
- Observe start-up and initial operation to make sure there are no seal or gasket leaks, or unusual sounds, vibration or heat rise during operation.
- Check the resistance of all motor and brake windings to verify the integrity of the winding insulation and inspect all terminal box openings and wire connection areas to verify that all components are dry and free of corrosion.

1. Installation site

Drives must be properly installed if they are to produce the rated torque. Improper installation may lead to oil leaks, reduced life, or even catastrophic failure. NORD gear drives and motors are intended to be installed at a suitable mounting site under the following conditions:

- Unimpeded airflow to and around the units.
- Accessibility to oil drain, level and breather plugs.
- On brakemotors, allow adequate space for removing the fan guard and replacing and adjusting the brake.
- Mounting surfaces must be flat, torsionally rigid, and dampened against vibration.
- Unless special measures are taken, the immediate vicinity around the gear drive or motor should not be exposed to any aggressive or corrosive substances, contaminated air, ozone, gases, solvents, acids, alkalis, salts, radioactivity, etc.

2. Mounting position

Reducer mounting position charts illustrate the standard mounting positions for horizontal and vertical mounting. All gear units are assembled with the oil fill-level, oil-drain and vent plugs installed in their proper locations, **according to the customer-specified mounting position**. For mounting orientations other than shown consult NORD Gear.

STOP *HARMFUL SITUATION* STOP

The gear reducer may not receive proper lubrication if the unit is not mounted in the position for which it is designed. Observe the mounting position designated on the reducer nameplate, or specified in the order acknowledgement. Consult NORD prior to changing mounting position in the field. While it is often possible to simply relocate the oil fill-level and vent locations, and adjust the oil fill amount, in some cases, different mounting positions may lend themselves to different internal construction features.

3. Reducer mounting

- The support foundation must be straight, level and flat. Whether the gear unit is foot-mounted or flange-mounted, NORD recommends that the straightness and flatness of the customer-supplied support foundation follow **Table 1**.
- The gear unit must be properly aligned with the driven shaft of the machine in order to prevent additional stress or load forces from being imposed upon the gear unit.
- To facilitate oil drainage it may be desirable to elevate the gear box foundation above the surrounding support structure.
- All bolting surfaces must be clean and free from contamination and corrosion.

Table 1: Recommended Straightness and Flatness of Customer-Supplied Support Foundation

Above (in)	To & Including (in)	General Tolerance on Straigtness & Flatness ISO 2768-2, Tolerance Class K
0.00	0.39	+/- 0.002 in
0.39	1.18	+/- 0.004 in
1.18	3.9	+/- 0.008 in
3.9	11.8	+/- 0.016 in
11.8	39	+/- 0.024 in
39	118	+/- 0.031 in

Above (mm)	To & Including (mm)	General Tolerance on Straigtness & Flatness ISO 2768-2, Tolerance Class K
0	10	+/- 0.05 mm
10	30	+/- 0.1 mm
30	100	+/- 0.2 mm
100	300	+/- 0.4 mm
300	1000	+/- 0.6 mm
1000	3000	+/- 0.8 mm

Straightness: Based upon the length of the corresponding line.

Flatness: Based upon the longer lateral surface or the diameter of the circular surface.

STOP *HARMFUL SITUATION* STOP

The responsibility for the design and construction of the support foundation is with the user. The foundation must be adequate to withstand normal operating loads and possible overloads while maintaining alignment to attached system components under such loads. ***Motors and drive components mounted on prefabricated base plates can become misaligned during shipment. Always check alignment after installation.***

4. Steel foundation

An engineered structural steel foundation should be designed to provide adequate rigidity and prevent loads from distorting the housing or causing misalignment of internal gears and shafts. When foot-mounting the gear reducer, a base plate or sole plate with suitable thickness (generally equal or greater than the thickness of the drive feet) should be securely bolted to steel supports and extend under the entire gear drive assembly. When flange-mounting the gear unit, the bulk head plate must be engineered to minimize buckling distortions and support the cantilevered weight of the gear unit or gear motor.

STOP *HARMFUL SITUATION* STOP

Do not weld on the gear unit or use the gear unit as an earth or ground connection for any welding procedure as this may cause permanent damage to the bearings and gears.

5. Concrete foundation

If a concrete foundation is used, allow the concrete to set firmly before bolting down the gear drive. Grout structural steel mounting pads and bolts of sufficient size into the concrete, to adequately distribute the load stress onto the concrete foundation.

Figure 1: Concrete Foundation

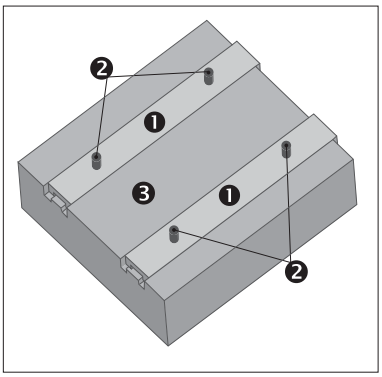

❶ Grouted Structural Steel Mounting Pads
❷ Mounting Bolts
❸ Concrete Foundation

6. Bolt connections for footed & flange mounted units

NORD footed reducers and flange-mount reducers (with B5 flange) have clearance designed into the mounting holes to allow for some minor adjustments in alignment. Bolt size, strength and quantity should be verified to insure proper torque reaction capacity whatever the mounting arrangement. Tightening torque for gear reducer mounting bolts, and recommended fastener grades, are provided in Table 2.

Table 2A: Tightening Torque for Inch Reducer Mounting Bolts

Thread Size	Grade SAE 5 / ASTM A449		Grade SAE 8	
(in)	(lb-ft)	(Nm)	(lb-ft)	(Nm)
1/4-20	7.1	9.6	10.0	13.6
5/16-18	16	21	22	30
3/8-16	28	37	39	53
1/2-13	69	93	98	132
5/8-11	138	188	195	264
3/4-10	247	334	348	472
7/8-9	396	537	558	757
1-8	592	802	833	1,130
1 1/8-7	-	-	1,233	1,672
1 1/4-7	-	-	1,717	2,327
1 3/8-6	-	-	2,267	3,073
1 1/2-6	-	-	2,983	4,045
1 3/4-5	-	-	4,458	6,045

- Calculated tightening torques are based a conventional 60°, clean and dry (un-lubricated) thread, with thread-friction and head-friction equal to 0.15.
- When using inch-fasteners, NORD recommends a minimum Grade SAE 5 (ASTM A-449) for sizes up to 1-8 UNC, and Grade SAE 8 for all larger sizes.

Table 2B: Tightening Torque for Metric Reducer Mounting Bolts

Above	ISO Grade 8.8		ISO Grade 10.9		ISO Grade 12.9	
(mm)	(lb-ft)	(Nm)	(lb-ft)	(Nm)	(lb-ft)	(Nm)
M4	2.4	3.2	3.5	4.7	4.1	5.5
M5	4.7	6.4	6.9	9.3	8.1	11
M6	8	11	12	16	14	19
M8	20	27	29	39	34	46
M10	39	53	58	78	67	91
M12	68	92	100	135	110	155
M14	107	145	159	215	180	250
M16	170	230	247	335	290	390
M18	240	325	343	465	400	540
M20	339	460	487	660	570	770
M22	465	630	664	900	770	1,050
M24	583	790	848	1,150	960	1,300
M27	848	1,150	1,217	1,650	1,440	1,950
M30	1,180	1,600	1,660	2,250	1,950	2,650
M36	2,050	2,780	2,884	3,910	3,470	4,710
M42	3,297	4,470	4,639	6,290	5,560	7,540
M48	4,940	6,700	7,010	9,500	8,260	11,200

- Calculated tightening torques are based on a conventional 60°, clean and dry (un-lubricated) thread, with thread-friction and head-friction equal to 0.15.
- When using metric-fasteners, NORD recommends a minimum ISO Grade 8.8 bolt.

7. Mounting the prime mover

When the motor is not flange mounted or integrally mounted to the gearbox, it is important to properly secure and align the gear drive with respect to the driven machine before attempting to align the prime mover or motor.

A. After the main gear drive is properly aligned and bolted in place, align the prime mover with respect to the reducer input shaft.

B. Use shims under the feet of the prime mover as needed, and secure in place with the proper mounting bolts. Dowel pins may be field-installed to help prevent misalignment and ensure proper realignment if removed for service.

IMPORTANT NOTE

When using a high speed coupling connection between the prime mover and the reducer, check alignment per the coupling manufacturers recommendations. If the coupling is misaligned, the reducer alignment or shimming is incorrect. Re-align the gear reducer and re-check the high-speed coupling alignment before re-aligning the motor.

1. Solid shaft diameter tolerance

Reducer input and output shaft extensions have a diameter tolerance as specified in **Table 1**.

Table 1: Solid Shaft Diameter Tolerance

Above ø (in)	To & Including ø (in)	Tolerance (in)
0.375	1.750	+0.0000 / -0.0005
1.750	7.500	+0.0000 / -0.0010

Above ø (mm)	To & Including ø (mm)	Tolerance (mm)	ISO 286-2 Fit Class
10	18	+0.012 / +0.001	k6
18	30	+0.015 / +0.002	k6
30	50	+0.018 / +0.002	k6
50	80	+0.030 / +0.011	m6
80	120	+0.035 / +0.013	m6
120	180	+0.040 / +0.015	m6
180	190	+0.046 / +0.017	m6

2. Fitting drive elements onto the reducer solid shaft

Solid input and output shaft extensions are provided with a drill and tap feature as indicated in Table 2. When installing drive elements such as coupling hubs, pulleys, sprockets, or gears, NORD recommends using the threaded hole in the end of the shaft, along with a suitable assembly device fitted into the threaded hole.

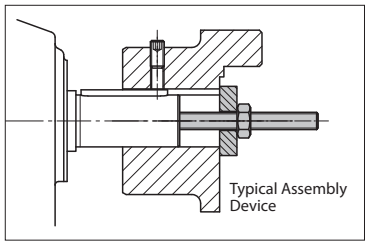

Table 2: Solid Shaft End - Threaded Holes

Above ø (in)	To & Including ø (in)	Tap size & Depth (in)
0.375	0.500	10-24 x 0.43 in
0.500	0.875	1/4-20 x 0.59 in
0.875	0.938	5/16-18 x 0.71 in
0.938	1.100	3/8-16 x 0.87 in
1.100	1.300	1/2-13 x 1.10 in
1.300	1.875	5/8-11 x 1.42 in
1.875	3.500	3/4-10 x 1.73 in
3.500	5.125	1-8 x 2.63 in
5.125	7.500	1 1/4 - 7 x 3.15

Above ø (mm)	To & Including ø (mm)	Tap Size & Depth (mm)
10	13	M4 x 10 mm
13	16	M5 x 12.5 mm
16	21	M6 x 16 mm
21	24	M8 x 19 mm
24	30	M10 x 22 mm
30	38	M12 x 28 mm
38	50	M16 x 36 mm
50	85	M20 x 42 mm
85	130	M24 x 50 mm
130	190	M30 x 60 mm

HARMFUL SITUATION

DO NOT DRIVE or **HAMMER** the coupling hub, pulley, sprocket, or gear into place. An endwise blow to the reducer shaft can generate damaging axial forces and cause damage to the reducer housing, bearings or internal components.

WARNING

To avoid serious injury the user must provide suitable safety guards for all rotating shafts and shaft components such as couplings, chain drives, belt drives, etc. All guarding must adhere to local regulations and safety standards.

3. Installing interference-fit hubs to the reducer shaft

Prior to installing any interference-fit hubs to the reducer shaft, consult with the manufacturer to determine proper assembly and fit. Interference-fits usually require heating the coupling, sprocket or gear hub, per the manufacturer's recommendations. Coupling hub installation typically follows ANSI/AGMA 9002-A86. Always make sure the reducer shaft seals are protected from the heat source. Apply uniform heat to the drive element hub to prevent distortion. NORD does not recommend heating the drive element hub beyond 212°F to 275°F (100°C to 135° C).

WARNING

When using heat to mount a drive element hub, do not use open flame in a combustible atmosphere or near flammable materials. Use suitable protection to avoid burns or serious injury.

HARMFUL SITUATION

When using external chain or belt drives, make sure the reducer is sized so that the shaft and bearings have adequate capacity. To avoid unnecessary bearing loads and additional shaft deflection, mount all power take-off devices (sprockets, pulleys, etc.) so that the applied load center is as close to the gear housing as possible and check component alignment and tension of any belts or chains per the manufacturer's recommendation. Do not over tighten the belts or chains.

4. Coupling installation

The performance and life of any coupling depends upon how well it is installed. Coupling hubs are typically mounted flush with the shaft ends, unless specifically ordered for overhung mounting. Shaft couplings should be installed according to the coupling manufacturer's recommendations for gap, angular and parallel alignment. To help obtain critical shaft alignment coupling hubs may be installed to the machine shafts prior to final shimming or tightening of the foundation bolts. Proper coupling alignment allows for thermal and mechanical shaft movement during operation and ensures that only torque (no radial load) is transmitted between the mating shafts.

Coupling gap and angular alignment

The shaft gap must be sufficient to accommodate any anticipated thermal or mechanical axial movement. When setting the coupling gap, insert a spacer or shim stock equal to the required spacing or gap between the coupling hub faces. Measure the clearance using feeler gauges at 90-degree intervals, to verify the angular alignment.

Parallel (or offset) alignment

Mount a dial indicator to one coupling hub, and rotate this hub, sweeping the outside diameter of the other hub. The parallel or offset misalignment is equal to one-half of the total indicator reading. Another method is to rest a straight edge squarely on the outside diameter of the hubs at 90° intervals and measure any gaps with feeler gauges. The maximum gap measurement is the parallel or offset misalignment.

Check alignment

After both angular and parallel alignments are within specified limits, tighten all foundation bolts securely and re-check critical alignment. If any of the specified limits for alignment are exceeded, realign the coupling.

5. Installing sheaves (pulleys), sprockets and gears

To avoid unnecessary bearing loads and additional shaft deflection, mount all power take-off devices (sprockets, pulleys, gears, etc.) so that the applied load center is as close to the gear housing as possible, as shown in **Figure 2**.

Figure 2: Sprocket or Gear Mounting

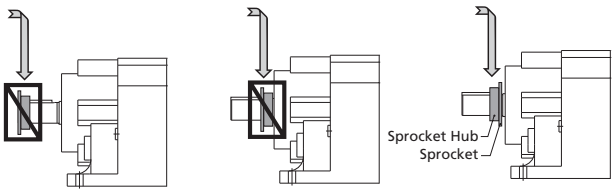

Preferred Mounting of Sprocket or Gear

Align the driver sheave or sprocket with the driven sheave or sprocket by placing a straight-edge length-wise across the face of the sheaves or sprockets. Alignment of bushed sheaves and sprockets should be checked only after bushings have been tightened. Check horizontal shaft alignment by placing one leg of a square or a level vertically against the face of the sheave or sprocket.

Always check component alignment and tension any belts or chains per the manufacturer's recommendation. The ideal belt or chain tension allows proper wrap of the driver and driven wheels, while maintaining the lowest possible tension of the belts or chain, so that no slipping occurs under load conditions. Check belt or chain tension frequently over the first 24 to 48 hours of operation.

STOP *HARMFUL SITUATION* STOP

When using external chain or belt drives, make sure the reducer is sized so that the shaft and bearings have adequate capacity. To avoid unnecessary bearing loads and additional shaft deflection, mount all power take-off devices (sprockets, pulleys, etc.) so that the applied load center is as close the gear housing as possible and check component alignment and tension of any belts or chains per the manufacturer's recommendation. Do not over tension the belts or chains.

6. Outboard pinion gear alignment

Align outboard pinion gears and adjust the gear tooth clearance according to the manufacturer's recommendations, checking for acceptable outboard pinion tooth contact. The foundation bolts may have to be loosened and the gear unit moved slightly to obtain proper gear tooth contact. After the unit is moved to correct tooth contact, the prime mover may need to be realigned.

KEYED HOLLOW SHAFT

1. Keyed hollow shaft design

NORD uses high quality carbon steel to manufacture hollow-shafts. Upon request, NORD can provide alternate materials, such as stainless steel. NORD hollow shafts are designed with a bore relief (reduced contact area) between the mating shafts.

The bore relief provides a cavity to hold an anti-seize assembly paste. It also acts as a design feature intended to help prevent corrosion and to facilitate gearbox removal from the solid shaft.

NORD furnishes dual keys designed to be used in each of the bore land areas, as opposed to supplying a single long key. The dual keys are intended to simplify assembly onto the machine's solid shaft.

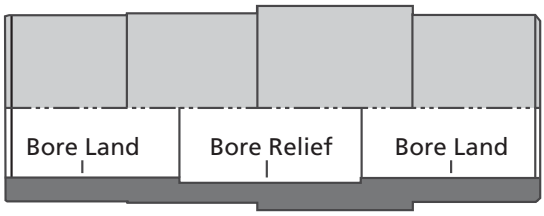

IMPORTANT NOTE

If a single shaft key or dual shaft keys are supplied by others, the key/s must engage the full bore-land length at each end of the hollow shaft.

2. Key and keyway dimensions

Unless otherwise indicated, inch keys and keyways follow the ANSI B17.1 standard and metric keys and keyways follow the DIN6885-1 standard. Inch bores will typically utilize square keys but in some instances the larger hollow shaft bore sizes utilize the alternate rectangular key shown in the ANSI B17.1 standard.

Key slots for the solid machine shaft should be made with a Class 2, transitional-fit class (slightly loose to slightly tight). Key slots in the female shaft are designed to be a low clearance fit. These suggested practices should allow for easier assembly with the mating solid shaft, without allowing excessive clearance which could cause keys to work loose during reducer operation.

IMPORTANT NOTE

If the key fit is too tight, light filing of the key sides and hand-fitting of the keys may be required.

3. Keyed hollow-shaft bore tolerances

Standard keyed hollow-shaft bore tolerances are shown in the following table.

Table 1 - Keyed hollow bore tolerances

Above ø [in]	To and Including ø [in]	Bore Diameter Tolerance ø [in]
0.4375	1.6250	+0.0010 / -0.0000
1.6250	3.2500	+0.0012 / -0.0000
3.2500	7.0000	+0.0014 / -0.0000

Above ø [mm]	To and Including ø [mm]	Bore Diameter Tolerance ø [mm]
10	18	+0.018 / -0.000
18	30	+0.021 / -0.000
30	50	+0.025 / -0.000
50	80	+0.030 / -0.000
80	120	+0.035 / -0.000
120	180	+0.040 / -0.000
180	190	+0.035 / -0.000

Metric hollow bore tolerances per ISO286-2, Class H7

4. Suggested solid shaft (machine shaft) tolerances

NORD recommends a close fit of the customer-supplied solid shaft or machine-shaft, for the following reasons:

- To help minimize the potential for fretting and corrosion.
- To help prevent excessive free play in the shaft connection that could lead to excessive load stress on the driven system, the gear drive, or both.

Table 2 - Suggested solid shaft tolerances

Above ø [in]	To and Including ø [in]	Shaft Diameter Tolerance Uniform Load ø [in]	Shaft Diameter Tolerance Shock Load ø [in]
0.4375	0.8750	+0.0000 / -0.0005	+0.0000 / +0.0005
0.8750	4.5000	+0.0000 / -0.0010	+0.0000 / +0.0010
4.5000	7.0000	+0.0000 / -0.0012	+0.0000 / +0.0015

Above ø [mm]	To and Including ø [mm]	Shaft Diameter Tolerance Uniform Load ❶ ø [mm]	Shaft Diameter Tolerance Shock Load ❷ ø [mm]
10	18	+0.000 / -0.011	+0.012 / +0.001
18	30	+0.000 / -0.013	+0.015 / +0.002
30	50	+0.000 / -0.016	+0.018 / +0.002
50	80	+0.000 / -0.019	+0.021 / +0.002
80	120	+0.000 / -0.022	+0.025 / +0.003
120	180	+0.000 / -0.025	+0.028 / +0.003
180	190	+0.000 / -0.029	+0.033 / +0.004

❶ **Uniform load: Mating shaft diameter tolerance per ISO286-2, class h6**

❷ **Shock load: Mating shaft diameter tolerance per ISO286-2, class k6**

As indicated in Table 2, different solid shaft tolerances are suggested depending upon the load type.

- If the machine load conditions are considered "Uniform" a clearance fit is allowed.
- If the machine load conditions are considered to have "Shock Load" a light clearance to interference fit condition is suggested.

Typically the machine builder will have good knowledge as to the load type. As an alternate method to classify load type, one could follow the "Mass Acceleration Factor Selection Method" that is discussed in NORD's product catalog/s.

Straightness, roundness, and diameter tolerance variations of both shafts should be controlled as accurately as possible. When mating, solid shaft design features are not controlled, reducer installation may be very difficult without ordering special hollow-bore design features to accomodate.

STOP *HARMFUL SITUATION* STOP

The supporting solid shaft or driven machine shaft must be of adequate size and strength to withstand normal operating loads and peak loads without damage to itself or any of the system components.

5. Suggested solid-shaft mating shaft surface finish

Controlling the mating shaft surface finish helps to assure proper fit and assembly while minimizing the possibility of corrosion and fretting. NORD recommends that the mating solid shaft surface should be at least 125 micro-inches (3.2 microns) or smoother.

6. Assembly to the machine shaft

A. Clean and remove any dirt, grease, or rust-preventative coatings from both the reducer hollow shaft and the machine shaft.

B. Make sure the edges of both the reducer hollow shaft and machine shaft are free from any nicks or burrs. If nicks or burrs are present remove them using an abrasive material such as an emery cloth.

C. Before installing the gear reducer onto the machine shaft, apply an anti-seize compound or anti-corrosive lubricant to the mating shafts as shown in Figure 1. Assembly and subsequent dismantling will be aided by the anti-seize agent.

Figure 1 – Application of anti-seize to the mating shafts

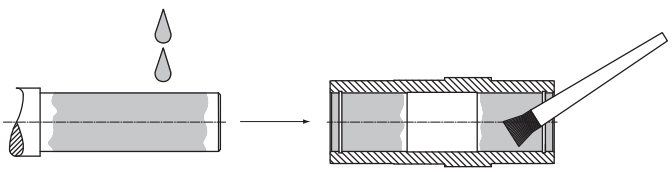

Apply to machine shaft Apply to bore land area

D. Fit the shaft key/s into place on the machine shaft. Depending upon the key slot design on the machine shaft, it may be necessary to stake or Loctite® the key/s into place so they do not slide axially while fitting the reducer to the shaft.

E. Lift the gear unit assembly into place and align it carefully with respect to the machine shaft.

F. Fit the gear unit assembly onto the machine shaft using a suitable pulling device.

G. Secure the reducer onto the machine shaft in an axial direction, to prevent the reducer from shifting or walking out of place during operation.

STOP *HARMFUL SITUATION* STOP

Do not use excessive force or try to hammer the gear unit into place. The housing, shafting, bearings or gear wheels may become damaged.

7. Securing the reducer onto the machine shaft

There are slight shaft oscillations during operation in any rotating shaft equipment or any shaft-mounted reducer assembly. Therefore it is important to secure the reducer in an axial direction onto the machine shaft, to prevent the reducer from shifting or walking out of place during operation.

Possible methods to secure the reducer axially to the machine shaft include:

- Using commercial set collars, retaining rings, or snap rings.
- Using the optional "NORD Fixing Element Kit" (see U10280).

The NORD Fixing Element Kit includes all of the necessary parts to secure the shaft by using a tapped hole in the end of the mating male shaft.

Loctite® is a registered trademark of Loctite Corporation U.S.A. and Henkel.

1. Shaft fixing kit - basic design

The NORD Fixing Kit provides a method for securing the reducer in an axial direction, after the keyed-hollow shaft reducer is mounted onto the machine shaft. The fixing kit prevents the reducer from shifting or walking out of place during operation. NORD offers a variety of standard fixing kits, based upon bore size, as shown on Page 2 of this manual.

Figure 1 – Fixing kit components

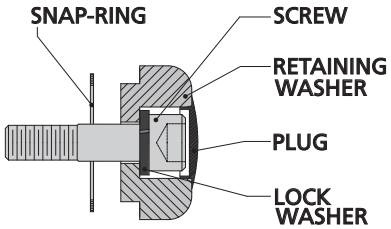

IMPORTANT NOTE

For installation of the keyed-hollow bore reducer to the machine-shaft, see user manual U10270.

2. Assembly types

There are two types of assembly methods commonly used for securing the fixing kit.

Figure 2 – Fixing kit assembly methods

Type 1

The machine-shaft is located against a fixed snap-ring located inside the bore of the reducer.

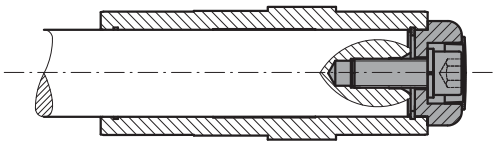

Type 2

The machine shaft is shouldered and is pulled tight against the hollow-shaft; the snap-ring is no longer required.

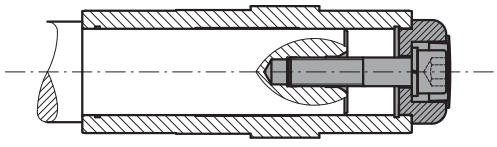

HARMFUL SITUATION

The maximum edge break on the solid machine shaft must not exceed the values shown on Page 2 of this manual. Otherwise the load-bearing capacity of the snap-ring will be reduced and may result in failure.

3. Assembly

A. If using a Type 1 assembly, secure the appropriate snap-ring into the bore of the reducer. With Type 2 assembly, no snap-ring is required.

B. Draw the hollow bore gear reducer onto the machine shaft as instructed in U10270. Remember to apply a suitable assembly paste or anti-seize compound to the mating shafts.

C. Install the retaining washer over the end of the hollow bore.

D. Secure the appropriate cap-screw into the machine shaft and tighten the screw based upon the assembly type, as noted below. Then install the protective plug over the screw hole.

Type 1 - Screw tightening

Tighten until lightly snug and secure the screw with a thread-locking compound to prevent the screw from backing out.

HARMFUL SITUATION

Over tightening the retaining screw may cause the snap ring to be pulled out of its seating groove, causing damage to the hollow-bore or snap ring.

Type 2 - Screw tightening

Follow the cap screw manufactures guidelines and tighten the screw to the proper torque, based upon the bolt grade and material. For reference tightening torque values, also see manual U10060, Table 2.

4. Disassembly

When using Type 2 assembly, it is possible to design a simple disassembly tool to allow easier removal of the hollow-bore reducer. The solid shaft is shouldered to rest against the hollow-bore of the reducer. The machine shaft is supported in both of the hollow bore land areas, but the overall length is reduced compared to Type 1 assembly.

Figure 3 – Disassembly Tool

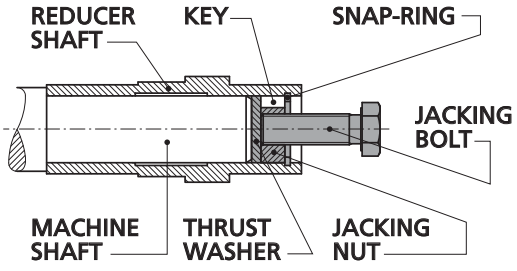

IMPORTANT NOTE

For suggestions on how to construct a disassembly tool for a particular reducer and bore size, please consult NORD's application engineering department.

5. Standard fixing kit size offerings

NORD offers a variety of standard fixing kit sizes as shown by the following tables.

Table 1 - Standard fixing kit size offerings

Shaft Bore [in]	Bolt Size	Allowable Thrust Groove ❷ lb [N]	Allowable Thrust Ring ❸ lb [N]	Max. Edge Break ❹ in [mm]
0.500	10-32	730 [3255]	520 [2300]	0.02 [0.5]
0.750	1/4-20	1800 [7905]	560 [2500]	0.04 [1]
1.000	3/8-16	2900 [13020]	1000 [4600]	0.04 [1]
1.188	7/16-14	5100 [22630]	1000 [4700]	0.04 [1]
1.250	7/16-14	5100 [22630]	1000 [4700]	0.04 [1]
1.375	5/8-11	6500 [29140]	1400 [6400]	0.06 [1.5]
1.438	5/8-11	6900 [30690]	1500 [6500]	0.06 [1.5]
1.500	5/8-11	7800 [34875]	1500 [6700]	0.06 [1.5]
1.625	5/8-11	9900 [44020]	1900 [8400]	0.08 [2]
1.688	5/8-11	10500 [46810]	1800 [8200]	0.08 [2]
1.938	5/8-11	11100 [49600]	1900 [8400]	0.08 [2]
2.000	5/8-11	14100 [62775]	2700 [12100]	0.08 [2]
2.063	5/8-11	14100 [62775]	2700 [12100]	0.08 [2]
2.188	5/8-11	16800 [74865]	2900 [13000]	0.08 [2]
2.375	3/4-10	17400 [77190]	2900 [13000]	0.08 [2]
2.438	3/4-10	17400 [77190]	2900 [13000]	0.08 [2]
2.750	3/4-10	19600 [87110]	4700 [21000]	0.10 [2.5]
2.938	3/4-10	20900 [93000]	4700 [21000]	0.10 [2.5]
3.188	3/4-10	27700 [123225]	7000 [31200]	0.12 [3]
3.438	3/4-10	29300 [130200]	7000 [31400]	0.12 [3]
3.625	3/4-10	30900 [137330]	7000 [31400]	0.12 [3]
3.938	7/8-9	32400 [144305]	6900 [30800]	0.12 [3]
4.000	7/8-9	39000 [173600]	16400 [73000]	0.12 [3]
4.063	7/8-9	39000 [173600]	16400 [73000]	0.12 [3]
4.375	7/8-9	41500 [184450]	16200 [72000]	0.12 [3]
4.438	7/8-9	41500 [184450]	16200 [72000]	0.12 [3]
4.750	7/8-9	44200 [196850]	15700 [70000]	0.12 [3]
4.938	7/8-9	48000 [213900]	15500 [69000]	0.12 [3]

Upon request, additional hollow-bore sizes & fixing kit sizes may be offered.

Shaft Bore [mm]	Bolt Size	Allowable Thrust Groove ❷ N [lb]	Allowable Thrust Ring ❸ N [lb]	Max. Edge Break ❹ mm [in]
16	M5	Not applicable ❶		
20	M6	8370 [1900]	5600 [1300]	1.0 [0.04]
25	M10	12400 [2800]	7300 [1600]	1.0 [0.04]
30	M10	17515 [3900]	7200 [1600]	1.0 [0.04]
35	M12	29140 [6500]	8700 [1900]	1.5 [0.06]
40	M16	41850 [9400]	10900 [2400]	2.0 [0.08]
45	M16	46810 [10500]	10700 [2400]	2.0 [0.08]
50	M16	62775 [14100]	19000 [4300]	2.0 [0.08]
60	M20	74865 [16800]	29200 [6600]	2.0 [0.08]
70	M20	87110 [19600]	30300 [6800]	2.5 [0.10]
80	M20	115630 [26000]	56000 [12600]	2.5 [0.10]
90	M24	130200 [29300]	56000 [12600]	3.0 [0.12]
100	M24	144305 [32400]	55000 [12400]	3.0 [0.12]
110	M24	181350 [40800]	71000 [16000]	3.0 [0.12]
120	M24	196850 [44300]	70000 [15700]	3.0 [0.12]

Upon request, additional hollow-bore sizes and fixing kit sizes may be offered.

❶ This fixing kit is not supplied with a snap-ring. A Type 2 machine shaft is required.

❷ Thrust load-bearing capacity of the groove is based upon using a hollow-shaft material with a yield-strength of at least 45,000 psi (310 N/mm²).

❸ Thrust load-bearing capacity of the snap-ring is based upon a typical snap-ring material with a yield-strength of at least 30,500 psi (210 N/mm²).

❹ On the solid machine shaft, observe the maximum edge break (radius or chamfer) shown. A larger edge break will result in reduced load-bearing capacity of the snap-ring.

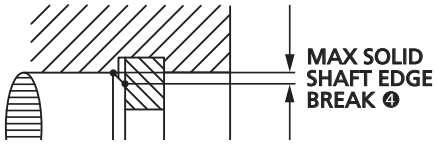

HOLLOW SHAFT WITH SHRINK DISC

1. Shrink disc design concept

A shrink disc option is adaptable to many NORD hollow-bore reducers. The shrink disc applies a high-capacity, zero backlash, interference fit to the driven machine shaft. The double tapered inner ring converts most all of the screw clamping load into radial contact pressure, as the outer clamping discs are pulled together by proper tightening of the locking screws. As the inner ring is contracted, the clearance between the customer solid shaft and reducer shaft is absorbed.

- In their relaxed state, shrink discs provide a generous assembly clearance, thus eliminating the typical assembly and disassembly challenges of using interference fits.
- Shrink discs also reduce solid machine shaft stresses by eliminating the need for shaft keys and keyways.
- When properly applied, high shrink fits help eliminate shaft fretting corrosion and allow for easier shaft mounting and dismounting.

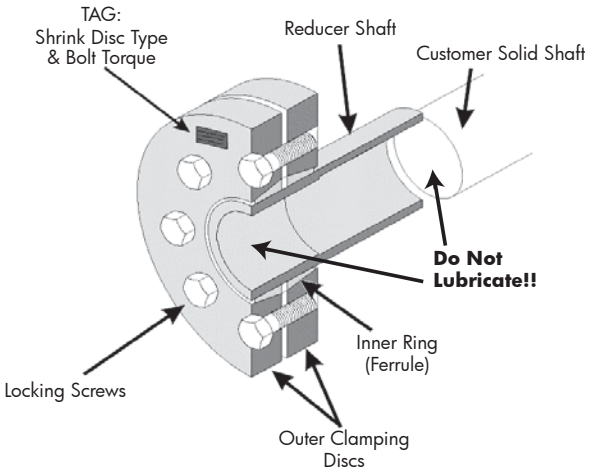

2. Solid (machine) shaft design guidelines

Always use a solid shaft material of adequate strength and apply proper shaft fits in order to establish adequate clamping force during assembly and assure proper shaft release during disassembly.

- Use solid shaft material with yield strength of at least 52,260 psi (360 N/mm²).
- The solid machine shaft should be machined according to ISO 286-2, Class h6 fit tolerances, with a shaft finish of 125 micro inches (3.2 µm) or smoother, per Table 1.
- The solid machine shaft must extend the full length of the reducer hollow shaft.

STOP *HARMFUL SITUATION* **STOP**

Contact NORD when using a shrink disc in an application where the shrink disc connection must simultaneously transmit torque and thrust.

3. Safety

⚠ *WARNING* ⚠

- The supporting solid shaft or driven machine shaft must be of adequate size and strength to withstand normal operating loads and peak loads without damage to itself or any of the system components.
- The transmissible torque and the gripping capacity of the shrink disc may be reduced if shaft tolerances or clearances are larger than specified.
- Excessive tightening torque can result in permanent deformation of the inner ring and the reducer hollow bore, making disassembly very difficult. Do not over tighten the shrink disc to compensate for excessive clearance between the machine shaft and reducer bore.
- Observe the published ratings and safety factors for both the reducer and shrink disc. Overload conditions or excessively high torque can cause the shrink disc connection to slip. In extreme cases localized galling or welding of components may occur.

4. Shrink disc shaft tolerances

Recommended solid shaft tolerances and reducer bore tolerances are shown in the table below.

Table 1: Shrink disc shaft tolerances

Above & Including ø [in]	To & Including ø [in]	Solid Shaft Tolerance ø [in]	Reducer Bore Tolerance ø [in]	Max. Assembly Clearance [in]
0.7500	1.1250	+0.0000 / -0.0005	+0.0008 / -0.0000	0.0013
1.1250	1.9375	+0.0000 / -0.0006	+0.0009 / -0.0000	0.0015
2.0000	3.1250	+0.0000 / -0.0007	+0.0011 / -0.0000	0.0018
3.1875	4.6875	+0.0000 / -0.0008	+0.0013 / -0.0000	0.0021
4.7500	7.0625	+0.0000 / -0.0009	+0.0015 / -0.0000	0.0024
7.1250	7.5000	+0.0000 / -0.0011	+0.0018 / -0.0000	0.0029

Above ø [mm]	To & Including ø [mm]	Solid Shaft Tolerance ø [mm]	Reducer Bore Tolerance ø [mm]	Max. Assembly Clearance [mm]
18	30	+0.000 / -0.013	+0.021 / -0.000	0.034
30	50	+0.000 / -0.016	+0.025 / -0.000	0.041
50	80	+0.000 / -0.019	+0.030 / -0.000	0.049
80	120	+0.000 / -0.022	+0.035 / -0.000	0.057
120	180	+0.000 / -0.025	+0.040 / -0.000	0.065
180	190	+0.000 / -0.029	+0.046 / -0.000	0.075

Shaft/bore tolerances per ISO 282-6, Class h6/H7.

Solid shaft finish should be 125 micro inches (3.2 micro meters) or smoother.

HOLLOW SHAFT WITH SHRINK DISC

5. Installation

⚠ WARNING ⚠

Disconnect all power sources from the equipment before beginning this installation procedure. Handle the components with care and avoid all sharp machined edges to prevent personal injury.

STOP HARMFUL SITUATION STOP

Do not tighten any of the shrink disc locking screws prior to installing the reducer with shrink disc onto the machine shaft. The inner ring of the shrink disc can become permanently contracted or damaged at relatively low tightening torque.

A. Inspect the gear unit received. Make sure the shrink disc and extended hollow shaft projection is on the side of the reducer where it was specified or ordered.

B. Loosen the shrink disc locking screws but do not take the shrink disc completely apart. Remove and discard any packaging material or transportation spacers that come with the shrink disc.

C. Remove all burrs, rust, corrosion, lubricants, and foreign matter from the surfaces of the solid shaft and hollow-bore.

D. Make sure the shrink disk is positioned onto the hollow shaft until the outer clamping ring is flush with the edge of the hollow shaft.

E. To aid in assembly, it is acceptable to lightly grease the solid shaft, only in the area that will come in contact with the bronze-bushing side of the reducer hollow-shaft. ***The reducer hollow shaft must be completely de-greased and free of lubricant, especially in the area of the shrink disc.***

F. Position the gear reducer onto the solid machine shaft and make certain the area under the shrink disc is completely supported by the solid shaft.

G. After confirming the proper positioning of gear reducer and the shrink disc, hand tighten (3) or (4) equally spaced locking screws to make sure the outer collars of the shrink disc are drawn together in a parallel fashion. Then hand-tighten the remaining screws.

H. Refer to Table 2 for the specified tightening torques for the shrink disc locking screws. Using a properly set torque wrench using approximately ¼ (90°) turns; tighten the locking screws, by working in a circular clockwise or counterclockwise sequence around the shrink disc.

I. Continue the tightening sequence (Step H.) even if some locking screws initially require very low tightening torque to achieve ¼ turns; do this for several passes until ¼ turns can no longer be achieved.

J. Reset the torque wrench to approximately 3-5% over-torque and tighten the locking screws for 1 or 2 more passes. This procedure will compensate for relaxation of the locking screws, since tightening of a given screw will always tend to relax the adjacent screw. Without a slight overtorquing of the screws, an infinite number of passes would be required to reach the desired tightening torque.

Table 2 - Shrink Disc Locking Screw Torque

Screw Size	Wrench Size [mm]	Tightening Torque [Nm]	[lb-in]	[lb-ft]
M5	8	7	62	5.2
M6	10	12	106	8.9
M8	13	30	266	22
M10	17	59	522	44
M12	19	100	885	74
M16	24	250	2213	184
M20	30	490	4337	361
M24	36	840	7435	620
M30	46	1700	15050	1254

BOLT TIGHTENING PATTERN

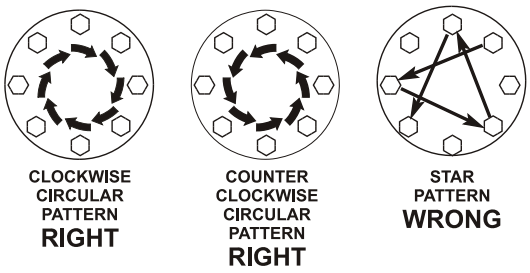

K. Reset the torque wrench to the correct tightening torque as indicated in Table 2. Make sure each locking screw has been properly tightened until the screws are no longer turning at the specified torque wrench setting. If necessary repeat Steps G. & H.

6. Removal

A. Loosen the shrink disc locking screws in a circular pattern by using ½ (180°) turns, until the shrink disc hub can be moved or until the shrink disc hub and reducer shaft will return to their original fits.

⚠ WARNING ⚠

Do not completely remove the locking screws before the outer clamping disks of the shrink disc are disengaged from the inner ring. A sudden release of the outer collars will create high separating forces and could result in injury or even death.

B. Loosen the outer collars of the shrink disc from the tapered inner ring. This may require tapping the bolts with a **soft faced** hammer or prying lightly between the outer collars.

C. Remove the gear reducer from the machine shaft.

7. Re-installation

A. It may be possible to re-use the shrink disc. However the shrink disk should not be re-used if it becomes damaged during removal, or excessively rusty or corroded. Shrink discs must always be disassembled and thoroughly cleaned before re-using.

B. After cleaning the shrink disc, lubricate between the taper of the outer clamping disks and the outside of the inner ring using MOLYKOTE® G-Rapid Plus Paste (product of Dow Corning) or equivalent. In addition, grease screw threads and head contact area with multi-purpose grease.

NORD GRIPMAXX™

1. General information

The NORD GRIPMAXX™ keyless bushing system is adaptable to most all NORD shaft-mounted reducers. The bushing system offers interchangeable bushings to accommodate a large range of driven machine-shaft sizes.

The unique design of the NORD GRIPMAXX™ bushing system offers a number of distinct advantages as follows:

- The NORD GRIPMAXX™ allows the machine builder to utilize standard cold finished shaft stock, without the need for additional shaft machining or shaft keys.
- It uses a NORD shrink disc to apply a high-capacity, zero backlash, interference fit to the driven machine shaft, while eliminating the typical assembly and disassembly challenges of using interference fits.
- The built in clearance between the customer shaft and the bushing system helps to ensure easy installation and removal of the gearbox. To help ensure easy removal, the NORD GRIPMAXX™ bushings are prepared with a special low-wear, corrosion-resistant hardened surface treatment, that minimizes the formation of shaft corrosion and fretting.
- The NORD GRIPMAXX™ is ideal for start-stop operation and bi-directional loading because it does not depend on keys or keyways that transmit torque, which can also can become loose or deform when subjected to these loading conditions.
- Unlike the typical conical or tapered bushing kits, the NORD GRIPMAXX™ design allows a tight fit against a shouldered machine shaft.
- The torque bushing and support bushing are the same part and are fully interchangeable with one another.

2. GRIPMAXX™ assembly detail

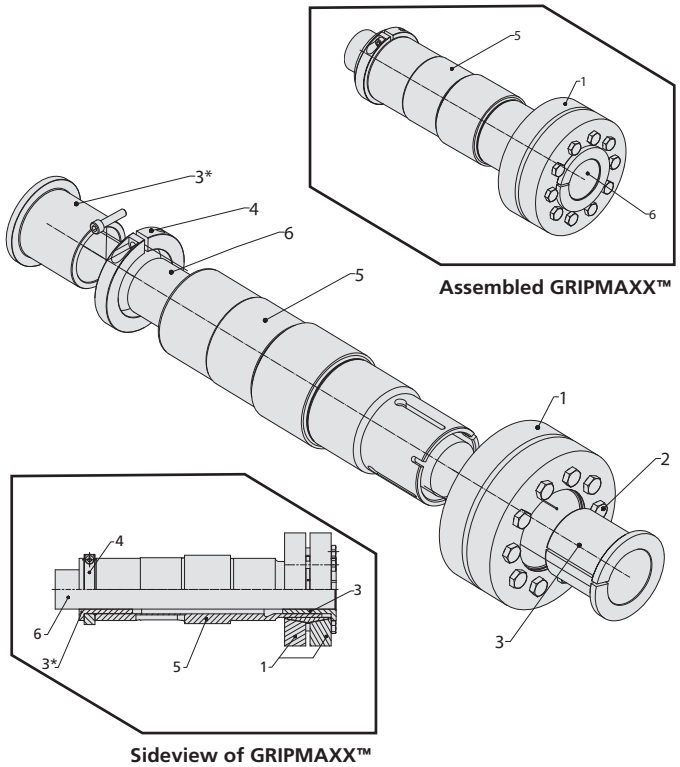

Assembled GRIPMAXX™

Sideview of GRIPMAXX™

[1] NORD Shrink Disc
[2] Locking Screw
[3] Bushing (Torque Side)
[3*] Bushing (Support Side)
[4] Clamp Ring
[5] Gear Reducer Hollow Shaft
[6] Machine Shaft

IMPORTANT NOTE

NORD recommends that the machine shaft have a yield strength of at least 52,260psi (360N/mm^2)

IMPORTANT NOTE

Observe the recommended machine shaft tolerances in table 1, page 2.

WARNING

The supporting solid shaft or driven machine shaft must be of adequate size and strength to withstand normal operating loads and peak loads without damage to itself or any of the system components.

3. Installation

⚠ WARNING ⚠

Disconnect all power sources from the equipment before beginning this installation procedure. Handle the components with care and avoid all sharp or machined edges to prevent personal injury.

STOP HARMFUL SITUATION STOP

Do not tighten any of the shrink disc locking screws prior to installing the reducer with shrink disc onto the machine shaft. The inner ring of the shrink disc can become permanently contracted or damaged at a relatively low tightening torque.

Table 1 - Required Machined Shaft Tolerance

Inch Machine Shaft			Metric Machine Shaft		
From ø [in]	To ø [in]	ISO 286-2 Tolerance h11(-) [in]	Over ø [mm]	Including ø [mm]	ISO 286-2 Tolerance h11(-) [mm]
0.4375	0.6875	- 0.004	10	18	- 0.11
0.7500	1.0625	- 0.005	18	30	- 0.13
1.1250	1.9375	- 0.006	30	50	- 0.16
2.0000	3.1250	- 0.007	50	80	- 0.19
3.1875	4.6875	-0.008	80	120	-0.22
4.7500	4.7500	-0.009	120	125	-0.25

A. Carefully inspect the machine shaft [6] and remove all burrs, rust, corrosion, lubricants, and foreign matter from the shaft surface. Verify that the diameter is within the dimensional tolerances shown in Table 1.

B. Inspect the gear unit received to confirm the correct position of the shrink disc [1]. Make sure the hollow shaft [5] projection is on the side of the reducer where it was specified or ordered.

C. In addition to cleaning the machine shaft [6], remove all dirt, grease or oils from the reducer hollow shaft [5], bushings [3], clamp ring [4], and shrink disk [1]. ***Do not apply lubricants, corrosion preventatives, anti-sieze compounds or coatings to the mating surfaces of the shaft, bushings, clamp collars or shrink disc.***

D. Position the clamp ring [4] and support bushing [3*] over the machine shaft [6], making sure the support bushing is in its desired location. Then secure the support bushing [3*] with the clamp ring [4] and tighten the clamp ring screw.

E. Slide the gear reducer onto the machine shaft [6] until the gear reducer stops against the secured support bushing [3*].

F. Without taking the shrink disc [1] apart, loosen the shrink disc locking screws [2]. Slide the shrink disk over the reducer shaft [5] and slide the torque bushing [3] onto the machine shaft, making sure it is seated completely.

G. Confirm the positioning of the shrink disc [1] and torque bushing [3]. ***Do not tighten the shrink disc until the machine shaft and torque bushing are in proper position, or the reducer shaft will be damaged.*** Hand-tighten 3 or 4 or locking screws [2] and make sure the outer collars of the shrink disc are drawn together in a parallel fashion and then hand-tighten the remaining screws.

H. Refer to Table 2 for the specified tightening torques for the shrink disc locking screws. Using a properly set torque wrench using approximately ¼ (90°) turns; tighten the locking screws, by working in a circular clockwise or counterclockwise sequence around the shrink disc.

I. Continue the tightening sequence (Step H.) even if some locking screws initially require very low tightening torque to achieve ¼ turns; do this for several passes until ¼ turns can no longer be achieved.

J. Reset the torque wrench to approximately 3-5% over-torque and tighten the locking screws for 1 or 2 more passes. This procedure will compensate for relaxation of the locking screws, since tightening of a given screw will always tend to relax the adjacent screw. Without a slight overtorquing of the screws, an infinite number of passes would be required to reach the desired tightening torque.

Table 2 - Shrink Disc Locking Screw Torque

Screw Size	Wrench Size [mm]	Tightening Torque [Nm]	[lb-in]	[ft-lb]
M5	8	7	62	5.2
M6	10	12	106	8.9
M8	13	30	266	22
M10	17	59	522	44
M12	19	100	885	74
M16	24	250	2213	184
M20	30	490	4337	361

BOLT TIGHTENING PATTERN

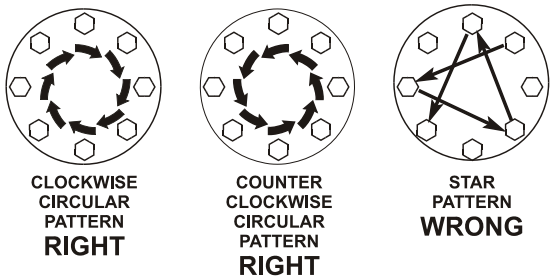

K. Reset the torque wrench to the correct tightening torque as indicated in Table 2. Make sure each locking screw has been properly tightened until the screws are no longer turning at the specified torque wrench setting. If necessary repeat Steps G. & H.

5. Bushing kit removal

A. Loosen the shrink disc locking screws [2] in circular pattern by using ½ (180°) turns, until the shrink disc hub can be moved or until the shrink disc hub and reducer shaft will return to their original fits.

> ⚠ *WARNING* ⚠
>
> Do not completely remove the locking screws before the outer clamping disks of the shrink disc are disengaged from the inner ring. A sudden release of the outer collars will create high separating forces and could result in injury or even death.

B. Loosen the outer collars of the shrink disc from the tapered inner ring. This may require tapping the bolts with a **soft faced** hammer or prying lightly between the outer collars.

C. Remove the gear reducer from the machine shaft.

6. Re-installation

A. It may be possible to re-use the bushings and shrink disc that are part of the NORD bushing system. However these components should not be re-used if they are damaged during removal, or excessively rusty or corroded.

B. Never re-use any of the bushing kit components without prior cleaning. Shrink discs must always be disassembled and thoroughly cleaned before re-using.

C. After cleaning the shrink disc, lubricate between the taper of the outer clamping disks and the outside of the inner ring using MOLYKOTE® G-Rapid Plus Paste (product of Dow Corning) or equivalent. In addition, grease screw threads and head contact area with multipurpose grease.

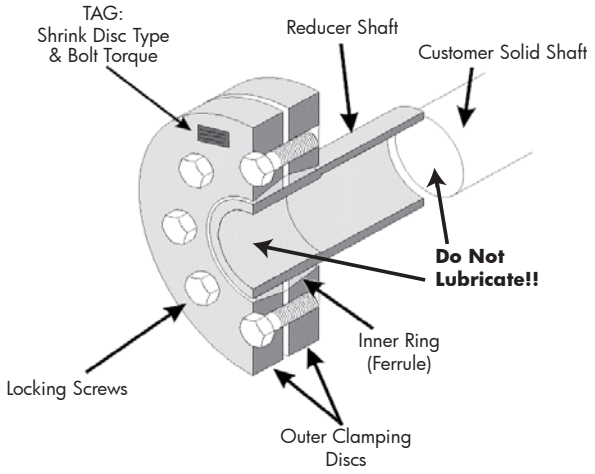

REDUCER MOUNTING
FOOTED & FLANGE MOUNT GEAR UNITS

1. Foot-mounted reducers

When installing the foot-mounted gear unit, observe the flatness specifications and bolt tightening torque guidelines provided in U10060 and make sure the mating mounting surface and reducer feet are clean and free of debris. Use of shims under the feet of the gear unit may be required in order to align the output shaft to the driven equipment. Make sure that all feet are supported so that the housing will not distort when it is bolted down. Improper shimming will cause mis-alignment and may reduce the life of the gear unit or cause component failure. Dowel pins may be field-installed to help prevent misalignment and ensure proper realignment if removed for service.

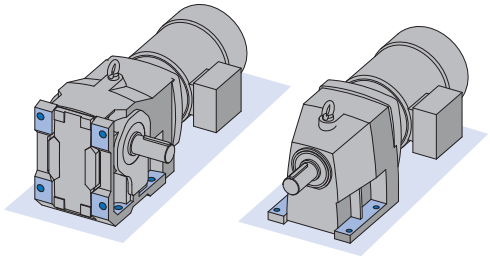

IMPORTANT NOTE

Gear units may be subjected to radial loads or side pull, caused by external chain drives or belt drives. In these instances it is recommended that the mounting base be designed with a slide-plate adjustment to accommodate extra slack in the chain or the belt after the feet are loosened. When using an external chain or belt drive, make sure the reducer is sized so that the shaft and bearings have adequate capacity.

2. Flange-mounted reducers (with B5 flange)

When using the B5 flange to mount the gear unit, the bulk head plate must be engineered to minimize buckling distortions and support the cantilevered weight of the gear reducer or gearmotor. On the B5 mounting flange NORD provides a pilot register or and the flange pilot tolerance as listed per Table 1. When the mating hole is designed with the proper fit, the flange pilot tenon provides a means of accurately positioning the reducer while the hold-down bolts are properly secured; once the reducer is secured, the tenon helps prevent movement of the reducer and it helps locate the center of the reducer output shaft.

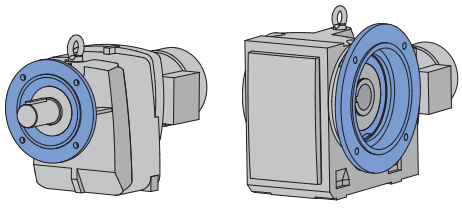

Table : Flange Pilot Tolerance

Above ø (in)	To & Including ø (in)	Tolerance (in)	ISO 286-2 Fit Class
1.969	3.150	+0.0005 / -0.0003	j6
3.150	4.724	+0.0005 / -0.0004	j6
4.724	7.087	+0.0006 / -0.0004	j6
7.087	9.055	+0.0000 / -0.0005	h6
9.055	9.843	+0.0000 / -0.0011	h6
9.843	12.402	+0.0000 / -0.0013	h6
12.402	15.748	+0.0000 / -0.0014	h6
15.748	19.685	+0.0000 / -0.0016	h6

Above ø (mm)	To & Including ø (mm)	Tolerance (mm)	ISO 286-2 Fit Class
50	80	+0.012 / -0.007	j6
80	120	+0.013 / -0.009	j6
120	180	+0.014 / -0.011	j6
180	230	+0.000 / -0.013	h6
230	250	+0.000 / -0.029	h6
250	315	+0.000 / -0.032	h6
315	400	+0.000 / -0.036	h6
400	500	+0.000 / -0.040	h6

When installing the flange mounted gear unit, observe the flatness specifications and bolt tightening torque guidelines provided in U10060. Make sure the mating mounting surface and reducer flange are clean and free of debris. Use a straight edge or parallel bar to check for high spots on the mating mounting surface and remove any raised material around the mounting holes.

Set the gear unit into place and tighten the bolts until they are snug. Before final bolt-tightening check for any material gaps between the mating surfaces and if shimming is required, use "U" shaped shims at least 2 times the width of the bolt. Avoid over shimming a very irregular surface as this will make it very difficult to achieve proper alignment.

IMPORTANT NOTE

For heavy shock applications, it is advisable to field-install dowel pins through the mounting flange connection (in addition to the mounting bolts). This will help control flange movement or flange rotation and relieve the mounting bolts from this additional stress.

3. Flange-mounted reducers (with B14 flange)

When using the B14 flange to mount the gear unit, the bulk head plate must be engineered to minimize buckling distortions and support the cantilevered weight of the gear reducer or gearmotor. When properly installed, the output flange of the reducer housing is designed to enable the permissible torques and radial forces to be reliably transmitted by the bolt connections.

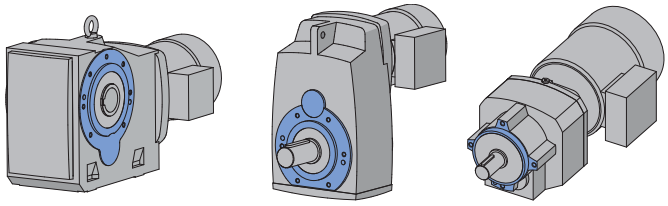

IMPORTANT NOTE

When using the B14 flange-face for mounting, if dowel pin holes are provided in addition to the threaded holes, then it is advisable to also use the proper dowel pins, to help control flange movement or flange rotation and relieve the mounting bolts from this additional stress This is especially important for heavy shock applications.

4. Foot & flange reducer housings

Some gear reducer housings are available with a foot and an output flange. Units with a foot and a B5 Flange are designated with the suffix XF after the primary model number and units with a B14 face-flange are designated with the suffix XZ after the primary model number. When a gear unit is provided with both a foot and a flange, the foot is consider the primary mounting surface. The flange is generally considered to be the secondary mounting option and it is intended that this surface be used for auxiliary add on elements that place minimal load stress on the reducer housing.

HARMFUL SITUATION

To prevent overstress on the main gear unit housing, never tighten the reducer mounting feet and the mounting flange against one-another. Auxiliary add-on elements that are mounted to the reducer flange, must not transmit excessive force, torque or vibration to the main gear housing.

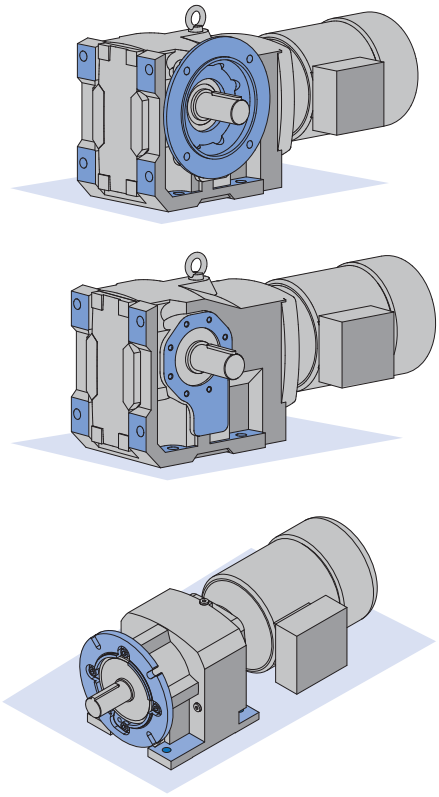

CLINCHER™ SHAFT-MOUNT WITH RUBBER BUFFERS

1. Purpose of the built-in torque arm lug

The preferred method of installing a shaft-mounted Clincher™ reducer is to support the weight of the gear unit or gearmotor assembly from the driven solid machine shaft. In order to restrain the gearbox, react the torque, and keep the gear unit from spinning around the shaft, the Clincher™ gear units have a built-in torque arm lug or tab cast into the reducer housing. This torque tab is intended to be used in conjunction with the NORD Rubber Buffers.

Figure 1: Built-in torque lug

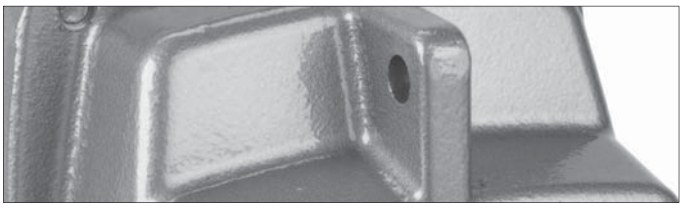

2. Rubber buffers

When specified, NORD provides two rubber buffers that are installed on either side of the gear unit's integral torque lug.

When properly used in tandem, on either side of the torque-arm lug, the rubber buffers help isolate and absorb the load forces present in the system and increase the reducer's service life by reducing cumulative torsional shock loads.

- The primary load force acts in the direction of driven shaft rotation, reacts the torque of the reducer, keeping the gearbox from spinning on the shaft.
- Additional forces present themselves in the direction opposite of the shaft rotation, due to the typical slight out-of-round condition present in the machine shaft. This condition is the reason most shaft mounted-reducers have a slight shaft-wobble, which is normal.

For further dampening it is possible to combine several rubber buffers in a row, on either side of the torque lug.

IMPORTANT NOTE

Please reference Table 1 on page 2 of this manual for dimensional information.

HARMFUL SITUATION

Always mount at least one rubber buffer on either side of the reducer's torque-arm lug. When using rubber buffers in tandem, make sure equal numbers are used on both sides of the torque tab. Failure to do so will not properly cushion the reducer and can result in excessive binding, bearing stress, and damage to the reducer.

3. Machine support

WARNING

It is the responsibility of the machine builder to design a support bracket of adequate strength and rigidity, and supply an appropriate tightening bolt assembly. Failure to do so may result in injury caused from a damaged or broken torque-reaction assembly.

A single customer-supplied machine support bracket, of adequate strength and rigidity, can provide adequate restraint for both directions. This is because when the rubber buffer system is used, the applied load forces are always parallel to the retaining bolt and there are no twisting forces induced onto the bolt in either the clockwise or counter-clockwise direction. In some cases the customer may desire to supply a rigid support on either side of the rubber buffers. In these instances, longer assembly hardware is required.

4. Installation of the rubber buffers

A. Install the Clincher™ hollow bore reducer onto the machine shaft. Line up the hole in the reducer's torque-arm lug with the hole in the machine's support bracket and temporarily hold the reducer in place.

B. Properly secure the gear unit assembly to the driven shaft in an axial direction. If using the NORD Shaft Fixing Kit, follow the instructions in User Manual U10280.

C. Install the rubber buffers on either side of the gear unit's torque-arm lug. Apply a thread locking compound to the end of the fixing bolt. Then place the fixing bolt through the rubber buffers, torque-arm lug and rigid machine support bracket and loosely secure the nut onto the end of the bolt.

D. Tighten the fixing bolt and nut until lightly snug until all of the free play is eliminated from the rubber buffer assembly. Then snug the fixing bolt assembly by tightening an additional 1/4 to 1/2 turn.

WARNING

To help prevent damage to the rubber buffers, avoid over-tightening.

IMPORTANT NOTE

- A min. of (2) rubber buffers are required for each unit.
- For larger size CLINCHER'S™, NORD offers the heavy-duty rubber buffer (Option VG).
- A metric fixing bolt is preferred for rubber buffer assembly. NORD recommends a minimum ISO Grade 8.8 fixing bolt.

CLINCHER™ SHAFT-MOUNT WITH RUBBER BUFFERS

Table 1: Rubber buffer assembly/typical dimensions

Standard Rubber Buffer Assembly Option **(G)**

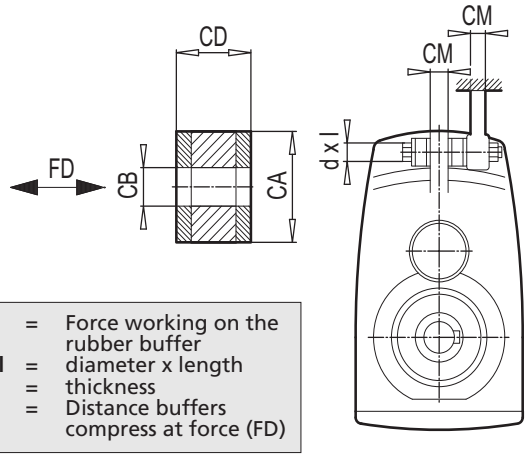

FD = Force working on the rubber buffer
d x l = diameter x length
c = thickness
S_{FD} = Distance buffers compress at force (FD)

Heavy Duty Rubber Buffer Assembly Option **(VG)**

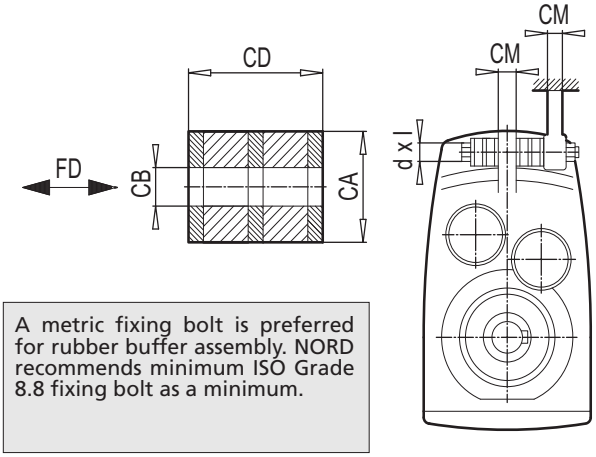

A metric fixing bolt is preferred for rubber buffer assembly. NORD recommends minimum ISO Grade 8.8 fixing bolt as a minimum.

Type	Rubber Buffer P/N	CB inch [mm]	CA inch [mm]	CD inch [mm]	CM inch [mm]	Bolt d x l [metric]	FD lb [kN]	SFD inch [mm]
SK0182NB..G	29603000	0.43 [11]	1.18 [30]	0.59 [15]	0.39 [10]	M10 x 70	217 [0.967]	0.06 [1.5]
SK0282NB..G	29603000	0.43 [11]	1.18 [30]	0.59 [15]	0.47 [12]	M10 x 70	234 [1.04]	0.07 [1.7]
SK1282..G	29603000	0.43 [11]	1.18 [30]	0.59 [15]	0.55 [14]	M10 x 80	504 [2.24]	0.14 [3.6]
SK1382NB..G	29603000	0.43 [11]	1.18 [30]	0.59 [15]	0.55 [14]	M10 x 80	402 [1.79]	0.11 [2.8]
SK2282..G SK2382..G	29604000	0.49 [12.5]	1.57 [40]	0.59 [15]	0.63 [16]	M12 x 90	600 [2.67]	0.07 [1.8]
SK3282..G SK3382..G	29604000	0.49 [12.5]	1.57 [40]	0.59 [15]	0.71 [18]	M12 x 90	935 [4.16]	0.11 [2.9]
SK4282..G SK4382..G	29606000	0.83 [21]	2.36 [60]	1.18 [30]	0.87 [22]	M20 x 150	1661 [7.39]	0.29 [7.3]
SK5282..G SK5382..G	29606000	0.83 [21]	2.36 [60]	1.18 [30]	1.1 [28]	M20 x 150	2133 [9.49]	0.37 [9.4]
SK6282..G SK6382..G	29608000	0.98 [25]	3.15 [80]	1.57 [40]	1.38 [35]	M24 x 190	3779 [16.81]	0.36 [9.2]
SK7282..G SK7382..G	29608000	0.98 [25]	3.15 [80]	1.57 [40]	1.57 [40]	M24 x 200	4676 [20.8]	0.45 [11.4]
SK8282..G SK8382..G	29610000	1.22 [31]	3.94 [100]	1.97 [50]	1.97 [50]	M30 x 260	6382 [28.39]	0.64 [16.3]
SK9282..G SK9382..G	29610000	1.22 [31]	3.94 [100]	1.97 [50]	2.17 [55]	M30 x 260	9777 [43.49]	0.98 [24.9]

Type	Rubber Buffer P/N	CB inch [mm]	CA inch [mm]	CD inch [mm]	CM inch [mm]	Bolt d x l [metric]	FD lb [kN]	SFD inch [mm]
SK7282.VG SK7382.VG	29620850	0.98 [25]	3.35 [85]	2.36 [60]	1.57 [40]	M24 x 240	4676 [20.8]	0.48 [12.2]
SK8282.VG SK8382.VG	29621100	1.22 [31]	4.33 [110]	3.54 [90]	1.97 [50]	M30 x 340	6382 [28.39]	0.76 [19.3]
SK9282.VG SK9382.VG	29621400	1.22 [31]	5.51 [140]	4.33 [110]	2.17 [55]	M30 x 380	9777 [43.49]	0.83 [21.2]
SK10282.VG SK10382.VG	29621800	1.22 [31]	5.51 [140]	4.33 [110]	3.15 [80]	M30 x 430	12670 [56.36]	1.08 [27.4]
SK11282.VG SK11382.VG	29621800	1.93 [49]	7.09 [180]	5.91 [150]	3.54 [90]	M48 x 550	18185 [80.89]	1.52 [38.5]
SK12382.VG	29621800	1.93 [49]	7.09 [180]	5.91 [150]	3.54 [90]	M48 x 550	23720 [105.51]	1.98 [50.2]

RIGHT-ANGLE SHAFT-MOUNT WITH TORQUE ARM (D)

1. Torque arm (D)

The preferred method of installing a shaft-mounted reducer is to support the weight of the gear unit or gearmotor assembly from the driven solid machine shaft. A torque arm is required in order to restrain the gearbox, react the load torque, and keep the gear unit from spinning around the shaft.

The Torque-Arm (D) bracket is mounted to either side of the right-angle gear unit using mounting screws that thread into the B14 flange-face of the reducer. The anchor hole of the torque-arm bracket is supplied with a resilient rubber bushing.

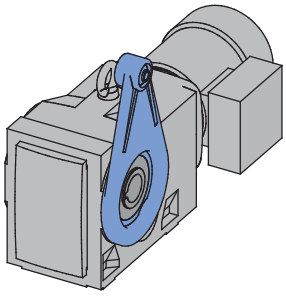

IMPORTANT NOTE

The side of the reducer that the torque arm is mounted on, and the angular position can be specified at time of order. Consult the appropriate NORD catalog for specific Torque Arm (D) mounting options and ordering guidelines.

2. Purpose of the built-in resilient rubber bushing

The resilient rubber bushing installed into the anchor hole end of the torque-arm helps isolate and absorb all the load forces present in the system and increase the reducer's service life by reducing cumulative torsional shock loads.

- The primary load force acts in the direction of driven shaft rotation, reacts the load torque of the reducer, and prevents the gearbox from spinning on the shaft.
- Additional forces present themselves in the direction opposite of the shaft rotation, due to the typical slight out-of-round condition present in the machine shaft. This condition is the reason most shaft mounted-reducers have a slight shaft-wobble, which is normal.

HARMFUL SITUATION

Always make sure that the Torque Arm (D) has the resilient rubber bushing installed into the anchor hole end of the torque arm. Failure to do so will not properly cushion the reducer and can result in excessive binding, bearing stress, and damage to the reducer.

3. Machine support

The user must supply a suitably strong and rigid mating machine support that provides load bearing capacity on both sides of the torque-arm bracket.

WARNING

It is the responsibility of the machine builder to design a support bracket of adequate strength and rigidity, and supply an appropriate tightening bolt assembly. Failure to do so may result in injury caused from a damaged or broken torque-reaction assembly.

4. Installation of a right-angle reducer with torque arm

A. Make sure the Torque-Arm (D) is mounted in the correct position on the reducer. Assembled screw heads should always sit flush with the torque arm.
   - To reposition the torque-arm, remove the mounting screws, relocate the torque-arm, and reassemble the mounting screws as noted above.
   - If the torque-arm was shipped loose, position the torque-arm in the correct location on the gear unit, and secure the torque-arm as noted above.

IMPORTANT NOTES

- Torque arm mounting screws should be secured with a thread locking product (ex. Loctite® 242 or Loxeal® 54-03) and tightened per the table on page 2.
- Assembled screw heads should always sit flush with the torque arm.
- The support bracket should provide support on both sides of the torque arm or be in the form of a U-shape.
- Do not force the torque-arm. The torque arm must remain at a right angle to the gear unit.
- If mounting holes do not align properly the machine support may need to be moved.

B. Install the right-angle hollow bore reducer onto the machine shaft. Then line up the hole in the reducer's torque-arm with the hole in the machine's support bracket, and temporarily hold the reducer in place.

C. Apply a thread locking compound such as Loctite® 242 or Loxeal® 54-03 to the end of the anchor bolt that is used to secure the torque arm in place.

D. Place the anchor bolt through the support bracket and the reducer torque-arm. Attach the mating nut to the bolt and tighten the assembly until snug. At least one bolt diameter should protrude from the nut after assembly.

WARNING

Do not force misalignment of the torque-arm. The torque arm must remain at a right angle to the gear unit or excessive load may be placed on the reducer shaft and bearings.

E. Properly secure the gear unit assembly to the driven shaft in an axial direction.

Table 1 - Torque Arm (D) with rubber buffer

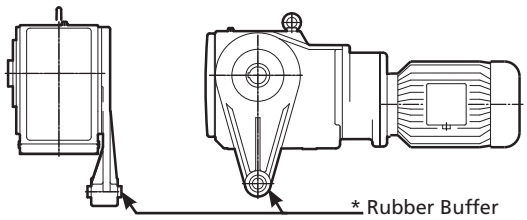

- For all 90.1 Series Helical-Bevel gear units, NORD also offers a bottom mount Torque Arm (K). See User Manual U10620.
- For the large 90.1 Series Helical-Bevel gear units sizes: SK9082.1, SK9086.1, SK9092.1, and SK9096.1, please use the Torque Arm (K).
- A metric fixing bolt is preferred for fastening the Torque-Arm(D) to the machine support bracket.

Gear Unit Series	Torque Arm				Torque Arm Mounting Screw					
	Type	Rubber Buffer P/N	Anchor Hole Size	Anchor Bolt Size	Qty	Size	Grade	Torque (Nm)	Torque (lb-ft)	Torque (lb-in)
92.1/93.1 Series Helical-Bevel	SK92072.1AD/SK93072.1AD	29602505	10.5 mm [0.41 in]	M10	4	M8 x 25	8.8	27	20	35
	SK92172.1AD/SK93172.1AD	29602505	10.5 mm [0.41 in]	M10	4	M8 x 25	8.8	27	20	35
	SK92372.1AD/SK93372.1AD	29602505	10.5 mm [0.41 in]	M10	4	M10 x 30	8.8	53	39	35
	SK92672.1AD/SK93672.1AD	29602505	10.5 mm [0.41 in]	M10	4	M10 x 30	8.8	53	39	35
	SK92772.1AD/SK93772.1AD	29603605	16.5 mm [0.65 in]	M16	4	M12 x 30	8.8	92	68	35
92 Series Helical-Bevel	SK92172AZD	29602505	10.5 mm [0.41 in]	M10	8	M6 x 16	8.8	11	8	71
	SK92372AZD	29602505	10.5 mm [0.41 in]	M10	8	M8 x 25	8.8	27	20	71
	SK92672AZD	29602505	10.5 mm [0.41 in]	M10	8	M8 x 25	8.8	27	20	71
	SK92772AZD	29603605	16.5 mm [0.65 in]	M16	8	M8 x 25	8.8	27	20	71
90.1 Series Helical-Bevel	SK9012.1AZD/SK9013.1AZD	29602505	10.5 mm [0.41 in]	M10	7	M8 x 20	8.8	27	20	62
	SK9016.1AZD/SK9017.1AZD	29602505	10.5 mm [0.41 in]	M10	7	M8 x 20	8.8	27	20	62
	SK9022.1AZD/SK9023.1AZD	29603605	16.5 mm [0.65 in]	M16	7	M8 x 25	8.8	27	20	62
	SK9032.1AZD/SK9033.1AZD	29603605	16.5 mm [0.65 in]	M16	7	M10 x 30	8.8	53	39	62
	SK9042.1AZD/SK9043.1AZD	29605205	25 mm [0.98 in]	M24	7	M12 x 35	8.8	92	68	62
	SK9052.1AZD/SK9053.1AZD	29605205	25 mm [0.98 in]	M24	7	M12 x 35	8.8	92	68	62
	SK9072.1AZD	29605205	25 mm [0.98 in]	M24	7	M16 x 45	8.8	230	170	62
Helical-Worm	SK02040AZD	29602505	10.5 mm [0.41 in]	M10	4	M6 x 20	8.8	11	8	35
	SK02050AZD/SK13050AZD	29602505	10.5 mm [0.41 in]	M10	4	M8 x 20	8.8	27	20	35
	SK12063AZD/SK13063AZD	29602505	10.5 mm [0.41 in]	M10	7	M8 x 22	8.8	27	20	62
	SK12080AZD/SK13080AZD	29602505	10.5 mm [0.41 in]	M10	7	M10 x 25	8.8	53	39	62
	SK32100AZD/SK33100AZD	29603605	16.5 mm [0.65 in]	M16	7	M12 x 30	8.8	92	68	62
	SK42125AZD/SK43125AZD	29603605	16.5 mm [0.65 in]	M16	7	M12 x 30	8.8	92	68	62
MINICASE® SMI Series Worm	SK1SMI31AZD	29602505	10.5 mm [0.41 in]	M10	4	M6 x 16	8.8	11	8	35
	SK1SMI40AZD/SK2SMI40AZD	29602505	10.5 mm [0.41 in]	M10	4	M8 x 22	8.8	27	20	35
	SK1SMI50AZD/SK2SMI50AZD	29602505	10.5 mm [0.41 in]	M10	4	M8 x 22	8.8	27	20	35
	SK1SMI50AZD/SK2SMI50AZD	29602505	10.5 mm [0.41 in]	M10	4	M8 x 22	8.8	27	20	35
	SK1SMI63AZD/SK2SMI63AZD	29602505	10.5 mm [0.41 in]	M10	4	M10 x 25	8.8	53	39	35
	SK1SMI75AZD	29602505	10.5 mm [0.41 in]	M10	4	M12 x 30	8.8	92	68	35
MINICASE® SM Series Worm	SK1SM31AZD	29602505	10.5 mm [0.41 in]	M10	4	M6 x 20	8.8	11	8	35
	SK1SM40AZD/SK2SM40AZD	29602505	10.5 mm [0.41 in]	M10	4	M8 x 20	8.8	27	20	35
	SK1SM50AZD/SK2SM50AZD	29602505	10.5 mm [0.41 in]	M10	4	M8 x 20	8.8	27	20	35
	SK1SM63AZD/SK2SM63AZD	29602505	10.5 mm [0.41 in]	M10	4	M8 x 20	8.8	27	20	35
"FLECBLOC™ SI Series Worm"	SK1SI31D	29602505	10.5 mm [0.41 in]	M10	4	M6 x 16	8.8	11	8	35
	SK1SI40D	29602505	10.5 mm [0.41 in]	M10	4	M8 x 22	8.8	27	20	35
	SK1SI50D	29602505	10.5 mm [0.41 in]	M10	4	M8 x 22	8.8	27	20	35
	SK1SI63D	29602505	10.5 mm [0.41 in]	M10	4	M10 x 25	8.8	53	39	35
	SK1SMI75D	29602505	10.5 mm [0.41 in]	M10	4	M12 x 30	8.8	92	68	35

90.1 HELICAL-BEVEL SHAFT-MOUNT WITH BOTTOM MOUNT TORQUE ARM (K)

1. Torque arm (K)

The preferred method of installing a shaft-mounted reducer is to support the weight of the gear unit or gearmotor assembly from the driven solid machine shaft. A torque arm is required in order to restrain the gearbox, react to the load torque, and keep the gear unit from spinning around the shaft.

Table 1 (Page 2) provides a list of Torque-Arm (K) part numbers available for the 90.1 Series Helical-Bevel gear units. The Torque Arm (K) is secured to the base of the reducer. On most sizes there is an integral resilient rubber bushing located at the fastening hole-end of the torque arm. On the larger sizes, rubber buffers are used in conjunction with the torque arm and when properly used they are applied in tandem, on either side of the torque arm lug.

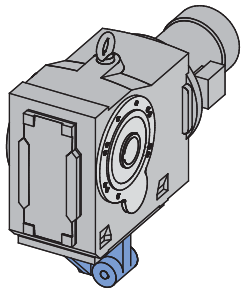

IMPORTANT NOTE

When ordering the Torque Arm (K) one can specify which side of the reducer to mount the fastening hole that bolts to the machine support bracket. Consult the appropriate NORD catalog for specific Torque Arm (K) mounting options and ordering guidelines.

2. Purpose of the rubber bushing or rubber buffers

Regardless if the Torque Arm (K) is supplied with the integral rubber bushing or whether separate rubber buffers are required, the bushing/buffers help isolate and absorb all the load forces present in the system and increase the reducer's service life by reducing cumulative torsional shock loads.

- The primary load force acts in the direction of driven shaft rotation, reacts the load torque of the reducer, and prevents the gearbox from spinning on the shaft.
- Additional forces present themselves in the direction opposite of the shaft rotation, due to the typical slight out-of-round condition present in the machine shaft. This condition is the reason most shaft mounted-reducers have a slight shaft-wobble, which is normal.

HARMFUL SITUATION

Always make sure that the Torque Arm (K) is used in conjunction with the required rubber bushing/s. Failure to do so will not properly cushion the reducer and can result in excessive binding, bearing stress, and damage to the reducer.

3. Machine support

The user must supply a suitably strong and rigid mating machine support that provides load bearing capacity on both sides of the machine support bracket.

WARNING

It is the responsibility of the machine builder to design a support bracket of adequate strength and rigidity, and supply an appropriate tightening bolt assembly. Failure to do so may result in injury caused from a damaged or broken torque-reaction assembly.

4. Installation of the right-angle reducer with torque arm (K)

A. Make sure the Torque-Arm (K) is mounted so that the machine fastening hole is on the correct side of the reducer.
   - The torque-arm can be repositioned on the as-received unit by removing the fixing screws, re-position the torque-arm in the correct location, and re-securing the fixing screws to the proper tightening torque, as indicated in Table 2 (Page 2).
   - If the torque-arm was shipped loose, position the torque-arm in the correct location on the gear unit, and secure the torque-arm with the proper fixing screws & tightening torque, as indicated in Table 2 (Page 2).

B. Install the right-angle hollow bore reducer onto the machine shaft. Line up the hole in the reducer's torque-arm with the hole in the machine's support bracket ,and temporarily hold the reducer in place

C. Properly secure the gear unit assembly to the driven shaft in an axial direction.

D. Apply thread locking compound to the end of the fixing bolt, then place the fastening bolt through the rigid machine support bracket and reducer torque-arm and loosely secure the nut onto the end of the bolt.

E. If the torque arm has an integral rubber bushing follow step F and skip steps G-H. If the torque arm uses rubber buffers skip forward to steps G-H.

F. Tighten the fixing bolt to the proper tightening torque as indicated in Table 2 (Page 2).

G. Install the rubber buffers on either side of the gear unit's torque-arm lug and place the fixing bolt through the rubber buffers and torque-arm lug and into the rigid machine support bracket.

H. Tighten the fixing bolt and nut lightly snug, until all the free-play is eliminated from the rubber buffer assembly. Then snug the fixing bolt assembly by tightening an additional ¼ to ½ turn.

WARNING

To prevent damage to the rubber buffers, avoid over-tightening.

90.1 HELICAL-BEVEL SHAFT-MOUNT WITH BOTTOM MOUNT TORQUE ARM (K)

Torque Arm (K) with integrated bushing

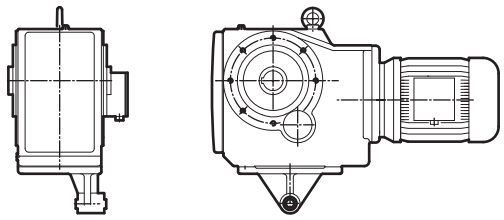

Available for Sizes SK9012.1 - SK9072.1

Torque Arm (K) with rubber buffer

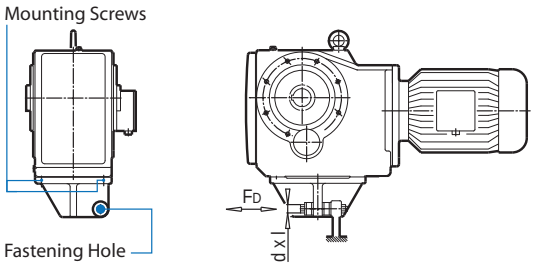

Available for Sizes SK9082.1 - SK90906.1

- For most all 90.1 series Helical-Bevel gear units, an optional tear-drop shaped side -mounted torque arm (D) is available. See user manual U10600.
- A metric fixing bolt is preferred for fastening the torque arm (K) to the machine support bracket.

Type	Torque Arm P/N	Reducer Hardware Hex Head Cap Screws + Lock Washer	Mounting Screw P/N	Lock Washer P/N	Rubber Buffer P/N	Fastening Hole In [mm]	Fastening Bolt Size	Bolt d x l [metric]	FD lb [N]	SFD inch [mm]
SK9012.1...K SK9013.1...K	68190600	M10 X 30 + A10 (Qty 3 Ea.)	22010300	28560106	N/A	0.41 [10.5]	M10	N/A	N/A	N/A
SK9016.1...K SK9017.1...K	68190600	M10 X 30 + A10 (Qty 3 Ea.)	22010300	28560106	N/A	0.41 [10.5]	M10	N/A	N/A	N/A
SK9022.1...K SK9023.1...K	68290610	M12 X 35 + A12 (Qty 3 Ea.)	22012350	28560126	N/A	0.65 [16.5]	M16	N/A	N/A	N/A
SK9032.1...K SK9033.1...K	68390610	M12 X 35 + A12 (Qty 3 Ea.)	22012350	28560126	N/A	0.65 [16.5]	M16	N/A	N/A	N/A
SK9042.1...K SK9043.1...K	68490610	M16 X 40 + A16 (Qty 3 Ea.)	22016400	28560166	N/A	0.98 [25]	M24	N/A	N/A	N/A
SK9052.1...K SK9053.1...K	68590620	M16 X 40 + A16 (Qty 3 Ea.)	22016450	28560166	N/A	0.98 [25]	M24	N/A	N/A	N/A
SK9072.1...K	68690620	M24 X 60 + A24 (Qty 4 Ea.)	22024060	28560246	N/A	0.98 [25]	M24	N/A	N/A	N/A
SK9082.1...K SK9082.1...SHK	68819010	M24 x 65 + A24 (Qty 4 Ea.)	22024650	22024650	29610000	1.22 [31]	M30	M30 x 260	5300 [23.64]	0.53 [13.5]
SK9086.1...K SK9086.1...SHK	68819010	M24 x 65 + A24 (Qty 4 Ea.)	22024650	22024650	29610000	1.22 [31]	M30	M30 x 260	6900 [30.77]	0.69 [17.6]
SK9092.1...SHK	68919010	M36 x 90 + A36 (Qty 4 Ea.)	22036900	28560366	29610000	1.22 [31]	M30	M30 x 260	10300 [45.71]	1.03 [26.2]
SK9096.1...SHK	69019000	M42 x 120 + A42 (Qty 4 Ea.)	22042120	28560426	29621800	1.93 [49]	M48	M48 x 550	12,500 [55.56]	1.06 [27.0]

HELICAL & BEVEL REDUCER LUBRICATION

1. Importance of proper lubrication

Proper gearbox lubrication is essential in order to reduce friction, heat, and component wear. Lubricants reduce heat and wear by inserting a protective "fluid boundary" between mating parts and preventing direct metal to metal contact. Lubricants also help prevent corrosion and oxidation, minimize foam, improve heat transfer, optimize reducer efficiency, absorb shock loads and reduce noise.

Most NORD reducers are shipped from the factory with a pre-determined oil fill level in accordance to the specified reducer size and mounting position.

2. Standard oil type

The following tables indicate the standard oil fill type used. Please see user manual U11000 for more specific information and for optional helical and bevel gear lubricants:

Serviceable Gear Units	
Helical In-line	Standard Oil Fill: ISO VG 220, Mineral Oil
Clincher Parallel-Shaft	
Right-Angle Bevel	
NORDBLOC® Series In-line	
NORDBLOC®.1 Series In-line	
Standard Series In-line	

IMPORTANT NOTE

For shipping purposes, the following large Clincher™ gear units are supplied without oil:
• Clincher™ Sizes SK11282, SK11382 and SK12382

Maintenance-free / Lubricated For Life Gear Units	
Clincher™ sizes SK0182NB, SK0282NB & SK1382NB	Standard Oil Fill: ISO VG220 SHC/PAO Synthetic Oil
NORDBLOC® Sizes SK172, SK272, SK371F, SK372, SK373, SK320	

IMPORTANT NOTE

Maintenance-free units are supplied as sealed units with no vent-plug. Consult NORD prior to ordering if interested in ordering any of the above sizes as serviceable gear units.

IMPORTANT NOTE

Consult the sticker adjacent to the fill plug to determine the type of lubricant installed at the factory. Some units have special lubricants designed to operate in certain environments or intended to extend the service life or service temperature range of the lubricant. If in doubt about which lubricant is needed for a certain application, please contact NORD Gear.

3. Lubrication replacement

If the gear unit is filled with mineral oil, the lubricant should be replaced at least after every 10,000 operating hours or after every two years. If the gear unit is filled with synthetic oil, the lubricant should be replaced at least after every 20,000 operating hours or after every four years. Often gear reducers are exposed to extreme ambient conditions, hostile environments, wet conditions, or dirty and dusty operating areas. Especially in these situations, it is important to establish a condition-based oil service interval.

4. Oil viscosity

Viscosity, or the oil's resistance to shear under load, is often considered the single most important property of any gear oil.

- Often one will consider making a viscosity correction to the oil to improve the performance when operating the gear unit at low temperature or high temperature.
- In cases of extreme load conditions, gear pairs and antifriction bearings may be more susceptible to sliding or scuffing wear. In these operating conditions, it may also be beneficial to consider an increased lubrication viscosity and/or a lubrication with improved antiwear additive packages.

IMPORTANT NOTE

The user should consult with their primary lubrication supplier before considering changes in oil type or viscosity.

5. Maximum oil sump temperature limit

To prevent reducer overheating, the reducer's maximum oil sump temperature limit must not be exceeded for prolonged periods of operation (up to 3 hours continuous operation depending upon reducer size).

Oil Type	Maximum Oil Temperature Limit	
	NORD	AGMA 9005-D94
Mineral	80-85°C (176-185°F)	95°C (203°F)
Synthetic	105°C (220°F)	107°C (225°F)

IMPORTANT NOTE

Use caution when specifying gear reducers for high temperature service. If there is concern about exceeding the allowable safe operating temperatures, please consult NORD to discuss alternatives.

6. The importance of routine oil analysis

Routine oil analysis, sound lubrication practices, and good tracking of oil performance trends will help establish proper lubrication maintenance and change-out intervals. To maximize equipment reliability, NORD Gear generally recommends a condition-based lubrication maintenance program. One may take exceptions to this general recommendation on sealed-for-life or maintenance-free gear units or smaller and less costly gear units. In these instances, the replacement cost of the gear unit is often small compared to the costs associated with this type of oil analysis program.

STOP *HARMFUL SITUATION* **STOP**

NORD suggests replacing the gear oil if oil analysis indicates any of the following:

- Viscosity has changed by approximately 10% or more.
- Debris particles (silicon, dust, dirt or sand) exceed 25 ppm.
- Iron content exceeds 150-200 ppm.
- Water content is greater than 0.05% (500 ppm).
- The total acid number (TAN) tests indicate a significant level of oxidative break-down of the oil, and a critical reduction in performance; If the TAN number measured changes by more than 5% over the new oil, then an oil change would be recommended.

7. Mounting position and oil fill quantity

All NORD Gear reducers are shipped from the factory with a pre-determined oil fill level in accordance to the specified reducer size and mounting position. ***For additional information, please see the seperate mounting position diagrams and the corresponding oil fill quantity tables for the specified gear unit.***

The gearbox nametag will indicate the mounting position that was provided. ***For mounting orientations other than shown in the mounting position charts, please consult NORD Gear.***

STOP *HARMFUL SITUATION* **STOP**

Actual oil volume can vary slightly depending upon the gear case size, mounting and ratio. Prior to commissioning the reducer, check the oil-fill level using the reducer's oil-level plug and drain or add additional oil as needed. The minimum acceptable oil level is 0.15 in (4mm) below the oil level hole.

8. Oil plug locations

All gear units are assembled with the oil fill-level, oil-drain and vent plugs installed in their proper locations, according to the specified mounting position. All standard plugs are metric and utilize sealing gaskets between the head of the plug and the reducer housing.

9. Drain and fill-level plugs

All reducer drain plugs are metric socket head cap screws. For easier identification, it is NORD's standard practice to provide a hex-head screw for the fill-level plug. For ease of draining the used oil from the gear reducer, use the socket head screw located at the lowest part of the gearbox.

Drain Plug

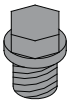

Fill Level Plug

10. Vent plug locations

Reducer venting allows for air pressure differences that occur during operation, between the inner space of the reducer and the atmosphere, while ensuring leak-free operation. The AUTOVENT™ is standard for all vented gear units, unless otherwise noted.

AUTOVENT™ - The AUTOVENT™ helps prevent bearing and gear damage by behaving like a check valve to block the entry of foreign material (water, dust, corrosives, etc.). The breather opens at approximately 2-3 psi during operation and closes tightly as the gearbox cools. This option is perfect for humid conditions and wash-down environments, helping to maintain proper oil cleanliness, and reducing foaming and oxidation. NORD may choose to offer one of two style options as shown in Figure 1. The Type 2 AUTOVENT™ comes closed upon delivery with a transportation sealing plug (see Warning).

Figure 1 AUTOVENT™ Types

Type 1

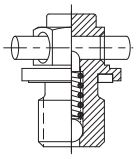

Type 2 with transportation plug

Open Vent - An optional open vent can be supplied by NORD. The open vent comes closed upon delivery with a transportation sealing plug (see Warning).

⚠ *WARNING* ⚠

To prevent build-up of excessive pressure, sealed vents must be activated as shown prior to gear unit start up.

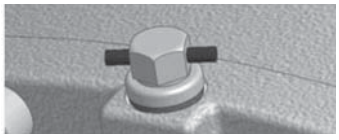

Sealed vent

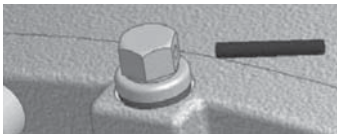

Activated vent

Filtered Vent - NORD may offer an optional filtered vent, which allows gases to permeate, but does not allow dust and debris to pass through the vent.

VL2 & VL3
EXTENDED BEARING LUBRICATION

1. VL2 – Spread Bearing Design

NORD offers reinforced output shaft bearings with increased bearing distance. The lower bearing is a oversized, double row spherical bearing, which absorbs high overhung and thrust loads while providing a longer bearing service life. The spherical roller bearing is especially useful in compensating for alignment errors in long agitator shafts. The VL2 spread bearing design is commonly used for shredders, mixers, overhead conveyors or applications requiring increased bearing load carrying capacities. Included with the VL2 design is a grease fitting for the lower bearing and a removable plug to allow excess grease to purge from the bearing cavity.

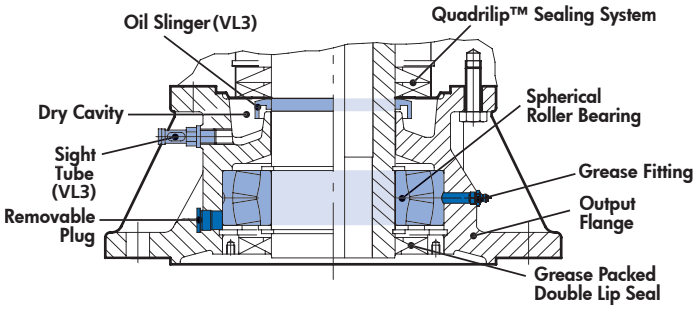

2. VL3 – Spread Bearing Design with Oil Safe Dry Cavity

The VL3 dry cavity design adds additional oil leak protective measures to the VL2 spread bearing design. NORD's Quadralip™ sealing system prevents oil from leaking from the gearbox into the VL2 flange. If in any case oil does leak past the Quadralip™ seals, it would flow down to the oil slinger mounted onto the shaft. As the shaft rotates, the oil will sling off into the dry cavity. A sight tube is provided for dry cavity inspection. At the bottom of the spread bearing flange is greased packed, double lip seal.

3. Service Guidelines for the Extended Bearing Flange

The spherical roller bearing on the extended bearing housing should be re-greased with 0.75 to 1.0 ounces (20-25 grams) of grease after every 2,500 hours of service or at least every 6 months. Prior to re-greasing the screw plug located opposite to the grease nipple should be unscrewed. After re-greasing the screw plug must be reinstalled and tightened. The extended bearing is factory assembled with the proper amount and type of grease. The type of grease supplied depends upon the type of oil specified at time of order.

Bearing Grease Options

Reducer Oil Type	Grease Type	Thickener Type	NLGI Grade	Ambient Temperature Range	Manufacture Brand / Type
Mineral	Standard	Li-Complex	NLGI 2	-30 to 60 °C (-22 to 140 °F)	Mobil Grease XHP222
Synthetic	High-Temperature	Polyurea	NLGI 2	-25 to 80 °C (-13 to 176 °F)	Mobil / Polyrex EP 2
Food-Grade	Food-Grade	Al-Complex	NLGI 2	-25 to 40 °C (-13 to 104 °F)	Mobil / FM222

STOP *HARMFUL SITUATION* STOP

Grease compatibility depends upon the type of thickener or soap complex used, the base oil type suspended within the thickener, and the type of additives used. The user should check with the lubrication supplier before making substitutions in brand and type in order to assure compatibility and to avoid causing possible damage to the extended bearing.

HELICAL-WORM REDUCER LUBRICATION

1. Importance of proper lubrication

Proper gearbox lubrication is essential in order to reduce friction, heat, and component wear. Lubricants reduce heat and wear by inserting a protective "fluid boundary" between mating parts and preventing direct metal to metal contact. Lubricants also help prevent corrosion and oxidation, minimize foam, improve heat transfer, optimize reducer efficiency, absorb shock loads and reduce noise.

NORD helical-worm reducers are shipped from the factory with a pre-determined oil fill level in accordance to the specified reducer size and mounting position.

2. Standard oil type

NORD helical worm gear reducers are filled with ISO VG 680 synthetic-hydrocarbon/polyalphaolefin (SHC/PAO) worm gear oil.

- SHC/PAO worm gear oils have good high and low temperature stability, are compatible with most paint and seal types, and are miscible with mineral oils.
- SHC/PAO worm gear oils also contain a small amount of organic ester and other antiwear (AW) packages to offer improved lubrication conditions, especially in the worm mesh, where a sideways sliding motion prevails.

Please see user manual U11020 for more specific information and for optional helical worm lubricants.

HARMFUL SITUATION

In worm gears avoid using extreme pressure (EP) gear oils containing sulfur-phosphorous chemistries; these additives can react adversely with bronze worm gears, and accelerate wear.

IMPORTANT NOTE

Consult the sticker adjacent to the fill plug to determine the type of lubricant installed at the factory. Some units have special lubricants designed to operate in certain environments or intended to extend the service life or service temperature range of the lubricant. If in doubt about which lubricant is needed for a certain application, please contact NORD Gear.

3. Lubrication replacement

The helical-worm gear oil should be replaced at least after every 20,000 operating hours or after every four years. Often gear reducers are exposed to extreme ambient conditions, hostile environments, wet conditions, or dirty and dusty operating areas. Especially in these situations, it is important to establish a condition-based oil service interval.

4. Efficiency

Helical worm gears reach efficiencies up to 92% and are generally much more efficient than worm-only gear units. However, it is important to consider the following, when using worm gears.

- Worm gears reach their peak rated efficiency, after they undergo a natural run-in process (up to 25 hours operating time at maximum rated load). Catalog published power and torque figures are based upon the rated efficiency after the run-in is complete.
- Worm gears have naturally lower startup efficiencies compared to operating efficiencies. As input speed increases the enhanced hydrodynamic effects of the oil result in less tooth friction and increased worm gear efficiency.

IMPORTANT NOTE

Worm gear reducers applied in cold temperature service, may require increased motor power for the following reasons:

- Lower operating temperatures, cause lubrication viscosity to increase in both the gearbox and in the moving areas of the driven machine.
- Worm-gears have naturally lower start-up efficiencies compared to operating efficiencies.
- In extreme cases, one might need to consider increasing the motor power and lowering the oil viscosity

5. Oil Viscosity

Viscosity, or the oil's resistance to shear under load, is often considered the single most important property of any gear oil.

- Often one will consider making a viscosity correction to the oil to improve the performance when operating the gear unit at low temperature or high temperature.
- In cases of extreme load conditions, gear pairs and antifriction bearings may be more susceptible to sliding or scuffing wear. In these operating conditions, it may also be beneficial to consider an increased lubrication viscosity and/or a lubrication with improved antiwear additive packages.

IMPORTANT NOTE

The user should consult with their primary lubrication supplier before considering changes in oil type or viscosity.

6. Maximum oil sump temperature limit

To prevent reducer overheating, the reducer's maximum oil sump temperature limit must not be exceeded for prolonged periods of operation (up to 3 hours continuous operation depending upon reducer size).

Oil Type	Maximum Oil Temperature Limit	
	NORD	AGMA 9005-D94
Synthetic	105°C (220°F)	107°C (225°F)

IMPORTANT NOTE

Use caution when specifying gear reducers for high temperature service. If there is concern about exceeding the allowable safe operating temperatures, please consult NORD to discuss alternatives.

7. The importance of routine oil analysis

Routine oil analysis, sound lubrication practices, and good tracking of oil performance trends will help establish proper lubrication maintenance and change-out intervals. To maximize equipment reliability, NORD Gear generally recommends a condition-based lubrication maintenance program. One may take exceptions to this general recommendation on sealed-for-life or maintenance-free gear units or smaller and less costly gear units. In these instances, the replacement cost of the gear unit is often small compared to the costs associated with this type of oil analysis program.

STOP *HARMFUL SITUATION* **STOP**

NORD suggests replacing the gear oil if oil analysis indicates any of the following:

- Viscosity has changed by approximately 10% or more.
- Debris particles (silicon, dust, dirt or sand) exceed 25 ppm.
- Iron content exceeds 150-200 ppm.
- Water content is greater than 0.05% (500 ppm).
- The total acid number (TAN) tests indicate a significant level of oxidative break-down of the oil, and a critical reduction in performance; If the TAN number measured changes by more than 5% over the new oil, then an oil change would be recommended.

8. Mounting position and oil fill quantity

All NORD Gear reducers are shipped from the factory with a pre-determined oil fill level in accordance to the specified reducer size and mounting position. ***For additional information, please see the seperate mounting position diagrams and the corresponding oil fill quantity tables for the specified gear unit.***

The gearbox nametag will indicate the mounting position that was provided. ***For mounting orientations other than shown in the mounting position charts, please consult NORD Gear.***

STOP *HARMFUL SITUATION* **STOP**

Actual oil volume can vary slightly depending upon the gear case size, mounting and ratio. Prior to commissioning the reducer, check the oil-fill level using the reducer's oil-level plug and drain or add additional oil as needed. The minimum acceptable oil level is 0.15 in (4mm) below the oil level hole.

9. Oil plug locations

All gear units are assembled with the oil fill-level, oil-drain and vent plugs installed in their proper locations, according to the specified mounting position. All standard plugs are metric and utilize sealing gaskets between the head of the plug and the reducer housing.

10. Drain and fill-level plugs

All reducer drain plugs are metric socket head cap screws. For easier identification, it is NORD's standard practice to provide a hex-head screw for the fill-level plug. For ease of draining the used oil from the gear reducer, use the socket head screw located at the lowest part of the gearbox.

Drain Plug

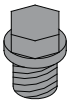

Fill Level Plug

11. Vent plug locations

Reducer venting allows for air pressure differences that occur during operation, between the inner space of the reducer and the atmosphere, while ensuring leak-free operation. The AUTOVENT™ is standard for all vented gear units, unless otherwise noted.

AUTOVENT™ - The AUTOVENT™ helps prevent bearing and gear damage by behaving like a check valve to block the entry of foreign material (water, dust, corrosives, etc.). The breather opens at approximately 2-3 psi during operation and closes tightly as the gearbox cools. This option is perfect for humid conditions and wash-down environments, helping to maintain proper oil cleanliness, and reducing foaming and oxidation. NORD may choose to offer one of two style options as shown in Figure 1. The Type 2 AUTOVENT™ comes closed upon delivery with a transportation sealing plug (see Warning).

Figure 1 AUTOVENT™ Types

Type 1

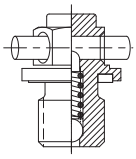

Type 2 with transportation plug

Open Vent - An optional open vent can be supplied by NORD. The open vent comes closed upon delivery with a transportation sealing plug (see Warning).

⚠ *WARNING* **⚠**

To prevent build-up of excessive pressure, sealed vents must be activated as shown prior to gear unit start up.

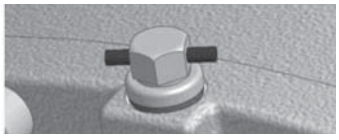

Sealed vent

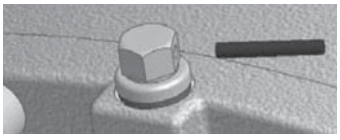

Activated vent

Filtered Vent - NORD may offer an optional filtered vent, which allows gases to permeate, but does not allow dust and debris to pass through the vent.

MINICASE® (SM SERIES) WORM GEAR LUBRICATION GUIDELINES

1. Importance of proper gearbox lubrication

Proper gearbox lubrication is essential in order to reduce friction, heat, and component wear. Lubricants reduce heat and wear by inserting a protective "fluid boundary" between mating parts and preventing direct metal to metal contact. Lubricants also help prevent corrosion and oxidation, minimize foam, improve heat transfer, optimize reducer efficiency, absorb shock loads and reduce noise.

2. Maintenance free design

MINICASE® (SM series) worm gear reducers are designed to be maintenance-free and are supplied completely sealed. They are factory oil-filled with a pre-determined oil fill amount in accordance to the specified reducer size and mounting position. The synthetic lubrication used is suitable for the life of the product so the MINICASE™ is inherently maintenance free.

3. Standard oil type

The standard factory oil fill for MINICASE® (SM) worm gear reducers is ISO viscosity VG synthetic hydrocarbon/polyalphaolefin (SHC/PAO oil) food grade oil suitable for NSF-H1 incidental contact and is a factory stocked lubricant. Food grade oil suitable for NSF-H1 incidental contact is a factory stocked option.

See user manual U11040 for specific information and for optional MINICASE® (SM) worm lubrication types and options.

HARMFUL SITUATION

In worm gears avoid using extreme pressure (EP) gear oils containing sulfur-phosphorous chemistries; these additives can react adversely with bronze worm gears, and accelerate wear.

4. Efficiency

It is important to consider the following, when using worm gears.

- Worm gears reach their peak rated efficiency, after they undergo a natural run-in process (up to 25 hours operating time at maximum rated load). Catalog published power and torque figures are based upon the rated efficiency after the run-in is complete.
- Worm gears have naturally lower startup efficiencies compared to operating efficiencies. As input speed increases the enhanced hydrodynamic effects of the oil result in less tooth friction and increased worm gear efficiency.

IMPORTANT NOTE

Worm gear reducers applied in cold temperature service, may require increased motor power for the following reasons:

- Lower operating temperatures, cause lubrication viscosity to increase in both the gearbox and in the moving areas of the driven machine.
- Worm-gears have naturally lower start-up efficiencies compared to operating efficiencies.
- In extreme cases, one might need to consider increasing the motor power and/or lowering the oil viscosity.

5. Maximum oil sump temperature limit

To prevent reducer overheating, the reducer's maximum oil sump temperature limit must not be exceeded for prolonged periods of operation (up to 3 hours continuous operation depending upon reducer size).

Oil Type	Maximum Oil Temperature Limit	
	NORD	AGMA 9005-D94
Synthetic	105°C (220°F)	107°C (225°F)

IMPORTANT NOTE

Use caution when specifying gear reducers for high temperature service. If there is concern about exceeding the allowable safe operating temperatures, please consult NORD to discuss alternatives.

6. Oil Viscosity

The viscosity rating determines the operating oil's resistance to shear under load conditions. Some important viscosity considerations include the following:

- Lightly loaded gears require lower viscosity oils than highly loaded gears.
- Lower viscosity will provide thin oil film, lower friction, higher mechanical efficiency, and better heat removal conditions.
- Higher viscosity will provide thicker oil film, and better resistance to sliding wear, scuffing wear, and galling at high pressure.
- Higher operating temperatures will cause a reduction in viscosity and lower operating temperatures, cause an increase in viscosity or a thickening of the oil.

The standard oil-fill is considered acceptable for most applications. In certain situations an oil viscosity change may be beneficial.

- If the gear unit is exposed to frequent high load conditions. A higher viscosity oil will have a higher film thickness offering better overall resistance to oil shear, sliding wear and scuffing wear in gears and roller element bearings.
- An oil viscosity correction or lubrication change may improve the overall performance when operating the gear unit at very low or high ambient temperature conditions.

IMPORTANT NOTE

The user should consult with their primary lubrication supplier before considering changes in oil type or viscosity.

7. Viscosity Index

Viscosity index helps quantify the rate of oil viscosity change with respect to temperature changes. Oils with a reasonably high viscosity index tend to be more stable in a changing temperature environment. The ability of an oil to maintain a small viscosity differential over the operating range of the gearbox provides a more consistent lubricating film and better wear performance.

Synthetic oils typically have a higher viscosity index than mineral oils and polyglycol oils tend to have an exceptionally high viscosity index compared to other synthetic oils like polyalphaolefin or ester based products.

MINICASE® (SMI/SMID) WORM GEAR LUBRICATION GUIDELINES

1. Importance of proper gearbox lubrication

Proper gearbox lubrication is essential in order to reduce friction, heat, and component wear. Lubricants reduce heat and wear by inserting a protective "fluid boundary" between mating parts and preventing direct metal to metal contact. Lubricants also help prevent corrosion and oxidation, minimize foam, improve heat transfer, optimize reducer efficiency, absorb shock loads and reduce noise.

2. Factory Oil-Filled / Maintence-Free

NORD modular worm gear units are inherently maintence-free, factory oil filled, and supplied with a high-quality, long-life, synthetic oil which is intend to be suitable for the life of the gear unit.

MINICASE® (SMI/SMID) worm gear units are assembled at the factory from stocked component parts. They are filled at time of assembly in accordance to the specified reducer mounting position. See user manuals U13150 and U13250 for more info.

3. Standard Oil Types

MINICASE® (SMI/SMID) worm gear units are factory filled with synthetic poly glycol oil. Food-grade polyglycol oil is optional. The specific oil type and viscosity grade are displayed on the reducer nameplate. See user manual 11050 for specific MINICASE® (SMI/SMID) worm lubrication types and options.

STOP *HARMFUL SITUATION* **STOP**

In worm gears avoid using extreme pressure (EP) gear oils containing sulfur-phosphorous chemistries; these additives can react adversely with bronze worm gears, and accelerate wear.

4. Efficiency

It is important to consider the following, when ordering worm gears.

- Worm gears reach their peak rated efficiency, after they undergo a natural run-in process (up to 25 hours operating time at maximum rated load). Catalog published power and torque figures are based upon the rated efficiency after the run-in is complete.
- Worm gears have naturally lower startup efficiencies compared to operating efficiencies. As input speed increases the enhanced hydrodynamic effects of the oil result in less tooth friction and increased worm gear efficiency.

IMPORTANT NOTE

Worm gear reducers applied in cold temperature service, may require increased motor power for the following reasons:

- Lower operating temperatures, cause lubrication viscosity to increase in both the gearbox and in the moving areas of the driven machine.
- Worm-gears have naturally lower start-up efficiencies compared to operating efficiencies.
- In extreme cases, one might need to consider increasing the motor power and lowering the oil viscosity

5. Optional Vent Kits

MINICASE® (SMI/SMID) worm gear units are designed to operate sealed or vented. As a standard the modular worm gear units are factory oil filled and supplied with oil plugs in the housing, making vent plugs optional. See user manual U14750.

NORD can supply an AUTOVENT™ or an open vent with each gear unit size. If a vent is desired the type must be specified at the time of order. Reducer vents are sealed with a transportation plug that must be removed prior to gear unit start-up.

Type	Transportation Seal	Installation	Part Number
AUTOVENT™	Included	Factory or Field site	66093510
Open Vent	None	Field Only	60693500
Open Vent	Included	Factory or Field site	22008004 (vent) 25308120 (gasket)

Unless noted by a seperate part number, vent kits include the housing gasket

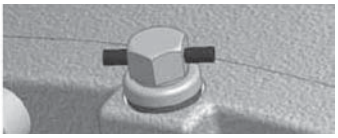

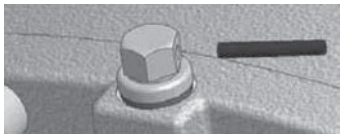

WARNING

To prevent build-up of excessive pressure, sealed vents must be activated as shown prior to gear unit start-up.

6. AUTOVENT™

The AUTOVENT™ helps prevent bearing and gear damage by behaving like a check valve to block the entry of foreign material (water, dust, corrosives, etc.). The breather opens at approximately 2-3 psi during operation and closes tightly as the gearbox cools. This option is perfect for humid conditions and wash-down environments, helping to maintain proper oil cleanliness, while reducing foaming and oxidation.

7. Open Vent

A typical gearbox industry open vent option can also be supplied by NORD. This option allows free exchange of air and does not build-up any back pressure inside the gear unit. This option is ideal for many operating conditions where the geared product is used in relatively clean and moisture-free environment.

8. When to Use a Sealed or a Vented Unit

There are many conditions that should be considered when deciding whether to use a sealed or vented unit.

1. If the duty cycle is intermittent, the run times are short, and any build-up of internal pressure or temperature is relatively low, the sealed unit option may be used.
2. If running continuous and under moderate to high load conditions, worm gears can generate higher operating temperatures and a build-up of internal pressure. In these instances a vent is strongly recommended. Consult NORD if operation at high load conditions is required.
3. If running continuous at 4-pole electric motor speeds (1800 rpm at 60 Hz) or higher, then a vent option is usually recommended. Consult NORD if operation at higher speeds is required.
4. Radial shaft seals produce a hydrodynamic pumping action to help push lubricant back into the gear unit, causing a small amount of ingested air and a small pressure increase (1-2 psi) that does not normally require a reducer vent; however when combined with continuous operation under high load (Condition 2), additional operating pressures will result and a vent should be used.
5. When the environment is contaminated with water, dirt, or other objects that may be ingested into the breather, increased wear of bearings, gearing, and lubrication breakdown can result. In these instances the sealed option or an AUTOVENT™ should be considered.

9. Maximum Oil Sump Temperature Limit

To prevent reducer overheating, the reducer's maximum oil-sump temperature limit must not be exceeded for prolonged periods of operation.

Oil Type	Maximum Oil Temperature Limit	
	NORD	AGMA 9005-D94
Synthetic	105°C (220°F)	107°C (225°F)

IMPORTANT NOTE

Use caution when specifying gear reducers for high temperature service. If there is concern about exceeding the safe operating temperature limit, please consult NORD to discuss alternatives.

10. Oil Viscosity

The viscosity rating determines the operating oil's resistance to shear under load conditions. Some important viscosity considerations include the following:

- Lightly loaded gears require lower viscosity oils than highly loaded gears.
- Lower viscosity will provide thin oil film, lower friction, higher mechanical efficiency, and better heat removal conditions.
- Higher viscosity will provide thicker oil film, and a better resistance to sliding wear, scuffing wear, and galling at high pressure.
- Higher operating temperatures will cause a reduc-tion in viscosity and lower operating temperatures, cause an increase in viscosity or a thickening of the oil.

The standard oil-fill is considered acceptable for most applications. In certain situations an oil viscosity change may be beneficial.

- If the gear unit is exposed to frequent high load conditions. A higher viscosity oil will have a higher film thickness offering better overall resistance to oil shear, sliding wear and scuffing wear in gears and roller element bearings.
- An oil viscosity correction or lubrication change may improve the overall performance when operating the gear unit at very low or high ambient temperature conditions.

IMPORTANT NOTE

The user should consult with their primary lubrication supplier before considering changes in oil type or viscosity.

11. Viscosity Index

Viscosity index helps quantify the rate of oil viscosity change with respect to temperature changes. Oils with a reasonably high viscosity index tend to be more stable in a changing temperature environment. The ability of an oil to maintain a small viscosity differential over the operating range of the gearbox provides a more consistent lubricating film and better wear performance.

Synthetic oils typically have a higher viscosity index than mineral oils and polyglycol oils tend to have an exceptionally high viscosity index compared to other synthetic oils like polyalphaolefin or ester based products.

FLEXBLOC™ (SI/SID SERIES) WORM GEAR LUBRICATION GUIDELINES

1. Importance of Proper Lubrication

Proper gearbox lubrication is essential in order to reduce friction, heat, and component wear. Lubricants reduce heat and wear by inserting a protective "fluid boundary" between mating parts and preventing direct metal to metal contact. Lubricants also help prevent corrosion and oxidation, minimize foam, improve heat transfer, optimize reducer efficiency, absorb shock loads and reduce noise.

2. Factory Oil-Filled / Maintence-Free

NORD modular worm gear units are inherently maintence-free, factory oil filled, and supplied with a high-quality, long-life, synthetic oil which is intend to be suitable for the life of the gear unit.

FLEXBLOC™ SI worm gear units are filled at time of assembly to a universal oil fill, allowing for many mounting position possibilities. See user manual U13300.

3. Standard oil type

FLEXBLOC™ (SI/SID) worm gear units are factory filled with synthetic poly glycol oil. Food-grade polyglycol oil is optional. The specific oil type and viscosity grade are displayed on the reducer nameplate. See user manual 11060 for specific FLEXBLOC™ (SI/SID) worm lubrication types and options.

STOP *HARMFUL SITUATION* **STOP**

In worm gears avoid using extreme pressure (EP) gear oils containing sulfur-phosphorous chemistries; these additives can react adversely with bronze worm gears, and accelerate wear.

4. Efficiency

It is important to consider the following, when ordering worm gears.

- Worm gears reach their peak rated efficiency, after they undergo a natural run-in process (up to 25 hours operating time at maximum rated load). Catalog published power and torque figures are based upon the rated efficiency after the run-in is complete.
- Worm gears have naturally lower startup efficiencies compared to operating efficiencies. As input speed increases the enhanced hydrodynamic effects of the oil result in less tooth friction and increased worm gear efficiency.

IMPORTANT NOTE

Worm gear reducers applied in cold temperature service, may require increased motor power for the following reasons:

- Lower operating temperatures, cause lubrication viscosity to increase in both the gearbox and in the moving areas of the driven machine.
- Worm-gears have naturally lower start-up efficiencies compared to operating efficiencies.
- In extreme cases, one might need to consider increasing the motor power and lowering the oil viscosity

5. Optional Vent Kits

FLEXBLOC™ (SI) worm gear units are designed to operate sealed or vented. As a standard the modular worm gear units are factory oil filled and supplied with oil plugs in the housing, making vent plugs optional. See user manual U14800 for vent locations.

NORD can supply an AUTOVENT™ or an open vent with each gear unit size. If a vent is desired the type must be specified at the time of order. Reducer vents are sealed with a transportation plug that must be removed prior to gear unit start-up.

Type	Transportation Seal	Installation	Part Number
AUTOVENT™	Included	Factory or Field site	66093510
Open Vent	None	Field Only	60693500
Open Vent	Included	Factory or Field site	22008004 (vent) 25308120 (gasket)

Unless noted by a seperate part number, vent kits include the housing gasket

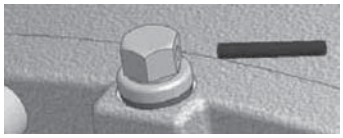

WARNING

To prevent build-up of excessive pressure, sealed vents must be activated as shown prior to gear unit start-up.

6. AUTOVENT™

The AUTOVENT™ helps prevent bearing and gear damage by behaving like a check valve to block the entry of foreign material (water, dust, corrosives, etc.). The breather opens at approximately 2-3 psi during operation and closes tightly as the gearbox cools. This option is perfect for humid conditions and wash-down environments, helping to maintain proper oil cleanliness, while reducing foaming and oxidation.

7. Open Vent

A typical gearbox industry open vent option can also be supplied by NORD. This option allows free exchange of air and does not build-up any back pressure inside the gear unit. This option is ideal for many operating conditions where the geared product is used in relatively clean and moisture-free environment.

FLEXBLOC™ (SI/SID SERIES) WORM GEAR LUBRICATION GUIDELINES

8. When to Use a Sealed or a Vented Unit

There are many conditions that should be considered when deciding whether to use a sealed or vented unit.

1. If the duty cycle is intermittent, the run times are short, and any build-up of internal pressure or temperature is relatively low, the sealed unit option may be used.
2. If running continuous and under moderate to high load conditions, worm gears can generate higher operating temperatures and a build-up of internal pressure. In these instances a vent is strongly recommended. Consult NORD if operation at high load conditions is required.
3. If running continuous at 4-pole electric motor speeds (1800 rpm at 60 Hz) or higher, then a vent option is usually recommended. Consult NORD if operation at higher speeds is required.
4. Radial shaft seals produce a hydrodynamic pumping action to help push lubricant back into the gear unit, causing a small amount of ingested air and a small pressure increase (1-2 psi) that does not normally require a reducer vent; however when combined with continuous operation under high load (Condition 2), additional operating pressures will result and a vent should be used.
5. When the environment is contaminated with water, dirt, or other objects that may be ingested into the breather, increased wear of bearings, gearing, and lubrication breakdown can result. In these instances the sealed option or an AUTOVENT™ should be considered.

9. Maximum Oil Sump Temperature Limit

To prevent reducer overheating, the reducer's maximum oil-sump temperature limit must not be exceeded for prolonged periods of operation.

Oil Type	Maximum Oil Temperature Limit	
	NORD	AGMA 9005-D94
Synthetic	105°C (220°F)	107°C (225°F)

IMPORTANT NOTE

Use caution when specifying gear reducers for high temperature service. If there is concern about exceeding the allowable safe operating temperatures, please consult NORD to discuss alternatives.

10. Oil Viscosity

The viscosity rating determines the operating oil's resistance to shear under load conditions. Some important viscosity considerations include the following:

- Lightly loaded gears require lower viscosity oils than highly loaded gears.
- Lower viscosity will provide thin oil film, lower friction, higher mechanical efficiency, and better heat removal conditions.
- Higher viscosity will provide thicker oil film, and better resistance to sliding wear, scuffing wear, and galling at high pressure.
- Higher operating temperatures will cause a reduction in viscosity and lower operating temperatures, cause an increase in viscosity or a thickening of the oil.

The standard oil-fill is considered acceptable for most applications. In certain situations an oil viscosity change may be beneficial.

- If the gear unit is exposed to frequent high load conditions. A higher viscosity oil will have a higher film thickness offering better overall resistance to oil shear, sliding wear and scuffing wear in gears and roller element bearings.
- An oil viscosity correction or lubrication change may improve the overall performance when operating the gear unit at very low or high ambient temperature conditions.

IMPORTANT NOTE

The user should consult with their primary lubrication supplier before considering changes in oil type or viscosity.

11. Viscosity Index

Viscosity index helps quantify the rate of oil viscosity change with respect to temperature changes. Oils with a reasonably high viscosity index tend to be more stable in a changing temperature environment. The ability of an oil to maintain a small viscosity differential over the operating range of the gearbox provides a more consistent lubricating film and better wear performance.

Synthetic oils typically have a higher viscosity index than mineral oils and polyglycol oils tend to have an exceptionally high viscosity index compared to other synthetic oils like polyalphaolefin or ester based products.

EXPANSION CHAMBERS INSTALLATION & MAINTENANCE MANUAL

Installation Instructions

Sometimes NORD requires the use of an oil expansion chamber when the motor or reducer input is mounted vertically. Consult your NORD catalog for additional information and application considerations.

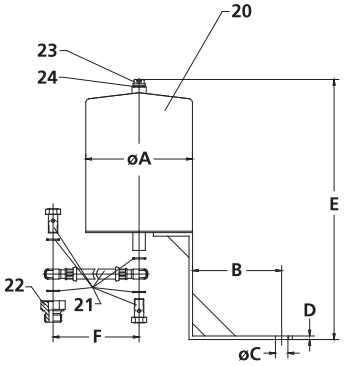

1. Secure the gear reducer in the proper mounting position for the application and remove the vent plug from the gear reducer. The hose assembly kit (21) will be fitted to the reducer using the housing port provided.
2. When using the larger 2.7 and 5.4 liter chambers, screw the adapter fitting (22) into the reducer housing port. Use all sealing gaskets provided.
3. Mount the overflow tank (20) at the highest location from the reducer, as permitted by the hose assembly kit (21). Typical mounting configurations are represented below. Use one of the input cover's mounting bolts, to mount the chamber support leg to the reducer.

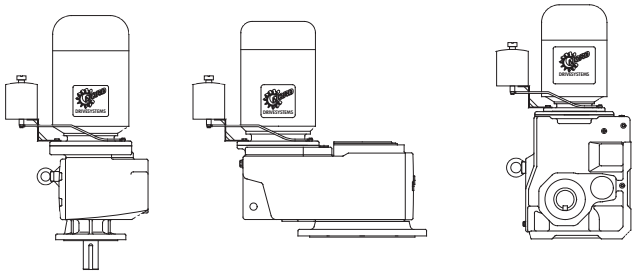

4. Be sure to use the proper fittings. Assemble one end of the vent-hose assembly (21) to bottom of the chamber and one-end to the reducer.
5. Secure the vent-plug (23) and gasket (24) that is supplied with the kit to the top of the expansion chamber.

STOP *HARMFUL SITUATION* STOP

Remove the protective "rubber element" from the supplied vent prior to use so that an open-vent is formed on top of the overflow tank. Avoid using a pressurized AUTOVENT™ breather on the overflow tank since this may create an undesired pressure-vacuum in the overflow tank.

Expansion Chamber Kit Dimensions & Parts List

Kit Part Number: 28390390 - 0.7 Liter Oil Expansion Chamber

Kit P/N	Ø A	B	Ø C	D	E	F	Units
28390390 (0.7 Liter)	3.94	1.97	0.53	0.20	8.50	19.69	inch
	100	50	13.5	5	216	500	mm

Item	Part Number	Description
20	28300390	Overflow Tank - 0.7 Liter
21	28310020	Flexible Vent Hose Assembly - Includes: Hose, metal gaskets & 2 Hollow Bolts (1 Bolt. - M12 X 1.5 and 1 Pc. - G1/4)
22	None	Adapter Fitting
23	22012004	Normal Style Vent Plug (M12 X 1.5, DIN 910)
24	25312150	Vent Plug Gasket (12 X 15.5 X 1.5)

Kit Part Number: 28390400 - 2.7 Liter Oil Expansion Chamber

Kit P/N	Ø A	B	Ø C	D	E	F	Units
28390400 (2.7 Liter)	5.91	4.92	0.69	0.20	15.22	27.56	inch
	150	125	17.5	5	386.5	700	mm

Item	Part Number	Description
20	28300400	Overflow Tank - 2.7 Liter
21	28310030	Flexible Vent Hose Assy - Includes: Hose, metal gaskets & 2 Hollow Bolts (2 Pcs. - G1/4)
22	22024030	Adapter Fitting (M24 X 1.5 to G1/4)
23	22012004	Normal Style Vent Plug (M12 X 1.5, DIN 910)
24	25312150	Vent Plug Gasket (12 X 15.5 X 1.5)

Kit Part Number: 28390410 - 5.4 Liter Oil Expansion Chamber

Kit P/N	Ø A	B	Ø C	D	E	F	Units
28390410 (5.4 Liter)	7.09	3.54	0.69	0.20	15.18	31.50	inch
	180	90	17.5	5	385.5	800	mm

Item	Part Number	Description
20	28300410	Overflow Tank - 5.4 Liter
21	28310040	Flexible Vent Hose Assy - Includes: Hose, metal gaskets & 2 Hollow Bolts (2 Pcs. - G1/4)
22	22030030	Adapter Fitting (M30 X 1.5 to G1/4)
23	22012004	Normal Style Vent Plug (M12 X 1.5, DIN 910)
24	25312150	Vent Plug Gasket (12 X 15.5 X 1.5)

Please see page 2 for gearbox compatability

Expansion Chamber Compatability Chart

Helical In-line	NORDBLOC™	NORDBLOC.1™	Clincher™	Helical-Bevel	Part Number	[lb]
SK 42/43 SK 52/53 SK 63	SK472/473 SK572/573 SK672/673 SK772/773 SK872/873 SK972/973	SK572.1/573.1* SK672.1/673.1*	SK 4282/4382 SK 5282/5382 SK 6382	SK 9042.1/9043.1 SK 9052.1/9053.1	28390390	11.0
SK 62 SK 72/73			SK 6282 SK 7282/7382	SK 9072.1 SK 9082.1	28390400	13.2
SK 82/83 SK 92/93 SK 102/103			SK 8282/8382	SK 9086.1 SK 9092.1 SK 9096.1	28390410	15.4

* Need to additionally order part #28390380 which is sub-assembly shown below.

Sub-Assembly P/N 28390380 for NORDBLOC®.1 gear units with M10x1 air vent.

❶	❷	❸	❹
1x DIN 7643 M10x1 283 00380	1x DIN 7603A Cu 10x16x1 253 10166	1x Ring 10x14x5 283 00370	1xDIN 9021 ø8,4 227 10840

Assembly of the expansion unit at the gear unit. Types SK 572.1/573.1, SK 672.1/673.1

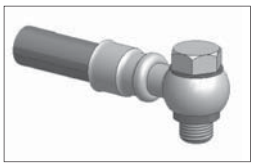

Vent Hose Sub-Assembly

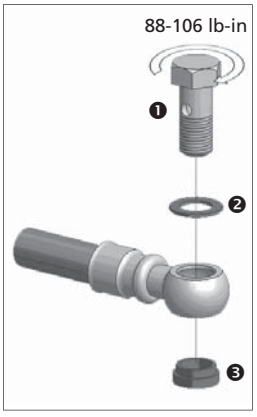

❹ For motor sizes 63, 71, 80, 90, 100 & 112

• Motor attachment bolt

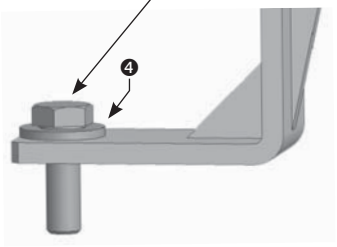

Motor Sizes 63, 71 & 80:
Assembly vent-hose to port as shown.

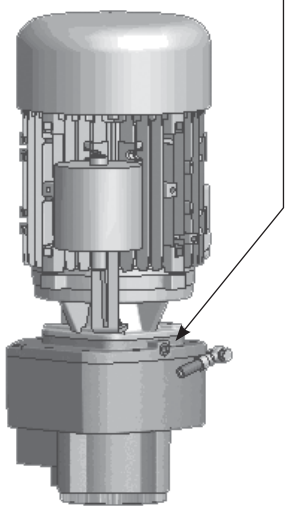

Motor Sizes 90,100 & 112:
Assembly vent-hose to port as shown.

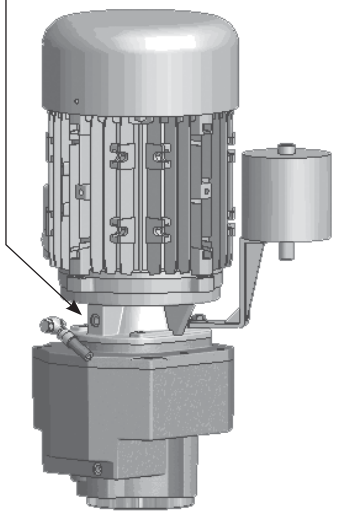

HELICAL & BEVEL REDUCER LUBRICATION TYPES

Lubrication Tables – Helical and Bevel Gear Units

Standard Oil Lubricants

ISO Viscosity	Oil Type	Ambient Temperature Range	Manufacturer Brand/Type	Notes
VG220	MIN-EP	0 to 40°C (32 to 104°)	Mobilgear 600XP220	♦❶
	PAO	-35 to 60°C (-31 to 140°F)	Mobil SHC630	♦❷
	FG	-5 to 40°C (23 to 104°F)	Fuchs FM220	♦

Optional Oil Lubricants

ISO Viscosity	Oil Type	Ambient Temperature Range	Manufacturer Brand/Type	Notes
VG460	PAO	-35 to 80°C (-31 to 176°F)	Mobil SHC 634	-
	FG-PAO	-35 to 80°C (-31 to 176°F)	Mobil SHC Cibus 460	-
VG220	FG-PAO	-35 to 60°C (-31 to 140°F)	Mobil SHC Cibus 220	-
VG150	PAO	-35 to 25°C (-31 to 77°F)	Mobil SHC629	-

Grease Options (applied to greased bearings and seal cavities)

NLGI Grade	Grease Type/Thickener	Ambient Temperature Range	Manufacturer Brand/Type	Notes
NLGI 2	Standard (Li-Complex)	-30 to 60°C (-22 to 140°F)	Mobil Grease XHP222	♦❶
	High Temp (Polyurea)	-40 to 80°C (-40 to 176°F)	Mobil / Polyrex EP 2	♦❷
	Food-Grade (Polyurea)	-30 to 40°C (-22 to 104°F)	Mobil SHC Polyrex 222	♦

♦ Stocked Lubricants

❶ Standard product on serviceable gear units

❷ Standard product on maintenance free gear units

IMPORTANT NOTES

- The "Ambient Temperature" is intended to be an operation guideline based upon the typical properties of all the lubricant. The viscosity and other properties of the lubricant change based upon load, speed, ambient conditions, and reducer operating temperatures. The user should consult with their lubrication supplier & NORD gear before considering changes in oil type or viscosity.
- To prevent reducer overheating, observe the maximum operating oil temperature limits:
  Mineral Oil: 80-85 °C (176 – 180 °F).
  Synthetic Oil: 105 °C (225 °F).
- In the following instances, please consult NORD for specific recommendations:
  - √ Gear units will operate in high ambient temperature conditions exceeding 40 °C (104 °F).
  - √ Gear units will operate in cold ambient temperature conditions approaching 0 °C (32 °F) or lower.
  - √ Lower than an ISO VG100 viscosity oil is being considered for a cold-temperature service.
  - √ Fluid grease is required for lubricating the gear unit.
- Observe the general lubrication guidelines outlined in user manual U10750.

Oil Formulation Codes

MIN-EP - Mineral Oil with EP Additive
PAO-EP - Synthetic Polyalphaolefin Oil with EP Additive
PAO - Synthetic Polyalphaolefin Oil
PG - Synthetic Polyglycol Oil
FG - Food-Grade Oil
FG-PAO - Food-Grade, Synthetic Poyalphaolefin Oil
FG-PG - Food-Grade, Synthetic Polyglycol Oil

Lubrication Notes

- Avoid using (EP) gear oils in worm gears that contain sulfur-phosphorous chemistries, as these additives can react adversely with bronze worm gears and accelerate wear.
- Food grade lubricants must be in compliance with FDA 212 CFR 178.3570 and qualify as a NSF-H1 lubricant. Please consult with lubrication manufacturer for more information.
- When making a lubrication change, check with the lubrication supplier to assure compatibility and to obtain recommended cleaning or flushing procedures.
- Do not to mix different oils with different additive packages or different base oil formulation types. Polyglycol (PG) oils are not miscible with other oil types and should never be mixed with mineral oil or polyalphaolefin (PAO) synthetic oil.

NORD Gear Limited
Toll Free in Canada: 800.668.4378

NORD Gear Corporation
Toll Free in the United States: 888.314.6673

HELICAL & BEVEL REDUCER LUBRICATION TYPES

Oil Cross-reference Chart

ISO Viscosity	Oil Type	Ambient Temperature Range	Mobil	Shell	Castrol	FUCHS	KLÜBER LUBRICATION
VG150	MIN-EP	0 to 25°C (32 to 77°F)	Mobilgear 600XP150	Omala 150	Alpha SP150	Renolin EP150	Klüberoil GEM 1-150N
	PAO-EP	-30 to 25 °C (-22 to 77 °F)	Mobilgear SHC150	Omala HD 150	Alphasyn EP150	Gearmaster SYN150/NA	Klübersynth EG 4-150
	PAO	-30 to 25°C (-22 to 77°F)	Mobil SHC629	Omala RL 150	Alphasyn T150	N/A	Klübersynth GEM 4-150N
	PG	-25 to 25°C (-13 to 77°F)	Mobil Glygoyle 150	Tivela S150	Alphasyn PG150	Renolin PG150	Klübersynth GH 6-150
	FG	0 to 25°C (32 to 77°F)	Mobil DTE FM 150	N/A	N/A	N/A	N/A
	FG-PAO	-15 to 25°C (5 to 77°F)	Mobil SHC Cibus 150	N/A	N/A	Cassida GL150	Klüberoil 4 UH 1-150N
	FG-PG	-25 to 25°C (-13 to 77°F)	Mobil Glygoyle 150	N/A	N/A	N/A	Klübersynth UH1 6-150
VG220	MIN-EP	0 to 40°C (32 to 104°)	Mobilgear 600XP220	Omala 220	Alpha SP220	Renolin EP220	Klüberoil GEM 1-220N
	PAO-EP	-30 to 60 °C (-22 to 140 °F)	Mobilgear SHC220	Omala HD220	Alphasyn EP220	Gearmaster SYN220/NA	Klübersynth EG 4-220
	PAO	-30 to 60°C (-22 to 140°F)	Mobil SHC630	Omala RL220	Alphasyn T220	N/A	Klübersynth GEM 4-220N
	PG	-25 to 60°C (-13 to 140°F)	Mobil Glygoyle 220	Tivela S220	Alphasyn PG220	Renolin PG220	Klübersynth GH 6-220
	FG	0 to 40°C (32 to 104°F)	Mobil DTE FM 220	N/A	N/A	Fuchs FM220	N/A
	FG-PAO	-25 to 60°C (-13 to 140°F)	Mobil SHC Cibus 220	N/A	N/A	Cassida GL220	Klüberoil 4 UH 1-220N
	FG-PG	-25 to 60°C (-13 to 140°F)	Mobil Glygoyle 220	N/A	N/A	Cassida WG220	Klübersynth UH1 6-220
VG460	MIN-EP	0 to 40°C (32 to 104°F)	Mobilgear 600XP460	Omala 460	Alpha SP460	Renolin EP460	Klüberoil GEM 1-460N
	PAO-EP	-20 to 80°C (-4 to 176°F)	Mobilgear SHC460	Omala HD460	Alphasyn EP460	Gearmaster SYN460/NA	Klübersynth EG 4-460
	PAO	-20 to 80°C (-4 to 176°F)	Mobil SHC 634	Omala RL460	Alphasyn T460	N/A	Klübersynth GEM 4-460N
	PG	-20 to 80°C (-4 to 176°F)	Mobil Glygoyle 460	Tivela S460	Alphasyn PG460	N/A	Klübersynth GH 6-460
	FG	0 to 40°C (32 to 104°F)	Mobil DTE FM460	N/A	N/A	Fuchs FM460	N/A
	FG-PAO	-20 to 80°C (-4 to 176°F)	Mobil SHC Cibus 460	N/A	N/A	Cassida GL460	Klüberoil 4 UH 1-460N
	FG-PG	-20 to 80°C (-4 to 176°F)	Mobil Glygoyle 460	N/A	N/A	Cassida WG460	Klübersynth UH1 6-460

Low-end service temperature limit may vary for a specific lubricant; Please also see the important notes on Page 1.

HELICAL-WORM REDUCER LUBRICATION TYPES

Lubrication Tables – Helical Worm Gear Units

Standard Oil Lubricants

ISO Viscosity	Oil Type	Ambient Temperature Range	Manufacturer Brand/Type	Notes
VG680	PAO	0 to 60°C (32 to 140°F)	Mobil SHC636	♦

Optional Oil Lubricants

ISO Viscosity	Oil Type	Ambient Temperature Range	Manufacturer Brand/Type	Notes
VG460	PAO	0 to50°C (32 to 122°F)	Mobil SHC 634	-
	FG-PAO	0 to50°C (32 to 122°F)	Mobil SHC Cibus 460	-

Grease Options (applied to greased bearings and seal cavities)

NLGI Grade	Grease Type/Thickener	Ambient Temperature Range	Manufacturer Brand/Type	Notes
NLGI 2	Standard (Li-Complex)	-30 to 60°C (-22 to 140°F)	Mobil Grease XHP222	♦
	High Temp (Polyurea)	-40 to 80°C (-40 to 176°F)	Mobil / Polyrex EP 2	♦
	Food-Grade (Polyurea)	-30 to 40°C (-22 to 104°F)	Mobil SHC Polyrex 222	♦

♦ **Stocked Lubricants**

IMPORTANT NOTES

- The "Ambient Temperature" is intended to be an operation guideline based upon the typical properties of all the lubricant. The viscosity and other properties of the lubricant change based upon load, speed, ambient conditions, and reducer operating temperatures. The user should consult with their lubrication supplier & NORD Gear before considering changes in oil type or viscosity.
- To prevent reducer overheating, observe the maximum operating oil temperature limits:

  Synthetic Oil: 105 °C (225 °F).
- In the following instances, please consult NORD for specific recommendations:

√ Gear units will operate in high ambient temperature conditions exceeding 40 °C (104 °F).
√ Gear units will operate in cold ambient temperature conditions approaching 0 °C (32 °F) or lower.
√ Lower than an ISO VG100 viscosity oil is being considered for a cold-temperature service.
√ Fluid grease is required for lubricating the gear unit.

- Observe the general lubrication guidelines outlined in user manual U10770.

Oil Formulation Codes

PAO - Synthetic Polyalphaolefin Oil
PG - Synthetic Polyglycol Oil
FG-PAO - Food-Grade, Synthetic Poyalphaolefin Oil
FG-PG - Food-Grade, Synthetic Polyglycol Oil

Lubrication Notes

- Avoid using (EP) gear oils in worm gears that contain sulfur-phosphorous chemistries, as these additives can react adversely with bronze worm gears and accelerate wear.
- Food grade lubricants must be in compliance with FDA 212 CFR 178.3570 and qualify as a NSF-H1 lubricant. Please consult with lubrication manufacturer for more information.
- When making a lubrication change, check with the lubrication supplier to assure compatibility and to obtain recommended cleaning or flushing procedures.
- Do not to mix different oils with different additive packages or different base oil formulation types. Polyglycol (PG) oils are not miscible with other oil types and should never be mixed with mineral oil or polyalphaolefin (PAO) synthetic oil.

HELICAL-WORM REDUCER LUBRICATION TYPES

Oil Cross-reference Chart

ISO Viscosity	Oil Type	Ambient Temperature Range	Mobil	Shell	Castrol	FUCHS	KLÜBER LUBRICATION
VG 100	PAO	-35 to 25°C (-31 to 77°F)	Mobil SHC627	N/A	N/A	N/A	Klübersynth GEM 4-100N
	PG	-25 to 25°C (-13 to 77°F)	Mobil Glygoyle 100	N/A	N/A	N/A	Klübersynth GH 6-100
	FG-PAO	-35 to 25°C (-31 to 77°F)	Mobil SHC Cibus 100	N/A	N/A	N/A	Klüberoil 4 UH 1-100N
	FG-PG	-25 to 25°C (-13 to 77°F)	Mobil Glygoyle 100	N/A	N/A	N/A	Klübersynth UH1 6-100
VG150	PAO	-35 to 25°C (-31 to 77°F)	Mobil SHC629	Omala RL 150	Alphasyn T150	N/A	Klübersynth GEM 4-150N
	PG	-25 to 25°C (-13 to 77°F)	Mobil Glygoyle 150	Tivela S150	Alphasyn PG150	Renolin PG150	Klübersynth GH 6-150
	FG-PAO	-15 to 25°C (5 to 77°F)	Mobil SHC Cibus 150	N/A	N/A	Cassida GL150	Klüberoil 4 UH 1-150N
	FG-PG	-25 to 25°C (-13 to 77°F)	Mobil Glygoyle 150	N/A	N/A	N/A	Klübersynth UH1 6-150
VG220	PAO	-15 to 40°C (5 to 104°F)	Mobil SHC630	Omala RL220	Alphasyn T220	N/A	Klübersynth GEM 4-220N
	PG	-25 to 40°C (-13 to 104°F)	Mobil Glygoyle 220	Tivela S220	Alphasyn PG220	Renolin PG220	Klübersynth GH 6-220
	FG-PAO	-25 to 40°C (-13 to 104°F)	Mobil SHC Cibus 220	N/A	N/A	Cassida GL220	Klüberoil 4 UH 1-220N
	FG-PG	-25 to 40°C (-13 to 104°F)	Mobil Glygoyle 220	N/A	N/A	Cassida WG220	Klübersynth UH1 6-220
VG460	PAO	0 to50°C (32 to 122°F)	Mobil SHC 634	Omala RL460	Alphasyn T460	N/A	Klübersynth GEM 4-460N
	PG	0 to50°C (32 to 122°F)	Mobil Glygoyle 460	Tivela S460	Alphasyn PG460	N/A	Klübersynth GH 6-460
	FG-PAO	0 to50°C (32 to 122°F)	Mobil SHC Cibus 460	N/A	N/A	Cassida GL460	Klüberoil 4 UH 1-460N
	FG-PG	0 to50°C (32 to 122°F)	Mobil Glygoyle 460	N/A	N/A	Cassida WG460	Klübersynth UH1 6-460
VG680	PAO	0 to 60°C (32 to 140°F)	Mobil SHC636	Omala RL680	N/A	N/A	Klübersynth GEM 4-680N
	PG	0 to 60°C (32 to 140°F)	Mobil Glygoyle 680	Tivela S680	N/A	N/A	Klübersynth GH 6-680
	FG-PAO	0 to 60°C (32 to 140°F)	N/A	N/A	N/A	Cassida GL680	Klüberoil 4 UH1-680N
	FG-PG	0 to 60°C (32 to 140°F)	Mobil Glygoyle 680	N/A	N/A	Cassida WG680	Klübersynth UH1 6-680

Low-end service temperature limit may vary for a specific lubricant; Please also see the important notes on Page 1.

MINICASE® (SM SERIES) WORM GEAR LUBRICATION TYPES

Lubrication Tables – MINICASE® (SM series) Worm Gear Units

Standard Oil Lubricants

ISO Viscosity	Oil Type	Ambient Temperature Range	Manufacturer Brand/Type	Notes
VG680	PG	-20 to 40°C (-4 to 104°F)	Klübersynth GH 6-680	♦

Optional Oil Lubricants

ISO Viscosity	Oil Type	Ambient Temperature Range	Manufacturer Brand/Type	Notes
VG680	FG-PG	-25 to 80°C (-13 to 176°F)	Klübersynth UH1 6-680	♦

Grease Options (applied to greased bearings and seal cavities)

NLGI Grade	Grease Type/Thickener	Ambient Temperature Range	Manufacturer Brand/Type	Notes
NLGI 2	High Temp (Polyurea)	-25 to 80°C (-13 to 176°F)	Kluber / Petamo GHY133N	♦
	Food-Grade (Aluminum Complex)	-25 to 40°C (-13 to 104°F)	Kluber / Klubersynth UH1 14-151	♦

♦ **Stocked Lubricants**

IMPORTANT NOTES

- Observe the general lubrication guidelines in User Manual U17900.
- Ambient temperature range is a guideline only. The allowed operating temperature range for the gear unit is dependent upon assembly components used, their individual temperature limits, and the actual operating conditions.
- The selected oil type and viscosity is considered appropriate for most applications utilizing the specified NORD gear unit type. Different oil types or viscosity grades may be recommended if the gear unit is exposed to frequent high load conditions or operating under extreme low or high ambient temperature conditions.
- To prevent reducer overheating, observe the maximum operating oil temperature limits:
  Synthetic oil: 105 °C (225 °F).
- Consult NORD for recommendations in the following instances:
  √ The gear unit is exposed to frequent high load conditions.
  √ Ambient temperature conditions exceed 40 °C (104 °F) or approach 0 °C (32 °F) or lower.
  √ Fluid grease is being considered or specified for lubricating the gear unit.
  √ Lower than an ISO VG100 viscosity oil is being considered for a cold-temperature service.

Oil Formulation Codes

PAO - Synthetic Polyalphaolefin Oil
PG - Synthetic Polyglycol Oil
FG-PAO - Food-Grade, Synthetic Poyalphaolefin Oil
FG-PG - Food-Grade, Synthetic Polyglycol Oil

WARNING

- Avoid using (EP) gear oils in worm gears that contain sulfur-phosphorous chemistries, as these additives can react adversely with bronze worm gears and accelerate wear.
- Food grade lubricants must be in compliance with FDA 212 CFR 178.3570 and qualify as a NSF-H1 lubricant. Please consult with lubrication manufacturer for more information.
- When making a lubrication change, check with the lubrication supplier to assure compatibility and to obtain recommended cleaning or flushing procedures.
- Do not to mix different oils with different additive packages or different base oil formulation types. Polyglycol (PG) oils are not miscible with other oil types and should never be mixed with mineral or polyaolphaolefin (PAO) oils.

MINICASE® (SM SERIES) WORM GEAR LUBRICATION TYPES

Oil Cross-reference Chart

ISO Viscosity	Oil Type	Ambient Temperature Range	Mobil	Shell	Castrol	FUCHS	KLÜBER LUBRICATION
VG 100	PAO	-35 to 25°C (-31 to 77°F)	Mobil SHC627	N/A	N/A	N/A	Klübersynth GEM 4-100N
	PG	-25 to 25°C (-13 to 77°F)	Mobil Glygoyle 100	N/A	N/A	N/A	Klübersynth GH 6-100
	FG-PAO	-30 to 25°C (-22 to 77°F)	Mobil SHC Cibus 100	N/A	N/A	N/A	Klüberoil 4 UH 1-100N
	FG-PG	-25 to 25°C (-13 to 77°F)	Mobil Glygoyle 100	N/A	N/A	N/A	Klübersynth UH1 6-100
VG150	PAO	-35 to 25°C (-31 to 77°F)	Mobil SHC629	Omala RL 150	Alphasyn T150	N/A	Klübersynth GEM 4-150N
	PG	-25 to 25°C (-13 to 77°F)	Mobil Glygoyle 150	Tivela S150	Alphasyn PG150	Renolin PG150	Klübersynth GH 6-150
	FG-PAO	-15 to 25°C (5 to 77°F)	Mobil SHC Cibus 150	N/A	N/A	Cassida GL150	Klüberoil 4 UH 1-150N
	FG-PG	-25 to 25°C (-13 to 77°F)	Mobil Glygoyle 150	N/A	N/A	N/A	Klübersynth UH1 6-150
VG220	PAO	-35 to 40°C (-31 to 104°F)	Mobil SHC630	Omala RL220	Alphasyn T220	N/A	Klübersynth GEM 4-220N
	PG	-25 to 40°C (-13 to 104°F)	Mobil Glygoyle 220	Tivela S220	Alphasyn PG220	Renolin PG220	Klübersynth GH 6-220
	FG-PAO	-25 to 40°C (-13 to 104°F)	Mobil SHC Cibus 220	N/A	N/A	Cassida GL220	Klüberoil 4 UH 1-220N
	FG-PG	-25 to 40°C (-13 to 104°F)	Mobil Glygoyle 220	N/A	N/A	Cassida WG220	Klübersynth UH1 6-220
VG460	PAO	-20 to 40°C (-4 to 104°F)	Mobil SHC 634	Omala RL460	Alphasyn T460	N/A	Klübersynth GEM 4-460N
	PG	-20 to 40°C (-4 to 104°F)	Mobil Glygoyle 460	Tivela S460	Alphasyn PG460	N/A	Klübersynth GH 6-460
	FG-PAO	-5 to 40°C (23 to 104°F)	Mobil SHC Cibus 460	N/A	N/A	Cassida GL460	Klüberoil 4 UH 1-460N
	FG-PG	-5 to 40°C (23 to 104°F)	Mobil Glygoyle 460	N/A	N/A	Cassida WG460	Klübersynth UH1 6-460
VG680	PAO	-20 to 40°C (-4 to 104°F)	Mobil SHC636	Omala RL680	N/A	N/A	Klübersynth GEM 4-680N
	PG	-20 to 40°C (-4 to 104°F)	Mobil Glygoyle 680	Tivela S680	N/A	N/A	Klübersynth GH 6-680
	FG-PAO	-5 to 40°C (23 to 104°F)	N/A	N/A	N/A	Cassida GL680	Klüberoil 4 UH1-680N
	FG-PG	-25 to 80°C (-13 to 176°F)	Mobil Glygoyle 680	N/A	N/A	Cassida WG680	Klübersynth UH1 6-680

Low-end service temperature limit may vary for a specific lubricant; Please also see the important notes on Page 1.

MINICASE® (SMI/SMID) WORM GEAR LUBRICATION TYPES

Lubrication Tables – MINICASE® (SMI/SMID series) Worm Gear Units

Standard Oil Lubricants

ISO Viscosity	Oil Type	Ambient Temperature Range	Manufacturer Brand/Type	Notes
VG680	PG	-20 to 40°C (-4 to 104°F)	Klübersynth GH 6-680	♦

Optional Oil Lubricants

ISO Viscosity	Oil Type	Ambient Temperature Range	Manufacturer Brand/Type	Notes
VG680	FG-PG	-25 to 80°C (-13 to 176°F)	Klübersynth UH1 14-151	♦

Grease Options (applied to greased bearings and seal cavities)

NLGI Grade	Grease Type/Thickener	Ambient Temperature Range	Manufacturer Brand/Type	Notes
NLGI 2	High Temp (Polyurea)	-25 to 80°C (-13 to 176°F)	Kluber / Petamo GHY133N	♦
	Food-Grade (Aluminum Complex)	-25 to 40°C (-13 to 104°F)	Kluber / Klubersynth UH1 14-151	♦

♦ **Stocked Lubricants**

IMPORTANT NOTES

- Observe the general lubrication guidelines in User Manual U10800.
- Ambient temperature range is a guideline only. The allowed operating temperature range for the gear unit is dependent upon assembly components used, their individual temperature limits, and the actual operating conditions.
- The selected oil type and viscosity is considered appropriate for most applications utilizing the specified NORD gear unit type. Different oil types or viscosity grades may be recommended if the gear unit is exposed to frequent high load conditions or operating under extreme low or high ambient temperature conditions.
- To prevent reducer overheating, observe the maximum operating oil temperature limits:
  Synthetic oil: 105 °C (225 °F).
- Consult NORD for recommendations in the following instances:
  √ The gear unit is exposed to frequent high load conditions.
  √ Ambient temperature conditions exceed 40 °C (104 °F) or approach 0 °C (32 °F) or lower.
  √ Fluid grease is being considered or specified for lubricating the gear unit.
  √ Lower than an ISO VG100 viscosity oil is being considered for a cold-temperature service.

Oil Formulation Codes

PAO - Synthetic Polyalphaolefin Oil
PG - Synthetic Polyglycol Oil
FG-PAO - Food-Grade, Synthetic Poyalphaolefin Oil
FG-PG - Food-Grade, Synthetic Polyglycol Oil

WARNING

- Avoid using (EP) gear oils in worm gears that contain sulfur-phosphorous chemistries, as these additives can react adversely with bronze worm gears and accelerate wear.
- Food grade lubricants must be in compliance with FDA 212 CFR 178.3570 and qualify as a NSF-H1 lubricant. Please consult with lubrication manufacturer for more information.
- When making a lubrication change, check with the lubrication supplier to assure compatibility and to obtain recommended cleaning or flushing procedures.
- Do not to mix different oils with different additive packages or different base oil formulation types. Polyglycol (PG) oils are not miscible with other oil types and should never be mixed with mineral or polyaolphaolefin (PAO) oils.

MINICASE® (SMI/SMID) WORM GEAR LUBRICATION TYPES

Oil Cross-reference Chart

ISO Viscosity	Oil Type	Ambient Temperature Range	Mobil	Shell	Castrol	FUCHS	KLÜBER LUBRICATION
VG 100	PAO	-35 to 25°C (-31 to 77°F)	Mobil SHC627	N/A	N/A	N/A	Klübersynth GEM 4-100N
	PG	-25 to 25°C (-13 to 77°F)	Mobil Glygoyle 100	N/A	N/A	N/A	Klübersynth GH 6-100
	FG-PAO	-30 to 25°C (-22 to 77°F)	Mobil SHC Cibus 100	N/A	N/A	N/A	Klüberoil 4 UH 1-100N
	FG-PG	-25 to 25°C (-13 to 77°F)	Mobil Glygoyle 100	N/A	N/A	N/A	Klübersynth UH1 6-100
VG150	PAO	-35 to 25°C (-31 to 77°F)	Mobil SHC629	Omala RL 150	Alphasyn T150	N/A	Klübersynth GEM 4-150N
	PG	-25 to 25°C (-13 to 77°F)	Mobil Glygoyle 150	Tivela S150	Alphasyn PG150	Renolin PG150	Klübersynth GH 6-150
	FG-PAO	-15 to 25°C (5 to 77°F)	Mobil SHC Cibus 150	N/A	N/A	Cassida GL150	Klüberoil 4 UH 1-150N
	FG-PG	-25 to 25°C (-13 to 77°F)	Mobil Glygoyle 150	N/A	N/A	N/A	Klübersynth UH1 6-150
VG220	PAO	-35 to 40°C (-31 to 104°F)	Mobil SHC630	Omala RL220	Alphasyn T220	N/A	Klübersynth GEM 4-220N
	PG	-25 to 40°C (-13 to 104°F)	Mobil Glygoyle 220	Tivela S220	Alphasyn PG220	Renolin PG220	Klübersynth GH 6-220
	FG-PAO	-25 to 40°C (-13 to 104°F)	Mobil SHC Cibus 220	N/A	N/A	Cassida GL220	Klüberoil 4 UH 1-220N
	FG-PG	-25 to 40°C (-13 to 104°F)	Mobil Glygoyle 220	N/A	N/A	Cassida WG220	Klübersynth UH1 6-220
VG460	PAO	-20 to 40°C (-4 to 104°F)	Mobil SHC 634	Omala RL460	Alphasyn T460	N/A	Klübersynth GEM 4-460N
	PG	-20 to 40°C (-4 to 104°F)	Mobil Glygoyle 460	Tivela S460	Alphasyn PG460	N/A	Klübersynth GH 6-460
	FG-PAO	-5 to 40°C (23 to 104°F)	Mobil SHC Cibus 460	N/A	N/A	Cassida GL460	Klüberoil 4 UH 1-460N
	FG-PG	-5 to 40°C (23 to 104°F)	Mobil Glygoyle 460	N/A	N/A	Cassida WG460	Klübersynth UH1 6-460
VG680	PAO	-20 to 40°C (-4 to 104°F)	Mobil SHC636	Omala RL680	N/A	N/A	Klübersynth GEM 4-680N
	PG	-20 to 40°C (-4 to 104°F)	Mobil Glygoyle 680	Tivela S680	N/A	N/A	Klübersynth GH 6-680
	FG-PAO	-5 to 40°C (23 to 104°F)	N/A	N/A	N/A	Cassida GL680	Klüberoil 4 UH1-680N
	FG-PG	-25 to 80°C (-13 to 176°F)	Mobil Glygoyle 680	N/A	N/A	Cassida WG680	Klübersynth UH1 14-151

Low-end service temperature limit may vary for a specific lubricant; Please also see the important notes on Page 1.

FLEXBLOC™ (SI/SID SERIES) WORM GEAR LUBRICATION TYPES

Lubrication Tables – FLEXBLOC™ (SI/SID Series) Worm Gear Units

Standard Oil Lubricants

NORD uses a semi automated assembly process to produce the FLEXBLOC™ gear unit assemblies. During this process the gear units are factory filled in accordance with the following table.

Standard Oil Lubricants

ISO Viscosity	Oil Type	Ambient Temperature Range	Manufacturer Brand/Type	Notes
VG680	FG-PG	-25 to 80°C (-13 to 176°F)	Klübersynth UH1 6-680	Inch
	PG	-20 to 40°C (-4 to 104°F)	Klübersynth GH 6-680	Metric
VG220	FG-PG	-25 to 40°C (-13 to 104°F)	Klübersynth UH1 6-220	Inch
	PG	-25 to 40°C (-13 to 104°F)	Klübersynth GH 6-220	Metric

Grease Options (applied to greased bearings and seal cavities)

NLGI Grade	Grease Type/Thickener	Ambient Temperature Range	Manufacturer Brand/Type	Notes
NLGI 2	High Temp (Polyurea)	-25 to 80°C (-13 to 176°F)	Kluber / Petamo GHY133N	♦
	Food-Grade (Aluminum Complex)	-25 to 40°C (-13 to 104°F)	Kluber / Klubersynth UH1 14-151	♦

♦ **Stocked Lubricants**

IMPORTANT NOTES

- Observe the general lubrication guidelines in User Manual U10800.
- Ambient temperature range is a guideline only. The allowed operating temperature range for the gear unit is dependent upon assembly components used, their individual temperature limits, and the actual operating conditions.
- The selected oil type and viscosity is considered appropriate for most applications utilizing the specified NORD gear unit type. Different oil types or viscosity grades may be recommended if the gear unit is exposed to frequent high load conditions or operating under extreme low or high ambient temperature conditions.
- To prevent reducer overheating, observe the maximum operating oil temperature limits:
  Synthetic oil: 105 °C (225 °F).
- Consult NORD for recommendations in the following instances:
  √ The gear unit is exposed to frequent high load conditions.
  √ Ambient temperature conditions exceed 40 °C (104 °F) or approach 0 °C (32 °F) or lower.
  √ Fluid grease is being considered or specified for lubricating the gear unit.
  √ Lower than an ISO VG100 viscosity oil is being considered for a cold-temperature service.

Oil Formulation Codes

PAO - Synthetic Polyalphaolefin Oil
PG - Synthetic Polyglycol Oil
FG-PAO - Food-Grade, Synthetic Poyalphaolefin Oil
FG-PG - Food-Grade, Synthetic Polyglycol Oil

WARNING

- Avoid using (EP) gear oils in worm gears that contain sulfur-phosphorous chemistries, as these additives can react adversely with bronze worm gears and accelerate wear.
- Food grade lubricants must be in compliance with FDA 212 CFR 178.3570 and qualify as a NSF-H1 lubricant. Please consult with lubrication manufacturer for more information.
- When making a lubrication change, check with the lubrication supplier to assure compatibility and to obtain recommended cleaning or flushing procedures.
- Do not to mix different oils with different additive packages or different base oil formulation types. Polyglycol (PG) oils are not miscible with other oil types and should never be mixed with mineral or polyaolpha-olefin (PAO) oils.

FLEXBLOC™ (SI/SID SERIES) WORM GEAR LUBRICATION TYPES

Oil Cross-reference Chart

ISO Viscosity	Oil Type	Ambient Temperature Range	Mobil	Shell	Castrol	FUCHS	KLÜBER LUBRICATION
VG 100	PAO	-35 to 25°C (-31 to 77°F)	Mobil SHC627	N/A	N/A	N/A	Klübersynth GEM 4-100N
	PG	-25 to 25°C (-13 to 77°F)	Mobil Glygoyle 100	N/A	N/A	N/A	Klübersynth GH 6-100
	FG-PAO	-30 to 25°C (-22 to 77°F)	Mobil SHC Cibus 100	N/A	N/A	N/A	Klüberoil 4 UH 1-100N
	FG-PG	-25 to 25°C (-13 to 77°F)	Mobil Glygoyle 100	N/A	N/A	N/A	Klübersynth UH1 6-100
VG150	PAO	-35 to 25°C (-31 to 77°F)	Mobil SHC629	Omala RL 150	Alphasyn T150	N/A	Klübersynth GEM 4-150N
	PG	-25 to 25°C (-13 to 77°F)	Mobil Glygoyle 150	Tivela S150	Alphasyn PG150	Renolin PG150	Klübersynth GH 6-150
	FG-PAO	-15 to 25°C (5 to 77°F)	Mobil SHC Cibus 150	N/A	N/A	Cassida GL150	Klüberoil 4 UH 1-150N
	FG-PG	-25 to 25°C (-13 to 77°F)	Mobil Glygoyle 150	N/A	N/A	N/A	Klübersynth UH1 6-150
VG220	PAO	-35 to 40°C (-31 to 104°F)	Mobil SHC630	Omala RL220	Alphasyn T220	N/A	Klübersynth GEM 4-220N
	PG	-25 to 40°C (-13 to 104°F)	Mobil Glygoyle 220	Tivela S220	Alphasyn PG220	Renolin PG220	Klübersynth GH 6-220
	FG-PAO	-25 to 40°C (-13 to 104°F)	Mobil SHC Cibus 220	N/A	N/A	Cassida GL220	Klüberoil 4 UH 1-220N
	FG-PG	-25 to 40°C (-13 to 104°F)	Mobil Glygoyle 220	N/A	N/A	Cassida WG220	Klübersynth UH1 6-220
VG460	PAO	-20 to 40°C (-4 to 104°F)	Mobil SHC 634	Omala RL460	Alphasyn T460	N/A	Klübersynth GEM 4-460N
	PG	-20 to 40°C (-4 to 104°F)	Mobil Glygoyle 460	Tivela S460	Alphasyn PG460	N/A	Klübersynth GH 6-460
	FG-PAO	-5 to 40°C (23 to 104°F)	Mobil SHC Cibus 460	N/A	N/A	Cassida GL460	Klüberoil 4 UH 1-460N
	FG-PG	-5 to 40°C (23 to 104°F)	Mobil Glygoyle 460	N/A	N/A	Cassida WG460	Klübersynth UH1 6-460
VG680	PAO	-20 to 40°C (-4 to 104°F)	Mobil SHC636	Omala RL680	N/A	N/A	Klübersynth GEM 4-680N
	PG	-20 to 40°C (-4 to 104°F)	Mobil Glygoyle 680	Tivela S680	N/A	N/A	Klübersynth GH 6-680
	FG-PAO	-5 to 40°C (23 to 104°F)	N/A	N/A	N/A	Cassida GL680	Klüberoil 4 UH1-680N
	FG-PG	-25 to 80°C (-13 to 176°F)	Mobil Glygoyle 680	N/A	N/A	Cassida WG680	Klübersynth UH1 6-680

Low-end service temperature limit may vary for a specific lubricant; Please also see the important notes on Page 1.

STANDARD IN-LINE FOOTED OIL FILL QUANTITIES

Standard In-line footed lubrication

All Standard In-line reducers are shipped from NORD with a pre-determined oil fill level in accordance to the specified reducer size and mounting position. When filling these gear units the oil must be measured and added until one establishes the proper fill quantity. For additional information please refer to the "Oil & vent plug locations" documentation for your specified gear unit

STOP *HARMFUL SITUATION* **STOP**

For mounting orientations other than shown please consult NORD Gear. Reducer modifications may be required.

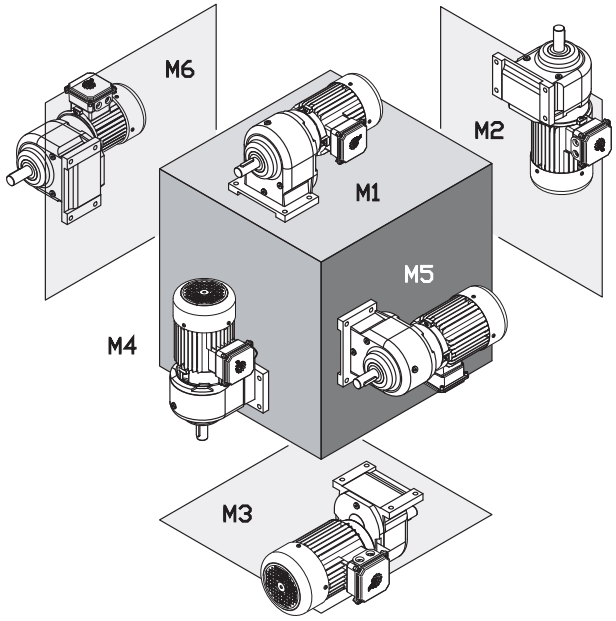

Type	M1		M2		M3		M4		M5		M6	
	Quarts	Liters	Quarts	Liters	Quarts	Liters	Quarts	Liters	Quarts	Liters	Quarts	Liters
SK0 / SK05	0.14	0.13	0.23	0.22	0.14	0.13	0.23	0.22	0.14	0.13	0.14	0.13
SK000	0.25	0.24	0.42	0.40	0.25	0.24	0.42	0.40	0.25	0.24	0.25	0.24
SK01 / SK015	0.23	0.22	0.40	0.38	0.23	0.22	0.40	0.38	0.23	0.22	0.23	0.22
SK010 / SK0105	0.40	0.38	0.63	0.60	0.40	0.38	0.63	0.60	0.40	0.38	0.40	0.38
SK20 / SK205	0.58	0.55	1.06	1.00	0.58	0.55	1.06	1.00	0.58	0.55	0.58	0.55
SK200 / SK2005	0.85	0.80	1.37	1.30	0.85	0.80	1.37	1.30	0.85	0.80	0.85	0.80
SK25 / SK255	0.53	0.50	1.06	1.00	0.53	0.50	1.06	1.00	0.53	0.50	0.53	0.50
SK250 / SK2505	1.27	1.20	1.59	1.50	1.27	1.20	1.59	1.50	1.27	1.20	1.27	1.20
SK30 / SK305	0.95	0.90	1.37	1.30	0.95	0.90	1.37	1.30	0.95	0.90	0.95	0.90
SK300 / SK3005	1.27	1.20	2.11	2.00	1.27	1.20	2.11	2.00	1.27	1.20	1.27	1.20
SK33 / SK335	1.06	1.00	1.69	1.60	1.06	1.00	1.69	1.60	1.06	1.00	1.06	1.00
SK330 / SK3305	1.90	1.80	2.96	2.80	1.90	1.80	2.96	2.80	1.90	1.80	1.90	1.80

STANDARD IN-LINE FLANGED OIL FILL QUANTITIES

Standard In-line flanged lubrication

All Standard In-line reducers are shipped from NORD with a pre-determined oil fill level in accordance to the specified reducer size and mounting position. When filling these gear units the oil must be measured and added until one establishes the proper fill quantity. For additional information please refer to the "Oil & vent plug locations" documentation for your specified gear unit

STOP *HARMFUL SITUATION* STOP

For mounting orientations other than shown please consult NORD Gear. Reducer modifications may be required.

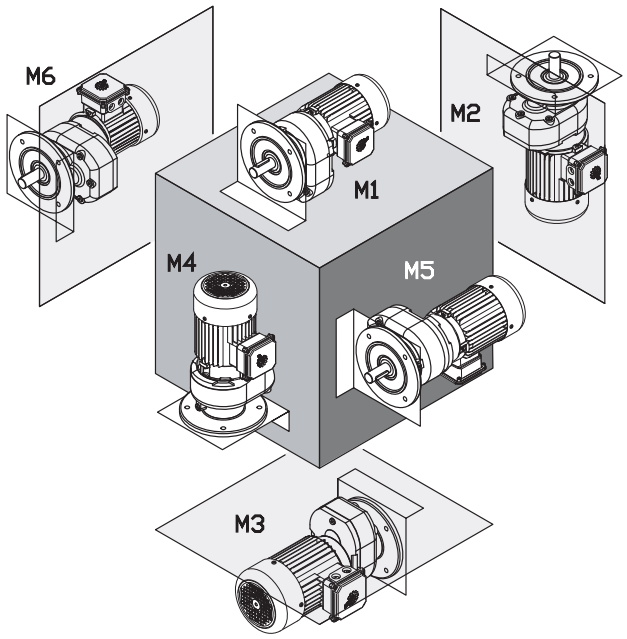

Type	M1		M2		M3		M4		M5		M6	
	Quarts	Liters	Quarts	Liters	Quarts	Liters	Quarts	Liters	Quarts	Liters	Quarts	Liters
SK0 F / SK05 F	0.14	0.13	0.23	0.22	0.14	0.13	0.23	0.22	0.14	0.13	0.14	0.13
SK000 F	0.25	0.24	0.43	0.41	0.25	0.24	0.43	0.41	0.25	0.24	0.25	0.24
SK01 F	0.23	0.22	0.40	0.38	0.23	0.22	0.40	0.38	0.23	0.22	0.23	0.22
SK010 F / SK0105 F	0.37	0.35	0.69	0.65	0.37	0.35	0.78	0.74	0.37	0.35	0.37	0.35
SK20 F	0.37	0.35	0.63	0.60	0.37	0.35	0.63	0.60	0.37	0.35	0.37	0.35
SK200 F / SK2005 F	0.69	0.65	1.00	0.95	0.69	0.65	1.16	1.10	0.69	0.65	0.69	0.65
SK25 F	0.53	0.50	1.06	1.00	0.53	0.50	1.06	1.00	0.53	0.50	0.53	0.50
SK250 F / SK2505 F	0.95	0.90	1.48	1.40	0.95	0.90	1.69	1.60	0.95	0.90	0.95	0.90
SK30 F	0.74	0.70	1.16	1.10	0.74	0.70	1.16	1.10	0.74	0.70	0.74	0.70
SK300 F / SK3005 F	1.32	1.25	1.59	1.50	1.32	1.25	1.90	1.80	1.32	1.25	1.32	1.25
SK33 F / SK335F	1.06	1.00	1.59	1.50	1.06	1.00	1.59	1.50	1.06	1.00	1.06	1.00
SK330 F / SK3305 F	1.69	1.60	2.64	2.50	1.69	1.60	3.06	2.90	1.69	1.60	1.69	1.60

HELICAL IN-LINE FOOTED OIL FILL QUANTITIES

Helical In-line footed lubrication

The following NORD Gear reducers are shipped from the factory with a pre-determined oil fill level in accordance to the specified reducer size and mounting position. For additional information, please refer to the "Oil Plug & Vent Locations" documentation for your gear unit.

HARMFUL SITUATION

Actual oil volume can vary slightly depending upon the gear case size, mounting and ratio. Prior to commissioning the reducer, check the oil-fill level using the reducer's oil level plug and drain or add addition oil as needed. The minimum acceptable oil level is 0.15 in (4mm) below the oil level hole.

For mounting orientations other than shown please consult NORD Gear. Reducer modifications may be required.

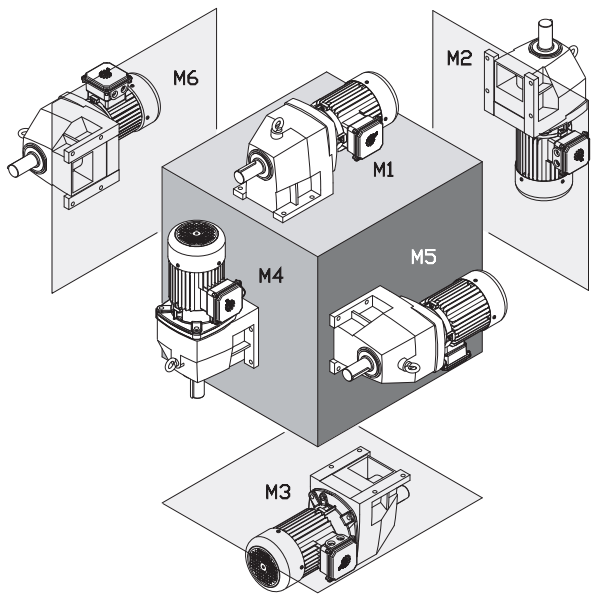

Type	M1		M2		M3		M4		M5		M6	
	Quarts	Liters	Quarts	Liters	Quarts	Liters	Quarts	Liters	Quarts	Liters	Quarts	Liters
SK02	0.21	0.20	0.79	0.75	0.79	0.75	0.69	0.65	0.63	0.60	0.63	0.60
SK 03	0.37	0.35	1.27	1.20	0.85	0.80	1.06	1.00	0.74	0.70	0.74	0.70
SK11E	0.26	0.25	0.53	0.50	0.69	0.65	0.53	0.50	0.42	0.40	0.42	0.40
SK12	0.26	0.25	0.85	0.80	0.90	0.85	0.79	0.75	0.58	0.55	0.58	0.55
SK 13	0.79	0.75	1.37	1.30	1.37	1.30	1.27	1.20	0.79	0.75	0.79	0.75
SK21E	0.63	0.60	1.27	1.20	1.37	1.30	1.06	1.00	1.06	1.00	1.06	1.00
SK22	0.53	0.50	2.01	1.90	2.22	2.10	1.90	1.80	1.48	1.40	1.48	1.40
SK 23	1.27	1.20	2.11	2.00	2.01	1.90	2.54	2.40	1.69	1.60	1.69	1.60
SK31E	1.16	1.10	2.11	2.00	2.32	2.20	1.80	1.70	1.59	1.50	1.59	1.50
SK32	0.95	0.90	2.64	2.50	3.28	3.10	3.28	3.10	2.11	2.00	2.11	2.00
SK 33N	1.85	1.75	3.17	3.00	3.59	3.40	4.23	4.00	2.43	2.30	2.43	2.30
SK41E	1.69	1.60	2.75	2.60	3.49	3.30	2.96	2.80	2.43	2.30	2.43	2.30
SK42	1.48	1.40	4.76	4.50	4.76	4.50	4.54	4.30	3.38	3.20	3.38	3.20
SK 43	3.17	3.00	5.92	5.60	5.49	5.20	6.97	6.60	3.80	3.60	3.80	3.60
SK51E	1.90	1.80	3.70	3.50	4.33	4.10	4.23	4.00	4.02	3.80	4.02	3.80
SK52	2.64	2.50	7.40	7.00	7.19	6.80	7.19	6.80	5.39	5.10	5.39	5.10
SK 53	4.76	4.50	9.19	8.70	8.14	7.70	9.19	8.70	6.34	6.00	6.34	6.00
SK62	6.87	6.50	15.9	15.0	13.7	13.0	16.9	16.0	15.9	15.0	15.9	15.0
SK 63	13.7	13.0	15.3	14.5	15.3	14.5	16.9	16.0	13.7	13.0	13.7	13.0
SK72	10.6	10.0	24.3	23.0	19.0	18.0	27.5	26.0	24.3	23.0	24.3	23.0
SK 73	21.7	20.5	21.1	20.0	23.8	22.5	28.5	27.0	21.1	20.0	21.1	20.0
SK82	14.8	14.0	37.0	35.0	28.5	27.0	46.5	44.0	33.8	32.0	33.8	32.0
SK 83	31.7	30.0	32.8	31.0	35.9	34.0	39.1	37.0	34.9	33.0	34.9	33.0
SK92	26.4	25.0	77.0	73.0	49.7	47.0	80.0	76.0	55.0	52.0	55.0	52.0
SK 93	56.0	53.0	74.0	70.0	62.0	59.0	76.0	72.0	52.0	49.0	52.0	49.0
SK102	38.0	36.0	84.0	79.0	70.0	66.0	108	102	75.0	71.0	75.0	71.0
SK 103	78.0	74.0	75.0	71.0	78.0	74.0	102	97.0	71.0	67.0	71.0	67.0

HELICAL IN-LINE FLANGED OIL FILL QUANTITIES

Helical In-line flanged lubrication

The following NORD Gear reducers are shipped from the factory with a pre-determined oil fill level in accordance to the specified reducer size and mounting position. For additional information, please refer to the "Oil Plug & Vent Locations" documentation for your gear unit.

STOP *HARMFUL SITUATION* STOP

Actual oil volume can vary slightly depending upon the gear case size, mounting and ratio. Prior to commissioning the reducer, check the oil-fill level using the reducer's oil level plug and drain or add addition oil as needed. The minimum acceptable oil level is 0.15 in (4mm) below the oil level hole.

For mounting orientations other than shown please consult NORD Gear. Reducer modifications may be required.

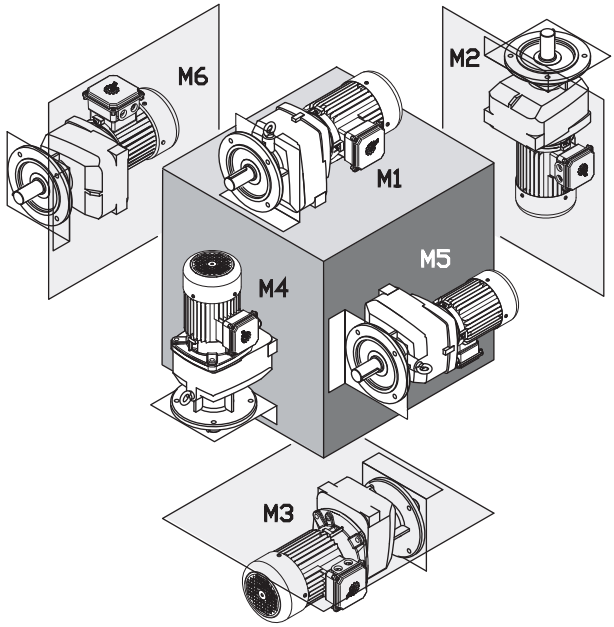

Type	M1		M2		M3		M4		M5		M6	
	Quarts	Liters	Quarts	Liters	Quarts	Liters	Quarts	Liters	Quarts	Liters	Quarts	Liters
SK02F	0.26	0.25	0.74	0.70	0.74	0.70	0.74	0.70	0.53	0.50	0.53	0.50
SK 03 F	0.58	0.55	1.00	0.95	0.95	0.90	1.27	1.20	0.95	0.90	0.95	0.90
SK11E F	0.32	0.30	0.53	0.50	0.53	0.50	0.48	0.45	0.42	0.40	0.42	0.40
SK12F	0.37	0.35	0.90	0.85	0.95	0.90	0.95	0.90	0.74	0.70	0.74	0.70
SK 13 F	1.06	1.00	1.37	1.30	1.37	1.30	1.27	1.20	1.06	1.00	1.06	1.00
SK21E F	0.53	0.50	1.27	1.20	1.37	1.30	0.63	0.60	0.95	0.90	0.95	0.90
SK22F	0.74	0.70	1.90	1.80	1.90	1.80	1.90	1.80	1.48	1.40	1.48	1.40
SK 23 F	1.48	1.40	2.75	2.60	2.43	2.30	2.96	2.80	2.96	2.80	2.96	2.80
SK31E F	0.95	0.90	1.90	1.80	1.74	1.65	1.37	1.30	1.32	1.25	1.32	1.25
SK32F	1.27	1.20	2.96	2.80	3.28	3.10	3.28	3.10	2.32	2.20	2.32	2.20
SK 33N F	2.32	2.20	3.17	3.00	3.59	3.40	4.44	4.20	2.43	2.30	2.43	2.30
SK41E F	1.27	1.20	2.43	2.30	2.85	2.70	2.11	2.00	2.01	1.90	2.01	1.90
SK42F	1.90	1.80	4.65	4.40	4.76	4.50	4.23	4.00	3.91	3.70	3.91	3.70
SK 43 F	3.70	3.50	6.02	5.70	5.28	5.00	6.45	6.10	4.33	4.10	4.33	4.10
SK51E F	1.90	1.80	3.70	3.50	4.33	4.10	3.17	3.00	4.02	3.80	4.02	3.80
SK52F	3.17	3.00	7.19	6.80	6.55	6.20	7.82	7.40	5.92	5.60	5.92	5.60
SK 53 F	5.49	5.20	8.88	8.40	7.40	7.00	9.40	8.90	7.08	6.70	7.08	6.70
SK 62 F	7.40	7.00	15.9	15.0	14.8	14.0	19.5	18.5	16.9	16.0	16.9	16.0
SK 63 F	14.3	13.5	14.8	14.0	16.4	15.5	19.0	18.0	14.8	14.0	14.8	14.0
SK 72 F	10.6	10.0	24.3	23.0	19.5	18.5	29.6	28.0	24.3	23.0	24.3	23.0
SK 73 F	23.2	22.0	23.8	22.5	24.3	23.0	29.1	27.5	21.1	20.0	21.1	20.0
SK 82 F	15.9	15.0	39.1	37.0	30.6	29.0	47.6	45.0	36.5	34.5	36.5	34.5
SK 83 F	32.8	31.0	35.9	34.0	37.0	35.0	42.3	40.0	35.9	34.0	35.9	34.0
SK 92 F	27.5	26.0	77.0	73.0	49.7	47.0	82.0	78.0	55.0	52.0	55.0	52.0
SK 93 F	56.0	53.0	74.0	70.0	62.0	59.0	78.0	74.0	52.0	49.0	52.0	49.0
SK 102 F	42.3	40.0	86.0	81.0	70.0	66.0	110	104	76.0	72.0	76.0	72.0
SK 103 F	73.0	69.0	82.0	78.0	82.0	78.0	105	99.0	71.0	67.0	71.0	67.0

CLINCHER™ OIL FILL QUANTITIES

CLINCHER™ lubrication

Unless otherwise noted below, the following NORD Gear reducers are shipped from the factory with a pre-determined oil fill level in accordance to the specified reducer size and mounting position. For additional information, please refer to the "Oil Plug & Vent Locations" documentation for your gear unit.

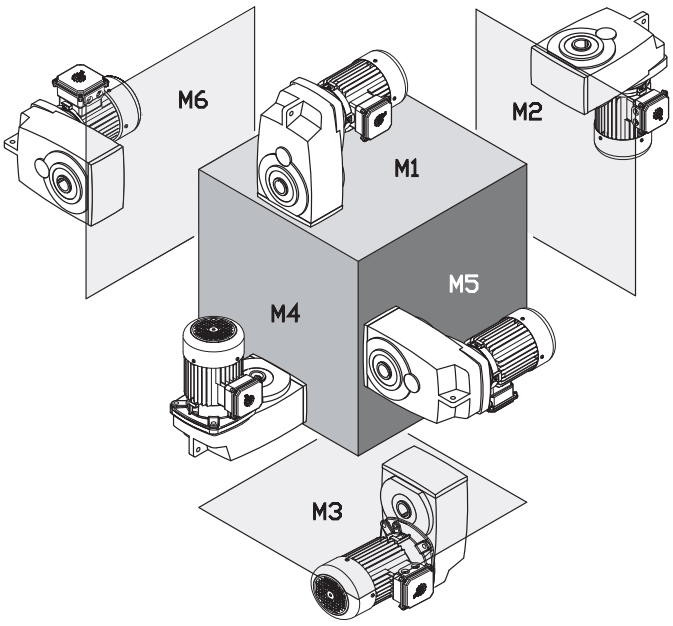

STOP *HARMFUL SITUATION* **STOP**

Actual oil volume can vary slightly depending upon the gear case size, mounting and ratio. Prior to commissioning the reducer, check the oil-fill level using the reducer's oil level plug and drain or add addition oil as needed. The minimum acceptable oil level is 0.15 in (4mm) below the oil level hole.

For mounting orientations other than shown please consult NORD Gear. Reducer modifications may be required.

Type	M1		M2		M3		M4		M5		M6	
	Quarts	Liters	Quarts	Liters	Quarts	Liters	Quarts	Liters	Quarts	Liters	Quarts	Liters
SK 0182NB	0.42	0.40	0.58	0.55	0.58	0.55	0.42	0.40	0.42	0.40	0.42	0.40
SK 0282NB	0.74	0.70	1.16	1.10	0.85	0.80	1.16	1.10	0.95	0.90	0.95	0.90
SK 1282	1.00	0.95	1.37	1.30	0.95	0.90	1.37	1.30	1.06	1.00	1.06	1.00
SK 1382NB	1.48	1.40	2.43	2.30	2.32	2.20	2.32	2.20	2.11	2.00	2.11	2.00
SK 1382	1.53	1.45	1.69	1.60	1.22	1.15	1.80	1.70	1.16	1.10	1.16	1.10
SK 2282	1.80	1.70	2.43	2.30	1.80	1.70	2.32	2.20	2.01	1.90	2.01	1.90
SK 2382	2.43	2.30	2.85	2.70	2.22	2.10	3.38	3.20	2.11	2.00	2.11	2.00
SK 3282	2.96	2.80	4.23	4.00	3.49	3.30	4.02	3.80	3.17	3.00	3.17	3.00
SK 3382	4.02	3.80	4.54	4.30	3.17	3.00	5.81	5.50	3.17	3.00	3.17	3.00
SK 4282	4.44	4.20	5.71	5.40	4.65	4.40	5.28	5.00	4.44	4.20	4.44	4.20
SK 4382	6.45	6.10	7.29	6.90	5.18	4.90	8.88	8.40	5.28	5.00	5.28	5.00
SK 5282	7.93	7.50	9.30	8.80	7.93	7.50	9.30	8.80	7.61	7.20	7.61	7.20
SK 5382	13.2	12.5	12.7	12.0	7.08	6.70	14.8	14.0	8.77	8.30	8.77	8.30
SK 6282	18.0	17.0	16.4	15.5	13.2	12.5	18.5	17.5	11.6	11.0	14.8	14.0
SK 6382	16.9	16.0	13.7	13.0	10.6	10.0	19.0	18.0	14.8	14.0	13.2	12.5
SK 7282	26.9	25.5	22.2	21.0	21.7	20.5	28.5	27.0	16.9	16.0	22.2	21.0
SK 7382	23.2	22.0	22.2	21.0	16.9	16.0	26.4	25.0	24.3	23.0	23.2	22.0
SK 8282	39.6	37.5	34.9	33.0	32.2	30.5	46.5	44.0	32.8	31.0	32.8	31.0
SK 8382	36.5	34.5	34.3	32.5	26.4	25.0	40.2	38.0	37.0	35.0	31.7	30.0
SK 9282	79.0	75.0	74.0	70.0	59.0	56.0	85.0 †	80.0 †	69.0	65.0	62.0	59.0
SK 9382	78.0	74.0	74.0	70.0	45.4	43.0	79.0 †	75.0 †	69.0	65.0	63.0	60.0
SK 10282	95.0	90.0	95.0	90.0	42.3	40.0	95.0 †	90.0 †	63.0	60.0	87.0	82.0
SK 10382	90.0	85.0	95.0	90.0	77.0	73.0	106 †	100 †	85	80.0	85.0	80.0
SK 11282*	174	165	169	160	153	145	206 †	195 †	106	100	148	140
SK 11382*	169	160	164	155	148	140	222 †	210 †	164	155	143	135
SK 12382*	169	160	164	155	148	140	**222 †**	**210 †**	164	155	143	135

*** For shipping purposes the larger Clincher™ gear units are supplied without oil.**

† Oil quantities shown are for the gearbox only. When the OT (oil tank) option is used, the oil must be filled to the level shown on the dipstick which is located inside of the oil tank. Even when the gear unit is filled by NORD, the user MUST add more oil untill the oil is filled to the proper level.

90.1 HELICAL-BEVEL FOOTED OIL FILL QUANTITIES

90.1 Helical-bevel footed lubrication

Unless otherwise noted below, the following NORD Gear reducers are shipped from the factory with a pre-determined oil fill level in accordance to the specified reducer size and mounting position. For additional information, please refer to the "Oil Plug & Vent Locations" documentation for your gear unit.

STOP *HARMFUL SITUATION* **STOP**

Actual oil volume can vary slightly depending upon the gear case size, mounting and ratio. Prior to commissioning the reducer, check the oil-fill level using the reducer's oil level plug and drain or add addition oil as needed. The minimum acceptable oil level is 0.15 in (4mm) below the oil level hole.

For mounting orientations other than shown please consult NORD Gear. Reducer modifications may be required.

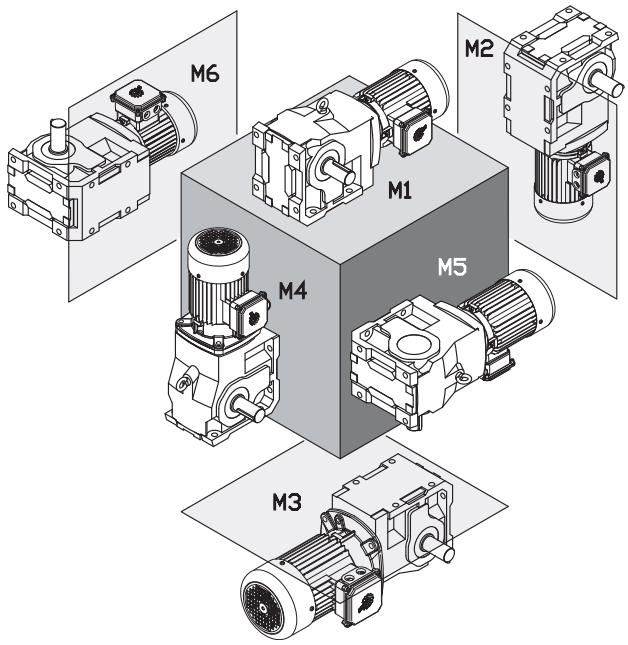

Type	M1		M2		M3		M4		M5		M6	
	Quarts	Liters	Quarts	Liters	Quarts	Liters	Quarts	Liters	Quarts	Liters	Quarts	Liters
SK 9012.1	0.74	0.70	1.80	1.70	2.01	1.90	2.22	2.10	1.16	1.10	1.59	1.50
SK 9013.1	1.43	1.35	2.22	2.10	2.27	2.15	2.91	2.75	1.06	1.00	1.90	1.80
SK 9016.1	0.74	0.70	1.80	1.70	2.01	1.90	2.22	2.10	1.16	1.10	1.59	1.50
SK 9017.1	1.37	1.30	2.11	2.00	2.22	2.10	2.85	2.70	1.06	1.00	1.80	1.70
SK 9022.1	1.37	1.30	3.06	2.90	3.49	3.30	4.02	3.80	1.80	1.70	2.96	2.80
SK 9023.1	2.32	2.20	3.38	3.20	3.80	3.60	4.97	4.70	2.32	2.20	3.06	2.90
SK 9032.1	1.90	1.80	5.71	5.40	6.45	6.10	7.19	6.80	3.17	3.00	4.86	4.60
SK 9033.1	3.28	3.10	6.02	5.70	6.66	6.30	8.45	8.00	3.59	3.40	5.07	4.80
SK 9042.1	2.85	2.70	9.51	9.00	10.6	10.0	11.3	10.7	5.49	5.20	8.14	7.70
SK 9043.1	5.28	5.00	10.7	10.1	11.6	11.0	14.1	13.3	6.02	5.70	8.56	8.10
SK 9052.1	6.87	6.50	16.9	16.0	20.1	19.0	22.7	21.5	11.6	11.0	16.4	15.5
SK 9053.1	10.6	10.0	18.0	17.0	21.1	20.0	25.9	24.5	12.2	11.5	17.4	16.5
SK 9062.1	10.6	10.0	29.1	27.5	33.8	32.0	38.0	36.0	19.0	18.0	25.4	24.0
SK 9072.1	10.6	10.0	29.1	27.5	33.8	32.0	38.0	36.0	19.0	18.0	25.4	24.0
SK 9082.1	18.0	17.0	54.0	52.0	66.0	63.0	76.0	72.0	34.9	33.0	49.1	46.5
SK 9086.1	30.6	29.0	77.0	73.0	90.0	85.0	108	102	51.0	48.0	66.0	62.0
SK 9092.1	43.3	41.0	166	157	180	170	182	172	85.0	80.0	95.0	90.0
SK 9096.1	74.0	70.0	198	187	205	194	268	254	115	109	161	152

Oil Levels shown apply to base models and gear units ending in LX, AX, & VX.

90.1 HELICAL-BEVEL FLANGED OIL FILL QUANTITIES

90.1 Helical-bevel flanged lubrication

Unless otherwise noted below, the following NORD Gear reducers are shipped from the factory with a pre-determined oil fill level in accordance to the specified reducer size and mounting position. For additional information, please refer to the "Oil Plug & Vent Locations" documentation for your gear unit.

STOP *HARMFUL SITUATION* **STOP**

Actual oil volume can vary slightly depending upon the gear case size, mounting and ratio. Prior to commissioning the reducer, check the oil-fill level using the reducer's oil level plug and drain or add addition oil as needed. The minimum acceptable oil level is 0.15 in (4mm) below the oil level hole.

For mounting orientations other than shown please consult NORD Gear. Reducer modifications may be required.

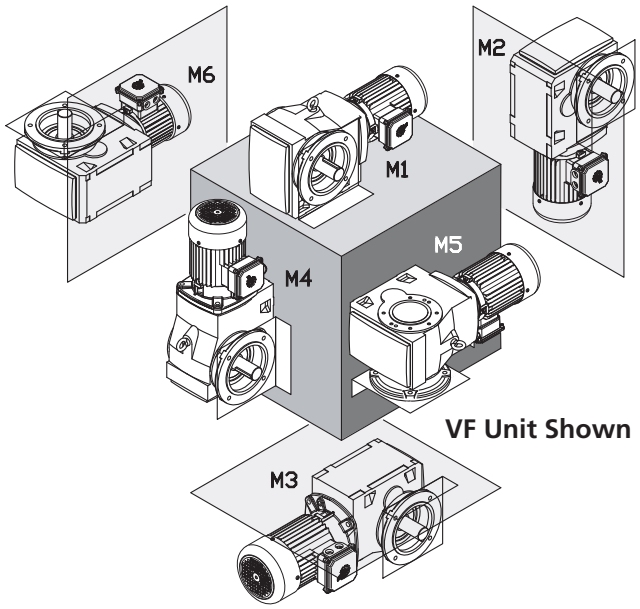

VF Unit Shown

Type	M1		M2		M3		M4		M5		M6	
	Quarts	Liters	Quarts	Liters	Quarts	Liters	Quarts	Liters	Quarts	Liters	Quarts	Liters
SK 9012.1	1.06	1.00	2.01	1.90	2.01	1.90	2.32	2.20	1.27	1.20	1.80	1.70
SK 9013.1	1.53	1.45	2.43	2.30	2.22	2.10	2.96	2.80	1.11	1.05	1.90	1.80
SK 9016.1	1.06	1.00	2.01	1.90	2.01	1.90	2.32	2.20	1.27	1.20	1.80	1.70
SK 9017.1	1.53	1.45	2.43	2.30	2.22	2.10	2.96	2.80	1.11	1.05	1.90	1.80
SK 9022.1	1.69	1.60	3.70	3.50	3.70	3.50	4.44	4.20	2.43	2.30	2.96	2.80
SK 9023.1	2.43	2.30	3.70	3.50	4.02	3.80	5.60	5.30	2.32	2.20	3.59	3.40
SK 9032.1	2.22	2.10	5.07	4.80	6.76	6.40	7.50	7.10	3.49	3.30	5.39	5.10
SK 9033.1	3.91	3.70	6.02	5.70	7.08	6.70	9.09	8.60	3.80	3.60	5.60	5.30
SK 9042.1	4.76	4.50	10.6	10.0	10.6	10.0	12.2	11.5	6.87	6.50	8.66	8.20
SK 9043.1	6.87	6.50	11.1	10.5	12.6	11.9	15.5	14.7	7.08	6.70	9.83	9.30
SK 9052.1	7.93	7.50	17.4	16.5	21.1	20.0	24.8	23.5	12.2	11.5	19.0	18.0
SK 9053.1	13.7	13.0	19.0	18.0	22.7	21.5	28.0	26.5	13.7	13.0	18.0	17.0
SK 9062.1	12.7	12.0	29.1	27.5	34.9	33.0	40.7	38.5	20.1	19.0	27.5	26.0
SK 9072.1	12.7	12.0	29.1	27.5	34.9	33.0	40.7	38.5	20.1	19.0	27.5	26.0
SK 9082.1	22.2	21.0	57.0	54.0	70.0	66.0	85.0	80.0	40.2	38.0	55.0	52.0
SK 9086.1	38.0	36.0	82.0	78.0	96.0	91.0	113	107	56.0	53.0	80.0	76.0
SK 9092.1	42.3	40.0	137	130	163	154	185	175	87.0	82.0	96.0	91.0
SK 9096.1	85.0	80.0	198	187	204	193	272	257	119	113	165	156

Oil Levels shown apply to base models and gear units ending in AZ, AF, VZ, & VF.

92 SERIES HELICAL-BEVEL FOOTED OIL FILL QUANTITIES

92 Helical-bevel footed lubrication

The following NORD Gear reducers are shipped from the factory with a pre-determined oil fill level in accordance to the specified reducer size and mounting position. For additional information, please refer to the "Oil Plug & Vent Locations" documentation for your gear unit.

STOP *HARMFUL SITUATION* **STOP**

Actual oil volume can vary slightly depending upon the gear case size, mounting and ratio. Prior to commissioning the reducer, check the oil-fill level using the reducer's oil level plug and drain or add addition oil as needed. The minimum acceptable oil level is 0.15 in (4mm) below the oil level hole.

For mounting orientations other than shown please consult NORD Gear. Reducer modifications may be required.

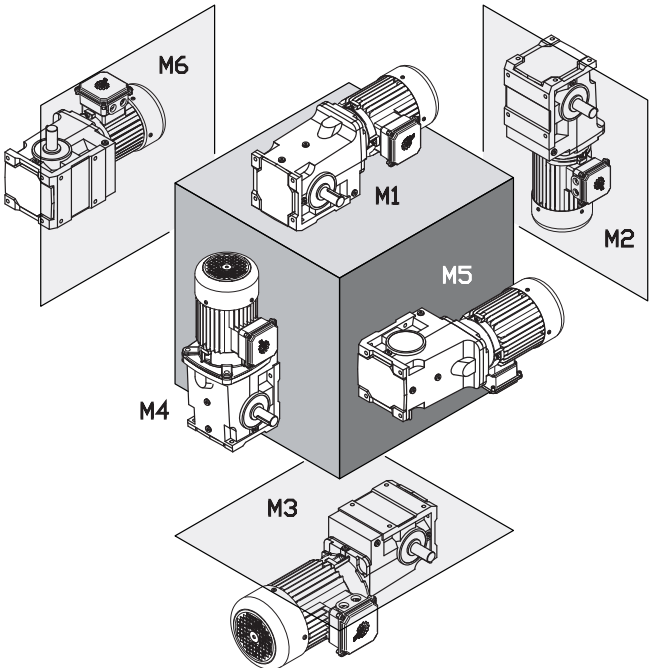

Type	M1		M2		M3		M4		M5		M6	
	Quarts	Liters	Quarts	Liters	Quarts	Liters	Quarts	Liters	Quarts	Liters	Quarts	Liters
SK 92072	0.42	0.40	0.63	0.60	0.53	0.50	0.58	0.55	0.42	0.40	0.42	0.40
SK 92172	0.63	0.60	0.95	0.90	1.06	1.00	1.16	1.10	1.16	1.10	0.85	0.80
SK 92372	0.95	0.90	1.69	1.60	1.59	1.50	2.01	1.90	1.59	1.50	0.95	0.90
SK 92672	1.90	1.80	3.70	3.50	3.80	3.60	3.59	3.40	2.75	2.60	2.75	2.60
SK 92772	2.43	2.30	4.76	4.50	4.86	4.60	5.60	5.30	4.33	4.10	4.33	4.10

Oil Levels shown apply to base models and gear units ending in LX, AX, & VX.

92.1/93.1 SERIES HELICAL-BEVEL OIL FILL QUANTITIES

92.1/93.1 Helical-bevel lubrication

All NORD Gear reducers are shipped from the factory with a pre-determined oil fill level in accordance to the specified reducer size & mounting position. For additional information, please refer to the "Oil Plug & Vent Locations" documentation for your gear unit.

STOP *HARMFUL SITUATION* **STOP**

Actual oil volume can vary slightly depending upon the gear case size, mounting and ratio. Prior to commissioning the reducer, check the oil-fill level using the reducer's oil level plug and drain or add addition oil as needed.

For mounting orientations other than shown please consult NORD Gear. Reducer modifications may be required.

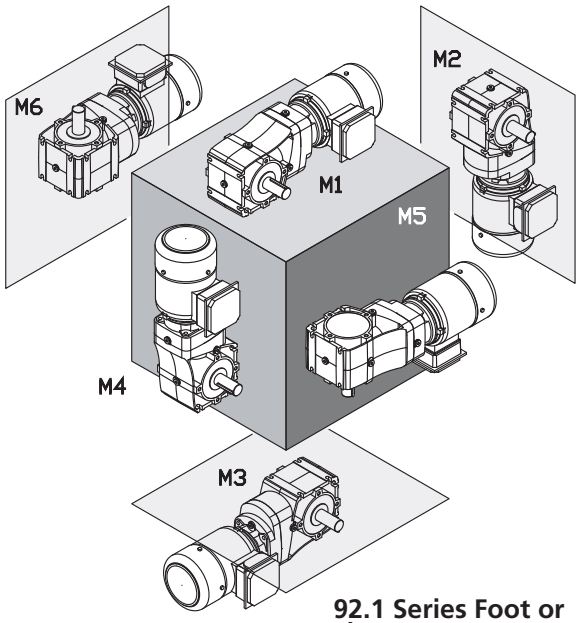

92.1 Series Foot or Flange Mount

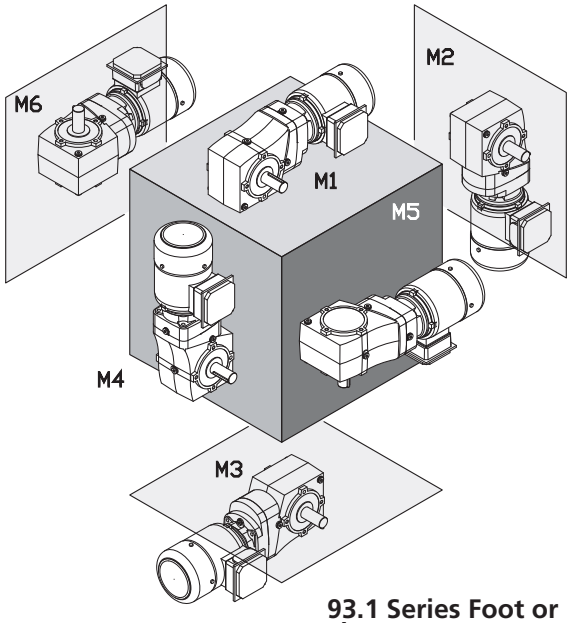

93.1 Series Foot or Flange Mount

92.1 Series Oil Fill

	M1		M2		M3		M4		M5		M6	
	Quarts	Liters	Quarts	Liters	Quarts	Liters	Quarts	Liters	Quarts	Liters	Quarts	Liters
SK 92072.1	0.28	0.26	0.52	0.49	0.44	0.42	0.57	0.54	0.31	0.29	0.33	0.31
SK 92172.1	0.36	0.34	0.65	0.61	0.55	0.52	0.71	0.67	0.44	0.42	0.51	0.48
SK 92372.1	0.45	0.43	0.97	0.92	0.77	0.73	0.88	0.83	0.58	0.55	0.65	0.61
SK 92672.1	0.90	0.85	1.69	1.60	1.27	1.20	1.59	1.50	1.08	1.02	1.08	1.02
SK 92772.1	1.37	1.30	2.80	2.65	1.97	1.86	2.59	2.45	1.69	1.60	1.69	1.60

Oil levels shown apply to all foot & flange mounted units.

93.1 Series Oil Fill

	M1		M2		M3		M4		M5		M6	
	Quarts	Liters	Quarts	Liters	Quarts	Liters	Quarts	Liters	Quarts	Liters	Quarts	Liters
SK 93072.1	0.41	0.39	0.98	0.93	0.84	0.79	1.08	1.02	0.52	0.49	0.66	0.62
SK 93172.1	0.63	0.60	1.24	1.17	0.99	0.94	1.29	1.22	0.69	0.65	0.90	0.85
SK 93372.1	1.06	1.00	2.08	1.97	1.74	1.65	2.26	2.14	1.18	1.12	1.42	1.34
SK 93672.1	1.90	1.80	3.41	3.23	2.86	2.71	4.44	4.20	2.13	2.02	2.59	2.45
SK 93772.1	2.87	2.72	4.89	4.63	3.91	3.70	5.71	5.40	3.10	2.93	3.43	3.25

Oil levels shown apply to all foot & flange mounted units.

92 SERIES HELICAL-BEVEL FLANGED OIL FILL QUANTITIES

92 Helical-bevel flanged lubrication

The following NORD Gear reducers are shipped from the factory with a pre-determined oil fill level in accordance to the specified reducer size and mounting position. For additional information, please refer to the "Oil Plug & Vent Locations" documentation for your gear unit.

STOP *HARMFUL SITUATION* **STOP**

Actual oil volume can vary slightly depending upon the gear case size, mounting and ratio. Prior to commissioning the reducer, check the oil-fill level using the reducer's oil level plug and drain or add addition oil as needed. The minimum acceptable oil level is 0.15 in (4mm) below the oil level hole.

For mounting orientations other than shown please consult NORD Gear. Reducer modifications may be required.

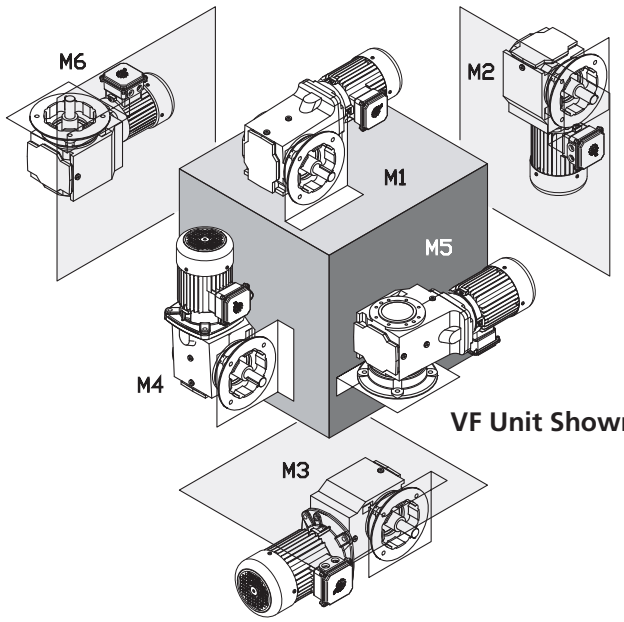

VF Unit Shown

Type	M1		M2		M3		M4		M5		M6	
	Quarts	Liters	Quarts	Liters	Quarts	Liters	Quarts	Liters	Quarts	Liters	Quarts	Liters
SK 92072	0.42	0.40	0.63	0.60	0.58	0.55	0.58	0.55	0.42	0.40	0.42	0.40
SK 92172	0.53	0.50	1.06	1.00	0.95	0.90	1.11	1.05	0.95	0.90	0.63	0.60
SK 92372	1.27	1.20	1.69	1.60	1.59	1.50	2.01	1.90	1.37	1.30	1.37	1.30
SK 92672	1.69	1.60	2.96	2.80	2.64	2.50	3.49	3.30	2.54	2.40	2.54	2.40
SK 92772	2.96	2.80	4.65	4.40	4.76	4.50	5.81	5.50	3.70	3.50	3.70	3.50

Oil Levels shown apply to gear units ending in AZ, AF, VZ, & VF.

HELICAL-WORM FOOTED OIL FILL QUANTITIES

Helical-worm footed lubrication

The following NORD Gear reducers are shipped from the factory with a pre-determined oil fill level in accordance to the specified reducer size and mounting position. For additional information, please refer to the "Oil Plug & Vent Locations" documentation for your gear unit.

HARMFUL SITUATION

Actual oil volume can vary slightly depending upon the gear case size, mounting and ratio. Prior to commissioning the reducer, check the oil-fill level using the reducer's oil level plug and drain or add addition oil as needed. The minimum acceptable oil level is 0.15 in (4mm) below the oil level hole.

For mounting orientations other than shown please consult NORD Gear. Reducer modifications may be required.

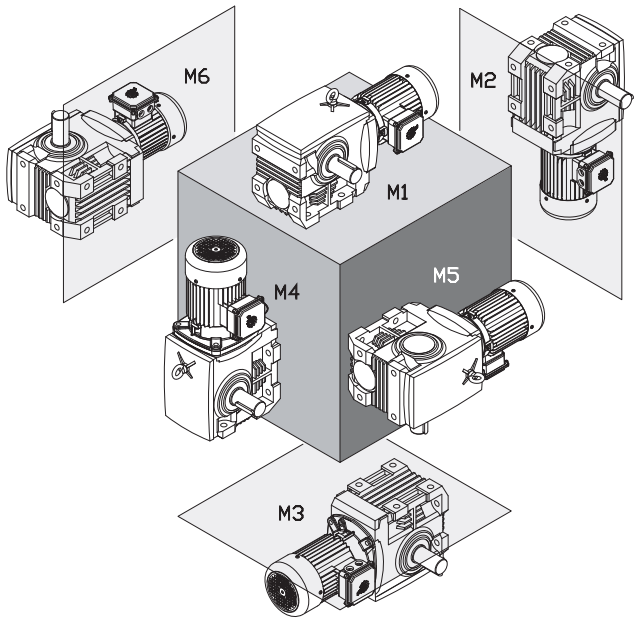

Type	M1		M2		M3		M4		M5		M6	
	Quarts	Liters	Quarts	Liters	Quarts	Liters	Quarts	Liters	Quarts	Liters	Quarts	Liters
SK 02040	0.42	0.40	0.85	0.80	0.79	0.75	0.69	0.65	0.53	0.50	0.53	0.50
SK 02050	0.42	0.40	1.48	1.40	1.16	1.10	1.37	1.30	0.74	0.70	0.74	0.70
SK 13050	0.79	0.75	1.85	1.75	1.37	1.30	1.85	1.75	0.79	0.75	0.79	0.75
SK 12063	0.63	0.60	1.90	1.80	1.27	1.20	1.69	1.60	1.06	1.00	1.06	1.00
SK 13063	1.06	1.00	2.43	2.30	1.59	1.50	2.32	2.20	1.16	1.10	1.16	1.10
SK 12080	0.95	0.90	3.28	3.10	2.54	2.40	3.17	3.00	1.90	1.80	1.90	1.80
SK 13080	1.80	1.70	3.70	3.50	3.70	3.50	3.70	3.50	2.11	2.00	2.11	2.00
SK 32100	1.59	1.50	6.66	6.30	5.92	5.60	5.81	5.50	3.80	3.60	3.80	3.60
SK 33100	2.54	2.40	6.76	6.40	5.71	5.40	6.87	6.50	3.59	3.40	3.59	3.40
SK 42125	2.96	2.80	12.5	11.8	10.8	10.2	10.6	10.0	6.55	6.20	6.55	6.20
SK 43125	4.49	4.25	13.7	13.0	11.1	10.5	14.3	13.5	7.61	7.20	7.61	7.20

HELICAL-WORM SOLID SHAFT/FLANGED OIL FILL QUANTITIES

Helical-worm solid shaft/flanged lubrication

The following NORD Gear reducers are shipped from the factory with a pre-determined oil fill level in accordance to the specified reducer size and mounting position. For additional information, please refer to the "Oil Plug & Vent Locations" documentation for your gear unit.

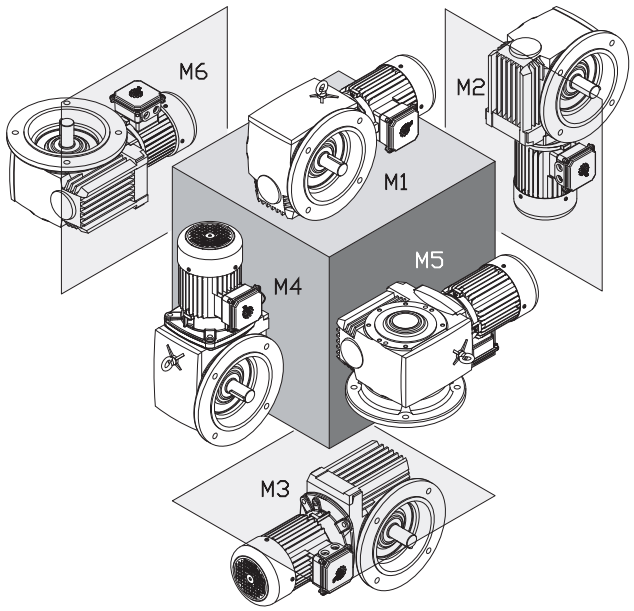

STOP *HARMFUL SITUATION* **STOP**

Actual oil volume can vary slightly depending upon the gear case size, mounting and ratio. Prior to commissioning the reducer, check the oil-fill level using the reducer's oil level plug and drain or add addition oil as needed. The minimum acceptable oil level is 0.15 in (4mm) below the oil level hole.

For mounting orientations other than shown please consult NORD Gear. Reducer modifications may be required.

Type	M1		M2		M3		M4		M5		M6	
	Quarts	Liters	Quarts	Liters	Quarts	Liters	Quarts	Liters	Quarts	Liters	Quarts	Liters
SK 02040 VF	0.53	0.50	0.85	0.80	0.79	0.75	0.63	0.60	0.53	0.50	0.53	0.50
SK 02050 VF	0.42	0.40	1.59	1.50	1.32	1.25	1.27	1.20	0.95	0.90	0.79	0.75
SK 13050 VF	0.79	0.75	1.90	1.80	1.59	1.50	1.80	1.70	1.11	1.05	0.95	0.90
SK 12063 VF	0.53	0.50	2.06	1.95	1.80	1.70	1.85	1.75	1.27	1.20	1.00	0.95
SK 13063 VF	1.06	1.00	2.43	2.30	2.01	1.90	2.32	2.20	1.43	1.35	1.16	1.10
SK 12080 VF	0.95	0.90	3.91	3.70	3.38	3.20	3.59	3.40	2.64	2.50	2.43	2.30
SK 13080 VF	1.69	1.60	4.02	3.80	3.70	3.50	4.12	3.90	2.85	2.70	2.64	2.50
SK 32100 VF	1.48	1.40	6.66	6.30	6.45	6.10	6.45	6.10	4.23	4.00	3.80	3.60
SK 33100 VF	2.80	2.65	7.61	7.20	6.76	6.40	8.03	7.60	4.54	4.30	4.02	3.80
SK 42125 VF	3.17	3.00	12.2	11.5	12.2	11.5	11.6	11.0	8.88	8.40	7.71	7.30
SK 43125 VF	4.97	4.70	15.9	15.0	13.7	13.0	16.9	16.0	9.51	9.00	8.14	7.70

HELICAL-WORM HOLLOW SHAFT OIL FILL QUANTITIES

Helical-worm hollow shaft lubrication

The following NORD Gear reducers are shipped from the factory with a pre-determined oil fi ll level in accordance to the specifi ed reducer size and mounting position. For additional information, please refer to the "Oil Plug & Vent Locations" documentation for your gear unit.

STOP *HARMFUL SITUATION* **STOP**

Actual oil volume can vary slightly depending upon the gear case size, mounting and ratio. Prior to commissioning the reducer, check the oil-fi ll level using the reducer's oil level plug and drain or add addition oil as needed. The minimum acceptable oil level is 0.15 in (4mm) below the oil level hole.

For mounting orientations other than shown please consult NORD Gear. Reducer modifications may be required.

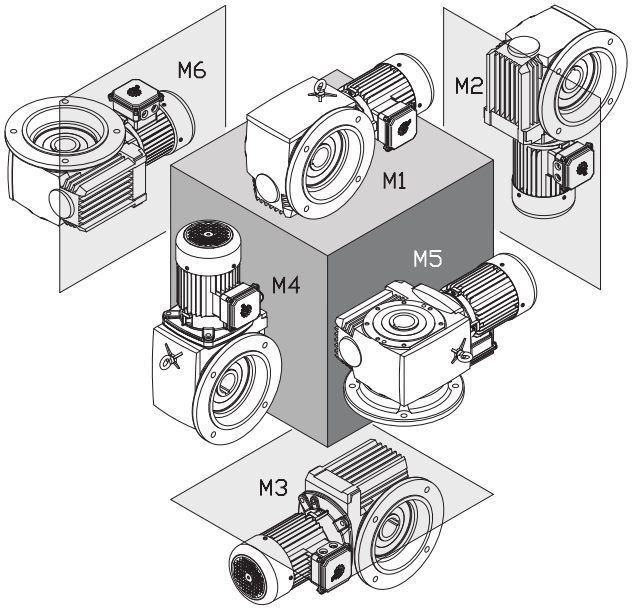

AF Unit Shown

Type	M1		M2		M3		M4		M5		M6	
	Quarts	Liters	Quarts	Liters	Quarts	Liters	Quarts	Liters	Quarts	Liters	Quarts	Liters
SK 02040	0.42	0.40	0.74	0.70	0.69	0.65	0.69	0.65	0.58	0.55	0.58	0.55
SK 02050	0.48	0.45	1.48	1.40	1.22	1.15	1.16	1.10	0.79	0.75	0.79	0.75
SK 13050	0.95	0.90	1.90	1.80	1.37	1.30	1.74	1.65	1.37	1.30	1.37	1.30
SK 12063	0.58	0.55	1.53	1.45	1.69	1.60	1.69	1.60	1.16	1.10	1.16	1.10
SK 13063	1.11	1.05	2.22	2.10	1.90	1.80	2.22	2.10	1.48	1.40	1.48	1.40
SK 12080	0.85	0.80	3.28	3.10	3.38	3.20	2.96	2.80	1.90	1.80	1.90	1.80
SK 13080	1.69	1.60	3.80	3.60	3.06	2.90	3.96	3.75	2.11	2.00	2.11	2.00
SK 32100	1.59	1.50	5.92	5.60	5.92	5.60	5.60	5.30	4.23	4.00	4.23	4.00
SK 33100	2.75	2.60	6.34	6.00	6.13	5.80	6.34	6.00	3.70	3.50	3.70	3.50
SK 42125	3.17	3.00	13.2	12.5	11.4	10.8	11.4	10.8	6.87	6.50	6.87	6.50
SK 43125	4.86	4.60	14.4	13.6	12.0	11.4	15.1	14.3	8.03	7.60	8.03	7.60

Oil Levels shown apply to gear units ending in AZ, AF.

NORDBLOC® FOOTED OIL FILL QUANTITIES

NORDBLOC® footed lubrication

The following NORD Gear reducers are shipped from the factory with a pre-determined oil fill level in accordance to the specified reducer size and mounting position. For additional information, please refer to the "Oil Plug & Vent Locations" documentation for your gear unit.

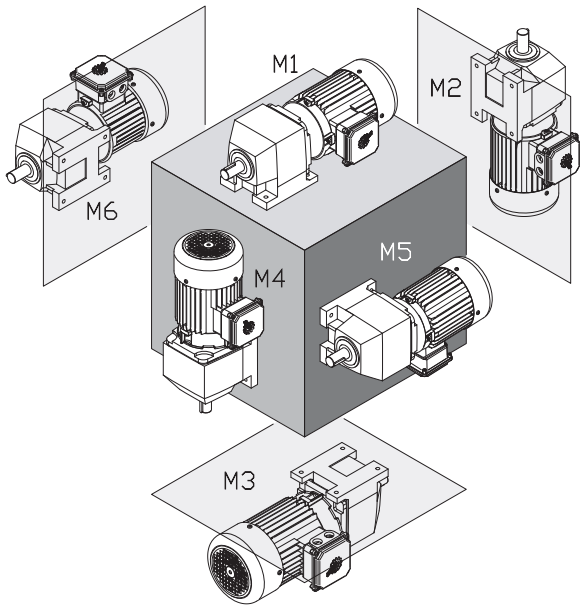

STOP *HARMFUL SITUATION* **STOP**

Actual oil volume can vary slightly depending upon the gear case size, mounting and ratio. Prior to commissioning the reducer, check the oil-fill level using the reducer's oil level plug and drain or add addition oil as needed. The minimum acceptable oil level is 0.15 in (4mm) below the oil level hole.

For mounting orientations other than shown please consult NORD Gear. Reducer modifications may be required.

Type	M1		M2		M3		M4		M5		M6	
	Quarts	Liters	Quarts	Liters	Quarts	Liters	Quarts	Liters	Quarts	Liters	Quarts	Liters
SK 172	0.37	0.35	0.53	0.50	0.53	0.50	0.53	0.50	0.53	0.50	0.53	0.50
SK 272	0.63	0.60	1.06	1.00	1.06	1.00	1.06	1.00	1.06	1.00	1.06	1.00
SK 273	0.66	0.62	1.16	1.10	1.16	1.10	1.16	1.10	1.16	1.10	1.16	1.10
SK 372	0.63	0.60	1.06	1.00	1.06	1.00	1.06	1.00	1.06	1.00	1.06	1.00
SK 373	0.58	0.55	1.16	1.10	1.16	1.10	1.16	1.10	1.16	1.10	1.16	1.10
SK 472	1.06	1.00	2.01	1.90	2.01	1.90	2.11	2.00	1.90	1.80	1.90	1.80
SK 473	1.37	1.30	2.64	2.50	2.22	2.10	2.54	2.40	2.22	2.10	2.22	2.10
SK 572	1.06	1.00	2.01	1.90	2.01	1.90	2.11	2.00	1.90	1.80	1.90	1.80
SK 573	1.37	1.30	2.64	2.50	2.22	2.10	2.54	2.40	2.22	2.10	2.22	2.10
SK 672	1.48	1.40	3.59	3.40	3.28	3.10	3.33	3.15	1.53	1.45	3.33	3.15
SK 673	1.90	1.80	4.02	3.80	3.38	3.20	3.59	3.40	3.06	2.90	3.17	3.00
SK 772	2.11	2.00	3.49	3.30	3.70	3.50	4.44	4.20	2.85	2.70	3.49	3.30
SK 773	2.64	2.50	4.76	4.50	3.91	3.70	4.86	4.60	3.49	3.30	3.49	3.30
SK 872	3.91	3.70	10.1	9.60	9.62	9.10	7.71	7.30	4.97	4.70	8.45	8.00
SK 873	6.55	6.20	8.88	8.40	7.93	7.50	9.62	9.10	7.93	7.50	7.93	7.50
SK 972	6.87	6.50	16.9	16.0	16.6	15.7	15.5	14.7	8.98	8.50	14.8	14.0
SK 973	11.6	11.0	16.7	15.8	13.7	13.0	16.9	16.0	14.1	13.3	13.7	13.0

NORDBLOC® FLANGED OIL FILL QUANTITIES

NORDBLOC® flanged lubrication

The following NORD Gear reducers are shipped from the factory with a pre-determined oil fill level in accordance to the specified reducer size and mounting position. For additional information, please refer to the "Oil Plug & Vent Locations" documentation for your gear unit.

STOP *HARMFUL SITUATION* **STOP**

Actual oil volume can vary slightly depending upon the gear case size, mounting and ratio. Prior to commissioning the reducer, check the oil-fill level using the reducer's oil level plug and drain or add addition oil as needed. The minimum acceptable oil level is 0.15 in (4mm) below the oil level hole.

For mounting orientations other than shown please consult NORD Gear. Reducer modifications may be required.

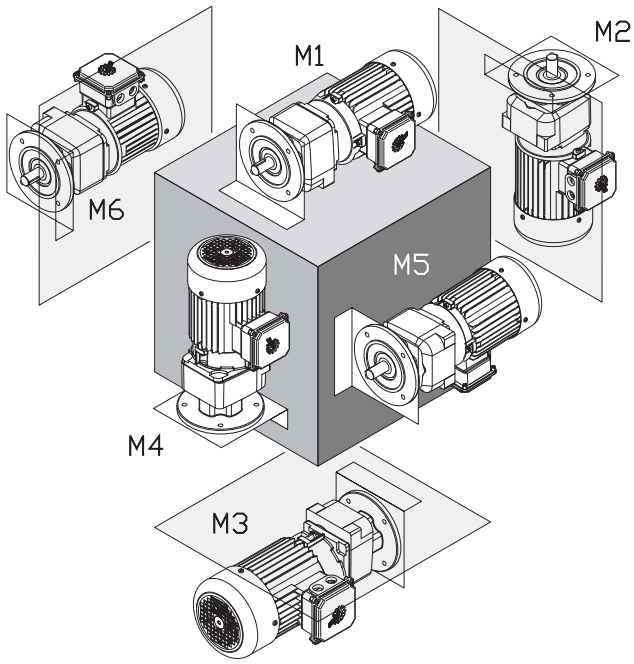

Mounting Position	M1		M2		M3		M4		M5		M6	
	Quarts	Liters	Quarts	Liters	Quarts	Liters	Quarts	Liters	Quarts	Liters	Quarts	Liters
SK 172 F	0.37	0.35	0.53	0.50	0.53	0.50	0.53	0.50	0.53	0.50	0.53	0.50
SK 272 F	0.63	0.60	1.06	1.00	1.06	1.00	1.06	1.00	1.06	1.00	1.06	1.00
SK 273 F	0.66	0.62	1.16	1.10	1.16	1.10	1.16	1.10	1.16	1.10	1.16	1.10
SK 372 F	0.63	0.60	1.06	1.00	1.06	1.00	1.06	1.00	1.06	1.00	1.06	1.00
SK 373 F	0.58	0.55	1.16	1.10	1.16	1.10	1.16	1.10	1.16	1.10	1.16	1.10
SK 472 F	1.06	1.00	2.01	1.90	2.01	1.90	2.01	1.90	2.01	1.90	1.59	1.50
SK 473 F	1.32	1.25	2.54	2.40	2.22	2.10	2.64	2.50	2.22	2.10	2.22	2.10
SK 572 F	1.06	1.00	2.01	1.90	2.01	1.90	2.01	1.90	2.01	1.90	1.59	1.50
SK 573 F	1.32	1.25	2.54	2.40	2.22	2.10	2.64	2.50	2.22	2.10	2.22	2.10
SK 672 F	1.22	1.15	3.59	3.40	2.85	2.70	2.96	2.80	1.32	1.25	2.85	2.70
SK 673 F	1.80	1.70	4.02	3.80	3.17	3.00	3.38	3.20	3.17	3.00	3.17	3.00
SK 772 F	1.69	1.60	3.49	3.30	3.70	3.50	3.49	3.30	3.28	3.10	3.28	3.10
SK 773 F	2.43	2.30	5.28	5.00	3.80	3.60	4.76	4.50	4.12	3.90	4.12	3.90
SK 872 F	3.70	3.50	9.51	9.00	8.35	7.90	8.14	7.70	4.12	3.90	7.61	7.20
SK 873 F	5.28	5.00	9.30	8.80	8.03	7.60	8.45	8.00	8.45	8.00	8.45	8.00
SK 972 F	6.87	6.50	15.9	15.0	13.7	13.0	14.3	13.5	6.87	6.50	12.7	12.0
SK 973 F	10.9	10.3	17.4	16.5	13.7	13.0	16.9	16.0	14.8	14.0	14.8	14.0

NORDBLOC®.1 FOOTED OIL FILL QUANTITIES

NORDBLOC®.1 footed lubrication

The following NORD Gear reducers are shipped from the factory with a pre-determined oil fill level in accordance to the specified reducer size and mounting position. For additional information, please refer to the "Oil Plug & Vent Locations" documentation for your gear unit.

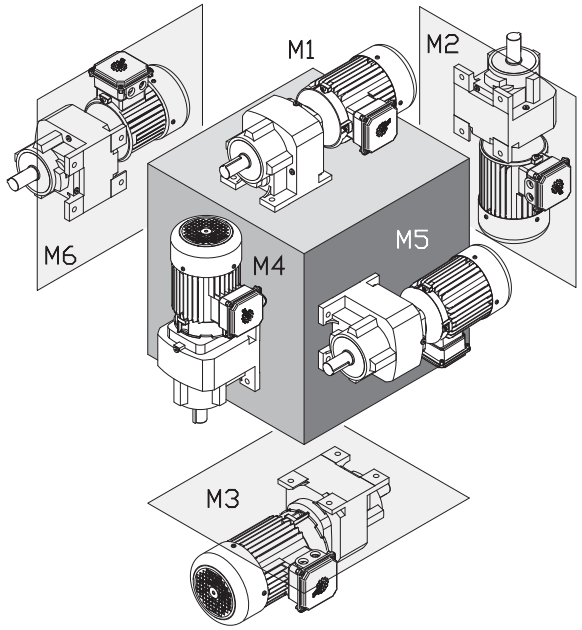

STOP *HARMFUL SITUATION* STOP

Actual oil volume can vary slightly depending upon the gear case size, mounting and ratio. Prior to commissioning the reducer, check the oil-fill level using the reducer's oil level plug and drain or add addition oil as needed. The minimum acceptable oil level is 0.15 in (4mm) below the oil level hole.

For mounting orientations other than shown please consult NORD Gear. Reducer modifications may be required.

Type	M1		M2		M3		M4		M5		M6	
	Quarts	Liters	Quarts	Liters	Quarts	Liters	Quarts	Liters	Quarts	Liters	Quarts	Liters
SK072.1	0.17	0.16	0.34	0.32	0.22	0.21	0.24	0.23	0.19	0.18	0.21	0.20
SK172.1	0.29	0.27	0.62	0.59	0.44	0.42	0.48	0.45	0.34	0.32	0.41	0.39
SK372.1	0.48	0.45	1.11	1.05	0.79	0.75	1.06	1.00	0.63	0.60	0.69	0.65
SK373.1	0.48	0.45	1.11	1.05	0.79	0.75	1.06	1.00	0.63	0.60	0.69	0.65
SK572.1	0.79	0.75	2.01	1.90	1.59	1.50	2.11	2.00	1.16	1.10	1.22	1.15
SK573.1	0.79	0.75	2.01	1.90	1.59	1.50	2.11	2.00	1.16	1.10	1.22	1.15
SK672.1	1.16	1.10	2.75	2.60	2.27	2.15	2.85	2.70	1.64	1.55	1.74	1.65
SK673.1	1.16	1.10	2.75	2.60	2.27	2.15	2.85	2.70	1.64	1.55	1.74	1.65
SK772.1	1.37	1.30	4.02	3.80	2.54	2.40	3.38	3.20	1.69	1.60	2.64	2.50
SK773.1	2.43	2.30	4.02	3.80	3.49	3.30	3.38	3.20	2.54	2.40	3.28	3.10
SK872.1	3.06	2.90	8.24	7.80	4.86	4.60	6.76	6.40	2.64	2.50	4.23	4.00
SK873.1	4.44	4.20	8.24	7.80	6.23	5.90	6.76	6.40	4.33	4.10	6.23	5.90
SK972.1	4.76	4.50	12.7	12.0	7.93	7.50	12.2	11.5	4.44	4.20	7.93	7.50
SK973.1	7.93	7.50	12.7	12.0	11.1	10.5	12.2	11.5	7.93	7.50	11.1	10.5
SK772.1VL	2.11	2.00	4.02	3.80	2.54	2.40	3.38	3.20	1.69	1.60	2.64	2.50
SK773.1VL	2.43	2.30	4.02	3.80	3.49	3.30	3.38	3.20	2.54	2.40	3.28	3.10
SK872.1VL	5.28	5.00	8.24	7.80	4.86	4.60	6.76	6.40	2.64	2.50	4.23	4.00
SK873.1VL	4.44	4.20	8.24	7.80	6.23	5.90	6.76	6.40	4.33	4.10	6.23	5.90
SK972.1VL	8.98	8.50	12.7	12.0	7.93	7.50	12.2	11.5	4.44	4.20	7.93	7.50
SK973.1VL	7.93	7.50	12.7	12.0	11.1	10.5	12.2	11.5	7.93	7.50	11.1	10.5

NORDBLOC®.1 FLANGED OIL FILL QUANTITIES

NORDBLOC®.1 flanged lubrication

The following NORD Gear reducers are shipped from the factory with a pre-determined oil fill level in accordance to the specified reducer size and mounting position. For additional information, please refer to the "Oil Plug & Vent Locations" documentation for your gear unit.

STOP *HARMFUL SITUATION* **STOP**

Actual oil volume can vary slightly depending upon the gear case size, mounting and ratio. Prior to commissioning the reducer, check the oil-fill level using the reducer's oil level plug and drain or add addition oil as needed. The minimum acceptable oil level is 0.15 in (4mm) below the oil level hole.

For mounting orientations other than shown please consult NORD Gear. Reducer modifications may be required.

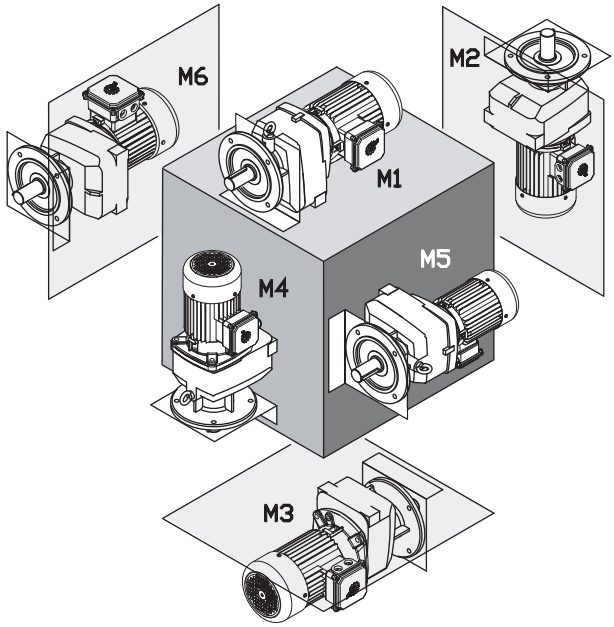

Type	M1		M2		M3		M4		M5		M6	
	Quarts	Liters	Quarts	Liters	Quarts	Liters	Quarts	Liters	Quarts	Liters	Quarts	Liters
SK072.1 F	0.17	0.16	0.34	0.32	0.22	0.21	0.24	0.23	0.19	0.18	0.21	0.20
SK172.1 F	0.29	0.27	0.62	0.59	0.44	0.42	0.48	0.45	0.34	0.32	0.41	0.39
SK372.1 F	0.48	0.45	1.11	1.05	0.79	0.75	1.06	1.00	0.63	0.60	0.69	0.65
SK373.1 F	0.48	0.45	1.11	1.05	0.79	0.75	1.06	1.00	0.63	0.60	0.69	0.65
SK572.1 F	0.79	0.75	2.01	1.90	1.59	1.50	2.11	2.00	1.16	1.10	1.22	1.15
SK573.1 F	0.79	0.75	2.01	1.90	1.59	1.50	2.11	2.00	1.16	1.10	1.22	1.15
SK672.1 F	1.16	1.10	2.75	2.60	2.27	2.15	2.85	2.70	1.64	1.55	1.74	1.65
SK673.1 F	1.16	1.10	2.75	2.60	2.27	2.15	2.85	2.70	1.64	1.55	1.74	1.65
SK772.1 F	1.37	1.30	4.02	3.80	2.54	2.40	3.49	3.30	1.80	1.70	2.54	2.40
SK773.1 F	2.11	2.00	3.70	3.50	3.38	3.20	3.06	2.90	2.43	2.30	3.17	3.00
SK872.1 F	3.06	2.90	7.93	7.50	5.39	5.10	7.08	6.70	2.75	2.60	4.54	4.30
SK873.1 F	4.33	4.10	8.03	7.60	7.29	6.90	6.97	6.60	5.28	5.00	6.97	6.60
SK973.1 F	7.82	7.40	12.9	12.2	11.7	11.1	12.3	11.6	8.45	8.00	11.5	10.9
SK972.1 F	4.76	4.50	13.2	12.5	8.45	8.00	13.2	12.5	4.76	4.50	8.14	7.70
SK772.1F VL	2.11	2.00	4.02	3.80	2.54	2.40	3.49	3.30	1.80	1.70	2.54	2.40
SK773.1F VL	2.11	2.00	3.70	3.50	3.38	3.20	3.06	2.90	2.43	2.30	3.17	3.00
SK872.1F VL	5.28	5.00	7.93	7.50	5.39	5.10	7.08	6.70	2.75	2.60	4.54	4.30
SK873.1F VL	4.33	4.10	8.03	7.60	7.29	6.90	6.97	6.60	5.28	5.00	6.97	6.60
SK972.1F VL	8.98	8.50	13.2	12.5	8.45	8.00	13.2	12.5	4.76	4.50	8.14	7.70
SK973.1F VL	7.82	7.40	12.9	12.2	11.7	11.1	12.3	11.6	8.45	8.00	11.5	10.9

MINICASE® (SM SERIES) WORM GEAR OIL FILL QUANTITIES - FOOT HOUSING

MINICASE® (SM Series) Lubrication

NORD MINICASE® (SM Series) worm gear reducers and worm gearmotors are inherently maintence free, factory oil filled, and supplied with a high quality, long life synthetic gear oil intended to be suitable for the life of the product. These gear units are also supplied without oil service plugs or vents.

Related User Manuals

U10790 MINICASE® (SM Series) Worm – Lubrication Guidelines.
U11040 MINICASE® (SM Series) Worm – Lubrication Types.

STOP *HARMFUL SITUATION* STOP

For mounting orientations other than shown please consult NORD Gear. Reducer modifications may be required.

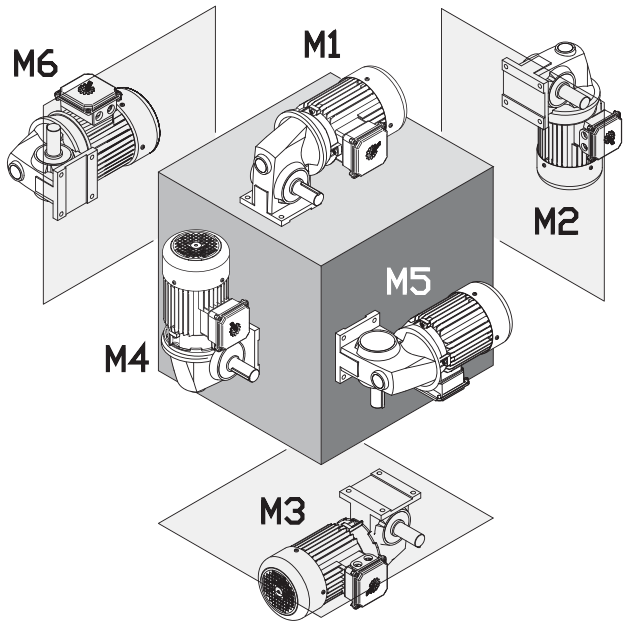

Type	M1		M2		M3		M4		M5		M6	
	oz	ml	oz	ml	oz	ml	oz	ml	oz	ml	oz	ml
SK 1SM31	4.1	120	4.1	120	4.1	120	4.1	120	4.1	120	4.1	120
SK 1SM40	7.4	220	7.4	220	7.4	220	7.4	220	7.4	220	7.4	220
SK 2SM40	11.2	330	11.2	330	11.2	330	12.2	360	11.2	330	11.2	330
SK 1SM50	8.5	250	8.5	250	8.5	250	8.5	250	8.5	250	8.5	250
SK 2SM50	11.8	350	11.8	350	11.8	350	14.2	420	11.8	350	11.8	350
SK 1SM63	14.2	420	14.2	420	14.2	420	14.2	420	14.2	420	14.2	420
SK 2SM63	17.9	530	17.9	530	17.9	530	21.3	630	17.9	530	17.9	530

Oil levels shown apply to any foot-mount gear housings including those ending with no suffix or ending with LX or AX.

MINICASE® (SMI/SMID) WORM GEAR OIL FILL QUANTITIES - FOOT HOUSING

MINICASE® (SMI/SMID Series) Lubrication

NORD MINICASE® (SMI/SMID Series) worm gear reducers and worm gearmotors are inherently maintence free, factory oil filled, and supplied with a high quality, long life synthetic gear oil intended to be suitable for the life of the product. For lubrication types see user manual U11050.

NORD MINICASE® (SMI/SMID Series) worm gear reducers and worm gearmotors are equipped with oil plugs. Venting the gear unit is optional as discussed in user manual U14750.

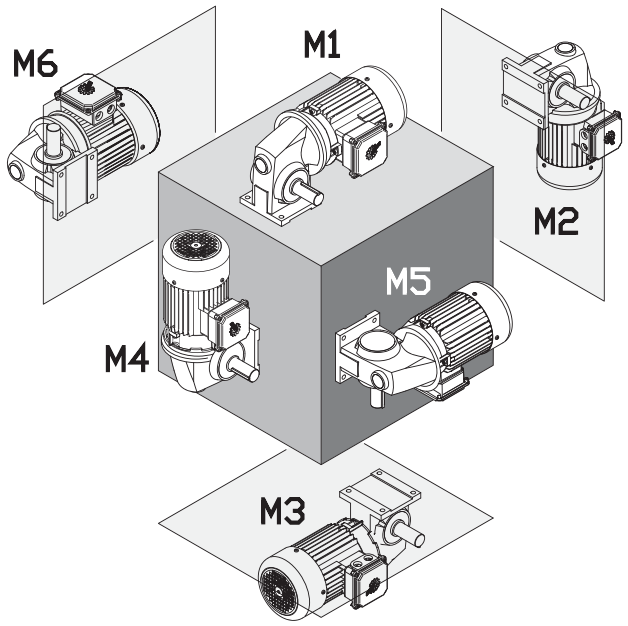

Related User Manuals

U10800 - MINICASE® (SMI/SMID Series) Worm – Lubrication Guidelines.
U11050 - MINICASE® (SMI/SMID Series) Worm – Lubrication Types
U14750 - MINICASE® (SMI/SMID Series) Worm – Oil Plug Locations

STOP *HARMFUL SITUATION* **STOP**

For mounting orientations other than shown please consult NORD Gear. Reducer modifications may be required.

MINICASE® (SMI Series) Gear Reducer Oil Fill - Foot Housing

Type	M1		M2		M3		M4		M5		M6	
	oz	ml	oz	ml	oz	ml	oz	ml	oz	ml	oz	ml
SK 1SMI31	1.5	45	1.5	45	1.5	45	1.5	45	1.5	45	1.5	45
SK 1SMI40	2.7	80	2.7	80	2.7	80	2.7	80	2.7	80	2.7	80
SK 1SMI50	4.4	130	4.4	130	4.4	130	4.4	130	4.4	130	4.4	130
SK 1SMI63	9.1	270	9.1	270	9.1	270	9.1	270	9.1	270	9.1	270
SK 1SMI75	14.2	420	14.2	420	14.2	420	14.2	420	14.2	420	14.2	420

Oil fill level is universal and independent of mounting position
Oil levels shown apply to any foot-mount gear housings including those ending with no-suffix or LX or AX.

MINICASE® (SMID Series) Integral Gearmotor Oil Fill - Foot Housing

Type	M1		M2		M3		M4		M5		M6	
	oz	ml	oz	ml	oz	ml	oz	ml	oz	ml	oz	ml
SK 1SMID31	2.0	60	3.6	105	2.4	70	1.7	50	2.4	70	2.4	70
SK 1SMID40	3.4	100	5.6	165	4.1	120	3.0	90	4.1	120	4.1	120
SK 1SMID50	5.9	175	8.8	260	6.6	195	5.4	160	6.6	195	6.6	195
SK 1SMID63	9.6	285	14.4	425	11.0	325	9.1	270	11.0	325	11.0	325

Oil levels shown apply to any foot-mount gear housings including those ending with no-suffix or LX or AX.

MINICASE® (SM SERIES) WORM GEAR OIL FILL QUANTITIES - FLANGE HOUSING

MINICASE® (SM Series) Lubrication

NORD MINICASE® (SM Series) worm gear reducers and worm gearmotors are inherently maintence free, factory oil filled, and supplied with a high quality, long life synthetic gear oil intended to be suitable for the life of the product. These gear units are also supplied without oil service plugs or vents.

Related User Manuals

U10790 MINICASE® (SM Series) Worm – Lubrication Guidelines.
U11040 MINICASE® (SM Series) Worm – Lubrication Types.

STOP *HARMFUL SITUATION* STOP

For mounting orientations other than shown please consult NORD Gear. Reducer modifications may be required.

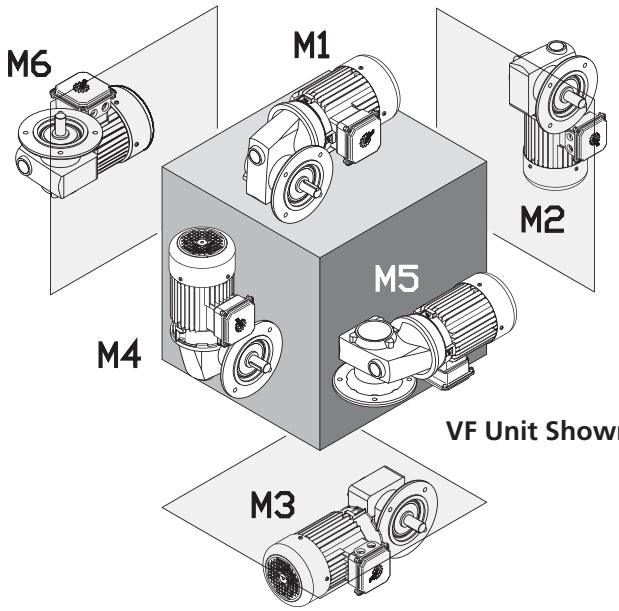

VF Unit Shown

Type	M1		M2		M3		M4		M5		M6	
	oz	ml	oz	ml	oz	ml	oz	ml	oz	ml	oz	ml
SK 1SM31	4.4	130	4.4	130	4.4	130	4.4	130	4.4	130	4.4	130
SK 1SM40	8.1	240	8.1	240	8.1	240	8.1	240	8.1	240	8.1	240
SK 2SM40	11.5	340	11.5	340	11.5	340	12.8	380	11.5	340	11.5	340
SK 1SM50	9.1	270	9.1	270	9.1	270	9.1	270	9.1	270	9.1	270
SK 2SM50	12.5	370	12.5	370	12.5	370	15.2	450	12.5	370	12.5	370
SK 1SM63	15.2	450	15.2	450	15.2	450	15.2	450	15.2	450	15.2	450
SK 2SM63	20.3	600	20.3	600	20.3	600	24.7	730	20.3	600	20.3	600

Oil Levels shown apply to flange-mount gear housings with model type ending in AZ, AF, VZ or VF.

MINICASE® (SMI/SMID) WORM GEAR OIL FILL QUANTITIES - FLANGE HOUSING

MINICASE® (SMI/SMID Series) Lubrication

NORD MINICASE® (SMI/SMID Series) worm gear reducers and worm gearmotors are inherently maintence free, factory oil filled, and supplied with a high quality, long life synthetic gear oil intended to be suitable for the life of the product. For lubrication types see user manual U11050.

NORD MINICASE® (SMI/SMID Series) worm gear reducers and worm gearmotors are equipped with oil plugs. Venting the gear unit is optional as discussed in user manual U14750.

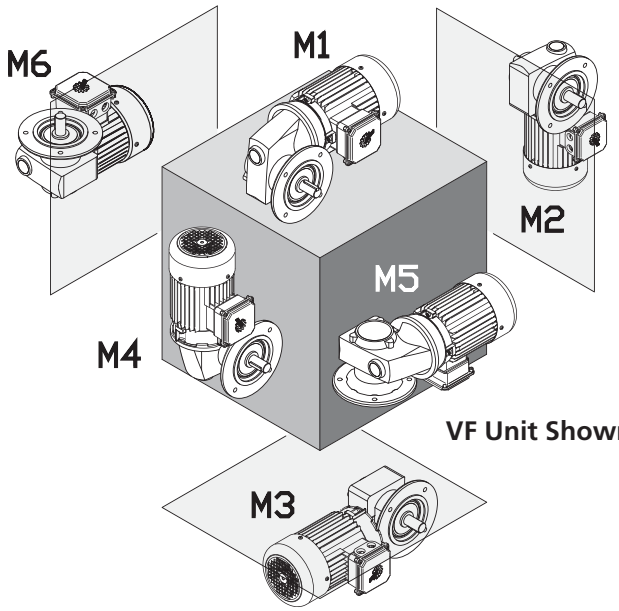

VF Unit Shown

Related User Manuals

U10800 - MINICASE® (SMI/SMID Series) Worm – Lubrication Guidelines.
U11050 - MINICASE® (SMI/SMID Series) Worm – Lubrication Types
U14750 - MINICASE® (SMI/SMID Series) Worm – Oil Plug Locations

STOP *HARMFUL SITUATION* **STOP**

For mounting orientations other than shown please consult NORD Gear. Reducer modifications may be required.

MINICASE® (SMI Series) Gear Reducer Oil Fill - Flange Housing

Type	M1		M2		M3		M4		M5		M6	
	oz	ml	oz	ml	oz	ml	oz	ml	oz	ml	oz	ml
SK 1SMI31	1.5	45	1.5	45	1.5	45	1.5	45	1.5	45	1.5	45
SK 1SMI40	2.7	80	2.7	80	2.7	80	2.7	80	2.7	80	2.7	80
SK 1SMI50	4.4	130	4.4	130	4.4	130	4.4	130	4.4	130	4.4	130
SK 1SMI63	9.1	270	9.1	270	9.1	270	9.1	270	9.1	270	9.1	270
SK 1SMI75	14.2	420	14.2	420	14.2	420	14.2	420	14.2	420	14.2	420

Oil Fill is universal and independent of mounting position.
Oil Levels shown apply to flange-mount gear housings with model type ending in AZ, AF, VZ or VF.

MINICASE® (SMID Series) Integral Gearmotor Oil Fill - Flange Housing

Type	M1		M2		M3		M4		M5		M6	
	oz	ml	oz	ml	oz	ml	oz	ml	oz	ml	oz	ml
SK 1SMID31	2.0	60	3.6	105	2.4	70	1.7	50	2.4	70	2.4	70
SK 1SMID40	3.4	100	5.6	165	4.1	120	3.0	90	4.1	120	4.1	120
SK 1SMID50	5.9	175	8.8	260	6.6	195	5.4	160	6.6	195	6.6	195
SK 1SMID63	9.6	285	14.4	425	11.0	325	9.1	270	11.0	325	11.0	325

Oil Levels shown apply to flange-mount gear housings with model type ending in AZ, AF, VZ or VF.

FLEXBLOC™ (SI/SID SERIES) WORM GEAR OIL FILL QUANTITIES

FLEXBLOC™ (SI/SID Series) Lubrication

NORD FLEXBLOC™ worm gear reducers are inherently maintence free, factory oil filled, and supplied with a high quality, long life synthetic gear oil intended to be suitable for the life of the product. For lubrication types see User Manual U11060.

NORD FLEXBLOC™ worm gear reducers are equipped with oil plugs. Venting the gear unit is optional as discussed in User Manual U14800.

Related User Manuals

U10810 FLEXBLOC™ (SI/SID Series) Worm – Lubrication Guidelines
U11060 FLEXBLOC™ Worm (SI/SID Series) – Lubrication Types
U14800 FLEXBLOC™ Worm (SI/SID Series) – Oil Plug Locations

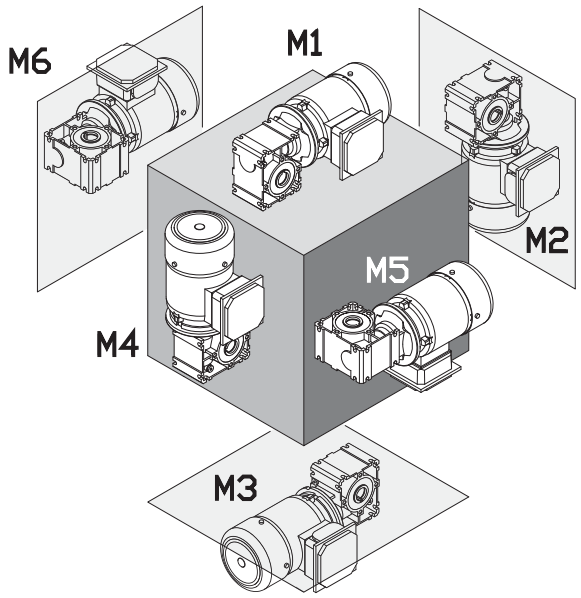

FLEXBLOC™ (SI Series) Gear Reducer Oil Fill

Type	M1		M2		M3		M4		M5		M6	
	oz	ml	oz	ml	oz	ml	oz	ml	oz	ml	oz	ml
SK 1SI31	1.0	30	1.0	30	1.0	30	1.0	30	1.0	30	1.0	30
SK 1SI40	1.9	55	1.9	55	1.9	55	1.9	55	1.9	55	1.9	55
SK 1SI50	3.2	95	3.2	95	3.2	95	3.2	95	3.2	95	3.2	95
SK 1SI63	6.1	180	6.1	180	6.1	180	6.1	180	6.1	180	6.1	180
SK 1SI75	12.2	360	12.2	360	12.2	360	12.2	360	12.2	360	12.2	360

Oil Fill is universal and independent of mounting position.

FLEXBLOC™ (SID Series) Gear Reducer Oil Fill

Type	M1		M2		M3		M4		M5		M6	
	oz	ml	oz	ml	oz	ml	oz	ml	oz	ml	oz	ml
SK 1SID31	1.7	50	3.0	90	2.4	70	1.7	50	2.4	70	2.4	70
SK 1SID40	3.0	90	5.1	150	3.7	110	2.7	80	4.1	120	4.1	120
SK 1SID50	5.7	170	6.8	200	5.7	170	5.1	150	6.1	180	6.1	180
SK 1SID63	9.8	280	12.2	360	9.8	290	8.1	240	10.5	310	10.5	310

Integral gear motors only available upon special request.

STANDARD IN-LINE OIL PLUG & VENT LOCATIONS

Oil plug connections

All reducers are shipped from the factory with a pre-determined oil fill level in accordance to the specified reducer size and mounting position. ***For mounting orientations other than shown please consult NORD Gear. New plug locations may be required.***

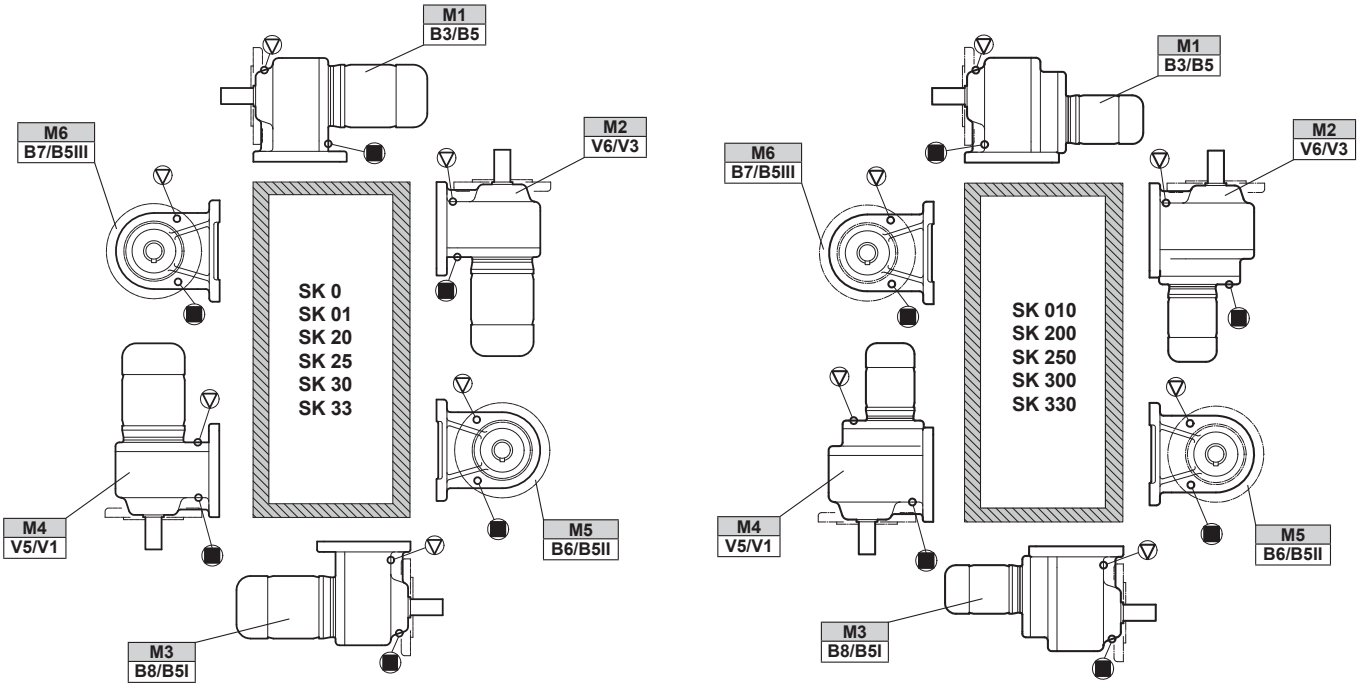

▽ = Vent

■ = Oil Plug

HELICAL IN-LINE
OIL PLUG & VENT LOCATIONS

Oil plug connections

Prior to commissioning the reducer, check the oil-fill level using the reducer's oil-level plug and drain or add additional oil as needed. The minimum acceptable oil level is 0.15 in (4mm) below the oil level hole. ***For mounting orientations other than shown please consult NORD Gear. New plug locations may be required.***

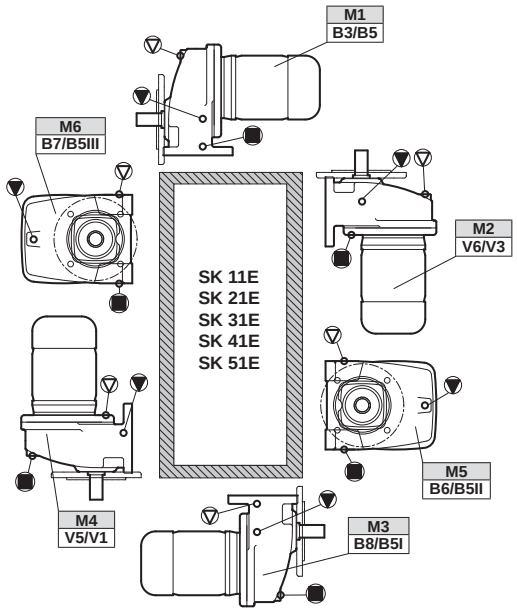

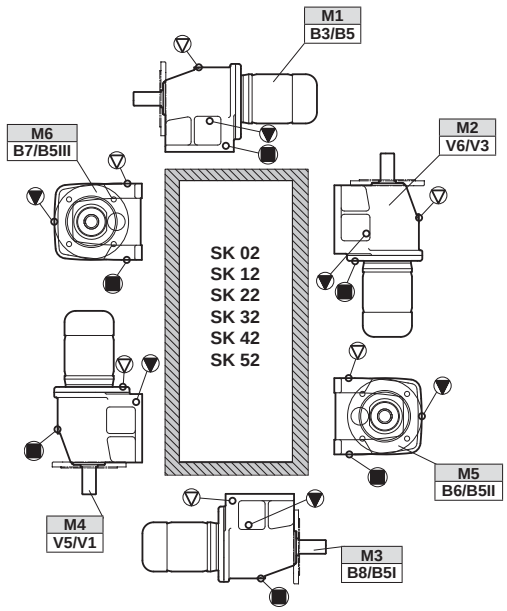

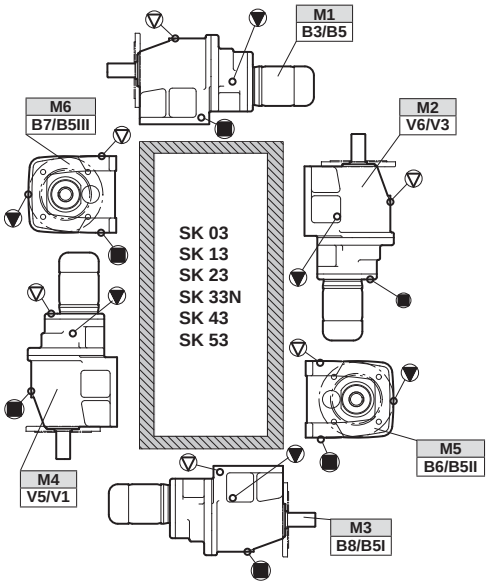

▽ = Vent

▼ = Oil Level

■ = Oil Plug

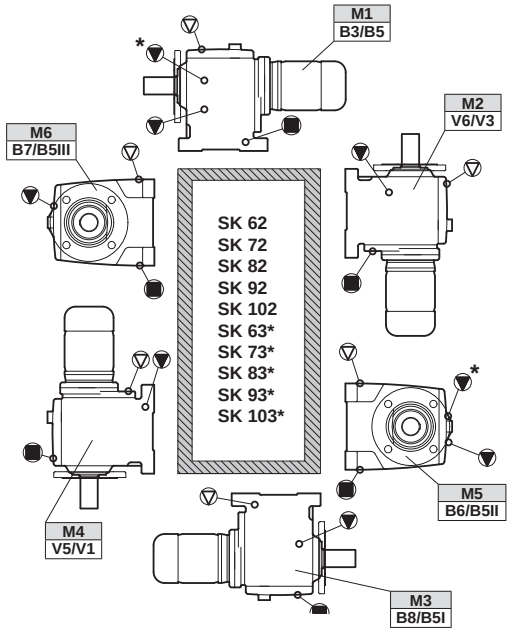

*** Oil level for 3 stage gear units.**

CLINCHER™ OIL PLUG & VENT LOCATIONS

Oil plug connections

Prior to commissioning the reducer, check the oil-fill level using the reducer's oil-level plug and drain or add additional oil as needed. The minimum acceptable oil level is 0.15 in (4mm) below the oil level hole. ***For mounting orientations other than shown please consult NORD Gear. New plug locations may be required.***

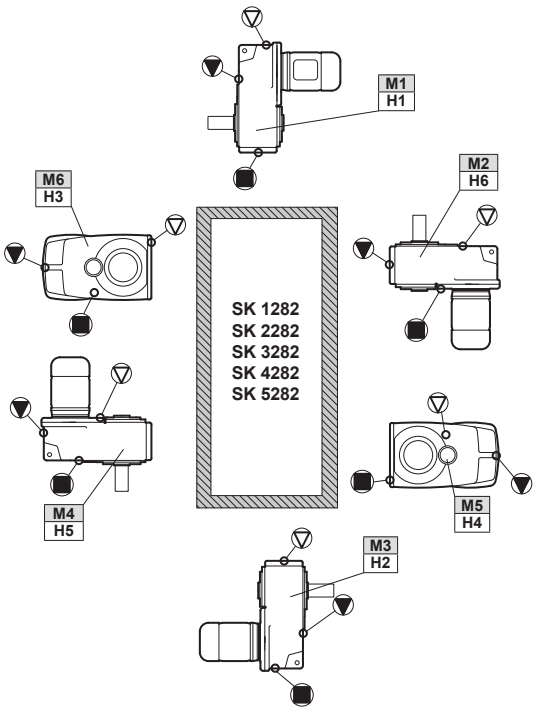

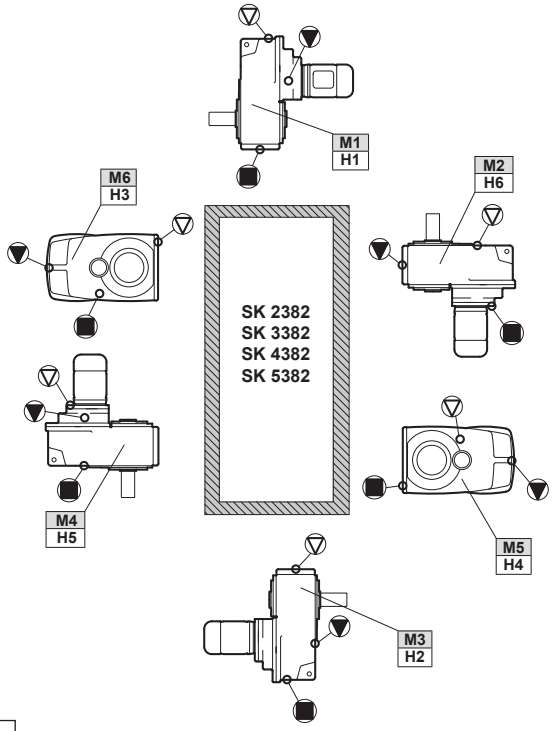

▽ = Vent

▼ = Oil Level

■ = Oil Plug

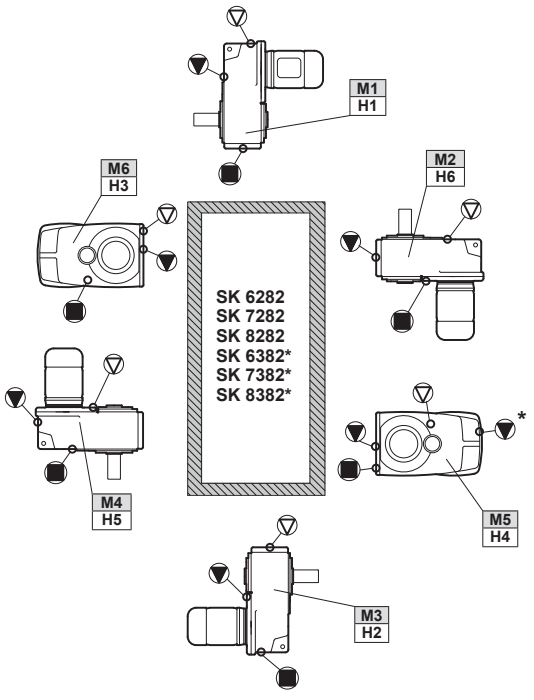

* Oil level for 3 stage gear units

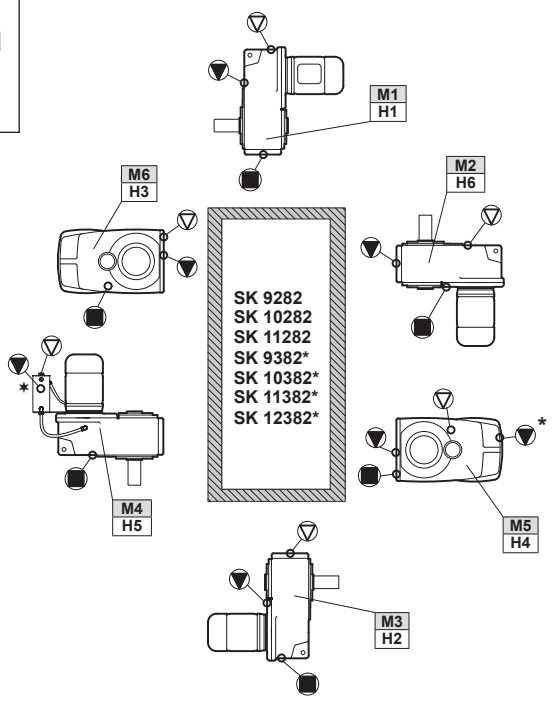

* Oil level for 3 stage gear units

∗ Oil fill level should be verified using the dip stick located in the oil tank for the M4/H5 position.

92 SERIES HELICAL-BEVEL OIL PLUG & VENT LOCATIONS

Oil plug connections

Prior to commissioning the reducer, check the oil-fill level using the reducer's oil-level plug and drain or add additional oil as needed. The minimum acceptable oil level is 0.15 in (4mm) below the oil level hole. ***For mounting orientations other than shown please consult NORD Gear. New plug locations may be required.***

Foot Mount

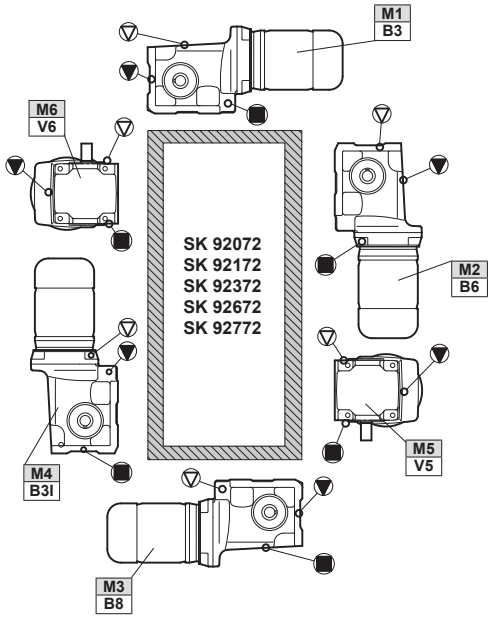

Shaft/Flange Mount

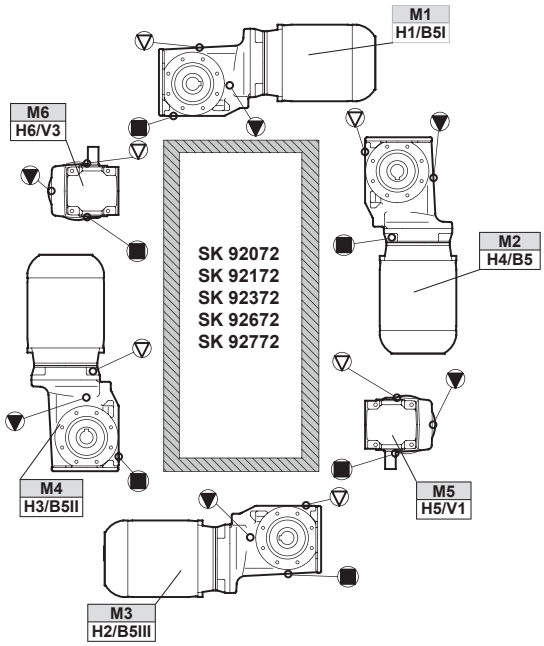

▽ = Vent

▼ = Oil Level

■ = Oil Plug

92.1/93.1 SERIES HELICAL-BEVEL OIL PLUG & VENT LOCATIONS

Oil plug locations

Prior to commissioning the reducer, check the oil-fill level using the reducer's oil-level plug and drain or add additional oil as needed. ***For mounting orientations other than shown please consult NORD Gear. New plug locations may be required.***

92.1 Series

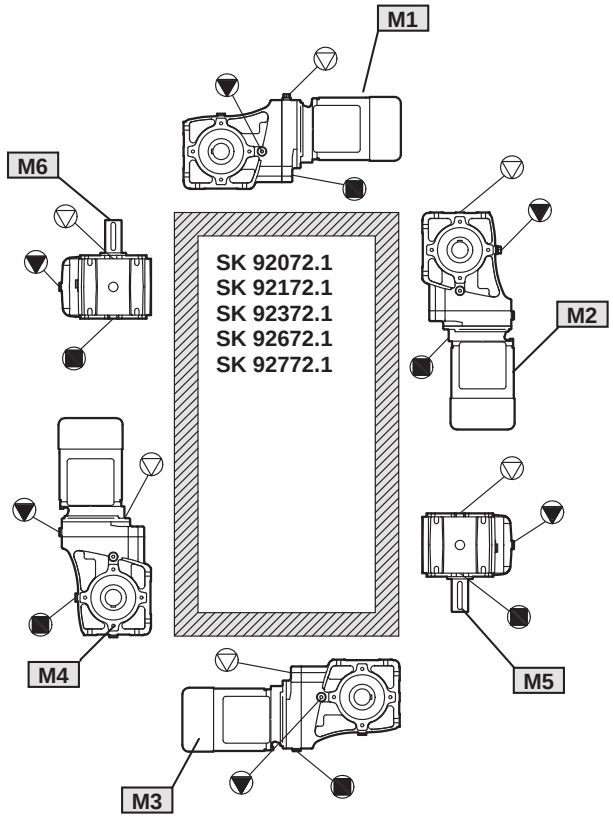

93.1 Series

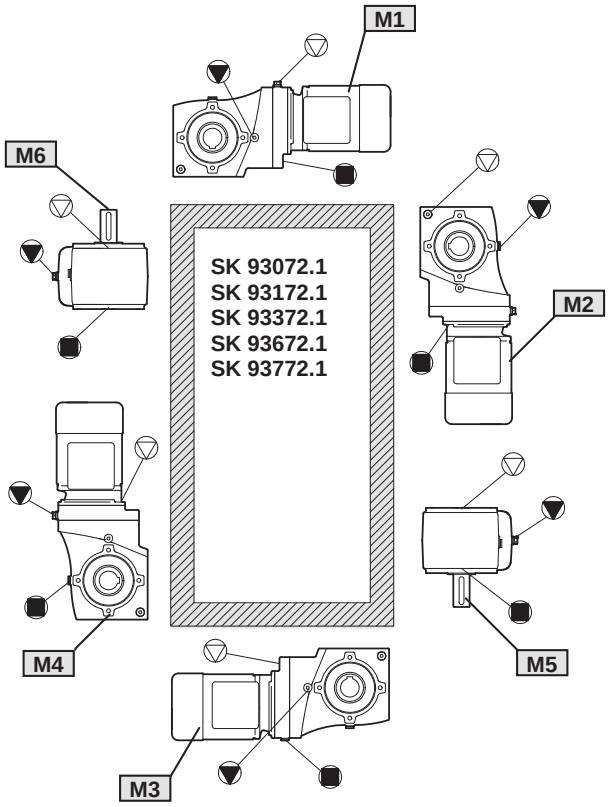

▽ = Vent

▼ = Oil Level

■ = Oil Plug

90.1 HELICAL-BEVEL OIL PLUG & VENT LOCATIONS

Oil plug connections

Prior to commissioning the reducer, check the oil-fill level using the reducer's oil-level plug and drain or add additional oil as needed. The minimum acceptable oil level is 0.15 in (4mm) below the oil level hole. ***For mounting orientations other than shown please consult NORD Gear. New plug locations may be required.***

Foot Mount

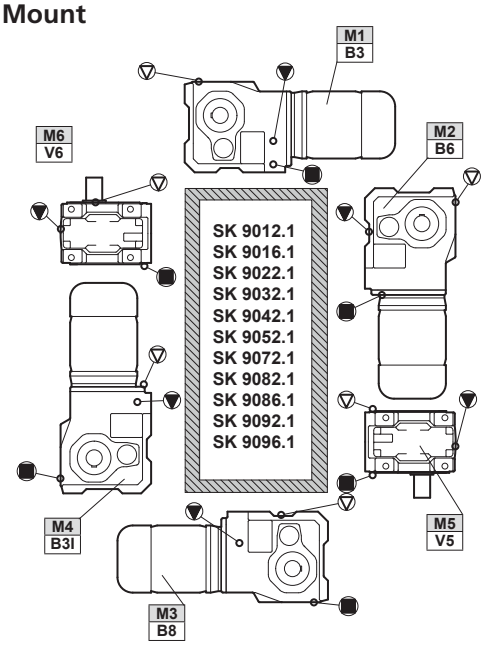

Foot Mount

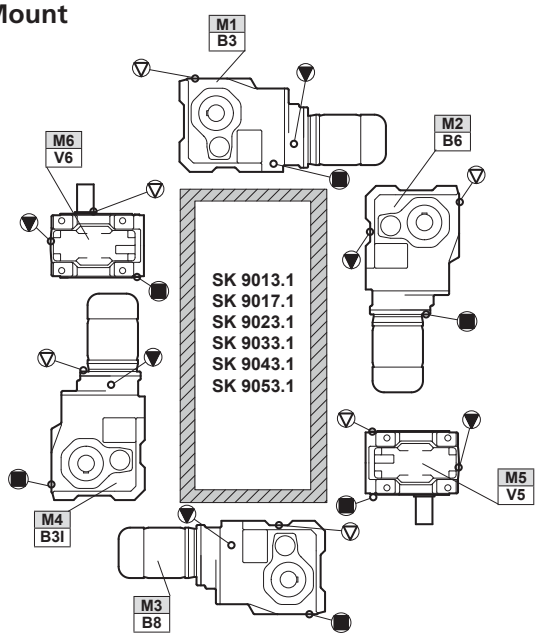

Shaft/Flange Mount

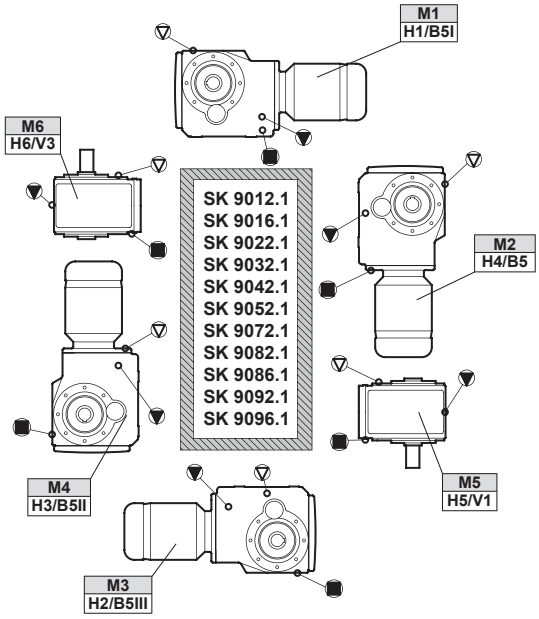

Shaft/Flange Mount

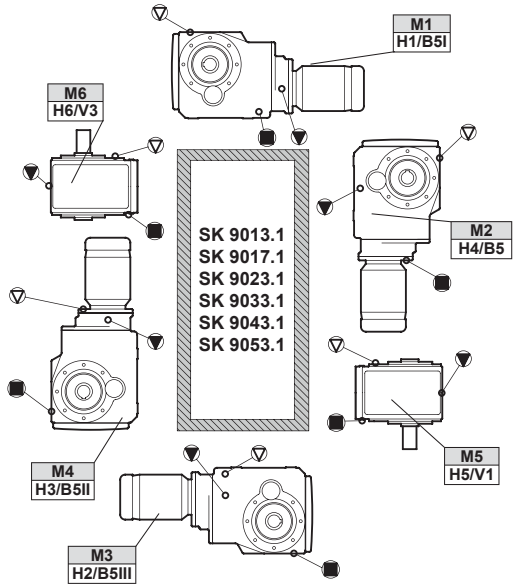

▽ = Vent

▼ = Oil Level

■ = Oil Plug

NORD Gear Limited
Toll Free in Canada: 800.668.4378

NORD Gear Corporation
Toll Free in the United States: 888.314.6673

HELICAL-WORM
OIL PLUG & VENT LOCATIONS

Oil plug connections

Prior to commissioning the reducer, check the oil-fill level using the reducer's oil-level plug and drain or add additional oil as needed. The minimum acceptable oil level is 0.15 in (4mm) below the oil level hole. ***For mounting orientations other than shown please consult NORD Gear. New plug locations may be required.***

Foot Mount

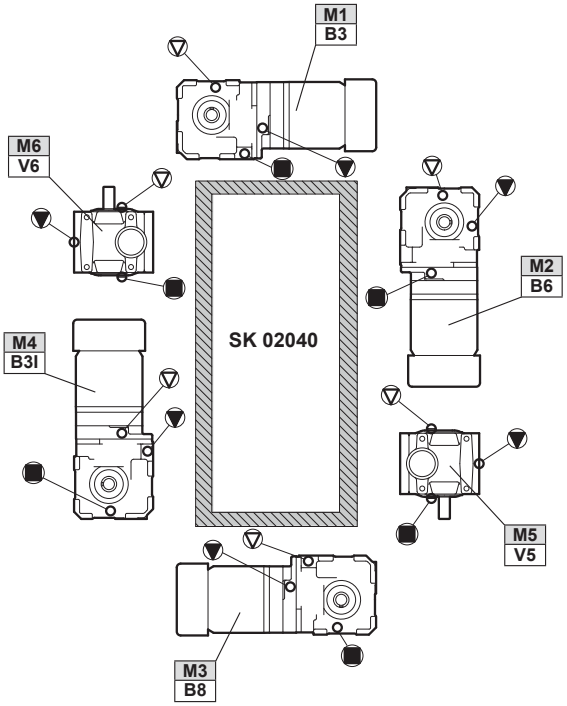

Shaft/Flange Mount

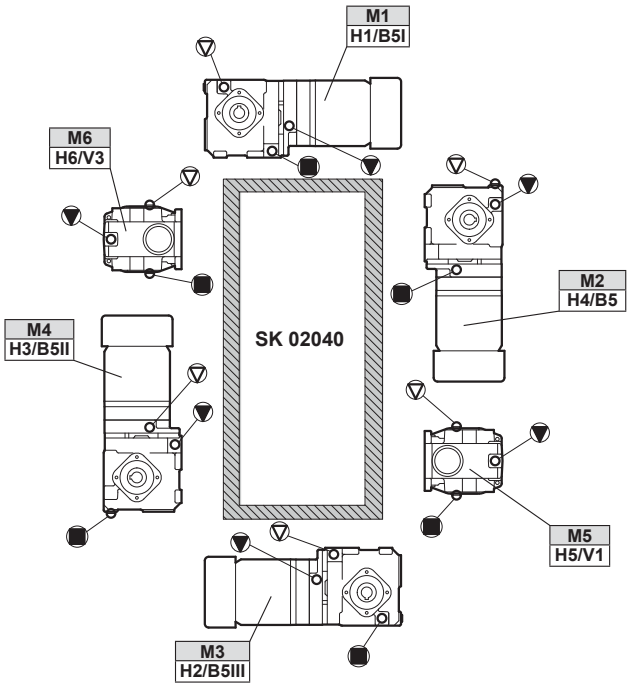

▽ = Vent

▼ = Oil Level

■ = Oil Plug

HELICAL-WORM
OIL PLUG & VENT LOCATIONS

Foot Mount

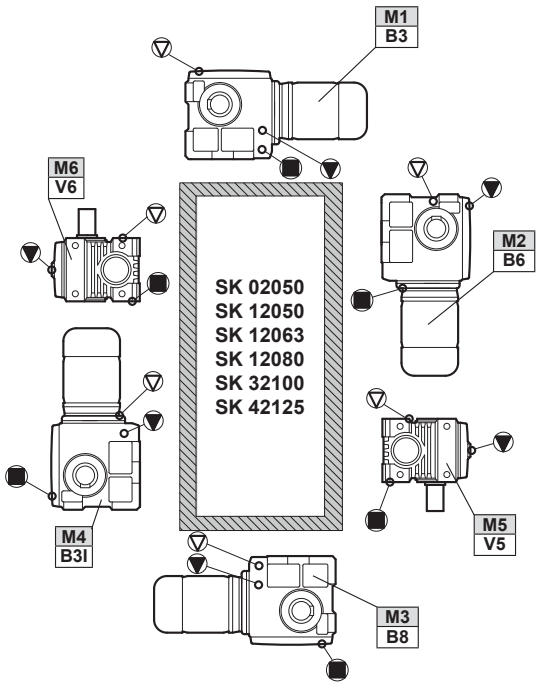

Foot Mount

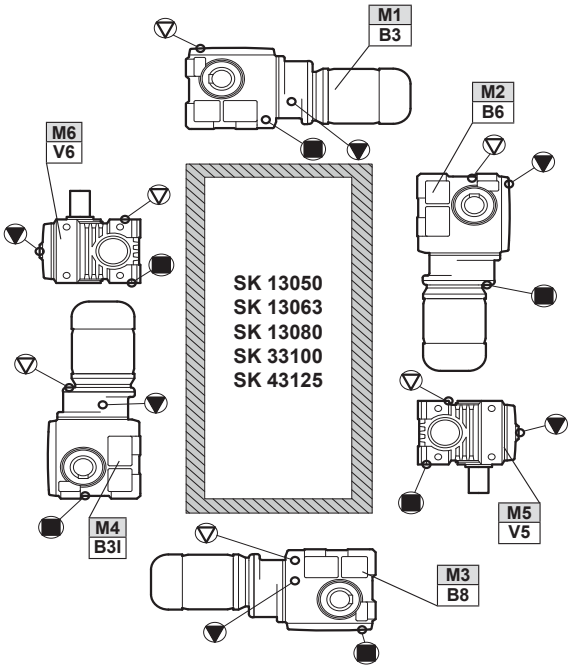

Shaft/Flange Mount

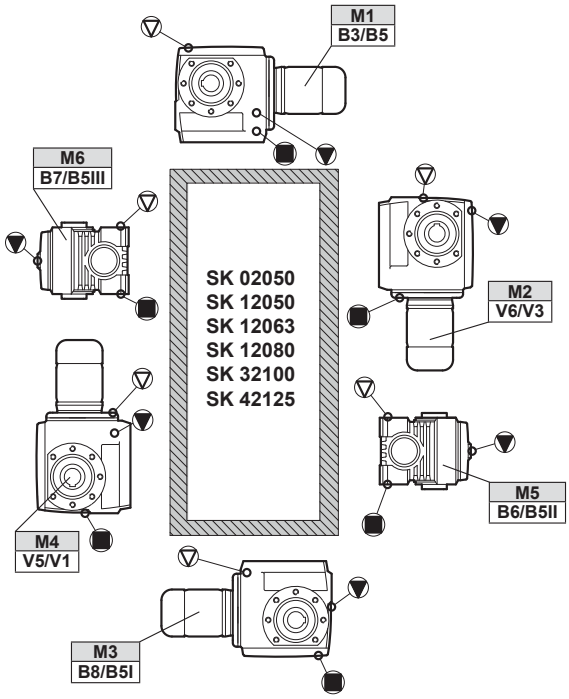

Shaft/Flange Mount

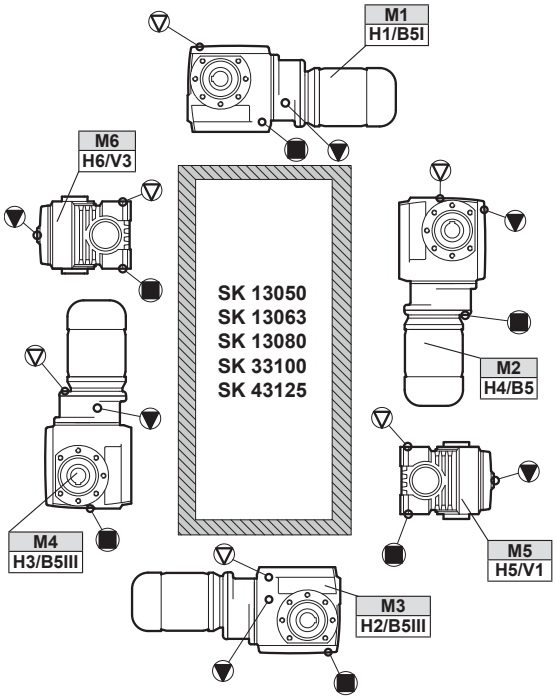

▽ = Vent
▼ = Oil Level
■ = Oil Drain

NORD Gear Limited
Toll Free in Canada: 800.668.4378

NORD Gear Corporation
Toll Free in the United States: 888.314.6673

NORDBLOC®
OIL PLUG & VENT LOCATIONS

Oil plug connections

Prior to commissioning the reducer, check the oil-fill level using the reducer's oil-level plug and drain or add additional oil as needed. The minimum acceptable oil level is 0.15 in (4mm) below the oil level hole. ***For mounting orientations other than shown please consult NORD Gear. New plug locations may be required.***

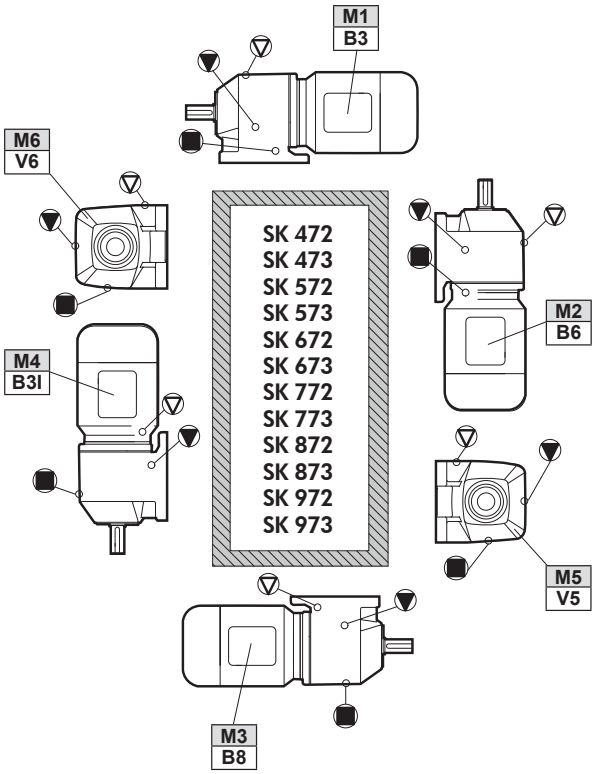

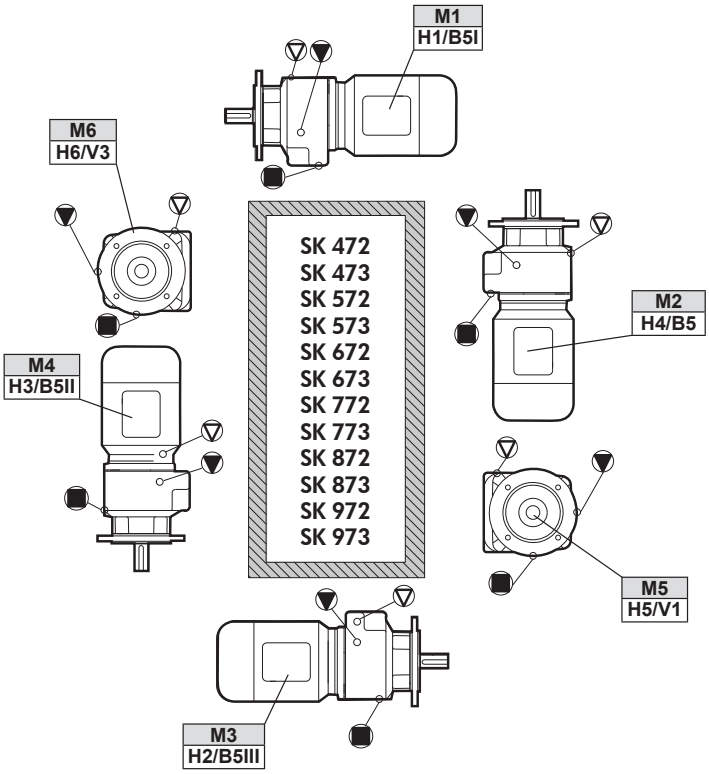

▽ = Vent

▼ = Oil Level

■ = Oil Plug

NORDBLOC®.1
OIL PLUG & VENT LOCATIONS

Oil plug connections

Prior to commissioning the reducer, check the oil-fill level using the reducer's oil-level plug and drain or add additional oil as needed. The minimum acceptable oil level is 0.15 in (4mm) below the oil level hole. ***For mounting orientations other than shown please consult NORD Gear. New plug locations may be required.***

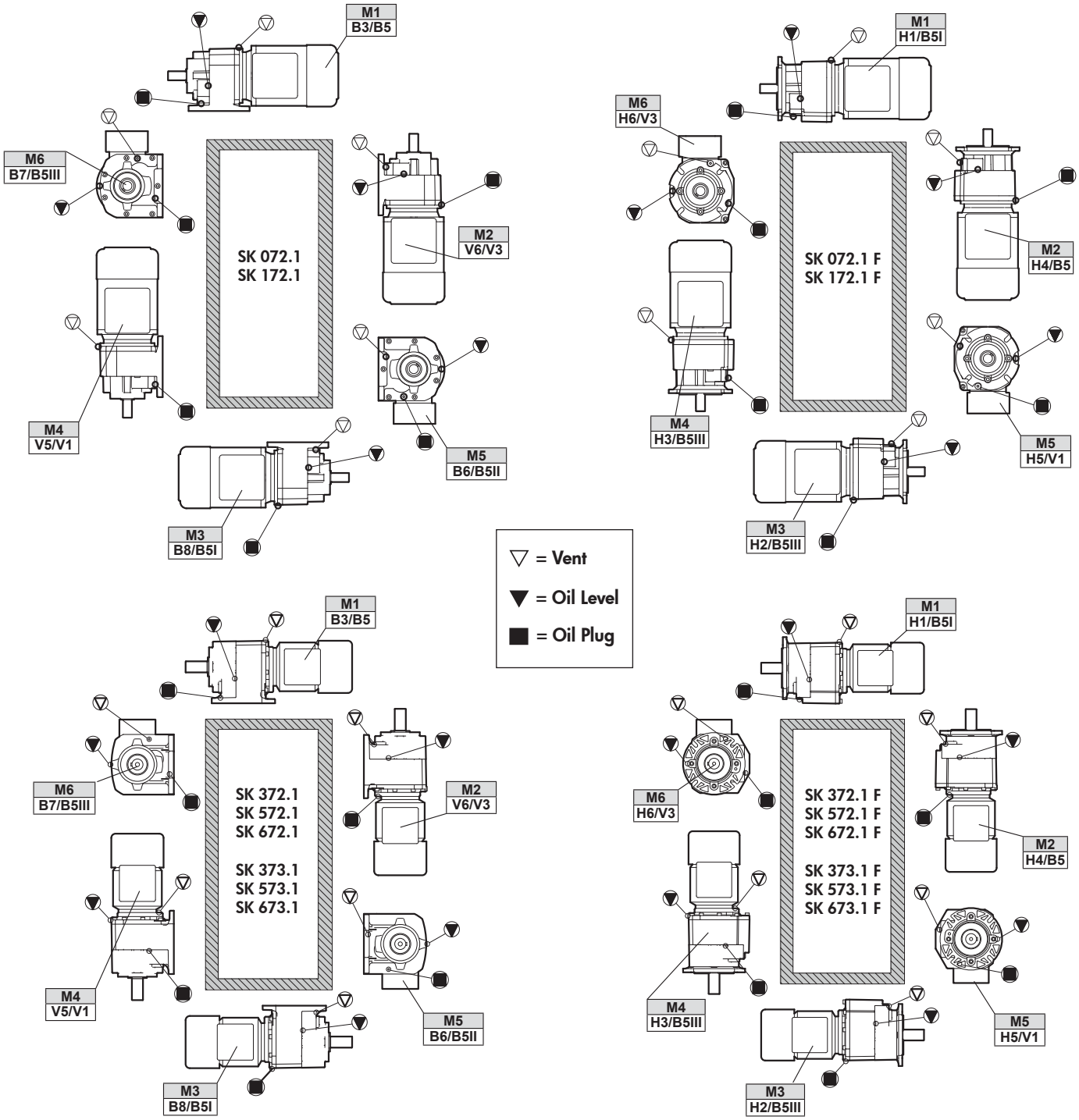

NORDBLOC®.1
OIL PLUG & VENT LOCATIONS

Oil plug connections

Prior to commissioning the reducer, check the oil-fill level using the reducer's oil-level plug and drain or add additional oil as needed. The minimum acceptable oil level is 0.15 in (4mm) below the oil level hole. ***For mounting orientations other than shown please consult NORD Gear. New plug locations may be required.***

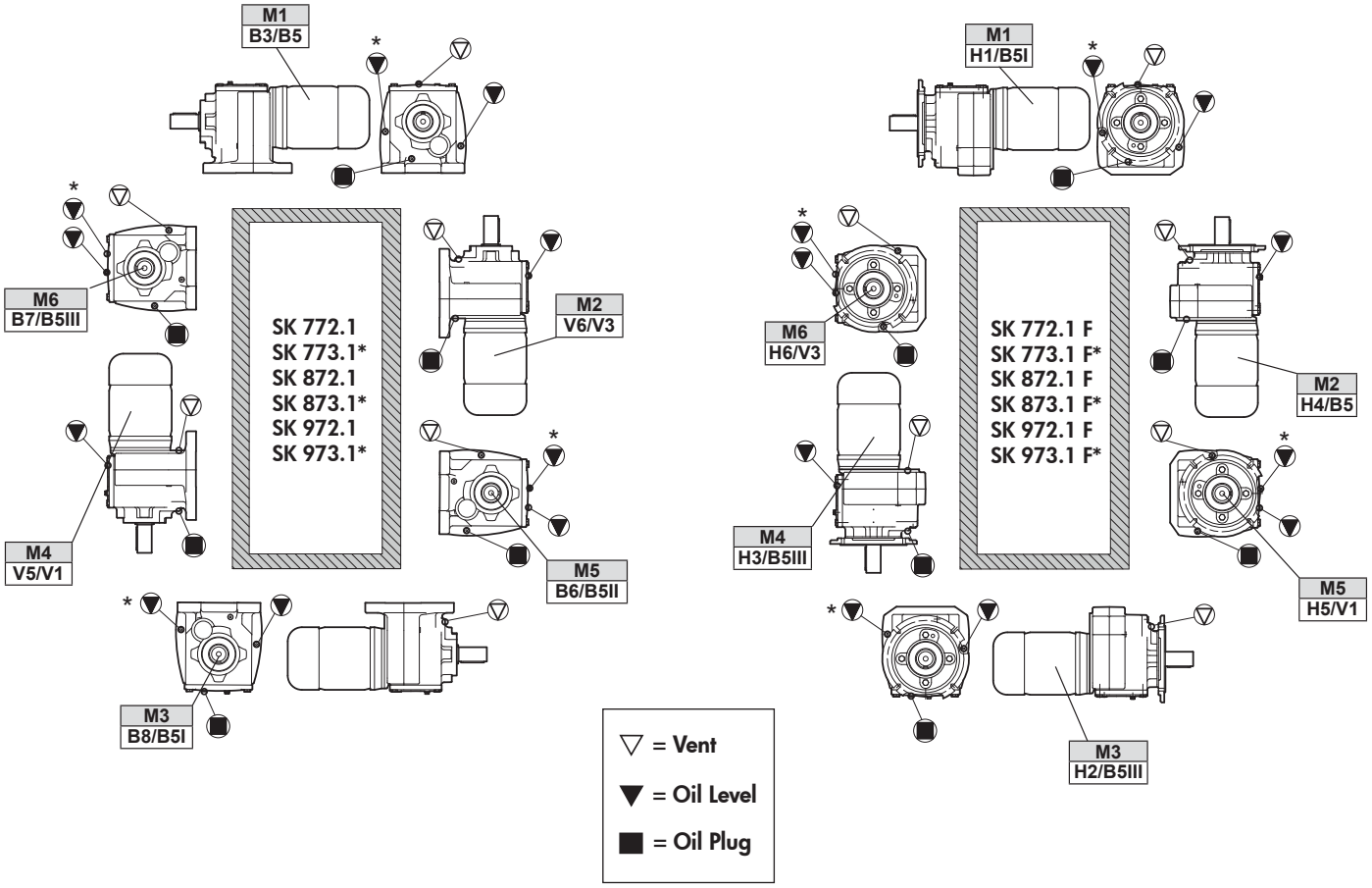

*** Oil fill level for three stage gear units.**

MINICASE® (SMI/SMID) WORM GEAR OIL PLUG & VENT LOCATIONS

DRIVESYSTEMS — RETAIN FOR FUTURE USE — U14750 - 1 of 1

Oil Plug and Vent Locations

MINICASE® (SMI/SMID) reducers and gear motors are fitted with oil plugs to allow for optional venting of the gear unit. NORD can supply either an AUTOVENT™ (valve-type) vent or an open vent. Vent options are available for most gear unit sizes and positions as indicated by the table below. For more complete details on vent options and when to consider reducer venting, see user manual U10800.

Vent Compatability by Unit Size & Mounting Position

	M1	M2	M3	M4	M5	M6
SMI/SMID 31		✓	✓	✓		✓
SMI/SMID 40		✓	✓	✓		✓
SMI/SMID 50	✓	✓	✓	✓		✓
SMI/SMID 63	✓	✓	✓	✓	✓	✓
SMI/SMID 75	✓	✓	✓	✓		✓

Continuous Input speed ≤ 1800 rpm

Vent Kit Part Numbers

Type	Transportation Seal	Installation	Part Number
AUTOVENT™	Included	Factory or Field site	66093510
Open Vent	None	Field Only	60693500
Open Vent	Included	Factory or Field site	22008004 (vent) 25308120 (gasket)

Unless noted by a seperate part number, vent kits include the housing gasket

Optional Vent Locations

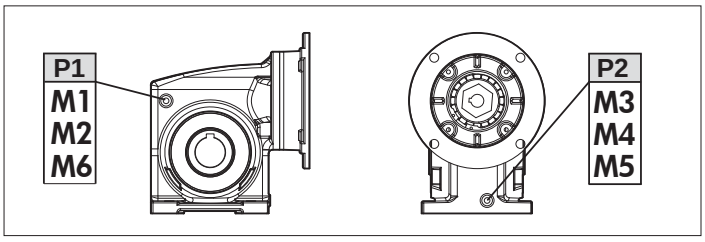

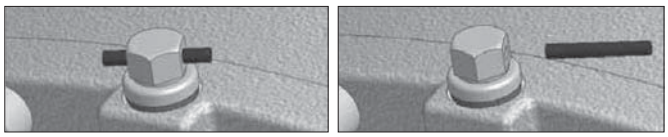

WARNING

To prevent build-up of excessive pressure, sealed vents must be activated as shown prior to gear unit start-up.

MINICASE® (SMI/SMID) Foot Housing

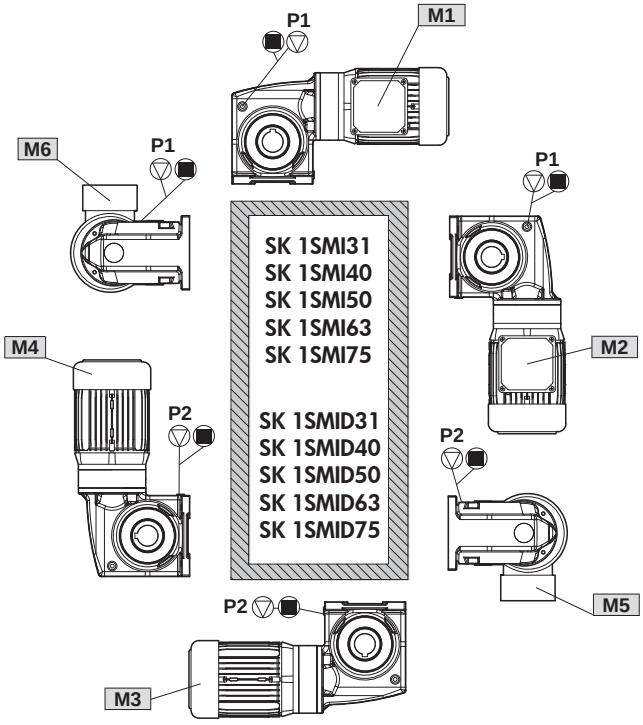

MINICASE® (SMI/SMID) Flange Housing

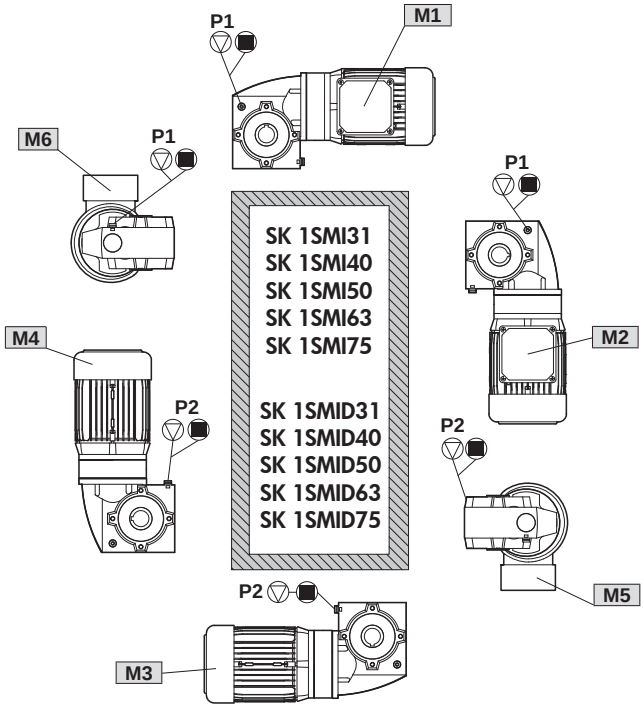

▽ = Vent
■ = Oil Plug

NORD Gear Limited
Toll Free in Canada: 800.668.4378

NORD Gear Corporation
Toll Free in the United States: 888.314.6673

FLEXBLOC™ (SI/SID SERIES) WORM GEAR OIL PLUG & VENT LOCATIONS

Vent locations

FLEXBLOC™ (SI?SID SERIES) reducers are fitted with oil plugs to allow for optional venting of the gear unit. NORD can supply either an AUTOVENT™ (valve-type) vent or an open vent. Vent options are available for most gear unit sizes and positions as indicated by the table below. For more complete details on vent options and when to consider reducer venting, see user manual U10810.

Vent Compatability by Unit Size & Mounting Position

	M1	M2	M3	M4	M5	M6
SI/SID 31		✓	✓	✓		✓
SI/SID 40		✓	✓	✓		✓
SI/SID 50	✓	✓	✓	✓		✓
SI/SID 63	✓	✓	✓	✓	✓	✓
SI/SID 75	✓	✓	✓	✓		✓

Continuous Input speed ≤ 1800 rpm

Vent Kit Part Numbers

Type	Transportation Seal	Installation	Part Number
AUTOVENT™	Included	Factory or Field site	66093510
Open Vent	None	Field Only	60693500
Open Vent	Included	Factory or Field site	22008004 (vent) 25308120 (gasket)

Unless noted by a seperate part number, vent kits include the housing gasket

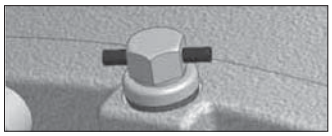

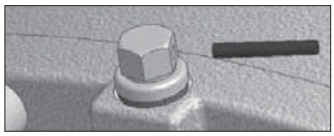

Optional Vent Locations

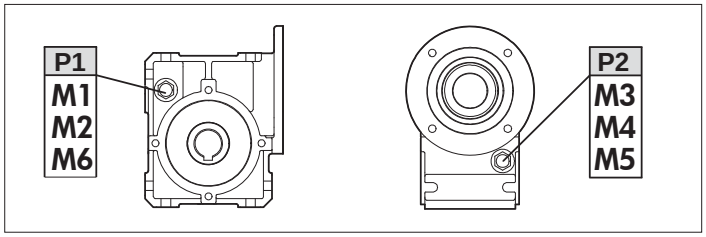

WARNING

To prevent build-up of excessive pressure, sealed vents must be activated as shown prior to gear unit start-up.

FLEXBLOC™ (SI Series) Universal Housing

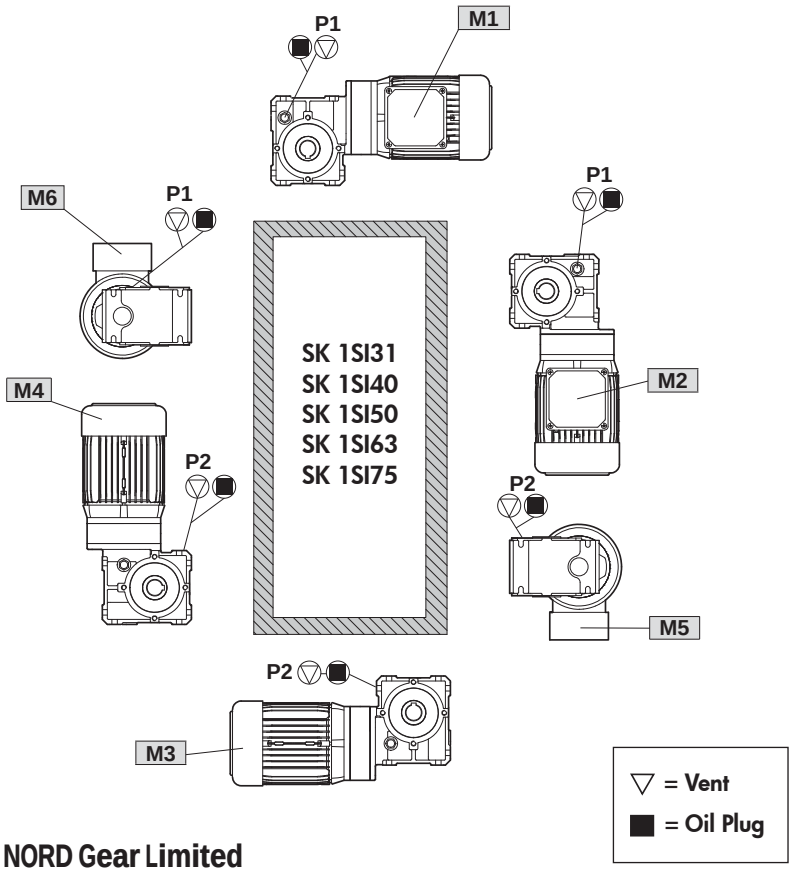

NORD Gear Limited
Toll Free in Canada: 800.668.4378

NORD Gear Corporation
Toll Free in the United States: 888.314.6673

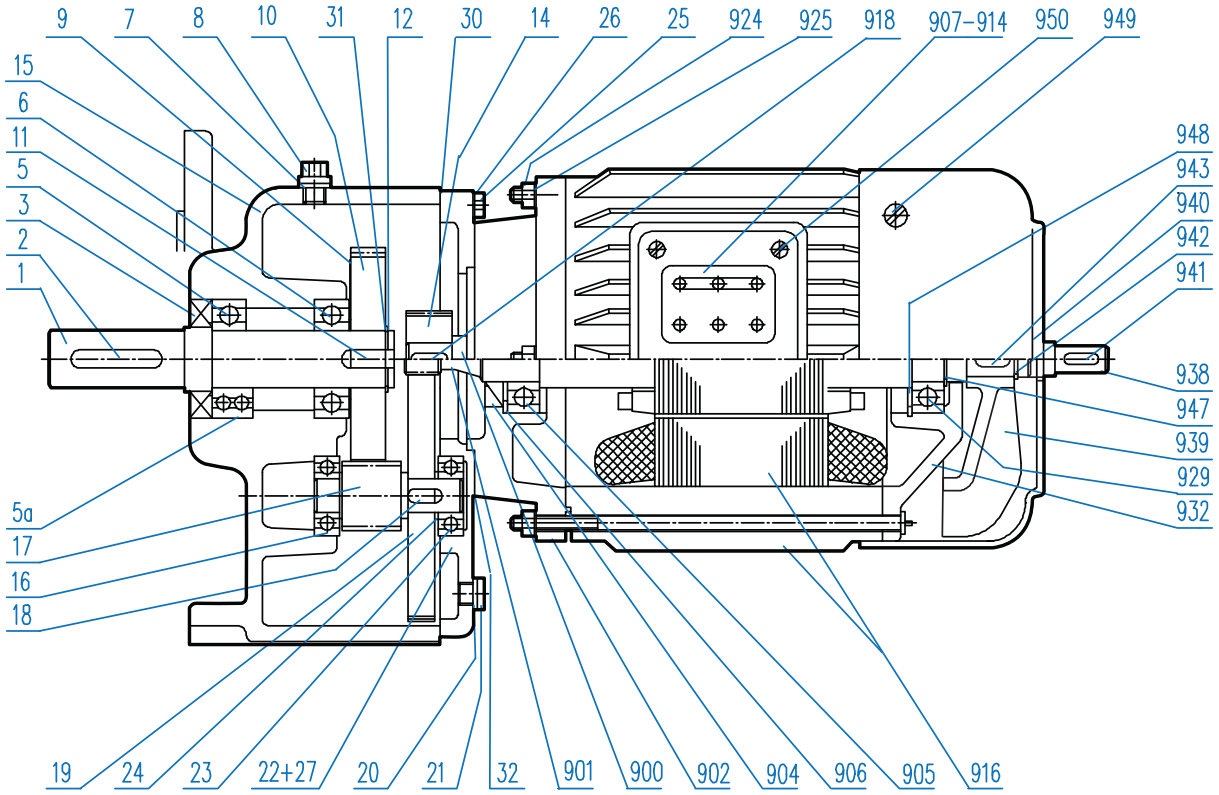

SK 0 - SK 33 Helical Gear Unit

1	Output shaft	21	Plug	910	Terminal box cover gasket
2	Key	22	Gear case cover	911	Terminal board
3	Shaft seal	23	Pinion shaft bearing	914	Cable entry gland
5	Output shaft bearing, normal	24	Shim	916	Stator case
5A	Output shaft bearing, reinforced	25	Hexagon bolt	918	Key
6	Output shaft bearing	26	Washer	924	Collar bolt
7	Seal	27	Spiral pin	925	Hexagonal nut
8	Vent screw	30	Seal	929	Bearing B
9	Shim	31	Shim	932	Endshield B
10	Driven gear	32	Seal	938	Second motor shaft end*
11	Key	900	Rotor with shaft,plain	939	Fan
12	Circlip	901	Rotor with shaft,gearcut	940	Fan cover
14	Driving pinion	902	End shield A	941	Key
15	Gear case	904	Shaft seal	942	Circlip
16	Pinion shaft, bearing	905	Bearing A	943	Key
17	Driven pinion	906	Bearing shim	947	Circlip
18	Key	907	Terminal box frame	948	Circlip
19	Driving gear	908	Terminal box cover	949	Oval flat-head bolt
20	Seal	909	Terminal box frame gasket	950	Oval flat-head bolt

* Optional Part

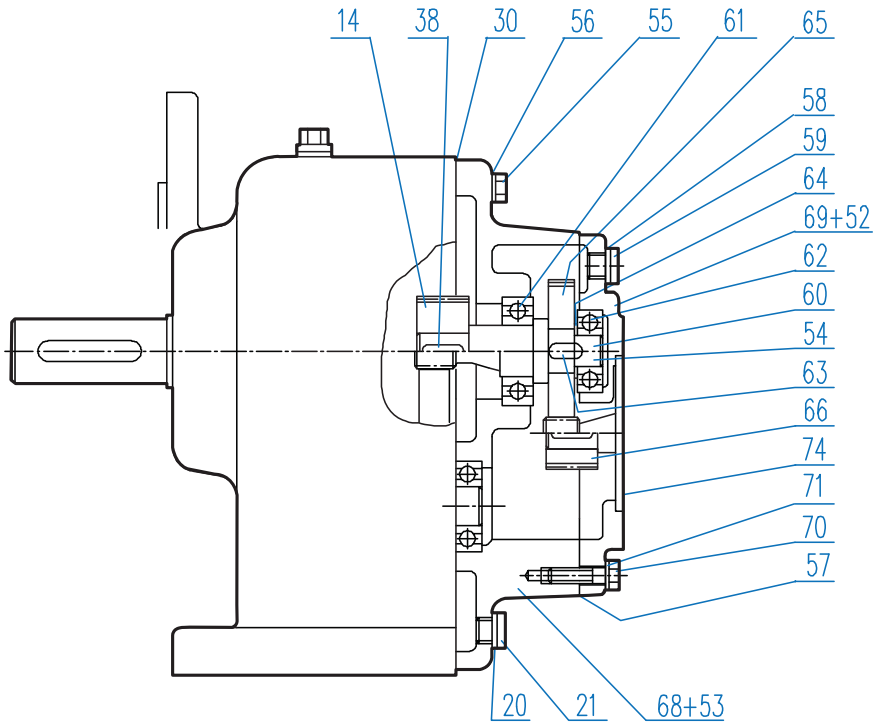

SK 010 - SK 330 Third Stage Reduction Gear

14	Driving pinion	55	Hexagon bolt	64	Shim
20	Seal	56	Washer	65	Driving gear
21	Plug	57	Seal	66	Driving pinion
27	Spiral pin	58	Seal	68	Gear case 3rd.-red.
30	Seal	59	Plug	69	Gear case cover
38	Key	60	Intermediate shaft, plain	70	Hexagon bolt
52	Spiral pin	61	Grooved ball bearing	71	Washer
53	Spiral pin	62	Grooved ball bearing	74	Seal
54	Intermediate shaft, gearcut	63	Key		

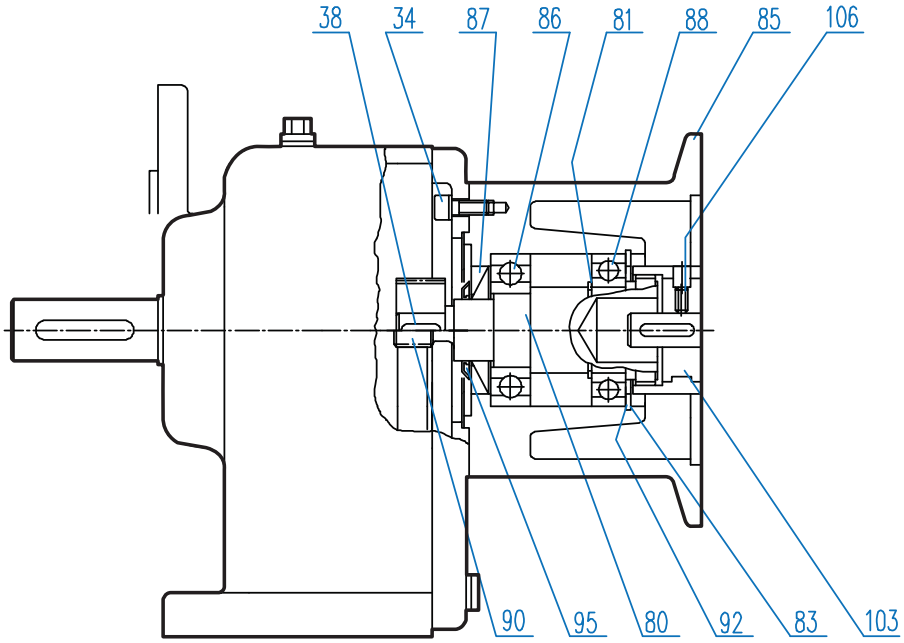

SK 0 - SK 330 IEC Input

34	Socket head bolt	85	IEC adaptor	92	Shim
38	Key	86	Input shaft bearing	103	Coupling
80	Input shaft	87	Shaft seal	106	Set screw
81	Circlip	88	Input shaft bearing		
83	Circlip	90	Pinion shaft		

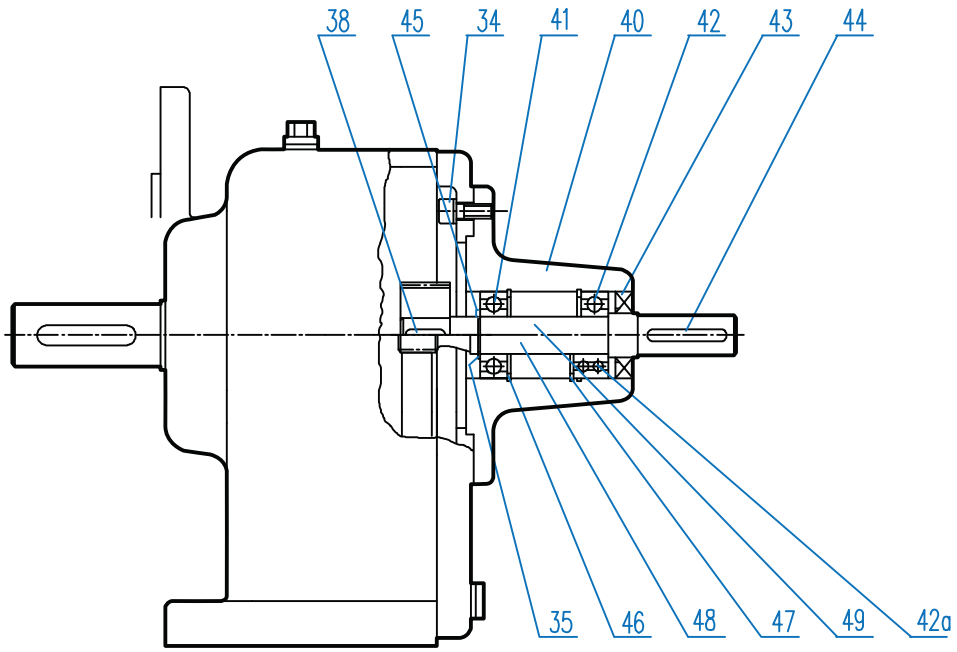

SK 0 - SK 330 Solid Shaft Input (W)

34	Socket head bolt	42	Grooved ball bearing, normal	46	Circlip
35	Shim	42A	Grooved ball bearing, reinforced	47	Circlip
38	Key	43	Shaft seal	48	Input shaft, gearcut
40	Input bearing housing	44	Key	49	input shaft, plain
41	Grooved ball bearing	45	Circlip		

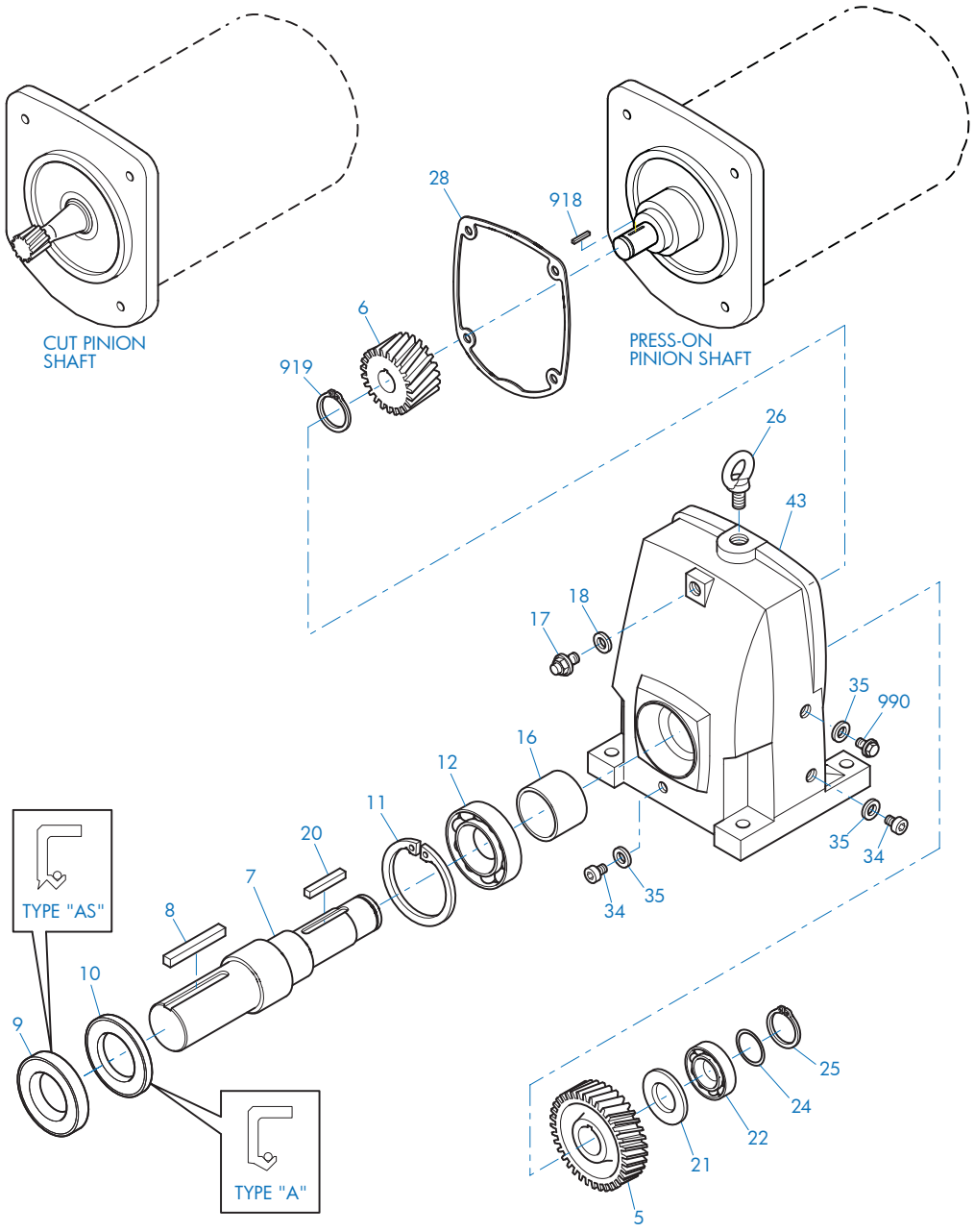

SK 11E - SK 51E Foot Mount

5	Gear	16	Spacer	26	Flanged Eye Bolt
6	Pinion	17	Vent Plug	28	Gasket
7	Output Shaft	18	Seal	34	Drain Plug
8	Key	20	Key	35	Gasket
9	Oil Seal	21	Spacer	43	Gearcase
10	Oil Seal	22	Anti-Friction Bearing	918	Key
11	Snap Ring	24	Shim	919	Snap Ring
12	Anti-Friction Bearing	25	Snap Ring	990	Oil Level Plug

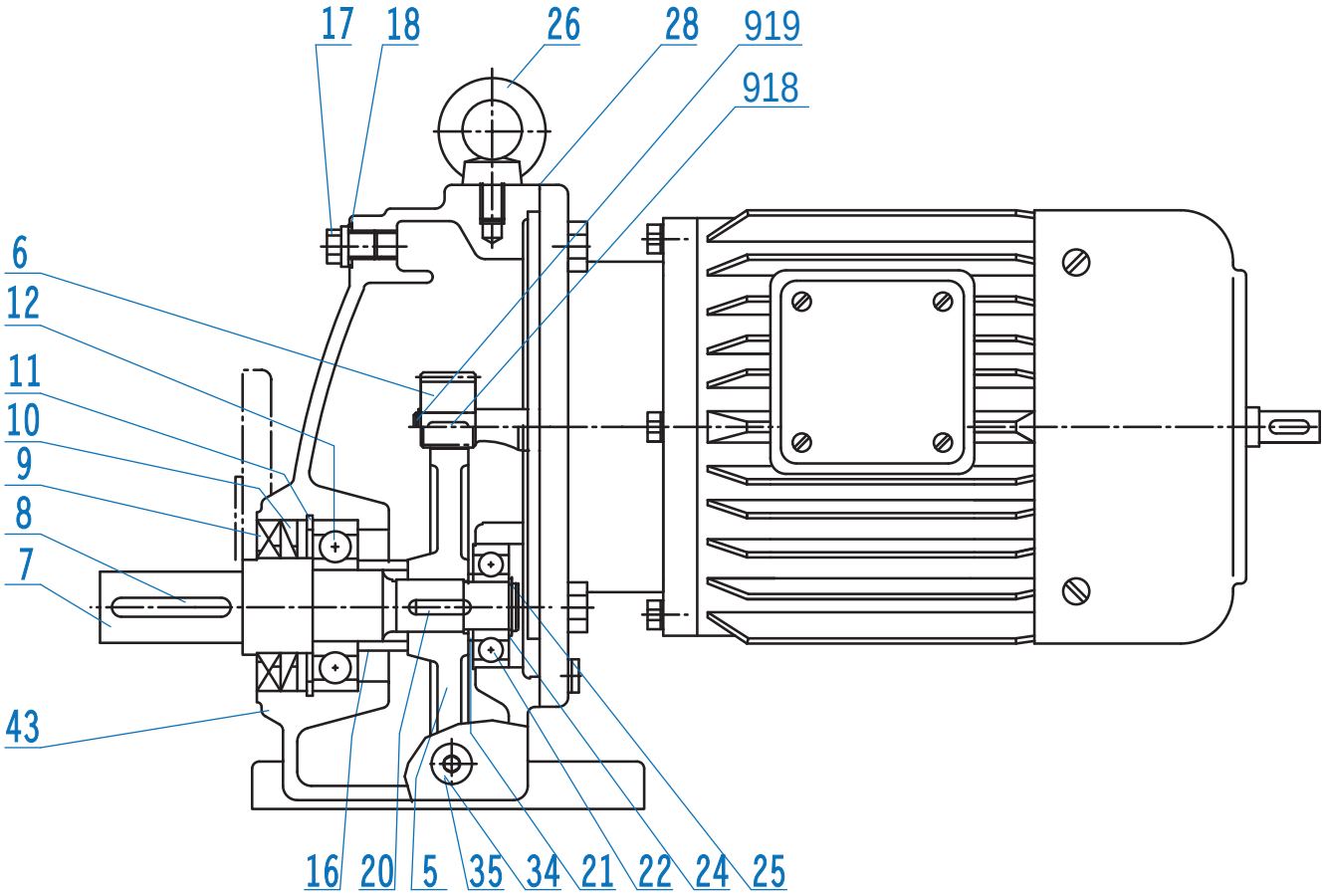

SK 11E - SK 51E Foot Mount

5	Gear	16	Spacer	26	Flanged Eye Bolt
6	Pinion	17	Vent Plug	28	Gasket
7	Output Shaft	18	Seal	34	Drain Plug
8	Key	20	Key	35	Gasket
9	Oil Seal	21	Spacer	43	Gearcase
10	Oil Seal	22	Anti-Friction Bearing	918	Key
11	Snap Ring	24	Shim	919	Snap Ring
12	Anti-Friction Bearing	25	Snap Ring		

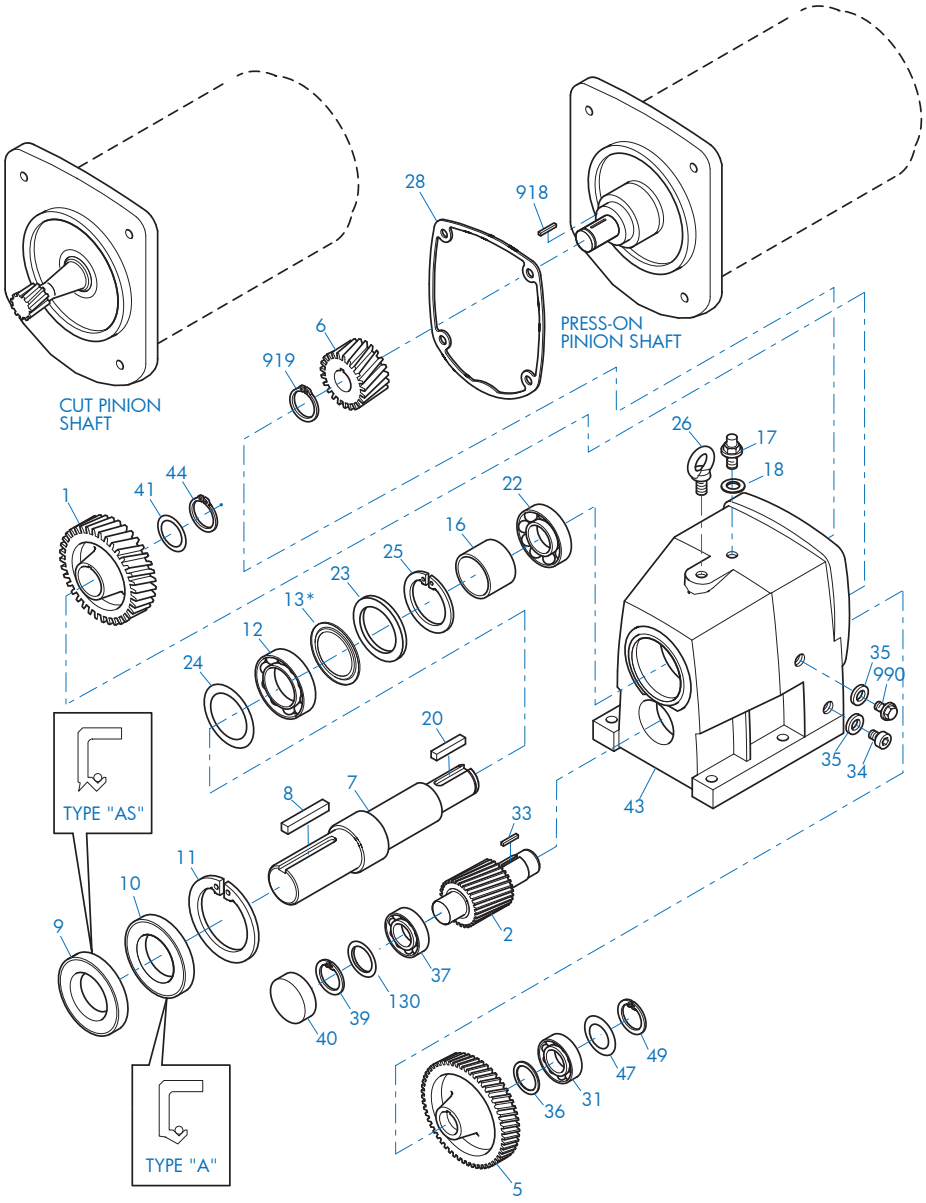

SK02 - SK52 Foot Mount

1	Gear	18	Seal	37	Anti-Friction Bearing
2	Pinion Shaft	20	Key	39	Snap Ring
5	Gear	22	Anti-Friction Bearing	40	Bore Plug
6	Pinion	23	Thrust Washer	41	Shim
7	Output Shaft	24	Shim	43	Gearcase
8	Key	25	Snap Ring	44	Snap Ring
9	Oil Seal	26	Flanged Eye Bolt	47	Shim
10	Oil Seal	28	Gasket	49	Snap Ring
11	Snap Ring	31	Anti-Friction Bearing	130	Shim
12	Anti-Friction Bearing	33	Key	918	Key
13	NILOS Ring*	34	Drain Plug	919	Snap Ring
16	Spacer	35	Gasket	990	Oil Level Plug
17	Vent Plug	36	Spacer		

* Conditionally used part

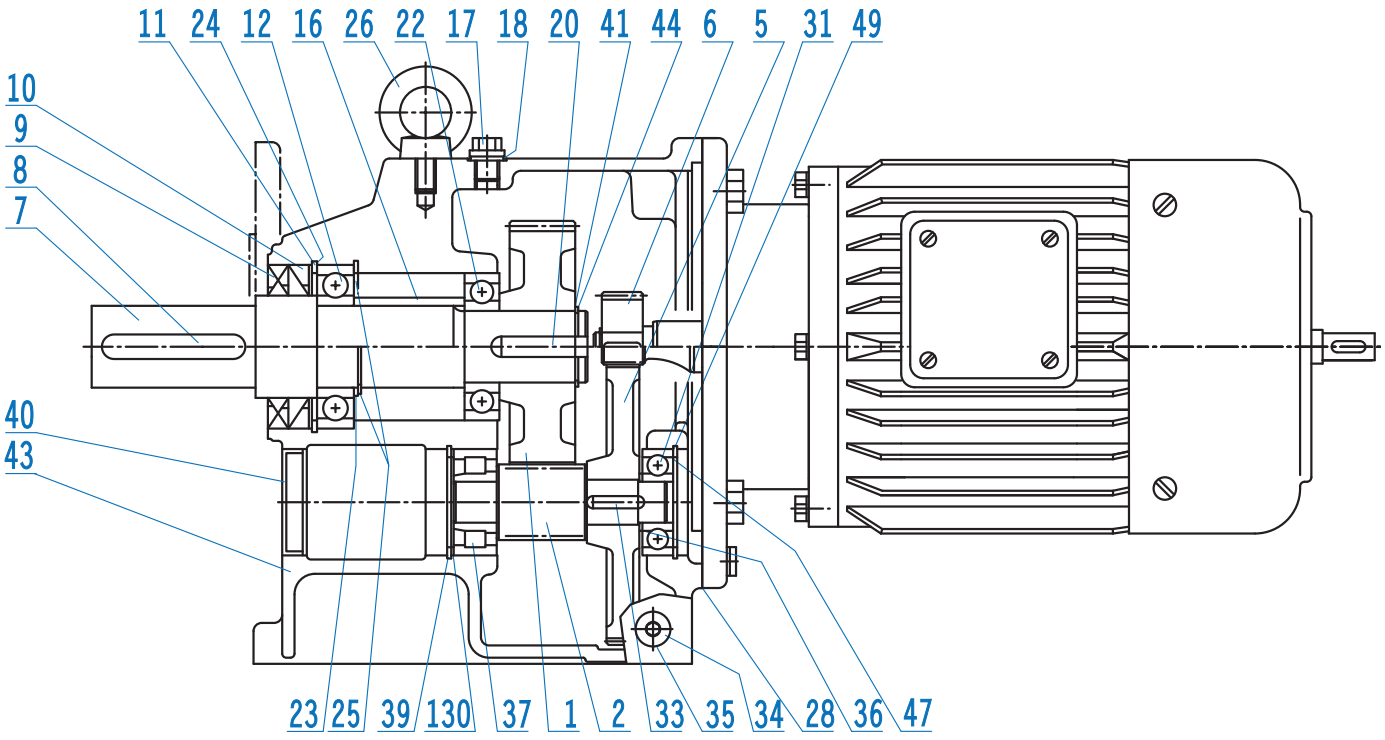

SK02 - SK52 Foot Mount

1	Gear	18	Seal	37	Anti-Friction Bearing
2	Pinion Shaft	20	Key	39	Snap Ring
5	Gear	22	Anti-Friction Bearing	40	Bore Plug
6	Pinion	23	Thrust Washer	41	Shim
7	Output Shaft	24	Shim	43	Gearcase
8	Key	25	Snap Ring	44	Snap Ring
9	Oil Seal	26	Flanged Eye Bolt	47	Shim
10	Oil Seal	28	Gasket	49	Snap Ring
11	Snap Ring	31	Anti-Friction Bearing	130	Shim
12	Anti-Friction Bearing	33	Key	918	Key
13	NILOS Ring*	34	Drain Plug	919	Snap Ring
16	Spacer	35	Gasket		
17	Vent Plug	36	Spacer		

* Conditionally used part

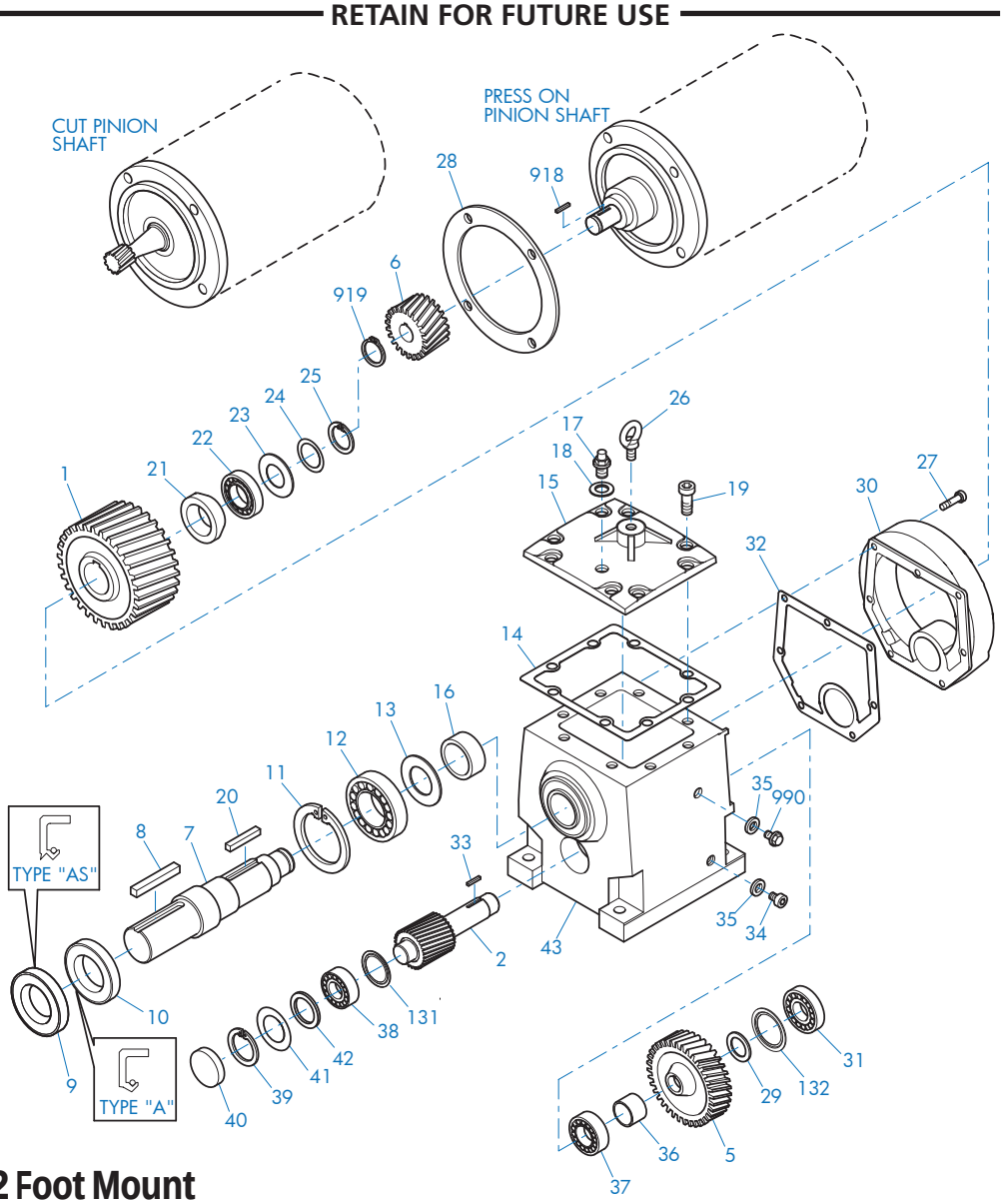

SK62 - SK102 Foot Mount

1	Gear	19	Bolt	35	Gasket
2	Pinion Shaft	20	Key	36	Spacer
5	Gear	21	Spacer	37	Anti-Friction Bearing
6	Pinion	22	Anti-Friction Bearing	38	Anti-Friction Bearing
7	Output Shaft	23	Thrust Washer	39	Snap Ring
8	Key	24	Shim	40	Bore Plug
9	Oil Seal	25	Snap Ring	41	Shim
10	Oil Seal	26	Flanged Eye Bolt	42	Thrust Washer
11	Snap Ring	27	Bolt	43	Gearcase
12	Anti-Friction Bearing	28	Gasket	131	NILOS Ring
13	NILOS ring	29	Spacer	132	NILOS Ring
14	Gasket	30	Input Cover	918	Key
15	Inspection Cover	31	Anti-Friction Bearing	919	Snap Ring
16	Spacer	32	Gasket	990	Oil Level Plug
17	Vent Plug	33	Key		
18	Seal	34	Drain Plug		

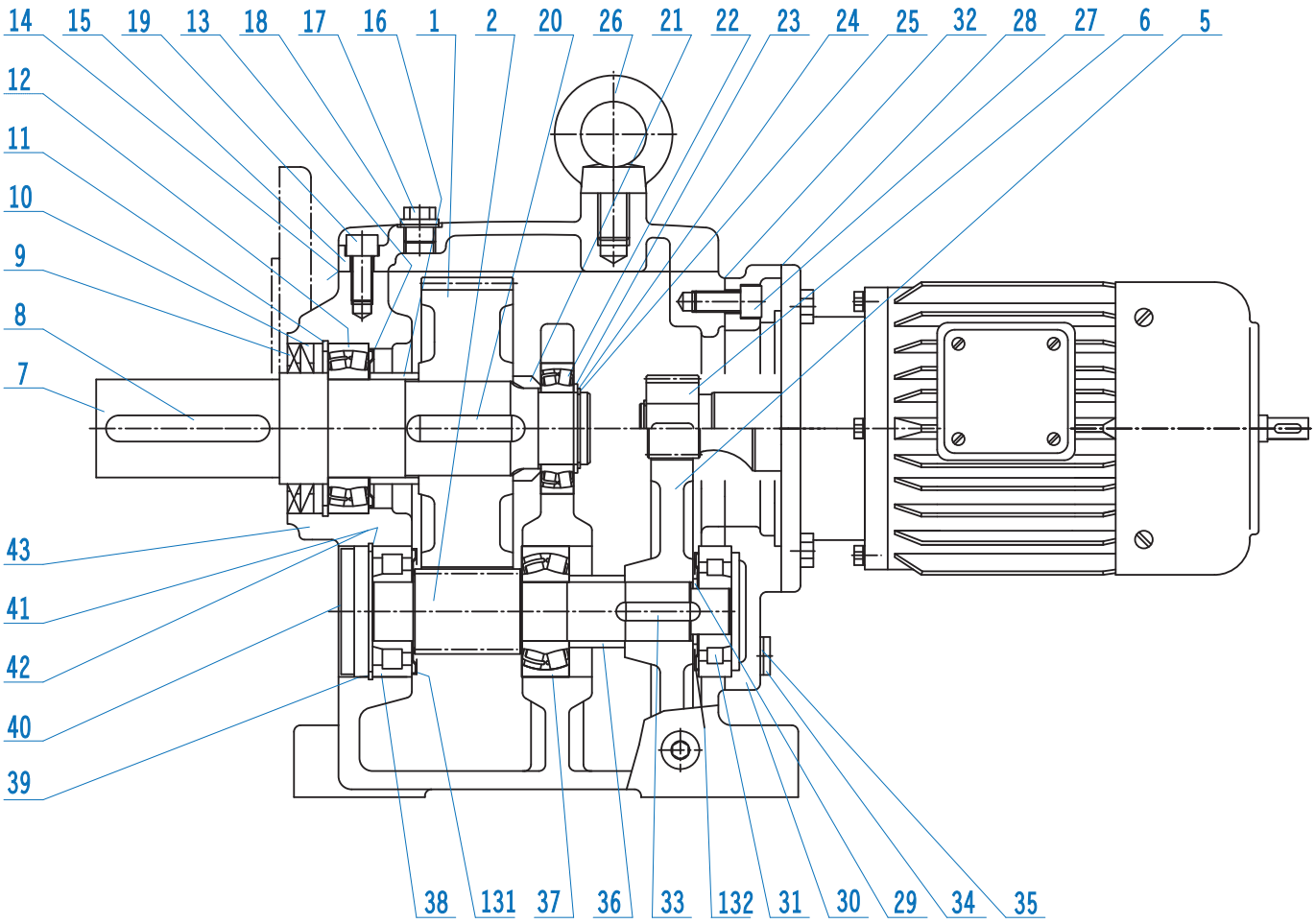

SK62 - SK102 Foot Mount

1	Gear	18	Seal	33	Key
2	Pinion Shaft	19	Bolt	34	Drain Plug
5	Gear	20	Key	35	Gasket
6	Pinion	21	Spacer	36	Spacer
7	Output Shaft	22	Anti-Friction Bearing	37	Anti-Friction Bearing
8	Key	23	Thrust Washer	38	Anti-Friction Bearing
9	Oil Seal	24	Shim	39	Snap Ring
10	Oil Seal	25	Snap Ring	40	Bore Plug
11	Snap Ring	26	Flanged Eye Bolt	41	Shim
12	Anti-Friction Bearing	27	Bolt	42	Thrust Washer
13	NILOS ring*	28	Gasket	43	Gearcase
14	Gasket	29	Spacer	131	NILOS Ring*
15	Inspection Cover	30	Input Cover	132	NILOS Ring*
16	Spacer	31	Anti-Friction Bearing	918	Key
17	Vent Plug	32	Gasket	919	Snap Ring

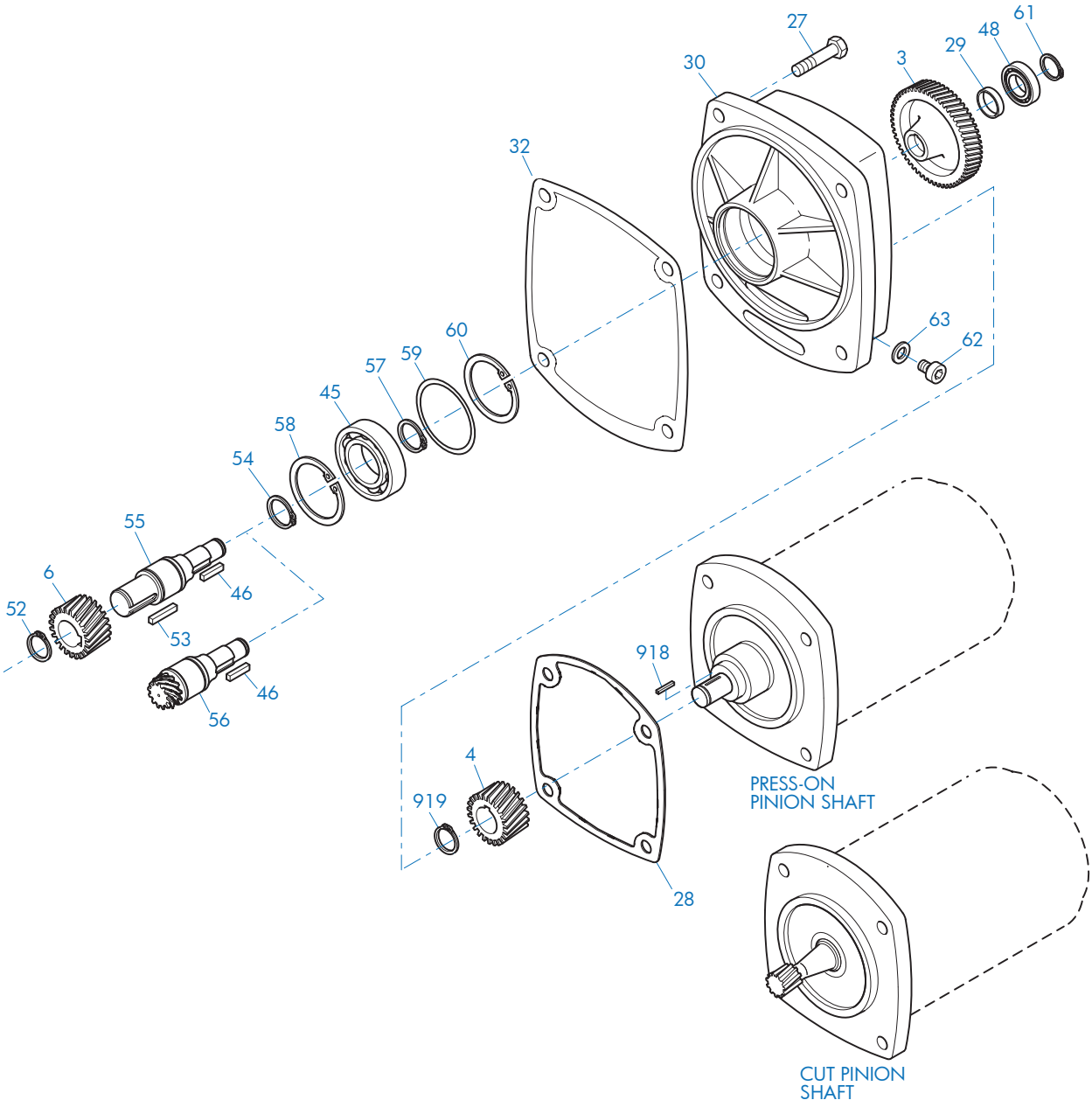

SK03 - SK53 Third Stage Reduction Gear

3	Gear	46	Key	59	Shim
4	Pinion	48	Anti-Friction Bearing	60	Snap Ring
6	Pinion	52	Snap Ring	61	Snap Ring
27	Bolt	53	Key	62	Oil Plug
28	Gasket	54	Snap Ring	63	Gasket
29	Spacer	55	Intermediate Shaft, Plain	918	Key
30	Third Reduction Gearcase	56	Intermediate Shaft, Gearcut	919	Snap Ring
32	Gasket	57	Snap Ring		
45	Anti-Friction Bearing	58	Snap Ring		

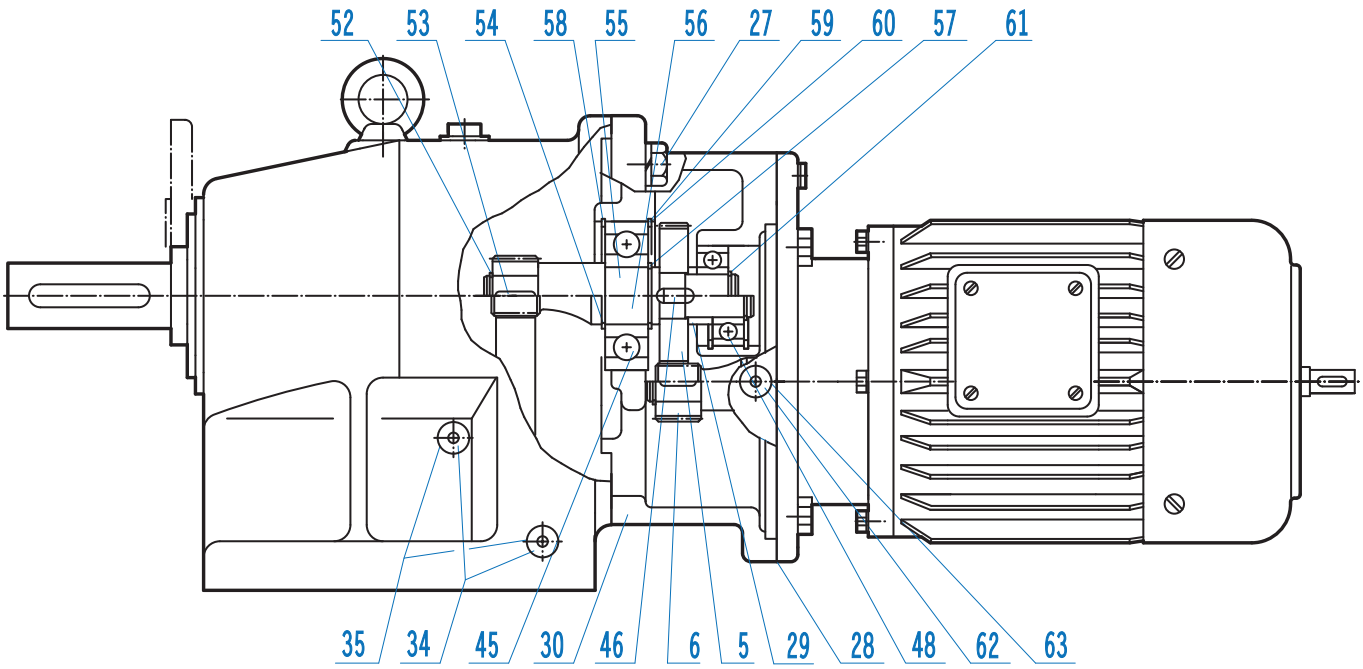

SK03 - SK53 Using Third Stage Reduction Gear

3	Gear	46	Key	59	Shim
4	Pinion	48	Anti-Friction Bearing	60	Snap Ring
6	Pinion	52	Snap Ring	61	Snap Ring
27	Bolt	53	Key	62	Oil Plug
28	Gasket	54	Snap Ring	63	Gasket
29	Spacer	55	Intermediate Shaft, Plain	918	Key
30	Third Reduction Gearcase	56	Intermediate Shaft, Gearcut	919	Snap Ring
32	Gasket	57	Snap Ring		
45	Anti-Friction Bearing	58	Snap Ring		

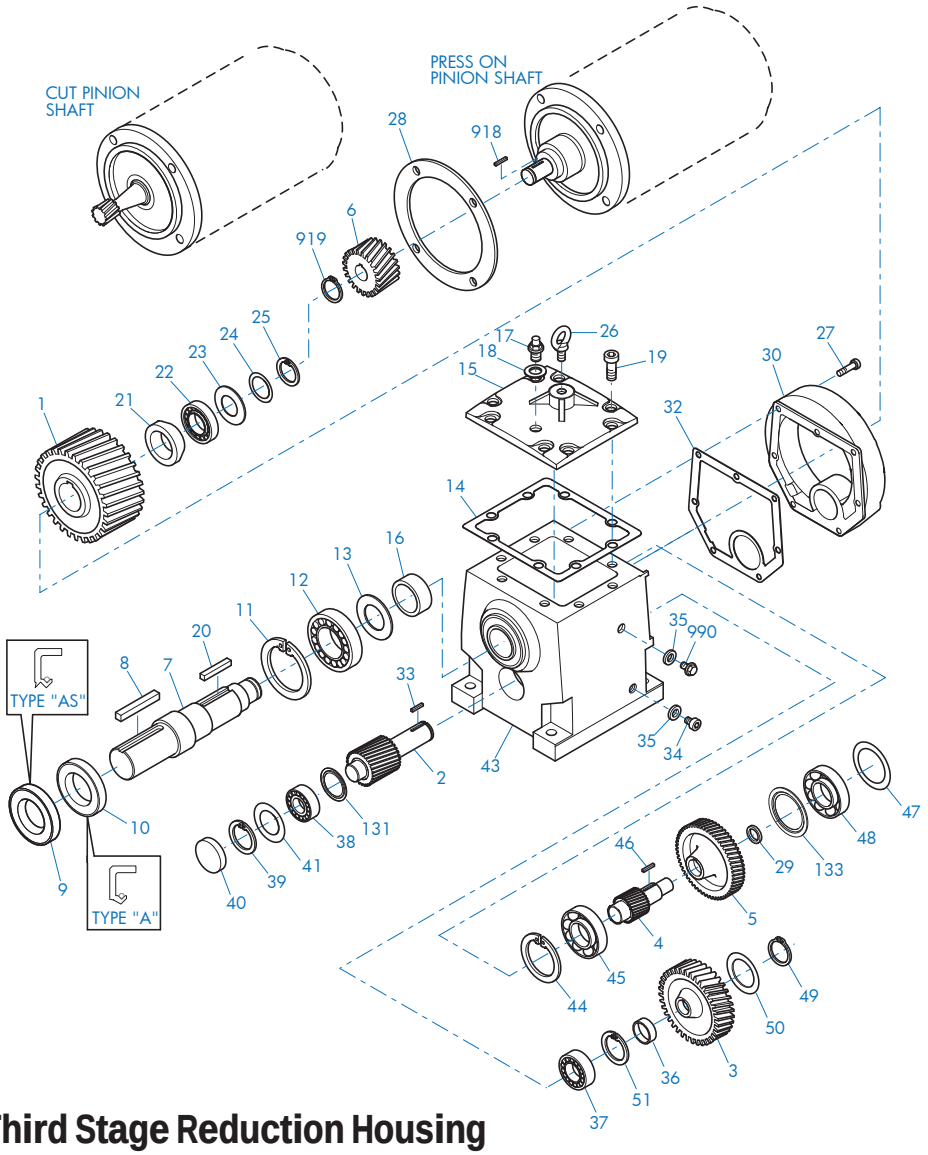

SK63 - SK103 Third Stage Reduction Housing

1	Gear	19	Bolt	38	Anti-Friction Bearing
2	Pinion Shaft	20	Key	39	Snap Ring
3	Gear	21	Spacer	40	Bore Plug
4	Pinion Shaft	22	Anti-Friction Bearing	41	Shim
5	Gear	23	Thrust Washer	43	Gearcase
6	Pinion	24	Shim	44	Snap Ring
7	Output Shaft	25	Snap Ring	45	Anti-Friction Bearing
8	Key	26	Flanged Eye Bolt	46	Key
9	Oil Seal	27	Bolt	47	Shim
10	Oil Seal	28	Gasket	48	Bearing
11	Snap Ring	29	Spacer	49	Snap Ring
12	Anti-Friction Bearing	30	Input Cover	50	Thrust Washer
13	NILOS Ring	32	Gasket	51	Snap Ring
14	Gasket	33	Key	131	NILOS Ring
15	Inspection Cover	34	Drain plug	133	NILOS Ring
16	Spacer	35	Gasket	918	Key
17	Vent Plug	36	Spacer	919	Snap Ring
18	Seal	37	Anti-Friction Bearing	990	Oil Level Plug

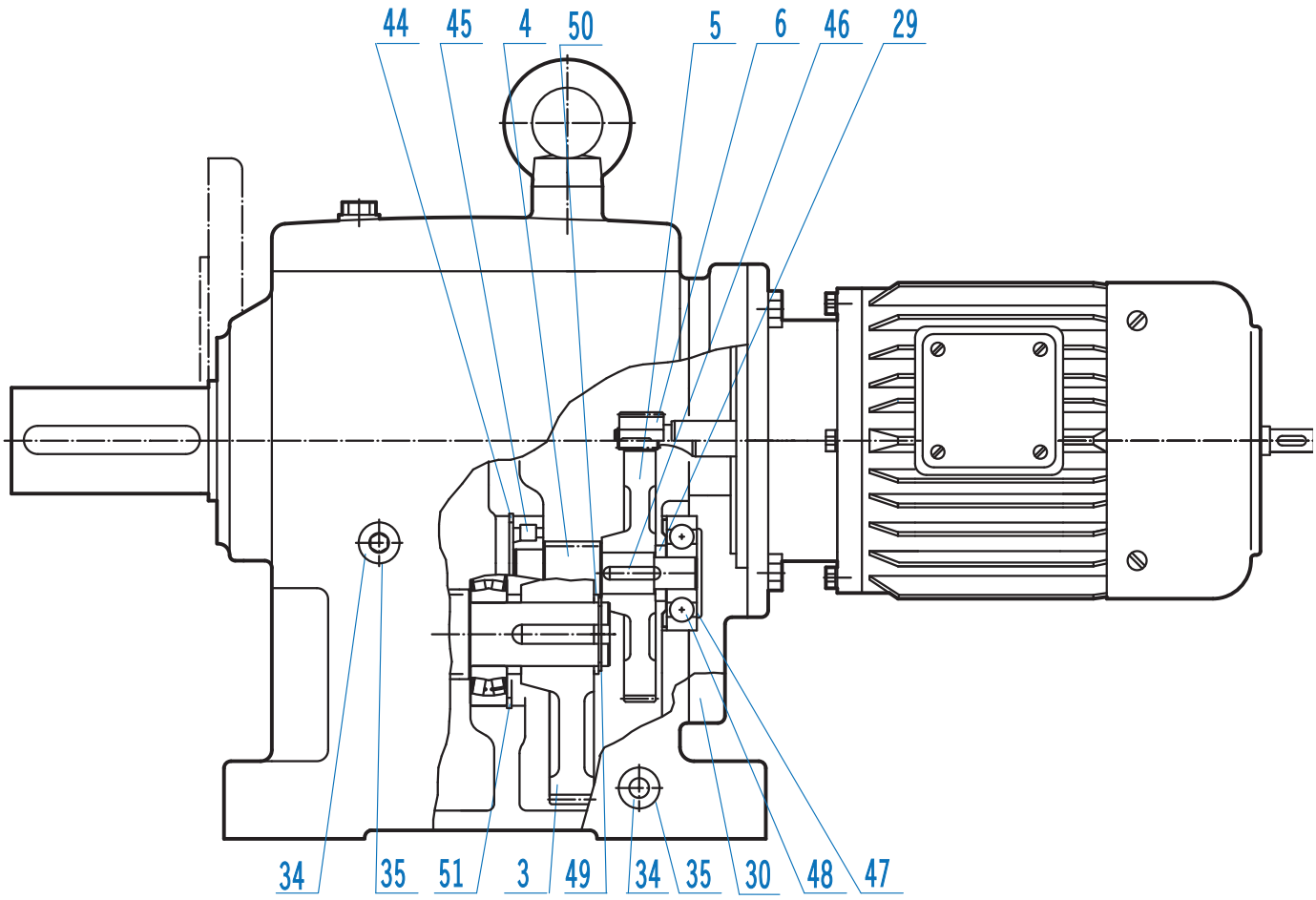

SK63 - SK103 Foot Mount

3	Gear	32	Gasket	47	Shim
4	Pinion Shaft	33	Key	48	Bearing
5	Gear	34	Drain plug	49	Snap Ring
6	Pinion	35	Gasket	50	Thrust Washer
28	Gasket	44	Snap Ring	51	Snap Ring
29	Spacer	45	Anti-Friction Bearing	133	NILOS Ring
30	Input Cover	46	Key		

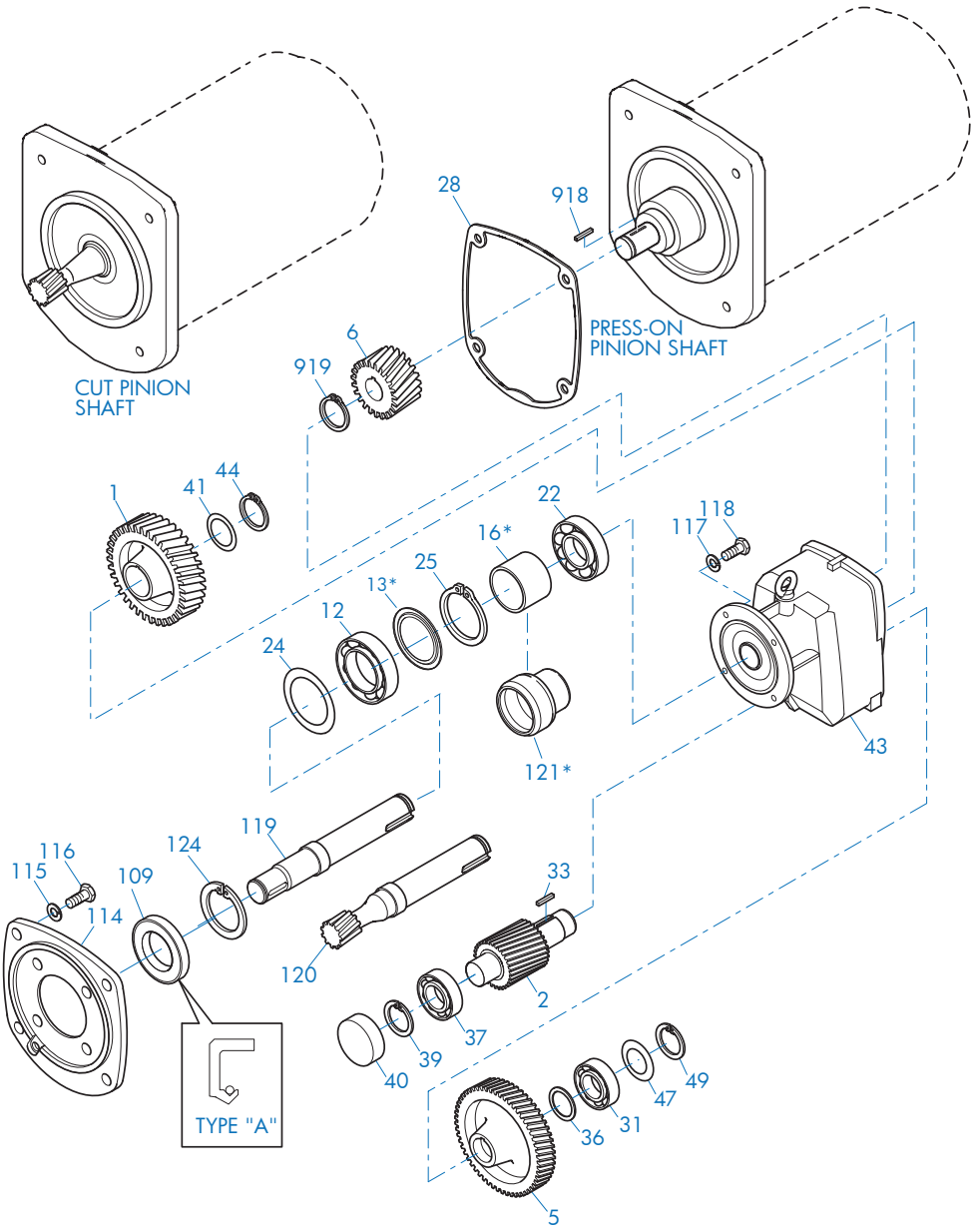

SK12/02 - SK103/52 Input Compound Reduction

1	Gear	33	Key	115	Lock Washer
2	Pinion Shaft	36	Spacer	116	Bolt
5	Gear	37	Anti-Friction Bearing	117	Lock Washer
6	Pinion	39	Snap Ring	118	Bolt
12	Anti-Friction Bearing	40	Bore Plug	119	Intermediate Shaft, Plain
13	Nilos Ring*	41	Shim	120	Intermediate Shaft, Gearcut
16	Spacer*	43	Gearcase	121	Bearing Sleeve*
22	Anti-Friction Bearing	44	Snap Ring	124	Snap Ring
24	Shim	47	Shim	918	Key
25	Snap Ring	49	Snap Ring	919	Snap Ring
28	Gasket	109	Oil Seal		
31	Anti-Friction Bearing	114	Intermediate Flange		

* Conditionally used part

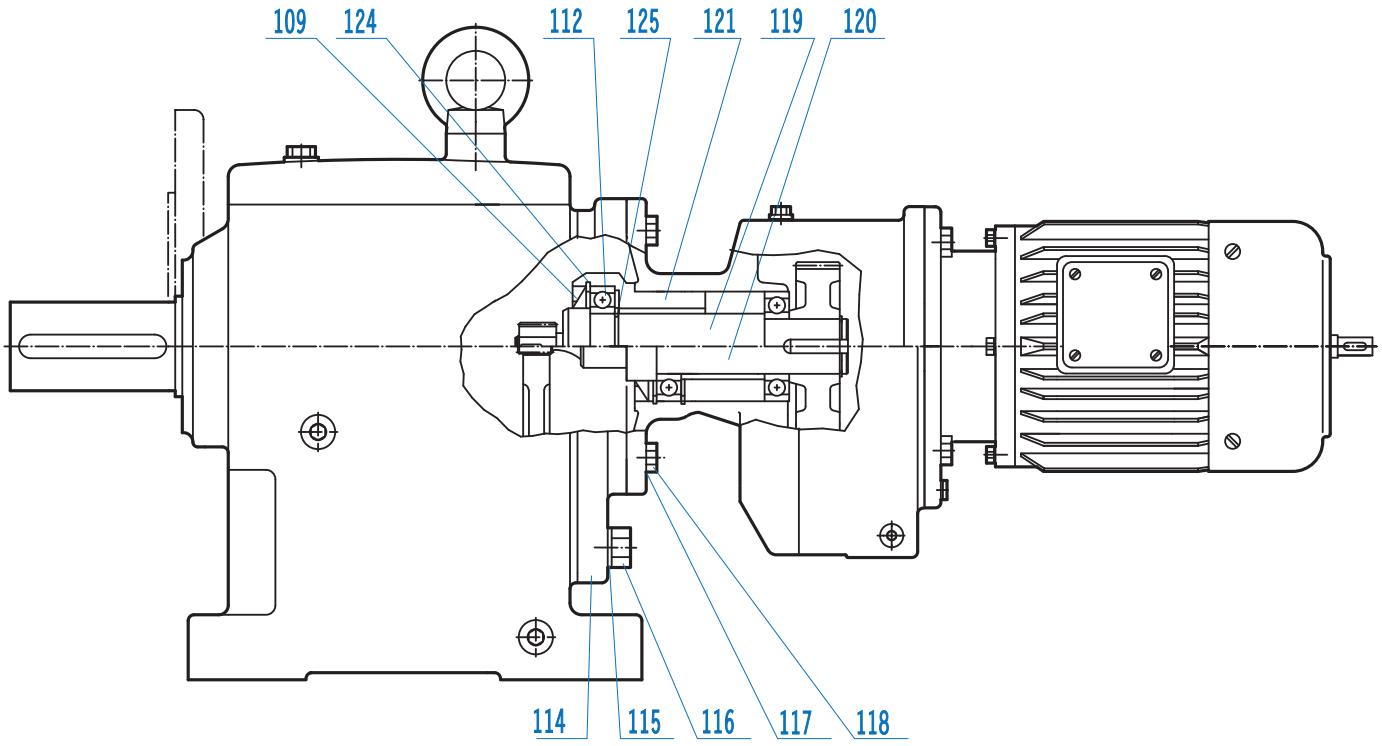

SK12/02 - SK103/52 Input Compound Reduction

12	Anti-Friction Bearing	115	Lock Washer	120	Intermediate Shaft, Gearcut
13	Nilos Ring*	116	Bolt	121	Bearing Sleeve*
16	Spacer*	117	Lock Washer	124	Snap Ring
25	Snap Ring	118	Bolt		
109	Oil Seal	119	Intermediate Shaft, Plain		
114	Intermediate Flange				

* Conditionally used part

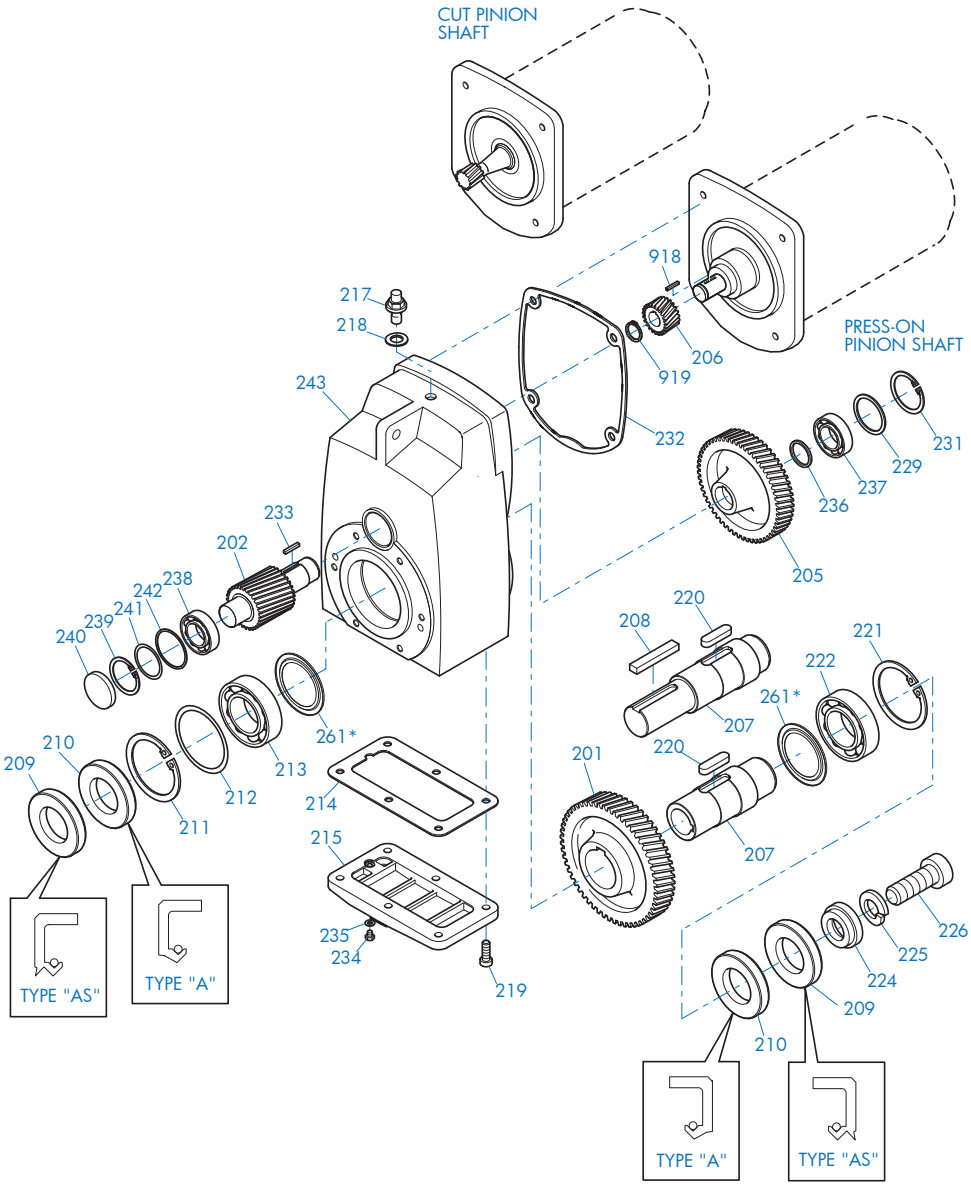

SK 0182NB - SK 5282

201 Gear	217 Vent Plug	234 Drain Plug
202 Pinion Shaft	218 Gasket	235 Gasket
205 Gear	219 Bolt	236 Thrust Washer
206 Pinion	220 Key	237 Anti-Friction Bearing
207 Output Shaft	221 Snap Ring	238 Anti-Friction Bearing
208 Key	222 Anti-Friction Bearing	239 Snap Ring
209 Oil Seal	224 Retaining Washer	240 Bore Plug
210 Oil Seal	225 Lock Washer	241 Shim
211 Snap Ring	226 Bolt	242 Thrust Washer
212 Shim	229 Thrust Washer	243 Gearcase
213 Anti-Friction Bearing	231 Snap Ring	261 Nilos Ring*
214 Gasket	232 Gasket	918 Key
215 Inspection Cover	233 Key	919 Snap Ring

* Conditionally used part

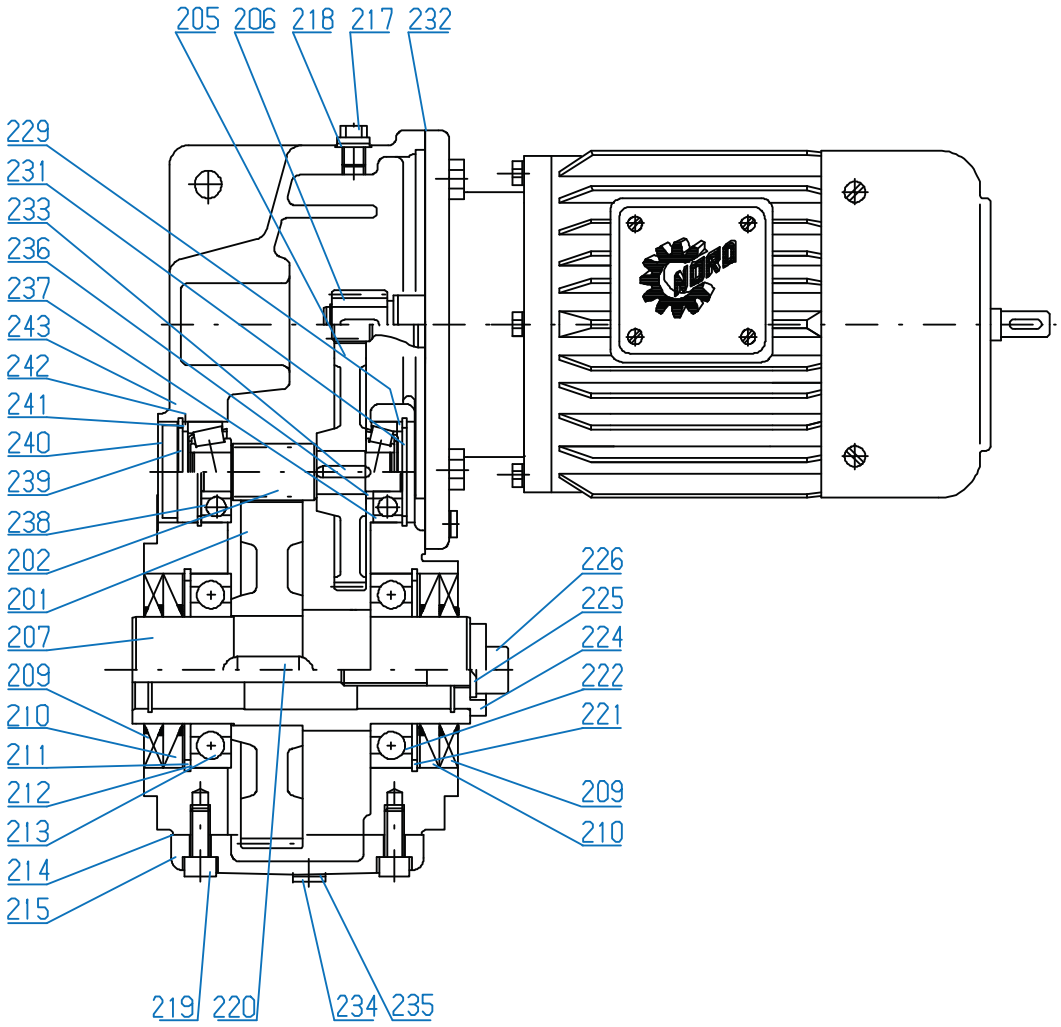

SK 0182NB - SK 5282

201 Gear	217 Vent Plug	233 Key
202 Pinion Shaft	218 Gasket	234 Drain Plug
205 Gear	219 Bolt	235 Gasket
206 Pinion	220 Key	236 Thrust Washer
207 Output Shaft	221 Snap Ring	237 Anti-Friction Bearing
209 Oil Seal	222 Anti-Friction Bearing	238 Anti-Friction Bearing
210 Oil Seal	224 Retaining Washer	239 Snap Ring
211 Snap Ring	225 Lock Washer	240 Bore Plug
212 Shim	226 Bolt	241 Shim
213 Anti-Friction Bearing	229 Thrust Washer	242 Thrust Washer
214 Gasket	231 Snap Ring	243 Gearcase
215 Inspection Cover	232 Gasket	261 Nilos Ring*

* Conditionally used part

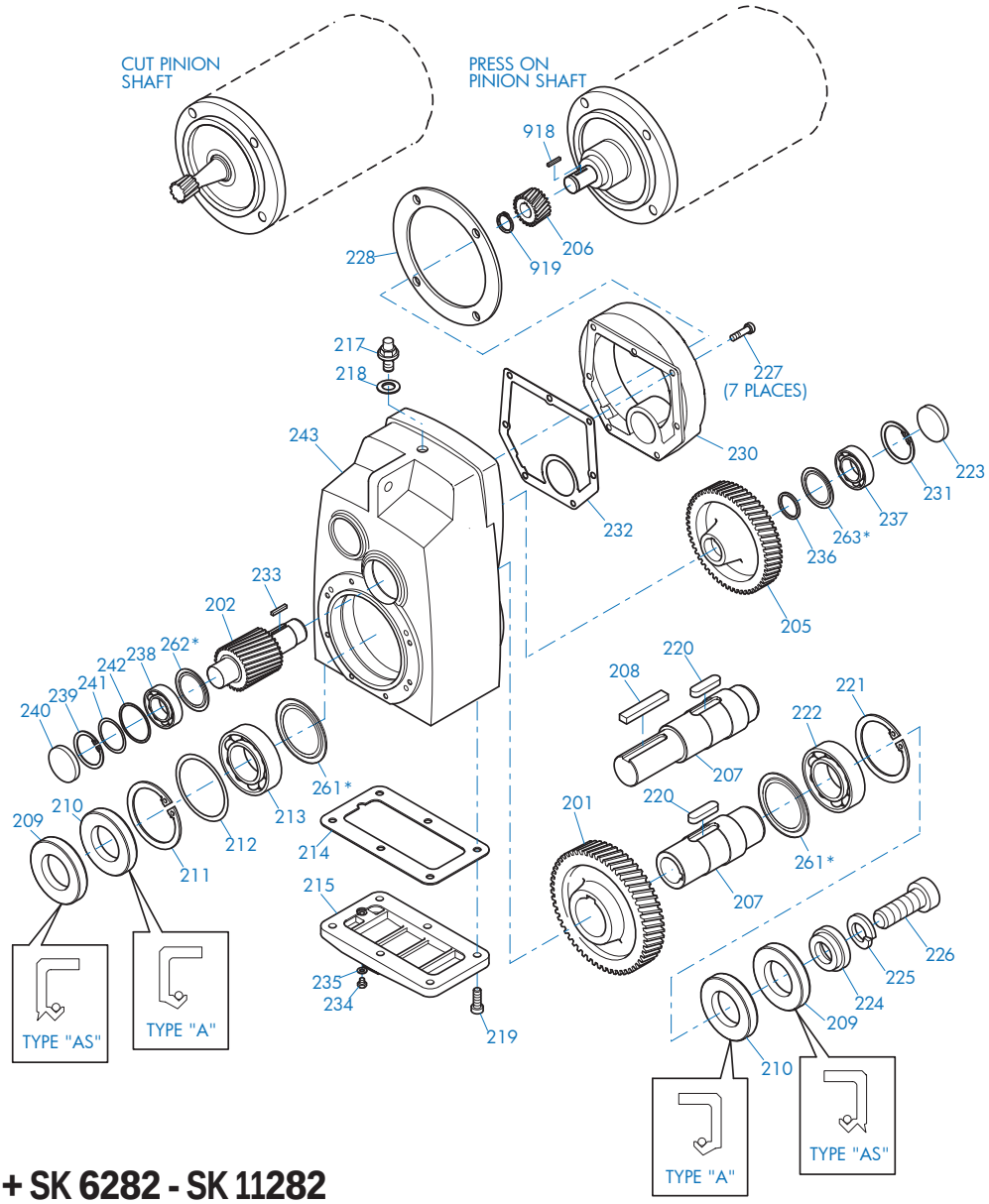

SK 0282NB + SK 6282 - SK 11282

201 Gear	219 Bolt	236 Thrust Washer
202 Pinion Shaft	220 Key	237 Anti-Friction Bearing
205 Gear	221 Snap Ring	238 Anti-Friction Bearing
206 Pinion	222 Anti-Friction Bearing	239 Snap Ring
207 Output Shaft	224 Retaining Washer	240 Bore Plug
208 Key	225 Lock Washer	241 Shim
209 Oil Seal	226 Bolt	242 Thrust Washer
210 Oil Seal	227 Bolt	243 Gear case
211 Snap Ring	228 Gasket	261 Nilos Ring*
212 Shim	230 Input Cover	262 Nilos Ring*
213 Anti-Friction Bearing	231 Snap Ring	263 Nilos Ring*
214 Gasket	232 Gasket	918 Key
215 Inspection Cover	233 Key	919 Snap Ring
217 Vent Plug	234 Drain Plug	
218 Gasket	235 Gasket	

* Conditionally used part

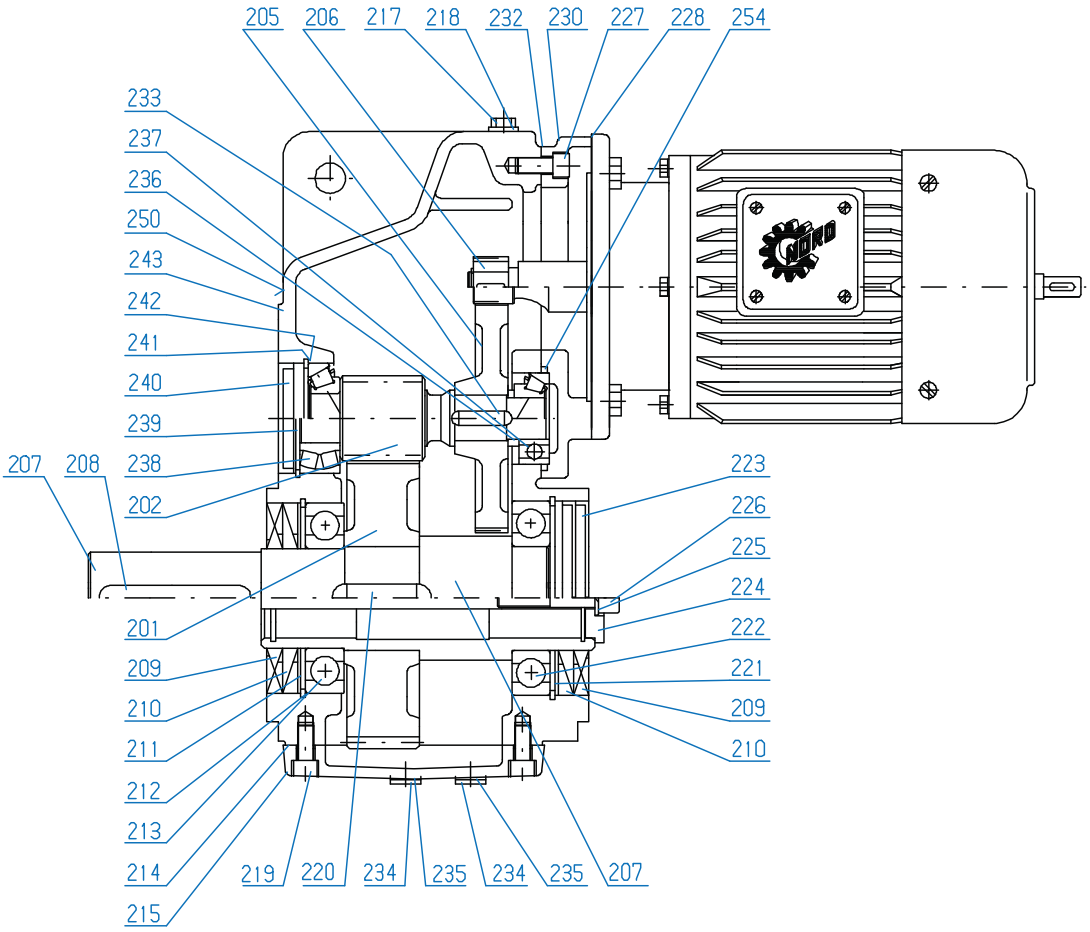

SK 0282NB + SK 6282 - SK 11282

201 Gear
202 Pinion Shaft
205 Gear
206 Pinion
207 Output Shaft
208 Key
209 Oil Seal
210 Oil Seal
211 Snap Ring
212 Shim
213 Anti-Friction Bearing
214 Gasket
215 Inspection Cover
217 Vent Plug
218 Gasket
219 Bolt
220 Key
221 Snap Ring
222 Anti-Friction Bearing
223 Bore Plug
224 Retaining Washer
225 Lock Washer
226 Bolt
227 Bolt
228 Gasket
230 Input Cover
232 Gasket
233 Key
234 Drain Plug
235 Gasket
236 Thrust Washer
237 Anti-Friction Bearing
238 Anti-Friction Bearing
239 Snap Ring
240 Bore Plug
241 Shim
242 Thrust Washer
243 Gear case
250 Bore Plug
261 Nilos Ring*
262 Nilos Ring*
263 Nilos Ring*

* Conditionally used part

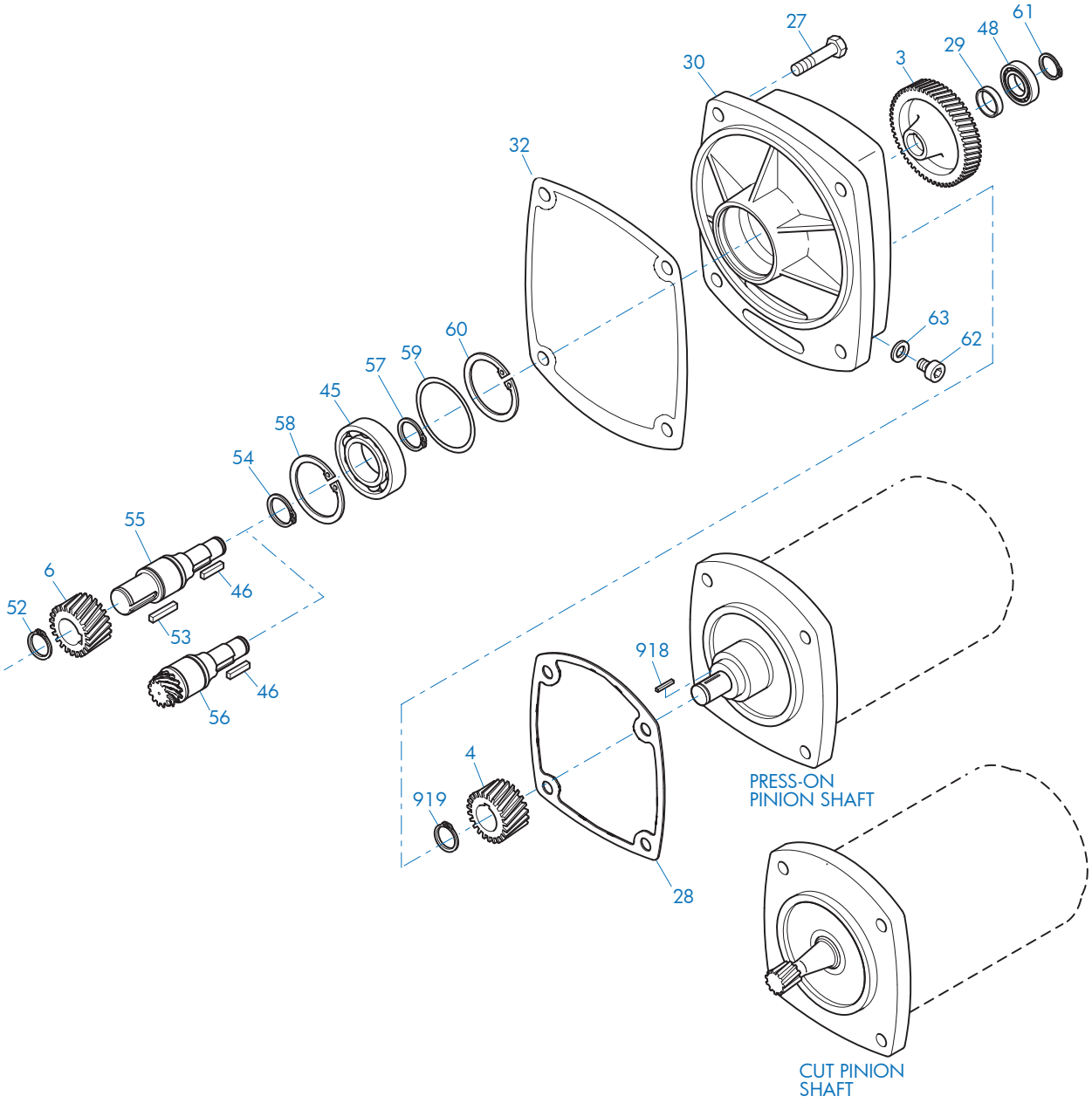

SK 2382 - SK 5382 Third Stage Reduction Housing

3	Gear	46	Key	59	Shim
4	Pinion	48	Anti-Friction Bearing	60	Snap Ring
6	Pinion	52	Snap Ring	61	Snap Ring
27	Bolt	53	Key	62	Oil Plug
28	Gasket	54	Snap Ring	63	Gasket
29	Spacer	55	Intermediate Shaft, Plain	918	Key
30	Third Reduction Gearcase	56	Intermediate Shaft, Gearcut	919	Snap Ring
32	Gasket	57	Snap Ring		
45	Anti-Friction Bearing	58	Snap Ring		

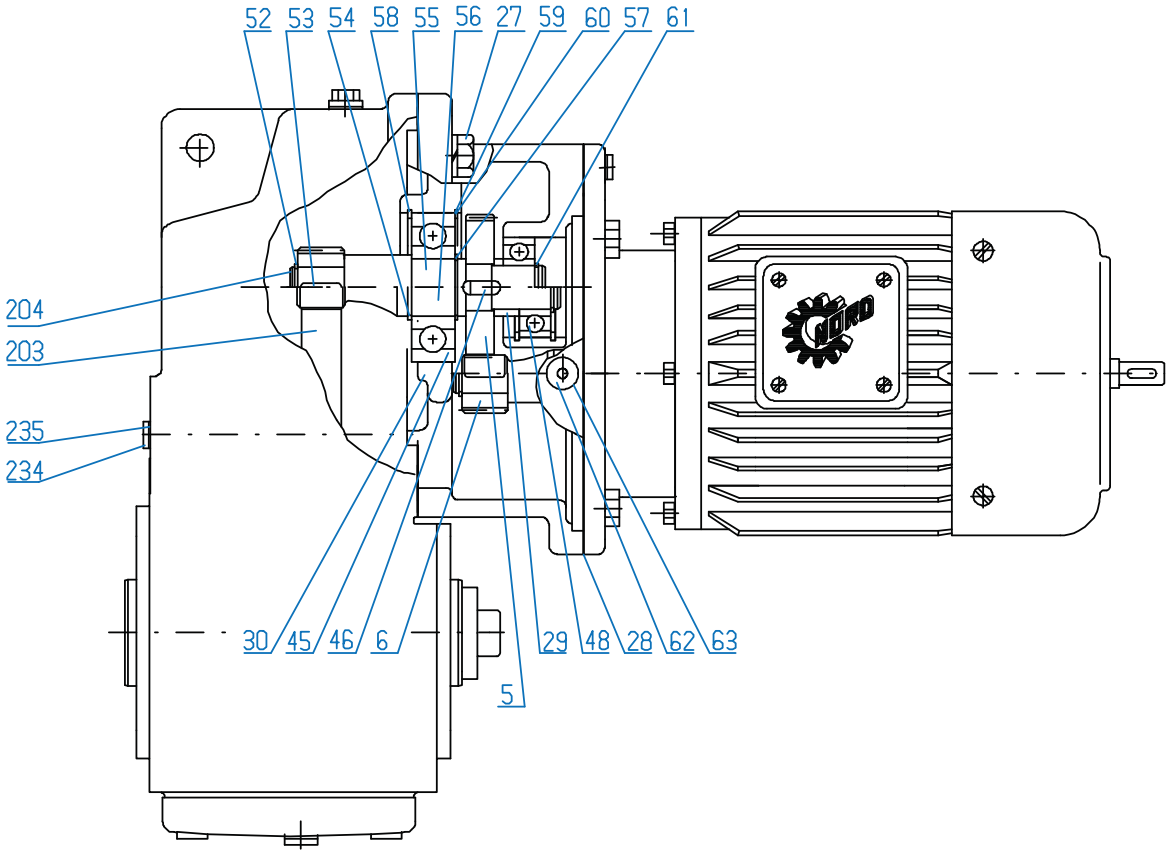

SK 2382 - SK 5382 Third Stage Reduction Housing

3	Gear	46	Key	59	Shim
4	Pinion	48	Anti-Friction Bearing	60	Snap Ring
6	Pinion	52	Snap Ring	61	Snap Ring
27	Bolt	53	Key	62	Oil Plug
28	Gasket	54	Snap Ring	63	Gasket
29	Spacer	55	Intermediate Shaft, Plain	203	Gear
32	Gasket	56	Intermediate Shaft, Gearcut	204	Pinion Shaft
30	Third Reduction Gearcase	57	Snap Ring	234	Oil Plug
45	Anti-Friction Bearing	58	Snap Ring	235	Gasket

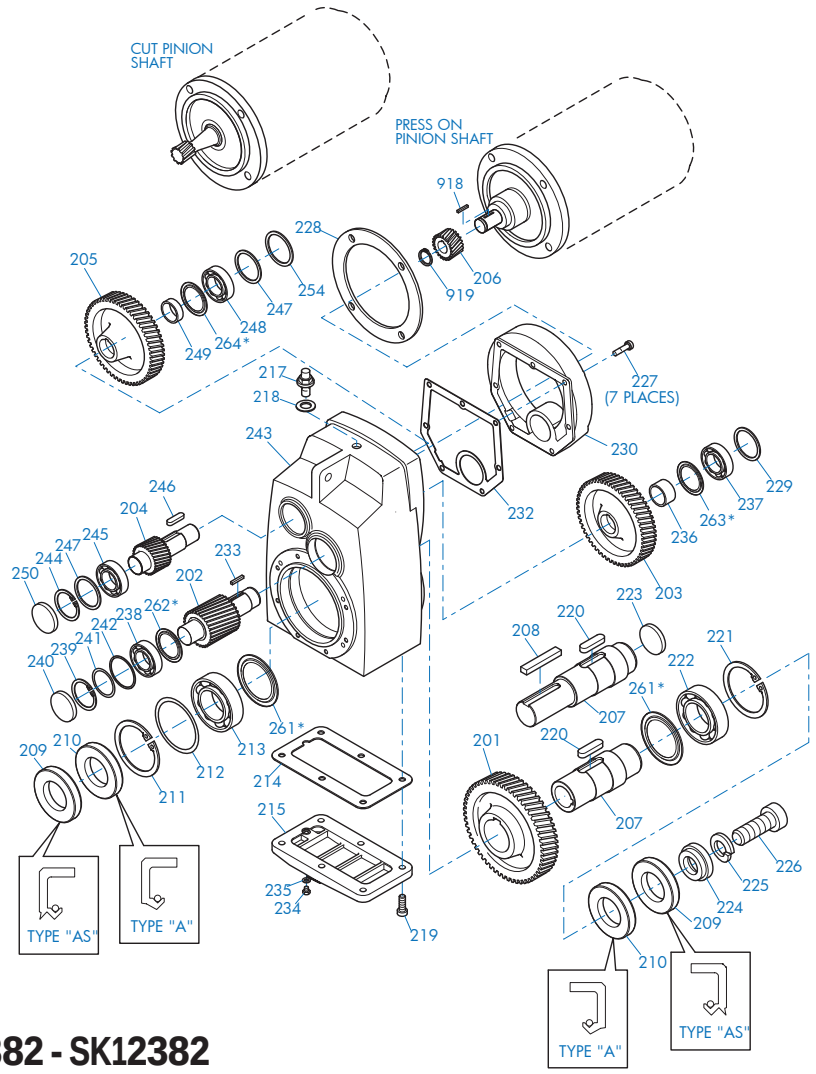

SK 1382 NB + SK 6382 - SK12382

201 Gear
202 Pinion Shaft
203 Gear
204 Pinion Shaft
205 Gear
206 Pinion
207 Output Shaft
208 Key
209 Oil Seal
210 Oil Seal
211 Snap Ring
212 Shim
213 Anti-Friction Bearing
214 Gasket
215 Inspection Cover
217 Vent Plug
218 Gasket
219 Bolt
220 Key
221 Snap Ring
222 Anti-Friction Bearing
223 Bore Plug
224 Retaining Washer
225 Lock Washer
226 Bolt
227 Bolt
228 Gasket
229 Thrust Washer
230 Input Cover
232 Gasket
233 Key
234 Drain Plug
235 Gasket
236 Thrust Washer
237 Anti-Friction Bearing
238 Anti-Friction Bearing
239 Snap Ring
240 Bore Plug
241 Shim
242 Thrust Washer
243 Gearcase
244 Snap Ring
245 Anti-Friction Bearing
246 Key
247 Shim
248 Anti-Friction Bearing
249 Spacer
250 Bore Plug
254 Thrust Washer
261 Nilos Ring*
262 Nilos Ring*
263 Nilos Ring*
264 Nilos Ring*
918 Key
919 Snap Ring

* Conditionally used part

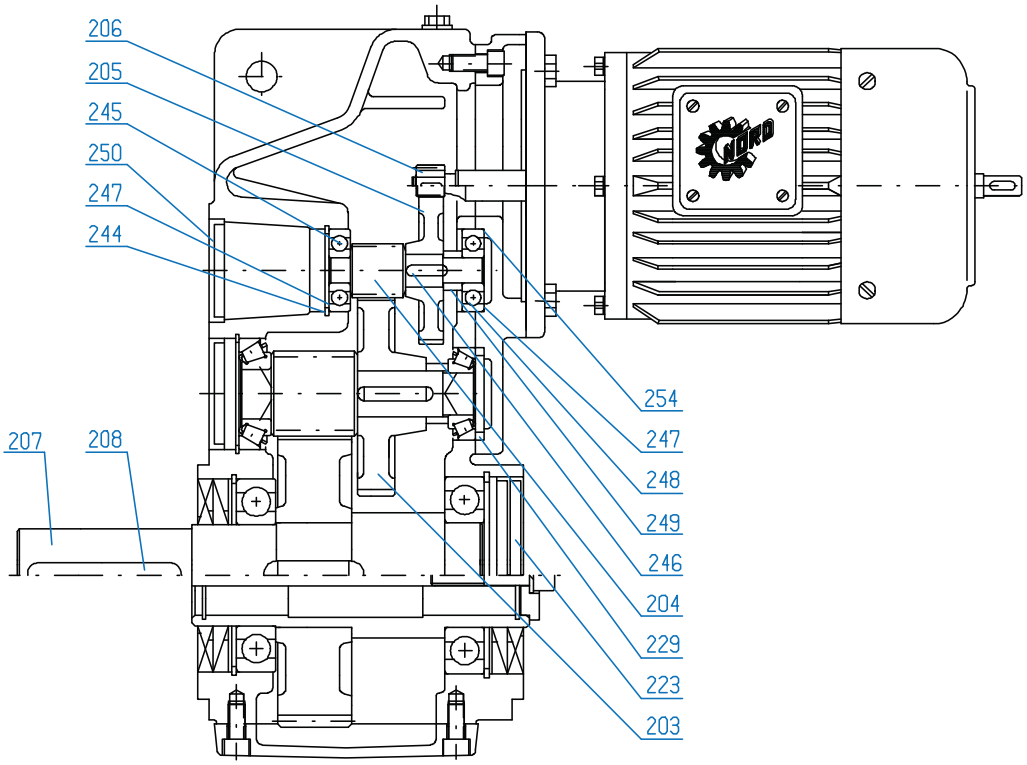

SK 1382 NB + SK 6382 - SK12382

203 Gear	229 Thrust Washer	250 Bore Plug
204 Pinion Shaft	244 Snap Ring	254 Thrust Washer
205 Gear	245 Anti-Friction Bearing	261 Nilos Ring*
206 Pinion	246 Key	262 Nilos Ring*
207 Output Shaft	247 Shim	263 Nilos Ring*
208 Key	248 Anti-Friction Bearing	264 Nilos Ring*
223 Bore Plug	249 Spacer	

* Conditionally used part

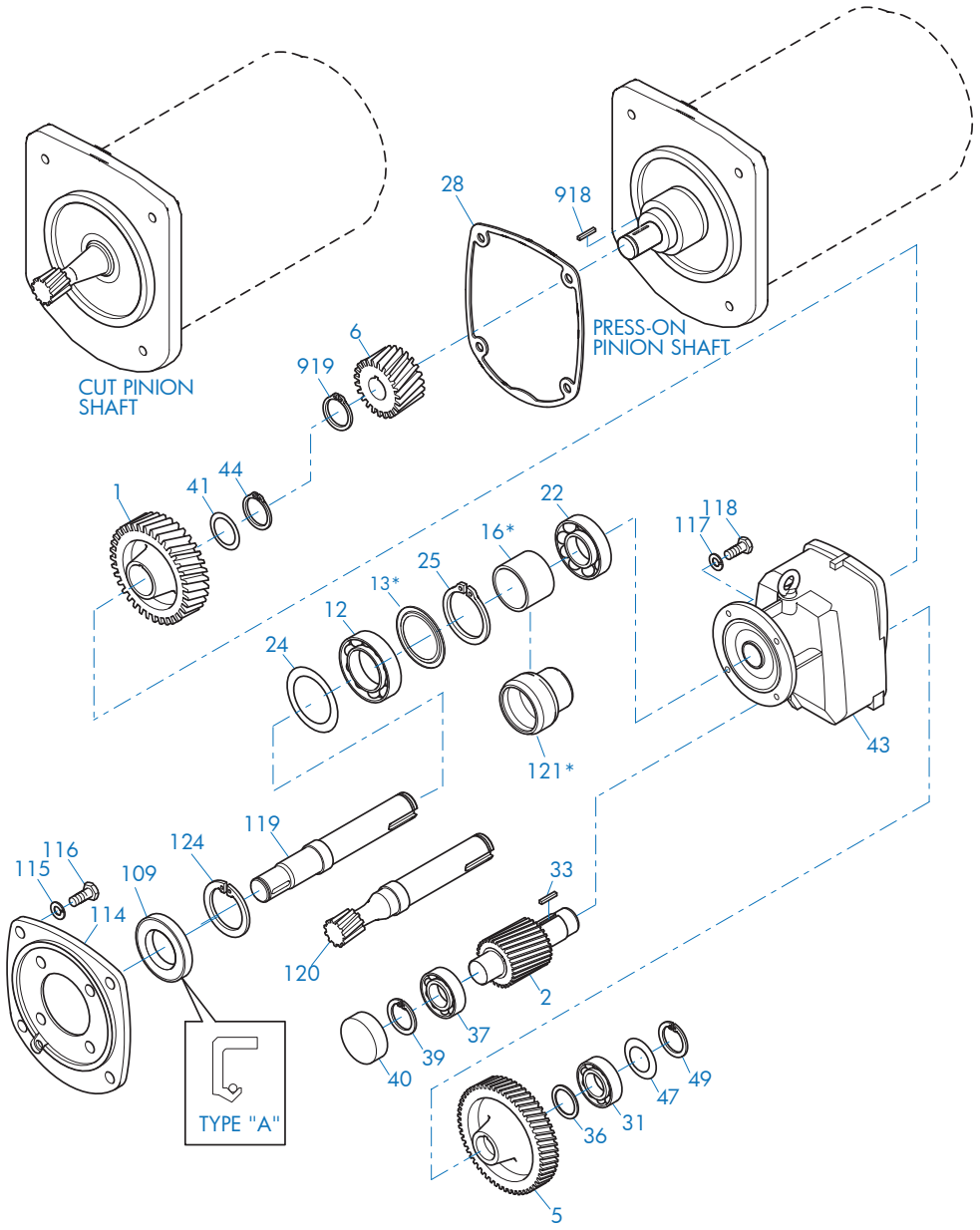

SK1282/02 - SK11382/52 Multi-stage Reduction Unit

1	Gear	33	Key	115	Lock Washer
2	Pinion Shaft	36	Spacer	116	Bolt
5	Gear	37	Anti-Friction Bearing	117	Lock Washer
6	Pinion	39	Snap Ring	118	Bolt
12	Anti-Friction Bearing	40	Bore Plug	119	Intermediate Shaft, Plain
13	Nilos Ring*	41	Shim	120	Intermediate Shaft, Gearcut
16	Spacer*	43	Gearcase	121	Bearing Sleeve*
22	Anti-Friction Bearing	44	Snap Ring	124	Snap Ring
24	Shim	47	Shim	918	Key
25	Snap Ring	49	Snap Ring	919	Snap Ring
28	Gasket	109	Oil Seal		
31	Anti-Friction Bearing	114	Intermediate Flange		

* Conditionally used part

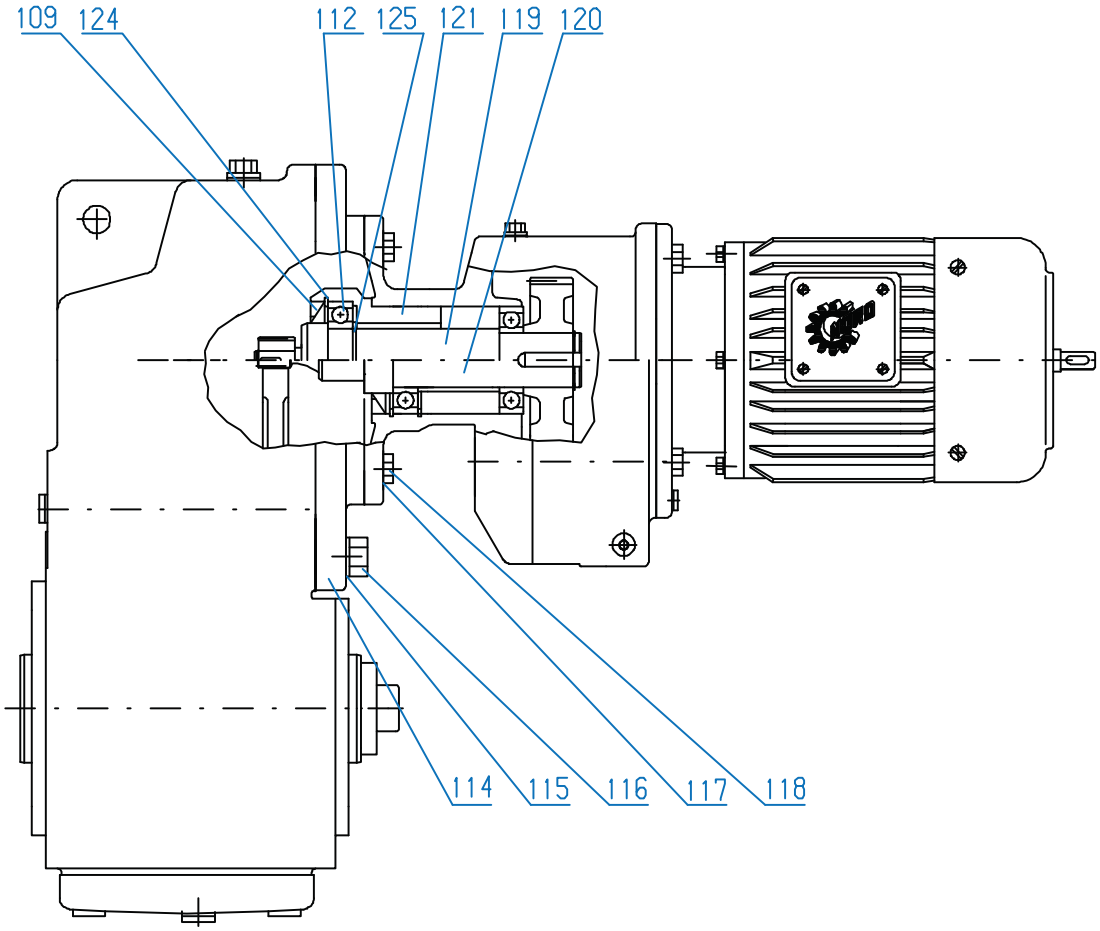

SK 1282/02 - SK 11382/52

12 Anti-friction Bearing	114 Intermediate Flange	119 Intermediate Shaft, Plain
13 Nilos Ring*	115 Lock Washer	120 Intermediate Shaft, Gearcut
16 Spacer	116 Bolt	121 Bearing Sleeve
25 Snap Ring	117 Lock Washer	124 Snap Ring
109 Oil Seal	118 Bolt	

* Conditionally used part

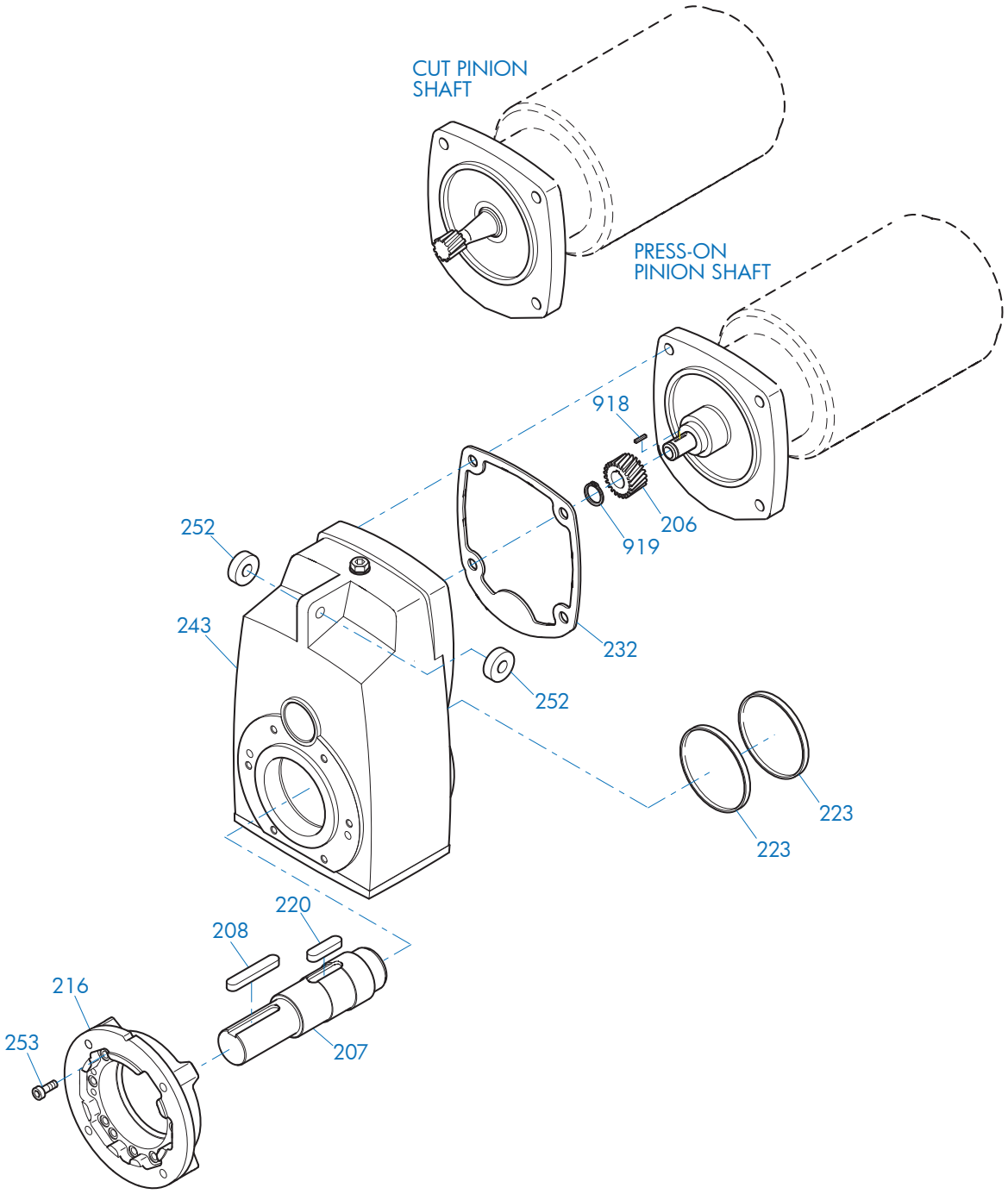

SK 0182NB - SK 11282 & SK 1382 - SK 11382

206 Pinion	220 Key	252 Rubber Buffer
207 Output Shaft	223 Bore Plug	253 Bolt
208 Key	232 Gasket	918 Key
216 Flange	243 Gearcase	919 Snap Ring

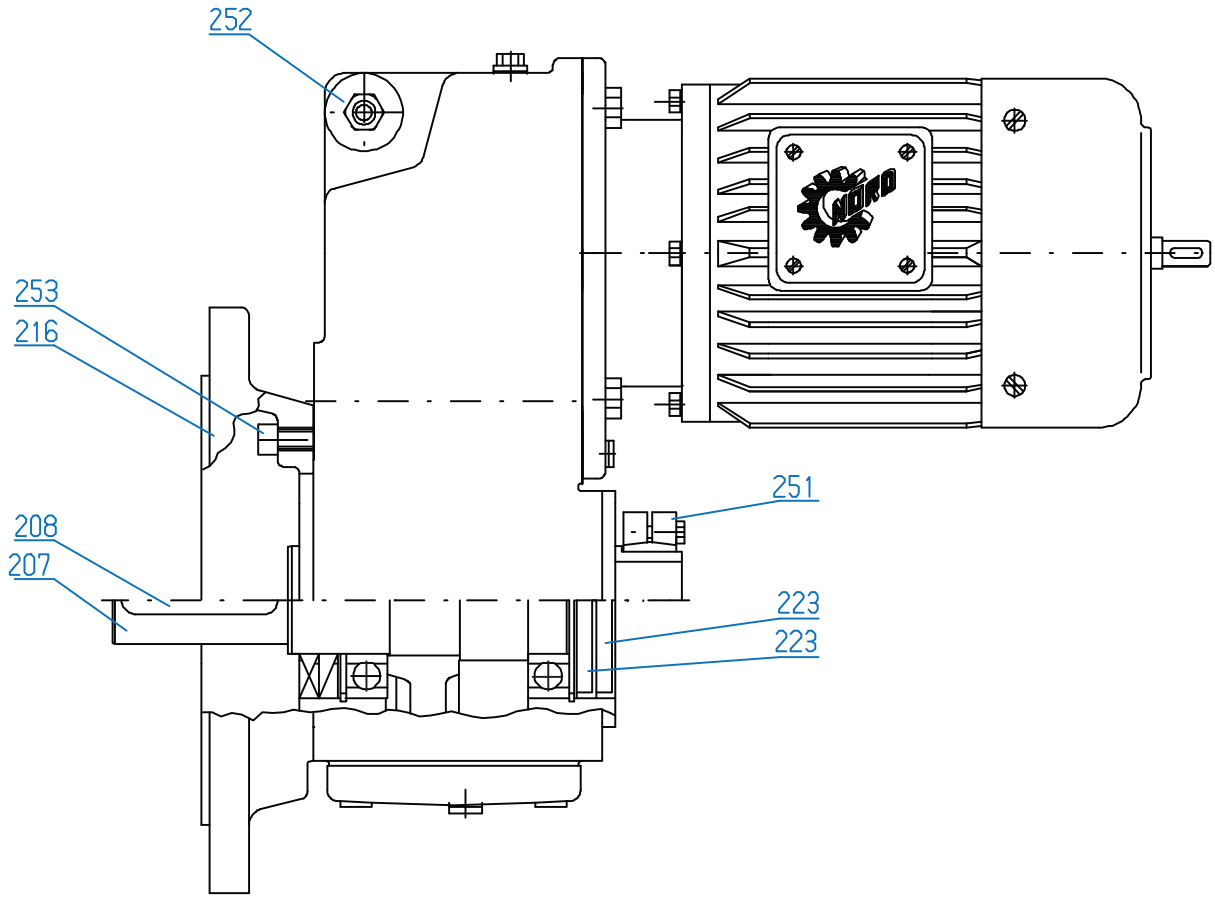

SK 0182NB - SK 11282 & SK 1382 - SK 11382

207 Output Shaft	223 Bore Plug	253 Bolt
208 Key	251 Shrink Disc	
216 Flange	252 Rubber Buffer	

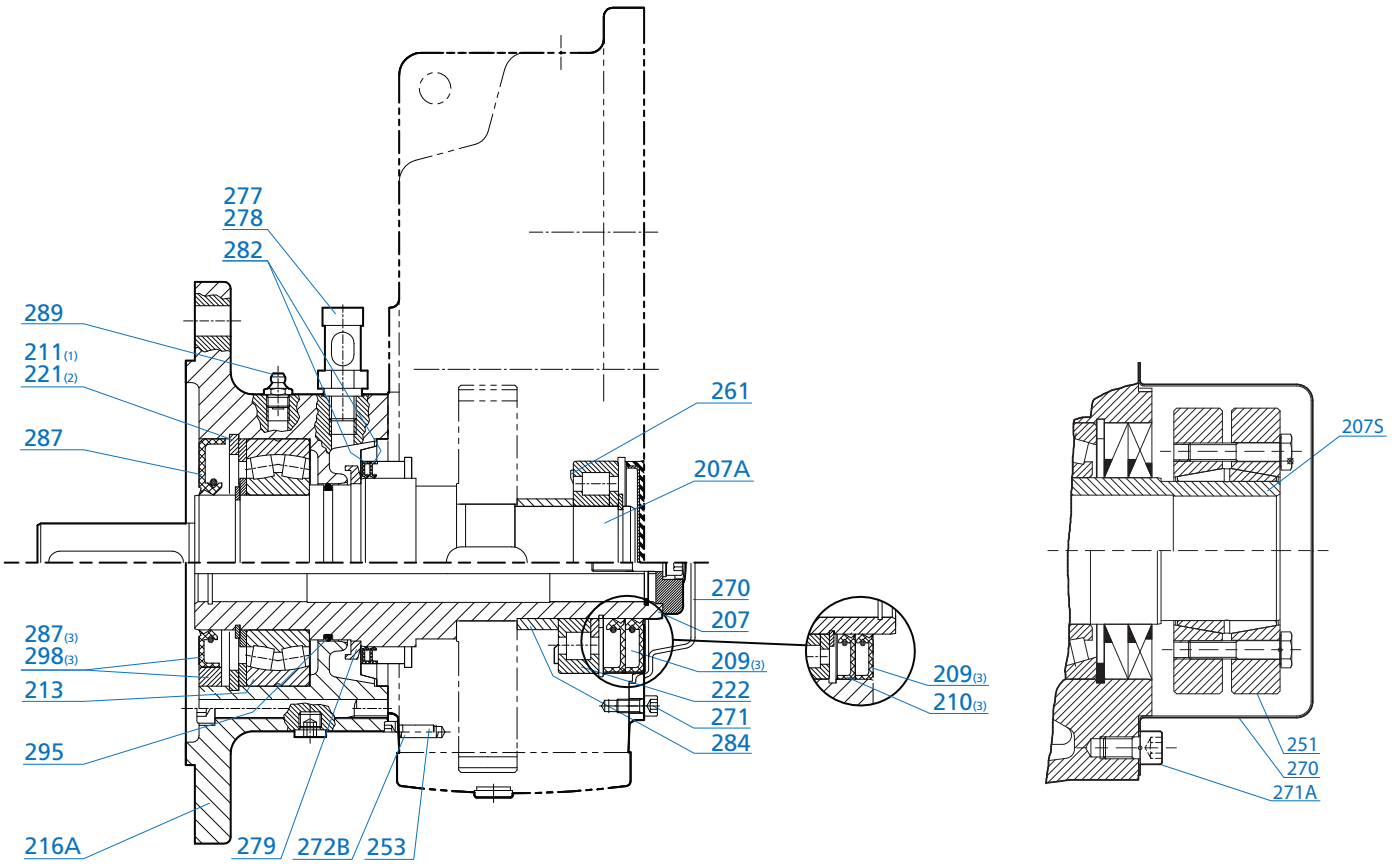

Parallel Helical Clincher VL2 & VL3

207A	Hollow Output Shaft	222	Bearing	278	Plug Gasket
207	Solid Output Shaft	251	Shrink Disk	279	Oil Slinger (VL3)
207S	Shrink Disk Hollow Shaft	253	Screw	282	Seal
209 (3)	Seal	261	NILOS Ring	284	Spacer
210 (3)	Seal	270	Shaft Cover	287 (3)	Seal
211 (1)	Snap Ring	271	Shaft Cover Screw	289	Grease Fitting
213	Bearing	272B	Dowel Pin	295	O-Ring
216A	Flange	277	Drain Plug (VL2)	298 (3)	Bushing
221(3)	Snap Ring	277	Oil Level Indicator (VL3)		

(1) = Needed for 2282/3282 **(3) = Varies By Unit**
(2) = Needed for 3282/3382

90.1 HELICAL-BEVEL PARTS LIST DRAWINGS

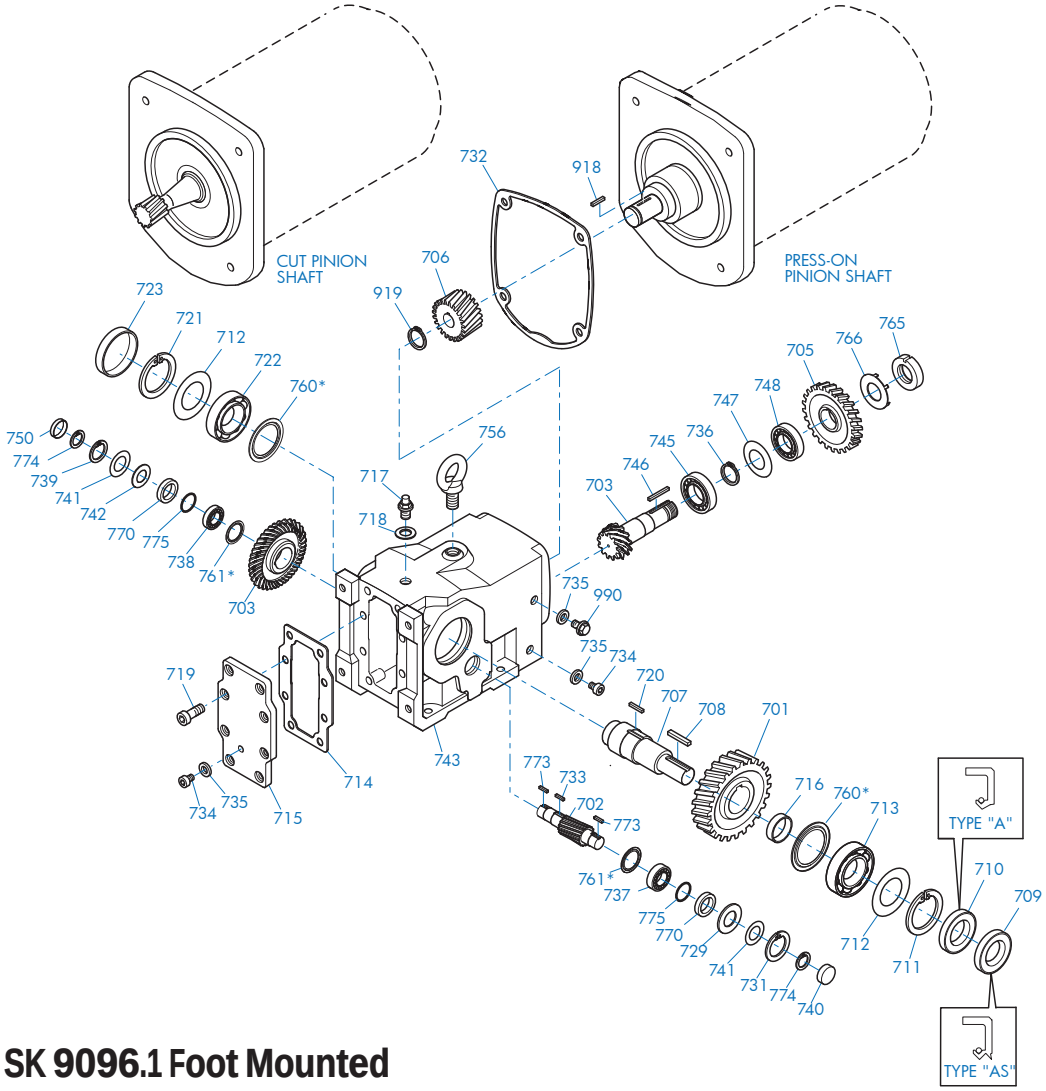

SK 9012.1 - SK 9096.1 Foot Mounted

701 Output Gear
702 Pinion Shaft
703 Bevel Gearset
705 Gear
706 Pinion
707 Output Shaft
708 Key
709 Oil Seal
710 Oil Seal
711 Snap Ring
712 Shim
713 Anti-Friction Bearing
714 Gasket
715 Inspection Cover
716 Spacer
717 Vent screw
718 Gasket
719 Bolt
720 Key
721 Snap Ring
722 Anti-Friction Bearing
723 Bore Plug
729 Thrust Washer
731 Snap Ring
732 Gasket
733 Key
734 Oil Plug
735 Gasket
736 Snap Ring
737 Anti-Friction Bearing
738 Anti-Friction Bearing
739 Snap Ring
740 Bore Plug
741 Shim
742 Thrust Washer
743 Gearcase
745 Anti-Friction Bearing
746 Key
747 Shim
748 Anti-Friction Bearing
750 Bore Plug
756 Flanged Eye Bolt
760 Nilos Ring*
761 Nilos Ring*
765 Slotted Round Nut
766 Tab Lock Washer
770 Backstop (If Equipped)
773 Key (w/Backstop)
774 Snap Ring (w/Backstop)
775 Thrust Washer (w/Backstop)
918 Key
919 Snap Ring
990 Oil Level Plug

* Conditionally used part

NORD Gear Limited
Toll Free in Canada: 800.668.4378

NORD Gear Corporation
Toll Free in the United States: 888.314.6673

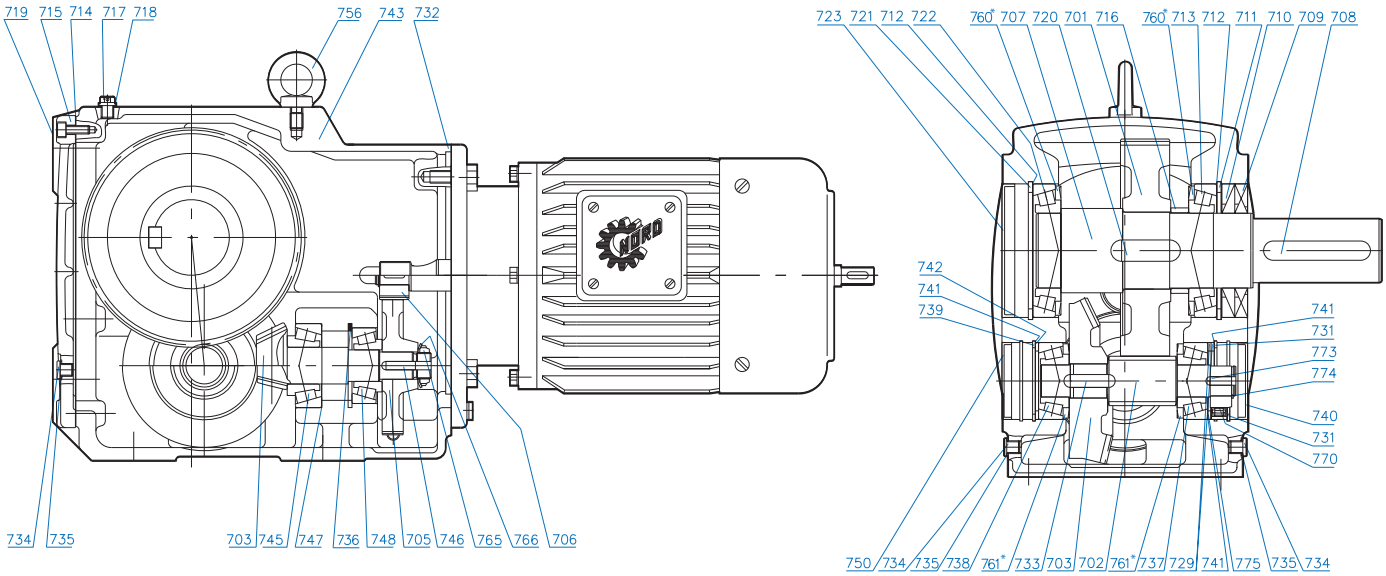

SK 9012.1 - SK 9096.1 Foot Mounted

701 Output Gear
702 Pinion Shaft
703 Bevel Gearset
705 Gear
706 Pinion
707 Output Shaft
708 Key
709 Oil Seal
710 Oil Seal
711 Snap Ring
712 Shim
713 Anti-Friction Bearing
714 Gasket
715 Inspection Cover
716 Spacer
717 Vent
718 Gasket
719 Bolt
720 Key
721 Snap Ring
722 Anti-Friction Bearing
723 Bore Plug
729 Thrust Washer
731 Snap Ring
732 Gasket
733 Key
734 Oil Plug
735 Gasket
736 Snap Ring
737 Anti-Friction Bearing
738 Anti-Friction Bearing
739 Snap Ring
740 Bore Plug
741 Shim
742 Thrust Washer
743 Gearcase
745 Anti-Friction Bearing
746 Key
747 Shim
748 Anti-Friction Bearing
750 Bore Plug
756 Flanged Eye Bolt
760 Nilos Ring*
761 Nilos Ring*
765 Slotted Round Nut
766 Tab Lock Washer
770 Backstop (If Equipped)
773 Key (w/Backstop)
774 Snap Ring (w/Backstop)
775 Thrust Washer (w/Backstop)

* Conditionally used part

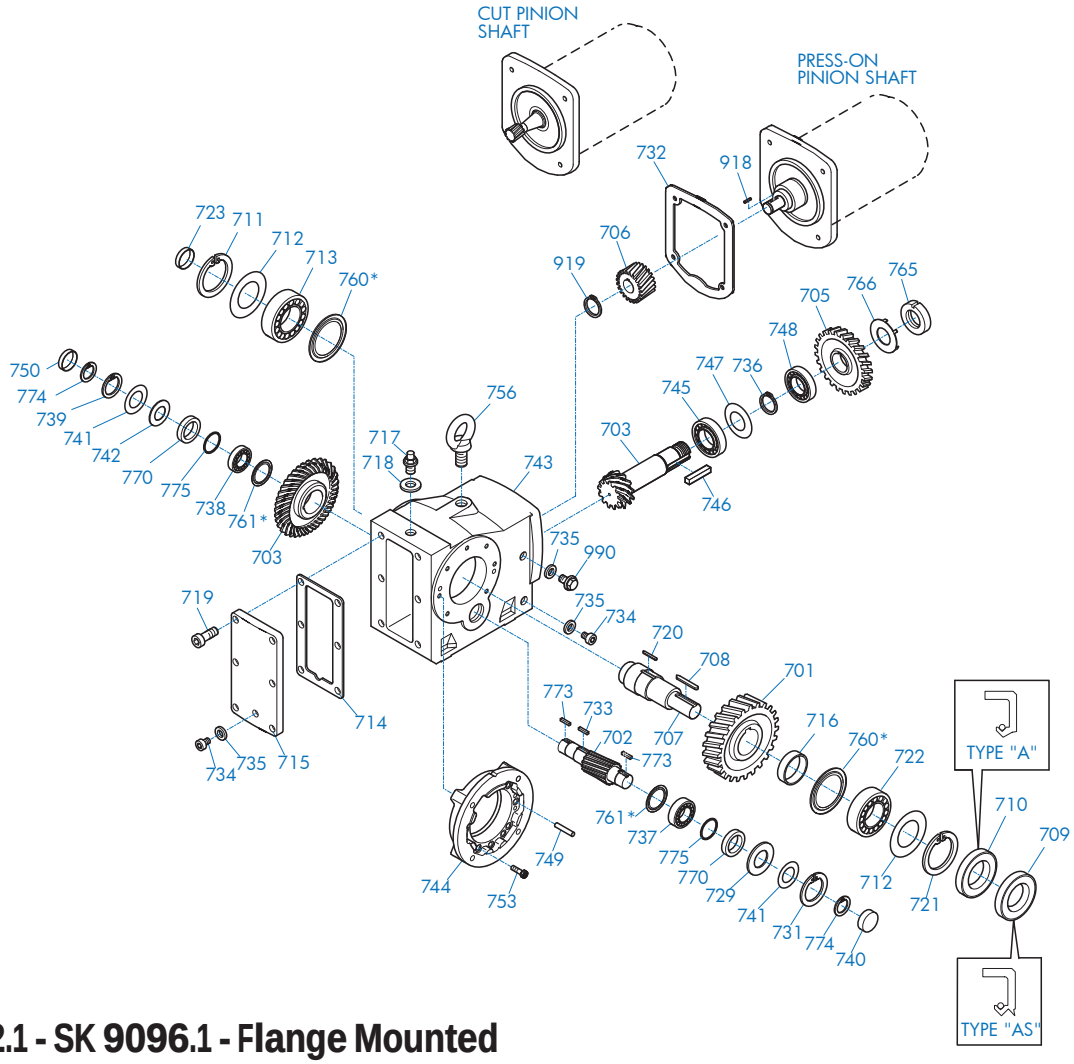

SK 9012.1 - SK 9096.1 - Flange Mounted

701 Output Gear
702 Pinion Shaft
703 Bevel Gearset
705 Gear
706 Pinion
707 Output Shaft
708 Key
709 Oil Seal
710 Oil Seal
711 Snap Ring
712 Shim
713 Anti-Friction Bearing
714 Gasket
715 Inspection Cover
716 Spacer
717 Vent Plug
718 Gasket
719 Bolt
720 Key
721 Snap Ring
722 Anti-Friction Bearing
723 Bore Plug
729 Thrust Washer
731 Snap Ring
732 Gasket
733 Key
734 Oil plug
735 Gasket
736 Snap Ring
737 Anti-Friction Bearing
738 Anti-Friction Bearing
739 Snap Ring
740 Bore Plug
741 Shim
742 Thrust Washer
743 Gearcase
744 Flange
745 Anti-Friction Bearing
746 Key
747 Shim
748 Anti-Friction Bearing
749 Dowel Pin
750 Bore Plug
753 Bolt
756 Flanged Eye Bolt
760 Nilos Ring*
761 Nilos Ring*
765 Slotted Round Nut
766 Tab Lock Washer
770 Backstop (If Equipped)
773 Key (w/Backstop)
774 Snap Ring (w/Backstop)
775 Thrust Washer (w/Backstop)
918 Key
919 Snap Ring
990 Oil Level Plug

* Conditionally used part

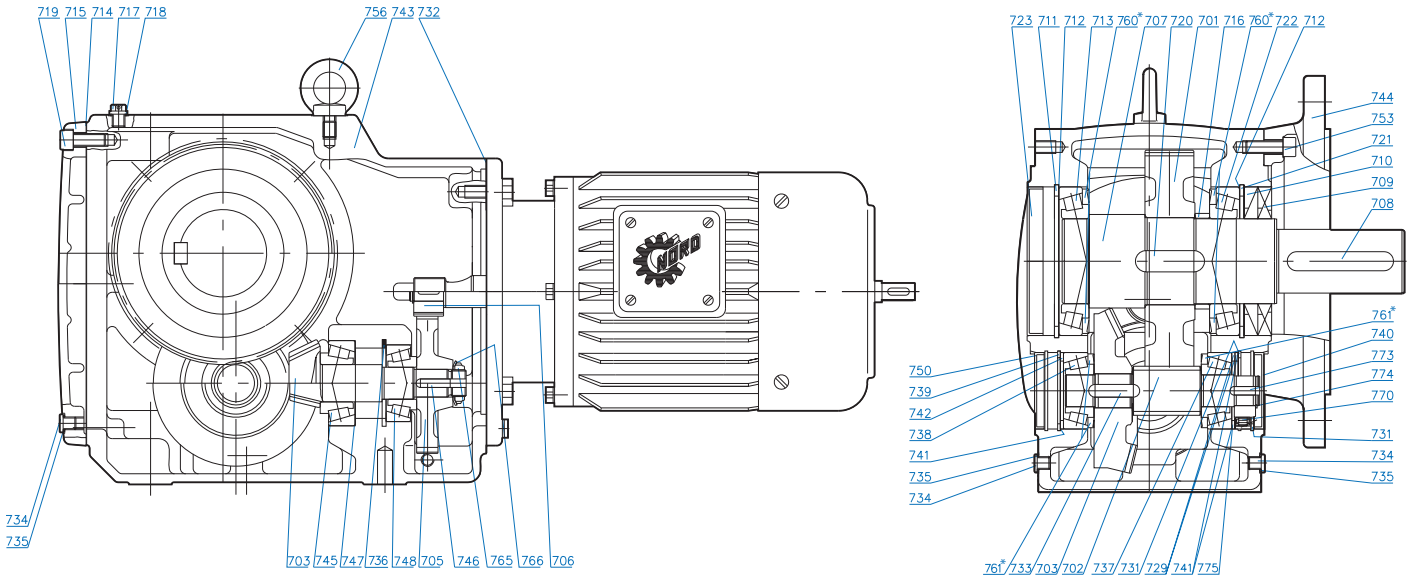

SK 9012.1 - SK 9096.1 - Flange Mounted

701 Output Gear
702 Pinion Shaft
703 Bevel Gearset
705 Gear
706 Pinion
707 Output Shaft
708 Key
709 Oil Seal
710 Oil Seal
711 Snap Ring
712 Shim
713 Anti-Friction Bearing
714 Gasket
715 Inspection Cover
716 Spacer
717 Vent Plug
718 Gasket
719 Bolt
720 Key
721 Snap Ring
722 Anti-Friction Bearing
723 Bore Plug
729 Thrust Washer
731 Snap Ring
732 Gasket
733 Key
734 Oil plug
735 Gasket
736 Snap Ring
737 Anti-Friction Bearing
738 Anti-Friction Bearing
739 Snap Ring
740 Bore Plug
741 Shim
742 Thrust Washer
743 Gearcase
744 Flange
745 Anti-Friction Bearing
746 Key
747 Shim
748 Anti-Friction Bearing
750 Bore Plug
753 Bolt
756 Flanged Eye Bolt
760 Nilos Ring*
761 Nilos Ring*
765 Slotted Round Nut
766 Tab Lock Washer
770 Backstop*
773 Key (w/Backstop)
774 Snap Ring (w/Backstop)
775 Thrust Washer (w/Backstop)

* Conditionally used part

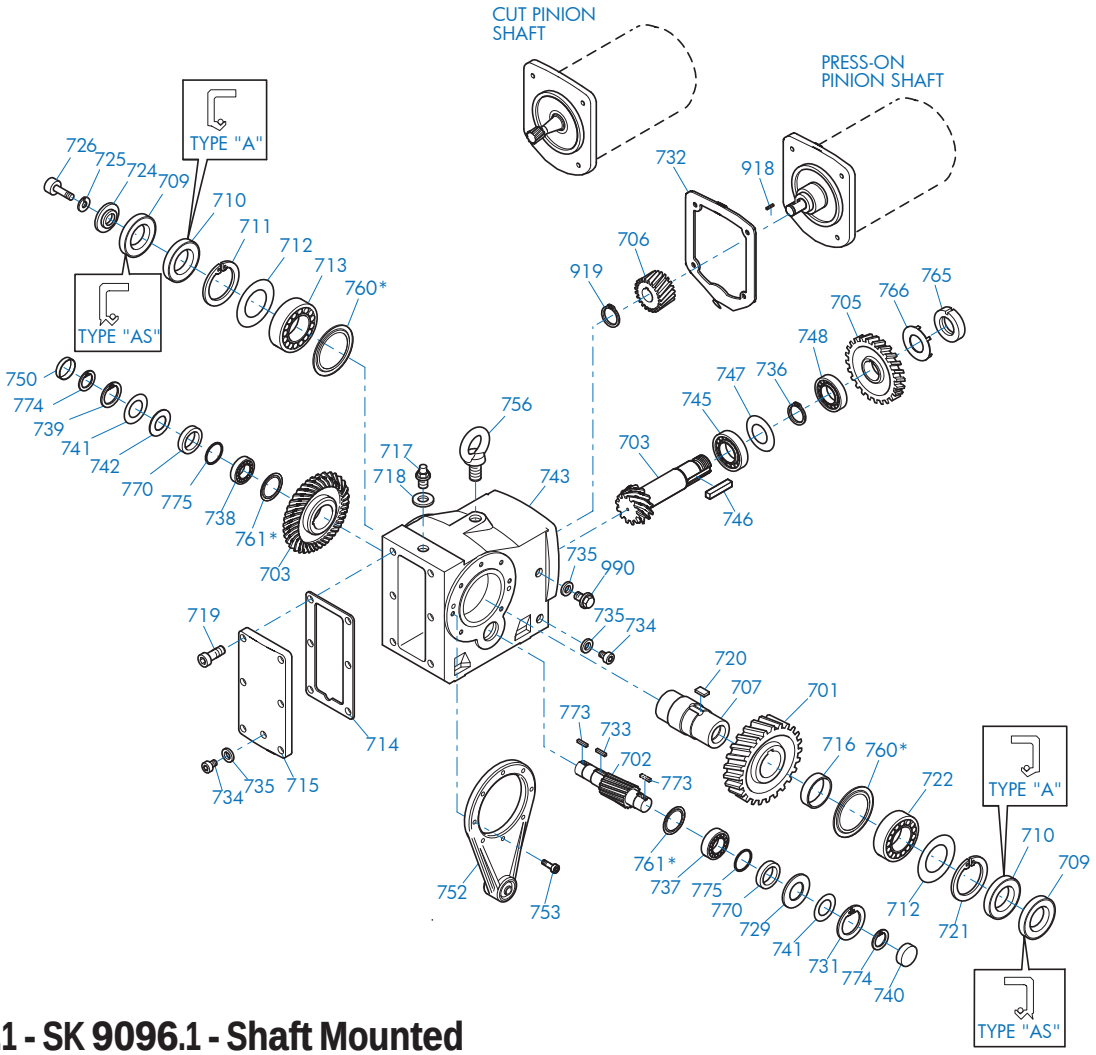

SK 9012.1 - SK 9096.1 - Shaft Mounted

701 Gear
702 Pinion Shaft
703 Bevel Gearset
705 Gear
706 Pinion
707 Output Shaft
709 Oil Seal
710 Oil Seal
711 Snap Ring
712 Shim
713 Anti-Friction Bearing
714 Gasket
715 Inspection Cover
716 Spacer
717 Vent Plug
718 Gasket
719 Bolt
720 Key
721 Snap Ring
722 Anti-Friction Bearing
724 Retaining Washer
725 Lock Washer
726 Bolt
729 Thrust Washer
731 Snap Ring
732 Gasket
733 Key
734 Oil plug
735 Gasket
736 Snap Ring
737 Anti-Friction Bearing
738 Anti-Friction Bearing
739 Snap Ring
740 Bore Plug
741 Shim
742 Thrust Washer
743 Gearcase
745 Anti-Friction Bearing
746 Key
747 Shim
748 Anti-Friction Bearing
750 Bore Plug
752 Torque Arm
753 Bolt
756 Flanged Eye Bolt
760 Nilos Ring*
761 Nilos Ring*
765 Slotted Round Nut
766 Tab Lock Washer
770 Backstop (If Equipped)
773 Key (w/Backstop)
774 Snap Ring (w/Backstop)
775 Thrust Washer (w/Backstop)
918 Key
919 Snap Ring
990 Oil Level Plug

* Conditionally used part

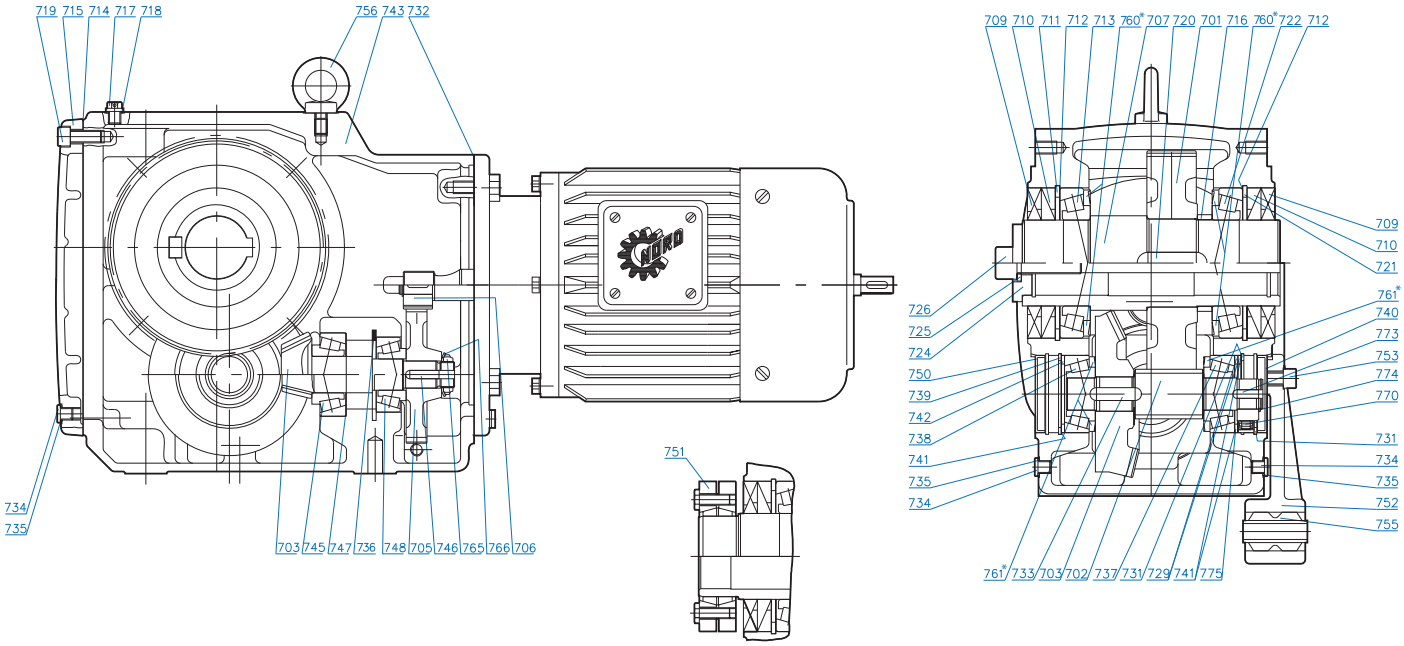

SK 9012.1 - SK 9096.1 - Shaft Mounted

701 Gear
702 Pinion Shaft
703 Bevel Gearset
705 Gear
706 Pinion
707 Output Shaft
709 Oil Seal
710 Oil Seal
711 Snap Ring
712 Shim
713 Anti-Friction Bearing
714 Gasket
715 Inspection Cover
716 Spacer
717 Vent Plug
718 Seal
719 Bolt
720 Key
721 Snap Ring
722 Anti-Friction Bearing
724 Washer
725 Lock Washer
726 Bolt
729 Thrust Washer
731 Snap Ring
732 Gasket
733 Key
734 Oil plug
735 Gasket
736 Snap Ring
737 Anti-Friction Bearing
738 Anti-Friction Bearing
739 Snap Ring
740 Bore Plug
741 Shim
742 Thrust Washer
743 Gearcase
745 Anti-Friction Bearing
746 Key
747 Shim
748 Anti-Friction Bearing
750 Bore Plug
751 Shrink Disc
752 Torque Arm
753 Bolt
755 Rubber Buffer
756 Flanged Eye Bolt
760 Nilos Ring*
761 Nilos Ring*
765 Slotted Round Nut
766 Tab Lock Washer
770 Backstop*
773 Key (w/Backstop)
774 Snap Ring (w/Backstop)
775 Thrust Washer (w/Backstop)

* Conditionally used part

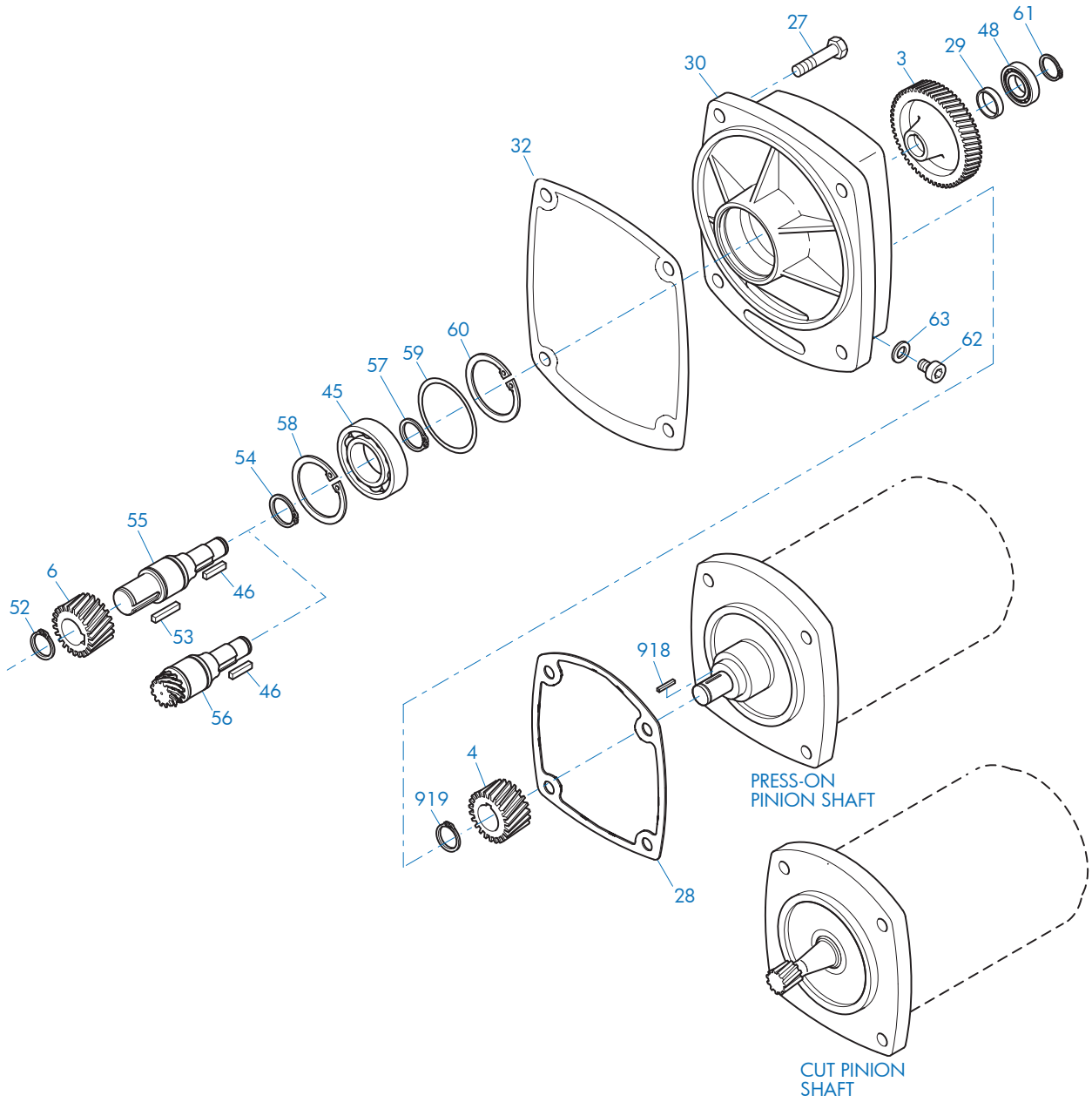

SK9013.1 - SK9053.1 Third Stage Reduction Gear

3	Gear	46	Key	59	Shim
4	Pinion	48	Anti-Friction Bearing	60	Snap Ring
6	Pinion	52	Snap Ring	61	Snap Ring
27	Bolt	53	Key	62	Oil Plug
28	Gasket	54	Snap Ring	63	Gasket
29	Spacer	55	Intermediate Shaft, Plain	918	Key
30	Third Reduction Gearcase	56	Intermediate Shaft, Gearcut	919	Snap Ring
32	Gasket	57	Snap Ring		
45	Anti-Friction Bearing	58	Snap Ring		

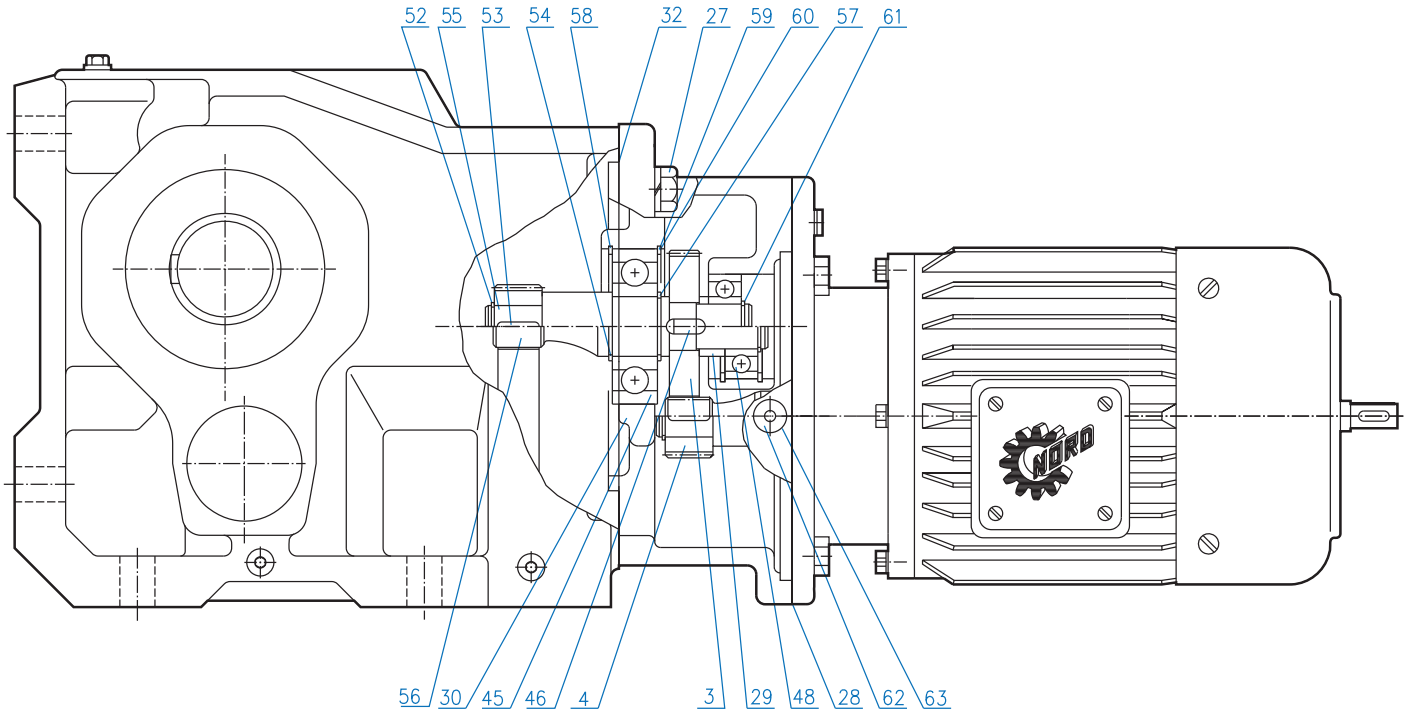

SK9013.1 - SK9053.1 Third Stage Reduction Gear

3	Gear	46	Key	58	Snap Ring
4	Pinion	48	Anti-Friction Bearing	59	Shim
27	Bolt	52	Snap Ring	60	Snap Ring
28	Gasket	53	Key	61	Snap Ring
29	Spacer	54	Snap Ring	62	Oil Plug
30	Third Reduction Gearcase	55	Intermediate Shaft, Plain	63	Gasket
32	Gasket	56	Intermediate Shaft, Gearcut		
45	Anti-Friction Bearing	57	Snap Ring		

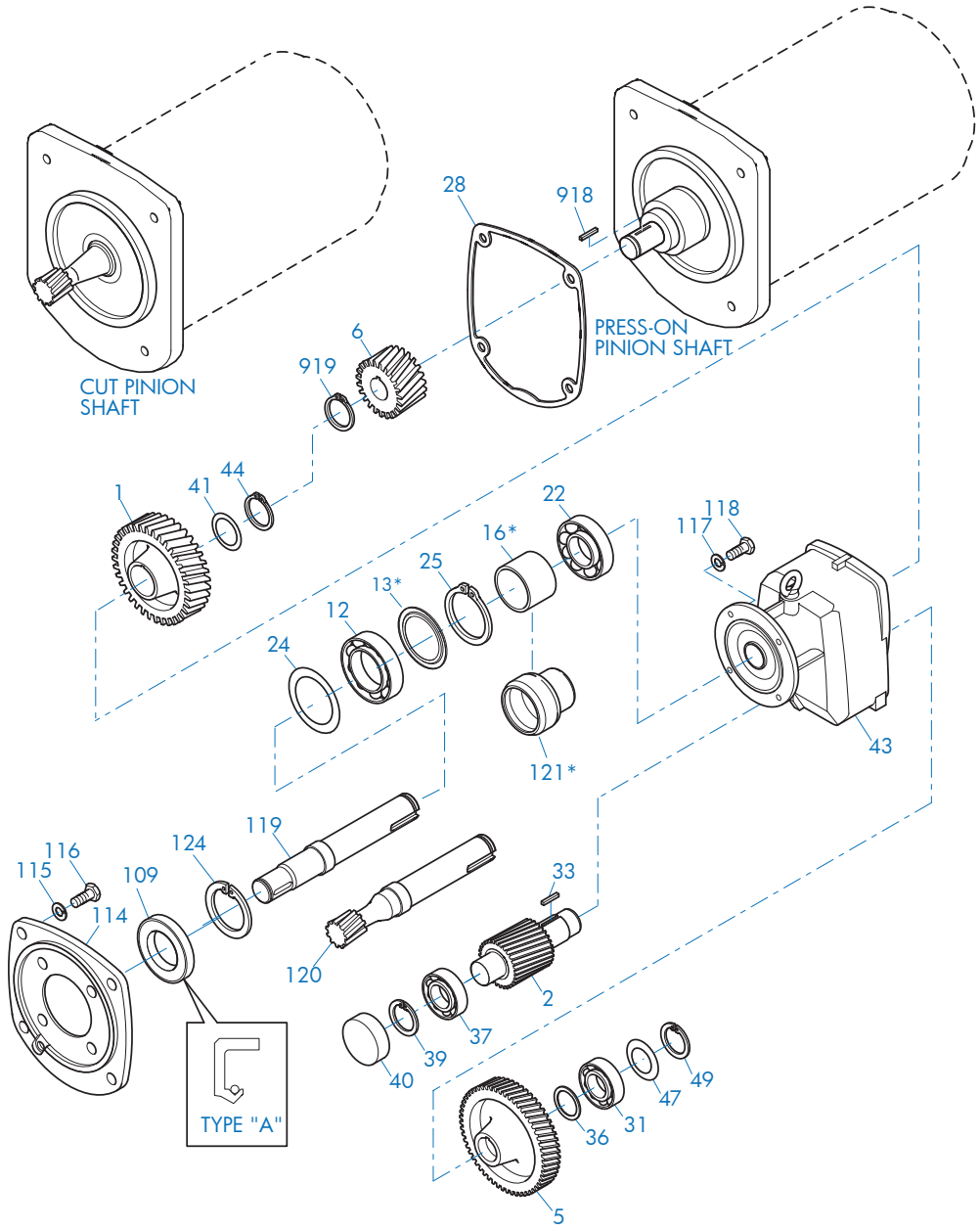

SK9062.1/32 - SK9092.1/52 Input Compound Reduction

1	Gear	33	Key	115	Lock Washer
2	Pinion Shaft	36	Spacer	116	Bolt
5	Gear	37	Anti-Friction Bearing	117	Lock Washer
6	Pinion	39	Snap Ring	118	Bolt
12	Anti-Friction Bearing	40	Bore Plug	119	Intermediate Shaft, Plain
13	Nilos Ring*	41	Shim	120	Intermediate Shaft, Gearcut
16	Spacer*	43	Gearcase	121	Bearing Sleeve*
22	Anti-Friction Bearing	44	Snap Ring	124	Snap Ring
24	Shim	47	Shim	918	Key
25	Snap Ring	49	Snap Ring	919	Snap Ring
28	Gasket	109	Oil Seal		
31	Anti-Friction Bearing	114	Intermediate Flange		

* Conditionally used part

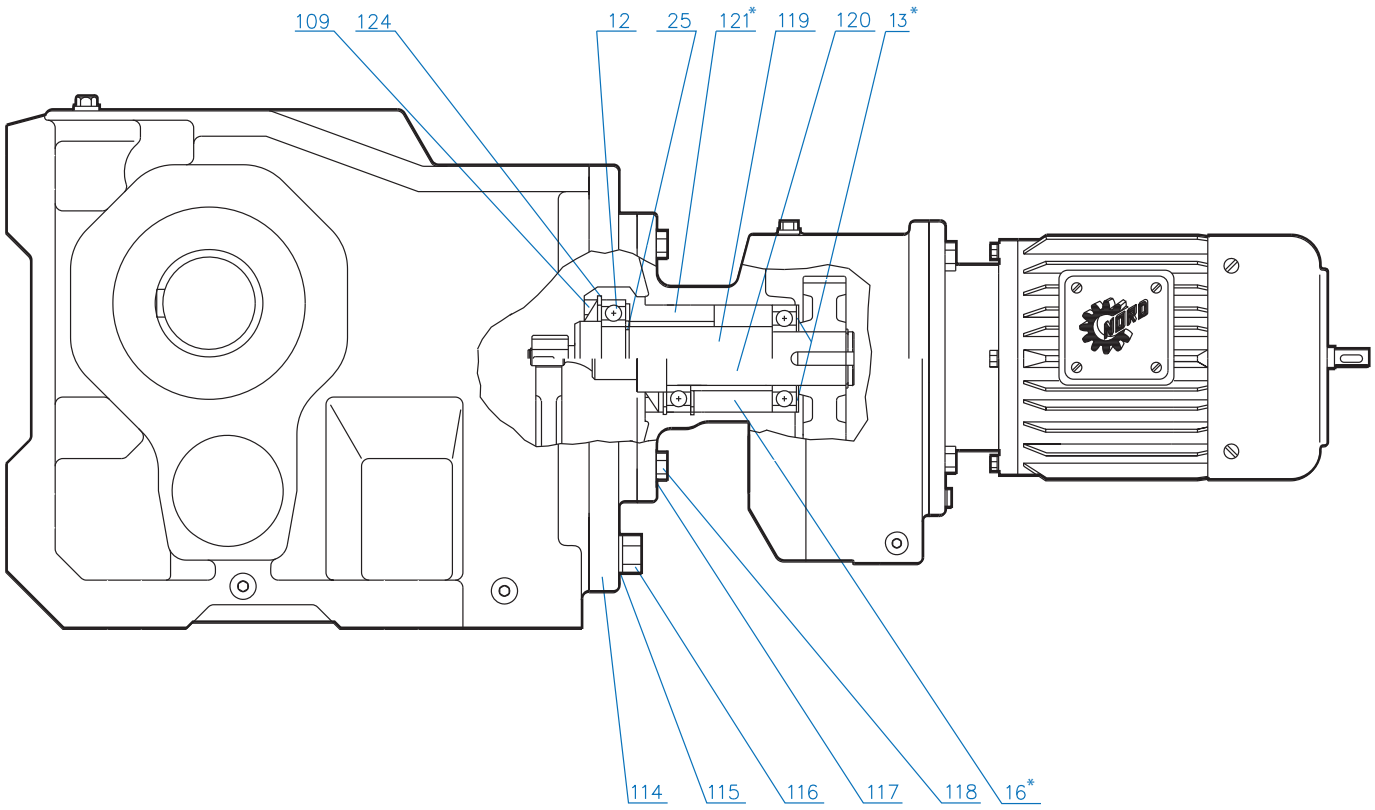

SK9062.1/32 - SK9092.1/52 Input Compound Reduction

11 Bearing	114 Intermediate Flange	119 Intermediate Shaft, Plain
13 Nilos Ring*	115 Lock Washer	120 Intermediate Shaft, Gearcut
16 Spacer*	116 Bolt	121 Bearing Sleeve *
25 Snap Ring	117 Lock Washer	124 Snap Ring
109 Oil Seal	118 Bolt	

* Conditionally used part

Helical Bevel VL2 & VL3
PARTS LIST DRAWINGS

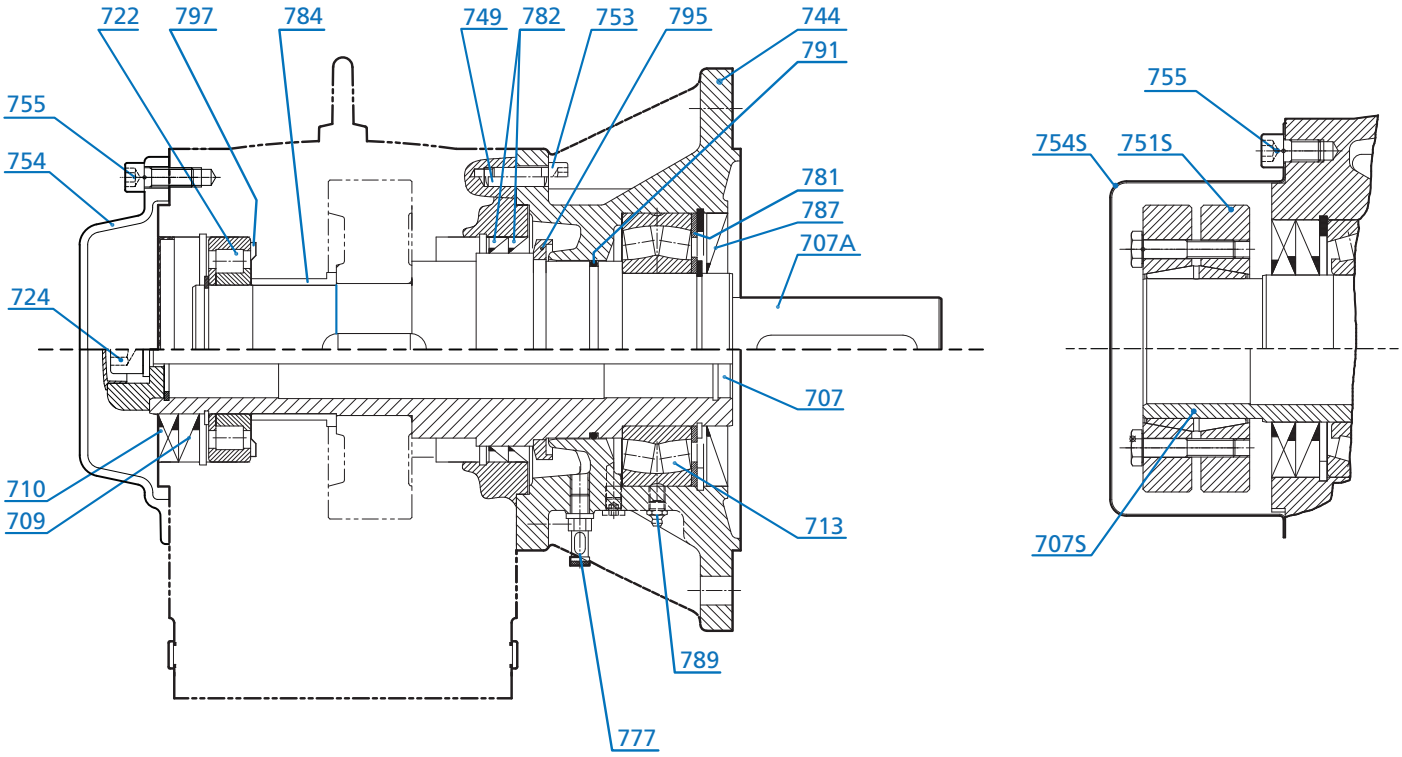

Helical Bevel VL2 & VL3

707	Hollow Output Shaft	744	Flange VLII & VLIII	782	Seal
707A	Output Shaft	749	Dowel Pin	784	Spacer VLIII
707S	Shrink Disk Hollow Shaft	751S	Shrink Disk	787	Seal
709	Seal	753	Screw	789	Grease Fitting
710	Seal	754	Shaft Cover	791	O-Ring
711	Snap Ring	755	Shaft Cover Screw	795	Oil Slinger (VLIII Only)
713	Bearing	777	Drain Plug (VLII)	797	NILOS Ring
722	Bearing	777	Oil Indicator (VLIII Only)		
724	Fixing Kit	781	Axial Shim		

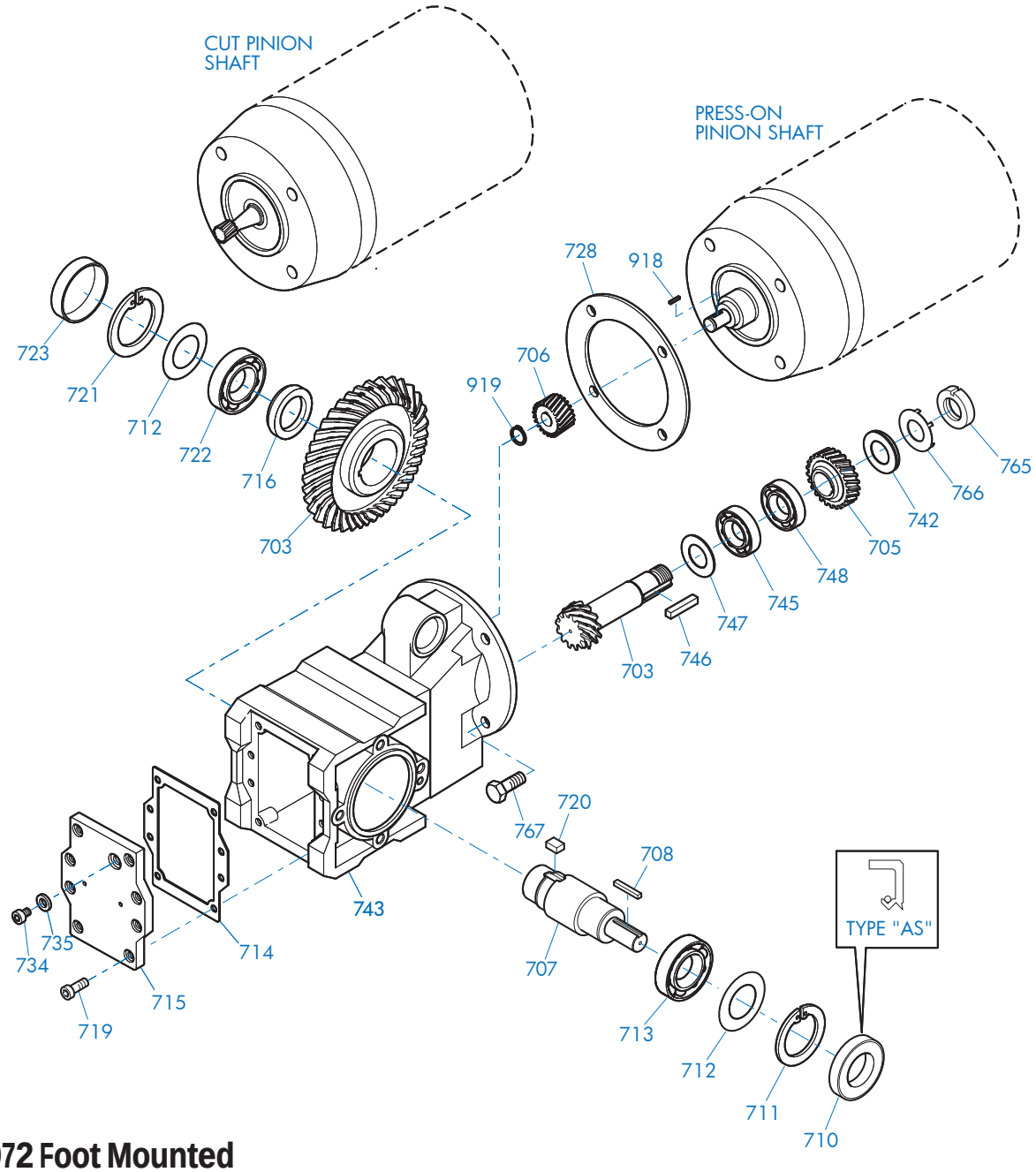

SK 92072 Foot Mounted

703 Bevel Gearset	716 Spacer	745 Anti-Friction Bearing
705 Gear	719 Bolt	746 Key
706 Pinion	720 Key	747 Shim
707 Output Shaft	721 Snap Ring	748 Anti-Friction Bearing
708 Key	722 Anti-Friction Bearing	765 Slotted Nut
710 Oil Seal	723 Bore Plug	766 Tab Lock Washer
711 Snap Ring	728 Gasket	767 Bolt
712 Shim	734 Oil Plug	918 Key
713 Anti-Friction Bearing	735 Gasket	919 Snap Ring
714 Gasket	742 Thrust Washer	
715 Inspection Cover	743 Gear case	

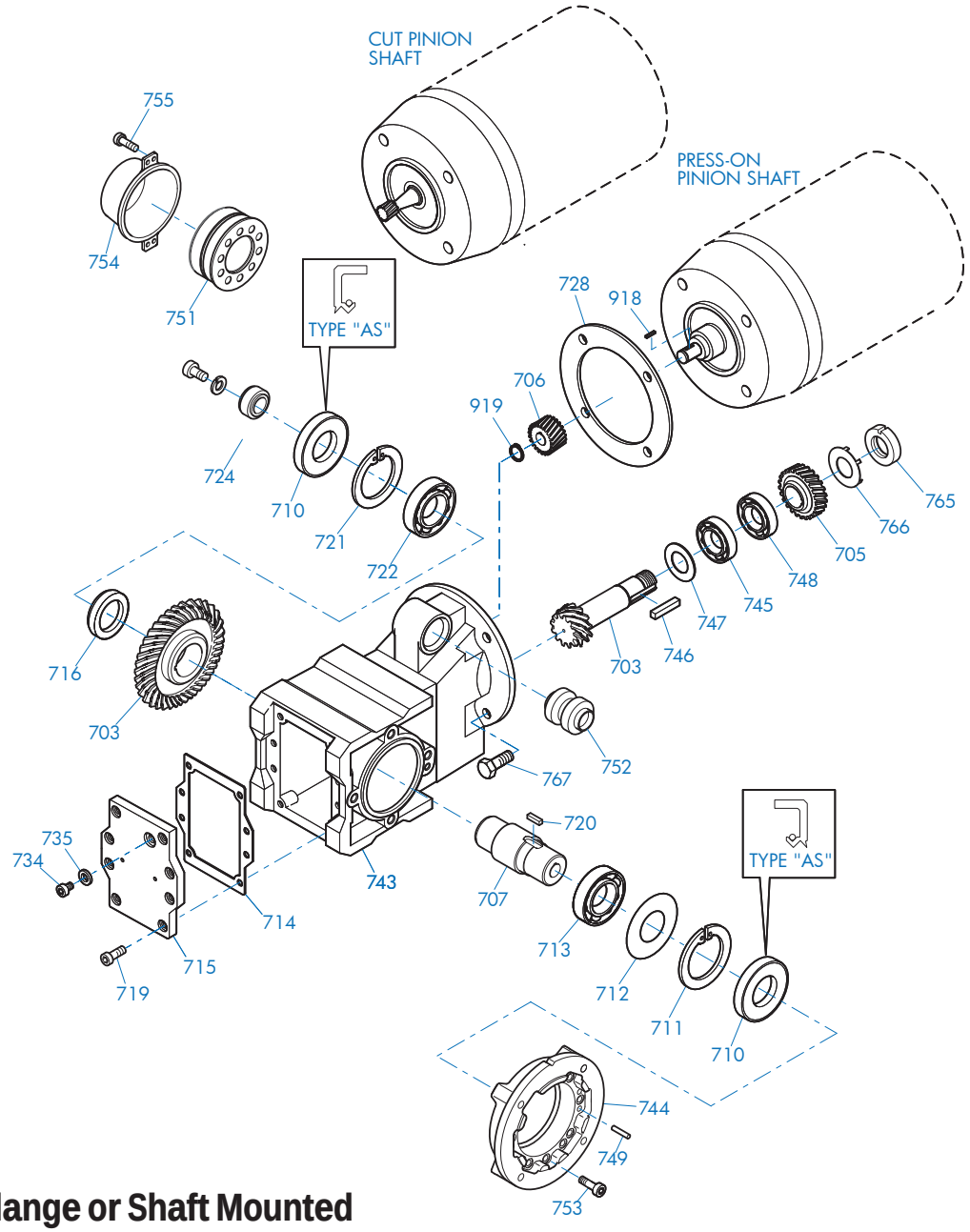

SK 92072 Flange or Shaft Mounted

703 Bevel Gearset
705 Gear
706 Pinion
707 Output Shaft
710 Oil Seal
711 Snap Ring
712 Shim
713 Anti-Friction Bearing
714 Gasket
715 Inspection Cover
716 Spacer
719 Bolt
720 Key
721 Snap Ring
722 Anti-Friction Bearing
724 Fixing Element Kit
728 Gasket
734 Oil Plug
735 Gasket
743 Gearcase
744 Flange
745 Anti-Friction Bearing
746 Key
747 Shim
748 Anti-Friction Bearing
749 Grooved Pin
751 Shrink Disc
752 Rubber Buffer
753 Bolt
754 Cover
755 Bolt
765 Slotted Round Nut
766 Tab Lock Washer
767 Bolt
918 Key
919 Snap Ring

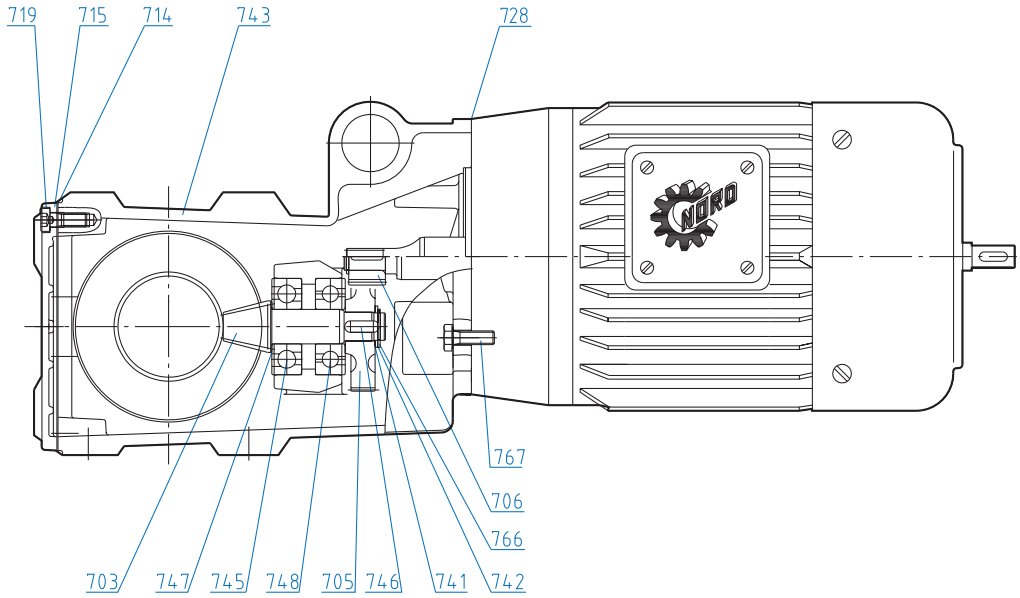

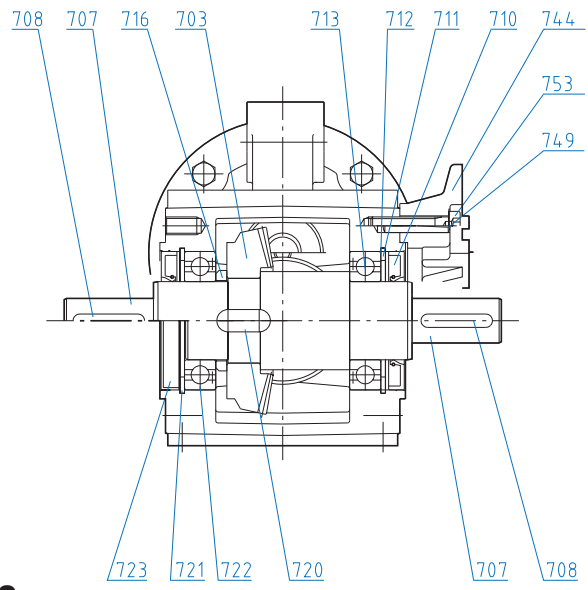

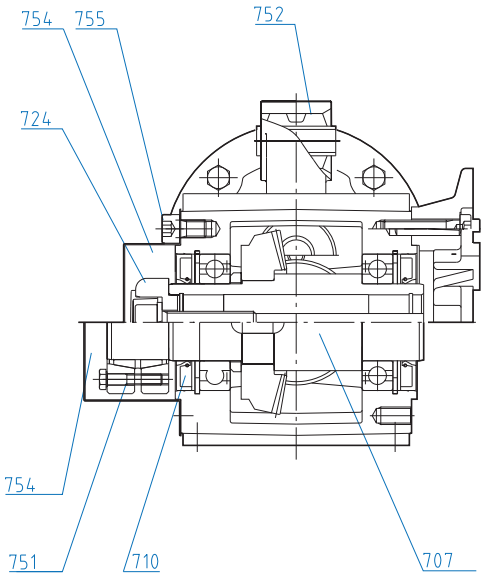

SK 92072

703 Bevel Gearset
705 Gear
706 Pinion
707 Output Shaft
708 Key
710 Oil Seal
711 Snap Ring
712 Shim
713 Anti-Friction Bearing
714 Gasket
715 Inspection Cover
716 Spacer
719 Bolt
720 Key
721 Snap Ring
722 Anti-Friction Bearing
723 Bore Plug
724 Fixing Element Kit
728 Gasket
741 Shim
742 Thrust Washer
743 Gear case
744 Flange
745 Anti-Friction Bearing
746 Key
747 Shim
748 Anti-Friction Bearing
749 Grooved Pin
751 Shrink Disc Connector
752 Rubber Buffer
753 Socket Head Screw
754 Shrink Disc Cover
755 Socket Head Screw
766 Tab Lock Washer
767 Bolt

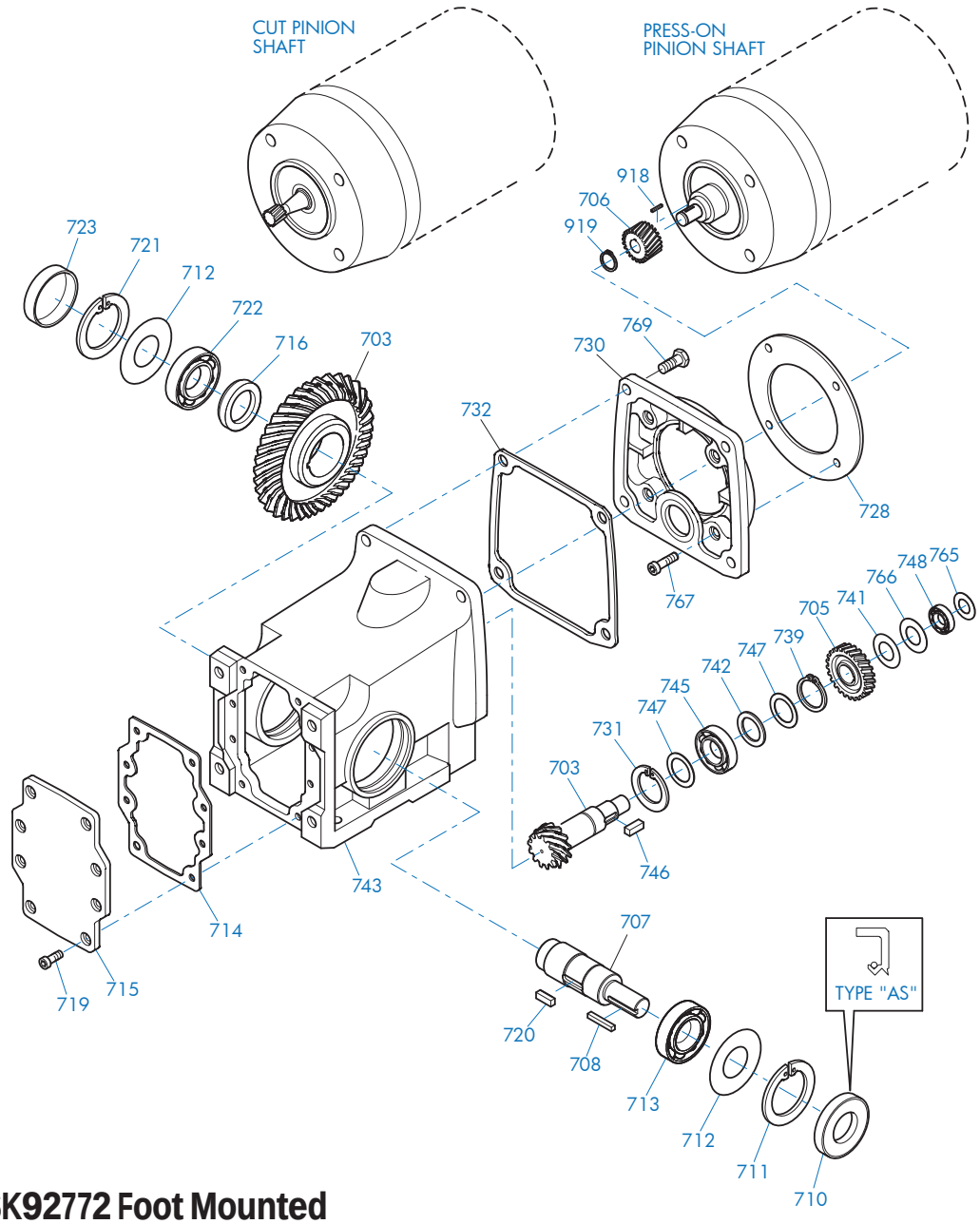

SK 92172 - SK92772 Foot Mounted

703 Bevel Gearset
705 Gear
706 Pinion
707 Output Shaft
708 Key
710 Oil Seal
711 Snap Ring
712 Shim
713 Anti-Friction Bearing
714 Gasket
715 Inspection Cover
716 Spacer
719 Bolt
720 Key
721 Snap Ring
722 Anti-Friction Bearing
723 Bore Plug
728 Gasket
730 Input Cover
731 Snap Ring
732 Gasket
739 Snap Ring
741 Shim
742 Thrust Washer
743 Gearcase
745 Anti-Friction Bearing
746 Key
747 Shim
748 Anti-Friction Bearing
765 Shim
766 Snap Ring
767 Bolt
769 Bolt
918 Key
919 Snap Ring

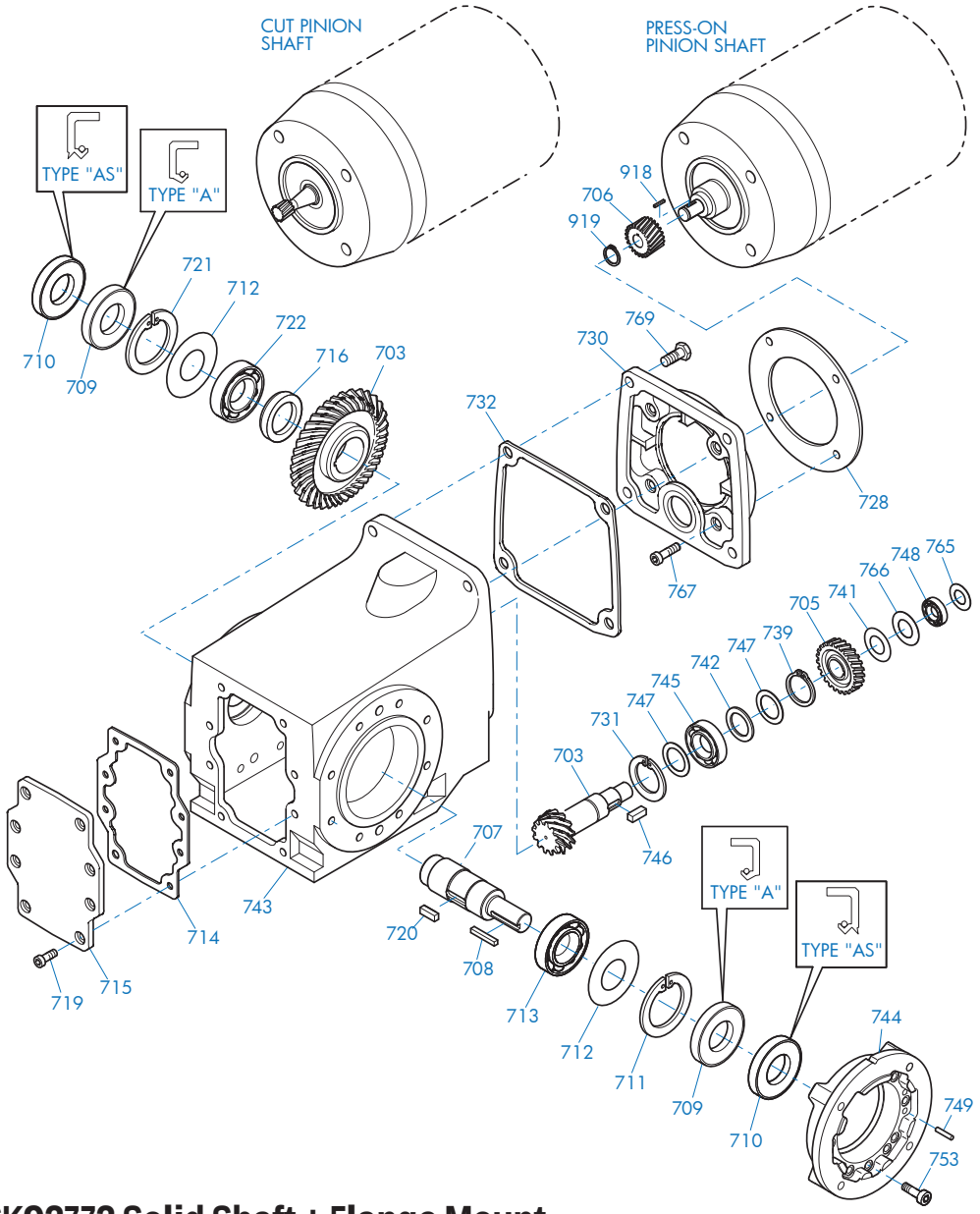

SK 92172 - SK92772 Solid Shaft + Flange Mount

703 Bevel Gearset
705 Gear
706 Pinion
707 Output Shaft
708 Key
709 Oil Seal
710 Oil Seal
711 Snap Ring
712 Shim
713 Anti-Friction Bearing
714 Gasket
715 Inspection Cover
716 Spacer
719 Bolt
720 Key
721 Snap Ring
722 Anti-Friction Bearing
728 Gasket
730 Input Cover
731 Snap Ring
732 Gasket
739 Snap Ring
741 Shim
742 Thrust Washer
743 Gearcase
744 Flange
745 Anti-Friction Bearing
746 Key
747 Shim
748 Anti-Friction Bearing
749 Grooved Pin
753 Bolt
765 Shim
766 Snap Ring
767 Bolt
769 Bolt
918 Key
919 Snap Ring

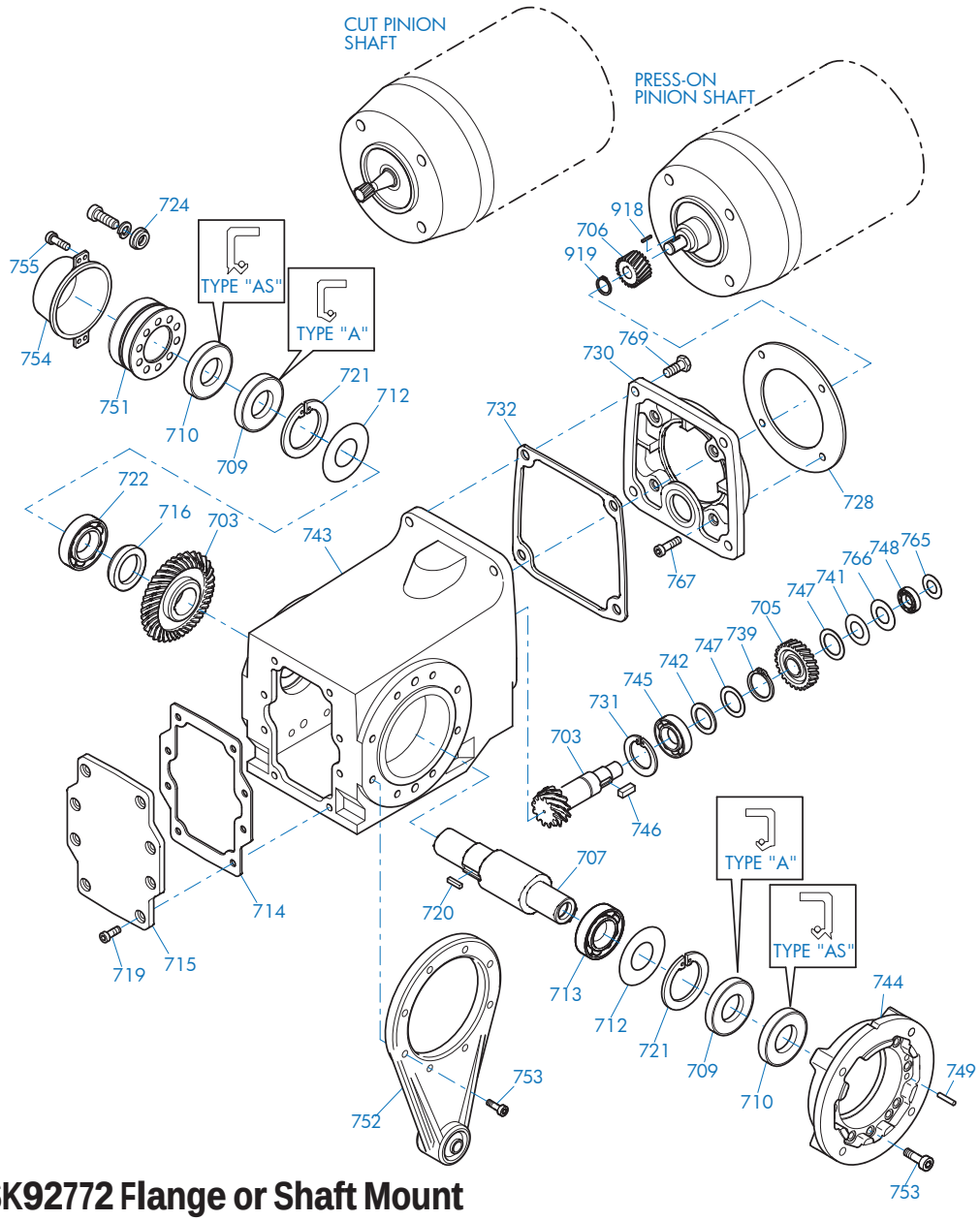

SK 92172 - SK92772 Flange or Shaft Mount

703 Bevel Gearset	722 Anti-Friction Bearing	748 Anti-Friction Bearing
705 Gear	724 Fixing Element Kit	749 Grooved Pin
706 Pinion	728 Gasket	751 Shrink Disc Connector
707 Output Shaft	730 Input Cover	752 Torque Arm
709 Oil Seal	731 Snap Ring	753 Bolt
710 Oil Seal	732 Gasket	754 Cover
712 Shim	739 Snap Ring	755 Bolt
713 Anti-Friction Bearing	741 Shim	765 Shim
714 Gasket	742 Thrust Washer	766 Snap Ring
715 Inspection Cover	743 Gearcase	767 Bolt
716 Spacer	744 Flange	769 Bolt
719 Bolt	745 Anti-Friction Bearing	918 Key
720 Key	746 Key	919 Snap Ring
721 Snap Ring	747 Shim	

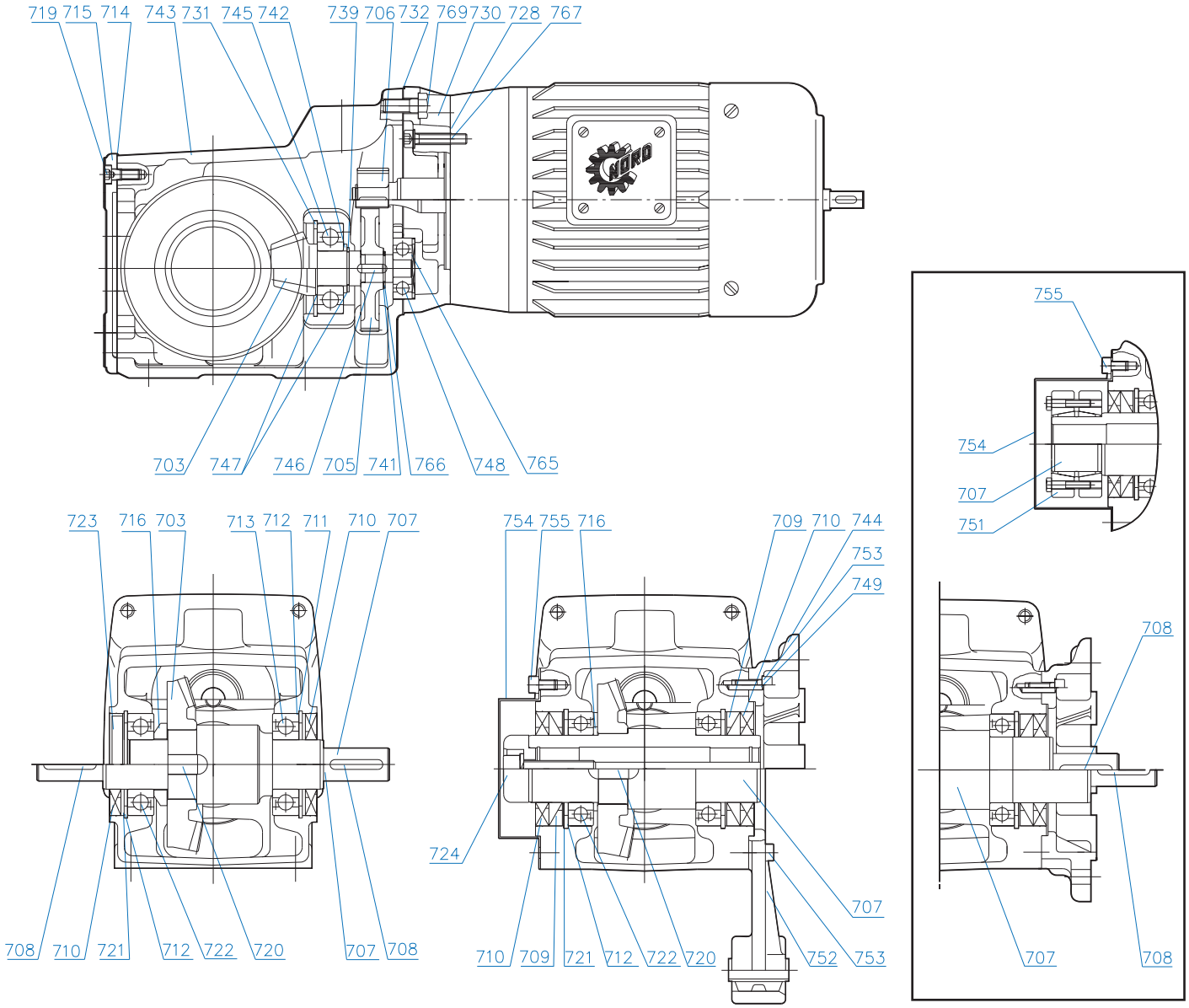

SK 92172 - SK 92772

703 Bevel Gearset
705 Gear
706 Pinion
707 Output Shaft
708 Key
709 Oil Seal
710 Oil Seal
711 Snap Ring
712 Shim
713 Anti-Friction Bearing
714 Gasket
715 Inspection Cover
716 Spacer
719 Bolt
720 Key
721 Snap Ring
722 Anti-Friction Bearing
723 Sealing Plug
724 Fixing Element Kit
728 Gasket
730 Gearbox Cover
731 Snap Ring
732 Gasket
739 Snap Ring
741 Shim
742 Thrust Washer
743 Gearcase
744 Flange
745 Anti-Friction Bearing
746 Key
747 Shim
748 Anti-Friction Bearing
749 Grooved Pin
751 Shrink Disc Connector
752 Torque Arm
753 Bolt
754 Cover
755 Bolt
765 Slotted Round Nut
766 Tab Lock Washer
767 Bolt
769 Hexagonal Screw

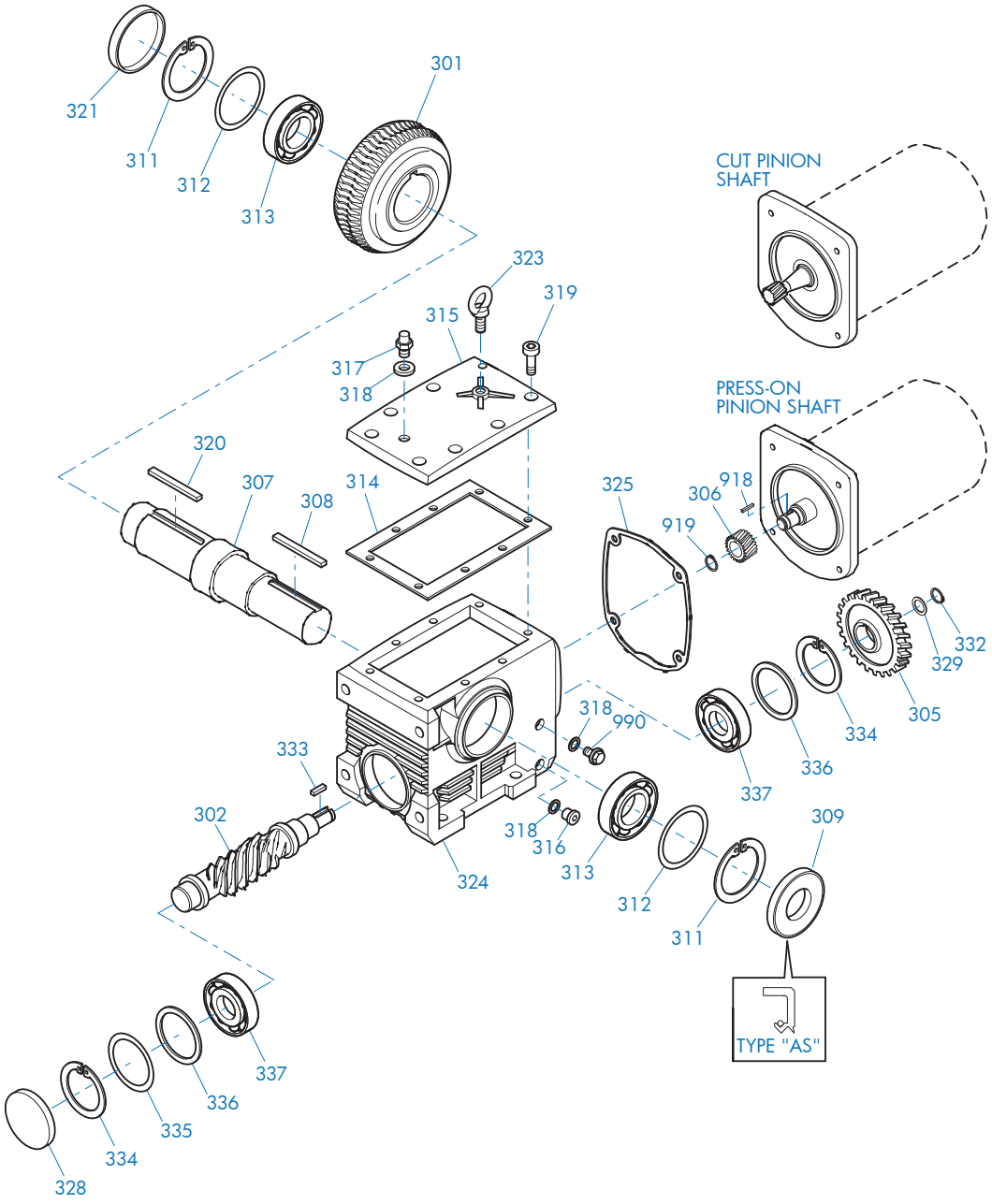

SK 02040 - SK 42125 Foot Mounted

301 Worm Wheel	315 Inspection Cover	329 Thrust Washer
302 Worm	316 Drain Plug	332 Snap Ring
305 Gear	317 Vent Plug	333 Key
306 Pinion	318 Gasket	334 Snap Ring
307 Output Shaft	319 Socket Head Screw	335 Shim
308 Key	320 Key	336 Thrust Washer
309 Oil Seal	321 Bore Plug	337 Anti-Friction Bearing
311 Snap Ring	323 Flanged Eye Bolt	918 Key
312 Shim	324 Gearcase	919 Snap Ring
313 Anti-Friction Bearing	325 Gasket	990 Oil Level Plug
314 Gasket	328 Bore Plug	

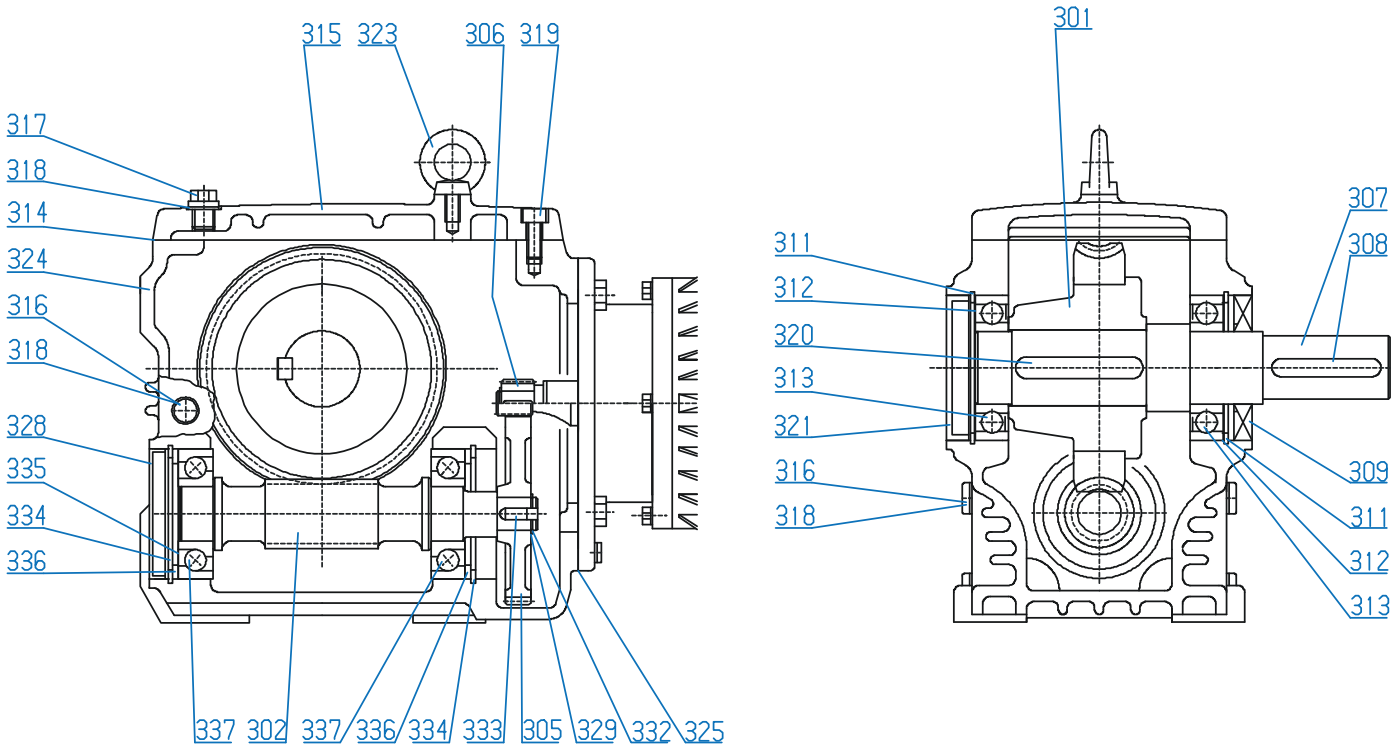

SK 02040 - SK 42125 Foot Mounted

301 Worm Wheel	314 Gasket	325 Gasket
302 Worm	315 Inspection Cover	328 Bore Plug
305 Gear	316 Drain Plug	329 Thrust Washer
306 Pinion	317 Vent Plug	332 Snap Ring
307 Output Shaft	318 Gasket	333 Key
308 Key	319 Socket Head Screw	334 Snap Ring
309 Oil Seal	320 Key	335 Shim
311 Snap Ring	321 Bore Plug	336 Thrust Washer
312 Shim	323 Flanged Eye Bolt	337 Anti-Friction Bearing
313 Anti-Friction Bearing	324 Gearcase	

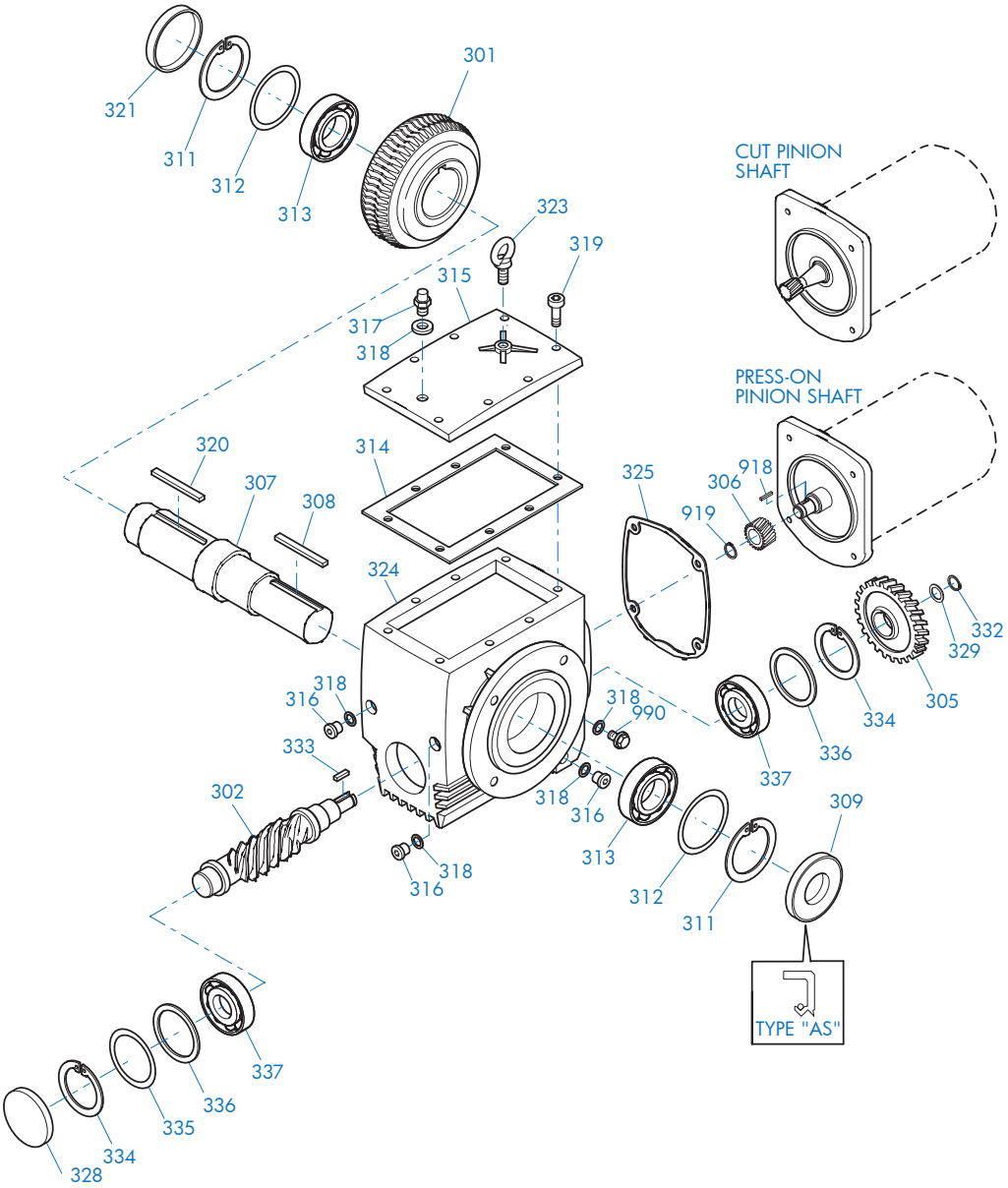

SK 02040 - SK 42125 Flange Mounted

301 Worm Wheel	315 Inspection Cover	329 Thrust Washer
302 Worm	316 Drain Plug	332 Snap Ring
305 Gear	317 Vent Plug	333 Key
306 Pinion	318 Gasket	334 Snap Ring
307 Output Shaft	319 Socket Head Screw	335 Shim
308 Key	320 Key	336 Thrust Washer
309 Oil Seal	321 Bore Plug	337 Anti-Friction Bearing
311 Snap Ring	323 Flanged Eye Bolt	918 Key
312 Shim	324 Gearcase	919 Snap Ring
313 Anti-Friction Bearing	325 Gasket	990 Oil Level Plug
314 Gasket	328 Bore Plug	

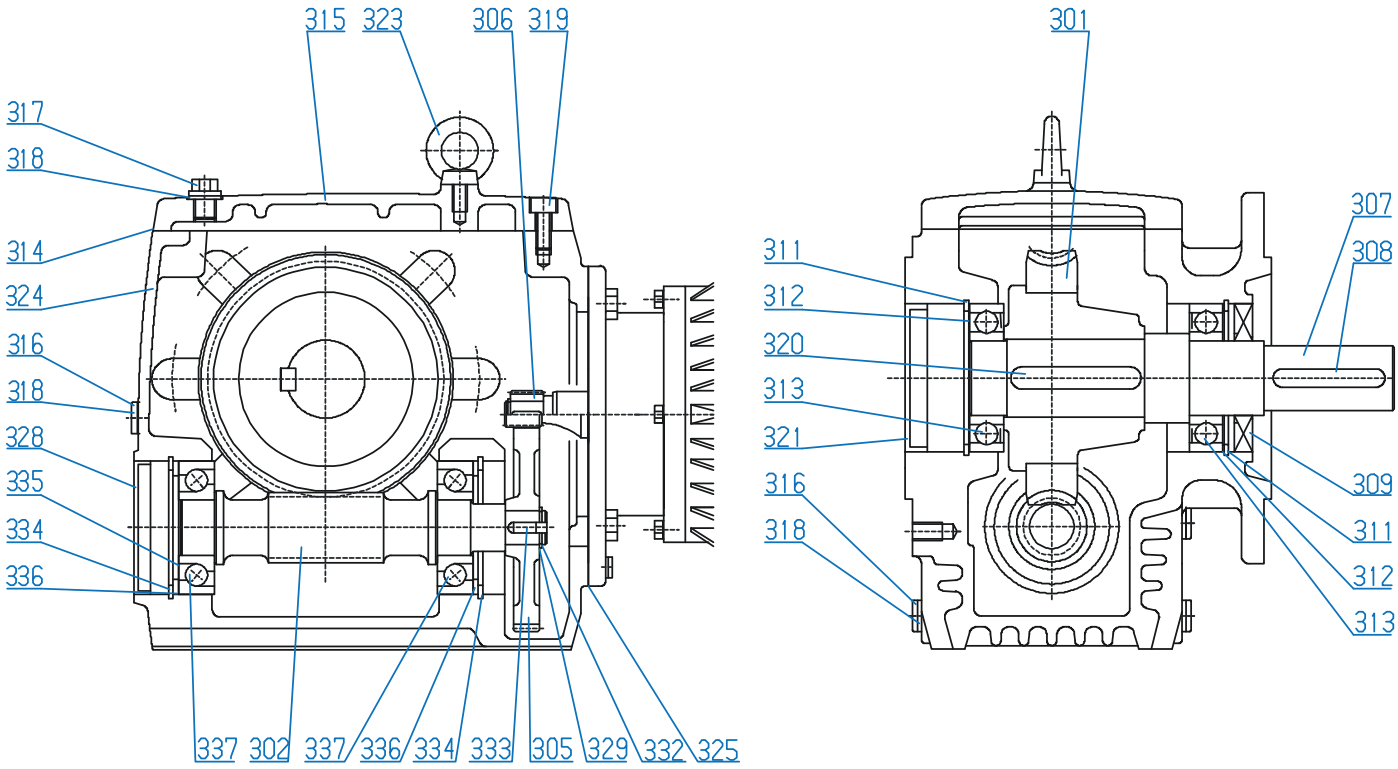

SK 02040 - SK 42125 Flange Mounted

301 Worm Wheel	314 Gasket	325 Gasket
302 Worm	315 Inspection Cover	328 Bore Plug
305 Gear	316 Drain Plug	329 Thrust Washer
306 Pinion	317 Vent Plug	332 Snap Ring
307 Output Shaft	318 Gasket	333 Key
308 Key	319 Socket Head Screw	334 Snap Ring
309 Oil Seal	320 Key	335 Shim
311 Snap Ring	321 Bore Plug	336 Thrust Washer
312 Shim	323 Flanged Eye Bolt	337 Anti-Friction Bearing
313 Anti-Friction Bearing	324 Gearcase	

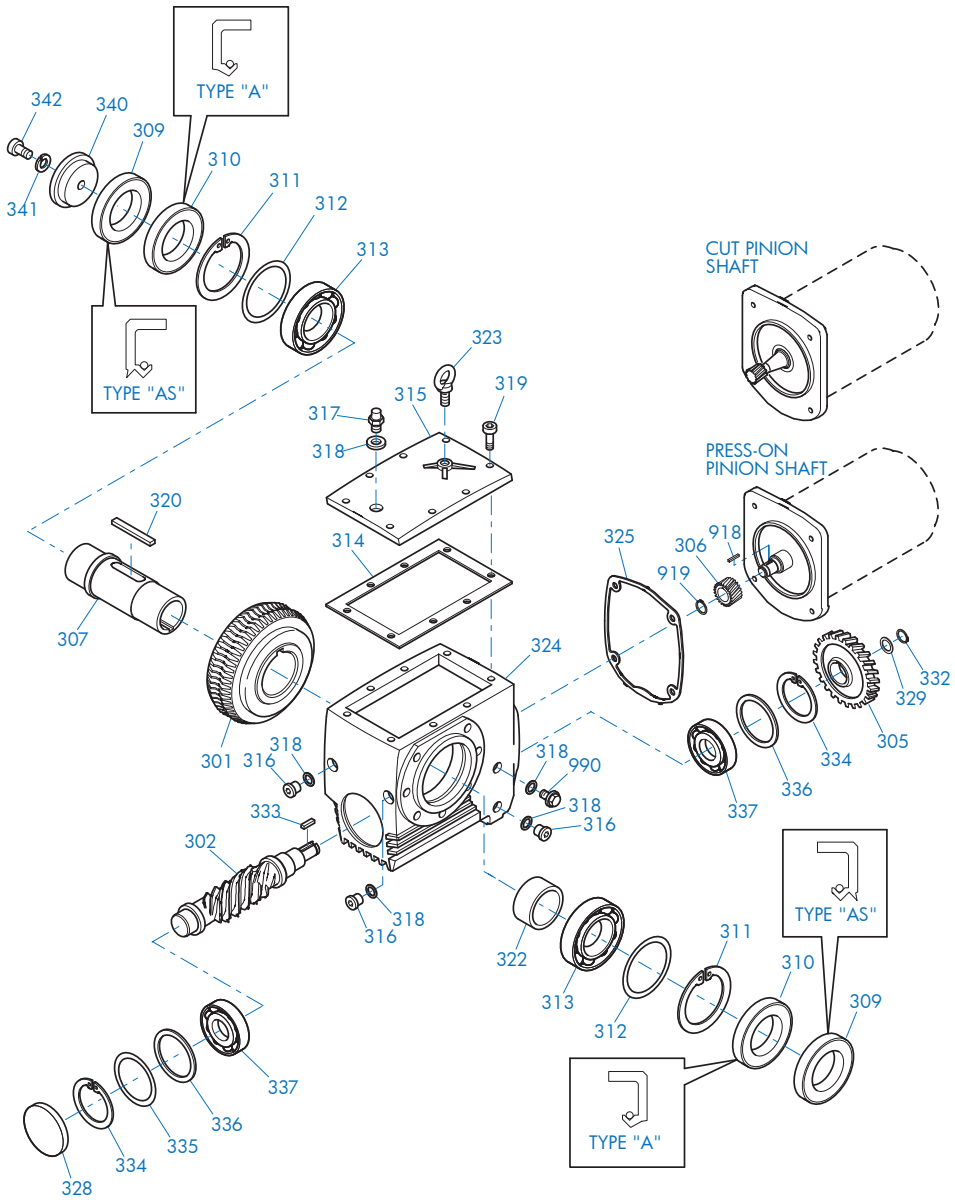

SK 02040 - SK 42125 Shaft Mounted

301 Worm Wheel
302 Worm
305 Gear
306 Pinion
307 Output Shaft
309 Oil Seal
310 Oil Seal
311 Snap Ring
312 Shim
313 Anti-Friction Bearing
314 Gasket
315 Inspection Cover
316 Drain Plug
317 Vent Plug
318 Gasket
319 Socket Head Screw
320 Key
322 Spacer
323 Flanged Eye Bolt
324 Gearcase
325 Gasket
328 Bore Plug
329 Thrust Washer
332 Snap Ring
333 Key
334 Snap Ring
335 Shim
336 Thrust Washer
337 Anti-Friction Bearing
340 Retaining Washer
341 Lock Washer
342 Bolt
350 Flange
351 Bolt
918 Key
919 Snap Ring
990 Oil Level Plug

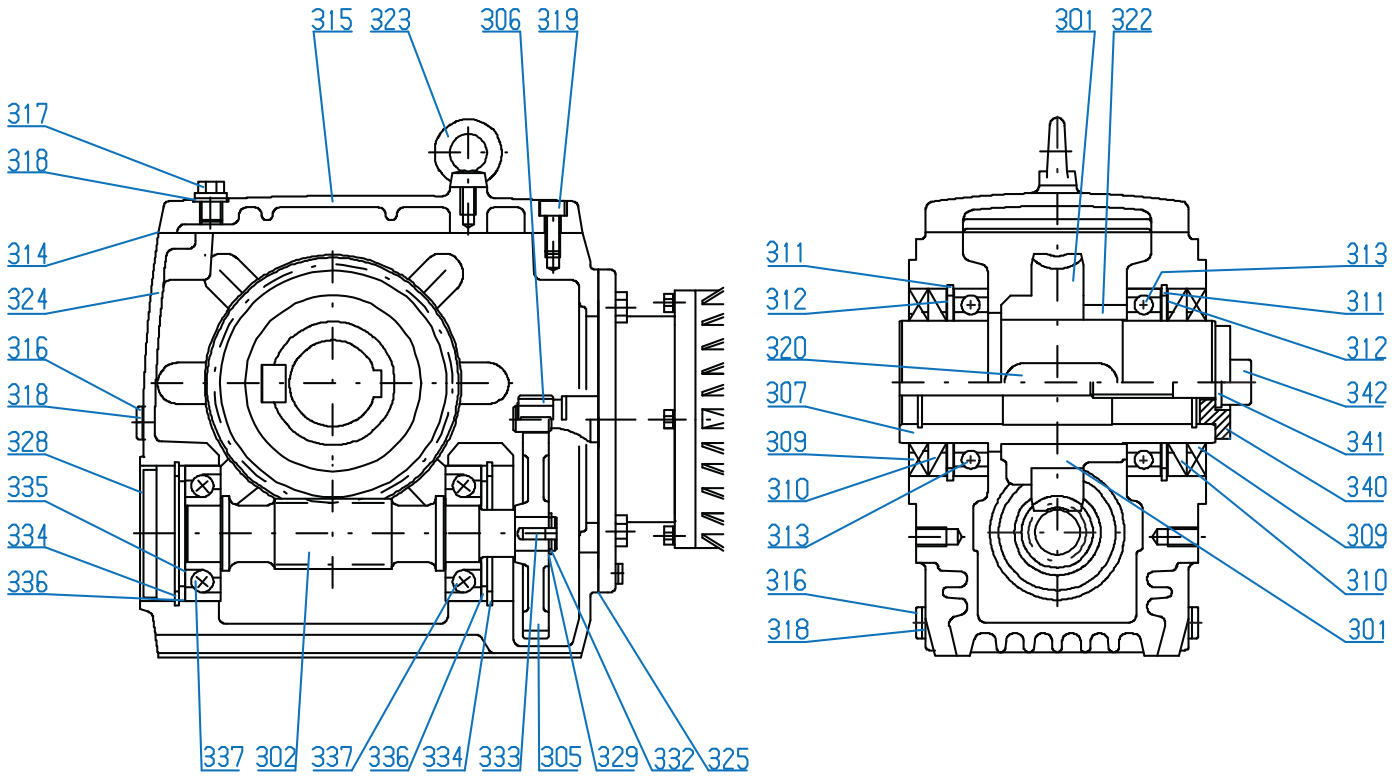

SK 02040 - SK 42125 Shaft Mounted

301 Worm Wheel	316 Drain Plug	333 Key
302 Worm	317 Vent Plug	334 Snap Ring
305 Gear	318 Gasket	335 Shim
306 Pinion	319 Socket Head Screw	336 Thrust Washer
307 Output Shaft	320 Key	337 Anti-Friction Bearing
309 Oil Seal	322 Spacer	340 Retaining Washer
310 Oil Seal	323 Flanged Eye Bolt	341 Lock Washer
311 Snap Ring	324 Gearcase	342 Bolt
312 Shim	325 Gasket	350 Flange
313 Anti-Friction Bearing	328 Bore Plug	351 Bolt
314 Gasket	329 Thrust Washer	
315 Inspection Cover	332 Snap Ring	

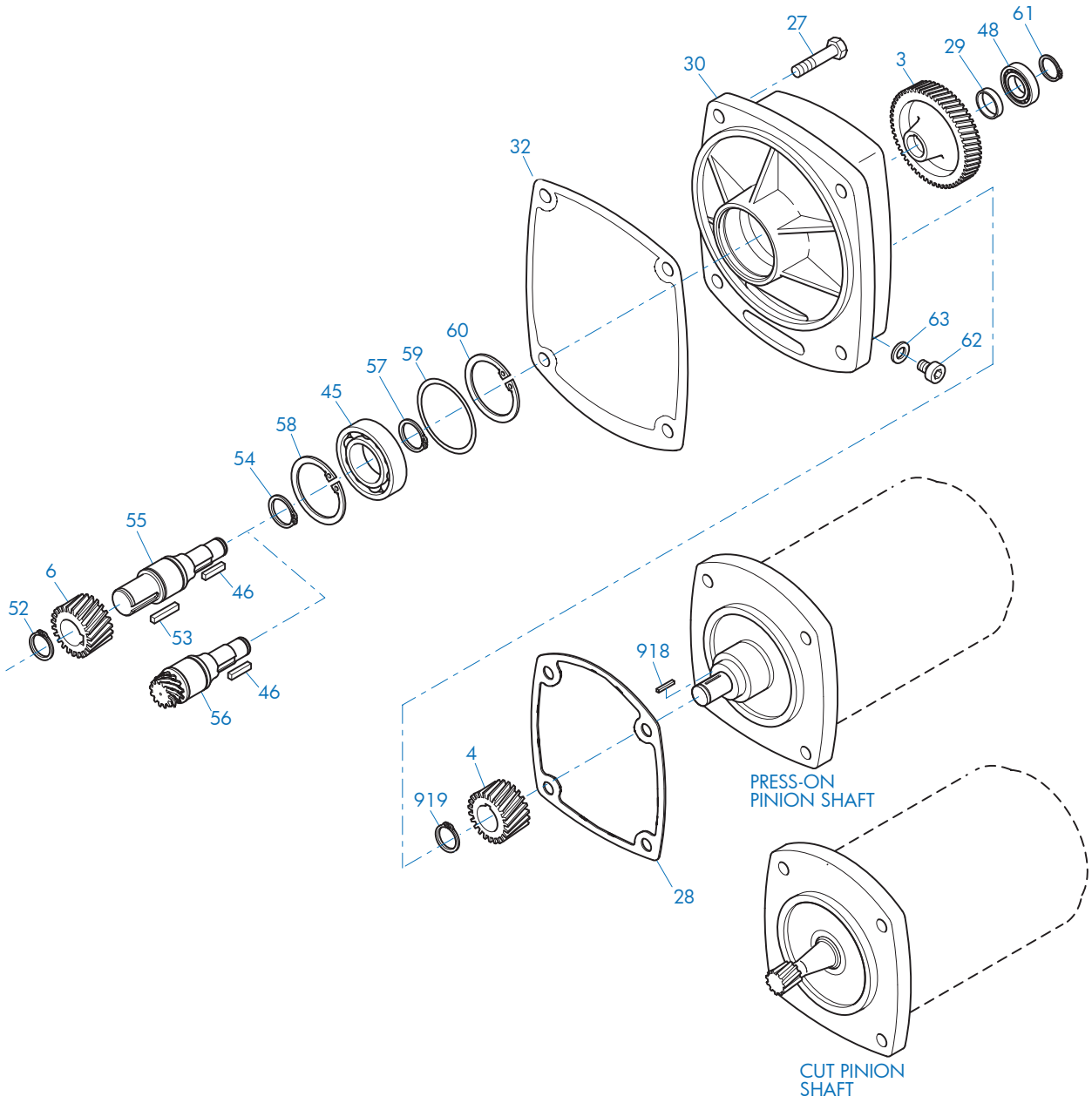

SK13050 - SK43125 Third Stage Reduction Gear

3	Gear	46	Key	59	Shim
4	Pinion	48	Anti-Friction Bearing	60	Snap Ring
6	Pinion	52	Snap Ring	61	Snap Ring
27	Bolt	53	Key	62	Oil Plug
28	Gasket	54	Snap Ring	63	Gasket
29	Spacer	55	Intermediate Shaft, Plain	918	Key
30	Third Reduction Gearcase	56	Intermediate Shaft, Gearcut	919	Snap Ring
32	Gasket	57	Snap Ring		
45	Anti-Friction Bearing	58	Snap Ring		

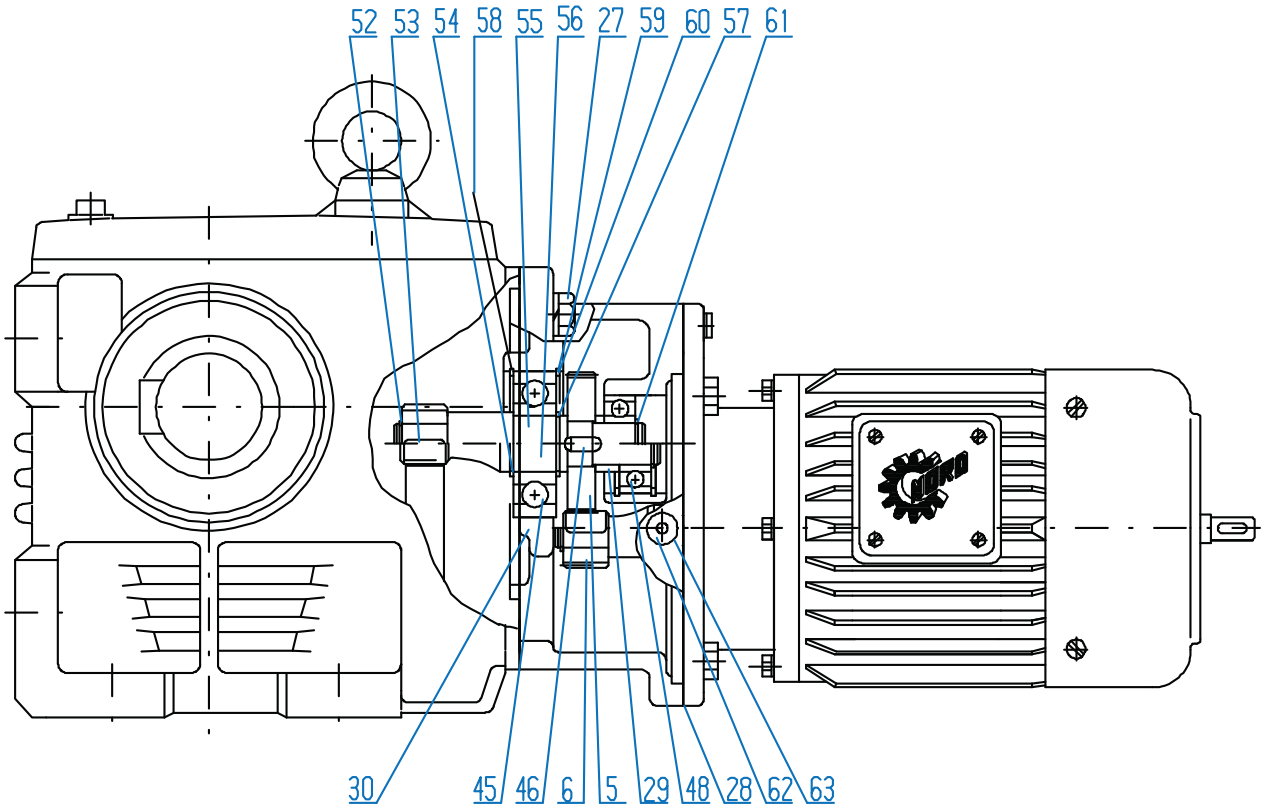

SK13050 - SK43125 Third Stage Reduction Gear

3	Gear	46	Key	58	Snap Ring
4	Pinion	48	Anti-Friction Bearing	59	Shim
27	Bolt	52	Snap Ring	60	Snap Ring
28	Gasket	53	Key	61	Snap Ring
29	Spacer	54	Snap Ring	62	Oil Plug
30	Third Reduction Gearcase	55	Intermediate Shaft, Plain	63	Gasket
32	Gasket	56	Intermediate Shaft, Gearcut		
45	Anti-Friction Bearing	57	Snap Ring		

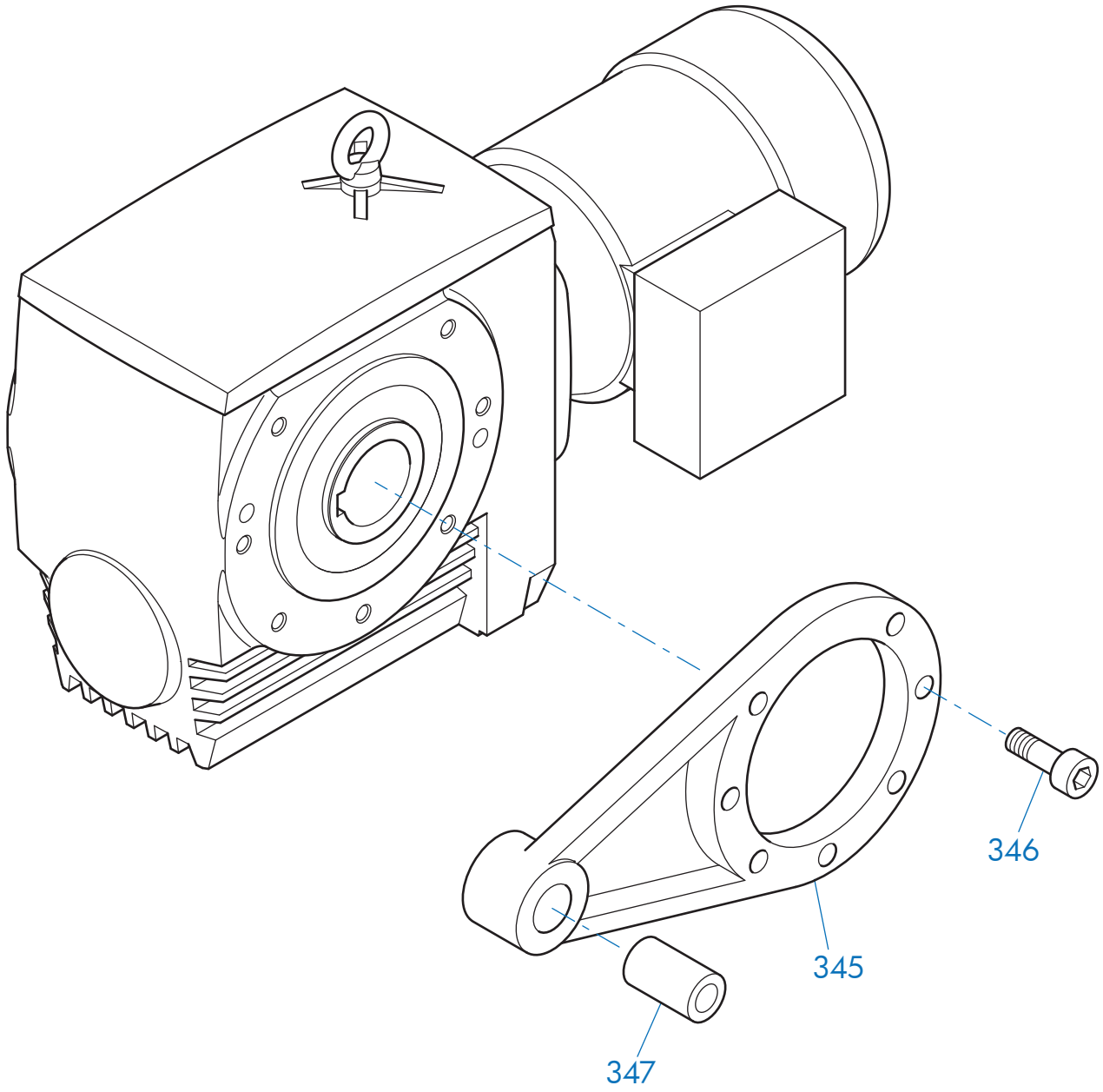

SK13050 - SK43125 Torque Arm

345 Torque Arm	346 Bolt	347 Bushing

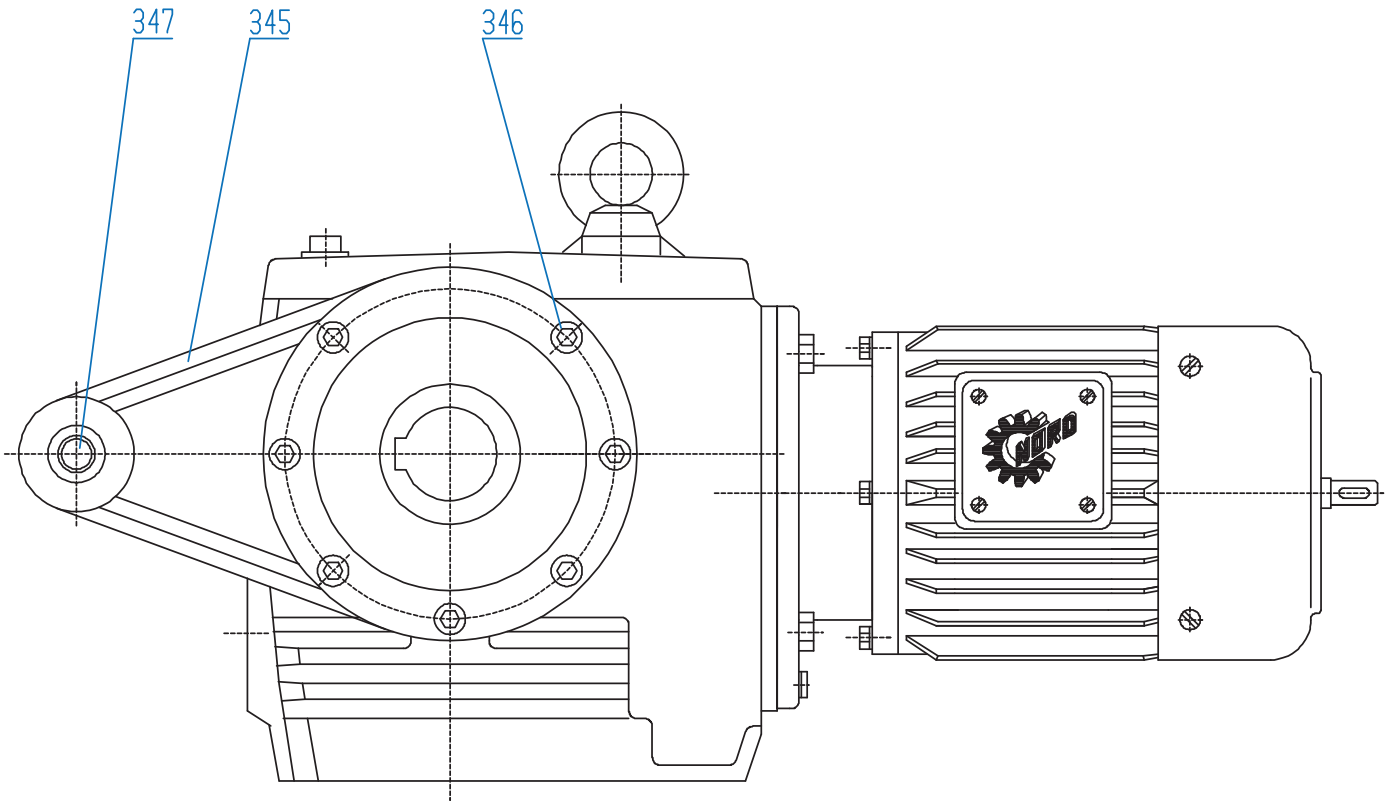

SK13050 - SK43125 Torque Arm

345 Torque Arm	346 Bolt	347 Bushing

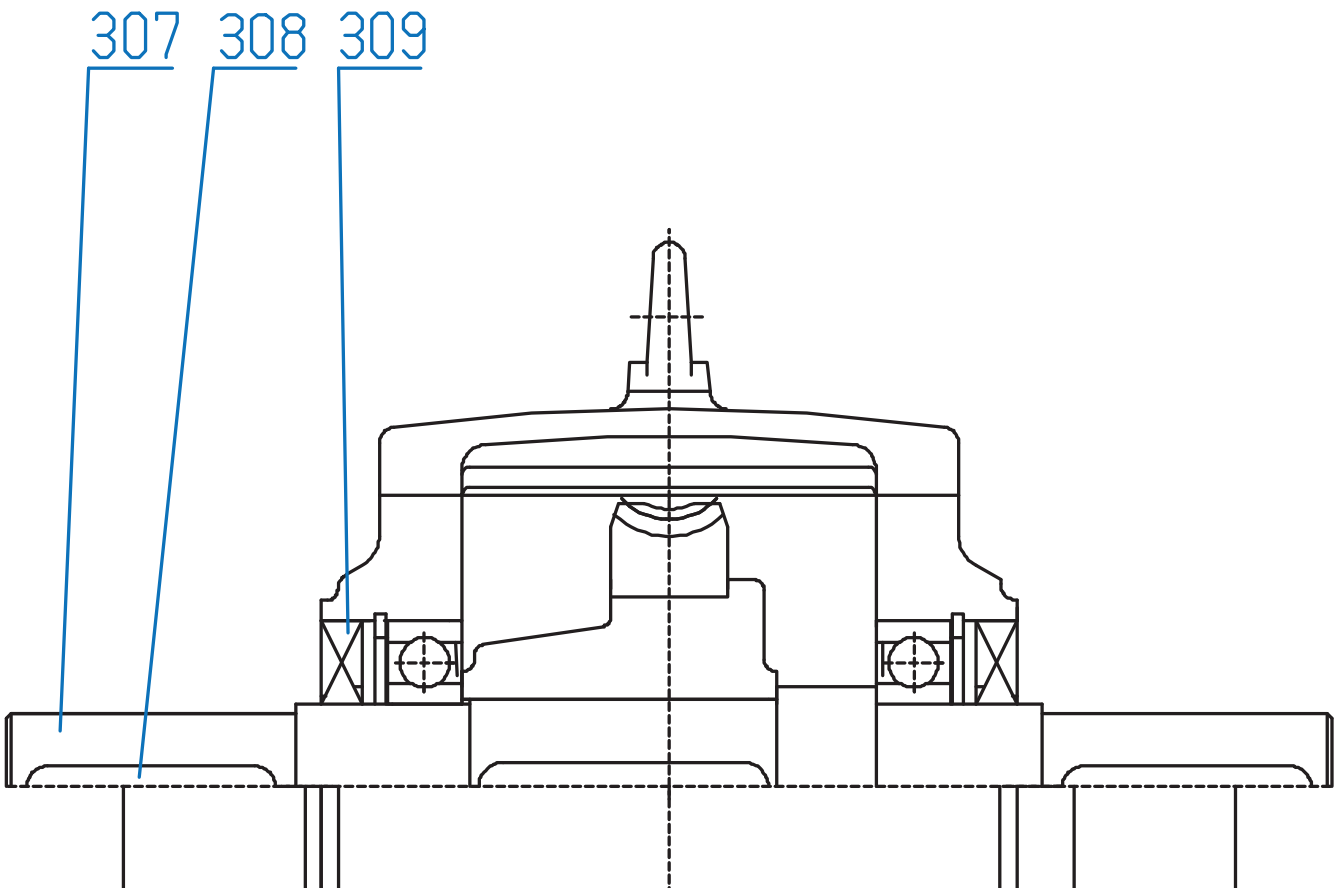

SK13050 - SK43125

307 Output Shaft	309 Oil Seal	350 Flange
308 Key	346 Screw	354 Shrink Disc Connector

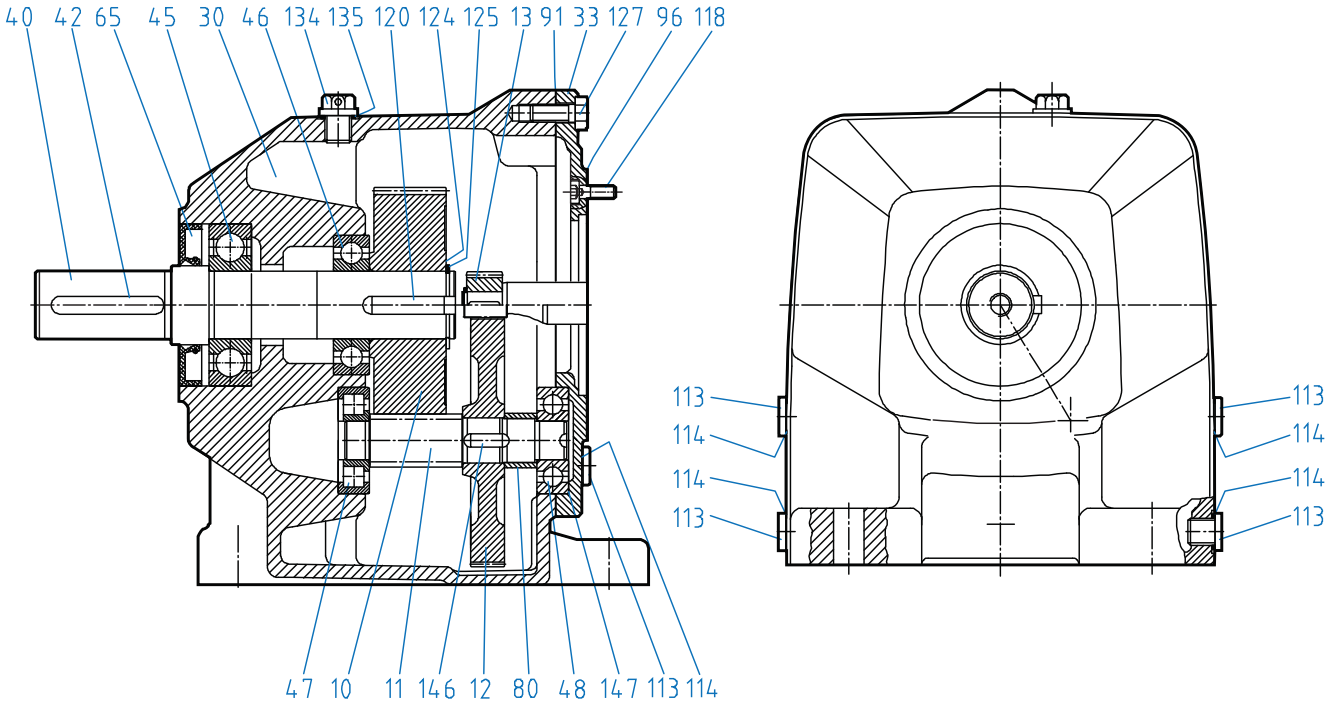

SK 172 - SK 972 Foot Mounted

10	Driven gear	46	Output shaft bearing	118	Bolt
11	Pinion shaft	47	Pinion shaft bearing	120	Key
12	Driving gear	48	Pinion shaft bearing	124	Shim
13	Driving pinion	65	Shaft seal	125	Snap ring
30	Gearcase	80	Spacer	127	Bolt
33	Input cover	91	Gasket	134	Vent plug
40	Output shaft	96	Gasket	135	Gasket
42	Key	113	Oil plug	146	Key
45	Output shaft bearing	114	Gasket	147	Shim

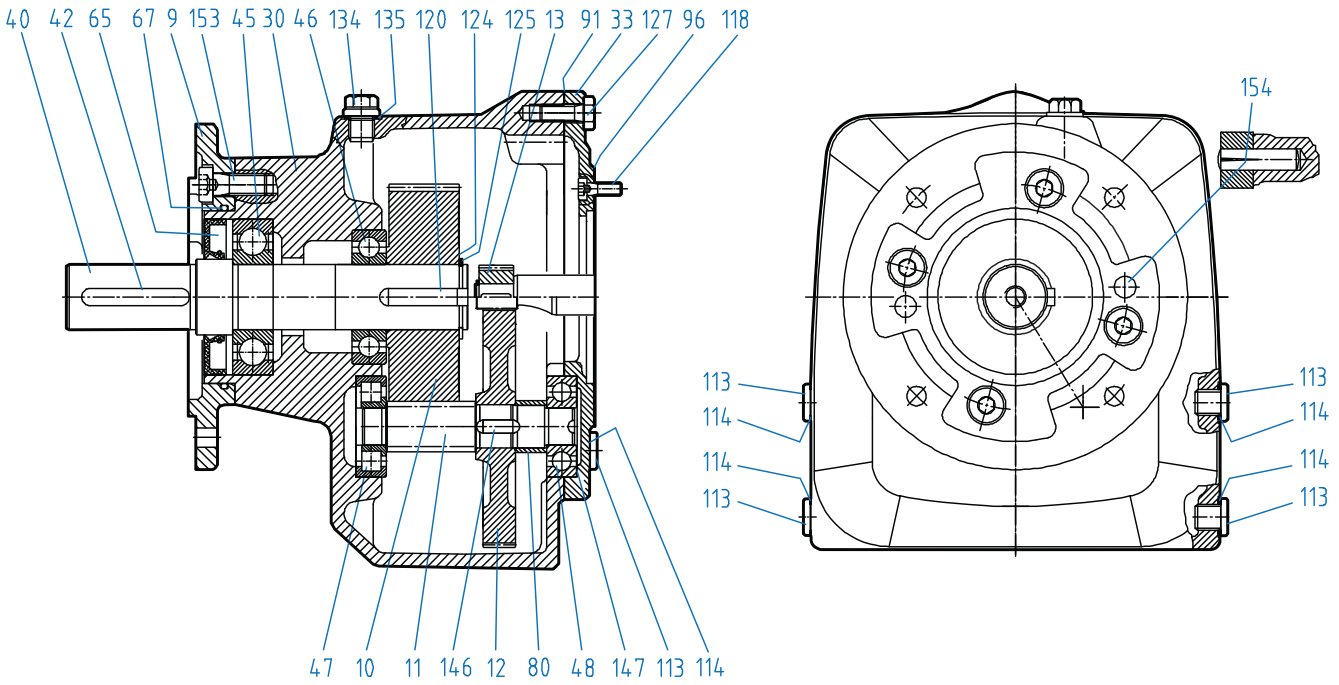

SK 172 - SK 972 Flange Mounted

9	Flange	47	Pinion shaft bearing	124	Shim
10	Driven gear	48	Pinion shaft bearing	125	Snap ring
11	Pinion shaft	65	Shaft seal	127	Bolt
12	Driving gear	67	O-Ring	134	Vent plug
13	Driving pinion	80	Spacer	135	Gasket
30	Gearcase	91	Gasket	146	Key
33	Input cover	96	Gasket	147	Shim
40	Output shaft	113	Oil plug	153	Bolt
42	Key	114	Gasket	154	Grooved dowel pin
45	Output shaft bearing	118	Bolt		
46	Output shaft bearing	120	Key		

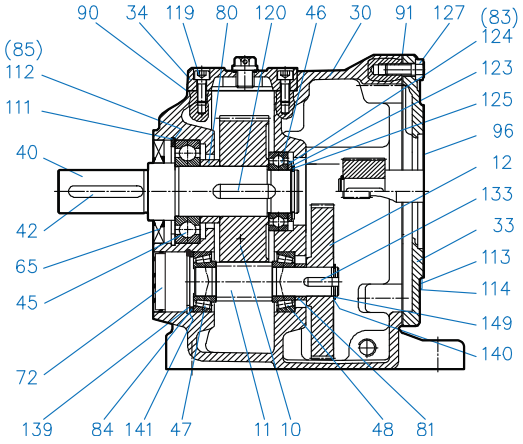

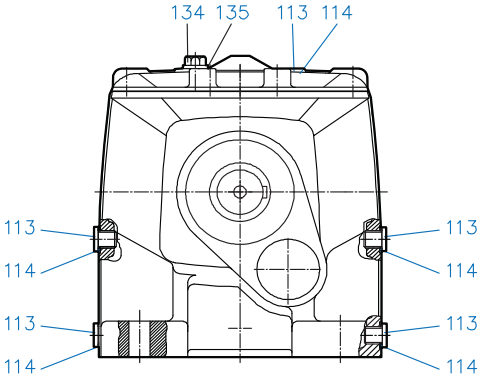

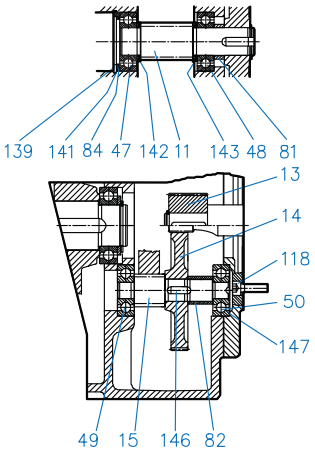

SK 273 - SK 973 Foot Mounted

10	Driven gear	65	Shaft seal	120	Key
11	Pinion shaft	72	Bore plug	123	Thrust washer
12	Driving gear	80	Spacer	124	Shim
13	Driving pinion	81	Spacer	125	Snap ring
14	Driving gear	82	Spacer	127	Bolt
15	Pinion shaft	83	Thrust washer	133	Key
30	Gearcase	84	Thrust washer	134	Vent plug
33	Input cover	85	Thrust washer	135	Gasket
34	Gear case cover	90	Gasket	139	Snap ring
40	Output shaft	91	Gasket	140	Shim
42	Key	96	Gasket	141	Shim
45	Output shaft bearing	111	Snap ring	142	Thrust washer
46	Output shaft bearing	112	Shim	143	Thrust washer
47	Pinion shaft bearing	113	Oil plug	146	Key
48	Pinion shaft bearing	114	Gasket	147	Shim
49	Pinion shaft bearing	118	Bolt	149	Snap ring
50	Pinion shaft bearing	119	Bolt		

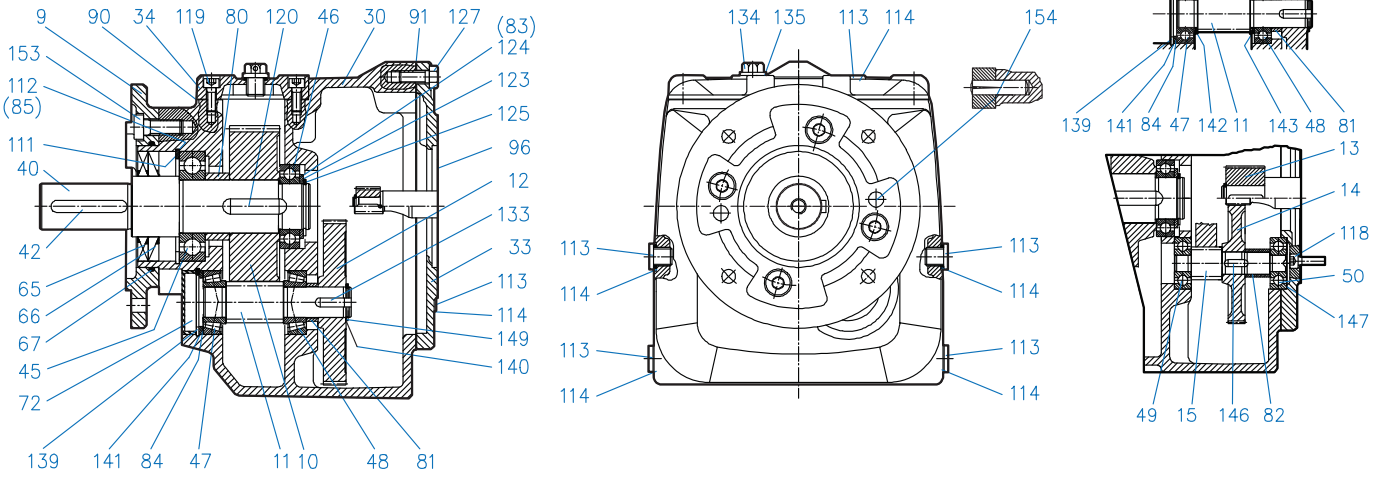

SK 273 - SK 973 Flange Mounted

9	Flange	66	Shaft seal	123	Thrust washer
10	Driven gear	67	O-Ring	124	Shim
11	Pinion shaft	72	Bore plug	125	Snap ring
12	Driving gear	80	Spacer	127	Bolt
13	Driving pinion	81	Spacer	133	Key
14	Driving gear	82	Spacer	134	Vent plug
15	Pinion shaft	83	Thrust washer	135	Gasket
30	Gearcase	84	Thrust washer	139	Snap ring
33	Input cover	85	Thrust washer	140	Shim
34	Gearcase cover	90	Gasket	141	Shim
40	Output shaft	91	Gasket	142	Thrust washer
42	Key	96	Gasket	143	Thrust washer
45	Output shaft bearing	111	Snap ring	146	Key
46	Output shaft bearing	112	Shim	147	Shim
47	Pinion shaft bearing	113	Oil plug	149	Snap ring
48	Pinion shaft bearing	114	Gasket	153	Bolt
49	Pinion shaft bearing	118	Bolt	154	Grooved dowel pin
50	Pinion shaft bearing	119	Bolt		
65	Shaft seal	120	Key		

Troubleshooting

This section identifies some of the most common issues involved with NORD Gear speed reducers , and provides recommendations to assist you in defining and answering your questions as you work with our products. You may also contact our Engineering/Application departments if your questions are not answered in the table below.

Problem With the Reducer		Possible Causes	Suggested Remedy
Runs Hot	Overloading	Load exceeds the capacity of the reducer	Check rated capacity of reducer, replace with unit of sufficient capacity or reduce the load.
	Improper lubrication	Insufficient lubrication	Check lubricant level and adjust up to recommended levels
		Excessive lubrication	Check lubricant level and adjust down to recommended levels.
		Wrong lubrication	Flush out and refill with correct lubricant as recommended
Runs Noisy	Loose foundation bolts	Weak mounting structure	Inspect mounting of reducer. Tighten loose bolts and/or reinforce mounting and structure.
		Loose hold down bolts	Tighten bolts
	Failure of bearings	May be due to lack of lubricant	Replace bearing. Clean and flush reducer and fill with recommended lubricant.
		Overload	Check rated capacity of reducer.
	Insufficient lubricant	Level of lubricant in reducer not properly maintained.	Check lubricant level and adjust to factory recommended level.
Output shaft does not turn	Internal parts are broken or missing	Overloading of reducer can cause damage	Replace broken parts. Check rated capacity of reducer.
		Key missing or sheared off on input shaft.	Replace key.
		Coupling loose or disconnected	Properly allign reducer and coupling. Tighten coupling.
Oil Leakage	Worn seals	Caused by dirt or grit entering seal.	Replace seals. Autovent may be clogged. Replace or clean.
	Unit runs hot or leaks	Overfilled reducer	Check lubricant level and adjust to recommended level.
		Vent clogged.	Clean or replace, being sure to prevent any dirt from falling into the reducer.
	Incorrect fill level	Improper mounting position, such as wall or ceiling mount of horizontal reducer.	Check mounting position on the name tag & verify with mounting chart in manual.

1. Overview

This user manual applies to NORD Motor products and it provides general information for motor operation, installation, maintenance, inspection, repair, and trouble shooting, which is relevant to most of the motor products shipped by NORD. Information and instructions provided in this manual, safety and commissioning information and all other manuals applicable to any items supplied by NORD must be observed.

This instruction manual is not intended to include comprehensive details and information related to all possible design variations or accessories options available with NORD motors. If there is any uncertainty about specific procedures, instructions or motor details, then please refer these questions to NORD for additional information or clarification.

Before installing, operating, or performing maintenance on any electrical motor become familiar with the following:

- The detailed operating instructions and wiring diagrams.
- All applicable national, local and system-specific regulations, codes and practices.
- The national / regional regulations governing safety and accident prevention.
- The proper use of any tools, transportation or hoisting equipment, and safety equipment needed to complete the installation.
- To avoid serious injury or possible damage to the equipment or machine, compliance with all safety and information notes is mandatory!

⚠ *WARNING* ⚠

All work involved in the transport, connection, commissioning and maintenance of any NORD product must be carried out by qualified and responsible technicians. All applicable national, regional, and local work regulations and safety requirements must also be complied with. NORD assumes no liability for personal injury, accidental death, or equipment damage and malfunctions resulting from failure to comply with installation or operating instructions, safety notes, or any work regulations and laws!

⚠ *WARNING* ⚠

To avoid electrocution, injury or death, make certain the motor is properly grounded, completely de-energized and brought to a no-voltage condition prior to working on any electrical connections.

2. Motor Types

NORD AC electric induction motors described in this manual generally include the following types:

- Single speed or two-speed design.
- Three phase alternating current or single phase design.
- Enclosure types: TEFC, TENV, and TEBC.

3. Enclosure Types

Totally enclosed fan cooled (TEFC).

TEFC motor designs rely on fan that is mounted on the motor's rotor shaft so the cooling capacity can vary based upon the motor's operating speed.

Totally enclosed, non-ventilated (TENV)

The TENV motor designs rely purely on convection cooling and they have no fan. Often TENV designs are labeled for intermittent or periodic duty or at a lower power rating than is typical for the given motor frame size.

Totally enclosed, blower cooled (TEBC)

The TEBC design uses separate blower or ventilator fan, with its own low wattage motor and a separate power supply, to provide continuous airflow and cooling. The blower can be used to extend the speed range of the motor and allow extreme slow speed operation without causing a concern for overheating. Blower data is provided in Table 6, page 11.

4. Voltage and Frequency Variation

Voltage and frequency variations are based upon the assumption that the nameplate horsepower will not be exceeded and that the motor temperature may increase. Standard allowable deviations are based upon the type of motor labeling.

NEMA and CSA Labeled Motors

Variations are based upon the nominal utilization voltage, and not the service (supply) voltage as per ANSI C84.1.

Service Voltages	Utilization Voltages
120V, 208V, 240V, 480V, 600V	115V, 200V, 230V, 460V, 575V

- Voltage variation at rated frequency = ±10%.
- Frequency variations at rated voltage = ±5%.
- Combined voltage/frequency variation = ±5%.

CE Labeled Motors

Per IEC 60038, allowable service voltage variations on in the current system, compared to the previous system, are as indicated.

Previous Service Voltages	Current Service Voltages
220V, 380V, 660V	230V, 400V, 690V +6/-10%
240V, 415V	230V, 400V +10/-6%

- Per EN 60034-1 a ±5% voltage variation and a ±2% frequency variation can be tolerated.
- The allowed variations are based upon the voltage (or voltage range) indicated on the motor nameplate.

5. Motor Nameplate Information

The motor nameplate and the display of technical information may vary slightly depending upon the global standard/s that the motor conforms to and the efficiency level. Please reference the examples below.

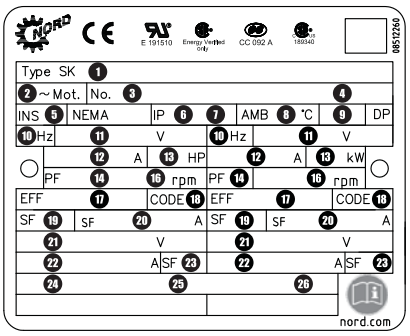

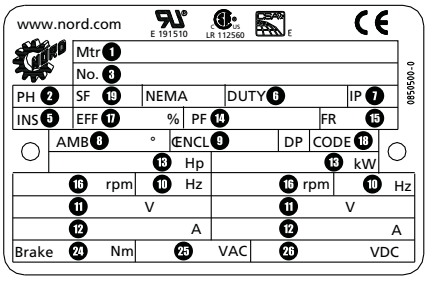

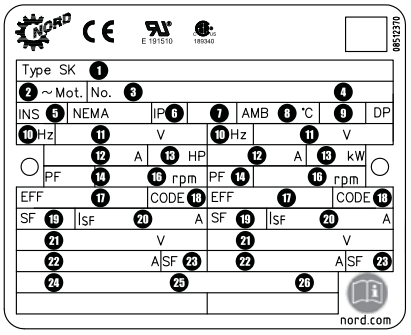

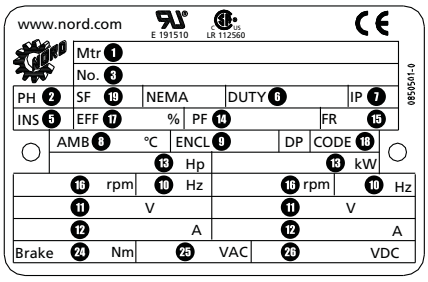

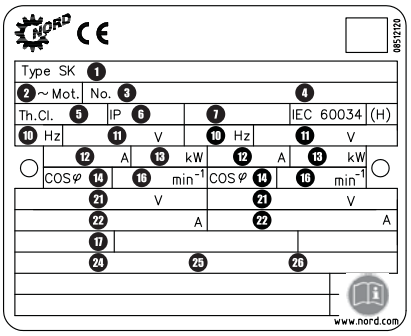

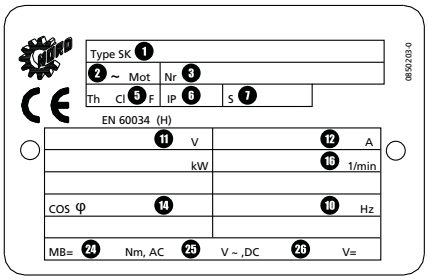

Table 1. Nameplate Data

Field	Definition
1	Model / Type
2	Number of Phases
3	Order Number
4	Serial Number
5	Insulation Class
6	IP (Ingress Protection) Enclosure Rating
7	Duty Cycle
8	Ambient Temperature Rating (°C)
9	Enclosure Type
10	Motor Frequency (Hz)
11	Voltage Rating (V)
12	Current Rating (A)
13	Rated Power (HP or kW)

Field	Definition
14	Power Factor
15	Motor Frame Size
16	Full Load Speed (rpm or 1/min^2)
17	Efficiency
18	NEMA Code Letter
19	Service Factor
20	Current Rating (If Service Factor ≥ 1.15)
21	Operating Voltage Rage (A)
22	Current Rating at Operating Voltage Range (A)
23	Service Factor at Operating Voltage Range (A)
24	Brake Rating (Nm)
25	Brake Supply Voltage (VAC)
26	Brake Coil Voltage (VDC)

6. Motor Options And Nomenclature

NORD offers many options for its motors. The option code will be shown in the motor nomenclature. Below are commonly used options.

Code	Description
AICM	Additional Internal Insulation Coating Applied
BRE	With Brake
EAR	Single Phase, Start Cap/Run Cap
ECR	Single Phase, Start Cap/Run Cap Increased SF
EHB	Single Phase, Run Capacitor Only
EP	Epoxy Dipped Windings
F	Blower Cooling Fan - 3ph & 1ph
FC	Blower Cooling Fan - 1ph
FHL	Brake – Lockable Manual Release
H	Energy Efficient
HL	Brake – Manual Hand Release
IG	Incremental Encoder
IP66	IP66 Environmental Protection
IR	Brake – Current Sensing Relay
KB	Condensation Holes - Removable Plugs
KD	Condensation Holes - Open
MIK	Brake – Microswitch
MS	Power Plug Connector

Code	Description
OL	TENV Motor – Without Fan / With Cover
OL/H	TENV Motor - Without Fan & Cover
P	Premium Efficient Motors
RD	Canopy Cover
RDD	Double Canopy Cover
RG	Brake – Corrosion Protected
RLS	Backstop
SH	Motor Space Heater
SR	Brake – Dust Protected
TF	Thermistor
TW	Thermostat
VN	10:1 Constant Torque Rated Motor
VR	5:1 Constant Torque Rated Motor
VW	20:1 Constant Torque Rated Motor
VZ-F	1000+:1 Constant Torque Rated Motor
WE	2nd Motor Shaft End
WU	High Slip Rotor
Z	High Inertia Motor Fan

Motor Nomenclature

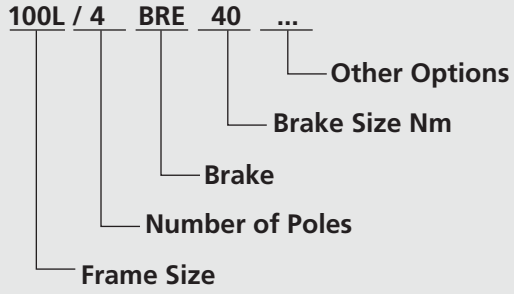

Ordering Examples

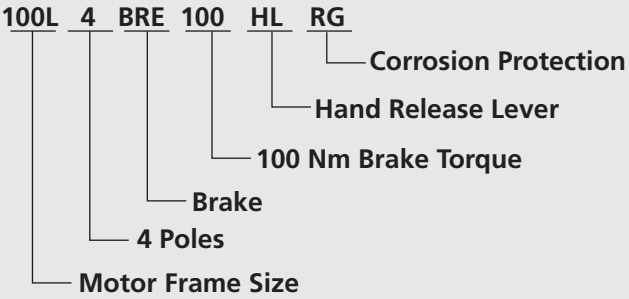

100 Frame Motor with 4 poles, Brake, 100 Nm with a hand release lever, corrosion protected brake, and a current sensing relay.

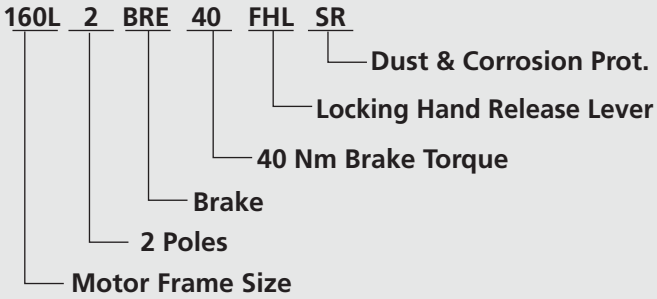

63 Frame Energy efficient motor with 4 poles, Brake, 40 Nm with a locking hand release lever and dust & corrosion protection.

7. Application Conditions

Standard NORD motors are designed to operate in dusty or moist environments and have anti-fungal, thermal class F insulation.

- Enclosure Protection Rating = IP55 (minimum).
- Maximum Installation Height = 3300 ft (1000 m).
- Ambient Temperature = -4 to 104°F (-20 to 40 °C).
- Tropical-proof, Thermal Class F insulation.

The protection level and maximum ambient temperature are stated on the motor nameplate.

IMPORTANT NOTE

NORD can provide motors for an expanded range of applications and service conditions including higher protection levels, extreme ambient conditions and, higher altitudes.

WARNING

Consult NORD for recommendations if motors are operated under extreme loading conditions, exposed to high inertia loads, or need to operate under unusually high cycling conditions with high starting and stopping frequency.

WARNING

Special design and assembly considerations are needed if NORD motors are subject to any of the following conditions:

- Outdoor installation with motor in a vertical position.
- Direct contact with aggressive or corrosive materials (acids, bases, salts, certain gases, etc.).
- Exposure to extreme high or low temperatures, high relative humidity, condensation moisture or very wet environments.
- Subject to extreme material build-up on the unit (dirt, dust, sand, etc.).
- Hazardous Locations (risk of fire or explosion).

8. Transportation

During transportation observe the following:

- Make sure that all eyebolts and lifting lugs are tight and firmly against their supporting surface.
- Use all the lifting eyes that are intentionally supplied with the motor.
- Lift only at designed points.
- Protect the mounting surface from possible damage during transportation.
- Always use sufficiently rated handling equipment, lift mechanisms and lifting straps.
- With heavier objects or unbalanced loads, it may be appropriate to use more than one lifting point or an additional strap or sling to assure safe transportation of the assembly. This is especially true of assembled gearmotors and motorized reducers.
- Once the NORD motor or assembly is properly installed, remove the transportation fixtures completely or make certain they are properly re-secured and tightened.

WARNING

Transportation – Use of Lifting Devices

To avoid death, serious injury or equipment damage…

- Hoisting lugs or lifting eyes attached to the motor are designed for the weight of the motor only! Do not attach any additional loads!
- The motor must only be transported and lifted using the lifting eyes, in a position that is appropriate for its type of construction. Otherwise, it could fall over or slip in the lifting tackle.
- During suspended transport, two straps must be able to carry the entire load weight safely.
- When required use additional, suitable means of support for transportation, installation or removal.
- Always secure the support equipment to prevent it from slipping.

9. Storage

If the motor is not in service, store it according to the following conditions:

- Store the motor in a clean, dry, dirt-free, vibration free area.
- Storage temperatures of 10°C (50°F) to 50°C (120°F) must be maintained.
- Relative humidity must not exceed 60%.
- If vibration in the area exceeds 0.002 inch (0.05 mm) at 60 hertz, then vibration isolation pads are suggested to prevent brinelling of the bearings.
- Treat the unprotected shaft end and mating flange surfaces with a corrosion inhibitor that can be cleaned off prior to commissioning.
- Before placing the motor into service, visually inspect the motor exterior for evidence of deterioration during storage. Turn the motor shaft by hand to make sure the shaft turns freely.
- Motor space heaters, when provided, are to be connected and energized whenever there is a possibility that the storage ambient conditions will reach the dew point. Space heaters are optional. Remove motor from the storage container when the heater is energized.
- If the motor needs to be stored for extended periods, or if it is stored in less than favorable conditions, it is recommend that the winding insulation resistance be checked prior to commissioning (page 7).
- Even if stored in favorable conditions, the antifriction motor bearings and motor shaft seals may need to be replaced if the storage period is more than 4 years.

10. Safety Considerations

When installing, servicing or replacing electric motors it is important to be working in a “voltage-free” state. Observe the following safety rules.

Five Safety Rules

1. Disconnect the system. Disconnect the auxiliary circuits (brakes, space heaters, etc.).
2. Prevent reconnection (follow safe lock-out/tag-out practices).
3. Make sure that the equipment is at zero voltage.
4. Make certain the equipment is properly grounded and short-circuited.
5. Cover or isolate nearby components that are still electrically live.

To energize the system, apply the measures in reverse order.

Qualified Personnel

All work involved in the transport, connection, commissioning and maintenance of any NORD product must be carried out by qualified and responsible technicians.

For the purpose of this documentation, a qualified personnel is taken to mean a person or people who fulfill the following requirements:

- Through appropriate training and experience, they are able to recognize and avoid risks and potential dangers in their particular field of activity.
- They have been instructed to carry out work on the machine by the appropriate person responsible.
- They are responsible for knowing and complying with all applicable national, regional, and local work regulations and safety requirements.

10. Safety Considerations Ctd.

General Warnings and Cautions

⚠ *WARNING* ⚠

To avoid electrocution, injury or death, make certain all electrical devices (motors, brakes, variable frequency drives, etc.) are properly grounded, completely de-energized, and brought to a no-voltage condition prior to working on any electrical connections. Remember that most of these devices carry potentially dangerous energy levels for a period of time after power is removed. Always follow proper lock-out/tag-out procedures.

⚠ *WARNING* ⚠

Electrical machines contain dangerous voltage levels, electrically live parts, rotating surfaces and hot surfaces. To prevent injury, death or possible equipment damage always observe the following:

- Keep all safety covers and guards in place during operation. Remove and replace covers in compliance with the applicable safety regulations.
- Allow the machine to cool down before starting any work on it.
- Operate the machines properly.
- Perform regular maintenance on the machine.
- Secure and guard free-standing shaft extensions.

⚠ *WARNING* ⚠

Electrically Live Parts

Electrical machines contain electrically live parts. Fatal or severe injuries and substantial material damage can occur if the required covers are removed or if the machines are not handled, operated, or maintained properly.

⚠ *WARNING* ⚠

Rotating Parts

Electrical machines contain dangerous rotating parts. Fatal or severe injuries and substantial material damage can occur if the required covers are removed or if the machines are not handled, operated, or maintained properly.

⚠ *WARNING* ⚠

Hot Surfaces

Electrical machines have hot surfaces. Fatal or severe injuries and substantial material damage can occur if the required covers are removed or if the machines are not handled, operated, or maintained properly. Allow the machine to cool down before starting any work on it.

⚠ *WARNING* ⚠

Maintain Proper Cooling

Operating the motor without the intended cooling fan may cause overheating and result in very hot surfaces, personal injury and material damage. Never commission a motor intended to be fan cooled when it is missing the shaft-driven fan or external blower assembly.

⚠ *WARNING* ⚠

Condensation Drain Holes (Optional)

Inserting objects into the condensation drain holes can damage the winding and can result in death, serious injury and damage to property!

- Before opening sealed drain holes, make sure the motor is in a no-voltage condition. Close the condensation drain holes before re-commissioning.
- Exercise caution around drain holes that are intended to be left open, especially when the motor is energized.

STOP *HARMFUL SITUATION* STOP

Before start-up check the following:

- All electrical connections are secure, well grounded and properly made.
- The motor is rotating in the correct direction (when de-coupled from the driven load).
- There are no temperature-sensitive parts (cables etc.), in contact with motor enclosure.
- Condensation drain holes are always located at the lowest point of the motor.

11. Checking the Insulation

Before putting the motor into operation for the first time, after a lengthy period of storage or standstill (approx. 6 months), the insulation resistance of the winding should be checked.

⚠ WARNING ⚠

During and directly after measurement the motor connection terminals carry hazardous voltages.

A. Control

The insulation resistance of new, cleaned, or repaired motor windings against the grounded housing and against one another should be > 200 Mega-Ohms.

B. Measurement

Using a Mega-Ohm meter apply a DC voltage of 500 VDC to the motor winding for a period of 60 seconds and record the winding insulation resistance compared to ground.

- The 500 VDC test voltage is applicable to low voltage motors up to 1000 VAC.
- When performing this test the temperature of the windings should be 25°C ± 15°C (77°F ± 27°F).

C. Verification

- If the insulation resistance of the winding is less than 50 Mega-Ohms, the cause may be moisture. The windings should be dried and the test should be repeated.
- After any lengthy period of operation the insulation resistance may drop. So long as the measured value does not fall below the critical value of 50 Mega-Ohm, the motor may continue to be operated.
- If the measured value falls below the critical 50 Mega-Ohm level, the cause must be established and the windings or winding sections must be cleaned, dried, repaired, or replaced as needed.

12. Bearing Lubrication

NORD motor frame sizes 63 up to and including 225 are normally supplied with internally grease lubricated bearings and require no lubrication during normal operation.

NORD motor frame sizes 250 and larger are supplied with grease fittings for re-greasing the motor bearings.

IMPORTANT NOTE

Motors with grease fittings are normally supplied with a label indicating the grease type used, the suggested re-lubrication interval, and the amount of new grease to be applied. General bearing maintence guidelines are listed in Table 3.

Typical motor bearing grease is an NLGI No. 2 consistency, high grade product with a polyurea base thickener, synthetic or blended mineral/synthetic oil, and stabilizing agents to protect against heat and oxidation.

Table 3 – Motor Bearing Maintence Guidelines

Frame Size	Power	Poles	Re-greasing Interval
63-225	0.16-60 HP (0.12-45 kW)	All	Maintence Free
250 to 280	75-125 HP (55-75 kW)	2	4000 h
		4 to 8	8000 h
315	150-250 HP (132-200 kW)	2	3000 h
		4 to 8	6000 h

STOP HARMFUL SITUATION STOP

When re-greasing motor bearings do not to mix different greases without verifying the compatibility with a reputable grease lubrication supplier. Mixing incompatible products can lead to bearing failure.

13. Mechanical Installation

Integral motors, NEMA C-face motors, and IEC flange mounted motors must be rigidly secured to their mating connection surface using all fastening screws tightened to the proper bolt torque. It is good practice to apply a medium strength thread- locking agent (Loctite® 242) to the mounting screws.

Foot mounted motors must be securely installed to a rigid and level foundation or mounting surface to minimize vibration and maintain alignment between the motor and shaft load. All mounting hole locations must be utilized. Tighten all hold down screws or bolts to the proper bolt torque.

STOP HARMFUL SITUATION STOP

Failure to provide a proper mounting surface may cause vibration, misalignment and bearing damage.

Accurate alignment and proper balancing of output devices (couplings, belts, pulleys, etc.) is required to assure quite, low vibration, trouble free operation. When the motor is directly coupled to a gear drive or a driven machine make sure that the motor shaft and driven machine shaft are aligned with one another axially.

STOP HARMFUL SITUATION STOP

Inaccurate alignment may lead to bearing damage, excessive vibrations and shaft breakage.

IMPORTANT NOTE

For motor replacement guidelines see section 20 on page 15 and section 21 on page 16.

14. Electrical Connections

⚠ WARNING ⚠

To avoid electrocution, injury or death, make certain all electrical devices (motors, brakes, variable frequency drives, etc.) are properly grounded, completely de-energized, and brought to a no-voltage condition prior to working on any electrical connections. Remember that most of these devices potentially dangerous energy levels for a period of time after power is removed. Always follow proper lock-out/tag-out procedures.

IMPORTANT NOTE

External motor brakes have their own connection requirements as indicated in the appropriate brake instruction manuals.

⚠ WARNING ⚠

If the motor has an integral brake, make certain there is no load connected to the driven equipment before releasing the brake. Otherwise serious injury, death, or damage to the equipment may result.

- The supply voltage and frequency must agree with the motor nameplate data.
- Always feed the connecting leads into the terminal box using appropriate mating cable glands. The mating connection cables and cable glands should be suitable for temperatures ≥ 194°F (90°C).
- Provide the ends of the connecting leads and ground lead with cable lugs or curved ring eyelets before connecting them to the terminal board.
- Make certain that the wiring connections and arrangement of the terminal board jumpers conform to the appropriate wiring diagram as provided in the motor terminal box and/or page 9 of this manual.
- Tighten the terminal board screw connections on the on the main terminal board per the table below.

Table 4 – Tightening Torque: Terminal Board and Grounding Screws

Thread Size	Nut Size [mm]	Tightening Torque [lb-ft]	Tightening Torque [N-m]
M4	7	0.6-0.9	0.8-1.2
M5	8	1.3-1.8	1.8-2.5
M6	10	2.0-3.0	2.7-4
M8	13	4.0-5.9	5.5-8
M10	17	6.6-9.6	9-13
M12	19	11.8-14.8	16-20

- Upon final assembly, the terminal box cover must be sealed so that it is dust-tight and water-tight.

Table 5 – Tightening Torque: Terminal Box Cover Screws

Thread Size	Tightening Torque [lb-ft]	Tightening Torque [N-m]
M4	0.6-0.9	0.8-1.2
M5	0.9-1.3	1.2-1.8
M6	1.1-1.8	1.5-2.5
M8	2.2-3.7	3.0-5.0

15. Wiring Diagrams

NORD Frames 63-225
230 / 460V, 60Hz, 3Ø | 200 / 400V, 50Hz, 3Ø

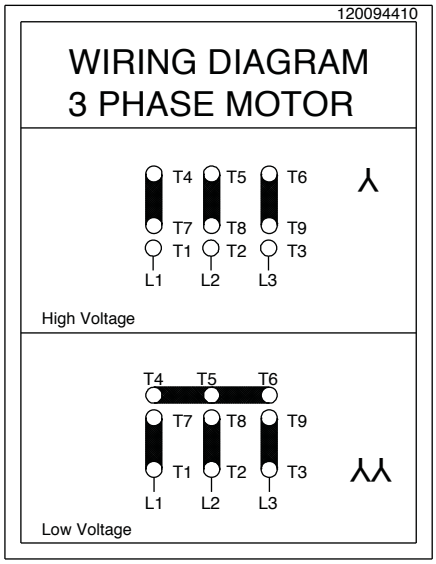

NORD mfg by Siemens - Frames 200 +
230 / 460V, 60Hz, 3Ø | 200 / 400V, 50Hz, 3Ø
190 / 380V, 60Hz, 3Ø

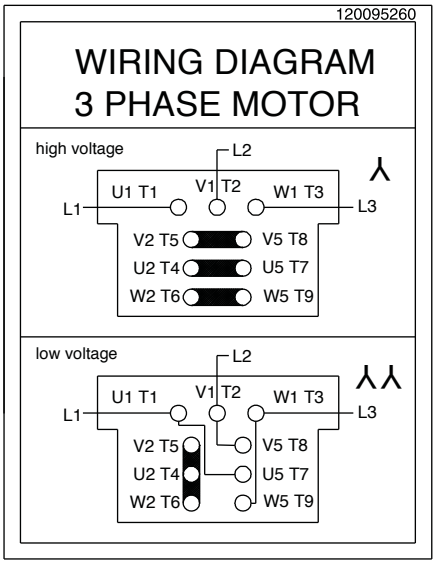

NORD mfg by Siemens - Frames 200 +
230 / 460V, 60Hz, 3Ø | 200 / 400V, 50Hz, 3Ø
190 / 380V, 60Hz, 3Ø

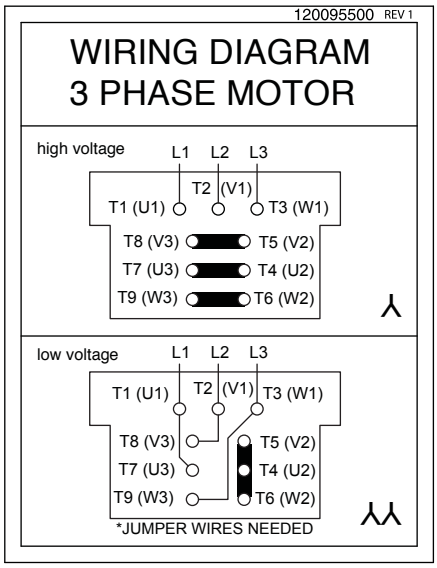

NORD Frames 63 - 225
460 / 800V, 60Hz, 3Ø | 230 / 400V, 50Hz, 3Ø
208 / 360V, 60Hz, 3Ø | 400 / 690V, 50Hz, 3Ø
332 / 575V, 60Hz, 3Ø

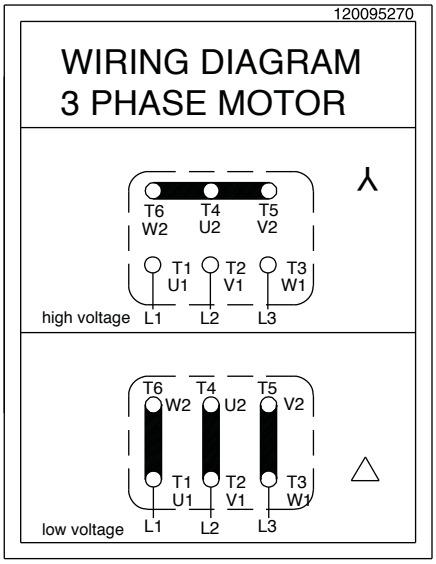

NORD - 2 - SPEED MOTORS
SINGLE WINDING (4-2 & 8-4 POLE)

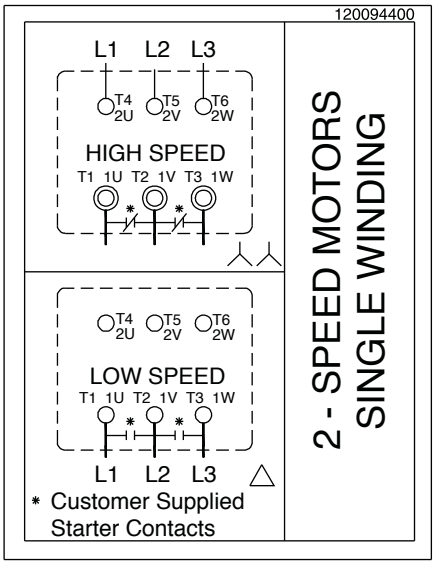

NORD - 2 - SPEED MOTORS
DUAL WINDING (8-2 POLE)

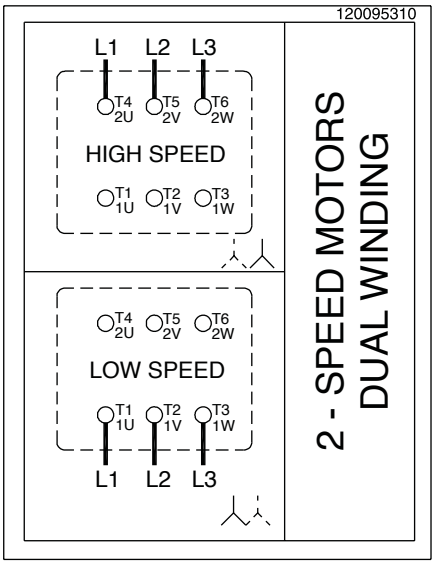

15. Wiring Diagrams Ctd.

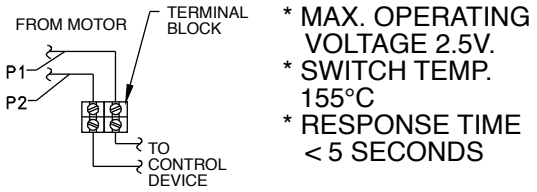

THERMISTOR
"TF" OPTION

120095240

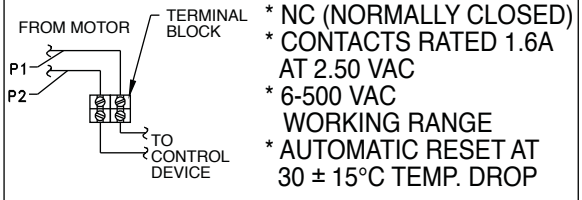

THERMISTATS
"TW" OPTION

120095230

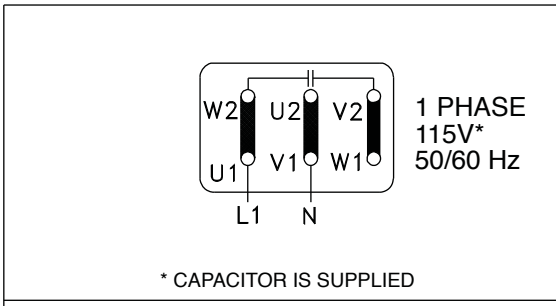

BLOWER COOLING FAN
"FC" OPTION

120095450

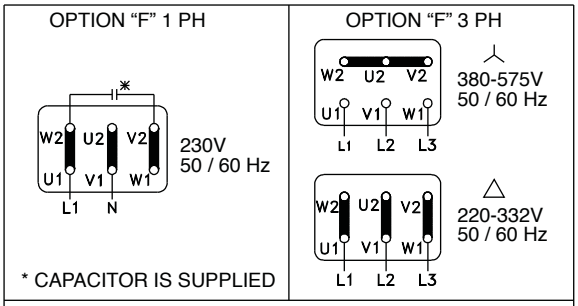

BLOWER COOLING FAN
"F" OPTION

120095250

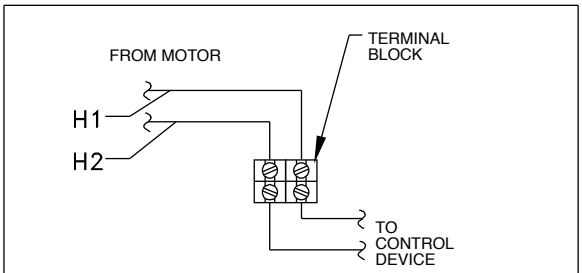

SPACE HEATER
"SH" OPTION

120095220

16. Motor Accessories

Blower Cooling Fan (Option F & FC)

- Connection Diagram Shown on page 10
- Option FC is 1-phase, 115V
- Option F has capability of 1 phase by connecting a supplied capacitor

Option F – 3ph & 1ph 220-575V 50/60Hz

Motor Frame	60Hz Ratings			50Hz Ratings		
	Voltage [V]	Current [A]	Power [W]	Voltage [V]	Current [A]	Power [W]
Single phase connection - ⊥ (Delta)						
63	230 – 277	0.11	38	230 – 277	0.10	27
71	230 – 277	0.12	41	230 – 277	0.10	28
80	230 – 277	0.13	44	230 – 277	0.11	29
90	230 – 277	0.25	88	230 – 277	0.26	72
100	230 – 277	0.28	88	230 – 277	0.26	70
112	230 – 277	0.31	107	230 – 277	0.26	73
132	230 – 277	0.27	89	230 – 277	0.29	82
160 - 225	230 – 277	0.41	140	230 – 277	0.45	128
Three phase low-voltage connection - (Delta)						
63	220 – 332	0.08	23	220 – 290	0.10	27
71	220 – 332	0.08	24	220 – 290	0.10	30
80	220 – 332	0.08	25	220 – 290	0.01	29
90	220 – 332	0.21	64	220 – 290	0.28	86
100	220 – 332	0.21	66	220 – 290	0.27	86
112	220 – 332	0.23	70	220 – 290	0.27	85
132	220 – 332	0.25	74	220 – 290	0.32	96
160 - 225	220 – 322	0.49	165	220 – 290	0.52	155
Three phase high-voltage connection - (Y)						
63	380 – 575	0.04	23	380 – 500	0.05	29
71	380 – 575	0.04	25	380 – 500	0.05	30
80	380 – 575	0.04	26	380 – 500	0.05	29
90	380 – 575	0.12	62	380 – 500	0.16	82
100	380 – 575	0.12	66	380 – 500	0.16	83
112	380 – 575	0.13	70	380 – 500	0.16	82
132	380 – 575	0.14	75	380 – 500	0.18	96
160 - 225	380 – 575	0.28	165	380 – 500	0.29	155

Option FC – 115V 50/60Hz 1ph

Motor Frame	60Hz Ratings			50Hz Ratings		
	Voltage [V]	Current [A]	Power [W]	Voltage [V]	Current [A]	Power [W]
Single Phase Connection - ⊥ (Delta)						
63	100 – 135	0.23	42	100 – 135	0.30	42
71	100 – 135	0.23	47	100 – 135	0.30	44
80	100 – 135	0.27	57	100 – 135	0.30	43
90	100 – 135	0.46	102	100 – 135	0.57	78
100	100 – 135	0.53	105	100 – 135	0.54	78
112	100 – 135	0.60	115	100 – 135	0.55	80

Table 6 – Option F & FC

16. Motor Accessories Ctd.

Thermostats (Option TW and Option 2TW)

Standard connection	Series connected, one per phase
Contact	NC (Normally Closed)/ Auto Re-setting
Response Temperature (Option TW)	311 °F (155 °C) Shut-Off Device
Response Temperature (Option 2TW)	311 °F (155 °C) Shut-Off Device + 266°F (130 °C) Alarm Device
Nominal Current	1.6 Amp at 250 V
Resistance	< 50 mΩ
Switch Rebound	< 1ms
Insulation Rating	2000 VAC
Cycles	10,000 max
Lead Identification (inside terminal box)	P1 and P2 or TB1 and TB2 / 2TB1 and 2TB2

Motor thermostats or bi-metallic switches can be wired directly into the control circuit without a separate control module or tripping device. Thermostats operate on a relatively high control voltage so they are much less sensitive to voltage interference from the main power supply. Often one can run thermostat leads and motor power leads next to each other when using the appropriate shielded cable. The installer is responsible to wire the thermostats into the motor control circuit. The leads may be labeled in a variety of ways as indicated.

Thermistors (Option TF)

Standard Connection	Three devices, series connected, one per phase
Type	Positive temperature coefficient (PTC)
Transition Temperature	150°C±5 °C
Resistance	20… 500Ω (below transition) > 4 kΩ (above transition)
Reed Current	< 1mA
Max Voltage	30V
Lead Identification (inside terminal box)	P1 and P2 or TP1 and TP2

With a separate control module or tripping device (ex. Kirwan INT69) thermistors are used to sense motor overload/ over temperature conditions by converting the critical operating temperature limit into large internal resistance change. Due to their small size, heat sink construction, and high change in resistance value, minor resistance variations caused by relatively long lead runs can be tolerated. This feature also allows for one controller to be used for several temperature sensing locations. Many variable frequency drives come with on-board thermistor inputs. NORD does not supply the thermistor control module.

⚠ WARNING ⚠

Thermostats and Thermistors will automatically reset.

⚠ WARNING ⚠

All wiring must be completed by qualified personal and adhere to all local codes.

Space Heaters (Option SH)

- Connection Diagram shown on Page 9
- Space Heaters are mounted directly on the motor winding
- The leads are brought into the terminal box and labeled H1 and H2
- They require a separate voltage supply and must not be energized when the motor is energized
- The heaters will keep the winding of the motor approximately 5°C above the surrounding ambient

Table 5. Space Heater Data

Frame Size	Wattage	Voltages	Heater Strips/MTR
63 & 71	18W	110V	1
		230V	
		460V	
80	25W	110V	1
		230V	
		460V	
90 – 112	50W	110V	2
		230V	
		460V	
132-180	100W	110V	2
		230V	
		460V	
200 & 225	120W	110V	2
		230V	
		460V	

Encoder (Option IG)

- Most standard encoders will be enclosed inside the fan cover
- Incremental, Quadrature, Differential, Marker Channel
- IP66 Protection
- IG1 = 1024PPR, IG2 = 2048PPR, IG4 = 4096PPR
- TTL/RS422, HTL/Push-Pull, Line Driver.
- 5V or 10-30V available.
- Absolute encoders also available.
- Seperate encoder wiring instructions are provided by NORD.

17. Inspection

Inspect the motor after every 500 operating hours.

> ⚠ *WARNING* ⚠
>
> If it is necessary to clean the motor exterior, do not use shop air. Shop air can force contaminents into the motor and may cause parts damage or result in blowing debris causing injury.

Table 8 - Inspection Guidelines

Inspect	Check	Action
Motor Exterior	Check the external surfaces for contamination. Accumulation of dirt and fibrous deposits must be removed.	Clean the motor external surfaces using clean, lint-free cloths.
		Clean deposits from between cooling fins using a vacuum cleaner and a stiff-bristled nylon brush.
	Check the external surfaces for oil film and greasy deposits.	Clean the oil film and greasy deposits from the motor surface using clean, lint-free cloths.
		If necessary, moisten the cloth with an approved non-flammable, residue-free solvent. Do not pour solvent on the motor.
	Check for evidence of damage or overheating.	If the motor has physical damage, replace the motor.
Motor Mountings	Make sure the mounting hardware is secure.	If the mounting hardware is not secure, check the motor/gearbox alignment, and tighten the mounting hardware.
Motor Electrical Connections	Check that all electrical connections are secure.	If the electrical connections are not secure, tighten them.
	Check the electrical connections for evidence of arcing.	Loose electrical connections can cause arcing, which is evident by discoloration and charring. If you find evidence of arcing, replace the damaged connections.
Insulation Resistance	Using an ohmmeter, check and record the resistance of motor winding insulation.	Compare the current resistance reading to previous readings. If the resistance drops significantly, perform an internal inspection for insulation damage or deterioration.
Motor Brake	On motors that have a brake, use a feeler gauge to check the air gap in between the brake pad and the rotor according to the appropriate user manual.	If the air gap exceeds the maximum allowed for that brake configuration provided in the manual, adjust the air gap or replace the brake pad according to user manual U35000.

18. Parts List

If you are ordering a part, provide the model and order number (table 1, page 2) of your motor. This will determine the specific part number you need.

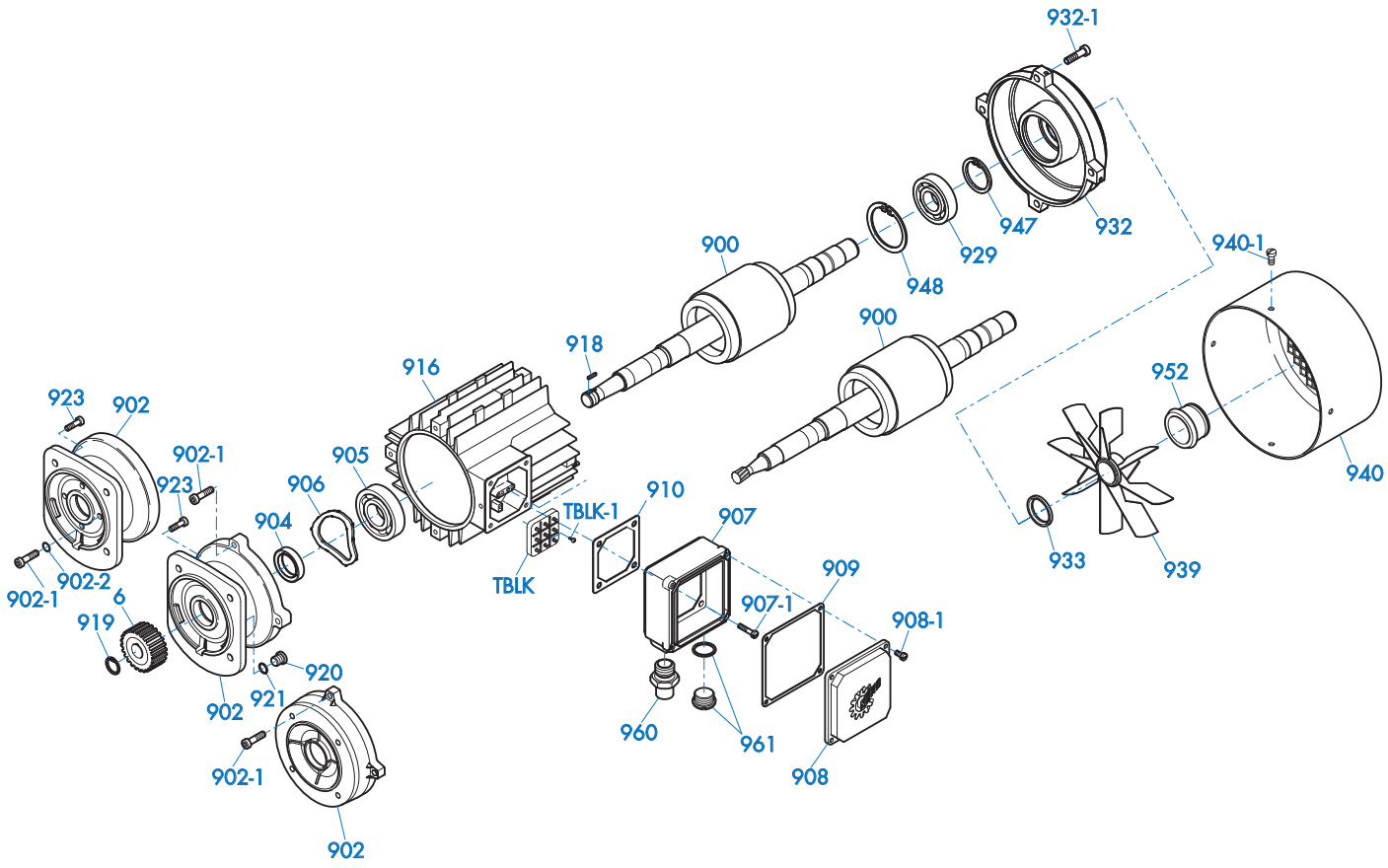

Part Number	Part Description	Qty per Assembly
6	Input Pinion	1
900	Rotor Assembly	1
902	A-Endbell	1
902-1	Screw	4
902-2	Dubo Seal	4
904	Oil Seal	1
905	Bearing	1
906	Preload Spring	1
907	Terminal Box Frame	1
907-1	Screw	4
908	Terminal Box Cover	1
908-1	Screw	4
909	Gasket - Terminal Box Frame	1
910	Gasket - Terminal Box Cover	1
916	Stator	1
918	Key	1
919	Retaining Ring	1
920	Oil Plug	1

Part Number	Part Description	Qty per Assembly
921	Gasket	1
923	Screw	4
929	Bearing	1
932	B-Endbell	1
932-1	Screw	4
933	Oil Seal	1
939	Fan	1
940	Fan Cover	1
940-1	Screw	4
947	Retaining Ring	1
948	Retaining Ring	1
952	Fan Clip	1
960	NPT Thread Adapter	1
961	Plug (includes O-ring)	1
TBLK	Terminal Block	1
TBLK-1	Screw, Terminal Block Mounting	2
	Jumper Bar (not illustrated)	AR

19. Repair

Reference the parts list drawing on page 14 for clarification.

A. Disassemble the motor according to the general exploded view in PARTS INFORMATION. Disassemble only as far as necessary to replace the failed parts.

B. Whenever the motor is disassembled, clean all dust and contamination from the motor interior using a vacuum cleaner and a soft-bristled nylon brush.

C. The following parts must be replaced if they are removed:

- Oil seal (904), Oil seal (933)
- Gasket (909), Gasket (910), Gasket (921)
- Gasket on plug (961)
- Self-locking screws (907-1, 908-1, 923, 932-1, 940-1)
- Dubo Seals (902-2)

D. If the following parts are removed, inspect them, and replace them if they are deformed or damaged:

- Retaining ring (919), Retaining ring (947), Retaining ring (948)
- Fan clip (952)

20. Removing and Replacing Integral Motors

Reference the parts list on Page 14 for clarification.

A. Disconnect the power to the electric motor. Make certain the motor is properly grounded, de-energized and secured with a lock-out/tag-out device.

B. Drain the oil from the mating gearbox, or rotate the motor/gearbox assembly so that the motor is up, to prevent oil from spilling from the gearbox when the motor is removed.

C. Support the motor and prepare it for removal. Steady the motor and support it. For larger motors, use of mechanical lifting or support devices to may be appropriate.

D. Remove the fastening screws that hold the motor to the reducer input.

IMPORTANT NOTE

Most integral motor installations have mounting bolts accessible from the motor exterior. If the bolts are not clearly visible, unbolt the input flange from the gearbox. Remove the bolts securing the motor to the reducer input flange, and discard the old DUBO sealing rings that were under the screw heads.

E. Maintain motor shaft alignment and move the motor directly away from its mounting surface until the motor shaft and mating input gear clear both the internal gear mesh and reducer input.

F. Remove and discard the old flange gasket.

G. Clean the gasket faces on the motor and gearbox, making sure no cleaning debris enters the gearbox.

H. Check the replacement motor to make sure the motor flange, motor shaft, and motor pinion are identical to the motor that was removed.

I. Place a new gasket between the gearbox and new motor.

J. Position the motor on the gearbox, making sure the input pinion meshes with the input gear. Rotate the motor as necessary to align the bolt holes and seat the motor flange. Make sure the gasket remains properly aligned and seated

K. Apply a medium strength thread locking compound to the bolt threads. Install the bolts and tighten them to the appropriate torque.

IMPORTANT NOTE

If the motor/gearbox installation uses an input flange, first mount the input flange to the motor using the four mounting bolts and NEW DUBO sealing rings under the head of each fastening screw. Make sure the fastening screws are clean and apply new thread sealant if necessary.

L. Check the gearbox oil level in accordance with the appropriate User Manual/s. If necessary fill or add oil to the gearbox.

HARMFUL SITUATION

Do not mix different types of oil!

M. Re-establish the electrical connection to the motor.

N. Observe the subsequent start-up closely to make certain the equipment is operating properly and there are no seal or gasket leaks.

21. Removing and Replacing NEMA C-Face or IEC Fange-Mounted Motors

For further clarification of these instructions, reference the parts list on Page 14 of this manual.

A. Disconnect the power to the electric motor. Make certain the motor is properly grounded, de-energized and secured with a lock-out/tag-out device.

B. Support the motor and prepare it for removal. Steady the motor and support it. For larger motors, use of mechanical lifting or support devices to may be appropriate.

C. Remove the fastening screws that hold the motor to the C-face or IEC mounting flange.

D. Maintain motor shaft alignment, and move the motor directly away from its mounting surface until the motor shaft and mating coupling clear the mounting flange surface of the driven equipment.

E. Measure and record the proper placement of the motor shaft coupling prior to removing it from the old motor.

F. Make sure the new motor shaft, key and key slot are free of all nicks, burrs, and lubrication or grease.

G. Install the new shaft key on the new motor. If the shaft key is not captured or if an open-ended key slot is utilized it is good practice to secure the key into the key slot with a medium strength thread locking agent or alternatively one may stake the key in place.

H. Re-install the coupling on the new motor shaft, making sure the placement of the coupling is in the same location as it was on the old motor (See Step E).

I. Clean all old gasket material, sealants, contamination, and corrosion from the flange surface on the driven equipment.

J. If the motor is utilized in a wet or wash down environment apply a sealing gasket or gasket eliminating compound to the mating flange surface, as would seem most appropriate for the application.

K. Support the new motor and mount it flush against the mating flange surface of the driven equipment.

L. Apply a medium strength thread locking agent to the bolt threads.

M. Install the bolts and tighten them to the appropriate torque.

N. Re-establish the electrical connection to the motor.

O. Observe the subsequent start-up closely to make certain the equipment is operating properly.

22. Testing

IMPORTANT NOTE

NORD electric motors do not require periodic testing. However, if a motor is removed from its installation, NORD recommends that the motor be checked according to the following static and dynamic testing procedures before it is reinstalled. Finding a condition that will require future repair before the motor is reinstalled decreases the overall maintenance time.

This section provides general test information and functional checks for the types of motors covered by this manual. Read and understand the tests and checks before performing them on your motor.

Record and date all measurements taken.

If the motor fails any of the test procedures provided below, use the troubleshooting guide to determine the motor problem.

Static Testing

A. The motor can only be static tested if it is disconnected from the component it drives and securely mounted on a fixture or mounting plate. These tests are usually conducted when a motor has been removed for any reason other than failure

B. Turn the motor shaft slowly by hand. Feel and listen for evidence of a failed bearing, which is indicated by a rough feel as the shaft rotates, and by noise.

C. Check for smooth rotation, with no evidence of binding or catching. If the shaft does not rotate smoothly, or binds or catches, the bearings are worn or failing, lack lubrication, or are contaminated.

D. Check the motor shaft for side play by applying pressure at right angles to the shaft in several places around the circumference. If the shaft moves perceptibly, the front bearing may be worn.

Dynamic Testing

A. Find the motor voltage and rated load current values as listed on the motor nameplate.

B. Using a volt-ohmmeter, verify that the motor power supply is in the correct range.

C. Run the motor with no load. As the motor is operating, listen for unusual motor noise and check for excessive vibration. Vibration and motor noise are indications of bearing contamination, lack of lubrication, damage, or failure.

D. Use an ammeter to measure the no-load current. Record the no-load current for comparison with previous readings, and for reference during future testing.

E. If the motor passes the no-load test, operate the motor at rated load and check and record the current.

F. Check the motor operating temperature at rated load. If the motor operates at a higher than normal temperature, the motor may be damaged, overloaded or failing.

23. Troubleshooting

Fault	Likely Cause	Corrective Action
Motor fails to start.	• Motor is mis-wired • Brake is may not be releasing. • Fan guard damaged and contacting fan. • Motor protection device has tripped or does not switch • 1-Ph Capacitor or start switch has failed.	• Verify and correct motor wiring. • Troubleshoot brake per User Manual U35000. • Replace damaged fan guard. • Check motor protection device for correct setting and correct error. • Discharge capacitor and use a volt-ohm meter to check the capacitor for an open circuit - replace if needed. Inspect switch and connections. Replace if contacts look burned or pitted.
Fuses blow or motor protection faults immediately.	• Short circuit in line. • Lines connected incorrectly. • Fuse or circuit breaker tripped. • Motor is overloaded or equipment jammed. • Stator is shorted or went to ground.	• Rectify short circuit. • Check circuit diagram and make corrections. • Replace fuse or circuit breaker. • Make sure load is free. Verify motor amp draw compared to nameplate rating. • A damaged or blown stator will show a burn mark. Stator must be repaired or replaced.
Motor hums and has high current consumption	• Brake may not be releasing. • Rotor may be rubbing stator. • Defective or incorrect stator winding.	• Troubleshoot brake per User Manual U35000. • Send motor to a repair specialist.
Severe speed loss under load or excessive acceleration time.	• Overload. • Excessive voltage drop. • Damaged or failing motor bearings. • Damaged or worn gear unit. • 1-Ph Capacitor or start switch has failed.	• Check load conditions and make certain system is unobstructed. Reduce load or consider a larger motor. • Verify service voltage is within specification. Check if nearby equipment is affecting incoming power. Make sure connection harness and wiring is adequate. • Replace motor bearings. • Replace or repair damaged gear unit. • See instructions under "Motor fails to start".
Motor runs the incorrect direction.	• Incorrect wiring.	• Rewire motor according to system schematic and/or switch two incoming motor phases.
Motor heats up excessively or thermal overload protection trips	• Overload. • Ambient temperature is too high. • Inadequate cooling. • Operation is outside the allowed duty cycle. • Motor protection device may be defective. • Excessive supply voltage. • System short or damaged stator.	• Make sure load is free. Verify motor amp draw compared to nameplate rating. Reduce load or consider a larger motor. • Do not operate above the rated conditions. • Correct cooling air supply. Open and clear cooling air passages. Retrofit with forced ventilator fan if needed. • Adjust operating duty cycle or contact a specialist to select a suitable motor or drive. • Replace motor protection device. • Adapt motor supply voltage. • Check for loose, cut or damaged wires. Check stator winding for defects or burn damage.
Excessive Noise or Vibration	• Motor bearings contaminated or damaged. • Excessive motor shaft end play. • Misaligned or imbalanced load.	• Test motor by itself. If bearings are bad noise may be heard or roughness detected. Replace bearings. Add lubrication if bearings have grease fittings. • Check shaft endplay with motor and system power disconnected. If shaft movement is excessive replace motor shaft bearings. • Check all mating shaft connections for proper alignment and correct all imbalanced load conditions.
1 Ph Start Capacitor Failures	• Motor is not coming up to speed quickly enough. • Motor is being cycled frequently • Start switch is defective or damaged.	• Verify motor size to load conditions. Motor should come up to speed in no more than 2-3 seconds. • Verify duty cycle and consult specialist for recommendations. • Replace start switch.
1 Ph Run Capacitor Failures	• Possible power surge to motor caused by transient voltage or lightening. • Excessive ambient temperature.	• Install proper surge protection. • Verify ambient conditions do not exceed nameplate value.

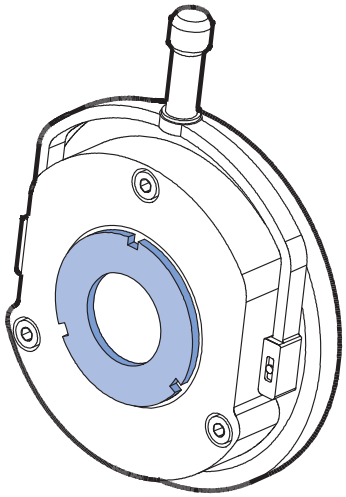

General Instructions

This manual describes general operating and maintenance guidelines for a majority of brake products shipped by NORD Gear. This instruction manual is not intended to include a comprehensive listing of all details or procedures required for installation, operation and maintenance.

Brakes covered in this manual are manufactured by PRECIMA. Please feel free to contact NORD with any questions about the supplied brake components.

Safety Notice

Only qualified personnel should attempt installation, operation and maintenance of NORD brakes. Read this manual in its entirety before operating, commissioning, servicing, or assembling the motor brake. If you have a question about a procedure or are uncertain about any detail, seek clarification and DO NOT PROCEED!

⚠ WARNING ⚠

- This equipment contains high electrical voltage. Remove and lockout all power from the electric motor and brake before any work is completed on the brake.
- The user is responsible for conforming to all national and local electrical and safety codes. Wiring practices, proper grounding, disconnects, and over current protection, are of particular importance.
- Make certain the load is supported when servicing the brake. Removing power from the brake or removing the brake from the motor will release the load, which may cause severe injury or death.
- Failure to follow proper procedures and precautions may result in severe bodily injury or death.

Brake Operation

The standard NORD motor brake is “spring-set”. When power is removed and the brake is de-energized (power-off), the brake springs exert a force against the armature plate in turn preventing the brake rotor (or brake disc) from rotating. When the brake coil is energized (power-on), a magnetic field builds and pulls the armature plate across the air gap to the brake casing, which releases the brake rotor and allows the motor shaft to rotate.

Figure 1: Basic Brake Operation

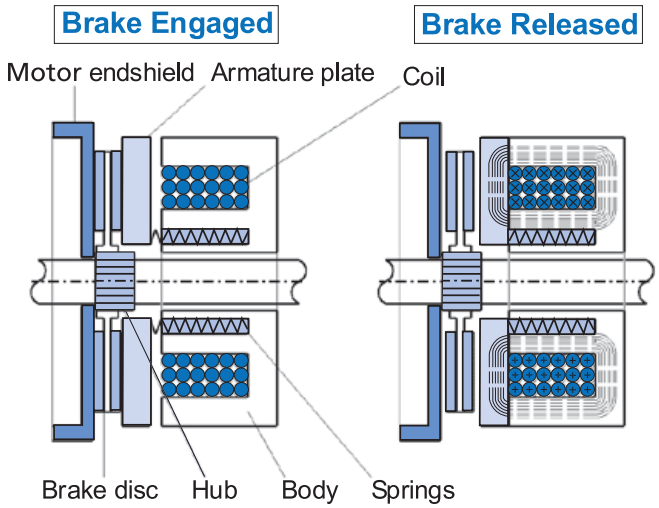

NORD brakes are DC voltage brakes and in most instances are supplied with a motor mounted brake rectifier for easy connections to AC power. AC power is taken directly from the power line or from the terminal block of the motor and converted to DC by the supplied rectifier.

IMPORTANT NOTE

If the motor is connected to a frequency inverter, soft start, or is a two-speed motor, the AC power must be supplied to the brake rectifier separately from the motor power.

Advantages

- Each NORD motor frame size has a number of brake sizes available, with different torque capacities.
- Brake torque adjustments are possible by changing the brake spring combinations. In addition, brake sizes from 5-40 Nm (3.7-30 lb-ft) are typically supplied with an additional spanner-nut adjustment on the back of the brake.
- NORD brakes provide a high degree of safety because when power is removed the brake will automatically set to hold the load.
- The brake rotor or brake disc is environmentally safe and asbestos-free.
- The connection between the rectifier and the brake coil is completed at the factory and the brake air-gap is factory-set but can be adjusted in the event of wear.

General Selection Considerations

As indicated in the NORD catalog, each NORD motor can be supplied with a number of brake torque sizes.

NORD relies on the equipment builder to specify appropriate brake sizing for their application, while giving consideration to the following:

- For most applications, we advise sizing the brake to 1.5 - 2 times the motor rated torque.
- For vertical applications, it may be advisable to size the brake size up to 3 times the motor rated torque.
- For some applications, it may be necessary to specify a reduced brake torque setting to prevent excessive peak load conditions developed at the reducer output.
- On travel drive applications, excessive brake torque may lead to wheel skid; in addition on crane applications excess hoist-cable swing can result.

⚠ CAUTIONS ⚠

- **Brake torque -** The brake torque is measured with a mean friction radius of the brake pad surface with a circumferential speed of 1m/sec (197 fpm).
- **Brake torque tolerance -** For different applications and operating conditions, brake torque can vary from +40/-20% compared to the rated brake torque.
- **Hoisting (lifting/lowering) applications -** must have the brake wired for fast response (DC-switching)
- **Initial operation & wear-in period -** In new condition, the brake will have a reduced torque of up to 30%. In order to achieve full rated brake torque, a short run-in period is required. The run in time will vary depending on system loads.
- **The brake rotor or brake pad -** must be protected against foreign matter, oil and grease. Contaminants of this type can greatly influence wear and reduce breaking torque.

Brake Torque Adjustment

Brake torque adjustments are possible by changing the brake spring combinations or by removing springs (Table 1).

In addition, brake sizes from 5-40 Nm (3.7-30 lb-ft) are typically supplied with a threaded adjustment nut or spanner nut to allow for additional fine torque adjustments of the brake. The braking torque can be adjusted by unscrewing the spanner nut a number of turns or "clicks" with a spanner wrench (Table 2).

Table 1a: Brake Torque Reduction - Spring Removal

"Brake Size"	7 Springs		5 Springs		3 Springs	
	[Nm]	[lb-ft]	[Nm]	[lb-ft]	[Nm]	[lb-ft]
BRE 5	5	3.7	3.5	2.6	2	1.5
BRE10	10	7.4	7	5.2	4	3.0
BRE20	20	14.8	14	10.3	8	5.9
BRE40	40	29.5	28	20.7	17	12.5
BRE60	60	44.3	43	31.7	26	19.2
BRE100	100	73.8	70	51.6	42	31.0
BRE150	150	111	107	78.9	65	47.9

On brake sizes 5-150 Nm (3.7-111 lb-ft) full brake torque is achieved with all (7) springs. The brake springs are placed in such a manner where there are (3) inner and (4) outer springs. When adjusting the brake torque, start by removing the outer springs at opposite corners to prevent uneven brake wear.

Table 1b: Brake Torque Reduction - Spring Removal

"Brake Size"	8 Springs		6 Springs		4 Springs	
	[Nm]	[lb-ft]	[Nm]	[lb-ft]	[Nm]	[lb-ft]
BRE250	250	184	187	138	125	92
BRE400	400	295	300	221	200	148
BRE800	800	590	600	443	400	295
BRE1200	1200	885	900	664	600	443

On brake sizes 250-1200 Nm (184-885 lb-ft) full brake torque is achieved with all (8) springs. The brake springs are placed in such a manner where there are (4) inner and (4) outer springs. When adjusting the brake torque, start by removing the outer springs at opposite corners to prevent uneven brake wear.

Table 2: Spanner Nut Adjustment

"Brake Size"	Torque Reduction*		Max. Turns	Minimum Torque✹	
	[Nm]	[lb-ft]		[Nm]	[lb-ft]
BRE 5	0.2	0.15	6	0.8	0.59
BRE10	0.2	0.15	12	1.6	1.18
BRE20	0.3	0.22	12	4.4	3.25
BRE40	1	0.74	9	8.0	5.90

✹ **With the minimum number of springs and maximum number of turns to the spanner nut.**

* **Per each turn of the spanner nut**

Brake sizes from 5-40 Nm (3.7-30 lb-ft) are typically supplied with a threaded adjustment nut or spanner nut. Additional fine torque adjustment can be made by unscrewing the spanner nut a number of turns or "clicks" with a spanner wrench.

Brake Control Rectifiers

NORD brake control rectifiers convert AC voltage to DC voltage. Rectifiers are used because most applications require AC voltage to power the motor, but DC power is required to power the brake and DC power is not typically available. NORD brake motors typically include the rectifier located inside the terminal box.

Rectifier Advantages

- Individual power source for each brake.
- Compact size, mounted inside the terminal box.
- Multiple types, voltage options and release/engagement modes available.
- Mountable in a separate control cabinet.
- Integral protection against voltage spikes.

Model	Type	Part No.	Color	Input Voltage V_{AC} ± 10%	Rated Current A_{DC} (40°C)	Rated Current A_{DC} (75°C)
GVE20L	Full-wave	19141000	Black	110-275	1.5	1.0
GVE20V	Full-wave	19141030	Black	110-275	1.5	1.0
GHE40L	Half-wave	19141010	Yellow	200-480	2.0	1.0
GHE40V	Half-wave	19141040	Yellow	200-480	2.0	1.0
GHE50L	Half-wave	19141020	Gray	200-575	2.0	1.0
GHE50V	Half-wave	19141050	Gray	200-575	2.0	1.0
GUE40V	Dual-wave	19140300	Black	230-460	0.7	0.5
PMG500	Push-Hybrid	19140200	Black	200-500	4.0	2.8

Rectifier electronics are sealed for moisture-protection; electronics on models ending with the suffix "V" are resin-encapsulated to provide added protection if water should get into the motor terminal box.

Rectifier Types

Full-wave rectifier [GVE]:
A rectifier in which both the positive and negative half-cycles of the AC input signal are rectified to produce a uni-directional DC current supply to the load or the brake. The output voltage is 90% of the input voltage ($V_{DC} = 0.90 \times V_{AC}$).

Half-wave rectifier [GHE]:
A rectifier in which only alternate half-cycles of the AC input signal are rectified to produce a uni-directional DC current supply to the load or the brake. The output voltage is 45% of the input voltage ($V_{DC} = 0.45 \times V_{AC}$).

Dual Wave Rectifier [GUE]
A rectifier that can be wired as either a full-wave rectifier or a half-wave rectifier depending upon how it is connected to the AC input signal.

IMPORTANT NOTE

If the motor is connected to a frequency inverter, soft start, or is a two-speed motor, then seperate AC power must be supplied to the brake rectifier.

Rectifier Types [Ctd.]

PMG 500 Push-Hybrid rectifier [PMG]:
A fast-acting or push-hybrid brake rectifier provides an initial "push" in the form of a timed full-wave brake-release function, which is then followed by a continuous half-wave brake-holding function. There are two ways to apply these rectifiers as follows:

- "Overexcitation" of the brake coil provides faster brake release or improved cycling capacity. The DC voltage of the brake coil is determined based upon using a half-wave rectifier. The output voltage is 45% of the input voltage ($V_{DC} = 0.45 \times V_{AC}$).
- "Reducer-Power Holding" of the brake coil maintains the brake in a released state by using only 25% of the power needed for the initial brake release. This results in very fast brake stopping. The DC voltage of the brake coil is determined based upon using a full-wave rectifier. The output voltage is 90% of the input voltage. ($V_{DC} = 0.90 \times V_{AC}$).

NORD offers additional fast-acting rectifiers besides the PMG 500. For additional details please reference User Manual U35100 – Fast Acting Brake Rectifiers.

IMPORTANT NOTE

In order to prevent rapid wear, the PMG 500 rectifier is required when utilizing the larger 800 Nm (590 lb-ft) and 1200 Nm (885 lb-ft) twin-rotor brakes. The PMG 500 rectifier is wired to "overexcite" the brake during its initial release.

Brake Switching Options

The rectifiers discussed in this manual can be wired to allow brake switching at either the AC power source (input) or the DC power source (output).

- AC switching allows the brake rectifier to be powered directly from the motor's terminal block with no additional wiring. However, this provides a slower brake stopping time due to the additional time needed to de-energize or collapse the motor's magnetic field.
- DC switching directly interrupts the current flow in the DC circuit of the brake rectifier. This method of brake switching guarantees faster brake stopping or brake engagement times.

WARNING

When the moving system undergoes a change in height (such as in a lift or incline conveyor application) or if the system tends to speed up or overhaul during normal operation, then DC-switching of the brake is required in order to prevent excessive load movement, drift or falling loads during stopping.

Figure 2.1: GVE/GHE Dimensions

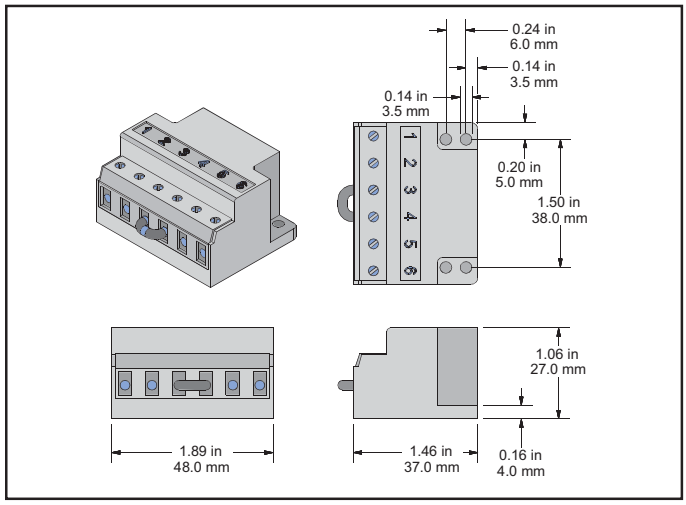

Figure 3.1: GUE Dimensions

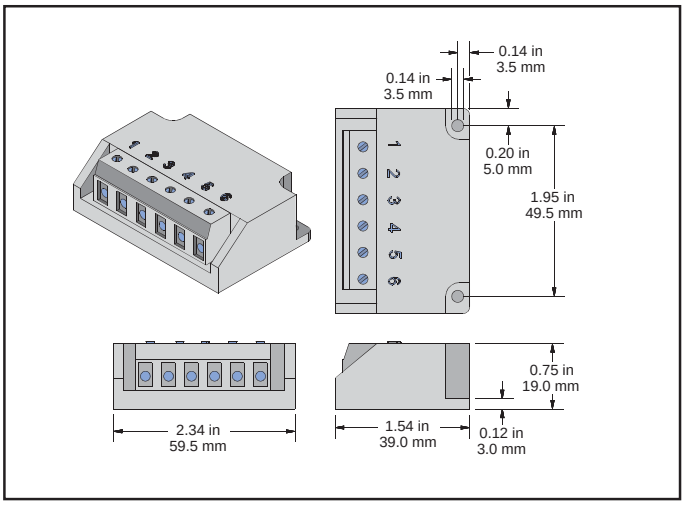

Figure 2.2: GVE/GHE Braking Methods

STANDARD STOPPING AC-SWITCHING

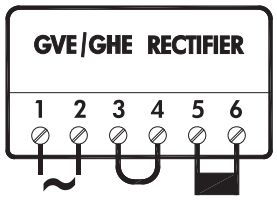

1 & 2	3 & 4	5 & 6
AC BRAKE VOLTAGE	JUMPER	DC BRAKE

FAST STOPPING DC-SWITCHING

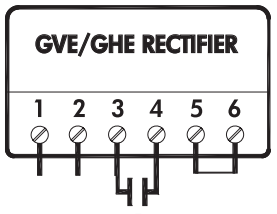

1 & 2	3 & 4	5 & 6
AC BRAKE VOLTAGE	NORMALLY OPEN CONTACT	DC BRAKE

* The normally open contact/s (NO) is not supplied by NORD it must close at the same time power is supplied to the brake. The contact must be capable of switching inductive loads and/or be rated at IEC AC3.

Braking Method	Break Release (Start)	Brake Engage (Stop)	Power Source
10	Standard	Standard (AC-Switching)	Motor terminals
15	Standard	Fast (DC-switching)	Motor terminals
20	Standard	Standard (AC-Switching)	Separate power
25	Standard	Fast (DC-switching)	Separate power

Figure 3.2: GVE/GHE Braking Methods

STANDARD STOPPING AC-SWITCHING

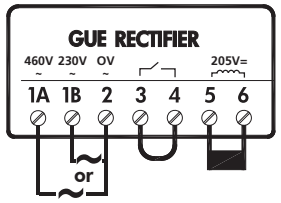

1B & 2	3 & 4	5 & 6
AC BRAKE VOLTAGE	JUMPER	DC BRAKE

FAST STOPPING DC-SWITCHING

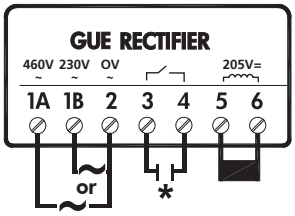

1 & 2	3 & 4	5 & 6
AC BRAKE VOLTAGE	NORMALLY OPEN CONTACT	DC BRAKE

* The normally open contact/s (NO) is not supplied by NORD it must close at the same time power is supplied to the brake. The contact must be capable of switching inductive loads and/or be rated at IEC AC3.

Braking Method	Break Release (Start)	Brake Engage (Stop)	Power Source
10	Standard	Standard (AC-Switching)	Motor terminals
15	Standard	Fast (DC-switching)	Motor terminals
20	Standard	Standard (AC-Switching)	Separate power
25	Standard	Fast (DC-switching)	Separate power

Figure 4.1: PMG 500 Dimensions

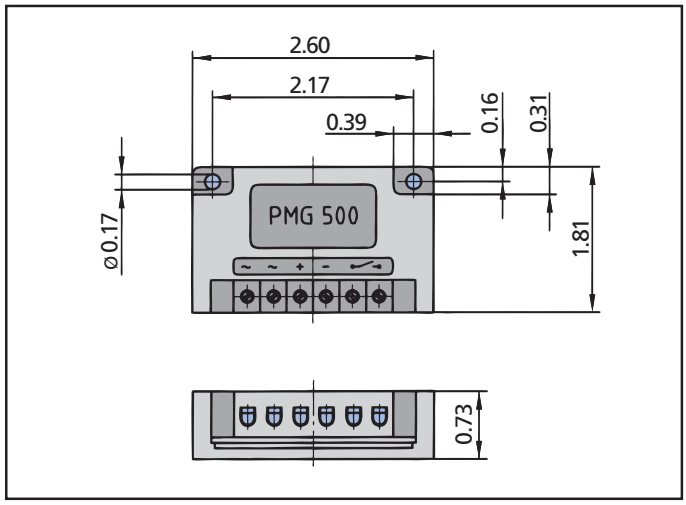

PMG 500 Push-Hybrid Rectifier

The PMG 500 rectifier provides an initial "push" the form of a timed full-wave brake-release function, which is then followed by a continuous half-wave brake-holding function.

- In order to prevent rapid wear, the PMG 500 rectifier is required when utilizing the larger 800 Nm (590 lb-ft) - and 1200 Nm (885 lb-ft) twin-rotor brakes.
- The PMG 500 rectifier is wired to "overexcite" the brake during its initial release. The DC voltage of the brake coil is determined based upon using a half-wave rectifier.

In some applications the PMG rectifier may be used for "Reduced Power Holding" or very fast brake engagement (See user manual U35100 for details).

IMPORTANT NOTE

If the motor is connected to an AC drive, soft start, or is a two-speed motor, the AC power must be supplied to the brake rectifier seperately from the motor power.

Figure 4.2: PMG 500 Braking Methods

STANDARD STOPPING (AC-SWITCHING)

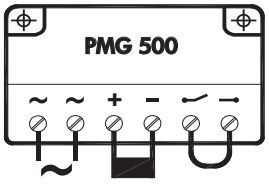

~ & ~	+ & -	⊷ & ⊸
AC BRAKE VOLTAGE	DC BRAKE	JUMPER

FAST & VERY FAST STOPPING (DC-SWITCHING)

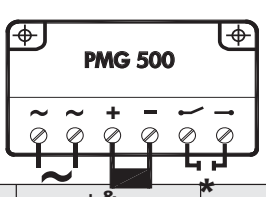

~ & ~	+ & -	⊷ & ⊸
AC BRAKE VOLTAGE	DC BRAKE	NORMALLY OPEN CONTACT

* The normally open contact/s (NO) is not supplied by NORD it must close at the same time power is supplied to the brake. The contact must be capable of switching inductive loads and/or be rated at IEC AC3.

Braking Method	Break Release (Start)	Brake Engage (Stop)	Power Source
30	Fast (Overecitation)	Standard (AC Switching)	Motor terminals
35	Fast (Overecitation)	Fast (DC Switching)	Motor terminals
45	Fast (Overecitation)	Standard (AC Switching)	Seperate power
50	Fast (Overecitation)	Fast (DC Switching)	Seperate power

BRAKE SIZE: BRE 5 **BRAKE TORQUE: 5 Nm (3.7 lb-ft) max.**

NORD Brake P/N	Half-Wave [V_{AC}]	Half-Wave [A_{AC}]	Full-Wave [V_{AC}]	Full-Wave [A_{AC}]	P_C [W]	V_C [V_{DC}]	I_C [A_{DC}]	R_C [Ω]
19010212	-	-	-	-	22	24	0.92	26.0
19010912	230	0.09	115	0.19	22	105	0.21	500
19011902	400	0.05	200	0.11	22	180	0.12	1475
19011912	460	0.05	230	0.10	22	205	0.11	1900
19012212	500	0.04	250	0.08	21	225	0.09	2450
19012512	575	0.04	-	-	22	250	0.09	2850

BRAKE SIZE: BRE20 **BRAKE TORQUE: 20 Nm (15 lb-ft) max.**

NORD Brake P/N	Half-Wave [V_{AC}]	Half-Wave [A_{AC}]	Full-Wave [V_{AC}]	Full-Wave [A_{AC}]	P_C [W]	V_C [V_{DC}]	I_C [A_{DC}]	R_C [Ω]
19030222	-	-	-	-	34	24	1.42	16.9
19030922	230	0.18	115	0.35	41	105	0.39	270
19031922	400	0.09	200	0.17	34	180	0.19	950
19031932	460	0.07	230	0.13	30	205	0.15	1391
19032222	500	0.07	250	0.15	36	225	0.16	1391
19032522	575	0.06	-	-	35	250	0.14	1780

BRAKE SIZE: BRE 60 **BRAKE TORQUE: 60 Nm (44 lb-ft) max.**

NORD Brake P/N	Half-Wave [V_{AC}]	Half-Wave [A_{AC}]	Full-Wave [V_{AC}]	Full-Wave [A_{AC}]	P_C [W]	V_C [V_{DC}]	I_C [A_{DC}]	R_C [Ω]
19050252	-	-	-	-	52	24	2.18	11.0
19050952	230	0.27	115	0.54	63	105	0.60	174
19051902	400	0.13	200	0.27	54	180	0.30	602
19051952	460	0.12	230	0.25	57	205	0.28	740
19052252	500	0.10	250	0.20	50	225	0.22	1004
19052552	575	0.09	-	-	48	250	0.19	1300

BRAKE SIZE: BRE 150 **BRAKE TORQUE: 150 Nm (110 lb-ft) max.**

NORD Brake P/N	Half-Wave [V_{AC}]	Half-Wave [A_{AC}]	Full-Wave [V_{AC}]	Full-Wave [A_{AC}]	P_C [W]	V_C [V_{DC}]	I_C [A_{DC}]	R_C [Ω]
19070252	-	-	-	-	77	24	3.20	7.5
19070952	230	0.39	115	0.79	92	105	0.88	120
19071902	400	0.18	200	0.36	73	180	0.40	445
19071952	460	0.15	230	0.31	70	205	0.34	600
19072252	500	0.15	250	0.30	76	225	0.34	670
19072552	575	0.14	-	-	76	250	0.30	825

BRAKE SIZE: BRE 400 **BRAKE TORQUE: 400 Nm (295 lb-ft) max.**

NORD Brake P/N	Half-Wave [V_{AC}]	Half-Wave [A_{AC}]	Full-Wave [V_{AC}]	Full-Wave [A_{AC}]	P_C [W]	V_C [V_{DC}]	I_C [A_{DC}]	R_C [Ω]
19092252	-	-	-	-	144	24	6.00	4.0
19092952	230	0.62	115	1.24	145	105	1.38	76
19093902	400	0.35	200	0.70	141	180	0.78	230
19093952	460	0.31	230	0.62	140	205	0.68	300
19093962	500	0.29	250	0.57	143	225	0.63	355
19093972	575	0.26	-	-	142	250	0.57	440

BRAKE SIZE: BRE 1200 **BRAKE TORQUE: 1200 Nm (885 lb-ft) max. ❷**

NORD Brake P/N	Half-Wave [V_{AC}]	Half-Wave [A_{AC}]	Full-Wave [V_{AC}]	Full-Wave [A_{AC}]	P_C [W]	V_C [V_{DC}]	I_C [A_{DC}]	R_C [Ω]
19099802	**230**	**0.62**	**-**	**-**	**145**	**105**	**1.38**	**76**
19099902	**400**	**0.27**	**-**	**-**	**108**	**180**	**0.60**	**300**
19099902	**460**	**0.31**	**-**	**-**	**140**	**205**	**0.68**	**300**

BRAKE SIZE: BRE 10 **BRAKE TORQUE: 10 Nm (7.4 lb-ft) max.**

NORD Brake P/N	Half-Wave [V_{AC}]	Half-Wave [A_{AC}]	Full-Wave [V_{AC}]	Full-Wave [A_{AC}]	P_C [W]	V_C [V_{DC}]	I_C [A_{DC}]	R_C [Ω]
19020222	-	-	-	-	28	24	1.17	20.6
19020922	230	0.14	115	0.28	33	105	0.32	332
19021902	400	0.07	200	0.15	29	180	0.16	1100
19021922	460	0.06	230	0.11	26	205	0.13	1620
19022222	500	0.06	250	0.12	30	225	0.13	1700
19022522	575	0.05	-	-	27	250	0.11	2323

BRAKE SIZE: BRE40 **BRAKE TORQUE: 40 Nm (30 lb-ft) max.**

NORD Brake P/N	Half-Wave [V_{AC}]	Half-Wave [A_{AC}]	Full-Wave [V_{AC}]	Full-Wave [A_{AC}]	P_C [W]	V_C [V_{DC}]	I_C [A_{DC}]	R_C [Ω]
19040232	-	-	-	-	41	24	1.69	14.2
19040932	230	0.21	115	0.42	49	105	0.46	226
19041902	400	0.11	200	0.22	45	180	0.25	723
19041922	460	0.11	230	0.22	50	205	0.24	840
19042232	500	0.09	250	0.18	44	225	0.20	1150
19042532	575	0.08	-	-	44	250	0.18	1425

BRAKE SIZE: BRE 100 **BRAKE TORQUE: 100 Nm (74 lb-ft) max.**

NORD Brake P/N	Half-Wave [V_{AC}]	Half-Wave [A_{AC}]	Full-Wave [V_{AC}]	Full-Wave [A_{AC}]	P_C [W]	V_C [V_{DC}]	I_C [A_{DC}]	R_C [Ω]
19060252	-	-	-	-	80	24	3.33	7.2
19060952	230	0.39	115	0.79	92	105	0.88	120
19061902	400	0.21	200	0.42	83	180	0.46	390
19061952	460	0.20	230	0.40	91	205	0.44	464
19062252	500	0.16	250	0.32	79	225	0.35	643
19062552	575	0.14	-	-	79	250	0.31	795

BRAKE SIZE: BRE 250 **BRAKE TORQUE: 250 Nm (185 lb-ft) max.**

NORD Brake P/N	Half-Wave [V_{AC}]	Half-Wave [A_{AC}]	Full-Wave [V_{AC}]	Full-Wave [A_{AC}]	P_C [W]	V_C [V_{DC}]	I_C [A_{DC}]	R_C [Ω]
19080252	-	-	-	-	99	24	4.14	5.8
19080952	230	0.51	115	1.03	120	105	1.14	92
19081902	400	0.27	200	0.54	108	180	0.60	300
19081952	460	0.24	230	0.49	111	205	0.54	380
19082252	500	0.20	250	0.40	100	225	0.44	507
19081962	575	0.17	-	-	95	250	0.38	655

BRAKE SIZE: BRE 800 **BRAKE TORQUE: 800 Nm (590 lb-ft) max. ❶**

NORD Brake P/N	Half-Wave [V_{AC}]	Half-Wave [A_{AC}]	Full-Wave [V_{AC}]	Full-Wave [A_{AC}]	P_C [W]	V_C [V_{DC}]	I_C [A_{DC}]	R_C [Ω]
19094252	-	-	-	-	144	24	6.00	4.0
19094952	230	0.62	-	-	145	105	1.38	76
19095902	400	0.27	-	-	108	180	0.60	300
19095902	460	0.31	-	-	140	205	0.68	300
19095962	500	0.29	-	-	143	225	0.63	355

IMPORTANT NOTE

The PMG500 rectifier is required when utilizing the larger 800 Nm (590 lb-ft) - and 1200 Nm (885 lb-ft) twin-rotor brakes. In order to prevent rapid wear, NORD recommends using the PMG500 rectifier to "overexcite" the brake during its release. The brake coil should be sized utilizing the PMG rectifier like a half-wave rectifier.

Half-Wave [V_{AC}] = AC supply voltage with half-wave rectifier

Half-Wave [A_{AC}] = AC supply current to half-wave rectifier

Full-Wave [V_{AC}] = DC supply voltage with full-wave rectifier

Full-Wave [A_{AC}] = AC supply current to full-wave rectifier

Pc [W] = Power to brake coil

Vc [V_{DC}] = DC brake coil voltage (range -30% to +10%)

Ic [A_{DC}] = DC current top brake coil

Rc [V] = Brake coil resistance (±5%)

❶ When used as a stopping brake, evaluation of brake work is essential.

❷ Designed as a holding brake or emergency stop brake only.

Brake coil data based upon ambient conditions of 20°C (68°F).

General Maintenance

Brake Air Gap

In order to obtain optimal brake performance and maximum brake life, it is necessary to periodically check and reset the brake air gap. As the brake rotor wears and decreases in thickness, the air gap will increase. If the air gap is too large, the brake coil may not have enough magnetic force to pull the metal armature disc across the gap and the brake will drag.

IMPORTANT NOTE

When a complete brake motor is supplied by NORD, the air gap is already set at the factory. If the brake is ordered as a part, the air gap must be set in the field. All brake air gap adjustments must be made with the brake assembled onto the motor and power off (brake engaged).

Hand Release Lever (HL)

It is common to supply the NORD brake with a hand release lever assembly. The hand release lever allows the brake to be manually released without requiring that the brake be energized with voltage. The lever has a spring return that allows the brake to be hand released and returned automatically to its set position. The handle of the hand release lever can be unscrewed for easy removal.

Figure 5

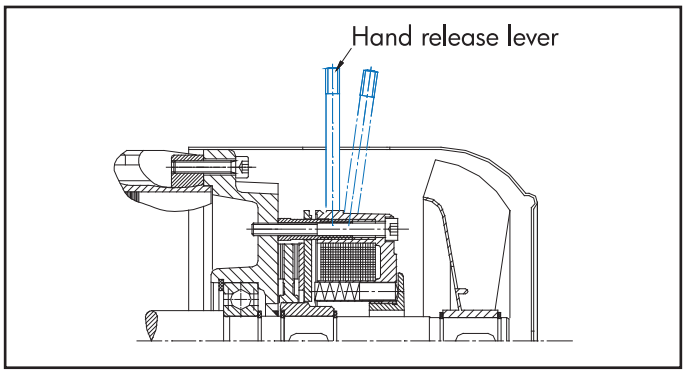

IMPORTANT NOTE

When a brake motor with hand-lever is supplied by NORD, both the hand lever air gap and brake air gap are set at the factory. When ordered as parts, proper hand-lever and air gap adjustments must be made in the field. Hand-lever adjustments must always be made prior to assembling the brake to the motor. All brake air gap adjustments must be made with the brake assembled to the motor and the power off (brake engaged).

Brake Hand-Lever Installation and Adjustment

Figure 6

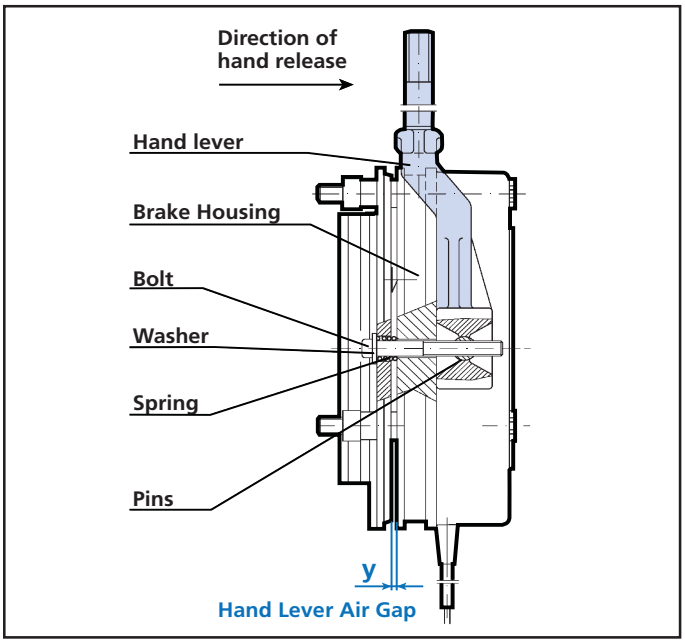

1. Place the hand-lever over the brake housing (as shown) and align the pins.
2. Screw the bolts with washer and spring into the pins.
3. Using a feeler gage, adjust the hand-lever air gap per Table 5.

Table 5: Hand-Lever Air Gap Setting

Brake Size	Dimension "y" ❶ [mm]	[in]	Brake Size	Dimension "y" ❶ [mm]	[in]
BRE 5	1	0.040	BRE 100	1.2	0.047
BRE 10	1	0.040	BRE 150	1.2	0.047
BRE 20	1	0.040	BRE 250	1.5	0.059
BRE 40	1	0.040	BRE 400	1.5	0.059
BRE 60	1	0.040	BRE 800	1.5	0.059
			BRE 1200	1.5	0.059

❶ Tolerance: + 0.008 in [+ 0.2 mm]

IMPORTANT NOTE

When setting the hand-lever gap or dimension "y" the magnetic brake coil housing and the anchor plate must be kept uniform all around.

WARNING

- To assure proper assembly and proper functioning of the brake, the hand-lever must be assembled to the brake, and the hand-lever air gap must be adjusted, before the brake is assembled to the motor.
- Once adjusted properly, the hand-lever air gap setting should not be altered, even when readjusting the air gap setting.

Setting the Brake Air Gap

NORD spring-loaded brakes are virtually maintenance free. However, the air-gap of the brake rotor or brake disc must be periodically checked and adjusted. If necessary, the worn brake rotor must be replaced. Table 6 serves as guide to check and set the brake air gap as needed.

IMPORTANT NOTE

When a complete brake motor is supplied by NORD, the air gap is already set at the factory. If the brake is ordered as a part, the air gap must be set in the field. All brake air gap adjustments must be made with the brake assembled to the motor and the power off (brake engaged).

The brake air gap is checked by placing a feeler gage between metal anchor plate and the brake coil housing as shown in Figure 6. This procedure is identical even for the larger BRE800 and BRE1200 twin rotor brakes.

Figure 7 – Setting the Brake Air Gap

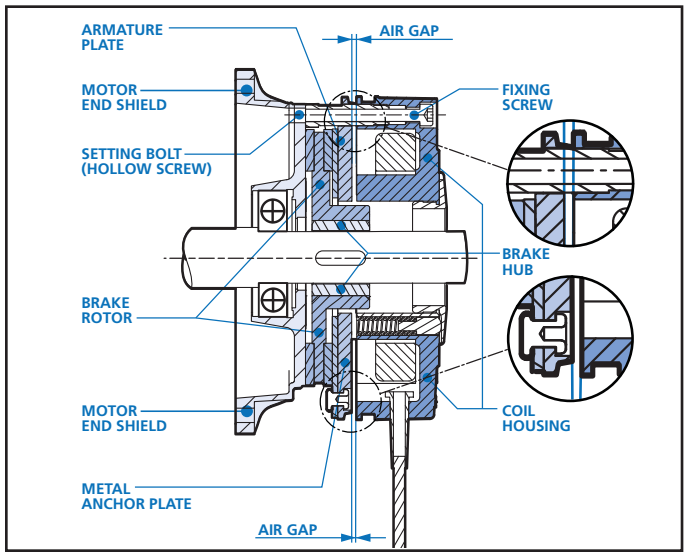

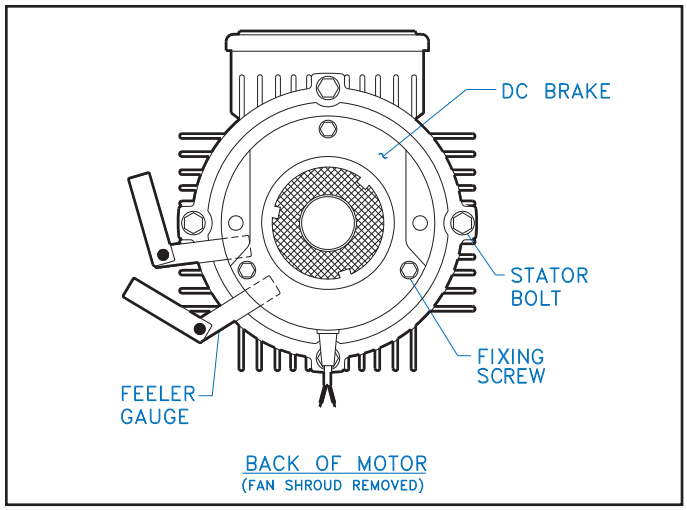

Procedure

1. Loosen the fixing screws that attach the brake to the motor's end-shield by approximately half a turn.
2. If required, the brake assembly may be loosened slightly from the motor's end shield by turning the threaded setting bolts (hollow screws) that surround the fixing screws, counter clockwise, into the brake coil housing.
3. Depending upon whether or not the air gap needs to be decreased or increased, turn the fixing screws accordingly until the desired nominal air gap (Table 6) is reached, as measured using the appropriate feeler gauge.
   - Turning the fixing screws clockwise allows the brake coil housing to be moved towards the anchor plate and reduces the air gap.
   - Turning the fixing screws counter-clockwise allows the brake coil housing to be moved away from the anchor plate and increases the air gap.
4. If the setting bolts (hollow screws) were adjusted as suggested in Step 2, re-secure the brake coil housing firmly against the motor's end shield by turning the setting bolts (hollow screws) clockwise, out of the brake coil housing.
5. Tighten the fixing screws to the appropriate torque.
6. Re-check and measure the air gap in multiple locations to check for appropriate spacing. Repeat the steps as needed until the desired air gap spacing is uniform and consistent all the way around the brake.

Table 6: Brake Air Gap Settings

Brake Size	Fixing Screw Tightening Torque		Nominal Air Gap Setting ❶		Maximum Air Gap ❷	
	[lb-ft]	[Nm]	[in]	[mm]	[in]	[mm]
BRE 5	2.2	3	0.008	0.2	0.024	0.6
BRE10	4.4	6	0.008	0.2	0.028	0.7
BRE20	7.4	10	0.012	0.3	0.031	0.8
BRE40	7.4	10	0.012	0.3	0.035	0.9
BRE60	18	25	0.012	0.3	0.039	1.0
BRE100 ❸	18	25	0.016	0.4	0.043	1.1
BRE150 ❸	18	25	0.016	0.4	0.043	1.1
BRE250	37	50	0.020	0.5	0.047	1.2
BRE400	37	50	0.020	0.5	0.047	1.2
BRE800	37	50	0.028	0.7	0.047	1.2
BRE1200	37	50	0.028	0.7	0.047	1.2

❶ **Tolerance: + 0.004 in [+ 0.1 mm]**

❷ **Brake air gap must be re-adjusted before the stated value.**

❸ **When using the stainless steel friction plate (RG) increase the nominal air gap to 0.6 mm (0.024 in.).**

Brake Rotor (Brake Disc) Wear Assessment

Periodically the brake rotor or brake disc must also be checked for wear. If the brake rotors wear approaches the minimum allowed thickness, then the part should be replaced. Use Table 7 to determine whether or not the brake rotor requires replacement.

Table 7: Brake Rotor Thickness

Brake Size	Nominal Brake Rotor Thickness ❶		Minimum Brake Rotor Thickness ❷	
	[in]	[mm]	[in]	[mm]
BRE 5	0.295	7.5	0.177	4.5
BRE10	0.335	8.5	0.217	5.5
BRE20	0.406	10.3	0.295	7.5
BRE40	0.492	12.5	0.374	9.5
BRE60	0.571	14.5	0.453	11.5
BRE100	0.630	16	0.492	12.5
BRE150	0.709	18	0.571	14.5
BRE250	0.787	20	0.650	16.5
BRE400	0.787	20	0.650	16.5
BRE800	0.787	20	0.650	16.5
BRE1200	0.866	22	0.689	17.5

❶ As new condition.

❷ Worn condition - brake rotor replacement is required!

Brake Pad Replacement (reference to parts list on page 8)

When the brake pad is worn the pad should be replaced to maintain proper brake operation and ensure safety.

Required Tools

- Phillips head screw drivers (fan shroud removal)
- External snap ring pliers (fan and brake hub removal).
- Large flat head screw driver or small pry bar (fan removal)
- Metric T-handle wrenches and open-end wrenches.

Procedure

1. Remove the fixing screws (946) securing the fan cover (940) to the motor end-shield (932). If the brake has a hand release (937), the lever arm should be removed by unscrewing it.
2. Remove the fan cover (940) and note the position of the hand release slot if applicable.
3. Remove the snap ring holding the cooling fan (939) and carefully remove the cooling fan (939), key and second snap ring (997).
4. If the brake is equipped with a dust boot (992), remove it.
5. Remove the socket head cap screws holding the brake coil (936) to the motor end-shield (932).
6. Remove the brake coil (936), noting the hand release (937) and power cable locations.
7. Slide the brake rotor (993) off the brake hub (938) which is secured to the motor shaft.
8. Clean the brake, install the new brake rotor pad and reassemble the brake in reverse order of the steps outlined.

Optional Brake Accessories

NORD can supply a variety of brake options and accessories, of which some of the most common are noted below.

Hand Release Lever (HL)

The hand release lever allows the brake to be manually released without requiring that the brake be energized with voltage. The lever has a spring return that allows the brake to be hand released and returned automatically to its set position. The handle of the hand release lever can be unscrewed for easy removal.

Figure 8

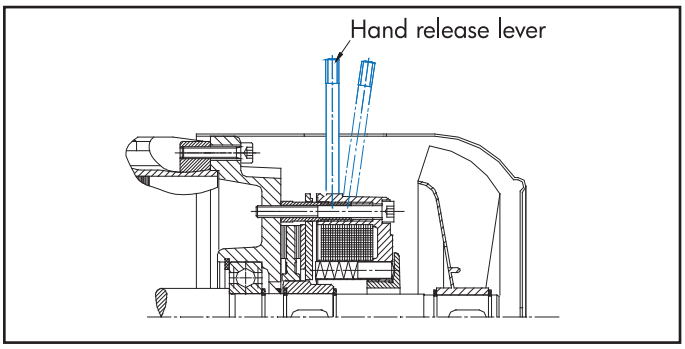

Locking Hand Release Lever (FHL)

This option allows the brake to be manually released and locked off without requiring voltage to the brake. The lock mechanism prevents the spring from returning the brake to a closed state without manual action by the user. The hand release lever can be unscrewed for easy removal.

Figure 9

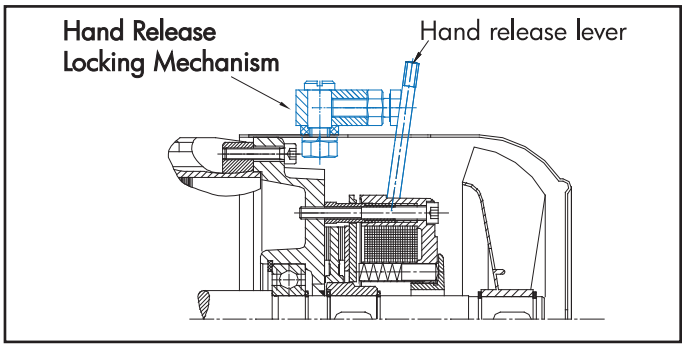

Corrosion Protected Brake (RG)

The brake is fitted with a stainless steel brake plate to provide additional corrosion protection in severe and wet environments.

Dust & Corrosion Protected Brake (SR)

A rubber-sealing boot is installed on the brake to provide additional protection in dusty environments. This feature includes the stainless steel brake plate (RG).

IP66 Brake (IP66)

NORD can also provide an IP66 brake option designed for a bigger degree of protection against severe environments.

Parts List - Precima Brakes

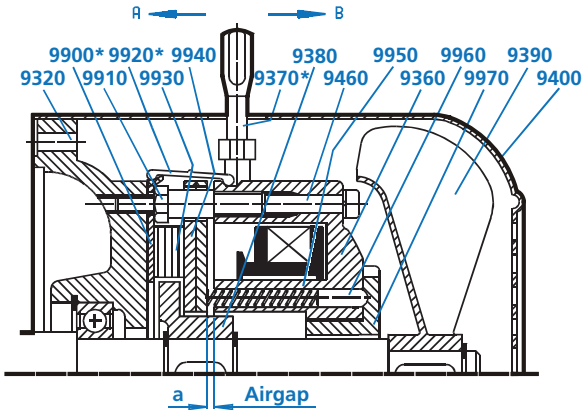

Normal Design, Enclosure IP55 with following options:

RG – Stainless Steel Disc (Item 9900)
SR – Dust Boot-includes Option RG (Item 9920)
HL – Hand Release (Item 9370)

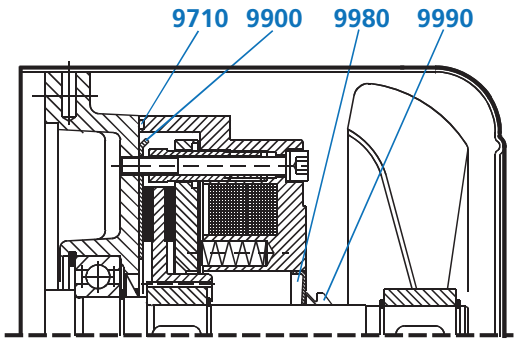

Optional Brake with optional IP66 enclosure

9320	Non-drive end shield	9710	O-ring - optional	9960	Pressure plate adjustment**
9360	Brake coil	9900	Friction plate - optional	9970	Adjustable ring **
9370	Manual brake lever – optional	9910	Setting bolt	9980	Bushing/seal - optional
9380	Brake hub	9920	Dust protection ring	9990	V-ring - optional
9390	Fan	9930	Brake rotor		
9400	Fan cover	9940	Armature plate		
9460	Fixing screw	9950	Spring		

***** Only for brakes that are 5 Nm to 40 Nm***

Table 8: Spare Parts

Brake Size	NORD Motor Frame	Brake Rotor [Item 9930]	Brake Hub [Item 9380]	Brake Hub Bore / (Style)	Hand Release (HL) [Item 9370]	Stainless Disc (RG) [Item 9900]	Dust Boot (SR) [Item 9920]
BRE5	63/71/80	19120042	19100112	15 mm (hex)	19150042	19130042	19110042
BRE10	63/71	19120082	19100212	15 mm (hex)	19150082	19130082	19110082
BRE10	80/90	19120082	19100222	20 mm (hex)	19150082	19130082	19110082
BRE20	80/90/112	19120162	19100322	20 mm (hex)	19150162	19130162	19110162
BRE20	100	19120162	19100332	25 mm (hex)	19150162	19130162	19110162
BRE40	90/100	19120322	19100452	25 mm (spline)	19150322	19130322	19110402
BRE40	112	19120402	19100442	30 mm (hex)	19150322	19130322	19110402
BRE60	100	19120602	19100532	25 mm (spline)	19150602	19130602	19110602
BRE60	112	19120602	19100542	30 mm (spline)	19150602	19130602	19110602
BRE60	132	19120602	19100552	35 mm (spline)	19150602	19130602	19110602
BRE100	132/160	19120802	19100652	35 mm (spline)	19150802	19130802	19110802
BRE150	132	19121502	19100752	35 mm (spline)	19151502	19131502	19111502
BRE150	160/180	19121502	19100772	45 mm (spline)	19151502	19131502	19111502
BRE250	160/180	19122402	19100872	45 mm (spline)	19152402	19132500	19112502
BRE250	200	19122402	19100882	50 mm (spline)	19152402	19132500	19112502
BRE400	200/225	19124002	19100912	60 mm (spline)	19154003	10114020	19114002

IMPORTANT NOTES

- For brake coil part numbers, listed by brake size and coil voltage, please see page 4.
- The large BRE 800 and BRE 1200 twin rotor brakes are supplied to NORD pre-assembled and complete. For parts list details and spare parts information please contact NORD.

Brake Times & Electrical Selection

Brake timing performance is critical in selecting the optimal brake system. NORD brakes can provide exceptional performance in terms of the release (start) times and engagement (stop) times. Use the following guidelines in order to select the correct brake control components and connections.

1) Determine if the brake needs to be wired directly from the motor terminal block or powered by a separate power source.

- If you are using a frequency inverter, soft-start or a two speed motor you will need to supply the rectifier from a separate power source.

- If the motor is powered direct across-the-line the rectifier power can be supplied from the motor's terminal block.

2) What type of performance do I need?

- Is the standard brake performance OK?

- Is a higher performance required for fast brake release or very fast brake stopping?

3) Determine the brake supply voltage and check the rectifier compatability using the table on page 10?

Selection Suggestions

When Fast Stopping is Recommended

Any applications that require quick stops and positive action at stand-still

Recommended Applications

- conveyors and inclined conveyors
- hoists and lifts
- bulk material handling equipment (bucket elevators, idler conveyor's).

⚠ *CAUTION* ⚠

- **Hoisting (lifting/lowering) applications** - must have the brake wired for fast response.

When Fast-Release is Recommended (Overexcitation)

Fast Release is recommended in any application that is very high-cycling with frequent starts and stops. These applications require the brake to release very-quickly in order to avoid excessive heat build-up in the AC motor and brake coil.

Recommended Applications

- Index conveyors
- Diverters
- Storage and retrieval crane systems

Power Source	Brake Release (start)	Brake engagement (stop)	Braking Method *	Rectifier
Motor Terminal Block	Standard	Standard (AC switching)	10	GVE/GHE/GUE
	Standard	Fast (DC switching)	15	GVE/GHE/GUE
	❶ Fast (Overexcitation)	Standard (AC switching)	30	PMG 500
	❶ Fast (Overexcitation)	Fast (DC switching)	35	PMG 500
Separate Power Source	Standard	Standard (AC switching)	20	GVE/GHE/GUE
	Standard	Fast (DC switching)	25	GVE/GHE/GUE
	❶ Fast (Overexcitation)	Standard (AC switching)	45	PMG 500
	❶ Fast (Overexcitation)	Fast (DC switching)	50	PMG 500

*** Braking methods referenced in connection diagrams on pages 11-15.**

❶ Please see important note below:

IMPORTANT NOTE

The PMG500 rectifier is required when utilizing the larger 800 Nm (590 lb-ft) - and 1200 Nm (885 lb-ft) twin-rotor brakes. In order to prevent rapid wear, NORD recommends using the PMG500 rectifier to "overexcite" the brake during its release. The brake coil should be sized utilizing the PMG rectifier like a half-wave rectifier.

The table below determines the rectifier and DC brake voltage required, based on the AC supply voltage & braking method.

Rectifier Supply Voltage (VAC)	Brake Coil Voltage (VDC)	Braking Method	Rectifier Type	Rectifier P/N	BRE 5	BRE 10	BRE 20	BRE 40	BRE 60	BRE 100	BRE 150	BRE 250	BRE 400	BRE 800	BRE 1200
115 (105-120)	105	20	GVE20L	19141000	X	X	X	X	X	X	X				
	105	25	GVE20L	19141000	X	X	X	X	X	X	X				
208 (200-208)	180	10	GVE20L	19141000	X	X	X	X	X	X	X	X	X		
	180	15	GVE20L	19141000	X	X	X	X	X	X	X	X	X		
	180	20	GVE20L	19141000	X	X	X	X	X	X	X	X	X		
	105	25	GHE40L	19141010	X	X	X	X	X	X	X				
	105	25	GHE50L	19141020	X	X	X	X	X	X	X				
	180	25	GVE20L	19141000	X	X	X	X	X	X	X	X	X		
	105	30	PMG500	19140200										X	X
	105	35	PMG500	19140200										X	X
	105	45	PMG500	19140200										X	X
	105	50	PMG500	19140200										X	X
	180	55	PMG500	19140200										X	X
230 (220-240)	105	10	GHE40L	19141010	X	X	X	X	X	X	X				
	205	10	GVE20L	19141000	X	X	X	X	X	X	X	X	X		
	105	15	GHE40L	19141010	X	X	X	X	X	X	X				
	205	15	GVE20L	19141000	X	X	X	X	X	X	X	X	X		
	105	20	GHE40L	19141010	X	X	X	X	X	X	X				
	205	20	GUE40V	19140300	X	X	X	X	X	X	X				
	205	20	GVE20L	19141000	X	X	X	X	X	X	X	X	X		
	105	25	GHE40L	19141010	X	X	X	X	X	X	X				
	205	25	GUE40V	19140300	X	X	X	X	X	X	X				
	205	25	GVE20L	19141000	X	X	X	X	X	X	X	X	X		
	105	30	PMG500	19140200										X	X
	105	35	PMG500	19140200										X	X
	105	45	PMG500	19140200										X	X
	105	50	PMG500	19140200										X	X
332	180	30	PMG500	19140200										X	X
	180	35	PMG500	19140200										X	X
400 (380-415)	180	10	GHE40L	19141010	X	X	X	X	X	X	X	X	X		
	180	15	GHE40L	19141010	X	X	X	X	X	X	X	X	X		
	180	20	GHE40L	19141010	X	X	X	X	X	X	X	X	X		
	180	25	GHE40L	19141010	X	X	X	X	X	X	X	X	X		
	180	30	PMG500	19140200										X	X
	180	35	PMG500	19140200										X	X
	180	45	PMG500	19140200										X	X
	180	50	PMG500	19140200										X	X
460 (440-480)	205	10	GHE40L	19141010	X	X	X	X	X	X	X	X	X		
	205	15	GHE40L	19141010	X	X	X	X	X	X	X	X	X		
	205	20	GHE40L	19141010	X	X	X	X	X	X	X	X	X		
	205	20	GUE40V	19140300	X	X	X	X	X	X	X				
	205	25	GHE40L	19141010	X	X	X	X	X	X	X	X	X		
	205	25	GUE40V	19140300	X	X	X	X	X	X	X				
	205	30	PMG500	19140200										X	X
	205	35	PMG500	19140200										X	X
	205	45	PMG500	19140200										X	X
	205	50	PMG500	19140200										X	X
575 (550-600)	250	10	GHE50L	19141020	X	X	X	X	X	X	X	X	X		
	250	15	GHE50L	19141020	X	X	X	X	X	X	X	X	X		
	250	20	GHE50L	19141020	X	X	X	X	X	X	X	X	X		
	250	25	GHE50L	19141020	X	X	X	X	X	X	X	X	X		

? Specify Rectifier Model Type _____ And DC Brake Voltage _____

Typical Connection Diagrams

BR101A — POWERED FROM MOTOR TERMINAL BLOCK — STANDARD RELEASE — NORMAL STOPPING (AC-SWITCHING) — 10

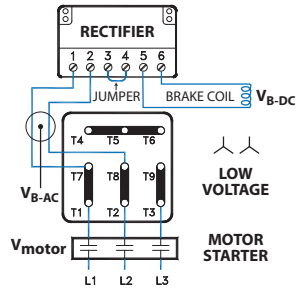

MOTOR	RECTIFIER	V_{motor}	V_{B-AC}	V_{B-DC}
208-230YY/460Y	GVE20	208 VAC	230 VAC	205 VDC
230YY/460Y	GVE20	230 VAC	230 VAC	205 VDC
230YY/460Y	GHE40	230 VAC	230 VAC	105 VDC

BR101B — POWERED FROM MOTOR TERMINAL BLOCK — STANDARD RELEASE — NORMAL STOPPING (AC-SWITCHING) — 10

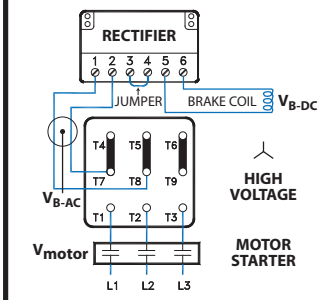

MOTOR	RECTIFIER	V_{motor}	V_{B-AC}	V_{B-DC}
230YY/460Y	GVE20	460 VAC	230 VAC	205 VDC

GP101C — POWERED FROM MOTOR TERMINAL BLOCK — STANDARD RELEASE — NORMAL STOPPING (AC-SWITCHING) — 10

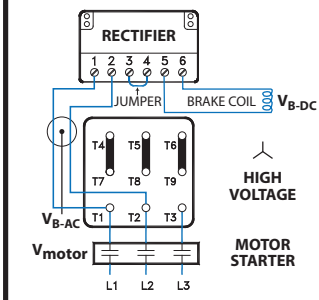

MOTOR	RECTIFIER	V_{motor}	V_{B-AC}	V_{B-DC}
230YY/460Y	GHE40	460 VAC	460 VAC	205 VDC

BR601A — POWERED FROM MOTOR TERMINAL BLOCK — STANDARD RELEASE — NORMAL STOPPING (AC-SWITCHING) — 10

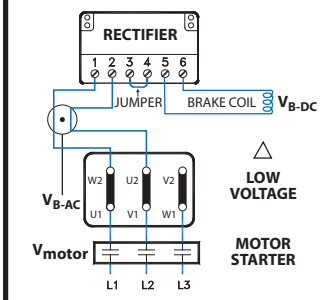

MOTOR	RECTIFIER	V_{motor}	V_{B-AC}	V_{B-DC}
208Δ/360Y	GVE20	208 VAC	208 VAC	180 VDC
230Δ/400Y	GVE20	230 VAC	230 VAC	205 VDC
400Δ/690Y	GHE40	400 VAC	400 VAC	180 VDC
460Δ/Y	GHE40	460 VAC	460 VAC	205 VDC

BR601B — POWERED FROM MOTOR TERMINAL BLOCK — STANDARD RELEASE — NORMAL STOPPING (AC-SWITCHING) — 10

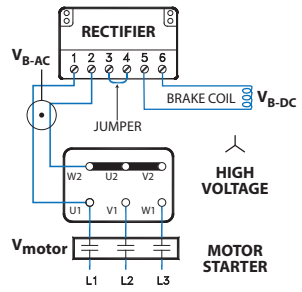

MOTOR	RECTIFIER	V_{motor}	V_{B-AC}	V_{B-DC}
230Δ/400Y	GVE20	400 VAC	230 VAC	205 VDC

BR601C — POWERED FROM MOTOR TERMINAL BLOCK — STANDARD RELEASE — NORMAL STOPPING (AC-SWITCHING) — 10

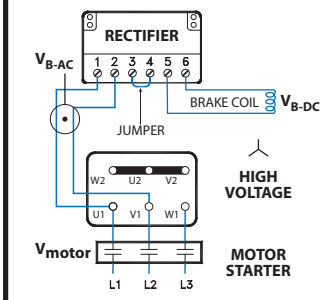

MOTOR	RECTIFIER	V_{motor}	V_{B-AC}	V_{B-DC}
332Δ/575Y	GHE50	575 VAC	575 VAC	250 VDC

BR603A — POWERED FROM MOTOR TERMINAL BLOCK — STANDARD RELEASE — FAST STOPPING (DC-SWITCHING) — 15

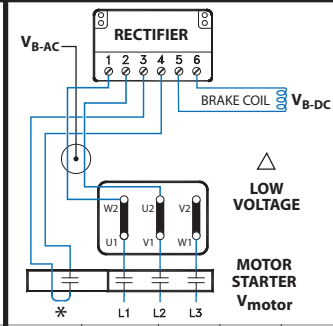

MOTOR	RECTIFIER	V_{motor}	V_{B-AC}	V_{B-DC}
208Δ/360Y	GVE20	208 VAC	208 VAC	180 VDC
230Δ/400Y	GVE20	230 VAC	230 VAC	205 VDC
400Δ/690Y	GHE40	400 VAC	400 VAC	180 VDC
460Δ/Y	GHE40	460 VAC	460 VAC	205 VDC

BR603B — POWERED FROM MOTOR TERMINAL BLOCK — STANDARD RELEASE — FAST STOPPING (DC-SWITCHING) — 15

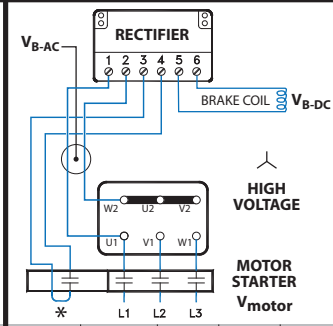

MOTOR	RECTIFIER	V_{motor}	V_{B-AC}	V_{B-DC}
230Δ/400Y	GVE20	400 VAC	230 VAC	105 VDC

BR603C — POWERED FROM MOTOR TERMINAL BLOCK — STANDARD RELEASE — FAST STOPPING (DC-SWITCHING) — 15

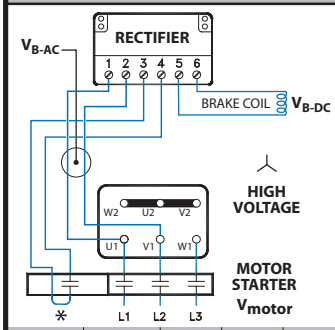

MOTOR	RECTIFIER	V_{motor}	V_{B-AC}	V_{B-DC}
332Δ/575Y	GHE50	575 VAC	575 VAC	250 VDC

BR103A — POWERED FROM MOTOR TERMINAL BLOCK — STANDARD RELEASE — FAST STOPPING (DC-SWITCHING) — 15

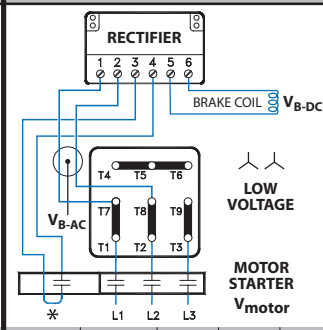

MOTOR	RECTIFIER	V_{motor}	V_{B-AC}	V_{B-DC}
208-230YY/460Y	GVE20	208 VAC	230 VAC	205 VDC
230YY/460Y	GVE20	230 VAC	230 VAC	205 VDC
230YY/460Y	GHE40	230 VAC	230 VAC	105 VDC

BR103B — POWERED FROM MOTOR TERMINAL BLOCK — STANDARD RELEASE — FAST STOPPING (DC-SWITCHING) — 15

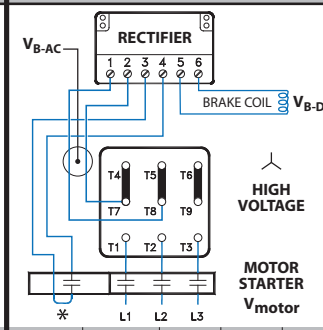

MOTOR	RECTIFIER	V_{motor}	V_{B-AC}	V_{B-DC}
230YY/460Y	GVE20	460 VAC	230 VAC	205 VDC

BR103C — POWERED FROM MOTOR TERMINAL BLOCK — STANDARD RELEASE — FAST STOPPING (DC-SWITCHING) — 15

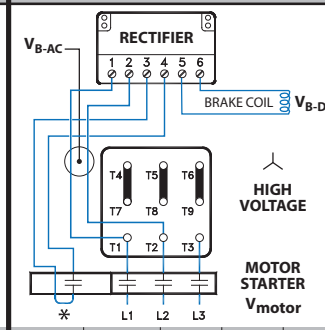

MOTOR	RECTIFIER	V_{motor}	V_{B-AC}	V_{B-DC}
230YY/460Y	GHE40	460 VAC	460 VAC	205 VDC

* The normally open contact/s (NO) is not supplied by NORD. It must close at the same time power is supplied to the brake. The contact must be capable of switching inductive loads and/or be rated IEC AC3.

= Braking Method

Typical Connection Diagrams

BR102A — 20 — SEPERATE POWER SOURCE, STANDARD RELEASE, NORMAL STOPPING (AC-SWITCHING)

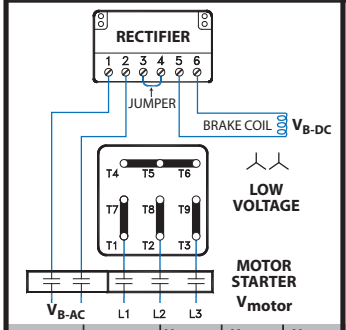

MOTOR	RECTIFIER	V_{motor}	V_{B-AC}	V_{B-DC}
208-230YY/460Y	GVE20	208 VAC	230 VAC	205 VDC
230YY/460Y	GVE20	230 VAC	105 VAC	115 VDC
230YY/460Y	GVE20	230 VAC	230 VAC	205 VDC
230YY/460Y	GHE40	230 VAC	230 VAC	105 VDC

BR102B — 20 — SEPERATE POWER SOURCE, STANDARD RELEASE, NORMAL STOPPING (AC-SWITCHING)

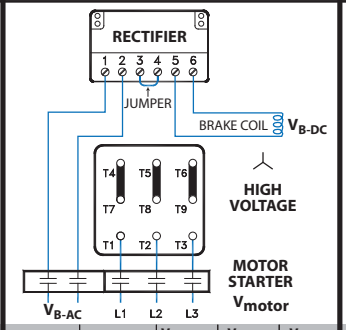

MOTOR	RECTIFIER	V_{motor}	V_{B-AC}	V_{B-DC}
230YY/460Y	GVE20	460 VAC	115 VAC	105 VDC
230YY/460Y	GHE40	460 VAC	460 VAC	205 VDC

BR602A — 20 — SEPERATE POWER SOURCE, STANDARD RELEASE, NORMAL STOPPING (AC-SWITCHING)

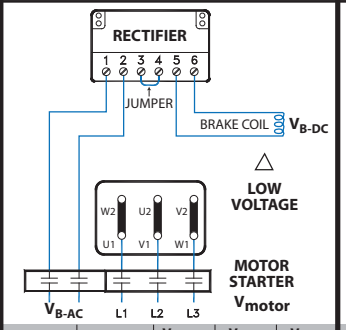

MOTOR	RECTIFIER	V_{motor}	V_{B-AC}	V_{B-DC}
208Δ/360Y	GVE20	208 VAC	208 VAC	180 VDC
230Δ/400Y	GVE20	230 VAC	230 VAC	205 VDC
400Δ/690Y	GHE40	400 VAC	400 VAC	180 VDC
460Δ/Y	GHE40	460 VAC	460 VAC	205 VDC

BR602B — 20 — SEPERATE POWER SOURCE, STANDARD RELEASE, NORMAL STOPPING (AC-SWITCHING)

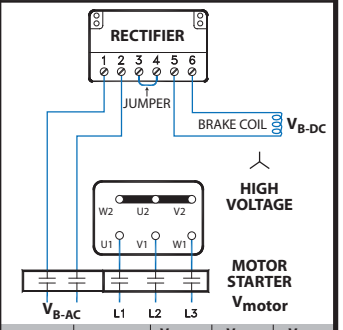

MOTOR	RECTIFIER	V_{motor}	V_{B-AC}	V_{B-DC}
230Δ/400Y	GHE40	400 VAC	400 VAC	180 VDC
332Δ/575Y	GHE50	575 VAC	575 VAC	250 VDC

BR104A — 25 — SEPERATE POWER SOURCE, STANDARD RELEASE, FAST STOPPING (DC-SWITCHING)

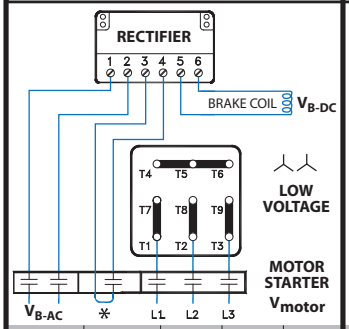

MOTOR	RECTIFIER	V_{motor}	V_{B-AC}	V_{B-DC}
208-230YY/460Y	GVE20	208 VAC	230 VAC	205 VDC
230YY/460Y	GVE20	230 VAC	115 VAC	105 VDC
230YY/460Y	GVE20	230 VAC	230 VAC	205 VDC
230YY/460Y	GHE40	230 VAC	230 VAC	105 VDC

BR104B — 25 — SEPERATE POWER SOURCE, STANDARD RELEASE, FAST STOPPING (DC-SWITCHING)

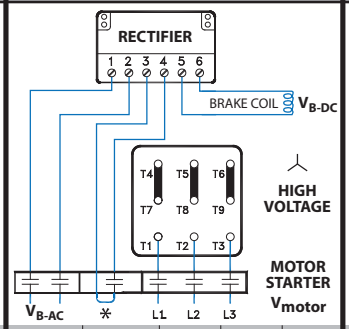

MOTOR	RECTIFIER	V_{motor}	V_{B-AC}	V_{B-DC}
230YY/460Y	GVE20	460 VAC	115 VAC	105 VDC
230YY/460Y	GHE40	460 VAC	460 VAC	205 VDC

BR604A — 25 — SEPERATE POWER SOURCE, STANDARD RELEASE, FAST STOPPING (DC-SWITCHING)

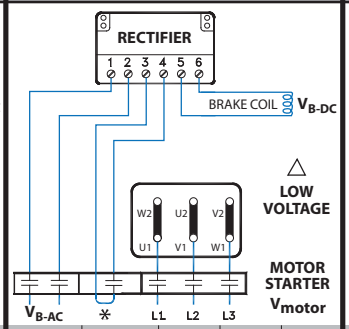

MOTOR	RECTIFIER	V_{motor}	V_{B-AC}	V_{B-DC}
208Δ/360Y	GHE20	208 VAC	208 VAC	105 VDC
230Δ/400Y	GHE20	230 VAC	230 VAC	105 VDC
400Δ/690Y	GHE40	400 VAC	400 VAC	180 VDC
460Δ/Y	GHE40	460 VAC	460 VAC	205 VDC

BR604B — 25 — SEPERATE POWER SOURCE, STANDARD RELEASE, FAST STOPPING (DC-SWITCHING)

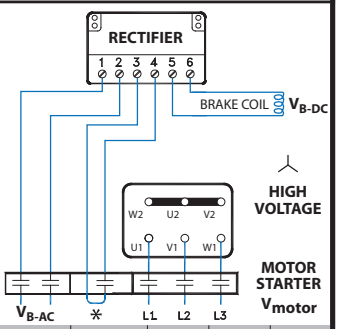

MOTOR	RECTIFIER	V_{motor}	V_{B-AC}	V_{B-DC}
230Δ/400Y	GHE20	400 VAC	230 VAC	105 VDC
332Δ/575Y	GHE40	575 VAC	332 VAC	180 VDC

✻ The normally open contact/s (NO) is not supplied by NORD. It must close at the same time power is supplied to the brake. The contact must be capable of switching inductive loads and/or be rated IEC AC3.

= Braking Method

Typical Connection Diagrams

PMG101A — POWERED FROM MOTOR TERMINAL BLOCK — FAST-RELEASE (OVER EXCITATION) — NORMAL STOPPING (AC-SWITCHING) — 30

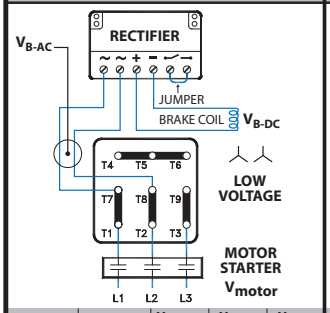

MOTOR	RECTIFIER	V_{motor}	$V_{B\text{-}AC}$	$V_{B\text{-}DC}$
230YY/460Y	PMG500	230 VAC	230 VAC	105 VDC

PMG101B — POWERED FROM MOTOR TERMINAL BLOCK — FAST-RELEASE (OVER EXCITATION) — NORMAL STOPPING (AC-SWITCHING) — 30

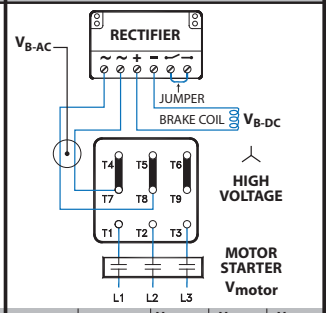

MOTOR	RECTIFIER	V_{motor}	$V_{B\text{-}AC}$	$V_{B\text{-}DC}$
230YY/460Y	PMG500	460 VAC	230 VAC	105 VDC

PMG101C — POWERED FROM MOTOR TERMINAL BLOCK — FAST-RELEASE (OVER EXCITATION) — NORMAL STOPPING (AC-SWITCHING) — 30

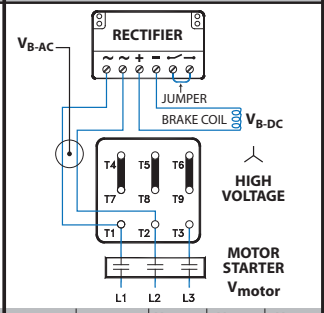

MOTOR	RECTIFIER	V_{motor}	$V_{B\text{-}AC}$	$V_{B\text{-}DC}$
230YY/460Y	PMG500	460 VAC	460 VAC	205 VDC

PMG101D — POWERED FROM MOTOR TERMINAL BLOCK — FAST-RELEASE (OVER EXCITATION) — NORMAL STOPPING (AC-SWITCHING) — 30

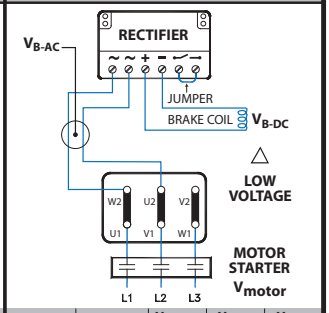

MOTOR	RECTIFIER	V_{motor}	$V_{B\text{-}AC}$	$V_{B\text{-}DC}$
208Δ/360Y	PMG500	208 VAC	208 VAC	105 VDC
230Δ/400Y	PMG500	230 VAC	230 VAC	105 VDC
400Δ/690Y	PMG500	400 VAC	400 VAC	180 VDC
460Δ/Y	PMG500	460 VAC	460 VAC	205 VDC

PMG101E — POWERED FROM MOTOR TERMINAL BLOCK — FAST-RELEASE (OVER EXCITATION) — NORMAL STOPPING (AC-SWITCHING) — 30

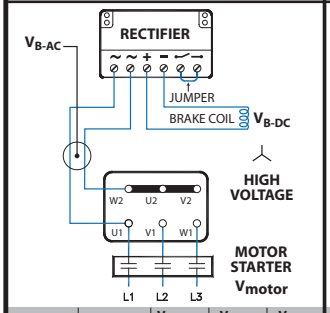

MOTOR	RECTIFIER	V_{motor}	$V_{B\text{-}AC}$	$V_{B\text{-}DC}$
230Δ/400Y	PMG500	400 VAC	230 VAC	105 VDC

PMG102A — POWERED FROM MOTOR TERMINAL BLOCK — FAST-RELEASE (OVER EXCITATION) — FAST STOPPING (DC-SWITCHING) — 35

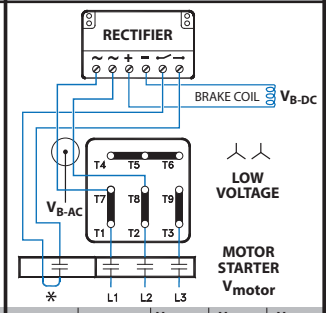

MOTOR	RECTIFIER	V_{motor}	$V_{B\text{-}AC}$	$V_{B\text{-}DC}$
230YY/460Y	PMG500	230 VAC	230 VAC	105 VDC

PMG102B — POWERED FROM MOTOR TERMINAL BLOCK — FAST-RELEASE (OVER EXCITATION) — FAST STOPPING (DC-SWITCHING) — 35

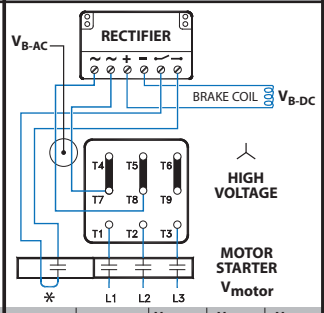

MOTOR	RECTIFIER	V_{motor}	$V_{B\text{-}AC}$	$V_{B\text{-}DC}$
230YY/460Y	PMG500	460 VAC	230 VAC	105 VDC

PMG102C — POWERED FROM MOTOR TERMINAL BLOCK — FAST-RELEASE (OVER EXCITATION) — FAST STOPPING (DC-SWITCHING) — 35

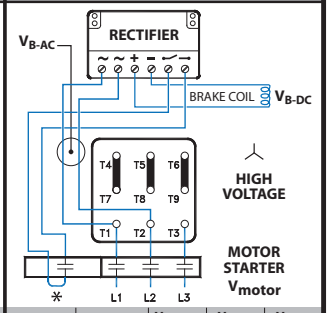

MOTOR	RECTIFIER	V_{motor}	$V_{B\text{-}AC}$	$V_{B\text{-}DC}$
230YY/460Y	PMG500	460 VAC	460 VAC	205 VDC

PMG102D — POWERED FROM MOTOR TERMINAL BLOCK — FAST-RELEASE (OVER EXCITATION) — FAST STOPPING (DC-SWITCHING) — 35

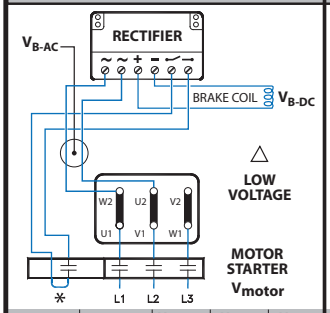

MOTOR	RECTIFIER	V_{motor}	$V_{B\text{-}AC}$	$V_{B\text{-}DC}$
208Δ/360Y	PMG500	208 VAC	208 VAC	105 VDC
230Δ/400Y	PMG500	230 VAC	230 VAC	105 VDC
400Δ/690Y	PMG500	400 VAC	400 VAC	180 VDC
460Δ/Y	PMG500	460 VAC	460 VAC	205 VDC

PMG102E — POWERED FROM MOTOR TERMINAL BLOCK — FAST-RELEASE (OVER EXCITATION) — FAST STOPPING (DC-SWITCHING) — 35

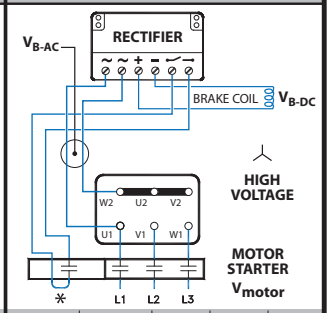

MOTOR	RECTIFIER	V_{motor}	$V_{B\text{-}AC}$	$V_{B\text{-}DC}$
230Δ/400Y	PMG500	400 VAC	230 VAC	105 VDC

✻ The normally open contact/s (NO) is not supplied by NORD. It must close at the same time power is supplied to the brake. The contact must be capable of switching inductive loads and/or be rated IEC AC3.

= Braking Method

Typical Connection Diagrams

PMG104A — 45

SEPERATE POWER SOURCE
FAST-RELEASE (OVER EXCITATION)
NORMAL STOPPING (AC-SWITCHING)

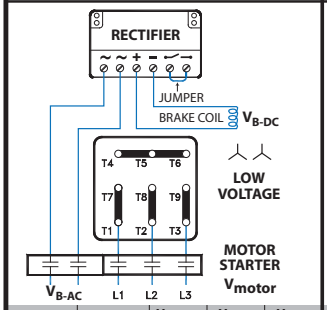

MOTOR	RECTIFIER	V_{motor}	V_{B-AC}	V_{B-DC}
230YY/460Y	PMG500	230 VAC	230 VAC	105 VDC

PMG104B — 45

SEPERATE POWER SOURCE
FAST-RELEASE (OVER EXCITATION)
NORMAL STOPPING (AC-SWITCHING)

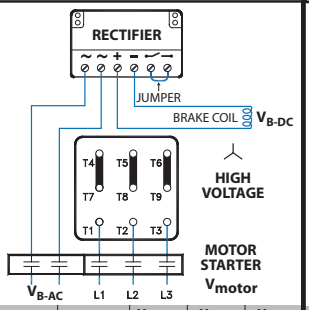

MOTOR	RECTIFIER	V_{motor}	V_{B-AC}	V_{B-DC}
230YY/460Y	PMG500	460 VAC	230 VAC	105 VDC

PMG104C — 45

SEPERATE POWER SOURCE
FAST-RELEASE (OVER EXCITATION)
NORMAL STOPPING (AC-SWITCHING)

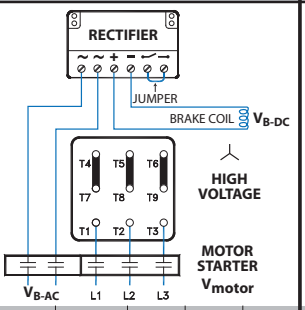

MOTOR	RECTIFIER	V_{motor}	V_{B-AC}	V_{B-DC}
230YY/460Y	PMG500	460 VAC	460 VAC	205 VDC

PMG104D — 45

SEPERATE POWER SOURCE
FAST-RELEASE (OVER EXCITATION)
NORMAL STOPPING (AC-SWITCHING)

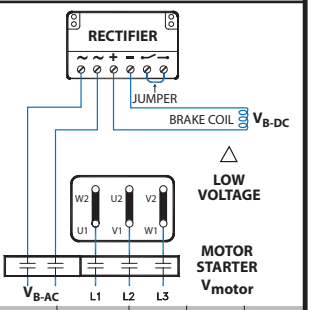

MOTOR	RECTIFIER	V_{motor}	V_{B-AC}	V_{B-DC}
208Δ/360Y	PMG500	208 VAC	208 VAC	105 VDC
230Δ/400Y	PMG500	230 VAC	230 VAC	105 VDC
400Δ/690Y	PMG500	400 VAC	400 VAC	180 VDC
460Δ/Y	PMG500	460 VAC	460 VAC	205 VDC

PMG104E — 45

SEPERATE POWER SOURCE
FAST-RELEASE (OVER EXCITATION)
NORMAL STOPPING (AC-SWITCHING)

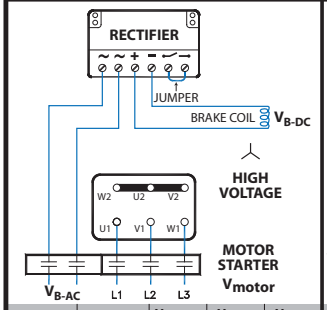

MOTOR	RECTIFIER	V_{motor}	V_{B-AC}	V_{B-DC}
230Δ/400Y	PMG500	400 VAC	230 VAC	105 VDC

PMG105A — 50

SEPERATE POWER SOURCE
FAST-RELEASE (OVER EXCITATION)
FAST STOPPING (DC-SWITCHING)

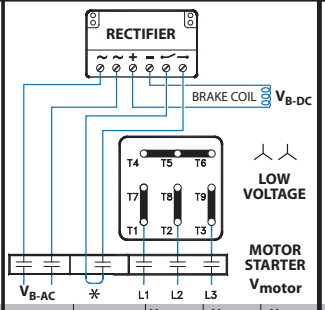

MOTOR	RECTIFIER	V_{motor}	V_{B-AC}	V_{B-DC}
230YY/460Y	PMG500	230 VAC	230 VAC	105 VDC

PMG105B — 50

SEPERATE POWER SOURCE
FAST-RELEASE (OVER EXCITATION)
FAST STOPPING (DC-SWITCHING)

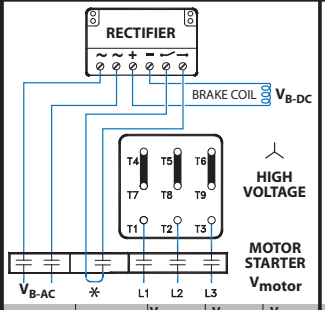

MOTOR	RECTIFIER	V_{motor}	V_{B-AC}	V_{B-DC}
230YY/460Y	PMG500	460 VAC	230 VAC	105 VDC

PMG105C — 50

SEPERATE POWER SOURCE
FAST-RELEASE (OVER EXCITATION)
FAST STOPPING (DC-SWITCHING)

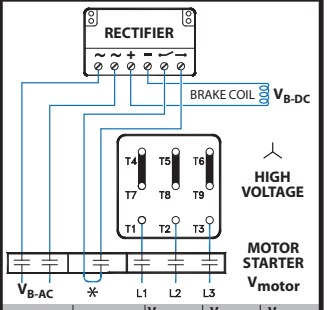

MOTOR	RECTIFIER	V_{motor}	V_{B-AC}	V_{B-DC}
230YY/460Y	PMG500	460 VAC	460 VAC	205 VDC

PMG105D — 50

SEPERATE POWER SOURCE
FAST-RELEASE (OVER EXCITATION)
FAST STOPPING (DC-SWITCHING)

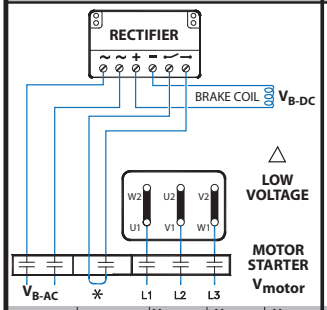

MOTOR	RECTIFIER	V_{motor}	V_{B-AC}	V_{B-DC}
208Δ/360Y	PMG500	208 VAC	208 VAC	105 VDC
230Δ/400Y	PMG500	230 VAC	230 VAC	105 VDC
400Δ/690Y	PMG500	400 VAC	400 VAC	180 VDC
460Δ/Y	PMG500	460 VAC	460 VAC	205 VDC

PMG105E — 50

SEPERATE POWER SOURCE
FAST-RELEASE (OVER EXCITATION)
FAST STOPPING (DC-SWITCHING)

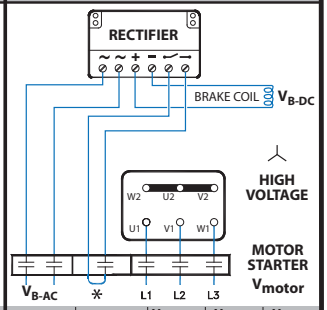

MOTOR	RECTIFIER	V_{motor}	V_{B-AC}	V_{B-DC}
230Δ/400Y	PMG500	400 VAC	230 VAC	105 VDC

✻ The normally open contact/s (NO) is not supplied by NORD. It must close at the same time power is supplied to the brake. The contact must be capable of switching inductive loads and/or be rated IEC AC3.

= Braking Method

Typical Connection Diagrams - Single Phase Motors

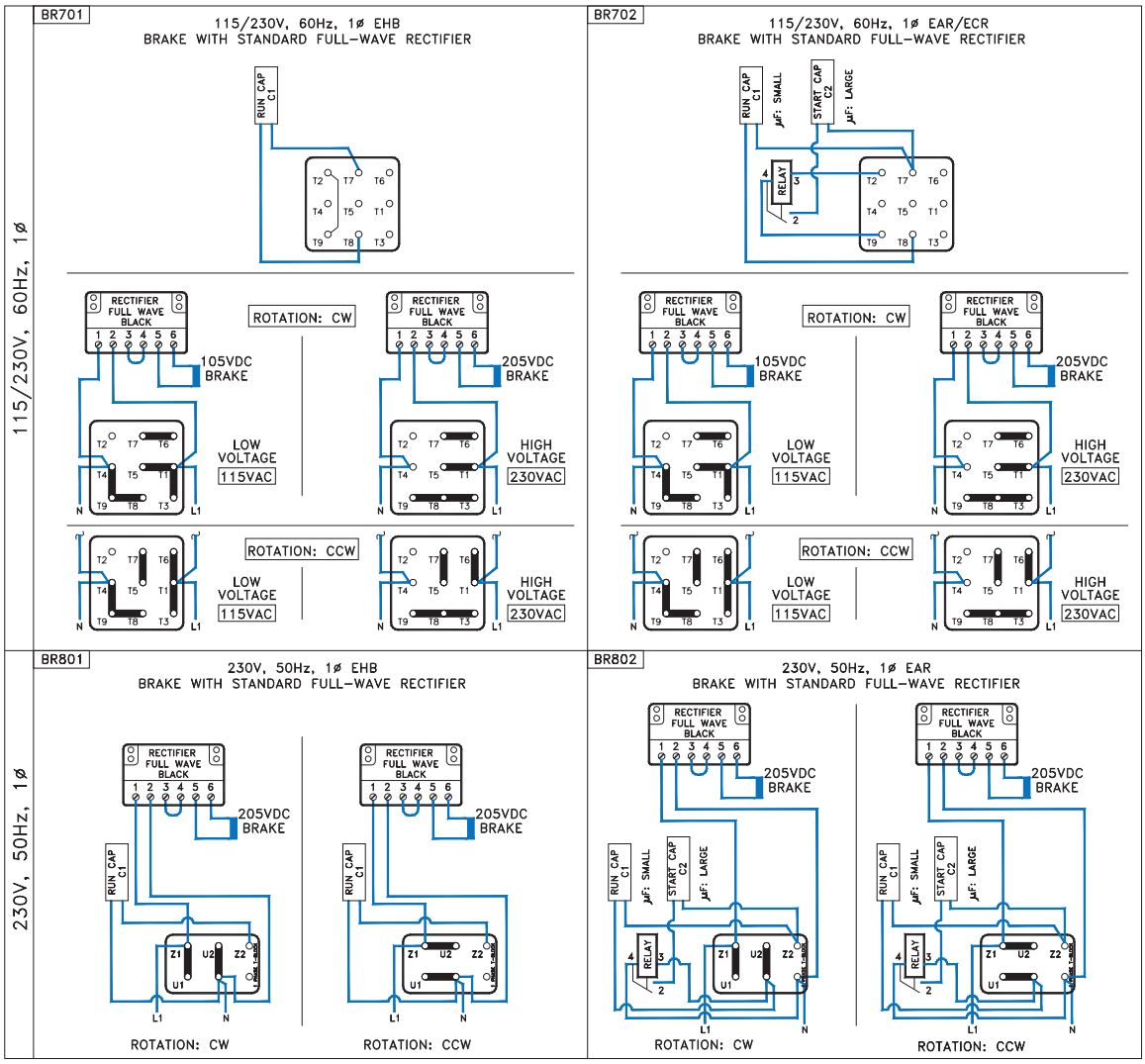

Troubleshooting Information

Troubleshooting	Cause	Remedy
Brake doesn't release	Air gap too large	Check air gap and adjust
	Brake not recieving electrical power	Check electrical connection
	Failed rectifier	Replace rectifier
	Brake is getting too warm	Use fast response (FR) rectifier
	Voltage to brake coil too small	Check connection voltageof brake coil
	Rectifier supply voltage from inverter	Rectifier voltage must be from seperate source. (Inverter output voltage varies)
Brake release is delayed	Air gap too large	Check air gap and adjust
	Voltage to brake coil too small	Check connection voltage of brake coil
Brake does not engage	Voltage to coil too large	Check connection voltages of brake windings
	Hand release is adjusted incorrectly	Adjust to correct air gap
	Anchor plate mechanically blocked	Remove mechanical blockage
Brake engagement is delayed	Voltage to coil too large	Check connection voltage of brake windings
	Brake is switched to AC side	Use DC switching

FAST ACTING BRAKE RECTIFIERS (GPE, GPU & PMG)

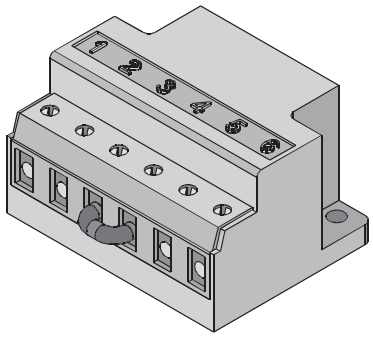

General Instructions

This manual provides general operating instructions for the "Fast Acting Brake Rectifiers type "GPE, GPU, and PMG" that are commonly offered by NORD in addition to the standard brake control rectifiers. Please feel free to contact NORD with any questions concerning the supplied brake rectifiers and brake components.

Safety Notice

Only qualified personnel should attempt installation, operation and maintenance of NORD brakes and brake rectifiers. If you have a question about a procedure or are uncertain about any detail, seek clarification and DO NOT PROCEED.

⚠ WARNING ⚠

- This equipment contains high electrical voltage. Remove and lockout all power from the electric motor and brake before any work is completed on the brake.
- The user is responsible for conforming to all national and local electrical and safety codes. Wiring practices, proper grounding, disconnects, and over current protection, are of particular importance.
- Make certain the load is supported when servicing the brake. Removing power from the brake or removing the brake from the motor will release the load, which may cause severe injury or death.
- Failure to follow proper procedures and precautions may result in severe bodily injury or death.

Brake Control Rectifiers

NORD brake control rectifiers convert AC voltage to DC voltage. Rectifiers are used because most applications require AC voltage to power the motor, but DC power is required to power the brake and DC power is not typically available. NORD brakemotors typically include the rectifier located inside the terminal box.

Rectifier Advantages

- Individual power source for each brake.
- Compact size, mounted inside the terminal box.
- Multiple types, voltage options and release/engagement modes available.
- Mountable in a separate control cabinet.
- Integral protection against voltage spikes.

Standard Rectifier Types

Full-Wave Rectifier

A rectifier in which both the positive and negative half-cycles of the AC input signal are rectified to produce a uni-directional DC current supply to the load or the brake. The output voltage is 90% of the input voltage ($V_{DC} = 0.90 \times V_{AC}$).

Half-Wave Rectifier

A rectifier in which only alternate half-cycles of the AC input signal are rectified to produce a uni-directional DC current supply to the load or the brake. The output voltage is 45% of the input voltage ($V_{DC} = 0.45 \times V_{AC}$).

Dual-Wave Rectifier

A rectifier that can be wired as either a full-wave rectifier or a half-wave rectifier depending upon how it is connected to the AC input signal.

IMPORTANT NOTE

This manual provides general operating instructions for NORD brakes with Fast-Acting brake Rectifiers. For additional brake and brake rectifier information please reference User Manual U35000.

Fast-Acting or Push-Hybrid Rectifiers [GPE, GPU & PMG]

A push-hybrid rectifier or fast-acting brake rectifier provides an initial "push" in the form of a timed full-wave brake-release function, which is then followed by a continuous half-wave brake-holding function. There are two ways to apply these rectifiers as follows:

- "Overexcitation" of the brake coil provides faster brake release or improved cycling capacity. The DC voltage of the brake coil is determined based upon using a half-wave rectifier. The output voltage is 45% of the input voltage ($V_{DC} = 0.45 \times V_{AC}$).
- "Reducer-Power Holding" of the brake coil maintains the brake in a released state by using only 25% of the power needed for the initial brake release. This results in very fast brake stopping. The DC voltage of the brake coil is determined based upon using a full-wave rectifier. The output voltage is 90% of the input voltage. ($V_{DC} = 0.90 \times V_{AC}$).

IMPORTANT NOTE

In order to prevent rapid wear, the PMG 500 rectifier is required when utilizing the larger 800 Nm (590 lb-ft) and 1200 Nm (885 lb-ft) twin-rotor brakes. The PMG500 rectifier is wired to "overexcite" the brake during its initial release.

Push-Hybrid Rectifiers External DC Switching (GPE)

Like the standard NORD brake control rectifiers, NORD's fast acting brake control rectifiers convert AC voltage to DC voltage. The "Fast Acting Brake Rectifiers"are utilized to improve brake performance and are often recommended in order to provide shorter brake release times or to provide faster stopping times.

The fast acting rectifiers are a two-stage "push" design, when power is first applied these rectifiers operate like a full-wave rectifier and then after a relatively short period of time they act like a half-wave rectifier. The GPE type rectifiers start out in full-wave mode when power is first applied and then after approximately 250 ms they switch to half-wave mode.

GPE rectifiers were designed for external control of the brake's DC-switching. GPE rectifiers are primarily used in across-the-line applications where the brake power is supplied by the motor terminals but they may also be used in situations where the brake power is supplied separately to the brake rectifier.

There are two ways to apply the fast acting rectifiers:

- The first method, known as "Overexcitation," provides fast brake release. The brake coil is selected like a half-wave system (45% of the AC supply voltage).
- The second method, known as "Reduced Power Holding," provides very fast brake stopping. The brake coil is selected like a full-wave system (90% of the AC supply voltage).

IMPORTANT NOTE

If the motor is connected to a frequency inverter, soft start, or is a two-speed motor, then seperate AC power must be supplied to the brake rectifier.

GPE Rectifier Dimensions

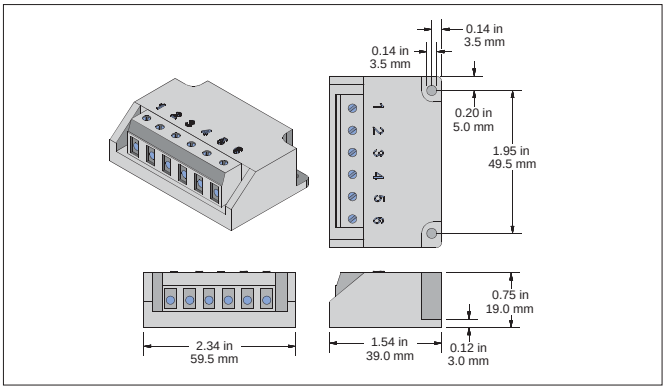

Ratings & Part Numbers

Model Type	GPE20L	GPE40L
Part Number	19140230	19140240
Protection (electronics)	Coated	Coated
Color	Black	
Input Voltage (V_{AC})	200V-275V	380V-480V
Output Voltage (V_{DC})	(V_{DC}=0.45 x V_{AC}) - As Half-Wave (V_{DC}=0.90 x V_{AC}) - As Full-Wave	
Rated Current @ 40°C	0.7 A	0.7A
Rated Current @ 75°C	0.5 A	0.5A
Temperature Range	-20°C to 75°C	
DC-Switching via	External Contact or IR Relay	

Braking Method

Braking Method	Break Release (Start)	Brake Engage (Stop)	Power Source
40	Standard	Very Fast (Reduced Power Holding)	Motor terminals
30	Fast (Overecitation)	Standard (AC Switching)	Motor terminals
35	Fast (Overecitation)	Fast (DC Switching)	Motor terminals

Basic Connection (AC & DC Switching)

The GPE brake system can be connected for standard stopping (AC-Switching), fast stopping (DC-Switching) and very fast stopping (Reduced power holding & DC-Switching). Fast brake release can also be achieved by selecting a different brake coil combination.

STANDARD STOPPING (AC-SWITCHING)

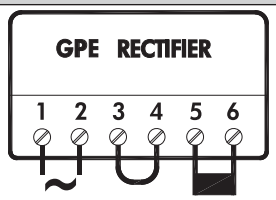

1 & 2	3 & 4	5 & 6
AC BRAKE VOLTAGE	JUMPER	DC BRAKE

FAST & VERY FAST STOPPING (DC-SWITCHING)

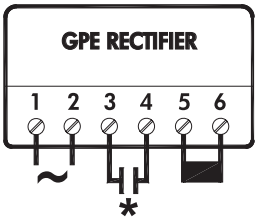

1 & 2	3 & 4	5 & 6
AC BRAKE VOLTAGE	NORMALLY OPEN CONTACT	DC BRAKE

* The normally open contact/s (NO) is not supplied by NORD it must close at the same time power is supplied to the brake. The contact must be capable of switching inductive loads and/or be rated at IEC AC3.

Push-Hybrid Rectifiers Integrated DC Switching (GPU)

Like the standard NORD brake control rectifiers, NORD's fast acting brake control rectifiers convert AC voltage to DC voltage. The "Fast Acting Brake Rectifiers"are utilized to improve brake performance and are often recommended in order to provide shorter brake release times or to provide faster stopping times.

The fast acting rectifiers are a two-stage "push" design. When power is first applied these rectifiers operate like a full-wave rectifier and then after a relatively short period of time they act like a half-wave rectifier. The GPU rectifiers start out in full-wave mode when power is first applied and then after approximately 250 ms they switch to half-wave mode.

GPU rectifiers were designed for integrated control of the brake's DC-switching and are voltage sensing. GPU rectifiers are primarily used in applications where there is a frequency inverter, soft start, or two-speed motor. Seperate AC power must be supplied to the brake rectifier.

There are two ways to apply the fast acting rectifiers:

- The first method, known as "Overexcitation," provides fast brake release. The brake coil is selected like a half-wave system (45% of the AC supply voltage).
- The second method, known as "Reduced Power Holding," provides very fast brake stopping. The brake coil is selected like a full-wave system (90% of the AC supply voltage).

IMPORTANT NOTE

The GPU rectifier may also be utilized for across-the-line applications; however it must always be powered separate from the motor and have its own pair of contactors or starters. It is unadvisable to use the motor terminal block to supply the GPU rectifier's AC power due to the motor's slow energy dissipation when switched off.

IMPORTANT NOTE

If the motor is connected to a frequency inverter, soft start, or is a two-speed motor, then seperate AC power must be supplied to the brake rectifier.

Braking Method

Braking Method	Break Release (Start)	Brake Engage (Stop)	Power Source
55	Standard	Very Fast (Reduced Power Holding)	Seperate power
45	Fast (Overecitation)	Standard (AC Switching)	Seperate power
50	Fast (Overecitation)	Fast (DC Switching)	Seperate power

GPU Rectifier Dimensions

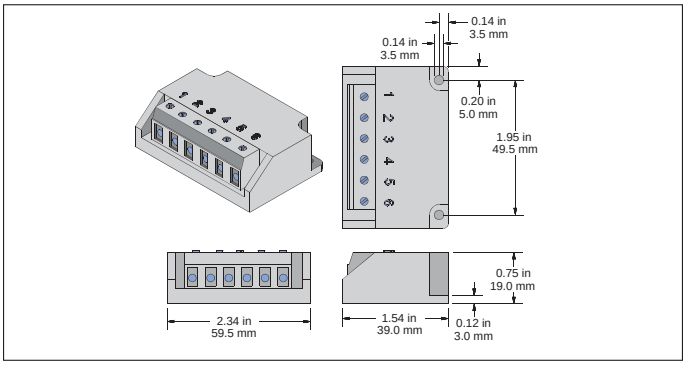

Ratings & Part Numbers

Model Type	GPU20L	GPU40L
Part Number	19140090	19140170
Protection (electronics)	Coated	Coated
Color	Black	
Input Voltage (V_{AC})	200V-275V	380V-480V
Output Voltage (V_{DC})	(V_{DC}=0.45 x V_{AC}) - As Half-Wave (V_{DC}=0.90 x V_{AC}) - As Full-Wave	
Rated Current @ 40°C	0.7A	0.7A
Rated Current @ 75°C	0.5A	0.5A
Temperature Range	-20°C to 75°C	
DC-Switching via	Internal Activation	

Basic Connection (AC & DC Switching)

The GPU brake system can be connected for standard stopping (AC-Switching), fast stopping (DC-Switching) and very fast stopping (Reduced power holding & DC-Switching). Fast brake release can also be achieved by selecting a different brake coil combination.

STANDARD STOPPING AC-SWITCHING

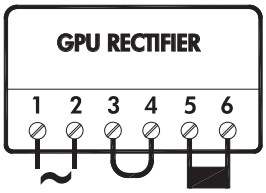

1 & 2	3 & 4	5 & 6
AC BRAKE VOLTAGE	JUMPER	DC BRAKE

FAST & VERY FAST STOPPING DC-SWITCHING

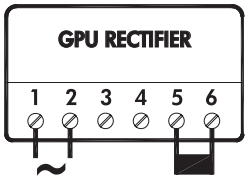

1 & 2	3 & 4	5 & 6
AC BRAKE VOLTAGE	-	DC BRAKE

Push-Hybrid Rectifiers External DC Switching (PMG)

Like the standard NORD brake control rectifiers, NORD's fast acting brake control rectifiers convert AC voltage to DC voltage. The "Fast Acting Brake Rectifiers"are utilized to improve brake performance and are often recommended in order to provide shorter brake release times or to provide faster stopping times.

The fast acting rectifiers are a two-stage "push" design. When power is first applied these rectifiers operate like a full-wave rectifier and then after a relatively short period of time they act like a half-wave rectifier. The PMG type rectifiers start out in full-wave mode when power is first applied and then after approximately 250 ms they switch to half-wave mode.

PMG rectifiers were designed for external control of the brake's DC-switching. PMG rectifiers are primarily used in across-the-line applications where the brake power is supplied by the motor terminals, but they may also be used in situations where the brake power is supplied separately from the brake rectifier.

There are two ways to apply the fast acting rectifiers:

- The first method, known as "Overexcitation," provides fast brake release. The brake coil is selected like a half-wave system (45% of the AC supply voltage).
- The second method, known as "Reduced Power Holding," provides very fast brake stopping. The brake coil is selected like a full-wave system (90% of the AC supply voltage).

IMPORTANT NOTE

If the motor is connected to a frequency inverter, soft start, or is a two-speed motor, then seperate AC power must be supplied to the brake rectifier.

PMG Rectifier Dimensions

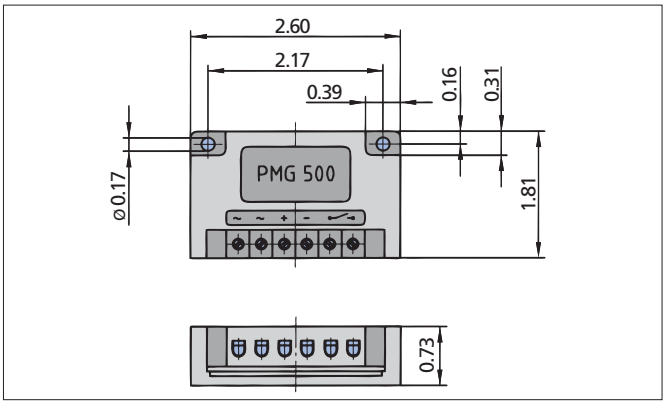

Ratings & Part Numbers

Model Type	PMG 500
Part Number	19140200
Protection (electronics)	Coated
Color	Black
Input Voltage (V_{AC})	200-500V_{AC} +/- 10%
Output Voltage (V_{DC})	(V_{DC}=0.45 x V_{AC}) - As Half-Wave (V_{DC}=0.90 x V_{AC}) - As Full-Wave
Rated Current @ 40°C	4.0 A
Rated Current @ 75°C	2.8 A
Temperature Range	-15°C to 80°C
DC-Switching via	External Contact

Braking Method

Braking Method	Break Release (Start)	Brake Engage (Stop)	Power Source
40	Standard	Very Fast (Reduced Power Holding)	Motor terminals
30	Fast (Overecitation)	Standard (AC Switching)	Motor terminals
35	Fast (Overecitation)	Fast (DC Switching)	Motor terminals
55	Standard	Very Fast (Reduced Power Holding)	Seperate power
45	Fast (Overecitation)	Standard (AC Switching)	Seperate power
50	Fast (Overecitation)	Fast (DC Switching)	Seperate power

Basic Connection (AC & DC Switching)

The PMG brake system can be connected for standard stopping (AC-Switching), fast stopping (DC-Switching) and very fast stopping (Reduced power holding & DC-Switching). Fast brake release can also be achieved by selecting a different brake coil combination.

STANDARD STOPPING (AC-SWITCHING)

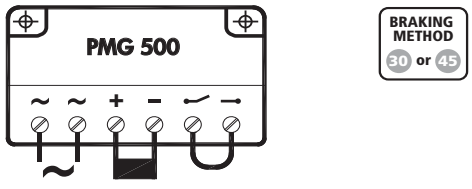

~ & ~	+ & -	⏜ & ⊸
AC BRAKE VOLTAGE	DC BRAKE	JUMPER

FAST & VERY FAST STOPPING (DC-SWITCHING)

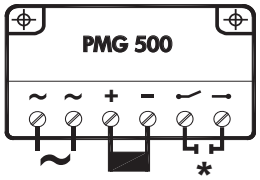

~ & ~	+ & -	⏜ & ⊸
AC BRAKE VOLTAGE	DC BRAKE	NORMALLY OPEN CONTACT

* The normally open contact/s (NO) is not supplied by NORD it must close at the same time power is supplied to the brake. The contact must be capable of switching inductive loads and/or be rated at IEC AC3.

Brake Times & Electrical Selection

Brake timing performance is critical in selecting the optimal brake system. NORD brakes can provide exceptional performance in terms of the release (start) times and engagement (stop) times. Use the following guidelines in order to select the correct brake control components and connections.

1) Determine if the brake needs to be wired directly from the motor terminal block or powered by a separate source.

- If you are using a frequency inverter, soft-start or a two speed motor you will need to supply the rectifier from a separate power source.

- If the motor is powered direct across-the-line the rectifier power can be supplied from the motor's terminal block.

2) What type of performance do I need?

- Is the standard brake performance OK?

- Is a higher performance required for fast brake release or very fast brake stopping?

3) Determine the brake supply voltage and check the rectifier compatability using the table on the page 6.

Selection Suggestions

When Fast or Very Fast Stopping is Recommended

Any applications that require quick stops and positive action at stand-still

Recommended Applications

- conveyors and inclined conveyors
- hoists and lifts
- bulk material handling equipment (bucket elevators, idler conveyor's).

⚠ *WARNING* ⚠

Hoisting (lifting/lowering) applications - must have the brake wired for fast response (DC-switching)

When Fast-Release is Recommended (Overexcitation)

Any application that is very high-cycling with frequent starts and stops. These applications require the brake to release very-quickly in order to avoid excessive heat build-up in the AC motor and brake coil.

Recommended Applications

- Index conveyors
- Diverters

Power Source	Brake Release (start)	Brake engagement (stop)	Braking Method *	Rectifier
Motor Terminal Block	Standard	Very Fast (Reduced power holding)	40	GPE or PMG 500
	Fast (Overexcitation)	Standard (AC switching)	30	GPE or PMG 500
	Fast (Overexcitation)	Fast (DC switching)	35	GPE or PMG 500
Seperate Power Source	Standard	Very Fast (Reduced power holding)	55	GPU or PMG 500
	Fast (Overexcitation)	Standard (AC switching)	45	GPU or PMG 500
	Fast (Overexcitation)	Fast (DC switching)	50	GPU or PMG 500

*** Braking methods referenced in connection diagrams on pages 7-11.**

Rectifier Supply Voltage (VAC)	Brake Coil Voltage (VDC)	Braking Method	Rectifier Type	Rectifier P/N	BRE 5	BRE 10	BRE 20	BRE 40	BRE 60	BRE 100	BRE 150	BRE 250	BRE 400	BRE 800	BRE 1200
208 (200-208)	105	30	GPE20L	19140230	X	X	X	X							
	105	30	PMG500	19140200					X	X	X	X	X	X	X
	105	35	GPE20L	19140230	X	X	X	X							
	105	35	PMG500	19140200					X	X	X	X	X	X	X
	180	40	GPE20L	19140230	X	X	X	X	X	X	X				
	180	40	PMG500	19140200								X	X	X	X
	105	45	GPU20L	19140090	X	X	X	X							
	105	45	PMG500	19140200					X	X	X	X	X	X	X
	105	50	GPU20L	19140090	X	X	X	X							
	105	50	PMG500	19140200					X	X	X	X	X	X	X
	180	55	GPU20L	19140090	X	X	X	X	X	X	X				
	180	55	PMG500	19140200								X	X	X	X
230 (220-240)	105	30	GPE20L	19140230	X	X	X	X							
	105	30	PMG500	19140200					X	X	X	X	X	X	X
	105	35	GPE20L	19140230	X	X	X	X	X	X	X				
	105	35	PMG500	19140200								X	X	X	X
	205	40	GPE20L	19140230	X	X	X	X	X	X	X				
	205	40	PMG500	19140200								X	X	X	X
	105	45	GPU20L	19140090	X	X	X	X							
	105	45	PMG500	19140200					X	X	X	X	X	X	X
	105	50	GPU20L	19140090	X	X	X	X							
	105	50	PMG500	19140200					X	X	X	X	X	X	X
	205	55	GPU20L	19140090	X	X	X	X	X	X	X				
	205	55	PMG500	19140200								X	X	X	X
332	180	30	GPE40L	19140240	X	X	X	X	X	X	X				
	180	30	PMG500	19140200								X	X	X	X
	180	35	GPE40L	19140240	X	X	X	X	X	X	X				
	180	35	PMG500	19140200								X	X	X	X
	180	45	GPU40L	19140170	X	X	X	X	X	X	X				
	180	50	GPU40L	19140170	X	X	X	X	X	X	X				
400 (380-415)	180	30	GPE40L	19140240	X	X	X	X	X	X	X				
	180	30	PMG500	19140200								X	X	X	X
	180	35	GPE40L	19140240	X	X	X	X	X	X	X				
	180	35	PMG500	19140200								X	X	X	X
	180	45	GPU20L	19140090	X	X	X	X	X	X	X				
	180	45	PMG500	19140200								X	X	X	X
	180	50	GPU20L	19140090	X	X	X	X	X	X	X				
	180	50	PMG500	19140200								X	X	X	X
460 (440-480)	205	30	GPE40L	19140240	X	X	X	X	X	X	X				
	205	30	PMG500	19140200								X	X	X	X
	205	35	GPE40L	19140240	X	X	X	X	X	X	X				
	205	35	PMG500	19140200								X	X	X	X
	205	45	GPU40L	19140170	X	X	X	X	X	X	X				
	205	45	PMG500	19140200								X	X	X	X
	205	50	GPU40L	19140170	X	X	X	X	X	X	X				
	205	50	PMG500	19140200								X	X	X	X

GP101A — POWERED FROM MOTOR TERMINAL BLOCK — FAST-RELEASE (OVER EXCITATION) — NORMAL STOPPING (AC-SWITCHING) — 30

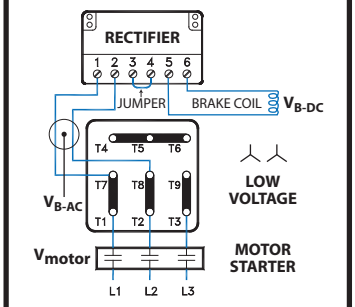

MOTOR	RECTIFIER	Vmotor	VB-AC	VB-DC
230YY/460Y	GPE20L	230 VAC	230 VAC	105 VDC

GP101B — POWERED FROM MOTOR TERMINAL BLOCK — FAST-RELEASE (OVER EXCITATION) — NORMAL STOPPING (AC-SWITCHING) — 30

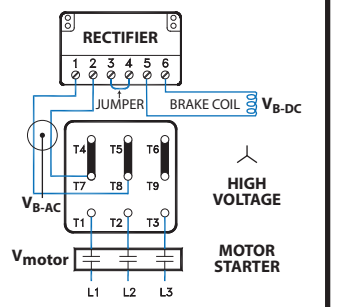

MOTOR	RECTIFIER	Vmotor	VB-AC	VB-DC
230YY/460Y	GPE20L	460 VAC	230 VAC	105 VDC

GP101C — POWERED FROM MOTOR TERMINAL BLOCK — FAST-RELEASE (OVER EXCITATION) — NORMAL STOPPING (AC-SWITCHING) — 30

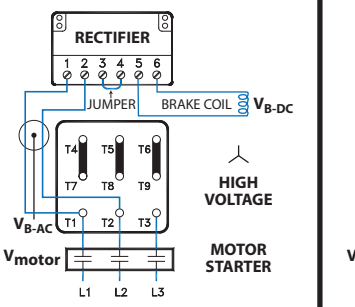

MOTOR	RECTIFIER	Vmotor	VB-AC	VB-DC
230YY/460Y	GPE40L	460 VAC	460 VAC	205 VDC

GP101D — POWERED FROM MOTOR TERMINAL BLOCK — FAST-RELEASE (OVER EXCITATION) — NORMAL STOPPING (AC-SWITCHING) — 30

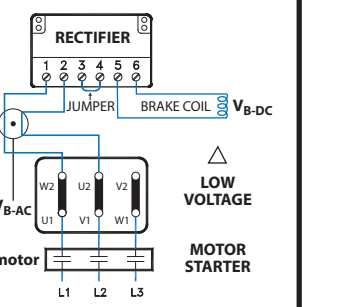

MOTOR	RECTIFIER	Vmotor	VB-AC	VB-DC
208Δ/360Y	GPE20L	208 VAC	208 VAC	105 VDC
230Δ/400Y	GPE20L	230 VAC	230 VAC	105 VDC
400Δ/690Y	GPE40L	400 VAC	400 VAC	180 VDC
460Δ/Y	GPE40L	460 VAC	460 VAC	205 VDC

GP101E — POWERED FROM MOTOR TERMINAL BLOCK — FAST-RELEASE (OVER EXCITATION) — NORMAL STOPPING (AC-SWITCHING) — 30

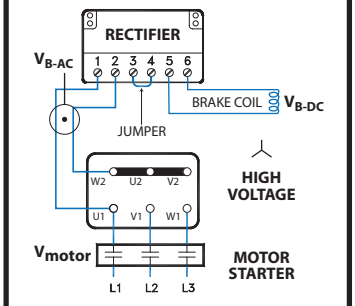

MOTOR	RECTIFIER	Vmotor	VB-AC	VB-DC
230Δ/400Y	GPE20L	400 VAC	230 VAC	105 VDC
332Δ/575Y	GPE40L	575 VAC	332 VAC	180 VDC

GP102A — POWERED FROM MOTOR TERMINAL BLOCK — FAST-RELEASE (OVER EXCITATION) — FAST STOPPING (DC-SWITCHING) — 35

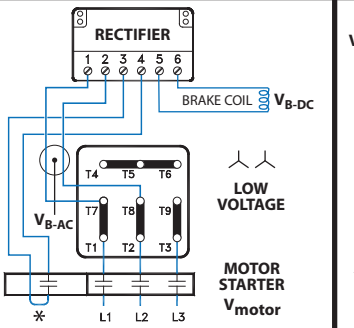

MOTOR	RECTIFIER	Vmotor	VB-AC	VB-DC
230YY/460Y	GPE20L	230 VAC	230 VAC	105 VDC

GP102B — POWERED FROM MOTOR TERMINAL BLOCK — FAST-RELEASE (OVER EXCITATION) — FAST STOPPING (DC-SWITCHING) — 35

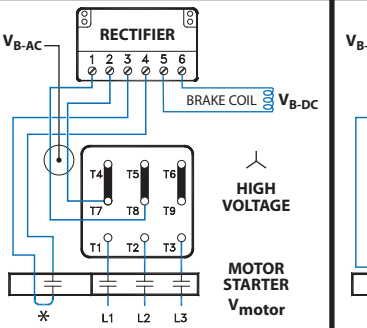

MOTOR	RECTIFIER	Vmotor	VB-AC	VB-DC
230YY/460Y	GPE20L	460 VAC	230 VAC	105 VDC

GP102C — POWERED FROM MOTOR TERMINAL BLOCK — FAST-RELEASE (OVER EXCITATION) — FAST STOPPING (DC-SWITCHING) — 35

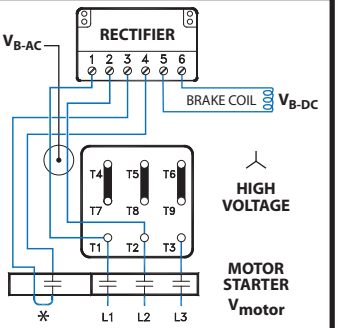

MOTOR	RECTIFIER	Vmotor	VB-AC	VB-DC
230YY/460Y	GPE40L	460 VAC	460 VAC	205 VDC

GP102D — POWERED FROM MOTOR TERMINAL BLOCK — FAST-RELEASE (OVER EXCITATION) — FAST STOPPING (DC-SWITCHING) — 35

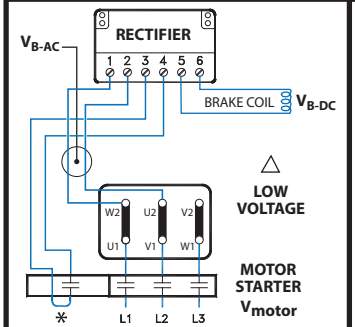

MOTOR	RECTIFIER	Vmotor	VB-AC	VB-DC
208Δ/360Y	GPE20L	208 VAC	208 VAC	105 VDC
230Δ/400Y	GPE20L	230 VAC	230 VAC	105 VDC
400Δ/690Y	GPE40L	400 VAC	400 VAC	180 VDC
460Δ/Y	GPE40L	460 VAC	460 VAC	205 VDC

GP102E — POWERED FROM MOTOR TERMINAL BLOCK — FAST-RELEASE (OVER EXCITATION) — FAST STOPPING (DC-SWITCHING) — 35

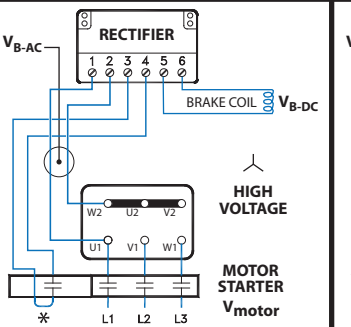

MOTOR	RECTIFIER	Vmotor	VB-AC	VB-DC
230Δ/400Y	GPE20L	400 VAC	230 VAC	105 VDC
332Δ/575Y	GPE40L	575 VAC	332 VAC	180 VDC

GP103A — POWERED FROM MOTOR TERMINAL BLOCK — STANDARD RELEASE — VERY FAST STOPPING (DC-SWITCHING + REDUCED POWER HOLDING) — 40

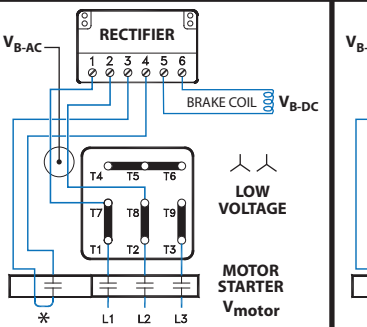

MOTOR	RECTIFIER	Vmotor	VB-AC	VB-DC
230YY/460Y	GPE20L	230 VAC	230 VAC	205 VDC

GP103B — POWERED FROM MOTOR TERMINAL BLOCK — STANDARD RELEASE — VERY FAST STOPPING (DC-SWITCHING + REDUCED POWER HOLDING) — 40

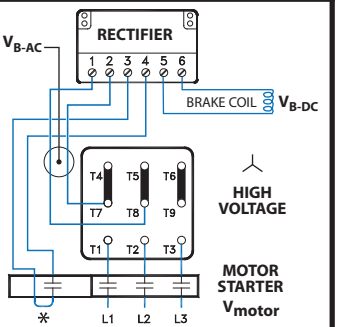

MOTOR	RECTIFIER	Vmotor	VB-AC	VB-DC
230YY/460Y	GPE20L	460 VAC	230 VAC	205 VDC

✱ The normally open contact/s (NO) is not supplied by NORD. It must close at the same time power is supplied to the brake. The contact must be capable of switching inductive loads and/or be rated IEC AC3.

= Braking Method

FAST ACTING BRAKE RECTIFIERS (GPE, GPU & PMG)

GP103C — 40

POWERED FROM MOTOR TERMINAL BLOCK
STANDARD RELEASE
VERY FAST STOPPING (DC-SWITCHING + REDUCED POWER HOLDING)

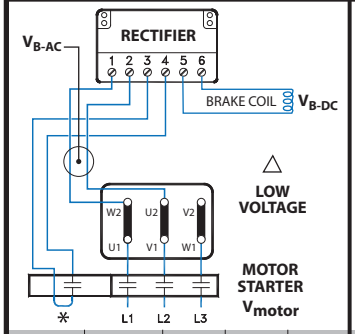

MOTOR	RECTIFIER	V_{motor}	V_{B-AC}	V_{B-DC}
208Δ/360Y	GPE20L	208 VAC	208 VAC	180 VDC
230Δ/400Y	GPE20L	230 VAC	230 VAC	205 VDC

GP103D — 40

POWERED FROM MOTOR TERMINAL BLOCK
STANDARD RELEASE
VERY FAST STOPPING (DC-SWITCHING + REDUCED POWER HOLDING)

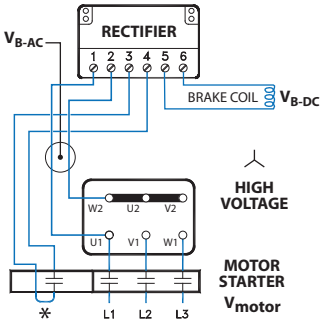

MOTOR	RECTIFIER	V_{motor}	V_{B-AC}	V_{B-DC}
230Δ/400Y	GPE20L	400 VAC	230 VAC	205 VDC

GP104A — 45

SEPERATE POWER SOURCE
FAST-RELEASE (OVER EXCITATION)
NORMAL STOPPING (AC-SWITCHING)

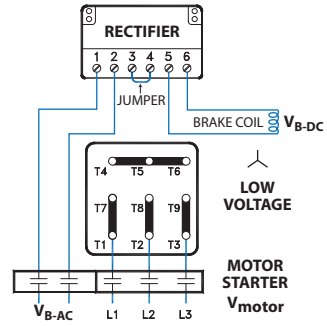

MOTOR	RECTIFIER	V_{motor}	V_{B-AC}	V_{B-DC}
230YY/460Y	GPU20L	230 VAC	230 VAC	105 VDC

GP104B — 45

SEPERATE POWER SOURCE
FAST-RELEASE (OVER EXCITATION)
NORMAL STOPPING (AC-SWITCHING)

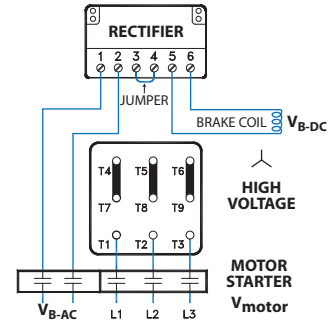

MOTOR	RECTIFIER	V_{motor}	V_{B-AC}	V_{B-DC}
230YY/460Y	GPU20L	460 VAC	230 VAC	105 VDC

GP104C — 45

SEPERATE POWER SOURCE
FAST-RELEASE (OVER EXCITATION)
NORMAL STOPPING (AC-SWITCHING)

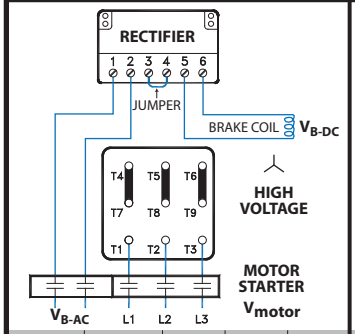

MOTOR	RECTIFIER	V_{motor}	V_{B-AC}	V_{B-DC}
230YY/460Y	GPU40L	460 VAC	460 VAC	205 VDC

GP104D — 45

SEPERATE POWER SOURCE
FAST-RELEASE (OVER EXCITATION)
NORMAL STOPPING (AC-SWITCHING)

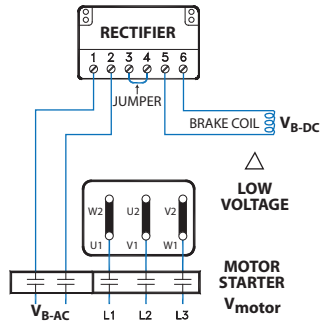

MOTOR	RECTIFIER	V_{motor}	V_{B-AC}	V_{B-DC}
208Δ/360Y	GPU20L	208 VAC	208 VAC	105 VDC
230Δ/400Y	GPU20L	230 VAC	230 VAC	105 VDC
400Δ/690Y	GPU40L	400 VAC	400 VAC	180 VDC
460Δ/Y	GPU40L	460 VAC	460 VAC	205 VDC

GP104E — 45

SEPERATE POWER SOURCE
FAST-RELEASE (OVER EXCITATION)
NORMAL STOPPING (AC-SWITCHING)

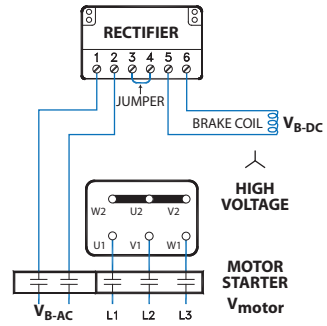

MOTOR	RECTIFIER	V_{motor}	V_{B-AC}	V_{B-DC}
230Δ/400Y	GPU20L	400 VAC	230 VAC	105 VDC
332Δ/575Y	GPU40L	575 VAC	332 VAC	180 VDC

GP105A — 50

SEPERATE POWER SOURCE
FAST-RELEASE (OVER EXCITATION)
FAST STOPPING (DC-SWITCHING)

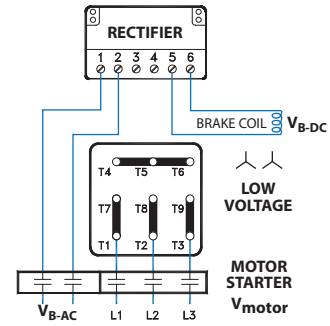

MOTOR	RECTIFIER	V_{motor}	V_{B-AC}	V_{B-DC}
230YY/460Y	GPU20L	230 VAC	230 VAC	105 VDC

GP105B — 50

SEPERATE POWER SOURCE
FAST-RELEASE (OVER EXCITATION)
FAST STOPPING (DC-SWITCHING)

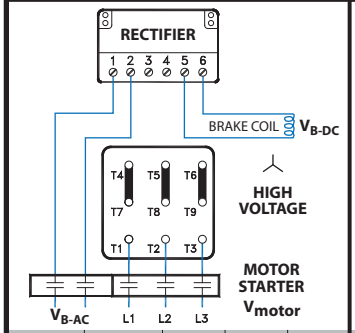

MOTOR	RECTIFIER	V_{motor}	V_{B-AC}	V_{B-DC}
230YY/460Y	GPU20L	460 VAC	230 VAC	105 VDC

GP105C — 50

SEPERATE POWER SOURCE
FAST-RELEASE (OVER EXCITATION)
FAST STOPPING (DC-SWITCHING)

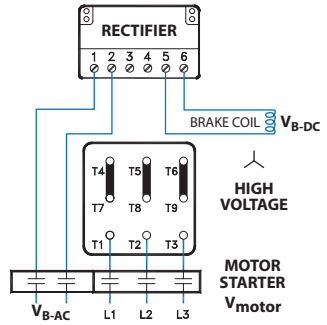

MOTOR	RECTIFIER	V_{motor}	V_{B-AC}	V_{B-DC}
230YY/460Y	GPU40L	460 VAC	460 VAC	205 VDC

GP105D — 50

SEPERATE POWER SOURCE
FAST-RELEASE (OVER EXCITATION)
FAST STOPPING (DC-SWITCHING)

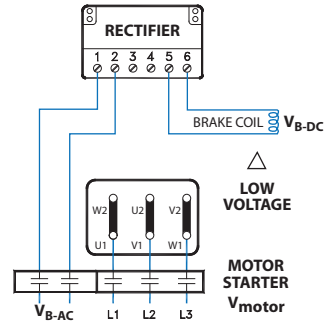

MOTOR	RECTIFIER	V_{motor}	V_{B-AC}	V_{B-DC}
208Δ/360Y	GPU20L	208 VAC	208 VAC	105 VDC
230Δ/400Y	GPU20L	230 VAC	230 VAC	105 VDC
400Δ/690Y	GPU40L	400 VAC	400 VAC	180 VDC
460Δ/Y	GPU40L	460 VAC	460 VAC	205 VDC

GP105E — 50

SEPERATE POWER SOURCE
FAST-RELEASE (OVER EXCITATION)
FAST STOPPING (DC-SWITCHING)

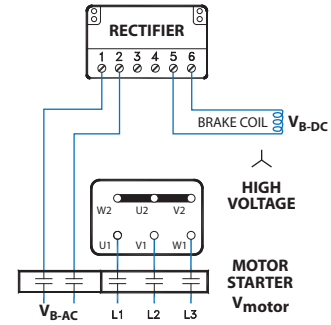

MOTOR	RECTIFIER	V_{motor}	V_{B-AC}	V_{B-DC}
230Δ/400Y	GPU20L	400 VAC	230 VAC	105 VDC
332Δ/575Y	GPU40L	575 VAC	332 VAC	180 VDC

✱ The normally open contact/s (NO) is not supplied by NORD. It must close at the same time power is supplied to the brake. The contact must be capable of switching inductive loads and/or be rated IEC AC3.

= Braking Method

NORD Gear Limited
Toll Free in Canada: 800.668.4378

NORD Gear Corporation
Toll Free in the United States: 888.314.6673

FAST ACTING BRAKE RECTIFIERS (GPE, GPU & PMG)

GP106A — SEPERATE POWER SOURCE — STANDARD RELEASE — VERY FAST STOPPING (DC-SWITCHING + REDUCED POWER HOLDING) — 55

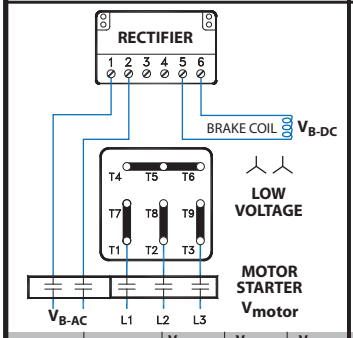

MOTOR	RECTIFIER	V_{motor}	V_{B-AC}	V_{B-DC}
230YY/460Y	GPU20L	230 VAC	230 VAC	205 VDC

GP106B — SEPERATE POWER SOURCE — STANDARD RELEASE — VERY FAST STOPPING (DC-SWITCHING + REDUCED POWER HOLDING) — 55

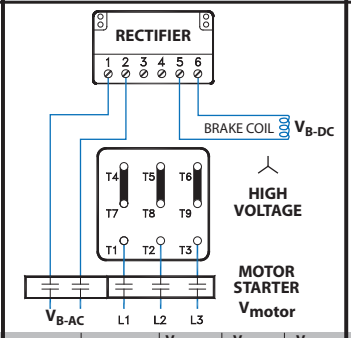

MOTOR	RECTIFIER	V_{motor}	V_{B-AC}	V_{B-DC}
230YY/460Y	GPU20L	460 VAC	230 VAC	205 VDC

GP106C — SEPERATE POWER SOURCE — STANDARD RELEASE — VERY FAST STOPPING (DC-SWITCHING + REDUCED POWER HOLDING) — 55

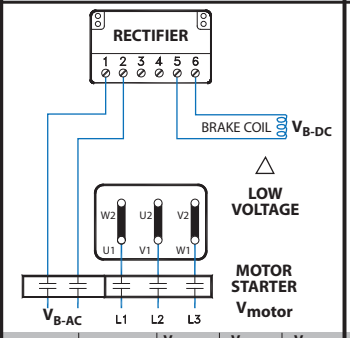

MOTOR	RECTIFIER	V_{motor}	V_{B-AC}	V_{B-DC}
208Δ/360Y	GPU20L	208 VAC	208 VAC	180 VDC
230Δ/400Y	GPU20L	230 VAC	230 VAC	205 VDC

GP106D — SEPERATE POWER SOURCE — STANDARD RELEASE — VERY FAST STOPPING (DC-SWITCHING + REDUCED POWER HOLDING) — 55

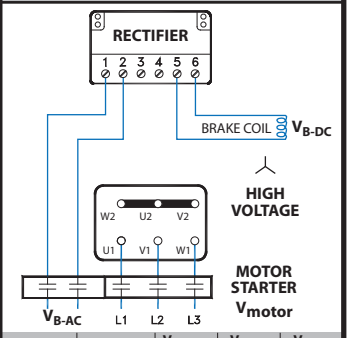

MOTOR	RECTIFIER	V_{motor}	V_{B-AC}	V_{B-DC}
230Δ/400Y	GPU20L	400 VAC	230 VAC	205 VDC

PMG101A — POWERED FROM MOTOR TERMINAL BLOCK — FAST-RELEASE (OVER EXCITATION) — NORMAL STOPPING (AC-SWITCHING) — 30

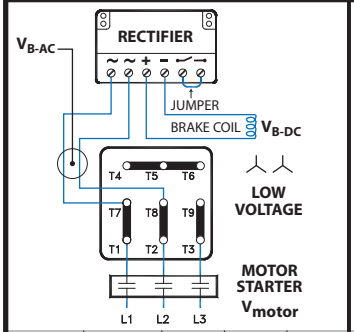

MOTOR	RECTIFIER	V_{motor}	V_{B-AC}	V_{B-DC}
230YY/460Y	PMG500	230 VAC	230 VAC	105 VDC

PMG101B — POWERED FROM MOTOR TERMINAL BLOCK — FAST-RELEASE (OVER EXCITATION) — NORMAL STOPPING (AC-SWITCHING) — 30

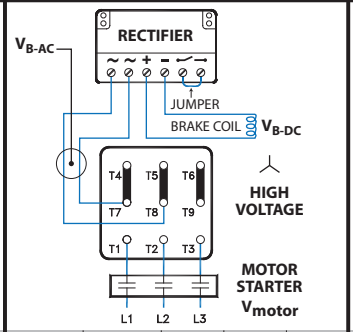

MOTOR	RECTIFIER	V_{motor}	V_{B-AC}	V_{B-DC}
230YY/460Y	PMG500	460 VAC	230 VAC	105 VDC

PMG101C — POWERED FROM MOTOR TERMINAL BLOCK — FAST-RELEASE (OVER EXCITATION) — NORMAL STOPPING (AC-SWITCHING) — 30

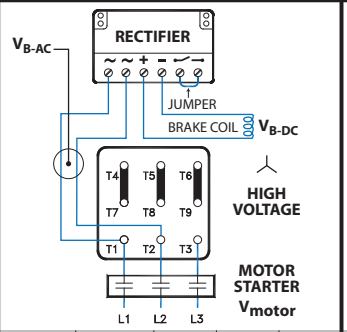

MOTOR	RECTIFIER	V_{motor}	V_{B-AC}	V_{B-DC}
230YY/460Y	PMG500	460 VAC	460 VAC	205 VDC

PMG101D — POWERED FROM MOTOR TERMINAL BLOCK — FAST-RELEASE (OVER EXCITATION) — NORMAL STOPPING (AC-SWITCHING) — 30

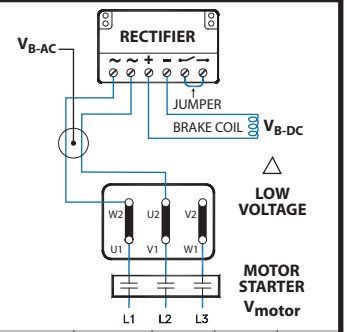

MOTOR	RECTIFIER	V_{motor}	V_{B-AC}	V_{B-DC}
208Δ/360Y	PMG500	208 VAC	208 VAC	105 VDC
230Δ/400Y	PMG500	230 VAC	230 VAC	105 VDC
400Δ/690Y	PMG500	400 VAC	400 VAC	180 VDC
460Δ/Y	PMG500	460 VAC	460 VAC	205 VDC

PMG101E — POWERED FROM MOTOR TERMINAL BLOCK — FAST-RELEASE (OVER EXCITATION) — NORMAL STOPPING (AC-SWITCHING) — 30

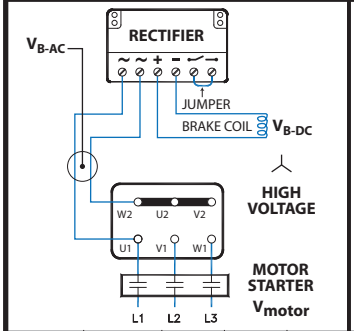

MOTOR	RECTIFIER	V_{motor}	V_{B-AC}	V_{B-DC}
230Δ/400Y	PMG500	400 VAC	230 VAC	105 VDC

PMG102A — POWERED FROM MOTOR TERMINAL BLOCK — FAST-RELEASE (OVER EXCITATION) — FAST STOPPING (DC-SWITCHING) — 35

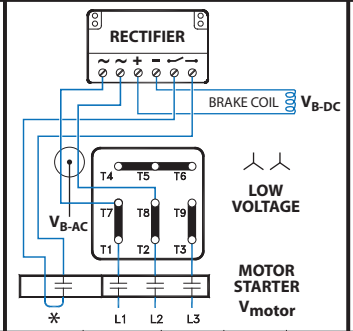

MOTOR	RECTIFIER	V_{motor}	V_{B-AC}	V_{B-DC}
230YY/460Y	PMG500	230 VAC	230 VAC	105 VDC

PMG102B — POWERED FROM MOTOR TERMINAL BLOCK — FAST-RELEASE (OVER EXCITATION) — FAST STOPPING (DC-SWITCHING) — 35

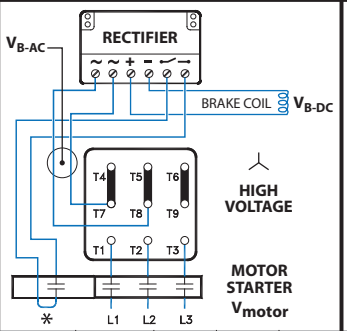

MOTOR	RECTIFIER	V_{motor}	V_{B-AC}	V_{B-DC}
230YY/460Y	PMG500	460 VAC	230 VAC	105 VDC

PMG102C — POWERED FROM MOTOR TERMINAL BLOCK — FAST-RELEASE (OVER EXCITATION) — FAST STOPPING (DC-SWITCHING) — 35

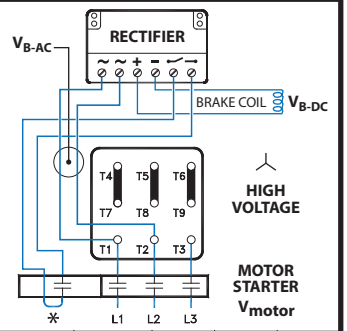

MOTOR	RECTIFIER	V_{motor}	V_{B-AC}	V_{B-DC}
230YY/460Y	PMG500	460 VAC	460 VAC	205 VDC

✻ The normally open contact/s (NO) is not supplied by NORD. It must close at the same time power is supplied to the brake. The contact must be capable of switching inductive loads and/or be rated IEC AC3.

= Braking Method

NORD Gear Limited
Toll Free in Canada: 800.668.4378

NORD Gear Corporation
Toll Free in the United States: 888.314.6673

FAST ACTING BRAKE RECTIFIERS (GPE, GPU & PMG)

PMG102D — POWERED FROM MOTOR TERMINAL BLOCK — FAST-RELEASE (OVER EXCITATION) — FAST STOPPING (DC-SWITCHING) — 35

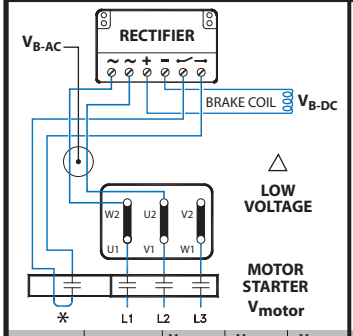

MOTOR	RECTIFIER	V_{motor}	V_{B-AC}	V_{B-DC}
208Δ/360Y	PMG500	208 VAC	208 VAC	105 VDC
230Δ/400Y	PMG500	230 VAC	230 VAC	105 VDC
400Δ/690Y	PMG500	400 VAC	400 VAC	180 VDC
460Δ/Y	PMG500	460 VAC	460 VAC	205 VDC

PMG102E — POWERED FROM MOTOR TERMINAL BLOCK — FAST-RELEASE (OVER EXCITATION) — FAST STOPPING (DC-SWITCHING) — 35

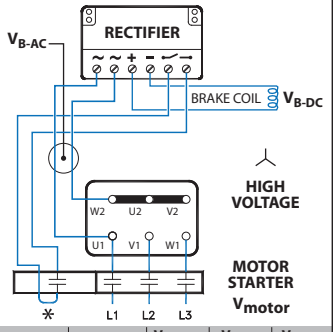

MOTOR	RECTIFIER	V_{motor}	V_{B-AC}	V_{B-DC}
230Δ/400Y	PMG500	400 VAC	230 VAC	105 VDC

PMG103A — POWERED FROM MOTOR TERMINAL BLOCK — STANDARD RELEASE — VERY FAST STOPPING (DC-SWITCHING + REDUCED POWER HOLDING) — 40

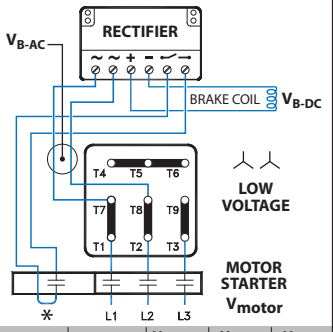

MOTOR	RECTIFIER	V_{motor}	V_{B-AC}	V_{B-DC}
230YY/460Y	PMG500	230 VAC	230 VAC	205 VDC

PMG103B — POWERED FROM MOTOR TERMINAL BLOCK — STANDARD RELEASE — VERY FAST STOPPING (DC-SWITCHING + REDUCED POWER HOLDING) — 40

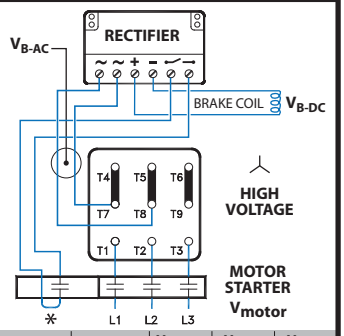

MOTOR	RECTIFIER	V_{motor}	V_{B-AC}	V_{B-DC}
230YY/460Y	PMG500	460 VAC	230 VAC	205 VDC

PMG103C — POWERED FROM MOTOR TERMINAL BLOCK — STANDARD RELEASE — VERY FAST STOPPING (DC-SWITCHING + REDUCED POWER HOLDING) — 40

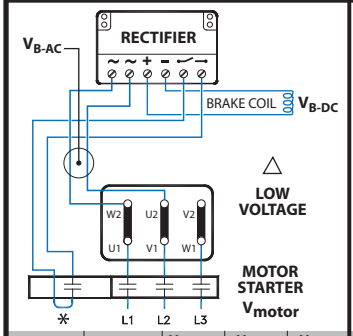

MOTOR	RECTIFIER	V_{motor}	V_{B-AC}	V_{B-DC}
208Δ/360Y	PMG500	208 VAC	208 VAC	180 VDC
230Δ/400Y	PMG500	230 VAC	230 VAC	205 VDC

PMG103D — POWERED FROM MOTOR TERMINAL BLOCK — STANDARD RELEASE — VERY FAST STOPPING (DC-SWITCHING + REDUCED POWER HOLDING) — 40

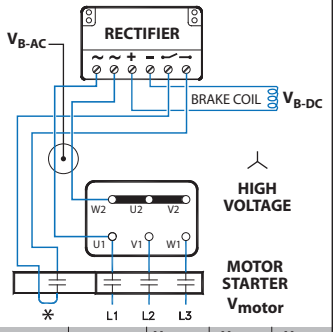

MOTOR	RECTIFIER	V_{motor}	V_{B-AC}	V_{B-DC}
230Δ/400Y	PMG500	400 VAC	230 VAC	205 VDC

PMG104A — SEPERATE POWER SOURCE — FAST-RELEASE (OVER EXCITATION) — NORMAL STOPPING (AC-SWITCHING) — 45

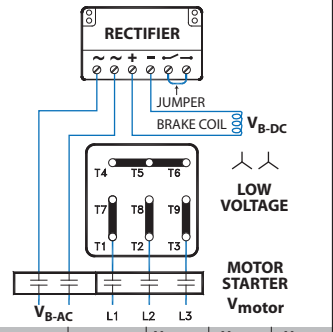

MOTOR	RECTIFIER	V_{motor}	V_{B-AC}	V_{B-DC}
230YY/460Y	PMG500	230 VAC	230 VAC	105 VDC

PMG104B — SEPERATE POWER SOURCE — FAST-RELEASE (OVER EXCITATION) — NORMAL STOPPING (AC-SWITCHING) — 45

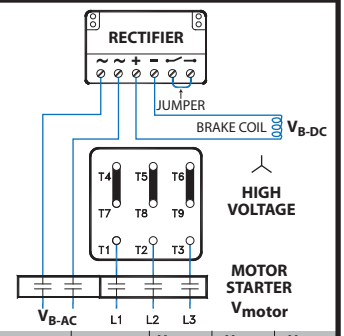

MOTOR	RECTIFIER	V_{motor}	V_{B-AC}	V_{B-DC}
230YY/460Y	PMG500	460 VAC	230 VAC	105 VDC

PMG104C — SEPERATE POWER SOURCE — FAST-RELEASE (OVER EXCITATION) — NORMAL STOPPING (AC-SWITCHING) — 45

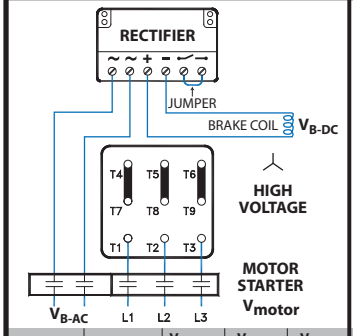

MOTOR	RECTIFIER	V_{motor}	V_{B-AC}	V_{B-DC}
230YY/460Y	PMG500	460 VAC	460 VAC	205 VDC

PMG104D — SEPERATE POWER SOURCE — FAST-RELEASE (OVER EXCITATION) — NORMAL STOPPING (AC-SWITCHING) — 45

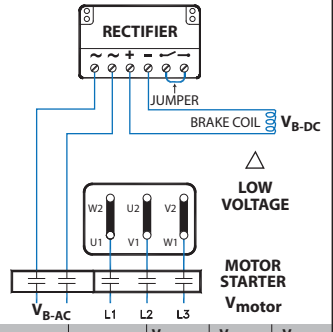

MOTOR	RECTIFIER	V_{motor}	V_{B-AC}	V_{B-DC}
208Δ/360Y	PMG500	208 VAC	208 VAC	105 VDC
230Δ/400Y	PMG500	230 VAC	230 VAC	105 VDC
400Δ/690Y	PMG500	400 VAC	400 VAC	180 VDC
460Δ/Y	PMG500	460 VAC	460 VAC	205 VDC

PMG104E — SEPERATE POWER SOURCE — FAST-RELEASE (OVER EXCITATION) — NORMAL STOPPING (AC-SWITCHING) — 45

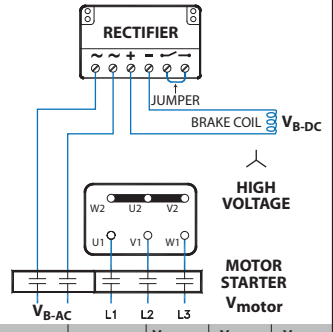

MOTOR	RECTIFIER	V_{motor}	V_{B-AC}	V_{B-DC}
230Δ/400Y	PMG500	400 VAC	230 VAC	105 VDC

PMG105A — SEPERATE POWER SOURCE — FAST-RELEASE (OVER EXCITATION) — FAST STOPPING (DC-SWITCHING) — 50

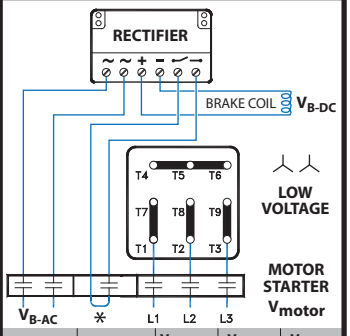

MOTOR	RECTIFIER	V_{motor}	V_{B-AC}	V_{B-DC}
230YY/460Y	PMG500	230 VAC	230 VAC	105 VDC

✱ The normally open contact/s (NO) is not supplied by NORD. It must close at the same time power is supplied to the brake. The contact must be capable of switching inductive loads and/or be rated IEC AC3.

= Braking Method

NORD Gear Limited
Toll Free in Canada: 800.668.4378

NORD Gear Corporation
Toll Free in the United States: 888.314.6673

PMG105B

SEPERATE POWER SOURCE
FAST-RELEASE (OVER EXCITATION)
FAST STOPPING (DC-SWITCHING)

50

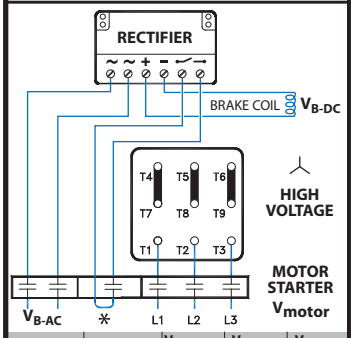

MOTOR	RECTIFIER	V_{motor}	V_{B-AC}	V_{B-DC}
230YY/460Y	PMG500	460 VAC	230 VAC	105 VDC

PMG105C

SEPERATE POWER SOURCE
FAST-RELEASE (OVER EXCITATION)
FAST STOPPING (DC-SWITCHING)

50

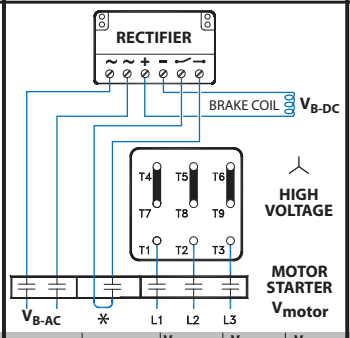

MOTOR	RECTIFIER	V_{motor}	V_{B-AC}	V_{B-DC}
230YY/460Y	PMG500	460 VAC	460 VAC	205 VDC

PMG105D

SEPERATE POWER SOURCE
FAST-RELEASE (OVER EXCITATION)
FAST STOPPING (DC-SWITCHING)

50

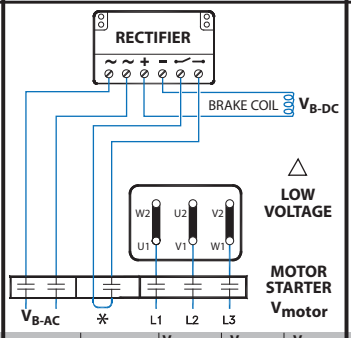

MOTOR	RECTIFIER	V_{motor}	V_{B-AC}	V_{B-DC}
208Δ/360Y	PMG500	208 VAC	208 VAC	105 VDC
230Δ/400Y	PMG500	230 VAC	230 VAC	105 VDC
400Δ/690Y	PMG500	400 VAC	400 VAC	180 VDC
460Δ/Y	PMG500	460 VAC	460 VAC	205 VDC

PMG105E

SEPERATE POWER SOURCE
FAST-RELEASE (OVER EXCITATION)
FAST STOPPING (DC-SWITCHING)

50

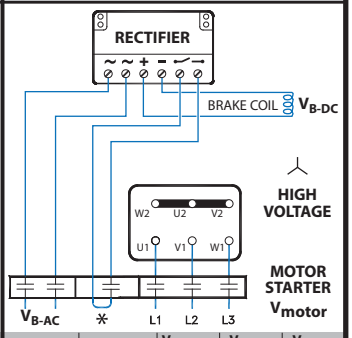

MOTOR	RECTIFIER	V_{motor}	V_{B-AC}	V_{B-DC}
230Δ/400Y	PMG500	400 VAC	230 VAC	105 VDC

PMG106A

SEPERATE POWER SOURCE
STANDARD RELEASE
VERY FAST STOPPING
(DC-SWITCHING + REDUCED POWER HOLDING)

55

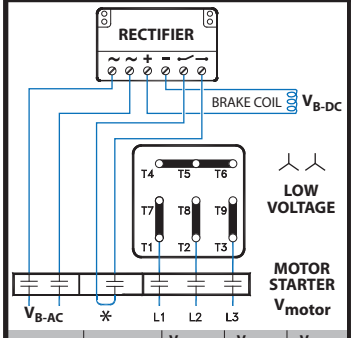

MOTOR	RECTIFIER	V_{motor}	V_{B-AC}	V_{B-DC}
230YY/460Y	PMG500	230 VAC	230 VAC	205 VDC

PMG106B

SEPERATE POWER SOURCE
STANDARD RELEASE
VERY FAST STOPPING
(DC-SWITCHING + REDUCED POWER HOLDING)

55

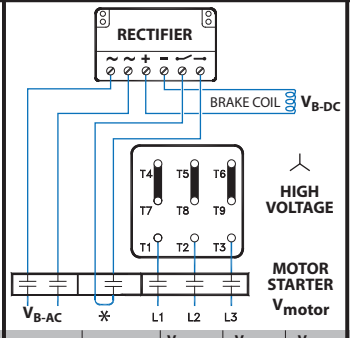

MOTOR	RECTIFIER	V_{motor}	V_{B-AC}	V_{B-DC}
230YY/460Y	PMG500	460 VAC	230 VAC	205 VDC

PMG106C

SEPERATE POWER SOURCE
STANDARD RELEASE
VERY FAST STOPPING
(DC-SWITCHING + REDUCED POWER HOLDING)

55

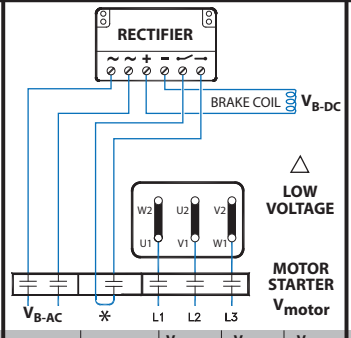

MOTOR	RECTIFIER	V_{motor}	V_{B-AC}	V_{B-DC}
208Δ/360Y	PMG500	208 VAC	208 VAC	180 VDC
230Δ/400Y	PMG500	230 VAC	230 VAC	205 VDC

PMG106D

SEPERATE POWER SOURCE
STANDARD RELEASE
VERY FAST STOPPING
(DC-SWITCHING + REDUCED POWER HOLDING)

55

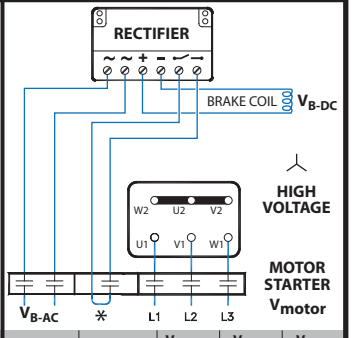

MOTOR	RECTIFIER	V_{motor}	V_{B-AC}	V_{B-DC}
230Δ/400Y	PMG500	400 VAC	230 VAC	205 VDC

✱ **The normally open contact/s (NO) is not supplied by NORD. It must close at the same time power is supplied to the brake. The contact must be capable of switching inductive loads and/or be rated IEC AC3.**

= Braking Method

CURRENT SENSING BRAKE RELAY (IR) INSTALLATION & MAINTENANCE

Motor Current Sensing Brake Relay (IR)

The current sensing relay, normally called the IR option, is used to achieve improved brake engagement or stopping time without the use of external control equipment or additional wiring. The relay is mounted directly onto the motor terminal box. The relay switch leads are connected to terminals 3 and 4 of the rectifier. When the power to the motor is shut off, the IR relay opens the brake circuit on the DC side; this allows the brake to demagnetize quickly.

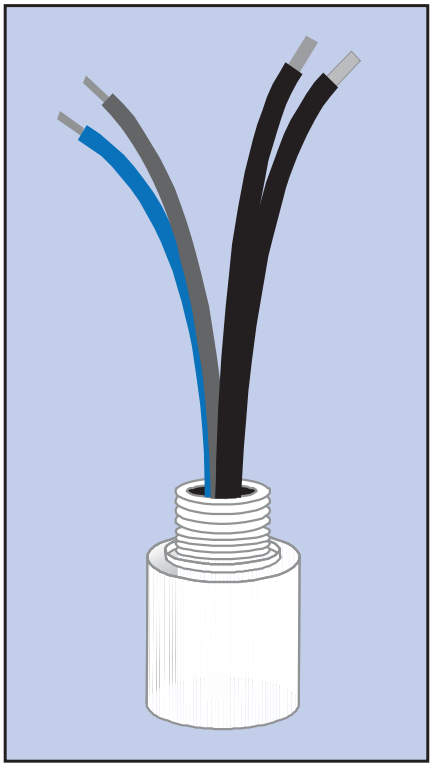

⚠ WARNING ⚠

- Motor must be powered across-the-line (not inverter powered or controlled with a soft-start)
- The brake power must be provided from the motor's terminal block (not separately powered)
- Motor must be a single-speed (not possible with two-speed motors)

Ratings

Part Number	18556010	18556020
Motor Frame Sizes	63S – 180M*	180L – 225M
Maximum Cycles per hour	500	500
Switching Voltage	42-550V_{DC}	42-550V_{DC}
AC input current – black/white wires	25 A_{AC} -75A_{AC} – 0.2 s	50 A_{AC} - 75A_{AC} – 0.2s
DC brake current – red and blue wires	1.0 A_{DC}	1.0 A_{DC}
Holding Current	0.7 A_{AC}	0.7 A_{AC}
Additional brake setting delay	18 ms	18 ms
Ambient temperature	- 25 to 90 °C - 40 to 167 °F	- 25 to 90 °C - 40 to 167 °F
Enclosure with o-ring mounted to a terminal box	IP65	IP65

* For the 180MX/4, 230/460V motor use part number 18556020

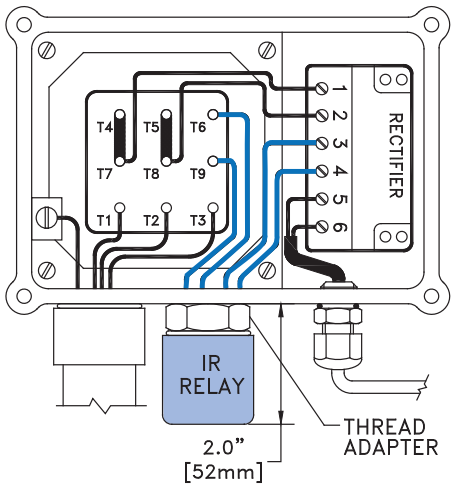

Connection Notes

Rectifier			IR Relay Wires To Rectifiers	
Type	Part Number	Design	Red	Blue
GVE20L	19141000	Full-Wave	3	4
GHE40L	19141010	Half-Wave	4	3
GHE50L	19141020	Half Wave	4	3
GPE20L	19140230	Push-Hybrid	4	3
GPE40L	19140240	Push-Hybrid	4	3

Conduit Box Thread Adapter

Thread	Motor Frame	Part number
M20	63-71	18542006*
M25	80-90	18522253
M32	100-132	18522320
M40	160-180	18522400 + 18522253

* Spacer

CURRENT SENSING BRAKE RELAY (IR) INSTALLATION & MAINTENANCE

Connection Diagrams

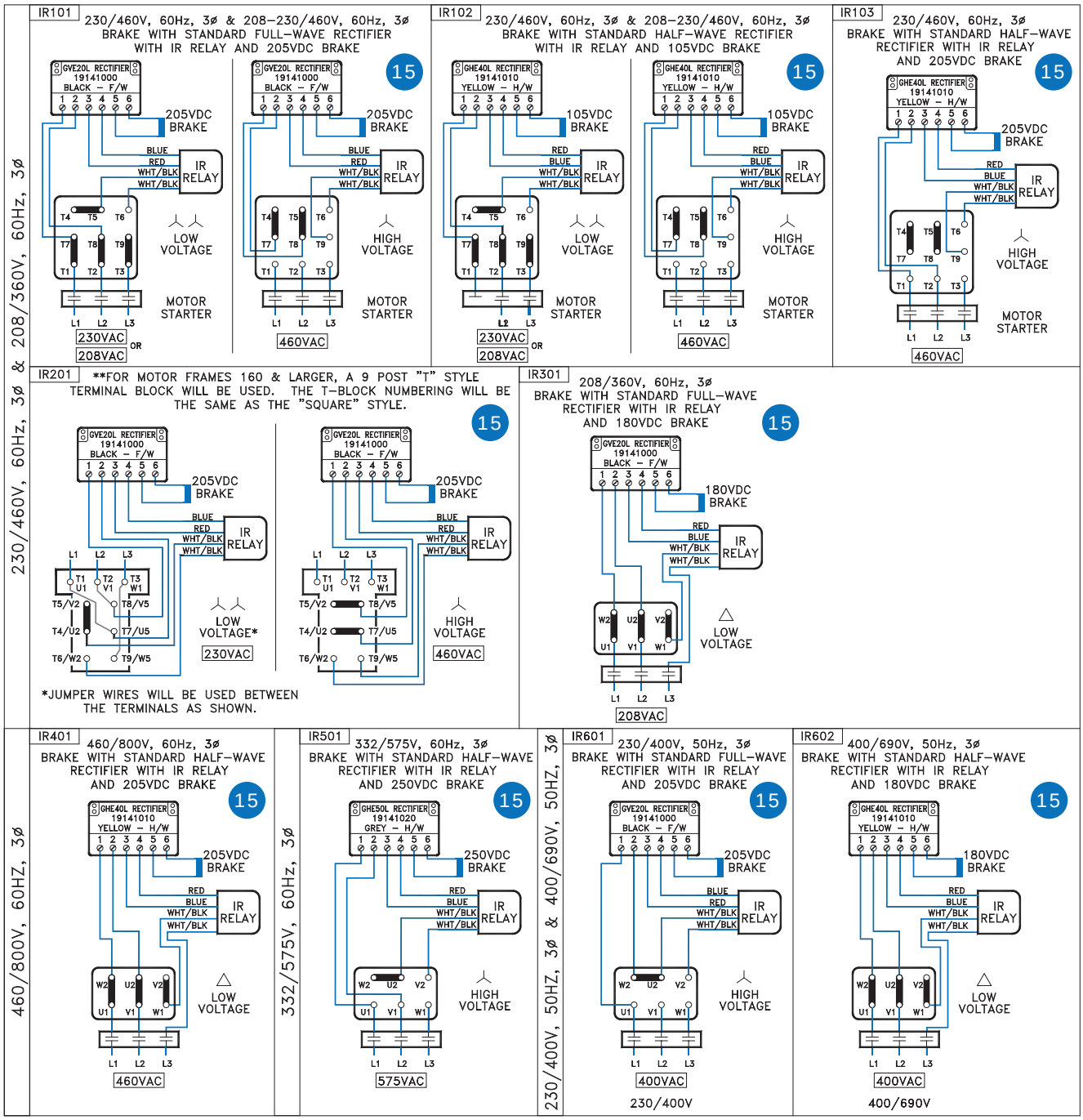

Connection Diagrams
GPE Rectifier with IR Relay used for External DC-Switching

Method Operation

Start - Fast release (Overexcitation)
Stop - Fast stop (DC-Switching)

GPE type - External DC-Switching
Terminal 3 & 4 - Contact or IR-relay

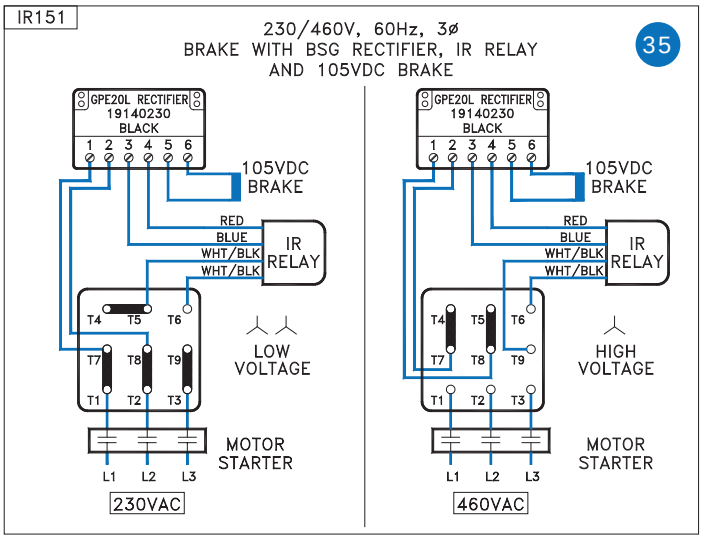

= Braking Method

Method Operation

Start - Standard Release
Stop - Very Fast stop (Reduced power Hold)

GPE type - External DC-Switching
Terminal 3 & 4 - Contact or IR-relay

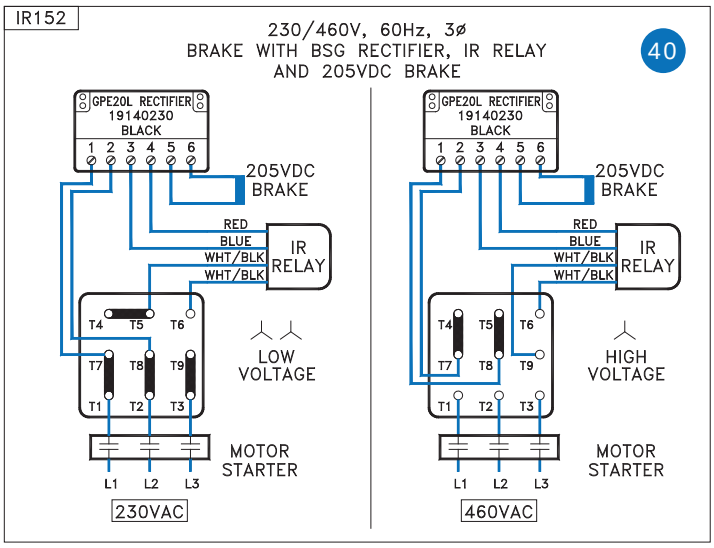

= Braking Method

Additional Reference - U_____ GP Brake Rectifier Installation and Maintenence

NEMA/IEC INPUT ADAPTERS & THEIR COUPLINGS

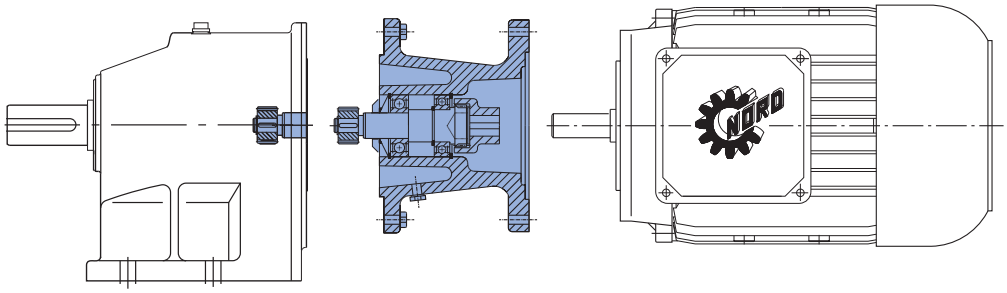

⚠ WARNING ⚠

LOCK OUT POWER before any maintenance is performed. Make absolutely sure that no voltage is applied while work is being done on the gearbox or input.

NEMA/ IEC Motor Adapters

Motor adapters allow for easy installation and removal of industry standard motors. Motor adapters consist of a coupling and an adapter housing that connects the motor to the gear reducer.

NORD Gear supplies a coupling that is to be mounted on the motor shaft. It is important that the coupling is properly positioned.

- For NEMA Input Adapters, follow the Motor Installation Instructions on pages 3-4.
- For IEC Input Adapters, the supplied coupling will mount directly against the motor shaft shoulder. No locating measurements need to be taken.

⚠ NOTE ⚠

Some of the larger IEC inputs will have a coupling spacer included to help locate the coupling. Slide the spacer against the motor shaft shoulder, slide the coupling against the spacer and tighten set screw(s).

⚠ NOTE ⚠

For the larger motor adapters (IEC160 / N250TC and larger), an Automatic Lubricator is supplied. This will need to be activated at the time of startup. For operation and activation instructions, refer to user manual U45200.

NEMA/IEC Motor Weight Limits

When mounting a motor to a NORD NEMA C-face motor adapter it is important to consider the motor's weight. Following is a table that includes the maximum motor weight the NEMA adapter can support. If the motor exceeds the listed weight is must be externally supported. When a C-face mounted motor is externally supported care must be taken to ensure that the support system does not impose additional pre-loads on the NEMA motor adapter.

NEMA Motor Weight Limit

Motor FRAME	56C	143TC	145TC	182TC	184TC	210TC
Max Weight [lb]	66	88	110	130	175	220
Motor FRAME	**250TC**	**280TC**	**324TC**	**326TC**	**365TC**	
Max Weight [lb]	440	550	770	1100	1540	

IEC Motor Weight Limit

Motor FRAME	63	71	80	90	100	112
Max Weight [lb]	55	66	88	110	130	175
Motor FRAME	**132**	**160**	**180**	**200**	**225**	**250**
Max Weight [lb]	220	440	550	770	1100	1540

Couplings

Couplings are made with tough abrasion resistant materials, which resist most chemicals and petroleum products. They are electrically isolated (prevent metal to metal contact) and require no lubrication or maintenance. Depending upon the size of the C-face input, NORD provides either a gear or a jaw type coupling.

NORD supplies three different types of couplings depending on the size of input: "J" style, "M" style and "Jaw" style coupling. Following are instructions on how to properly mount each type of coupling onto the motor.

NEMA/IEC INPUT ADAPTERS & THEIR COUPLINGS

Couplings for the NEMA and IEC Adapters

Depending on the size of the input adapter to the gearbox, NORD Gear supplies two styles of couplings - BoWex® (gear tooth) and Rotex® (jaw) couplings.

BoWex® Couplings

NORD C-face adapter input shafts have a machined spline on the end. NORD incorporates two styles of BoWex® couplings, the "J" and "M" styles. The "J" style is a one-piece coupling with a metal hub and nylon spline. The "M" style is a two-piece coupling – the metal hub and a nylon sleeve. Nylon and steel components allow them to operate in high ambient temperatures without lubrication or maintenance.

- Nylon sleeves resist dirt, moisture, most chemicals and petroleum products
- No lubrication required
- Operating Conditions: -22°F - 212°F (-30°C - 100°C)
- Higher temperature coupling sleeve available up to 250°F (120°C)
- Special bore available

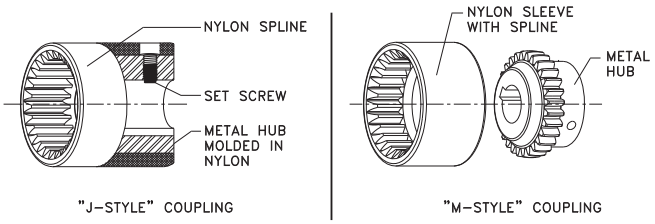

BoWex® Couplings Mechanical Ratings "J" Style

Coupling Type	Available Bore Sizes	Cont. / Peak Torque	Input
J14	11 mm,14 mm 5/8 in	10/20 Nm 89/117 lb-in	IEC 63, 71 NEMA 56C
J24	19 mm, 24 mm 5/8 in, 7/8 in	20/40 Nm 117/354 lb-in	IEC 80, 90 NEMA 56C, 140TC
J28	28 mm 1-1/8 in	45-90 Nm 399/797 lb-in	IEC 100-112 NEMA 180TC

BoWex® Couplings Mechanical Ratings "M" Style

Coupling Type	Available Bore Sizes	Cont. / Peak Torque	Input
M14, M24, M28	Same as "J" Style	Same as "J" Style	Same as "J" Style
M38	38 mm 1-1/8 in, 1-3/8 in	80/160 Nm 708/1,416 lb-in	IEC 132 NEMA 180TC, 210TC
M42	42 mm 1-5/8 in	100/200 Nm 885/1,770 lb-in	IEC 160 NEMA 250TC
M48	48 mm 1-7/8 in	140/280 Nm 1,240/2,478 lb-in	IEC 180 NEMA 280TC

Rotex® Couplings

The cast iron jaw type couplings have an integral urethane "spider" that provides smooth transmission of the motor torque. A set screw on the coupling prohibits axial movement along the motor shaft.

- Excellent shock and vibration dampening
- Excellent resistance to oils and most chemicals
- No metal-to-metal contact
- Operating Conditions: -22°F - 195°F (-30°C - 90°C)
- Higher temperature material (Hytrel) spider available up to 230°F (110°C)
- Low temperature materials available upon request
- Special bores available

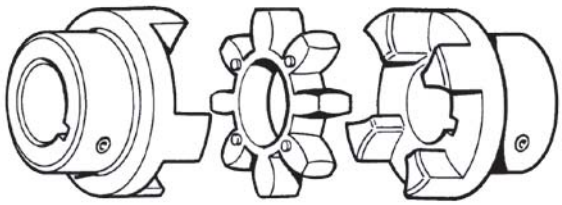

Rotex® Couplings Mechanical Ratings

Coupling Type	Available Bore Sizes	Cont. / Peak Torque	Input	Spider
R19	14 mm 19 mm	17/34 NM 150/300 lb-in	SEK/SEP 100	Urethane 98 Shore A Hardness Color: Red
R24	19 mm 24 mm	60/120 Nm 530/1,060 lb-in	SEK/SEP 100 SEK/SEP 130	
R28	32 mm 38 mm	95/190 Nm 840/1,680 lb-in	SEK/SEP 65 SEK/SEP 215	Urethane 92 Shore A Hardness Color: Yellow
R38	1.89" (48 mm) Max Bore	190/382 Nm 1,680/3,380 lb-in	-	
R42	2.44" (62 mm) Max Bore	310/620 Nm 2,740/5,480 lb-in	-	
R48	42, 48 mm 1-5/8, 1 7/8 in	310/620 Nm 2,740/5,480 lb-in	IEC 160, 180 NEMA 250T NEMA 280T SEK/SEP 300 SEK/SEP 215	
R65	60 mm 2-1/8, 2-3/8 in	625/1,250 Nm 5,530/11,060 lb-in	IEC 225 NEMA 320T NEMA 360T	
R90	65, 75, 80 mm 2-1/8, 2-3/8 in	2,400/4,800 Nm 24,240/42,480 lb-in	IEC 250, 280 IEC 315 NEMA 360TC NEMA 400TS NEMA 440TS	

NEMA/IEC INPUT ADAPTERS & THEIR COUPLINGS

"J" Style Coupling NEMA C-face Motor Installation

1. Measure the distance from the face of the input adapter to the face of the splined shaft and record that measurement as A in the equation below.
2. Measure depth of coupling engagement zone and record the measurement as "B" in the equation below.
3. Add "A" + "B" and subtract 0.08" (~2mm) from the distance. This needs to be done so that the coupling will not be preloaded after installation!
4. Use that measurement to locate the coupling from the face of the motor onto the shaft.
5. Once in place, tighten the set screw to lock the coupling in place. It is recommended that the key is staked or bonded (Loctite) in place to prohibit the key from vibrating out.
6. Mount the motor onto the input adapter with customer supplied bolts. Make sure that the coupling from the adapter and the motor engage securely. Use lock washers or Loctite to prohibit bolts from becoming loose from vibration.

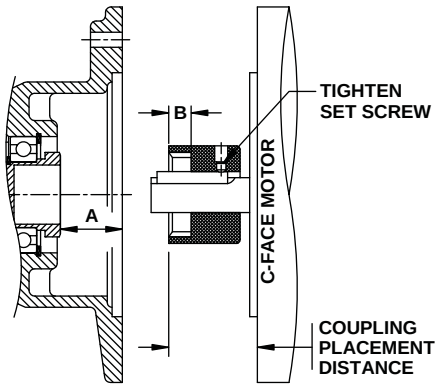

MEASURED DISTANCES A + B		SUBTRACT DISTANCE	COUPLING PLACEMENT DISTANCE
___ +	___	- 0.080" (2mm) =	_____

"M" Style Coupling NEMA C-face Motor Installation

1 Measure the distance from the face of the input adapter to the face of the splined shaft & record that measurement.
2. Subtract 0.31" (~8mm) from the distance. This needs to be done so that the coupling will not be preloaded after installation!
3. Use that measurement to locate the coupling from the face of the motor onto the shaft.
4. Once in place, tighten the set screw to lock the coupling in place. It is recommended that the key is staked or bonded (Loctite) in place to prohibit the key from vibrating out.
5. Mount the motor onto the input adapter with customer supplied bolts. Make sure that the coupling from the adapter and the motor engage securely. Use lock washers or Loctite to prohibit bolts from becoming loose from vibration.

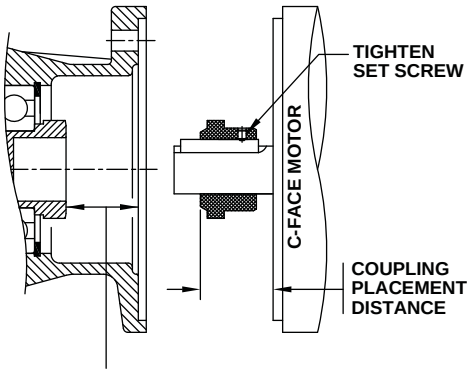

MEASURED DISTANCE	SUBTRACT DISTANCE	COUPLING PLACEMENT DISTANCE
_____	- 0.310" (8mm) =	_____

"Jaw" Style Coupling NEMA C-face Installation

1. Measure the distance from the face of the input adapter to the face of the coupling as shown and record that measurement.
2. Subtract the "X" dimension from the measured distance. This needs to be done so that the coupling will not be preloaded after installation!
3. Use that measurement to locate the coupling from the face of the motor onto the shaft.
4. The metal portion of the coupling should be heated up prior to assembly, generally 250°F to 300°F (120°C to 150°C).

⚠ *WARNING* ⚠
DO NOT HEAT THE URETHANE SPIDER.

5. Once in place, tighten the setscrew to lock coupling in place. Let the coupling cool down before placing the spider into the jaws. It is recommended that the key is staked or bonded (Loctite) in place to prohibit the key from vibrating out.
6. Mount the motor onto the input adapter with customer supplied bolts. Make sure that the coupling from the adapter and the motor engage securely. Use lock washers or Loctite to prohibit bolts from becoming loose from vibration.

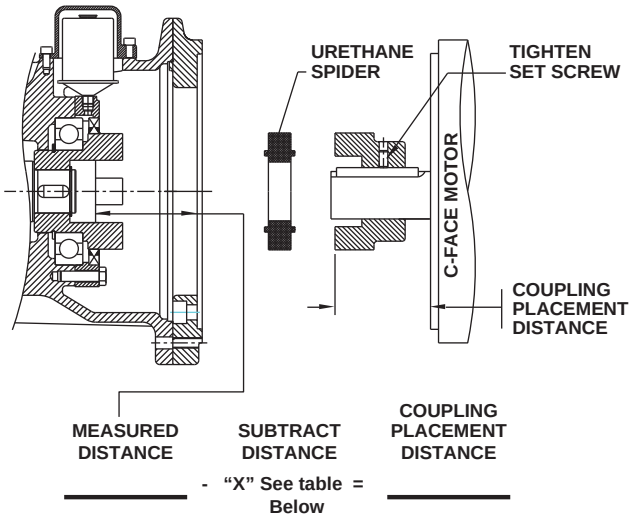

Coupling Size	"X" (Subtract this value from measured distance)
R14	0.06" (1.5 mm)
R19 & R24	0.08" (2.0 mm)
R28	0.10" (2.5 mm)
R38 & 42	0.12" (3.0 mm)
R48	0.14" (3.5 mm)
R65	0.18" (4.5 mm)
R90	0.22" (5.5 mm)

NEMA/IEC INPUT ADAPTERS & THEIR COUPLINGS

NEMA/IEC Parts List for UNICASE Gearboxes

NEMA 56C - 180TC

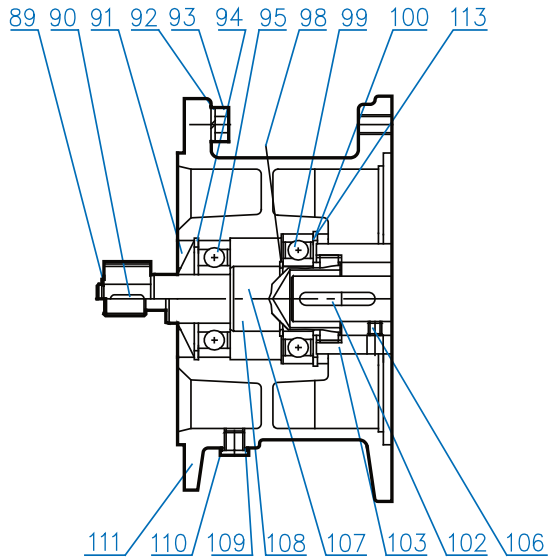

NEMA 180TC - 280TC

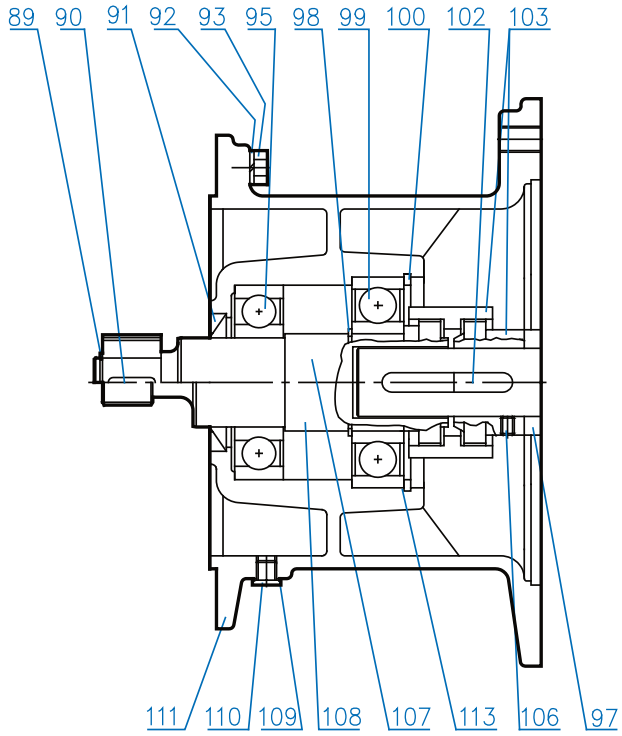

89	Circlip
90	Key
91	Shaft Seal
92	Washer
93	Hexagon Screw
94	Circlip
95	Clutch Shaft Bearing
97	Space
98	Circlip
99	Clutch Shaft Bearing
100	Circlip
101	Key
102	Key
103	Coupling
104	Coupling
105	Coupling
106	Set Screw
107	Clutch Shaft
108	Clutch Pinion Shaft
109	Seal
110	Oil-Plug
111	NEMA / IEC Adapter
112	Oil Flinger
113	Shim
140	Shim
141	Shim
142	Shim
143	Socket Head Screw
144	Cover
145	Automatic Lubricator*
146	Adapter
147	Bearing Cover
148	Hexagon Screw
149	Washer
150	Shaft Seal

* Please see U45250 for automatic lubricator Instructions.

NEMA 250TC - 400TC
IEC 160 - IEC 315

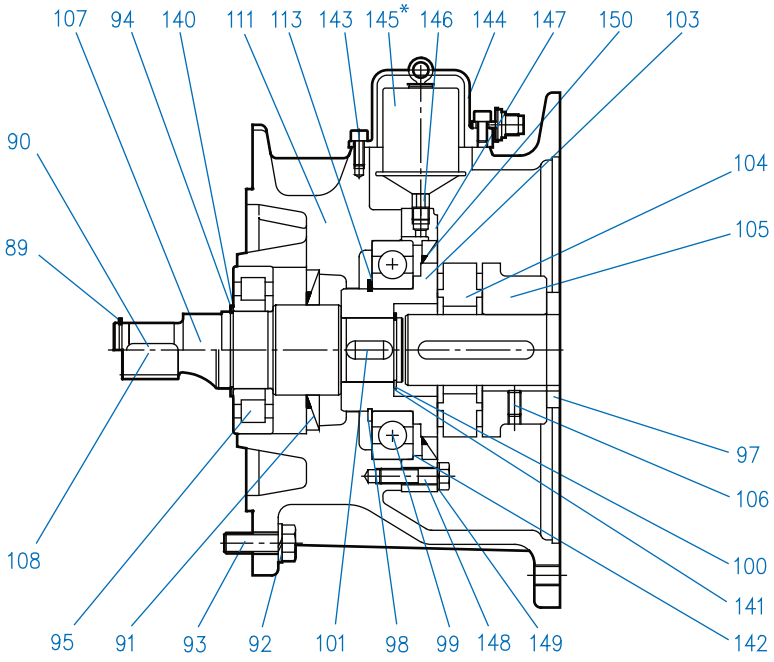

NORD Gear Limited
Toll Free in Canada: 800.668.4378

NORD Gear Corporation
Toll Free in the United States: 888.314.6673

NEMA/IEC Parts List for Nordbloc Gearboxes

NEMA 56C - 180TC
IEC 63 - IEC 112

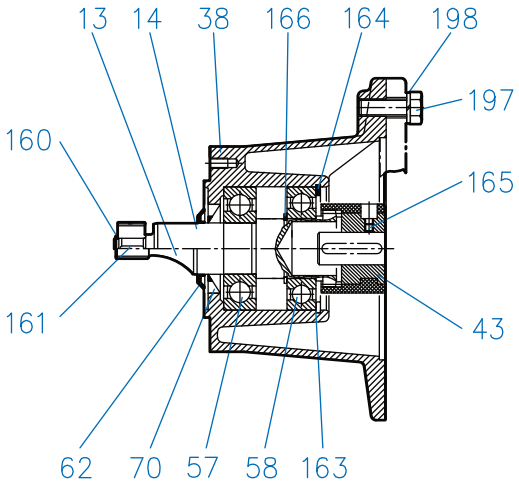

NEMA 210TC - 280TC
IEC 132-IEC 180

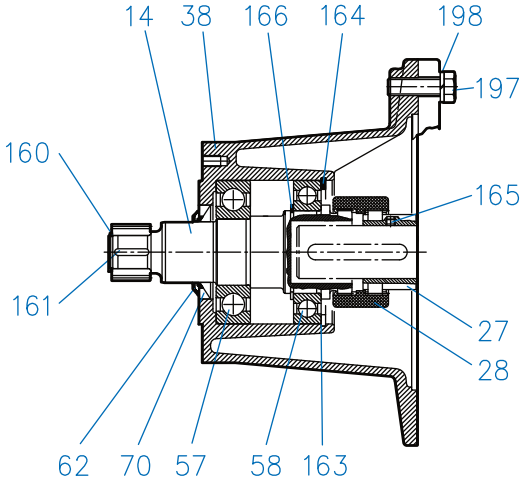

IEC 200

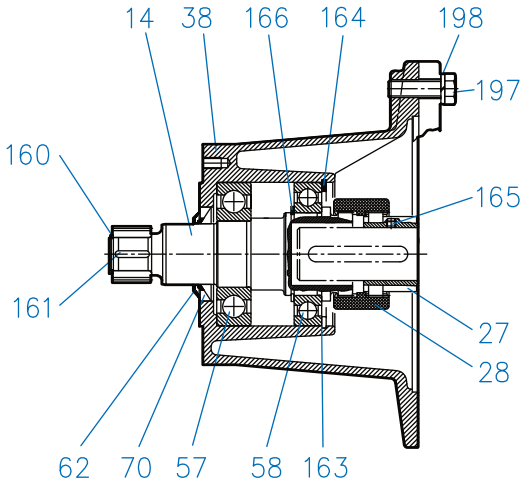

13	Clutch Pinion Shaft
14	Clutch Shaft
26	Coupling
27	Coupling
28	Coupling
38	IEC Adapter
43	Coupling
57	Clutch Shaft Bearing
58	Clutch Shaft Bearing
62	Oil Flinger
70	Shaft Seal
101	Key
160	Snap Ring
161	Key
163	Shim
164	Snap Ring
165	Set Screw
166	Snap Ring
197	Bolt
198	Spring Washer

Automatic Lubricator

Some NORD gear units with NEMA 250TC or IEC 160 and larger input adapters, have a PERMA® Classic automatic lubricator supplied to help dispense grease to the outboard bearing.

Helical Inline	SK62, SK72, SK73, SK82, SK83, SK92, SK93, SK102 and SK103
Parallel-Shaft Clincher™	SK6282, SK7282, SK7382 SK8282, SK8382, SK9282, SK9382, SK10282, SK10382, SK11282, SK11382, and SK12382
90.1 Series Helical-Bevel	SK9072.1, SK9082.1, SK9086.1, SK9092.1, and SK9096.1

Principle of Operation

The activation screw is secured into the top of the lubrication canister and tightened until the ring-eyelet reaches its breaking point. A zinc-molybdenum gas generator drops into a citric acid liquid electrolyte, that is contained within an elastic bladder. The gas generator starts an electrochemical reaction which gradually pressurizes the bladder by releasing hydrogen gas in very small amounts. The gas creates enough pressure (up to 4 bar or 58 psi) to expand the bladder and push the piston and the lubricant forward.

Lubricant is continuously injected into the lubrication point until the bearing cavity is full. Any back pressure from the bearing will cause the system to neutralize. The bladder inside the canister will continue to slowly build pressure so that once the equipment resumes normal operation, the lubricator will also resume its normal function. After 12 months of operation the PERMA® canister must be replaced.

The lubricator contains approximately 120 cm^3 or 120 ml (4.8 oz) of grease. For reference, a single stroke of a typical grease gun delivers approximately 1.0-1.2 cm^3 (0.03–0.04 oz) of grease. This means the canister contains approximately 100 strokes of grease. At the end of the lubrication period, the discharge indicator cap or piston becomes clearly visible through the clear nylon discharge indicator cap which is located at the bottom of the PERMA® canister; this helps indicate that the lubricant has been fully discharged.

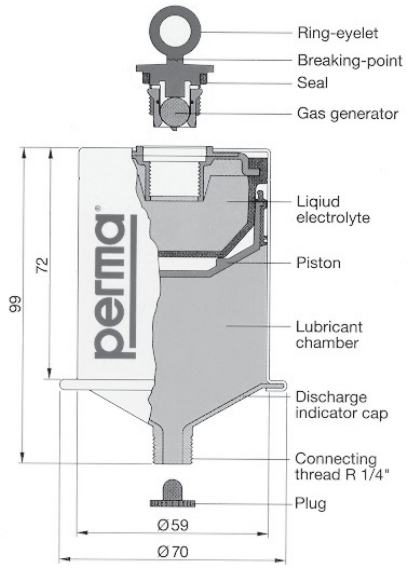

HARMFUL SITUATION

- To prevent premature bearing failure, the lubrication dispenser must be activated prior to commissioning the gear reducer.
- The lubricator must only be used once and should never be opened or taken apart or permanent damage will result.
- Never unscrew the PERMA® canister from the lubrication point after activation or during the discharge period. This would cause a permanent pressure loss in the lubricator and would justify replacing the lubricator.

WARNING

- Avoid swallowing the gas generator, the liquid electrolyte, and the lubricant.
- Avoid contact of, the liquid electrolyte, and the lubricant with the eyes, skin or clothing.
- Observe all applicable MSDS sheets.
- Follow applicable local laws and regulations concerning waste disposal.

PERMA® Classic – Options Supplied by NORD

NORD Part Number	28301000	28301010
Lubrication Option	Synthetic (standard)	Food Grade (optional)
PERMA® Classic Temperature Range ♦	0 to 40 °C (32 to 104 °F)	0 to 40 °C (32 to 104 °F)
Lubrication Volume	120 cm3 or 120 ml (4.8 oz)	120 cm3 or 120 ml (4.8 oz)
Grease Lubrication Mfg. / Type	Klüber / Petamo GHY 133	Lubriplate / FGL1
Lubrication Temperature Range ♦	-30 to 120 °C (-22 to 248 °F)	-18 to 120 °C (0 to 248 °F)

♦ The temperature range values shown do not apply to other components and/or lubricants within the gear reducer.

The lubricator contents will dispense for a 12 month period when the average temperature is 20 °C (68 °F).

Temperature Influences Discharge Rate

Discharge rate is based upon an ambient temperature of 20 °C (68 °F). The gray activating screw supplied by PERMA indicates that the lubricator contents will dispense for a 12 month period when the average temperature is 20 °C (68 °F).

- Lower ambient temperatures will lead to slower dispensing rates and higher ambient temperatures will lead to faster dispensing rates.
- Dispensing rates depend primarily on average ambient conditions and not extreme highs and lows.
- Discharge can also be influenced by type of lubricant, vibration, and the connecting parts and values shown are approximate, based upon supplier testing completed.

Average Ambient Temperature	Discharge Period Months ♦
0 °C (32 °F)	>18
10 °C (50 °F)	18
20 °C (68 °F)	12
30 °C (86 °F)	6
40 °C (104 °F)	3

♦ Values are approximate.

Attention!

Screw in the activation screw until the lug breaks off before commissioning the gear unit.

Dispensing time: 12 Months

Activation Date

Month 1 2 3 4 5 6 7 8 9 10 11 12

Year 11 12 13 14 15

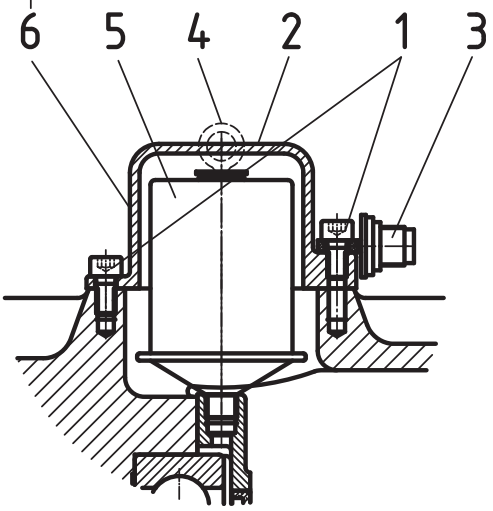

Initial Assembly Instructions

When first receiving the gear unit with motor adapter, the automatic lubricator is installed as shown in the figure below.

1. Loosen and remove the M8 x 16 socket head cap screws (1) and the protective cartridge case cover (2).
2. Insert the gray colored activation screw (3) into the lubrication dispenser (5) and tighten securely by hand.
3. Put a suitable tool through the ring-eyelet (4) and use it to turn the activator screw until the eyelet breaks off. The lubricator is now activated.
4. Refit the protective cartridge case cover (2) and tighten the M18 x 16 socket head screws.
5. Mark the activation date indicating on the reddish-orange adhesive label (6) by indicating the month and year.
6. Take note of the activation date and replace the canister again in twelve months.

Replacement Assembly Instructions

1. Loosen and remove the M8 x 16 socket head cap screws (1) and the protective cartridge case cover (2).
2. Remove the expired or old PERMA® canister from the bearing housing.
3. Remove the protective shipping plug from the thread-end of the New PERMA® canister.
4. Screw the canister into the reducer bearing housing by hand until it is snug and secure. Do not over tighten or the plastic threads on the canister can become damaged!
5. Put a suitable tool through the ring-eyelet (4) and use it to turn the activator screw until the eyelet breaks off. The lubricator is now activated.
6. Refit the protective cartridge case cover (2), tighten the M18 x 16 socket head screws (1)
7. Take note of the activation date and replace the canister again in twelve months.

NEMA OR IEC INPUT ADAPTER WITH GREASE FITTING

Application

NORD gear units listed in the table below that are supplied with a NEMA 250TC or IEC 160 and larger input adapter, may be supplied with an external grease fitting. The grease fitting allows the user to service the outboard bearing of the reducer's input assembly

Helical Inline	SK62, SK72, SK73, SK82, SK83, SK92, SK93, SK102 and SK103
Parallel-Shaft CLINCHER™	SK6282, SK7282, SK7382, SK8282, SK8382, SK9282, SK9382, SK10282, SK10382, SK11282, SK11382 & SK12382
90.1 Series Helical-Bevel	SK9072.1, SK9082.1, SK9086.1, SK9092.1 & SK9096.1

The grease fitting is an option which must be specified upon ordering, otherwise NORD will normally supply a PERMA Automatic Lubricator (See User Manual U45250).

Factory Supplied Grease

The bearing grease applied at the factory is as follows:

Brand	Mobil Polyrex EP 2
Thickener	Polyurea
NLGI Grade	2
Temperature Range	40°C to 120°C (-40°F to 250°F

IMPORTANT NOTE

It is the user's responsibility to ensure that if replacement grease is used, that it is fully compatible with the factory supplied grease.

Service Instructions

WARNING

- While working on the gear drive system, make sure the power from the prime mover is isolated or secured on "lock-out" to prevent accidental start-up and to safeguard against injury!
- Surfaces of motors and gear units may become hot during operation or shortly after start-up. In some instances additional protection against accidental contact may be necessary. Use caution to avoid burns or serious injury!

1. It is best to re-grease the bearing within a short period after the gear unit was operational because the old grease will be more viscous and will flow easier.
2. Ensure that the grease gun contains the right lubricant for the bearing to be re-greased.
3. Open the protective flip cover and clean the areas around the grease fitting to ensure that contaminants are not introduced into the bearing cavity.
4. Using a grease gun, apply 0.75 ounces (20-25 grams) of compatible bearing grease every 1,000 service hours.

IMPORTANT NOTE

Re-greasing should be carried out while the bearing is still warm from operation and/or while rotating (if it is safe).

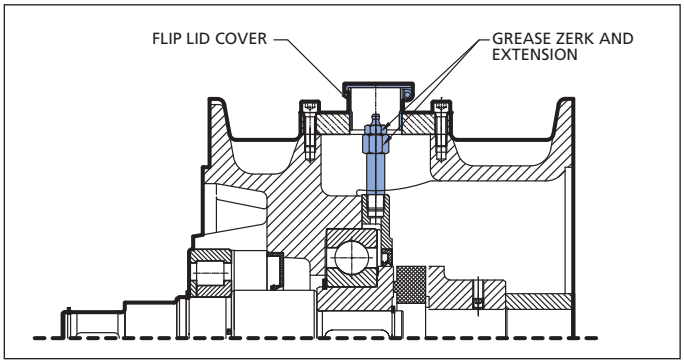

SOLID INPUT SHAFT (W)

1. Solid Input Shaft (W)

The shaft will be inch or metric, depending on how the unit was ordered. Measure and verify the shaft before mounting anything on the shaft. Below are the tolerances used for the solid shafts.

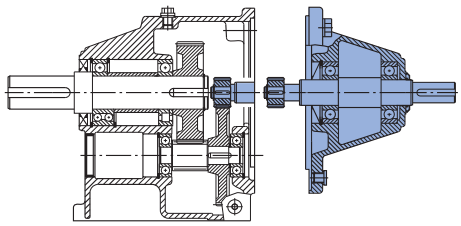

2. Solid shaft diameter tolerance

Reducer input shaft extensions have a diameter tolerance as specified in **Table 1**.

Table 1: Solid Shaft Diameter Tolerance

Above ø (in)	To & Including ø (in)	Tolerance (in)
0.375	1.750	+0.0000 / -0.0005
1.750	2.750	+0.0000 / -0.0010

Above ø (mm)	To & Including ø (mm)	Tolerance (mm)	ISO 286-2 Fit Class
10	18	+0.012 / +0.001	k6
18	30	+0.015 / +0.002	k6
30	50	+0.018 / +0.002	k6
50	70	+0.030 / +0.011	m6

3. Fitting drive elements onto the reducer solid shaft

Solid input shaft extensions are provided with a drill and tap feature as indicated in Table 2. When installing drive elements such as coupling hubs, pulleys, sprockets, or gears, NORD recommends using the threaded hole in the end of the shaft, along with a suitable assembly device fitted into the threaded hole.

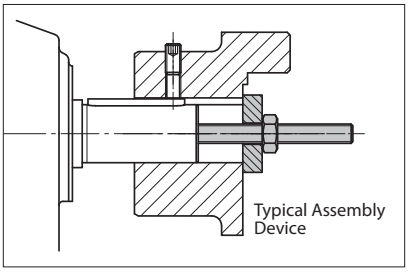

Table 2: Solid Input Shaft End - Threaded Holes

Above ø (in)	To & Including ø (in)	Tap size & Depth (in)
0.375	0.500	10-24 x 0.43 in
0.500	0.875	1/4-20 x 0.59 in
0.875	0.938	5/16-18 x 0.71 in
0.938	1.100	3/8-16 x 0.87 in
1.100	1.300	1/2-13 x 1.10 in
1.300	1.875	5/8-11 x 1.42 in
1.875	2.750	3/4-10 x 1.73 in

Above ø (mm)	To & Including ø (mm)	Tap Size & Depth (mm)
10	13	M4 x 10 mm
13	16	M5 x 12.5 mm
16	21	M6 x 16 mm
21	24	M8 x 19 mm
24	30	M10 x 22 mm
30	38	M12 x 28 mm
38	50	M16 x 36 mm
50	70	M20 x 42 mm

HARMFUL SITUATION

DO NOT DRIVE or **HAMMER** the coupling hub, pulley, sprocket, or gear into place. An endwise blow to the reducer shaft can generate damaging axial forces and cause damage to the reducer housing, bearings or internal components.

WARNING

To avoid serious injury the user must provide suitable safety guards for all rotating shafts and shaft components such as couplings, chain drives, belt drives, etc. All guarding must adhere to local regulations and safety standards.

4. Installing interference-fit hubs to the reducer shaft

Prior to installing any interference-fit hubs to the reducer shaft, consult with the manufacturer to determine proper assembly and fit. Interference-fits usually require heating the coupling, sprocket or gear hub, per the manufacturer's recommendations. Coupling hub installation typically follows ANSI/AGMA 9002-A86. Always make sure the reducer shaft seals are protected from the heat source. Apply uniform heat to the drive element hub to prevent distortion. NORD does not recommend heating the drive element hub beyond 212°F to 275°F (100°C to 135° C).

⚠ WARNING ⚠

When using heat to mount a drive element hub, do not use open flame in a combustible atmosphere or near flammable materials. Use suitable protection to avoid burns or serious injury.

STOP HARMFUL SITUATION STOP

When using external chain or belt drives, make sure the reducer is sized so that the shaft and bearings have adequate capacity. To avoid unnecessary bearing loads and additional shaft deflection, mount all power take-off devices (sprockets, pulleys, etc.) so that the applied load center is as close to the gear housing as possible and check component alignment and tension of any belts or chains per the manufacturer's recommendation. Do not over tighten the belts or chains.

5. Coupling installation

The performance and life of any coupling depends upon how well it is installed. Coupling hubs are typically mounted flush with the shaft ends, unless specifically ordered for overhung mounting. Shaft couplings should be installed according to the coupling manufacturer's recommendations for gap, angular and parallel alignment. To help obtain critical shaft alignment coupling hubs may be installed to the machine shafts prior to final shimming or tightening of the foundation bolts. Proper coupling alignment allows for thermal and mechanical shaft movement during operation and ensures that only torque (no radial load) is transmitted between the mating shafts.

Coupling gap and angular alignment

The shaft gap must be sufficient to accommodate any anticipated thermal or mechanical axial movement. When setting the coupling gap, insert a spacer or shim stock equal to the required spacing or gap between the coupling hub faces. Measure the clearance using feeler gauges at 90-degree intervals, to verify the angular alignment.

Parallel (or offset) alignment

Mount a dial indicator to one coupling hub, and rotate this hub, sweeping the outside diameter of the other hub. The parallel or offset misalignment is equal to one-half of the total indicator reading. Another method is to rest a straight edge squarely on the outside diameter of the hubs at 90° intervals and measure any gaps with feeler gauges. The maximum gap measurement is the parallel or offset misalignment.

Check alignment

After both angular and parallel alignments are within specified limits, tighten all foundation bolts securely and re-check critical alignment. If any of the specified limits for alignment are exceeded, realign the coupling.

6. Installing sheaves (pulleys), sprockets and gears

To avoid unnecessary bearing loads and additional shaft deflection, mount all power take-off devices (sprockets, pulleys, gears, etc.) so that the applied load center is as close to the gear housing as possible, as shown in **Figure 2**.

Figure 2: Pully or Sprocket Mounting

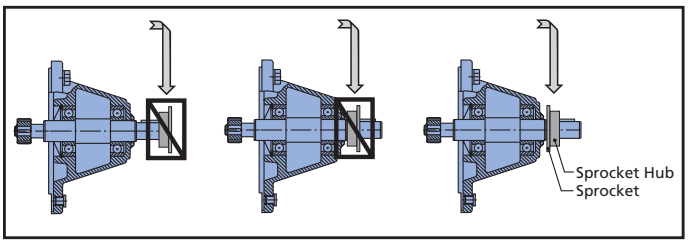

Align the driver sheave or sprocket with the driven sheave or sprocket by placing a straight-edge length-wise across the face of the sheaves or sprockets. Alignment of bushed sheaves and sprockets should be checked only after bushings have been tightened. Check horizontal shaft alignment by placing one leg of a square or a level vertically against the face of the sheave or sprocket.

Always check component alignment and tension any belts or chains per the manufacturer's recommendation. The ideal belt or chain tension allows proper wrap of the driver and driven wheels, while maintaining the lowest possible tension of the belts or chain, so that no slipping occurs under load conditions. Check belt or chain tension frequently over the first 24 to 48 hours of operation.

STOP HARMFUL SITUATION STOP

When using external chain or belt drives, make sure the reducer is sized so that the shaft and bearings have adequate capacity. To avoid unnecessary bearing loads and additional shaft deflection, mount all power take-off devices (sprockets, pulleys, etc.) so that the applied load center is as close the gear housing as possible and check component alignment and tension of any belts or chains per the manufacturer's recommendation. Do not over tension the belts or chains.

7. Service Guidelines for W-Shaft Input with Grease Fitting

On some solid shaft input (Type W) gear units, the outer roller bearing needs to be re-greased at regular service intervals. This is necessary for double-stage gearboxes sizes SK62 or SK6282 and larger, and triple-stage gearboxes from size SK73, SK7382 or SK9072.1 and larger.

To lubricate the bearing of the input shaft, approximately 0.75 to 1.0 ounces (20-25 grams) grease should be added by the grease fitting approximately after every 2,500 hours of service or at least every 6 months. The W-shaft input is factory assembled with the proper amount and type of grease. The type of grease supplied depends upon the type of oil specified at time of order.

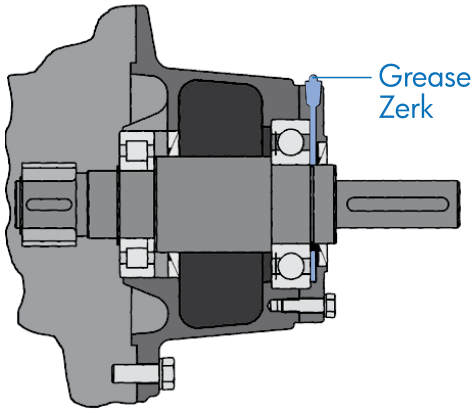

Reducer Oil Type	Grease Type/Thickener	NLGI Grade	Ambient Temperature Range	Manufacturer Brand/Type
Mineral	Standard (Li-Complex)	NLGI 2	-30 to 60°C (-22 to 140°F)	Mobil Grease XHP222
Synthetic	High Temp (Polyurea)	NLGI 2	-40 to 80°C (-40 to 176°F)	Mobil / Polyrex EP 2
Food-Grade	Food-Grade (Polyurea)	NLGI 2	-30 to 40°C (-22 to 104°F)	Mobil SHC Polyrex 222

STOP *HARMFUL SITUATION* STOP

Grease compatibility depends upon the type of thickener or soap complex used, the base oil type suspended within the thickener, and the type of additives used. The user should check with the lubrication supplier before making substitutions in brand and type in order to assure compatibility and to avoid causing damage to the extended bearing.

W-Type Input Parts List for UNICASE Gearboxes

SK 02 - SK 52
SK 03 - SK 63

SK 0182NB - SK 6382

SK 02040 - SK 42125
SK 13050 - SK 43125

SK 9012.1 - SK 9052.1
SK 9013.1 - SK 9053.1

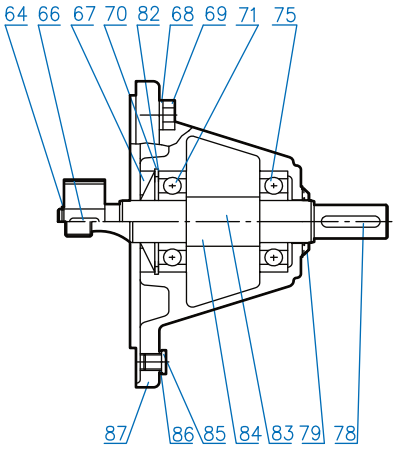

SK 62 - SK 72
SK 73 - SK 93

SK 6282 - SK 7282
SK 7382 - SK 9382

SK 9072.1

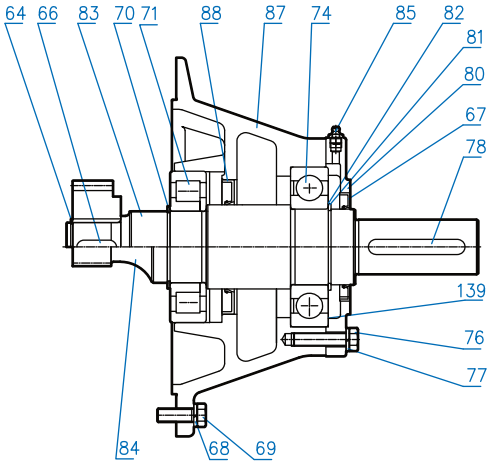

64	Circlip
66	Key
67	Shaft Seal
68	Washer
69	Hexagon Screw
70	Circlip
71	Input Shaft Bearing
74	Ball Bearing
75	Input Shaft Bearing
76	Washer
77	Hexagon Screw
78	Key
79	Oil Flinger
80	Bearing Cover
81	Circlip
82	Shim
83	Input Shaft, Plain
84	Input Shaft, Gearcut
85	Drain Plug
86	Seal
87	Input Bearing Housing
88	Shaft Seal (Oil Flinger)
139	Shim

SK 82 - SK 102
SK 103

SK 8282 - SK 9282

SK 9082.1 - SK 9092.1

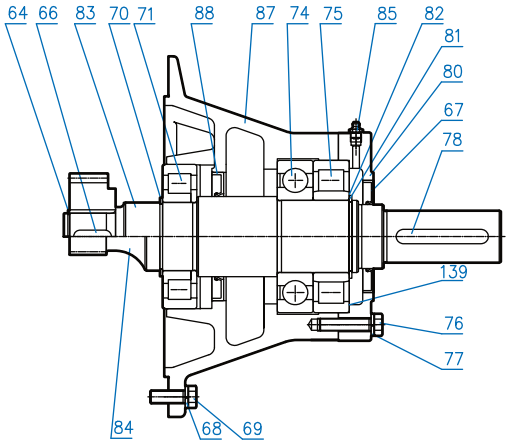

SK 10282 - SK 12382

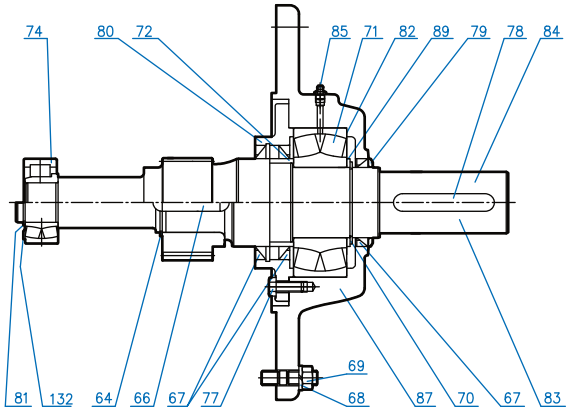

W-Type Inputs for Parts List for Nordbloc / 92 Bevel Gearboxes

SK172 - SK673
SK92072 - SK92372

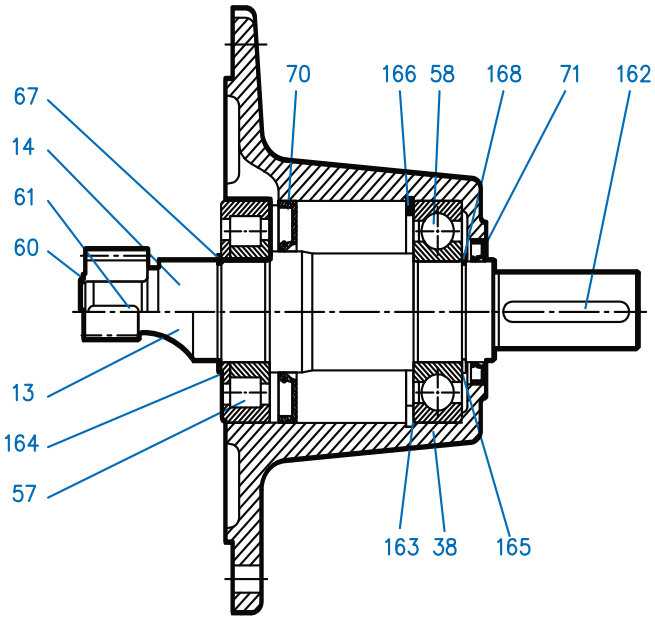

13	Pinion Shaft
14	InputShaft
38	IEC Adapter
57	Bearing
58	Bearing
62	Oil Flinger
70	Shaft Seal
71	Shaft Seal
160	Snap Ring
161	Key
162	Key
163	Shim
164	Snap Ring
165	Set Screw
166	Snap Ring
167	Snap Ring
168	Snap Ring

SK772 - SK973
SK92672 - SK92772

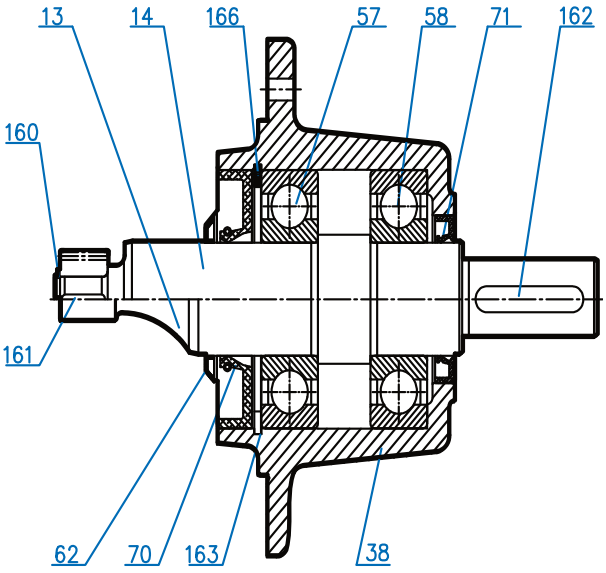

MOTOR MOUNT PLATFORM (MK)

Motor Mount Platform (MK)

For proper installation of the belt drive, consult the manufacturer. NORD MK motor mounts are adjustable in two ways. Slotted holes are provided at the input cylinder for the initial height adjustment. There are two fine adjustments at the yoke to increase/decrease tension. Two spanner head wrenches will be needed to tighten/loosen the fine adjustments. The four bolts holding the motor platform to the input cylinder must be loosened in order to use the fine adjustments.

The motor mounting platform has tapped holes to accept the foot pattern of the standard footed NEMA or IEC motor. All MK mounting input shaft diameters are metric.

Align the sheaves or sprockets square and parallel by placing a straight edge across their faces. Alignment of bushed sheaves and sprockets should be checked after bushings have been tightened. Check horizontal shaft alignment by placing a level vertically against the face of the sheave or sprocket. Adjust belt or chain tension per the manufacturer's specified procedure. After a period of operation, recheck alignment and adjust as required.

HARMFUL SITUATION

When using external chain or belt drives, make sure the reducer is sized so that the shaft and bearings have adequate capacity. To avoid unnecessary bearing loads and additional shaft deflection, mount all power take-off devices (sprockets, pulleys, etc.) so that the applied load center is as close to the gear housing as possible and check component alignment and tension of any belts or chains per the manufacturer's recommendation. Do not over tighten the belts or chains.

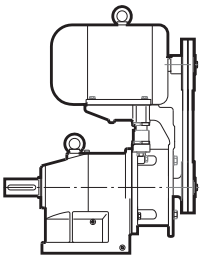

In-Line Unit

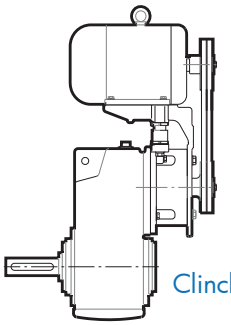

Clincher™ Unit

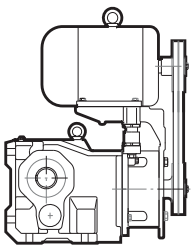

Bevel Unit

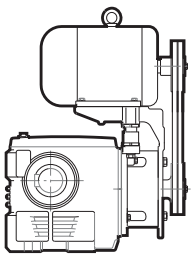

Worm Unit

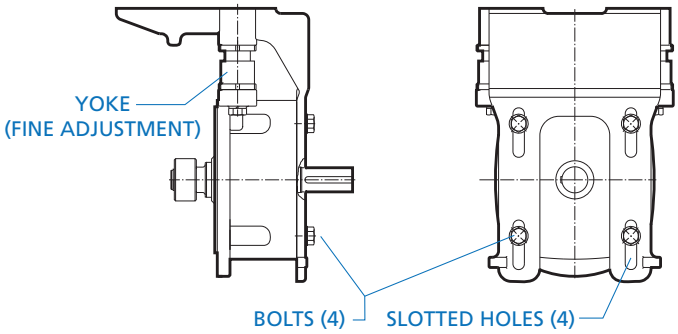

WARNING

NORD Gear does not furnish the safety guards for the belt drive. It is the responsibility of the customer to install a safety guard to conform to OSHA standards.

Sugar Scoop

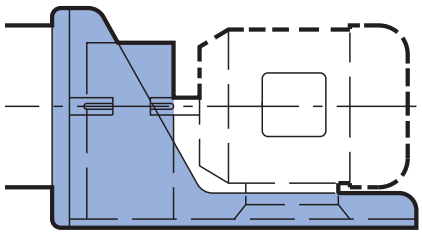

Each scoop bracket includes the coupling for the motor and the coupling guard.

- NORD's standard supplied coupling is the jaw-type coupling with elastomeric spider element.
- The reducer-side (driven) coupling hub is mounted by NORD.
- The motor-side (driver) coupling hub must be mounted by the party responsible for supplying or mounting the motor.
- The supplied coupling guard must be mounted after coupling installation.

Coupling Mounting Instructions

1. Make sure that the motor shaft is clean and free of burrs or defects.
2. Check the motor shaft, coupling hub bores, key and key seat dimensions to make sure they are the proper dimensions.
3. Mount the coupling onto the motor by placing the coupling so that the inside face is flush with the end of the motor shaft and tightening the set screws to hold it in place (Figure 1).

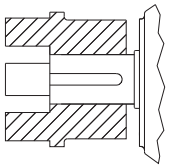

Figure 1. Place coupling flush with end of motor shaft and tighten setscrew.

IMPORTANT NOTE

Heating the coupling hub slightly, up to 176°F (80°C) will help facilitate installation onto the motor shaft.

WARNING

Wear appropriate safety gloves to handle the heated coupling hubs to avoid serious burns or injury.

HARMFUL SITUATION

DO NOT DRIVE or HAMMER coupling hubs into place. An endwise blow to the reducer or motor shaft can generate damaging axial forces and cause damage to the reducer or motor housing, bearings, or internal components.

4. Let the coupling cool down before mounting the spider into the jaws. The spider should not be under axial compression when installed.
5. Place the motor onto the scoop and engage the couplings together. The scoop has slotted holes to help accommodate axial alignment. Secure the motor to the scoop bracket but do not completely tighten the fasteners.

IMPORTANT NOTE

Before tightening the motor to the scoop bracket, the alignment of the coupling must be checked. Shimming of the motor feet may be needed to properly align the couplings. Careful coupling alignment extends the life of not only the coupling but all the components of the drive train.

6. Check the parallel alignment by placing a straight edge or level across the two coupling hubs, and measure the maximum offset at various points around the circumference of the coupling, without rotating the coupling. The maximum parallel alignment should not exceed 0.015 inches (4 mm).
7. Check the angular alignment of the coupling without rotating the hubs. The maximum angular displacement should not exceed 1.0°.
8. After both angular and parallel alignment is within specified limits, tighten all motor mounting hardware to the appropriate torque specification.
9. Re-check the critical alignment and repeat steps 6 and 7 if needed.
10. Mount the coupling guard to the scoop.

WARNING

It is the customer responsibility to properly guard the rotating shaft and coupling connection and make sure the system meets all local safety regulations.

IMPORTANT NOTE

After a period of operation, it is suggested that the system be checked to make sure coupling alignment is being maintained.

nsd tupH TOUCH-UP KIT

Items included in the touch-up kit

I. No Rinse Alodine® Touch-N-Prep pen.

II. Color matched sealer pen

⚠ WARNING ⚠

- Always wear Personal Protective Equipment (PPE), including gloves and safety glasses with side shields.
- When opening individual pens, pull safety caps straight out from pen. Do not twist or torque the cap to avoid damaging the applicator assembly.
- Do not use fingers to prime the applicator tip. Priming takes 15-30 seconds.
- Make sure the surface is clean and dry.

IMPORTANT NOTE

I. Metal temperature must be above 50° F

II. Do not excessively use abrasive pad while removing surface oxidation. Oxidation only needs to be removed from areas with exposed aluminum.

III. Use enough product to wet surface but avoid pooling.

IV. Do not rinse or wipe Alodine coating before the product is allowed to dry.

V. Allow to air dry or use a blow dryer. Do not use a heat gun. Maximum drying temperature is 140°F.

VI. Dry color will appear opaque.

Part I: Allodine® 871 Touch-N-Prep® Pen Instructions

Touch-N-Prep® pens are designed for easy and safe repair of clean, bare, or previously painted aluminum surfaces. It is a non-rinse, dry-in-place application that can be applied using the following steps:

1. Surface Preperation

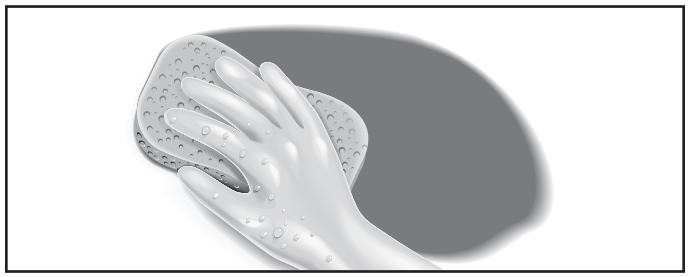

Before applying the coating, the treated surface must be cleaned using the following process:

- If the scratch is more than 24 hours old use a moistened abrasive pad to remove oxides from the surface of the metal.
- Wipe substrate with a damp lint-free cloth to ensure complete removal of soils and dislodged oxides generated from the previous step.
- Allow Surface to dry before Touch-N-Prep® application.

2. Prime Applicator Tip

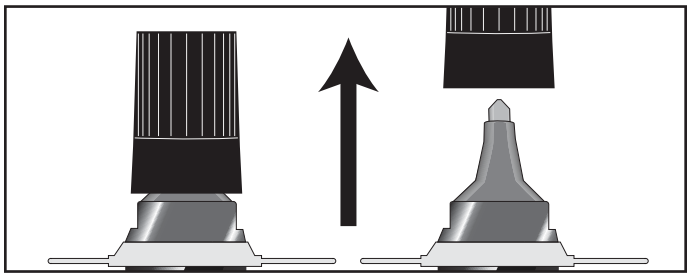

To activate, hold the Touch-N-Prep® pen upright and pop off the cap. Do not twist or turn to remove the cap, since this may result in the pen leaking. Hold the pen tip down onto a clean surface to begin the flow of solution to the tip.

3. Application

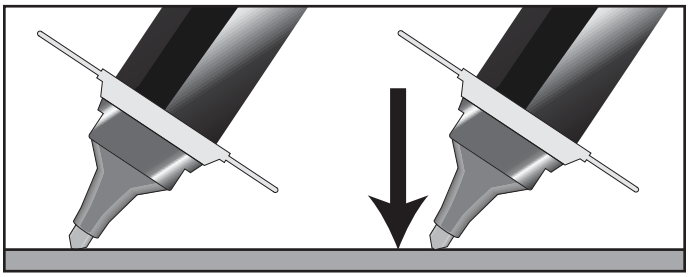

Press the pen tip down on the surface until solution fills the pen tip. Apply the Alodine® 871™ solution to the metal surface with firm, smooth, even strokes, covering all of the edges. Overlap each stroke and allow to dry.

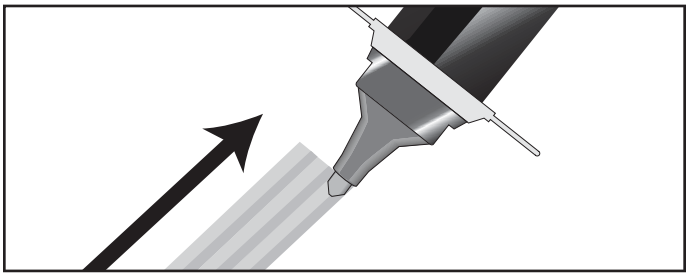

Frequent short jabs to re wet the application rip are preferred to maintain constant coating weights and avoid over-wetting the felt tip.

4. Re-Application

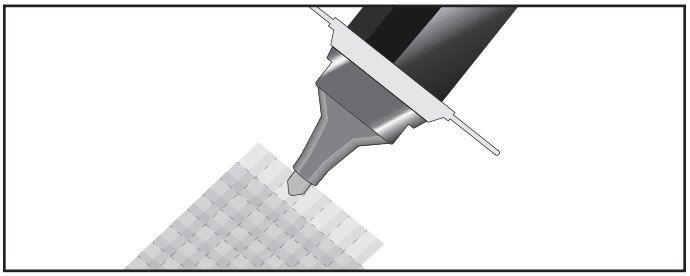

Within 5 minutes of the first coat, apply a second coat at a 90° angle to the first coat with the same smooth, firm stroke.

5. Prepare the Pen for Storage

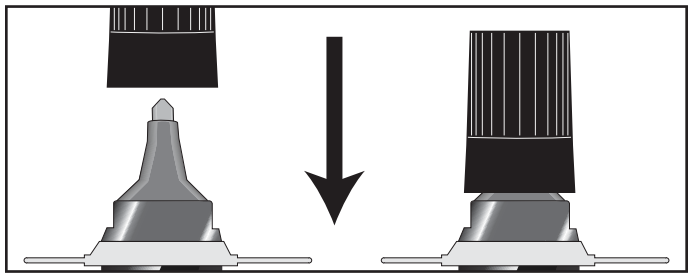

Always immediately replace the cap when not in use to avoid evaporation and contamination.

6. Drying

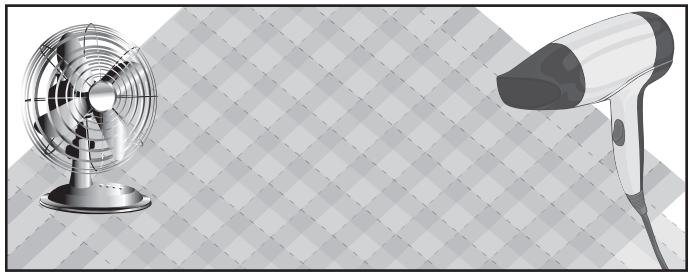

Allow the Alodine Touch-N-Prep® coating to air dry thoroughly.

Part II: Sealer Application

1. Prime Applicator Tip

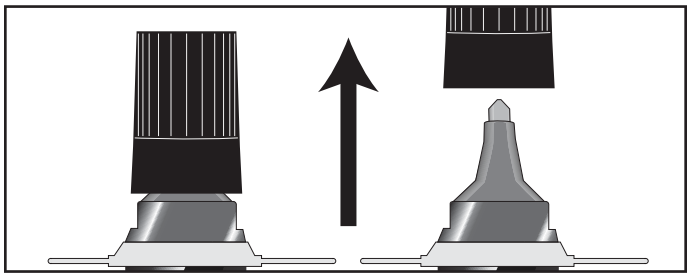

To activate, hold the pen upright and pop off the cap. Do not twist or turn to remove the cap, since this may result in the pen leaking. Hold the pen tip down onto a clean surface to begin the flow of solution to the tip.

2. Application

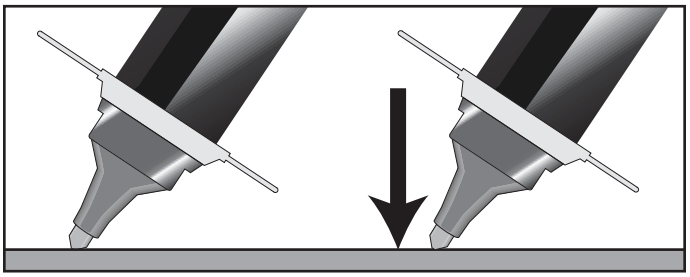

Press the pen tip down on the surface until solution fills the pen tip. Apply the sealer pen solution to the metal surface with firm, smooth, even strokes, covering all of the edges. Overlap each stroke and allow to dry.

3. Prepare the Pen for Storage

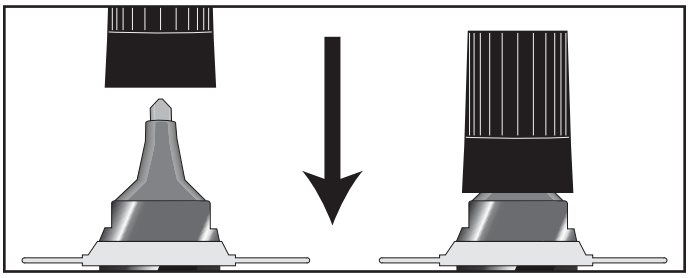

Always immediately replace the cap when not in use to avoid evaporation and contamination.

4. Drying

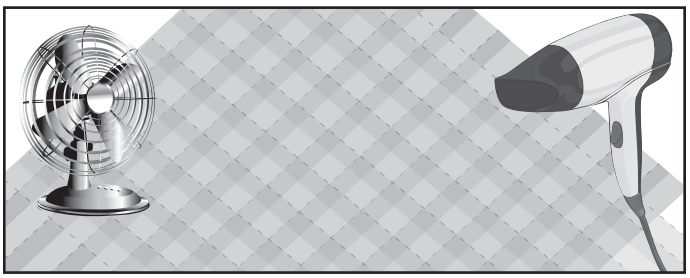

Allow the sealer pen coating to air dry thoroughly.

NORD GEAR CORPORATION

DRIVESYSTEMS — CONDITIONS OF SALE — WWW.NORD.COM

1. CONTRACT

Any contract between Nord Gear Corporation, hereinafter designated as Seller, and the Buyer is subject to the terms and conditions of sale hereinafter set forth. Any deviation from such terms and conditions must be specifically set forth in writing and consented to by Seller. Accordingly, the Buyer and Seller acknowledge and agree that the terms and conditions set forth below and on the face hereof shall govern Buyer's purchase of the goods described on the face hereof and shall take precedence over and represents the final agreement between Buyer and Seller, notwithstanding any inconsistent, contradictory or other prior or further conditions contained in any oral or written request or purchase order issued by Buyer or any other document furnished by Buyer in connection with its purchase of the Goods, regardless of whether such document or documents are exchanged simultaneously with this Invoice or prior or subsequent thereto. Any additional or different terms or conditions which may appear in any communicaiton, oral or written, from Seller, its officers, employees, agents or representatives, are hereby expressly rejected and shall not be effective or binding upon the Seller, unless specifically hereafter agreed to in writing by Seller and no such additional or different terms or conditions in any document submitted to Seller by Buyer shall become part of the contract between Buyer and Seller, unless such written acceptance by Seller specifically recognizes and assents to their inclusion. Any objection by Buyer to the terms and conditions hereof shall be ineffective unless Seller is advised in writing thereof within two (2) days of the date of this Invoice.

2. CONFIRMATION

An order shall be deemed accepted only when duly confirmed by Seller, at Nord Gear Corporation's home office in Waunakee, Wisconsin, and upon such confirmation the order shall become a contract binding upon the parties hereto, their successors and assigns.

3. PRICES

Prices shown are list prices and may be subject to applicable discounts. Unless otherwise agreed upon in writing, prices are FOB factory Waunakee, Wisconsin. Prices and discounts are subject to change without notice until order is accepted. Seller's prices do not include cost of any inspection permits required.

4. LIMITED WARRANTY

Seller hereby warrants that the goods sold hereunder shall be free from material defects in material and workmanship, if properly installed and used under normal operating conditions, for a period of twelve (12) months from the date of installation or eighteen (18) months from date of shipment, whichever comes first (the "Warranty Period"). With respect to gears and housings only, the Warranty Period is extended to thirty-six (36) months from the date of invoice or twenty-four (24) months from the date of installation, whichever comes first. The limited warranty shall not apply to any components or parts which are subject to normal operational wear and tear, including, but not limited to, belts and traction discs. Should any goods fail to comply with the foregoing limited warranty, Buyer shall provide written notice to Seller of the claimed defect and all relevant details within thirty (30) days of Buyer's discovery of the claimed defect. Buyer shall return the allegedly defective goods to Seller at its facilities in Waunakee, Wisconsin or to such other location within the USA as may be designated by Seller in its sole discretion, with all shipping and transportation charges prepaid by Buyer. Seller shall then examine the returned goods to determine if the claimed defect is covered by the limited warranty. If the claimed defect is covered by the limited warranty, Buyer's sole and exclusive remedy shall be to have Seller repair or replace, at Seller's option, the defective goods or components in accordance with the terms of this limited warranty. Seller shall have a commercially reasonable time to make such repairs or replacements and may use new or reconditioned components. Any repair or replacement shall not extend the Warranty Period unless otherwise agreed by Seller. Buyer shall pay all shipping costs and any costs of removal and re-installation of goods or components.

The foregoing limited warranty shall not apply with respect to any goods or components (i) which are not installed, used, operated, serviced or maintained in accordance with manufacturer's instructions or which are otherwise not properly installed, used, operated, serviced or maintained, or (ii) which are misused, neglected, damaged, altered, repaired, reconfigured or incorrectly wired. Seller makes no representations as to the specifications, capacity or performance of the goods sold hereunder, except as may be specifically set forth in the invoice's written specifications, and any such representations are expressly conditioned upon the accuracy and completeness of the data and information furnished by the buyer and upon the goods being properly installed, used, serviced and maintained by Buyer. Any description or model of the goods is for identification or illustrative purposes only and shall not be deemed to create any warranty, express or implied.

THE FOREGOING LIMITED WARRANTY SHALL EXTEND SOLELY TO BUYER AND NOT TO ANY OTHER PARTY. THE FOREGOING LIMITED WARRANTY IS IN LIEU OF ANY AND ALL OTHER WARRANTIES, WHETHER EXPRESS OR IMPLIED. SELLER HEREBY EXCLUDES AND DISCLAIMS ANY AND ALL OTHER WARRANTIES, WHETHER EXPRESS OR IMPLIED, INCLUDING, WITHOUT LIMITATION, ANY IMPLIED WARRANTIES OF MERCHANTABILITY OR FITNESS FOR A PARTICULAR PURPOSE. IF BUYER SHALL FAIL TO PAY WHEN DUE ANY PORTION OF THE PURCHASE PRICE OR ANY OTHER PAYMENT REQUIRED FROM BUYER TO SELLER UNDER THIS CONTRACT, ALL WARRANTIES AND REMEDIES SET FORTH HEREIN SHALL BE DEEMED NULL AND VOID, AB INITIO. THE PARTIES ACKNOWLEDGE AND AGREE THAT THE EXCLUSIVE REMEDY UNDER THE FOREGOING LIMITED WARRANTY SHALL NOT HAVE FAILED OF ITS ESSENTIAL PURPOSE (AS THAT TERM IS USED IN THE UNIFORM COMMERCIAL CODE) PROVIDED THAT SELLER REMAINS WILLING TO REPAIR OR REPLACE DEFECTIVE GOODS WITHIN A COMMERCIALLY REASONABLE TIME. BUYER SPECIFICALLY ACKNOWLEDGES AND AGREES THAT THE PRICE CHARGED BY SELLER FOR THE GOODS IS BASED UPON THE LIMITATIONS OF SELLER'S WARRANTY OBLIGATIONS AND OTHER LIABILITIES AS SET FORTH HEREIN.

LIMITATION OF LIABILITY. NOTWITHSTANDING ANY OTHER PROVISION HEREOF, IN NO EVENT SHALL SELLER BE LIABLE TO BUYER OR TO ANY OTHER PARTY FOR ANY INCIDENTAL, SPECIAL, INDIRECT OR CONSEQUENTIAL DAMAGES, LOST PROFITS, OR FOR ANY LOSSES, CLAIMS OR DAMAGES RELATING TO OR ARISING FROM THE USE OR OPERATION OF THE GOODS, AND IN NO EVENT SHALL ANY CLAIM OR RECOVERY OF ANY KIND EXCEED THE PURCHASE PRICE OF THE GOODS IDENTIFIED IN THE RELATED INVOICE.

5. SHORTAGE AND NONCONFORMITY

Any claim of shortage or that the goods do not conform with the specifications of the order or model must be made in writing within ten (10) days after delivery of the goods (as to which such claim is made) to Buyer or its nominees, but in no event shall the claim be later than within the time limit provided by the carrier or insurance company, otherwise such claim shall be deemed waived. Buyer may not return any goods claimed to be in non-conformity without Seller's prior written authorization. Goods returned without permission will not be accepted, including for credit, and will be returned to Buyer, F.O.B. Sellter's plant. Any claim based on the receipt of damaged Goods must be filed with the carrier which delivered the goods. The samples, measurements, dimensions and weights contained in the Seller's catalogs, sales manuals, photographs and drawings constitute only an approximate guide. The Seller reserves the right to make any change which the Seller, in its absolute discretion, considers necessary. While the goods will be delivered principally according to specifications or standards or quantities agreed upon, insignificant deviations or insignificant changes in construction are permissible. The same applies to partial deliveries, In the event that Buyer has a verified claim of shortage or nonconformity of the goods to the specifications of the order or the model, and if such claim has been submitted within the required time limit as set forth above, the Seller shall, at its own expense, make up for the shortage of the goods, or replace or repair the goods, as the case may be, but in no event shall Seller be or become liable to Buyer or to any other person or persons for any loss in damage, direct or indirect, arising out of or caused by such incidents or for the loss of profits, business or good will. The liability of the Seller to Buyer, if any hereunder, for breach of warranty, contract, negligence or otherwise, shall in no event exceed the amount of the purchase price of the goods sold with respect to which any damages are claimed. Shipping dates are estimates unless parties expressly agree on time of the essence.

6. FORCE MAJEURE

The obligation of the Seller shall be modified or excused, as the case may be, for reasons of Acts of God, war, governmental law regulations, strikes or lock-outs, fire, breakdown of machinery, whether in its own business enterprise, or if for any other cause beyond Seller's control, the goods cannot be delivered or their delivery becomes delayed in whole or in part. In the above instances time for delivery shall be extended for the period of the delay caused, with the proviso, however, that either party may cancel in writing the undelivered portion of the order or contract if the delay exceeds six (6) months from the delivery date originally confirmed by Seller. In no event shall Seller become liable in the aforesaid instances to Buyer or any third party for consequential damages or business loss.

7. SHIPMENT AS UNIT

Each shipment by Seller shall be treated as a separate and distinct unit with respect, but only with respect to forwarding, terms of payment, and the making of claims by the Buyer: provided, however, that if the Buyer defaults in the payment of any obligation to Seller or any installments thereof, under any agreement between Buyer and Seller, or if Buyer refuses to accept any goods when tendered for delivery, the Seller may, on fifteen (15) days written notice to the Buyer, without prejudice to Seller's other lawful remedies, either defer further performance until the defaulted payments are made in full, or make future deliveries for cash in advance only, or treat the entire contract or contracts with Buyer as breached by the Buyer and pursue its remedies for breach.

8. BUYER'S REFUSAL OF DELIVERY

If Buyer refuses to accept delivery of any goods tendered for delivery, then Seller, without prejudice to Seller's other lawful remedies, may either store or cause such goods to be stored in a warehouse, for buyer's account and at Buyer's cost, risk and expense, or sell such goods (without notice) to any purchases at public or private sale, and hold the Buyer liable for any difference between (a) the contract price of the goods, and (b) the price at which goods are resold less the costs and expense of such resale including brokerage commissions, or restocking charges.

9. GOODS IN TRANSIT

If prior to delivery or while the goods are in transit, Buyer or Seller becomes bankrupt or insolvent, or any petition in bankruptcy or for the reorganization or for a state court receivership is filed against Buyer or Seller, as the case may be, then the other party hereto may forthwith terminate this contract by giving written notice of such termination. Such termination shall not affect any claim for damages available to the Buyer, provided that if Buyer is then indebted to Seller, the amount of any such damage claim shall be abated to the extent that the indebtedness of Buyer to Seller, as actually paid in money, is abated by any order of judgement entered or any plan adopted in any bankruptcy, reorganization, receivership, or similar proceeding. Such termination shall not prejudice the Seller's rights to any amounts then due under the contract. If Buyer becomes bankrupt or insolvent or any petition in bankruptcy or for reorganizing or if a state court receivership is filed against Buyer, then, at its option Seller may take possession of any goods theretofore sold to Buyer, in connection with which the full purchase price has not been paid, analogous to the terms and provisions set forth in Paragraphs 11 and 12 hereinafter.

10. DELIVERY

(a) Any indicated dates of delivery are approximate only, but NORD Gear will attempt to meet them whenever possible. (b) NORD Gear will not be liable for any penalty clausess contained in any specifications or order submitted unless agreed to in writing by an authorized officer of NORD Gear Corporation. (c) Unless otherwise agreed, delivery of the goods to any carrier shall constitute delivery to the Buyer, and thereafter the risk of loss or damage to the goods shall be upon the Buyer. (d) If the Buyer does not give delivery instructions to the Seller at least (10) days prior to the delivery date ex factory confirmed by the Seller, the Seller may deliver the goods to a carrier of its own choosing, at Buyer's cost and risk, or, at Seller's option, may store the goods on the pier or any warehouse, at Buyer's cost and risk. Any purchase price in such event becomes due and payable within ten (10) days of such storage.

11. PAYMENT OF PURCHASE PRICE

Time of payment is of the essence under the contract. Unless otherwise provided, terms of payment are 30 days net from the date of invoice with a 1% discount if paid within 10 days of date of invoice. Upon default in any of the terms of the contract, or failure to comply with any of the conditions thereof, or upon seizure of the property under execution or other legal process, or if the Buyer becomes bankrupt or insolvent, or any petition for reorganization or for a state court receivership is filed against Buyer, or if the Buyer makes any assignment for the benefit of it's creditors or otherwise sells, encumbers or disposes of the goods, or if for any other reason the Seller should deem itself insecure, the full amount of the purchase price then remaining unpaid shall at once become due and payable at the option of the Seller.

12. BUYER'S DEFAULT

Upon the Buyer's default, the Seller may dispose of the merchandise in any manner that it deems fit and, if it desires to resell same, may do so at private or public sale, with or without notice, and with or without the property being at the place of sale, subject, however, to applicable laws. The Seller or its assigns shall have the right to bid at such sale and may become the purchaser of the property. The proceeds of the sale shall first be applied to the expenses incurred in retaking, repairing, storing and selling the goods, reasonable attorney's fees included, and then shall be applied to the payment of the balance due under the contract. Any surplus amount shall be paid to the Buyer. If a deficiency results after the resale, the Buyer agrees to pay such forthwith, together with reasonable attorney's fees, for the recovery of the goods incurred by the Seller. If upon the Buyer's default, the Seller elects not to resell any goods which it may repossess, then the cost of repossession, including reasonable attorney's fees, shall forthwith be due and payable from Buyer to Seller. Buyer agrees to pay all reasonable costs and reasonable attorneys' fees incurred by Seller in enforcing Seller's rights against Buyer, including Seller's right to payment of the purchase price of the goods and Buyer's payment of all other amounts owing to Seller required under this Invoice and Conditions of Sale.

13. SECURITY INTEREST AND TITLE

In states and localities which are governed by the Uniform Commercial Code, this contract shall serve as security agreement, reserving in Seller a security interest until full payment of purchase price. The provisions of the Uniform Commercial Code regarding security interest shall have preference and apply if inconsistent with other terms of the conditions of sale. In states and localities where the Uniform Commercial Code does not apply, title to the goods shall remain in the Seller or its assigns until full payment of the purchase price. Buyer agrees to execute forthwith any and all documents in such a way and form as Seller may need for filing or recording the security interest under the Uniform Commercial Code with the proper registers or offices, or for filing or recording the conditional sales contract.

14. SALES AND USE TAX

Buyer agrees to bear and pay any sales or use tax in connection with the purchase herein, and to hold the Seller harmless from payment. At the option the Seller, Buyer shall give evidence of payment or of exemption certificate.

15. INSURANCE

The Buyer shall keep the goods insured against damage by fire, water or other casualty as required by Seller, with a company acceptable to Seller, with loss payable to Seller for the total purchase price until the Seller is fully paid. Seller, if it so elects, may place said insurance at Buyer's expense; Seller may cancel such insurance at any time and without notice and may receive the return premium, if any.

16. MODIFICATION BY SELLER

Any contract may be assigned or transferred by the Seller, or the time for the making of any payment due by Buyer may be extended by Seller without derogation of any of the rights of the Seller or its assigns. Waiver by any party of any default shall not be deemed a waiver of any subsequent default.

17. RETURNED GOODS

No goods will be accepted for return unless authorized in writing by Seller. In all cases, transportation and restocking charges will be borne by Buyer.

18. PACKING

The Buyer will be charged for export packaging or other special packing desired. Cost for cartage to ship or transfer express will be added to the invoice. No credit will be allowed if no packing is required.

19. CHANGES/CANCELLATION

NORD Gear will not accept changes in specifications to a confirmed order unless such changes are requested in writing and confirmed back in writing. In addition, the purchaser must to agree to any additional charges that may arise from the change. Placing orders on hold or cancellation of orders require Seller's written approval, and are subject to cancellation and/or restocking charges.

20. BUYER'S RESPONSIBILITY AS TO MAINTENANCE

Buyer shall use and shall require its employees and agents to use all safety devices and guards and shall maintain the same in proper working order. Buyer shall use and require its employees and agents to use safe operation procedures in operating the equipment and shall further obey and have its employees and agents obey safety instructions given by Seller. If Buyer fails to meet the obligations herein, Buyer agrees to defend, indemnify and save Seller harmless from any liability or obligation with regard to any personal injuries or property damages directly or indirectly connected with the operation of the equipment. Buyer further agrees to notify Seller promptly and in any event not later than ten (10) days after notice or knowledge of any accident or malfunction involving Seller's equipment which has caused personal injury or property damages and to cooperate fully with Seller in investigating and determining the causes of such accident and malfunction. In the event that Buyer fails to give such notice to Seller or to cooperate with Seller, Buyer shall be obligated to defend, indemnify and save Seller harmless from any such claims arising from such accident.

21. MISCELLANEOUS PROVISIONS

(a) If for any reason a provision of a contract is legally invalid, then in such event the rest of the contract shall remain in full force and affect, except that the parties shall try to replace such invalid provision closest to their original mutual intentions. (b) This Invoice and these Conditions of Sale constitute the entire agreement between the parties regarding the subject matter hereof and supercedes all prior agreements, understandings and statements, whether oral or written, regarding such subject matter. No modification to, change in or departure from, the provisions of this Invoice and Conditions of Sale shall be valid or binding on Seller, unless approved in writing by Seller. No course of dealing or usage of trade shall be applicable unless expressly incorporated into this Invoice and Conditions of Sale. Any amendments to any contract or contracts between the parties shall be valid only upon the written consent of both parties.

22. NON ASSIGNMENT BY BUYER

Contract or contracts may not be assigned by the Buyer without prior written consent of the Seller.

23. APPLICABLE LAW AND VENUE

All contracts and their interpretation are governed by the applicable, substantive laws of the State of Wisconsin. Any litigation brought by the Buyer regarding this Invoice or goods purchased hereunder may only be brought in the Circuit Court for Dane County, Wisconsin.

NORD GEAR LIMITED

TERMS & CONDITIONS OF SALE

1. CONTRACT
Any contract between Nord Gear Limited, hereinafter designated as "Seller", and the party or parties accepting these terms and conditions of sale and any agent, officer, servant, employee or subcontractor of such party or parties, hereinafter designated as "Buyer", is subject to the terms and conditions of sale hereinafter set forth. Any deviation from such terms and conditions must be specifically set forth in writing and consented to by Seller.

2. CONFIRMATION
An order shall be deemed accepted only when duly confirmed by Seller, at Nord Gear Limited's home office in Brampton, Ontario, and upon such confirmation the orders shall become a contract binding upon the parties hereto, their successors and assigns.

3. PRICES
Prices shown are list prices and may be subject to applicable discounts. Unless otherwise agreed upon in writing, prices are FOB factory Brampton, Ontario. Prices and discounts are subject to change without notice until the order is accepted. Seller's prices do not include cost of any inspection permits required.

4. LIMITED WARRANTY
Seller warrants the goods sold hereunder to be free from defects in material and workmanship under normal use and service not arising from misuse, negligence, or accident, including but not limited to the use, installation, and transportation of the goods by Buyer, its agents, servants, employees, or by carriers. This warranty shall pertain to any part or parts of any goods to which Buyer or its assigns has within one year from date of delivery given written notice of claimed defects to Seller. Buyer shall be required to furnish Seller with details of such defects and this warranty shall be effective as to such goods which Seller's examination shall disclose to its satisfaction to have been defective and which at Seller's option shall promptly thereafter be returned to Seller or its nominees. EXCEPT FOR THE EXPRESS WARRANTIES SET FORTH ABOVE, SELLER HAS MADE NO WARRANTIES, EXPRESS, IMPLIED OR STATUTORY, AS TO THE GOODS SOLD HEREUNDER, INCLUDING, BUT NOT LIMITED TO THEIR MERCHANTABILITY OR FITNESS FOR ANY PARTICULAR PURPOSE. ANY DESCRIPTION OR MODEL OF THE GOODS IS FOR IDENTIFICATION OR ILLUSTRATIVE PURPOSES ONLY AND SHALL NOT BE DEEMED TO CREATE AN EXPRESS WARRANTY. The Buyer's exclusive remedy for claims arising from defective or nonconforming goods shall be limited to the repair or replacement thereof at the Seller's sole option. THE SELLER SHALL NOT BE RESPONSIBLE OR LIABLE FOR CONSEQUENTIAL DAMAGES ARISING OUT OF OR IN CONNECTION WITH THE SALE, DELIVERY, USE, PERFORMANCE, OR SERVICE OF THE GOODS SOLD UNDER THIS AGREEMENT. SELLER SHALL NOT BE LIABLE FOR ANY LOST PROFITS OR FOR ANY CLAIM OR DEMAND AGAINST SELLER BY ANY PARTY. IN NO EVENT WILL SELLER BE LIABLE FOR SPECIAL, INDIRECT OR CONSEQUENTIAL DAMAGES, EVEN IF SELLER HAS BEEN ADVISED OF THE POSSIBILITY OF SUCH DAMAGES. SELLER'S AGGREGATE LIABILITY FOR DAMAGES UNDER THIS AGREEMENT, WHETHER ARISING FROM OR BASED UPON BREACH OF WARRANTY, BREACH OF CONTRACT, TORT OR OTHER CAUSE OF ACTION, SHALL IN NO CASE EXCEED THE PURCHASE PRICE THAT BUYER PAYS FOR THE PARTICULAR GOODS INVOLVED. Seller shall in no event be liable to any person or firm (including any assignee or Buyer) except Buyer and its successors. Unless specifically authorized by Seller in writing, Seller shall not become responsible for any repair work done by Buyer or any other party on any goods sold. Any costs of the return of such goods to Seller shall be borne by Buyer. Goods sold but not manufactured by Seller are being warranted as to defects in material and workmanship consistent with the limited warranty policy of the original manufacturer of the goods and if there is not such a limited warranty policy, the warranty shall be limited to the provisions of Article 4 herein. Standards for the operating characteristics of the gearboxes and the gear motors are in conformity with Seller's tests. THIS WARRANTY IS IN LIEU OF ALL OTHER EXPRESS OR IMPLIED WARRANTIES, INCLUDING ANY IMPLIED WARRANTY OF MERCHANTABILITY OR FITNESS FOR ANY PARTICULAR PURPOSE SELLER DOES NOT ASSUME, NOR DOES IT AUTHORIZE ANY PERSON TO ASSUME, ON ITS BEHALF, ANY OTHER OBLIGATION OR LIABILITY.

5. SHORTAGE AND NONCONFORMITY
Any claim of shortage or that the goods do not conform with the specifications of the order or model must be made in writing within ten (10) days after delivery of the goods (as to which such claim is made) to Buyer or its nominees, but in no event shall the claim be later than within the time limit provided by the carrier or insurance company, otherwise such claim shall be deemed waived. The samples, measurements, dimensions and weights contained in Seller's catalogs, sales manuals, photographs and drawings constitute only an approximate guide. Seller reserves the right to make any changes which Seller, in its absolute discretion, considers necessary. While the goods will be delivered principally according to specifications of standards or quantities agreed upon, insignificant deviations or insignificant changes in construction are permissible. The same applies to partial deliveries. In the event that Buyer has a verified claim of shortage or nonconformity of the goods to the specifications of the order or the model, and if such claim has been submitted within the required time limit as set forth above, Seller shall, at its own expense, make up for the shortage of the goods, or replace or repair the goods, as the cause may be, but in no event shall Seller be or become liable to Buyer or to any other person or persons for any loss in damage, direct or indirect, arising out of or caused by such incidents or for the loss of profits, business of good will. Shipping dates are estimates unless parties expressly agree on time of the essence.

6. FORCE MAJEURE
The obligation of Seller shall be modified or excused, as the case may be, for reasons of Acts of God, war, governmental law regulations, strikes or lock-outs, fire, breakdown of machinery, whether in its own business enterprise, or if for any other cause beyond Seller's control, the goods cannot be delivered or their delivery becomes delayed in whole or in part. In the above instances time for delivery shall be extended for the period of the delay caused, with the proviso, however, that either party may cancel in writing the undelivered portion of the order of contract if the delay exceeds six (6) months from the delivery date originally confirmed by Seller. In no event shall Seller become liable in the aforesaid instances to Buyer or any third party for consequential damages or business loss.

7. SHIPMENT AS UNIT
Each shipment by Seller shall be treated as a separate and distinct unit with respect, but only with respect to forwarding, terms of payment, and the making of claims by Buyer; provided, however, that if Buyer defaults in the payment of any obligation to Seller or any installments thereof, under any agreement between Buyer and Seller, or if Buyer refuses to accept any goods when tendered for delivery, Seller may, on fifteen (15) days written notice to Buyer, without prejudice to Seller's other lawful remedies, either defer further performance until the defaulted payments are made in full, or make future deliveries for cash in advance only, or to treat the entire contract or contracts with Buyer as breached by Buyer and pursue its remedies for breach.

8. BUYER'S REFUSAL OF D ELIVERY
If Buyer refuses to accept delivery of any goods tendered for delivery, then Seller, without prejudice to Seller's other lawful remedies, may either store or cause such goods to be stored in a warehouse, for Buyer's account and at Buyer's cost, risk and expense, or sell such goods (without notice) to any purchaser at public or private sale, and hold Buyer liable for any difference between (A) the contract price of the goods, and (B) the price at which goods are resold less the costs and expense of such resale including brokerage commissions, or restocking charges.

9. GOODS IN TRANSIT
If prior to delivery or while the goods are in transit, Buyer or Seller becomes bankrupt or insolvent, or any petition in bankruptcy or for the reorganization or for appointment of a receiver is filed against Buyer or Seller, as the case may be, then the other party hereto may forthwith terminate this contract by giving written notice of such termination. Such termination shall not affect any claim for damages available to Buyer, to Seller, as actually paid in money, is abated by any order of judgment entered or any plan adopted in any bankruptcy, reorganization, receivership, or similar proceeding. Such termination shall not prejudice Seller's rights to any amounts then due under the contract. If Buyer becomes bankrupt or insolvent or any petition in bankruptcy or for reorganization or if a state court receivership is filed against Buyer, then, at its option, Seller may take possession of any goods theretofore sold to Buyer, in connection with which the full purchase price has not been paid, analogous to the terms and provisions set forth in Paragraphs 11 and 12 hereinafter.

10.DELIVERY
(A)Unless otherwise agreed, delivery of the goods to any carrier shall constitute delivery to Buyer, and thereafter the risk of loss or damage to the goods shall be upon Buyer. (B) If Buyer does not give delivery instructions to Seller at least ten (10) days prior to the delivery date ex factory confirmed by Seller, Seller may deliver the goods to a carrier of its own choosing, at Buyer's cost and risk, or, at Seller's option may store the goods on the pier or on any warehouse at Buyer's cost and risk. Any purchase price in such event becomes due and payable within ten (10) days of such storage.

11. PAYMENT OF PURCHASE PRICE
Time of payment is of the essence under the contract. Upon default in any of the terms of the contract, or failure to comply with any of the conditions thereof, or upon seizure of the property under execution or other legal process, or if Buyer becomes bankrupt or insolvent, or any petitions for reorganization or for appointment of a receiver is filed against Buyer, or if Buyer makes any assignment for the benefit of its creditors or otherwise sells, encumbers or disposes of the goods, or if for any other reason Seller should deem itself insecure, the full amount of the purchase price then remaining unpaid shall at once become due and payable at the option of Seller. Interest on the delinquent payment from the due date thereof until paid shall be at a rate of two (2%) percent per month.

12. BUYER'S DEFAULT
Upon Buyer's default, Seller may dispose of the merchandise in any manner that it deems fit and, if it desires to resell same, may do so at private or public sale, with or without notice, and with or without the property being at the place of sale, subject, however, to applicable laws. Seller or its assigns shall have the right to bid at such sale and may become the purchaser of the property. The proceeds of the sale shall first be applied to the expenses incurred in retaking, repairing, storing and selling the goods; reasonable solicitor's fees included, and then shall be applied to the payment of the balance due under the contract. Any surplus amount shall be paid to Buyer. If a deficiency results after the sale, Buyer agrees to pay such forthwith, together with reasonable solicitor's fees, for the recovery of the goods incurred by Seller. If upon Buyer's default, Seller elects not to resell any goods which it may repossess, then the cost of repossession, including reasonable solicitor's fees, shall forthwith be due and payable from Buyer to Seller.

13. SECURITY INTEREST AND TITLE
In provinces which are governed by a Personal Property Security Act, this contract shall serve as a security agreement, reserving in Seller a security interest until full payment of the purchase price. The provisions of the Personal Property Security Act regarding security interest shall have preference and apply if inconsistent with other terms of the conditions of sale herein. In provinces where a Personal Property Security Act does not apply, title to the goods shall remain in the Seller or its assigns until full payment of the purchase price. Buyer agrees to execute forthwith any and all documents in such a way and form as Seller may need for filing or recording the security interest under a Personal Property Security Act with the proper registers or offices, or for filing or recording the Conditional Sales Contract herein.

14. SALES AND USE TAX
Seller's prices do not include sales, use, excise or other taxes payable to any governmental authority in respect of the sale of Seller's goods. Buyer shall pay, in addition to Seller's price, the amount of any such taxes or shall reimburse Seller for the amount thereof that Seller may be required to pay. At the option of Seller, Buyer shall give evidence of payment or of exemption certificate.

15. INSURANCE
Buyer shall keep the goods insured against damage by fire, water or other casualty as required by Seller, with a company acceptable to Seller, with loss payable to Seller for the total purchase price until Seller is fully paid. Seller, if it so elects, may place said insurance at Buyer's expense; Seller may cancel such insurance at any time and without notice and may receive the return premium, if any.

16. MODIFICATION BY SELLER
Any contract may be assigned or transferred by Seller, or the time for the making of any payment due by Buyer may be extended by Seller without derogation of any of the rights of Seller or its assigns. Waiver by any party of any default shall not be deemed a waiver of any subsequent default.

17. RETURNED GOODS
No goods will be accepted for return unless authorized in writing by Seller. In all cases, transportation and restocking charges will be borne by Buyer.

18. PACKING
Seller does not charge for standard packaging for domestic shipment. Buyer will be charged, however, for export packaging or other special packing desired. Cost for cartage to ship or transfer express will be added to the invoice. No credit will be allowed if no packing is required.

19. EXPORT ORDER
Export orders are to be accompanied by a confirmed irrevocable Letter of Credit in Seller's favor, in Canadian currency, with an accredited Canadian bank, subject to Seller's draft, with shipping documents attached.

20. CANCELLATION
Placing orders on hold or cancellation of orders require Seller's written approval, and are subject to cancellation and/or restocking charges.

21. BUYER'S RESPONSIBILITY AS TO MAINTENANCE
Buyer shall use and shall require its employees and agents to use all safety devices and guards and shall maintain the same in proper working order. Buyer shall use and require its employees and agents to use safe operating procedures in operating the equipment and shall further obey and have its employees and agents obey safety instructions given by Seller. If Buyer fails to meet the obligations herein, Buyer agrees to indemnify and save Seller harmless from any liability or obligation with regard to any personal injuries or property damages directly or indirectly connected with the operation of the equipment. Buyer further agrees to notify Seller promptly and in any event not later than ten (10) days after notice or knowledge of any accident or malfunction involving Seller's equipment which has caused personal injury or property damages and to cooperate fully with Seller in investigating and determining the causes of such accident and malfunction. In the event that Buyer fails to give such notice to Seller or to cooperate with Seller, Buyer shall be obligated to indemnify and save Seller harmless from any such claims arising from such accident.

22. MISCELLANOUS PROVISIONS
(A)If for any reason a provision of a contract is legally invalid, then in such event the rest of the contract shall remain in full force and affect, except that the parties shall try to replace such invalid provision with a provision closest to their original mutual intentions. (B) Any amendments to any contract or contracts require the consent in writing by both parties. Headings in this document are for ease of reference only.

23. NON ASSIGNMENT BY BUYER
Contract or contracts may not be assigned by Buyer without prior written consent of Seller.

24. APPLICABLE LAW
This agreement shall be governed by the laws of the Province of Ontario and the applicable laws of Canada. Buyer and Seller agree that any judicial proceeding with respect to this agreement must be brought and maintained in the City of Toronto, In the Province of Ontario.

25.
This instrument sets forth the entire understanding and agreement of the parties hereto in respect of the subject matter hereof, and all prior undertaking between the parties hereto, together with all representations and obligations of such parties in respect of such subject matter, shall be superseded by and merged into this instrument.

26.
The provisions of this agreement shall bind and ensure to the benefit of the parties hereto and their respective heirs, executors, administrators, successors and (subject to any restrictions or assignment herein above set forth) assigns, as the case may be.

27.
The parties acknowledge that they have requested this document and all notices or other documents relating thereto be drafted in the English language.

Les parties reconnaissent qu'ils ont requis que ce contrat et tous les avis ou autres documents qui s'y rapportent soient rédiges en langue anglaise.

"Terms and Conditions in French available upon request."

Product Overview

We can match our NORDAC AC vector drives with our Inverter/Vector Duty Motors and UNICASE™ Speed Reducers to provide a total AC Motor Drive solution from one trusted source.

UNICASE™ SPEED REDUCERS

HELICAL IN-LINE
- Foot or Flange Mount
- Torque up to 205,000 lb-in
- Gear ratios – 1.82:1 to over 300,000:1

NORDBLOC® HELICAL IN-LINE
- Foot or Flange Mount
- Torque up to 26,550 lb-in
- Gear ratios – 1.88:1 to over 370:1

PARALLEL HELICAL CLINCHER™
- Shaft, Flange or Foot Mount
- Torque up to 797,000 lb-in
- Gear ratios – 4.26:1 to over 300,000:1

RIGHT ANGLE HELICAL-BEVEL 2-STAGE
- Foot, Flange or Shaft Mount
- Torque up to 5,840 lb-in
- Gear ratios – 4.1:1 to 72:1

RIGHT ANGLE HELICAL-BEVEL
- Foot, Flange or Shaft Mount
- Torque up to 283,000 lb-in
- Gear ratios – 8.04:1 to over 300,000:1

RIGHT ANGLE HELICAL-WORM
- Foot, Flange or Shaft Mount
- Torque up to 27,585 lb-in
- Gear ratios – 4.40:1 to over 300,000:1

MINICASE™ RIGHT ANGLE WORM
- Foot, Flange or Shaft Mount
- Torque up to 3,540 lb-in
- Gear ratios – 5:1 to 500:1

FLEXBLOC™ WORM
- Modular bolt-on options
- Torque up to 4,683 lb-in
- Gear ratios – 5:1 to 3,000:1

HIGH PERFORMANCE MOTORS & BRAKEMOTORS

INVERTER/VECTOR DUTY
- Standard or Energy Efficient
- Integral, NEMA or Metric IEC
- 1/6 to 250 hp

NORDAC AC VECTOR DRIVES

TRIO SK300E
- Motor or remote mounted
- IP55 – washdown
- 380-460V, 3-phase, to 5hp
- 200-240V, 3-phase, to 3hp

SK500/520/530E
- Compact, high performance
- 380-480V, 3-phase, to 10hp
- 200-240V, 3-phase, to 5hp
- 200-240V, 1-phase, to 3hp
- 110-120V, 1-phase, to 1.5hp

SK700E
- Flexible high performance
- 380-460V, 3-phase, to 200hp

NORD DRIVESYSTEMS

www.nord.com

NORD Gear Corporation
National Customer Service Toll-Free: 888.314.6673
info.us@nord.com

NORD Gear Limited
Toll-Free in Canada: 800.668.4378
info.ca@nord.com

WEST
Corona, CA (Los Angeles)
Phone: 608.849.0190

MIDWEST
Waunakee, WI (Madison)
Phone: 608.849.7300

EAST
Charlotte, NC
Phone: 608.849.0140

CANADA
Brampton, ON (Toronto)
Phone: 905.796.3606

10020010 4/0909

Installation, Operation and Maintenance Instructions

for AC Induction Motors
56- 6800 Frames (NEMA)
63 – 280 Frames (IEC)

MARATHON ELECTRIC
Contact Motor Customer Service at:
Phone: (715) 675-3311
www.marathonelectric.com

Form 5554E

INSTALLER: PLEASE LEAVE THIS MANUAL FOR THE OWNER'S USE
OWNER: READ AND SAVE THESE INSTRUCTIONS

SAFETY INSTRUCTIONS

⚠ This is the safety alert symbol. It is used to alert you to potential personal injury hazards. Obey all safety messages that follow this symbol to avoid possible injury or death.

⚠ WARNING
Before installing, using, or servicing this product, carefully read and fully understand the instructions including all warnings, cautions, & safety notice statements. To reduce risk of personal injury, death and/or property damage, follow all instructions for proper motor installation, operation and maintenance.

These instructions are not intended as a complete listing of all details for installation, operation, and maintenance. If you have any questions concerning any of the procedures, STOP, and call the appropriate Regal-Beloit motor company.

Table of Contents

1.0 INSTALLER / OWNER / OPERATOR RESPONSIBILITY
- 1.1 Electrical Safety
- 1.2 Mechanical Safety
- 1.3 Environmental Safety

2.0 RECEIVING & INSPECTION
- 2.1 Initial Inspection
  - 2.1.1 Packing List & Inspect
  - 2.1.2 Turn Motor Shaft
  - 2.1.3 Check Nameplate
- 2.2 Handling
  - 2.2.1 Correct Lifting Angles
- 2.3 Storage
  - 2.3.1 Bearing Lubrication
  - 2.3.2 Shaft Rotation
  - 2.3.3 Damp or Humid Storage Locations

3.0 INSTALLATION AND OPERATION
- 3.1 Location
  - 3.1.1 Selecting a Location
  - 3.1.2 Ambient Temperature Limits
  - 3.1.3 Construction Selection per Location
    - 3.1.3.1 Dripproof
    - 3.1.3.2 Totally Enclosed
    - 3.1.3.3 Hazardous Locations Motors
- 3.2 Mounting Motor
  - 3.2.1 Rigid Base (Footed)
  - 3.2.2 Rigid Base Hole Selection -6 or 8 Hole Bases
  - 3.2.3 Vertical
- 3.3 Application Assembly to Motor
  - 3.3.1 General: Proper Alignment
  - 3.3.2 Direct Coupling
  - 3.3.3 Direct Connected
  - 3.3.4 Belted
  - 3.3.5 VFD Operation
  - 3.3.6 Accessories
    - 3.3.6.1 General
    - 3.3.6.2 Brake Motors
    - 3.3.6.3 Space Heaters
    - 3.3.6.4 Thermal Protection General, Thermostats, Thermisters & RTDs
    - 3.3.6.5 RTD Alarm & Trip Settings
  - 3.3.7 Guards
- 3.4 Electrical Connections
  - 3.4.1 Power Supply / Branch Circuit
    - 3.4.1.1 Branch Circuit Supply
    - 3.4.1.2 Fuses, Breakers, Overload Relays
    - 3.4.1.3 AC Power Supply Limits
  - 3.4.2 Terminal Box
    - 3.4.2.1 Conduit opening
    - 3.4.2.2 Hazardous Locations
  - 3.4.3 Lead Connections
    - 3.4.3.1 Wire Size Requirements (Single Phase)
    - 3.4.3.2 Extension Cords (Single Phase)
  - 3.4.4 Ground Connections
  - 3.4.5 Start Up
    - 3.4.5.1 Start Up – No Load Procedure
    - 3.4.5.2 Start Up – Load Connected Procedure
    - 3.4.5.3 Jogging and/or repeated starts

4.0 MAINTENANCE
- 4.1 General Inspection

4.1.1 Ventilation
4.1.2 Insulation
4.1.3 Electrical Connections
4.2 Lubrication and Bearings
4.2.1 Grease Type
4.2.2 Bearing Operating Temperature
4.2.3 Lubrication Interval
4.2.4 Lubrication Procedure
4.2.5 Lubrication Example
4.3 Trouble Shooting
4.3.1 General Trouble-Shooting Warnings
4.3.2 Trouble-Shooting Cause / Corrective Action

motor is suitable for use on Pulse Width Modulated (PWM) type VFD power. In addition, the nameplate must be marked with the inverter rating; for example, "2:1 CT", "2 to 1 Constant Torque", etc.

1.0 INSTALLER/OWNER/OPERATOR RESPONSIBILITY:

1.1 ELECTRICAL SAFETY

⚠ WARNING: ELECTRICAL SHOCK HAZARD

Electrical connections shall be made by a qualified electrical personnel in accordance with all applicable codes, ordinances and sound practices. Failure to follow these instructions could result in serious personal injury, death and/or property damage. Only qualified personnel who are familiar with the applicable National Code (USA = NEC) and local codes should install or repair electrical motors and their accessories.

⚠ WARNING: ELECTRICAL LIVE CIRCUIT HAZARD

Do not touch electrically live parts. Disconnect, lockout and tag input power supply before installing or servicing motor (includes accessory devices). Use a voltmeter to verify that power is off before contacting conductors.

⚠ WARNING: ELECTRICAL GROUNDING HAZARD

Failure to properly ground motors, per the National Electrical Code (NEC) Article 430 and local codes may cause serious injury or death to personnel. For general information on grounding refer to NEC Article 250. (Also see "Ground Connections section 3.4.4").

⚠ WARNING: AUTOMATIC RESET PROTECTOR HAZARD

Do not use automatic reset protectors if automatically restarting the motor will place personnel or equipment at risk. . Failure to follow this instruction could result in serious personal injury, death and/or property damage

⚠ WARNING: MANUAL RESET PROTECTOR HAZARD

If a tripped manual reset thermal protector is exposed to a temperature less than –7°C (20°F) it may reset and restart the motor automatically. If an application requires a motor with a manual reset thermal protector that will be operated at temperatures less than –7°C (20°F) contact the manufacturer to review the application / motor requirements. Failure to follow this instruction could result in serious personal injury, death and/or property damage

1.2 MECHANICAL SAFETY

⚠ WARNING: LOOSE PARTS HAZARD

Before starting the motor, remove all unused shaft keys and loose rotating parts to prevent them from flying off. Failure to follow these instructions could result in serious personal injury, death and/or property damage.

⚠ WARNING: ROTATING PARTS HAZARD

Keep extremities, hair, jewelry and clothing away from moving parts. Failure to follow these instructions could result in serious personal injury, death and/or property damage.

1.3 ENVIRONMENTAL SAFETY

⚠ WARNING: HAZARDOUS LOCATIONS

(1) The NEC and the local authority having jurisdiction must be consulted concerning the installation and suitability of motors for use in Hazardous Locations. The local authority having jurisdiction must make the final determination of what type of motor is required. The application and operation is beyond the control of the motor manufacturer.
(2) Division 1 Hazardous Locations motors can only be modified or reworked by the manufacturer or a facility that is Listed under UL's category "Motors and Generators, Rebuilt for use in Hazardous Locations". Failure to follow these instructions could result in serious personal injury, death and/or property damage.
(3) Do not use a Hazardous Locations motor with a Variable Frequency Drive (VFD) unless the motor nameplate specifically states that the

2.0 RECEIVING AND INSPECTION

2.1 INITIAL INSPECTIONS

2.1.1 CHECK PACKING LIST AND INSPECT the packaging to make certain no damage has occurred in shipment. If there is visible damage to the packaging, unpack and inspect the motor immediately. Claims for any damage done in shipment must be made by the purchaser against the transportation company.

2.1.2 TURN MOTOR SHAFT by hand to be certain that it rotates freely. Note: Shaft seals and bearing seals may add drag.

2.1.3 CHECK NAMEPLATE for conformance with purchase order requirements and compliance with power supply and control equipment requirements.

2.2 HANDLING:

⚠ WARNING: FALLING OBJECT HAZARD

Eyebolts or lifting lugs, where provided, are intended for lifting only the motor and accessories mounted by the motor manufacturer (unless specifically stated otherwise on the motor). Utilizing the motor lifting provision to lift other components such as pumps and gear boxes could result in serious personal injury, death and/or property damage.

⚠ WARNING: FALLING OBJECT HAZARD

Before using the lifting provision, check the eyebolts and/or other lifting means to assure they are not bent or damaged and are completely threaded, seated & secured to the motor. Equipment to lift motor must have adequate lifting capacity. While lifting the motor DO NOT stand under or in the vicinity of the motor. Failure to follow these instructions could result in serious personal injury, death and/or property damage.

2.2.1 LIFTING ANGLE LIMITATIONS

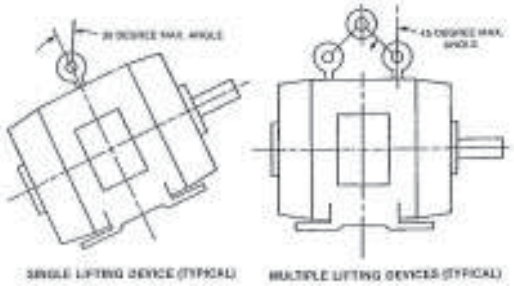

2.3 STORAGE: Motors, not put into service immediately, must be stored indoors in a clean, dry location. Avoid locations with large temperature swings that will result in condensation. Motors must be covered to eliminate airborne dust and dirt. If the storage location exhibits high vibration, place isolation pads under motor to minimize damage to motor bearings.

2.3.1 BEARING LUBRICATION: Bearings are grease packed at the factory; relubrication upon receipt of motor or while in storage is not necessary. If stored more than one year, add grease per lubrication instructions (Table 4-4) before start-up.

2.3.2 SHAFT ROTATION: It is recommended that the motor shaft be rotated 5 to 10 rotations every three months to distribute the grease in the bearings. This will reduce the chance for corrosion to form on the bearing rolling elements and raceways. Note: Shaft seals and bearing seals may add drag.

2.3.3 DAMP OR HUMID STORAGE LOCATIONS: Treat unpainted flanges, shafts, and fittings with a rust inhibitor. Apply appropriate power to the motor's space heaters (if so equipped)

3.0 INSTALLATION AND OPERATION

WARNING: Only qualified personnel who are familiar with the appropriate national code, local codes and sound practices should install or repair electrical motors and their accessories. Installation should conform to the appropriate national code as well as local codes and sound practices. Failure to follow these instructions could result in serious personal injury, death and/or property damage.

WARNING: ELECTRICAL LIVE CIRCUIT HAZARD

Do not touch electrically live parts. Disconnect, Lockout and Tag input power supply before installing or servicing motor (includes accessory devices). Use a voltmeter to verify that power is off before contacting conductors.

3.1 LOCATION

3.1.1 SELECTING A LOCATION: Consideration should be given to environment and ventilation. Motors should be installed in an area that is protected from direct sunlight, corrosives, harmful gases or liquids, dust, metallic particles, and vibration. A motor with the proper enclosure for the expected operating condition should be selected. Provide accessible clearance for cleaning, repair, service, and inspections (See section 3.1.3 for construction clearances). The location should be considered for possible future motor removal / handling. The free flow of air around the motor should not be obstructed.

3.1.2 AMBIENT TEMPERATURE LIMITS: The ambient temperatures of the air inlet to the motor should not exceed 40°C (104°F) or be less than -30°C (-22°F) unless the motor nameplate specifically states an ambient temperature outside of these limits. The ambient inside an enclosure built around the motor shall not exceed the nameplate ambient. For ambient temperatures outside of these limits consult the motor manufacturer.

CAUTION: INSULATION DEGRADATION WARNING

Insulation at high temperatures ages at an accelerated rate. Each 10°C increase in temperature reduces the insulation life by one half.

WARNING: HAZARDOUS LOCATIONS AMBIENT LIMIT: Division 1 Hazardous Locations motors shall **NOT** be operated below –25°C (-13°F) ambient. (Low temperatures reduce the component mechanical properties.)

3.1.3 CONSTRUCTION SELECTION per LOCATION:

3.1.3.1 DRIPPROOF (OPEN) MOTORS are intended for use indoors where the atmosphere is relatively clean, dry, and non-corrosive. Recommended a minimum clearance of ½ the shaft height between vent openings and the nearest obstruction.

3.1.3.2 TOTALLY ENCLOSED MOTORS are suitable for indoor or outdoor standard service applications.

TEAO or AOM (Totally Enclosed Air Over) motors must be mounted in the air stream. When the motor nameplate states a minimum airflow the motor must be mounted in an air stream meeting this minimum value.

TEFC (Totally Enclosed Fan Cooled) motors must meet a minimum distance of ½ the shaft height between the fan guard grill openings and the nearest obstruction.

3.1.3.3 HAZARDOUS LOCATIONS MOTORS: Hazardous Locations motors are intended for installations in accordance with NEC Article 500. For all installations involving Hazardous Locations motors, consult the applicable national codes, local codes, and the authority having jurisdiction.

Division 1 Installations – includes Class I & II: Use only motors that are UL Listed and CSA Certified or UL Listed and UL Certified for Canada. These motors bear a separate nameplate that includes the UL Listing Mark and CSA Certification Mark or includes the UL Listing Mark and the UL Mark for Canada. This plate also bears the phrase: " Electric motor for Hazardous Locations" and is marked with the Class, Group and Operating Temperature Code.

Division 2 Installations – Class I only: Use only motors that are CSA Certified and bear the CSA Certification Mark. These motors include a phrase on the main motor nameplate that indicates the motor is CSA Certified for Class I, Division 2 / Zone 2 locations.

Division 2 Installation – Class II only: Use only Class II motors as described above under "Division I Installations".

WARNING: EXPLOSION HAZARD

A motor should never be placed in an area with a hazardous process or where flammable gases or combustible materials may be present unless it is specifically designed and nameplated for this type of service. Hazardous Locations motors are intended for installations in accordance with NEC Article 500. For all installations involving Hazardous Locations motors, consult the NEC, local codes, and the authority having jurisdiction. Failure to follow these instructions could result in serious personal injury, death and/or property damage. (For other limitations see section 1.3)

3.2 MOUNTING MOTOR:

3.2.1 RIGID BASE (FOOTED): The motor must be securely installed to a rigid foundation or a mounting surface to minimize vibration and maintain alignment between the motor shaft and the load's shaft. The mounting surfaces of the four mounting pads must be flat within 0.01 inches for 210 frame & smaller; 0.015 inches for 250 frame & larger. [IEC 0.25 mm for 130 frame & smaller, 0.38 mm for 160 frame & larger]. This may be accomplished by shims under the motor feet. For special isolation mounting, contact manufacturer for assistance

3.2.2 RIGID BASE HOLE SELECTION -6 OR 8 HOLES

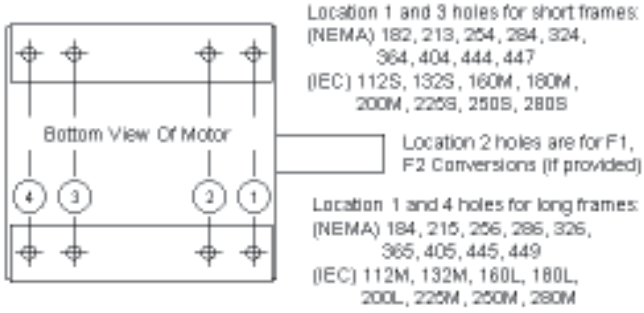

3.2.3 VERTICAL MOUNTING:

CAUTION: ENCLOSURE PROTECTION CAUTION: Most Dripproof rigid base (footed) motors do **NOT** meet "Dripproof" requirements when mounted vertically. If the motor is located in unprotected environments, the addition of a drip cover may be available. Drip covers not available for cast iron rigid base motors.

WARNING: FALLING OBJECT HAZARD

The lifting provision on standard horizontal footed motors is not designed for lifting the motor in a vertical shaft up or shaft down position. (see 2.2.1 lifting angles). Lifting method / provisions for

mounting a rigid base (footed) motor vertically is the responsibility of the installer.

VERTICAL SHAFT DOWN: Most standard horizontal motors thru 449 Fr. (excluding brake motors) can be mounted in a vertical shaft down orientation. For vertical brake motors see section 3.3.6.2.

VERTICAL SHAFT UP:

WARNING: HAZARDOUS LOCATIONS VERTICAL MOUNT: Hazardous locations motors must **NOT** be mounted vertically shaft up without approval by the motor manufacturer. Without proper retaining provisions the rotor may move axially and contact components, creating a spark hazard.

Belted or Radial Load when mounted vertically: The following frame sizes / constructions with applied (axial) down loads within the limit stated are acceptable when mounted vertical shaft up.

Table 3-1 Belted or Radial Load Applications (All speeds)

Frame Size	Enclosure	Construction	Shaft Up OK	Max Applied Down Load[3]
56	TEFC & ODP	Steel	Yes	25 lbs
140	TEFC	Steel & Cast Iron	Yes	25 lbs
	ODP	Steel	Yes	25 lbs
180	TEFC	All	Yes	35 lbs
	ODP	Steel	Yes	35 lbs
210	TEFC	All	Yes	40 lbs
	ODP	Steel	Yes	40 lbs
250	TEFC	All	Yes	40 lbs
	ODP	Steel	Yes	40 lbs
		Cast Iron	No[2]	N/A
280-320	320 TTFC models	Cast Iron	Eng[1]	N/A
	All Other TEFC	Cast Iron & Aluminum	Yes	30 lbs
	ODP	Cast Iron	No[2]	N/A
	TEFC & ODP	Steel	Build Up Only[4]	N/A
360 & Up	TEFC	Cast Iron	Build Up Only[4]	N/A
	ODP	Cast Iron	No[2]	N/A
	TEFC & ODP	Steel	Build Up Only[4]	N/A

Notes:

1 For TEFC model numbers beginning with 324TTFC or 326TTFC consult the motor manufacturer to determine if a build up motor is required.

2 The max applied down load is any applied load external to the motor, including such things as sheave weight, fan loads, axial belt force, pump load, etc. If the application is direct drive with no applied radial load, consult the motor manufacturer.

3 "Build-up only", refers to motors that are specifically ordered and built for shaft up applications. It does not imply that all build-up motors are suitable for shaft up applications.

3.3 APPLICATION ASSEMBLY TO MOTOR:

CAUTION: EQUIPMENT DAMAGE:
Do not connect or couple motor to load until correct rotational direction is established.

3.3.1 GENERAL: PROPER ALIGNMENT of the motor and driven equipment minimizes vibration levels, maximizes bearing life, and extends the overall life of the machinery. Consult the drive or equipment manufacturer for more information.

CAUTION: BEARING FAILURE
During assembly do NOT force components onto the shaft. Striking or hammering the component may result in bearing damage.

3.3.2 DIRECT COUPLING: Use flexible couplings if possible. For applications that apply radial, axial or moment loading on the motor shaft see section 3.3.3.

CAUTION: BEARING FAILURE
Unless approved by the motor manufacturer do **NOT** direct couple a vertical shaft up or roller bearing motor. Direct coupling a vertical shaft up motor or a motor with a roller bearing may result in bearing damage.

3.3.3 DIRECT CONNECTED: Radial loading for direct connected equipment (gears, fans etc.) must be approved by the motor manufacturer unless within the maximum overhung load limits (Table 3-2). Combined loading (axial, radial and/or moments) must be approved by motor manufacturer. For belted loads see section 3.3.4.

Table 3-2 Maximum Radial Load (lbf) @ Middle of the Shaft Extension Length

Frame Number	Motor Rated RPM			
	3600	1800	1200	900
143T	106	166	193	210
145T	109	170	199	218
182T	187	230	261	287
184T	193	237	273	301
213T	319	317	470	510
215T	327	320	480	533
254T	500	631	729	793
256T	510	631	736	820
284T	-	866	990	1100
286T	-	871	1005	1107
324T	-	950	1100	1215
326T	-	950	1113	1230
364T	-	1078	1365	1515
365T	-	1078	1380	1540
404T	-	1388	1590	1762
405T	-	1400	1610	1780
444T	-	1580	1795	2005
445T	-	1520	1795	1985
447T	-	1455	1765	1985
449T	-	1640	1885	2130

Values based on 26,280 hrs B-10 Life
For "End of Shaft" Load multiply value by 0.88
To convert from lbf to N multiply value by 4.4482.

3.3.4 BELTED:

The goal of any belted system is to efficiently transmit the required torque while minimizing the loads on the bearings and shafts of the motor and driven equipment. This can be accomplished by following four basic guidelines:

1. Use the largest practical sheave diameter.
2. Use the fewest number of belts possible.
3. Keep sheaves as close as possible to support bearings.
4. Tension the belts to the lowest tension that will still transmit the required torque without slipping. It is normal for V-belts to squeal initially when line starting a motor

3.3.4.1 Sheave Diameter Guidelines:

In general, smaller sheaves produce greater shaft stress and shaft deflection due to increased belt tension. See Table 3-3 for recommended minimum sheave diameters. Using larger sheaves increases the contact with belts which reduces the number of belts required. It also increases the belt speed, resulting in higher system efficiencies. When selecting sheaves, do not exceed the manufacturer's recommended maximum belt speed, typically 6,500 feet per minute for cast iron sheaves. Determine belt speed by the following formula:

Figure 1

$$\textbf{BELT SPEED (Ft/min)} = \frac{Shaft\ RPM\ x\ 3.14\ x\ Sheave\ Dia\ (inches)}{12}$$

3.3.4.2 Number of Belts

In general, use the fewest number of belts that will transmit the required torque without slipping. See Table 3-3 for recommended maximum number of belts. Each belt adds to the tension in the system, which increases load on the shafts and bearings. Belts are most efficient when operated at or near their rated horsepower.
If the sheaves have more grooves than the number of belts required, use the grooves closest to the motor.

3.3.4.3 Sheave Location

Install sheaves as close to the housing as possible to increase the bearing life of the motor and driven equipment

Figure 2

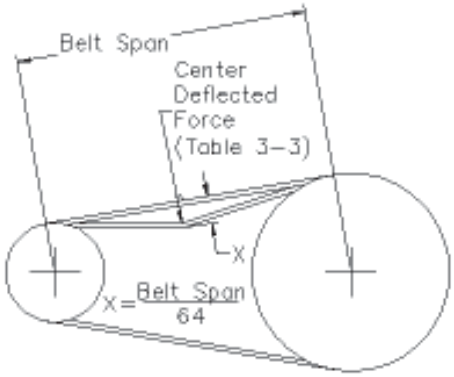

3.3.4.4 Belt Tension

CAUTION: Equipment Failure Caution
Belt tensioning by feel is **NOT** acceptable. Tensioning by "feel" can be very misleading, and can damage motor and equipment.
It is normal for V-belts to squeal initially when line starting a motor.

In general, belt tensions should be kept as loose as possible while still transmitting the required torque without slipping. Belt tensions must be measured with a belt tension gage. These inexpensive gages may be obtained through belt manufacturers, or distributors.

Proper belt tension is determined by measuring the force required to deflect the center of the belt a given distance. The proper deflection (in inches) is determined by dividing the belt span in inches by 64. Calculate the proper deflection and then see Table 3-3 for the required “Deflected Force” to achieve that deflection.
After tensioning the belt, rotate the sheaves for several rotations or operate the system for a few minutes to seat belts into the grooves, then re-tension the belts. New belts will stretch during use, and should be retensioned after the first eight hours of use.

Table 3-3 Recommended Minimum Sheave Diameters, Belt Type, Number of Belts and Deflected Force

Motor Hp	1200 rpm				1800 rpm				3600 rpm			
	Min Sheave Dia (in)	Belt Type	Max # of Belts	Avg. Deflected Force (lbs)	Min Sheave Dia (in)	Belt Type	Max # of Belts	Avg. Deflected Force (lbs)	Min Sheave Dia (in)	Belt Type	Max # of Belts	Avg. Deflected Force (lbs)
0.75	2.2	3VX	1	3.4	2.2	3VX	1	2.2	2.2	3VX	1	1.2
1	2.4	3VX	1	4.0	2.2	3VX	1	3.1	2.2	3VX	1	1.6
1.5	2.4	3VX	2	3.1	2.4	3VX	2	2.1	2.2	3VX	1	2.5
2	2.4	3VX	3	2.8	2.4	3VX	2	2.9	2.4	3VX	1	2.7
3	3.0	3VX	2	3.3	2.4	3VX	3	2.9	2.4	3VX	2	2.3
5	3.0	3VX	3	4.0	3.0	3VX	3	3.7	2.4	3VX	3	2.5
7.5	3.8	3VX	4	4.7	3.0	3VX	4	4.1	3.0	3VX	2	4.2
10	4.4	3VX	4	5.4	3.8	3VX	4	4.3	3.0	3VX	3	3.8
15	4.4	3VX	5	5.4	4.4	3VX	4	5.4	3.8	3VX	3	4.4
20	5.2	3VX	6	6.0	4.4	3VX	6	4.8	4.4	3VX	3	5.0
25	6.0	3VX	7	5.6	4.4	3VX	7	5.2	4.4	3VX	4	4.7
30	6.8	3VX	7	5.9	5.2	3VX	7	5.3				
40	6.8	5VX	4	11.6	6.0	3VX	7	6.0				
50	8.2	5VX	4	14.6	6.8	3VX	8	5.9				
60	8.2	5VX	5	14.1	7.4	5VX	4	13.3				
75	10.0	5VX	5	14.5	8.6	5VX	4	14.3				
100	10.0	5VX	6	16.0	8.6	5VX	6	13				
125	12.0	5V	7	14.1	10.5	5V	6	13.1				
150	13.2	5V	7	15.4	10.5	5V	7	13.4				
200	15.0	5V	8	16.0	13.2	5V	8	13.1				
250	15.0	8V	6	27.6	14.0	5V	9	13.8				
300	16.0	8V	7	27.1	14.0	5V/**8V**	11 / **7**	23.4				
350	16.5	8V	7	30.3	14.5	5V/**8V**	12 / **7**	26.0				
400	17.5	8V	8	29.1	15.0	5V/**8V**	13 / **8**	25.7				
450	18	8V	8	31.6	16.0	5V/**8V**	14 / **9**	25.2				
500	18.5	8V	9	30.7	16.5	5V/**8V**	15 / **9**	26.9				
600					17.5	8V	11	26.3				
700					19.0	8V	12	27.3				
800					20.0	8V	13	28.2				

Contact Motor Manufacturer when Belting 3600 rpm Motors Greater than 25 HP

Notes:

1. Horsepower is the nameplate motor horsepower, and RPM is the motor (driver) speed.
2. Minimum sheave diameters are from NEMA standards where applicable.
3. **For variable speed applications or values outside these recommendations, consult motor manufacturer.**
4. Selections are based on a 1.4 service factor, 5 to 1 speed ratio and various Power Transmission Manufacturers' catalogs.
5. These selections are for Narrow V-belt sections only. Consult manufacturer for details on conventional V-belt sections (A, B, C, D and E), or other belt types.
6. "Average Deflected Force is per section 3.3.4.4 of this document and is the force required to deflect the center of a belt 1/64 of the belt span distance. Tolerance on this force is ±1 lbf for forces ≤10 lbs, and ±2 lbs for forces >10 lbs as measured utilizing a belt tension gage.
7. When more than one belt is required the belts must be a matched set (matched for length).
8. If possible, the lower side of the belt should be the driving side to increase the length of wrap on the sheave).
9. For belted loads do not exceed 125% of 60 Hz operating RPM.

3.3.5 VFD (Variable Frequency Drives) OPERATION:

WARNING: VFD Motors with Reset Thermal Protectors
UL Recognition, UL Listing, or CSA certification does not apply to motors that are equipped with a manual or automatic reset thermal protector when the motor is operated on VFD power.

WARNING: Power Factor Correction Capacitors:
Power factor correction capacitors should never be installed between the drive and the motor.

CAUTION: VFD / Motor Setup:
It is the responsibility of the startup personnel during set up of the VFD / motor system to properly tune the drive to the motor for the specific application per the VFD user manual. The correct voltage boost and volts per hertz settings are application dependent and unique to each motor design. Failure to connect over temperature devices (when provided) will void the warranty.

3.3.5.1 Overspeed Capability:

Belted loads: Do not exceed 125% of 60 Hz operating RPM.

Table 3-4 Maximum Safe Continuous Speed (RPM) For Coupled and Direct Connected Loads

NEMA / [IEC] Frame Size	2-Pole	4, 6, or 8 Pole
56-180 [80-110]	7200 *	5400 *
210-250 [130-160]	5400 *	4200*
280 [180]	5400 *	3600
320 [200]	4500 *	3600
360 [225]	4500 *	2700
400-440 [250-280]	3600	2700
>440 [>280]	3600	1800

* = Fan cooled motors (Totally Enclosed & Hazardous Locations Motors) are limited to a maximum safe continuous speed of 4000 RPM **For higher speeds or shortened duty cycle contact motor manufacturer**

3.3.5.2 Cable Lengths: For optimum insulation life, limit VFD to motor cable lengths of general purpose motors

to Table 3-5 values. Definite purpose VFD motors may accommodate longer cable lengths. For additional information contact motor manufacturer.

Table 3-5 Max Cable Lengths General Purpose Motors
These values are based on 3 kHz carrier frequency. Add suitable VFD output-side filters when exceeding the listed values.

Frame Size	230V	460 V	575 V
NEMA 56-320	600 ft.	125 ft.	40 ft.
NEMA 360-5011	1000 ft.	225 ft.	60 ft.
IEC 80-200	180 m.	40 m.	12 m.
IEC 225-280.	300 m.	70 m.	18 m.

3.3.5.3 VFD Grounding: Equipment grounding conductors may be run in the same conduit as the AC motor power leads. This wire must be used as the equipment ground for the motor and not as the fourth current carrying wire of a "WYE" motor circuit. The grounded metal conduit carrying the output power conductors can provide EMI shielding, but the conduit does not provide an adequate ground for the motor; a separate grounding conductor must be used. Grounding the motor neutral (WYE) of a VFD powered motor may result in a VFD ground fault trip. Improper grounding of an inverter fed motor may result in frame voltages in excess of 500 Volts. Refer to Grounding section 3.4.4

3.3.5.4 VFD – Single Phase:

CAUTION: SINGLE PHASE MOTOR FAILURE:
Single Phase motors are **NOT** suitable for use on VFD power. Connecting a Single Phase Motor to a VFD voids the warranty.

3.3.5.5 Stray Voltage on Accessory Leads:

VFD's will couple stray (common-mode) voltage to motor-mounted RTDs, thermistors, thermostats and space heaters. The leads of these elements must be properly insulated and control input circuits must be designed to withstand this common-mode voltage.

3.3.6 ACCESSORIES / PROVISIONS:

3.3.6.1 General: Carefully read and understand the accessory manufacturer's instructions, supplied with motor. Contact the manufacturer for additional information.

3.3.6.2 Brake Motors:

CAUTION: Vertical Motor Premature Brake Failure
Motors with brakes that are designed for vertical applications are equipped with springs to support the brake pressure plate. Mounting a horizontal brake motor vertically shaft up or down may require a pressure plate spring modification. Failure to modify the brake for the vertical application may result in premature brake failure. If in question, consult brake literature or brake manufacturer.

Brake Solenoid Wiring: Do NOT connect the brake solenoid to the output of a VFD. The brake solenoids must be wired to 50/60 Hz line power

3.3.6.3 Space Heaters:

Motors provided with space heaters have two leads that are brought into the conduit box or into an auxiliary box. These leads are marked "H1", "H2" ("H3", "H4" if a second space heater is supplied). See the space heater nameplate on motor for heater rating.

WARNING: DIVISION 2 EXPLOSION HAZARD
The space heater temperature rating when used in Class I, Division 2 motors shall **NOT** exceed 80% of the auto ignition temperature of the hazardous gas or vapor. See the space heater nameplate on motor for heater Temperature Code and heater rating. Failure to follow this instruction could result in serious personal injury, death and/or property damage

3.3.6.4 Thermal Protection:

General Information: When thermal protection is provided, one of the following will be stamped on the nameplate:

1. **"THERMALLY PROTECTED**" This motor has built in thermal protection. Thermal protectors open the motor circuit electrically when the motor overheats or is overloaded. The protector cannot be reset until the motor cools. If the protector is automatic, it will reset itself. If the protector is manual, disconnect motor from power supply. After protector cools (five minutes or more) press the reset button and reapply power to the motor. In some cases a motor is marked "Auto" and the connection diagram on the motor will identify T'Stat leads – see "2 " below. (See warnings on Manual and Automatic reset protectors - section 1.1)

2. **"WITH OVERHEAT PROTECTIVE DEVICE**": This motor is provided with an overheat protective device that does not directly open the motor circuit. Motors nameplated with this phrase have either thermostats, thermisters or RTD's. The leads to these devices are routed into the motor conduit box or into an auxiliary box. The lead markings are defined on the nameplate (normally "P1", "P2") . The circuit controlled by the overheat protection device must be limited to a maximum of 600 volts and 360 volt-amps. See connection decal provided inside the terminal box cover. Failure to connect these over temperature devices (when provided) will void the warranty.

   WARNING: EXPLOSION HAZARD
   For Hazardous Locations motors provided with thermostats UL and the NEC require connection of thermostat leads into the control portion of a manual reset start circuit. Failure to follow this instruction could result in serious personal injury, death and/or property damage

Resistance Temperature Detectors (RTD): When winding and/or bearing RTDs are provided the RTD lead markings are defined on the nameplate. (Normally "R1", "R2", "R3" etc.)

3.3.6.5 RTD Alarm & Trip Settings:

Tables 3-6 & 3-7 are suggested initial RTD alarm and trip settings. For motors found to operate significantly below these values the settings may be reduced accordingly.

Table 3-6 Winding RTD – Temperature Limit (ºC) 40 ºC Max Ambient

Motor Load	Class B Temp Rise≤ 80ºC		Class F Temp Rise≤ 105ºC	
	Alarm	Trip	Alarm	Trip
Up to 1.0 SF	130	140	155	165
>1.0 to 1.15 SF	140	150	160	165

Table 3-7 Bearing RTD – Temperature Limit (ºC) 40 ºC Max Ambient

Ambient	Alarm	Trip
Up to 40ºC	95	100
> 40ºC	110	115
Bearings that are Heat Stabilized to 150 ºC	130	135

3.3.7 GUARDS:

WARNING: ROTATING PARTS HAZARD
When devices are assembled to the motor shaft, be sure to install protective devices such as belt guards, chain guards, and shaft covers. These devices must protect against accidental contact with extremities, hair, and clothing. Consider the application and provide guarding to protect personnel. Remove all unused shaft keys and loose rotating parts to prevent them from flying off and causing bodily injury. Failure to follow this warning could result in serious personal injury, death and/or property damage.

3.4 ELECTRICAL CONNECTIONS:

⚠ WARNING: ELECTRICAL HAZARDS

Before proceeding read Section 1-1 on Electrical Safety. Failure to follow the instructions in Section 1-1 could result in serious personal injury, death and/or property damage

3.4.1 POWER SUPPLY / BRANCH CIRCUIT

⚠ WARNING: POWER SUPPLY INCOMPATIBILITY HAZARD

Check power supply to make certain that voltage, frequency and current carrying capacity are in accordance with the motor nameplate. Failure to match motor nameplate values could result in serious personal injury, death and/or property damage

⚠ WARNING: BRANCH CIRCUIT SUPPLY HAZARD

Motor and control wiring, fusing, overload protection, disconnects, accessories and grounding must always conform to the applicable electrical codes as well as local codes and sound practices.

3.4.1.1 Branch Circuit Supply to a motor should include a disconnect switch, short circuit current fuse or breaker protection, motor starter (controller) and correctly sized thermal elements or overload relay protection.

3.4.1.2 Fuses, Breakers, Overload Relays

Short Circuit Current Fuses or Breakers are for the protection of the branch circuit. Starter or motor controller overload relays are for the protection of the motor. Each of these should be properly sized and installed per the applicable electrical codes as well as local codes and practices.

⚠ WARNING: PROTECTIVE DEVICE DISABLED HAZARD

DO NOT bypass or disable protective devices. Protection removal could result in serious personal injury, death and/or property damage

3.4.1.3 AC Power Supply Limits

Motors are designed to operate within the following limits at the motor terminals:

1- AC power is within +/- 10 % of rated voltage with rated frequency applied. (Verify with nameplate ratings) **OR**

2- AC power is within +/- 5% of rated frequency with rated voltage **OR**

3- A combined variation in voltage and frequency of +/- 10% (sum of absolute values) of rated values, provided the frequency variation does not exceed +/-5% of rated frequency.

4- For 3 phase motors the line to line full load voltage must be balanced within 1%.

5- If the motor is rated 208-230V, the voltage deviations must be calculated from 230V.

CAUTION: Reduced Motor Performance

Operation outside of these limits will degrade motor performance and increase operating temperature.

3.4.2 TERMINAL BOX:

3.4.2.1 Conduit Opening: For ease of connections, motors are typically provided with large terminal boxes. Most motors have conduit access in 90 degree increments, the terminal box conduit opening is typically provided via knockouts, holes with covers, or the terminal box is rotate-able. Fabricated conduit boxes may have a removable plate for the installer to provide correctly sized hole(s).

3.4.2.2 Hazardous Locations Motors:

⚠ WARNING: EXPLOSION HAZARDS

(1) Terminal Boxes mounted to motor with a pipe nipple: If a pipe nipple mounted terminal box is removed or rotated it must be reassembled with a minimum of five full threads of engagement.

(2) Component Removal: Do not set a terminal box component on its machined surfaces. Prior to component reassembly wipe clean all machined surfaces.

(3) Machined Surface Gap (Hazardous Locations Terminal Boxes): The gap between mating surfaces with the machined terminal box MUST BE LESS THAN 0.002 inches. This gap must be checked with a feeler gage along the entire perimeter. If there is visible damage to the mating surfaces, or if the gap between these surfaces exceeds 0.002 inches, DO NOT complete the installation and contact the motor manufacturer. Failure to follow these instructions could result in serious personal injury, death and/or property damage

3.4.3 LEAD CONNECTIONS

Electrical connections to be made per nameplate connection diagram or separate connection plate. In making connections follow the applicable electrical code as well as local codes and practices.

⚠ WARNING: ELECTRICAL CONNECTION HAZARD

Failure to correctly connect the motor leads and grounding conductor can result in injury or death. Motor lead connections can short and cause damage or injury if not well secured and insulated.

3.4.3.1 Wire Size (Single Phase) Requirements

The minimum wire size for Single Phase, 115 & 230 Volt Circuits must meet table 3-8 for a given distance between motor and either Fuse or Meter Box.

Table 3-8 Minimum Wire Gage Size Single Phase 115 & 230 Volt Circuits

Distance (Feet) - Motor to Fuse or Meter Box								
Motor	100 Ft.		200 Ft.		300 Ft.		500 Ft.	
HP	115	230	115	230	115	230	115	230
1/4	14	14	10	12	8	10	6	8
1/3	12	14	10	12	6	10	4	8
1/2	10	12	8	10	6	8	4	6
3/4	10	12	6	10	4	8	2	6
1	8	10	6	8	4	6		4
1 1/2	4	10	0	8		6		4
2		8		6		4		2
3		8		6		4		2
5		6		4		2		0

3.4.3.2 Extension Cords (Single Phase Motors):

Where an extension cord(s) is utilized to provide power to the motor the extension cord(s) must be…(1) the proper gauge size per table 3-8, (2) in good working condition (3) properly grounded.

3.4.4 GROUND CONNECTION(S):

⚠ WARNING: ELECTRICAL GROUNDING HAZARD

For general information on grounding (USA) refer to NEC Article 250. Improper grounding of an inverter fed motor may result in frame voltages in excess of 500 Volts. In making the ground connection, the installer must make certain that a good electrical connection is obtained between motor and grounding lead. Failure to properly ground motors, per the applicable national code (such as NEC Article 430) and local codes may cause serious injury or death to personnel.

Primary "Internal" Ground: A grounding conductor must be connected to the grounding terminal provided in the terminal housing. This grounding terminal is either a ground screw, ground lug, or a tapped hole to be used with a separately provided ground screw. The internal grounding feature is accessible inside the terminal housing and must be used as the primary grounding connection.

Secondary "External" Ground: Some motors are provided with a supplemental grounding terminal located on the external surface of the motor frame or feet. This external terminal is for supplemental bonding connections where local codes permit or require such connection

3.4.5 START UP:

⚠ WARNING: ELECTRICAL SHOCK HAZARD:

Be certain that all connections are secure and the conduit box cover is fastened in place before electrical power is connected. Failure to follow these instructions could result in serious personal injury, death, and/or property damage.

WARNING: LOOSE & ROTATING PARTS HAZARD
Before proceeding read Section 1-2 on Mechanical Safety. Failure to follow the instructions in Section 1-2 could result in serious personal injury, death and/or property damage

WARNING: EXCESSIVE SURFACE TEMPERATURE HAZARD
Motors with the temperature code stated on the nameplate are designed to operate within this limit. Improper application or operation can cause the maximum surface temperature to be exceeded. A motor operated in a Hazardous Location that exceeds this surface temperature limit increases the potential of igniting hazardous materials. *Therefore, motor selection, installation, operation, and maintenance must be carefully considered to ensure against the following conditions:* (1) Motor load exceeds service factor value, (2) Ambient temperature above nameplate value, (3) Voltages outside of limits (3.4.1.3), (4) Loss of proper ventilation, (5) VFD operation exceeding motor nameplate rating, (6) Altitude above 3300 feet / 1000 meters, (7) Severe duty cycles, (8) Repeated starts, (9) Motor stall, (10) Motor reversing, and (10) Single phase operation. Failure to follow these instructions could result in serious personal injury, death and/or property damage.

CAUTION: HOT SURFACE
Normal motor surface temperatures may exceed 90 ° C (194° F). Touching the motor frame may cause discomfort or injury. Surface temperatures should only be measured with suitable instruments and not estimated by hand touch.

3.4.5.1 Start Up - No Load Procedure

1. **Check Instructions:** Before startup carefully read and fully understand these instructions including all warnings, cautions, and safety notice statements.
2. **Motor out of storage after more than three months:** Check winding insulation integrity with a Megger. If winding resistance to ground is less than 1.5 Meg-ohms consult the local authorized service shop before energizing the motor.
3. **Check Installation: Mechanical** - Check tightness of all bolts and nuts. Manually rotate the motor shaft to ensure motor shaft rotates freely. Note: Shaft & bearing seals will add drag.
   Electrical - Inspect all electrical connections for proper terminations, clearance, mechanical tightness and electrical continuity. Be sure to verify connections are made per the nameplate connection diagram or separate connection plate. Replace all panels and covers that were removed during installation before energizing the motor.
4. **Energize Motor: Check Rotation**
   If practical check motor rotation before coupling to the load. Unlock the electrical system. Momentarily provide power to motor to verify direction of rotation. If opposite rotation is required, lock out power before reconnecting motor. If motor has a rotational arrow only operate the motor in the rotation identified. Reapply power to ensure proper operation.
5. **Record No Load Amps, Watts & Voltage:**
   Recommend - To establish a baseline value check and record the no load amps, watts, and voltage.

3.4.5.2 Start Up – Load Connected Procedure

1. **Check Instructions:** Before startup carefully read and fully understand these instructions including all warnings, cautions, & safety notice statements.
2. **Coupling Installation:** Check that the connected equipment is properly aligned and not binding. Check that all guards and protective devices are properly installed.
3. **Energize Motor:** When all personnel are clear of the machine, apply power and verify that the load is not transmitting excessive vibration back to the motor though the shaft or the foundation. Verify that motor amps are within nameplate rating. For repeated starts see 3.4.5.3. The equipment can now be fully loaded and operated within specified limits as stated on the nameplate.

3.4.5.3 Jogging and/or Repeated Starts

Do not start more than twice in succession under full load. Repeated starts and/or jogs of induction motors can cause overheating and immediate failure. Contact the motor manufacturer if it is necessary to repeatedly start or jog the motor.

4.0 MAINTENANCE:

WARNING: Hazardous Locations Motor Repair HAZARD:
Division 1 Hazardous Locations motors can only be modified or repaired by the manufacturer or a facility that is Listed under UL's category "Motors and Generators, Rebuilt for use in Hazardous Locations". Failure to follow these instructions could result in serious personal injury, death and/or property damage.

WARNING: ELECTRICAL SHOCK HAZARD
Electrical connections are to be made by qualified electrical personnel in accordance with all applicable codes, ordinances and sound practices. Failure to follow these instructions could result in serious personal injury, death and/or property damage. Only qualified personnel who are familiar with the applicable national codes, local codes and sound practices should install or repair electric motors and their accessories.

WARNING: ELECTRICAL LIVE CIRCUIT HAZARD
Do not touch electrically live parts. Disconnect, lockout and tag input power supply before installing or servicing motor (includes accessory devices).

4.1 GENERAL INSPECTION

Inspect the motor approximately every 500 hours of operation or every three months, whichever occurs first. Keep the motor clean and the ventilation and fin openings clear. The following steps should be performed at each inspection:

4.1.1 VENTILATION: Check that the ventilation openings and/or exterior of the motor is free of dirt, oil, grease, water, etc, which can accumulate and block motor ventilation. If the motor is not properly ventilated, overheating can occur and cause early motor failure.

4.1.2 INSULATION: Use a "Megger" periodically to ensure that the integrity of the winding insulation has been maintained. Record the Megger readings. If winding resistance to ground is less than 1.5 Meg-ohms consult the local authorized service shop before re-energizing the motor.

4.1.3 ELECTRICAL CONNECTIONS: Check all electrical connectors to be sure that they are tight.

4.2 LUBRICATION & BEARINGS:

The lubricating ability of grease (over time) depends primarily on the type of grease, the size of the bearing, the speed at which the bearing operates and the severity of the operating conditions. Longer bearing life can be obtained if the listed recommendations are followed:

NOTE: If lubrication instructions are provided on the motor nameplate, the nameplate instructions will supersede these instructions. Motors marked "Permanently Lubricated" do not require additional service.

CAUTION: BEARING / MOTOR DAMAGE WARNING
Lubricant should be added at a steady moderate pressure. If added under heavy pressure bearing shield(s) may collapse. Over greasing bearings greatly increases bearing friction and can cause premature bearing and/or motor failure.

4.2.1 GREASE TYPE (unless nameplate states otherwise):
Nameplate Ambient Temperature between -30°C (-22°F) to 65°C (150°F) inclusive: Recommended grease for standard service conditions is Mobil Polyrex ® EM. Equivalent and compatible greases include: Texaco Polystar RB, Rykon Premium #2, Pennzoil Pen 2 Lube, Chevron SRI & Mobil SHC 100.

Nameplate Ambient Temperature below -30°C (-22°F): Special low temperature grease is recommended, such as Aeroshell 7 or Beacon 325 for ball bearings and Mobil SHC 100 for roller bearings.

Nameplate Ambient Temperature above 65°C (150°F): Dow Corning DC44 or equivalent, a special high temperature grease is required. Note that Dow Corning DC44 grease does not mix with other grease types.

For RTD settings see Table 3-7.

4.2.2 BEARING OPERATING TEMPERATURE:

CAUTION: HOT SURFACE

The external surface temperature of the end shield (bracket) bearing hub may reach 100° C (212° F) during normal operation. Touching this surface may cause discomfort or injury. Surface temperatures should only be measured with suitable instruments and not estimated by hand touch.

4.2.3 LUBRICATION INTERVALS: (For motors with regreasing provisions)

Eq. 4.2 Lubrication Interval = [(Table 4-1) hrs] x [Interval Multiplier (Table 4-2)] x [Construction Multiplier (Table 4-3)]

Table 4-1 Lubrication Intervals (Hours) These values are based on average use.

NEMA / [IEC] Frame Size	Operating Speed – RPM (See Table 3.4 for Maximum Operating Speed)					
	<7200	<5400	<4500	<3600	<1800	<1200
56-180 [80-110]	2500 Hrs.	4000 Hrs	5000 Hrs	6000 Hrs.	17000 Hrs.	20000 Hrs.
210-250 [130-160]		2500 Hrs	4000 Hrs	5000 Hrs.	12000 Hrs.	16000 Hrs.
280 [180]		2000 Hrs	3000 Hrs	4000 Hrs.	10000 Hrs.	14000 Hrs.
320 [200]			2000 Hrs	3000 Hrs.	9000 Hrs.	12000 Hrs.
360 [225]			1500 Hrs	2000 Hrs.	8000 Hrs.	10000 Hrs.
400-440 [250 – 280]				1500 Hrs.	4000 Hrs.	7000 Hrs.
>440 [>280]				1000 Hrs.	3000 Hrs.	5000 Hrs.

Seasonal Service: If motor remains idle for more than six months, Lubricate at the beginning of the season, then follow lubrication interval.

Do not exceed maximum safe operating speed Table 3-4 without manufacturer's approval

Table 4-2 Service Conditions

Use highest level Multiplier: Maximum Ambient Temperature and Contamination are independent factors

Severity of Service	Maximum Ambient Temperature	Atmospheric Contamination	Multiplier
Standard	Less than 40° C (104° F)	Clean, Slight Corrosion, indoors, less than 16 hrs per day	1.0
Severe	Above 40° C (104° F) to 50° C	Moderate dirt or Corrosion or outdoors or more than 16 hrs per day	0.5
Extreme	Greater than 50° C or Class H Insulation	Severe dirt or Abrasive dust or Corrosion	0.2

Table 4-3 Construction Multiplier

Construction	Multiplier
Angular Contact or Roller Bearing	0.5
Vertical Motor	0.5
All others	1.0

Table 4-4 Relubrication Amounts

Frame Size		Volume		
NEMA	IEC	Cu. In.	Fluid oz	ml
48-56	80	0.25	0.14	4.0
143-145	90	0.25	0.14	4.0
182-184	110	0.50	0.28	8.0
213-215	130	0.75	0.42	12.5
254-256	160	1.00	0.55	16.0
284-286	180	1.50	0.83	25.0
324-326	200	2.00	1.11	33.0
364-365	225	3.00	1.66	50.0
404-405	250	3.80	2.11	62.0
444-449	280	4.10	2.27	67.0
>449	>280	4.50	2.50	74.0

For regreasing while operating multiply volume by 125%.

4.2.4 LUBRICATION PROCEDURE: (For Motors with Regreasing Provisions)

CAUTION: BEARING DAMAGE WARNING
Added grease must be compatible with the original equipment's grease. If a grease other than those stated in 4.2.1 is to be utilized contact the motor manufacturer. Nameplate information supersedes section 4.2.1 (GREASE TYPE). New grease must be free of dirt. Failure to follow these instructions and procedure below may result in bearing and/or motor damage.

For an extremely dirty environment, contact the motor manufacturer for additional information.

LUBRICATION PROCEDURE:

1. Clean the grease inlet plug or zerk fittings prior to regreasing.
2. (If present) Remove grease drain plug and clear outlet hole blockage.

CAUTION: GREASE DRAIN PLUGGED:
Old grease may completely block the drain opening and must be mechanically removed prior to regreasing. Forcing a blocked drain open by increased greasing pressure may collapse bearing shields and / or force excess grease through the bearings and into the motor.

3. Add grease per Table 4-4
4. Re-install grease inlet and drain plugs (if removed).

WARNING: EXPLOSION HAZARD
Do NOT energize a Hazardous Locations motor without all grease fittings properly installed.

4.2.5 EXAMPLE: LUBRICATION
Assume - NEMA 286T (IEC 180), 1750 RPM Vertical motor driving an exhaust fan in an ambient temperature of 43° C and the atmosphere is moderately corrosive.

1. Table 4-1 list 10,000 hours for standard conditions.
2. Table 4-2 classifies severity of service as "Severe" with a multiplier of 0.5.
3. Table 4-3 lists a multiplier value of 0.5 for "Vertical"
4. (Eq. 4.2) Interval = 10,000 hrs x 0.5 x 0.5 = 2500 hrs

Table 4-4 shows that 1.5 in^3 of grease is to be added.

Relubricate every 2,500 hrs of service with 1.5 in^3 of recommended grease.

4.3 TROUBLE-SHOOTING

WARNING: READ INSTRUCTIONS:
Before trouble-shooting a motor, carefully read and fully understand the warnings, cautions, & safety notice statements in this manual.

WARNING: Hazardous Locations Motor Repair:
Motors nameplated for use in Division 1 Hazardous Locations can only be disassembled, modified or repaired by the plant of manufacturer or a facility that is Listed under UL's category "Motors and Generators, Rebuilt for use in Hazardous Locations". Failure to follow these instructions could result in serious personal injury, death and/or property damage

CAUTION: DISASSEMBLY APPROVAL REQUIRED:
Motor disassembly must be performed by a party approved by the motor manufacturer. To disassemble the motor without approval voids the warranty.

4.3.1 GENERAL TROUBLE-SHOOTING WARNINGS

1. **DISCONNECT POWER TO THE MOTOR BEFORE PERFORMING SERVICE OR MAINTENANCE.**
2. **Discharge all capacitors before servicing motor.**
3. **Always keep hands and clothing away from moving parts.**
4. **Be sure required safety guards are in place before starting equipment.**
5. **If the problem persists contact the manufacturer.**

4.3.2 Motor Trouble-shooting Cause / Corrective Action - Table 4-5

Issue:		Likely Cause:	Corrective Action:
Motor fails to start upon initial installation:			
	A.)	Supply voltage is too low or is severely unbalanced (one phase is low or missing).	(1) Check power supply fuses (2) Match motor lead wiring to nameplate connection diagram and supply voltage (3) Ensure that steady state supply voltage at motor terminals is within limits (see section 3.4.1.3). Correct as needed (4) Obtain correct motor to match actual supply voltage.
	B.)	Motor leads are miswired at conduit box.	
	C.)	Driven load exceeds motor capacity	(1) Verify that motor & load turn freely (2) Disconnect motor from load & ensure motor turns freely. Note: Roller bearings make noise when motor is uncoupled and shaft is rotated (3) Verify that motor starts when disconnected from load (4) Remove excessive / binding load if present.
	D.)	Load is jammed.	
	E.)	Fan guard is bent and making contact with fan	Replace fan guard & fan (if blades are damaged)
	F.)	VFD with power factor capacitors installed	Remove power factor correction capacitors if equipped
	G.)	VFD with motor neutral lead grounded	Ensure that motor neutral lead is ungrounded
	H.)	VFD programmed incorrectly	(1) Repeat checks listed above (2) Verify that VFD current limit and starting boost are set correctly (5) Double-check motor and feedback parameter settings and VFD permissives (6) Repeat autotune (for vector drives) procedure (7) Consult VFD supplier.
Motor has been running, then slow down, stalls, or fails to restart:			
	A.)	Supply voltage has drooped or has become severely unbalanced	(1) Replace fuse or reset circuit breaker. Allow motor to cool down before resetting manual protector on motor. **Warnings** - See section 1.1 for automatic and manual reset protector warnings (2) Verify that rated and balanced supply voltage has been restored before restarting motor. Measure voltage during restart. Ensure that steady state supply voltage at motor terminals is within limits (see section 3.4.1.3).
	B.)	Motor is overloaded	(1) Verify that motor & load turn freely. Repair binding components as needed (2) Reduce driven load to match motor capacity or increase motor size to match load requirements.
	C.)	Motor bearings are seized	
	D.)	Load Is jammed.	
	E.)	VFD will not restart motor after tripping	(1) Check fault codes on VFD and follow VFD troubleshooting procedures (2) Verify that VFD input voltage is balanced and within limits (3) Remove excessive mechanical load if present.
	F.)	Capacitor failure on single phase motor (if equipped)	**Warning: Potential Shock Hazard**: Contact service shop to check capacitor.
Motor takes too long to accelerate:			
	A.)	Motor leads are not connected correctly	Match motor lead wiring to nameplate diagram.
	B.)	Supply voltage has drooped or become severely unbalanced.	(1) Ensure that steady state supply voltage at motor terminals is within limits (see section 3.4.1.3). Correct as needed (2) Obtain correct motor to match actual supply voltage.
	C.)	Load exceeds motor capability	Determine correct motor size and contact motor representative to obtain replacement motor.
	D.)	Faulty start capacitor (Single Phase)	Motor may be too small for load. Record acceleration time. Start capacitors may fail if acceleration time exceeds 3 seconds.
	E.)	Mechanical Failure	(1) Check to make sure motor & load turn freely (2) Disconnect motor from load & ensure motor turns freely
Motor rotates in the wrong direction:			
	A.)	Incorrect wiring connection at motor	[Single Phase] Reconnect motor according to wiring schematic provided. Note: Some motors are non-reversible
			[Three Phase] Interchange any two power supply (phase) leads.
Motor overheats or overload protector repeatedly trips			
	A.)	Driven Load is excessive	(1) If motor current exceeds nameplate value, ensure that driven load has not increased. Correct as needed. (2) If new motor is a replacement, verify that the rating is the same as the old motor. If previous motor was a special design, a general purpose motor may not have the correct performance.
	B.)	Ambient temperature too high	Most motors are designed to operate in an ambient up to 40 °C. (See section 4.2.2 Hot Surface Caution)
	C.)	Motor cooling fins and/or vent openings blocked	Remove foreign materials – clear vent openings, fan guard air inlets and frame fins (TEFC motors)
	D.)	Insufficient Air Flow	TEAO (Totally Enclosed Air Over) motors: Measure airflow next to motor surface and obtain minimum requirements from motor manufacturer.

	E.)	Motor is started too frequently	See section 3.4.5.3
	F.)	Supply voltage too low, too high, or unbalanced	(1) Ensure that steady state supply voltage at motor terminals is within limits (see section 3.4.1.3) Correct as needed (2) Reconnect motor per input voltage (3) Obtain correct motor to match power supply.

Motor Vibrates

	A.)	Motor misaligned to load.	Realign load
	B.)	Load out of balance (Direct drive application)	(1) Ensure that load is dynamically balanced: (2) Remove motor from load and inspect motor by itself. Verify that motor shaft is not bent. Rule of thumb is 0.002" runout for shafts extension lengths up to 3.00". Add 0.0005" per every additional inch of shaft length beyond 3.00".
	C.)	Uneven tension on multiple belts	Mixing new with used belts. Replace multiple belt applications with a complete set of matched belts.
	D.)	Driven load operating at resonant point / natural frequency.	(1) De-energize motor and record vibration as load coasts from 100% speed to 0 RPM. If vibration drops immediately, vibration source is electrical. If levels do not drop immediately, source is mechanical (2) Redesign system to operate below the resonant point (3) On VFD-driven loads, program skip frequencies to bypass resonant points (4) Increase carrier frequency to obtain <3% THD current (5) On variable torque loads reduce volts/hertz below base speed.
	E.)	VFD torque pulsations	(1) Adjust VFD to obtain <3% THD current @ rated motor current (2) Adjust VFD stability for smooth operation. Vector drives may be unstable at light load.
	F.)	Motor miswired at terminal box	Match motor lead wiring to nameplate connection diagram.
	G.)	Uneven, weak or loose mounting support.	Shim, strengthen or tighten where required.
	H.)	Motor bearings defective	Test motor by itself. If bearings are bad, you will hear noise or feel roughness. Roller bearings are normally noisy when operated without load. If sleeve bearing, add oil per nameplate instructions. For motors with regreasing provisions, add grease per relubricating instructions (see section 4.2.3). If noise persists contact warranty service.
	I.)	Motor out of balance	Disconnect from load. Set motor on rubber pads on solid floor. Secure a ½ height key in shaft keyway and energize from balanced power supply @ rated voltage. Record vibration levels and compare with appropriate standards. If excessive vibration persists contact motor manufacturer.

Bearings repeatedly fail.

	A.)	Load to motor may be excessive or unbalanced	(1) If belt drive check system per section 3.3.4. (2) Other than belting, check loading on motor shaft. An unbalanced load will also cause the bearings to fail. (3) Check runouts of mating components, such as a C-face and pump flange.
	B.)	Bearings contaminated.	Motor enclosure not suitable for environment. Replace with correct enclosure construction
	C.)	Incorrect grease or bearings for ambient extremes.	See section 4.2.1
	D.)	VFD bearing damage	Ground brush, common mode filter, or insulated bearings must be added. Contact motor manufacturer.

Motor, at start up, makes a loud rubbing, grinding, or squealing noise.

	A.)	Contact between rotating and stationary components	Belt squeal during across the line starting is normal: (1) Verify that supply voltage is within limits (see section 3.4.1.3). (2) Ensure that motor lead wiring matches nameplate connection diagram: (3) Isolate motor from load. (4) To locate point of contact turn motor shaft by hand. (5) If point of contact is not located contact motor service shop.

Start capacitors repeatedly fail.

	A.)	The motor acceleration time is too long	Motor may be too small for load. Record acceleration time. Start capacitors may fail if acceleration time exceeds 3 seconds.
	B.)	Motor is being started too frequently	Excessive starting will damage motor capacitors. Contact motor manufacturer if motor is started more than 20 times/hour or if acceleration time exceeds 3 seconds.
	C.)	Motor voltage low	Verify that voltage at the motor terminals is within limits (see section 3.4.1.3).
	D.)	Defective start switch inside motor	Motor internal switch failure overheats start capacitor. Contact service shop or motor manufacturer.

Run capacitor fails.

	A.)	High ambient temperature	Verify that the ambient does not exceed motor's nameplate value

	B.)	Input voltage exceeds limit	Verify that voltage to the motor terminals is within limits (see section 3.4.1.3).
	C.)	Power surge to motor (caused by lightning strike or other high transient voltage).	If a common problem, install surge protector.

SEEPEX.
ALL THINGS FLOW

SEEPEX GmbH
Scharnhölzstraße 344
46240 Bottrop
Postfach 10 15 64
46215 Bottrop
Germany

Tel +49.2041.996-0
Fax +49.2041.996-400
info@seepex.com
www.seepex.com

Great Britain

SEEPEX UK Ltd.
3 Armtech Row
Houndstone Business Park
Yeovil Somerset BA22 8RW
Tel +44.1935.472376
Fax +44.1935.479836
sales@seepex.co.uk

Austria

SEEPEX GmbH
Vertriebsbüro Österreich
Obermüllergasse 18
3003 Gablitz
Tel +43.2231.61085
Fax +43.2231.6108520
hfriedl@seepex.com

Belgium

SEEPEX GmbH
Bureau België
Industriezone Klein Gent-Link 21
Welvaartstraat 14-1 bus 15
2200 Herentals
Tel +32.14.501471
Fax +32.14.501461
seepex.be@seepex.com

Denmark

SEEPEX Nordic A/S
Krakasvej 7C
3400 Hillerød
Tel +45.49.192200
Fax + 45.49.193200
info.nordic@seepex.com

France

SEEPEX France SARL
1, Rue Pelloutier
77183 Croissy Beaubourg
Tel +33.1.64114450
Fax + 33.1.64114489
info.fr@seepex.com

Hungary

SEEPEX GmbH
Magyarországi iroda
Hecskó Tamás okl.vill.mérn.
Éva utca 5.
7632 Pécs
Tel +36.205806134
Fax +36.72952587
thecsko@seepex.com

Irland

SEEPEX UK Ltd.
Branch Office Ireland
29 Lackenfune
Dungarvan
Co. Waterford
Tel +353.860450439
sales@seepex.co.uk

Italy

SEEPEX Italia S.r.l.
Via Alberto da Giussano 23
20145 Milano (MI)
Tel +39.02.36569360
Fax +39.02.92877855
info.it@seepex.com

Poland

SEEPEX GmbH
Przedstawicielstwo w Polsce
ul. Romana Maya 1
61-371 Poznan
Tel +48.61.6469270
Fax +48.61.6469271
info.pl@seepex.com

Sweden

SEEPEX Nordic A/S
Hamndalsvägen 58
61633 Åby
Tel +46.1166940
Fax +46.1166941
info.nordic@seepex.com

Spain

SEEPEX GmbH
Officina de Representación en España
C/Copenhague, 12
Edif. Tifan Oficina 207
28232 La Rozas
Madrid
Tel +34.91.6361353
Fax +34.91.6409371
info.es@seepex.com

The Netherlands

SEEPEX GmbH
Bureau Nederland
Visbystraat 13
7418 BE Deventer
Tel +31.570.516644
Fax +31.570.516077
seepex.nl@seepex.com

Russia

SEEPEX Ltd. Ugreshskaya
Str. 2 Bldg. 23
115088 Moscow
Tel +7.495.2874830
Fax +7.495.2874830
info.cis@seepex.com

USA

SEEPEX Inc.
511 Speedway Drive
Enon
Ohio 45323
Tel +1.937.8647150
Fax + 1.937.8647157
sales.us@seepex.com

China

SEEPEX Pumps (Shanghai) Co., Ltd.
Xuanzhong Rd. 399, Building 13
Nanhui Industrial Area
201300 Shanghai
Tel +86.21.38108888
Fax +86.21.38108899
info.cn@seepex.com

India

SEEPEX India Pvt. Ltd.
Office No. 305.
Raheja Arcade Building
Sector 11, C.B.D. Belapur
Navi Mumbai 400614
Tel +91.22.40240434/35
Fax +91.22.40240436
info.ind@seepex.com

Japan

日本シーペックス株式会社
German Industry Park
1-18-2 Hakusan, Midori-ku
Yokohama 226-0006
Tel +81.46.2595931
Fax +81.46.2595941
info.jp@seepex.com

Malaysia

SEEPEX (M) Sdn. Bhd.
No. 2, Jalan 51/203A
Kaw. Perindustrian Tiong
Nam Seksyen 51
46050 Petaling Jaya Selengor
Darul Ehsan
Tel +60.3.88009988
seepex.m@seepex.com

Australia

SEEPEX Australia Pty. Ltd.
Unit 3, 4 Bounty Close
Tuggerah Business Park
NSW 2259
Tel +61.2.43554500
Fax +61.2.43554022
info.au@seepex.com

More SEEPEX sales partnes in Europe, America, Asia, Africa and Oceania you willl find on our website.

* 8 6 8 8 1 2 *

LEFT BLANK

SULZER

MODEL EJ 15D-2, SUBMERSIBLE PUMP

LEFT BLANK

SULZER

SCAVENGER™ E SERIES MS

EF SERIES EFFLUENT PUMPS
EJ SERIES SEWAGE EJECTOR PUMPS

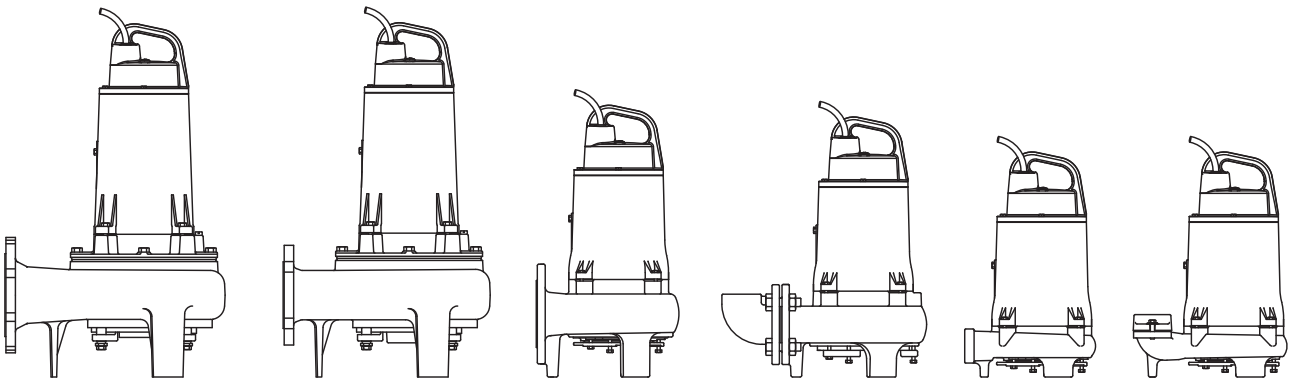

EN **Installation Operation & Maintenance Manual**

www.sulzer.com

abs

Safety Instructions

WARNING!

Risk of serious injury or death from electric shock

- Insure that the pump motor is properly grounded prior to starting the pump.
- On pumps equipped with a plug, insure that the ground prong is intact in both the pump plug and any extension cords used to power the pump. Insure that the pump is plugged into a properly grounded receptacle.
- On pumps not equipped with a plug, insure that the green "ground" conductor in the pump power cable is properly grounded at the power supply or control panel per National Electrical Code requirements.
- Do not touch or hold the pump while it is connected to the electrical supply.
- Disconnect the pump from the electrical supply prior to performing any service work.
- Do not allow personnel to enter the water while the pump is running or is connected to the electrical supply. Disconnect the pump from the electrical supply prior to entering the water.
- Do not use the E Series Scavenger pumps in swimming pool applications or in any other application where people or animals may be in the water with the pump.
- In the event that the pump power cable is damaged, disconnect pump from power supply and have the cable replaced by a qualified ABS Service Center or repair shop. Do not operate the pump with a damaged power supply cable.

WARNING!

Risk of serious injury from spinning impeller

- Disconnect pump from power supply prior to performing any service work or adjustments.
- Do not put hands or feet inside pump discharge or suction for any reason.
- Do not check for pump rotation by putting hand or any object into pump discharge or suction.

CAUTION!

Risk of injury during pump handling

- Prior to lifting the pump, insure that the pump lifting device (chain, wire rope, etc) is of suitable strength to lift the pump safely, and is in good condition.
- If the pump is to be lifted by a hoist, insure that the working load rating of the hoist exceeds the weight of the pump, and that the hoist is in good working condition.
- Never lift the pump by the power cable!
- Never work on a pump which is suspended in the air. Set the pump on the ground prior to performing any service or adjustments.
- Never apply power to a pump which is suspended in the air. The start reaction of the motor will cause the pump to spin violently and may cause injury.
- Scavenger pumps are made of cast iron and are heavy. Insure that pumps are handled in a manner that will prevent injury due to back strain, pinched fingers, foot injuries, etc.
- Disconnect pump from power supply prior to performing any service work or adjustments.

CAUTION!

Risk of injury or loss from improper application or installation

- Insure that the Scavenger pump selected is the proper model for the intended application, and that the pump and electrical supply are fully compatible.
- Insure that the Scavenger pump has been properly installed and connected to the power supply prior to starting the pump.
- Do not use the Scavenger pump in applications where people or live animals will be in the water with the pump.
- Do not use the Scavenger pump in highly corrosive environments.
- Consult ABS for assistance with application or installation questions, or with any questions not addressed by this operation & maintenance manual.

Table of Contents

SECTION 1.0- INTRODUCTION 6
1.1 Introduction 6
1.2 Applications 6
1.3 Warranty 6

SECTION 2.0- DESIGN OF PUMP 6
2.1 General 6
2.2 Material of Construction 6

SECTION 3.0- UNPACKING AND INSPECTION 6
3.1 Inspection on Receipt of Pump 6
3.2 Long Term Storage 6

SECTION 4.0- INSTALLATION 7
4.1 Free Standing Installation 7
4.2 Guide Rail System Installation 8
4.3 Float Switches 8
4.4 Pump Connections 9

SECTION 5.0- START UP 9
5.1 Impeller Rotation 9
5.2 Current Unbalance 10

SECTION 6.0- OPERATION & MAINTENANCE 11
6.1 Operation 11
6.2 Preventative Maintenance. 11
6.3 Lubrication. 11

SECTION 7.0- MAINTENANCE 11
7.1 Major Repairs 11
7.2 Cable Replacement 11
7.3 Parts 11

SECTION 8.0- INTERNAL MOTOR CONNECTION 12
8.1 Wire Size 12
8.2 Wiring 12
8.3 Motor Voltage Change 12

SECTION 9.0- MS - MONITORING SYSTEM 12
9.1 Aplication 12
9.2 Protection 12

WIRING DIAGRAMS 13

TROUBLESHOOTING CHART 15

WARRANTY 16

1.0 INTRODUCTION

1.1 **INTRODUCTION**
This manual was prepared to assist you in the correct installation, operation, and maintenance of your ABS pump. Please read it completely before installing the pump. Make certain that you are familiar with the contents, and that the chapters on installation and operation are fully understood before running the pump.

ABS pumps are designed for minimal maintenance. However, regular checks will ensure longer life and greater operating reliability.

1.2 The SCAVENGER™ series submersible pumps are designed to be used for pumping clean or contaminated water, residential or industrial sewage, or septic tank effluent. All liquids to be pumped must be compatible with the materials of construction of the pump. The pump consists of a fully submersible motor, close coupled to a non-clog type pump end.

1.3 **Warranty:** No repair work should be carried out during the warranty period without prior factory approval. To do so may render the warranty void.

Serial No.: In all correspondence and reports, make certain that the pump model and serial number is given.

2.0 DESIGN OF THE PUMP

2.1 ABS SCAVENGER™ submersible pumps are designed for continuous underwater operation in installations handling liquids containing suspended solids.

The motor and pump form a close coupled, watertight unit capable of operating while submerged to a depth of 65 feet. The squirrel cage induction motor is insulated against heat and moisture in accordance with Class "B" (130º C) regulations on models through 2 horsepower and class "F" (155º C) regulations on models from 3 to 10 horsepower.

The motor chamber is filled with non-toxic di-electric oil. This oil aids in motor heat transfer and lubricates the bearings. It also helps protect the motor from damage in the event of water entry.

The impeller is designed for efficient flow characteristics and clog-free operation.

Three-phase pumps are supplied with the free cable ends.

2.2 Table of Materials

Materials of Construction	
Housing & Volute	Cast Iron
Impeller and Wear Plate	Cast Iron
External Hardware	304 Stainless Steel
Motor Shaft	420 Stainless Steel
Mechanical Seals	Carbon/Ceramic (optional Silicon Carbide)
Bearings	Ball Bearings
Motor Windings	Copper (class B or F depending on model)
Start Switch (1 phase)	Solid State Electronic Switch
Power Cable	Thermoplastic Elastomer (20 ft. standard)
O-rings	Buna-N
Oil	Non-Toxic

3.0 UNPACKING, INSPECTION, AND STORAGE

3.1 ABS pumps are shipped from the factory ready for installation and use. They should be held in storage if the pump station is not complete.

Carefully open the shipping container and remove the pump. Check packing material for spare parts before discarding. Thoroughly inspect the pump for shipping damage. Pay special attention to the power cable, and discharge port threads (if applicable). Report any damage to the shipping carrier. In the event of damage, retain all packing material; it may be required to support a damage claim.

THE ENDS OF THE CABLE MUST BE PROTECTED AGAINST MOISTURE. DO NOT ALLOW THE CABLE ENDS TO COME IN CONTACT WITH WATER OR TO LAY ON THE GROUND OR FLOOR.

3.2 LONG TERM STORAGE

3.2.1 If it is necessary to store a pump for a long period of time, it should be stored indoors in a clean, dry temperature-stable environment. The pump should be left in its shipping container or otherwise protected from dirt and water. *The ends of the cable must be protected against moisture.*

3.2.2 Do not allow the pump to freeze. Water trapped during quality testing may expand and cause damage. If the pump must be stored in subfreezing environment, consult the factory for specific recommendations and precautions.

3.2.3 During storage, the impeller should be rotated a few turns once a month. Rotating the impeller will lubricate the seals and prevent seizing.

3.2.4 Prior to installation, or if the pump has been unused for one month or longer, the impeller should be rotated by hand to ensure the seals are free-spinning.

3.2.5 Installed pumps which are idle for long periods of time should be started and run for a few seconds once a month to lubricate the seals.

3.2.6 Installed pumps which have been idle for longer than one month should be lifted from the wet well before being started. The impeller should be rotated by hand to ensure the seals are free- spinning. The pump should then be reinstalled and started.

4.0 INSTALLATION

4.1 FREE STANDING INSTALLATION

The SCAVENGER™ pump may be installed using it's integrated feet on any hard bottomed tank capable of supporting the weight of the pump. When installed in this manner, the pump stands vertically on its feet, and the discharge of the pump is hard piped from the pump flange to the exit of the wet well. The piping should include all the features shown in figure 4.1 including a coupling device which will allow the piping to be separated in the event the pump must be removed.

The pump should not be installed on a soft bottomed tank (dirt, sand, crushed stone, etc.) If installation on a soft bottomed tank is required, consult factory for a “mud plate” accessory, which must be installed on the pump to prevent it from sinking into the soft bottom.

The pump is designed to be installed with the motor oriented vertically. Consult factory for approval prior to attempting any horizontal mounting of a Scavenger pump.

4.2 GUIDE RAIL SYSTEM INSTALLATION

A guide rail system is a quick disconnect system which allows the pump to be removed from the wet well without disturbing the discharge piping. The guide rail base is anchored to the floor of the wet well and the discharge piping is attached to it.

A coupling bracket is attached to the discharge flange of the pump and allows the pump to slide up and down a guide rail pipe when being removed and installed. When the pump with coupling bracket attached, is lowered onto the guide rail base, the pump discharge seals against the base automatically using a profile gasket or o-ring (see figure 4.2)

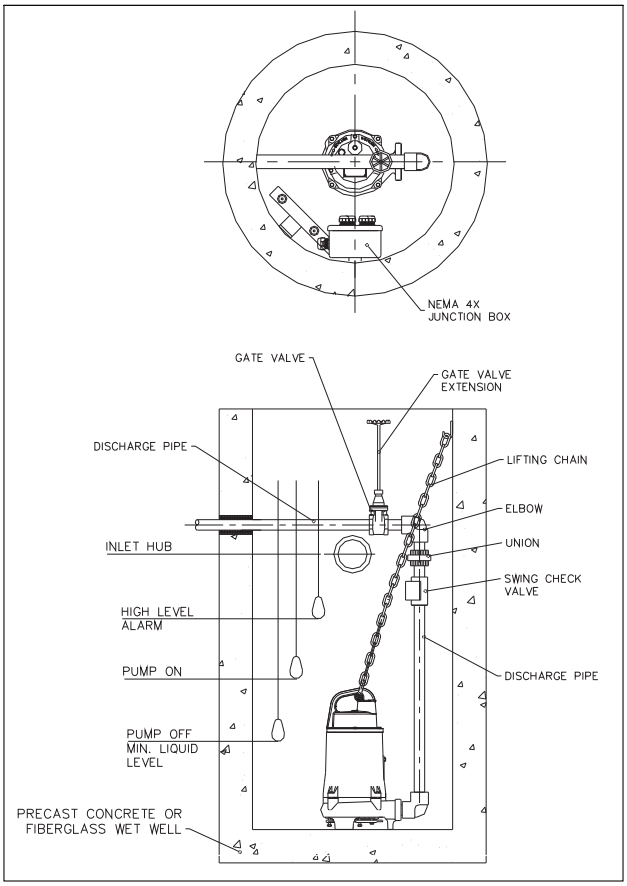

Figure 4-1

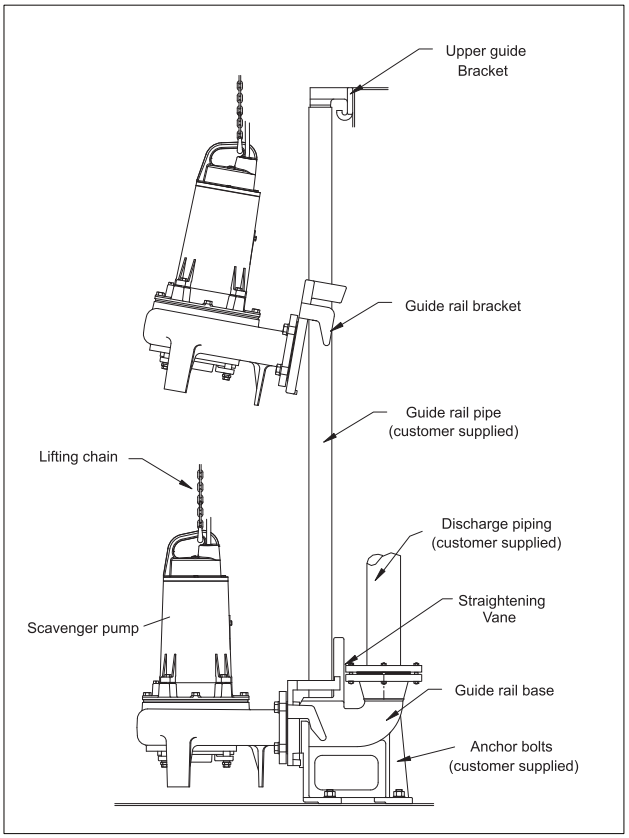

Figure 4-2

4.2.1 Guide Rail Base Anchoring Methods

The preferred method of anchoring the guide rail base to the wet well floor is to use stainless steel stud anchors which are cast into the floor during wet well construction. These can be cast into a concrete floor when the floor is poured, or can be fiberglassed into the floor when using a fiberglass basin. In either case, stud spacing and alignment is critical, and must be carefully controlled so that the guide rail base installation goes smoothly. An alternate anchoring method for concrete wet wells is stud or bolt type anchors which are drilled into the concrete floor after the concrete is cured. These anchors are not as strong as the cast in type, but are suitable as long as they are properly selected and installed.

4.2.2 Guide Rail System Assembly & Installation

To assemble the Automatic Coupling System and to install the Guide Rail Assembly, follow these instructions. (See Figure 4.2)

1. Mount the straightening vane (5) to the guide rail base (6) with screws and spring washer.

   Note: Some guide rail bases have an integrated straightening vane. *In this case, mounting of a bolt on straightening vane is not required.*

2. Install the guide rail base in the bottom of the wet well by means of cast-in anchor bolts (7). Check that the base is level, and insure that the base is positioned such that the guide rail pipe can be installed vertically between the base and upper guide rail bracket. Add grout beneath base to level. Re-check base after grout dries. Finally, secure in place with hex nuts and washers.

3. Position the upper guide bracket to the access cover or to the wall of the opening to determine length of guide rail. The guide rail, which is customer supplied, will be standard galvanized or stainless steel pipe. Pipe size depends on the particular guide rail base being installed. After positioning, cut pipe to the required length.

4. Install the guide rail pipe over the tapered plug of the guide rail base. Pipe should fit snugly over the plug.

5. Insert the upper guide bracket tapered plug into the upper end of the guide rail and locate so the guide rail is plumb. Secure upper guide bracket to the access cover or opening wall and Re-check for plumbness. Check that the guide rail base (6), the guide rail (2), and the upper guide bracket (1) are on the same center line with the discharge connection and vertically aligned. This is necessary to assure that the pump will seal itself correctly. Press upper guide bracket (1) into the guide rail pipe (2) so that no play remains and finally secure the upper guide rail bracket by tightening the screws.

6. The molded profile gasket is placed in the pump bracket so that the thicker or rounded face points towards the guide rail base and the thinner or flat face points toward the pump flange.

   Note: On some profile gaskets, both faces are the same shape and thickness. *In this case, the gasket can be installed either way.*

   The pump bracket is fastened to the discharge of the pump with stainless steel fasteners. The bolts should be equally tightened in a cross-wise manner to prevent leakage of the seal.

7. The station discharge piping is attached to the threaded or flanged discharge connection of the guide rail base.

   Piping should be provided with its own support mechanism so that the guide rail base is not required to support the full weight of the piping system.

4.3 FLOAT SWITCHES

Pumps are controlled by float switches mounted within the pump station wet well. Float switch cables are normally held in place with the float bracket mounted to the access cover frame or pit wall. See Figure 4-3 and 4-4. The floats must be secured so that they will not tangle with each other, catch on pipes, ladders or brackets.

High level Alarm-6 inches above the PUMP ON float.

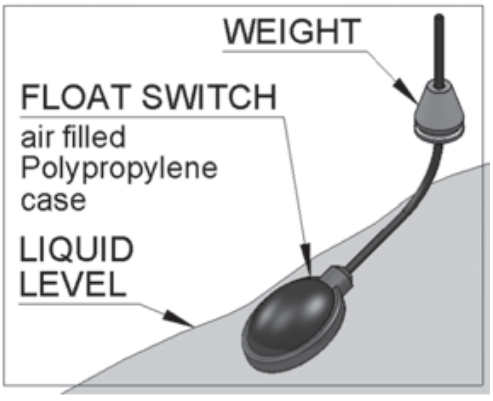

Figure 4-3

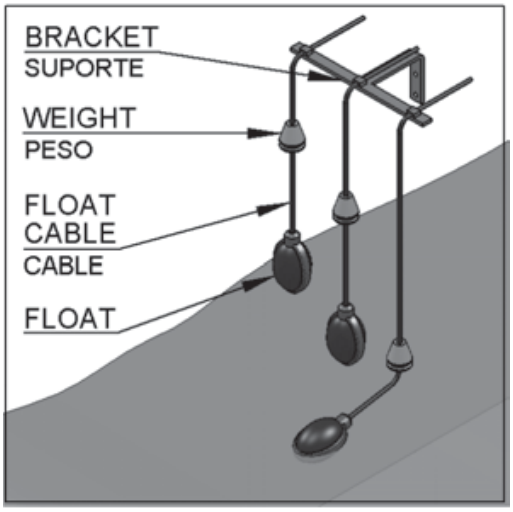

Figure 4-4

4.3.1 FLOAT SEQUENCE

1. As the liquid level in the wet well rises, the "PUMP OFF" float tilts, closing the switch. As the liquid level continues to rise, the "PUMP ON" float tilts. This switch closes, starting the pump.

2. The pump runs until the liquid level falls below the "PUMP OFF" float, emptying the wet well.

3. Duplex pump stations have an additional float for the second or lag pump. If the first pump fails to start or cannot keep up with the inflow and the wet well level continues to rise, the lag float is activated, bringing on the second pump. Both pumps then remain on until the wet well level drops below the off float level.

4. In the event of a malfunctioning float switch, control relay, or pump, the liquid level rises and tilts the "HIGH LEVEL ALARM" float activating the alarm.

4.3.2 FLOAT SWITCH INSTALLATION

The float switch levels will determine the storage volume of the pump station wet well. The storage volume is the main factor affecting the number of pump starts per hour.

Normally, all details of the pump station will be specified by engineering drawings. The drawings will specify the levels for PUMP ON and PUMP OFF floats and the HIGH-LEVEL ALARM float. If the float positions are not specified, the following guidelines for float switch levels will provide proper storage capacity and number of operating cycles for a standard pump station.

SIMPLEX PUMP STATION
Pump OFF-Minimum level at top of motor housing. Pump ON should be 1ft. minimum above pump OFF level. Keep a minimum of 1 ft. below bottom of influent pipe. High level alarm, 6" above lag float.

DUPLEX PUMP STATION
Pump OFF-Minimum level at top of motor housing. Lead pump ON float, minimum 1 ft. above OFF float (greater float spacing leads to fewer starts per hour, and is preferred). Lag float, 6" minimum above lead floats. High level alarm, 6" above lag floats.

If a specific installation cannot adhere to these guide lines, an engineer, the ABS representative, or the factory should be consulted for recommendations.

4.4 PUMP CONNECTIONS

The motor voltage and amp rating of the pump is shown on the nameplate of the pump.

Note: Some pumps are dual voltage or tri-voltage. The voltage for which the motor is connected is shown on a tag attached to the pump handle and on the carton label.

Check that the connected voltage is the same as the supply voltage. The connection of the pump cable leads should be carried out by a licensed electrician in accordance with the identification on the individual leads and the corresponding connections on the control panel. Refer to the Pump Wiring Diagram, Section 8.3.

After installing pump, insure that the power cable is properly secured; led straight up and away from the pump, so that it cannot get caught in the pump, and so that it is not bent and stressed at the point it enters the motor.

5.0 START UP

5.1 IMPELLER ROTATION

1. After the electrical connections are completed, and fully tested, the motor rotation must be checked. Incorrect rotation will result in low flow and can damage the motor.

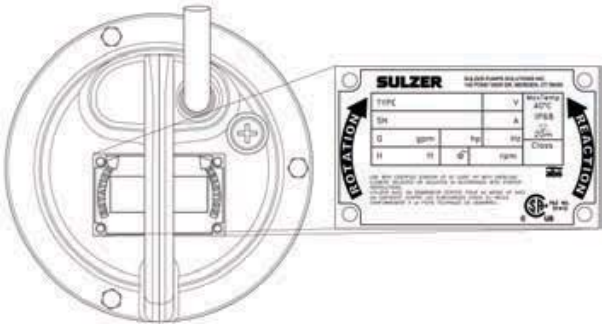

2. **Rotation.** Check to be sure the impeller is spinning in the proper direction before final installation of the pump. This is especially important with three phase pumps. Proper rotation is clock-wise when viewed from the

top of the pump. Often the easiest method for determining rotation is the "Start Reaction" method. To check rotation this way, place the pump standing upright on the floor. Momentarily energize the power and watch the direction the pump body twists. This twist or "Start Reaction" will be in a direction opposite to the impeller rotation. The start reaction should twist the pump in a counter-clockwise direction when viewed from the top of the pump.

CAUTION!

WHEN APPLYING POWER TO PUMP, STAND CLEAR OF THE UNIT TO PREVENT INJURY.

3. If the direction of rotation of a three phase pump is incorrect, disconnect power AHEAD of the control panel. Exchange any two of the motor input power leads at the power supply. This will reverse the rotation. Re-check pump for proper rotation after exchanging leads. If there are multiple pumps in the wet well, check rotation on each pump individually. Consult the factory immediately if a single phase pump runs backwards.

4. Run the pump under normal load, and check the motor amp draw with a clamp-on ammeter. Amp draw should be within the limits stated on the pump nameplate.

CAUTION!

PRIOR TO PLACING THE PUMP INTO OPERATION, A PRODUCT START-UP PROCEDURE SHALL BE COMPLETED BY AUTHORIZED PERSONNEL. FAILURE TO COMPLETE THE PRODUCT START-UP REPORT WILL VOID THE WARRANTY. A COPY OF THIS REPORT IS FURNISHED WITH EACH PUMP.

5.2 CURRENT UNBALANCE (three phase only)

After ensuring that the pump is rotating in the correct direction, and the current draw is within specifications, the Amount of current unbalance between phases must be calculated. Run the pump under water, simulating normal operating load conditions. Peform the measurements and calculations of the current unbalance equation. Enter the results of the current unbalance calculation on the Product Start-up Report.

CURRENT UNBALANCE EQUATION

% OF CURRENT UNBALANCE
=
MAX. CURRENT DIFFERENCE FROM AVERAGE CURRENT (X100)

EXAMPLE:

1. MESURE THE CURRENT (IN AMPS) OF EACH PHASE AT THE CONTROL PANEL TERMINAL STRIP.

   T1 = 10.0 *AMPS*
   T2 = 10.5 *AMPS*
   T3 = 10.5 *AMPS*

2. AVERAGE CURRENT

$$\frac{10.0+10.5+10.5}{3} = 10.33\ AMPS$$

3. MAXIMUM CURRENT DIFFERENCE FROM AVERAGE

$$10.33 - 10.00 = .33\ AMPS$$

4. ACTUAL CURRENT UNBALANCE

$$\frac{.33}{10.33}(100) = 3.2\%$$

The current unbalance for this installation is 3.2% which is within specifications.

CAUTION!

CURRENT UNBALANCE BETWEEN PHASES SHALL NOT EXCEED 4%. CONSULT THE FACTORY IMMEDIATELY WHEN CURRENT UNBALANCE EXCEEDS 4%. DO NOT OPERATE THE PUMP. THE PERCENT OF CURRENT UNBALANCE IS DEFINED AND CALCULATED IN THE CURRENT UNBALANCE EQUATION. ENTER THE RESULTS OF THE CURRENT UNBALANCE IN THE PRODUCT START-UP REPORT.

6.0 OPERATION & MAINTENANCE

6.1 OPERATION

After the electrical and mechanical installations have been performed, and the Produt Start-Up Report completed, the pump is ready for operation. No operational procedures are required except to apply rated power to the pump. There are no specific shutdown procedures beyond disconnecting the power supply.

6.2 PREVENTATIVE MAINTENANCE

ABS pumps are designed with a minimum number of preventative maintenace checks. These checks are few but will add satisfactory service to the life of the pump. Maintenance checks should be performed at the intervals stated. Severe operating environments will require more frequent checks.

⚠ CAUTION! ⚠

UNDER NO CIRCUMSTANCES SHOULD TOOLS BE APPLIED TO THE PUMP AND MOTOR WITHOUT THE POWER TO THE CONTROL BOX BEING DISCONNECTED AND LOCKED OFF.

6.2.1 Cable Inspection

The cable should be inspected for evidence of chafing, cuts or abrasion whenever the pumps is removed from the wet well. The area where the cable enters the teminal chamber should be examined carefully if damage is found, the cable should be replaced.

6.2.2 Washdown

The accumulation of grease and sludge on the pump and float switches should be washed down at three month intervals to insure proper operation. This can be accomplished by using a high pressure hose. After cleaning the switches should be inspected and checked for proper operation.

6.2.3 Bottom Plate Clearance Adjustment

The SCAVENGER™ E Series pumps utilize the patented ABS Contrablock impeller system with an adjustable wear plate. This system provides superior solids handling ability and allows for easy impeller clearance adjustment for maximum pumping efficiency.

Clearance Adjustment

The wear plate on the bottom of the pump has been factory set during pump manufacture. However, jostiling during shipping can upset this adjustment. Prior to placing the pump in service, it is recommended that this adjustment be checked. This is especially true if the pump is found to be noisy during initial startup. A small amount of noise during initial operation is normal, but excessive noise or binding of the impeller indicates that adjustment is necessary.

To adjust the wear plate, lay the pump on it's side. Note that there are two sets of screws holding the wear plate; one set pulling the wear plate toward the impeller, and one set pushing it away. On some models, the hold down screws are threaded through a hole in the center of the push away screws. Adjusting the screws one quarter turn at a time, move the wear plate away from or toward the impeller to set the proper impeller clearance. The clearance is set properly when the impeller can be rotated freely, but the gap between the bottom of the impeller and wear plate is at a minimum. A small amount of contact between the impeller and wear plate is considered acceptable. Use care to insure that the wear plate is adjusted evenly against the impeller.

6.3 LUBRIATION

Internal pump components are lubricated during manufacture and do not require additonal lubrication.

7.0 MAINTENANCE

7.1 MAJOR REPAIRS

Major repair tasks such as bearing, stator or motor shaft replacement should be performed only by ABS factory personnel or a technician trained by the ABS service department.

7.2 CABLE REPLACEMENT

The power cable is epoxy potted into the pump lid at the factory to guarantee a perfect seal. It is recommended that the ABS Service Dept. be contacted in the event a replacement cable assembly is required.

7.3 PARTS

For cross sectional drawings and part lists, please visit our website. You may also call or fax ABS to request this information. Be sure to include your pump model number in your request.

NOTE

If water is found in the motor chamber, the pump must be fully disassembled and major overhaul is required. This should only be performed by an ABS certified technician.

8.0 INTERNAL MOTOR CONNECTION

8.1 WIRE SIZE

All models must be wired to conform to the National Electric Code. Insure that the wire feeding the pump and control is of adequate size and rating for the full load amps of the motor.

8.2 WIRING

Check metal nameplate on unit to verify proper model, voltage and phase for which the unit is to be used; be sure they agree.

8.3 MOTOR VOLTAGE CHANGE

The operating voltage of 208-230/460 three phase models can be changed between 208-230 and 460 by reconnecting wires under the pump lid. Reconnection should be carried out by a qualified mechanic familiar with the wiring of electric motors. When removing the lid and changing the connections, insure that no dirt, debris, or wire slivers are allowed to drop into the motor.

8.3.1 Small Frame Scavengers (1-2 HP)

1. Winding connections are made using crimp connectors to join wires.
2. Note the position of the lid, then remove the lid and separate the quick connectors connecting the lid wires to the motor. Set the lid aside.
3. Using the appropriate wiring diagram on the next page, verify the present voltage connection by determining which wires are paired up with crimp connectors.
4. Cut the wires loose from the crimp connectors, being careful not to lose the wire markers.
5. Strip an appropriate amount of insulation back from each wire, and pair up the proper wires using new crimp connectors.
6. Verify that the proper wires are paired.
7. Clean the mating surface of the motor housing and lid. Clean and inspect the lid o-ring and set it in the groove on the motor housing.
8. Reconnect the wires from the lid to the motor and reinstall the lid being careful not to pinch any wires.

8.3.2 Large Frame Scavengers (3-10 HP)

The voltage change procedure is the same as for the small frame scavengers except no cutting of wires is necessary. Wire connections are made by pairing appropriate wires on the terminal board. In the 208-230 volt configuration, jumpers are required between certain terminal posts. Jumpers are available from ABS, or 12 gauge solid copper wire can be used.

8.3.3 Single Phase Scavengers

The single phase EF05W-1H can be connected internally for either 115V or 230V.

All other single phase pumps can be connected for only 230V.

To reconnect the EF05W-1H pump for a different voltage, follow the same basic instructions as for the small frame three phase pumps, while using the appropriate single phase diagram shown on the next page. Be certain to make all the proper connections to the capacitor, start switch, and thermal overload shown in the diagram.

If changing a 115V pump to 230V, the plug on the end of the cord must be removed.

If changing from 230V to 115V, a plug may need to be added. After reconnecting pump, verify proper pump rotation prior to installation. If pump turns in the incorrect direction, exchange wires 5 & 8 to reverse rotation.

9.0 MONITORING SYSTEM

9.1 Aplication

The supervisory system is optional and can be applied to the pumps EJ10W until EJ 100D.

9.2 PROTECTION

A di-electrode, installed in the oil chamber, gives an early warning when moisture entered through the lower sealing.

Thermal protectors enclosed to the motor windings protect the motor against overheating.

The EJ 10W up to EJ 20W pumps, have an internal thermal protector. For these pumps, only a di-electrode is installed in the oil chamber and has to be wired to the control panel.

Wiring Diagrams

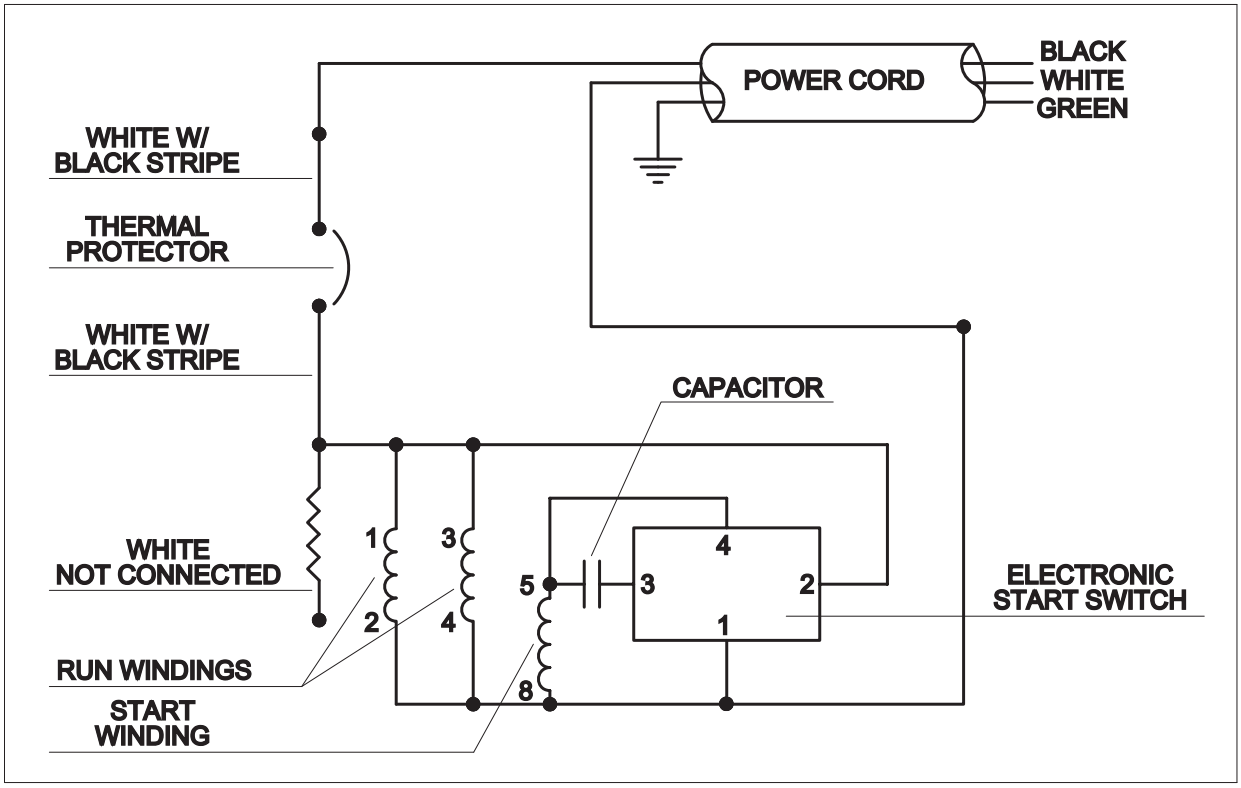

115V Single Phase Wiring Diagram.
Applies to 1/2 horsepower single phase models only.

Blank

Troubleshooting Chart

SYMPTOM	POSSIBLE CAUSE	ACTION
1. PUMP WILL NOT START	A. Power supply failure	A. Check Power Supply Check electrical system for loose connections Check operating voltage between the three power lines-three phase Check operating voltage between terminals L1 and L2-single phase.
	B. Burned-out fuse or tripped circuit breaker	B. Check circuit protectors, reset circuit breakers
	C. Damaged power cable	C. Check external cable for damage - repair
	D. Level switch failure	D. Check level switches
	E. Jammed impeller	E. Inspect and remove jamming object
	F. Water inside motor	F. Refer to symptom 8
	G. Foreign matter build-up	G. Clean floats carefully
2. REPEATED TRIPPING	A. Circuit protection underrated	A. Check rating and replace with proper size
	B. Phase current unbalance	B. Check amp draw
	C. Pump connected to incorrect voltage	C. Verify connections. See wiring diagram
	D. Wet or Damaged wiring	D. Inspect external cable, replace if worn or damaged.
	E. Obstruction in pump	E. Remove obstruction
	F. Incorrect rotation	F. Check rotation per Section 5.1
	G. Shorted motor	G. Check motor for shorts using a megger
IF SYMPTOMS CONTINUE, CONSULT ABS PRODUCT SERVICE DEPARTMENT		
3. PUMP RUNS IN "HAND" BUT NOT IN AUTOMATIC MODE	A. Bad "OFF" float switch	A. Install wire jumper between "OFF" switch terminals. If pump starts to run replace the "OFF" float switch.
	B. Bad "ON " float switch	B. Install wire jumper between "ON" float terminals. If pump starts to run replace the "ON" float switch.
4. PUMP WILL NOT SHUT OFF	A. Float switch failure	A. With power off, check float switches for continuity.
	B. Control panel failure	B. Check control panel schematic drawing
5. HIGH LEVEL ALARM DOES NOT COME ON	A. Faulty high level alarm switch	A. Install wire jumper between alarm terminals. Replace high-level alarm float switch.
6. LOW FLOW	A. Incorrect pump rotation	A. Check rotation per Section 5.1
	B. Liquid level in pit too low,	B. Check liquid level and location of level switches.
	C. Obstruction in pump or piping	C. Remove obstruction.
7. WATER IN OIL CHAMBER	A. Loose or damaged oil plug	A. Check plug - replace
	B. Mechanical Seal Failure	B. Visit ABS website for instructions.
8. WATER INSIDE MOTOR CASING	A. Damaged upper lip seal or mechanical seal	A. Visit ABS website for pump rebuilding instructions.
	B. Damaged O-ring between oil chamber and motor casing.	B. Replace O-ring
	C. Cut in jacket of power cable	C. Inspect and replace as necessary
	D. Water wicking down power cable from wet well junction box	D. Dry and reseal junction box. Replace power cable.

NOTE:

NOTE:

LEFT BLANK

WAM

MBF SERIES, MICRO BATCH FEEDER

LEFT BLANK

WAM®

WAMGROUP

2

MAINTENANCE

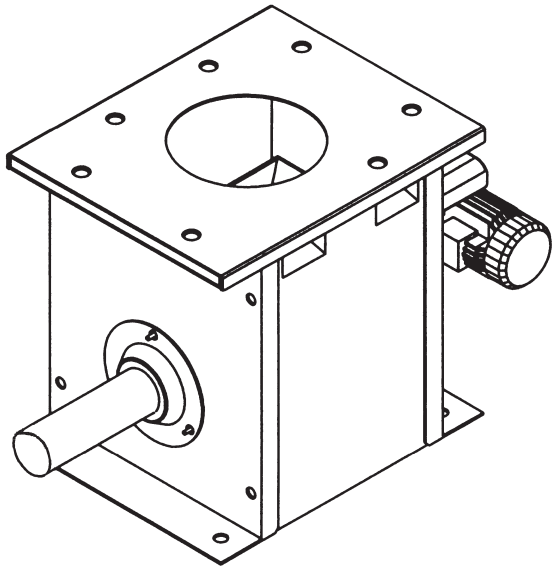

MBF

- ***MICRO-BATCH FEEDERS***
  INSTALLATION, OPERATION AND MAINTENANCE
- ***MIKRODOSIERER***
  EINBAU-, BETRIEBS- UND WARTUNGSANLEITUNG
- ***MICRODOSEURS***
  INSTALLATION, UTILISATION ET ENTRETIEN
- ***MICRODOSATORI***
  INSTALLAZIONE, USO E MANUTENZIONE

All rights reserved © WAMGROUP S.p.A.

CATALOGUE No. **VAL.062.--.M.4L**			
ISSUE **A13**	CIRCULATION **100**	LATEST UPDATE **01.10**	

WAM®

All the products described in this catalogue are manufactured according to **WAMGROUP S.p.A. Quality System procedures**. The Company's Quality System, certified in July 1994 according to International Standards **UNI EN ISO 9002** and extended to the latest release of **UNI EN ISO 9001**, ensures that the entire production process, starting from the processing of the order to the technical service after delivery, is carried out in a controlled manner that guarantees the quality standard of the product.

*Alle in diesem Katalog beschriebenen Produkte werden gemäß dem **Qualitätssystem der WAMGROUP S.p.A.** hergestellt. Das im Juli 1994 gemäß der internationalen Norm **UNI EN ISO 9002** und auf die neueste Version der **UNI EN ISO 9001** erweiterte, zertifizierte Qualitätssystem der Firma gewährleistet, dass der gesamte Produktionsprozess von der Auftragsbearbeitung bis zum technischen Kundendienst nach Lieferung in kontrollierter Art und Weise erfolgt, so dass der Qualitätsstandard des Produkts gewährleistet ist.*

Tous les produits décrits dans ce catalogue sont fabriqués selon les procédures du **Système de Qualité de WAMGROUP S.p.A.**, certifié en Juillet 1994 selon les normes internationales **UNI EN ISO 9002** et étendu à la dernière version de la norme **UNI EN ISO 9001**. Cela garantit que le processus de production, à partir de la gestion de la commande au service technique après-vente, est effectué de manière contrôlée garantissant la norme de qualité du produit.

*Tutti i prodotti descritti nel catalogo sono stati realizzati secondo le **procedure del Sistema Qualità di WAMGROUP S.p.A.** Il Sistema Qualità aziendale, certificato dal luglio 1994 in conformità alle normative internazionali **UNI EN ISO 9002** e successivamente esteso all' ultima versione delle normative **UNI EN ISO 9001**, garantisce che l'intero processo produttivo, dalla formulazione dell'ordine fino all'assistenza tecnica dopo la consegna, si svolga secondo modalità controllate che garantiscono lo standard qualitativo del prodotto.*

This publication cancels and replaces any previous edition and revision.
We reserve the right to implement modifications without notice.
This catalogue cannot be reproduced, even partially, without prior consent.

Diese Veröffentlichung storniert und ersetzt alle früheren Ausgaben und überarbeiteten Fassungen.
Wir behalten uns das Recht vor, Änderungen ohne vorherige Information durchzuführen.
Dieser Katalog darf ohne vorherige Genehmigung weder ganz noch teilweise vervielfältigt werden.

Cette publication annule et remplace toute édition et révision antérieure.
Nous nous réservons le droit de mettre en place des modifications sans préavis.
Ce catalogue ne peut être reproduit, même partiellement, sans notre consentement préalable.

Questa pubblicazione annulla e sostituisce le edizioni e revisioni precedenti.
Ci riserviamo la facoltà di apportare modifiche senza preavviso.
Il presente catalogo non può essere riprodotto, nemmeno parzialmente, senza previo consenso.

2 **MAINTENANCE CATALOGUE** **WARTUNGSKATALOG**

OPERATION AND MAINTENANCE.....BETRIEBS- UND WARTUNGSANLEITUNG.....**M. 4 → .24**
DECLARATION OF CONFORMITY.....KONFORMITÄTSERKLÄRUNG..... **25 → .28**

2
CATALOGUE D'ENTRETIEN **CATALOGO DI MANUTENZIONE**

UTILISATION ET ENTRETIEN.....USO E MANUTENZIONE.....**M. 4 → .24**
DECLARATION DE CONFORMITE.....DICHIARAZIONE DI CONFORMITA'..... **25 → .28**

ADDRESS OF LOCAL DEALER OR LOCAL SERVICE POINT	ANSCHRIFT DES HÄNDLERS ODER DES KUNDENDIENSTES	ADRESSE DU REVENDEUR OU DU SERVICE APRES-VENTE LOCAL	INDIRIZZO RIVENDITORE O PUNTO DI ASSISTENZA LOCALE

EQUIPMENT IDENTIFICATION	IDENTIFIKATION	PLAQUE D'IDENTIFICATION	INTERPRETAZIONE DELLA TARGHETTA
Refer to order code in acknowledgement of order, in invoice and on packaging to identify equipment.	Zur korrekten Identifikation auf den Bestellcode in der Auftragsbestätigung, in der Rechnung und auf der Verpackung Bezug nehmen.	Pour identifier correctement l'équipement, vous devez vous référer au code qui se trouve sur la confirmation de commande, sur la facture et sur la plaque qui se trouve sur l'emballage.	Per una corretta identificazione della macchina, bisogna fare riferimento al codice che si trova sulla conferma d'ordine, sulla fattura e sulla targhetta posta sull'imballo.
CONTRA-INDICATIONS If the user observes normal precaution (typical of this type of machine) together with the indications of this manual, work is safe. NOTE FOR FOOD GRADE MICRO-FEEDERS Clean micro-batch feeder with water from time to time. Cleaning frequency depends on type of product and plant. In cleaning certain feeder parts such as the body, the metering screw, the outlet pipe and the protections, special care must be taken. Before using any other than water for cleaning, contact a WAM® sales office. If material is acid or temperature is extremely high or low also contact a WAM® sales office.	**KONTRA-INDIKATIONEN** Sofern der Betreiber die für Geräte dieser Art typischen Vorsichtsmaßnahmen zusammen mit den in dieser Dokumentation enthaltenen Vorschriften beachtet, ist die Betriebssicherheit gewährleistet. BETRIFFT MIKRODOSIERER FÜR NAHRUNGSMITTEL Dosierer regelmäßig mit Wasser abwaschen (Häufigkeit abhängig von Produkt und Anlagentyp). Besonders bei der Reinigung von Gehäuse, Dosierwerkzeug, Ablaufrohr und Schutzvorrichtungen mit Vorsicht vorgehen. Bevor Reinigungsmittel egal welcher Art verwendet werden, bei einem WAM®-Verkaufsbüro Informationen in bezug auf die Verträglichkeit einholen. Ist das Produkt säurehaltig oder dessen Temperatur entweder sehr hoch oder sehr niedrig, ebenfalls mit einem WAM®-Verkaufsbüro Kontakt aufnehmen.	**CONTRE-INDICATIONS** Si l'utilisateur observe les précautions normales pour ce type de machine et les instructions contenues dans ce catalogue l'utilisation est sûre. NOTE POUR MICRODOSEURS ALIMENTAIRES Nettoyer le microdoseur périodiquement avec de l'eau (fréquence dépend du type de matériau et du type d'installation). Utilisez du soin particulier pour le corps, l'outil de dosage, la sortie verticale et les protections. Avant d'utiliser des autres produits au lieu de l'eau contactez un bureau de vente WAM®. Le même vaut si le matériau est acide ou sa température est trop élevée ou trop basse.	**CONTROINDICAZIONE** Se l'utilizzatore osserva le precauzioni normali tipiche per questo tipo di macchina insieme alle indicazioni date in questo catalogo l'utilizzo è sicuro. NOTE PER MICRODOSATORI PER USO ALIMENTARE Lavare il microdosatore periodicamente con acqua. La frequenza dipende dal tipo di materiale e della natura dell'impianto. Certe parti come il corpo, l'utensile di dosaggio, lo scarico verticale e le protezioni vanno puliti con particolare cura. Prima di utilizzare altri prodotti per la pulizia contattare il ns. Ufficio Vendite. Anche se il materiale da dosare fosse acido o avesse una temperatura troppo alta o troppo bassa, contattare il ns. Ufficio Vendite.
The equipment must not be put into service before the machine or plant it has been fitted to has been declared in conformity with the regulations of the directive 14/06/1982 (89/392/ECC).	Das Gerät darf nicht in Betrieb genommen werden, bevor die Anlage oder Maschine, in die er eingebaut wurde mit den Vorschriften der Bestimmungen vom 14.06.1982 (89/392/ECC) als konform erklärt wurden.	Il est interdit de mettre en fonction la machine avant que l'installation dans laquelle elle doit etre installée soit déclarée conforme aux dispositions de la directive 14/06/1982 (89/392/ECC).	E' inoltre vietato mettere in funzione la macchina prima che la macchina/ impianto nel quale devono essere installate sia dichiarato conforme alle disposizioni della direttiva 14/06/1982 (89/392/EEC).
For dangerous materials, i.e. those that must not get in contact with the human body or be inhaled, for flammable, explosive and bacteriologically dangerous materials the plant manufacturer or fitter must provide for the required safety devices and measures.	Für Gefahrenprodukte, bzw. solche, die nicht mit dem menschlichen Körper in Kontakt geraten oder eingeatmet werden dürfen, für leicht entzündbare, explosive sowie bakteriologisch gefährliche Medien muß der Anlagenbauer bzw. –errichter die für die Sicherheit erforderlichen Vorrichtungen vorsehen und Maßnahmen treffen.	Pour des produits dangereux, nuisibles au contact et/ou à l'inhalation, inflammables, explosifs et dangereux du point de vue bactériologique et/ou viral, le constructeur de l'installation ou l'installateur devront prévoir des dispositifs appropriés au besoin.	Per prodotti pericolosi, nocivi al contatto e/o all'inalzione, infiammabili, esplosivi e pericolosi dal punto di vista batteriologico e/o virale, l'impiantista e/o l'installatore, dovranno prevedere idonei dispositivi all'uopo.
It is the plant designer's / plant fitter's responsibility to design and install all necessary protection in order to avoid that breaking and/or yielding of the equipment or of parts of it might damage people and/or parts of the plant (e.g. adequate protection against falling down of the motor etc.).	Es liegt in der Verantwortung des Anlagenplaners bzw. –aufstellers, alle notwendigen Schutzvorrichtungen vorzusehen, welche es verhindern, dass durch einen Geräte- oder Teiledefekt Personen- und/oder Sachschäden verursacht werden (z.B. geeigneter Schutz gegen das Herunterfallen des Motors etc.).	Dans ce cadre il est la responsabilité du constructeur de l'installation ou de l'installateur de projeter et d'installer tout équipement de protection nécessaire afin d'éviter que des ruptures et/ou des tassements de la machine et/ou des parties d'elle puissent causer de dégâts à des personnes et/ou des choses (par ex.: des protections appropriées contre la chute du moteur etc.).	In quest'ambito è cura dell'impiantista/ installatore predisporre ed installare tutti gli accorgimenti/protezioni al fine di evitare danni a cose o persone in caso di rotture e conseguente caduta di pezzi della macchina (ad es: rottura del motore).

RECEIPT OF GOODS / PACKAGING DATA

On arrival, prior to unloading, check if nature and quantity of the goods comply with the contents of the delivery note, the invoice and the acknowledgement of order.

If any parts are damaged through transport immediately state your claims in writing on the consignment note (waybill). The driver is obliged to accept this and to leave you a copy. Send off your claims without hesitation to us if you received goods free destination or to your shipping agent. Failure to state your claims on arrival of the goods may later invalidate your claim.
Avoid any kind of damage to goods during unloading and handling.
Always handle goods with care.

N. B.: The weights given below do not include any additional packaging such as pallets or similar.

KOLLIMASSE UND GEWICHTE

Bei Wareneingang vor dem Ab-Laden prüfen, ob Ware in Be-schaffenheit und Menge mit den Angaben auf Lieferschein, Rechnung und Auftragsbestätigung übereinstimmt. Eventuelle Schäden sofort schriftlich im Frachtbrief reklamieren, da spätere Ansprüche nicht mehr geltend gemacht werden können. Der Fahrer ist dazu verpflichtet, die Reklamation entgegen zu nehmen und dem Empfänger eine
Kopie dieser zu überlassen. Bei Lieferung frei Haus Reklamation an den Lieferanten schicken, in allen anderen Fällen an den Spediteur. Beim Abladen Ware nicht beschädigen. Berücksichtigen, daß es sich um mechanische Teile handelt, die mit Vorsicht zu behandeln sind.

N.B.: Gewichte beinhalten keine zusätzlichen Verpackungen wie Paletten o.ä.

EMBALLAGES - POIDS

Au moment où Vous recevez la marchandise, vérifiez bien que le modèle et la quantité correspondent aux données indiquées sur le bulletin de livraison, sur la facture et sur la confirmation de commande.
Si vous constatez des dommages, vous devez immédiatement le faire savoir en l'écrivant dans l'emplacement prévu à cet effet sur la lettre de voiture. Le chauffeur a l'obligation d'accepter votre réclamation et de vous en laisser une copie. Si la fourniture a été livrée franco destination, envoyez-nous votre réclamation, sinon, envoyez-la directement au transporteur. Si vous ne réclamez les dommages immédiatement après avoir reçu la marchandise, votre réclamation risque de ne pas être acceptée. Veillez à ne pas endommager la marchandise durant le déchargement et la manutention. Faites toujours extrèmement attention quand vous la deplacez.

N.B.: Les données ci-dessous ne comprennent pas le poids d'un éventuel emballage supplémentaire (palette ou autre).

TRASPORTO E RICEVIMENTO

Al ricevimento della merce controllare se la tipologia e la quantità corrispondono con i dati di bolla di consegna, fattura e conferma d'ordine.
Eventuali danni devono essere fatti presenti immediatamente per iscritto nell'apposito spazio della lettera di vettura. L'autista è obbligato ad accettare un tale reclamo e lasciarne una copia a Voi.
Se la fornitura è franco destino, inviate il Vs. reclamo a noi, altrimenti direttamente allo spedizioniere.
Se non richiederete i danni immediatatamente all'arrivo della merce, la vostra richiesta potrebbe non essere accolta.
Evitate ogni tipo di danneggiamento durante lo scarico e le movimentazioni.
Movimentate sempre la merce con cura.

N.B.: I dati riportati non comprendono il peso di un eventuale imballo cumulativo (pallet o altro).

	WEIGHTS - *GEWICHTE* - POIDS - *PESI* (kg)			
Type	Without speed variator *Ohne Regelgetriebe* Sans variateur *Senza motorizzazione*	With speed variator *Mit Regelgetriebe* Avec variateur *Con motovariatore*	Max. weight of accessories *Maximalgewicht Zubehör* Poids max. accessoires *Peso max. accessori*	Packing *Verpackung* Emballage *Imballo*
MBF 042	20	26	25	20
MBF 073	60	80	50	30
MBF 114	65	85	50	30

Total weight is given by weight of micro-batch feeder (with or without speed variator) plus accessories and packaging.

RECEIPT OF GOODS / PACKAGING DATA

Gesamtgewicht = Gewicht des Mikrodosierers (mit oder ohne Regelgetriebemotor) + Zubehör + Verpackung.

KOLLIMASSE UND GEWICHTE

Le poids total est donné du poids du microdoseur (avec ou sans motovariateur) plus les accessoires éventuels et l'emballage.

EMBALLAGES - POIDS

Il peso complessivo è dato dal peso del microdosatore (con o senza motovariatore) più gli eventuali accessori e l'imballo.

IMBALLI E PESI

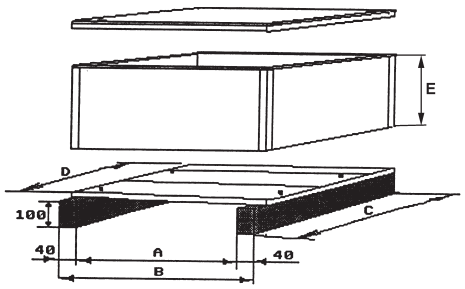

Suitable for - *Passend zu* Pour type - *Idoneo* MBF	**A**	**B**	**C**	**D**	**E**	**kg***
42	570	650	450	440	350	50
73	820	900	600	500	600	125
114	820	900	600	590	600	140

(*) Weight with standard MBF
Gewicht mit Standard MBF
Poids avec MBF std.
Peso con MBF std.

INSTALLATION
The micro-batch feeder is ready for operation. Prior to delivery, it has been tested at the factory.

PREPARATION
Remove equipment from packaging.

ASSEMBLY
The MBF units are despatched with the following parts not assembled:
- motors
- metering screws
- blending tools
- accessories

Procedure:
• unpack
• check supply is complete and in compilance with the order
• assemble metering screw

EINBAU
Der Dosierer ist bereits betriebsbereit und wurde vor der Auslieferung im Werk einem vollständigen Funktionstest unterzogen.

VORBEREITUNG
Gerät auspacken und zusammenbauen.

MONTAGE
Folgende Teile werden unmontiert geliefert:
- E-Motoren
- Dosierwerkzeuge
- Homogenisierwerkzeuge
- Zubehör

Vorgehensweise:
• Gerät auspacken
• Sicherstellen, daß Lieferung vollständing ist
• Dosierwerkzeug montieren

INSTALLATION
Le doseur ne nécessite d'aucun contrôle particulier, puisqu'il est fourni déjà complet et testé dans l'usine.

PREPARATION
Enlevez le doseur de l'emballage et commencez l'assemblage.

ASSEMBLAGE
Les microdoseurs sont fournis avec les éléments suivants non assemblés:
- moteurs
- outil de dosage
- homogénéisateur
- accessoires

Opérations à effectuer:
• enlever le microdoseur de l'emballage
• vérifier et contrôler la correspondance de tous les composants commandés
• monter l'outil de dosage

INSTALLAZIONE
I dosatori non richiedono particolari accorgimenti, in quanto la macchina viene fornita già completa e collaudata prima della consegna

PREPARAZIONE
Togliere il dosatore dall'imballo e provvedere all'imballaggio

ASSEMBLAGGIO
I dosatori vengono consegnati con le seguenti parti non montate:
- motore
- utensile dosaggio
- accessori

Operazioni da effettuarsi per un corretto assembiaggio:
• togliere il dosatore dall'imballo
• verificare presenza e corrispondenza di tutti i componenti ordinati.
• montaggio utensile dosaggio

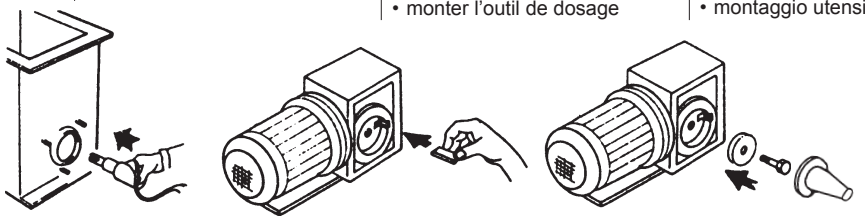

• ASSEMBLE FEEDER PIPE | **• DOSIERROHR MONTIEREN** | **• MONTER LA SORTIE** | **• MONTAGGIO SCARICO**

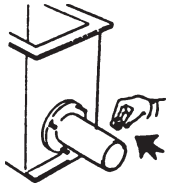

• ASSEMBLE BLENDING TOOL | **• HOMOGENISIERWERKZEUG MONTIEREN** | **• MONTER L'HOMOGÉNÉISATEUR** | **• MONTAGGIO UTENSILE DI OMOGENEIZZAZIONE**

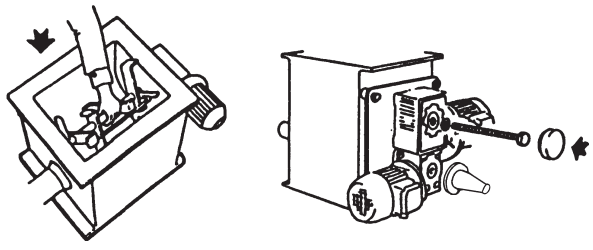

• ASSEMBLE MOTORS (SPEED VARIATORS) | **• E-MOTOREN UND, SOFERN VORHANDEN, REGELANTRIEB MONTIEREN** | **• MONTER LES MOTEURS (ÉVENTUELS VARIATEURS)** | **• MONTAGGIO MOTORI (EVENTUALI VARIATORI)**

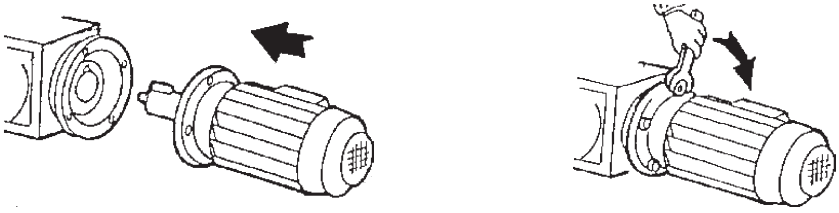

ASSEMBLE ACCESSORIES
- Fix micro-batch feeder to the ground or to a support structure using bolts.
- Check metering screw has been assembled correctly.
- Connect the electrical components to the central control panel or fit it in situ.
- Check sense of rotation of metering screw is ANTI-CLOCKWISE seen from be-hind the drive unit and the blending tool clockwise.
- Once carried out the above-mentioned steps, the micro-batch feeder is ready for the final check.

ZUBEHÖR MONTIEREN.
- Den Dosierer am Boden oder an der Rahmenkonstruktion mittels Schrauben befestigen.
- Prüfen, ob Dosierwerkzeug ordnungsgemäß montiert ist.
- Die elektrischen Komponenten an die zentrale Steuerungseinheit anschließen oder vor Ort einpassen.
- Sicherstellen, daß sich von hinter dem Antrieb stehend geshen das Dosierwerkzeug GEGEN DEN UHRZEIGERSINN dreht und dass das Homogenisierwerkzeug im Uhrzeigersinn drehen.
- Nach erfolgter Durchführung der vorgenannten Arbeiten ist der Dosierer bereit für eine letzte Kontrolle.

MONTER LES ACCESSOIRES
- Fixez le doseur à la structure de soutien au moyen de boulons à travers les trous prévus à ce propos.
- Contrôlez l'assemblage de l'outil de dosage.
- Connecter les composants électriques au panneau de commande central ou situé sur place.
- Contrôlez que vu de derrière la motorisation l'outil de dosage tourne AU SENS INVERSE DES AIGUILLES D'UNE MONTRE et l'outil de mélange dans le sens horaire.
- Exécutées les opérations indiquées ci-dessus, le microdoseur est prêt pour le contrôle final.

MONTAGGIO ACCESSORI
- Fissare il dosatore alla struttura di sostegno mediante viti da applicarsi nelle apposite sedi.
- Controllare il montaggio dell'utensile omogeneizzatore e dell'utensile dosaggio.
- Collegare le parti elettriche al quadro di comando centrale o posizionato in loco.
- Controllare che, rispetto ad un osservatore posto al lato del carico della macchina (retro), l'utensile di dosaggio ruoti in senso ANTIORARIO e l'utensile di omogenizzazione in senso orario.
- Eseguite le suddette operazioni, il dosatore è pronto per il collaudo finale.

ELECTRICAL CONNECTION
Connection between the feeder motor and mains supply, as well as all work on the open terminal box must be carried out by qualified personnel only.
PRIOR TO ANY KIND OF MAINTENANCE OR REPAIR WORK, DISCONNECT FEEDER MOTOR FROM THE MAINS!
Prior to connection ensure voltage supply and motor plate data match.
The protection of the junction box of the electric motor is IP 55.
Check the earthing connections of the machine.
The installer shall connect the machine to the earthing of the plant by means of a copper braid (not included in the standard supply) fitted to the fixing bolt; check the effectiveness of the earthing between the machine and the components of the plant connected to it. Always follow the safety standards.

ELEKTRISCHER ANSCHLUSS
Der Anschluß des Dosierermo-tors an das Netz sowie Arbeiten am Klemmenkasten des Dosierermotors im allgemeinen dürfen nur vom Elektriker ausgeführt werden.
VOR WARTUNGS- UND REPARATURARBEITEN IMMER DIE HAUPTSTROMZUFUHR UNTERBRECHEN!
Vor dem elektrischen Anschluß sicherstellen, daß die Netzspannung mit den Typenschildangaben des Dosierermotors übereinstimmen.
Die Schutzart des Elektromotor-Klemmenkastens ist IP 55.
Die Erdung der Maschine überprüfen.
Der Installateur sollte die Maschine unter Verwendung eines Kupfergeflechts (nicht im Standard-Lieferumfang enthalten), das an einem Schraubbolzen befestigt ist, an die Erdung der Anlage anschließen.
Die Funktion der Erdung zwischen Maschine und den anderen Anlagenkomponenten überprüfen, mit denen die Maschine verbunden ist. Dabei immer die Sicherheitsrichtlinien einhalten.
In jedem Fall die Allgemeinen Arbeitssicherheitsbestimmungen befolgen.

BRANCHEMENTS
La connexion entre le moteur et le réseau et, en tout cas, tout travail sur la boîte à bornes du moteur doit être effectué par du personnel spécialisé.
AVANT DE CHAQUE INTERVENTION DETACHER L'ALIMENTATION DE COURRANT!
Avant le branchement s'assurer que le voltage du réseau coïncide avec celui indiqué sur la plaquete du moteur.
La protection de la boîte a bornes du moteur électrique est IP 55.
Vérifier les connexions de mise à la terre de la machine.
L'installateur doit brancher la machine à la mise à la terre de l'installation au moyen d'une tresse en cuivre (non comprise dans la fourniture standard) inserée dans le boulon de fixation; avant de démarrer la machine, vérifier l'efficacité de la mise à la terre entre la machine et les composants de l'installation branchés sur celle-ci.
Faire toujours attention aux normes de sécurité.

COLLEGAMENTI
Il collegamento tra i motori del microdosatore e la rete elettrica e in ogni caso qualsiasi lavoro sulla scatola morsettiera dei motori, devono essere eseguiti da personale specializzato.
PRIMA DI QUALSIASI OPERAZIONE STACCARE L'ALIMENTAZIONE DI CORRENTE!
Prima del collegamento assicurasi che il voltaggio di rete coincida con quello indicato sulla targhetta del motore.
La protezione della morsettiera motore elettrico è IP55.
Verificare l'equipotenzialità della macchina.
L'installatore dovrà collegare la macchina al circuito di terra dell'impianto utilizzando una treccia di rame, non in dotazione, inserita nel bullone di fissaggio e verificarne l'effettiva equipotenzialità tra macchina e i componenti dell'impianto a contatto con le sue parti prima di avviare la macchina.
Fare sempre attenzione alle eventuali norme di sicurezza.

SAFETY NOTICE
Never introduce hands into a running micro-batch feeder.
Never open the inspection hatch when the feeder is running.
It is however necessary fitting upstream the machine a fix safety grid or a hopper high enough to prevent damages to limbs according to the Machine Directive in force. The same approach is necessary for the outlet: it is required using a vertical outlet or similar systems meant to prevent foreign bodies from entering the machine and cause damage to it, to persons or to their limbs. Always ensure the Machine Directive in force is being followed.

SICHERHEITS-HINWEIS
Niemals mit den Händen in den laufenden Mikrodosierer greifen.
Niemals die Inspektionsklappe öffnen, wenn der Dosierer in Betrieb ist.
Es ist notwendig, vor der Maschine ein Sicherheitsgitter oder ein Behälter mit adäquater Höhe zu installieren, um entsprechend der geltenden Maschinenrichtlinie Verletzungen an Gliedmaßen vorzubeugen.
Gleiches gilt auch für die Absicherung des Auslaufs: Es ist notwendig einen vertikalen Auslauf oder ähnliches zu verwenden, um zu verhindern, dass Fremdkörper in die Maschine gelangen können, die die Maschine schädigen oder das Personal verletzen könnten. Stellen Sie zu jeder Zeit sicher, dass die momentan geltende Maschinenrichtlinie stets eingehalten wird.

PRECAUTIONS GENERALES
Jamais mettre les mains à l'intérieur du microdoseur pendant qu'il est en fonction.
Jamais ouvrir la trappe de visite quand le doseur est en fonction.
Il est toutefois nécessaire de monter au-dessus de la machine une grille de sécurité fixe ou une trémie suffisamment haute pour prévenir les dommages aux membres inférieurs, selon la directive européenne en vigueur. La même approche est nécessaire pour la bouche de sortie: il faut utiliser une sortie verticale ou des systèmes similaires destinés à empêcher les corps étrangers d'entrer dans la machine et causer des dommages à celle-ci ou blesser les personnes. Assurez-vous que la directive européenne en vigueur est respectée.

PRECAUZIONE GENERALI
Mai mettere le mani all'interno del microdosatore mentre è in funzione. Mai aprire lo sportello di ispezione quando il dosatore è in funzione.
In ogni caso é necessario che sopra la macchina venga montata una griglia di sicurezza fissa o una tramoggia che sia di altezza sufficiente ad impedire che gli arti di una persona vengano danneggiati nel rispetto della Direttiva Macchine Vigente
Lo stesso discorso vale per lo scarico: é necessario usare lo scarico verticale o un sistema equivalente che protegga da eventuali intrusioni che possano pregiudicare il funzionamento della macchina o danneggiare persone o loro arti.
Verificare idoneità dei sistemi in accordo alla Direttiva Macchine in vigore.

START-UP
Check whether foreign substances or water have entered the micro-batch feeder. In such a case clean thoroughly.
Avoid any friction between the metering screw and the body.
Check sense of rotation of metering screw is ANTICLOCKWISE seen from behind the drive unit.
Check oil level in gear reducer is correct.
Check to ensure, with batch feeder in stainless steel, that the inspection hatch is closed.
First start-up must be carried out with empty micro-batch feeder. If feeder operates correctly add material and proceed with regular operation.

INBETRIEBNAHME
Prüfen, ob Fremdkörper oder Wasser ins Innere des Dosierers gedrungen sind. Ist dem so, gründlich säubern.
Jede übermäßige Reibung zwischen Dosierwerkzeug und Gehäuse vermeiden.
Sicherstellen, daß sich das Dosierwerkzeug gegen den Uhrzeigersinn dreht (aus der Sicht hinter dem Antrieb). Bei falscher Drehrichtung Kabeldrähte umklemmen.
Ölstand im Getriebe prüfen.
Sicherstellen, dass beim Dosierer aus Edelstahl die Inspektionsklappe verschlossen ist.
Probelauf mit leerem Dosierer durchführen. Material zugeben und regulären Betrieb aufnehmen.

MISE EN MARCHE
Vérifiez qu'aucune substance externe ou de l'eau ne soient entrées dans le microdoseur. S'il y en a, nettoyez.
Evitez absolument toute friction entre l'outil de dosage et le corps.
Contrôlez le sens de rotation de l'outil de dosage (sens inverse de celui des aiguilles d'une montre); si erronné, invertir le branchement des fils dans la boîte à bornes du moteur.
S'assurer que le niveau d'huile dans le réducteur soit correct. S'assurer, dans le doseur en inox, que la trappe de visite est fermée.
La première épreuve de mise en marche doit être faite à microdoseur vide. Si tout fonctionne régulière-ment, alimenter le doseur avec du matériau et procéder normalement.

AVVIAMENTO
Verificare se sostanze esterne o acqua sono entrate nel microdosatore. Se così fosse, pulire.
Evitate assolutamente ogni frizione tra spirale e dosatrice e dell'omogeneizzatore contro la parte esterna.
Controllare il senso di rotazione dell'utensile di dosaggio (antiorario visto dal carico); se errato, invertire i poli del motore.
Assicurarsi che l'olio del riduttore sia al livello giusto. Accertarsi, nel dosatore in AISI, che sia chiuso lo sportello d'ispezione.
La prima prova di avviamento deve essere fatta a microdosatore vuoto; se tutto funziona regolarmente, alimentare con il materiale e procedere normalmente.

OPERATION

I Depending on the type of plant, operation of the micro-feeder is controlled by a central control panel or by a local starter.
It is essential having knowledge regarding the weight of the product laid on the top of the micro-batch feeder as the former cannot exceed the max. resistance of the inner casing and also it must not generate abnormal flexion of the blending tool.
The maximum weight in case of the 042 and 73/144 machine sizes is 120 respectively 240 kg.
As it can be difficult measure the actual weight that rests on it due to the unpredictable behavior of the various material, we consider that the volume of our standard hoppers will not generate problems for material having their specific weight up to 1.3 t/m3. Otherwise, please contact our Sales Department.
In case the weight laid on the micro-batch feeder exceeds the indicated limits there has to be provided a safety system upstream the machine.

N.B.: Life of the micro-batch feeder increases considerably if it is emptied at the end of each working day. This becomes even more important with materials which, through longer storage, tend to harden or pack.

ASSEMBLY / DISMANTLING
FASTENING

The bottom part of the micro-batch feeder must be firmly fastened to the ground or to a support structure using nuts and bolts.
If on top of the standard hopper another loading system is installed the connection must be flexible in order to avoid vibrations.
In any case, vibrations must be avoided.
The micro-batch feeders cannot be used as a external support for the machines downstream it (eg. there cannot be hanged screw conveyors, belt conveyors and so on).

IMPORTANT: to prevent accidents it is necessary that the hopper for manual loading is equipped with fixed (bolted) protection grille.
Standard manual loading hoppers are always supplied complete with a protection grille.
Accident prevention laws require that this grille is correctly assembled and that the user does not remove it. If the user provides a different loading system or different types of mobile protection the protection must be able to stop the feeder instantaneously if protection is removed or opened.

This device is also meant to prevent machine start-up if the protection is not closed.

BETRIEB

Je nach Anlagentyp wird der Mikrodosierer über eine zentrale Steuerung oder einen Vor-Ort-Schaltkasten in Betrieb genommen.
Es ist unbedingt erforderlich das spezifische Gewicht des Produktes zu kennen, das auf dem Mikrodosierer aufliegt, da das Gewicht die max. Belastbarkeit des inneren Gehäuse nicht überschreiten darf. Des Weiteren könnte durch ein zu hohes Produktgewicht das Mischwerkzeug überbeansprucht bzw. verbogen werden.
Das Maximalgewicht bei den Maschinengrößen 042 und 73/144 ist 120 bzw. 240 kg.
Da das Verhalten verschiedener Materialien oft unvorhersehbar ist, kann es schwierig sein, das momentane Gewicht des auf der Maschine lastenden Materials zu messen. Ausgehend vom Volumen unseres Standardbehälters können wir jedoch einschätzen, das bei Materialien mit einem spezifischen Gewicht bis 1,3 t/m^3 keine Probleme entstehen. Andernfalls bitte unsere Vertriebsabteilung kontaktieren.
Für den Fall, dass das aufliegende Produkt das maximale Gewicht überschreitet, sind vor der Maschine entsprechende Schutzvorrichtungen zu installieren.

N.B.: Die Lebensdauer des Mikrodosierers erhöht sich merklich, wenn er täglich nach Feierabend geleert wird. Besonders wichtig ist dies bei der Dosierung von Medien, die nach längerer Lagerung zum Aushärten oder Anbacken neigen.

MONTAGE / DEMONTAGE
BEFESTIGUNG

Der Mikrodosierer muß an seiner Unterseite bündig am Boden oder auf einem Rahmen mittels Schrauben befestigt werden.
Falls über dem Trichter ein weiteres Befüllsystem vorgesehen ist, muß zwischen diesem und dem Trichter des Dosierers eine flexible Verbindung vorgesehen werden, um zu verhindern, daß sich Vibrationen übertragen.
Vibrationen sind im allgemeinen zu vermeiden.
Die Mikrodosierer können nicht als äußere Halterung nachgelagerter Maschinen eingesetzt werden (z.B. können keine Schnecken- oder Gurtförderer etc. angebaut werden).

WICHTIG: zur Unfallverhütung muß der Trichter zur manuellen Aufgabe mit einem fest installierten (verschraubten) Schutzgitter versehen werden.
Die manuellen Aufgabetrichter werden immer mit Schutzgitter geliefert. Im Interesse der Unfallverhütung ist es wichtig, dass das Schutzgitter ordnungsgemäß montiert ist und nicht entfernt wird. Falls der Betreiber ein anderes Befüllsystem oder bewegliche Schutzvorrichtungen vorsieht, so müssen diese Schutzvorrichtungen so ausgeführt sein, daß das Gerät augenblicklich abschaltet, sobald die Schutzvorrichtung entfernt oder geöffnet wird.

Diese Vorrichtung darf es außerdem nicht gestatten, dass die Maschine eingeschaltet werden kann, wenn das Schutzgitter sich nicht in der geschlossenen Position befindet.

FONCTIONNEMENT

Selon le type d'installation, le fonctionnement du microdoseur est contrôle ou par un pupitre de commande ou par starter sur place.
Il faut connaître le poids du produit qui se trouve sur le corps du microdoseur, puisqu'il ne doit pas dépasser la résistance maximale du boîtier interne et aussi il ne doit pas générer une flexion anormale de l'outil d'homogénéisation.
Le poids maximum pour les tailles 042 et 73/144 est de 120 et respectivement de 240 kg.
Comme il est difficile de mesurer le poids réel en raison du comportement imprévisible des différents matériaux, nous estimons que le volume de nos trémies standards ne génèrent pas de problèmes pour les matières avec poids spécifique jusqu'à 1,3 t/m^3. Dans le cas contraire, veuillez contacter notre département des ventes.
Dans le cas où le poids visé sur le microdoseur excède les limites indiquées, il faut prévoir un système de sécurité sur la machine.

N.B.: La durée du microdoseur augmente sensiblement si on le vide à la fin de la journée.
Ceci est particulièrement important quand le matériau dosé tend à durcir ou à se compacter s'il reste ferme pour une certaine période de temos.

MONTAGE / DEMONTAGE
FIXAGE

Le microdoseur doit être bien fixé dans la partie inférieure à une structure de support au moyen de boulons dans les trous prévus à ce propos.
Si au-dessus de la trémie est prévu un autre système de chargement, la connexion doit être flexible afin d'éviter des vibrations.
En tout cas il faut éviter toute vibration.
Les microdoseurs ne peuvent pas être utilisés comme support externe pour les machines en aval (par exemple vous ne pouvez pas pendre des convoyeurs à vis, convoyeurs à bande et ainsi de suite).

IMPORTANT: pour respecter les dispositions en vigueur en ce qui concerne la prévention d'accidents, il est nécessaire que la trémie de chargement manuel soit toujours munie d'une protection fixe (boulonnée).
Les trémies à chargement manuel sont toujours fournies dotées de grille de protection. Il est d'une importance fondamentale, dans le respect des normes de sécurité contre les accidents du travail, que cette protection soit assemblée correctement et ne soit pas enlevée. Au cas où le client utilise un autre système de chargement ou prévoit des protections de type mobile, il est obligatoire de doter l'appareillage d'un dispositif qui provoque son arrêt immédiat quand la protection est enlevée ou ouverte.

En outre ce dispositif ne doit pas permettre le démarrage de la machine quand la protection n'est pas dans la position correcte de fermeture.

FUNZIONAMENTO

In base al tipo di impianto, il funzionamento del microdosatore è controllato o da un quadro centrale di comando o da un comando in loco.
E molto importante conoscere il peso del prodotto che grava sul corpo del microdosatore: esso non deve mai superare la massima resistenza della cassa interna e non deve portare a flessioni anomale dell'utensile di omogenizzazione.
Considerare rispettivamente 120kg e 240kg come peso massimo per le taglie 042 e 73/114.
Poichè è molto difficile quantificare il peso che realmente viene a gravare a causa della imprevedibilità del comportamento dei vari prodotti, riteniamo che i volumi delle nostre tramogge standard con prodotti di peso specifico fino a 1,3 t/m^3 non abbiano problemi, in caso contrario consultare il ns. Uff. Tecnico Comm.le.
Qualora il peso sopra il microdosatore sia superiore ai limiti riportati sopra, è necessario prevedere un sistema di protezione nella tramoggia posto sopra il microdosatore.

N.B.: Si aumenta notevolmente la durata del microdosatore svuotandolo al termine di ogni giorno lavorativo.
Questo è particolarmente importante quando il materiale trasportato tende ad indurirsi o a compattarsi se rimane fermo per un certo periodo di tempo.

MONTAGGIO / SMONTAGGIO
FISSAGGIO

Il microdosatore deve essere fissato saldamente nella parte inferiore a una struttura di sostegno mediante viti da applicarsi nelle apposite sedi.
Se sopra una tramoggia viene posto un altro sistema di carico questa connessione deve essere flessibile per evitare la propagazione di vibrazioni.
In ogni caso l'importante è che siano evitate vibrazioni.
I microdosatori non possono essere impiegate da sostegno esterno per macchine sottostanti (per es. non si possono appendere coclee, nastri trasportatori, canalette, etc.).

IMPORTANTE: per rispettare le vígenti disposizioni in materia di prevenzione, è necessario che l'eventuale tramoggia di carico manuale sia sempre munita di protezione fissa (imbullonata).
Le tramogge a caricamento manuale sono fornite sempre complete di griglia di protezione, è di fondamentale importanza, per il rispetto delle norme antinfortunistiche, che tale protezione sia correttamente assemblata, e non venga rimossa. Qualora il cliente usi un altro sistema di carico o preveda protezioni. di tipo mobile, è obbligatorio dotare l'apparecchiatura di un dispositivo che ne provochi l'arresto immediato all'atto della rimozione o apertura della protezione.

Tale dispositivo, inoltre, non deve consentire l'avviamento della macchina se la protezione non è nella posizione di chiusura.

Particular attention must be paid to the feeder outlet. Either a vertical outlet must be fitted (see catalogue chapter on “accessories”) or the area around the outlet must be made inaccessible to the operator because the metering screw runs freely.

Am Auslauf des Dosierers besteht besondere Verletzungsgefahr. Entweder muß ein vertikales Ablaufrohr verwendet werden (siehe Katalog “Zubehör”) oder der gesamte Bereich muß dem Bedienungspersonal wegen der sich frei drehenden Dosierspirale unzugänglich gemacht werden.

Il faut faire attention particulière à la sortie du microdoseur: ou il faut utiliser la sortie verticale (v. catalogue “accessoires”), ou cette partie doit être inaccessible au personnel parceque dans ce point la spire peut tourner librement.

Particolare attenzione deve poi essere posta al lato uscita del microdosatore: o si deve usare lo scarico verticale (vedi catalogo accessori) oppure questa parte del microdosatore deve essere inaccessibile al personale, in quanto in quel punto la spirale può ruotare a ciclo libero.

DISMANTLING

ATTENTION:
PRIOR TO DISASSEMBLING ANY PART OF THE MICRO-BATCH FEEDER, ENSURE FEEDER MOTOR IS DISCONNECTED FROM MAINS SUPPLY.

MAINTENANCE
Failure to follow the following instructions may cause problems and invalidate the warranty on the supplied equipment.
Once every day, when operation finishes, empty the micro-batch feeder.
Once every week check outlet is free from material residues. If not clean thoroughly to avoid any kind of obstruction to material flow.
With the batch feeder in 304 stainless steel open the inspec-tion hatch.
Obviously lubrication and maintenance intervals depend on the use and on the type of metered material.

In case of feeders with MBTT type shaft seals grease once a month.
If the machine uses MBTX, MBTN or MBTT type seals, check these on a monthly basis to make sure they are intact.
For more heavy-duty applications, such as with particularly abrasive material and/or high tool rotation speed, increase the maintenance frequency.

SUBSTITUTION OF WEAR PARTS
Follow the following instructions (see appendix).

DEMONTAGE

ACHTUNG:
VOR DEM AUSBAU IRGENDWELCHE TEILE AUS DEM DOSIERER SICHERSTELLEN, DASS DIE HAUPTSTROMZUFUHR ZUM MOTOR DES DOSIERERS UNTERBROCHEN IST.

WARTUNG
Das Nichtbefolgen der nachfolgenden Vorschriften kann zu Störungen führen und die Gewährleistung auf das gelieferte Gerät außer kraft setzen.
Jeden Tag nach Feierabend den Mikrodosierer leer fahren.
Einmal die Woche prüfen, ob Auslauf frei von Materialrück-ständen ist und ggfls. gründlich säubern, um einen freien Produktfluß zu gewährleisten.
Beim Dosierer aus Edelstahl 1.4301 die Inspektionsklappe öffnen.
Es ist klar, daß die Schmier- und Wartungsintervalle sowohl von der Betriebsart, als auch vom Dosiergut abhängen.

Bei Dosierern mit Wellenabdichtungen vom Typ MBTT ein mal monatlich abschmieren.
Falls die Maschine Dichtungen vom Typ MBTX, MBTN oder MBTT vorsieht, sind diesen Dichtungen einmal im Monat auf Unversehrtheit zu prüfen.
Bei Anwendungen unter schwierigen Verhältnissen, wie beispielsweise mit besonders abrasiv wirkendem Material und/oder hoher Drehgeschwindigkeit des Werkzeugs sind die Wartungsintervalle zu verkürzen.

AUSTAUSCH DER VERSCHLEISSTEILE
Nachfolgende Anleitungen befolgen (siehe Anhang).

DEMONTAGE

ATTENTION:
AVANT DE DEMONTER DES PIECES DU MICRODOSEUR S’ASSURER QUE L’ALIMENTATION DE COURANT AU MOTEUR ELECTRIQUE SOIT DETACHE !

ENTRETIEN
Le ne pas respecter rigoureusement les instructions suivantes peut causer des problèmes et peut invalider la garantie sur les machines fournies.
Tous les jours, à la fin du travail, vider le microdoseur.
Toutes les semaines vérifier si la sortie est libre de résidus de matériau; sinon, la nettoyer soigneusement afin d’éviter toute obstruction au passage du matériau.
Dans le doseur en inox 304 ouvrir la trappe de visite.
Il est évident que les intervalles de lubrification et de remplacement des pièces dépend et de l’utilisation et du type de matériau dosé.

Au cas où la machine est prévue d’étanchéités de type MBTT graisser une fois par mois.
Au cas où la machine prévoit des étanchéités type MBTX, MBTN ou MBTT contrôler chaque mois l’intégrité du joint d’étanchéité.
En cas d’applications particulièrement contraignantes, par exemple des matériaux abrasifs et/ou une vitesse élevée de rotation de l’outil, réduire les intervalles de maintenance.

SUBSTITUTION DES PIECES D’USURE
Suivez les instructions suivantes (Voir annexe).

SMONTAGGIO

ATTENZIONE:
PRIMA DI SMONTARE QUALSIASI PEZZO DEL MICRODOSATORE, ASSICURARSI CHE L’ALIMENTAZIONE DI CORRENTE AL MOTORE ELETTRICO SIA STACCATA !

MANUTENZIONE
Il non attenersi strettamente alle seguenti istruzioni può causare problemi ed invalidare la garanzia sulle macchine fornite.
Ogni giorno, alla fine del lavoro vuotare il microdosatore.
Ogni settimana, verificare se lo scarico è libero da residui di materiale: se non lo è pulire accuratamente per evitare ogni ostruzione al passaggio di materiale.
Nel dosatore in AISI 304 aprire lo sportello d’ispezione.
E’ chiaro che il tempo di lubrificazione e di sostituzione dei pezzi dipende sia dall’uso del dosatore che dal tipo di prodotto trasportato.

Nel caso in cui la macchina preveda tenute tipo MBTT procedere mensilmente all’ingrassaggio.
Nel caso la macchina prevede tenute tipo MBTX, MBTN o MBTT procedere mensilmente al controllo dell’integrità della tenuta stessa.
In caso di applicazioni più gravose, per esempio materiale particolarmente abrasivo e/o elevata velocità di rotazione dell’utensile, accorciare gli intervalli di manutenzione.

SOSTITUZIONE DEI PEZZI DI USURA
Seguire le seguenti istruzioni (Vedi allegati).

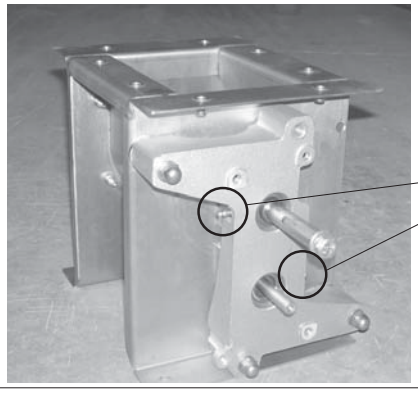

Greasing points
Schmierstellen
Points de graissage
Punti di ingrassaggio

METERING SCREW REPLACEMENT OF SINT® MBF - *AUSTAUSCH DES DOSIERWERKZEUGS VON SINT® MBF*
REMPLACEMENT OUTIL DE DOSAGE DE MBF DANS SINT® - *SOSTITUZIONE UTENSILE DOSAGGIO DELL' MBF IN SINT®*

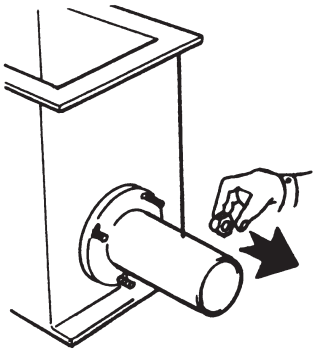

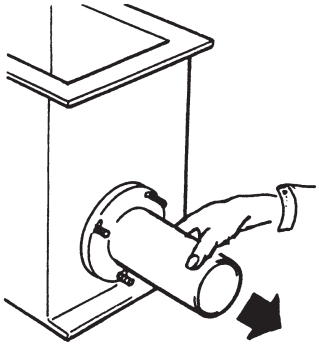

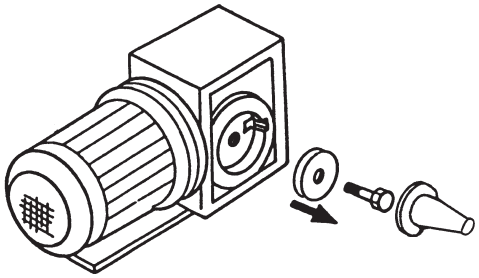

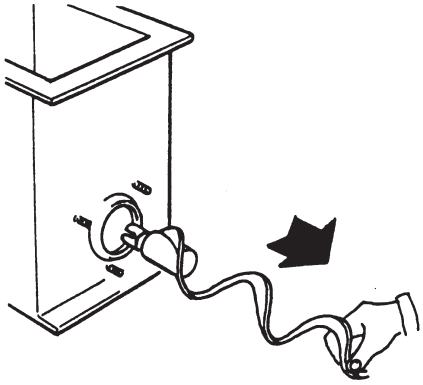

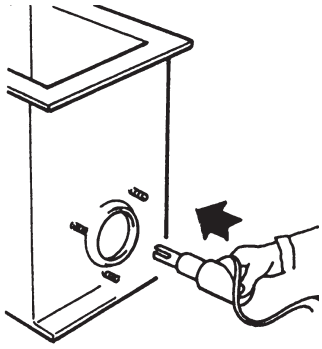

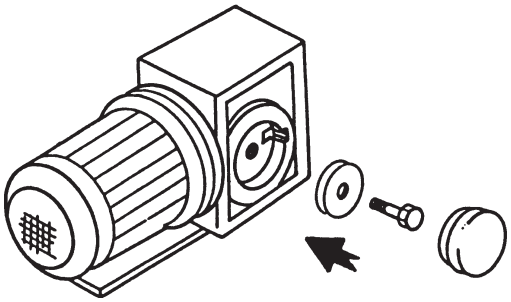

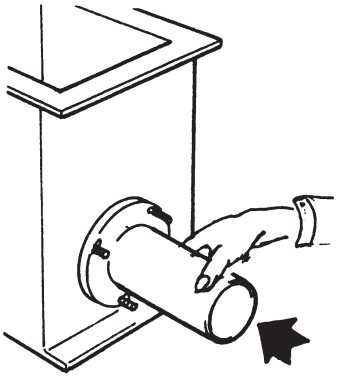

N.B.: DISCONNECT MOTOR FROM MAINS SUPPLY

1 - Unscrew nuts
2 - Take off feeder pipe
3 - Remove protection cover
4 - Unscrew metering screw
5 - Remove metering screw
6 - Insert new metering screw
7 - Screw on new metering screw
8 - Fix protection cover
9 - Reassemble feeder pipe

N.B.: HAUPTSTROMZUFUHR ZU DEN MOTOREN UNTERBRECHEN

1 - Muttern lösen
2 - Dosierrohr entfernen
3 - Abdeckungschutz entfernen
4 - Dosierwerkz. herausdrehen
5 - Dosierwerkz. herausziehen
6 - Neues Dosierw. einsetzen
7 - Neues Dosierw. eindrehen
8 - Abdeckungschutz befestigen
9 - Dosierrohr montieren

N.B.: DEBRANCHER LES CONNEXIONS ELECTRIQUES!

1 - Dévisser les écrous
2 - Emporter tube de dosage
3 - Enlever le couvercle de protection
4 - Dévisser (sens droit)
5 - Enlever outil de dosage
6 - Monter nouvel outil
7 - Visser (sens gauche)
8 - Fixer le couvercle de protection
9 - Rimontare la proboscide

N.B.: DISINSERIRE I COLLEGAMENTI ELETTRICI!

1 - Svitare i dadi
2 - Asportare proboscide
3 - Togliere coperchio di protezione
4 - Svitare filetto sinistro
5 - Estrarre utensile
6 - Inserire nuovo utensile
7 - Avvitare filetto sinistro
8 - Montare coperchio di protezione
9 - Rimontare proboscide

METERING SCREW REPLACEMENT OF AISI MBF - *AUSTAUSCH DES DOSIERWERKZEUGS VON EDELSTAHL MBF*
REMPLACEMENT OUTIL DE DOSAGE DE MBF DANS AISI - *SOSTITUZIONE UTENSILE DOSAGGIO DELL' MBF IN AISI*

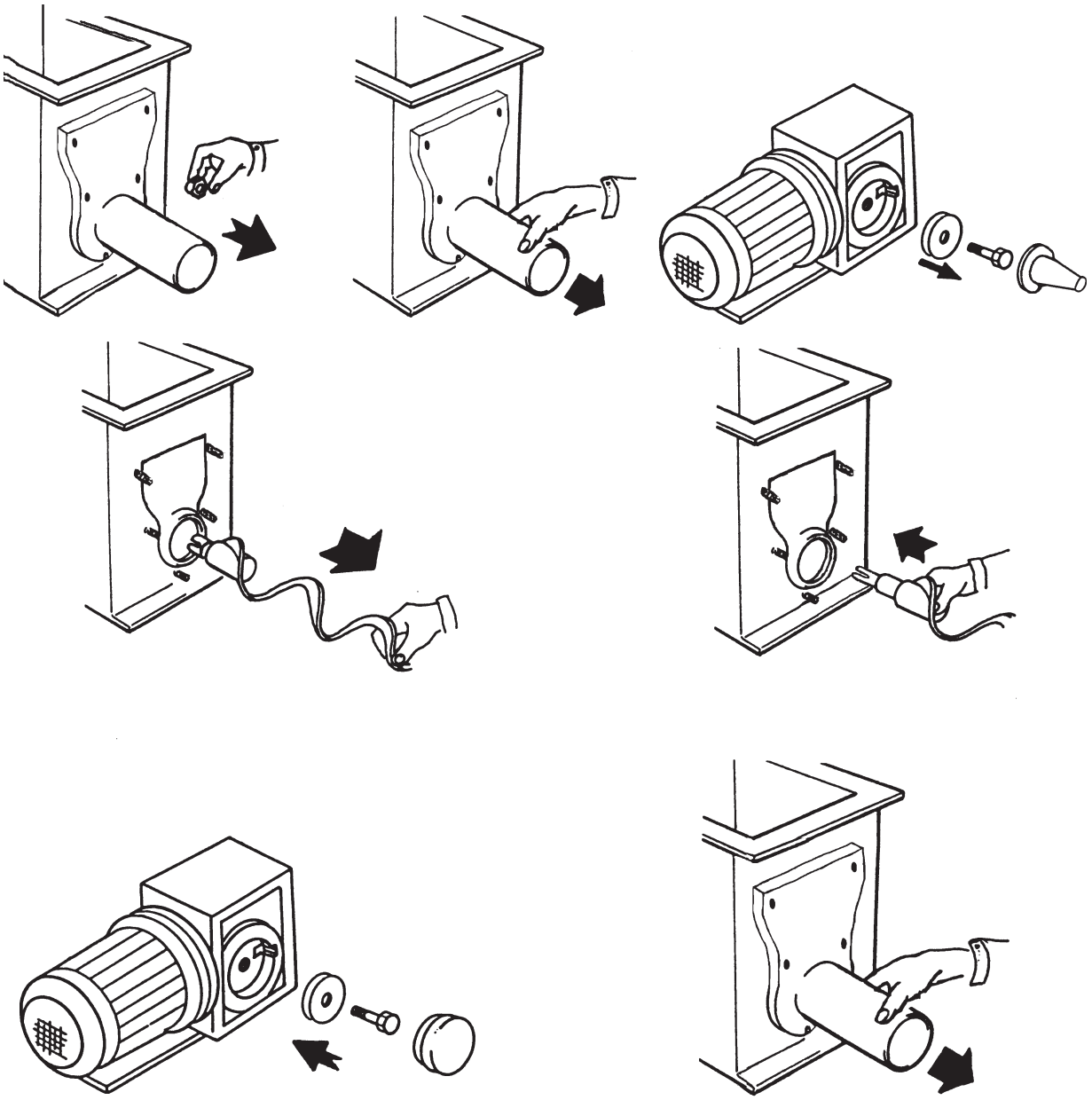

N.B.: DISCONNECT MOTOR FROM MAINS SUPPLY

1 - Unscrew safety nut
2 - Slacken threaded knobs
3 - Take off inspection hatch
4 - Remove protection cover
5 - Unscrew feeder screw
6 - Remove feeder screw
7 - Insert new feeder screw
8 - Screw on new feeder screw
9 - Fix protection cover
10- Reassemble threaded knobs
11- Fit inspection hatch
12- Tighten safety nut

N.B.: HAUPTSTROMZUFUHR ZU DEN MOTOREN UNTERBRECHEN

1 - Sicherungsmutter lösen
2 - Drehverschlüsse lösen
3 - Inspektionsklappe entfernen
4 - Schutzabdeckung entfernen
5 - Dosierwerkz. herausdrehen
6 - Dosierwerkz. herausziehen
7 - Neues Dosierw. einsetzen
8 - Neues Dosierw. eindrehen
9 - Schutzabdeckung befestigen
10- Drehverschlüsse eindrehen
11- Inspektionsklappe montieren
12- Sicherungsmutter anziehen

N.B.: DEBRANCHER LES CONNEXIONS ELECTRIQUES!

1 - Dévisser les écrous
2 - Dévisser les boulons
3 - Enlever la trappe de visite
4 - Enlever le couvercle de protection
5 - Dévisser (sens droit)
6 - Enlever outil de dosage
7 - Monter nouvel outil
8 - Visser (sens gauche)
9 - Fixer le couvercle de protection
10-Visser les boulons
11- Remonter la trappe de visite
12- Visser l'écrou de sécurité

N.B.: DISINSERIRE I COLLEGAMENTI ELETTRICI!

1 - Svitare il dado di sicurezza
2 - Svitare i pomelli
3 - Asportare il portello d'ispezione
4 - Togliere coperchio di protezione
5 - Svitare filetto sinistro
6 - Estrarre utensile
7 - Inserire nuovo utensile
8 - Avvitare filetto sinistro
9 - Montare coperchio di protezione
10 - Avvitare i pomelli
11 - Rimontare il portello d'ispezione
12 - Avvitare il dado di sicurezza

BLENDING TOOL REPLACEMENT - *AUSTAUSCH HOMOGENISIERWERKZEUG*
REMPLACEMENT HOMOGENEISATEUR - *SOSTITUZIONE UTENSILE OMOGENEIZZATORE*

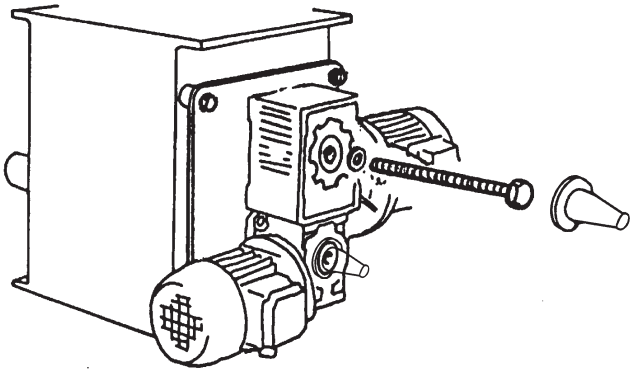

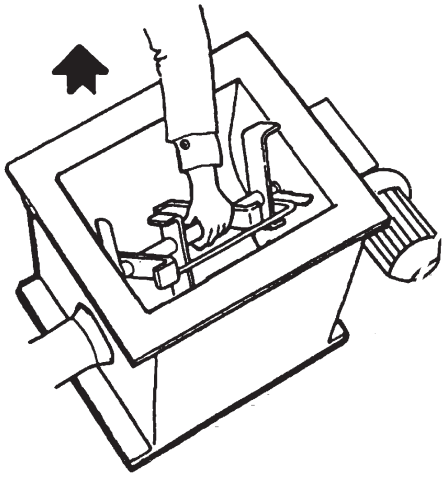

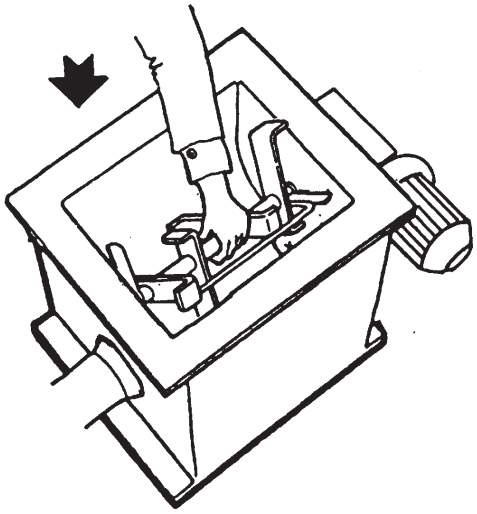

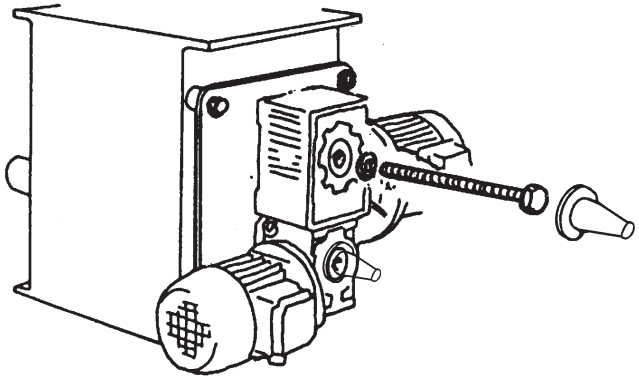

N.B.: DISCONNECT MOTORS FROM MAINS SUPPLY	**N.B.: HAUPTSTROMZUFUHR ZU DEN MOTOREN UNTERBRECHEN!**	**N.B.: DEBRANCHER LES CONNEXIONS ELECTRIQUES!**	**N.B.: DISINSERIRE I COLLEGAMENTI ELETTRICI!**
1 - Remove protection cover	1 - Abdeckungschutz entfernen	1 - Enlever couvercle de protection	1 - Togliere coperchio di protezione
2 - Unscrew gear rducer bolt	2 - Getriebeschraube lösen	2 - Dévisser boulon postérieur	2 - Agire sulla vite posteriore
3 - Remove bolt	3 - Schraube entfernen	3 - Enlever boulon	3 - Estrarre vite posteriore
4 - Remove blending tool	4 - Homogenisierwerkzeug von oben herausnehmen	4 - Enlever homogénéisateur	4 - Estrarre omogeneizzatore
5 - Insert new blending tool	5 - Neues Werkzeug einführen	5 - Introduire homogénéisateur	5 - Introdurre omogeneizzatore
6 - Insert gear reducer bolt	6 - Getrebeschraube einführen	6 - Insérer boulon postérieur	6 - Inserire vite posteriore
7 - Fasten gear reducer bolt	7 - Getriebeschraube anziehen	7 - Visser boulon postérieur	7 - Agire sulla vite posteriore
8 - Fix protection cover	8 - Abdeckungschutz befestigen	8 - Fixer couvercle de protection	8 - Fissare coperchio di protezione

SHAFT SEALS REPLACEMENT - *AUSTAUSCH WELLENABDICHTUNGEN*
REMPLACEMENT ETANCHEITES - *SOSTITUZIONE TENUTE*

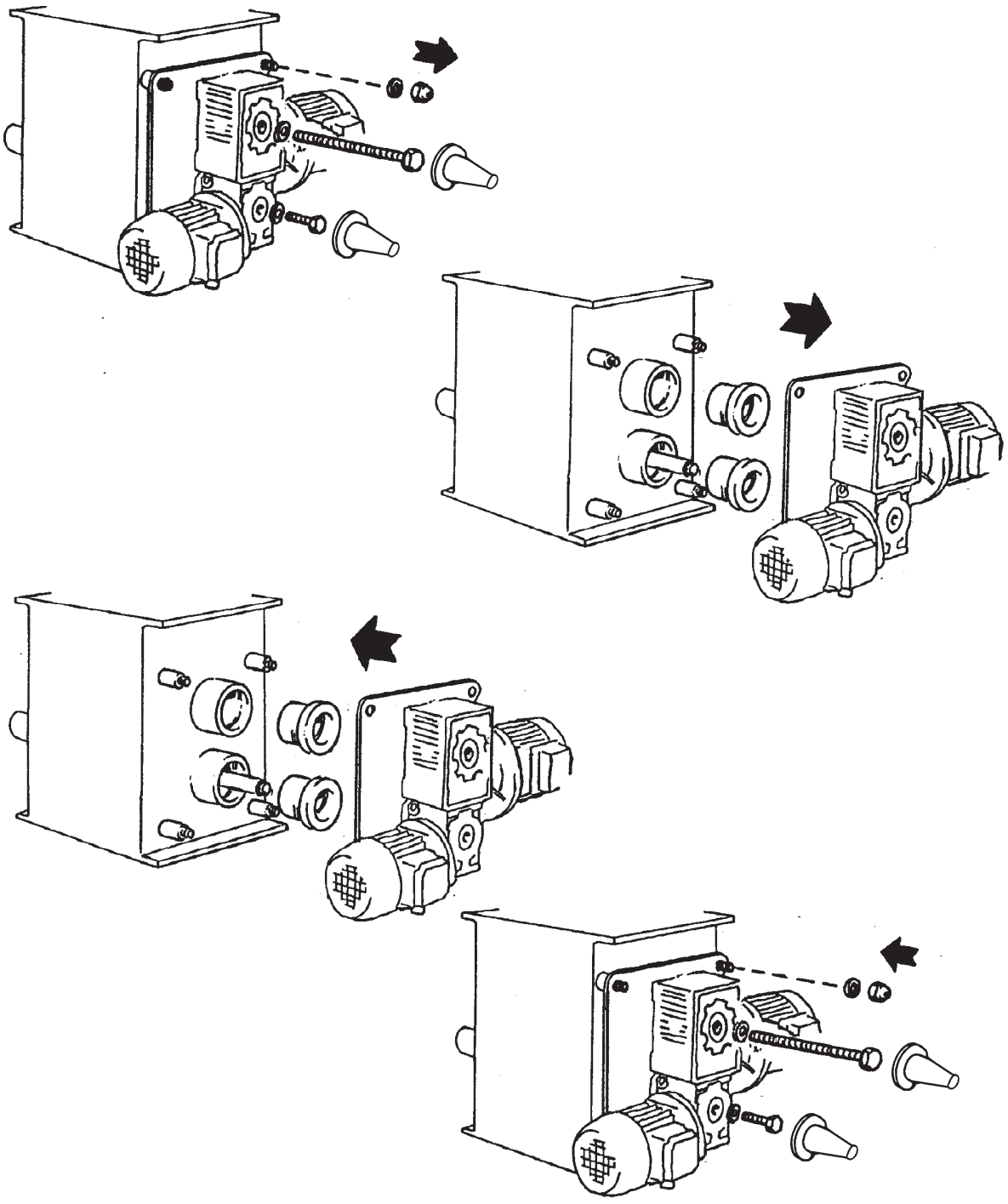

N.B: DISCONNECT MOTORS FROM MAINS SUPPLY	N.B: HAUPTSTROMZUFUHR ZU DEN MOTOREN UNTERBRECHEN !	N.B: DEBRANCHER LES CONNEXIONS ELECTRIQUES !	N.B: DISINSERIRE I COLLEGAMENTI ELETTRICI !

SHAFT SEALS REPLACEMENT AISI MBF - *AUSTAUSCH WELLENABDICHTUNGEN*
REMPLACEMENT ETANCHEITES MBF EN INOX - *SOSTITUZIONE TENUTE MICRODOSATORE IN AISI 304*

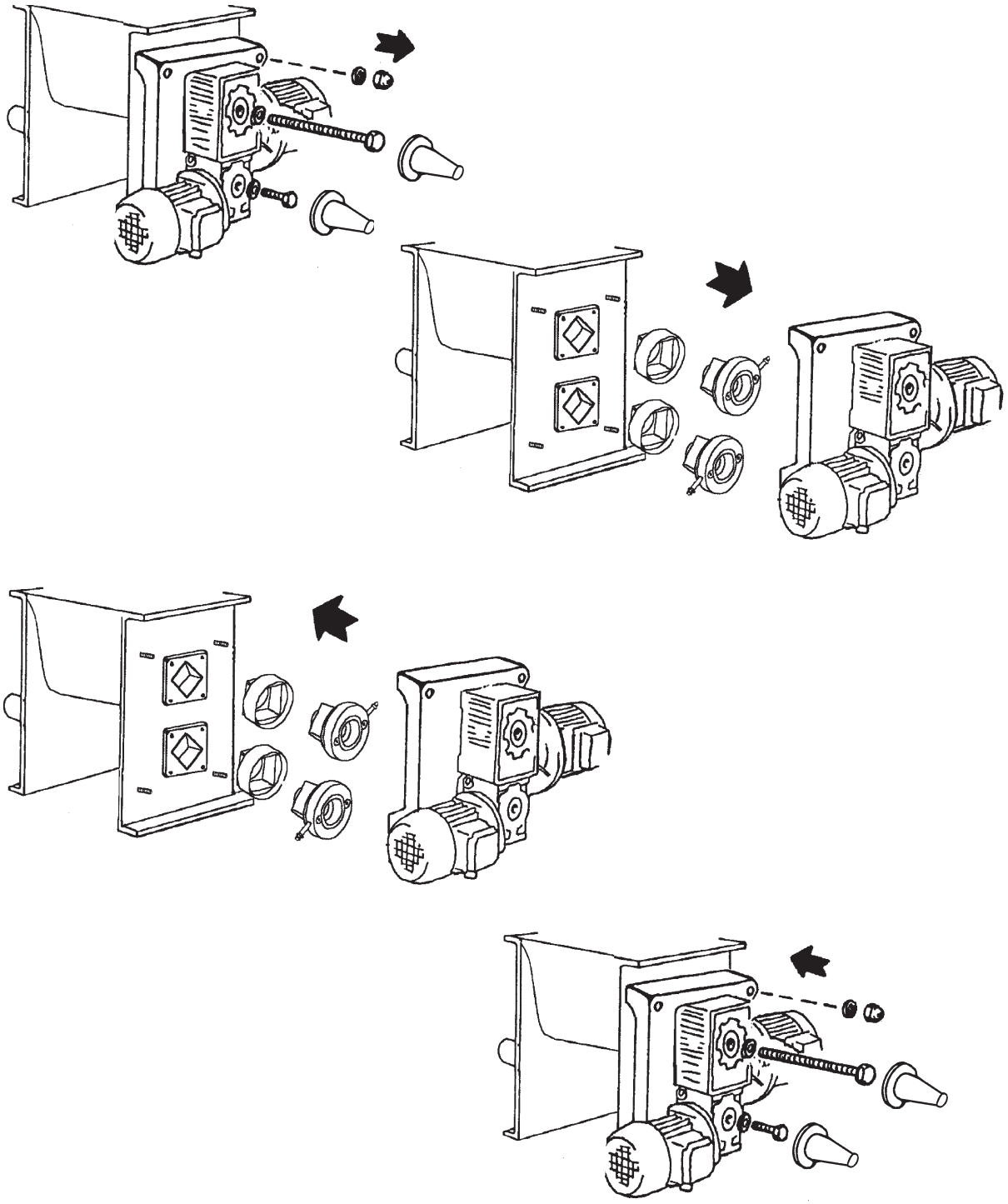

N.B: DISCONNECT MOTORS FROM MAINS SUPPLY	N.B: HAUPTSTROMZUFUHR ZU DEN MOTOREN UNTER-BRECHEN !	N.B: DEBRANCHER LES CONNEXIONS ELECTRIQUES !	N.B: DISINSERIRE I COLLEGA-MENTI ELETTRICI !

LUBRICATION

Micro-batch feeder MBW 042

The installed gear reducer is filled with long life grease and does, therefore, not require any maintenance.

Micro-batch feeders MBF 073-114

VARVEL REDUCERS
are sealed for life and, therefore, need no extra lubrification.

SPEED VARIATOR (MOTOVARIO)
Oil splash lubricated. For this reason it is particularly important to perform the following checks before starting them up:
- ensure that oil plugs are in right place and tight;
- ensure unit is topped up with oil to the, correct level. Oil must come up to about midpoint of the oil level plug according to mounting position.
  Units are supplied without breather plugs.
  Use only reccomended oils (see lable).

SCHMIERUNG

Mikrodosierer MBF 042

Das installierte Getriebe ist wartungsfrei dank einer Lebensdauer-Fettschmierung.

Mikrodosierer MBF 073-114

VARVEL-GETRIEBE
Erfordern keinerlei Wartung dank einer Lebensdauer-Fettschmierung.

REGELGETRIEBE (MOTOVARIO)
Da spritzgeschmiert, vor Inbetriebnahme unbedingt folgende Kontrollen vornehmen:
- Lage der Ölschrauben muß der jeweiligen Bauform entsprechen;
- Den ordnungsgemäßen Füllstand überprüfen; Am Schauglas muß ca. halber Füllstand anstehen. Regelgetriebe werden ohne Entlüftungsschrauben geliefert. Zum Nachfüllen die in der Tabelle genannten Ölsorten verwenden.

LUBRIFICATION

Microdoseur MBF 042

Le réducteur monté sur ce type de doseur est muni d'une graisse spéciale à vie.

Microdoseurs MBF 073-114

REDUCTEURS VARVEL
Aucune intervention nécessaire (lubrification à vie).

La lubrification du VARIATEUR (MOTOVARIO) se faisant par barbotage, on ne saurait trop recommander avant la mise en marche:
- de s'assurer de la position correcte des bouchons;
- de s'assurer du bon niveau du lubrifiant: l'huile doit être visible approximativement à mi-indicateur du niveau. Ils sont fournis sans bouchons de soupirail. Pour les appoints éventuels, utiliser uniquement les lubrifiants préconisés (voir tableau).

LUBRIFICAZIONE

Microdosatore MBF 042

Il riduttore montato con questo tipo di macchina è dotato di uno speciale grasso che ne mantiene la lubrificazione a vita.

Microdosatori MBF 073-114

RIDUTTORI VARVEL
Non necessitano di alcun intervento essendo lubrificati a vita.

La lubrificazione del VARIATORE (MOTOVARIO) avviene per sbattimento, quindi è molto importante, prima della messa in opera, eseguire le seguenti verifiche:
- assicurarsi che la posizione dei tappi olio sia corretta;
- verificare che il livello dell'olio sia corretto: olio visibile a circa metà della spia di livello. Sono forniti senza tappo di sfiato. Per gli eventuali rabbocchi attenersi ai tipi di olio raccommandati nella tabella.

Oil Quantity - *Ölfüllung*
Quantité d'huile - *Quantità d'olio*

TKF	l
002	0.12
005	0.15

Reccomended oils - *Empfohlene Ölsorten*
Type de lubrificants préconisés - *Tipi di olio raccomandati*

AGIP	A.T.F. DEXRON	**FINA**	A.T.F. DEXRON
BP	BP AUTRAN DX	**IP**	IP DEXRON
CHEVRON	A.T.F. DEXRON	**MOBIL**	A.T.F. 220
ELF	MATIC G2	**SHELL**	A.T.F. DEXRON
ESSO	A.T.F. DEXRON		

N.B.: The trade marks of lubrificants are in alphabetic order which does not refer to the quality of the products.
N.B.: Die Reihenfolge der Marken ist alphabetisch und sagt nichts über die Qualität der Produkte aus.
N.B.: Les marques de lubrificants sont par ordre alphabétique sans aucune référence en ce qui concerne la qualité du produit.
N.B.: Le marche di lubrificanti sono in ordine alfabetico senza alcun riferimento alla qualità del prodotto.

AUTOMATIC LUBRICATOR | **AUTOMATISCHE SCHMIERVORRICHTUNG** | **GRAISSEUR AUTOMATIQUE** | **LUBRIFICATORE AUTOMATICO**

CARTRIDGE GREASE NIPPLE LIT - *SCHMIERPATRONENSATZ*
KIT GRAISSEUR CARTOUCHE - *KIT INGRASSATORE CARTUCCIA*

M D X I 125

- 125 — Capacity - *Kapazität* - Capacité - *Capacità*
- I — Grease nipple - *Schmiernippel* - Graisseur - *Ingrassatore*
- X — Micro-batch feeders accessories - *Mikrodosierer zubehör* Accessoires microdoseurs - *Accessori microdosatore*

TECHNICAL SPECIFICATIONS	
Capacity	125 ml
Operating period	Adjustable at 1-12 months
Operating temperature	-20°C a + 55°C°
Max. operating pressure	5 bar**
Activation mechanism	Hydrogen gas release battery (H2)
Threading	G 1/4
Recommended storage temperature	+20°C
Storage period	2 years***
Weight	Approx. 190g (including grease)
Appellative	LAGD 125/WA (filled with SKF LGWA 2 grease) LAGD 125/"lubricant"

TECHNISCHE DATEN	
Kapazität	125 ml
Betriebsdauer	Von 1 bis 12 Monate einstellbar
Betriebstemperatur	-20°C bis + 55°C°
Max. Betriebsdruck	5 bar**
Einschaltmechanismus	Wasserstoff freisetzende Batterie (H2)
Gewinde	G 1/4
Empfohlene Lagerhaltungstemperatur	+20°C
Lagerzeit	2 Jahre ***
Gewicht	circa 190 g (Fett inbegriffen)
Bezeichnung	LAGD 125/WA (mit Fett SKF LGWA 2 gefüllt) LAGD 125/"Schmierstoff"

CARACTÉRISTIQUES TECHNIQUES	
Capacité	125 ml
Période de fonctionnement	Réglable de 1 à 12 mois
Température de fonctionnement	-20°C a + 55°C°
Pression max. de fonctionnement	5 bar**
Mécanisme d'activation	Batterie à dégagement de gaz hydrogène (H2)
Filetage	G 1/4
Température conseillée pour le stockage	+20°C
Période de stockage	2 ans***
Poids	Env. 190jj (graisse incluse)
Désignation	LAGD 125/WA (avec le plein de graisse SKF LGWA 2 grease) LAGD 125/"lubrifiant"

DATI TECNICI	
Capacità	125 ml
Periodo di funzionamento	Regolabile da 1 a 12 mesi
Temperatura di funzionamento	-20°C a + 55°C°
Pressione max. di funzionamento	5 bar**
Meccanismo di attivazione	Batteria a sviluppo di gas idrogeno (H_2)
Filettatura	G 1/4
Temperatura consigliata per lo stoccaggio	+20°C
Periodo di stoccaggio	2 anni***
Peso	Circa 190g (grasso incluso)
Appellativo	LAGD 125/WA (riempito con grasso SKF LGWA 2) LAGD 125/"lubrificante"

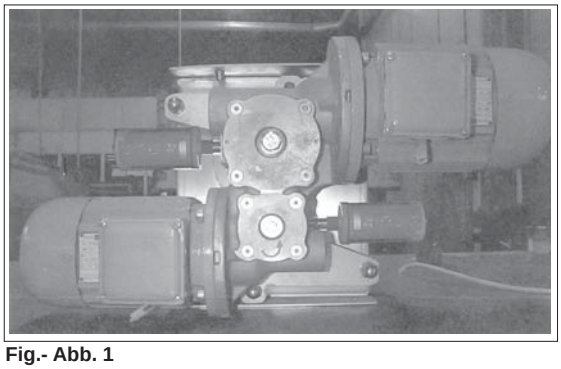

Fig.- Abb. 1
SKF assembly on Batch feeder - *Montage SKF auf Dosierer*
Montage SKF sur doseur - *Montaggio SKF su dosatore*

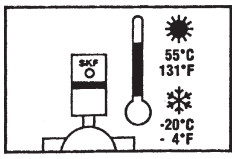

Operatin temperature - *Betriebstemperatur*
Température de fonctionnement - - *Temperatura di funzionamento*

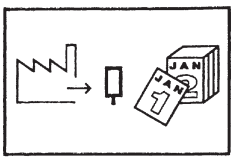

Production date - *Produktionsdatum*
Date de production - *Data di produzione*

Code MDXI125 grease nipple kit with 125 ml cartridge for greased MBTT seals

For assembly on new plants:

1. Make sure the grease used in System 24 is of the right type.
2. Make sure the grease supplied can be used with the one already present.
3. Check to ensure that the environmental temperature remains constant between -20ºC and + 55ºC.
4. Check to make sure the grease reaches the components to be lubricated.
5. Protect the unit from heat and temperature variations.

Note:
- The lubricator can be temporarily made inactive by setting the selector on 0.
- The unit can be mounted anywhere; it is airtight and can therefore also be installed immersed inside water.
- The oil lubricators are provided with a connector fitted with a check valve. Cut the tip before installation. Do not remove the connector.

Installation
1- Mark the installation date on the unit with an indelible ink marker pen.
2- Open the lubricant intake by cutting the tip or removing the cap (Fig. 3).
3- To activate the lubricator, turn the selector using a 3mm Allen wrench (Fig. 4).
4- Clean the area around the lubrication point.
5- Fit the new unit with the connector ready and tighten manually (Fig.6 - Fig.1).

Bestell-Nr.MDXI125 Schmierpatronensatz 125 ml für mit MBTT geschmierte Dichtungen

Für die Montage auf neuen Anlagen:
1. Sicherstellen, dass das im System 24 benutzte Fett der richtigen Sorte entspricht.
2. Sicherstellen, dass das Fett, das man benutzt, zusammen mit dem vorher vorhandenen benutzt werden kann.
3. Sicherstellen, ob die Umgebungstemperatur konstant zwischen -20°C und +55°C liegt.
4. Sicherstellen, dass das Fett die zu schmierenden Bestandteile erreicht.
5. Die Einheit vor Hitze und Temperatursprüngen schützen.

Anm.:
- Die Schmiervorrichtung kann vorübergehend abgestellt werden, wenn man den Schalthebel auf die Stellung 0 bringt.
- Das Gerät ist wasserdicht und kann daher überall installiert werden, auch in Wasser eingetaucht.
- Die Schmiervorrichtungen mit Öl werden mit einem Anschluss geliefert, der mit einem Rückschlagventil versehen ist. Vor der Installation das Ende absägen. Den Stutzen nicht entfernen.

Installation
1- Das Installationsdatum mit einem unauslöschlichen Filzstift auf der Einheit vermerken (Abb. 2).
2- Die Schmierstoffabgabe öffnen, indem man die Versiegelung durchschneidet oder den Stopfen abnimmt (Abb. 3).
3- Zum Aktivieren der Schmiervorrichtung den Wahlschalter um 3 mm drehen, und zwar mit einem Steckschlüssel (Abb. 4).
4- Den Bereich rings um die Schmierstelle reinigen.
5- Die neue Einheit mit dem vorhandenen Anschluss montieren und von Hand anziehen (Abb. 6 - Abb. 1)

Code MDXI125 kit graisseur à cartouche 125 ml pour étanchéités MBTT graissées

Pour le montage sur installations neuves:
1. S'assurer que la graisse utilisée dans le System 24 est du type approprié.
2. S'assurer que la graisse administrée peut être utilisée ensemble à celle existante.
3. Contrôle que la température ambiante se maintient constante entre -20°C et +55°C.
4. Vérifier que la graisse atteint les composants à lubrifier.
5. Protéger l'unité contre la chaleur et les écarts de température.

Remarques:
- Le graisseur peut temporairement être rendu inactif en tournant le sélecteur sur la position 0.
- L'unité peut être montée de partout, elle est étanche et peut donc être aussi installée immergée dans l'eau.
- Les graisseur à huile sont fournis avec un raccord doté de clapet antiretour. Avant de les monter couper l'extrémité. Ne pas enlever le raccord.

Mise en place
1- Marquer la date de mise en place sur l'unité avec un marqueur à encre indélébile (fig. 2).
2- Ouvrir la prise du lubrifiant en coupant le sceau ou en enlevant le bouchon (Fig. 3).
3- Pour activer le graisseur tourner le sélecteur de 3 mm en utilisant une clé d'Allen (Fig. 4).
4- Nettoyer toute la partie autour du point de lubrification.
5- Monter la nouvelle unité avec le raccord prévu et serrer à la main (Fig.6 - Fig.1).

Codice MDXI125 kit ingrassatore a cartuccia 125 ml per tenute MBTT ingrassate

Per il montaggio su impianti nuovi:

1- Assicurarsi che il grasso usato nel System 24 sia del tipo adatto.
2- Assicurarsi che il grasso somministrato possa essere usato insieme a quello preesistente.
3- Controllare se la temperatura ambientale si mantiene costante tra -20°C e +55°C.
4- Verificare che il grasso raggiunga i componenti da lubrificare.
5- Proteggere l'unità dal calore e dagli sbalzi di temperatura

Note:
- il lubrificatore può essere temporaneamente inattivato settando il selettore sulla posizione 0.
- L'unità può essere montata ovunque, è a tenuta stagna e può quindi essere installata anche sommersa in acqua.
- I lubrificatori ad olio sono forniti con un raccordo dotato di valvola di non ritorno. Prima di installarli tagliare l'estremità. Non rimuovere il raccordo.

Installazione
1- Marcare la data di installazione sull'unità con un pennarello ad inchiostro indelebile (fig.2).
2- Aprire la presa del lubrificante tagliando il sigillo o estraendo il tappo. (fig.3)
3- Per attivare il lubrificatore girare il selettore di 3 mm usando una chiave a brugola (fig. 4).
4- Pulire l'area intorno al punto di lubrificazione.
5- Montare la nuova unità con il raccordo predisposto e stringerla a mano (Fig.6 - Fig.1)

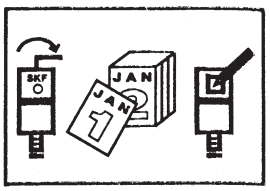

Fig.- Abb. 2

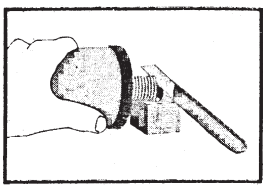
Fig.- Abb. 3

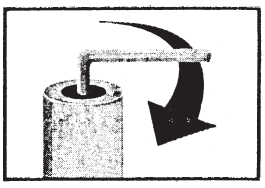
Fig.- Abb. 4

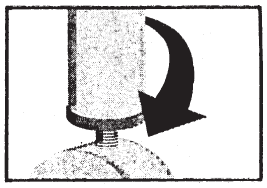
Fig.- Abb. 5

Selection on the basis of experience
If the previous results acquired on the basis of experience have been satisfactory, retain the same criteria.

Selection on the basis of lubrication using manual grease nipple
Set the lubricator emptying period in such a way as to guarantee the same quantity of lubricant as that supplied using a manual grease nipple.
For example:
- Bearing "X" receives 10 grease pump cycles by means of the grease injector (SKF 1077600) per month.
- The quantity of grease per pump cycle is 2.0 cm3.

LAGD 125
- The quantity of grease inside the LAGD 125 lubricator is 125 cm³.
- Therefore 125 cm³/2.0 cm³ = 62 pump cycles.
- 62/10 (pump cycles per month) equivalent to 6.2 months.

Position the selector on 6 months using the 3mm Allen wrench.

Activation period
A period of activation is necessary before the lubricator can start supplying grease. This period is variable, depending on the selected emptying time and the temperature. At normal room temperatures, the grease delivery will start within a week. Two weeks are required for temperatures of -20ºC. Therefore, check the bearing to make sure it has enough grease to last this period.

Influence on selection of duration
The emptying time can be influenced by the resistance offered by the lubrication channels and the room temperature. If the temperature is less than -10ºC, the emptying time will be approximately double that indicated on the lubricator.
On the other hand, if the room temperature is over 40ºC, the time will be halved.

Wahl aufgrund der Erfahrung
Wenn die vorher erhaltenen Resultate aufgrund der Erfahrung zufriedenstellend waren, die gleichen Kriterien beibehalten.

Wahl aufgrund der Neuschmierung mit Schmieren von Hand
Den Zeitraum für die Entleerung des Schmierstoffvorrats so einstellen, dass die gleiche Menge der vorher von Hand verabreichten Schmierstoffmenge gewährleistet wird. z.B.:
- Das Lager „X" erhält 10 Einspritzungen Fett pro Monat mittels des Schmiernippels (SKF 1077600).
- Die Fettmenge jeder einzelnen Einspritzung beträgt 2,0 cm³.

LAGD 125
- Die Fettmenge, die sich innerhalb der Schmiervorrichtung LAGD befindet, beträgt 125 cm³.
- Also 125 cm³/2,0 cm³=62 Einspritzungen.
- 62/10 (Einspritzungen pro Monat) entspricht 6,2 Monaten.

Den Wahlschalter daher auf 6 Montage stellen, wozu man die Inbusschraube von 3 mm benutzt.

Aktivierungszeit
Bevor die Schmiervorrichtung in der Lage ist, Fett abzugeben, braucht sie eine Aktivierungszeit. Diese Zeit hängt von der gewählten Entleerungszeit und der Temperatur ab. Bei normaler Umgebungstemperatur beginnt die Fettabgabe innerhalb einer Woche. Bei -20°C sind zwei Wochen erforderlich. Sicherstellen, dass das Lager ausreichend mit Schmierstoff versehen ist, um diese Zeit zu überstehen.

Einfluss auf der Wahl der Dauer
Die Entleerungszeit kann durch den Widerstand beeinflusst werden, den die Schmierkanäle bieten, wie auch die durch Umgebungstemperatur. Bei Temperaturen unter -10°C beträgt die Entleerungszeit circa das doppelte im Bezug zu der Abgabe auf der Schmiervorrichtung. Bei Umgebungstemperaturen über 40°C wird die Zeit dagegen halbiert.

Sélection en fonction de l'expérience
Si les résultats acquis en fonction de l'expérience sont satisfaisants, maintenir les mêmes critères.

Sélection en fonction de la lubrification effectuée par graisseur manuel
Régler la période de vidage du graisseur de manière à garantir la même quantité de lubrifiant fourni précédemment avec un graisseur manuel.
Par exemple:
- Le roulement "X" reçoit 10 coups de pompe à travers l'injecteur de graisse (SKF 1077600) par mois.
- La quantité de graisse pour chaque coup de pompe est de 2,0 cm3.

LAGD 125
- La quantité de graisse à l'intérieur du graisseur LAGD 125 est de 125 cm³.
- Donc 125 cm³/2,0 cm³ = 62 coups de pompe.
- 62/10 (coups de pompe par mois) équivaut à 6,2 mois.

Placer le sélecteur sur 6 mois à l'aide de la clé d'Allen de 3 mm.

Période d'activation
Une période d'activation est nécessaire avant que le lubrificateur ne soit en mesure de fournir la graisse. Cette période est variable selon la période de vidage choisie et de la température. A une température ambiante normale, la graisse sera débitée au bout d'une semaine. Deux semaines sont nécessaires à la température de -20ºC. Vérifier donc que le roulement a suffisamment de lubrifiant pour couvrir cette période.

Influence sur la sélection de la durée
Le temps de vidage peut être influencé par la résistance offerte par les canaux de lubrification et par la température ambiante. Si la température ambiante est inférieure à -10ºC, le temps de vidage sera approximativement le double par rapport à ce qui est indiqué sur le graisseur.
Au contraire avec une température ambiante de plus de 40ºC, le temps sera diminué de moitié.

Selezione in base all'esperienza
Se i precedenti risultati acquisiti in base all'esperienza sono soddisfacenti, mantenere gli stessi criteri.

Selezione in base alla rilubrificazione effettuata tramite ingrassatore manuale
Settare il periodo di svuotamento del lubrificatore in modo da garantire lo stesso quantitativo di lubrificante precedentemente fornito con un ingrassatore manuale.
es.:
- il cuscinetto"X" riceve 10 pompate tramite l'iniettore di grasso (SKF 1077600) al mese.
- Il quantitativo di grasso per ogni pompata è di 2.0 cm³.

LAGD 125
- Il quantitativo di grasso all'interno del lubrificatore LAGD 125 è di 125 cm³.
- Dunque 125 cm³/2.0 cm³=62 pompate.
- 62/10 (pompate per mese) equivale a 6.2 mesi.

Posizionare allora il selettore su 6 mesi con l'ausilio della brugola da 3 mm.

Periodo di attivazione
Prima che il lubrificatore sia in grado di fornire il grasso è necessario un periodo di attivazione. Questo tempo è variabile a seconda del periodo di svuotamento prescelto e della temperatura. A temperatura ambiente normale comincerà ad erogare il grasso entro una settimana. A -20°C necessiteranno due settimane. Verificare quindi che il cuscinetto abbia lubrificante a sufficienza per coprire questo periodo.

Influenza sulla selezione della durata
Il tempo di svuotamento può essere influenzato dalla resistenza offerta dai canali di lubrificazione e dalla temperatura ambiente. Se la temperatura è inferiore a -10°C il tempo di svuotamento sarà approssimativamente il doppio rispetto a quanto indicato sul lubrificatore.
Al contrario con temperatura ambiente di oltre 40°C il tempo sarà dimezzato.

NOISE
Operation noise depends on different factors. The most important ones are material properties and the application. The noise values in the following table were measured in one metre distance in the worst possible position.

BETRIEBSGERÄUSCHE
Betriebsgeräusche sind von verschiedenen Faktoren abhängig. Davon sind die wichtigsten die Produkteigenschaften und die Anwendung.
Die Geräuschwerte in der nachstehenden Tabelle wurden in einem Meter Entfernung in der ungünstigsten Position gemessen.

BRUIT
Le niveau de bruit des appareils dépend de différents facteurs. Les plus importants sont les caractéristiques du matériau dosé et l'application.
La valeur de bruit dans le tableau ci-dessous est mesurée à la distance de 1 m, dans la position plus défavoravble.

RUMORE
Il livello di rumorosità delle macchine dipende da diversi fattori tra cui principalmente la natura del materiale dosato e applicazione.
Il valore di rumorosità riportato nella tabella sottostante, è misurato alla distanza di 1 m, nella posizione più sfavorevole.

Type	dB(A)
MBF 042	56
MBF 073	60
MBF 114	62

DISAMNTLING AND DISPOSAL
Storage of equipement for longer periods:
- clean the equipment thoroughly.
- store the equipment in a container.

Scrapping:
- recycle plastic materials (e.g. seals, coatings etc.) and dispose according to regulations.
- Dispose of metal parts at the scrap yard.

DEMONTAGE UND VERSCHROTTUNG
Lagerung des Geräts über längere Zeiträume:
- Gerät gründlich säubern.
- Gerät in einem Behälter lagern.

Verschrottung:
- Kunststoffteile (z.B. Dichtungen, Beschichtungen etc.) gemäß den Vorschriften recyclen.
- Metallteile beim Schrotthändler abgeben.

DEMONTAGE ET DEMOLITION
Mise en entrepôt de la machine pendant une longue période:
- nettoyez soigneusement la machine;
- protégez-la en la mettant dans un conteneur.

Démolition:
- récupérez les pièces en matière plastique (par ex. revêtements, joints, etc.) et remettez les aux centres de récolte spécialisés;
- remettez les autres pièces en acier aux centres de récupération des métaux.

SMANTELLAMENTO E DEMOLIZIONE
Immagazinaggio della macchina per periodo prolungato:
- pulire accuratamente la macchina.
- immagazinare la macchina dentro un contenitore.

Rottamazione:
- riciclare i pezzi in plastica (per es. guarnizioni, rivestimenti etc.) a norma di legge.
- Consegnare i pezzi in metallo ai centri di raccolta.

FAULT FINDING
Minor problems can be resolved without consulting a specialist. Here are a few examples of possibles causes and solutions.

BETRIEBSSTÖRUNGEN UND ABHILFE
Kleinere Störungen können ohne die Einschaltung eines Fachmanns behoben werden. Im folgenden einige Beispiele möglicher Ursachen und Abhilfen.

PROBLEMES EVENTUELS
Vous pouvez résoudre vous-même les petits problèmes sans devoir consulter un spécialiste. De suite on donne quelques exemples des cuses éventuelles et des solutions possibles.

POSSIBILI INCONVENIENTI
I problemi minori possono essere risolti senza consultare uno specialista. Diamo qui di seguito un elenco degli incovenienti più comuni con le eventuali cause e possibili rimedi.

FAULT	POSSIBLE REASON	ACTION
Screw or agitator is damaged	Foreign body inside feeder	Remove foreign body and replace damaged components
Screw or agitator stops	Hygroscopic material inside feeder has absorbed humidity	Unload feeder completely when shutting down for longer periods
Rotating components unscrewed, no material handled	Motor incorrectly wired	Rewire (metering screw must turn anticlockwise viewed from behind drive unit)
Sticking of hygroscopic products **Agglomeration of viscous materials** **Contamination of the product**	Long shutdown period	Unload feeder completely when shutting down for longer periods

STÖRUNG	MÖGLICHE URSACHE	ABHILFE
Beschädigung des Dosier- oder Homogenisierwerkzeugs	Eindringen von Fremdkörpern	Fremdkörper entfernen und beschädigte Teile austauschen.
Blockierung von Dosier- oder Homogenisierwerkzeug	Verkleben von hygroskopischen Produkten bei längerer Verweilzeit. Viskose oder zum Anbacken neigende Medien mit hierfür ungeeigneten Werkzeugen.	Bei längeren Stilistandzeiten Gerät leeren. Geeignetes Dosierwerkzeug mit Innenrohr verwenden.
Dosierwerkzeug hat sich gelöst, keine Dosierung	E-Motor falsch angeschlossen.	E-Motor umklemmen; stellt man sich hinter den Antrieb, muß sich das Dosierwerkzeug gegen den Uhrzeigersinn, das Homogenisierwerkzeug im Uhrzeigersinn drehen.
Kompression hygroskopischer Medien **Verklumpen viskoser Medien** **Produktkontamination**	Längere Stillstandzeiten.	Bei längeren Stillstandzeiten das Gerät leeren.

PROBLEME	CAUSE POSSIBLE	SOLUTION
Défaut sur hélices ou rotors	Pénétration de corps étrangers dans la machine.	Retirer le corps étranger, remplacer les éléments endommagés.
Blocage de l'hélice ou du rotor	Empâtement de produits hygroscopiques demeurant dans la machine en milieux humides. Produits visqueux ou compressés traités au moyen de doseurs non adaptés.	Toujours vider la machine en cas de longues périodes de non utilisation. Utiliser des doseurs adaptés avec tube interne.
Dévissage organes roulants, **Absence de flux**	Connexion erronée des moteurs électriques.	Inversion de phases des moteurs: un observateur au chargement voit l'instrument de dosage tourner dans le sens trigonométrique, pendant que l'instrument d'homogénéisation tourne dans le sens horaire.
Compression de produits hygroscopiques **Colmatage de produits visqueux** **Contamination de oroduits périssables**	Périodes d'inactivité.	Vider la machine en prévision de longues périodes d'inactivité.

PROBLEMA	POSSIBILE MOTIVO	SOLUZIONE
Attorcigliamento eliche e rotori	Penetrazioni di corpi estranei entro la macchina.	Rimuovere il corpo estraneo; sostituire gli elementi danneggiati.
Blocco eliche	Appesantimento dei materiali igroscopici che permangono entro la macchina in ambienti umidi. Prodotti viscosi e impaccanti.	Svuotare sempre la macchina in caso di lunghi periodi di non utilizzo. Utilizzare utensili idonei.
Svitamento organi rotanti, assenza di flusso.	Erroneo collegamento delle fasi dei motori elettrici.	Inversioni fasi dei motori: un osservatore al carico vede l'utensile di dosaggio ruotare in senso antiorario.
Impaccamento prodotti igroscopici. **Solidificazione prodotti viscosi.** **Contaminazione prodotti deperibili**	Periodi di inattività.	Svuotare la macchina in previsione di lunghi periodi di inattività.

	List of hazards *Gefährdungsliste* Liste des risques *Lista dei rischi*	Safety Measures *Sicherheitsmaßnahmen* Consignes de sécurité *Misure di sicurezza*	Norm Reference *Bezugsnormen* Normes de référence *Norme di Riferimento*	Operating Instruction Ref. *Bez. Betriebsanleitung* Réf. instructions de fonctionnement *Rif. istruzioni operative*	Residual Risk *Restrisiken* Risque résiduel *Rischio residuo*
1.	**Mechanical Hazards - *Mechanische Gefährdungenen* - Risques mécaniques - *Rischi meccanici***				
1.1	Crushing - *Quetschen* Ecrasement - *Schiacciamento*	Protection (grid, robust flexible sock...) to keep the valve out of reach of the personnel. If the protection is movable a limit switch has to be fitted to stop the valve if the protection is removed. *Schutzvorrichtungen (Gitter, robuste Verbindungsmanschetten etc.) um zu verhindern, daß das Bedienungspersonal mit beweglichen Klappenteilen in Kontakt kommt. Bei beweglichen Schutzvorrichtungen ist ein Endschalter vorzusehen, der die Klappe abschaltet, sobald die Schutzvorrichtung entfernt wird.* Protection (grille, manchon flexible robuste etc.) pour éviter que le personnel entre en contact avec les pièces mobiles de la vanne. Si la protection est mobile, un dispositif de fin de course doit être installé qui arrête la vanne au moment où la protection est enlevée. *Protezione (griglia, robusto calzone flessibile ecc...) onde evitare che il personale entri in contatto con le parti mobili della valvola. Con protezioni mobili occorre installare un dispositivo fine corsa che arresti la valvola al momento in cui la protezione viene rimossa.*	EN 292 - 1 EN 294 EN 349	02515 M.6 02515 M.7	NO - *NEIN* NON - *NO*
1.2	Shearing - *Scheren* Troncature - *Troncamento*				
1.3	Cutting - *Schneiden* Coupe - *Taglio*				
1.4	Entanglement *Erfassen - Aufwickeln* Entortillement *Attorcigliamento*				
1.5	Drawing-in - Trapping *Einziehen - Fangen* Entraînement - Encastrement *Trascinamento - Intrappolamento*				
1.6	Impact - *Stoß* Impact - *Impatto*	Not applicable - *Nicht anwendbar* Non applicable - *Non applicabile*			
1.7	Stabbing - puncture *Stich* Perforation - perçage *Perforazione - foratura*				
1.8	Friction - abrasion *Reibung - Abrieb* Frottement - abrasion *Frizione - abrasione*				
1.9	High pressure fluid injection *Flüssigkeiten unter Druck* Injection de fluide à haute pression *Iniezione fluido ad alta pressione*				
1.10	Ejection of parts *Ausstoßung von Teilen* Ejection des pièces *Espulsione di pezzi*				
1.11	Loss of stability *Stabilitätsverlust* Perte de stabilité *Perdita di stabilità*	Fix correctly the machine to the ground or to a strong structure *Die maschine am Boden oder an einer soliden Struktur richtig verankern* Ancrer correctement la machine au sol ou à une structure solide *Ancorare correttamente la macchina al suolo o a una struttura solida*	EN 292-1	02515 M.6 02515 M.7	NO- *NEIN* NON - *NO*
1.12	Slip Trip and fall *Rutschen oder Fallen* Glissement et chute *Scivolamento e caduta*	Not applicable - *Nicht anwendbar* Non applicable - *Non applicabile*			

	List of hazards *Gefährdungsliste* Liste des risques *Lista dei rischi*	Safety Measures *Sicherheitsmaßnahmen* Consignes de sécurité *Misure di sicurezza*	Norm Reference *Bezugsnormen* Normes de référence *Norme di Riferimento*	Operating Instruction Ref. *Bez. Betriebsanleitung* Réf. instructions de fonctionnement *Rif. istruzioni operative*	Residual Risk *Restrisiken* Risque résiduel *Rischio residuo*
2.	**Electrical Hazard - *Elektrische Gefährdungen* - Risques électriques - *Rischi elettrici***				
2.1	Electrical contact *Elektrischer Kontakt* Contact électrique *Contatto elettrico*	Minimum protection of terminal box is IP 55 and suitable thermal fuse for the electrical motors has to be fitted. Only qualified personnel has to work on electrical connections. *Die kleinste Schutzart der Abzweigdose beträgt IP 55 und für die Elektromotoren sind geeignete thermosicherungen zu installieren.* *Die elektrischen Arbeiten dürfen ausschließlich durch qualifiziertes Personal ausgeführt werden.* La protection minimum du boîtier de dérivation est IP 55 et il faut prévoir des fusibles thermiques appopriés pour les moteurs électriques. Les opérations concernant les raccordements électriques doivent être réalisés exclusivement par du personnel qualifié. *La protezione minima della scatola di derivazione è IP 55 ed è necessario installare adeguati fusibili termici per i motori elettrici.* *Le operazioni riguardanti i collegamenti elettrici devono essere eseguite esclusivamente da personale qualificato.*	EN 292-1	02515 M.8 02515 M.9	NO - *NEIN* NON - *NO*
2.2	Electrostatic phenomena *Elektrostatische Erscheinungen* Phénomènes électrostatiques *Fenomeni elettrostatici*	Not applicable - *Nicht anwendbar* Non applicable - *Non applicabile*			
2.3	Thermal radiation *Wärmestrahlung* Radiation thermique *Radiazione termica*				
2.4	External influence on equipment *Äußere Einwirkungen auf die Geräte* Influence extérieure sur les appareillages *Influenza esterna sulle apparecchiature*				
3.	**Thermal Hazards - *Thermische Gefährdungen* - Risques thermiques - *Rischi termici***				
3.1	Burns and scalds *Verbrennungen und Branwunden* Brûlures et lésions *Bruciature e ustioni*	Not applicable - *Nicht anwendbar* Non applicable - *Non applicabile*			
3.2	Health -damaging effects by hot/cold environment *Gesundheitsschädliche Auswirkungen infolge warmer/kalter Umgebungen* Effets nocifs pour la santé dus aux environnement chauds/froids *Effetti dannosi per la salute dovuti ad ambienti caldi/freddi*				

	List of hazards *Gefährdungsliste* Liste des risques *Lista dei rischi*	Safety Measures *Sicherheitsmaßnahmen* Consignes de sécurité *Misure di sicurezza*	Norm Reference *Bezugsnormen* Normes de référence *Norme di Riferimento*	Operating Instruction Ref. *Bez. Betriebsanleitung* Réf. instructions de fonctionnement *Rif. istruzioni operative*	Residual Risk *Restrisiken* Risque résiduel *Rischio residuo*
4.	**Hazard generated by noise - *Gefährdungen durch Lärm* - Risque dérivant de la pollution acoustique - *Rischio da inquinamento acustico***				
4.1	Hearing losses *Gehörverlust* Pertes de l'ouïe *Perdite dell'udito*	Not applicable - *Nicht anwendbar* Non applicable - *Non applicabile*			
4.2	Interference with speech *Verständigungsschwierigkeiten* Difficulté de communication *Difficoltà di comunicazione*				
5.	**Hazard generated by vibration - *Gefährdungen durch Schwingungen* - Risque dû aux vibrations - *Rischio dovuto alle vibrazioni***				
		Fix correctly the machine to a strong structure *Die maschine am Boden oder an einer soliden Struktur richtig verankern* Ancrer correctement la machine au sol ou à une structure solide *Ancorare correttamente la macchina al suolo o a una struttura solida*	EN 292-1	02515 M.6 02515 M.7	NO - *NEIN* NON - *NO*
6.	**Radiation Hazards - *Gefährdungen durch Strahlung* - Risques de radiation - *Rischi di radiazione***				
		Not applicable - *Nicht anwendbar* Non applicable - *Non applicabile*			
7.	**Hazards generated by materials processed - *Gefährdungen duch die behandelten Materialien*** **Risques dus aux matériaux traités - *Rischi dovuti ai materiali trattati***				
7.1	Contact or inhalation *Berühren oder Einatmen* Contact ou inhalation *Contatto o inalazione*	For such a kind of materials the plant manufacturer and/or the installator has to fit suitable special device *Für diese Art Material ist der Anlagenhersteller oder der Installateurangehalten, passende Spezialeinrichtungen bereitzustellen.* Pour ce type de matériaux le constructeur de l'installation ou le personnel responsable est tenu de prévoir des dispositifs spéciaux. *Per questo tipo di materiali il costruttore dell'impianto o l'addetto all'installazione è tenuto a predisporre opportuni dispositivi speciali*	EN 292-1	02515 T.6 02515 M.4	NO - *NEIN* NON - *NO*
7.2	Fire and explosion *Brand oder Explosion* Incendie et explosion *Incendio ed esplosione*				
7.3	Biological (viral/bacterial) *Biologisch (durch Viren/Bakterien)* Biologique (viral/bactérien) *Biologico (virale/batterico)*				
8.	**H.generated by neglecting ergonomic principles - *Gefährdungen durch die Nichtbeachtung der ergonomischen Richtlinien*** **Risques dus à l'inobservation des principes ergonomiques - *Rischi dovuti all'inosservanza dei principi ergonomici***				
		Not applicable - *Nicht anwendbar* Non applicable - *Non applicabile*			
9.	**Hazards combination - *Kombination der Gefährdungen* - Combinaison de risques - *Combinazione di rischi***				
		Not applicable - *Nicht anwendbar* Non applicable - *Non applicabile*			
10.	**H. generated by failure of energy supply - *Gefährdungen durch eine Störung der Energieversorgung*** **Risques produits par une panne du secteur d'alimentation - *Rischi generati da un guasto nella rete di alimentazione***				
10.1	Failure of energy supply *Störung im Versorgungsnetz* Panne dans le secteur d'alimentation *Guasto nella rete di alimentazione*	Not applicable - *Nicht anwendbar* Non applicable - *Non applicabile*			
10.2	Unexpected ejection of parts *Unerwartetes Ausstoßen von Teilen* Ejection inattendue de pièces *Espulsione inaspettata di pezzi*				
10.3	Failure of control system *Störung des Steuersystems* Avarie du système de contrôle *Avaria del sistema di controllo*				
10.4	Errors of fitting - *Passungsfehler* Erreurs d'accouplement - *Errori di accoppiamento*				
11.	**H. generated by missing of safety related measures - *Gefährdungen durch die Nichtbeachtung der entsprechenden Sicherheitsnaßnahmen*** **Risques dus à l'absence de mesures concernant la sécurité - *Rischi dovuti alla mancanza di misure legate alla sicurezza***				
		Not applicable - *Nicht anwendbar* Non applicable - *Non applicabile*			

CHECK LIST IN CASE OF TROUBLE

GENERAL QUESTIONS
a) Does metering screw start without problems even after longer down periods?
b) Does it seem that atmospheric conditions contribute to malfunctioning?
c) Feeder must work in perfectly horizontal position.
d) Outlet must be free.

HOPPER CHECK
a) Hopper capacity must be less than 100 litres.
b) Is hopper equipped with bridge breaking deflector?
c) Is hopper equipped with fluidization, vibrator or knocker?

ELECTRIC MOTOR CHECK
a) Are voltage drops possible due to contemperary starting of different machines?
b) Is the plant equipped with a power generator ?
c) Check if motor receives power.
d) Check motor is correctly connected and wires are fixed properly to terminals.
e) Check power cut-out in main controls is correctly set and compare to motor plate data.
f) Check correct sense of rotation of electric motor.

MICRO-BATCH FEEDER CHECK
a) Does material stick to metering screw?
b) Are there any lumps of material hindering material transport?
c) Is the tecnopolymer body damaged?
d) Ensure shaft seals do not loose material.
e) During transport metering screw must not touch feeder pipe.

MATERIAL CHECK
a) Material description?
b) Bulk density? (kg/dm^3)
c) Particle size? (µm/mm)
d) Humidity? (%)
e) Flowability? (make material slide down a metal plate by varying the angle from low to steep)
f) Compressible material? (can you make a “snowball”?)
g) Abrasive material? (does it hurt when rubbing it between fingers?)

CHECKLISTE BEI BETRIEBSSTÖRUNGEN

ALLGEMEINE FRAGEN
a) Läuft Dosierwerkzeug auch nach längeren Betriebsunterbrechungen problemlos an?
b) Scheint Fehlfunktion durch Witterung begünstigt ?
c) Gerät muß sich in exakt horizontaler Lage befinden.
d) Auslauf muß frei sein.

KONTROLLE DES TRICHTERS
a) Trichterinhalt muß weniger als 100 l betragen.
b) Ist Trichter mit Entlastungsvorrichtung ausgestattet?
c) Ist Trichter mit Luftauflockerung, Rüttler oder Klopfer ausgestattet?

KONTROLLE E-MOTOR
a) Sind aufgrund gleichzeitigen Einschaltens mehrerer Geräte Spannungsschwankungen möglich?
b) Ist Anlage mit einem Stromgenerator ausgerüstet?
c) Prüfen, ob am Motor Strom anliegt.
d) Prüfen, ob Motor korrekt angeschlossen ist und ob Klemmenmuttern fest angezogen sind.
e) Prüfen, ob Überstromschalter des Motors in der Hauptsteuerung richtig eingestellt ist und mit Typenschilddaten vergleichen.
f) Motordrehrichtung prüfen.

KONTROLLE DES MIKRO-DOSIERERS
a) Haftet Dosiergut am Dosierwerkzeug?
b) Behindern Produktklumpen die Dosierung?
c) Ist der polymerverkleidung beschädigt?
d) Sicherstellen, daß durch die Wellenabdichtungen kein Produkt austritt.
e) Während der Dosierung darf das Dosierwerkzeug das Förderrohr nicht berühren.

PRÜFUNG DES DOSIERGUTS
a) Materialbezeichnung?
b) Schüttgewicht? (kg/dm^3)
c) Körnung? (µm/mm)
d) Feuchte? (%)
e) Fließfähigkeit ? (Materialprobe auf einem geneigten Blech zum Fließen bringen)
f) Komprimierbarkeit? (Kann ein “Schneeball” geformt wer-den?)
g) Abrasivität? (Schmerzt es, wenn man Material zwischen den Fingern reibt?)

CHECK-LIST EN CAS DE VIS EN PANNE

DEMANDES GENERALES
a) L’outil de dosage démarre sans problèmes même après des longues périodes d’inactivité?
b) Il semble que les conditions atmosphériques contribuisent au malfonctionnement?
c) Il faut que le doseur travaille de manière parfaitement horizontale.
d) Il faut que la bouche de sortie soit libre.

CONTROLE DE LA TREMIE
a) La trémie doit être plus petite que 100 litres.
b) La trémie est équipée d’un déflecteur casse-voûte?
c) La trémie est équipée d’un système de fluidification, d’un vibrateur ou d’un percuteur?

CONTROLE MOTEUR ELECTRIQUE
a) Est-ce qu’il y a la possibilité de variations de courant d’alimentation à cause d’un démarrage de divers appareils au même temps?
b) L’installation est équipée d’un générateur de courant?
c) Contrôler si le moteur reçoit du courant!
d) Contrôler si le moteur est connecté correctement et si les fils sont fixés bien aux bornes.
e) Contrôler le réglage thermique du moteur dans le pupitre général et le confronter avec les données sur la plaque du moteur.
f) Verificare il giusto senso di rotazione del motore elettrico!

CONTROLE DU MICRODOSEUR
a) Le matériau a adhéré à l’outil de dosage?
b) Est-ce qu’il y a des blocs de matériau qui obstruisent le dosage?
c) Est-ce que le corps en polymèr technique est ruiné?
d) S’assurer que les joints d’étanchéité ne perdent pas de matériau.
e) Durant le transport l’outil de dosage ne doit pas toucher le tube de décharge.

3) CONTROLE DU MATERIAU
a) Désignation du matériau
b) Densité? (kg/dm^3)
c) Granulométrie? (µm/mm)
d) Humidité? (%)
e) Fluidité? (faites couler le matériau sur une tôle en augmentant l’inclinaison de la même)
f) Compressibilité? (est-il possible de faire une “boule de neige”?)
g) Abrasivité? (est ce qu’il fait mal quand on frotte le matériau dans les doigts?)

CHECK-LIST IN CASO DI GUASTO

DOMANDE GENERALI
a) L’utensile di dosaggio parte senza problemi anche dopo lunghi periodi di sosta ?
b) Pare che le condizioni atmosferiche contribuiscano al malfunzionamento?
c) La macchina deve lavorare in modo perfettamente orizzontale.
d) La bocca di scarico deve essere libera.

CONTROLLO DELLA TRAMOGGIA
a) La tramoggia deve essere inferiore a 100 litri.
b) La tramoggia è equipaggiata con un deflettore rompiponte?
c) La tramoggia è equipaggiata con un impianto di fluidificazione, di un vibratore o martellatore ?

CONTROLLO MOTORE ELETTRICO
a) Sono possibili sbalzi di corrente di alimentazione a causa dell’avviamento contemporaneo di diverse macchine ?
b) L’impianto è equipaggiato con un generatore di corrente ?
c) Controllare se il motore riceve corrente!
d) Controllare se il motore è collegato correttamente e se i fili sono fissati bene ai morsetti!
e) Controllare la regolazione della termica del motore nel quadro generale e confrontarla con i dati sulla targhetta del motore!
f) Verificare il giusto senso di rotazione del motore elettrico!

CONTROLLO DEL MICRODOSATORE
a) Il materiale si è attaccato all’elica di dosaggio?
b) Ci sono dei blocchi di materiale che ostruiscono il trasporto?
c) Il corpo in tecnopolimero si è rovinato?
d) Accertarsi che le tenute non perdano materiale.
e) Durante il trasporto l’elica non deve toccare il tubo di scarico.

CONTROLLO DEL PRODOTTO
a) denominazione del prodotto ?
b) densità ? (kg/dm^3)
c) granulometria ? (µm/mm)
d) umidità? (%)
e) scorrevolezza ? (fare scorrere il materiale su una lamiera aumentando lentamente l’inclinazione!)
f) comprimibilità ‘ (è possibile fare una “palla di neve”?)
g) abrasività ? (fa male quando si sfrega il prodotto tra le dita ?)

WAM®

WAMGROUP

The manufacturer:

WAMGROUP S.p.A.

located in

Strada degli Schiocchi, 12 - I-41100 Modena (Mo) - Italy

under its own responsibility declares that:

MBF

Declaration Of Incorporation Of Partly Completed Machinery Annex II B 2006/42/CE Directive

comply with the RES Directive 2006/42/EC
of the European Parliament and the Council of 17 May 2006 on machinery

1.1.1. - Definitions
1.1.2. - Principles of safety integration
1.1.3. - Materials and products
1.1.5. - Design of machinery to facilitate its handling
1.3.1. - Risk of loss of stability
1.3.2. - Risk of break-up during operation
1.3.3. - Risks due to falling or ejected objects
1.3.4. - Risks due to surfaces, edges or angles
1.3.7. - Risks related to moving parts
1.3.8. - Choice of protection against risks arising from moving parts
1.3.9. - Risks of uncontrolled movements
1.5.4. - Errors of fitting
1.5.5. - Extreme temperatures
1.5.6. - Fire
1.5.7. - Explosion
1.5.8. - Noise
1.5.9. - Vibrations
1.5.13. - Emissions of hazardous materials and substances
1.5.15. - Risk of slipping, tripping or falling
1.6.1. - Machinery maintenance
1.6.2. - Access to operating positions and servicing points
1.6.4. - Operator intervention
1.6.5. - Cleaning of internal parts
1.7.1. - Information and warnings on the machinery
1.7.2. - Warning of residual risks
1.7.4. - Instructions

and, where applicable, the requirements imposed by the following EC Directives
Directive 2004/108/EC of the European Parliament and the Council of 15 December 2004 on the approximation of the laws of the Member States relating to electromagnetic compatibility.
Directive 2006/95/EC of the European Parliament and the Council of 12 December 2006 on the approximation of the laws of the Member States relating to electrical equipment designed for use within certain voltage limits.

The relevant technical documentation is compiled in accordance with Annex VII B of the Machinery Directive 2006/42/EC
Harmonized standards, national standards and technical regulations in question:
EN ISO 12100-1: 2005 EN ISO 12100-2: 2005

The signing company is committed to provide, in response to a reasoned request by national authorities, relevant information on products covered by this declaration, without prejudice to the rights of intellectual property of the manufacturer. The information will be transmitted directly to the national authorities having requested.

It's forbidden to operate all these products before the machine, in which they will be installed, is declared in conformity with 2006/42/EEC AND SUBSEQUENT AMENDMENTS

Strada degli Schiocchi, 12 - I-41100 Modena (Mo) - Italy, 01.01.2010

The person authorized to provide the technical documentation:
Vainer Marchesini

The legal representative:
Vainer Marchesini

WAM®

WAMGROUP

Der Hersteller:

WAMGROUP S.p.A.

mit Sitz in

Strada degli Schiocchi, 12 - I-41100 Modena (Mo) - Italien

erklärt unter eigener Verantwortung wie folgt:

MBF

EINBAUERKLÄRUNG für unvollständige Maschinen gem. Anhang II B der MRL 2006/42/EG

Diese Produkte entsprechen den Anforderungen der Maschinenrichtlinie 2006/42/EG
des europäischen Parlamentes und des Rates vom 17. Mai 2006

1.1.1. - Begriffsbestimmungen
1.1.2. - Grundsätze für die Integration der Sicherheit
1.1.3. - Materialien und Produkte
1.1.5. - Konstruktion der Maschine im Hinblick auf die Hanhabung
1.3.1. - Risiko des Verlustes der Standsicherheit
1.3.2. - Bruchrisiko beim Betrieb
1.3.3. - Risiken durch herabfallende oder herausgeschleuderte Gegenstände
1.3.4. - Risiken durch Oberflächen, Kanten und Ecken
1.3.7. - Risiken durch bewegliche Teile
1.3.8. - Wahl der Schutzeinrichtungen gegen Risiken durch bewegliche Teile
1.3.9. - Risiko unkontrollierter Bewegungen
1.5.4. - Montagefehler
1.5.5. - Extreme Temperaturen
1.5.6. - Brand
1.5.7. - Explosion
1.5.8. - Lärm
1.5.9. - Vibrationen
1.5.13. - Emission gefährlicher Werkstoffe und Substanzen
1.5.15. - Ausrutsch-, Stolper- und Sturzrisiko
1.6.1. - Wartung der Maschine
1.6.2. - Zugang zu den Bedienungsständen und den Eingriffspunkten für die Instandhaltung
1.6.4. - Eingriffe des Bedienungspersonals
1.6.5. - Reinigen innen liegender Maschinenteile
1.7.1. - Informationen und Warnhinweise an der Maschine
1.7.2. - Warnung vor Restrisiken
1.7.4. - Betriebsanleitung

Wo anwendbar wurden die Anforderungen folgender EG Richtlinien erfüllt
Richtlinie 2004/108/EG des Europäischen Parlaments und des Rates vom 15. Dezember 2004 zur Angleichung der Rechtsvorschriften der Mitgliedstaaten über die elektromagnetische Verträglichkeit.
Richtlinie 2006/95/EG des Europäischen Parlaments und des Rates vom 12. Dezember 2006 zur Angleichung der Rechtsvorschriften der Mitgliedstaaten betreffend elektrische Betriebsmittel zur Verwendung innerhalb bestimmter Spannungsgrenzen.

Die speziellen technischen Unterlagen gem. Anhang VII B der MRL 2006/42/EG wurden erstellt.
Folgende harmonisierte Normen, nationale Normen und technische Vorschriften fanden Anwendung:
EN ISO 12100-1: 2005 EN ISO 12100-2: 2005

Das ausstellende Unternehmen ist verpflichtet, die technischen Unterlagen für diese Produkte auf begründetes Verlangen den Marktaufsichtsbehörden, unbeschadet der Rechte am geistigen Eigentum des Herstellers, zur Verfügung zu stellen. Die Unterlagen werden direkt an die anfordernde Behörde gesandt.

Es ist verboten diese Produkte in Betrieb zu nehmen, bevor die Maschine, in welche diese eingebaut werden, den Anforderungen der MRL entspricht und die EG Konformitätserklärung gem. MRL 2006/42/EG und nachfolgenden Änderungen vorliegt.

Strada degli Schiocchi, 12 - I-41100 Modena (Mo) - Italien, 01.01.2010

Bevollmächtigter für die Zusammenstellung
der relevanten Technischen Unterlagen:
Vainer Marchesini

Für den Hersteller:

Vainer Marchesini

WAMGROUP S.p.A. - Strada degli Schiocchi, 12 - I-41100 Modena (Mo) - Italien

WAM®

WAMGROUP

Le fabricant:

WAMGROUP S.p.A.

son siège social à

Strada degli Schiocchi, 12 - I-41100 Modena (Mo) - Italie

déclare sous sa propre responsabilité que

les machines type MBF

Déclaration d'Incorporation des machines partiellement construites - Directive 2006/42/CE Annexe II B

sont en conformité avec la Directive RES 2006/42/EC
du Parlement Européen et du conseil du 17 mai 2006 sur les machines

1.1.1. - Definitions
1.1.2. - Principes d'intégration en sécurité
1.1.3. – Matériels et produits
1.1.5. – Conception des machines pour faciliter leur manipulation
1.3.1. – Risque de perte de stabilité
1.3.2. – Risque de casse pendant fonctionnement
1.3.3. – Risques causés par la chute ou l'éjection d'objets
1.3.4. – Risques liés aux surfaces, aux bords et aux angles
1.3.7. – Risques liés aux pièces en mouvement
1.3.8. – Choix de protection contre les risques résultant de pièces mobiles
1.3.9. – Risques de mouvements non désirés
1.5.4. – Erreurs de montage
1.5.5. – Températures extrêmes
1.5.6. – Feu
1.5.7. – Explosion
1.5.8. – Bruit
1.5.9. – Vibrations
1.5.13. – Emission de matières et substances dangereuses
1.5.15. – Risque de glisser, trébucher ou tomber
1.6.1. – Maintenance des machines
1.6.2. – Accès aux postes de travail et aux points d'intervention
1.6.4. – Intervention de l'opérateur
1.6.5. – Nettoyage des parties internes
1.7.1. – Informations et avertissements sur la machine
1.7.2. – Avertissements sur les risques résiduels
1.7.4. – Notices de fonctionnement

et, quand applicable, avec les exigences imposées par les directives européennes suivantes
La **Directive 2004/108/CE** du Parlement européen et du Conseil du 15 Décembre 2004 sur le rapprochement des législations des États membres concernant la compatibilité électromagnétique.
La **Directive 2006/95/CE** du Parlement européen et du Conseil du 12 Décembre 2006 sur le rapprochement des législations des États membres concernant le matériel électrique destiné à être employé dans certaines limites de tension.

La documentation technique appropriée est constituée conformément à l'annexe VII B de la Directive Machines 2006/42/CE
Les normes harmonisées, les normes et règles techniques nationales en question:
EN ISO 12100-1: 2005 EN ISO 12100-2: 2005

La société signataire s'engage à fournir, en réponse à une demande motivée par les autorités nationales, toute information sur les produits couverts par cette déclaration, sans préjudice des droits de propriété intellectuelle du fabricant. Les informations seront transmises directement aux autorités nationales demanderesses.

Il est interdit d'utiliser tous ces produits avant que la machine, dans laquelle ils seront installés, soit déclarée conforme à la Directive 2006/42/CEE et ses amendements successifs.

Strada degli Schiocchi, 12 - I-41100 Modena (Mo) - Italie, 01.01.2010

La personne autorisée à fournir
la documentation technique:
Vainer Marchesini

Le représentant légal:

Vainer Marchesini

WAM®

WAMGROUP

Il sottoscritto fabbricante:

WAMGROUP S.p.A.

con sede legale in

Strada degli Schiocchi, 12 - I-41100 Modena (Mo) - Italia

dichiara sotto la propria responsabilità che:

le quasi macchine serie MBF

ai sensi dell'Allegato II B della Direttiva Macchine 2006/42/CE (DICHIARAZIONE DI INCORPORAZIONE)

risultano conformi ai RES della Direttiva 2006/42/CE

del Parlamento Europeo e del Consiglio del 17 maggio 2006 relativa alle macchine

1.1.1. - Definizioni
1.1.2. - Principi di integrazione della sicurezza
1.1.3. - Materiali e prodotti
1.1.5. - Progettazione della macchina ai fini della movimentazione
1.3.1. - Rischio di perdita di stabilità
1.3.2. - Rischio di rottura durante il funzionamento
1.3.3. - Rischi dovuti alla caduta o alla proiezione di oggetti
1.3.4. - Rischi dovuti a superfici, spigoli ed angoli
1.3.7. - Rischi dovuti agli elementi mobili
1.3.8. - Scelta di una protezione contro i rischi dovuti agli elementi mobili
1.3.9. - Rischi di movimenti incontrollati
1.5.4. - Errori di montaggio
1.5.5. - Temperature estreme
1.5.6. - Incendio
1.5.7. - Esplosione
1.5.8. - Rumore
1.5.9. - Vibrazioni
1.5.13. - Emissioni di materie e sostanze pericolose
1.5.15. - Rischio di scivolamento, inciampo o caduta
1.6.1. - Manutenzione della macchina
1.6.2. - Accesso ai posti di lavoro e ai punti d'intervento utilizzati per la manutenzione
1.6.4. - Intervento dell'operatore
1.6.5. - Pulitura delle parti interne
1.7.1. - Informazioni e avvertenze sulla macchina
1.7.2. - Avvertenze in merito ai rischi residui
1.7.4. - Istruzioni

e, qualora applicabili, alle esigenze imposte dalle seguenti Direttive Comunitarie

Direttiva 2004/108/CE del Parlamento Europeo e del Consiglio del 15 dicembre 2004 concernente il riavvicinamento delle legislazioni degli Stati membri relative alla compatibilità elettromagnetica.

Direttiva 2006/95/CE del Parlamento Europeo e del Consiglio del 12 dicembre 2006 concernente il riavvicinamento delle legislazioni degli Stati membri relative al materiale elettrico destinato ad essere adoperato entro taluni limiti di tensione.

La documentazione tecnica pertinente è stata compilata in conformità dell'Allegato VII B della Direttiva Macchine 2006/42/CE

Norme armonizzate, norme nazionali e regole tecniche considerate:

UNI EN ISO 12100-1: 2005 UNI EN ISO 12100-2: 2005

L'azienda firmataria della presente si impegna a trasmettere, in risposta a una richiesta adeguatamente motivata delle autorità nazionali, informazioni pertinenti sui prodotti oggetto della presente dichiarazione, fatti salvi i diritti di proprietà intellettuale del fabbricante. Le informazioni verranno trasmesse direttamente all'autorità nazionale che le ha richieste.

AVVERTENZA IMPORTANTE. E' vietato mettere in servizio la quasi macchina oggetto della presente dichiarazione finché la macchina finale in cui deve essere incorporata non è stata dichiarata conforme, se del caso, alle disposizioni della Direttiva Macchine 2006/42/CE.

Strada degli Schiocchi, 12 - I-41100 Modena (MO) - Italia, 01.01.2010

La persona autorizzata
a costituire il fascicolo tecnico:
Vainer Marchesini

Il rappresentante legale:

Vainer Marchesini

N.B. Rights reserved to modify technical specifications
N.B. Angaben ohne Gewähr. Änderungen können ohne Vorankündigung vorgenommen werden.
N.B. Toutes données portées dans le présent catalogue n'engagent pas le fabricant. Elles peuvent être modifiéés à tout moment.
N.B. Tutti i dati riportati nel presente catalogo non sono impegnativi e possono subire variazioni in qualsiasi momento.

WAMGROUP S.p.A.
Via Cavour, 338
I - 41030 Ponte Motta
Cavezzo (MO) - ITALY

☎ +39 / 0535 / 618111
fax +39 / 0535 / 618226
e-mail info@wamgroup.it
internet www.wamgroup.com
videoconference + 39 / 0535 / 49032

LEFT BLANK

WAM®

WAMGROUP

3

SPARE PARTS

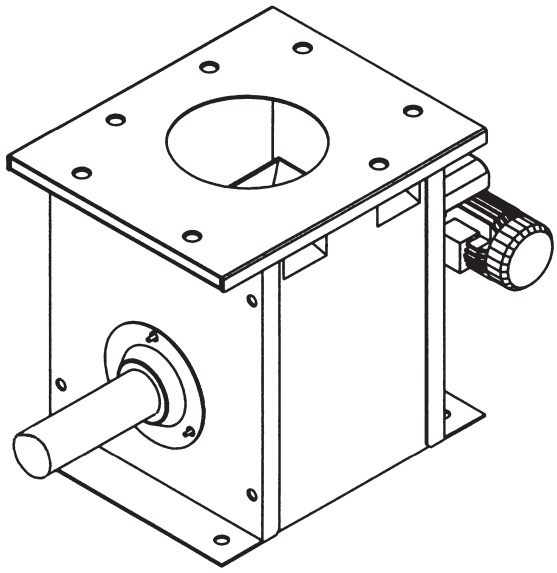

MBF

- ***MICRO-BATCH FEEDERS***
  SPARE PARTS CATALOGUE
- ***MIKRODOSIERER***
  ERSATZTEILKATALOG
- ***MICRODOSEURS***
  PIECES DE RECHANGE
- ***MICRODOSATORI***
  PEZZI DI RICAMBIO

All rights reserved © WAMGROUP S.p.A.

CATALOGUE No.		VAL.062.-.R.4L	CREATION DATE
ISSUE **A12**	CIRCULATION **100**	DATE OF LATEST UPDATE **05.14**	**03 - 2000**

WAM®

All the products described in this catalogue are manufactured according to **WAMGROUP S.p.A. Quality System procedures**. The Company's Quality System, certified in July 1994 according to International Standards **UNI EN ISO 9002** and extended to the latest release of **UNI EN ISO 9001**, ensures that the entire production process, starting from the processing of the order to the technical service after delivery, is carried out in a controlled manner that guarantees the quality standard of the product.

*Alle in diesem Katalog beschriebenen Produkte werden gemäß dem **Qualitätssystem der WAMGROUP S.p.A.** hergestellt. Das im Juli 1994 gemäß der internationalen Norm **UNI EN ISO 9002** und auf die neueste Version der **UNI EN ISO 9001** erweiterte, zertifizierte Qualitätssystem der Firma gewährleistet, dass der gesamte Produktionsprozess von der Auftragsbearbeitung bis zum technischen Kundendienst nach Lieferung in kontrollierter Art und Weise erfolgt, so dass der Qualitätsstandard des Produkts gewährleistet ist.*

Tous les produits décrits dans ce catalogue sont fabriqués selon les procédures du **Système de Qualité de WAMGROUP S.p.A.**, certifié en Juillet 1994 selon les normes internationales **UNI EN ISO 9002** et étendu à la dernière version de la norme **UNI EN ISO 9001**. Cela garantit que le processus de production, à partir de la gestion de la commande au service technique après-vente, est effectué de manière contrôlée garantissant la norme de qualité du produit.

*Tutti i prodotti descritti nel catalogo sono stati realizzati secondo le **procedure del Sistema Qualità di WAMGROUP S.p.A.** Il Sistema Qualità aziendale, certificato dal luglio 1994 in conformità alle normative internazionali **UNI EN ISO 9002** e successivamente esteso all' ultima versione delle normative **UNI EN ISO 9001**, garantisce che l'intero processo produttivo, dalla formulazione dell'ordine fino all'assistenza tecnica dopo la consegna, si svolga secondo modalità controllate che garantiscono lo standard qualitativo del prodotto.*

This publication cancels and replaces any previous edition and revision.
We reserve the right to implement modifications without notice.
This catalogue cannot be reproduced, even partially, without prior written consent by the Manufacturer.

Diese Veröffentlichung storniert und ersetzt alle früheren Ausgaben und überarbeiteten Fassungen.
Wir behalten uns das Recht vor, Änderungen ohne vorherige Information durchzuführen.
Dieser Katalog darf selbst auszugsweise nicht ohne das schriftliche Einverständnis der Herstellers vervielfältigt werden.

Cette publication annule et remplace toute édition et révision antérieure.
Nous nous réservons le droit de mettre en place des modifications sans préavis.
Aucune reproduction, partielle ou intégrale du catalogue, ne pourra être faite sans l'accord préalable et écrit du Fabricant.

Questa pubblicazione annulla e sostituisce le edizioni e revisioni precedenti.
Ci riserviamo la facoltà di apportare modifiche senza preavviso.
Il presente catalogo non può essere riprodotto, nemmeno parzialmente, senza previo consenso scritto del Costruttore.

1 TECHNICAL CATALOGUE — **TECHNISCHER KATALOG**

DESCRIPTION AND TECHNICAL CHARACTERISTICS ... BESCHREIBUNG UND TECHNISCE MERKMALE ... **T. 6 → .23**
ORDER CODES ... BESTELLCODES ... **24 → .27**
ACCESSORIES ... ZUBEHÖR ... **28 → .41**
OPERATION AND MAINTENANCE ... BETRIEBS- UND WARTUNGSANLEITUNG ... **42**
INQUIRY AND ORDER FORM ... ANFRAGE- UND BESTELLBLATT ... **43**

1 CATALOGUE TECNIQUE — **CATALOGO TECNICO**

DESCRIPTION ET CARACTERISTIQUES TECHNIQUES ... DESCRIZIONE E CARATTERISTICHE TECNICHE ... **T. 6 → .23**
CODES DE COMMANDE ... CODICI DI ORDINAZIONE ... **24 → .27**
ACCESSOIRES ... ACCESSORI ... **28 → .41**
UTILISATION ET ENTRETIEN ... USO E MANUTENZIONE ... **42**
QUESTIONNAIRE ... MODULO DI RICHIESTA ... **43**

2 MAINTENANCE CATALOGUE — **WARTUNGSKATALOG**

OPERATION AND MAINTENANCE ... BETRIEBS- UND WARTUNGSANLEITUNG ... **M. 4 → .24**

2 CATALOGUE D'ENTRETIEN — **CATALOGO DI MANUTENZIONE**

UTILISATION ET ENTRETIEN ... USO E MANUTENZIONE ... **M. 4 → .24**

3 SPARE PARTS CATALOGUE — **ERSAITZTEILKATALOG**

SPARE PARTS ... ERSATZTEIL ... **R. 4 → .12**

3 CATALOGUE PIECES DE RECHANGE — **CATALOGO RICAMBI**

PIECES DE RECHANGE ... PEZZI DI RICAMBIO ... **R. 4 → .12**

ORDERING OF SPARE PARTS
To identify the spare parts refer to the following tables.
To order spare part either indicate the part code or the microdoseur, the item number and part description, as well as the required quantity.
Kits and sets are only supplied entirely.
For any further information plase.

ERSATZTEILBESTELLUNGEN
Zur Identifikation der Ersatzteile auf nachfolgende Tabelle Bezug nehmen.
Zur Ersatzteilbestellung ist es ausreichend, die Produktionsnummer des Mikrodosierers, die Position des Teils in der Ersatzteilliste und die gewünschte stückzahl.

COMMANDE DE PIECES DE RECHANGE
Pour identifier les pièces de rechange voyez le tableau suivant.
Pour commander des pièces de rechange il est suffisant d'indiquer le numéro matriculaire du microdoseur, la position de la pièce et la quantité désidérée.
Les groupes composants du microdoseur normalement sont vendus intégralement.
Les pièces sont aussi disponibles séparément. En tel cas s'adresser à notre Bureau de Service de Pièces de Rechange.

ORDINAZIONE DEI PEZZI DI RICAMBIO
Per l'identificazione dei pezzi di ricambio vedi tabelle riportate qui a seguito.
Per l'ordinazione dei pezzi di ricambio è sufficiente indicare il numero di matricola del microdosatore, la posizione del pezzo e la quantità voluta.
I gruppi componenti del microdosatore sono normalmente venduti integralmente.
Sono comunque disponibili separatamente i particolari :in tale caso rivolgersi al ns. Uff. Ricambi.

A) Steel fabricated parts and bearing assemblies.
Please indicate serial No. of the MBW, wich you read on side wall, and copy page No. and item No. (or letter) as well as the description of the part from the catalogue.

A) Stahlbauteile und Lagereinheiten.
Folgende Angaben sind hierfür erforderlich: die Produktions- Nr. der MBF; die Seitenzahl und die entsprechende Positionsnummer, bzw. der Positionsbuchstabe und die Teilebezeichnung; die Mengenangabe, wobei auf die in der Preisliste angegebene, jeweilige Mindest-Abnahmemenge zu achten ist.

A) Pièces de charpente et paliers
Quand passez une commande de pièces de rechange, nous vous prions de comuniquer le N. de fabrication du MBF, le N. de la page, de la position et la désignation de la pièce, la quantitè désirée et tenant compte de la quantité minimum dans la liste de prix.

A) Pezzi di carpenteria e di supporteria
All'ordine sono da comunicare il N° matricolare del MBF, il N° di pagina, il N° o la lettera di posizione e la descrizione del pezzo nonchè la quantità richiesta tenendo conto delle quantità minime riportate nel listino.

B) Gear Reduction Units and Eletric Motors
Instead of the serial No. of the MBW indicate the serial No. of the gear reduction unit or of the electric motor and add the information requested under item A.
Parts not included in the price list cannot be supplied. These are:
1) Norm parts if not included in the kids
2) Item numbers in brackets ( )i. e. single parts of the kits.

Indicate the quantity of parts required (see minimum supply in the price list).

B) Getriebeeinheiten und Elektro Motoren
Anstelle der Produktions- Nr. der MBF ist die Produktions-Nr. des Getribes bzw. des E- Motors anzugeben.
Ansonsten sind die unter Punkt A bereits genannten Angaben hinzuzufügen. In der Preisliste nicht aufgeüfhrte Positionen sind nicht lieferbar. Im einzelnen sind dies:
1) Normteile, sofern die Montagesätze diese nicht beinhalten
2) in Klammern gesetzte Positionen ( ), bzw. Einzelteile zu den Montagesätzen.

B) Reducteurs et moteurs électriques
Au lieu du N. de fabrication du MBF il faut indiquer celui du reducteur ou du moteur. Ensuite ajoutez l'information demande sous la lettre A. Les pièces qui ne sont pas comprises dans la liste de prix ne peuvent pas être fournies. En particulier ce sont:
1) Les pièces commerciales à normes européenes si pas comprises dans les kits
2) Les positions entre parenthsès ( ), c' est à dire les composants des kits.

Avant le passage d'une commande vérifier les quantités minimum dans la liste de prix.

B) Testate motrici e motori elettrici
Al posto del N° matricolare del MBF, indicare quello della testata motrice o del motore elettrico. Quindi aggiungere le altre informazioni richieste sotto la lettera A.
I pezzi non compresi nel listino prezzi non possono essere forniti.
In particolare sono:
1) pezzi a norme se non compresi nei kits
2) numeri di posizione tra parentesi ( ), cioè singoli componenti dei kits.

Prima di passare un ordine verificare la quantità minima indicata nel listino prezzi.
Sono valide le ns Condizioni Generali di vendita.

SPARE PARTS	SERIES
ERSATZTEIL	SERIE
PIECES DE RECHANGE	SERIE
RICAMBI	SERIE

MBF 042 in SINT®

MBF made of AISI
Mikrodosierer aus Edelstahl
Microdoseurs construit dans AISI
Microdosatore in AISI

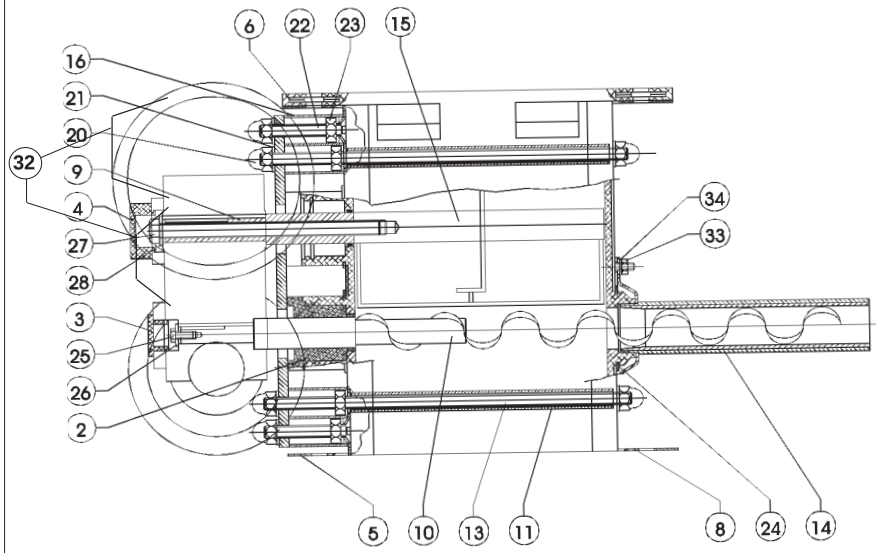

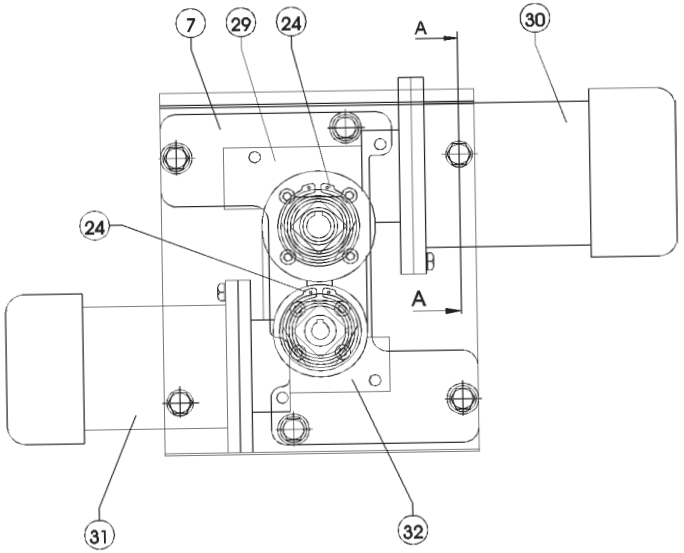

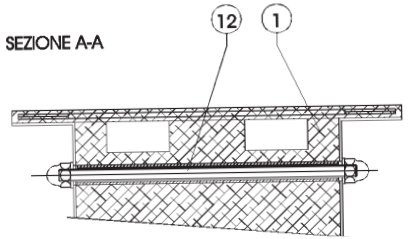

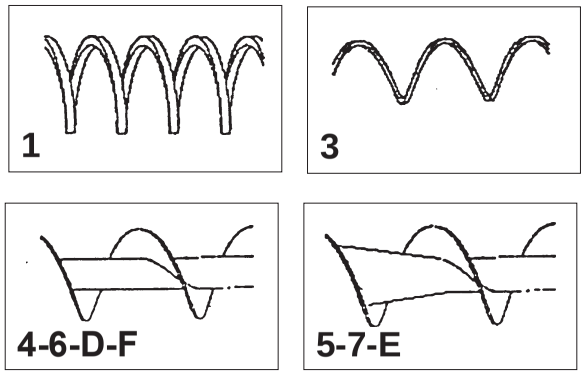

SPARE PARTS	SERIES
ERSATZTEILE	SERIE
PIECES DE RECHANGE	SERIE
RICAMBI	SERIE

MBF 042

*1

Type	Code
1	**UTD212**
3	**UTD232**
4	**UTD242**
5	**UTD254 (SINT®ER)**
	UTD255 (SINT®AL)
7	**UTD274 (SINT®ER)**
	UTD275 (SINT®AL)
D	**UTD2D2**
G	**UTD2G4 (SINT®ER)**
	UTD2G5 (SINT®AL)

*2

Type	Code
Normal *Normale*	**20640832/A**
Extended *Verlängert* Rallongé *Prolungato*	**20640842/A**

*3

Type	Code
1	**20642542/A**
2	**20642562/A**

*4

Type	Code
Cast - *Guß* Fonte - *Di fusione*	**20674161/A**
Welded *Geschweißt* Soudée *Saldata*	**20673351/A**

*5

Type	Code
TPU Yellow - *Gelb* Jaune - *Giallo*	**2099828HA**
TPU Food products *Nahrungsmitteln* Alimentaires *Alimentare*	**2099830HA**

*6

Type	Code
SINT®ER	**20689271A**
SINT®AL	**20689272A**

Pos	Q.	Norms	Description	Benennung	Désignation	Descrizione	Code
1	1		Body	Gehäuse	Corps	Corpo dosatore	***6**
2	2		Seal TPU	Dichtung TPU	Etanchéité TPU	Tenuta TPU	***5**
3	1		Shaft cover metering reduce	Wellenschutzdeckel Dos.	Protection arbre dos.	Capuccio x rid. D1 lato dosatore	**2099826-A**
4	1		Shaft cover blender reducer	Wellenschutzdeckel Hom.	Protection arbre hom.	Capuccio x rid. D1 lato omogeneiz.	**2099827-A**
5	1		End plate drive end	Endschild Antriebesseite	Plaque côté mot.	Facciata lato motorizzazione	**206F3E22/A**
7	1		Drive mount	Antriebskonsole	Support motorisation	Piastra supporto motorizzazione	*** 4**
8	1		End plate outlet end	Endschild Auslaufseite	Plaque coté sortie	Facciata lato scarico	**206F3E32/A**
9	1		Agitator shaft	Wellenzapfen	Arbre comm. rotor omogénéisateur	Albero comando utensile omog.	**20945101/A**
10	1		Metering screw	Dosierwerkzeug	Vis de dosaqe	Utensile dosatore	***1**
11	4		Spacer	Distanzring	Entretoise	Distanziale	**20989581/A**
12	2	DIN 975	Threaded bar M10x238	Gewindestange M 10x238	Barre filetée M 10x238	Barra fil. M10x238	**20689571/A**
13	2	DIN 975	Threaded bar M10x293	Gewindestange M 10x293	Barre filetée Ml 10x293	Barra fil. M10x293	**20689581/A**
14	1		Tubular housing outlet side	Auslaufrohr	Tube décharge	Tubo di scarico	***2**
15	1		Blending tool	Homogenisierwerkzeug	Homogénéisateur	Utensile omogeneizzatore	***3**
16	4		Spacer	Distanzring	Entretoise	Distanziale	**20986851/A**
17	3	DIN 934	Nut M6	Sechskantmutter M6	Ecrou M6	Dado M6	
18	3	DIN 433	Washer Ø 6	Unterlegscheibe Ø 6	Rondelle Ø 6	Rondella Ø 6	
19	1	DIN 913	Screw M 10x70	Schraube M10x70	Vis M10x70	Vite TE M 10x70	
20	16	DIN 15187	Cap nut M10	Hutmutter M 10	Ecrou borgne M10	Dado cieco M 10	
21	30	DIN 433	Washer Ø 10	Unterlegscheibe Ø 10	Rondelle Ø 10	Rondella Ø 10	
21	1	DIN 7991	Screw TSEI M10x70	Schraube TSEI M10x70	Vis TSEI M10x70	Vite TSEI M10x70	
23	12	DIN 934	Nut M10	Sechskantmutter M 10	Ecrou M10	Dado M10	
24	1	DIN 471	Shaft Ø60 retaining ring	Wellensicherungsring Ø 60	Criclip pour arbre Ø 60	Seeger x albero Ø 60	
25	1	DIN 91311	Hexagonal bolt M6x20	Sechskantschraube M6x20	Vis TE M6x20	Vite TE M6x20	
26	1	DIN 433	Washer Ø 6	Unterlegscheibe Ø 6	Rondelle Ø 6	Rondella Ø 6	
27	1	DIN 9311	Hexagonal bolt M12x190	Sechskantschraube M12x190	Vis TE M12x190	Vite TE M12x190	
28	1	DIN 433	Washer Ø 12	Unterlegscheibe Ø12	Rondelle Ø 12	Rondella Ø 12	
29	1		Gear box type “D1”	Getriebe Type “D1”	Réducteur type “D1”	Riduttore “D1”	
30	1		E-Motor “63”	E-Motor “63”	Moteur “63”	Motore “63”	
31	1		E-Motor “63”	E-Motor “63”	Moteur “63“	Motore “63”	
32	2		Protection cover	Abdeckungschutz	Couvercle de protection	Coperchio di protezione	

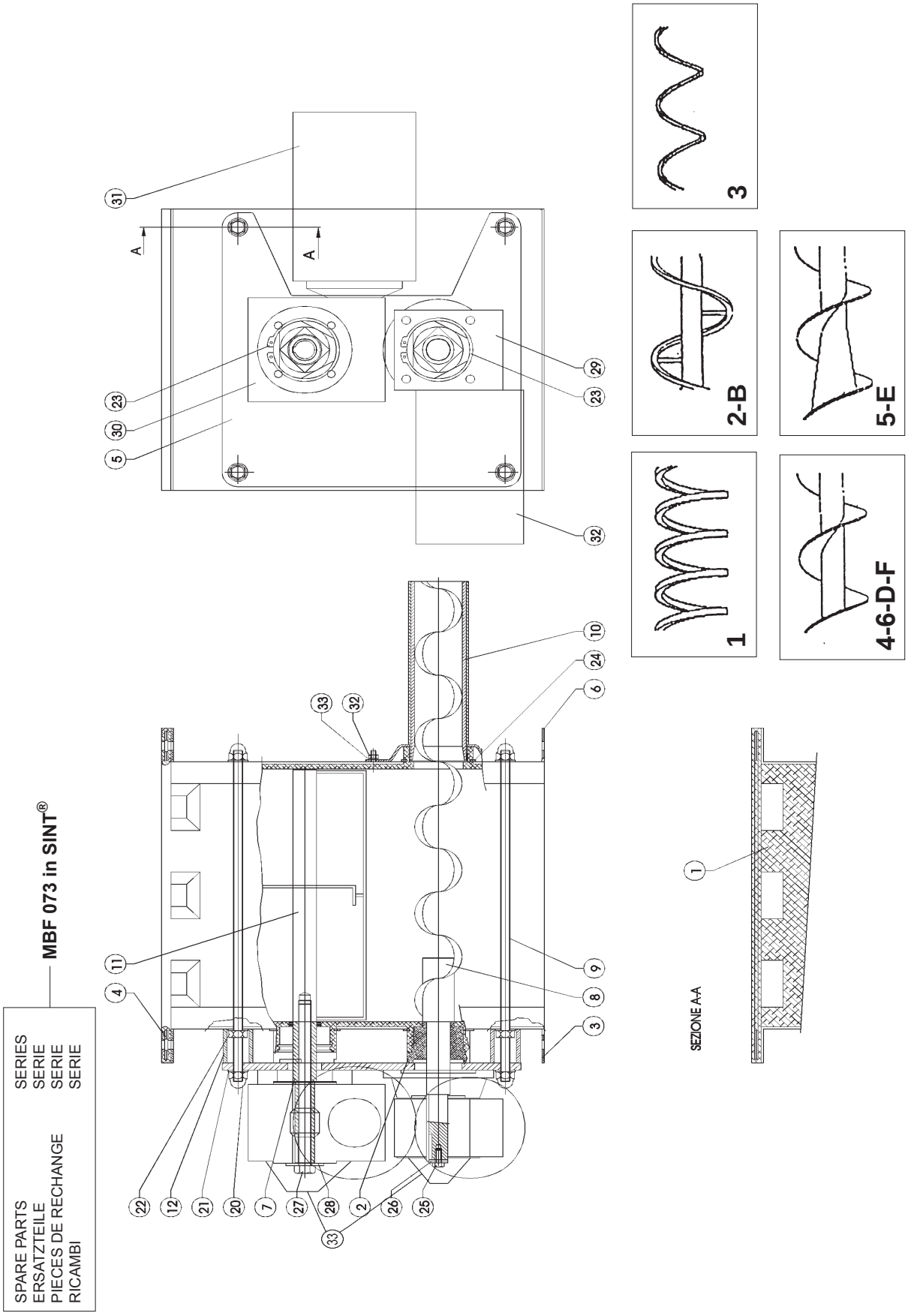
MBF 073 in SINT®
SPARE PARTS SERIES
ERSATZTEILE SERIE
PIECES DE RECHANGE SERIE
RICAMBI SERIE
1
2-B
3
4-6-D-F
5-E
SEZIONE A-A
A
A

SPARE PARTS	SERIES
ERSATZTEILE	SERIE
PIECES DE RECHANGE	SERIE
RICAMBI	SERIE

MBF 073

	Type	Code
*1	Cast - *Guß* Fonte - *Di fusione*	**20674171/A**
	Welded *Geschweißt* Soudée *Saldata*	**20674141/A**

	Type	Code
*2	1	**UTD312**
	2	**UTD322**
	3	**UTD332**
	4	**UTD342**
	5	**UTD354 (SINT®ER)**
		UTD355 (SINT®AL)
	B	**UTD3B2**
	D	**UTD3D2**
	E	**UTD3E4 (SINT®ER)**
		UTD3E5 (SINT®AL)

	Type	Code
*3	Normal *Normale*	**2064085½/A**
	Extended *Verlängert* Rallongé *Prolungato*	**2064086½/A**

	Type	Code
*4	1	**20642572/A**
	2	**20642552/A**

	Type	Code
*5	**TPU** Yellow - *Gelb* Jaune - *Giallo*	**2099843HA**
	TPU Food products *Nahrungsmitteln* Alimentaires *Alimentare*	**2099831HA**

	Type	Code
*6	SINT®ER	**20689281A**
	SINT®AL	**20689282A**

Pos	Q.	Norms	Description	Benennung	Désignation	Descrizione	Code
1	1		Body	Gehäuse	Corps	Corpo dosatore	***6**
2	2		Seal TPU	Dichtung TPU	Etanchéité TPU	Tenuta TPU	***5**
3	1		End plate drive end	Endschild Antriebesseite	Plaque côté mot.	Facciata lato motorizzazione	**206F3E42/A**
5	1		Drive mount	Antriebskonsole	Support motorisation	Piastra supporto motorizzazione	***1**
6	1		End plate outlet end	Endschild Auslaufseite	Plaque coté sortie	Facciata lato scarico	**206F3E52/A**
7	1		Agitator shaft	Wellenzapfen	Arbre com. rotor homogénéisateur	Albero comando utensile omog.	**20947371/A**
8	1		Metering screw	Dosierwerkzeug	Vis de dosage	Utensile-dosatore	***2**
9	4	DIN 975	Threaded bar M12x459	Gewindestange M12x459	Barre filetée M12x459	Barra fil. M12x459	**20689591/A**
10	1		Tubular housinq outlet side	Auslaufrohr	Tube décharqe	Tubo di scarico	***3**
11	1		Blending tool	Homogenisierwerkzeug	Homogénéisateur	Utensile omogeneizzatore	***4**
12	4		Spacer	Distanzring	Entretoise	Distanziale	**20987771/A**
18	3	DIN 433	Washer Ø 6	Unterlegscheibe Ø 6	Rondelle Ø 6	Rondella Ø6	
19	3	DIN 934	Nul M6	Sechskantmutter M6	Ecrou M6	Dado M6	
20	8	DIN 1587	Cap nul M12	Hut mutter M12	Ecrou borqne M12	Dado cieco M12	
21	12	DIN 433	Washer Ø 12	Unterlegscheibe Ø 12	Rondelle Ø 12	Rondella Ø12	
22	4	DIN 934	Nut M12	Sechskantmutter M12	Ecrou M12	Dado M12	
23	2	DIN 471	Shaft Ø 80 retaining ring	Wellensicherungsring Ø 80	Cnclip pour arbre Ø 80	Seeger x albero Ø80	
24	1	DIN 471	Shaft Ø 88 retaining ring	Wellensicherungsring Ø 88	Criclip pour arbre Ø 88	Seeger x albero Ø88	
25	1	DIN 931	Hexaqonal bolt M8x35	Sechskantschraube M8x35	Vis TE M8x35	Vite TE M8x35	
26	1	DIN 433	Washer Ø 8	Unterlegscheibe Ø 8	Rondelle Ø 8	Rondella Ø8	
27	1	DIN 931	Hexagonal bolt M16x240	Sechskantschraube M16x240	Vis TE Ml 6x240	Vite TE M16x240	
28	1		Washer Øl6	Unterlegscheibe Ø 16	Rondelle Ø 16	Rondella Ø16	
29	1		Gearbox	Getriebe	Réducteur	Riduttore	
30	1		Gearbox	Getriebe	Réducteur	Riduttore	
31	1		E-Motor “71”	E-Motor “71”	Moteur “71”	Motore”71”	
32	1		E-Motor “80”	E-Motor “80”	Moteur “80”	Motore “80”	
33	2		Cover	Abdeckungschutz	Couvercle de protection	Coperchio di protezione	

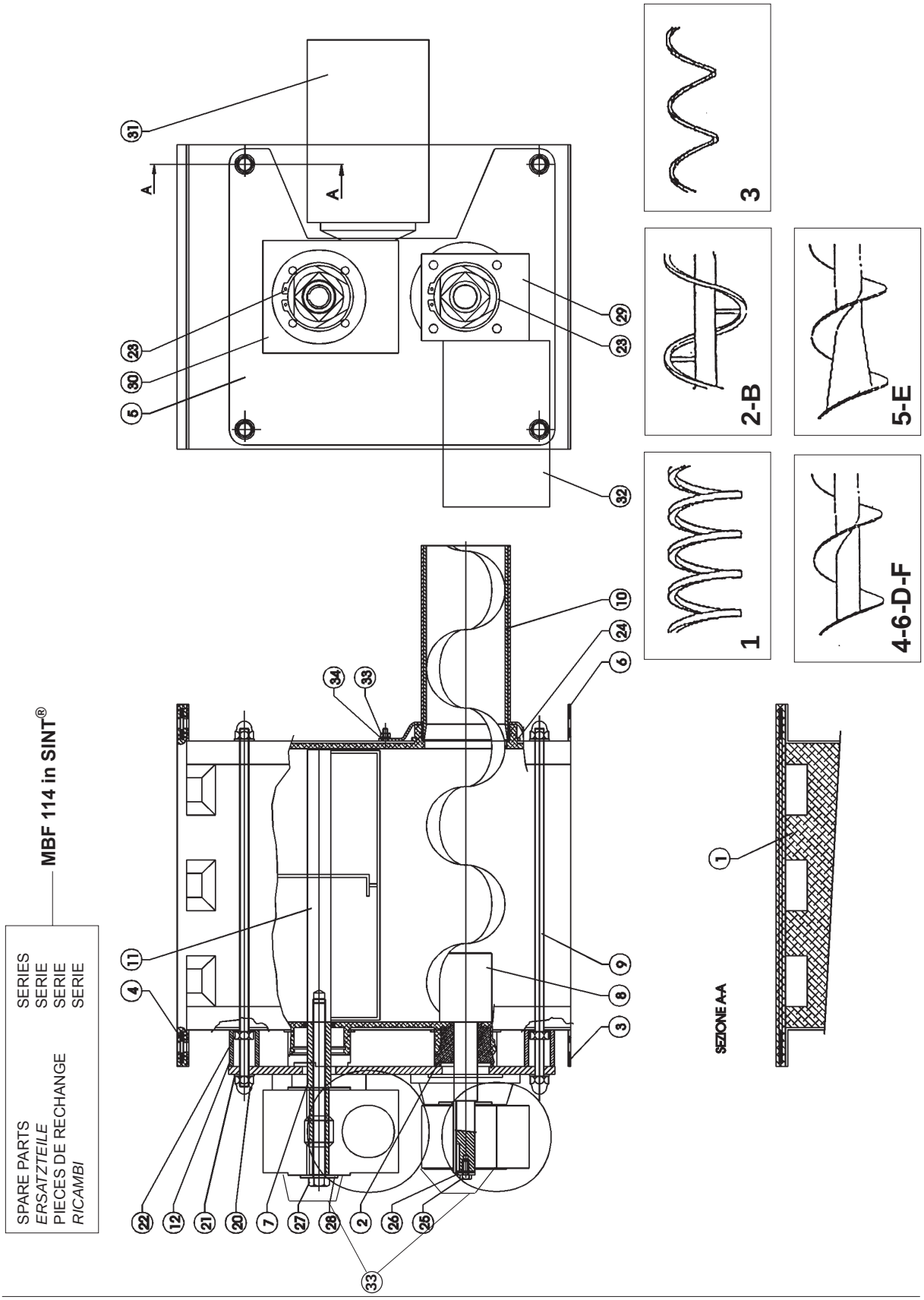
MBF 114 in SINT®
SPARE PARTS SERIES
ERSATZTEILE SERIE
PIECES DE RECHANGE SERIE
RICAMBI SERIE
SEZIONE A-A
1
2-B
3
4-6-D-F
5-E

SPARE PARTS — SERIES
ERSATZTEILE — SERIE
PIECES DE RECHANGE — SERIE
RICAMBI — SERIE

MBF 114

*1

Type	Code
Cast - *Guß* Fonte - *Di fusione*	**20674181/A**
Welded *Geschweißt* Soudée *Saldata*	**20674151/A**

*2

Type	Code
1	**UTD412**
2	**UTD422**
3	**UTD432**
4	**UTD442**
5	**UTD454 (SINT®ER)**
	UTD455 (SINT®AL)
B	**UTD4B2**
D	**UTD4D2**
E	**UTD4E4 (SINT®ER)**
	UTD4E5 (SINT®AL)

*3

Type	Code
Normal *Normale*	**2064087½/A**
Extended *Verlängert* Rallongé *Prolungato*	**2064088½/A**

*4

Type	Code
1	**20642572/A**
2	**20642552/A**

*5

Type	Code
TPU Yellow - *Gelb* Jaune - *Giallo*	**2099843HA**
TPU Food products *Nahrungsmitteln* Alimentaires *Alimentare*	**2099831HA**

*6

Type	Code
SINT®ER	**20689281A**
SINT®AL	**20689282A**

Pos.	Q.	Norms	Description	Benennung	Désignation	Descrizione	Code
1	1		Body	Gehäuse	Corps	Corpo dosatore	***6**
2	2		Seal TPU	Dichtung TPU	Etanchéité TPU	Tenuta TPU	***5**
3	1		End plate drive end	Endschild Antriebesseite	Plaque coté mot.	Facciata lato motorizzazione	**206F3E72/A**
5	1		Drive mount	Antriebskonsole	Support motorisation	Piastra supporto motorizzazione	***1**
6	1		End plate outlet end	Endschild Auslaufseite	Plaque côté sorbe	Facciata lato scarico	**206F3E52/A**
7	1		Agitator shaft	Wellenzapfen	Arbre com. rotor homogénéisateur	Albero comando utensile omog.	**20947371/A**
8	1		Metering screw	Dosierwerkzeug	Vis de dosage	Utensile dosatore	***2**
9	4	DIN 975	Threaded bar M12x459	Gewindestange M12x459	Barre filetée M12x459	Barra fil. M 12x459	**20689591/A**
10	1		Tubular housing outlet side	Auslaufrohr	Tube décharge	Tubo di scarico	***3**
11	1		Blending tool	Homogenisierwerkzeug	Homogénéisateur	Utensile omogeneizzatore	***4**
12	4		Spacer	Distanzring	Entretoise	Distanziale	**20987771/A**
18	3	DIN 433	Washer Ø6	Unterlegscheibe Ø6	Rondelle Ø6	Rondella Ø6	
19	3	DIN 934	Nut M6	Sechskantmutter M6	Ecrou M6	Dado M6	
20	8	DIN 1587	Cap nut M12	Hut mutter M12	Ecrou borqne M12	Dado cieco M12	
21	12	DIN 433	Washer Ø12	Unterlegscheibe Ø12	Rondelle Ø12	Rondella Ø12	
22	4	DIN 934	Nut M12	Sechskantmutter M 12	Ecrou M12	Dado M12	
23	2	DIN 471	Shaft Ø80 retaining ring	Wellensicherungsring Ø80	Criclip pour arbre Ø80	Seeger x albero Ø80	
24	1	DIN 471	Shaft Ø130 retaining ring	Wellensicherungsring Ø130	Criclip pour arbre Ø130	Seeger x albero Ø130	
25	1	DIN 931	Hexaqonal bolt M8x35	Sechskantschraube M8x35	Vis TE M8x35	Vite TE M8x35	
26	1	DIN 433	Washer Ø8	Unterlegscheibe Ø8	Rondelle Ø8	Rondella Ø8	
27	1	DIN 931	Hexagonal bolt M16x240	Sechskantschraube M16x240	Vis TE Ml 6x240	Vite TE M16x240	
28	1		Washer Ø16	Unterlegscheibe Ø16	Rondelle Ø16	Rondella Ø16	
29	1		Gearbox	Getriebe	Réducteur	Riduttore	
30	1		Gearbox	Getriebe	Réducteur	Riduttore	
31	1		E-Motor “71”	E-Motor “71”	Moteur “71”	Motore “71”	
32	1		E-Motor “80”	E-Motor “80”	Moteur “80”	Motore “80”	
33	2		Cover	Abdeckungschutz	Couvercle de protection	Coperchio di protezione	

For electric motors see Sint® version
Fur elektromotoren sieke Sint® version
Pour les moteurs electriques voir version in Sint®
Per le motorizzazioni vedi la versione in Sint®

SPARE PARTS *ERSATZTEILE* PIECES DE RECHANGE *RICAMBI*	SERIES SERIE SERIE SERIE

MBF 042 AISI
MBF 073 AISI
MBF 114 AISI

SPARE PARTS	SERIES
ERSATZTEILE	SERIE
PIECES DE RECHANGE	SERIE
RICAMBI	SERIE

MBF 042 AISI

MBF 073 AISI

MBF 114 AISI

For electric motors see Sint® version
Fur elektromotoren sieke Sint® version
Pour les moteurs electriques voir version in Sint®
Per le motorizzazioni vedi la versione in Sint®

	Type	Code
*2a	1	UTD212000
	2	UTD222000
	3	UTD232000
	4	UTD242000
	B	UTD2B2000
	D	UTD2D2000

	Type	Code
*2b	1	UTD312000
	2	UTD322000
	3	UTD332000
	4	UTD342000
	B	UTD3B2000
	D	UTD3D2000

	Type	Code
*2c	1	UTD412000
	2	UTD422000
	3	UTD432000
	4	UTD442000
	B	UTD4B2000
	D	UTD4D2000

Item Pos.	Q.	Norms	Description	Benennung	Désignation	Descrizione	Code		
							MBF-042	MBF-073	MBF-114
1	1		Body	Gehäuse	Corps	Corpo dosatore	2068A79_A	2068A81_A	2068A83_A
2	1		STD Inspection hatch	STD Inspektionstür	Trappe de visite STD	Portello di Ispesione STD	MBPI2	MBPI3	MBPI4
2a	1		Inspection hatch with extended tube	Inspektionstür mit langlichrohr	Trappe de visite avec tube prolonge	Portello di ispezione con tubo prolungato	MBPIP2	MBPIP3	MBPIP4
3	1		Agitator shaft	Wellenzapfen	Arbre comm. rotor omogénéisateur	Albero comando utensile omogeneizzatore	20945101A	20947371A	20947371A
4	1		Seal	Dichtung	Entachéité	Tenuta	MBTT2	MBTT3	MBTT4
5	2		Seal mount	Montierung fur dichtung	Support pour entachéité	Supporto per tenuta	-	-	-
6	2		Metering screw	Dosierwerkzeug	Vis de dosage	Utensile dosatore	2a*	2b*	2c*
7	1		Blending tool	Homogenisierwerkzeug	Homogénéisateur	Utensile omogenizzatore	UTO12 UTO22	UTO13 UTO23	UTO14 UTO24

N.B. Rights reserved to modify technical specifications
N.B. Angaben ohne Gewähr. Änderungen können ohne Vorankündigung vorgenommen werden.
N.B. Toutes données portées dans le présent catalogue n'engagent pas le fabricant. Elles peuvent être modifiéés à tout moment.
N.B. Tutti i dati riportati nel presente catalogo non sono impegnativi e possono subire variazioni in qualsiasi momento.

WAMGROUP S.p.A.
Via Cavour, 338
I - 41030 Ponte Motta
Cavezzo (MO) - ITALY

☎ +39 / 0535 / 618111
fax +39 / 0535 / 618226
e-mail info@wamgroup.it
internet www.wamgroup.com
videoconference + 39 / 0535 / 49032

LEFT BLANK

MANUFACTURER INSTALLATION OPERATION AND MAINTENANCE MANUAL

AMARUQ WTP – NUNAVUT

VEOLIA PROJECT: 5000 218 009

WAM

SBB SERIES, FLEXIBLE INTERMEDIATE BULK CONTAINER DISCHARGER (FIBC DISCHARGER)

LEFT BLANK

EXTRAC®

Controllo
Traduzioni
e AGGIORNAMENTO
1208

WAMGROUP

2

MAINTENANCE

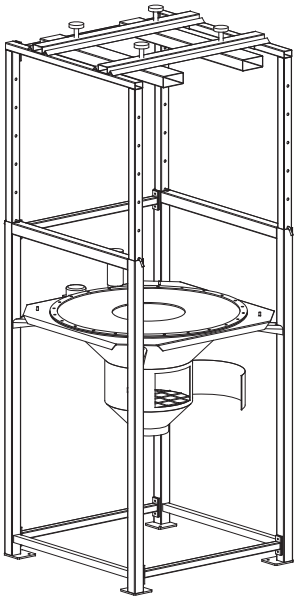

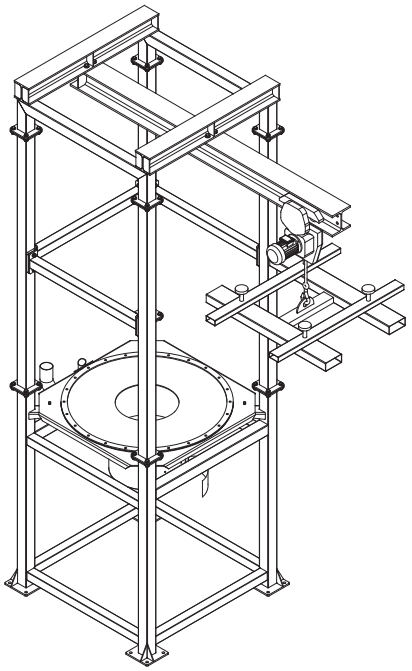

SBB

- **FLEXIBLE INTERMEDIATE BULK CONTAINER UNLOADER**
  INSTALLATION, OPERATION AND MAINTENANCE
- ***BIG-BAG - ENTLEERSTATION***
  EINBAU-, BETRIEBS- UND WARTUNGSANLEITUNG
- **VIDE-SACS DE GRANDES DIMENSIONS**
  INSTALLATION, UTILISATION ET ENTRETIEN
- ***SVUOTA BIG BAG***
  INSTALLAZIONE, USO E MANUTENZIONE

All rights reserved © WAMGROUP S.p.A.

CATALOGUE No. **EXT.096.--.M.4L**			
ISSUE **A8**	CIRCULATION **100**	LATEST UPDATE **12.13**	

WAM®

All the products described in this catalogue are manufactured according to **WAMGROUP S.p.A. Quality System procedures**. The Company's Quality System, certified in July 1994 according to International Standards **UNI EN ISO 9002** and extended to the latest release of **UNI EN ISO 9001**, ensures that the entire production process, starting from the processing of the order to the technical service after delivery, is carried out in a controlled manner that guarantees the quality standard of the product.

*Alle in diesem Katalog beschriebenen Produkte werden gemäß dem **Qualitätssystem der WAMGROUP S.p.A.** hergestellt. Das im Juli 1994 gemäß der internationalen Norm **UNI EN ISO 9002** und auf die neueste Version der **UNI EN ISO 9001** erweiterte, zertifizierte Qualitätssystem der Firma gewährleistet, dass der gesamte Produktionsprozess von der Auftragsbearbeitung bis zum technischen Kundendienst nach Lieferung in kontrollierter Art und Weise erfolgt, so dass der Qualitätsstandard des Produkts gewährleistet ist.*

Tous les produits décrits dans ce catalogue sont fabriqués selon les procédures du **Système de Qualité de WAMGROUP S.p.A.**, certifié en Juillet 1994 selon les normes internationales **UNI EN ISO 9002** et étendu à la dernière version de la norme **UNI EN ISO 9001**. Cela garantit que le processus de production, à partir de la gestion de la commande au service technique après-vente, est effectué de manière contrôlée garantissant la norme de qualité du produit.

*Tutti i prodotti descritti nel catalogo sono stati realizzati secondo le **procedure del Sistema Qualità di WAMGROUP S.p.A.** Il Sistema Qualità aziendale, certificato dal luglio 1994 in conformità alle normative internazionali **UNI EN ISO 9002** e successivamente esteso all' ultima versione delle normative **UNI EN ISO 9001**, garantisce che l'intero processo produttivo, dalla formulazione dell'ordine fino all'assistenza tecnica dopo la consegna, si svolga secondo modalità controllate che garantiscono lo standard qualitativo del prodotto.*

This publication cancels and replaces any previous edition and revision.
We reserve the right to implement modifications without notice.
This catalogue cannot be reproduced, even partially, without prior written consent by the Manufacturer.

Diese Veröffentlichung storniert und ersetzt alle früheren Ausgaben und überarbeiteten Fassungen.
Wir behalten uns das Recht vor, Änderungen ohne vorherige Information durchzuführen.
Dieser Katalog darf selbst auszugsweise nicht ohne das schriftliche Einverständnis der Herstellers vervielfältigt werden.

Cette publication annule et remplace toute édition et révision antérieure.
Nous nous réservons le droit de mettre en place des modifications sans préavis.
Aucune reproduction, partielle ou intégrale du catalogue, ne pourra être faite sans l'accord préalable et écrit du Fabricant.

Questa pubblicazione annulla e sostituisce le edizioni e revisioni precedenti.
Ci riserviamo la facoltà di apportare modifiche senza preavviso.
Il presente catalogo non può essere riprodotto, nemmeno parzialmente, senza previo consenso scritto del Costruttore.

2 MAINTENANCE CATALOGUE — WARTUNGS KATALOG

MANUFACTURING DATA	KONSTRUKTIONSDATEN **M.01**
GENERAL STANDARDS	ALLGEMEINES **.02**
OPERATING CONDITIONS	EINSATZEINSCHRÄNKUNGEN **.03**
INDICATIONS FOR USE	ANGABEN ZUM GEBRAUCH **.04**
WARNINGS	HINWEISE **.05**
DESCRIPTION AND USE	BESCHREIBUNG UND FUNKTION **.06 →.08**
WARRANTY CONDITIONS	GARANTIEBEDINGUNGEN **.09**
TRANSPORT AND STORAGE	TRANSPORT UND EINLAGERUNG **.10**
PAKING AND WEIGHTS	VERPACKUNGEN UND GEWICHTE **.11**
STORING THE MACHINE	LAGERHALTUNG **.12**
PACKING - UNPACKING	VERPACKUNG - AUSPACKEN **.13**
HANDLING	HANDLING **.14**
INSTALLATION - ANCHORING	INSTALLATION - BEFESTIGUNG **.15**
INSTALLATION - ASSEMBLY OF MODEL S	INSTALLATION - ZUSAMMENBAU MODELL S **.16**
INSTALLATION - ASSEMBLY OF MODEL M	INSTALLATION - ZUSAMMENBAU MODELL M **.17→.20**
ELECTRICAL CONNECTIONS	ELEKTRISCHE ANSCHLÜSSE **.21**
ELECTRIC -PNEUMATIC ACTUATORS CONNECTION	ELEKTRISCHER UND PNEUM. ANSCHLÜSS DER AUSTRAG **.22→.30**
START-UP	INBETRIEBNAHME **.31**
START-UP - OPERATION	INBETRIEBNAHME - BETRIEB **.32→.33**
START-UP - ADJUSTING THE ELECTRIC VIBRATOR	INBETRIEBNAHME - EINSTELLUNG DES UNWUCHTMOTORS **.34**
START-UP - PNEUMATIC ACTUATORS	INBETRIEBNAHME - PNEUMATISCHE AUSTRAGHILFEN **.35→.37**
MAINTENANCE - WARNING	WARTUNG - HINWEISE **.38→.40**
CLEANING	REINIGUNG **.41**
OPERATION NOISE	BETRIEBSGERAUSCHE **.42**
RESIDUAL RISKS	RESTRISIKEN **.43**
SCRAPPING THE MACHINE - RETURNING THE MACHINE	VERSCHROTTEN DER MASCHINE - MASCHINENRÜCKG **.44**
FAULT FINDING	BETRIEBSSTÖRUNGEN UND ABHILFE **.45**
DECLARATION OF CONFORMITY	KONFORMITÄTSERKLÄRUNG **.46→.49**

2 CATALOGUE D'ENTRETIEN — CATALOGO DI MANUTENZIONE

DONNÉES COSTRUCTIVES	DATI COSTRUZIONE **M.01**
CONSIGNES GENERALES	NORME GENERALI **.02**
LIMITES D'EMPLOI	LIMITI DI IMPIEGO **.03**
MODE D'EMPLOI	INDICAZIONE PER L'USO **.04**
RECOMMANDATIONS	AVVERTENZE **.05**
DESCRIPTION ET DOMAINE D'UTILISATION	DESCRIZIONE E FUNZIONE D'USO **.06 →.08**
CONDITIONS DE GARANTIE	CONDIZIONI DI GARANZIA **.09**
TRANSPORT ET EMMAGASINAGE	TRASPORTO E IMMAGAZZINAGGIO **.10**
EMBALLAGES ET POIDS	IMBALLI E PESI **.11**
EMMAGASINAGE	IMMAGAZZINAGGIO **.12**
EMBALLAGE DEBALLAGE	IMBALLO-RIMOZIONE **.13**
MANUTENTION	MOVIMENTAZIONE **.14**
INSTALLATION - NORMES DE FIXATION	INSTALLAZIONE- NORME DI FISSAGGIO **.15**
INSTALLATION - ASSEMBLAGE MODELE S	INSTALLAZIONE - ASSEMBLAGGIO MODELLI "C" ed "S" **.16→.20**
INSTALLATION - ASSEMBLAGE MODELE M	INSTALLAZIONE- ASSEMBLAGGIO MODELLO M **.21→.24**
RACCORDEMENTS ÉLECTRIQUES	COLLEGAMENTI ELETTRICI **.25**
RACCORDEMENT ÉLECTRIQUE-PNEUMATIQUE DES ACTION.	COLLEGAMENTO ELETTRO-PNEUMATICO ATTIVATORI **.26→.34**
MISE EN SERVICE DE LA MACHINE	MESSA IN SERVIZIO DELLA MACCHINA **.35**
MISE EN SERVICE - FONCTIONNEMENT	MESSA IN SERVIZIO - FUNZIONAMENTO **.36→.37**
MISE EN SERVICE - REGLAGE DU MOTOVIBRATEUR	MESSA IN SERVIZIO - REGOLAZIONE MOTOVIBRATORE **.38**
MISE EN SERVICE - ACTIONNEURS PNEUMATIQUES	MESSA IN SERVIZIO - ATTIVATORI PNEUMATICI **.39→.41**
ENTRETIEN - RECOMMANDATIONS	MANUTENZIONE - AVVERTENZE **.42→.44**
NETTOYAGE	PULIZIA **.45**
BRUYANCE	RUMOROSITA' **.46**
RISQUES RESIDUELS	RISCHI RESIDUI **.47**
DEMANTELEMENT DE LA MACHINE- RESTITUTION MACHINE	ROTTAMAZIONE MACCHINA - RESO MACCHINA **.48**
RECHERCHE DES PANNES	RICERCA GUASTI **.49**
DECLARATION DE CONFORMITE	DICHIARAZIONE DI CONFORMITA' **.50→.53**

ADDRESS OF LOCAL DEALER OR SERVICE POINT	ANSCHRIFT DES LOKALEN HÄNDLERS ODER KUNDEN-DIENSTES	ADRESSE DU REVENDEUR OU DU SERVICE APRES-VENTE LOCAL	INDIRIZZO RIVENDITORE O PUNTO DI ASSISTENZA LOCALE

MACHINE IDENTIFICATION

Refer to order code in acknowledgment of order, in invoice and on packaging to identify equipment or on the label applied on the package or on the plate affixed directly on the machine..

IDENTIFIKATION DER MASCHINE

Zur korrekten Identifikation des Geräts auf den Code Bezug nehmen, der sich in der Auftragsbestätigung, der Rechnung und dem Aufkleber auf der Verpackung oder dem Schild auf der Maschine befindet.

IDENTIFICATION DE LA MACHINE

Pour identifier correctement la machine, vous devez vous référer au code qui se trouve sur la confirmation de commande, sur la facture ou sur l'étiquette apposée sur l'emballage et sur la plaque appliquée directement sur la machine.

IDENTIFICAZIONE DELLA MACCHINA

Per una corretta identificazione della macchina, bisogna fare riferimento al codice che si trova sulla conferma d'ordine, sulla fattura o sulla etichetta posta sull'imballo e sulla targhetta direttamente applicata sulla macchina.

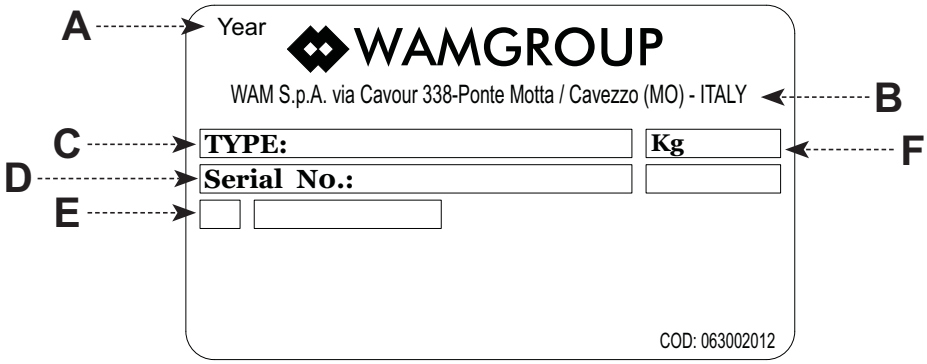

Identification plate of machine
The plate is affixed on machine.
A) Year of manufacture
B) Manufacturer's identification
C) Type of machine
D) Serial No.
E) Progressive number of section
F) Weight of the machine

Schnecken-Typenschild
Auf jedem Schneckenteil befindet sich ein identisches Typenschild.
A) Baujahr
B) Herstelleridentifikation
C) Schneckentyp
D) Serien-Nr.
E) Schneckenteil Nr.
F) Gewicht Schnecke

Plaque vis
Sur chaque tronçon de equipement il y a une plaque identique.
A) Année
B) Identification du constructeur
C) Type de equipement
D) N° de série
E) Tronçon de equipement N°
F) Poids de l'equipement

Targa identificazione della macchina
La targa è applicata sulla macchina o se e composta in più sezioni su ogni sezione.
A) Anno di fabbricazione
B) Identificazione del costruttore
C) Tipo di macchina
D) Numero di serie
E) Numero progressivo della sezione
F) Peso della macchina

SCOPE AND IMPORTANCE OF THE MANUAL

This manual, prepared by the manufacturer, forms an integral part of the FIBC UNLOADER; it must therefore accompany of the FIBC UNLOADER right up to its final scrapping, and must be available ready at hand for consultation by the operators concerned and those in charge of operations at the work site. If the machine changes hands, this manual must be handed over to the new owner, as part of the SBB supply. Before carrying out any operation on or using the SBB, the personnel concerned must have read this manual carefully and completely. If the manual is lost, or in such a condition as to make it illegible, download a new copy from the internet site www.wamgroup.com, and check the date of the last revision. This manual provides warnings and indications concerning the safety regulations for preventing accidents at the work site. However, the operators MUST scrupulously follow the safety regulations meant for them by the existing legislation.
Modifications to the safety regulations made over time must be integrated and implemented.

ZWECK UND BEDEUTUNG DES HANDBUCHS

Dieses vom Hersteller erstellte Handbuch ist integrierender Teil der BIG-BAG Entleerstation.. Daher muss es der BIG-BAG Entleerstation unbedingt folgen, bis dieser zerlegt bzw. verschrottet wird. Es muss zudem einfach zu finden sein, wenn die betroffenen Bediener oder die Baustellenleitung in ihm nachschlagen wollen. Bei einem Besitzerwechsel des SBB muss das Handbuch dem neuen Besitzer als normale Bestückung des SBB ausgehändigt werden. Bevor irgendwelche Arbeiten an oder mit dem Austragboden SBB ausgeführt werden, müssen die betreffenden Personen dieses Handbuch unbedingt mit großer Aufmerksamkeit durchgelesen haben. Falls das Handbuch verloren geht oder unleserlich geworden ist, kann eine neue Kopie von den Internetseiten unter www.wamgroup.com heruntergeladen werden, nachdem man das Datum der letzten Aktualisierung des Handbuchs geprüft hat. Dieses Handbuch liefert Hinweise und Angaben zu den Sicherheits- und Unfallverhütungsbestimmungen am Arbeits-platz. Die Sicherheitsbestimmungen, die laut den geltenden Normen vom Bedienungspersonal zu beachten sind, müssen zu jedem Zeitpunkt beachtet wer-den.
Etwaige Änderungen der Sicherheitsbestimmungen, die im Laufe der Zeit vorgenommen werden, sind immer zu erfassen und umzusetzen.

BUT ET IMPORTANCE DU MANUEL

Le présent Manuel, rédigé par le constructeur, fait partie intégrante de la fourniture du vide BIG-BAG. Il doit absolument suivre le vide BIG-BAGS jusqu'à son démantèlement et être à portée de la main pour une consultation rapide de la part des opérateurs concernés et par la direction des travaux du chantier. En cas de changement de propriété de la machine, le manuel doit être remis au nouveau propriétaire, comme équipement du SBB.
Avant d'effectuer une quelconque opération avec ou sur le SBB, le personnel concerné doit absolument et obligatoirement avoir lu très attentivement le présent manuel. Si le manuel est égaré, abîmé de manière à ne plus être lisible, une copie doit être téléchargée à partir du site internet www.wamgroup.com en vérifiant la date de la dernière mise à jour. Le présent manuel fournit les recommandations et les indications concernant les consignes de sécurité pour la prévention contre les accidents du travail. Dans tous les cas les consignes de sécurité conformément aux normes en vigueur doivent être observée avec la plus grande attention par les différents opérateurs.
Les modifications éventuelle des consignes de sécurité devront être adoptées et mises en oeuvre.

SCOPO ED IMPORTANZA DEL MANUALE

Il presente manuale, redatto dal costruttore, è parte integrante del corredo dello svuota BIG-BAG; come tale deve assolutamente seguire lo svuota BIG-BAG fino al suo smantellamento ed essere facilmente reperibile per una rapida consultazione da parte degli operatori interessati e della direzione lavori del cantiere. In caso di cambio di proprietà della macchina, il manuale deve essere consegnato alla nuova proprietà, quale corredo dello stesso SBB. Prima di eseguire qualsiasi operazione con, o sul SBB, il personale interessato deve assolutamente ed obbligatoriamente aver letto con la massima attenzione il presente manuale. Qualora il manuale venga smarrito, sgualcito e tale da non essere leggibile, si deve scaricare una nuova copia dal sito internet www.wamgroup.com e verificarne la data dell'ultimo aggiornamento. Il presente manuale fornisce avvertenze ed indicazioni relative alle norme di sicurezza per la prevenzione degli infortuni sul lavoro. Vanno comunque, ed in ogni caso, osservate con il massimo scrupolo da parte dei vari operatori le norme di sicurezza poste a loro carico dalle vigenti normative.
Eventuali modifiche delle norme di sicurezza che nel tempo dovessero aver luogo, dovranno essere recepite ed attuate.

The basic features of the machine being unchanged, the manufacturer reserves the right to make modifications to components, parts and accessories, which he considers as suitable for improving the product or for structural or commercial requirements, at any moment, without any obligation to updating this manual immediately.

Auch wenn die wesentlichen Eigenschaften der beschriebenen Geräte unverändert bleiben, behält der Hersteller sich das Recht vor, Änderungen an Organen, Einzelteilen und dem Zubehör vorzunehmen, die er von Fall zu Fall als angemessen betrachtet, um das Produkt zu verbessern, oder wenn die Konstruktion oder der Vertrieb dies verlangen, ohne dazu gezwungen zu sein, diese Veröffentlichung immer sofort auf den neuesten Stand zu bringen.

Sans préjudice des caractéristiques principales des machines décrites, le constructeur se réserve le droit d'apporter les modifications aux organes, pièces et accessoires qu'il retient avantageuses pour l'amélioration du produit ou pour des exigences de fabrication ou commerciale, à tout moment et sans l'obligation de mettre à jour immédiatement cette publication.

Ferme restando le caratteristiche essenziali delle macchine descritte, il costruttore si riserva il diritto di apportare modifiche di organi, dettagli ed accessori, che riterrà convenienti per il miglioramento del prodotto o per esigenze di carattere costruttivo o commerciale, in qualunque momento e senza impegnarsi di aggiornare tempestivamente questa pubblicazione.

The FIBC Dischargers (SBB) are designed and constructed for carrying out their function in compliance with the following limits of use:

Maximum operating temperature:
+40°C in continuous mode

Minimum operating temperature:
-20°C

Height of FIBC:
- Min. 600mm
- Max. 2000mm
(for models S and M)

- Any
(for models T and C)

USE
- The FIBC unloader is NOT designed for operating in potentially explosive atmospheres or with materials that could be hazardous by contact and/or inhalation, or else dangerous from a bacteriological or viral viewpoint.

If the machine has to cater for similar requirements, please contact the manufacturer.

Die Big-Bag-Entleerstationen (SBB) wurden entwickelt und werden hergestellt, um ihre Funktion unter Berücksihtigung folgender Einsatzeinschrämkungen zu erfüllen:

Max. Betriebstemperatur:
+40°C bei Dauerbetrieb

Niedrigste Betriebstemperatur:
-20°C

Höhe der Big-Bags:
- Min. 600 mm
- Max. 2000 mm
(für Modelle S und M)

- Jede beliebige
(für Modelle T und C)

GEBRAUCHSANGABEN
- Diese Big-Bag-Entleerstationen sind NICHT zum Einsatz in explosionsgefährdeten Bereichen oder zum Betrieb mit Schütt-gütern bestimmt, die bei Berüh-rung und/oder Einatmen schäd-lich sind oder die unter bakte-riologischen oder virologischen Gesichtspunkten gefährlich sind.

Wenn die Maschinen unter solchen Bedingungen zum Einsatz kommen sollen, ist es vorgeschrieben, Kontakt mit dem Hersteller aufzunehmen.

Les vide BIG BAG (SBB) ont été conçus et projetés pour assurer leur fonction d'utilisation dans le respect des limites d'emploi suivantes :

Température maximum de travail :
+40°C en continu

Température minimum de travail :
-20°C

Hauteur des BIG-BAG:
- Min. 600 mm
- Max. 2000 mm
(pour modèles S et M)

- Quelconque
(pour modèles T et C)

MODES D'EMPLOI
- Le vide BIG-BAG N'A PAS été conçu pour travailler dans des atmosphères explosibles, ni avec des matières nocives au contact ou à l'inhalation, ou encore dangereuses du point de vue bactériologique et viral :

Quand la machine doit être utilisée dans ces conditions, il faut contacter le fabricant.

Gli svuota BIG-BAG (SBB) sono stati studiati e progettati per assolvere alla loro funzione d'uso nel rispetto dei seguenti limiti di impiego:

Temperatura massima di lavoro:
+40°C in continuo

Temperatura minima di lavoro:
-20°C

Altezza dei BIG-BAG:
- Min. 600 mm
- Max. 2000 mm
(per modelli S e M)

- Qualsiasi
(per modelli T e C)

INDICAZIONI PER L'USO
- Lo svuota BIG-BAG NON è statoprogettato per operare in atmosfere potenzialmente esplosive o con materiali nocivi al contatto e/o inalazione, oppure pericolosi dal punto di vista batteriologico e virale.

Quando la macchina deve assolvere a queste esigenze è d'obbligo contattare il Costruttore.

The FIBC UNLOADERS ARE NOT designed for operating in potentially explosive atmospheres or with materials that are harmful on contact and/or when inhaled, or hazardous from a bacteriological or viral point of view.
The manufacturer must be informed if the machine is required to satisfy these requirements.
The FIBC UNLOADER must be installed with sufficient clearance around it to allow for normal assembly/disassembly, cleaning and maintenance operations.
It is also forbidden to start up the machine before the plant in which it is installed has been declared as conforming to the provisions of Machine Directive 23/07/1998 (2006/42/CE). In this regard, the installer must make provision for installing suitable personal and public protection devices to avoid damage to objects and harm to persons in the event of breakage.
Before carrying out any operation, make sure the machine is in safety condition.

Die BIG-BAG Entleerstation sind NICHT zum Einsatz in explosionsgefährdeter Umgebung oder mit bei Berührung und/oder beim Einatmen schädlichen oder unter dem bakteriologischen oder virologischen Gesichtspunkt gefährlichen Substanzen ausgelegt.
Wenn die Maschine unter solchen Bedingungen arbeiten muss, ist es unbedingt erforderlich, den Hersteller davon zu unterrichten.
Die BIG-BAG Entleerstation ist so zu installieren dass ringsum ausreichend freier Platz bleibt, um die normalen Ein- und Ausbauarbeiten, die Reinigung und die Wartung auszuführen.
Es ist außerdem verboten, die Maschine in Betrieb zu nehmen, bevor die Anlage, in die sie installiert werden, den Bestimmungen der Maschinen-Richtlinie vom 123.07.1998 (2006/42/EG) konform erklärt worden ist. In diesem Rahmen ist es Pflicht des Anlagenbauers/Installateurs, die persönlichen bzw. der Allgemeinheit dienenden Schutzausrüstungen vorzubereiten und zu installieren, um zu vermeiden dass im Bruchfall Personen- oder Sachschäden entstehen.
Bevor man irgendeinen Eingriff an der Maschine ausführt, ist zu überprüfen, dass diese in einen sicheren Zustand versetzt worden ist.

Les vide BIG-BAG N'ONT pas été conçus pour travailler dans les atmosphères potentiellement explosibles, avec des matériaux nocifs au contact et/ou à l'inhalation ou encore dangereux du point de vue bactériologique et viral.
Quand la machine doit satisfaire ces exigences il est obligatoire d'en informer le constructeur.
Le vide BIG-BAG devra être installé avec un espace circonstant suffisant pour effectuer les opérations ordinaires de montage/démontage, nettoyage et entretien.
Il est interdit, en outre, de mettre en service la machine avant que l'installation dans laquelle il sera monté n'ait été déclarée conformes aux dispositions de la Directive Machines du 23/07/1998 (2006/42/CE). Dans ce cadre, le technicien installateur devra monter les équipements de protection individuels et collectifs, afin d'éviter les dommages aux choses ou aux personnes en cas de ruptures.
Avant d'effectuer une quelconque intervention sur la machine s'assurer que celle-ci a été placée en condition de sécurité.

Gli svuota BIG-BAG NON sono stati progettati per operare in atmosfere potenzialmente esplosive o con materiali nocivi al contatto e/o all'inalazione oppure pericolosi dal punto di vista batteriologico e virale.
Quando la macchina deve assolvere a queste esigenze è d'obbligo informare il costruttore.
Lo svuota BIG-BAG dovrà essere installato con uno spazio circostante sufficiente per effettuare le normali operazioni di montaggio/smontaggio, pulitura e manutenzione.
È vietato, inoltre, mettere in funzione la macchina prima che l'impianto nel quale venga installato sia stato dichiarato conforme alle disposizioni della Direttiva Macchine 23/07/1998 (2006/42/CE). In quest'ambito è cura dell'impiantista/installatore predisporre ed installare gli idonei dispositivi di protezione individuali e collettivi al fine di evitare danni a cose o persone in caso di rotture.
Prima di effettuare un qualsiasi intervento sulla macchina assicurasi che questa sia messa in sicurezza.

In this manual, from here onwards **"setting the machine in safety conditions"** will indicate the following operations:
- Make sure the machine is disconnected from all electric power supply sources.
- Make sure the machine is completely stopped
- Provide sufficient lighting around the machine operating area (the operators may be provided with electric lamps if necessary).
- Wait for the powder mass inside to settle down completely, and then stop the machine.

In diesem Handbuch verstehen wir unter dem Begriff **„das Gerät in einen sicheren Zustand versetzen"** folgendes:
- Sicherstellen, dass das Geräte von allen elektrischen Versorgungsquellen getrennt ist.
- Sicherstellen, dass die Maschine ganz still steht.
- Dafür sorgen, dass der Bereich rings um das Gerät in angemessener Weise beleuchtet ist (eventuell indem man das Personal mit elektrischen Lampen ausstattet).
- Sicherstellen, dass die Staubmasse innerhalb sich ganz abgelagert hat und sich daher nicht mehr bewegt.

Dans le présent manuel la consigne **"mettre la machine en sécurité"** indique les opérations suivantes :
- S'assurer que la machine est débranchée de toutes les alimentations électriques.
- S'assurer que la machine est complètement arrêtée.
- Eclairer correctement la zone qui entoure la machine (en dotant éventuellement les opérateur de lampes électriques).
- Attendre que la masse de poussière contenue se soit entièrement déposée et donc arrêtée.

In seguito, nel presente manuale, indicheremo con la dicitura **"mettere in sicurezza la macchina"** le seguenti operazioni:
- Accertarsi che la macchina sia scollegata da tutte le alimentazioni elettriche.
- Accertarsi che la macchina sia completamente ferma.
- Provvedere ad illuminare correttamente la zona circostante alla macchina (eventualmente dotando gli operatori di lampade elettriche).
- Attendere che la massa di polvere contenuta all'interno sia completamente depositata e quindi ferma.

Before carrying out any operation on the machine (maintenance or cleaning), the operators must use suitable personal protection equipment:
- antistatic safety footwear (certified)
- antistatic protective clothing (certified)
- helmet
- antistatic, cut-proof gloves
- safety masks

In addition to these, use the safety devices specified in the safety chart of the product handled.

Für jede am Gerät durch-zuführende Arbeit wie Wartung und Reinigung muss das Personal mit den entsprechenden persönlichen Schutzausrüstungen (PSA) ausgestattet sein:
- Antistatische Sicherheitsschuhe (zertifiziert)
- Antistatische Schutzkleidung (zertifiziert)
- Schutzhelme
- Antistatische Schnittschutz-Handschuhe
- Atemschutzmasken.

Außerdem sind die Schutz-maßnahmen, die auf dem Sicherheitsdatenblatt des behandelten Produkts stehen, betroffen.

Pour toute opération à effectuer sur la machine (entretien et nettoyage), les opérateurs devront être munis des équipements de protection individuelle (EPI) :
- Chaussures de sécurité antistatiques (certifiées)
- Vêtements de protection antistatiques (certifiés)
- Casque
- Gants anticoupure antistatiques
- Maques de protection respiratoire

En outre les équipements de protection prévus par la fiche de sécurité du produit traité.

Per qualsiasi operazione da effettuarsi sulla macchina (manutenzioni e pulizia), gli operatori dovranno essere muniti degli appositi dispositivi di protezione individuale (DPI):
- Scarpe antinfortunistiche antistatiche (certificate)
- Indumenti protettivi antistatici (certificati)
- Casco
- Guanti antitaglio antistatici
- Mascherine protettive

Inoltre quei dispositivi di protezione previsti dalla scheda di sicurezza del prodotto trattato.

WARNINGS

The manufacturer shall be relieved of all responsibility concerning the safety of persons and objects and operations if the truck loading and unloading operations, transport, positioning at the worksite, use, repairs, maintenance are not carried out in conformity with the instructions in this manual.

Similarly the manufacturer shall not be responsible iif the FIBC is used:

- improperly;
- by unauthorized and/or unskilled personnel;
- with modifications to the original configuration;
- with spare parts that are not original;
- in a manner non conforming to existing standards and legisla tion;
- non conforming to the recom mendations in this manual or on the warning and hazard notices on the machine.

The user is obliged to carefully check that the work area is clear of obstacles, persons, and machines with potential risk, before carrying out any operation.

Lifting, transport, installation at the worksite, set-up, checking stability and operations, routine and extraordinary maintenance, etc. must be carried out by qualified authorized personnel according to the instructions in this manual and in compliance with the existing safety regulations.

When positioning the FIBC at the work site must be earthed.

- It is forbidden to carry out maintenance, repairs or modifications with the machine in operation.
- For every operation, it is compulsory to disconnect all the electric power supplies to the machine.
- It is forbidden to remove the guards and safeties present on the machine.
- Before startup, make sure all the guards are installed correctly.

HINWEISE

Der Hersteller betrachtet sich jeglicher Haftung hinsichtlich der Sicherheit von Personen, Sachen und Betrieb enthoben, falls das Auf- und Abladen vom Lkw, Transport, Aufstellung auf der Baustelle, Gebrauch, Reparaturen, Wartung etc. nicht gemäß der in diesem Handbuch beschriebenen Hinweise ausgeführt werden.

Gleichermaßen betrachtet der Hersteller sich in keinerlei Weise verantwortlich, falls die BIG-BAG Entleerstation wie folgt benutzt wird:

- bestimmungswidrig;
- durch Personal, das nicht befugt und/oder ausreichend angewiesen ist;
- mit Änderungen im Bezug zur ursprünglichen Konfiguration;
- mit Einbau von Ersatzteilen, die keine Originale sind;
- nicht entsprechend der augenblicklich geltenden Normen und Gesetze;
- nicht entsprechend der Empfehlungen dieses Hand buchs oder der Hinweis- und Warnschilder, die auf der Ma schine angebracht sind.

Der Anwender ist dazu verpflichtet, vor der Ausführung irgendeines Vorgangs sehr aufmerksam zu prüfen, dass der Arbeitsbereich frei von Hindernissen, Personen und Maschinen ist, die eine mögliche Gefahrenquelle darstellen.

Heben, Transport, Installation auf der Baustelle, Inbetriebnahme, Standsicherheits- und Funktion stests, regelmäßige und außeror dentliche Wartung etc. müssen durch qualifiziertes und befugtes Personal vorgenommen werden, das gemäß der Anweisungen, die in diesem Handbuch stehen, und unter Beachtung der geltenden Sicherheitsbestim mungen vorzugehen hat.

Bei der Aufstellung vor Ort muss die Big-Bag-Entleerstation geerdet werden.

- Es ist verboten, die laufende Maschine zu warten, zu reparieren oder zu ändern.
- Vor jedem Eingriff ist es unbedingt erforderlich, alle elektrischen Verbindungen der Maschine abzuklemmen.
- Es ist verboten, die Schutz- und Sicherheitseinrichtungen, die auf der Maschine vorhanden sind, zu entfernen.
- Vor der Inbetriebnahme sicherstellen, dass alle Schutzvorrichtungen korrekt installiert sind.

RECOMMANDATIONS

Le constructeur se considère dégagé de toute responsabilité concernant la sécurité des personnes, des choses et du fonctionnement si les opérations de chargement et de déchargement du camion, transport, positionnement sur chantier, utilisation, réparations, entretiens, etc. n'ont pas été effectuées conformément aux recommandations décrites dans cette notice d'instructions.

De même le constructeur ne pourra être considéré respon sable si le vide BIG-BAG est utilisé:

- de manière impropre;
- par du personnel non autorisé et/ ou pas suffisamment formé;
- avec des modifications par rapport à la configuration originale ;
- avec introduction de pièces détachées non d'origine ;
- de manière non conforme à la réglementation et à la législation en vigueur ;
- de manière non conforme aux recommandations fournies dans la présente notice ou par les plaques signalétiques apposées sur la machine.

L'utilisateur a l'obligation de vérifier avec la plus grande attention, avant d'effectuer une quelconque opération, que la zone de travail est dégagée de tout obstacle, personnes, machines pouvant représenter une source potentielle de danger.

Les opérations de soulèvement, le transport, le montage sur chantier, la mise en service, les vérifications de stabilité et de fonctionnement, les entretiens ordinaires et extraordinaires, etc. doivent être effectuées par du personnel qualifié et autorisé, lequel doit intervenir suivant les indications indiquées dans la présente notice d'instructions et dans le respect des normes de sécurité en vigueur.

Au moment du positionnement sur chantier le vide BIG BAG doit être relié électriquement à la terre.

- Il est interdit d'effectuer des opérations d'entretien, des réparations ou des modifications quand la machine est en marche.
- Avant toute opération il est obligatoire de débrancher toutes les alimentations électriques de la machine.
- Il est interdit d'enlever les protections et les sécurités présentes sur la machine.
- Avant la mise en marche s'assurer que toutes les protections sont montées correctement.

AVVERTENZE

Il costruttore si riterrà sollevato da qualsiasi responsabilità inerente la sicurezza delle persone, delle cose e di funzionamento qualora le operazioni di carico e scarico da autocarro, trasporto, posizionamento in cantiere, utilizzo, riparazioni, manutenzioni, ecc. non siano eseguite conformemente alle avvertenze descritte nel presente manuale.

Analogamente il costruttore non si riterrà in alcun modo responsabile qualora lo svuota BIG-BAG venga utilizzato:

- impropriamente;
- da personale non autorizzato e/o non sufficientemente addestrato;
- con modifiche rispetto alla configurazione originale;
- con inserimento di parti di ricambio non originali;
- non conformemente alla normativa e legislazione attualmente vigente;
- non conformemente a quanto raccomandato nel presente manuale o sulle targhette di avvertenza e pericolo applicata sulla macchina.

Per l'utente è fatto obbligo di verificare con la massima attenzione, prima di eseguire qualsiasi operazione, che la zona di lavoro sia libera da ostacoli, persone, macchine potenziali fonti di pericolo.

Le operazioni di sollevamento, trasporto, installazione in cantiere, la messa in funzione, le verifiche di stabilità e funzionamento, le manutenzioni ordinarie e straordinarie,ecc., devono essere svolte da personale qualificato ed autorizzato, il quale deve operare secondo le indicazioni riportate nel presente manuale e nel rispetto delle vigenti norme di sicurezza.

All'atto del posizionamento in cantiere lo svuota BIG-BAG deve essere collegato elettricamente a terra.

- É vietato manutenzionare, eseguire riparazioni o modifiche con la macchina in funzione.
- Prima di ogni operazione è obbligatorio scollegare tutte le alimentazioni elettriche della macchina.
- É vietato rimuovere le protezioni e le sicurezze presenti sulla macchina.
- Prima dell' avviamento assicurarsi che tutte le protezioni siano correttamente installate.

The FIBC in this catalogue (code SBB) are devices suitable for discharging bags of different shapes and sizes.
They are manufactured from shot-blasted, painted steel; on request, they may be supplied in 304 stainless steel, entirely or only the parts in contact with the product to prevent its contamination.
The numerous models and sizes of SBB available, together with the complete range of accessories make this equipment suitable for use in virtually all applications and industrial sectors and with different types of FIBCs: in fact, the hopper, which can also be supplied alone, is specially designed for optimising the flow of materials.

Die in diesem Katalog beschriebenen Big-Bag-Entleerstationen (Code SBB) sind Vorrichtungen, die zum Entleeren Big-Bags unterschiedlicher Form und Abmessungen geeignet sind.
Sie bestehen aus sandgestrahltem und lackiertem Stahl. Auf Anfrage sind sie auch entweder komplett oder, zur Verhinderung der Produktverunreinigung, nur in den produktberührenden Teilen aus Edelstahl 1.4301 lieferbar.
Die zahlreichen Modellvarianten der SBB in Bezug auf Abmessungen und das komplette Zubehörsortiment machen diese Geräte für praktisch jeden Einsatz in allen Industriezweigen und für unterschiedliche Big-Bag-Typen einsetzbar: Die Trichter, die auch separat lieferbar sind, sind so konstruiert, dass die Fließfähigkeit des Schüttguts optimiert wird.

Les vide BIG-BAG (code SBB) représentés dans ce catalogue sont des dispositifs qui servent à décharger des sacs de différentes formes et dimensions.
Ils sont réalisés en acier au carbone sablé et peint. Sur demande, ils peuvent être réalisés en acier inox 304, soit entièrement, soit uniquement les parties au contact du produit pour éviter de le contaminer.
Les nombreuses variantes de SBB en termes de modèle et dimensions disponibles, associées à une ample gamme d'accessoires, rendent ces machines utilisables pour n'importe quelle application pratiquement dans tous les secteurs industriels et avec différents types de BIG-BAG : en effet la trémie, qui peut être fournie même séparément, a été conçue spécialement pour optimiser la fluidité des produits.

Gli svuota BIG-BAG (codice SBB) rappresentati in questo catalogo sono dispositivi idonei a scaricare sacchi di svariate tipologie per forme e dimensioni.
Sono realizzati in acciaio al carbonio sabbiato e verniciato; su richiesta comunque possono essere realizzati in AISI 304, sia interamente che solo nelle parti a contatto col prodotto per evitare contaminazioni dello stesso.
Le numerose varianti di SBB in termini di modello e dimensioni disponibili, unite ad una completa gamma di accessori, rendono queste macchine utilizzabili per qualsiasi applicazione in tutti i settori industriali e con diverse tipologie di BIG-BAG: infatti la tramoggia, che può essere fornita anche da sola, è stata accuratamente studiata per ottimizzare la scorrevolezza dei materiali.

MACHINE CODE
- SBB

MACHINE TYPE
- FLEXIBLE INTERMEDIATE BULK CONTAINER UNLOADER

USE
- Emptying FIBCs of various sizes containing product in powder or granular form.

ADVANTAGES
- Equipment which can be assembled according to requirements.
- The model with hoist does not require the use of a forklift truck.
- The removable frame makes it possible to empty FIBCs 600 to 2000 mm in height.
- The operator is protected from falling FIBCs by the four posts of the frame.
- The FIBC valve can be accessed through the hatch.
- The pneumatic activators optimises emptying of FIBCs.

MASCHINENCODE
- SBB

MASCHINENTYPE
- BIG-BAG ENTLEERSTATION

BENUTZUNG
- Entleeren von Big-Bags unterschiedlicher Größe mit staub- und granulatförmigen Produkten.

VORTEILE
- Leicht und schnell aufstellbares Gerät.
- Die Version mit Flaschenzug kann ohne Einsatz von Gabelstaplern verwendet wird.
- Der herausziehbare Rahmen ermöglicht das Entleeren von Big-Bags mit Höhen von 600 bis 2000 mm.
- Der Bediener ist gegen den eventuellen Absturz des Big-Bags durch die vier Ständer des Gestells geschützt.
- Die Klappe ermöglicht den Zugriff zum Ventil des Big-Bags.
- Die pneumatische Austraghilfe optimiert die Entleerung des Big-Bags.

CODE MACHINE
- SBB

TYPE DE MACHINE
- VIDE-SACS GRANDES DIMENSIONS

UTILISATION
- Vidage de GRANDS SACS de différentes dimensions avec des produits en poudre ou granulaires.

AVANTAGES
- Machine composée suivant les exigences.
- La version avec palan n'exige pas l'utilisation du chariot élévateur.
- Le châssis démontable permet de vide des sacs d'une hauteur de 600 à 2000 mm.
- Les opérateurs sont protégés contre la chute des sacs par quatre montants du châssis.
- Une trappe permet l' accès à la vanne du BIG BAG.
- Les activateurs pneumatiques optimisent le vidage du BIG BAG.

CODICE MACCHINA
- SBB

TIPO MACCHINA
- SVUOTA BIG-BAG

FUNZIONE D'USO
- Svuotamento di BIG-BAG di varie dimensioni con prodotti in polvere o granulari.

VANTAGGI
- Macchina componibile a seconda delle esigenze.
- La versione con paranco non richiede l' utilizzo del carrello elevatore.
- Il telaio sfilabile permette di svuotare big bag con altezze da 600 a 2000 mm.
- Gli operatori sono protetti dall' eventuale caduta dei big bag dai quattro montanti del telaio.
- Attraverso il portello si accede alla valvola del BIG BAG.
- Gli attivatori pneumatici ottimizzano lo svuotamento del BIG BAG.

MODELS AVAILABLE

MODEL T:
UNLOADING HOPPER
- SBB._.125.T
- SBB._.150.T
Supplied separately, in two sizes, it is carefully designed to optimize the flowability of materials.
It comprises:
- seals made of material suitable for the type of use.
- adjustable weight motovi-brator.
- vent pipe with filter bag.
- finger mesh.
- inspection hatch with seal.
- damper supports.

MODEL C:
HOPPER WITH FEET
- SBB._.125.C
- SBB._.150.C
Thanks to its structure, there is plenty of space for using different systems for loading the FIBCs.
It comprises:
- a unloading hopper.
- supporting frame made of tubular elements having suitable size and thickness to ensure sturdiness and solidity.
- cross with pegs for hooking FIBC harness, lifting hooks and tubular elements for lift truck forks

MODEL S:
HOPPER WITH REMOVABLE FRAME
- SBB._.125.S
- SBB._.150.S
Athough it is identical as regards design and use, the difference lies in the size of the FIBCs which can be accepted.
These comprise:
- a unloading hopper.
- supporting tubular frame having size and thickness suitable to guarantee sturdiness and solidity.
- removable frame which makes it possible to adapt the Unloader for use with FIBCs of different heights.
- cross with pegs for hooking FIBC harness, lifting hooks and tubular elements for lift truck forks

LIEFERBARE MODELLE

MODELL T:
AUSLAUFTRICHTER
- SBB._.125.T
- SBB._.150.T
Wird separat geliefert; in zwei Größen erhältlich; ausgelegt, um optimalen Materialfluß zu gewährleisten.
Besteht aus:
- Dichtung aus dem Einsatz angepaßten Material.
- Vibrationsmotor mit einstellbaren Unwuchtmassen.
- Entlüftungsstutzen mit Filtersack.
- Schutzgitter.
- Inspektionsklappe mit Dichtung.
- Schwingungsdämpfende Träger.

MODELL C:
TRICHTER AUF STANDBEINEN
- SBB._.125.C
- SBB._.150.C
Läßt dank der besonderen Konstruktion viel Platz für Big-Bag-Handlingsyteme.
Besteht aus:
- Auslauftrichter.
- Traggestell aus Rohren mit solchen Abmessungen und Wandstärken, dass eine robuste und solide Bauweise gewährleistet wird.
- Kreuzteil mit Stiften zum Einhaken der Big-Bag-Gurte, Hubhaken und Rohre für die Gabeln des Staplers.

MODELL S:
TRICHTER MIT HERAUSZIEHBAREM GESTELL
- SBB._.125.S
- SBB._.150.S
Im Aufbau und im Einsatz identisch, jedoch geeignet für größere Big-Bags.
Besteht aus:
- Auslauftrichter.
- Rohrtragegestell in robu-ster Bauweise.
- Herausziehbarer Rahmen zur Anpassung des Geräts an verschiedene Big-Bag-Größen.
- Kreuzteil mit Stiften zum Einhaken der Big-Bag-Gurte, Hubhaken und Rohre für die Gabeln des Staplers.

MODELES DISPONIBLES

MODELE T:
TREMIE DE DÉCHARGEMENT
- SBB._.125.T
- SBB._.150.T
Fournie même seule, en deux dimensions, elle a été étudiée spécialement pour optimiser l' écoulement des produits.
Elle est composée de:
- joint en matière appropriée au secteur d' utilisation.
- motovibrateur à masses réglables.
- tube d' évent à manchon filtrant.
- grille de sécurité.
- trappe de visite avec joint.
- supports absorbe vibrations.

MODELE C :
TREMIE AVEC PIEDS
- SBB._.125.C
- SBB._.150.C
Grâce à sa conformation il laisse un espace ample à l'utilisateur des systèmes les plus variés de chargement du BIG BAG.
Composé de:
- trémie de dechargement.
- châssis de soutien réalisé en tubulaire aux dimensions et épaisseurs garantissant la robustesse et la solidité de la structure.
- croisillon à picots d' accrochage des bretelles BIG BAG, crochet de soulèvement et tubulaires pour fourches de chariot élévateur.

MODELE S :
TREMIE AVEC CHASSIS AMOVIBLE
- SBB._.125.S
- SBB._.150.S
Bien qu' étant identiques par composition et utilisation ils se différencient par les dimensions des SACS «BIG BAG» qu'ils peuvent accepter.
Ils sont composés de:
- trémie de dechargement.
- châssis réalisé en tubulaire aux dimensions et épaisseurs garantissant robustesse et solidité.
- châssis démontable pour permettre d' adapter la machine aux différentes hauteurs des BIG BAG.
- croisillon à picots d' accrochage des bretelles BIG BAG, crochet de soulèvement et tubulaires pour fourches de chariot élévateur.

MODELLI DISPONIBILI

MODELLO T:
TRAMOGGIA DI SCARICO
- SBB._.125.T
- SBB._.150.T
Fornita anche da sola, in due dimensioni, è stata accuratamente studiata per ottimizzare la scorrevolezza dei materiali.
E' composta da:
- guarnizione di tenuta in materiale idoneo al settore di impiego.
- motovibratore a masse regolabili.
- tubo sfiato aria con manica filtrante.
- griglia di sicurezza.
- portello di ispezione con relativa guarnizione.
- supporti antivibranti.

MODELLO C:
TRAMOGGIA CON PIEDI
- SBB._.125.C
- SBB._.150.C
Grazie alla sua conformazione lascia ampio spazio all' utilizzo dei più svariati sistemi di carico del BIG BAG.
Composto da:
- tramoggia di scarico.
- telaio di sostegno realizzato in tubolari di dimensioni e spessori tali da garantire robustezza e solidità.
- crociera con pioli di aggancio bretelle BIG BAG, gancio di sollevamento e tubolari per forche carrello elevatore.

MODELLO S:
TRAMOGGIA CON TELAIO SFILABILE
- SBB._.125.S
- SBB._.150.S
Pur essendo identici per composizione e funzione d' uso si differenziano per le dimensioni dei BIG BAG che possono accettare.
Sono composti da:
- tramoggia di scarico.
- telaio di sostegno realizzato in tubolari di dimensioni e spessori tali da garantire robustezza e solidità.
- telaio sfilabile per consentire di adattare la macchina alle diverse altezze dei BIG BAG.
- crociera con pioli di aggancio bretelle BIG BAG, gancio di sollevamento e tubolari per forche carrello elevatore.

MODEL M:
FRAME WITH MONORAIL
- SBB._.125.M

The special feature of this equipment lies in the fact that it does not require the use of a fork lift truck for external loading of FIBCs, as it is designed for use with its own hoist (not supplied) which makes it possible to operate independently during the various phases.
The equipment comprises:
- a unloading hopper.
- a supporting frame made of suitably sized tubular elements thick enough to guarantee the required sturdiness and solidity.
- a monorail for the hoist (hoist excluded)..
- cross with pegs for hooking the FIBC harness, lifting hooks and tubular elements for using a lift truck if necessary for handling FIBCs.

MODELL M:
GESTELL MIT EINSCHIENEN-BAHN
- SBB._.125.M

Die Besonderheit dieses Geräts besteht darin, daß es zum Aufladen des Big-Bags keinen Gabelstapler benötigt, weil das Gerät für die Installation einer eigenen Seilwinde ausgelegt ist (gehört nicht zum Lieferumfang), was in den verschiedenen Arbeitsphasen ein Höchstmaß an Autonomie bedeutet.
Besteht aus:
- Auslauf trichter.
- Rohrtragegestell in robuster Bauweise.
- Monoschiene für Seilwinde (Flaschenzug ausgenommen).
- Kreuzteil mit Stiften zum Einhaken der Big-Bag-Gurte, Haken zum Heben und Rohre für die eventuelle Benutzung eines Gabelstaplers zum Handling der Big-Bags.

MODELE M :
CHASSIS AVEC MONORAIL
- SBB._.125.M

Sa particularité est celle de ne pas exiger l' utilisation d'un chariot élévateur pour le chargement du BIG BAG extérieur car il est prévu pour être équipé d' un treuil (non de fourniture) qui permet une meilleure autonomie dans les différentes phases de travail.
Composé de:
- trémie de dechargement.
- châssis réalisé en tubulaire aux dimensions et épaisseurs garantissant robustesse et solidité.
- monorail pour palan (palan exclu).
- croisillon à picots d'accrochage des bretelles BIG BAG, crochet de soulèvement et tubulaires pour l'utilisation éventuelle d'un chariot élévateur pendant les phases de manutention des BIG BAG.

MODELLO M:
TELAIO CON MONOROTAIA
- SBB._.125.M

La sua particolarità è quella di non richiedere l' uso di un carrello elevatore per il carico BIG BAG esterno in quanto è predisposto per l' installazione di un proprio verricello (non di fornitura) che permette la più completa autonomia nelle varie fasi di lavoro.
Composto da:
- tramoggia si scarico.
- telaio di sostegno realizzato in tubolari di dimensioni e spessori tali da garantire robustezza e solidità.
- monorotaia per paranco (paranco escluso).
- crociera con pioli di aggancio bretelle BIG BAG, gancio di sollevamento e tubolari per l' eventuale utilizzo di un carrello elevatore durante le fasi di movimentazioni dei BIG BAG.

ACCESSORIES

- Hopper seal made of food- grade material.

- Pneumatic activators
  Materials featuring poor flowability do not flow out of the FIBC easily. It is therefore necessary to use pneumatic activators. These devices act directly at the bottom of the FIBC, causing lifting and lowering of the opposite corners to stimulate the flow of material compacted at the bottom.
  The gradual movement of the activators makes the FIBC assume a "V" shape, to eliminate the deadlock points.
For more information, see Technical Catalogue - Maintenance KSC.

- Cutting device
  It is used for cutting FIBCs without valves which cannot be recycled after emptying.
- Hose connector kit available in black or white food- grade rubber.
- Round or square flange for hopper.
- Raised feet for lifting the entire structure.
- Mechanical limit stop for signalling door open status.
- Manual gate valve at outlet.

ZUBEHÖR

- Trichterdichtung aus nahrungsmitteltauglichem Material.

- Pneumatische Austraghilfe
  Materialien, die nur schwach rieselfähig sind und nur schwer aus dem Big-Bag ausgetragen werden können, verlangen den Einsatz pneumatischer Austraghilfen. Diese wirken direkt auf den unteren Teil des Big-Bags und bewegen die gegenüberliegenden Sackkanten auf- und abwärts, damit das im unteren Bereich verdichtete Material abläuft.
  Das ständige Ausfahren der Austraghilfe dient dazu, daß der Big-Bag eine V-förmige Gestalt annimmt, wodurch Toträume beseitigt werden.
Weitere Informationen siehe Technischer Katalog - Einbau und Wartungsanleitung KSC.

- Schneidevorrichtung
  Hat die Funktion, Einwegsäcke ohne Ventil aufzuschneiden.
- Montagesatz für flexible Verbindung, erhältlich in schwarzem oder weißem, nahrungsmittelechtem Kautschuk.
- Rund- oder Vierkantflansche für Trichter.
- Füße zum Höherstellen der kompletten Vorrichtung.
- Mechanischer Endschalter für Meldungen Klappe offen.
- Handschieber am Auslauf.

ACCESSOIRES

- Joint trémie en matière indiquée pour le secteur alimentaire

- Activateurs pneumatiques.
  Les matières peu fluides ne sortent pas facilement des sacs. Il est donc nécessaire d'appliquer des activateurs pneumatiques. Ils agissent directement sur le fond des «big bag» en déterminant un rehaussement ou un abaissement des angles opposés de manière à stimuler la sortie du produit compacte sur le fond.
  Le mouvement progressif des activateurs fait prendre une forme en «V» au big bag de manière à éliminer les points morts.
Pour plus d'informations voir Catolgue Techinique - Utilisation et Entertien KSC.

- Système de coupe.
  Sa fonction est de couper les gros sacs sans valve, qui ne sont pas récupérés après vidange.
- Kit de liaison flexible disponible en caoutchouc noir ou blanc pour secteur alimentaire.
- Brides rondes ou carrées pour la trémie.
- Pieds de rehausse pour le soulèvement de toute la structure.
-- Fin de course mécanique pour signaler l'ouverture du portillon.
- Vanne manuelle de décharge-ment.

ACCESSORI

- Guarnizione tramoggia in materiale idoneo al settore alimentare

- Attivatori pneumatici.
  I materiali poco scorrevoli non escono facilmente dai big bag pertanto si rende necessario applicare degli attivatori pneumatici. Questi agiscono direttamente sul fondo dei big bag determinando un innalzamento e un abbassamento degli spigoli opposti in modo da stimolare la fuoriuscita del materiale compattato sul fondo.
  La progressiva escursione degli attivatori fa si che il big bag assume la forma a "V" in modo da eliminare i punti morti.
Per ulteriori informazioni consultare il relativo Catalogo Tecnico - Uso e Manutenzione KSC.

- Sistema di taglio.
  Ha la funzione di tagliare BIG BAG senza valvola, monouso.
- Kit collegamento flessibile disponibile in gomma nera o bianca per settore alimentare.
- Flange tonde o quadre per tramoggia.
- Piedi di rialzo per il sollevamento di tutta la struttura.
- Fine corsa meccanico per segnalazioni apertura portello.
- Serranda manuale allo scarico.

The Manufacturer provides a 12-month warranty on their products. This period starts from the date of the consignment note.
The warranty is not applicable for breakage and/or defects caused by incorrect installation or use, or incorrect maintenance, or modifications not authorized by the Manufacturer.
The warranty does not extend to parts that wear out following normal use and electrical components.
To be more precise, the warrantee lapses if the FIBC:
- has been tampered with or modified,
- has not been used correctly,
- has been used without respecting the limits indicated in this manual and/or has been subjected to excessive mecha nical stress,
- has not been subjected to the necessary maintenance or these operations have been carried out partly and/or incorrectly,
- has been damaged due to carelessness during transport, installation and use,
- has been fitted with spare parts that are not original.

On receiving the product, the user must check these for defects deriving from transport and/or incomplete supply.
Defects, damage or incom pleteness of the supply must be immediately communicated to the Manufacturer in writing and countersigned by the haulage transporter.

Der Hersteller gewährt auf ihre Erzeugnisse eine Garantie von 12 Monaten. Die Garantiezeit beginnt mit dem Datum des Lieferscheins.
Die Garantie ist nicht anwendbar, wenn es sich um Schäden und/ oder Defekte handelt, die auf falschem Einbau oder Gebrauch, nicht korrekter Wartung oder Änderungen beruhen, die ohne die Genehmigung des Her-stellers ausgeführt wurden.
Die Garantie deckt keine Teile ab, die infolge des normalen Gebrauchs verschleißen, und auch keine elektrischen Teile.
Vielmehr erlischt die Garantie in jenen Fällen, in denen die Big-Bag-Entleerstation:
- manipuliert oder geändert wurde,
- nicht korrekt verwendet wurde,
- nicht unter der Beachtung der in diesem Handbuch genannten Grenzwerte benutzt wurde und/ oder zu starken mechanischen Belastungen ausgesetzt wurde,
- bei Transport, Installation und Gebrauch Schäden wegen Fahrlässigkeit erlitten hat,
- mit Ersatzteilen bestückt wurde, die keine Originalteile sind.

Beim Empfang der Ware hat der Empfänger sicherzustellen, dass die Ware keine durch den Transport verursachten Schäden oder Defekte aufweist, und/oder dass der Lieferumfang vollstän-dig ist.
Etwaige Defekte, Schäden oder Fehlmengen sind mittels schriftlicher und vom Frachtführer gegengezeichneter Mitteilung sofort dem Hersteller zu melden.

Le constructeur reconnaît une période de 12 mois de garantie sur les produits de sa fabrication.
La période prend effet à compter de la date indiquée sur le bon de livraison.
La garantie ne s'applique pas à la suite de ruptures et/ou de défauts provoqués par un montage et une utilisation impropre, des entretiens qui ne sont réalisés correctement ou des modifications apportées sans autorisation du constru cteur.
La garantie s'étend aux pièces qui s'usent à la suite d'une utilisation normale et aux parties électriques.
Plus précisément, la garantie est sans effet dans les cas où le vide BIG-BAG :
- a été manipulé ou modifié,
- a été utilisé de manière incor recte,
- a été utilisé sans respecter les limites indiquées dans la présen te notice et/ou qu'il a été soumis à des contraintes mécaniques excessives
- il n'a pas été soumis aux entretiens nécessaires ou que ces opérations ont été effectuées partiellement, de manière incom plète ou incorrecte
- a subit des dommages par négligence pendant le transport, la mise en place et l'utilisation,
- a été réparé avec des pièces qui ne sont pas d'origine.

Dès réception de la marchan dise, le destinataire doit vérifier que celle-ci n'a pas de défauts ou subit de dégâts dus au tran sport et que la fourniture n'est pas incomplète.
Tout défaut, dommage ou four niture incomplète doit immédia tement être signalée au constru cteur par communication écrite et contresignée par le tran sporteur.

Il costruttore riconosce un periodo di 12 mesi di garanzia sui prodotti di propria costruzione. Il periodo decorre dalla data della bolla di consegna.
La garanzia non è applicabile a seguito di rotture e/o difetti causati da errata installazione o utilizzo, oppure da manutenzioni non corrette o modifiche apportate senza autorizzazione del costruttore.
La garanzia non si estende alle parti che si logorano in seguito al normale uso e alle parti elettriche.
A miglior precisazione la garanzia decade nei casi in cui lo svuota BIG-BAG:
- sia stato manomesso o modificato,
- sia stato utilizzato non correttamente,
- sia stato utilizzato non rispettando i limiti indicati nel presente manuale e/o sia stato sottoposto ad eccessive sollecitazioni meccaniche,
- non sia stato sottoposto alle necessarie manutenzioni o queste siano state eseguite solo in parte e/o non correttamente,
- abbia subito danni per incuria durante il trasporto, l'installazione e l'utilizzo,
- siano state inserite parti di ricambio non originali.

Al ricevimento del prodotto, il destinatario deve verificare che lo stesso non presenti difetti o danni derivanti dal trasporto e/o incompletezza della fornitura.
Eventuali difetti, danni o incompletezza vanno immediatamente segnalati al costruttore mediante comunicazione scritta e controfirmata dal vettore.

CHECKING BEFORE SHIPMENT
The machine has been subjected to operating tests at our factory in order to guarantee correct installation. The special checks carried out by the manufacturer are as follows:
- Checking the power voltage of the electric motor vibrator, which must correspond to the value specified at the time of purchase.;
- Checking the serial number;
- Checking to ensure that all rating plates are present;
- Checking to ensure that all bolts and screws are locked properly;
- Checking the dimensions;
- Checking painting;
- Check correct working of the pneumatic actuators without load for about 15 minutes;
- Checking packaging.

KONTROLLEN VON DEM VERSAND
Die Maschine ist im Herstellerwerk einer gründlichen Funktionsprobe unterzogen worden, damit die korrekte Inbetriebnahme garantiert werden kann. Insbesondere wurden die folgenden Kontrollen ausgeführt:
- Kontrolle der Betriebsspannung des elektrischen Unwuchtmotors, die den Werten entsprechen muss, die bei der Bestellung angegeben wurden.
- Kontrolle der Serien-Nummer.
- Kontrolle auf das Vorhandensein aller Schilder.
- Kontrolle aller Schrauben auf festen Sitz.
- Größenkontrolle.
- Lackkontrolle.
- Kontrolle der pneumatischen Austraghilfen im leeren Zustand auf korrekte Funktion auf die Dauer von circa 15 Minuten
- Kontrolle der Verpackung.

CONTROLES AVANT L'EXPEDITION
La machine a subi dans nos établissement un essai de réception réel de fonctionnement, pour garantir une mise en service correcte. Les contrôles effectués par le constructeur sont notamment les suivants:
- Contrôle de la tension de fonctionnement du motovibrateur électrique, qui doit correspondre à la valeur demandée au moment de la commande;
- Contrôle du numéro de matricule;
- Contrôle de la présence de toutes les plaques;
- Contrôle du serrage de toute la visserie;
- Contrôle dimensionnel;
- Contrôle de la peinture;
- Contrôle du fonctionnement correct des actionneurs pneumatiques à vide pendant environ 15 minutes;
- Contrôle de l'emballage.

CONTROLLI PRIMA DELLA SPEDIZIONE
La macchina ha subito, presso i nostri stabilimenti, un reale collaudo funzionale, così da garantire la corretta messa in esercizio. In particolare i controlli compiuti dal costruttore sono i seguenti:
- Controllo della tensione di funzionamento del motovibratore elettrico, che deve corrispondere al valore richiesto al momento dell' acquisto;
- Controllo del numero di matricola;
- Controllo presenza di tutte le targhette;
- Controllo serraggio di tutta la viteria;
- Controllo dimensionale;
- Controllo verniciatura;
- Controllo corretto funzionamento degli attivatori pneumatici a vuoto per 15 minuti circa;
- Controllo imballaggio.

TRANSPORT
When the filter is delivered, make sure that the type and quantity of the materials consigned comply with the information on the order confirmation. Immediately inform the haulage contractor in writing if damage is discovered, using the relative space on the consignment form.
The driver is obliged to accept the complaint and to issue you with a copy.
If the filter has been supplied carriage forward, either sent your complaint to us or straight to the haulage contractor. Damages will only be reimbursed if you have notified the matter on receipt of the goods.
Avoid any kind of damage due to the unloading and handling operations; so lift loose parts, if any of the FIBC using the eyebolts provided. DO NOT PUSH OR PULL the components! Always bear in mind you are dealing with mechanical equipment which must be treated with care.

TRANSPORT
Bei Erhalt der Ware sicherstellen, ob Typ und Menge mit den Daten auf der Bestellung übereinstimmen.
Etwaige Transportschäden sind sofort auf dem Schriftwege zu melden, und zwar durch Eintragen auf dem Lieferschein.
Der Fahrer ist verpflichtet, diese Reklamation anzunehmen und Ihnen eine Kopie davon auszuhändigen. Wenn die Lieferung frei Haus erfolgt, senden Sie Ihre Reklamation an uns, andernfalls direkt an den Frachtführer. Die Entschädigung erfolgt nur, wenn der Schaden gleich bei Empfang der Ware gemeldet wird.
Beim Abladen und beim Handling jede Art der Beschädigung vermei-den. Zum Anheben der eventuell zerlegten Teile der Big-Bag-Ent-leerstation die vorhandenen Kran-ösen verwenden. Komponenten weder SCHIEBEN NOCH SCHLEI-FEN! Immer berücksichtigen, dass es sich um mechanische Elemente handelt, die mit Vorsicht zu behandeln sind.

TRANSPORT
Au moment où vous recevez la machine, vérifiez si la typologie et la quantité correspondent bien aux données qui se trouvent sur la confirmation de la commande.
Si vous constatez des dommages, vous devez immédiatement le déclarer en l'écrivant dans l'emplacement réservé à cet effet sur la lettre de voiture.
Le chauffeur est obligé d'accepter votre réclamation et de vous en laisser une copie. Si la fourniture a été livrée franco destination, envoyez-nous votre réclamation, sinon envoyez-la directement au transporteur.
Vous ne pourrez être remboursé des dommages et intérêts que si vous avez déclaré le dommage au moment où vous avez reçu la machine. Evitez tout type de dégât pendant le déchargement et les déplacements ; pour cela soulever les pièces éventuellement séparées du vide BIG-BAG en utilisant les crochets prévus à cet effet. VOUS NE DEVEZ NI PAS POUSSER, NI TRAINER les composants ! Rappelez-vous qu'il s'agit de matériel mécanique qui doit être déplacé avec le plus grand soin.

TRASPORTO
Al ricevimento della merce controllare se la tipologia e la quantità corrispondono con i dati della conferma d'ordine.
Eventuali danni devono essere fatti presenti immediatamente per iscritto nell'apposito spazio della lettera di vettura.
L'autista è obbligato ad accettare un tale reclamo e lasciarne una copia a Voi. Se la fornitura è franco destino, inviate il vs. reclamo e noi, altrimenti direttamente allo spedizioniere. Il risarcimento avviene soltanto se avete fatto presente il danno all'atto del ricevimento.
Evitate ogni tipo di danneggiamento durante lo scarico e le movimentazioni; a tale scopo sollevare eventuali pezzi sfusi dello svuota BIG-BAG impiegando i golfari previsti. NON SPINGERE NÈ TRASCINARE i componenti! Tenete conto che si tratta di materiale meccanico che deve essere movimentato con cura.

MACHINE STORAGE OVER EXTENDED PERIODS
Avoid a humid or salty environ-ment. If this is not possible protect the filter using insulating foil.
Prior to installation of the filter, check to ensure that all the electrical and pneumatic components are intact.
To store the machine correctly for a period of inactivity, clean all the parts thoroughly and grease the elastic parts. Store the equipment on a wooden platform, in a place that is protected from inclement weather conditions.

LANGFRISTIGE EINLAGERUNG DER MASCHINE
Eine feuchte und salzige Umge-bung sollte vermieden werden. Ist dies nicht möglich, das Gerät durch wärmedämmende Folie schützen.
Vor dem Einbau des Geräts prüfen, ob die elektrischen und pneumatischen Komponenten intakt sind.
Eine korrekt Einlagerung der Maschine bei längerem Nichtgebrauch erfordert eine grundliche Reinigung aller Teile und das Einfetten der elastischen Komponenten; die Ausrüstung auf Holzbalken legen und witterungsgeschützt aufbewahren.

EMMAGASINAGE DE LA MACHINE POUR UNE LONGUE PÉRIODE.
Eviter possiblement des am-biants humides et salmâtres. Si cela n'est pas possible, protéger le produit avec des pellicules protectives thermoisolantes.
Avant d'installer la machine contrôler l'intégrité de l'instal-lation électrique et pneumatique.
Pour stocker correctement la machine pour une longue période d'inactivité, il est conseillé de nettoyer parfaitement toutes les pièces et de graisser les parties élastiques. Stocker sur une palette en bois à l'abri des intempéries.

IMMAGAZZINAGGIO DELLA MACCHINA PER PERIODO PROLUNGATO.
Evitare possibilmente ambienti umidi e salmastri.
Qualora ciò non sia possibile, proteggere il prodotto con pellicole protettive termoisolanti.
Prima di installare la macchina controllare l'integrità dell'impianto elettrico e pneumatico.
Per immagazzinare correttamente la macchina per un periodo di inattività, bisogna pulire accuratamente tutte le parti e ingrassare le parti metalliche.
Sistemare l'attrezzatura su pedane in legno e locarla al riparo dalle intemperie.

The FIBC is basically supplied on a pallet of suitable dimensions, protected with a heat-shrink polythene cover.

In ihrer Standardversion wird die Big-Bag-Entleerstation auf einer Palette entsprechender Größe stehend ausgeliefert und ist durch eine Schrumpffolie aus Poly-äthylen geschützt.

Le vide BIG-BAG est livré en standard sur une palette de dimensions appropriées et enveloppée dans un film en polyéthylène thermo-rétractable.

Di base lo svuota BIG-BAG viene fornito su un pallet di dimensioni opportune e protetto da un involucro di polietilene termoretraibile. A richiesta può essere fornito all'interno di gabbia di protezione in legno.

IMBALLO BASE - IMBALLO BASE
IMBALLO BASE - IMBALLO BASE

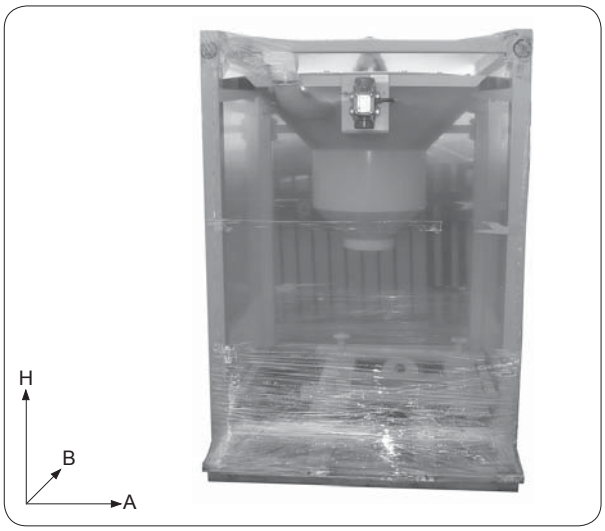

IMBALLO GABBIA IN LEGNO (MODELLI T, C,S)
IMBALLO GABBIA IN LEGNO (MODELLI T, C,S)
IMBALLO GABBIA IN LEGNO (MODELLI T, C,S)
IMBALLO GABBIA IN LEGNO (MODELLI T, C,S)

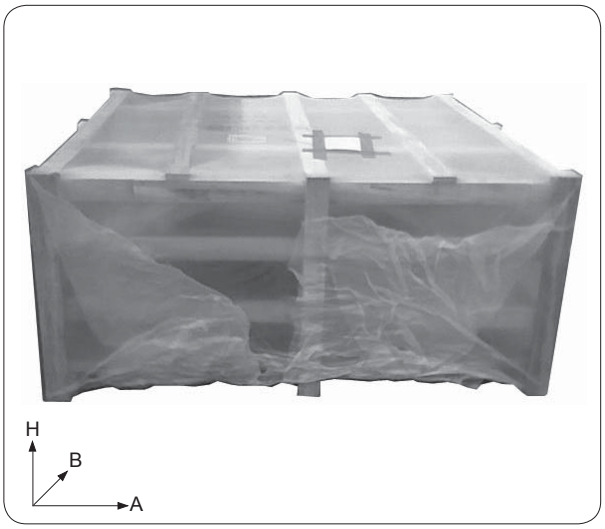

Packing code *Code Verpackung* **Code emballage** *Codice imballo*	**TYPE**	**A**	**B**	**H**	**Equipment weight** *Gerätegewicht* **Poidsmachine** *Peso macchina* **kg**	**Packing weight** *Verpackungsgewicht* **Poids et emballage** *Peso imballo* **kg**	**Peso totale Peso totale Peso totale Peso totale kg**
IME.SBB.125.T.P00	SBB.x.125.T	1684	1584	1102	125	53	178
IME.SBB.150.T.P00	SBB.x.150.T	1984	1834	1152	214	70	284
IME.SBB.125.C.P00	SBB.x.125.C	2034	1534	1102	321	60	381
IME.SBB.150.C.P00	SBB.x.150.C	2134	2034	1152	498	82	580
IME.SBB.125.S.P00	SBB.x.125.S	1684	2394	1102	400	84	484
IME.SBB.150.S.P00	SBB.x.150.S	2034	2584	1152	703	101	804
IME.SBB.125.M.P00	SBB.x.125.M	1684	1684	552	750	25	775

IME.SBB.125.T.G00	SBB.x.125.T	1718	1568	1102	125	89	214
IME.SBB.150.T.G00	SBB.x.150.T	2018	1868	1152	214	111	325
IME.SBB.125.C.G00	SBB.x.125.C	2068	1568	1102	321	98	419
IME.SBB.150.C.G00	SBB.x.150.C	2168	2068	1152	498	124	622
IME.SBB.125.S.G00	SBB.x.125.S	1718	2468	1102	400	124	524
IME.SBB.150.S.G00	SBB.x.150.S	2068	2618	1152	703	146	849
IME.SBB.125.M.G00	SBB.x.125.M	-	-	-	-	-	-

1 - STORAGE PRIOR TO INSTALLATION
- Avoid damp, salty environments, if possible.
- Place the equipment on wooden platforms and store them protected from unfavourable weather conditions.

2 - PROLONGED MACHINE SHUTDOWNS AFTER ASSEMBLY
- Before starting up the machine, set it in safety status.
- Prior to commissioning the machine check the vibrator motor and all other machine components are intact and functioning.
- Allow the pneumatic actuators to run load-free for **at least 10 minutes** without any material inside to ensure that all components work correctly.
- Check to ensure correct working of the electric vibrator, running it **only for a few seconds** with the hopper empty.

N.B.: prolonged use of the vibrator with the machine devoid of product can damage the machine.

3 - POSSIBLE REUSE AFTER PERIODS OF INACTIVITY
- During machine halts, avoid damp, salty environments
- Place the equipment on wooden platforms and store them protected from unfavourable weather conditions.
- Set the machine in safety status before starting it up.
- Before starting up the machine, check the condition of the electric vibrator and all parts for which long shutdowns may affect working.
- Clean the machine thoroughly before starting it.

1) EINLAGERUNG VOR DEM EINBAU
- Feuchte und salzhaltige Luft für die Einlagerung vermeiden.
- Die Einrichtung auf Holzpaletten setzen und vor Witterung schützen.

2) LÄNGERE BETRIEBSUNTERBRECHUNGEN NACH DEM EINBAU
- Vor der Inbetriebnahme ist das Gerät in einen sicheren Zustand zu versetzen.
- Vor der Inbetriebnahme des Gerätes den elektrischen Unwuchtmotor und alle anderen Geräteteile auf Unversehrtheit prüfen sowie auf deren Funktionstüchtigkeit die nach einem längeren Geräte-stillstand in Frage gestellt sein könnte.
- Vor dem Einschalten des Gerätes eine Reinigung durchführen.
- Die pneumatischen Austraghilfen wenigstens **10 Minuten** lang ohne Materialfüllung bei leerem Gerät laufen lassen, um den korrekten Betrieb aller Komponenten zu sicherzustellen.
- Den Unwuchtmotor auf korrekten Betrieb prüfen, indem man ihn **nur ein paar Sekunden** bei leerem Trichter laufen lässt.

N.B.: Eine längerer Betrieb des Unwuchtmotors bei leerem Gerät könnte dieses beschä-digen.

3) MÖGLICHE WIEDERVERWENDUNG NACH EINEM LÄNGEREN STILLSTAND
- Während des Stillstands des Gerätes Räume mit feuchter und salzhaltiger Luft vermeiden.
- Das Gerät auf Holzpaletten setzen und vor Witterung schützen.
- Vor der Inbetriebnahme ist das Gerät in einen sicheren Zustand zu versetzen.
- Vor der Inbetriebnahme des Gerätes den elektrischen Unwuchtmotor und alle Teile auf Unversehrtheit prüfen, deren Funktionstüchtigkeit durch die längere Betriebs-unterbrechung in Frage gestellt sein könnte.
- Vor dem Einschalten des Gerätes eine Reinigung durchführen.

1-EMMAGASINAGE AVANT LA MISE EN PLACE
- Si possible éviter les locaux humides et les saumâtres
- Placer l'équipement sur des palettes en bois et les ranger à l'abri des intempéries.

2-ARRÊT MACHINE PROLONGÉ APRÈS LE MONTAGE
- Avant la mise en service, mettre la machine en sécurité.
- Avant la mise en service de la machine, contrôler l'intégrité du motovibrateur électrique et de toutes les parties pour lesquelles un arrêt prolongé pourrait compromettre le fonctionnement.
- Effectuer un cycle complet de nettoyage avant de mettre la machine en marche.
- Laisser fonctionner à vide les actionneurs pneumatiques pendant **10 minutes** sans matière à l'intérieur pour vérifier le fonctionnement correct de chaque composant.
- Vérifier le bon fonctionnement du moto-vibrateur en le faisant fonctionner **seulement quelques secondes** avec la trémie vide.

N.B.: l'utilisation prolongée du vibrateur avec la machine sans produit pourrait provoquer des dommages à la machine.

3-RÉ-UTILISATION APRES UNE PÉRIODE D'INACTIVITÉ
- Pendant la période d'inactivté de la machine éviter les locaux humides et saumâtres
- Placer l'équipement sur des palettes en bois et les ranger à l'abri des intempéries.
- Prima della messa in servizio
- Avant la mise en service, mettre la machine en sécurité.
- Avant la mise en service de la machine, contrôler l'intégrité du motovibrateur électrique et de toutes les parties pour lesquelles un arrêt prolongé pourrait compromettre le fonctionnement.
- Effectuer un cycle complet de nettoyage avant de mettre la machine en marche.

1-IMMAGAZZINAGGIO PRIMA DELL'INSTALLAZIONE
- Evitare possibilmente ambienti umidi e salmastri
- Sistemare l'attrezzatura su pedane di legno e locarle al riparo dalle intemperie.

2-FERMO MACCHINA PROLUNGATO DOPO IL MONTAGGIO
- Prima della messa in servizio mettere in sicurezza la macchina.
- Prima della messa in servizio della macchina controllare l'integrità del motovibratore elettrico e di tutte le parti per le quali un prolungato arresto potrebbe compromettere la funzionalità.
- Eseguire un ciclo di pulizia completa prima di attivare la macchina.
- Lasciare funzionare a vuoto gli attuatori pneumatici per **almeno 10 minuti** senza materiale all'interno per verificare il corretto funzionamento di ogni componente.
- Verificare il corretto funzionamento del motovibratore facendolo funzionare **solo per pochi secondi** con tramoggia vuota.

N.B.: un utilizzo prolungato del vibratore con macchina scarica di prodotto potrebbe arrecare danni alla macchina.

3-POSSIBILE REIMPIEGO DOPO PERIODO DI INATTIVITÀ
- Durante il fermo macchina evitare ambienti umidi e salmastri
- Sistemare l'attrezzatura su pedane di legno e locarle al riparo dalle intemperie.
- Prima della messa in servizio mettere in sicurezza la macchina.
- Prima della messa in servizio della macchina controllare l'integrità del motovibratore elettrico e di tutte le parti per le quali un prolungato arresto potrebbe compromettere la funzionalità.
- Eseguire un ciclo di pulizia completa prima di attivare la macchina.

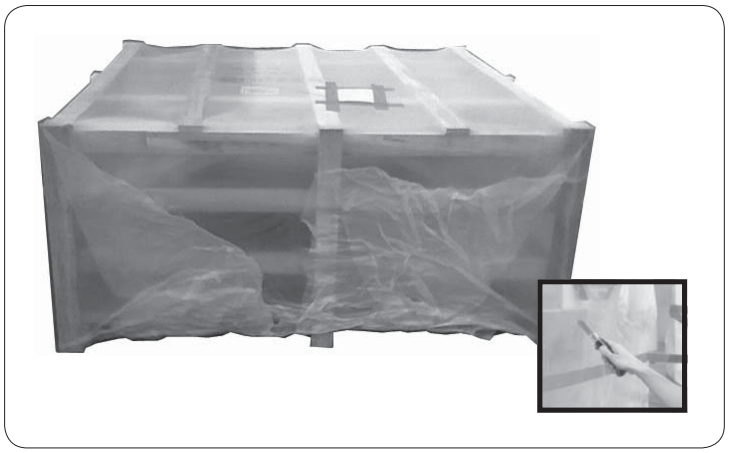

To remove the packing, use a cutter or a pair of scissors to cut the heat-shrink nylon covering.
Take special care to avoid damaging parts of the machine and/or scratch the paint with the blade.
Si consiglia di utilizzare un martello per smontare l'imballo a gabbia a protezione della macchina.
The FIBCs require certain operations for completing assembly before starting operation, in particular:

- **MODEL T** must be fixed to a solid structure (constructed by the plant designer).

- MODELLI C, S, M
Le macchine sono già parzialmente assemblate; dovrà essere assemblato il telaio ed installata la tramoggia. (vedi oltre)

- All the machines must be fixed to the ground or to a solid structure before use.
- Make the electrical connections of the electric vibrator to all the machines.
- For all the assembly operations listed above, proceed as described below.

NOTE:
It is the installer's responsibility to dispose off the packaging in a suitable manner, in compliance with existing legislation.

Zum Entfernen der Verpackung reicht es aus, einen Cutter oder eine Schere zu benutzen, mit der man die Nylon-Schrumpffolie aufschneidet.
Besonders darauf achten, dass das Messer keine Teile der Maschine beschädigt und/oder den Lack aufkratzt.
Si consiglia di utilizzare un martello per smontare l'imballo a gabbia a protezione della macchina.
Die BIG-BAG Entleerstationen verlangen noch, dass der Zusammenbau beendet wird, bevor man sie in Betrieb nehmen kann, insbesondere:

- **MODELL T**: Dieses muss an einer festen Struktur befestigt werden (Anfertigung durch den Anlagenbauer).

- MODELLI C, S, M
Le macchine sono già parzialmente assemblate; dovrà essere assemblato il telaio ed installata la tramoggia. (vedi oltre)

- Alle Maschinen müssen vor dem Gebrauch am Boden oder einer soliden Struktur verankert werden.
- Auf allen Maschinen ist der elektrische Anschluss des Unwuchtmotors vorzunehmen.
- Für die oben genannten Montagevorgänge ist so vorzuge

N.B.:
Der Anlagenaufsteller ist dafür verantwortlich, das Verpackungsmaterial auf angemessene Art und in Übereinstimmung mit den einschlägigen, geltenden Gesetzen zu entsorgen.

Pour le déballage il suffit d'utiliser un cutter ou des ciseaux et de couper le film en nylon thermorétractable.
Prêter une attention particulière à ne pas endommager des parties de la machine et/ou rayer le vernis avec la lame.
Si consiglia di utilizzare un martello per smontare l'imballo a gabbia a protezione della macchina.
Les vide BIG-BAG nécessitent quelques opérations pour terminer l'assemblage avant la mise en marche, à savoir:

- le **MODELE T** devra être fixé à une structure solide (réalisée par l'installateur).

- MODELLI C, S, M
Le macchine sono già parzialmente assemblate; dovrà essere assemblato il telaio ed installata la tramoggia. (vedi oltre)

- Toutes les machines seront ancrées par terre ou fixées à une structure solide avant l'utilisation.
- Sur toutes les machines il faudra réaliser le raccordement électrique du motovibrateur.
- Pour toutes les opérations de montage décrites ci-dessus, suivre les instructions des pages suivantes.

N.B.:
L'installateur doit, à ses frais, éliminer les emballages de manière adéquate et conformément aux lois en vigueur en la matière.

Per la rimozione dell'imballo è sufficiente utilizzare un cutter o un paio di forbici per tagliare l'involucro in naylon termoretraibile.
Prestare particolare attenzione a non danneggiare con la lama parti della macchina e/o scalfire la vernice.
Si consiglia di utilizzare un martello per smontare l'imballo a gabbia a protezione della macchina.
Gli svuota BIG-BAG necessitano di alcune operazioni per concluderne l'assemblaggio prima della messa in funzione, in particolare:

- MODELLO T dovrà essere fissato ad una struttura solida (fabbricazione a cura dell'impiantista).

- MODELLI C, S, M
Le macchine sono già parzialmente assemblate; dovrà essere assemblato il telaio ed installata la tramoggia. (vedi oltre)

- Tutte le macchine dovranno essere ancorate a terra o ad una struttura solida prima dell'utilizzo.
- Su tutte le macchine andrà effettuato il collegamento elettrico del motovibratore.
- Per tutte le operazioni di montaggio sopraelencate, procedere come descritto in seguito.

N.B.:
è a cura dell'installatore smaltire gli imballi in modo adeguato e secondo le leggi vigenti in materia.

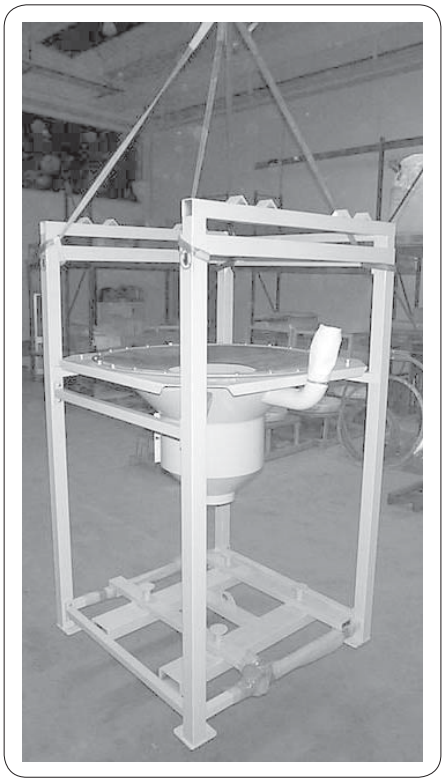

Use lifting equipment that is suitable for the weight, dimensions and movements required.

Zum Heben Vorrichtungen verwenden, die dem Gewicht der zu hebenden Last, deren Abmessungen und dem Transport entsprechen.

Utiliser des systèmes de levage appropriés aux poids, dimensions et déplacements prévus.

Utilizzare sistemi di sollevamento idonei alle masse, alle dimensioni e agli spostamenti previsti.

Hook the equipment to the lifting device by means of flexible straps and use hooks with safety fasteners.

Die Befestigung an den Lastaufnahmestellen mittels elastischer Gurte vornehmen und Haken mit Sicherheitsverschluß verwenden.

Effectuer l'accrochage aux prises de levage à l'aide de sangles élastiques et utiliser des crochets avec fermeture de sécurité.

Eseguire l' aggancio alle prese di sollevamento mediante fasce elastiche e utilizzare ganci con chiusure di sicurezza.

Do not use clamps, rings, open hooks or other systems which do not guarantee the same safety as shackles or hooks with safety fasteners.

Es ist verboten, Klammern, Ringe, offene Haken oder andere Systeme zu verwenden, die nicht den Sicher-heitsnormen entsprechen.

L'utilisation de mors, anneaux, crochets ouverts ou tout système ne garantissant pas la même sécurité que les manilles ou les crochets à fermeture de sécurité est interdite.

E' vietato l' utilizzo di morsetti, anelli, ganci aperti o qualsiasi sistema che non garantisca la stessa sicurezza dei grilli o dei ganci con chiusura di sicurezza.

If the straps are in close contact with the equipment it is advisable to place protective elements between the two to avoid damage.

Sollten die Anschlaggurte die Maschine berühren, Schutzelemente dazwischen schieben, um die Ausrüstung nicht zu beschädigen.

En cas de contact entre les sangles et les pièces de l'équipement, il est conseillé d'intercaler des protections pour ne pas endommager ce dernier.

Nel caso si verificassero contatti tra le fasce e parti della macchina, è consigliabile frapporre degli elementi di protezione per evitare danni a quest' ultima.

CAUTION !
1- Use lifting equipment which acts from above.
2- Keep the equipment at a minimum distance above the ground.
3- Do not stand near or walk under suspended loads.

ACHTUNG !
1- Nur Hebezeug verwenden, das von oben her angreift.
2- Die Ausrüstung nur so wenig wie gerade erforderlich heben.
3- Nicht unter der hängenden Last gehen oder stehen.

ATTENTION !
1- Utiliser des appareils de levage agissant par le haut.
2- Tenir la machine à une distance minimum du sol.
3- Ne pas stationner sous les charges suspendues.

ATTENZIONE !
1- Utilizzare apparecchi di sollevamento che agiscono dall' alto.
2- Tenere la macchina alla minima distanza da terra.
3- Non sostare o passare sotto i carichi sospesi.

While defining the installation of the equipment, take into account the space required for maintenance and access, for loading the FIBCs, especially as regards height, as it is variable.
This space depends on the lifting and handling equipment available at the work site.
The place in which the equipment is located must have the necessary connections (electricity, air, etc.) for operating the equipment.
It is the Customer's responsibility to equip the assembly area in accordance with the existing regulations and safety requirements: aeration, earthing, etc.

Bei der Festlegung des Standortes der Ausrüstung auch den für die Wartung und den Zugriff erforderlichen Platz berücksichtigen, der für die Aufgabe des Big-Bags dient, vor allem deshalb, weil die Höhe variabel ist.
Dieser Platz hängt vom Förder- und Hebezeug ab, das auf der Baustelle vorhanden ist.
Der Standort muß mit den erforderlichen Anschlüssen (Strom, Luft etc.) versehen sein, damit die Ausrüstung in Betrieb genommen werden kann.
Für die Einrichtung des Montageraums und die Beachtung der geltenden Normen und die Sicherheitserfordernisse (Belüftung, Erdung etc. ist der Anwender verantwortlich.

Lors de la détermination de l'emplacement de l'équipe-ment tenir compte des espaces d'entretien et d'accès, pour le chargement du sac, surtout en hauteur car celle-ci est variable.
Cet espace dépend des moyens de levage et de manutention disponibles au chantier.
Le local devra être doté des raccordements nécessaires (énergie électrique, air, etc.) pour le fonctionnement de l'équipement.
Le client a la responsabilité d'équiper le lieu de montage dans le respect des normes en vigueur sur la sécurité: aération, mise à la terre, etc.

Nel definire la dislocazione della macchina tenere conto degli spazi di manutenzione e di accesso, per il carico del saccone, soprattutto in altezza in quanto questa è variabile.
Suddetto spazio dipende dai mezzi di sollevamento e movimentazione disponibili in cantiere.
Il locale dovrà essere dotato degli allacciamenti necessari (energia elettrica, aria, ecc...) per il funzionamento della macchina.
E' responsabilità del cliente attrezzare il luogo di montaggio rispettando le normative vigenti e i requisiti di sicurezza: aereazione, messa a terra, ecc...

Assembly instructions:
- Lift and position the equipment (according to the procedure indicated on the previous page) near the supply lines.
- Countermark the position of the four anchor holes on the ground corresponding to the frame supporting plate.
- Move the frame, make the bores as shown in the Table and reposition the equipment.
- Check that the equipment is longitudinally and transversely perfectly level.
- Fit the plugs into the bores and tighten them.

Montageanweisungen:
- Das Gerät auf der Höhe der Versorgungsleitung aufstellen (Vorgehensweise siehe vorangegangene Seite).
- Die Befestigungsbohrungen, die sich auf der Platte der Stellfläche des Rahmens befinden, am Boden markieren.
- Das Gestell seitlich ablegen, Bohrungen lt. Tabelle vorsehen und das Gerät wieder aufstellen.
- Sicherstellen, daß das komplette Gerät in der Waage steht, sowohl in der Längs- als auch in der Querrichtung.
- Die Dübel in die Bohrungen einführen und anziehen.

Instructions de montage:
- Soulever et mettre en place (suivant les procédures indiquées dans la page précédente) au niveau de la ligne d'alimentation.
- Faire sur le sol les marques des trous de fixation situés sur les plaques d'ancrage du bâti.
- Déplacer le bâti, exécuter les trous comme indiqué dans le tableau et positionner de nouveau l'équipement.
- Contrôler que l'équipement est parfaitement horizontal dans le sens longitudinal et transversal.
- Insérer les bouchons dans les trous et visser.

Istruzioni per il montaggio:
- Sollevarlo e posizionarlo (secondo le procedure indicate nella pagina precedente) in corrispondenza della linea di alimentazione.
- Contromarcare sul pavimento i fori di fissaggio situati sulle piastre d' appoggio del telaio.
- Spostare il telaio, eseguire i fori come indicato nella tabella e riposizionare la macchina.
- Controllare che la macchina sia perfettamente orizzontale in senso longitudinale e trasversale.
- Inserire i tappi nei fori e avvitare.

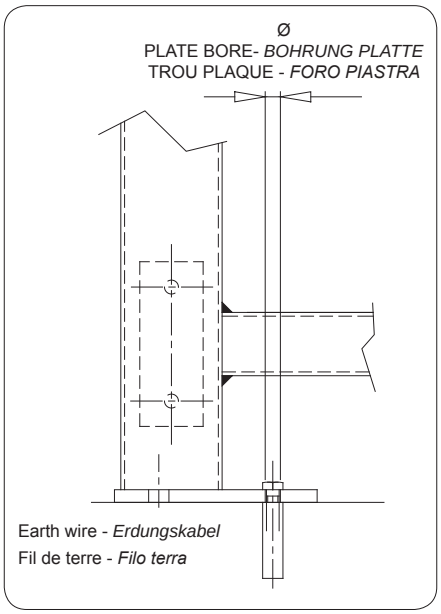

CODE	Ø PLATE HOLE *LOCH PLATTE* TROU PLAQUE *FORO PIASTRA* mm	NBR OF HOLES *LOCHZAHL* NBRE DE TROUS *N° FORI*	MAX. PULL FOR FIXING *MAX. ZUG PRO SCHRAUBE* TRACTION MAXI POUR ANCRAGE *TIRO MAX. PER ZANCA*
SBB125C	16.5	12	/
SBB125S	16.5	12	/
SBB150C	22	16	/
SBB150S	22	16	/
SBB125M	22	8	1250 daN

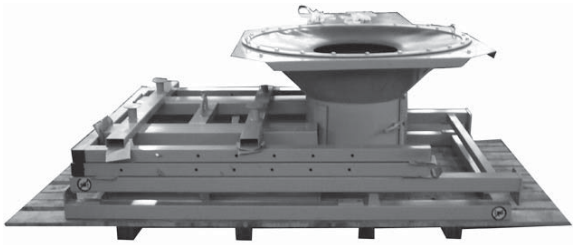

Verificare la presenza e l’integrità di tutte le parti costituenti la macchina che viene fornita già parzialmente assemblata.

Verificare la presenza e l’integrità di tutte le parti costituenti la macchina che viene fornita già parzialmente assemblata.

Verificare la presenza e l’integrità di tutte le parti costituenti la macchina che viene fornita già parzialmente assemblata.

Verificare la presenza e l’integrità di tutte le parti costituenti la macchina che viene fornita già parzialmente assemblata.

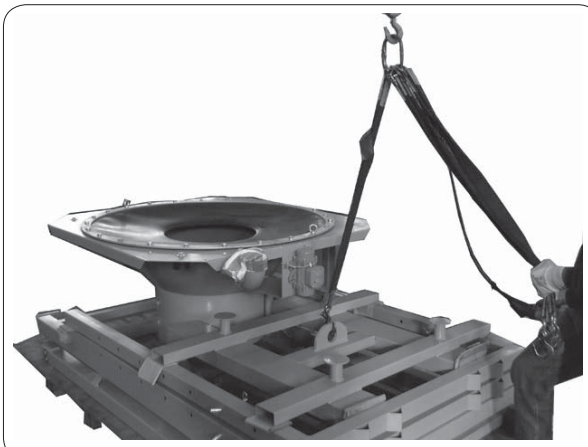

Mediante apposito sistema di sollevamento, rimuovere i componenti della macchina dall’imballo e posizionarli in prossimità della zona di assemblaggio avendo cura di non danneggiarli.

Mediante apposito sistema di sollevamento, rimuovere i componenti della macchina dall’imballo e posizionarli in prossimità della zona di assemblaggio avendo cura di non danneggiarli.

Mediante apposito sistema di sollevamento, rimuovere i componenti della macchina dall’imballo e posizionarli in prossimità della zona di assemblaggio avendo cura di non danneggiarli.

Mediante apposito sistema di sollevamento, rimuovere i componenti della macchina dall’imballo e posizionarli in prossimità della zona di assemblaggio avendo cura di non danneggiarli.

In particolare, per il sollevamento della tramoggia utilizzare i golfari forniti in dotazione.

In particolare, per il sollevamento della tramoggia utilizzare i golfari forniti in dotazione.

In particolare, per il sollevamento della tramoggia utilizzare i golfari forniti in dotazione.

In particolare, per il sollevamento della tramoggia utilizzare i golfari forniti in dotazione.

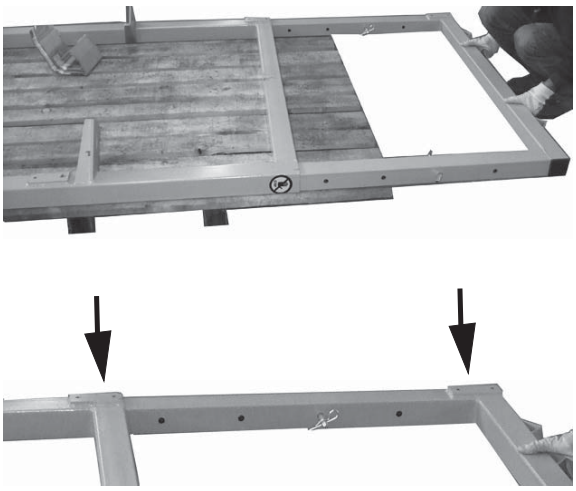

(SOLO MODELLO S)
Iniziare l’assemblaggio del telaio infilando ciascuna delle due parti sfilabili all’interno della rispettiva parte fissa del telaio; Prestare attenzione al verso di inserimento: le flange per la giunzione delle traverse sulla parte sfilabile e della parte fissa devono risultare dalla stessa parte come in figura.

(SOLO MODELLO S)
Iniziare l’assemblaggio del telaio infilando ciascuna delle due parti sfilabili all’interno della rispettiva parte fissa del telaio; Prestare attenzione al verso di inserimento: le flange per la giunzione delle traverse sulla parte sfilabile e della parte fissa devono risultare dalla stessa parte come in figura.

(SOLO MODELLO S)
Iniziare l’assemblaggio del telaio infilando ciascuna delle due parti sfilabili all’interno della rispettiva parte fissa del telaio; Prestare attenzione al verso di inserimento: le flange per la giunzione delle traverse sulla parte sfilabile e della parte fissa devono risultare dalla stessa parte come in figura.

(SOLO MODELLO S)
Iniziare l’assemblaggio del telaio infilando ciascuna delle due parti sfilabili all’interno della rispettiva parte fissa del telaio; Prestare attenzione al verso di inserimento: le flange per la giunzione delle traverse sulla parte sfilabile e della parte fissa devono risultare dalla stessa parte come in figura.

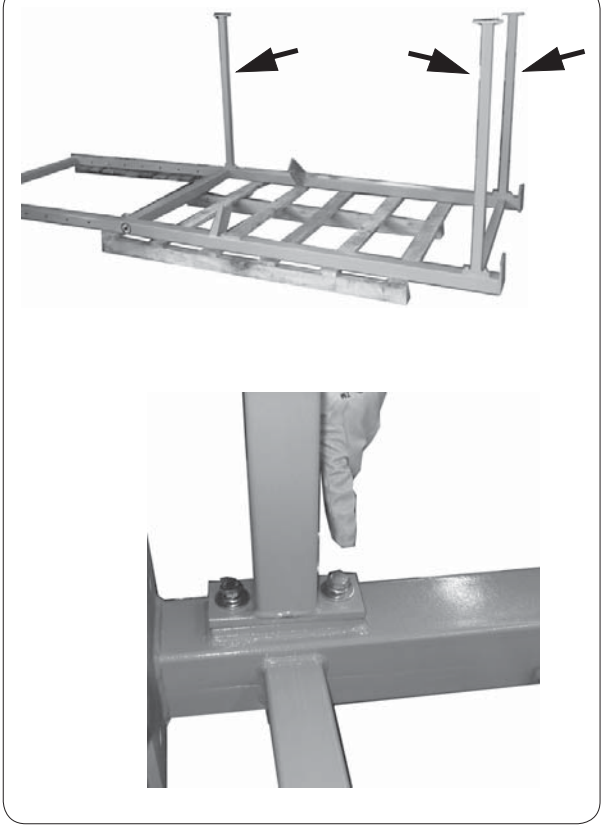

Procedere collegando le prime 3 traverse alla parte fissa del telaio. Per il momento non serrare fino a battuta le viti ma lasciare un gioco di circa 4-5 mm.

Procedere collegando le prime 3 traverse alla parte fissa del telaio. Per il momento non serrare fino a battuta le viti ma lasciare un gioco di circa 4-5 mm.

Procedere collegando le prime 3 traverse alla parte fissa del telaio. Per il momento non serrare fino a battuta le viti ma lasciare un gioco di circa 4-5 mm.

Procedere collegando le prime 3 traverse alla parte fissa del telaio. Per il momento non serrare fino a battuta le viti ma lasciare un gioco di circa 4-5 mm.

Sollevare il telaio in posizione verticale come indicato ed avvicinare l’altra fiancata.

Sollevare il telaio in posizione verticale come indicato ed avvicinare l’altra fiancata.

Sollevare il telaio in posizione verticale come indicato ed avvicinare l’altra fiancata.

Sollevare il telaio in posizione verticale come indicato ed avvicinare l’altra fiancata.

Collegare le due fiancate mediante le traverse senza portare del tutto a battuta le viti

Collegare le due fiancate mediante le traverse senza portare del tutto a battuta le viti

Collegare le due fiancate mediante le traverse senza portare del tutto a battuta le viti

Collegare le due fiancate mediante le traverse senza portare del tutto a battuta le viti

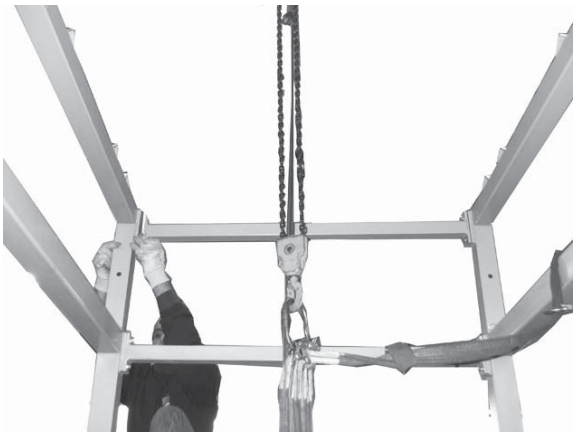

A questo punto, montare la traversa di collegamento delle due parti sfilabili, per il momento senza portare a battuta le viti.

A questo punto, montare la traversa di collegamento delle due parti sfilabili, per il momento senza portare a battuta le viti.

A questo punto, montare la traversa di collegamento delle due parti sfilabili, per il momento senza portare a battuta le viti.

A questo punto, montare la traversa di collegamento delle due parti sfilabili, per il momento senza portare a battuta le viti.

Sollevare la tramoggia mediante i golfari ed posizionarla sulle apposite mensole.

Sollevare la tramoggia mediante i golfari ed posizionarla sulle apposite mensole

Sollevare la tramoggia mediante i golfari ed posizionarla sulle apposite mensole

Sollevare la tramoggia mediante i golfari ed posizionarla sulle apposite mensole

Fissare la tramoggia mediante le viti in dotazione, senza serrare a battuta.

Fissare la tramoggia mediante le viti in dotazione, senza serrare a battuta.

Fissare la tramoggia mediante le viti in dotazione, senza serrare a battuta.

Fissare la tramoggia mediante le viti in dotazione, senza serrare a battuta.

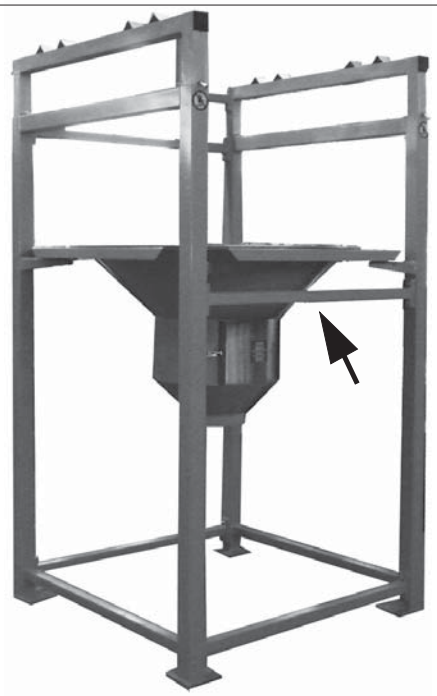

Montare la traversa anteriore

Montare la traversa anteriore

Montare la traversa anteriore

Montare la traversa anteriore

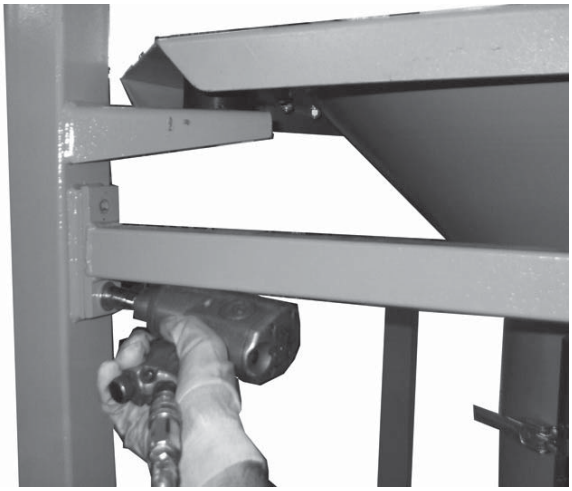

Procedere al serraggio competo di tutte le viti, partendo da quelle del telaio e successivamente della tramoggia.

Procedere al serraggio competo di tutte le viti, partendo da quelle del telaio e successivamente della tramoggia.

Procedere al serraggio competo di tutte le viti, partendo da quelle del telaio e successivamente della tramoggia.

Procedere al serraggio competo di tutte le viti, partendo da quelle del telaio e successivamente della tramoggia.

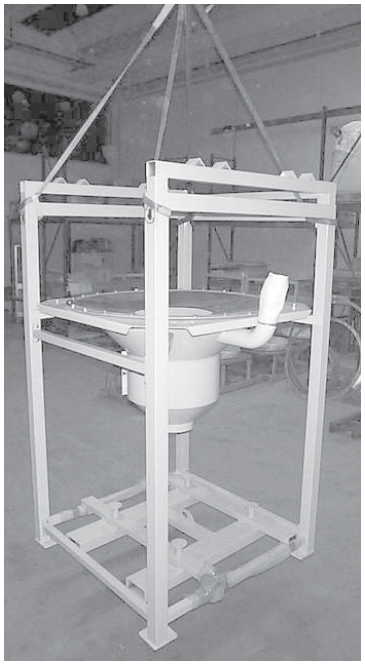

Sollevare la macchina come indicato in figura posizionarla nella sistemazione definitiva e fissarla a terra

Sollevare la macchina come indicato in figura posizionarla nella sistemazione definitiva e fissarla a terra.

Sollevare la macchina come indicato in figura posizionarla nella sistemazione definitiva e fissarla a terra.

Sollevare la macchina come indicato in figura posizionarla nella sistemazione definitiva e fissarla a terra.

Procedere quindi al cablaggio del vibratore elettrico (Vedi sezione dedicata pag…)

Procedere quindi al cablaggio del vibratore elettrico (Vedi sezione dedicata pag…)

Procedere quindi al cablaggio del vibratore elettrico (Vedi sezione dedicata pag…)

Procedere quindi al cablaggio del vibratore elettrico (Vedi sezione dedicata pag…)

1) The MODEL M BIG-BAG unloader is supplied partially dismantled to optimize transport. About two hours are required to complete assembly at the site; after unpacking and placing all the objects on the floor, proceed as follows:

1) Die BIG-BAG Entleerstation MODELL M wird teilweise zerlegt ausgeliefert, um den Transport zu optimieren. Um den Zusammenbau vor Ort zu vervollständigen, sind circa 2 Arbeitsstunden anzuschlagen. Nach dem Erntfernen der Verpackung und dem Anlegen aller Teile am Boden wie folgt vorgehen:

1) Le vide BIG-BAG MODELE M est fourni partiellement démonté pour optimiser le transport. Il faut environ 2 heures de travail pour réaliser l'assemblage sur place; après avoir enlevé le film d'emballage, procéder de la manière suivante :

1) Lo svuota BIG-BAG MODELLO M viene fornito parzialmente smontato per ottimizzarne il trasporto. Sono necessarie all'incirca 2 ore di lavoro per ultimarne l'assemblaggio in loco; una volta rimosso l'involucro dell'imballo e depositati tutti gli oggetti a terra, procedere come segue:

2) Slacken the screws connecting the hoist frame 1 to hopper frame 2.

2) Die Schrauben losdrehen, die den Flaschenzugrahmen 1 mit dem Trichtergestell 2 verbinden.

2) Dévisser les vis qui relient le châssis palan 1 et le châssis de la trémie 2.

*2) Svitare le viti che collegano il telaio paranco **1** dal telaio tramoggia **2**.*

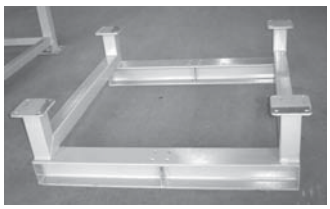

3) Using a suitable lifting system, lift the hoist frame and put it aside upside down

3) Das Flaschenzuggestell mit einem geeigneten Gerät heben und separat auf dem Kopf abstellen.

3) Soulever le châssis palan à l'aide d'un système de levage approprié et le mettre de côté, renversé.

3) Sollevare mediante apposito sistema di sollevamento il telaio paranco e deporlo in disparte rovesciato

4) Lift the hopper frame and place it in the final position, fixing the feet to the ground

4) Das Trichtergestell heben und in der endgültigen Position abstellen, um dann die Füße am Boden zu befestigen.

4) Soulever le châssis de la trémie et le mettre dans sa position définitive, en fixant les pieds par terre

4) Sollevare il telaio della tramoggia e disporlo in posizione definitiva fissandone i piedi a terra

5) Place a rear strut 4 on the ground as shown in the Figure and connect a cross beam 5 to it by means of screws, taking care to avoid tightening the screws excessively

5) Einen hinteren Mast 4 auf den Boden legen, wie im Bild zu sehen ist, und eine Querstrebe 5 anschrauben, wobei zu beachten ist, dass die Schrauben nicht zu fest angezogen werden.

5) Placer un pylône 4 arrière par terre, comme montré sur la figure et visser une traverse 5 sans serrer excessivement les vis

*5) Disporre un pilone **4** posteriore al suolo come mostrato in figura e avvitare una traversa **5** avendo cura di non serrare eccessivamente le viti*

6) Place the frame down and connect the second rear strut taking care to orient it as shown in the Figure.

6) Die Struktur hinlegen und den zweiten hinteren Mast befestigen, wobei darauf zu achten ist, dass er wie im Bild gezeigt ausgerichtet wird.

6) Allonger la structure et relier le deuxième pylône arrière en le dirigeant comme indiqué par la figure.

6) Sdraiare la struttura e collegare il secondo pilone posteriore avendo cura di orientarlo come in figura.

7) Connect a second beam 6 as shown in the Figure, taking care to avoid tightening the screws excessively

7) Eine zweite Querstrebe 6 anschließen, wie in der Abbildung zu sehen ist, wobei darauf zu achten ist, dass die Schrauben nicht zu straff angezogen werden.

7) Relier une deuxième traverse 6, comme l'indique la figure, en faisant attention à ne pas trop serrer les vis

*7) Collegare una seconda traversa **6** come mostrato in figura avendo cura di non serrare eccessivamente le viti*

8) Connect the last cross beam as shown in the Figure, taking care to avoid tightening the screws excessively.

8) Die vormontierte Struktur mit einem Kran oder einen ähnlichen System heben und den zweiten hinteren Mast befestigen, wobei darauf zu achten ist, dass die Schrauben nicht zu straff angezogen werden. Nun muss die Struktur ein stabiles Gleichgewicht aufweisen.

8) Relier la dernière traverse comme l'indique la figure, sans serrer excessivement les vis.

8) Collegare l'ultima traversa come mostrato in figura, avendo cura di non serrare eccessivamente le viti.

8) Using a crane or similar system, lift the pre-assembly and fix the third strut taking care to avoid tightening the screws excessively. The structure will now be stable

8) Die vormontierte Struktur mit einem Kran oder einem ähnlichen System heben und den dritten Mast befestigen, wobei ebenfalls zu beachten ist, dass man die Schrauben nicht zu fest anzieht. Nun muss die Struktur ein stabiles Gleichgewicht haben.

8) A l'aide d'une grue ou d'un système similaire soulever la structure pré-assemblée et fixer le troisième pylône sans serrer excessivement les vis. Après quoi la structure sera en équilibre stable

8) Sollevare mediante gru o sistema simile il pre-assemblato e fissare il terzo pilone avendo cura di non serrare eccessivamente le viti. A questo punto la struttura sarà in equilibrio stabile

10)Complete the chassis fixing the last of the struts as shown in the Figure; again take care to avoid tightening the screws excessively

10)Das Gestell fertig montieren, indem man den letzten der Maste befestigt, wie in der Abbildung zu sehen ist. Erneut darauf achten, die Schrauben nicht zu fest anzuziehen.

10)Compléter le châssis en fixant le dernier pylône comme l'indique la figure ; même dans ce cas il ne faut pas trop serrer les vis

10)Completare lo chassis fissando l'ultimo dei piloni come mostrato in figura; ancora una volta non serrare eccessivamente le viti

11) Lift the chassis carefully using a crane or a forklift truck and place it on top of the hoist frame as shown in the Figure

11) Das Gestell sorgfältig mit einem Kran oder Gabelstapler geben und über dem Flaschenzuggestell abstellen, wie im Bild zu sehen ist.

11) A l'aide d'une grue ou d'un chariot élévateur soulever le châssis et l'appuyer sur le châssis pour palan comme le montre la figure.

11) Sollevare con cura mediante una gru o carrello elevatore lo chassis ed appoggiarlo sopra al telaio per paranco come mostrato in figura

12) Fix the hoist frame to the chassis by means of the 16 M16 bolts and tighten these

12) Das Flaschenzuggestell mit 16 Schraubbolzen M16 am Gestell befestigen und diese Schrauben gut anziehen.

12) Fixer le châssis du palan sur le châssis au moyen des 16 boulons M16 en veillant à bien les serrer

12) Fissare il telaio paranco allo chassis mediante i 16 bulloni M16 e serrare bene questi ultimi

13) Fix the beam 3 for the hoist on hoist frame using the 8 M20 bolts and tighten the assembly firmly

13) Den Balken 3 für den Flaschenzug mit den 8 Schraubbolzen M20 am Flaschenzugrahmen befestigen und alles gut anziehen.

13) Fixer la poutre 3 pour le palan sur le châssis du palan au moyen des 8 boulons M20 et bien serrer le tout

*13) Fissare la trave **3** per il paranco sul telaio paranco mediante gli 8 bulloni M20 e serrare bene il tutto*

14) Using a suitable crane or forklift truck lift the entire block A and position it on top of the hopper frame B taking care to align the holes of the connecting flanges

14) Den ganzen Block A mit Kran oder Gabelstapler heben und über dem Trichtergestell B anordnen, wobei darauf zu achten ist, dass die Löcher der Verbindungsflansche übereinander zu liegen kommen.

14) A l'aide d'une grue ou d'un chariot élévateur soulever tout l'ensemble **A** et le poser au-dessus du châssis trémie **B** en veillant à faire coïncider les orifices des brides d'accouplement

*14) Mediante gru o carrello elevatore adeguato sollevare l'intero blocco **A** e posizionarlo sopra il telaio tramoggia **B** avendo cura di far combaciare i fori delle flangie di collegamento*

15) Insert the connecting bolts and tighten them

15) Die Verbindungsschrauben einstecken und gut anziehen.

15) Introduire les boulons d'accouplement et les serrer

15) Inserire i bulloni di collegamento e serrarli bene

16) Now tighten all the bolts of the chassis and carry out a final check on all the bolts to make sure they are tightened perfectly

16) Nun alle Schraubbolzen des Gestells gut anziehen und die anschließende Kontrolle ausführen, um sicherzugehen, dass alle Schraubteile fest angezogen sind.

16) Après quoi bien serrer tous les boulons du châssis et effectuer un contrôle final du serrage correct de tous les boulons

16) Provvedere ora a serrare bene tutti i bulloni dello chassis ed eseguire un controllo finale sul corretto serraggio di tutta la bulloneria

Important:	**Wichtig:**	**Important :**	**Importante:**
use a torque wrench to ensure the following tightening torques: M16 screws: 225 Nm M18 screws: 439 Nm	Einen Drehmomentschlüssel benutzen, um die folgenden Anzugsdrehmomente zu erhalten: Schrauben M16: 225 Nm Schrauben M18: 439 Nm	utiliser une clé dynamométrique afin de garantir les couples de serrage suivant : Vis M16 : 225 Nm Vis M18 : 439 Nm	utilizzare una chiave dinanometrica al fine di garantire le seguenti coppie di serraggio: Viti M16: 225 Nm Viti M18: 439 Nm

GENERAL WARNINGS	ALLGEMEINE WARNHINWEISE	CONSIGNES GENERALES	AVVERTENZE GENERALI
1.1 All the connections to the supplies must be carried out according to existing safety regulations.	1.1 Alle Anschlüsse an das Stromnetz müssen gemäß der geltenden Sicherheitsbestimmungen ausgeführt werden.	1.1 Tous les raccordements au secteur électrique doivent être réalisés conformément aux normes de sécurité en vigueur.	1.1 Tutti i collegamenti alla rete di alimentazione devono essere eseguiti secondo le norme di sicurezza vigenti.
1.2 Before start-up, check the efficiency of the earth connection.	1.2 Vor der Inbetriebnahme ist der Erdungsanschluß auf Funktionstüchtigkeit zu prüfen.	1.2 Avant la mise en route vérifier la mise à la terre et son efficacité.	1.2 Prima dell' avviamento assicurarsi del perfetto collegamento a terra verificandone l' efficienza.
1.3 Check the supply voltage and cycles to ensure these correspond with the values on the motor rating plate.	1.3 Sicherstellen, daß Spannung und Frequenz den Werten auf dem Typenschild des Motors entsprechen.	1.3 Contrôler que la tension et la fréquence d'alimentation correspondent aux valeurs de plaque du moteur.	1.3 Controllare che tensione e frequenza di alimentazione siano corrispondenti ai valori di targa del motore.
1.4 Provide protection against overload; ensure the calibrated values of the thermal or magnetothermal current do not exceed those on the rating plate.	1.4 Einen Überlastschutz vorsehen, dabei auch prüfen, ob die Einstellwerte der Thermorelais oder Motorschutzschalter nicht über dem Wert des Typenschilds liegen.	1.4 Prévoir des protections contre les surcharges, en vérifiant que les valeurs du courant de réglage de l'interrupteur ne dépasse pas ceux de plaque.	1.4 Prevedere delle protezioni di sovraccarico, verificando che i valori della corrente di taratura del termico o magnetotermico non superino più del 10% quelli di targa.
1.5 The electrical connection must be carried out according to the following sequence: - disconnect the mains supply. - Pass the power cable through the cable gland into the junction box. - make the connections using the accessories provided. - tighten the cable glands completely. - fit the junction box cover taking care to avoid damaging the seal.	1.5 Der Stromanschluß ist in folgender Reihenfolge vorzunehmen: - Die allgemeine Stromversorgung ausschalten. - Die Speisekabel durch die Kabeldurchführung in das Innere des Anschlußkastens stecken. - Die Anschlüsse mit den vorgesehenen Zubehörteilen vornehmen. - Die Kabeldurchführungen fest anziehen. - Den Kastendeckel montieren und dabei beachten, daß die Dichtung nicht beschädigt wird.	1.5 Le raccordement électrique doit être effectué dans la séquence ci-dessous: - débrancher l'alimentation électrique générale. - Passer les câbles d'alimentation à travers les serre-câbles, à l'intérieur du boîtier de connexion. - Exécuter les raccordements en utilisant les accessoires prévus à cet effet. - Serrer à fond les serre-câbles. - Monter le couvercle du boîtier en faisant attention à ne pas endommager le joint.	1.5 Il collegamento elettrico dovrà essere eseguito in sequenza: - disinserire l' alimentazione elettrica generale. - inserire i cavi di alimentazione attraverso i pressacavi, all' interno della scatola di collegamento. - eseguire i collegamenti utilizzando gli appositi accessori. - serrare a fondo i pressacavi. - montare il coperchio della scatola facendo attenzione a non danneggiare la guarnizione.
CAUTION ! **The cross section of the power cable and safety cable must be defined by the buyer. The user must provide a differential automatic circuit-breaker upline of the main switch.**	**ACHTUNG !** **Für die Stromkabel- und Sicherungskabelquer-schnitte ist der Betreiber verantwortlich. Der Betreiber muß stromauf vom Hauptschalter der Anlage einen Fehlerstrom-Schutzschalter vorsehen.**	**ATTENTION !** **Le dimensionnement des câbles d' alimentation et du câble de protection est sous la responsabilité de l'acheteur. L' utilisateur doit appliquer en amont de l'interrupteur général de l'installation, un interrupteur automatique différentiel.**	**ATTENZIONE !** **Il dimensionamento dei cavi di alimentazione e del cavo di protezione è responsabilità dell' acquirente. L' utilizzatore deve applicare a monte dell' interruttore generale dell' impianto, un interruttore automatico differenziale.**
PRECAUTION **Connecting the machine to the mains supply must be done in accordance with the existing regulations of the country where the machine is being used.**	**VORSICHTMASSNAHME** **Der Anschluß der Ausrüstung an das Netz muß unter Beachtung der Normen ausgeführt werden, die im Land des Anwenders gelten.**	**PRECAUTION** **Le raccordement de la machine au secteur doit être effectué dans le respect de la réglementation en vigueur dans le pays de l'utilisateur.**	**PRECAUZIONE** **Nel collegare la macchina alla rete, rispettare la regolamentazione in vigore nel paese dell' utilizzatore.**

PNEUMATIC ACTUATORS KIT - *BAUSATZ PNEUMATISCHE AUSTRAGHILFEN*
KIT ACTIONNEURS PNEUMATIQUES - *KIT ATTIVATORI PNEUMATICI*

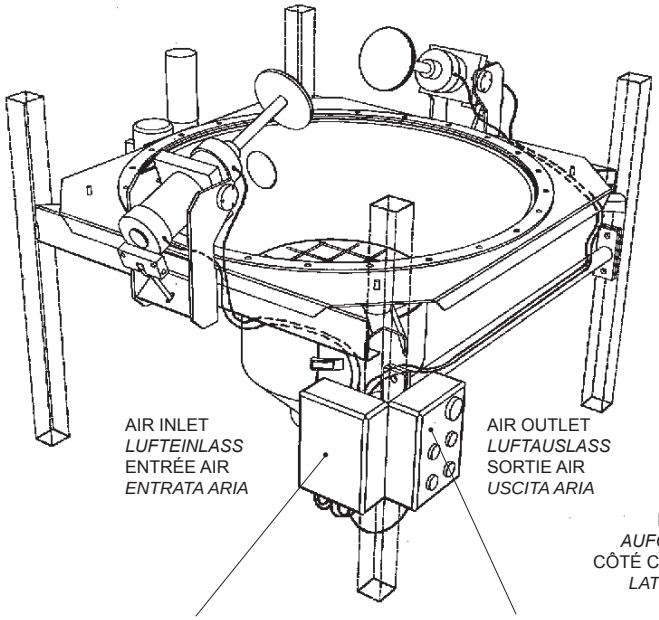

CYLINDER INFEED PIPING PATH
VERLAUF DER ZYLINDERVERSORGUNGSLEITUNGEN
PARCOURS TUBES ALIMENTATION CYLINDRES
PERCORSO TUBI ALIMENTAZIONE CILINDRI

ELECTRICAL DATA - *ELEKTRISCHE DATEN*
CARACTÉRISTIQUES ÉLECTRIQUES - *DATI ELETTRICI*

Mains Voltage - *Betriebsspannung*
Tension d'alimentation - *Tensione di alimentazione*

Line: Three-phase 400V + Earth *Leitung: dreiphasig 400V + Erde* Ligne: Troisphase 400V + Terre *Linea: Trifase 400V + Terra*

Auxiliaries: *Steuerspannung:* Auxiliaires: *Ausiliari:*	110VAC *110V WS* 110VCA *110vca*

Mains frequency - *Betriebsfrequenz*
Fréquence d'alimentation - *Frequenza di alimentazione*

Cycles: *Frequenz:* Fréquence: *Frequenza:*	**50/60 Hz**

Consumption - Verbrauch - Consommation - *Consumi*

Max. Ampere: *Max. Stromaufnahme:* Ampère maxi: *Amper max:*	**2 A**

PNEUMATIC DATA - *PNEUMATISCHE DATEN*
CARACTÉRISTIQUES PNEUMATIQUES - *DATI PNEUMATICI*

Inlet pressure: *Eingangsdruck:* Pression d'entrée: *Pressione d'ingresso:*	**6 bar**

Operating pressure: *Betriebsdruck:* Pression de service: *Pressione d'esercizio:*	**6 bar max**

Air consumption per cycle: *Luftverbrauch pro zyklus:* Consomm. d'air par cycle: *Consumo d'aria per ciclo:* *(AVANTI / INDIETRO)*	**66,72 Nl/cycle**

ELECTRIC CONTROL PANEL - *ELEKTROSCHALTKASTEN* - ARMOIRE ÉLECTRIQUE - *QUADRO ELETTRICO*

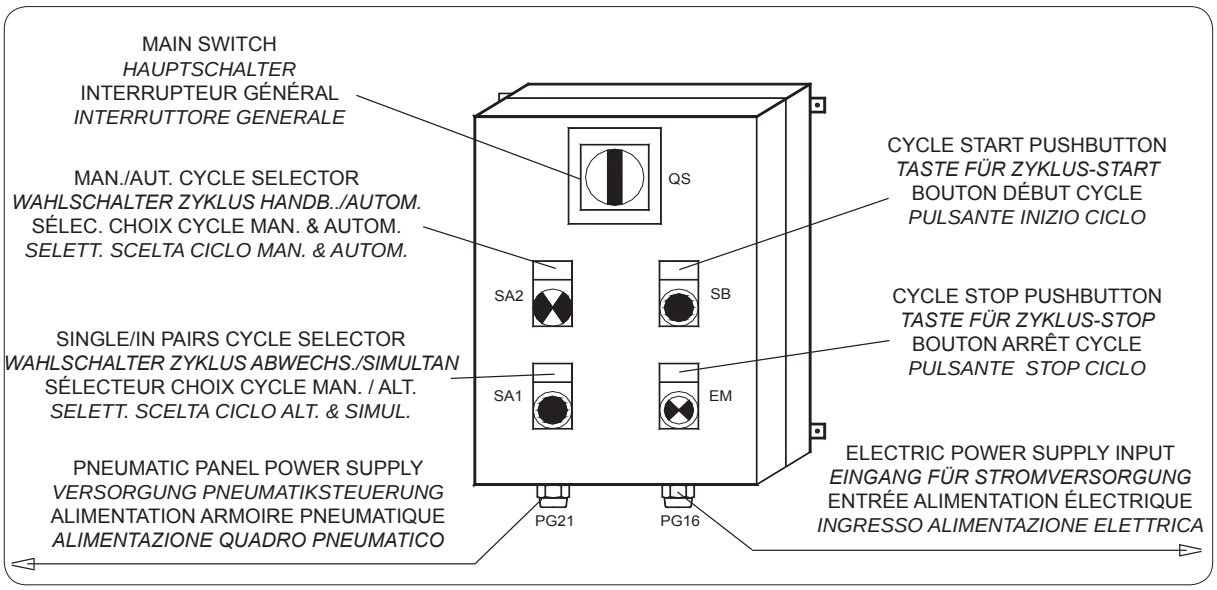

ITEM *POS.*	DESCRIPTION - *BENENNUNG* - DÉSIGNATION - *DENOMINAZIONE*	COLOUR - *FARBE* COULEUR - *COLORE*
QS	MAIN SWITCH - *HAUPTSCHALTER* INTERRUPTEUR GÉNÉRAL - *INTERRUTTORE GENERALE*	RED – YELLOW *ROT –GELB* ROUGE –JAUNE *ROSSO - GIALLO*
SB	CYCLE START PUSHBUTTON - *TASTE FÜR ZYKLUS-START* BOUTON DÉBUT CYCLE - *PULSANTE INIZIO CICLO*	BLACK - *SCHWARZ* NOIR - *NERO*
EM	CYCLE STOP PUSHBUTTON - *TASTE FÜR ZYKLUS-STOP* BOUTON ARRÊT CYCLE - *PULSANTE STOP CICLO*	RED - *ROT* ROUGE - *ROSSO*
SA1	SINGLE/IN PAIRS CYCLE SELECTOR - *WAHLSCHALTER ZYKLUS ABWECHSELND - SIMULTAN* SÉLECTEUR CHOIX CYCLE ALT. - SIMULT. - *SELETTORE SCELTA CICLO ALTERNATIVO -SIMULTANEO*	BLACK - *SCHWARZ* NOIR - *NERO*
SA2	MAN./AUT. CYCLE SELECTOR - *WAHLSCHALTER ZYKLUS MANUELL - AUTOMATISCH* SÉLECTEUR CHOIX CYCLE MAN. - AUT. - *SELETTORE SCELTA CICLO MANUALE - AUTOMATICO*	BLACK - *SCHWARZ* NOIR - *NERO*

The control board comprises a box with front door on which the controls and operation indicators are fitted.

Description of controls and indicators:
SB/EM = PUSHBUTTONS:
controls with single operating mode
SA = SELECTORS:
double-function switches
QS = SWITCHES:
controls with two possible positions.

Die elektrische Steuerung ist mit einer Tür ausgestattet, auf der sich die Bedienelemente und Kontrollanzeigen befinden.

Beschreibung der Bedienelemente und Kontrollanzeigen:
SB/EM = DRUCKKNÖPFE:
Bedienelemente mit nur einer Betriebsart.
SA = WAHLSCHALTER:
Bedienelemente mit zwei Betriebsarten.
QS = SCHALTER:
Bedienelemente mit zwei möglichen Positionen.

L`armoire électrique de commande est constituée d'un boîtier à porte frontale sur lequel sont montés les commandes et témoins de fonctionnement.

Description commandes et indicateurs:
SB / EM = BOUTONS: commandes avec un seul mode de fonctionnemnt.
SA= SÉLECTEURS: commutateurs à deux fonctions.
QS=INTERRUPTEURS commandes à deux positions possibles.

Il quadro elettrico di comando è costituito da una cassetta con portello frontale sul quale sono montati dei comandi ed indicatori di funzionamento.

Descrizione comandi ed indicatori:
SB / EM =PULSANTI:
sono comandi con un'unica modalità di funzionamento
SA=SELETTORI:
sono commutatori a due funzioni.
QS=INTERRUTTORI:
sono comandi con due posizioni possibili.

PNEUMATIC PANEL - *PNEUMATIKSTEUERUNG* - ARMOIRE PNEUMATIQUE - *QUADRO PNEUMATICO*

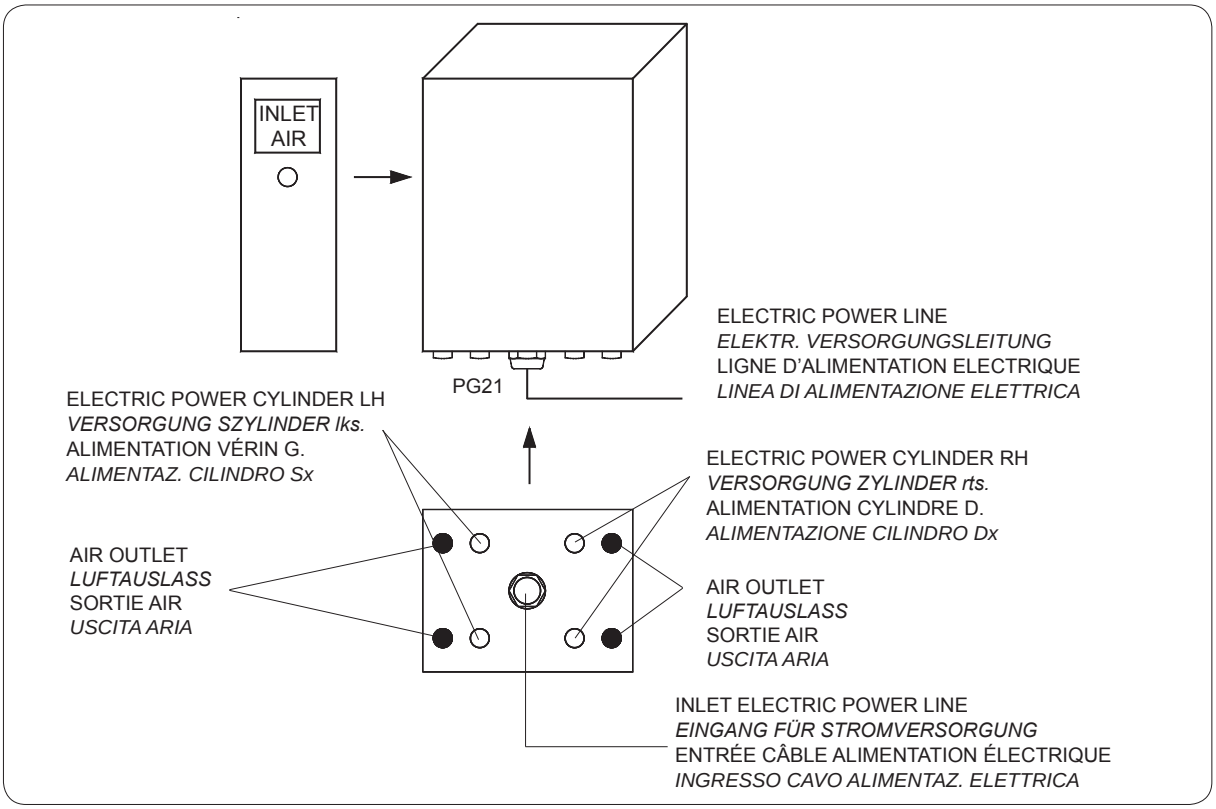

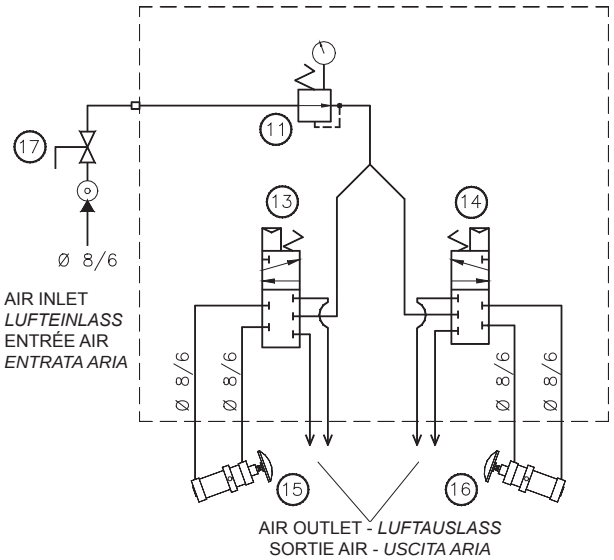

ITEM *POS.*	DESCRIPTION - *BENENNUNG* - DÉSIGNATION - *ENOMINAZIONE*
13/14	5 WAY SOLENOID VALVE - *5 WEGE-MAGNETVENTIL* ÉLECTROVALVE À 5 VOIES - *ELETTROVALVOLA 5 VIE*
11	PRESSURE REDUCER - *DRUCKMINDERER* RÉDUCTEUR DE PRESSION - *RIDUTTORE DI PRESSIONE*
15-16	PNEUMATIC ACTIVATORS - *PNEUMATISCHE AUSTRAGHILFEN* ACTIVATEURS PNEUMATIQUES - *ATTIVATORI PNEUMATICI*
17	1/2" MANUAL BALL VALVE (NON STANDARD) - *1/2" KUGELHAHN MANUELL (KEIN STANDARD)* VANNE SPHÉRIQUE MANUELLE 1/2" (NON STANDARD) - *VALVOLA A SFERA MANUALE 1/2" (NON STANDARD)*

TERMINAL BOARD ELECTRIC CONTROL PANEL - PNEUMATIC CONTROL PANEL
KLEMMENLEISTE ELEKTROSTEUERUNG - PNEUMATIKSTEUERUNG
BORNIER ARMOIRE ÉLECTRIQUE - ARMOIRE PNEUMATIQUE
MORSETTIERA QUADRO ELETTRICO - QUADRO PNEUMATICO

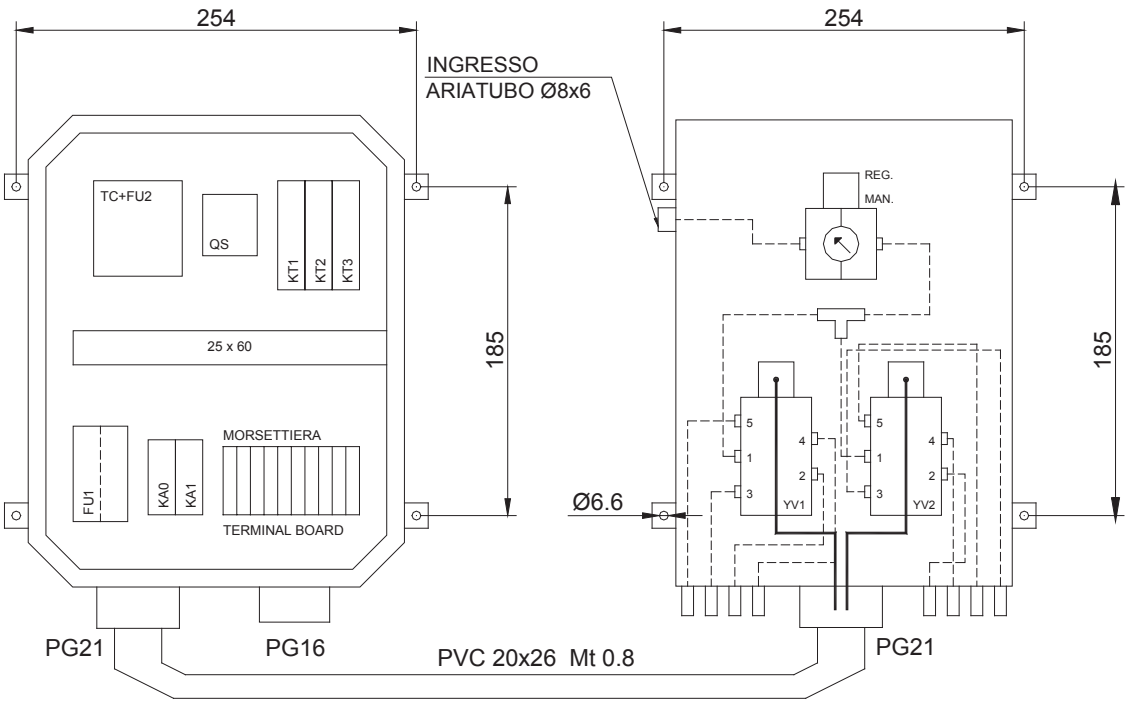

TERMINAL BOARD
KLEMMENLEISTE
PLAQUE À BORNES
MORSETTIERA

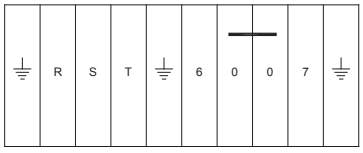

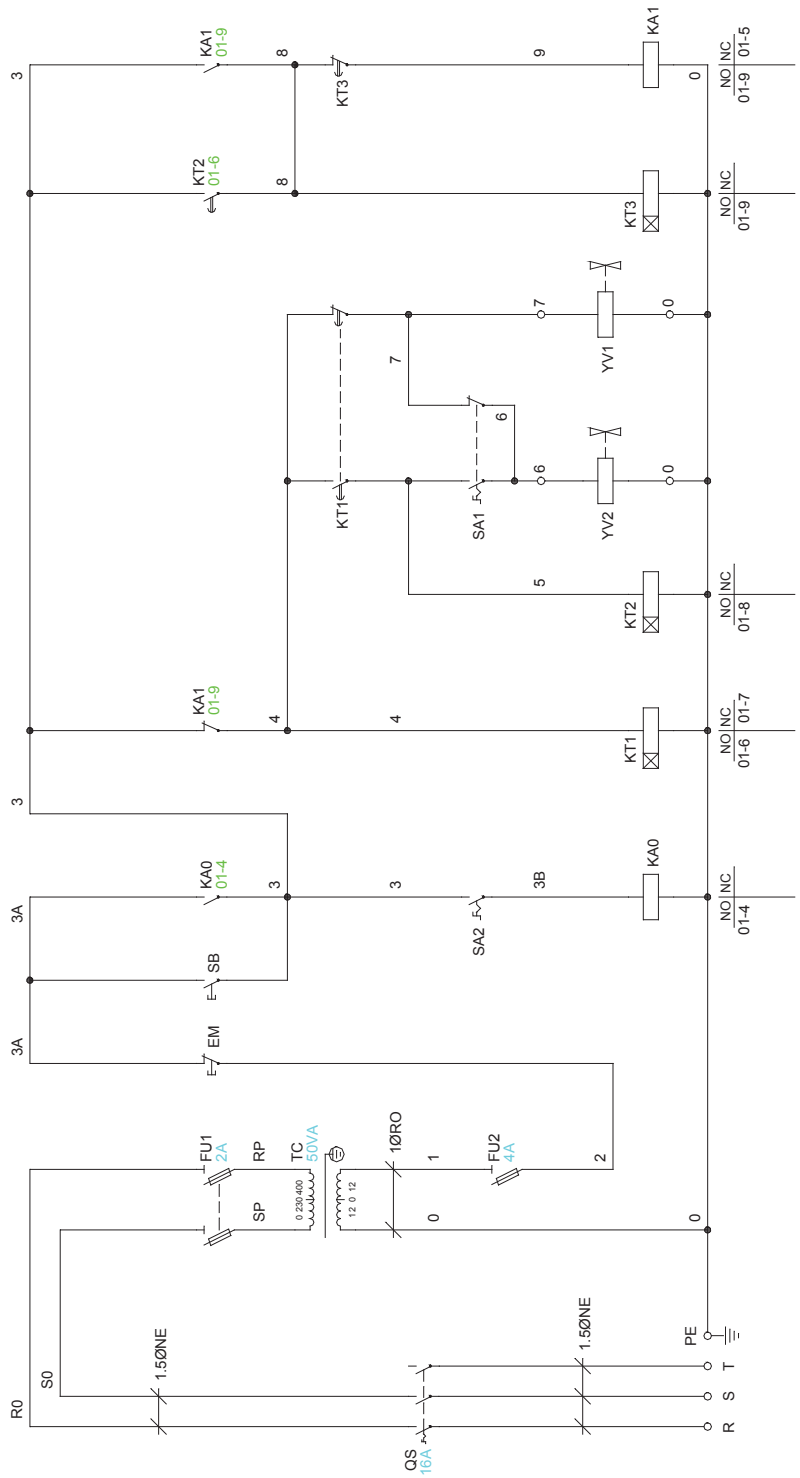

ARMS CYCLE STOP AUXILIARY RELAY
HILFSRELAIS ZYKLUSENDE ARME
RÉLAIS AUXILIAIRES FIN DE CYCLE BRAS
RELE' AUSILIARI FINE CICLO BRACCI

CYCLE RESET RELAY
ZEITSCHALTER ZYKLUS-RESET
TEMPO RESET CYCLE
TIMER RESET CICLO

ARM 2 SOLENOID VALVE
MAGNETVENTIL ARM 2
ÉLECTROVANNE BRAS 2
ELETTROVALVOLA BRACCIO 2

ARM 1 SOLENOID VALVE
MAGNETVENTIL ARM 1
ÉLECTROVANNE BRAS 1
ELETTROVALVOLA BRACCIO 1

ARM 2 FORWARD TIMER
ZEITSCHALTER VORWÄRTS ARM 2
TEMPO AVANT BRAS 2
TIMER AVANTI BRACCIO 2

ARM 1 FORWARD TIMER
ZEITSCHALTER VORWÄRTS ARM 1
TEMPO AVANT BRAS 1
TIMER AVANTI BRACCIO 1

AUTOMATIC CYCLE RELAY
RELAIS AUTOMATIKZYKLUS
RÉLAIS CYCLE AUTOMATIQUE
RELE' CICLO AUTOMATICO

POWER SUPPLY
VERSORGUNG
ALIMENTATION
ALIMENTAZIONE

NOTE: The magneto-thermal differential cutout switch for this electric panel must be provided by the final Customer.

HINWEIS: *Der Fehlerstrom-Schutzschalter für diesen Schaltkasten ist eine Leistung, für die der Endanwender zu sorgen hat (gehört nicht zum Lieferumfang).*

REMARQUE: L'interrupteur de protection magnétothermique différentielle de cette armoire électrique est à la charge du Client utilisateur final.

NOTE: *La protezione magnetotermica differenziale di questo quadro elettrico é a carico del Cliente utilizzatore finale.*

WIRING DIAGRAM CODE *KURZBEZEICHNUNG STROMLAUFPLAN* ENTRÉE CÂBLE ALIMENTATION ELECT. *SIGLA SCHEMA ELETTRICO*	Q.ty *Menge* Q.té *Q.tà*	DESCRIPTION *BENENNUNG* DÉSIGNATION *DENOMINAZIONE*	TYPE *TYP* TYPE *TIPO*	BRAND *FABRIKAT* MARQUE *MARCA*
	2	Box 300x220x120 mm *Kunststoffgehäuse 300 x 320 x 120 mm* Boîtier plastique 300x220x120 mm *Scatola plastica 300x220x120 mm*	GW44209	GEWISS
	2	Internal panel *Bodenplatte* Plaque de fond *Piastra di fondo*	GW44617	GEWISS
	8	Fixing support *Befestigungsbügel* Étrier de fixation *Staffa di fissaggio*	GW44621	GEWISS
QS	1	Main switch 3X16A *Schalter 3 x 16 A* Interrupteur 3x16 A *Interruttore 3X16A*	LA216-1753	BRETER
QS	1	Yellow/red dial *Gelbrote Anzeige* Cache jaune/rouge *Mostrina giallo/rossa*	LFS2-N.6.1753	BRETER
QS	1	Main switch extension *Verlängerung Kunststoffwelle* Rallonge arbre plastique *Prolunga albero plastica*	LA2-G2853	BRETER
TC	1	Transformer 50VA *Transformator 50 VA* Transformateur 50 VA *Trasformatore 50VA*	50WP/G+F	ITALTRAFO
FU1	1	BiPole fuse holder *Zweipoliger Sicherungshalter* Porte fusible bipolaire *Portafusibile bipolare*	24212	ELETTRO ITALIA
FU1	2	Fuse GL 10x38 2A *Sicherung GL 10x38 2A* Fusible GL 10x38 2A *Fusibile GL 10x38 2A*	CH10-2A	
FU2	1	Glass Fuse 4A *Glassicherung 4A* Fusible de verre 4A *Fusibile di vetro 4A*	4A5X20	
KA0 KA1	2	Base for 2-contact relay *Sockel für Relais 2SC* Socle pour rélais 2SC *Zoccolo per relè 2SC.*	95.45	FINDER
KA0 KA1	2	*2-contact relay 24VAC* *Relais mit 2 Kontakten 24V WS* *Rélais 2 contacts 24VCA* *Relè 2 contatti 24VAC*	40.52.8.024	FINDER
KT1 KT2 KT3	3	Multiscale Timer 24 240VAC/DC *Mehrbereichszeitschalter 24V WS/GS* Temporisateur 24 240VCA *Timer multiscala 24 240VAC/DC*	H3DE-S1	OMRON
SA1 SA2	2	Selector 0-1 *Stabiler Wahlschalter 0-1* Sélecteur stable 0-1 *Selettore stabile 0-1*	P2T-S120	OMRON

WIRING DIAGRAM CODE ***KURZBEZEICHNUNG STROMLAUFPLAN*** **ENTRÉE CÂBLE ALIMENTIMENTATION ELECT.** ***SIGLA SCHEMA ELETTRICO***	**Q.ty** ***Menge*** **Q.té** ***Q.tà***	**DESCRIPTION** ***BENENNUNG*** **DÉSIGNATION** ***DENOMINAZIONE***	**TYPE** ***TYP*** **TYPE** ***TIPO***	**MAKE** ***FABRIKAT*** **MARQUE** ***MARCA***
SB	1	Black button *Schwarze Taste* Bouton noir *Pulsante nero*	P2T-B102	LOVATO
EM	1	Red button *Rote Taste* Bouton rouge *Pulsante rosso*	P2T-B2104	LOVATO
	3	Contact 1NA *Kontakt 1NA* Contact 1NA *Contatto 1NA*	M2T-C10	LOVATO
	2	Contact 1NA *Kontakt 1S* Contact 1NA *Contatto 1NA*	M2T-C01	LOVATO
HL0 SB2	1	Lamp BA9S 30V *Lampe BA9S 30V* Lampe BA9S 30V *Lampadina BA9S 30V*	BA9S 30V	
SA1 SA2 SB EM	4	Plate holder *Schildhalter* Porte plaquette *Porta targhetta*	PTAR22	MODERNO TECNICA
SA1 SA2 SB EM	4	Glass *Glas* Verre *Vetrino*	T1527V	MODERNO TECNICA
	7	Spring terminal ZDU 2.5 *Klemme mit Feder ZDU 2.5* Bornier à ressort ZDU 2.5 *Morsetto a molla ZDU 2.5*	160851	WEIDMULLER
	3	Spring ground term. ZPE 2.5 *Erdungsklemme mit Feder ZPE 2.5* Borner de terre à ressort ZPE 2.5 *Morsetto terra a molla ZPE 2.5*	160864	WEIDMULLER
	1	Terminal plate ZDU 2.5 *Klemmenleiste ZDU 2.5* Plaque à cosse ZDU 2.5 *Piastra terminale ZDU2.5*	160874	WEIDMULLER
	2	Terminal lock ZEW35 *Klemmensperre ZWE35* Serre borne ZWE35 *Ferma morsetto ZEW35*	954000	WEIDMULLER
	1	Cable-press PG16 *Kabelverschraubung PG16* Serre fil PG16 *Pressacavo PG16*	POP-PG16	RTA
	2	Alfa nylon union PG21 *Alfa-Nylonanschluss PG21* Raccord alfa Nylon PG21 *Raccordo alfa nylon PG21*	81028	RTA
	1	Metal ring PG16 *Metallringmutter PG16* Bague en métal PG16 *Ghiera metallo PG16*	86625	RTA

WIRING DIAGRAM CODE ***KURZBEZEICHNUNG STROMLAUFPLAN*** **ENTRÉE CÂBLE ALIMENTATION ELECT.** ***SIGLA SCHEMA ELETTRICO***	**Q.ty** ***Menge*** **Q.té** ***Q.tà***	**DESCRIPTION** ***BENENNUNG*** **DÉSIGNATION** ***DENOMINAZIONE***	**TYPE** ***TYP*** **TYPE** ***TIPO***	**MAKE** ***FABRIKAT*** **MARQUE** ***MARCA***
	2	Metal ring PG21 *Metallringmutter PG21* Bague en métal PG21 *Ghiera metallo PG21*	86626	RTA
	1 mt	Grey PVC sheath 20x26mm *Graue PVC-Hülle 20x26 mm* Gaine PVC 20x26 mm grise *Guaina PVC 20x26mm grigia*	PVC20GR	RTA
	4 mt	Flame-retardant cable 3x1 *Graues flammwidriges Kabel 3x1* Câble antifeu 3x1 gris *Cavo antifiamma 3x1 grigio*	3x1GR	
MAN	1	Manometer 0.4 bar 1/8" *Manometer 0,4 bar 1/8"* Manomètre 0,4 bar 1/8" *Manometro 0.4 bar 1/8"*	0.4 bar 1/8	WIKA
REG	1	Pressure regulator *Druckregler* Régulateur de pression *Regolatore di pressione*	MRBIT 1/4-0.4	METAL WORK
REG	1	Pressure regulator support *Bügel für Druckregler* Étrier pour régulateur de pression *Staffa per regolatore di pressione*	SF 1/4	METAL WORK
YV1 YV2	2	Solenoid valve SOV 35 SOS OO *Magnetventil SOV 35 SOS OO* Électrovanne SOV 35 SOS OO *Elettrovalvola SOV 35 SOS OO*	SOV35SOSOO	METAL WORK
YV1 YV2	2	Coil for solenoid valve *Spule für Magnetventil* Bobine pour électrovanne *Bobina per elettrovalvola*	22D8-2450	METAL WORK
YV1 YV2	2	Connector for coil *Steckverbinder für Spule* Connecteur pour bobine *Connettore per bobina*	22STD	METAL WORK
	5	Union pipe Ø8 *Wanddurchführung Rohr Ø8* Raccord passe paroi tube Ø8 *Raccordo passaparete tubo Ø8*	RL108	METAL WORK
	4	Leak SFE 1/4" *Entlüftung SFE 1/4"* Évent SFE 1/4" *Sfiato SFE 1/4"*	SFE-1/4	METAL WORK
	4	Female union 1/4" pipe Ø8 *Anschluß 1/4" Rohr Ø8* Raccord femelle 1/4" tube Ø8 *Raccordo femmina 1/4" tubo Ø8*	RL2-8-1/4	METAL WORK
	12	Union 90x8 1/4" pipe Ø8 *Anschluß 90x8 1/4" Rohr Ø8* Raccord 90x8 1/4" tube Ø8 *Raccordo 90x8 1/4" tubo Ø8*	RL34-8-1/4	METAL WORK
	1	T-Union pipe Ø8 *T-Stück Rohr Ø8* Raccord en Té tube Ø8 *Raccordo a T tubo Ø8*	RL228	METAL WORK
	3 mt	Light blue Elastolan pipe 8x6 *Hellblauer Elastolan-Schlauch 8x6* Tube Elastolan 8x6 bleu ciel *Tubo Elastolan 8x6 azzurro*	ELASTOLAN 8x6AZ	METAL WORK

PNEUMATIC POWER

The compressed air coupling on the equipment is achieved by means of a hose connector pipe having internal diameter 8x6mm.

COMPRESSED AIR PRESSURE

- Minimum 5 bar
- Maximum 6 bar

It is advisable to connect a manual cut-off device on the air infeed line (ball valve or similar) to facilitate subsequent maintenance operations.

DRUCKLUFTVERSORGUNG

Die Einleitung der Druckluft auf die Vorrichtung erfolgt mit einem Gummistutzen mit Innendurchmesser 8x6 mm.

DRUCK DER DRUCKLUFT

- Minimum 5 bar
- Maximum 6 bar

Auf die Zufuhrleitung der Druckluft sollte ein von Hand zu betätigendes Absperrorgan (Kugelventil oder ähnliches) installiert werden, das die anschließenden Wartungsarbeiten vereinfacht.

ALIMENTATION PNEUMATIQUE

Le branchement de l'air comprimé sur les filtres est réalisé par un tube de diamètre 8x6 mm.

PRESSION AIR COMPRIMÉ

- Minimum 5 bar
- Maximum 6 bar

Il est conseillé d 'insérer sur la circuit d' alimentation de l'air un dispositif de coupure manuelle (robinet à boisseau ou similaire) pour faciliter les opérations d' entretien.

ALIMENTAZIONE PNEUMATICA

L' innesto dell' aria compressa sulla macchina è realizzato da un tubo portagomma di diametro 8x6 mm.

PRESSIONE ARIA COMPRESSA

- Minimo 5 bar
- Massimo 6 bar

É consigliabile inserire sulla linea di alimentazione della aria un organo di intercettazione manuale (valvola a sfera o simile) che faciliterà le successive operazioni di manutenzione.

The compressed air must be:

1- Clean
Free of impurities which may damage the solenoid valve.

Warning: Before connecting the compressed air to the equipment, empty the piping.

2 - Dehumidified
However, it is advisable to use a condensate trap.

3 - Oil-free
The presence of oily substances in the air may cause precocious, irreversible clogging.

Die Druckluft muß sein:

1- Sauber
Sie darf keinen Schmutz enthalten, der das Magnetventil des Filters beschädigen könnte.

Achtung: Vor dem Anschluß der Druckluft an die Vorrichtung die Leitungen entleeren.

2 - Trocken
Es sollte aber besser ein Kondensatabscheider benutzt werden.

3 - Ölfrei
Das Vorhandensein von Ölteilchen in der Druckluft würde unweigerlich zum vorzeitigen Verstopfen führen.

L' air comprimé doit être :

1- Propre
Sans impuretés pouvant endommager l'électrovanne du filtre

Attention: avant de brancher l'air comprimé au filtre vider les tuyauteries

2 - Déshumidifié
Il faut prévoir l'utilisation d'un séparateur d'eau de condensation.

3 - Déshuilé
La présence de substances huileuses dans l'air constitue une cause de colmatage précoce et irréversible.

L' aria compressa deve essere:

1- Pulita
Esente da impurità che potrebbe danneggiare l' elettrovalvola

Attenzione: prima di collegare l' aria compressa alla macchina vuotare le tubazioni

2 - Deumidificata
E' opportuno comunque prevedere l' utilizzo di un separatore di condensa.

3 - Disoleata
La presenza di sostanze oleose nell' aria costituirebbe una causa d' intasamento precoce ed irreversibile.

PRELIMINARY OPERATIONS PRIOR TO START-UP

Before starting up the plant, it is essential to carry out a series of checks to prevent problems or risks.

Ascertain that all the equipment components are positioned and fixed correctly.

Carefully check all the connections, the rubber hoses and fixtures.

If pneumatic activators are provided, special attention must be paid to the compressed air connections.

WARNINGS

1) Si raccomanda di non far funzionare mai il motovibratore a macchina vuota (anche in fase di collaudo) onde evitare il rischio di surriscaldamento dello stesso e conseguente possibile danneggiamento irreversibile dello stesso.
2) Per un corretto funzionamento della macchina si consiglia di far funzionare il motovibratore per intervalli di tempo non superiori a 10-15 secondi ogni minuto onde evitare il compattamento del prodotto nella tramoggia; Si ricorda che le masse impiegano circa 40-45 secondi ad arrestarsi completamente.
3 - For proper functioning of the FIBC unloader, the equipment downline must be capable of removing all the product extracted from the FIBC.
4 - The connection between the outlet spout of the FIBC Unloader and any other equipment positioned downline must be made using a flexible connector to prevent vibrations of the hopper from being transmitted to the equipment.
5 - It is advisable to provide a butterfly valve or slide valve at the hopper outlet in order to prevent outflow of product when the motovibrator stops operating.

VORBEREITUNG DER INBETRIEBNAHME

Vor der Inbetriebnahme des Systems müssen eine Reihe von Kontrollen vorgenommen werden, um etwaige Probleme oder Risiken zu vermeiden.

Sicherstellen, daß alle Bestandteile der Vorrichtung korrekt aufgestellt und befestigt sind.

Alle Anschlüsse, Gummischläuche und entsprechenden Befestigungen sorgfältig prüfen.

Falls pneumatische Aus-traghilfen vorgesehen sind, ist besonders auf die pneumatischen Anschlüsse zu achten.

VORSICHT

1) Si raccomanda di non far funzionare mai il motovibratore a macchina vuota (anche in fase di collaudo) onde evitare il rischio di surriscaldamento dello stesso e conseguente possibile danneggiamento irreversibile dello stesso.
2) Per un corretto funzionamento della macchina si consiglia di far funzionare il motovibratore per intervalli di tempo non superiori a 10-15 secondi ogni minuto onde evitare il compattamento del prodotto nella tramoggia; Si ricorda che le masse impiegano circa 40-45 secondi ad arrestarsi completamente.
3 - Für den korrekten Betrieb der Big-Bag-Entleerstation müssen die Geräte stromab unbedingt in der Lage sein, das aus dem Big-Bag entleerte Produkt aufzunehmen.
4 - Der Anschluß zwischen dem Auslauf der Big-Bag-Entleerungsstation und dem stromab eingebauten Gerät ist mittels einer flexiblen Verbindung vorzunehmen, damit die Vibrationen des Trichters nicht auf das Gerät übertragen werden.
5- Am Trichterauslauf sollte ein Flachschieber oder eine Drehklappe vorgesehen werden, damit kein Produkt mehr ausströmt, wenn der Vibrationsmotor einge-schaltet wird.

OPERATIONS PRELIMINAIRES A LA MISE EN MARCHE

Avant d'effectuer la mise en marche de l'installation il est important de faire une série de contrôles pour prévenir les problèmes et les risques.

S' assurer que tous les composants de l'équipement sont bien positionnés et fixés correctement.

Vérifier soigneusement tous les raccordements, les tubes en caoutchouc et leurs fixations.

Si l'équipement est équipé d'activateurs pneumatiques, faire tout particulièrement attention aux raccordements pneumatiques.

RECOMMANDATIONS

1) Si raccomanda di non far funzionare mai il motovibratore a macchina vuota (anche in fase di collaudo) onde evitare il rischio di surriscaldamento dello stesso e conseguente possibile danneggiamento irreversibile dello stesso.
2) Per un corretto funzionamento della macchina si consiglia di far funzionare il motovibratore per intervalli di tempo non superiori a 10-15 secondi ogni minuto onde evitare il compattamento del prodotto nella tramoggia; Si ricorda che le masse impiegano circa 40-45 secondi ad arrestarsi completamente.
3 - Pour un bon fonctionnement du vide-sac il est indispensable que les machines en aval soient en mesure d'évacuer le produit extrait des sacs.
4 - La liaison à la bouche de sortie du vide-sacs et de toute machine placée en aval doit être réalisée à travers un raccord flexible de manière à éviter que les vibrations de la trémie soient transmises à l'équipement.
5 - Il est conseillé de prévoir en sortie de la trémie une vanne papillon ou une vanne à guillotine pour éviter la sortie de produit lors de l'arrêt du fonctionnement du moto-vibrateur.

OPERAZIONI PRELIMINARI ALL' AVVIAMENTO

Prima di effettuare l' avviamento dell' impianto è importante che vengano eseguiti una serie di controlli al fine di prevenire problemi o rischi.

Accertarsi che tutti i componenti della macchina siano collocati in modo opportuno e correttamente fissati.

Verificare accuratamente tutti gli allacciamenti, i tubi gomma ed i relativi fissaggi.

Nel caso siano previsti gli attivatori pneumatici porre particolare attenzione ai collegamenti pneumatici.

AVVERTENZE

1) Si raccomanda di non far funzionare mai il motovibratore a macchina vuota (anche in fase di collaudo) onde evitare il rischio di surriscaldamento dello stesso e conseguente possibile danneggiamento irreversibile dello stesso.
2) Per un corretto funzionamento della macchina si consiglia di far funzionare il motovibratore per intervalli di tempo non superiori a 10-15 secondi ogni minuto onde evitare il compattamento del prodotto nella tramoggia; Si ricorda che le masse impiegano circa 40-45 secondi ad arrestarsi completamente.
3 - Per un buon funzionamento dello svuota big bag è indispensabile che le macchine a valle siano in grado di evacuare il prodotto estratto dal big bag.
4 - Il collegamento tra la bocca di scarico dello svuota big bag e qualunque macchina posizionata a valle dovrà essere effettuata mediante un raccordo flessibile in modo da evitare che le vibrazioni della tramoggia vengano trasmesse alla macchina stessa.
5 - Si consiglia di prevedere allo scarico della tramoggia una valvola a farfalla o una serranda a ghigliottina in modo da evitare fuoriuscita di prodotto all' arresto del funzionamento del motovibratore.

1) Lift the fixing cross of the FIBC above the FIBC by means of a forklift truck or a hoist, and fix the slings to the hooks as shown in the Figure.

1) Das Kreuzstück zur Befestigung des Big-Bag per Gabelstapler oder Flaschenzug über denselben heben und die Gurte zum Einhaken wie in der Abbildung gezeigt befestigen.

1) Soulever le croisillon de fixation du BIG-BAG au-dessus du BIG-BAG au moyen d'un chariot élévateur ou d'un palan; fixer ensuite les sangles dans les crochets, comme l'indique la figure.

1) Sollevare la apposita crociera di fissaggio del BIG-BAG al di sopra del BIG-BAG stesso mediante carrello elevatore o paranco, e fissare le bretelle agli agganci come mostrato in figura.

2) Lift the cross on which the FIBC is hooked by means of a forklift truck or hoist and insert it in the supporting frame.

2) Mit dem Gabelstapler oder dem Flaschenzug das Kreuzstück heben, in den der Big-Bag eingehängt ist, und ihn in die Tragstruktur einführen.

2) A l'aide d'un chariot élévateur ou d'un palan soulever le croisillon sur lequel est accroché le BIG-BAG et l'introduire dans la structure de soutien.

2) *Sollevare col muletto o paranco la crociera sul quale è agganciato il BIG-BAG e introdurlo nella struttura di sostegno.*

3) While inserting the frame, take care to fit the tailpieces of the cross in the seats provided (MODEL S).

3) Beim Einführen darauf achten, dass sich die Vorsprünge des Kreuzstücks innerhalb der vorgesehenen Winkeleisen befinden (MODELL S).

3) En phase d'introduction, veiller à encastrer les extrémités du croisillon dans leurs sièges (MODELE S).

3) *In fase di introduzione avere cura di incastrare le appendici della crociera nelle apposite sedi (MODELLO S).*

4) In the working position the FIBC must only rest on the seal and not exert its weight on it. If this is not the case, modify the position of the removable frame to obtain proper stretching of the FIBC. In the version with hoist it is sufficient to modify the length of the chain. For other versions, it shall be the responsibility of the plant technician or the user to use structures or forklift trucks of suitable height to ensure this condition.

4) *Es ist wichtig, daß der Big-Bag in der Arbeitsstellung auf der Dichtung nur leicht aufliegt und nicht mit seinem Gewicht auf sie drückt. Andernfalls ist die Einstellung des ausziehbaren Gestells so weit zu verändern bis die richtige Streckung des Big-Bag erreicht ist. In der Version mit Seilwinde muß lediglich die Kettenlänge angepaßt werden. Für die anderen Versionen muss der Anlagenbauer bzw. der Betreiber dafür sorgen, dass Strukturen oder Gabelstapler geeigneter Höhe verwendet werden, die diesen Zustand gewährleisten.*

4) Il est très important que le Big-Bag en position de travail soit seulement appuyé sur le joint et qu'il ne repose pas de tout son poids sur celui-ci. Dans le cas contraire modifier la position du châssis démontable jusqu'à obtenir une juste tension du Big-Bag. Dans la version à palan il suffit de modifier la longueur de la chaîne. Pour les autres versions, l'installateur ou l'utilisateur devront se servir de structures ou de chariots élévateurs d'une hauteur appropriée pour garantir cette condition.

4) *É molto importante che il BIG-BAG, in posizione di lavoro, sia solo appoggiato sulla guarnizione e che non gravi col proprio peso sulla stessa. In caso contrario modificare la posizione del telaio sfilabile fino ad ottenere un giusto tensionamento del Big-Bag. Nella versione con paranco sarà sufficente modificare la lunghezza della catena. Per le altre versioni sarà cura dell'impiantista o dell'utilizzatore provvedere ad utilizzare strutture o carrelli elevatori di altezza adeguata a garantire questa condizione.*

5) Open the hatch.

5) *Inspektionsklappe öffnen.*

5) Ouvrir la trappe en actionnant le crochet prévu à cet effet.

5) *Aprire il portello agendo sull' apposito gancio.*

6) Extract the FIBC outlet spout and untie the cord to allow the product to start flowing out.

6) *Die Auslaßöffnung des Big-Bag herausziehen und die Verschlußleine öffnen, damit das Produkts langsam herausströmen kann.*

6) Extraire la bouche de sortie du Big-Bag et délacer le cordon de fermeture de manière à faire tomber la première partie de produit.

6) *Estrarre la bocca di scarico del Big-Bag e slacciarne il cordone di chiusura in modo da fare defluire lentamente la prima parte di prodotto.*

7) Close the hatch and start up the motovibrator to begin emptying the FIBC.

7) *Die Klappe wieder verschließen und den Vibrationsmotor starten, um mit der eigentlichen Entleerung zu beginnen.*

7) Fermer la trappe en agissant sur le crochet prévu à cet effet et commencer le vidage en mettant en marche le motovibrateur.

7) *Chiudere il portello agendo sull' apposito gancio ed iniziare lo svuotamento avviando il motovibratore.*

Operation of the motovibra-tor will be cyclic or continuous according to the flow required. At the end of the emptying process, it is advisable to continue to operate the motovibrator for another one or two minutes in order to remove any product remaining in the folds of the FIBC. Do not start up the motovibrator without the FIBC or without product.

To unload the FIBC empty the hopper completely, then proceed with the operations indicated in reverse order.

Der Vibrationsmotor arbeitet je nach dem geforderten Durchsatz zyklisch oder im Dauerbetrieb. Am Ende der Entleerphase sollte der Vibrationsmotor noch 1 oder 2 Minuten weiterlaufen, um die Restmenge auszutragen, die in den Sackfalten verblieben ist. Den Vibrationsmotor nicht einschalten, wenn kein Sack oder kein Produkt vorhanden ist.

Zur Entfernung des Big-Bag den Trichter ganz entleeren, um die beschriebenen Vorgänge dann in umgekehrter Reihenfolge vorzunehmen.

Le fonctionnement du moto-vibrateur sera cyclique ou continu suivant le débit requis. Il est conseillé, à la fin du vidage, de faire fonctionner le motovibrateur encore 1 à 2 minutes pour extraire le produit qui est resté dans les plis du sac. Ne pas mettre le moto-vibrateur en marche en l'absence de Big Bags ou sans produit.

Pour décharger le Big-Bag vider complètement la trémie puis procéder dans l'ordre inverse aux opérations indiquées.

Il funzionamento del motovibra-tore sarà ciclico o in continuo a seconda della portata richiesta. Si consiglia, al termine dello svuota-mento, di far funzionare ancora il motovibratore per 1 o 2 minuti al fine di estrarre l' eventuale pro-dotto rimasto nelle pieghe del big bag. Non avviare il motovibratore in assenza di Big Bag o senza prodotto.

Per scaricare il BIG-BAG svuo-tare completamente la tramog-gia poi procedere in senso con-trario alle operazioni indicate.

If, during operation, there is a problem with downflow of the product, the motovibrator can be adjusted, by increasing or decreasing its intensity of vibration.

PROCEDURES FOR ADJUSTING MOTOVIBRATOR

The motovibrator installed is of the variable weights type; it is therefore necessary to change the degree of intensity of vibrations according to the method described in the (enclosed) USE AND MAINTENANCE manual supplied by the Manufacturer.

The value of regulation of the motovibrator fitted on the FIBC, is closely linked to the conditions of use.

The adjustment must be made before start-up.

The parameters to be taken into consideration are:

- Type of product;
- Humidity;
- Temperature;
- FIBC storage time;
- Flow rate;
- FIBC dimensions.

The adjustment defined by the Manufacturer during the acceptance test phase is 70%.

If it is necessary to change this value, it is advisable to proceed gradually.

If the results are not satisfactory, before proceeding with another adjustment, empty the product from the hopper in order to avoid residue from previous tests.

THE OPERATION MUST BE CARRIED OUT EXCLUSIVELY BY QUALIFIED PERSONNEL, WITH THE POWER SUPPLY DISCONNECTED.

- Remove the side covers after unscrewing the screws.
- Slacken the Allen nut (photo 1) and move the mobile mass (photo 2) to the required position, and tighten all the way after fitting the respective washers.
- Retighten the Allen nut all the way (Photo 3).

The weights must be adjusted perfectly equal and in the same direction on both sides.

Maximum intensity is obtained with the adjustable masses perfectly aligned with the fixed masses.

Refit the covers, after replacing the OR sealing ring without damaging it.

For more information, refer to the vibrator motor manual available on the site www.wamgroup.com.

Wenn während des Betriebs der Entleerungsstation feststellt wird, daß das Produkt unregelmäßig ausgetragen wird, kann eine Einstellung des Vibrationsmotors vorgenommen werden, indem man die Stärke der Vibrationen erhöht oder verringert.

VORGEHENSWEISE ZUR EINSTELLUNG DES VIBRATIONSMOTORS

Der eingebaute Vibrationsmotor hat einstellbare Un-wuchtmassen. Man kann daher die Stärke der Vibrationen nach Bedarf einstellen. Dazu die Beschreibungen der BETRIEBS- UND WARTUNGSANLEITUNG (in der Anlage) beachten, die der Hersteller des Motors liefert.

Der Wert, auf den der Vibrationsmotor eingestellt ist, der in der Big-Bag- Entleerungsstation installiert ist, ist abhängig von den Einsatzbe-dingungen.

Die Einstellung ist vor der Inbetriebnahme vorzunehmen.

Die zu berücksichtigenden Parameter sind:

- Produkttyp;
- Feuchtegehalt;
- Temperatur;
- Lagerzeit des BIG-BAG;
- Durchsatzmenge;
- BIG-BAG-Abmessungen.

Vom Hersteller ist der Motor bei der Abnahmeprüfung auf einen Wert von 70% eingestellt.

Falls dieser Wert geändert werden muß, immer stufenweise vorgehen.

Wenn das Resultat nicht zufriedenstellend ausfällt, vor weiteren Einstellungen das Produkt aus dem Trichter entfernen, um bei weiteren Versuchen keine Restmengen zu haben.

DER VORGANG DARF NUR DURCH QUALIFIZIERTES PERSONAL UND BEI AUSGESCHALTETER VERSORGUNG AUSGEFÜHRT WERDEN.

- Die Seitendeckel abnehmen, nachdem man die Schrauben losgedreht hat.
- Die Innensechskantmutter (Bild 1) lockern, das bewegliche Gewicht (Bild 2) in die gewünschte Position bringen und fest anziehen, nachdem man immer die entsprechenden Unterlegscheiben dazwischengelegt hat.
- Die Mutter fest anziehen (Bild 3)

Die Gewichte müssen perfekt gleichmäßig und auf beiden Seiten in der gleichen Richtung eingestellt werden.

Die max. Stärke erhält man, wenn die einstellbaren Gewichte perfekt zu den festen Gewichten ausgerichtet sind.

Die Deckel wieder montieren. Vorsichtig den O-Ring dazwischen legen, ohne diesen zu beschädigen.

Für weitere Informationen ist Bezug auf das Handbuch des Unwuchtmotors auf der Webseite www.wamgroup.com zu nehmen.

Si pendant le fonctionnement des irrégularités se vérifient dans la descente du produit, on peut effectuer le réglage du motovibrateur, en augmentant ou en diminuant son intensité de vibration.

PROCEDURES DE REGLAGE DU MOTOVIBRATEUR

Le motovibrateur installé est à masses variables, donc, s'il s'avère nécessaire de changer le degré d'intensité des vibrations suivre les modalités prévues sur la notice UTILISATION ET ENTRETIEN (ci-joint) fournie par le constructeur.

La valeur de réglage du motovibrateur, monté sur le Big Bag est étroitement lié aux conditions d'utilisation.

Le réglage devra être effectué avant le démarrage.

Les paramètres à prendre en compte sont:

- Type de produit;
- Humidité;
- Température;
- Temps de stockage du BIG-BAG;
- Débit;
- Dimensions du BIG-BAG.

Le réglage prévu par le constructeur en phase de réception, est de 70%.

S'il s'avère nécessaire de modifier cette valeur il est conseillé de procéder graduellement.

Si le résultat n'est pas satisfaisant, avant de faire un nouveau réglage, vider la trémie du produit pour ne pas avoir les résidus des essais précédents.

L'OPÉRATION DOIT ÊTRE EXÉCUTÉE UNIQUEMENT PAR DU PERSONNEL QUALIFIÉ ET AVEC L'ALIMENTATION DÉBRANCHÉE.

- Déposer les couvercles latéraux en dévissant les vis.
- Desserrer le boulon d'Allen (photo 1), déplacer la masse mobile (photo 2) dans la position désirée.
- Resserrer à fond l'écrou à six pans creux (Photo 3)

Les poids doivent être réglés de manière parfaitement identique et dans le même sens de deux côtés.

L'intensité maximale s'obtient avec les poids réglables parfaitement alignés aux poids fixes.

Remonter le couvercles en montant, sans l'endommager, le joint d'étanchéité OR.

Pour tout complément d'informations faire référence au Manuel du motovibrateur repérable sur le site www.wamgroup.com.

Se durante il funzionamento si riscontrano delle irregolarità nella discesa del prodotto si può effettuare la regolazione del motovibratore, aumentando o riducendo la sua intensità di vibrazione.

PROCEDURE PER LA REGOLAZIONE DEL MOTOVIBRATORE

Il motovibratore installato è a masse variabili, pertanto, nel caso si renda necessario variare il grado di intensità delle vibrazioni seguire le modalità previste sul libretto USO E MANUTENZIONE (in allegato) fornito dal Costruttore.

Il valore di regolazione del motovibratore, montato sul big bag, è strettamente legato alle condizioni di utilizzo.

La regolazione dovrà essere effettuata prima dell' avviamento.

I parametri da considerare sono:

- Tipo di prodotto;
- Umidità;
- Temperatura;
- Tempo di stoccaggio del BIG-BAG;
- Portata;
- Dimensioni del BIG-BAG.

La regolazione prevista dal Costruttore in fase di collaudo, è del 70%.

Nel caso si renda necessario modificare tale valore è consigliabile procedere gradualmente.

Se il risultato non è soddisfacente, prima di procedere a una nuova regolazione, svuotare la tramoggia dal prodotto per non avere residui di prove precedenti.

L'OPERAZIONE DEVE ESSERE ESEGUITA ESCLUSIVAMENTE DA PERSONALE QUALIFICATO E CON ALIMENTAZIONE DISINSERITA.

- Togliere i coperchi laterali svitando le viti.
- Allentare il dado a brugola (foto 1), spostare la massa mobile (foto 2) nella posizione desiderata.
- Riserrare a fondo il dado a brugola (Foto 3)

Le masse devono essere regolate in modo perfettamente uguale e nello stesso senso in entrambi i lati.

La massima intensità si ottiene con le masse regolabili perfettamente allineate alle masse fisse.

Rimontare i coperchi, interponendo, senza danneggiarla, la guarnizione OR di tenuta.

Per ulteriori informazioni riferirsi al manuale del motovibratore reperibile sul sito www.wamgroup.com

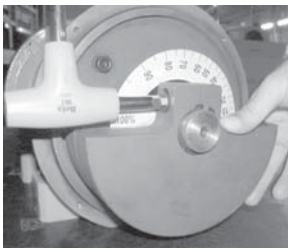

Photo 1 - *Bild 1*
Photo 1 - *Foto 1*

Photo 2 - *Bild 2*
Photo 2 - *Foto 2*

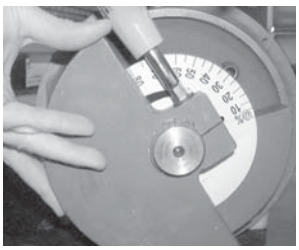

Photo 3 - *Bild 3*
Photo 3 - *Foto 3*

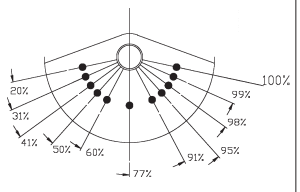

Weights - *Unwuchtmassen*
Masses - Masse

Before starting up the plant, it is necessary to carry out a series of checks in order to prevent problems or risks.
Make sure that all the equipment components are positioned and fitted properly.
Carefully check all the electric and pneumatic connections.

Vor Inbetriebnahme des Systems muß eine Reihe von Prüfungen vorgenommen werden, um Probleme oder Risiken zu vermeiden.
Sicherstellen, daß alle Bestandteile der Vorrichtung korrekt aufgestellt und befestigt wurden.
Alle elektrischen und pneumatischen Anschlüsse sorgfältig prüfen.

Avant de mettre en marche l'installation il est important d'effectuer une série de contrôles afin de prévenir les problèmes ou les risques.
S'assurer que tous les composants de la machine sont placés de la bonne manière et fixés correctement.
Vérifier soigneusement tous les raccordements électriques et pneumatiques.

Prima di effettuare l' avviamento dell' impianto è importante che vengano eseguiti una serie di controlli al fine di prevenire problemi o rischi.
Accertarsi che tutti i componenti della macchina siano collocati in modo opportuno e correttamente fissati.
Verificare accuratamente tutti gli allacciamenti elettrici e pneumatici.

OPERATION
The work cycle can be:
- automatic
- manual.

The cylinders may operate:
- in pairs (the two pneumatic hammers move in parallel towards the FIBC).
- In single mode (the two pneumatic hammers move alternately).

FUNKTIONSWEISE
Der Betriebszyklus kann wie folgt ablaufen:
- automatisch
- von Hand.

Der Betrieb der Zylinder erfolgt:
- gleichzeitig (die beiden Betätigungsstangen fahren parallel zum BIG-BAG vorwärts)
- abwechselnd (die beiden Betätigungsstangen fahren abwechselnd vorwärts).

FONCTIONNEMENT
Le cycle de fonctionnement peut être:
- automatique
- manuel

En outre il est prévu que les cylindres fonctionnement de manière:
- simultanée (les deux percuteurs avancent parallèles vers le BIG-BAF).
- alternée (les deux percuteurs avancent alternativement).

FUNZIONAMENTO
Il ciclo di funzionamento può essere:
- automatico
- manuale.

Inoltre è previsto un funzionamento dei cilindri:
- simultaneo (i due percussori avanzano in parallelo verso il BIG-BAG).
- alternato (i due percussori avanzano alternativamente)

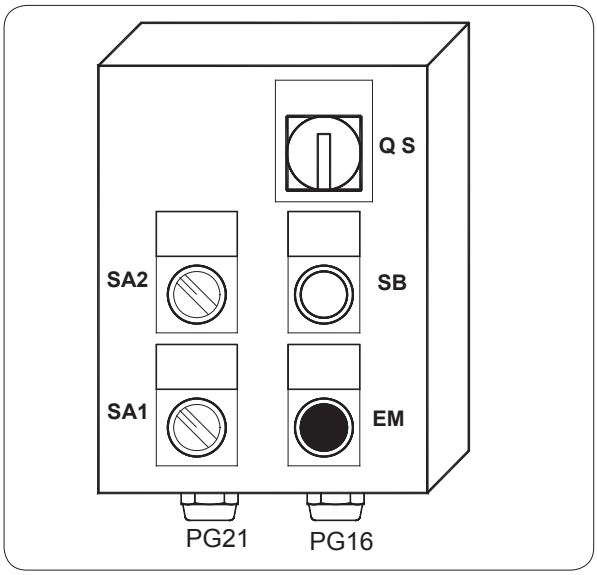

A - AUTOMATIC - SINGLE operation

- Turn on the main switch QS to power the panels (electric and pneumatic).
- Open the compressed air on/off valve (to be provided by the Customer) to supply the electric panel.
- Turn selector SA2 to the "AUTOMATIC" position.
- Turn selector SA1 to the "SINGLE" position.
- Set the operating times on timers KT1-KT2-KT3.

A - Betrieb AUTOMATISCH - ABWECHSELND

- Den Hauptschalter QS drehen, um die Schalttafeln (elektrisch und pneumatisch) spannungsführend zu machen.
- Das Sperrventil der Druckluft (Installation auf Veranlassung des Kunden) zum Speisen der elektrischen Schalttafel öffnen.
- Den Wahlschalter SA2 auf die Stellung „AUTOMATIK" drehen.
- Den Wahlschalter SA1 auf die Stellung „SINGLE" drehen.
- Auf den Zeitschaltern KT1-KT2-KT3 die Betriebszeiten einstellen.

A - Fonctionnement AUTOMATIQUE - ALTERNÉ

- Tourner l'interrupteur général QS pour mettre les armoires sous tension (électrique et pneumatique).
- Ouvrir la vanne d'arrêt de l'air comprimé (installation à la charge du Client) pour alimenter l'armoire électrique.
- Tourner le sélecteur SA2 sur la position «AUTOMATIQUE».
- Tourner le sélecteur SA1 sur la position «SINGLE».
- Programmer les temps de fonctionnement sur les temporisateurs KT1-KT2-KT3

A - Funzionamento AUTOMATICO - ALTERNATO

- Ruotare interruttore generale QS per dare tensione ai quadri (elettrico e pneumatico).
- Aprire la valvola di intercettazione aria compressa (installazione a carico del Cliente) per alimentare il quadro elettrico.
- Ruotare il selettore SA2 in posizione "AUTOMATICO".
- Ruotare il selettore SA1 in posizione "SINGLE".
- Impostare i tempi di funzionamento sui timer KT1-KT2-KT3.

- Press the cycle start pushbutton SB (the automatic cycle relay KA0 is energized - solenoid valve YV1 is energized and it pushes activator 1 regulated by timer KT1 forward.
- At the end of the time set on timer KT1, solenoid valve YV2 is energized which pushes activator 2 regulated by timer KT2 forward and at the same time activator 1 is drawn back.
- At the end of the time set on timer KT2, activator 2 is drawn back and at the same time energizes relay KA1 which holds the two activators in pause in the retracted position.
  The pause time is regulated by timer KT3 which, at the end of the set time, allows the next cycle to be started up.
- When the FIBC is completely empty, select push-button EM to stop the working of the system.

- Die Starte Zyklus-Start SB drücken (das Relais Zyklus Automatik KA0 zieht an - das Magnetventil YV1 wird erregt, das den Trieb 1, der vom Timer KT1 aktiviert wird, vorwärts schiebt.
- Nach Ablauf der auf Zeitschalter KT1 eingestellten Zeit erregt sich das Magnetventil YV2, das den Trieb 2, der vom Timer KT2 aktiviert wird, vorwärts schiebt, wobei der Trieb 1 sich gleichzeitig rückwärts bewegt.
- Nach Ablauf der auf Zeitschalter KT2 eingestellten Zeit bewegt sich der Trieb 2 rückwärts und gleichzeitig zieht das Relais KA1 an, das die beiden Triebe in der zurückgefahrenen Position in der Pause hält.
  Die Pausenzeit wird vom Zeitschalter KT3 geregelt, der nach Ablauf der Zeit die Wiederaufnahme des anschließenden Zyklus gestattet.
- Nach dem Entleeren des Big-Bag die Taste EM wählen, um den Betrieb des Systems zu stoppen.

- Appuyer sur le bouton de marche cycle SB (excitation du relais de cycle automatique KA0 - excitation de l'électrovanne YV1 qui pousse vers l'avant l'activateur 1 réglé par le temporisateur KT1).
- Quand le temps programmé sur le temporisateur KT1 est terminé, l'électrovanne YV2 s'excite et pousse vers l'avant l'activateur 2 réglé par le temporisateur KT2 et simultanément l'activateur 1 recule.
- Quand le temps programmé sur le temporisateur KT2 est terminé, l'activateur 2 recule et simultanément s'excite le relais KA1 qui tient en pause les deux activateurs dans la position rentrée.
  Le temps d'arrêt est réglé par le temporisateur KT3 qui à la fin du temps permet la reprise du cycle successif.
- Quand le vidage du Big-Bag est terminé, appuyer sur le bouton EM pour arrêter le fonctionnement du système.

- Premere il pulsante di marcia ciclo SB (si eccita il relè di ciclo automatico KA0 - si eccita l'elettrovalvola YV1 che spinge in avanti l'attivatore 1 regolato dal timer KT1.
- Scaduto il tempo impostato sul timer KT1 si eccita l'elettrovalvola YV2 che spinge in avanti l'attivatore 2 regolato dal timer KT2 e contemporaneamente retrocede l'attivatore 1.
- Scaduto il tempo del timer KT2 l'attivatore 2 retrocede e contemporaneamente si eccita il relè KA1 che tiene in pausa i due attivatori in posizione retratta.
  Il tempo di sosta è regolato dal timer KT3 che a fine tempo consente la ripresa del ciclo successivo).
- Completato lo svuotamento del Big - Bag selezionare il pulsante EM per arrestare il funzionamento del sistema.

B - AUTOMATIC - IN PAIRS operation

- Turn on the main switch QS to power the panels (electric and pneumatic).
- Open the compressed air on/off valve (to be provided by the Customer) to supply the electric panel.
- Turn selector SA2 to the "AUTOMATIC" position.
- Turn selector SA1 to the "IN PAIRS" position.
- Set the operating times on timers KT1-KT2-KT3.
- Press the cycle start pushbutton SB (the automatic cycle relay KA0 is energized - solenoid valves YV1 and YV2 are energized and simultaneously push the two pneumatic hammers for the time set on timer KT1.
- At the end of the time set on timer KT1, both pneumatic hammers are retracted and remain in pause for the time set on timer KT3.
- When the FIBC is completely empty, select push-button EM to stop the operation of the system.

B - Betrieb AUTOMATISCH - SIMULTAN

- Den Hauptschalter QS drehen, um die (elektrische und pneumatische) Schalttafel spannungsführend zu machen.
- Das Sperrventil der Druckluft öffnen (Installation durch den Kunden), um die elektrische Schalttafel zu speisen.
- Den Wahlschalter SA2 auf die Stellung „AUTOMATIK" drehen.
- Den Wahlschalter SA1 auf die Stellung „IN PAIRS" drehen.
- Die Betriebszeiten auf den Zeitschaltern KT1-KT3 einstellen.
- Die Taste Zyklus Start SB drücken (das Relais Zyklus Automatik KA0 zieht an - die Magnetventile YV1 und YV2 erregen sich, welche die beiden Betätigungsstangen für die auf Zeitschalter KT1 eingestellte Zeit gleichzeitig nach vorn schieben.
- Nach Ablauf der auf dem Zeitschalter KT1 eingestellten Zeit fahren beide Betätigungsstangen zurück und bleiben die auf Zeitschalter KT3 eingestellte Zeit in der Pause).
- Nach Ablauf der Entleerung des Big-Bag die Taste EM wählen, um den Betrieb des Systems anzuhalten.

B - Fonctionnement AUTOMATIQUE - SIMULTANÉ

- Tourner l'interrupteur général QS pour mettre les armoires sous tension (électrique et pneumatique).
- Ouvrir la vanne d'arrêt de l'air comprimé (installation à la charge du Client) pour alimenter l'armoire électrique.
- Tourner le sélecteur SA2 sur la position «AUTOMATIQUE».
- Tourner le sélecteur SA1 sur la position «IN PAIRS».
- Programmer les temps de fonctionnement sur les temporisateurs KT1-KT2-KT3.
- Appuyer sur le bouton de marche cycle SB (excitation du relais de cycle automatique KA0 - excitation des électrovannes YV1 et YV2 qui poussent vers l'avant simultanément les deux percuteurs pour la durée programmée sur le temporisateur KT1).
- Quand le temps programmé sur le temporisateur KT1 est terminé, les deux percuteurs reculent et restent en pause pendant le temps programmé sur le temporisateur KT3.
- Quand le vidage du Big-Bag est terminé, appuyer sur le bouton EM pour arrêter le fonctionnement du système.

B - Funzionamento AUTOMATICO - SIMULTANEO

- Ruotare interruttore generale QS per dare tensione ai quadri (elettrico e pneumatico).
- Aprire la valvola di intercettazione aria compressa (installazione a carico del Cliente) per alimentare il quadro elettrico.
- Ruotare il selettore SA2 in posizione "AUTOMATICO".
- Ruotare il selettore SA1 in posizione "IN PAIRS".
- Impostare i tempi di funzionamento sui timer KT1-KT3.
- Premere il pulsante di marcia ciclo SB (si eccita il relè di ciclo automatico KA0 - si eccitano le elettrovalvola YV1 e YV2 che spingeranno in avanti contemporaneamente i due percussori per il tempo impostato sul timer KT1.
- Scaduto il tempo impostato sul timer KT1 retrocedono ambedue i percussori restando in pausa per il tempo impostato sul timer KT3).
- Completato lo svuotamento del Big - Bag selezionare il pulsante EM per arrestare il funzionamento del sistema.

C - MANUAL - IN PAIRS operation

- Turn on the main switch QS to power the panels (electric and pneumatic).
- Open the compressed air on/off valve (to be provided by the Customer) to supply the electric panel.
- Turn selector SA2 to the “MANUAL” position.
- Turn selector SA1 to the “IN PAIRS” position.
- Press the cycle start pushbutton SB. The system works as long as the start pushbutton is kept pressed.

C - Betrieb VON HAND - SIMULTAN

- Den Hauptschalter QS drehen, um den (elektrischen und pneumatischen) Schaltkasten spannungsführend zu machen.
- Das Sperrventil der Druckluft öffnen (Installation durch den Kunden), um die elektrische Schalttafel zu speisen.
- Den Wahlschalter SA2 auf die Stellung „VON HAND“ drehen.
- Den Wahlschalter SA1 auf die Stellung „SIMULTAN“ drehen.
- Die Start-Taste SB drücken. Das System funktioniert, solange man die Start-Taste gedrückt hält.

C - Fonctionnement MANUEL - SIMULTANÉ

- Tourner l’interrupteur général QS pour mettre les armoires sous tension (électrique et pneumatique).
- Ouvrir la vanne d’arrêt de l’air comprimé (installation à la charge du Client) pour alimenter l’armoire électrique.
- Tourner le sélecteur SA2 sur la position «MANUEL».
- Tourner le sélecteur SA1 sur la position «SIMULTANÉ».
- Appuyer sur le bouton de marche SB. Le système fonctionne tant que le bouton de marche est maintenu enfoncé.

C - Funzionamento MANUALE - SIMULTANEO

- Ruotare interruttore generale QS per dare tensione ai quadri (elettrico e pneumatico).
- Aprire la valvola di intercettazione aria compressa (installazione a carico del Cliente) per alimentare il quadro elettrico.
- Ruotare il selettore SA2 in posizione “MANUALE”.
- Ruotare il selettore SA1 in posizione “SIMULTANEO”.
- Premere il pulsante di marcia SB. Il sistema funziona finché si tiene premuto il pulsante di marcia.

D - MANUAL - SINGLE operation

- Turn on the main switch QS to power the panels (electric and pneumatic).
- Open the compressed air on/off valve (to be provided by the Customer) to supply the electric panel.
- Turn selector SA2 to the “MANUAL” position.
- Turn selector SA1 to the “SINGLE” position.
- Press the start pushbutton SB. The system works as long as the start pushbutton is kept pressed.

D - Betrieb VON HAND - ABWECHSELND

- Den Hauptschalter QS drehen, um den (elektrischen und pneumatischen) Schaltkasten spannungsführend zu machen.
- Das Sperrventil der Druckluft öffnen (Installation durch den Kunden), um die elektrische Schalttafel zu speisen.
- Den Wahlschalter SA2 auf die Stellung „VON HAND“ drehen.
- Den Wahlschalter SA1 auf die Stellung „ABWECHSELND“ drehen.
- Die Start-Taste SB drücken. Das System funktioniert, solange man die Start-Taste gedrückt hält.

D - Fonctionnement MANUEL - ALTERNÉ

- Tourner l’interrupteur général QS pour mettre les armoires sous tension (électrique et pneumatique).
- Ouvrir la vanne d’arrêt de l’air comprimé (installation à la charge du Client) pour alimenter l’armoire électrique.
- Tourner le sélecteur SA2 sur la position «MANUEL».
- Tourner le sélecteur SA1 sur la position «ALTERNÉ».
- Appuyer sur le bouton de marche SB. Le système fonctionne tant que le bouton de marche est maintenu enfoncé.

D - Funzionamento MANUALE - ALTERNATO

- Ruotare interruttore generale QS per dare tensione ai quadri (elettrico e pneumatico).
- Aprire la valvola di intercettazione aria compressa (installazione a carico del Cliente) per alimentare il quadro elettrico.
- Ruotare il selettore SA2 in posizione “MANUALE”.
- Ruotare il selettore SA1 in posizione “ALTERNATO”.
- Premere il pulsante di marcia SB. Il sistema funziona finché si tiene premuto il pulsante di marcia.

CHECKS MADE AT THE FACTORY

The equipment has been subjected to actual operating tests load-free for about 15 minutes at the factory, so as to guarantee correct start-up.

VOM HERSTELLER DURCHGEFÜHRTE KONTROLLEN

Die Vorrichtung wurde im Herstellerwerk einer abschließenden Funktionskontrolle unterzogen der leeren Vorrichtung auf die Dauer von ca. 15 Minuten., um eine korrekte Inbetriebnahme zu garantieren.

CONTRÔLES EFFECTUÉS DANS NOS ETABLISSEMENTS

Cette machine a été soumise, dans l’ établissement du constructeur un fonctionnement à vide pendant environ 15 minutes, à un essai fonctionnel de réception afin de garantir une mise en service correcte.

CONTROLLI EFFETTUATI NEI NOSTRI STABILIMENTI

La macchina ha subito, presso gli stabilimenti del costruttore, un reale collaudo funzionale a vuoto per circa 15 minuti così da garantire la corretta messa in esercizio.

MAINTENANCE

Before carrying out any operation, make sure the machine is in safety condition

In this manual, from here onwards "setting the machine in safety conditions" will indicate the following operations:

- Make sure the machine is disconnected from all electric power supply sources.
- Make sure the machine is completely stopped.
- Wait for the internal and external machine temperatures to reach values not dangerous to the touch.
- Provide sufficient lighting around the machine operating area (the operators may be provided with electric lamps with protection degree IP65, if necessary).
- Make sure the machine is disconnected from the compressed air supply.
- Wait for the powder mass inside the silo to settle down completely.

Before carrying out any operation on the machine (maintenance or cleaning), the operators must use suitable personal protection equipment:

- antistatic safety footwear (certified)
- antistatic protective clothing (certified)
- helmet
- antistatic, cut-proof gloves
- safety masks

In addition to these, use the safety devices specified in the safety chart of the product handled.

Machine operations must be carried out with the machine in safety conditions disconnected from all energy sources and in the absence of airborne dust; follow the machine stop procedure for maintenance.

All maintenance operations, whether ordinary or extraordinary, must be carried out by adopting the suitable personal protection equipment required and by following the instructions in this manual strictly.

To reach the parts at the top of the machine, use a work platform, which must be chosen in such a way as to prevent risk of slipping, tripping or falling of operators.

WARTUNG

Vor Eingriffen jeder Art am Gerät überprüfen, ob dieses in einen sicheren Zustand versetzt wurde.

In diesem Handbuch verstehen wir unter dem Begriff „das Gerät in einen sicheren Zustand bringen" die folgenden Maßnahmen:

- Sicherstellen, dass die Maschine von allen elektrischen Versorgungsquellen getrennt ist.
- Sicherstellen, dass alle beweglichen Geräteteile still stehen.
- Sicherstellen, dass die Innen- und Außentemperatur des Gerä-tes einen Wert erreicht hat, der bei Berührung ungefährlich ist.
- Dafür sorgen, dass der Bereich rings um das Gerät gut be-leuchtet ist (eventuell indem man das Personal mit elektrischen Lampen mit Schutzart IP65 ausstattet).
- Sicherstellen, dass das Gerät vom Versorgungsnetz für Druckluft abgetrennt ist.
- Abwarten, bis der Staub, der sich innerhalb des Gerätes befindet, sich vollkommen abgesetzt hat.

Für jede Arbeit, die am Gerät auszuführen ist, (Wartung und Reinigung) muss das Personal mit den entsprechenden persönlichen Schutzausrüstungen (PSA) ausgestattet sein:

- Antistatische Sicherheitsschuhe (zertifiziert)
- Antistatische Schutzkleidung (zertifiziert)
- Schutzhelme
- Antistatische Schnittschutz-handschuhe
- Atemschutzmasken.

Außerdem auch die Schutzvorrichtungen, die auf dem Sicherheitsdatenblatt zu filternden Produkts stehen.

Die Wartungsarbeiten müssen bei in den sicheren Zustand gebrachter Maschine ausgeführt werden, wenn diese von allen Energiequellen getrennt ist, und in Abwesenheit von durch die Luft verteiltem Staub: Die ganze Prozedur zum Anhalten der Maschine durchführen, bevor man mit der Wartung beginnt.

Alle Wartungsarbeiten, sowohl regelmäßige als auch außerordentliche, müssen unter Anwendung aller erforderlichen persönlichen Schutzeinrichtu ngen und unter Beachtung aller Angaben dieses Handbuchs ausgeführt werden.

Wenn Teile der Maschine erreicht werden müssen, die sich in größerer Höhe befinden, benutzen Sie eine Arbeitsbühne, die so zu wählen ist, dass Ausrutsch-, Stolper- und Abstürzgefahren für das Personal vermieden werden.

ENTRETIEN

Avant d'effectuer une quelconque intervention sur la machine s'assurer que celle-ci a été placée en condition de sécurité.

Dans le présent manuel la consigne "mettre la machine en sécurité" indique les opérations suivantes :

- S'assurer que la machine est débranchée de toutes les alimentations électriques;
- S'assurer que la machine est complètement arrêtée;
- Attendre que la température intérieure et extérieure de la machine a atteint une valeur qui n'est pas dangereuse au toucher;
- Eclairer correctement la zone qui entoure la machine (en dotant éventuellement les opérateur de lampes électriques avec degré de protection IP65);
- S'assurer que la machine est débranchée du réseau de distribution de l'air comprimé;
- Attendre que la poussière contenue à l'intérieur de la machine se soit entièrement déposée.

Pour toute opération à effectuer sur la machine (entretien et nettoyage), les opérateurs devront être munis des équipements de protection individuelle (EPI) :

- Chaussures de sécurité antistatiques (certifiées)
- Vêtements de protection antistatiques (certifiés)
- Casque
- Gants anticoupure antistatiques
- Maques de protection respiratoire

En outre les équipements de protection prévus par la fiche de sécurité du produit filtré.

Les opérations d'entretien doivent être effectuées avec la machine en condition de sécurité, débranché de toute source d'énergie et en absence de poussières dispersée dans l'air : effectuer toute la procédure d'arrêt de la machine avant de commencer l'entretien.

Toutes les opérations d'entretien, aussi bien ordinaire qu'extraordinaire, doivent être exécutées en adoptant tous les dispositifs de protection individuelle requis et en suivant attentivement les indications de cette notice.

Si l'on doit atteindre des parties de la machine, utiliser une plate-forme aérienne de travail qui devra être choisie de manière à éviter les dangers de glissement, heurt ou chute des opérateurs.

MANUTENZIONE

Prima di effettuare un qualsiasi intervento sulla macchina assicurarsi che questa sia messa in sicurezza.

In seguito nel presente manuale indicheremo con la dicitura "mettere in sicurezza la macchina" le seguenti operazioni:

- accertarsi che la macchina sia scollegata da tutte le alimentazioni elettriche;
- accertarsi che la macchina sia completamente ferma;
- attendere che la temperatura interna ed esterna della macchina abbia raggiunto un valore non pericoloso al tatto;
- provvedere ad illuminare correttamente la zona circostante alla macchina (eventualmente dotando gli operatori di lampade elettriche con grado di protezione IP65);
- accertarsi che la macchina sia scollegata dalla rete di distribuzione d'aria compressa;
- attendere che la polvere contenuta all'interno della macchina sia completamente depositata.

Per qualsiasi operazione da effettuarsi sulla macchina (manutenzioni e pulizia), gli operatori dovranno essere muniti degli appositi dispositivi di protezione individuale (DPI):

- scarpe antinfortunistiche antistatiche (certificate)
- indumenti protettivi antistatici (certificati)
- casco
- guanti antitaglio antistatici
- mascherine protettive

Inoltre occorre utilizzare tutti i dispositivi di protezione previsti dalla scheda di sicurezza del prodotto filtrato.

Le operazioni di manutenzione devono essere effettuate a macchina in sicurezza, scollegata da ogni fonte di energia e in assenza di polvere aerodispersa: seguire tutta la procedura di arresto della macchina prima di iniziare la manutenzione.

Tutte le operazioni di manutenzione, sia ordinaria che straordinaria, devono essere eseguite adottando tutti i dispositivi di protezione personale richiesti e seguendo attentamente le indicazioni di questo manuale.

Laddove si debbano raggiungere parti della macchina in quota, utilizzare una piattaforma aerea di lavoro che dovrà essere scelta in modo da evitare pericoli di scivolamento, inciampo o caduta per gli operatori.

The machine can be used with a very large range of products; this involves different degrees of wear on some components.

The recommended maintenance schedules are therefore subject to modifications.

It is always preferable to program maintenance operations periodically instead of having to act in emergency conditions so as to eliminate potential stops during periods of peak production.

Failure to follow the instruc-tions given below can lead to risks for the operators and lead to invalidation of the warranty on the equipment supplied.

CAUTION
All maintenance, lubrication and cleaning operations must be performed with the machine in safety conditions.

For hazardous materials, suitable PPD (personal protection devices) must be used in accordance with the safety chart of the powder handled.

Maintenance must be done only by qualified technicians.
Lift and handle all heavy parts using suitable lifting equipment.
Make sure that the parts or components are supported by suitable harnesses or hooks.
Ensure that there is no one standing in the area where the load is being lifted.

Remember that careful periodic maintenance and correct use are essential requirements for guaranteeing high machine performance.
To ensure that the machine functions constantly and normally and to prevent the guarantee's replacement clauses being invalidated, we recommend that you always use original spare parts.

Maintenance of the vibrator motor must be carried out in accordance with the instructions given in the relevant manual.

Das Gerät kann für unter-schiedliche Medien eingesetzt werden, was einen unterschiedlich schnellen Verschleiß einiger Komponenten zur Folge haben kann.

Die empfohlenen Wartungsabstände können daher Änderungen unterliegen.

Es ist immer besser, regelmäßige Wartungseingriffe zu planen, statt erst im Notfall eingreifen zu müssen, weil dann die Gefahr etwaiger Ausfallzeiten nicht besteht, wenn max. Produktionsauslastung vorgesehen ist.

Die Nichtbeachtung der folgenden Anweisungen kann zur Gefährdung des Personals und zum Ungültigwerden der Garantie auf die gelieferten Maschinen führen.

ACHTUNG
Vor der Ausführung von Wartung, Schmierung oder Reinigungsarbeiten ist die Maschine in den sicheren Zustand zu bringen.

Für gefährliches Schüttgut sind die persönlichen Schutzausrüstungen zu benutzen, die auf den Sicherheitsdatenblättern des behandelten Schüttguts beschrie-ben sind.

Die Wartungsarbeiten sind von spezialisierten Technikern auszuführen.
Alle schweren Einzelteile mit einer angemessenen Hubeinrichtung heben und transportieren.
Sicherstellen, daß Gruppen oder Einzelteile von passenden Anschlagelementen und Haken gehalten werden.
Sicherstellen, daß sich in der Nähe der zu hebenden Maschine keine Personen aufhalten.
Eine genaue und regelmäßige Wartung wie auch eine korrekte Benutzung sind in der Regel die Voraussetzungen für eine hohe Leistung der Maschine.
Um einen konstanten und ordnungsgemäßen Betrieb zu garantieren und zu vermeiden, die Voraussetzungen für die Garantiegewähr zu verlieren, sollte man immer nur Originalersatzteile verwenden.

Die Wartung des Unwuchtmotors ist gemäß der Angaben im Handbuch desselben vorzunehmen.

Il est rappelé que la machine peut travailler avec une très vaste gamme de produits et ceci comporte une rapidité différente dans l'usure de certains composants.

Le calendrier des intervention d'entretien est donc susceptible de variations.

Il convient de programmer régulièrement les interventions au lieu d'intervenir en conditions d'émergence, afin d'éliminer les arrêts potentiels pendant les périodes de production maximale.

L' inobservation des consignes suivantes peut provoquer des risques pour les opérateurs et invalider la garantie des machines fournies.

ATTENTION
Toute intervention d'entretien, lubrification et nettoyage doit être exécutée la machine en condition de sécurité.

Pour les matières dangereuses il faut utiliser les EPI appropriés conformément à la fiche de sécurité de la poudre traitée.

Les opérations d' entretien doivent être effectuées par des techniciens spécialisés.
Soulever et manipuler les pièces lourdes avec un moyen de levage approprié.
S' assurer que les groupes ou les pièces sont soutenues par des élingues et des crochets appropriés.
S' assurer qu' il n' y a personne à proximité de la charge à soulever.
Il est rappelé qu' un entretien régulier et précis ainsi qu'une utilisation correcte sont les conditions indispensables pour garantir un rendement élevé de la machine.
Pour assurer un fonctionnement constant, régulier et ne pas risquer de ne plus bénéficier du remplacement sous garantie, il est recommandé d'utiliser uniquement des pièces détachées d'origine.

L'entretien du motovibrateur doit être réalisé en suivant les indications contenues dans le manuel. tuellement branché à la RSM).

Si ricorda che la macchina può lavorare con una vastissima gamma di prodotti, e ciò comporta una diversa rapidità nell' usura di alcuni componenti.

I tempi di intervento di manutenzione consigliati sono quindi suscettibili di modifiche.

E' sempre preferibile programmare periodicamente gli interventi anziché dover intervenire in condizioni di emergenza così da eliminare potenziali arresti durante i periodi di massima produzione.

Il non attenersi strettamente alle seguenti istruzioni può causare rischi sugli operatori ed invalidare la garanzia sulle macchine fornite.

ATTENZIONE
Ogni intervento di manutenzione, lubrificazione e pulizia deve essere eseguito a macchina in sicurezza.

Per materiali pericolosi si devono usare i DPI idonei in accordo con la scheda di sicurezza della polvere trattata.

Le operazioni di manutenzione devono essere effettuate da tecnici specializzati.
Sollevare e maneggiare tutti i particolari pesanti con un mezzo di sollevamento adatto.
Assicurarsi che i gruppi od i particolari siano sostenuti da imbragature e ganci appropriati.
Accertarsi che non ci siano persone in prossimità del carico da sollevare.
Si ricorda che una precisa e periodica manutenzione ed un uso corretto sono la premessa indispensabile per garantire un elevato rendimento della macchina.
Per assicurare il suo costante e regolare funzionamento ed evitare che vengano a mancare i presupposti per la sostituzione in garanzia, si raccomanda di utilizzare sempre ricambi originali.

La manutenzione del motovibratore deve essere eseguita secondo le indicazioni contenute nel manuale dello stesso.

PERIODIC CHECKS	REGELMÄSSIGE KONTROLLEN	CONTRÔLES PÉRIODIQUES	CONTROLLI PERIODICI
Before every work shift Check the safety devices to ensure they are present and intact.	**Vor jeder Schicht** Sicherstellen, daß die Schutzvorrichtungen vorhanden und unversehrt sind.	**Avant chaque poste de travail** Vérifier la présence et l'intégrité des protections.	**Prima di ogni turno di lavoro** Verificare la presenza e l'integrità delle protezioni.
After every work shift Make sure that the passage of the material is free of residue; if this is not the case, clean carefully.	**Nach jeder Schicht** Sicherstellen, daß der Produktdurchlaufbereich keine Produktreste aufweist; an-dernfalls ist dieser Bereich sorgfältig zu reinigen.	**Après chaque poste de travail** Vérifier que la zone de passage du produit est libre de tous résidus; dans le cas contraire nettoyer soigneusement	**Dopo ogni turno di lavoro** Verificare che la zona di passaggio del materiale sia libera da residui dello stesso ; se non lo è pulire accuratamente
Every 100 hours of operation (every 2 weeks) Check the condition of the FIBC support seal.	**Alle 100 Betriebsstunden (alle 2 Wochen)** Den Zustand der Dichtungen prüfen, auf denen der Sack aufliegt.	**Toutes les 100 heures de travail (tous les 15 jours)** Contrôler l'état du joint d'appui du Big Bag.	**Ogni 100 ore di lavoro (ogni 15 giorni)** Controllare lo stato di efficienza della guarnizione di appoggio Big Bag.
Every 200 hours of operation (monthly) **1** - Check the appearance of the structure, paying particular attention to the state of: - welds in general; - motovibrator fixing plate; - damper support plates.	**Alle 200 Betriebsstunden (monatlich)** **1** - Das Aussehen der Struktur prüfen, wobei besonders auf folgendes zu achten ist: - Schweißstellen im allgemeinen; - Befestigungsplatte des Vibrationsmotors; - Trageplatten der Schwingungsdämpfer.	**Toutes les 200 heures de travail (tous les mois)** **1** - Vérifier l' aspect de la structure du fond en faisant attention à: - points de soudures; - plaque de fixation du motovibrateur; - plaques de soutien des dispositifs anti-vibration.	**Ogni 200 ore di lavoro (ogni mese)** **1** - Verificare l' aspetto della struttura prestando attenzione a: - saldature in genere; - piastra di fissaggio del motovibratore; - piastre di sostegno degli antivibranti.
2 - Check that all bolts are correctly tightened, in par-ticular the motovibrator fixing bolts.	**2** - Kontrolle der Schrauben auf festen Sitz, insbesondere der Schrauben zur Befestigung des Vibrations-motors.	**2**- Contrôler si les boulons ont été serrés correctement en faisant particulièrement attention à ceux qui fixent le motovibrateur.	**2** - Controllare il corretto serraggio dei bulloni prestando particolare attenzione a quelli di fissaggio del motovibratore.
3 - Check the seal for cracks or splits.	**3** - Sicherstellen, daß die Dichtungen keine Risse oder Bruchstellen aufweisen.	**3** - Contrôler que les joint ne présent aucune fissure ou lacération.	**3** - Controllare che non ci siano screpolature o fessurazioni nella guarnizione.
4 - Check the dampers for signs of collapse (load deformation must not exceed 10% of nominal height).	**4**- Sicherstellen, daß die Schwingungsdämpfer nicht verformt sind (die Verformung unter Lasteinwirkung darf nicht mehr als 10% über der Nennhöhe liegen).	**4**- Contrôler que les dispositifs anti-vibration ne sont pas défoncés (la déformation ne doit pas dépasser 10% de la hauteur nominale).	**4** - Controllare che gli antivibranti non presentino segni di sfondamento (la deformazione sotto carico non deve superare il 10% dell' altezza nominale).
5 - Check that the motovi-brator is as clean as pos-sible.	**5** - Sicherstellen, daß der Vibrationsmotor so sauber wie möglich ist.	**5**- Contrôler que le moto-vibrateur est toujours très propre.	**5** - Controllare che il motovibratore sia il più pulito possibile.
6 - Check the seals of the compressed air connections.	**6** - Die pneumatischen Anschlüsse auf dichten Sitz prüfen.	**6**- Contrôler la tenue des raccordements pneumatiques.	**6** - Controllare la tenuta dei collegamenti pneumatici.
7 - Check to make sure the pneumatic cylinders of the pneumatic actuators kit (if present) are in perfect working order.	**7**- Die Funktionstüchtigkeit der pneumatischen Zylinder des Bausatzes pneumatische Austraghilfen prüfen (falls vorhanden).	**7**- Contrôler l'efficacité des cylindres pneumatiques du kit des actionneurs pneumatiques (si prévu)	**7**- Controllare l' efficienza dei cilindri pneumatici del kit attivatori pneumatici (se presente)

The detergents to be used for cleaning the various equipment must have a flash point indicated in the respective safety chart, higher than the temperature reached in normal operating conditions and reasonably expected; therefore, there should be no risk of fire.

Die für die Reinigung der verschiedenen Geräte zu benutzenden Reinigungsmittel müssen einen Flammpunkt aufweisen (siehe entsprechendes Sicherheitsdatenblatt), der über der Temperatur liegt, die unter normalen und vorhersehbaren Einsatzbedingungen erreicht wird. Daher können sie keine Brandgefahr darstellen.

Les détergents à utiliser pour le nettoyage des différents appareillages doivent présenter un point d'inflammabilité, reporté sur les fiches de sécurité correspondantes, supérieur à la température pouvant être atteinte dans les conditions d'utilisation normales et raisonnablement prévisibles; par conséquent ils ne doivent pas déterminer un risque d'incendie.

I detergenti da impiegare per la pulizia delle varie apparecchiature devono presentare un punto di infiammabilità, riportato nelle rispettive schede di sicurezza, superiore alla temperatura raggiungibile nelle condizioni di utilizzo normali e ragionevolmente prevedibili; pertanto non possono determinare pericoli di incendio.

Before starting cleaning operations, set the machine in safety conditions.

Bevor man mit der Reinigung beginnt, ist das Gerät in den sicheren Zustand zu versetzen.

Avant de commencer les opérations de nettoyage, mettre la machine en condition de sécurité.

Prima di iniziare le operazioni di pulizia mettere in sicurezza la macchina.

When removing dust that may be present on the machine, take care to avoid spreading it in the surrounding area.

Beim Entfernen des Staubs, der eventuell im Gerät vorhanden ist, ist darauf zu achten, dass dieser nicht aufgewirbelt wird.

Lors du nettoyage de la poussière présente dans la machine, faire attention à ne pas la disperser dans le milieu ambiant.

Nella rimozione della polvere eventualmente presente nella macchina aver cura di non disperdere la polvere stessa nell'ambiente circostante.

The user must provide for the choice of suitable products for cleaning, depending on the type of plant and the product handled.

Der Benutzer muss Produkte auswählen, die für den jeweiligen Typ der Anlage und das behan-delte Schüttgut geeignet sind.

L'utilisateur devra choisir des produits appropriés pour le nettoyage en fonction de la typologie d'installation et de la matière transportée.

L'utilizzatore dovrà provvedere alla scelta dei prodotti idonei alle fasi di pulizia in base alla tipologia di impianto ed al prodotto trasportato.

the FIBC UNLOADERS meant for use with food products, provision must be made for cleaning at intervals depending on the type or product and plant.

Für die BIG-BAG Entleerstationen, die für Nahrungsmittel eingesetzt werden soll, ist die Häufigkeit der Reinigung abhängig von der Beschaffenheit des behandelten Produkts und vom Anlagentyp.

Pour les vide BIG-BAG destinés à être utilisés avec des produits alimentaires, il faut prévoir une phase de nettoyage à une fréquence qui dépend de la nature du produit et de l'installation.

Per gli svuota BIG-BAG destinati ad essere utilizzati con prodotti alimentari occorre prevedere una fase di pulizia con frequenza che dipende dalla natura del prodotto e dell'impianto.

In case of harmful products, the cleaning wastes must be conveyed to a tank and disposed off according to relevant regulations.

Bei schädlichen oder giftigen Produkten muss das Spülwasser in geeigneten Wannen aufgefangen und in Übereinstimmung mit den einschlägigen geltenden Bestimmungen entsorgt werden.

Dans le cas de produits nocifs, toxiques, les effluents de la phase de nettoyage doivent être convoyés dans une cuve appropriée et éliminés conformément à la norme en vigueur en la matière.

Nel caso di prodotti nocivi, tossici, i reflui della fase di pulizia dovranno essere convogliati in idonea vasca e smaltiti in accordo alle normative vigenti in materia.

OPERATION NOISE

The noise level values, expressed in dB(A) are obtained from readings made in an open field, at maximum performance, on 4 cardinal points at a distance of 1.5 metres from the equipment.

The values obtained are:

max. 75 dB(A)

The user may obtain values different from those indicated depending on the environment in which the equipment is installed.
It is therefore advisable to avoid installing the equipment near corners, walls and boxed metal structures.

The noise values refer to the machine complete with accessories, if any.

BETRIEBSGERÄUSCHE

Die Werte des Lärmpegels, ausgedrückt in dB(A), resultieren aus Freifeldmessungen bei maximaler Leistungsstufe, in den 4 Himmelsrichtungen, in 1,5 Meter Abstand von der Vorrichtung.

Meßwerte:

max. 75 dB(A)

Der Betreiber kann je nach der-Positionierung der Vorrichtung im Raum auf andere Werte treffen.
Daher die Vorrichtung nicht in Ecken, nahe an Wänden oder Metallstrukturen aufstellen.

Der Wert des Lärmpegels bezieht sich auf die Maschine mit eventuellen angebauten Zubehörteilen.

NIVEAU SONORE

Les valeurs du niveau sonore, exprimées en dB(A) sont obtenues à travers des lectures en champ libre, au rendement maximum, sur les 4 points cardinaux à 1,5 mètres de la machine.

Valeurs mesurées:

max. 75 dB(A)

L' utilisateur pourrait relever des valeurs différentes de celles indiquées en fonction de l' emplacement de la machine.
Il est préférable d' éviter de placer la machine à proximité des angles, murs, structures métalliques en caisson.

La valeur de bruit se réfère à la machine complète avec tout accessoire éventuel.

RUMOROSITÀ

I valori di rumorosità, espressi in dB (A) sono ottenuti attraverso letture eseguite in campo libero, al massimo rendimento, sui 4 punti cardinali a 1,5 metri dalla macchina.

I **valori rilevati sono:**

dB(A) max. 75

L' utilizzatore potrebbe rilevare valori diversi da quelli indicati in funzione della collocazione ambientale.
Pertanto è preferibile evitare di collocare la macchina in prossimità di angoli, pareti, strutture metalliche cassonate.

Il valore di rumorosità si riferisce alla macchina completa di eventuali accessori.

During operations and/or maintenance, the operators ARE NOT exposed to any residual risks.

In any case, it shall be the installer's responsibility to provide further indications and/or warning notices which may be necessary depending on the machine installation site and the material handled.

When servicing, inspecting or cleaning, the operator, after setting the machine to safety conditions, must use some of the individual protection devices indicated on the additional special plates to be affixed to the various machine sections.

Given below are examples of some warning notices which may be necessary, depending on the type of powder handled.

Während des Betriebs und der Wartung ist das Personal KEINEN Restgefahren ausgesetzt.

Es ist daher auf jeden Fall Aufgabe des Monteurs, weitere Angaben und /oder Schilder anzubringen, die in bezug auf den Einbauort und das behandelte Schüttgut erforderlich werden könnten.

Während der Wartungsarbeiten, der Inspektion und Reinigung und, nachdem man die Maschine in den sicheren Zustand gebracht hat, ist es auf jeden Fall erforderlich, dass das Bedienungspersonal einige persönliche Schutzausrüstungen benutzt, so wie durch Warnschilder, die in den einzelnen Bereichen des Geräts hinzuzufügen sind.

Untenstehend folgen Beispiele einiger Schilder, die je nach Art der verarbeiteten Pulver erforderlich sein könnten.

Pendant le travail et/ou l'entretien, les opérateurs ne sont PAS exposés à certains risques résiduels.

Dans tous le cas, l'installateur devra se charger d'apposer les indications ou les panneaux de signalisation qui peuvent s'avérer nécessaires en fonction du lieu d'installation de la machine et de la matière traitée.

Pendant les activités de maintenance, inspection et nettoyage et après avoir mis la machine en sécurité il est obligatoire que l'opérateur utilise des équipements de protection individuelle comme indiqué sur les plaques signalétiques à ajouter dans les différentes sections de la machine.

Voir ci-après, à titre d'exemple, quelques plaques qui pourraient se rendre nécessaires en fonction du type de poudre traitée.

Durante la lavorazione e/o la manutenzione, gli operatori NON sono esposti ad alcuni rischi residui.

In ogni caso sarà cura dell'installatore apporre ulteriori indicazioni e/o cartellonistiche che si potrebbero rendere necessarie in funzione del luogo di installazione della macchina e del materiale trattato.

Durante le attività di manutenzione, ispezione, pulizia, dopo aver messo in sicurezza la macchina, è obbligatorio che l'operatore utilizzi alcuni dispositivi di protezione individuale come indicato da apposite targhe monitorie da aggiungere nelle singole sezioni della macchina.

Di seguito si riportano a titolo esemplificativo alcune targhe che potrebbero rendersi necessarie in funzione del tipo di polvere.

Before carrying out any operation, set the machine in safety status and use suitable personal protection devices.

Vor Arbeiten jeglicher Aret an dem Gerät muss dieses in einen sicheren Zustand versetzt werden und geeignete PSA angelegt werden.

Avant toute intervention mettre la machine en condition de sécurité et utiliser les EPI appropriés.

Prima di qualsiasi intervento mettere in sicurezza la macchina e far uso degli idonei DPI.

SCRAPPING

For scrapping the machine at the end of its life, make sure the plastic parts (seals and components) are collected separately and sent to special centres for disposal.

The other parts meant for recycling must be sent to iron scrap yards.

When dismantling the machine make sure the lifting procedures indicated in the HANDLING section (page M.14) are followed.

For disposal of materials contained in the machine, refer to the existing legislation concerning disposal and the product safety chart.

VERSCHROTTUNG

Bei Verschrottung des Gerätes sind die Teile aus Kunststoff (Dichtungen und Komponenten) auszubauen und vorschriftsmäßig zu entsorgen.

Die restlichen Teile sind beim Scrotthändler abzugeben.

Während des Zerlegens des Gerätes die Anleitungen zum Anheben beachten, die im Teil HANDLING DES GERÄTES auf Seite M.14 nachzulesen sind.

Für die Entsorgung des im Gerät vorhandenen Produkts ist Bezug auf die geltenden Bestimmungen zur Materialentsorgung und die Sicherheitsdatenblätter der Produkte zu nehmen.

DEMANTELEMENT

En cas de démantèlement de la machine, démonter les parties en matières plastique (joints et composants) et les mettre à la décharge dans les déchetteries spécialisées.

Les parties restantes sont destinées à la récupération des matériaux ferreux.

Pendant les phases de démantèlement de la machine respecter les procédures de levage comme indiqué dans la section MANUTENTION (page M.14)

Pour l'élimination de la matière contenue dans la machine, se conformer aux normes en vigueur en matière d'élimination et à la fiche de sécurité du produit.

ROTTAMAZIONE

In caso di rottamazione a fine vita della macchina, aver cura di smontare le parti in materiale plastico (guarnizioni e componenti) e destinarle agli appositi centri di raccolta.

Le restanti parti sono da destinare al recupero dei materiali ferrosi.

Durante le fasi di smantellamento della macchina osservare le procedure di sollevamento come indicato nella sezione MOVIMENTAZIONE (pag. M.14)

Per lo smaltimento del materiale contenuto nella macchina, fare riferimento all norme vigenti in materia di smaltimento ed alla scheda di sicurezza del prodotto.

RETURNING THE MACHINE

To return the machine, fasten to a pallet and cover it with.heat-shrink nylon to protect it from knocks during transport

In any event, make sure the machine does not contain any material residue.

MASCHINENRÜCKGABE

Bei der etwaigen Rückgabe des Geräts ist dieses auf einer Palette zu befestigen und mit Schrumpffolie zu schützen. Auf jeden Fall versuchen, es so weit wie möglich vor etwaigen Stößen beim Transport zu schützen.

Sicherstellen, daß sich keine Materialrückstände im Gerät befinden.

RESTITUTION MACHINE

En cas de restitution de la machine, la fixer sur une palette et la protéger au moyen de Nylon thermorétractable, en essayant de la protéger au mieux contre les chocs éventuels du transport.

Vérifier dans tous les cas qu'il n'y a pas de résidus de matériel dans la machine.

RESO MACCHINA

In caso di reso della macchina fissarla su di un pallet e proteggerla con del nylon termoretraibile , cercando di proteggerla al meglio da eventuali urti derivanti dal trasporto.

In ogni caso assicurarsi che la macchina non abbia residui di materiale.

Minor problems may often be solved without calling a technician.
The most common faults with relevant solutions are given in the Table below.

Kleinere Probleme können oft ohne die Einschaltung eines Fachmanns behoben werden. Hier folgt eine Aufstellung der häufigsten Probleme und deren Abhilfe.

Les problèmes mineurs peuvent être résolus sans consulter un spécialiste. Vous trouverez ci-dessous une liste des inconvénients les plus communs avec les solutions éventuelles.

I problemi minori possono essere risolti senza consultare uno specialista.
Diamo di seguito un elenco degli inconvenienti più comuni con le eventuali soluzioni.

N.	Problem	Cause	Solution
1	Vibrator does not work.	Connection not made.	Check fuses.
		Incorrect voltage.	Correct voltage.
		Vibrator.	Replace faulty parts.
2	Product does not flow down.	Insufficient vibration.	Adjust vibrator size value.
		Outlet is obstructed.	Check extraction system below outlet.
		Valve closed..	Open.
		Vibrator burnt out.	Check; replace the vibrator if necessary.
3	Product under the hopper..	Hatchway seal damaged.t.	Locate cause, then replace if necessary.
		Welded joints are cracked.	Repair welds immediately.
4	Hopper vibrates irregularly.s.	Damper(s) damaged.	Locate, then replace.

N.	Problem	Ursache	Abhilfe
1	Vibrationsmotor funktioniert nicht.	Kein Anschluß..	Sicherungen prüfen..
		Falsche Spannung.	Spannung anpassen.
		Vibrationsmotor defekt.	Defektes Teil ersetzen.
2	Produkt wird nicht gefördert.	Schlechte Vibration.	Unwuchtmassen im Motor ersetzen.
		Verstopfung des Auslaufs.	Austragesystem stromab vom Trichter prüfen.
		Klappe oder Schieber geschlossen.	Klappe oder Schieber öffnen.
		Vibrationsmotor durchgebrannt.	Ursache suchen und Vibrationsmotor ersetzen.
3	Unter Trichter tritt Produkt aus.	Dichtung der Klappe beschädigt.	Ursache suchen und dann ersetzen.
		Risse in der Schweißnaht.	Sofort reparieren.
4	Unregelmäßige Vibrationen des Trichters.	Bruch der Schwingungsdämpfer.	Ursache suchen und ersetzen.

N.	Problème	Cause	Remède
1	Le motovibrateur ne fonctionne pas	Absence de courant..	Contrôler les fusibles.
		Tension erronée.	Adapter la tension.
		Motovibrateur défectueux..	Changer le composant défectueux.
2	Le produit ne descend pas.	Vibration faible.	Régler les masses du motovibrateur.
		Obstruction de la bouche de sortie.	Contrôler le système d'extraction en aval du fond.
		Vanne fermée.	Ouvrir la vanne. .
		Motovibrateur brûlé.	Rechercher la cause puis remplacer le motovibrateur.e.
3	Présence de produit sous la trémie	Joint de trappe endommagé.	Rechercher la cause puis le remplacer.
		Présence de criques dans les soudurese	Réparer immédiatement.
4	Vibration décomposée de la trémie.	Rupture d'un anti-vibrant..	Rechercher la cause et le remplacer.

N.	Problema	Causa	Soluzione
1	Il motovibratore non funziona.	Manca il collegamento.	Controllare fusibili.
		Tensione errata.	Adeguare la tensione.
		Motovibratore difettoso.	Sostituire il componente difettoso.
2	Il prodotto non scende.	Vibrazione scarsa.	Regolare masse motovibratore.
		Ostruzione della bocca di scarico.	Controllare sistema di estrazione a valle del fondo
		Valvola o serranda chiusa.	Aprire la valvola o serranda.
		Motovibratore bruciato.	Indagare il motivo poi sostituire il motovibratore.
3	Presenza prodotto sotto la tramoggia.	Guarnizione boccaporto danneggiata.	Scoprire il motivo e poi sostituirla.
		Presenza di cricche nelle saldature	Riparare immediatamente.
4	Vibrazione scomposta della tramoggia.	Rottura di un antivibrante/i.	Scoprire il motivo e sostituirlo/i.

WAM®

WAMGROUP

The manufacturer:

WAMGROUP S.p.A.

located in

Strada degli Schiocchi, 12 - I-41100 Modena (Mo) - Italy

under its own responsibility declares that:

SBB

Declaration Of Incorporation Of Partly Completed Machinery Annex II B 2006/42/CE Directive

comply with the RES Directive 2006/42/EC
of the European Parliament and the Council of 17 May 2006 on machinery

1.1.1. - Definitions
1.1.2. - Principles of safety integration
1.1.3. - Materials and products
1.1.5. - Design of machinery to facilitate its handling
1.3.1. - Risk of loss of stability
1.3.2. - Risk of break-up during operation
1.3.3. - Risks due to falling or ejected objects
1.3.4. - Risks due to surfaces, edges or angles
1.3.7. - Risks related to moving parts
1.3.8. - Choice of protection against risks arising from moving parts
1.3.9. - Risks of uncontrolled movements
1.5.4. - Errors of fitting
1.5.5. - Extreme temperatures
1.5.6. - Fire
1.5.7. - Explosion
1.5.8. - Noise
1.5.9. - Vibrations
1.5.13. - Emissions of hazardous materials and substances
1.5.15. - Risk of slipping, tripping or falling
1.6.1. - Machinery maintenance
1.6.2. - Access to operating positions and servicing points
1.6.4. - Operator intervention
1.6.5. - Cleaning of internal parts
1.7.1. - Information and warnings on the machinery
1.7.2. - Warning of residual risks
1.7.4. - Instructions

and, where applicable, the requirements imposed by the following EC Directives
Directive 2004/108/EC of the European Parliament and the Council of 15 December 2004 on the approximation of the laws of the Member States relating to electromagnetic compatibility.
Directive 2006/95/EC of the European Parliament and the Council of 12 December 2006 on the approximation of the laws of the Member States relating to electrical equipment designed for use within certain voltage limits.

The relevant technical documentation is compiled in accordance with Annex VII B of the Machinery Directive 2006/42/EC
Harmonized standards, national standards and technical regulations in question:
EN ISO 12100-1: 2005 EN ISO 12100-2: 2005

The signing company is committed to provide, in response to a reasoned request by national authorities, relevant information on products covered by this declaration, without prejudice to the rights of intellectual property of the manufacturer. The information will be transmitted directly to the national authorities having requested.

It's forbidden to operate all these products before the machine, in which they will be installed, is declared in conformity with 2006/42/EEC AND SUBSEQUENT AMENDMENTS

Strada degli Schiocchi, 12 - I-41100 Modena (Mo) - Italy, 01.01.2010

The person authorized to provide the technical documentation:
Vainer Marchesini

The legal representative:
Vainer Marchesini

WAM®

WAMGROUP

Der Hersteller:

WAMGROUP S.p.A.

mit Sitz in

Strada degli Schiocchi, 12 - I-41100 Modena (Mo) - Italien

erklärt unter eigener Verantwortung wie folgt:

SBB

EINBAUERKLÄRUNG für unvollständige Maschinen gem. Anhang II B der MRL 2006/42/EG

Diese Produkte entsprechen den Anforderungen der Maschinenrichtlinie 2006/42/EG
des europäischen Parlamentes und des Rates vom 17. Mai 2006

1.1.1. - Begriffsbestimmungen
1.1.2. - Grundsätze für die Integration der Sicherheit
1.1.3. - Materialien und Produkte
1.1.5. - Konstruktion der Maschine im Hinblick auf die Hanhabung
1.3.1. - Risiko des Verlustes der Standsicherheit
1.3.2. - Bruchrisiko beim Betrieb
1.3.3. - Risiken durch herabfallende oder herausgeschleuderte Gegenstände
1.3.4. - Risiken durch Oberflächen, Kanten und Ecken
1.3.7. - Risiken durch bewegliche Teile
1.3.8. - Wahl der Schutzeinrichtungen gegen Risiken durch bewegliche Teile
1.3.9. - Risiko unkontrollierter Bewegungen
1.5.4. - Montagefehler
1.5.5. - Extreme Temperaturen
1.5.6. - Brand
1.5.7. - Explosion
1.5.8. - Lärm
1.5.9. - Vibrationen
1.5.13. - Emission gefährlicher Werkstoffe und Substanzen
1.5.15. - Ausrutsch-, Stolper- und Sturzrisiko
1.6.1. - Wartung der Maschine
1.6.2. - Zugang zu den Bedienungsständen und den Eingriffspunkten für die Instandhaltung
1.6.4. - Eingriffe des Bedienungspersonals
1.6.5. - Reinigen innen liegender Maschinenteile
1.7.1. - Informationen und Warnhinweise an der Maschine
1.7.2. - Warnung vor Restrisiken
1.7.4. - Betriebsanleitung

Wo anwendbar wurden die Anforderungen folgender EG Richtlinien erfüllt
Richtlinie 2004/108/EG des Europäischen Parlaments und des Rates vom 15. Dezember 2004 zur Angleichung der Rechtsvorschriften der Mitgliedstaaten über die elektromagnetische Verträglichkeit.
Richtlinie 2006/95/EG des Europäischen Parlaments und des Rates vom 12. Dezember 2006 zur Angleichung der Rechtsvorschriften der Mitgliedstaaten betreffend elektrische Betriebsmittel zur Verwendung innerhalb bestimmter Spannungsgrenzen.

Die speziellen technischen Unterlagen gem. Anhang VII B der MRL 2006/42/EG wurden erstellt.
Folgende harmonisierte Normen, nationale Normen und technische Vorschriften fanden Anwendung:
EN ISO 12100-1: 2005 EN ISO 12100-2: 2005

Das ausstellende Unternehmen ist verpflichtet, die technischen Unterlagen für diese Produkte auf begründetes Verlangen den Marktaufsichtsbehörden, unbeschadet der Rechte am geistigen Eigentum des Herstellers, zur Verfügung zu stellen. Die Unterlagen werden direkt an die anfordernde Behörde gesandt.

Es ist verboten diese Produkte in Betrieb zu nehmen, bevor die Maschine, in welche diese eingebaut werden, den Anforderungen der MRL entspricht und die EG Konformitätserklärung gem. MRL 2006/42/EG und nachfolgenden Änderungen vorliegt.

Strada degli Schiocchi, 12 - I-41100 Modena (Mo) - Italien, 01.01.2010

Bevollmächtigter für die Zusammenstellung
der relevanten Technischen Unterlagen:
Vainer Marchesini

Für den Hersteller:

Vainer Marchesini

WAM®

WAMGROUP

Le fabricant:

WAMGROUP S.p.A.

son siège social à

Strada degli Schiocchi, 12 - I-41100 Modena (Mo) - Italie

déclare sous sa propre responsabilité que

les machines type SBB

Déclaration d'Incorporation des machines partiellement construites - Directive 2006/42/CE Annexe II B

sont en conformité avec la Directive RES 2006/42/EC
du Parlement Européen et du conseil du 17 mai 2006 sur les machines

1.1.1. - Definitions
1.1.2. - Principes d'intégration en sécurité
1.1.3. – Matériels et produits
1.1.5. – Conception des machines pour faciliter leur manipulation
1.3.1. – Risque de perte de stabilité
1.3.2. – Risque de casse pendant fonctionnement
1.3.3. – Risques causés par la chute ou l'éjection d'objets
1.3.4. – Risques liés aux surfaces, aux bords et aux angles
1.3.7. – Risques liés aux pièces en mouvement
1.3.8. – Choix de protection contre les risques résultant de pièces mobiles
1.3.9. – Risques de mouvements non désirés
1.5.4. – Erreurs de montage
1.5.5. – Températures extrêmes
1.5.6. – Feu
1.5.7. – Explosion
1.5.8. – Bruit
1.5.9. – Vibrations
1.5.13. – Emission de matières et substances dangereuses
1.5.15. – Risque de glisser, trébucher ou tomber
1.6.1. – Maintenance des machines
1.6.2. – Accès aux postes de travail et aux points d'intervention
1.6.4. – Intervention de l'opérateur
1.6.5. – Nettoyage des parties internes
1.7.1. – Informations et avertissements sur la machine
1.7.2. – Avertissements sur les risques résiduels
1.7.4. – Notices de fonctionnement

et, quand applicable, avec les exigences imposées par les directives européennes suivantes
La **Directive 2004/108/CE** du Parlement européen et du Conseil du 15 Décembre 2004 sur le rapprochement des législations des États membres concernant la compatibilité électromagnétique.
La **Directive 2006/95/CE** du Parlement européen et du Conseil du 12 Décembre 2006 sur le rapprochement des législations des États membres concernant le matériel électrique destiné à être employé dans certaines limites de tension.

La documentation technique appropriée est constituée conformément à l'annexe VII B de la Directive Machines 2006/42/CE
Les normes harmonisées, les normes et règles techniques nationales en question:
EN ISO 12100-1: 2005 EN ISO 12100-2: 2005

La société signataire s'engage à fournir, en réponse à une demande motivée par les autorités nationales, toute information sur les produits couverts par cette déclaration, sans préjudice des droits de propriété intellectuelle du fabricant. Les informations seront transmises directement aux autorités nationales demanderesses.

Il est interdit d'utiliser tous ces produits avant que la machine, dans laquelle ils seront installés, soit déclarée conforme à la Directive 2006/42/CEE et ses amendements successifs.

Strada degli Schiocchi, 12 - I-41100 Modena (Mo) - Italie, 01.01.2010

La personne autorisée à fournir
la documentation technique:
Vainer Marchesini

Le représentant légal:

Vainer Marchesini

WAM®

WAMGROUP

Il sottoscritto fabbricante:

WAMGROUP S.p.A.

con sede legale in

Strada degli Schiocchi, 12 - I-41100 Modena (Mo) - Italia

dichiara sotto la propria responsabilità che:

le quasi macchine serie SBB

ai sensi dell'Allegato II B della Direttiva Macchine 2006/42/CE (DICHIARAZIONE DI INCORPORAZIONE)

risultano conformi ai RES della Direttiva 2006/42/CE
del Parlamento Europeo e del Consiglio del 17 maggio 2006 relativa alle macchine

1.1.1. - Definizioni
1.1.2. - Principi di integrazione della sicurezza
1.1.3. - Materiali e prodotti
1.1.5. - Progettazione della macchina ai fini della movimentazione
1.3.1. - Rischio di perdita di stabilità
1.3.2. - Rischio di rottura durante il funzionamento
1.3.3. - Rischi dovuti alla caduta o alla proiezione di oggetti
1.3.4. - Rischi dovuti a superfici, spigoli ed angoli
1.3.7. - Rischi dovuti agli elementi mobili
1.3.8. - Scelta di una protezione contro i rischi dovuti agli elementi mobili
1.3.9. - Rischi di movimenti incontrollati
1.5.4. - Errori di montaggio
1.5.5. - Temperature estreme
1.5.6. - Incendio
1.5.7. - Esplosione
1.5.8. - Rumore
1.5.9. - Vibrazioni
1.5.13. - Emissioni di materie e sostanze pericolose
1.5.15. - Rischio di scivolamento, inciampo o caduta
1.6.1. - Manutenzione della macchina
1.6.2. - Accesso ai posti di lavoro e ai punti d'intervento utilizzati per la manutenzione
1.6.4. - Intervento dell'operatore
1.6.5. - Pulitura delle parti interne
1.7.1. - Informazioni e avvertenze sulla macchina
1.7.2. - Avvertenze in merito ai rischi residui
1.7.4. - Istruzioni

e, qualora applicabili, alle esigenze imposte dalle seguenti Direttive Comunitarie
Direttiva 2004/108/CE del Parlamento Europeo e del Consiglio del 15 dicembre 2004 concernente il riavvicinamento delle legislazioni degli Stati membri relative alla compatibilità elettromagnetica.
Direttiva 2006/95/CE del Parlamento Europeo e del Consiglio del 12 dicembre 2006 concernente il riavvicinamento delle legislazioni degli Stati membri relative al materiale elettrico destinato ad essere adoperato entro taluni limiti di tensione.

La documentazione tecnica pertinente è stata compilata in conformità dell'Allegato VII B della Direttiva Macchine 2006/42/CE
Norme armonizzate, norme nazionali e regole tecniche considerate:
UNI EN ISO 12100-1: 2005 UNI EN ISO 12100-2: 2005

L'azienda firmataria della presente si impegna a trasmettere, in risposta a una richiesta adeguatamente motivata delle autorità nazionali, informazioni pertinenti sui prodotti oggetto della presente dichiarazione, fatti salvi i diritti di proprietà intellettuale del fabbricante. Le informazioni verranno trasmesse direttamente all'autorità nazionale che le ha richieste.

AVVERTENZA IMPORTANTE. E' vietato mettere in servizio la quasi macchina oggetto della presente dichiarazione finché la macchina finale in cui deve essere incorporata non è stata dichiarata conforme, se del caso, alle disposizioni della Direttiva Macchine 2006/42/CE.

Strada degli Schiocchi, 12 - I-41100 Modena (MO) - Italia, 01.01.2010

La persona autorizzata
a costituire il fascicolo tecnico:
Vainer Marchesini

Il rappresentante legale:

Vainer Marchesini

N.B. Rights reserved to modify technical specifications
N.B. Angaben ohne Gewähr. Änderungen können ohne Vorankündigung vorgenommen werden.
N.B. Toutes données portées dans le présent catalogue n'engagent pas le fabricant. Elles peuvent être modifiéés à tout moment.
N.B. Tutti i dati riportati nel presente catalogo non sono impegnativi e possono subire variazioni in qualsiasi momento.

WAMGROUP S.p.A. - EXTRAC
Division
Via Cavour, 338
I - 41030 Ponte Motta
Cavezzo (MO) - ITALY

☎ + 39 / 0535 / 618111
fax + 39 / 0535 / 618226
e-mail info@wamgroup.it
internet www.wamgroup.com
videoconferenze + 39 / 0535 / 49032

LEFT BLANK

EXTRAC®

WAMGROUP

3

SPARE PARTS

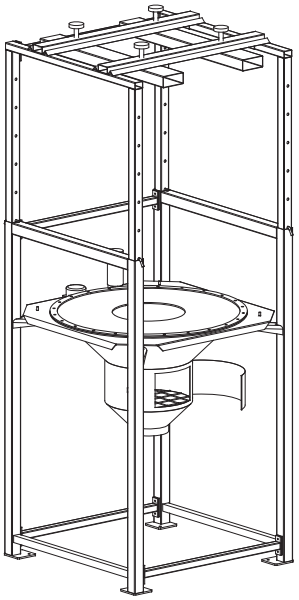

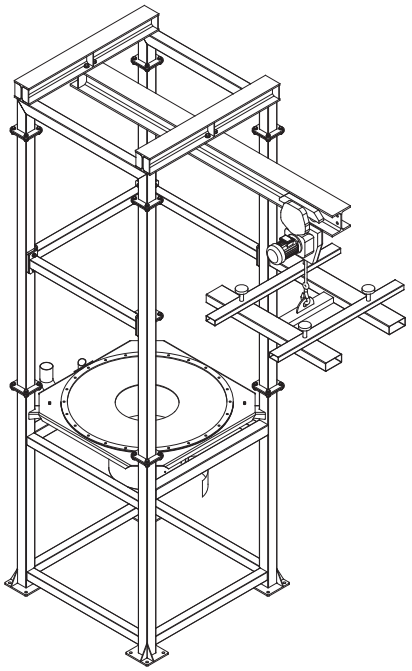

SBB

- **FLEXIBLE INTERMEDIATE BULK CONTAINER UNLOADER**
  SPARE PARTS CATALOGUE
- ***BIG-BAG - ENTLEERSTATION***
  ERSATZTEILKATALOG
- **VIDE-SACS DE GRANDES DIMENSIONS**
  PIECES DE RECHANGE
- ***SVUOTA BIG BAG***
  PEZZI DI RICAMBIO

All rights reserved © WAMGROUP S.p.A.

CATALOGUE No. **EXT.096.--.R.4L**			
ISSUE **A3**	CIRCULATION **100**	LATEST UPDATE **04.15**	

WAM®

All the products described in this catalogue are manufactured according to **WAMGROUP S.p.A. Quality System procedures**. The Company's Quality System, certified in July 1994 according to International Standards **UNI EN ISO 9002** and extended to the latest release of **UNI EN ISO 9001**, ensures that the entire production process, starting from the processing of the order to the technical service after delivery, is carried out in a controlled manner that guarantees the quality standard of the product.

*Alle in diesem Katalog beschriebenen Produkte werden gemäß dem **Qualitätssystem der WAMGROUP S.p.A.** hergestellt. Das im Juli 1994 gemäß der internationalen Norm **UNI EN ISO 9002** und auf die neueste Version der **UNI EN ISO 9001** erweiterte, zertifizierte Qualitätssystem der Firma gewährleistet, dass der gesamte Produktionsprozess von der Auftragsbearbeitung bis zum technischen Kundendienst nach Lieferung in kontrollierter Art und Weise erfolgt, so dass der Qualitätsstandard des Produkts gewährleistet ist.*

Tous les produits décrits dans ce catalogue sont fabriqués selon les procédures du **Système de Qualité de WAMGROUP S.p.A.**, certifié en Juillet 1994 selon les normes internationales **UNI EN ISO 9002** et étendu à la dernière version de la norme **UNI EN ISO 9001**. Cela garantit que le processus de production, à partir de la gestion de la commande au service technique après-vente, est effectué de manière contrôlée garantissant la norme de qualité du produit.

*Tutti i prodotti descritti nel catalogo sono stati realizzati secondo le **procedure del Sistema Qualità di WAMGROUP S.p.A.** Il Sistema Qualità aziendale, certificato dal luglio 1994 in conformità alle normative internazionali **UNI EN ISO 9002** e successivamente esteso all' ultima versione delle normative **UNI EN ISO 9001**, garantisce che l'intero processo produttivo, dalla formulazione dell'ordine fino all'assistenza tecnica dopo la consegna, si svolga secondo modalità controllate che garantiscono lo standard qualitativo del prodotto.*

This publication cancels and replaces any previous edition and revision.
We reserve the right to implement modifications without notice.
This catalogue cannot be reproduced, even partially, without prior written consent by the Manufacturer.

Diese Veröffentlichung storniert und ersetzt alle früheren Ausgaben und überarbeiteten Fassungen.
Wir behalten uns das Recht vor, Änderungen ohne vorherige Information durchzuführen.
Dieser Katalog darf selbst auszugsweise nicht ohne das schriftliche Einverständnis der Herstellers vervielfältigt werden.

Cette publication annule et remplace toute édition et révision antérieure.
Nous nous réservons le droit de mettre en place des modifications sans préavis.
Aucune reproduction, partielle ou intégrale du catalogue, ne pourra être faite sans l'accord préalable et écrit du Fabricant.

Questa pubblicazione annulla e sostituisce le edizioni e revisioni precedenti.
Ci riserviamo la facoltà di apportare modifiche senza preavviso.
Il presente catalogo non può essere riprodotto, nemmeno parzialmente, senza previo consenso scritto del Costruttore.

3 **SPARE PARTS CATALOGUE** **ERSATZTEILKATALOG**

SPARE PARTS CATALOGUE.....ERSATZTEILKATALOG..... **R.01**

3 **PIECES DE RECHANGE** **PEZZI DI RICAMBIO**

PIECES DE RECHANGE.....PEZZI DI RICAMBIO..... **R.01**

ALL MODELS - *ALLE MODELLE* - TOUS LES MODÈLES - *TUTTI I MODELLI*

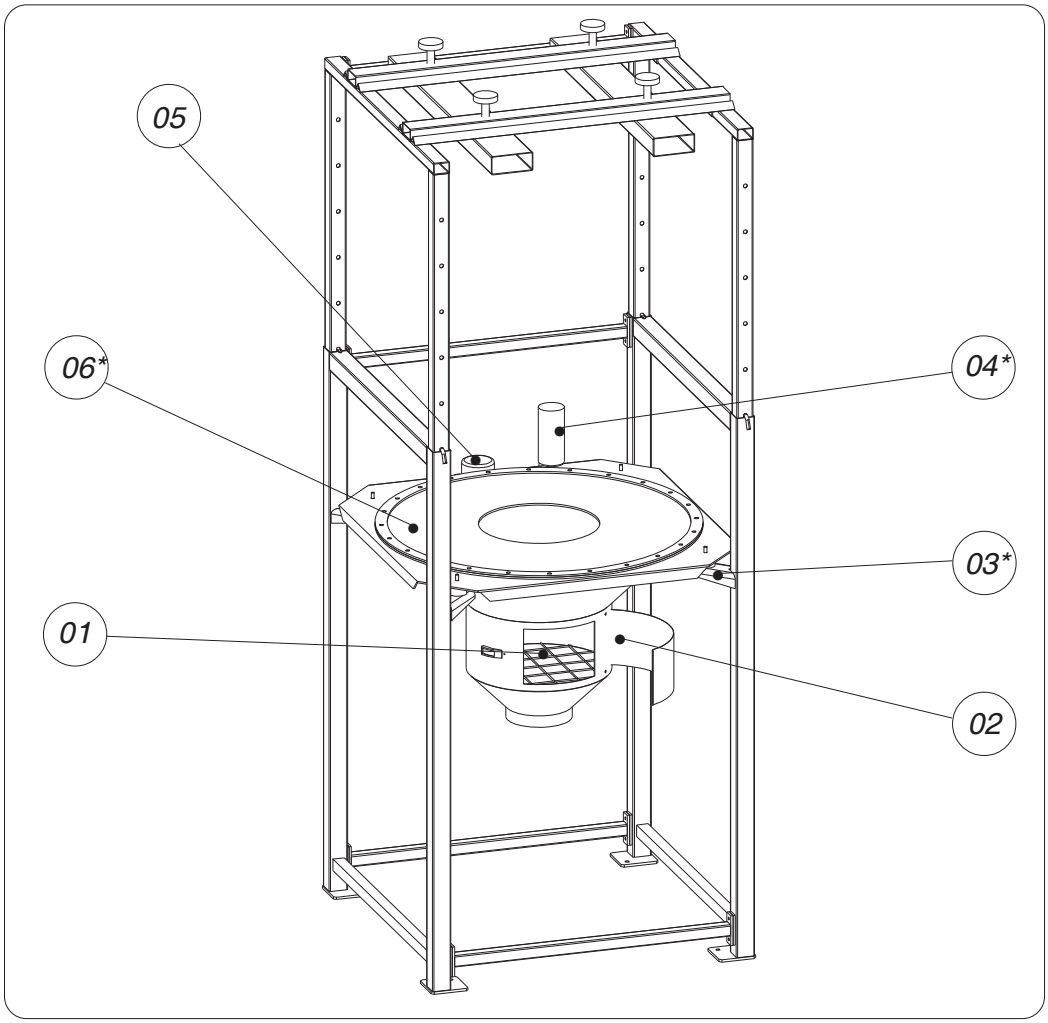

ITEM POS.	QT.Y MENGE	DESCRIPTION	BENENNUNG	DÉSIGNATION	DENOMINAZIONE	Type SBB	Code
01	1	SAFETY GRILLE	SICHERHEITSGITTER	GRILLE DE SÉCURITÉ	GRIGLIA DI SICUREZZA	All - *Alle* - Tous - *Tutte*	**206F4BQ2A**
02	1	HATCH SEAL	KLAPPENDICHTUNG	JOINT DE TRAPPE	GUARNIZIONE PORTELLO	All - *Alle* - Tous - *Tutte*	**20994512A**
03*	4	DAMPER	SCHWINGUNGSDÄMPFER	SILENT-BLOC	ANTIVIBRANTE	All - *Alle* - Tous - *Tutte*	**2099574TA**
04*	1	FILTER BAG	FILTERSACK	MANCHON FILTRANT	MANICA FILTRANTE	All - *Alle* - Tous - *Tutte*	**2099580ZA**
05	1	STD MOTOVIBRATOR	VIBRATIONSMOTOR STD	MOTOVIBRATEUR STD	MOTOVIBRATORE STD	SBB125	**VBOL101311**
						SBB150	**VBOL201311**
06*	1	STD SEAL Black	DICHTUNG STD Schwarze	JOINT STD Noir	GUARNIZIONE Nera STD	SBB125	**361002300**
						SBB150	**361002301**
		SEAL white	DICHTUNG Weiße	JOINT Blanc	GUARNIZIONE Bianca	SBB125	**19ZAQN6TA**
						SBB150	**19ZAQN8TA**

* = RECOMMENDED SPARE PARTS
* = *EMPFOHLENE ERSATZTEILE*
* = PIÈCES DÉTACHÉES CONSEILLÉES
* = *RICAMBI CONSIGLIATI*

CUTTING SYSTEM - *SCHNEIDEVORRICHTUNG* - SYSTÈME DE COUPE - *SISTEMA DI TAGLIO*

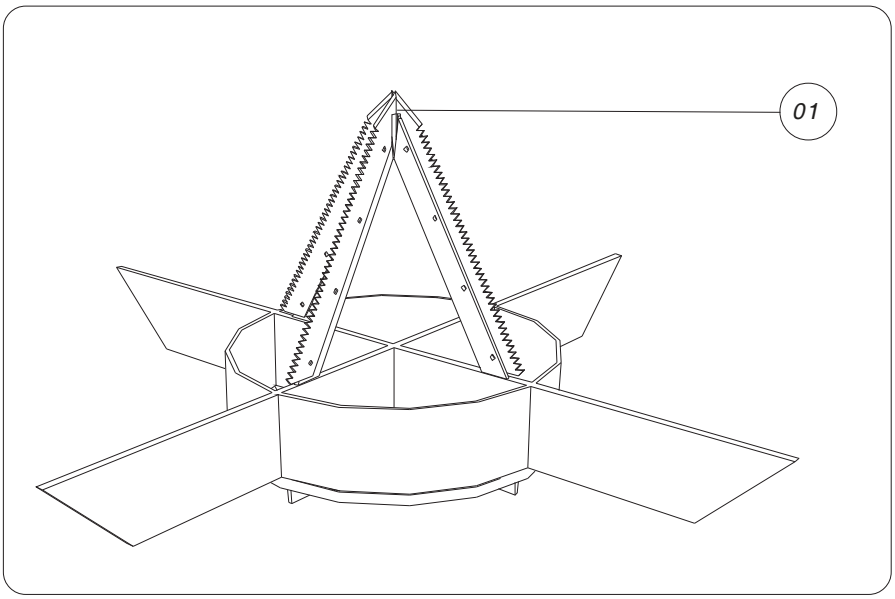

ITEM POS.	QTY MENGE	DESCRIPTION	BENENNUNG	DÉSIGNATION	DENOMINAZIONE	Cod.
01	4	CUTTING BLADES	SCHNITTMESSER	LAMES DE COUPE	LAME DI TAGLIO	206FWGU2A

PROCEDURE FOR PARTS REPLACEMENT	AUSTAUSCH VON ERSATZ-TEILEN	PROCÉDURES POUR LE REMPLACEMENT DES PIÈCES DETACHEES	PROCEDURA PER LA SOSTITUZIONE DELLE PARTI DI RI-CAMBIO
ITEM 6 **REPLACING SEAL** - Disconnect power supply to the panel and terminal board. - Unscrew the screws blocking the seal to the underlying hopper. - Remove the seal and replace it. - Restore the power supply connections.	**POS. 6** **AUSTAUSCH DER DICHTUNG** - Den elektrischen Anschluß am Schaltkasten und der Klemmenleiste abtrennen. - Die Schrauben lösen, welche die Dichtung am unteren Trichter befestigen. - Die Dichtung entfernen und ersetzen. - Die elektrischen Anschlüsse wieder herstellen.	**POS. 6** **REMPLACEMENT DU JOINT** - Débrancher le raccordement électrique au tableau et au bornier. - Dévisser les vis de serrage qui bloquent le joint à la trémie inférieure. - Enlever et changer le joint. - Rétablir les raccordements électriques.	**POS. 6** **SOSTITUZIONE GUARNIZIONE** - Disconnettere l' allacciamento elettrico al quadro e alla morsettiera. - Svitare le viti di serraggio che bloccano la guarnizione alla tramoggia inferiore. - Rimuovere e sostituire la guarnizione. - Ripristinare i collegamenti elettrici.
ITEM 3 **REPLACING DAMPERS** - Disconnect power supply to the motor and panel. - Harness the hopper and support it using suitable lifting equipment that will keep it balanced. - Unscrew the four fixing screws which fix the dampers to the supporting frame. - Remove the dampers and replace them. - Repeat the operations in reverse order. - Restore the electrical connections.	**POS. 3** **ERSETZEN DER SCHWINGUNGSDÄMPFER** - Den elektrischen Anschluß am Motor und am Schaltkasten unterbrechen. - Den Trichter anschlagen und mit einem geeigneten Hebezeug im Gleichgewicht halten. - Die vier Schrauben lösen, mit denen die Schwingungsdämpfer an den Gestellträgern befestigt sind. - Die Schwingungsdämpfer entfernen und ersetzen. - Zusammenbau in umgekehrter Reihenfolge vornehmen. - Die elektrischen Anschlüsse wieder herstellen.	**POS. 3** **REMPLACEMENT DES SILENTBLOCS** - Débrancher le raccordement électrique au moteur et au tableau. - Elinguer la trémie et la soutenir avec un moyen de levage approprié pour la maintenir en équilibre. - Dévisser les quatre vis de serrage qui bloquent les silentblocs aux supports du châssis. - Enlever et changer les silentblocs. - Exécuter les opérations dans l'ordre inverse. - Rétablir les raccordements électriques.	**POS. 3** **SOSTITUZIONE ANTIVIBRANTI** - Disconnettere l' allacciamento elettrico al motore e al quadro. - Imbragare la tramoggia e sostenerla con mezzo di sollevamento idoneo in modo da tenerla in equilibrio. - Svitare le quattro viti di serraggio che bloccano gli antivibranti ai sostegni del telaio. - Rimuovere e sostituire gli antivibranti. - Eseguire le operazioni in senso inverso. - Ripristinare i collegamenti elettrici.
ITEM 4 **REPLACING FILTER BAG** - Slacken the locking clamp - Remove the filter bag and replace it. - Refit the clamp.	**POS. 4** **AUSTAUSCH DES FILTERSCHLAUCHS** - Die Befestigungsschelle lösen. - Den Filterschlauch entfernen und ersetzen. - Die Befestigungsschelle wieder anschrauben.	**POS. 4** **REMPLACEMENT DU MANCHON FILTRANT** - Dévisser le collier de blocage. - Enlever et remplacer le manchon filtrant. - Revisser le collier.	**POS. 4** **SOSTITUZIONE MANICA FILTRANTE** - Svitare la fascetta di bloccag-gio. - Rimuovere e sostituire la manica filtrante. - Riavvitare la fascetta.
ITEM 5 **REPLACING VIBRATOR** - Disconnect power supply to the terminal board and panel - Remove the fixing bolts. - Remove the vibrator safety cable. - Install the new vibrator. - Refit the safety cable. - Restore the electrical connections.	**POS. 5** **AUSTAUSCH DES SCHWINGUNGSDÄMPFERS** - Den elektrischen Anschluß an der Klemmenleiste und dem Schaltkasten unterbrechen. - Die Befestigungsschrauben entfernen. - Das Sicherheitskabel des Schwingungsdämpfers entfernen. - Den neuen Schwingungsdämpfer einbauen. - Das Sicherheitskabel wieder befestigen. - Elektrische Anschlüsse vornehmen.	**POS. 5** **REMPLACEMENT DU VIBRATEUR** - Débrancher le raccordement électrique du bornier et du tableau. - Enlever les boulons de fixation. - Enlever le câble de sécurité du vibrateur. - Installer le nouveau vibrateur. - Remettre le câble de sécurité. - Rétablir les raccordements électriques.	**POS. 5** **SOSTITUZIONE VIBRATORE** - Disconnettere l' allacciamento elettrico alla morsettiera e al quadro - Togliere i bulloni di fissaggio. - Togliere il cavo di sicurezza del vibratore. - Installare il nuovo vibratore. - Reinserire il cavo di sicurezza. - Ripristinare i collegamenti elettrici.

N.B. Rights reserved to modify technical specifications
N.B. Angaben ohne Gewähr. Änderungen können ohne Vorankündigung vorgenommen werden.
N.B. Toutes données portées dans le présent catalogue n'engagent pas le fabricant. Elles peuvent être modifiéés à tout moment.
N.B. Tutti i dati riportati nel presente catalogo non sono impegnativi e possono subire variazioni in qualsiasi momento.

WAMGROUP S.p.A. - EXTRAC
Division
Via Cavour, 338
I - 41030 Ponte Motta
Cavezzo (MO) - ITALY

☎ + 39 / 0535 / 618111
fax + 39 / 0535 / 618226
e-mail info@wamgroup.it
internet www.wamgroup.com
videoconferenze + 39 / 0535 / 49032

LEFT BLANK

WAM

VL SERIES, SLIDE GATE VALVE

LEFT BLANK

EN

VL

SLIDE VALVES

2

ASSEMBLY AND MAIN INSTRUCTIONS FOR USE AND MAINTENANCE

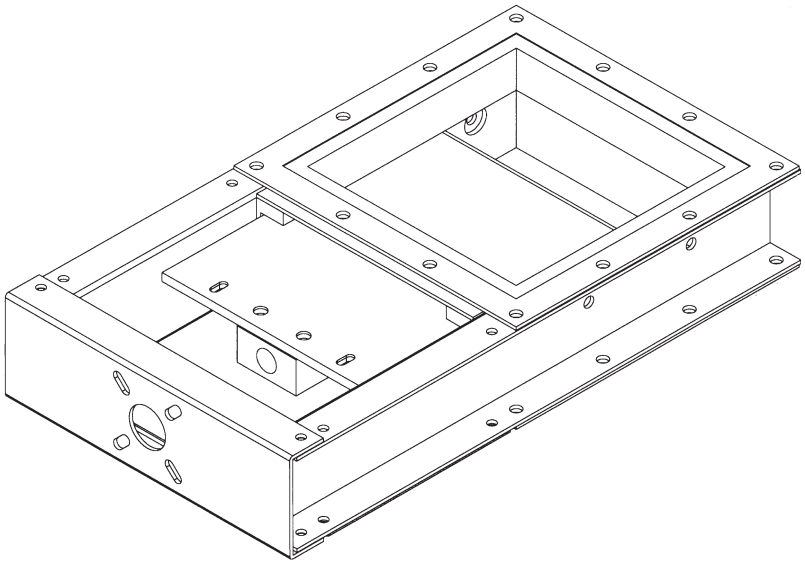

Manual No. VAL.130.--.M.EN Issue: A1 Latest update: September 2016
ORIGINAL INSTRUCTIONS IN ENGLISH

WAMGROUP S.p.A.
Via Cavour, 338
41030 Ponte Motta
Cavezzo (MO) - ITALY

☎ + 39 / 0535 / 618111
fax + 39 / 0535 / 618226
e-mail info@wamgroup.com
internet www.wamgroup.com

WAMGROUP®

WAM®

All the products described in this catalogue are manufactured according to **WAMGROUP S.p.A. Quality System procedures**. The Company's Quality System, certified in July 1994 according to International Standards **UNI EN ISO 9002** and extended to the latest release of **UNI EN ISO 9001**, ensures that the entire production process, starting from the processing of the order to the technical service after delivery, is carried out in a controlled manner that guarantees the quality standard of the product.

This publication cancels and replaces any previous edition and revision.
We reserve the right to implement modifications without notice.
This catalogue cannot be reproduced, even partially, without prior written consent by the Manufacturer.

SUMMARY

1.0 GENERAL INFORMATION 1
1.1 Scope of the Manual 1
1.2 Symbols 2
1.3 Glossary and terminology 4
1.4 Manufacturer's data and identification of the valve 5
1.5 Request for assistance 5
1.6 Warranty 5
1.7 Exclusion of responsibility 6
2.0 INFORMATION REGARDING SAFETY 7
2.1 General safety prescriptions 7
2.2 Safety prescriptions for transport and handling 7
2.3 Safety prescriptions for installation 8
2.4 Safety prescriptions for use and operation 8
2.5 Safety prescriptions for maintenance and replacement of components 8
3.0 TECHNICAL INFORMATION 10
3.1 General description of the valve 10
3.2 Main components 11
3.3 Operating principle 12
3.4 Permitted use 12
3.5 Improper use not permitted 12
3.6 Noise level 13
3.7 Environmental operating limits 13
3.8 Overall dimensions and technical features 13
3.9 Safety and information signs 14
3.10 Safety devices 15
4.0 INFORMATION REGARDING HANDLING AND TRANSPORT 16
4.1 Type of packaging 16
4.2 Reception of goods 17
4.3 Lifting and unloading methods 18
5.0 INSTALLATION AND FIXING 19
5.1 Recommendations for installation 19
5.2 Storage or shutdowns 19
5.3 Supply 20
5.4 Preparation 20
5.5 Installation and fixing of the valve 20
5.6 Assembly instruction 25
5.7 Electrical connection 34
5.8 Compressed air connections 35
5.9 Inspection 36

6.0 INFORMATION REGARDING USE 37
6.1 Production Start-up 37
6.2 Cleaning the valve after clogging 38
6.3 Shutdown of the valve at the end of the work cycle 38
6.4 Long shutdowns of the valve 38
6.5 Reuse 39
7.0 INFORMATION REGARDING MAINTENANCE 40
7.1 Cleaning the valve 41
7.2 Lubrication 41
8.0 REPLACEMENT OF PARTS 42
8.1 Safety recommendations for replacement 42
8.2 Replacement of worn parts 43
8.3 Returning the valve 48
8.4 Dismantling and disposal 48
9.0 INFORMATION REGARDING FAULTS 49
9.1 Trouble-shooting 49
9.2 Check-list in case of fault 50
10.0 TECHNICAL DATA 51
11.0 SPARE AND WARE PARTS 53
A ATTACHMENTS 54
A1 Nuts and bolts tightening torque Table 54

1.1 Scope of the Manual

This Manual has been prepared by the Manufacturer to provide the operating technical information for installation, operation and maintenance of the valve concerned.

The Manual, which is an integral part of the valve concerned, must be preserved throughout the life of the valve in a known easily accessible place, available for consultation whenever required.

If the Manual is lost, damaged or becomes illegible, contact the Manufacturer for a copy specifying the serial number of the valve.

If the valve concerned changes ownership, the Manual has to be handed over to the new owner as part of the valve supply.

The Manual is meant for specialist technical personnel appointed and authorized by the Manufacturer, owner and installer to act on the valve concerned for which specific technical skills in the sector concerned are necessary (electrical, mechanical, etc.).

The illustrations may differ from the actual structure of the valve concerned but do not interfere with the explanation of the operations.
In case of doubt, contact the Manufacturer for explanations.

The Manufacturer reserves the right to make changes to the Manual without the obligation to provide prior notification, except in case of modifications concerning the safety level.

The technical information included in this Instruction Manual is the property of the Manufacturer and therefore has to be considered as confidential.

It is forbidden to use the Manual for purposes other than those strictly linked to the operation and maintenance of the valve concerned.

This information is provided by the Manufacturer in the original language (English) and can be translated into other languages to satisfy legislative and/or commercial requirements.

1.2 Symbols

To highlight certain parts of the text, for purposes of safety, or to indicate important information, certain symbols are used, the meaning of which is described below.

It is important to comply with and scrupulously follow the information highlighted by the symbols.

Danger - Warning

Indicates situations of serious danger which, if ignored, can be risky for the health and safety of persons.

Caution

Indicates that appropriate behaviour must be adopted to avoid posing risk for the health and safety of persons and avoid causing economic damage.

Important

Indicates particularly important technical information which must not be ignored.

List of safety and information symbols

Symbol representation	Symbol description
	Danger sign: indicates danger of electric shock caused by the presence of powered components inside the junction box or control panel.
	Obligation: read this Manual before carrying out any action on the valve concerned.
	Forbidden: indicates that it is forbidden to lubricate or adjust moving parts.
	Danger: indicates danger of serious injury to limbs if the internal moving parts of the valve are exposed. Before carrying out inspection operations, isolate the valve concerned from the electrical energy sources.
	Information: indicates the direction of rotation of the electric motor.
	Obligation: indicates the hooking points for lifting of the valve concerned.
	Forbidden: indicates it is forbidden to introduce hands into the valve.

1.3 Glossary and terminology

Operator: person appropriately trained and authorized by the Production Manager for setting up the valve concerned and carrying out routine maintenance.

Installer: organization with specialized technicians and appropriate equipment for carrying out risk-free installation and extraordinary maintenance.

Specialist technician: person responsible for and authorized by the Manufacturer, owner or installer to act on the valve; must have specific technical skills depending on the sector concerned (electrical, mechanical etc.). The specialist technician, in addition to being familiar with the working of the valve concerned, must be familiar with the working of the plant or equipment on which the valve concerned is installed.

Routine maintenance: includes all the actions necessary to keep the valve in good working conditions, to ensure greater operating durability and to keep the safety requisites constant.

Extraordinary maintenance: all the actions meant to keep the valve in perfect working order.

Setting in safety conditions: all the precautions the authorized personnel must adopt before acting on the valve concerned.

The precautions are listed below.

- **Ensure that the valve concerned is disconnected from all the mains and appropriate devices are used to prevent these from being reconnected accidentally.**
- **Ensure that all the moving parts of the valve have come to a complete stop.**
- **Ensure the temperature of the valve concerned is such that it does not burn.**
- **Provide appropriate lighting in the area around the operations.**
- **Wait for the material to be handled inside the valve concerned to settle down completely.**

1.4 Manufacturer's data and identification of the valve

Important

Do not change the data on the identification plate.
Keep the ID plates clean, intact and legible as regards the data they contain.
If the ID plate is damaged or is no longer legible (even just one informative element on it) contact the Manufacturer for a new ID plate and replace it.

The ID plates shown identify the valve concerned and its main components.
The plates show the reference necessary for operating safety.

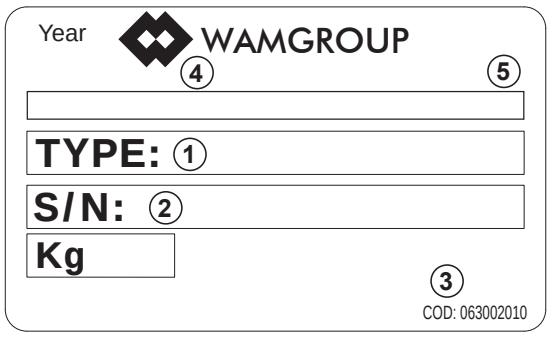

1) Type of valve
2) Serial No.
3) Label code
4) Manufacturer's logo
5) Manufacturer's name and address

1.5 Request for assistance

For all technical assistance, contact the Manufacturer's service network.
For all requests, provide the valve identification data, the type of problem encountered and all other information which could be useful for identifying the problem.

1.6 Warranty

The conditions for validity and applicability of the warranty are specified in the sales contract.

1.7 Exclusion of responsibility

The valve is delivered according to the specifications indicated by the Buyer in the order and the conditions valid at the time of purchase.

The Manufacturer shall not accept responsibility for safety of persons or objects and operation failure of the valve if the loading/unloading operations from trucks, transport, positioning at the site, use, repairs, maintenance etc. have not been carried out in compliance with the warnings described in this Manual, and in accordance with the national legislation in force.

Likewise, the Manufacturer shall not accept any responsibility if the valve concerned is used:

- improperly;
- by unauthorized persons and/or persons not sufficiently trained for installation, operation and maintenance;
- with modifications made to the original configuration without the Manufacturer's permission;
- with spare parts that are not original or are not specific for the model;
- without maintenance;
- non-pursuant to the regulatory standards and national or local legislation on the matter of occupational safety;
- non-pursuant to the recommendations in this Manual or on the warning and danger plates applied on the valve.

2.1 General safety prescriptions

Read the Instruction Manual carefully and strictly follow the instructions it includes, especially those regarding safety.

Most accidents at the workplace are caused by negligence, failure to follow the most elementary safety regulations and incorrect or improper use of tools and equipment.

Accidents can be prevented and avoided by taking due care, using suitable equipment and adopting adequate preventive measures.

Apply and comply with the standards in force regarding workplace hygiene and safety.

The personnel trained for and authorized for the operations has to have the psychological/physical requisites, experience in the sector concerned and the necessary technical skills for carrying out the operations assigned to them.

All workers involved in any kind of operation must be prepared, trained and informed as regards the risks and the behaviour to be adopted.

Pay attention to the meaning of the notices applied on the valve, keep these legible and respect the information indicated.

Use instruments, equipment and tools that have been approved and are intrinsically safe, and cannot alter the safety level of the operations or damage the valve during installation, use and maintenance.

Modifications to the valve components should not be made for any reason whatsoever, without the Manufacturer's permission.

2.2 Safety prescriptions for transport and handling

Carry out all the handling and transport operations in accordance with the procedures and instructions shown on the packaging and in the Manual supplied.

All the operations must be performed by qualified authorized personnel.

Those authorized to carry out the handling operations must have the capabilities and experience required to adopt all the necessary measures to guarantee one's safety and the safety of persons directly involved in the operations.

The chosen features of the lifting and handling means (crane, bridge crane, forklift truck etc.) must take into account the weight to be handled, the dimensions and the gripping points.

During lifting use only accessories such as eyebolts, hooks, shackles, spring hooks, belts, slings, chains, ropes etc., that have been certified and are suitable for the weight to be lifted.

During handling respect the prescriptions applicable for handling loads.

Keep the position of the valve concerned and the loose components horizontal, keep the load low and make all the necessary movements gently.

Avoid sudden manoeuvres, dangerous oscillations and rotations, accompanying the movements manually and place the load gently on the ground.

2.3 Safety prescriptions for installation

Before starting with installation, a “Safety Plan” must be implemented to safeguard the personnel directly involved and those who carry out operations in the surrounding area.

All the laws must be strictly applied, especially those concerning workplace safety.

Before proceeding with installation operations, mark off the work area to prevent access by unauthorized persons.

The electrical connections must be made in compliance with the standards and laws in force.

The person in charge of making the electrical connections has to ensure that the required standards and laws are respected before testing.

2.4 Safety prescriptions for use and operation

Do not tamper with the valve concerned by using any kind of device to obtain performances different from those designed.
All unauthorized changes can affect the health of people and the integrity of the valve.

The operators have to exclusively wear protective clothing and have to be equipped with appropriate individual protection devices for carrying out the operations and as required by the safety and work accident prevention standards.

Before use, ensure that all the safety devices are installed and that they are working properly.

During operations, prevent access to the work area by unauthorized persons.

Remove all obstacles or sources of danger from the work area.

It is strictly forbidden placing any improper load on the valve.

2.5 Safety prescriptions for maintenance and replacement of components

Danger - Warning

Before carrying out any operation on the valve concerned, ensure it is switched off and disconnected from all mains and use suitable devices to prevent the possibility of the power sources being activated accidentally.

Maintain the valve concerned in the conditions of utmost efficiency compliant with the maintenance plan provided by the Manufacturer.

Good maintenance apart from preserving the functional features and essential safety features over time, will also allow extending the working life of the valve concerned and achieving the best possible performance.

Strictly follow the procedures indicated in the Manual, especially those concerning safety.

Ensure that all the safety devices are active and working properly.
Mark off the work area in such a manner as to prevent the access of unauthorized persons.

Replace the worn and damaged components exclusively with original spare parts, whose safety, reliability and interchangeability have been undoubtedly established.

Apart from invalidation of the warranty, the Manufacturer declines all responsibility for damage to objects and harm to persons deriving from the use of non-original spare parts or due to modifications made during repairs without express written authorization.

Use the oil and lubricants recommended by the Manufacturer.

Do not dump polluting material (oil, grease, paint, plastic etc.) in the environment, but carry out waste separation disposal depending on the chemical composition of the various products in compliance with the legislation in force.

On completion of maintenance or replacement operations, before resuming production, check that no foreign bodies (rags, tools etc.) have been left inside the valve concerned.

3.1 General description of the valve

VIB Slides Valves are used in all types of bulk solids processing plants where interception of gravity-fed or conveyed dry powders or granules is required. **VIB** Slide Valves may be fitted beneath hoppers, bins, silos, outlet, on inlets and outlets of mechanical conveyors, as well as on the inlet of telescopic loading spouts. Due to their special design and to the engineering materials used, they represent a particularly economic yet most efficient solution.

VIB Slide Valves consist of two high-pressure die-cast semi-bodies manufactured from aluminium alloy, a sliding blade in carbon or stainless steel, a carbon or stainless steel frame and a pre-stressed elastomeric seal in WAM's **SINT®** engineering polymer composite.

The special geometry of new "Slim" **VIB** Slide Valves and the various options in blade design enable their application in virtually all industries including Food processing. For the food industry it is available a version with stainless steel blade and frame and FOOD approved seal is available.

VIB Slide Valves are available in a variety of configurations: **VIBQ** version comes with a square inlet, in the **VIBC** version with a circular open cross section**. VIB** valves can be fitted with a manual, pneumatic or geared motor actuator. All actuator systems are interchangeable (see ACTUATOR catalogue).

Important

The terms "equipment" and "valve" used in this manual refer to the same machine.
As components meant for installation in a plant, the valves - not fully provided with safety means - have to be considered "partly completed machinery". Therefore, they do not bear an EC marking.
It is forbidden to start the valve unless the machine/plant in which it is to be installed has been declared compliant with the Directive 2006/42/EC and further modifications.

3.2 Main components

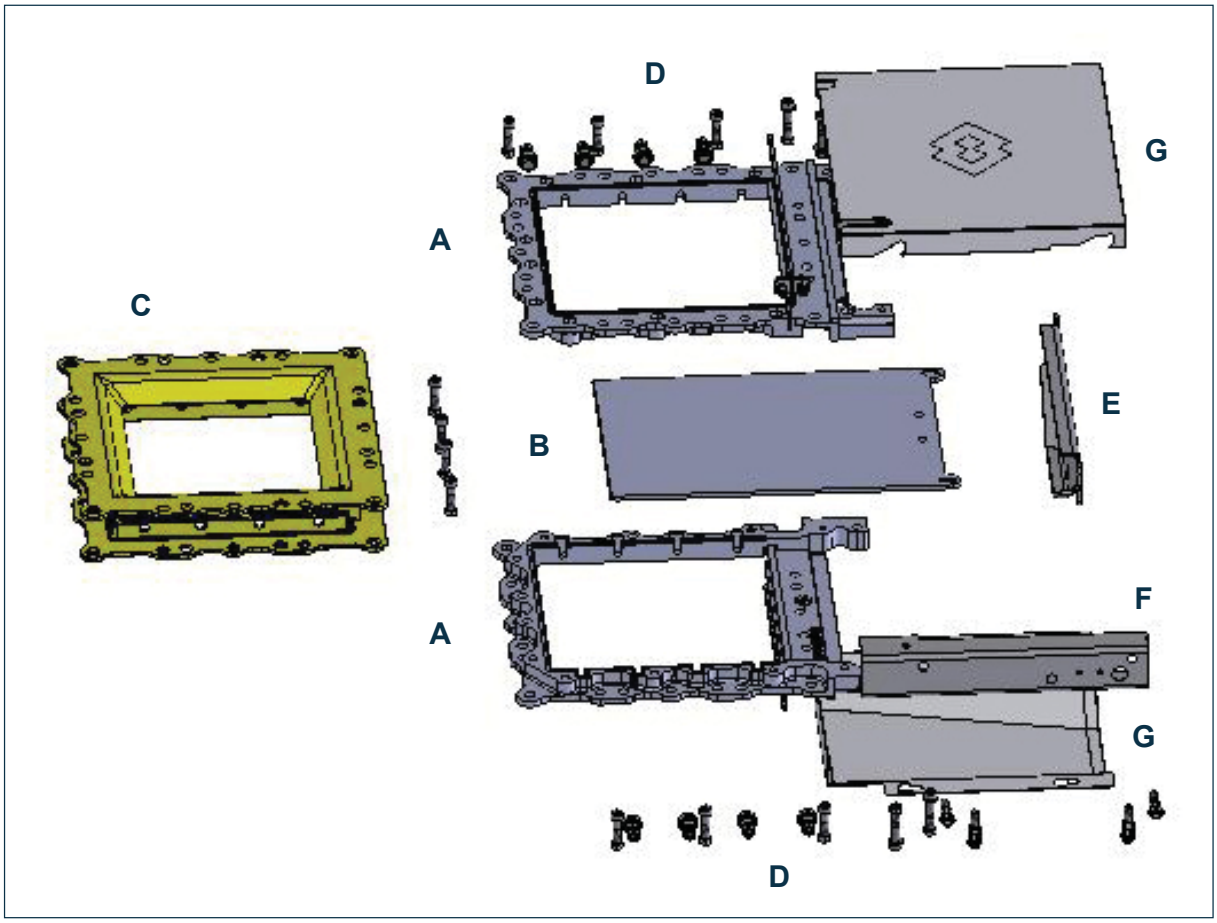

A) Die cast aluminium semi-bodies
B) Blade
C) SINT® liner
D) Roller bearing
E) Actuator fixing plate
F) Back lateral frame
G) Protection plate

3.3 Operating principle

The VIB is a valve that opens by lifting a round or polygonal gate/wedge out of the material flow path from the equipment upstream.

3.4 Permitted use

The **VIB** valves can be used in discontinuous operation for interception of handling powders flakes, pellet or granular material.

The **VIB** slide valve is designed for applications in which interception of gravity-fed or pneumatically conveyed dry powders or granules is required.

The **VIB** slide valves can only be used with maximum internal pressure or negative pressure according to the technical specification.

The **VIB** slide valves made from aluminium alloy are not designed to bear the weight of equipment installed below (e.g. screw feeders, belt conveyors, vibratory feeders etc.)

The **VIB** slide valves must be closed only by the moving product column.

Every other use must be considered as improper and therefore not permitted.

The **VIB** slide valves food version (model F), compliant to EU 1935/2004, are suitable for application with E-simulant, max. temperature of 80 °C and 3 days constant in-contact time.

3.5 Improper use not permitted

It is forbidden to start operating the slide valve until the plant or equipment in which it is to be incorporated has been declared as compliant to the relevant national and local legislative provisions in force.

It is forbidden to use the slide valve in potentially inflammable or explosive atmospheres (ATEX) unless they are indicated on the certification enclosed.

It is forbidden to use the slide valve for granular materials (stones, sand, gravel, etc.) grater than 20mm in the bigger dimension.

It is forbidden to use the slide valve unless the seals are intact.

It is forbidden to use the slide valve as a support even if it is not running. Apart from falling, there is risk of damaging to the valve.

It is forbidden to operate the valve in the absence of material.

It is forbidden to wet the valve with water or grease it.

It is forbidden to insert any type of gasket between the silo flange and the upper flange of the slide valve!

Do not use the valve in the absence of the safety guards.

It is forbidden to use the slide valve for materials which can cause radioactive contamination.

It is forbidden to close the slide valve when material flow is stopped.

The **VIB** valves are not suitable for applications with liquids or with pressure values different from atmospheric pressure.

It is forbidden using the seal adjustment in the absence of wear or leakage problems.

It is forbidden washing / cleaning the valve using high pressure devices.

It is forbidden to use the slide valve for hot materials with temperatures exceeding 60°C and cold materials with temperatures below - 20°C.

It is forbidden to disassemble the valve or its components if material is present upstream the valve.

It is forbidden using the hammer on the aluminium valve body.

VIB - type Slide Valves are dust proof but they are NOT pressure proof.

NOTE: Depending on the type of plant, the valve can be operated either manually, electropneumatically or by a gear motor. In the two latter versions the valve is controlled by a remote control panel or by a local starter.

The weight of the material column must not exceed the resistance of the mobile valve parts.

Materials with bulk density < 1.3 t/m³ normally do not create any problem. When dealing with materials with higher bulk density check with WAMGROUP customer service.

3.6 Noise level

The noise level of the **VIB** valve operating on empty does not exceed 50 dB(A), the value measured at a distance of 1m, in the most unfavourable position.

This may vary according to the type of material handled and the type of actuator applied.

Danger - Warning

Depending on the installation site, the installer must adopt suitable systems (barriers, etc.), if necessary, to maintain the noise levels within the legally permitted limits.

3.7 Environmental operating limits

Unless otherwise specified, the valve concerned may be used only within the limits indicated.

- Altitude: less than 1,000 m at sea level
- Environmental temperature: between - 20 °C and + 40 °C

Maximum temperature of dusts: +80 °C continuous, +90 °C for short time intervals (maximum of 1 minute).

These temperature limits are linked to the features of the gaskets and plastic coatings; if their efficiency is affected by extremely high temperatures, it leads to loss of material and formation of potentially explosive hazardous mixtures.

- Cold climates: with temperature less than 5 °C use oil and lubricants suitable to the operating temperature.

3.8 Overall dimensions and technical features

For the exact identification of the valve concerned, see the identification plate.

The shipping document shows the dimension of the slide valve in addition to the serial number and identification codes.

Information regarding the technical features of the **VIB** slide valves, such as dimension, seal and blade characteristics is given in Chapter 10.

3.9 Safety and information signs

Danger - Warning

Follow the signs on the plates.
The plates have to be readable; if they are not, clean them, replace the damaged ones and place them in their original position.

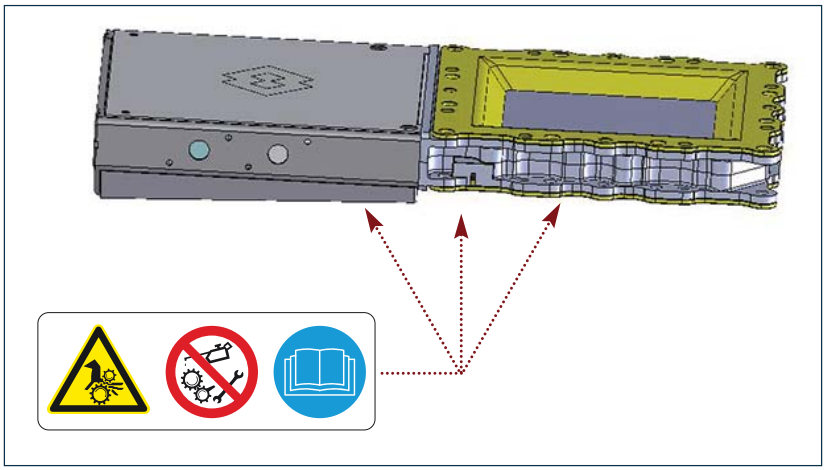

NB: See page 2, **1.2 Symbols**

3.10 Safety devices

The access to the internal parts of the valve is not necessary during operation.

Extraordinary access is necessary for removing foreign bodies and material residues inside the valve or for extraordinary maintenance.

For accident prevention it is essential to keep the valve out of personnel reach during operation. To this purpose, the customer has to provide suitable safety devices such as grids, as well as protective inlet and outlet joints (either robust flexible sleeves or rigid pipe unions). However, the installer has to avoid that, even accidentally, a person remains harmed (by employing suitable hopper, safety grilles,...).

When using movable safety devices, provide protection limit switches, which stop the valve instantaneously if the protection is opened or removed. Re-starting of the valve operation must only be possible when the protection is effective again (according to EN 1088 or regulation in force).

4.1 Type of packaging

The type of packaging is selected according to the type of valve supplied, the transport means used, the quantity of goods shipped and the destination.

To facilitate shipment, the valves may be divided into separate packages that are suitably protected. Nuts and bolts and gaskets necessary for the correct assembly are not included and supplied together with the valves.

The packages can be loaded separately on the vehicle or fixed to a pallet, protected properly, or inside a container for shipment to a far destination or for sea or air transportation.

The signs for safe lifting and handling are shown on all the packages.

The list bellow provides the description and symbols envisaged on the packaging.

A) Fragile: indicates that the package must be handled and lifted carefully to avoid damage.

B) Centre of gravity: indicates the position of the centre of gravity of the package.

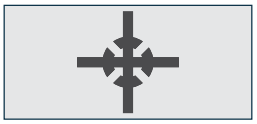

C) Harness: indicates the correct position of the harness for lifting the package.

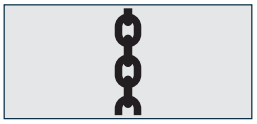

D) Stacking limit: indicates the maximum stacking load of the packages.

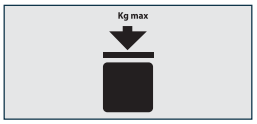

E) Weight: indicates the maximum weight of the package.

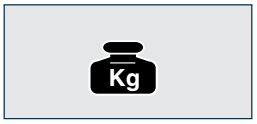

The packaging material has to be disposed off or recycled in compliance with the standards in force.

The data given below do not include any additional packaging (such as pallets or similar).

Valve	Weight (kg)					
	Nominal width					
	150	200	250	300	350	400
VIB	10	14	17	24	34	41

Single packing included

The illustration shows the type and dimensions of mostly used packaging for truck, sea or air shipping.

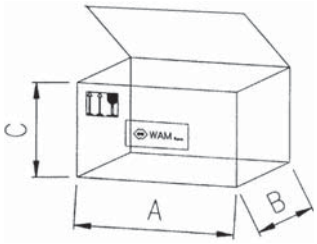

Valve	Nominal width																	
	150			200			250			300			350			400		
	A	B	C	A	B	C	A	B	C	A	B	C	A	B	C	A	B	C
VIB	515	305	140	615	350	135	715	390	135	845	465	135	965	525	160	1060	565	160

The valves for food applications (model F and P) with the related instructions for cleaning and sanitization, shall be provided individually packed in plastic bags inside the cardboard box.

4.2 Reception of goods

On receiving the goods, ensure that the type and quantity correspond to the data present on the acknowledgement of order.

Possible damage has to be immediately communicated in writing in the space provided to this purpose in the waybill.

The carrier is obliged to accept the complaint and leave the Customer a copy of the waybill.

If the supply is “free destination” a copy of the waybill and of the complaint shall be sent to the Manufacturer or to the forwarder.

If the damages are not claimed immediately on receipt of the goods, your request for compensation may not be accepted.

4.3 Lifting and unloading methods

Danger - Warning

Carry out the lifting and handling operations according to the information indicated on the valve and in the Manufacturer's Operation Manual.
The person authorized for unloading operations has to make sure all the necessary measures are adopted to ensure his or her safety and the safety of other persons directly involved.
Use means and accessories (ropes, hooks, shackles etc.) suitable for the load to be lifted.
Pay attention in the lifting phase to balance the load to avoid uncontrolled movements which could cause work injuries to persons.
Do not stack the packages as they are not sized for that purpose.
Do not drag or push the equipment as this will damage it.
Before lifting and handling the load, read the relevant information indicated in the "Information regarding safety" Chapter.

Harness the packages according to the indications and symbols applied on them.

Unload the packages from the means of transport and place them on a flat surface which can ensure the stability.

Avoid any kind of damage to the goods during unloading and handling. Always handle them with care.

5.1 Recommendations for installation

Danger - Warning

The installation operations have to be carried out by a technician specialised in such activities
Provide appropriate safety measures and use suitable equipment to prevent risk of work accident to the persons involved in the operations and to those nearby.
Harness and handle the valve concerned as described and shown in the "Unloading and lifting method" paragraph.

Before starting installation, define a safety plan which complies with the laws in force regarding workplace safety.

The specialist technician, authorized by the installer or owner, has to evaluate whether the area has been prepared properly and whether the necessary installation equipment is available (crane, etc.).

Define, on the basis of the configuration of the valve concerned, the assembly method, if the gear reducer and electric motor require preassembly.

Clean the coupling surfaces thoroughly.

5.2 Storage or shutdowns

Prior to installation

Avoid damp and salty atmospheres if possible. Place the valve on wooden platforms or protected from unfavourable weather conditions. The valves in the food configuration (model F and P) must only be stored indoor.

Long valve shutdowns after assembly

Set the valve in safety condition before starting operation.

Before starting the valve, check the electrical and pneumatic system along with all parts whose operation may be affected by long shutdowns.

Possible reuse after long shutdowns

Avoid damp, salty atmospheres during valve shutdowns.

Place the valve on wooden platforms, or protected from unfavourable weather conditions.

Set the valve in safety condition before starting operation.

Before starting the valve, check the electrical and pneumatic system along with all parts whose operation may be affected by long shutdowns.

Before starting up the valve, clean it thoroughly according to the instructions given on the product safety chart.

If the valve operates in different conditions, or it uses materials different from the previous application, ensure that the use complies to the INDICATIONS FOR USE section.

5.3 Supply

All valves have been preassembled and tested at the factory.

The actuators and accessories are supplied unfitted and separately from the valve.

5.4 Preparation

Remove the packaging.

Fit the actuator (manual lever, hand wheel, manual chain actuator, electro-pneumatic, geared motor, hydraulic or others).

WAMGROUP® supplies some of the above mentioned actuators which have to be bolted on by the customer.

The customer is liable for the installation of any other type of actuator different than those mentioned above. The customer will perform the mechanical analysis necessary to ensure an effective use.

Do not hang any heavy devices directly on the valves (screw feeder, belt conveyor, air slide, vibrating feeder, bin activator or similar).

Prior to installation the valves for food applications (model F and P), shall be subjected to cleaning and sanitation by means of a woven/non-woven cloth and sanitizer spray.

5.5 Installation and fixing of the valve

- Lifting the valve

Danger - Warning

Carry out the lifting and handling operations according to the information shown on the valve and in the Manufacturer's Operation Manual.
The specialist technician authorized for carrying out the installation must make sure all the necessary measures are adopted to ensure his own safety and that of other persons directly involved.
The laws regarding workplace safety must be strictly followed.
Use means and accessories (ropes, hooks, shackles, etc.) suitable for the load to be lifted.
Pay attention in the lifting phase to balance the load so as to avoid uncontrolled movements, which could cause an accident.

Use lifting systems suitable to the weight and dimensions of the load to be lifted and the lifting distances concerned.

Use the lifting bores of the flange according to the stickers on the valve and the photo below.

- Valve lifting

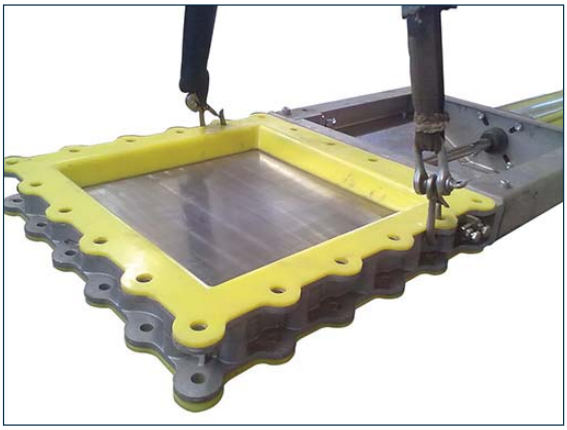

- Fixing the valve

Place the valve in position and bolt it on carefully using nuts, bolts and stud bolts respectively. Use a specific tool with a torque of 30 Nm.

Ensure the valve is fitten on the right way (see assembly with actuator section).

For food valves versions (model F and P) assemble according to the instructions given on the technical sheet inside the package.

Carry out the pneumatic and electrical connections in compliance with the standards in force.

Important

For accident prevention it is essential keeping the valve out of personnel reach during operation. To this purpose the customer has to provide suitable safety devices such as grids, as well as protective inlet and outlet joints (either robust flexible sleeves or rigid pipe unions). However, the installer has to avoid that, even inadvertently, a person remains harmed (by using suitable hopper, safety grilles, etc.)

When employing mobile safety devices, provide protection limit switches that stop the valve instantaneously if the protection is opened or removed. Re-starting of the valve operation must only be possible when the protection is effective again (according to EN 1088).

To fix such devices to the valve, use only stud bolts long enough to pass through the upper connecting flange, the valve and the lower connecting flange, obtaining though a “sandwich”. Otherwise the weight below would tend to pull apart the semi-bodies of the valve. Screw the nuts on according to the instructions below.

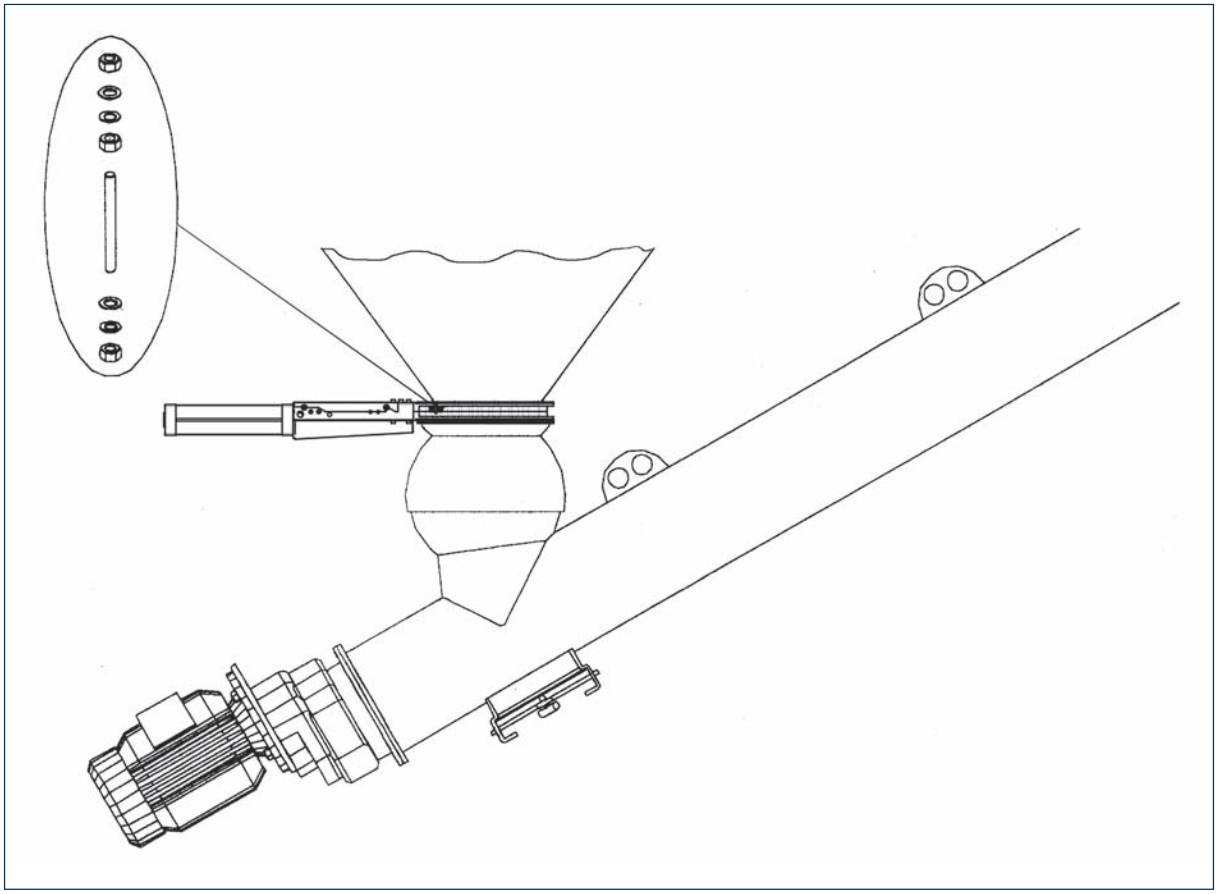

The inner nuts have no weight bearing function. They only serve to secure the valve when the downstream device is removed.

Ensure parallel tolerance of the connecting hopper flange is within 2 mm.

Check and remove any possible vibrations of the plant, which could affect the safe and correct working of the valve.

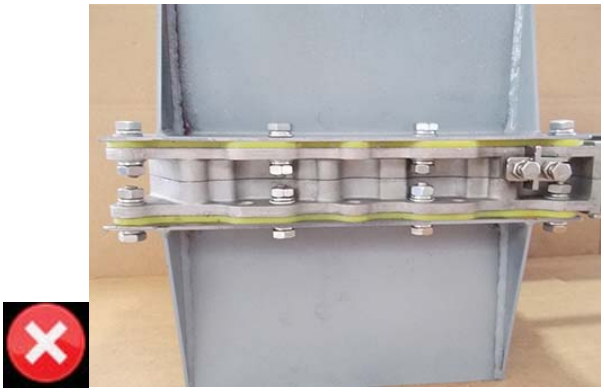

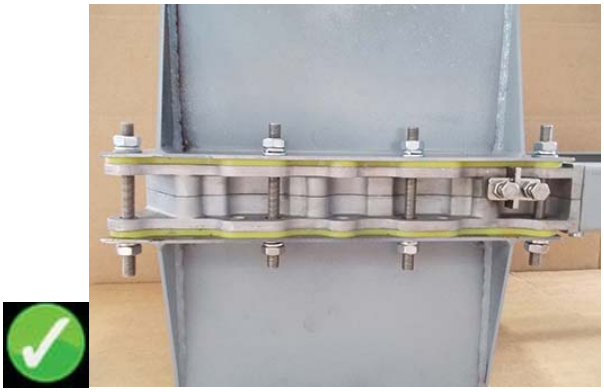

Ensure the valve is perfectly parallel after installation.

Avoid connection of square valve with round silo flange or round valve with square silo flange.

Ensure there is no pressurized air present in the valve inlet zone. Fluidification system has to be at list 30 cm far from the inlet.

Follow strictly the assembly instruction given for actuators.

With lumpy, granular and fibrous materials use a steel blade.

With raised product columns it is recommended to insert a safety cup in the silo, above the valve.

Close the valve only when material is flowing. Valves must NOT operate in absence of material!

Clean the valve regularly with either air or water. This is particularly important if the material handled tends to compact or to solidify due to long shut-down periods.

Do not insert any type of gasket between the silo flange and the upper flange of the side valve!

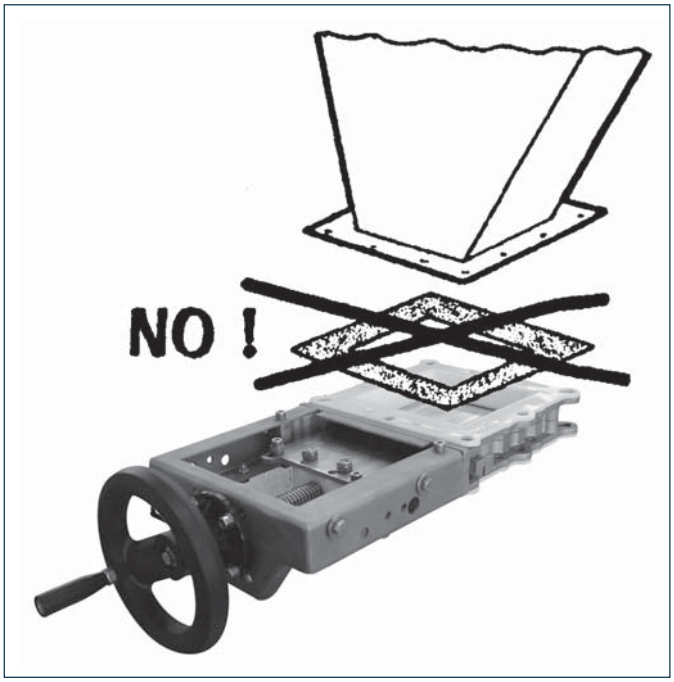

Before enabling the specific actuator, ensure there are no signs of rust on the actuator shafts and remove any rust traces.

Grease the shaft and splined bush with conductive lubricating pastes such as adhesive lithium grease containing micronized copper powder. They are used specifically for lubricating dynamic contacts to facilitate passage of electric current:
- NLGI Consistency: 2;
- Temperature: -35°C/+220°C.

With higher material columns it is recommended to insert a baffle plate inside the silo, above the valve.

Check for and remove any possible vibrations of the plant, which may affect the proper working of the valve.

It is the responsibility of the installer, and of any person using the valve:
- not to start it unless it has been fixed to the parts of the plant provided for the purpose;
- not to start it if the system in which is fitted has not been certified in accordance with the laws in force;
- to install a system that prevents harm to persons or damages to property.

Important

After carrying out the installation, check for misalignments and deviations to be corrected.

5.6 Assembly instruction

SUPPLY:

Manual Actuator assembly

A) 1 hand wheel cpl. with spindle
B) 1 nut screw
• Bolts, nuts, washers
• Cardboard box

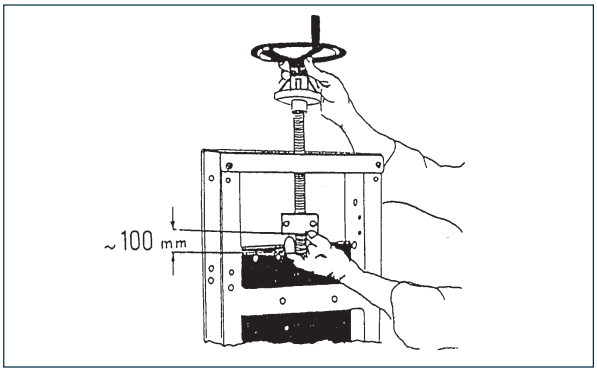

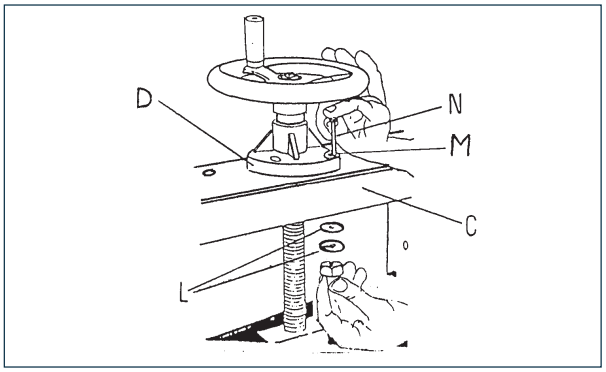

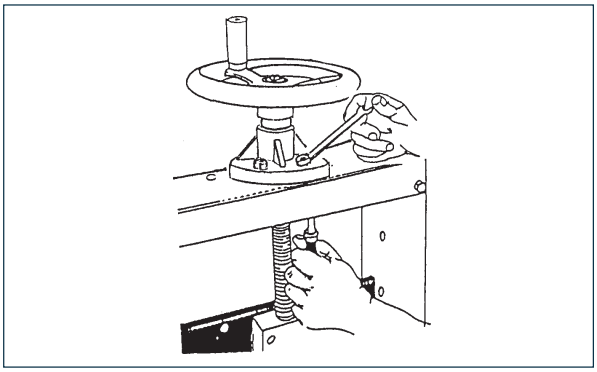

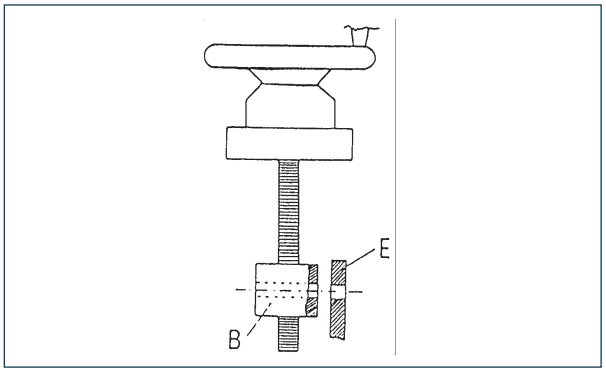

NOTE: During assembly the blade must rest on all bearings. Only after, lay the valve on the lower side for actuator assembly.

1) Insert spindle (**A**) into the central bore on the upper crosspiece of valve body. Screw the nut screw (**B**) onto the pindle (**A**) by approx. 100 mm.

2) Insert the larger washers (**L**) on the inside of the valve frame (**C**) from below and the smaller washers (**M**) on the hand wheel support (**D**). Insert the bolts and nuts (**N**).

3) Tighten the bolts and nuts.

4) Rotate the hand wheel to match the bores on nut screw (**B**) and on blade (**E**).

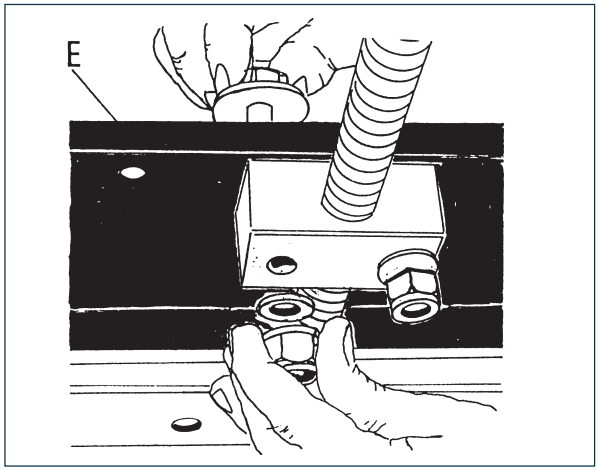

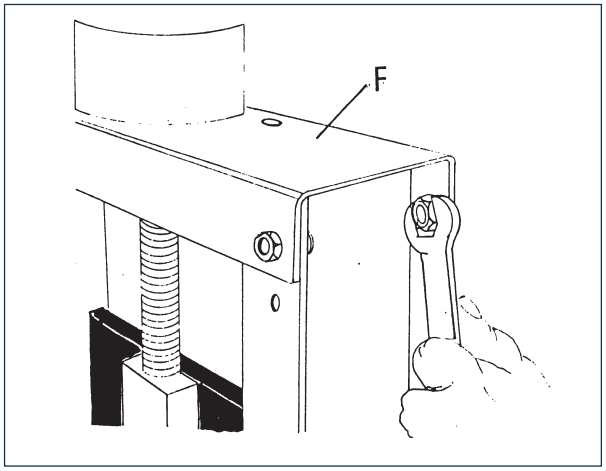

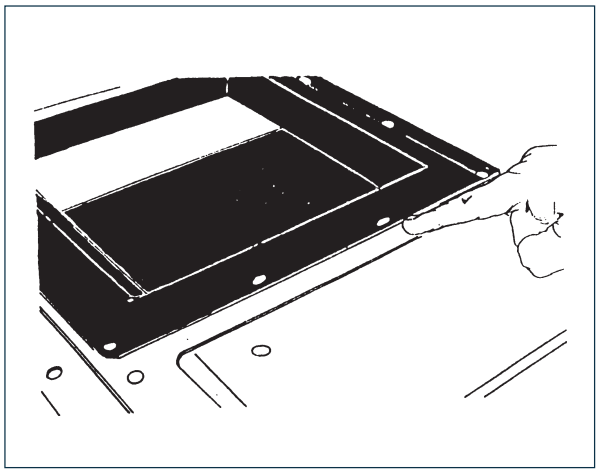

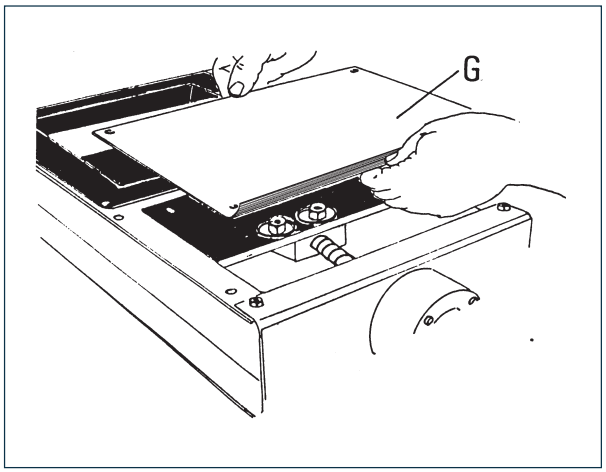

5) Insert the M12 bolts and the larger washers on the upper side of the blade (**E**). Position the smaller washers and the self-locking nuts. Do not tighten completely.

6) Tighten 4 connecting nuts between the cross bar (**F**) and the body. Check if the valve operation is correct by turning the hand wheel.

7) For valve installation use bolts which are short enough not to interfere with the blade.

8) When assembly is completed, fit the top and bottom guard (**G**) ensuring they perfectly adhere to the frame. Check the positioning of the self-adhesive gasket.

SUPPLY:
C) 1 bush
H) 1 solenoid valve support bracket
B) Bolts, nuts, spring washers and flat washers
• Cardboard box

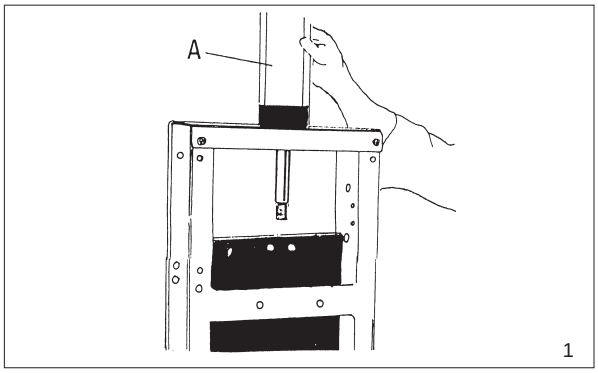

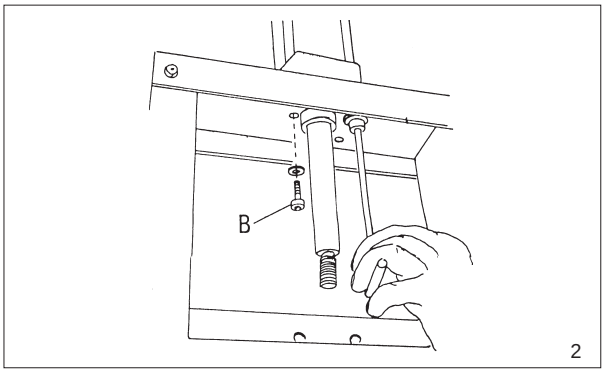

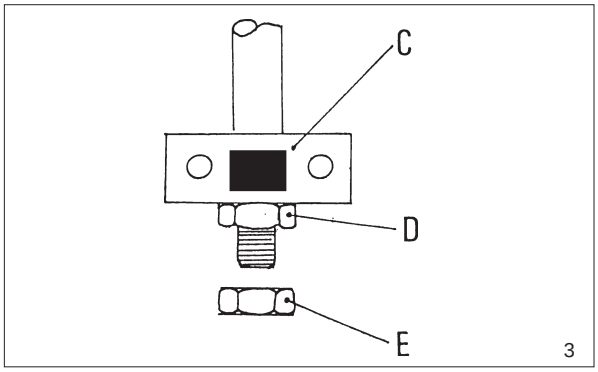

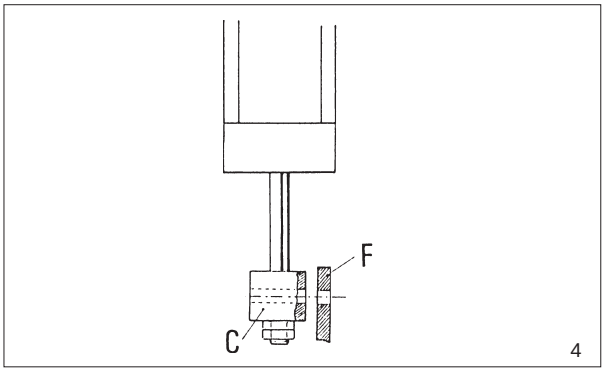

NOTE: During assembly the blade must rest on all bearings. Only after having checked this up - end valve for actuator assembly.

1) Insert the pneumatic cylinder (**A**) in central bore on the upper crosspiece of the valve body.

2) Fix the cylinder by inserting the 4 bolts M8x25, the spring washers, the flat washers and the nuts (**B**) from below and tighten crossways.

3) Fit the bush on the rod so that the sticker on the bush remains visible. Fix the bush by screwing on the nut (**D**) and the self-locking nut (**E**).Tighten bolts and nuts.

4) Slide down the rod to match the bores on bush (**C**) and on blade (**F**).

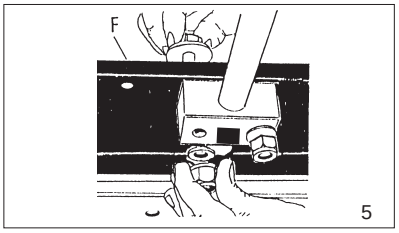

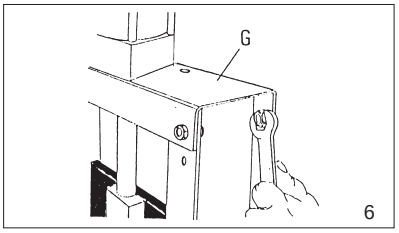

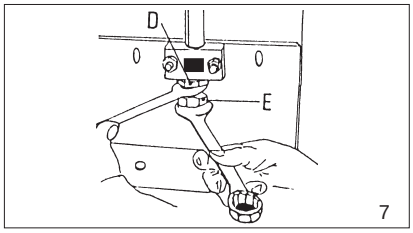

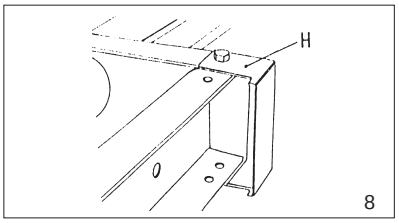

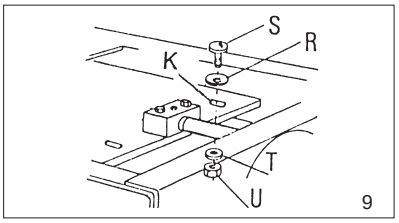

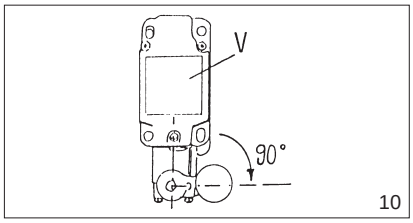

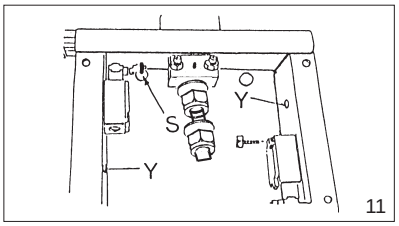

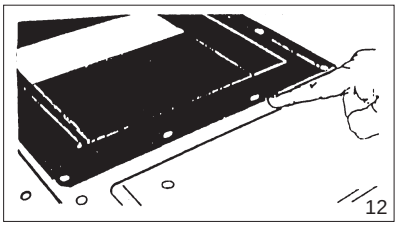

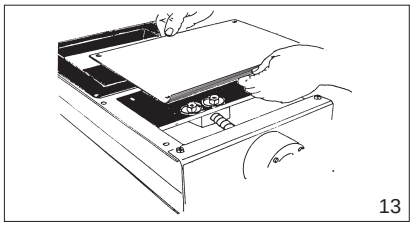

5) Place the M12 bolts and the large washers on top side of the blade (**F**). Insert the small washers and self-locking nuts without tightening completely.

6) Tighten the 4 bolts that fix upper crosspiece (**G**) to valve frame.

7) Loosen by a quarter turn the bush fixing nuts (**D**) and (**E**). Tighten the bottom nut (**E**) to the top one (**D**).

8) If required, now, fit the solenoid valve for pneumatic actuator to the support bracket (H) supplied separately by using 2 crosspiece connecting bolts.

9) Position the washers Ø 12 (**R**) on the bottom side of the blade. Insert the round head bolt M8x25 (S) and fix from the top side using washers Ø 8 (**T**) and nuts (**U**).

10) Position the arms of limit switches (**V**) to 90°so that, after having fitted the rollers, they face the blade slots.

11) Fix the limit switches on the inside using nuts and bolts. Open the valve to 0 position, the head of the bolt (**S**) must rest on the limit switch roller. The bores (**Y**) are cable passages. Check the switch operation before starting regular operation. Refer to specific procedure for limit switch assembly reported in the next section.

12) For valve installation use bolts which are short enough not to interfere with blade.

13) When assembly is complete, fit the top and bottom guard ensuring they perfectly adhere to the frame, and check the positioning of the self-adhesive gasket.

SUPPLY:
C) 1 gear motor actuator
D) 1 nut screw
V) 2 solenoid valves
• Bolts, nuts and washers
• Cardboard box

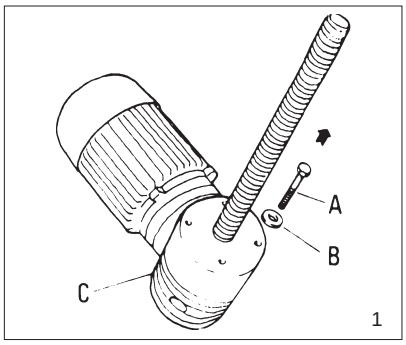

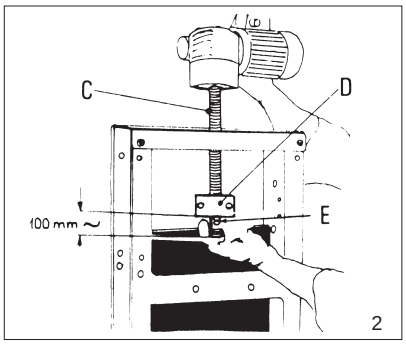

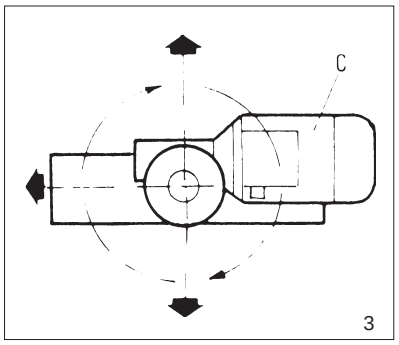

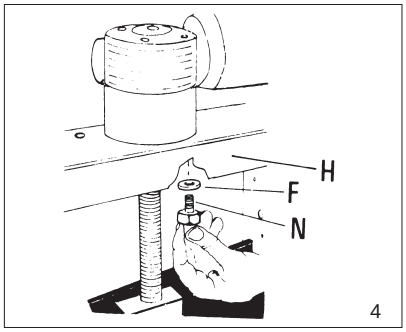

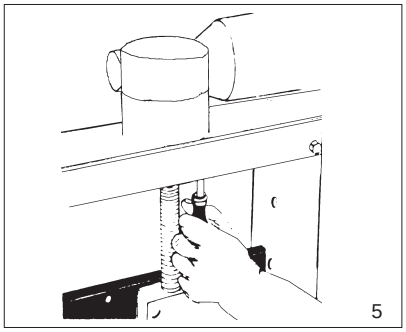

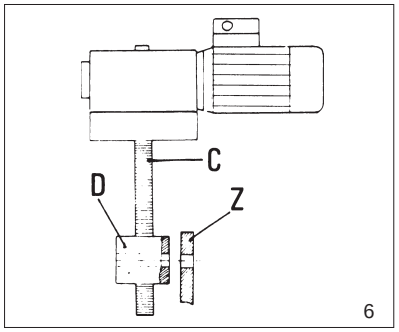

NOTE: During installation the blade has to be supported on all bearings. Only after having checked this, up-end valve for actuator assembly.

1) Remove the 4 bolts (**A**) and washers (**B**) from the actuator.

2) Insert the actuator spindle (**C**) in the central bore on the upper crosspiece of the valve body. Screw the nut screw (**D**) on the spindle by approx. 100 mm with the greasing nipple (**E**) pointing outside.

3) Choose the position of actuator (**C**).

4) Insert the 4 washers (**F**) and bolts (**N**) from below through the upper crosspiece (**H**) in threaded bores of the actuator.

5) Tighten the bolts.

6) Turn the spindle (**C**) by hand until the bores on nut screw (**D**) and those on blade (**Z**) match.

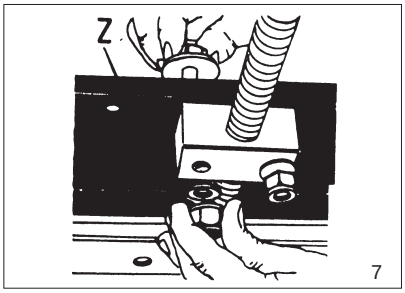

7

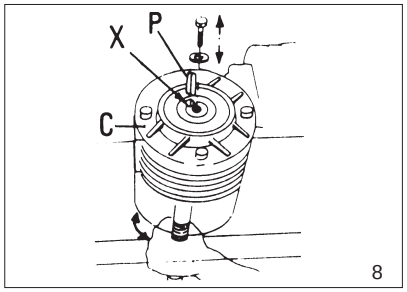

8

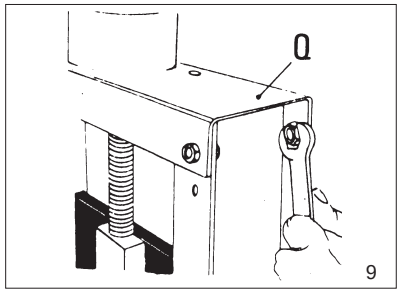

9

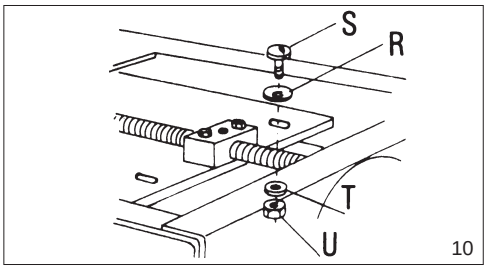

10

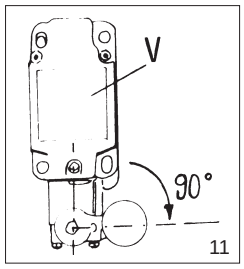

11

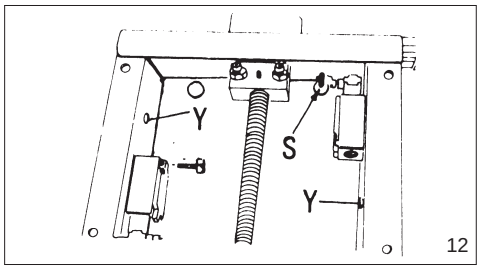

12

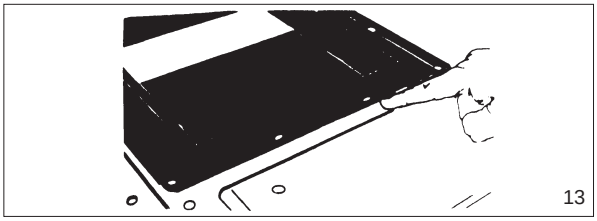
13

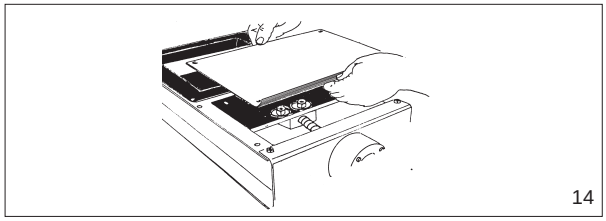
14

7) Insert from above into the blade (**Z**) the two M12 bolts along with the large washers. Insert the small washers and screw on the self-locking nuts from below without tightening them up.

8) Remove the central bolt and washer from the actuator top side. Turn the spindle by hand until the key slots in the reducer housing (**X**) are aligned. Insert the parallel key (**P**) and refit the central bolt and washer. Tighten the bolt.

9) Tighten the 4 bolts that fix the upper crosspiece (**Q**) to valve frame.

10) Position the washers D.12 (**R**) on the rear side in the centre of the slots. Insert the round head screws M8x25 (**S**). Insert the washers D.8 (**T**) and nuts (**U**) from the opposite side.

11) Position arms of limit switches (**V**) to 90° so that, after being fitted, the rollers face the blade slots.

12) Fix the limit switches to the inside using nuts and bolts. Open the valve on 0 position, the head of the bolt (**S**) must rest on limit switch roller. Bores (**Y**) are cable passages. Check the switch operation before starting regular operation. Refer to specific procedure for limit switch assembly reported in the next section.

13) For valve installation use bolts which are short enough not to interfere with blade.

14) Carry out greasing (see Lubrication chapter).

15) Fit the top and bottom guard ensuring they perfectly adhere to the frame. Check the positioning of the self-adhesive gasket.

MECHANICAL LIMIT SWITCH

1) Position the arms of the limit switches (**V**) to 90° so that, after having fitted, the rollers they face the blade slots.

2) Remove from the box the fixing flange and four screws with their washers.

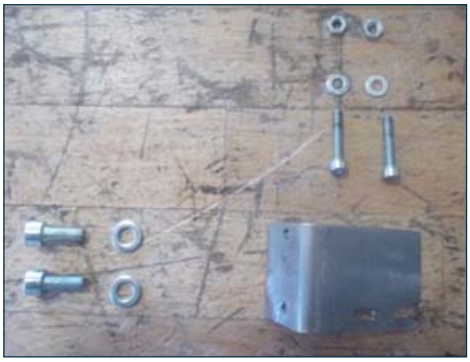

3) Fix the limit switch on the plate with the two screws M4x25.

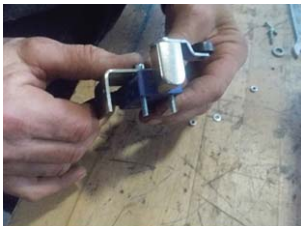

4) Fix the plate on the outside of the valve body by means of the two screws M6x16 and washers.

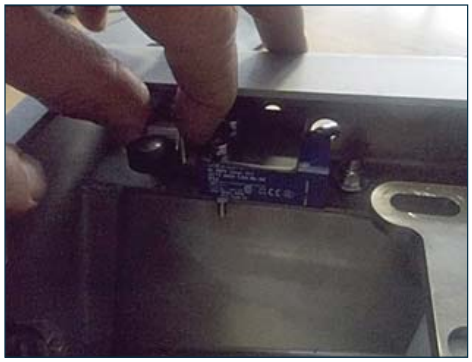

5) Fit the drive system on the blade of the limit switch (cam) with the screw M8x25, screw, washer and spacer as shown in the figure. Check the operation the prior to starting regular operation.

6) Repeat the operation for the second limit switch, if required.

INDUCTIVE LIMIT SWITCH

1) Remove from the box the detection system consists of plate and the related fixing screws. Then assembly according to the indications.

2) Fit the inductive sensor D.18 to the valve by using the appropriate bores.

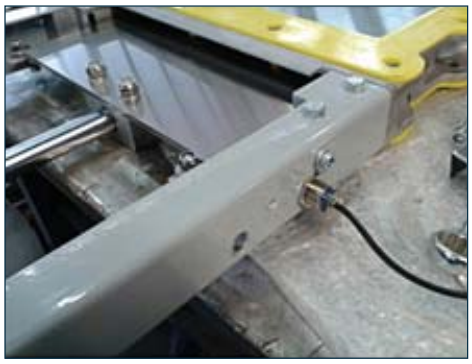

3) Adjust the sensor on the basis of its reading / operation features.

4) Tighten the nut of the inductive sensor.

5) Check the operation the prior to starting regular operation.

6) Repeat the operation for the second limit switch, if required.

ADJUSTABLE SEAL SYSTEM

The valve is equipped with a seal adjusting system meant to vary the blade - gasket gap; this allows restoring / increasing the dust sealing in case of particularly thin dust or partial wear of the sealing gasket.

5.7 Electrical connection

Danger - Warning

The valve is not provided with an electrical system. Connection to the mains must be carried out by an electrician.
Provide a connection line for powering the valve in accordance with the provisions of the laws on the matter and taking into consideration the environmental safety requisites for installation and the envisaged operating conditions.

None of the basic utilities require electrical connection.

The installer must interface the valve with the necessary start/stop controls, emergency stops, reset after emergency stop, and micro-switches for inspection hatches, in compliance with existing regulations.

Before making the connection, ensure that the mains voltage and frequency correspond to those indicated on the electric component rating plate. Disconnect the power supply before carrying out any work and use suitable devices so that it cannot be accidentally reconnected.

Use electric cables having suitable cross-section for the power absorption of the motor of the valve.

The type of motor connection depends on the voltage value available to be applied; refer to the wiring diagram provided for each motor.

The illustration shows the wiring diagrams if the motor is supplied by **WAM**®. Refer to the manual on the website www.wamgroup.com

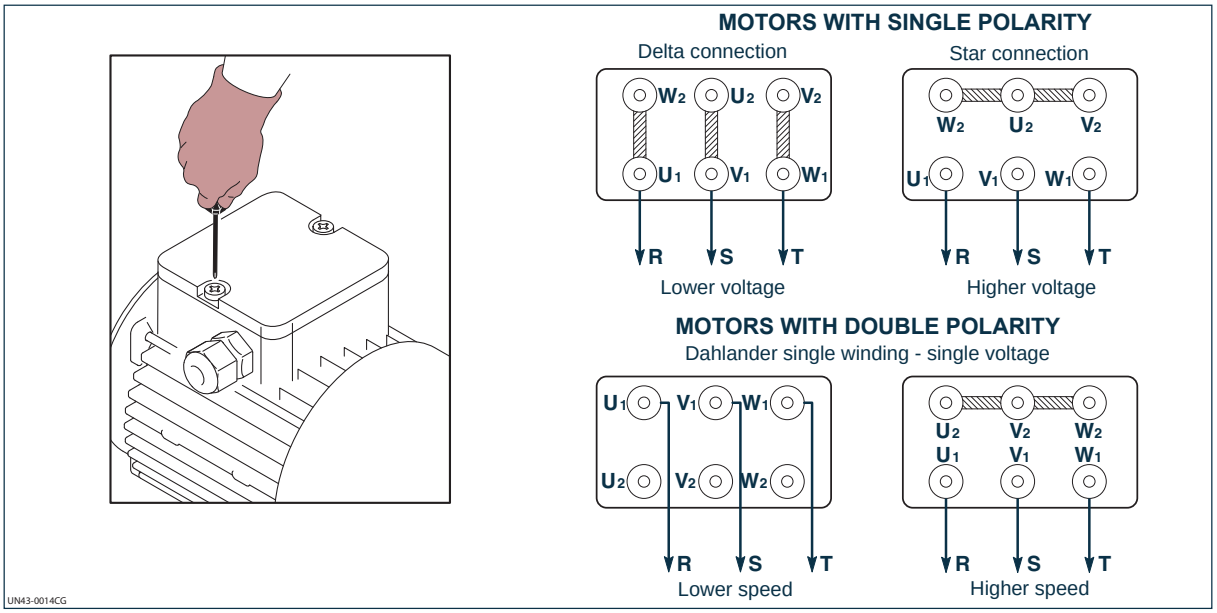

The installer will have to provide for interfacing the equipment with the necessary controls for: start/stop, emergency stop, reset after an emergency stop, in compliance with the regulatory standards in force.

In the testing phase, ensure that the motor rotation corresponds to the direction of rotation shown by the arrow applied on the motor.

If the rotation is inverse, invert the cable connections in the terminal board.

Disconnect the power supply before every intervention and use suitable devices to prevent accidental reconnection of the valve.

Before operating the valve 's actuator each time, ensure the protection devices are present and working properly.

During these checks make sure the sliding of the valve blade cannot harm any person or damage the valve.

The installer must connect the valve to the grounding system of the plant.

5.8 Compressed air connection

None of the basic utilities require the use of compressed air.

If pneumatic actuators are used, it is installer's responsibility to make sure the compressed air pipes are fixed properly and provide the required protection for sudden detachment of the piping.

COMPRESSED AIR FEATURES

The connection of the compressed air could cause the opening or closing of the valve; it is therefore necessary to make sure, prior to connecting it, the valve is in suitable safety conditions.

The compressed air supplied to the pneumatic components must have special features:
1) Filtered: free of scum which may damage the components internally.
2) De-moist: use of a condensate tap is advisable.

ATTENTION

Before connecting the compressed air to the utilities:
- drain the piping;
- check the pneumatic components to see if they require lubrication;
- if pneumatic actuators are used, it is the installer's responsibility to make sure the compressed air pipes are fixed properly and provide the required protection for sudden detachment of the piping section;
- check the pneumatic pipes to make sure they are tightened properly.

The related actuator operation manuals are available on the website www.wamgroup.com.

5.9 Inspection

Important

When installation is complete, authorized personnel must carry out a general test to make sure the safety conditions have been completely satisfied.

The authorized personnel must also check:
- That the linearity error of the valve is within the values indicated (see specific paragraph);
- That no tools or other material have been left inside the valve;
- That the fixing screws have been tightened using the prescribed torque;
- The level of oil in the actuator gear reducer is correct.

Before starting to operate the valve:
- Ensure that the plant in which the valve is installed complies to the Directive 2006/42/EC and the relevant directives, the safety standards in force and those specifically applicable.
- Make sure the inlet and outlet spouts of the valve are connected to the final equipment or plant in order to prevent access to hazardous areas.
- Ensure the operating conditions are complied with.
- Make sure the food versions (model F and P) were properly cleaned and sanitized.

Start up the valve without load to ensure the sliding of the blade is correct and easy;

Operate the valve for about 1 to 3 minutes to ensure it is working correctly.

In the presence of:
- Unusual noise;
- Overheating of the motor and/or gear box;
- High friction of the disc against the inner seal;
- Not enough torque to open and close the valve.

Stop the valve and remove the cause of the malfunctioning.

Danger - Warning

When sizing the valve, check for any chemical incompatibility between the material and the components of the valve.

6.1 Production Start-up

Before starting up the valve, the operator in charge and authorized for the production must ensure the safety devices installed are present, in working order and that the operating conditions are followed (inlet and outlet spouts connected correctly or protected, etc.).

Especially with materials which tend to harden or become sticky through longer periods of storage ensure no material or liquid is deposited on the shaft passages. In such a case clean the area thoroughly.

Start valve operation on empty. If valve works correctly, add material and proceed with regular operation.

Important

In case of excessive noise, strong vibrations, etc. stop the valve and report the problem to the person in charge authorized to intervene to restore correct working.
Do not use the valve if damaged.

Operation

Depending on the type of plant, the valve can be operated either manually, electropneumatically or by a geared motor. In the last two cases the valve is controlled by a remote control panel or by a local starter.

The weight of the material column must not exceed the resistance of the mobile valve parts.

Regular cleaning increases the life of the valve. This applies in particular to those application in which the materials handled either tend to harden or become sticky when stored for a longer period.

Important

The material weight on the sliding of the blade must never be greater than its maximum static torque. As it is difficult to calculate this weight exactly due to varying of material proprieties, as rule of thumb, one may consider there are no problems with bulk density < 1.13 kg/dm^3 in standard hoppers or silos. When dealing with materials with higher bulk density check with the customer service.

Important

Operate the valve always when material is flowing.
These valves are specifically provided for work with powdery or granular materials and not with liquid ones.

6.2 Cleaning the valve after clogging

If, during normal operation, the valve actuator is found to be moving gradually under stress and then comes to a complete stop, it is highly probable that the problem is caused by a blockage.

Danger - Warning

The authorized operator must strictly apply all laws regarding workplace safety and adopt appropriate protective measures against work accidents.
Specifically, do not insert the hands into the inlet/outlet next to the valve if the blade has not been blocked safely using external means.

Danger - Warning

Disconnect the valve from all mains and use the appropriate means to prevent it from being reconnected accidentally.

Proceed as described.

- Cut off the actuator power supply to the valve or block the hand lever in a fixed and safe position.
- Remove the outlet sleeve and ensure that the outlet spout is not obstructed by material or deposits and clean it using a tool, if necessary.

Danger - Warning

Never insert the hands inside the valve.

Before disconnecting the valve, ensure the pneumatic actuator contains no compressed air.

6.3 Shutdown of the valve at the end of the work cycle

There is no special switch-off procedure.

The stop of the valve is made with the shutdown of its actuator. It is advisable to drain the valve at the end of each working day. This is particularly important when the material transported handled tend to harden or become sticky when stored for a longer period.

6.4 Long shutdowns of the valve

When the valve remains unused for long periods, proceed as described below.

1) Empty the valve of the product it contains to prevent it from hardening.

2) Clean the valve (see “Cleaning the valve”).

3) Grease the coupling between valve and actuator.

4) Grease actuator components if necessary.

5) Repair the damaged or worn mechanical parts, if necessary.

6) Cut the power supply.

6.5 Reuse

Important

If the equipment is to be used in different conditions and with materials other than the previous application, ensure the “Permitted use” indications are complied with.

Before reusing the valve after a prolonged shutdown, proceed as described below.

1) Check the main nuts and bolts to make sure they are tightened properly.

2) Set the valve in safety conditions before starting operation making sure the valve is completely empty.

3) Check the supply system and all parts the working of which may be affected by long shutdowns.

4) Clean the valve thoroughly according to the instructions given on the product safety chart.

5) If the valve operates in different conditions, or using materials different from the previous application, ensure this use complies the INDICATIONS FOR USE section.

6) Start up the valve (see “Production Start-up”).

Danger - Warning

Before carrying out any maintenance operation, activate all the safety devices for the safety of the persons involved in the operations and those nearby.
Set the valve concerned in safety condition.
Wear suitable personal protection devices; in this regard, consult the person in charge of safety of production activities.

Important

Failure to strictly follow the instructions can cause problems and invalidate the warranty on the valves supplied.

- Scheduled maintenance Table

Component	Operation to be carried out	Daily	Weekly	Every month	Every six months	Every two years	Manual reference
Safety device	Performance check	•					
Valve	Remove dust residue from the outer surface	•					
Valve outlet	Check if the outlet is free of material residues. Otherwise, clean it thoroughly to remove all obstructions that block the material flow		•				
Earthing connection	Integrity of electrical connection			•			
Seal	Check the wear			•			
Bushes	Check the wear				•		
Flanges	Verify fixing				•		
Actuator coupling	Check and remove any rust						
Seal	Replace					•	
Actuator bracket	Check condition				•	•	
Safety and information signs	Check the condition and legibility				•		

Important

Part replacement depends on the use of the valve and type of material handled.

7.1 Cleaning the valve

Clean the outside part of the valve using a vacuum cleaner to prevent dispersal of dust in the environment and in the surrounding area, or use a moist cloth.

Do not use compressed air under ATEX condition.

Wash the valve, after vacuuming the dust, with a low-pressure water jet.

Before start-up the valves for food applications (model F and P), has to be subjected to cleaning and sanitation by means of a woven/non-woven cloth and sanitizer spray.

7.2 Lubrication

Lubrication operations have to be carried out (see periodic check maintenance), using conductive type grease pastes on the following parts:

- Connecting shaft;
- Earth wiring contact screw.

N.B.: A routine lubrication cycle is only recommended for the CRGX electromechanical control, with grease suitable for ATEX applications applied on the bronze block approx. every 300 opening/closing cycles.

8.1 Safety recommendations for replacement

Danger - Warning

The replacement operations must be carried out by a specialist authorized technician with specific skills in the sector concerned (mechanical, electrical etc).
Before carrying out any operation, provide suitable safety measures and use the appropriate equipment to prevent risk of work injuries to persons involved in the operations and those nearby.
Activate all the safety devices envisaged and prevent access to controls which, if activated, could cause work injuries to the persons involved in the operations.

8.2 Replacement of worn parts

The seal and roller bearings (blade supports), which are the only wear parts in the **VIB** type valves, must be replaced after a certain period, depending on the material and application.

We suggest replacing the seals and roller bearings every 2 years, as you can see in the Maintenance Schedule table.

For spare part codes refer to Spare Parts section.

Proceed as described.

1) Ensure the container below which the valve is fitted is empty;

2) Disconnect from the mains and the compressed air supply from the actuator;

3) Remove the actuator;

4) Remove the valve.

VIB

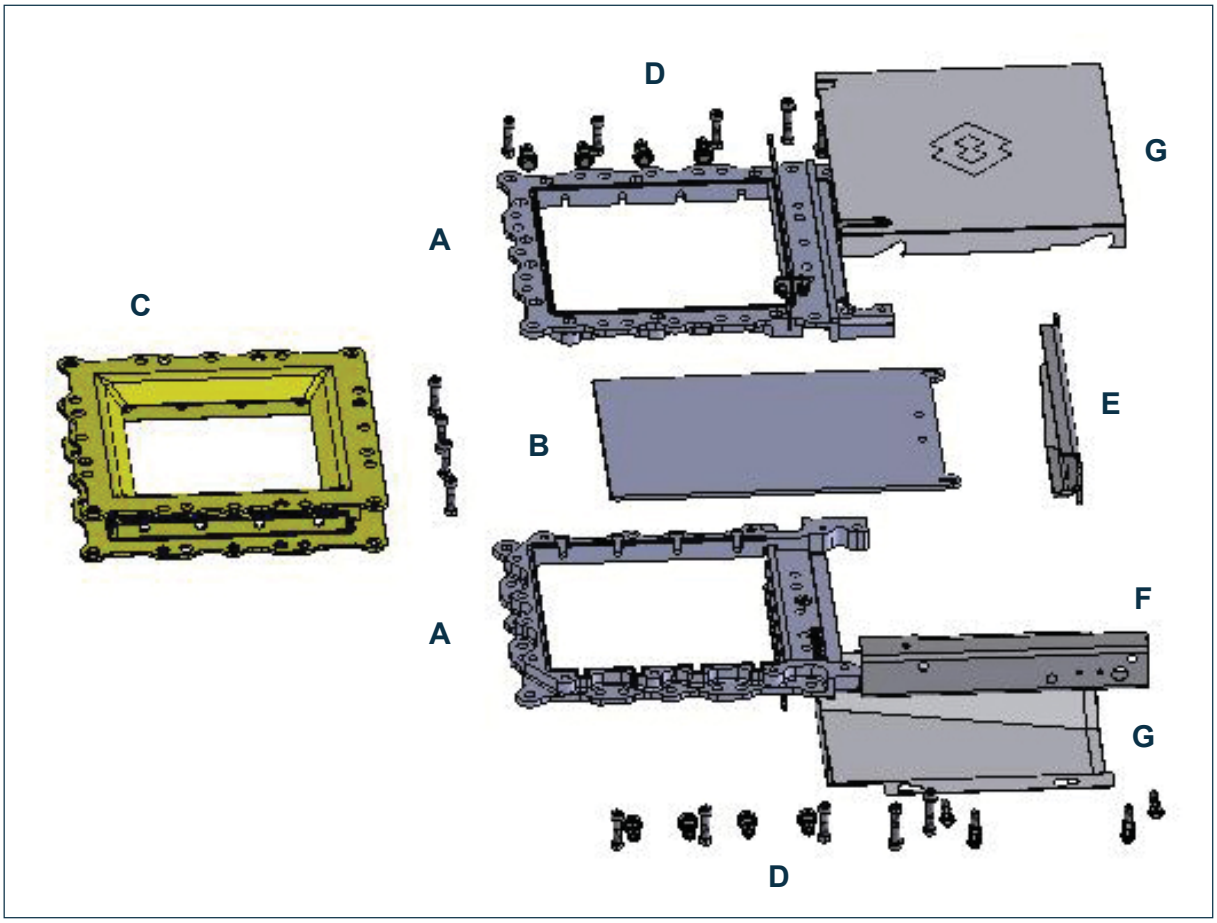

A) Die cast aluminium semi-bodies
B) Blade
C) SINT® liner
D) Roller bearing
E) Actuator fixing plate
F) Back lateral frame
G) Protection plate

5) Loosen the bolts (**8**) and (**10**) and remove them. Do not lose the nuts (**9**);

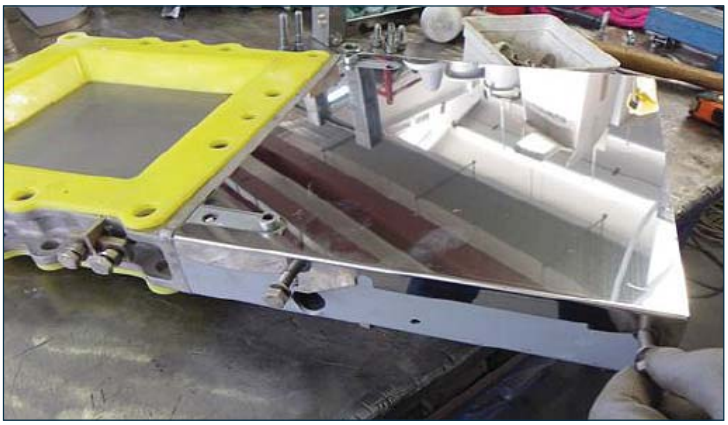

6) Remove the rear cover;

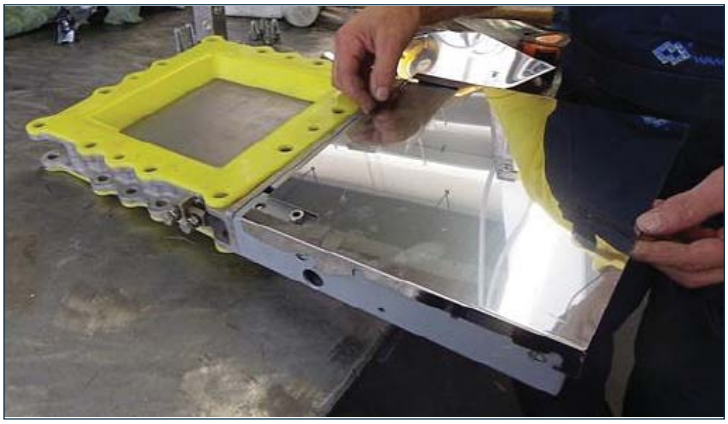

7) Remove the fixing screws on the rear of the metal body.

8) Remove the metal body from the back;

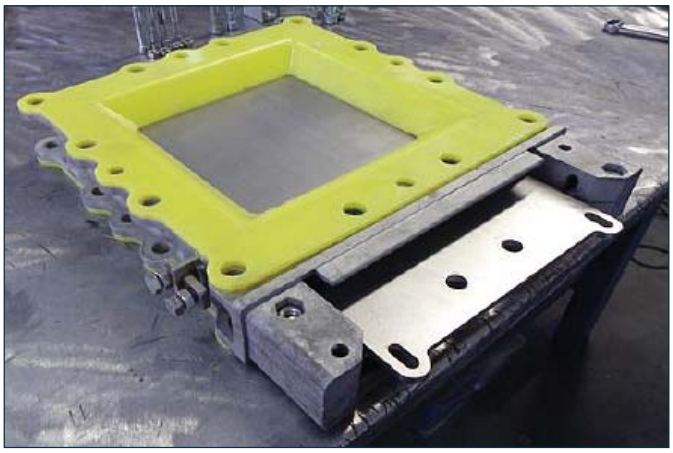

9) Separate the blade along with the seal from the valve body; verify the position of the blade beveled side for its correct repositioning.

10) Remove the roller bearings from the body (**6**) from the disc shaft;

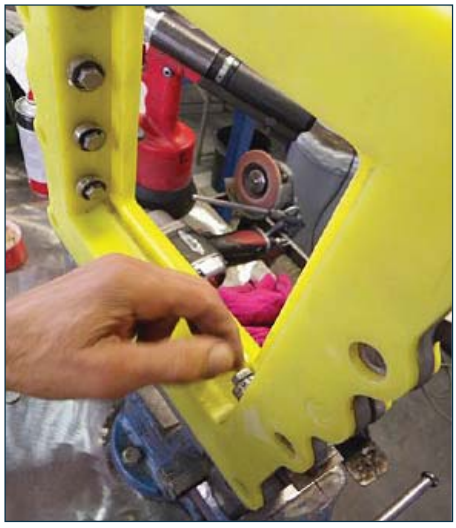

11) Remove the fixing screws (**6**) the aluminium body, located under the gasket;

12) Separate the two aluminium half-bodies and remove the seal.

ASSEMBLING PROCEDURE

13) Ensure the seal does not get damaged. Fit the new seal by positioning vertically the valve body to facilitate the operation. Keep the seal body with the gap down. Make sure the food versions (model F and P) were properly cleaned and sanitized.

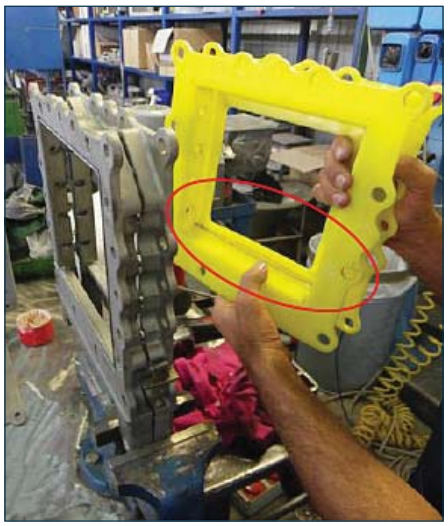

14) Fit the seal to the half-bodies made from aluminium by matching the bores and positioning the gap of the blade down.

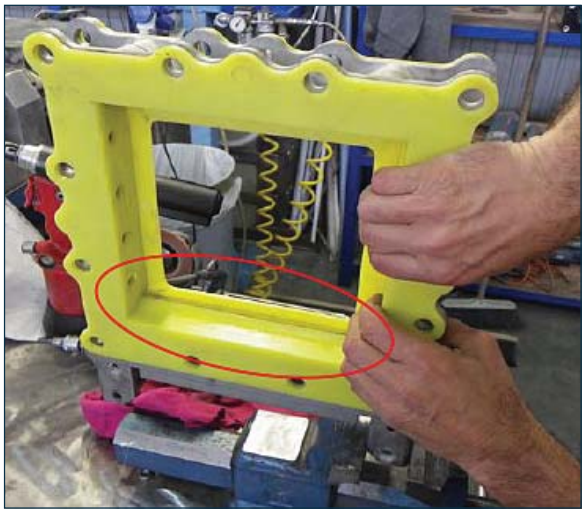

15) Insert the nuts and the screw and tighten.

16) Assemble the bearings with screw and bush in the seats of the valve body. (Fig. 10)

17) Remove the blade and insert it into the valve body through the gap at the bottom, by sliding them on the bearings. Abut the blade to close the valve. (Fig. 9)

NOTE: The blade must be assembled by keeping the beveled side to 20 ° on the front, facing the opposite side of the bearings.

18) Fit the steel body on the aluminium valve body by centring the bores and abutting it. Use a rubber hammer if necessary. (Fig. 8)

19) Insert the fixing screws and tighten. (Fig. 7)

20) Fit the cover on the steel part of the valve body, match the slots to the screws and bores on the side. (Fig.6)

21) Assemble the screws and washers on the fixing surface of the cover and tighten. (Fig.5)

22) Reinstall the valve according to “Installation and fixing of the valve” section.

The seals, fitted on food configurations (**D**), shall be provided individually packed in plastic bags inside a paperboard box.

The client has to keeps trace of the seal lot reference number for an easier future traceability. The lot number of the seal is present in the Instruction for cleaning and sanitizing provide inside the package.

For the replacement of bearings the valve doesn’t need to be completely disassembled.

8.3 Returning the valve

When returning the valve use the original packaging if it has been preserved, otherwise fix the it on a pallet and cover it with nylon shrink-wrap, to protect it as best as possible from impact during transport. In any event, make sure there is no residue material inside the valve.

8.4 Dismantling and disposal

Dismantling of the valve must be entrusted to personnel specialized in these activities and equipped with adequate skills.

Dismantle the components of the valve concerned; if necessary contact the Manufacturer for further information.

The components dismantled have to be separated on the basis of the nature of the materials of which they consist, in compliance with the laws on the matter of “differential collection and disposal of wastes”.

With reference to the WEEE Directives, electrical and electronic components, marked with a special symbol, have to be disposed off in authorized collection centres meant for the purpose.

Unauthorized disposal of “Waste Electrical and Electronic Equipment” (WEEE) is punishable with fines governed by the laws concerning the matter.

9.1 Trouble-shooting

Minor problems can be solved without consulting a specialist.

The following Table contains a list of the most common problems, the possible causes and possible remedies.

For particularly difficult actions which are not mentioned in the Table, contact the Manufacturer's Customer Service Department.

Danger - Warning

Before carrying out any operation "set the valve concerned in safety" (see "Glossary and terminology"), operate according to the indications on the "Operation and Maintenance Manual" and in accordance with and in compliance with the standards in force as regards health and safety.

FAULT	POSSIBLE REASON	SOLUTION
A) The valve does not open or it remains opened.	1) Lumps inside the material.	1) Remove the valve, clean it thoroughly and reinstall it.
	2) Bulk density too high.	2) Provide weight relief inside the bin cone.
	3) Actuator air pressure too low.	3) Check for leakages in compressed air mains and repair.
	4) Drive power too low.	4) Check the electric motor and the mains. Then remove the fault.
B) The valve leaks.	1) Valve does not close completely.	1) See item A.
	2) Seal worn out	2) Replace the disc seal.
C) Valve opens and closes with difficulty	1) See item A.1-A.2-A.3-A.4	1) Ensure valve works in axis
D) Excessive presence of dust	1) Fluidization nozzles too close to the valve	1.1) Substitute nozzles with vibrator o knocker or move nozzles from present position
		1.2) Provide breather hole in the bottom system
	2) Material column always too high	2) Provide weight relief above valve
E) Infiltration of powder or water in the rear part of the valve	1) Guard incorrectly positioned	1) Fit the guard tightly onto the valve frame

9.2 Check-list in case of fault

If you have been unable to solve the problem on the valve even after having carried out the operations suggested in paragraph “Trouble-shooting” please contact the plant technician/installer/or the Manufacturer.

If technical assistance is required, in addition to the valve data, the plant technician/installer or Manufacturer will also need information concerning the plant in which the valve is installed, its installation and its working, for better identification of the problem that has occurred.

Obviously many of the checking operations which are requested have already been performed in the various steps during installation, testing and start-up of the valve concerned.

Danger - Warning

Before carrying out any operation “set the valve concerned in safety” (see “Glossary and terminology”), operate according to the indications on the “Operation and Maintenance Manual” and in accordance with and in compliance with the standards in force as regards health and safety.

1) Information necessary

a) Description of problem;

b) Material handled;

c) Photo showing the entire valve and how it is installed;

d) Valve type;

e) Does the valve start up without any problem after long shutdowns?

f) Is the outlet spout free of encrustations which reduce the cross-section?

g) Is the vent of the weigh hopper into which the valve discharges the material sized correctly; is it clean and does it work properly?

2) Checking the silo

a) What is the inclination of the cone?

b) How much material does the silo contain?

c) Is the silo equipped with a bridge-breaker baffle plate?

d) Is the silo provided with fluidization/aeration?

How many nozzles or aeration pads are preset on the cone, how are they arranged and what is their distance from the outlet flange of the silo?

What is the operating pressure and the operating cycle?

e) Is the silo provided with a vibrator or a hammering device?

What is the operating cycle?

NOTE: If the valve got clogged with product in a silo which cannot be emptied, cut the bottom of the scraper and make sure the adjustable seal system is in 0 position.

VIBQ

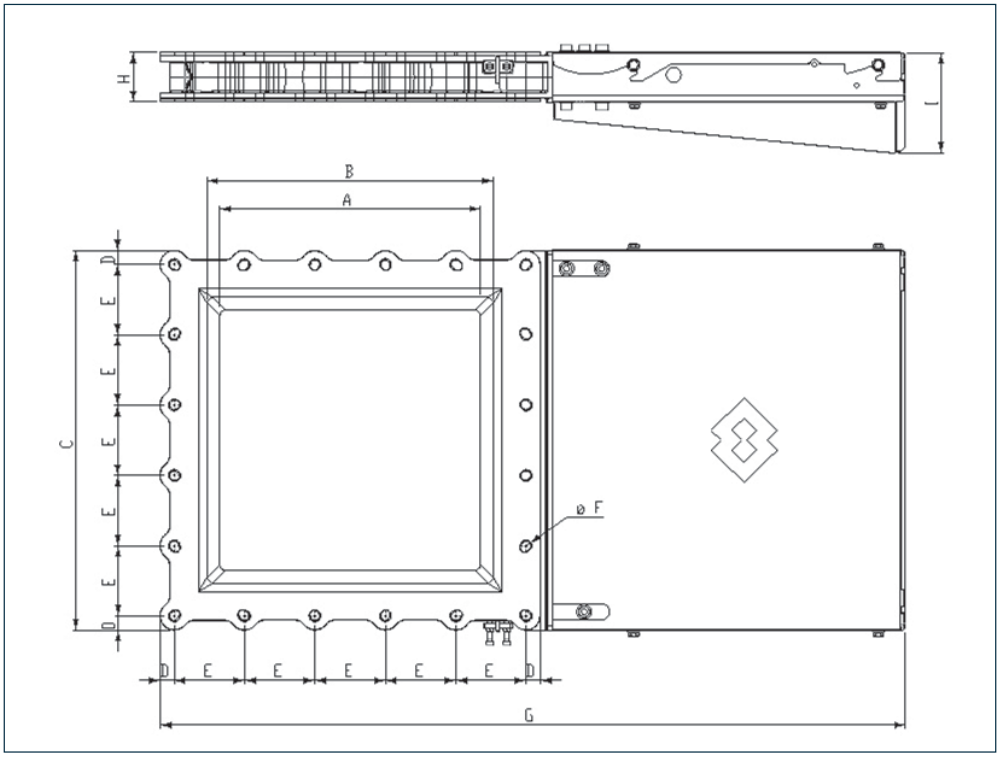

VIB	A	B	C	D	E	N° E	ØF	BOLTS	G	H	I	kg
150	120	175	261	15.5	115	2	12.5	M10	510	61	125	10
200	170	225	311	15.5	93.3	3	12.5	M10	610	61	122	14
250	220	275	361	15.5	110	3	12.5	M10	710	61	122	17
300	270	325	438	26.5	128.3	3	12.5	M10	840	61	122	24
350	320	375	489	22	89	5	12.5	M10	961	71	145	34
400	370	425	531	20	100	5	12.5	M10	1058	71	145	41

STANDARD CEMA FLANGE

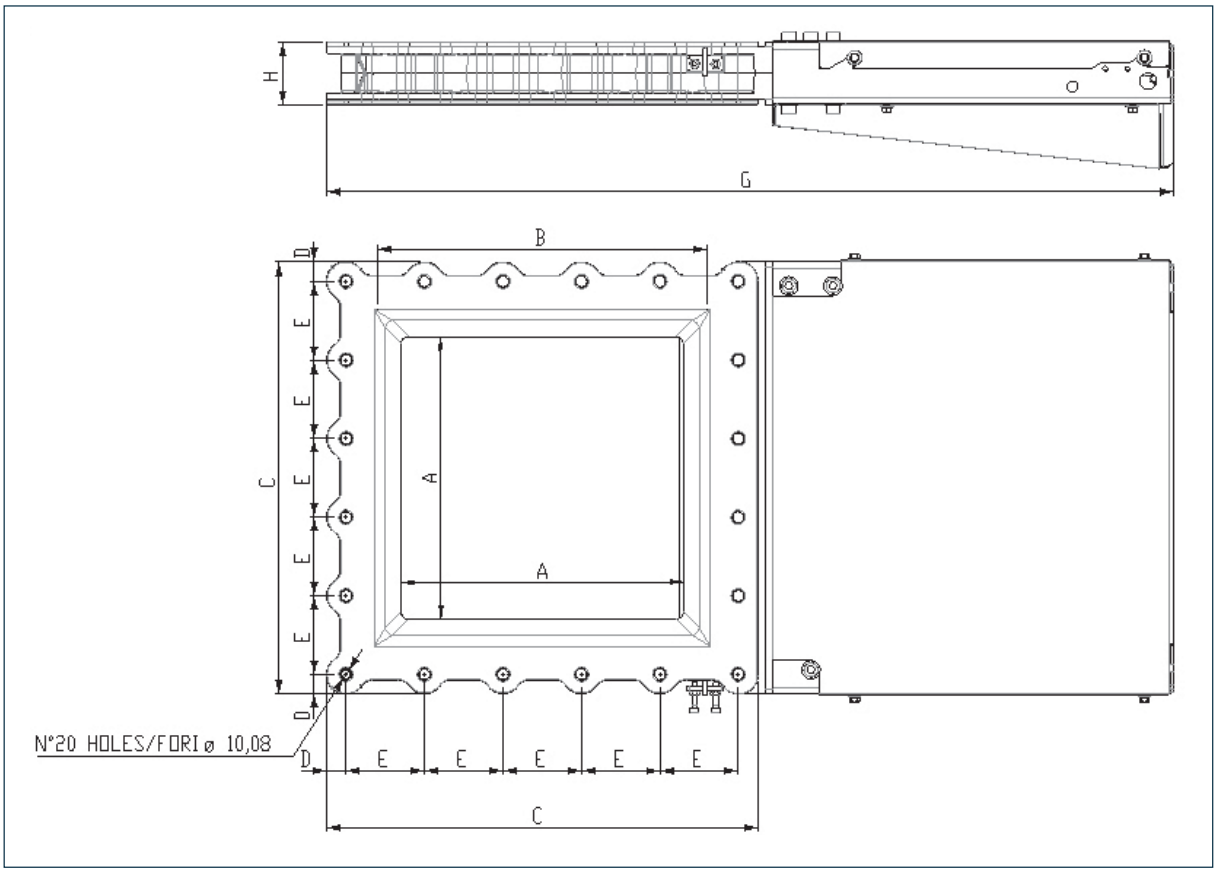

VIB	A	B	C	D	E	N° E	S	N° S	ØF	BOLTS	G	H	I	Kg
150 - 6”	120	175	261	21	76.2	1	71.4	2	12.5	M10	510	61	125	10
									12.5	M10	610	61	122	12
250 - 10”	220	275	361	15.4	111.1	1	109.5	2	12.5	M10	710	61	122	16
300 -12”	270	325	438	22.2	133.4	1	130.2	2	12.5	M10	840	61	122	22
350 -14”	320	375	489	22.2	89	4	\	\	12.5	M10	961	71	145	30
400 -16”	370	425	531	22.2	101.6	3	95.3	2	12.5	M10	1058	71	145	37

Use original spare parts only.

For the identification of spare parts and wear components codes, refer to the drawings in the dedicated catalogue.

Please find below a list of components to which reference can be made.

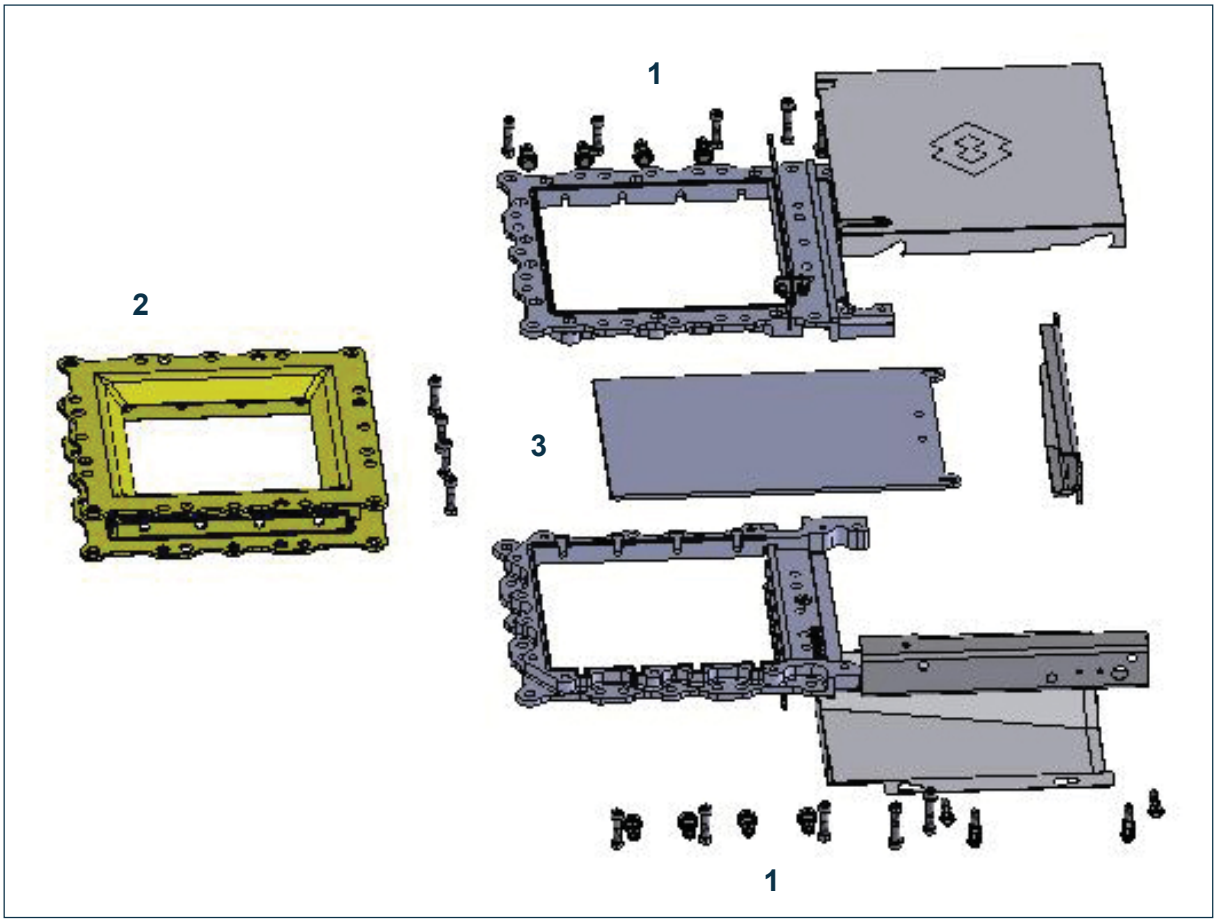

1) Roller bearings

2) Seal

3) Blade

NOTE: All other elements in the drawing do not represent spare parts.

A1 Nuts and bolts tightening torque Table

Thread diameter	Tightening torque [Nm]		
	Resistance Class **8.8**	Resistance Class **10.9**	Resistance Class **12.9**
M6	9.5	13.0	16.0
M8	23.0	32.0	39.0
M10	46.0	64.0	77.0
M12	80.0	110.0	135.0
M14	125.0	180.0	215.0
M16	195.0	275.0	330.0
M18	270.0	390.0	455.0
M20	385.0	540.0	650.0
M22	510.0	720.0	670.0
M24	660.0	930.0	1100.0
M27	980.0	1400.0	1650.0
M30	1350.0	1850.0	2250.0

WAM®

WAMGROUP

3

SPARE PARTS

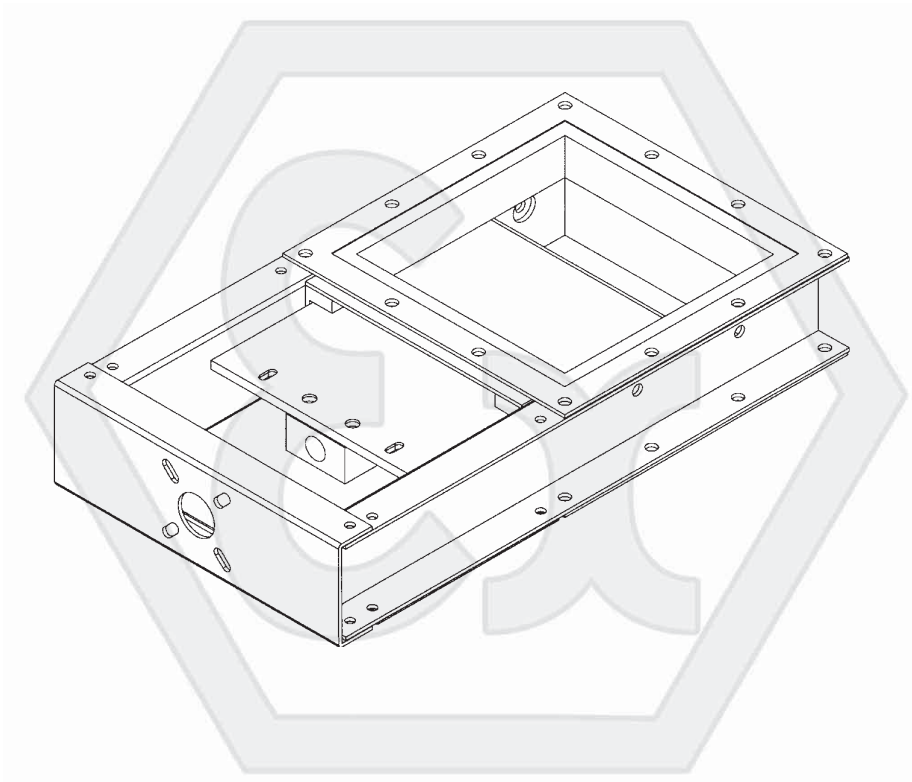

VL ATEX

- **SLIDE VALVES FOR EXPLOSIVE ATMOSPHERES**
  SPARE PARTS CATALOGUE
- ***FLACHSCHIEBER FÜR EXPLOSIVE ATMOSPHÄRE***
  ERSATZTEILKATALOG
- **VANNES GUILLOTTINE POUR ATMOSPHERES EXPLOSIVES**
  PIECES DE RECHANGE
- ***VALVOLE A GHIGLIOTTINA PER ATMOSFERE ESPLOSIVE***
  PEZZI DI RICAMBIO

All rights reserved © WAMGROUP S.p.A.

CATALOGUE No.		VAL.131.EX.R.4L	CREATION DATE
ISSUE **A**	CIRCULATION **100**	DATE OF LATEST UPDATE	**06 - 2006**

All the products described in this catalogue are manufactured according to **WAMGROUP S.p.A. Quality System procedures**. The Company's Quality System, certified in July 1994 according to International Standards **UNI EN ISO 9002** and extended to the latest release of **UNI EN ISO 9001**, ensures that the entire production process, starting from the processing of the order to the technical service after delivery, is carried out in a controlled manner that guarantees the quality standard of the product.

*Alle in diesem Katalog beschriebenen Produkte werden gemäß dem **Qualitätssystem der WAMGROUP S.p.A.** hergestellt. Das im Juli 1994 gemäß der internationalen Norm **UNI EN ISO 9002** und auf die neueste Version der **UNI EN ISO 9001** erweiterte, zertifizierte Qualitätssystem der Firma gewährleistet, dass der gesamte Produktionsprozess von der Auftragsbearbeitung bis zum technischen Kundendienst nach Lieferung in kontrollierter Art und Weise erfolgt, so dass der Qualitätsstandard des Produkts gewährleistet ist.*

Tous les produits décrits dans ce catalogue sont fabriqués selon les procédures du **Système de Qualité de WAMGROUP S.p.A.**, certifié en Juillet 1994 selon les normes internationales **UNI EN ISO 9002** et étendu à la dernière version de la norme **UNI EN ISO 9001**. Cela garantit que le processus de production, à partir de la gestion de la commande au service technique après-vente, est effectué de manière contrôlée garantissant la norme de qualité du produit.

*Tutti i prodotti descritti nel catalogo sono stati realizzati secondo le **procedure del Sistema Qualità di WAMGROUP S.p.A.** Il Sistema Qualità aziendale, certificato dal luglio 1994 in conformità alle normative internazionali **UNI EN ISO 9002** e successivamente esteso all' ultima versione delle normative **UNI EN ISO 9001**, garantisce che l'intero processo produttivo, dalla formulazione dell'ordine fino all'assistenza tecnica dopo la consegna, si svolga secondo modalità controllate che garantiscono lo standard qualitativo del prodotto.*

This publication cancels and replaces any previous edition and revision.
We reserve the right to implement modifications without notice.
This catalogue cannot be reproduced, even partially, without prior consent.

Diese Veröffentlichung storniert und ersetzt alle früheren Ausgaben und überarbeiteten Fassungen.
Wir behalten uns das Recht vor, Änderungen ohne vorherige Information durchzuführen.
Dieser Katalog darf ohne vorherige Genehmigung weder ganz noch teilweise vervielfältigt werden.

Cette publication annule et remplace toute édition et révision antérieure.
Nous nous réservons le droit de mettre en place des modifications sans préavis.
Ce catalogue ne peut être reproduit, même partiellement, sans notre consentement préalable.

Questa pubblicazione annulla e sostituisce le edizioni e revisioni precedenti.
Ci riserviamo la facoltà di apportare modifiche senza preavviso.
Il presente catalogo non può essere riprodotto, nemmeno parzialmente, senza previo consenso.

3 **SPARE PARTS CATALOGUE** — **ERSATZTEILKATALOG**

SPARE PARTS..... ERSATZTEIL..... **R.04 → .07**

3 **CATALOGUE PIECES DE RECHANGE** — **CATALOGO RICAMBI**

PIECES DE RECHANGE..... PEZZI DI RICAMBIO..... **R.04 → .07**

L	Vulcanized SINT®MC blade *SINT®MC-Blech vulkanisiert* Lame vulcanisée SINT®MC *Lama vulcanizzata SINT®MC*	T	St. st. 304 blade *1.4301-Blech* Lame AISI 304 *Lama AISI 304*

VLXQ | | | | | | | 1

Size / *Größe*
Taille / *Dimensioni*

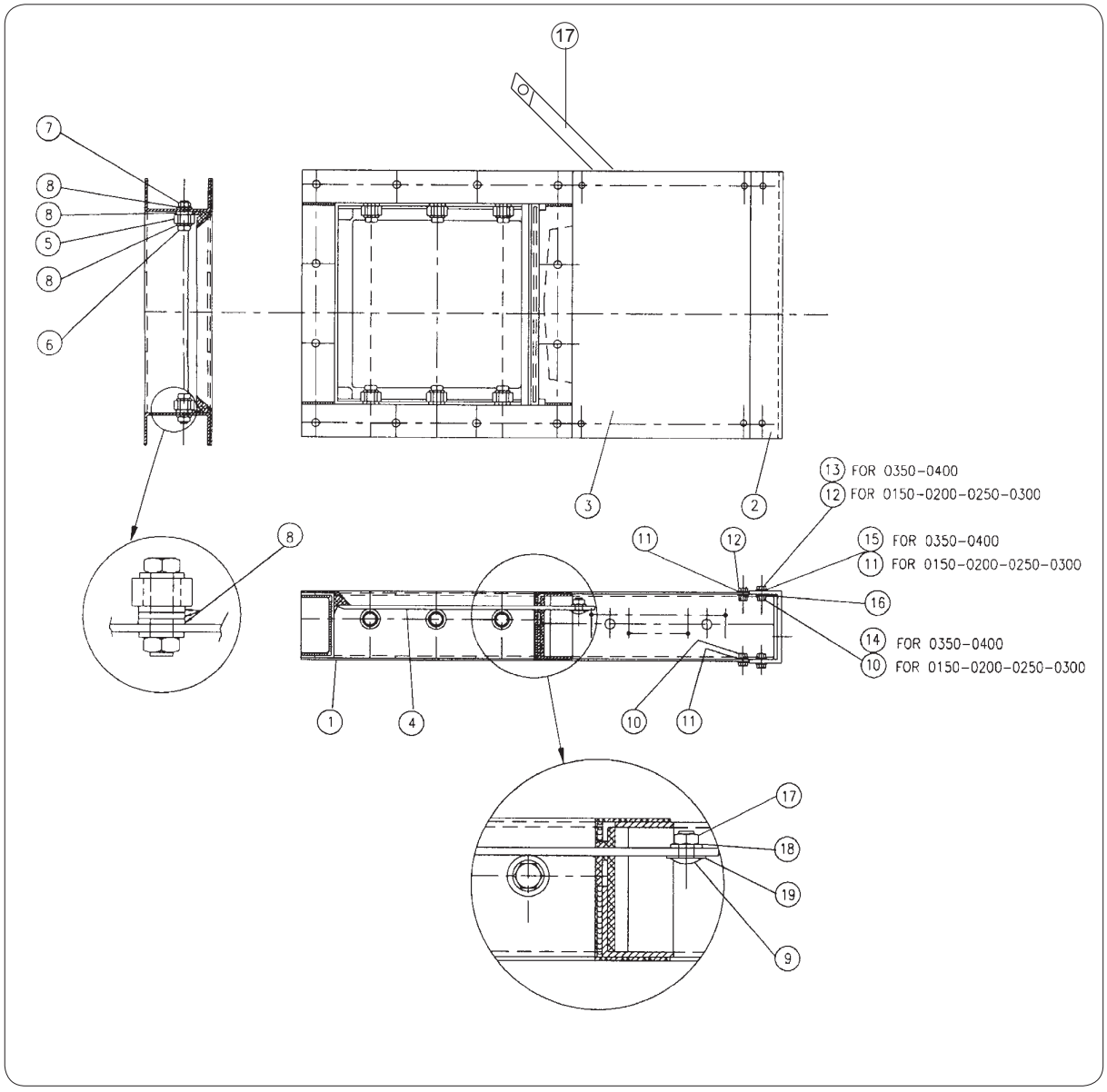

WAM®

VL ATEX

- SPARE PARTS
- ERSATZTEILE
- PIECES DE RECHANGE
- RICAMBI

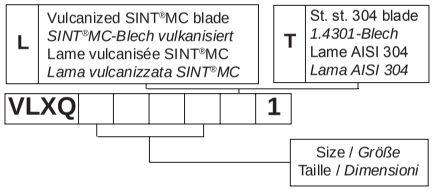

WA.03021.25EX **R. 02**

Item Pos. Pos. Pos.	Quant. Menge Quant. Quant.	Norms Normen Normes Norme	Description	Benennung	Dèsignation	Denominazione	0150 Code Codice	0200 Code Codice	0250 Code Codice	0300 Code Codice
1	1		Body	Gehäuse	Corps vanne	Corpo valvola	**20933911A**	**20933921A**	**20933931A**	**20933941A**
2	1		Plate	Kantblech	Tôle pliée	Lamiera piegata	**20688711A**	**20688721A**	**20688731A**	**20688741A**
3	2		Guard	Schutzblech	Tôle de protection	Lamiera di protez.	**20691561A**	**20691571A**	**20691581A**	**20691591A**
4L	1		Vulc. blade SINT®MC L	Schieberblech SINT®MC L	Lame vulc. SINT®MC L	Lama vulcaniz. in SINT®MC tipo L	**20654211B**	**20654221B**	**20654231B**	**20654241B**
4M	1		Carbon steel blade M	Schieberblech Stahl M	Lame en fer M	Lama in ferro tipo M	**20654351A**	**20654361A**	**20654371A**	**20654381A**
4T	1		St. steel 304 blade T	Schieberblech 1.4301 T	Lame AISI 304 type T	Lama in AISI 304 tipo T	**20654352A**	**20654362A**	**20654372A**	**20654382A**
5	*	12x32x10 DIN 625	Bearing	Wälzlager	Roulement	Cuscinetto	-	-	-	-
6	*	M12 x 40 DIN 934	Hexagonal bolt	Sechskantschraube	Vis à tête à six pans	Vite T.E.	-	-	-	-
7	*	M12 DIN 934	Hexagonal nut	Sechskantmutter	Écrou à tète à six pans	Dado esagonale	-	-	-	-
8	**	Ø12 DIN 125A	Flat washer	Unterlegscheibe	Rondelle	Rondella	-	-	-	-
9	2	M8 x 20 DIN 603	Round-headed bolt	Zylinderkopfschraube	Boulon à tête ronde	Bullone testa tonda	-	-	-	-
10	14	M8 DIN 934	Hexagonal nut	Sechskantmutter	Écrou à tète à six pans	Dado esagonale	-	-	-	-
11	22	Ø8 DIN 125A	Flat washer	Unterlegscheibe	Rondelle	Rondella	-	-	-	-
12	12	M8 x 20 DIN 933	Hexagonal bolt	Sechskantschraube	Vis à tête à six pans	Vita T.E.	-	-	-	-
16	4	Ø8 DIN 127B	Spring washer	Federring	Rondelle à ressort	Rosetta elastica	-	-	-	-
17	1	L=250mm holes ø 12	Earthing braid	Erdungsband	Tresse de mise a la terre	Treccia di messa a terra	**3804001056**	**3804001056**	**3804001056**	**3804001056**

Item Pos. Pos. Pos.	Quant. Menge Quant. Quant.	Norms Normen Normes Norme	Description	Benennung	Dèsignation	Denominazione	0350 Code Codice	0400 Code Codice		
1	1		Body	Gehäuse	Corps	Corpo valvola	**20933951A**	**20933961A**		
2	1		Plate	Kantblech	Tôle pliée	Lamiera piegata	**20690461A**	**20690471A**		
3	2		Guard	Schutzblech	Tôle de protection	Lamiera di protez.	**20691601A**	**20691611A**		
4L	1		Vulc. blade SINT®MC L	Schieberblech SINT®MC L	Lame vulc. SINT®MC L	Lama vulcaniz. in SINT®MC tipo L	**20654251B**	**20654261B**		
4M			Carbon steel blade M	Schieberblech Stahl M	Lame en fer M	Lama in ferro tipo M	**20654391A**	**20654401A**		
4T			St. steel 304 blade T	Schieberblech 1.4301 T	Lame AISI 304 type T	Lama in AISI 304 tipo T	**20654392A**	**20654402A**		
5	6	12x37x12 DIN 625	Bearing	Wälzlager	Roulement	Cuscinetto	-	-		
6	6	M12 x 40 DIN 933	Hexagonal bolt	Sechskantschraube	Vis à tête à six pans	Vite T.E.	-	-		
7	6	M12 DIN 934	Hexagonal nut	Sechskantmutter	Écrou à tète à six pans	Dado esagonale	-	-		
8	32	Ø 12 DIN 125A	Flat washer	Unterlegscheibe	Rondelle	Rondella	-	-		
9	2	M8 x 20 DIN 603	Round-headed bolt	Zylinderkopfschraube	Boulon à tête ronde	Bullone testa tonda	-	-		
10	10	M8 DIN 934	Hexagonal nut	Sechskantmutter	Écrou à tète à six pans	Dado esagonale	-	-		
11	18	Ø 8 DIN 125A	Flat washer	Unterlegscheibe	Rondelle	Rondella	-	-		
12	8	M8 x 20 DIN 933	Hexagonal bolt	Sechskantschraube	Vis à tête à six pans	Vita T.E.	-	-		
13	4	M10 x 25 DIN 933	Hexagonal bolt	Sechskantschraube	Vis à tête à six pans	Vita T.E.	-	-		
14	4	M10 DIN 934	Hexagonal nut	Sechskantmutter	Écrou à tète à six pans	Dado esagonale	-	-		
15	4	Ø 10 DIN 125A	Flat washer	Unterlegscheibe	Rondelle	Rondella	-	-		
16	4	Ø 8 DIN 127b	Spring washer	Federring	Rondelle à ressort	Rosetta elastica	-	-		
17	1	L=250mm holes ø 12	Earthing braid	Erdungsband	Tresse de mise a la terre	Treccia di messa a terra	**3804001056**	**3804001056**		

* (4 off / St. / Pces. / Pezzi: VLQ0150 - 0200 - 0250) - (6 off / St. / Pces. / Pezzi: VLQ0300)

* (22 off / St. / Pces. / Pezzi: VLQ0150 - 0200 - 0250) - (32 off / St. / Pces. / Pezzi: VLQ0300)

L	Vulcanized SINT®MC blade *SINT®MC-Blech vulkanisiert* Lame vulcanisée SINT®MC *Lama vulcanizzata SINT®MC*
T	St. st. 304 blade *1.4301-Blech* Lame AISI 304 *Lama AISI 304*

VLXC [ ][ ][ ][ ][ ][ ] **1**

Size / *Größe*
Taille / *Dimensioni*

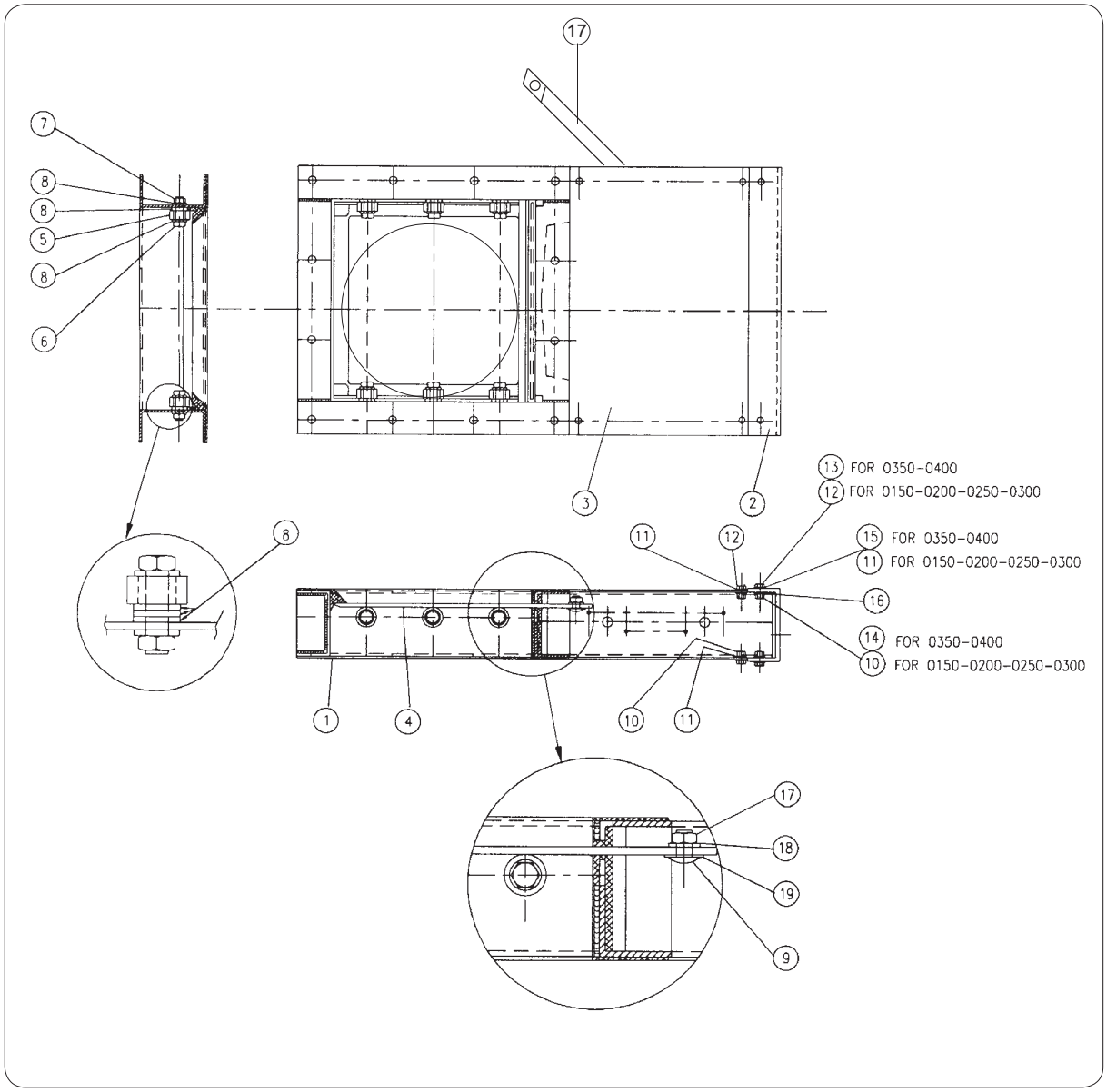

WAM®

VL ATEX

- **SPARE PARTS**
- **ERSATZTEILE**
- **PIECES DE RECHANGE**
- **RICAMBI**

L	Vulcanized SINT®MC blade *SINT®MC-Blech vulkanisiert* Lame vulcanisée SINT®MC *Lama vulcanizzata SINT®MC*
T	St. st. 304 blade *1.4301-Blech* Lame AISI 304 *Lama AISI 304*

VLXC | | | | | | **1**

Size / *Größe*
Taille / *Dimensioni*

Item Pos. Pos. Pos.	Quant. Menge Quant. Quant.	Norms Normen Normes Norme	Description	Benennung	Dèsignation	Denominazione	0150 Code Codice	0200 Code Codice	0250 Code Codice	0300 Code Codice
1	1		Body	Gehäuse	Corps vanne	Corpo valvola	**20934231A**	**20934241A**	**20934251A**	**20934261A**
2	1		Plate	Kantblech	Tôle pliée	Lamiera piegata	**20688711A**	**20688721A**	**20688731A**	**20688741A**
3	2		Guard	Schutzblech	Tôle de protection	Lamiera di protez.	**20691561A**	**20691571A**	**20691581A**	**20691591A**
4L	1		Vulc. blade SINT®MC L	Schieberblech SINT®MC L	Lame vulc. SINT®MC L	Lama vulcaniz. in SINT®MC tipo L	**20654211B**	**20654221B**	**20654231B**	**20654241B**
4M	1		Carbon steel blade M	Schieberblech Stahl M	Lame en fer M	Lama in ferro tipo M	**20654351A**	**20654361A**	**20654371A**	**20654381A**
4T	1		St. steel 304 blade T	Schieberblech 1.4301 T	Lame AISI 304 type T	Lama in AISI 304 tipo T	**20654352A**	**20654362A**	**20654372A**	**20654382A**
5	*	12x32x10 DIN 625	Bearing	Wälzlager	Roulement	Cuscinetto	-	-	-	-
6	*	M12 x 40 DIN 934	Hexagonal bolt	Sechskantschraube	Vis à tête à six pans	Vite T.E.	-	-	-	-
7	*	M12 DIN 934	Hexagonal nut	Sechskantmutter	Écrou à tète à six pans	Dado esagonale	-	-	-	-
8	**	Ø12 DIN 125A	Flat washer	Unterlegscheibe	Rondelle	Rondella	-	-	-	-
9	2	M8 x 20 DIN 603	Round-headed bolt	Zylinderkopfschraube	Boulon à tête ronde	Bullone testa tonda	-	-	-	-
10	14	M8 DIN 934	Hexagonal nut	Sechskantmutter	Écrou à tète à six pans	Dado esagonale	-	-	-	-
11	22	Ø8 DIN 125A	Flat washer	Unterlegscheibe	Rondelle	Rondella	-	-	-	-
12	12	M8 x 20 DIN 933	Hexagonal bolt	Sechskantschraube	Vis à tête à six pans	Vita T.E.	-	-	-	-
16	4	Ø8 DIN 127B	Spring washer	Federring	Rondelle à ressort	Rosetta elastica	-	-	-	-
17	1	L=250mm holes ø 12	Earthing braid	Erdungsband	Tresse de mise a la terre	Treccia di messa a terra	**3804001056**	**3804001056**	**3804001056**	**3804001056**

Item Pos. Pos. Pos.	Quant. Menge Quant. Quant.	Norms Normen Normes Norme	Description	Benennung	Dèsignation	Denominazione	0350 Code Codice	0400 Code Codice		
1	1		Body	Gehäuse	Corps	Corpo valvola	**20934271A**	**20934281A**		
2	1		Plate	Kantblech	Tôle pliée	Lamiera piegata	**20690461A**	**20690471A**		
3	2		Guard	Schutzblech	Tôle de protection	Lamiera di protez.	**20691601A**	**20691611A**		
4L	1		Vulc. blade SINT®MC L	Schieberblech SINT®MC L	Lame vulc. SINT®MC L	Lama vulcaniz. in SINT®MC tipo L	**20654251B**	**20654261B**		
4M			Carbon steel blade M	Schieberblech Stahl M	Lame en fer M	Lama in ferro tipo M	**20654391A**	**20654401A**		
4T			St. steel 304 blade T	Schieberblech 1.4301 T	Lame AISI 304 type T	Lama in AISI 304 tipo T	**20654392A**	**20654402A**		
5	6	12x37x12 DIN 625	Bearing	Wälzlager	Roulement	Cuscinetto	-	-		
6	6	M12 x 40 DIN 933	Hexagonal bolt	Sechskantschraube	Vis à tête à six pans	Vite T.E.	-	-		
7	6	M12 DIN 934	Hexagonal nut	Sechskantmutter	Écrou à tète à six pans	Dado esagonale	-	-		
8	32	Ø 12 DIN 125A	Flat washer	Unterlegscheibe	Rondelle	Rondella	-	-		
9	2	M8 x 20 DIN 603	Round-headed bolt	Zylinderkopfschraube	Boulon à tête ronde	Bullone testa tonda	-	-		
10	10	M8 DIN 934	Hexagonal nut	Sechskantmutter	Écrou à tète à six pans	Dado esagonale	-	-		
11	18	Ø 8 DIN 125A	Flat washer	Unterlegscheibe	Rondelle	Rondella	-	-		
12	8	M8 x 20 DIN 933	Hexagonal bolt	Sechskantschraube	Vis à tête à six pans	Vita T.E.	-	-		
13	4	M10 x 25 DIN 933	Hexagonal bolt	Sechskantschraube	Vis à tête à six pans	Vita T.E.	-	-		
14	4	M10 DIN 934	Hexagonal nut	Sechskantmutter	Écrou à tète à six pans	Dado esagonale	-	-		
15	4	Ø 10 DIN 125A	Flat washer	Unterlegscheibe	Rondelle	Rondella	-	-		
16	4	Ø 8 DIN 127b	Spring washer	Federring	Rondelle à ressort	Rosetta elastica	-	-		
17	1	L=250mm holes ø 12	Earthing braid	Erdungsband	Tresse de mise a la terre	Treccia di messa a terra	**3804001056**	**3804001056**		

* (4 off / St. / Pces. / Pezzi: VLQ0150 - 0200 - 0250) - (6 off / St. / Pces. / Pezzi: VLQ0300)

* (22 off / St. / Pces. / Pezzi: VLQ0150 - 0200 - 0250) - (32 off / St. / Pces. / Pezzi: VLQ0300)

N.B. Rights reserved to modify technical specifications
N.B. Angaben ohne Gewähr. Änderungen können ohne Vorankündigung vorgenommen werden.
N.B. Toutes données portées dans le présent catalogue n'engagent pas le fabricant. Elles peuvent être modifiéés à tout moment.
N.B. Tutti i dati riportati nel presente catalogo non sono impegnativi e possono subire variazioni in qualsiasi momento.

WAM®

WAMGROUP S.p.A.
Via Cavour, 338
I - 41030 Ponte Motta
Cavezzo (MO) - ITALY

☎ +39 / 0535 / 618111
fax +39 / 0535 / 618226
e-mail info@wamgroup.it
internet www.wamgroup.com
videoconferenze + 39 / 0535 / 49032