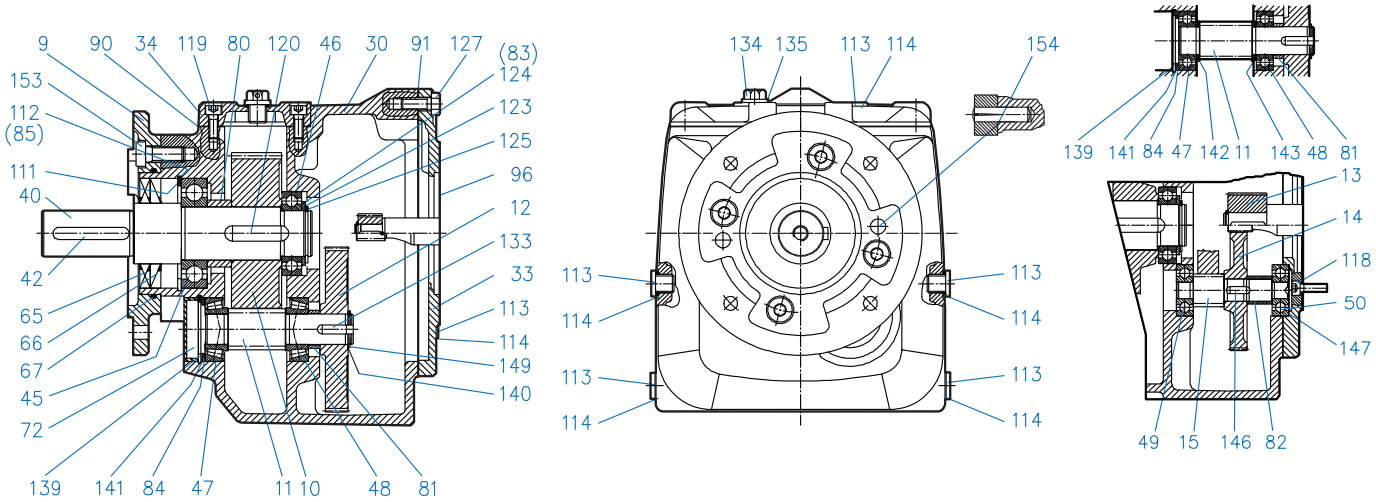

SK 273 - SK 973 Flange Mounted

9	Flange	66	Shaft seal	123	Thrust washer
10	Driven gear	67	O-Ring	124	Shim
11	Pinion shaft	72	Bore plug	125	Snap ring
12	Driving gear	80	Spacer	127	Bolt
13	Driving pinion	81	Spacer	133	Key
14	Driving gear	82	Spacer	134	Vent plug
15	Pinion shaft	83	Thrust washer	135	Gasket
30	Gearcase	84	Thrust washer	139	Snap ring
33	Input cover	85	Thrust washer	140	Shim
34	Gearcase cover	90	Gasket	141	Shim
40	Output shaft	91	Gasket	142	Thrust washer
42	Key	96	Gasket	143	Thrust washer
45	Output shaft bearing	111	Snap ring	146	Key
46	Output shaft bearing	112	Shim	147	Shim
47	Pinion shaft bearing	113	Oil plug	149	Snap ring
48	Pinion shaft bearing	114	Gasket	153	Bolt
49	Pinion shaft bearing	118	Bolt	154	Grooved dowel pin
50	Pinion shaft bearing	119	Bolt		
65	Shaft seal	120	Key		

Troubleshooting

This section identifies some of the most common issues involved with NORD Gear speed reducers , and provides recommendations to assist you in defining and answering your questions as you work with our products. You may also contact our Engineering/Application departments if your questions are not answered in the table below.

Problem With the Reducer		Possible Causes	Suggested Remedy
Runs Hot	Overloading	Load exceeds the capacity of the reducer	Check rated capacity of reducer, replace with unit of sufficient capacity or reduce the load.
	Improper lubrication	Insufficient lubrication	Check lubricant level and adjust up to recommended levels
		Excessive lubrication	Check lubricant level and adjust down to recommended levels.
		Wrong lubrication	Flush out and refill with correct lubricant as recommended
Runs Noisy	Loose foundation bolts	Weak mounting structure	Inspect mounting of reducer. Tighten loose bolts and/or reinforce mounting and structure.
		Loose hold down bolts	Tighten bolts
	Failure of bearings	May be due to lack of lubricant	Replace bearing. Clean and flush reducer and fill with recommended lubricant.
		Overload	Check rated capacity of reducer.
	Insufficient lubricant	Level of lubricant in reducer not properly maintained.	Check lubricant level and adjust to factory recommended level.
Output shaft does not turn	Internal parts are broken or missing	Overloading of reducer can cause damage	Replace broken parts. Check rated capacity of reducer.
		Key missing or sheared off on input shaft.	Replace key.
		Coupling loose or disconnected	Properly allign reducer and coupling. Tighten coupling.
Oil Leakage	Worn seals	Caused by dirt or grit entering seal.	Replace seals. Autovent may be clogged. Replace or clean.
	Unit runs hot or leaks	Overfilled reducer	Check lubricant level and adjust to recommended level.
		Vent clogged.	Clean or replace, being sure to prevent any dirt from falling into the reducer.
	Incorrect fill level	Improper mounting position, such as wall or ceiling mount of horizontal reducer.	Check mounting position on the name tag & verify with mounting chart in manual.

1. Overview

This user manual applies to NORD Motor products and it provides general information for motor operation, installation, maintenance, inspection, repair, and trouble shooting, which is relevant to most of the motor products shipped by NORD. Information and instructions provided in this manual, safety and commissioning information and all other manuals applicable to any items supplied by NORD must be observed.

This instruction manual is not intended to include comprehensive details and information related to all possible design variations or accessories options available with NORD motors. If there is any uncertainty about specific procedures, instructions or motor details, then please refer these questions to NORD for additional information or clarification.

Before installing, operating, or performing maintenance on any electrical motor become familiar with the following:

- The detailed operating instructions and wiring diagrams.
- All applicable national, local and system-specific regulations, codes and practices.
- The national / regional regulations governing safety and accident prevention.
- The proper use of any tools, transportation or hoisting equipment, and safety equipment needed to complete the installation.
- To avoid serious injury or possible damage to the equipment or machine, compliance with all safety and information notes is mandatory!

⚠ WARNING ⚠

All work involved in the transport, connection, commissioning and maintenance of any NORD product must be carried out by qualified and responsible technicians. All applicable national, regional, and local work regulations and safety requirements must also be complied with. NORD assumes no liability for personal injury, accidental death, or equipment damage and malfunctions resulting from failure to comply with installation or operating instructions, safety notes, or any work regulations and laws!

⚠ WARNING ⚠

To avoid electrocution, injury or death, make certain the motor is properly grounded, completely de-energized and brought to a no-voltage condition prior to working on any electrical connections.

2. Motor Types

NORD AC electric induction motors described in this manual generally include the following types:

- Single speed or two-speed design.
- Three phase alternating current or single phase design.
- Enclosure types: TEFC, TENV, and TEBC.

3. Enclosure Types

Totally enclosed fan cooled (TEFC).

TEFC motor designs rely on fan that is mounted on the motor's rotor shaft so the cooling capacity can vary based upon the motor's operating speed.

Totally enclosed, non-ventilated (TENV)

The TENV motor designs rely purely on convection cooling and they have no fan. Often TENV designs are labeled for intermittent or periodic duty or at a lower power rating than is typical for the given motor frame size.

Totally enclosed, blower cooled (TEBC)

The TEBC design uses separate blower or ventilator fan, with its own low wattage motor and a separate power supply, to provide continuous airflow and cooling. The blower can be used to extend the speed range of the motor and allow extreme slow speed operation without causing a concern for overheating. Blower data is provided in Table 6, page 11.

4. Voltage and Frequency Variation

Voltage and frequency variations are based upon the assumption that the nameplate horsepower will not be exceeded and that the motor temperature may increase. Standard allowable deviations are based upon the type of motor labeling.

NEMA and CSA Labeled Motors

Variations are based upon the nominal utilization voltage, and not the service (supply) voltage as per ANSI C84.1.

Service Voltages	Utilization Voltages
120V, 208V, 240V, 480V, 600V	115V, 200V, 230V, 460V, 575V

- Voltage variation at rated frequency = ±10%.
- Frequency variations at rated voltage = ±5%.
- Combined voltage/frequency variation = ±5%.

CE Labeled Motors

Per IEC 60038, allowable service voltage variations on in the current system, compared to the previous system, are as indicated.

Previous Service Voltages	Current Service Voltages
220V, 380V, 660V	230V, 400V, 690V +6/-10%
240V, 415V	230V, 400V +10/-6%

- Per EN 60034-1 a ±5% voltage variation and a ±2% frequency variation can be tolerated.
- The allowed variations are based upon the voltage (or voltage range) indicated on the motor nameplate.

5. Motor Nameplate Information

The motor nameplate and the display of technical information may vary slightly depending upon the global standard/s that the motor conforms to and the efficiency level. Please reference the examples below.

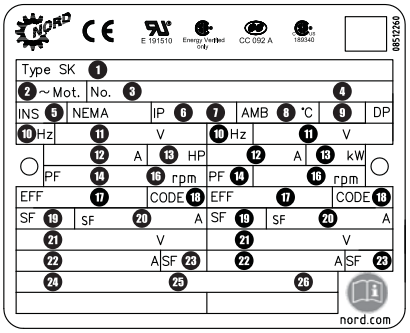

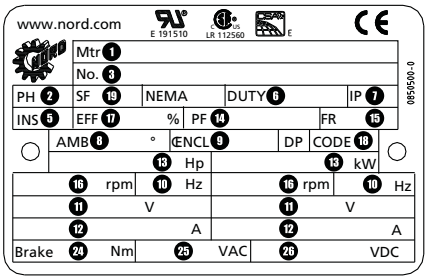

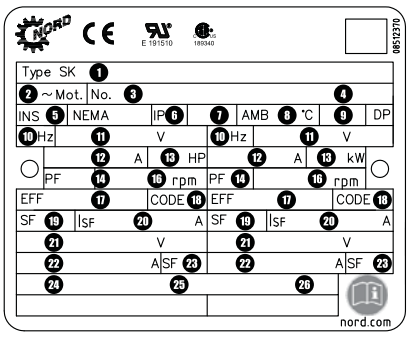

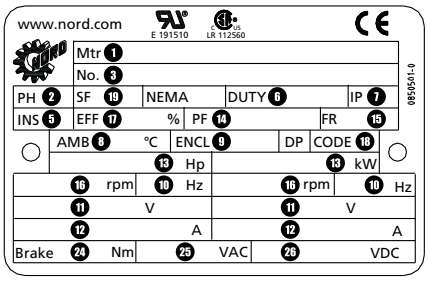

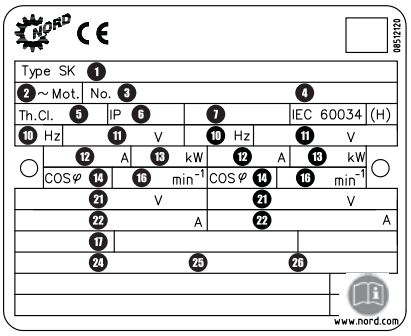

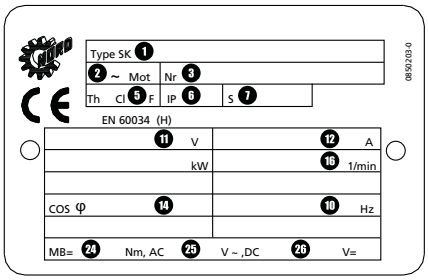

Table 1. Nameplate Data

Field	Definition
1	Model / Type
2	Number of Phases
3	Order Number
4	Serial Number
5	Insulation Class
6	IP (Ingress Protection) Enclosure Rating
7	Duty Cycle
8	Ambient Temperature Rating (°C)
9	Enclosure Type
10	Motor Frequency (Hz)
11	Voltage Rating (V)
12	Current Rating (A)
13	Rated Power (HP or kW)

Field	Definition
14	Power Factor
15	Motor Frame Size
16	Full Load Speed (rpm or 1/min^2)
17	Efficiency
18	NEMA Code Letter
19	Service Factor
20	Current Rating (If Service Factor ≥ 1.15)
21	Operating Voltage Rage (A)
22	Current Rating at Operating Voltage Range (A)
23	Service Factor at Operating Voltage Range (A)
24	Brake Rating (Nm)
25	Brake Supply Voltage (VAC)
26	Brake Coil Voltage (VDC)

6. Motor Options And Nomenclature

NORD offers many options for its motors. The option code will be shown in the motor nomenclature. Below are commonly used options.

Code	Description
AICM	Additional Internal Insulation Coating Applied
BRE	With Brake
EAR	Single Phase, Start Cap/Run Cap
ECR	Single Phase, Start Cap/Run Cap Increased SF
EHB	Single Phase, Run Capacitor Only
EP	Epoxy Dipped Windings
F	Blower Cooling Fan - 3ph & 1ph
FC	Blower Cooling Fan - 1ph
FHL	Brake – Lockable Manual Release
H	Energy Efficient
HL	Brake – Manual Hand Release
IG	Incremental Encoder
IP66	IP66 Environmental Protection
IR	Brake – Current Sensing Relay
KB	Condensation Holes - Removable Plugs
KD	Condensation Holes - Open
MIK	Brake – Microswitch
MS	Power Plug Connector

Code	Description
OL	TENV Motor – Without Fan / With Cover
OL/H	TENV Motor - Without Fan & Cover
P	Premium Efficient Motors
RD	Canopy Cover
RDD	Double Canopy Cover
RG	Brake – Corrosion Protected
RLS	Backstop
SH	Motor Space Heater
SR	Brake – Dust Protected
TF	Thermistor
TW	Thermostat
VN	10:1 Constant Torque Rated Motor
VR	5:1 Constant Torque Rated Motor
VW	20:1 Constant Torque Rated Motor
VZ-F	1000+:1 Constant Torque Rated Motor
WE	2nd Motor Shaft End
WU	High Slip Rotor
Z	High Inertia Motor Fan

Motor Nomenclature

100L / 4 BRE 40 ...

- ... — Other Options
- 40 — Brake Size Nm
- BRE — Brake
- 4 — Number of Poles
- 100L — Frame Size

Ordering Examples

100L 4 BRE 100 HL RG

- RG — Corrosion Protection
- HL — Hand Release Lever
- 100 — 100 Nm Brake Torque
- BRE — Brake
- 4 — 4 Poles
- 100L — Motor Frame Size

100 Frame Motor with 4 poles, Brake, 100 Nm with a hand release lever, corrosion protected brake, and a current sensing relay.

160L 2 BRE 40 FHL SR

- SR — Dust & Corrosion Prot.
- FHL — Locking Hand Release Lever
- 40 — 40 Nm Brake Torque
- BRE — Brake
- 2 — 2 Poles
- 160L — Motor Frame Size

63 Frame Energy efficient motor with 4 poles, Brake, 40 Nm with a locking hand release lever and dust & corrosion protection.

7. Application Conditions

Standard NORD motors are designed to operate in dusty or moist environments and have anti-fungal, thermal class F insulation.

- Enclosure Protection Rating = IP55 (minimum).
- Maximum Installation Height = 3300 ft (1000 m).
- Ambient Temperature = -4 to 104°F (-20 to 40 °C).
- Tropical-proof, Thermal Class F insulation.

The protection level and maximum ambient temperature are stated on the motor nameplate.

IMPORTANT NOTE

NORD can provide motors for an expanded range of applications and service conditions including higher protection levels, extreme ambient conditions and, higher altitudes.

WARNING

Consult NORD for recommendations if motors are operated under extreme loading conditions, exposed to high inertia loads, or need to operate under unusually high cycling conditions with high starting and stopping frequency.

WARNING

Special design and assembly considerations are needed if NORD motors are subject to any of the following conditions:

- Outdoor installation with motor in a vertical position.
- Direct contact with aggressive or corrosive materials (acids, bases, salts, certain gases, etc.).
- Exposure to extreme high or low temperatures, high relative humidity, condensation moisture or very wet environments.
- Subject to extreme material build-up on the unit (dirt, dust, sand, etc.).
- Hazardous Locations (risk of fire or explosion).

8. Transportation

During transportation observe the following:

- Make sure that all eyebolts and lifting lugs are tight and firmly against their supporting surface.
- Use all the lifting eyes that are intentionally supplied with the motor.
- Lift only at designed points.
- Protect the mounting surface from possible damage during transportation.
- Always use sufficiently rated handling equipment, lift mechanisms and lifting straps.
- With heavier objects or unbalanced loads, it may be appropriate to use more than one lifting point or an additional strap or sling to assure safe transportation of the assembly. This is especially true of assembled gearmotors and motorized reducers.
- Once the NORD motor or assembly is properly installed, remove the transportation fixtures completely or make certain they are properly re-secured and tightened.

WARNING

Transportation – Use of Lifting Devices

To avoid death, serious injury or equipment damage…

- Hoisting lugs or lifting eyes attached to the motor are designed for the weight of the motor only! Do not attach any additional loads!
- The motor must only be transported and lifted using the lifting eyes, in a position that is appropriate for its type of construction. Otherwise, it could fall over or slip in the lifting tackle.
- During suspended transport, two straps must be able to carry the entire load weight safely.
- When required use additional, suitable means of support for transportation, installation or removal.
- Always secure the support equipment to prevent it from slipping.

9. Storage

If the motor is not in service, store it according to the following conditions:

- Store the motor in a clean, dry, dirt-free, vibration free area.
- Storage temperatures of 10°C (50°F) to 50°C (120°F) must be maintained.
- Relative humidity must not exceed 60%.
- If vibration in the area exceeds 0.002 inch (0.05 mm) at 60 hertz, then vibration isolation pads are suggested to prevent brinelling of the bearings.
- Treat the unprotected shaft end and mating flange surfaces with a corrosion inhibitor that can be cleaned off prior to commissioning.
- Before placing the motor into service, visually inspect the motor exterior for evidence of deterioration during storage. Turn the motor shaft by hand to make sure the shaft turns freely.
- Motor space heaters, when provided, are to be connected and energized whenever there is a possibility that the storage ambient conditions will reach the dew point. Space heaters are optional. Remove motor from the storage container when the heater is energized.
- If the motor needs to be stored for extended periods, or if it is stored in less than favorable conditions, it is recommend that the winding insulation resistance be checked prior to commissioning (page 7).
- Even if stored in favorable conditions, the antifriction motor bearings and motor shaft seals may need to be replaced if the storage period is more than 4 years.

10. Safety Considerations

When installing, servicing or replacing electric motors it is important to be working in a “voltage-free” state. Observe the following safety rules.

Five Safety Rules

1. Disconnect the system. Disconnect the auxiliary circuits (brakes, space heaters, etc.).
2. Prevent reconnection (follow safe lock-out/tag-out practices).
3. Make sure that the equipment is at zero voltage.
4. Make certain the equipment is properly grounded and short-circuited.
5. Cover or isolate nearby components that are still electrically live.

To energize the system, apply the measures in reverse order.

Qualified Personnel

All work involved in the transport, connection, commissioning and maintenance of any NORD product must be carried out by qualified and responsible technicians.

For the purpose of this documentation, a qualified personnel is taken to mean a person or people who fulfill the following requirements:

- Through appropriate training and experience, they are able to recognize and avoid risks and potential dangers in their particular field of activity.
- They have been instructed to carry out work on the machine by the appropriate person responsible.
- They are responsible for knowing and complying with all applicable national, regional, and local work regulations and safety requirements.

10. Safety Considerations Ctd.

General Warnings and Cautions

WARNING

To avoid electrocution, injury or death, make certain all electrical devices (motors, brakes, variable frequency drives, etc.) are properly grounded, completely de-energized, and brought to a no-voltage condition prior to working on any electrical connections. Remember that most of these devices carry potentially dangerous energy levels for a period of time after power is removed. Always follow proper lock-out/tag-out procedures.

WARNING

Electrical machines contain dangerous voltage levels, electrically live parts, rotating surfaces and hot surfaces. To prevent injury, death or possible equipment damage always observe the following:

- Keep all safety covers and guards in place during operation. Remove and replace covers in compliance with the applicable safety regulations.
- Allow the machine to cool down before starting any work on it.
- Operate the machines properly.
- Perform regular maintenance on the machine.
- Secure and guard free-standing shaft extensions.

WARNING

Electrically Live Parts

Electrical machines contain electrically live parts. Fatal or severe injuries and substantial material damage can occur if the required covers are removed or if the machines are not handled, operated, or maintained properly.

WARNING

Rotating Parts

Electrical machines contain dangerous rotating parts. Fatal or severe injuries and substantial material damage can occur if the required covers are removed or if the machines are not handled, operated, or maintained properly.

WARNING

Hot Surfaces

Electrical machines have hot surfaces. Fatal or severe injuries and substantial material damage can occur if the required covers are removed or if the machines are not handled, operated, or maintained properly. Allow the machine to cool down before starting any work on it.

WARNING

Maintain Proper Cooling

Operating the motor without the intended cooling fan may cause overheating and result in very hot surfaces, personal injury and material damage. Never commission a motor intended to be fan cooled when it is missing the shaft-driven fan or external blower assembly.

WARNING

Condensation Drain Holes (Optional)

Inserting objects into the condensation drain holes can damage the winding and can result in death, serious injury and damage to property!

- Before opening sealed drain holes, make sure the motor is in a no-voltage condition. Close the condensation drain holes before re-commissioning.
- Exercise caution around drain holes that are intended to be left open, especially when the motor is energized.

HARMFUL SITUATION

Before start-up check the following:

- All electrical connections are secure, well grounded and properly made.
- The motor is rotating in the correct direction (when de-coupled from the driven load).
- There are no temperature-sensitive parts (cables etc.), in contact with motor enclosure.
- Condensation drain holes are always located at the lowest point of the motor.

11. Checking the Insulation

Before putting the motor into operation for the first time, after a lengthy period of storage or standstill (approx. 6 months), the insulation resistance of the winding should be checked.

WARNING

During and directly after measurement the motor connection terminals carry hazardous voltages.

A. Control

The insulation resistance of new, cleaned, or repaired motor windings against the grounded housing and against one another should be > 200 Mega-Ohms.

B. Measurement

Using a Mega-Ohm meter apply a DC voltage of 500 VDC to the motor winding for a period of 60 seconds and record the winding insulation resistance compared to ground.

- The 500 VDC test voltage is applicable to low voltage motors up to 1000 VAC.
- When performing this test the temperature of the windings should be 25°C ± 15°C (77°F ± 27°F).

C. Verification

- If the insulation resistance of the winding is less than 50 Mega-Ohms, the cause may be moisture. The windings should be dried and the test should be repeated.
- After any lengthy period of operation the insulation resistance may drop. So long as the measured value does not fall below the critical value of 50 Mega-Ohm, the motor may continue to be operated.
- If the measured value falls below the critical 50 Mega-Ohm level, the cause must be established and the windings or winding sections must be cleaned, dried, repaired, or replaced as needed.

12. Bearing Lubrication

NORD motor frame sizes 63 up to and including 225 are normally supplied with internally grease lubricated bearings and require no lubrication during normal operation.

NORD motor frame sizes 250 and larger are supplied with grease fittings for re-greasing the motor bearings.

IMPORTANT NOTE

Motors with grease fittings are normally supplied with a label indicating the grease type used, the suggested re-lubrication interval, and the amount of new grease to be applied. General bearing maintence guidelines are listed in Table 3.

Typical motor bearing grease is an NLGI No. 2 consistency, high grade product with a polyurea base thickener, synthetic or blended mineral/synthetic oil, and stabilizing agents to protect against heat and oxidation.

Table 3 – Motor Bearing Maintence Guidelines

Frame Size	Power	Poles	Re-greasing Interval
63-225	0.16-60 HP (0.12-45 kW)	All	Maintence Free
250 to 280	75-125 HP (55-75 kW)	2	4000 h
		4 to 8	8000 h
315	150-250 HP (132-200 kW)	2	3000 h
		4 to 8	6000 h

HARMFUL SITUATION

When re-greasing motor bearings do not to mix different greases without verifying the compatibility with a reputable grease lubrication supplier. Mixing incompatible products can lead to bearing failure.

13. Mechanical Installation

Integral motors, NEMA C-face motors, and IEC flange mounted motors must be rigidly secured to their mating connection surface using all fastening screws tightened to the proper bolt torque. It is good practice to apply a medium strength thread- locking agent (Loctite® 242) to the mounting screws.

Foot mounted motors must be securely installed to a rigid and level foundation or mounting surface to minimize vibration and maintain alignment between the motor and shaft load. All mounting hole locations must be utilized. Tighten all hold down screws or bolts to the proper bolt torque.

HARMFUL SITUATION

Failure to provide a proper mounting surface may cause vibration, misalignment and bearing damage.

Accurate alignment and proper balancing of output devices (couplings, belts, pulleys, etc.) is required to assure quite, low vibration, trouble free operation. When the motor is directly coupled to a gear drive or a driven machine make sure that the motor shaft and driven machine shaft are aligned with one another axially.

HARMFUL SITUATION

Inaccurate alignment may lead to bearing damage, excessive vibrations and shaft breakage.

IMPORTANT NOTE

For motor replacement guidelines see section 20 on page 15 and section 21 on page 16.

14. Electrical Connections

WARNING

To avoid electrocution, injury or death, make certain all electrical devices (motors, brakes, variable frequency drives, etc.) are properly grounded, completely de-energized, and brought to a no-voltage condition prior to working on any electrical connections. Remember that most of these devices potentially dangerous energy levels for a period of time after power is removed. Always follow proper lock-out/tag-out procedures.

IMPORTANT NOTE

External motor brakes have their own connection requirements as indicated in the appropriate brake instruction manuals.

WARNING

If the motor has an integral brake, make certain there is no load connected to the driven equipment before releasing the brake. Otherwise serious injury, death, or damage to the equipment may result.

- The supply voltage and frequency must agree with the motor nameplate data.
- Always feed the connecting leads into the terminal box using appropriate mating cable glands. The mating connection cables and cable glands should be suitable for temperatures ≥ 194°F (90°C).
- Provide the ends of the connecting leads and ground lead with cable lugs or curved ring eyelets before connecting them to the terminal board.
- Make certain that the wiring connections and arrangement of the terminal board jumpers conform to the appropriate wiring diagram as provided in the motor terminal box and/or page 9 of this manual.
- Tighten the terminal board screw connections on the on the main terminal board per the table below.

Table 4 – Tightening Torque: Terminal Board and Grounding Screws

Thread Size	Nut Size [mm]	Tightening Torque [lb-ft]	Tightening Torque [N-m]
M4	7	0.6-0.9	0.8-1.2
M5	8	1.3-1.8	1.8-2.5
M6	10	2.0-3.0	2.7-4
M8	13	4.0-5.9	5.5-8
M10	17	6.6-9.6	9-13
M12	19	11.8-14.8	16-20

- Upon final assembly, the terminal box cover must be sealed so that it is dust-tight and water-tight.

Table 5 – Tightening Torque: Terminal Box Cover Screws

Thread Size	Tightening Torque [lb-ft]	Tightening Torque [N-m]
M4	0.6-0.9	0.8-1.2
M5	0.9-1.3	1.2-1.8
M6	1.1-1.8	1.5-2.5
M8	2.2-3.7	3.0-5.0

15. Wiring Diagrams

NORD Frames 63-225
230 / 460V, 60Hz, 3Ø | 200 / 400V, 50Hz, 3Ø

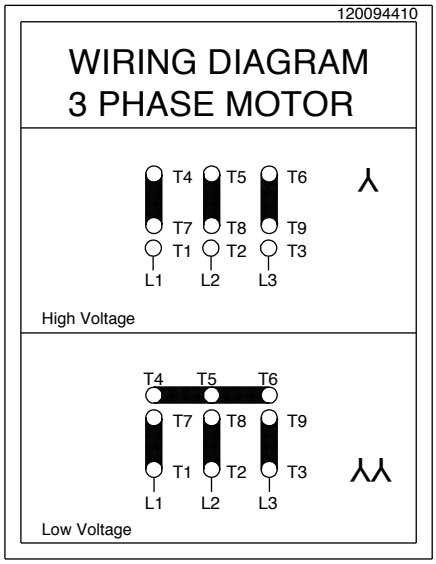

NORD mfg by Siemens - Frames 200 +
230 / 460V, 60Hz, 3Ø | 200 / 400V, 50Hz, 3Ø
190 / 380V, 60Hz, 3Ø

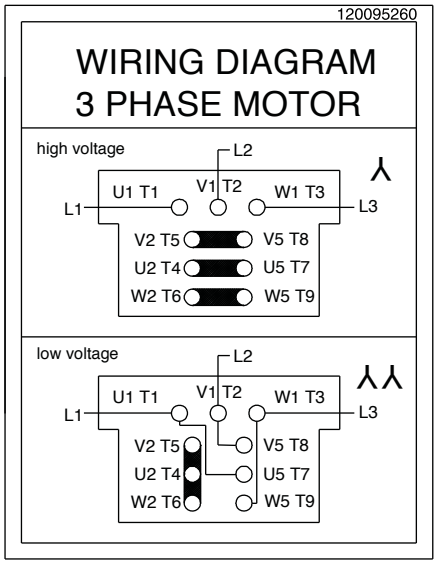

NORD mfg by Siemens - Frames 200 +
230 / 460V, 60Hz, 3Ø | 200 / 400V, 50Hz, 3Ø
190 / 380V, 60Hz, 3Ø

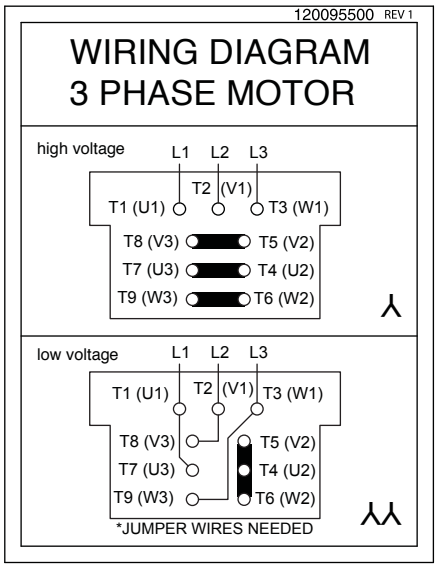

NORD Frames 63 - 225
460 / 800V, 60Hz, 3Ø | 230 / 400V, 50Hz, 3Ø
208 / 360V, 60Hz, 3Ø | 400 / 690V, 50Hz, 3Ø
332 / 575V, 60Hz, 3Ø

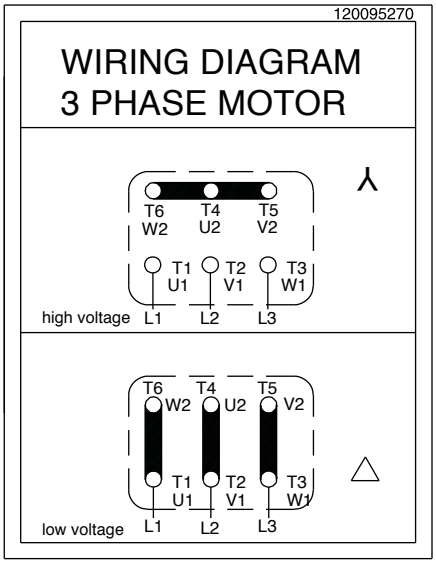

NORD - 2 - SPEED MOTORS
SINGLE WINDING (4-2 & 8-4 POLE)

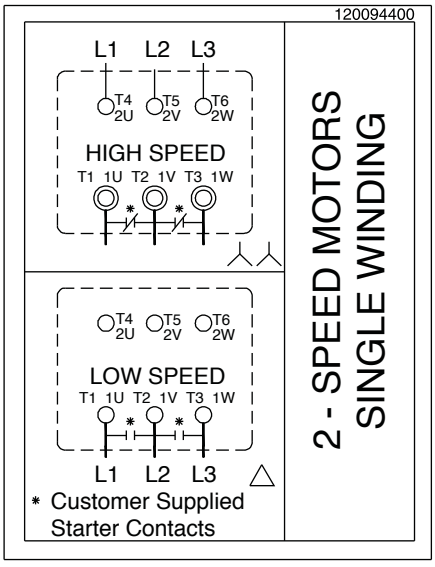

NORD - 2 - SPEED MOTORS
DUAL WINDING (8-2 POLE)

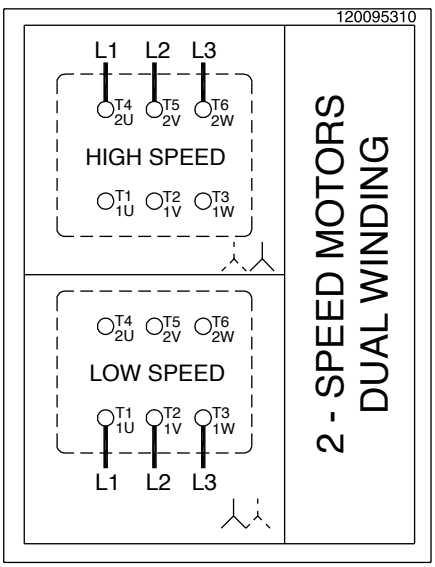

15. Wiring Diagrams Ctd.

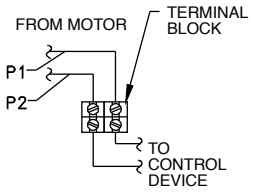

* MAX. OPERATING VOLTAGE 2.5V.
* SWITCH TEMP. 155°C
* RESPONSE TIME < 5 SECONDS

THERMISTOR
"TF" OPTION

120095240

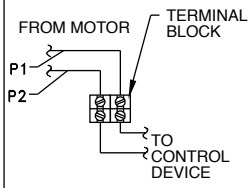

* NC (NORMALLY CLOSED)
* CONTACTS RATED 1.6A AT 2.50 VAC
* 6-500 VAC WORKING RANGE
* AUTOMATIC RESET AT 30 ± 15°C TEMP. DROP

THERMISTATS
"TW" OPTION

120095230

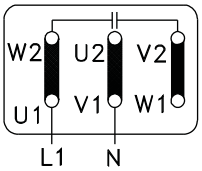

1 PHASE
115V*
50/60 Hz

* CAPACITOR IS SUPPLIED

BLOWER COOLING FAN
"FC" OPTION

120095450

OPTION "F" 1 PH

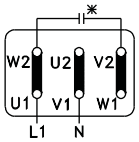

230V
50 / 60 Hz

* CAPACITOR IS SUPPLIED

OPTION "F" 3 PH

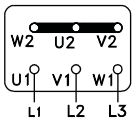

380-575V
50 / 60 Hz

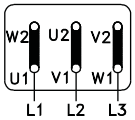

220-332V
50 / 60 Hz

BLOWER COOLING FAN
"F" OPTION

120095250

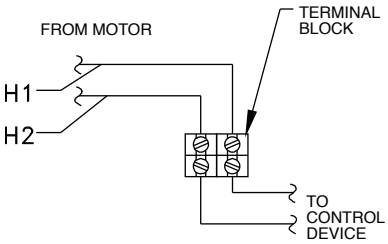

SPACE HEATER
"SH" OPTION

120095220

16. Motor Accessories

Blower Cooling Fan (Option F & FC)

- Connection Diagram Shown on page 10
- Option FC is 1-phase, 115V
- Option F has capability of 1 phase by connecting a supplied capacitor

Option F – 3ph & 1ph 220-575V 50/60Hz

Motor Frame	60Hz Ratings			50Hz Ratings		
	Voltage [V]	Current [A]	Power [W]	Voltage [V]	Current [A]	Power [W]
Single phase connection - ⊥ (Delta)						
63	230 – 277	0.11	38	230 – 277	0.10	27
71	230 – 277	0.12	41	230 – 277	0.10	28
80	230 – 277	0.13	44	230 – 277	0.11	29
90	230 – 277	0.25	88	230 – 277	0.26	72
100	230 – 277	0.28	88	230 – 277	0.26	70
112	230 – 277	0.31	107	230 – 277	0.26	73
132	230 – 277	0.27	89	230 – 277	0.29	82
160 - 225	230 – 277	0.41	140	230 – 277	0.45	128
Three phase low-voltage connection - (Delta)						
63	220 – 332	0.08	23	220 – 290	0.10	27
71	220 – 332	0.08	24	220 – 290	0.10	30
80	220 – 332	0.08	25	220 – 290	0.01	29
90	220 – 332	0.21	64	220 – 290	0.28	86
100	220 – 332	0.21	66	220 – 290	0.27	86
112	220 – 332	0.23	70	220 – 290	0.27	85
132	220 – 332	0.25	74	220 – 290	0.32	96
160 - 225	220 – 322	0.49	165	220 – 290	0.52	155
Three phase high-voltage connection - (Y)						
63	380 – 575	0.04	23	380 – 500	0.05	29
71	380 – 575	0.04	25	380 – 500	0.05	30
80	380 – 575	0.04	26	380 – 500	0.05	29
90	380 – 575	0.12	62	380 – 500	0.16	82
100	380 – 575	0.12	66	380 – 500	0.16	83
112	380 – 575	0.13	70	380 – 500	0.16	82
132	380 – 575	0.14	75	380 – 500	0.18	96
160 - 225	380 – 575	0.28	165	380 – 500	0.29	155

Option FC – 115V 50/60Hz 1ph

Motor Frame	60Hz Ratings			50Hz Ratings		
	Voltage [V]	Current [A]	Power [W]	Voltage [V]	Current [A]	Power [W]
Single Phase Connection - ⊥ (Delta)						
63	100 – 135	0.23	42	100 – 135	0.30	42
71	100 – 135	0.23	47	100 – 135	0.30	44
80	100 – 135	0.27	57	100 – 135	0.30	43
90	100 – 135	0.46	102	100 – 135	0.57	78
100	100 – 135	0.53	105	100 – 135	0.54	78
112	100 – 135	0.60	115	100 – 135	0.55	80

Table 6 – Option F & FC

16. Motor Accessories Ctd.

Thermostats (Option TW and Option 2TW)

Standard connection	Series connected, one per phase
Contact	NC (Normally Closed)/ Auto Re-setting
Response Temperature (Option TW)	311 °F (155 °C) Shut-Off Device
Response Temperature (Option 2TW)	311 °F (155 °C) Shut-Off Device + 266°F (130 °C) Alarm Device
Nominal Current	1.6 Amp at 250 V
Resistance	< 50 mΩ
Switch Rebound	< 1ms
Insulation Rating	2000 VAC
Cycles	10,000 max
Lead Identification (inside terminal box)	P1 and P2 or TB1 and TB2 / 2TB1 and 2TB2

Motor thermostats or bi-metallic switches can be wired directly into the control circuit without a separate control module or tripping device. Thermostats operate on a relatively high control voltage so they are much less sensitive to voltage interference from the main power supply. Often one can run thermostat leads and motor power leads next to each other when using the appropriate shielded cable. The installer is responsible to wire the thermostats into the motor control circuit. The leads may be labeled in a variety of ways as indicated.

Thermistors (Option TF)

Standard Connection	Three devices, series connected, one per phase
Type	Positive temperature coefficient (PTC)
Transition Temperature	150°C±5 °C
Resistance	20… 500Ω (below transition) > 4 kΩ (above transition)
Reed Current	< 1mA
Max Voltage	30V
Lead Identification (inside terminal box)	P1 and P2 or TP1 and TP2

With a separate control module or tripping device (ex. Kirwan INT69) thermistors are used to sense motor overload/ over temperature conditions by converting the critical operating temperature limit into large internal resistance change. Due to their small size, heat sink construction, and high change in resistance value, minor resistance variations caused by relatively long lead runs can be tolerated. This feature also allows for one controller to be used for several temperature sensing locations. Many variable frequency drives come with on-board thermistor inputs. NORD does not supply the thermistor control module.

⚠ WARNING ⚠

Thermostats and Thermistors will automatically reset.

⚠ WARNING ⚠

All wiring must be completed by qualified personal and adhere to all local codes.

Space Heaters (Option SH)

- Connection Diagram shown on Page 9
- Space Heaters are mounted directly on the motor winding
- The leads are brought into the terminal box and labeled H1 and H2
- They require a separate voltage supply and must not be energized when the motor is energized
- The heaters will keep the winding of the motor approximately 5°C above the surrounding ambient

Table 5. Space Heater Data

Frame Size	Wattage	Voltages	Heater Strips/MTR
63 & 71	18W	110V	1
		230V	
		460V	
80	25W	110V	1
		230V	
		460V	
90 – 112	50W	110V	2
		230V	
		460V	
132-180	100W	110V	2
		230V	
		460V	
200 & 225	120W	110V	2
		230V	
		460V	

Encoder (Option IG)

- Most standard encoders will be enclosed inside the fan cover
- Incremental, Quadrature, Differential, Marker Channel
- IP66 Protection
- IG1 = 1024PPR, IG2 = 2048PPR, IG4 = 4096PPR
- TTL/RS422, HTL/Push-Pull, Line Driver.
- 5V or 10-30V available.
- Absolute encoders also available.
- Seperate encoder wiring instructions are provided by NORD.

17. Inspection

Inspect the motor after every 500 operating hours.

WARNING

If it is necessary to clean the motor exterior, do not use shop air. Shop air can force contaminents into the motor and may cause parts damage or result in blowing debris causing injury.

Table 8 - Inspection Guidelines

Inspect	Check	Action
Motor Exterior	Check the external surfaces for contamination. Accumulation of dirt and fibrous deposits must be removed.	Clean the motor external surfaces using clean, lint-free cloths.
		Clean deposits from between cooling fins using a vacuum cleaner and a stiff-bristled nylon brush.
	Check the external surfaces for oil film and greasy deposits.	Clean the oil film and greasy deposits from the motor surface using clean, lint-free cloths.
		If necessary, moisten the cloth with an approved non-flammable, residue-free solvent. Do not pour solvent on the motor.
	Check for evidence of damage or overheating.	If the motor has physical damage, replace the motor.
Motor Mountings	Make sure the mounting hardware is secure.	If the mounting hardware is not secure, check the motor/gearbox alignment, and tighten the mounting hardware.
Motor Electrical Connections	Check that all electrical connections are secure.	If the electrical connections are not secure, tighten them.
	Check the electrical connections for evidence of arcing.	Loose electrical connections can cause arcing, which is evident by discoloration and charring. If you find evidence of arcing, replace the damaged connections.
Insulation Resistance	Using an ohmmeter, check and record the resistance of motor winding insulation.	Compare the current resistance reading to previous readings. If the resistance drops significantly, perform an internal inspection for insulation damage or deterioration.
Motor Brake	On motors that have a brake, use a feeler gauge to check the air gap in between the brake pad and the rotor according to the appropriate user manual.	If the air gap exceeds the maximum allowed for that brake configuration provided in the manual, adjust the air gap or replace the brake pad according to user manual U35000.

18. Parts List

If you are ordering a part, provide the model and order number (table 1, page 2) of your motor. This will determine the specific part number you need.

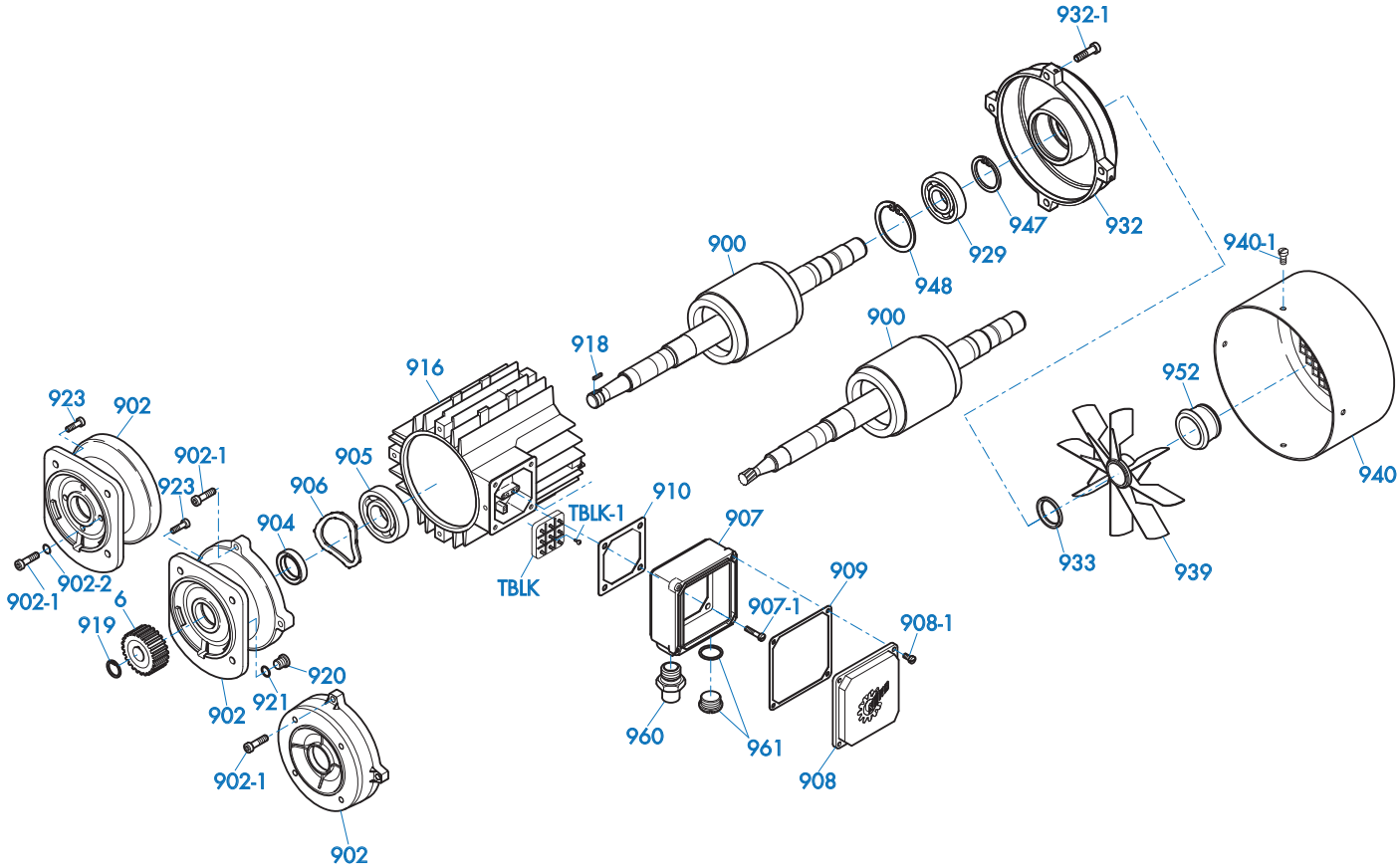

Part Number	Part Description	Qty per Assembly
6	Input Pinion	1
900	Rotor Assembly	1
902	A-Endbell	1
902-1	Screw	4
902-2	Dubo Seal	4
904	Oil Seal	1
905	Bearing	1
906	Preload Spring	1
907	Terminal Box Frame	1
907-1	Screw	4
908	Terminal Box Cover	1
908-1	Screw	4
909	Gasket - Terminal Box Frame	1
910	Gasket - Terminal Box Cover	1
916	Stator	1
918	Key	1
919	Retaining Ring	1
920	Oil Plug	1

Part Number	Part Description	Qty per Assembly
921	Gasket	1
923	Screw	4
929	Bearing	1
932	B-Endbell	1
932-1	Screw	4
933	Oil Seal	1
939	Fan	1
940	Fan Cover	1
940-1	Screw	4
947	Retaining Ring	1
948	Retaining Ring	1
952	Fan Clip	1
960	NPT Thread Adapter	1
961	Plug (includes O-ring)	1
TBLK	Terminal Block	1
TBLK-1	Screw, Terminal Block Mounting	2
	Jumper Bar (not illustrated)	AR

19. Repair

Reference the parts list drawing on page 14 for clarification.

A. Disassemble the motor according to the general exploded view in PARTS INFORMATION. Disassemble only as far as necessary to replace the failed parts.

B. Whenever the motor is disassembled, clean all dust and contamination from the motor interior using a vacuum cleaner and a soft-bristled nylon brush.

C. The following parts must be replaced if they are removed:

- Oil seal (904), Oil seal (933)
- Gasket (909), Gasket (910), Gasket (921)
- Gasket on plug (961)
- Self-locking screws (907-1, 908-1, 923, 932-1, 940-1)
- Dubo Seals (902-2)

D. If the following parts are removed, inspect them, and replace them if they are deformed or damaged:

- Retaining ring (919), Retaining ring (947), Retaining ring (948)
- Fan clip (952)

20. Removing and Replacing Integral Motors

Reference the parts list on Page 14 for clarification.

A. Disconnect the power to the electric motor. Make certain the motor is properly grounded, de-energized and secured with a lock-out/tag-out device.

B. Drain the oil from the mating gearbox, or rotate the motor/gearbox assembly so that the motor is up, to prevent oil from spilling from the gearbox when the motor is removed.

C. Support the motor and prepare it for removal. Steady the motor and support it. For larger motors, use of mechanical lifting or support devices to may be appropriate.

D. Remove the fastening screws that hold the motor to the reducer input.

IMPORTANT NOTE

Most integral motor installations have mounting bolts accessible from the motor exterior. If the bolts are not clearly visible, unbolt the input flange from the gearbox. Remove the bolts securing the motor to the reducer input flange, and discard the old DUBO sealing rings that were under the screw heads.

E. Maintain motor shaft alignment and move the motor directly away from its mounting surface until the motor shaft and mating input gear clear both the internal gear mesh and reducer input.

F. Remove and discard the old flange gasket.

G. Clean the gasket faces on the motor and gearbox, making sure no cleaning debris enters the gearbox.

H. Check the replacement motor to make sure the motor flange, motor shaft, and motor pinion are identical to the motor that was removed.

I. Place a new gasket between the gearbox and new motor.

J. Position the motor on the gearbox, making sure the input pinion meshes with the input gear. Rotate the motor as necessary to align the bolt holes and seat the motor flange. Make sure the gasket remains properly aligned and seated

K. Apply a medium strength thread locking compound to the bolt threads. Install the bolts and tighten them to the appropriate torque.

IMPORTANT NOTE

If the motor/gearbox installation uses an input flange, first mount the input flange to the motor using the four mounting bolts and NEW DUBO sealing rings under the head of each fastening screw. Make sure the fastening screws are clean and apply new thread sealant if necessary.

L. Check the gearbox oil level in accordance with the appropriate User Manual/s. If necessary fill or add oil to the gearbox.

HARMFUL SITUATION

Do not mix different types of oil!

M. Re-establish the electrical connection to the motor.

N. Observe the subsequent start-up closely to make certain the equipment is operating properly and there are no seal or gasket leaks.

21. Removing and Replacing NEMA C-Face or IEC Fange-Mounted Motors

For further clarification of these instructions, reference the parts list on Page 14 of this manual.

A. Disconnect the power to the electric motor. Make certain the motor is properly grounded, de-energized and secured with a lock-out/tag-out device.

B. Support the motor and prepare it for removal. Steady the motor and support it. For larger motors, use of mechanical lifting or support devices to may be appropriate.

C. Remove the fastening screws that hold the motor to the C-face or IEC mounting flange.

D. Maintain motor shaft alignment, and move the motor directly away from its mounting surface until the motor shaft and mating coupling clear the mounting flange surface of the driven equipment.

E. Measure and record the proper placement of the motor shaft coupling prior to removing it from the old motor.

F. Make sure the new motor shaft, key and key slot are free of all nicks, burrs, and lubrication or grease.

G. Install the new shaft key on the new motor. If the shaft key is not captured or if an open-ended key slot is utilized it is good practice to secure the key into the key slot with a medium strength thread locking agent or alternatively one may stake the key in place.

H. Re-install the coupling on the new motor shaft, making sure the placement of the coupling is in the same location as it was on the old motor (See Step E).

I. Clean all old gasket material, sealants, contamination, and corrosion from the flange surface on the driven equipment.

J. If the motor is utilized in a wet or wash down environment apply a sealing gasket or gasket eliminating compound to the mating flange surface, as would seem most appropriate for the application.

K. Support the new motor and mount it flush against the mating flange surface of the driven equipment.

L. Apply a medium strength thread locking agent to the bolt threads.

M. Install the bolts and tighten them to the appropriate torque.

N. Re-establish the electrical connection to the motor.

O. Observe the subsequent start-up closely to make certain the equipment is operating properly.

22. Testing

IMPORTANT NOTE

NORD electric motors do not require periodic testing. However, if a motor is removed from its installation, NORD recommends that the motor be checked according to the following static and dynamic testing procedures before it is reinstalled. Finding a condition that will require future repair before the motor is reinstalled decreases the overall maintenance time.

This section provides general test information and functional checks for the types of motors covered by this manual. Read and understand the tests and checks before performing them on your motor.

Record and date all measurements taken.

If the motor fails any of the test procedures provided below, use the troubleshooting guide to determine the motor problem.

Static Testing

A. The motor can only be static tested if it is disconnected from the component it drives and securely mounted on a fixture or mounting plate. These tests are usually conducted when a motor has been removed for any reason other than failure

B. Turn the motor shaft slowly by hand. Feel and listen for evidence of a failed bearing, which is indicated by a rough feel as the shaft rotates, and by noise.

C. Check for smooth rotation, with no evidence of binding or catching. If the shaft does not rotate smoothly, or binds or catches, the bearings are worn or failing, lack lubrication, or are contaminated.

D. Check the motor shaft for side play by applying pressure at right angles to the shaft in several places around the circumference. If the shaft moves perceptibly, the front bearing may be worn.

Dynamic Testing

A. Find the motor voltage and rated load current values as listed on the motor nameplate.

B. Using a volt-ohmmeter, verify that the motor power supply is in the correct range.

C. Run the motor with no load. As the motor is operating, listen for unusual motor noise and check for excessive vibration. Vibration and motor noise are indications of bearing contamination, lack of lubrication, damage, or failure.

D. Use an ammeter to measure the no-load current. Record the no-load current for comparison with previous readings, and for reference during future testing.

E. If the motor passes the no-load test, operate the motor at rated load and check and record the current.

F. Check the motor operating temperature at rated load. If the motor operates at a higher than normal temperature, the motor may be damaged, overloaded or failing.

23. Troubleshooting

Fault	Likely Cause	Corrective Action
Motor fails to start.	• Motor is mis-wired • Brake is may not be releasing. • Fan guard damaged and contacting fan. • Motor protection device has tripped or does not switch • 1-Ph Capacitor or start switch has failed.	• Verify and correct motor wiring. • Troubleshoot brake per User Manual U35000. • Replace damaged fan guard. • Check motor protection device for correct setting and correct error. • Discharge capacitor and use a volt-ohm meter to check the capacitor for an open circuit - replace if needed. Inspect switch and connections. Replace if contacts look burned or pitted.
Fuses blow or motor protection faults immediately.	• Short circuit in line. • Lines connected incorrectly. • Fuse or circuit breaker tripped. • Motor is overloaded or equipment jammed. • Stator is shorted or went to ground.	• Rectify short circuit. • Check circuit diagram and make corrections. • Replace fuse or circuit breaker. • Make sure load is free. Verify motor amp draw compared to nameplate rating. • A damaged or blown stator will show a burn mark. Stator must be repaired or replaced.
Motor hums and has high current consumption	• Brake may not be releasing. • Rotor may be rubbing stator. • Defective or incorrect stator winding.	• Troubleshoot brake per User Manual U35000. • Send motor to a repair specialist.
Severe speed loss under load or excessive acceleration time.	• Overload. • Excessive voltage drop. • Damaged or failing motor bearings. • Damaged or worn gear unit. • 1-Ph Capacitor or start switch has failed.	• Check load conditions and make certain system is unobstructed. Reduce load or consider a larger motor. • Verify service voltage is within specification. Check if nearby equipment is affecting incoming power. Make sure connection harness and wiring is adequate. • Replace motor bearings. • Replace or repair damaged gear unit. • See instructions under “Motor fails to start”.
Motor runs the incorrect direction.	• Incorrect wiring.	• Rewire motor according to system schematic and/or switch two incoming motor phases.
Motor heats up excessively or thermal overload protection trips	• Overload. • Ambient temperature is too high. • Inadequate cooling. • Operation is outside the allowed duty cycle. • Motor protection device may be defective. • Excessive supply voltage. • System short or damaged stator.	• Make sure load is free. Verify motor amp draw compared to nameplate rating. Reduce load or consider a larger motor. • Do not operate above the rated conditions. • Correct cooling air supply. Open and clear cooling air passages. Retrofit with forced ventilator fan if needed. • Adjust operating duty cycle or contact a specialist to select a suitable motor or drive. • Replace motor protection device. • Adapt motor supply voltage. • Check for loose, cut or damaged wires. Check stator winding for defects or burn damage.
Excessive Noise or Vibration	• Motor bearings contaminated or damaged. • Excessive motor shaft end play. • Misaligned or imbalanced load.	• Test motor by itself. If bearings are bad noise may be heard or roughness detected. Replace bearings. Add lubrication if bearings have grease fittings. • Check shaft endplay with motor and system power disconnected. If shaft movement is excessive replace motor shaft bearings. • Check all mating shaft connections for proper alignment and correct all imbalanced load conditions.
1 Ph Start Capacitor Failures	• Motor is not coming up to speed quickly enough. • Motor is being cycled frequently • Start switch is defective or damaged.	• Verify motor size to load conditions. Motor should come up to speed in no more than 2-3 seconds. • Verify duty cycle and consult specialist for recommendations. • Replace start switch.
1 Ph Run Capacitor Failures	• Possible power surge to motor caused by transient voltage or lightening. • Excessive ambient temperature.	• Install proper surge protection. • Verify ambient conditions do not exceed nameplate value.

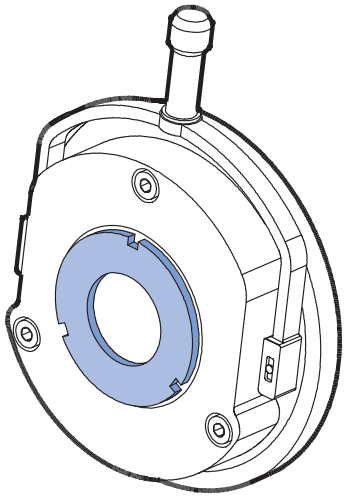

General Instructions

This manual describes general operating and maintenance guidelines for a majority of brake products shipped by NORD Gear. This instruction manual is not intended to include a comprehensive listing of all details or procedures required for installation, operation and maintenance.

Brakes covered in this manual are manufactured by PRECIMA. Please feel free to contact NORD with any questions about the supplied brake components.

Safety Notice

Only qualified personnel should attempt installation, operation and maintenance of NORD brakes. Read this manual in its entirety before operating, commissioning, servicing, or assembling the motor brake. If you have a question about a procedure or are uncertain about any detail, seek clarification and DO NOT PROCEED!

WARNING

- This equipment contains high electrical voltage. Remove and lockout all power from the electric motor and brake before any work is completed on the brake.
- The user is responsible for conforming to all national and local electrical and safety codes. Wiring practices, proper grounding, disconnects, and over current protection, are of particular importance.
- Make certain the load is supported when servicing the brake. Removing power from the brake or removing the brake from the motor will release the load, which may cause severe injury or death.
- Failure to follow proper procedures and precautions may result in severe bodily injury or death.

Brake Operation

The standard NORD motor brake is “spring-set”. When power is removed and the brake is de-energized (power-off), the brake springs exert a force against the armature plate in turn preventing the brake rotor (or brake disc) from rotating. When the brake coil is energized (power-on), a magnetic field builds and pulls the armature plate across the air gap to the brake casing, which releases the brake rotor and allows the motor shaft to rotate.

Figure 1: Basic Brake Operation

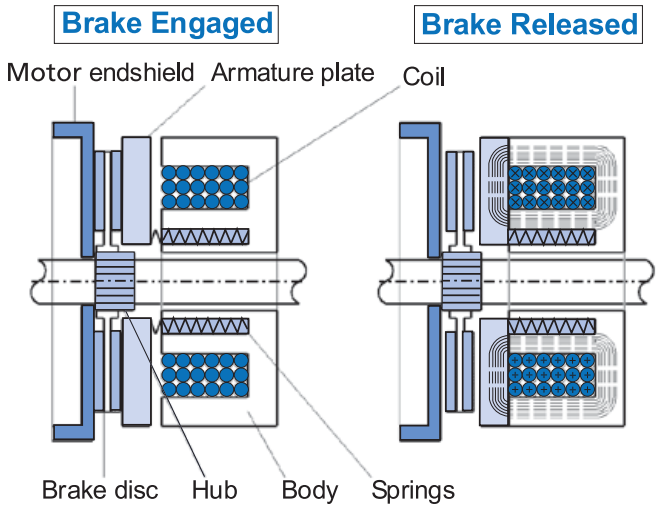

NORD brakes are DC voltage brakes and in most instances are supplied with a motor mounted brake rectifier for easy connections to AC power. AC power is taken directly from the power line or from the terminal block of the motor and converted to DC by the supplied rectifier.

IMPORTANT NOTE

If the motor is connected to a frequency inverter, soft start, or is a two-speed motor, the AC power must be supplied to the brake rectifier separately from the motor power.

Advantages

- Each NORD motor frame size has a number of brake sizes available, with different torque capacities.
- Brake torque adjustments are possible by changing the brake spring combinations. In addition, brake sizes from 5-40 Nm (3.7-30 lb-ft) are typically supplied with an additional spanner-nut adjustment on the back of the brake.
- NORD brakes provide a high degree of safety because when power is removed the brake will automatically set to hold the load.
- The brake rotor or brake disc is environmentally safe and asbestos-free.
- The connection between the rectifier and the brake coil is completed at the factory and the brake air-gap is factory-set but can be adjusted in the event of wear.

General Selection Considerations

As indicated in the NORD catalog, each NORD motor can be supplied with a number of brake torque sizes.

NORD relies on the equipment builder to specify appropriate brake sizing for their application, while giving consideration to the following:

- For most applications, we advise sizing the brake to 1.5 - 2 times the motor rated torque.
- For vertical applications, it may be advisable to size the brake size up to 3 times the motor rated torque.
- For some applications, it may be necessary to specify a reduced brake torque setting to prevent excessive peak load conditions developed at the reducer output.
- On travel drive applications, excessive brake torque may lead to wheel skid; in addition on crane applications excess hoist-cable swing can result.

⚠ CAUTIONS ⚠

- **Brake torque -** The brake torque is measured with a mean friction radius of the brake pad surface with a circumferential speed of 1m/sec (197 fpm).
- **Brake torque tolerance -** For different applications and operating conditions, brake torque can vary from +40/-20% compared to the rated brake torque.
- **Hoisting (lifting/lowering) applications -** must have the brake wired for fast response (DC-switching)
- **Initial operation & wear-in period -** In new condition, the brake will have a reduced torque of up to 30%. In order to achieve full rated brake torque, a short run-in period is required. The run in time will vary depending on system loads.
- **The brake rotor or brake pad -** must be protected against foreign matter, oil and grease. Contaminants of this type can greatly influence wear and reduce breaking torque.

Brake Torque Adjustment

Brake torque adjustments are possible by changing the brake spring combinations or by removing springs (Table 1).

In addition, brake sizes from 5-40 Nm (3.7-30 lb-ft) are typically supplied with a threaded adjustment nut or spanner nut to allow for additional fine torque adjustments of the brake. The braking torque can be adjusted by unscrewing the spanner nut a number of turns or "clicks" with a spanner wrench (Table 2).

Table 1a: Brake Torque Reduction - Spring Removal

"Brake Size"	7 Springs		5 Springs		3 Springs	
	[Nm]	[lb-ft]	[Nm]	[lb-ft]	[Nm]	[lb-ft]
BRE 5	5	3.7	3.5	2.6	2	1.5
BRE10	10	7.4	7	5.2	4	3.0
BRE20	20	14.8	14	10.3	8	5.9
BRE40	40	29.5	28	20.7	17	12.5
BRE60	60	44.3	43	31.7	26	19.2
BRE100	100	73.8	70	51.6	42	31.0
BRE150	150	111	107	78.9	65	47.9

On brake sizes 5-150 Nm (3.7-111 lb-ft) full brake torque is achieved with all (7) springs. The brake springs are placed in such a manner where there are (3) inner and (4) outer springs. When adjusting the brake torque, start by removing the outer springs at opposite corners to prevent uneven brake wear.

Table 1b: Brake Torque Reduction - Spring Removal

"Brake Size"	8 Springs		6 Springs		4 Springs	
	[Nm]	[lb-ft]	[Nm]	[lb-ft]	[Nm]	[lb-ft]
BRE250	250	184	187	138	125	92
BRE400	400	295	300	221	200	148
BRE800	800	590	600	443	400	295
BRE1200	1200	885	900	664	600	443

On brake sizes 250-1200 Nm (184-885 lb-ft) full brake torque is achieved with all (8) springs. The brake springs are placed in such a manner where there are (4) inner and (4) outer springs. When adjusting the brake torque, start by removing the outer springs at opposite corners to prevent uneven brake wear.

Table 2: Spanner Nut Adjustment

"Brake Size"	Torque Reduction*		Max. Turns	Minimum Torque✹	
	[Nm]	[lb-ft]		[Nm]	[lb-ft]
BRE 5	0.2	0.15	6	0.8	0.59
BRE10	0.2	0.15	12	1.6	1.18
BRE20	0.3	0.22	12	4.4	3.25
BRE40	1	0.74	9	8.0	5.90

✹ **With the minimum number of springs and maximum number of turns to the spanner nut.**
* **Per each turn of the spanner nut**

Brake sizes from 5-40 Nm (3.7-30 lb-ft) are typically supplied with a threaded adjustment nut or spanner nut. Additional fine torque adjustment can be made by unscrewing the spanner nut a number of turns or "clicks" with a spanner wrench.

Brake Control Rectifiers

NORD brake control rectifiers convert AC voltage to DC voltage. Rectifiers are used because most applications require AC voltage to power the motor, but DC power is required to power the brake and DC power is not typically available. NORD brake motors typically include the rectifier located inside the terminal box.

Rectifier Advantages

- Individual power source for each brake.
- Compact size, mounted inside the terminal box.
- Multiple types, voltage options and release/engagement modes available.
- Mountable in a separate control cabinet.
- Integral protection against voltage spikes.

Model	Type	Part No.	Color	Input Voltage V_{AC} ± 10%	Rated Current A_{DC} (40°C)	Rated Current A_{DC} (75°C)
GVE20L	Full-wave	19141000	Black	110-275	1.5	1.0
GVE20V	Full-wave	19141030	Black	110-275	1.5	1.0
GHE40L	Half-wave	19141010	Yellow	200-480	2.0	1.0
GHE40V	Half-wave	19141040	Yellow	200-480	2.0	1.0
GHE50L	Half-wave	19141020	Gray	200-575	2.0	1.0
GHE50V	Half-wave	19141050	Gray	200-575	2.0	1.0
GUE40V	Dual-wave	19140300	Black	230-460	0.7	0.5
PMG500	Push-Hybrid	19140200	Black	200-500	4.0	2.8

Rectifier electronics are sealed for moisture-protection; electronics on models ending with the suffix "V" are resin-encapsulated to provide added protection if water should get into the motor terminal box.

Rectifier Types

Full-wave rectifier [GVE]:
A rectifier in which both the positive and negative half-cycles of the AC input signal are rectified to produce a uni-directional DC current supply to the load or the brake. The output voltage is 90% of the input voltage ($V_{DC} = 0.90 \times V_{AC}$).

Half-wave rectifier [GHE]:
A rectifier in which only alternate half-cycles of the AC input signal are rectified to produce a uni-directional DC current supply to the load or the brake. The output voltage is 45% of the input voltage ($V_{DC} = 0.45 \times V_{AC}$).

Dual Wave Rectifier [GUE]
A rectifier that can be wired as either a full-wave rectifier or a half-wave rectifier depending upon how it is connected to the AC input signal.

IMPORTANT NOTE

If the motor is connected to a frequency inverter, soft start, or is a two-speed motor, then seperate AC power must be supplied to the brake rectifier.

Rectifier Types [Ctd.]

PMG 500 Push-Hybrid rectifier [PMG]:
A fast-acting or push-hybrid brake rectifier provides an initial "push" in the form of a timed full-wave brake-release function, which is then followed by a continuous half-wave brake-holding function. There are two ways to apply these rectifiers as follows:

- "Overexcitation" of the brake coil provides faster brake release or improved cycling capacity. The DC voltage of the brake coil is determined based upon using a half-wave rectifier. The output voltage is 45% of the input voltage ($V_{DC} = 0.45 \times V_{AC}$).
- "Reducer-Power Holding" of the brake coil maintains the brake in a released state by using only 25% of the power needed for the initial brake release. This results in very fast brake stopping. The DC voltage of the brake coil is determined based upon using a full-wave rectifier. The output voltage is 90% of the input voltage. ($V_{DC} = 0.90 \times V_{AC}$).

NORD offers additional fast-acting rectifiers besides the PMG 500. For additional details please reference User Manual U35100 – Fast Acting Brake Rectifiers.

IMPORTANT NOTE

In order to prevent rapid wear, the PMG 500 rectifier is required when utilizing the larger 800 Nm (590 lb-ft) and 1200 Nm (885 lb-ft) twin-rotor brakes. The PMG 500 rectifier is wired to "overexcite" the brake during its initial release.

Brake Switching Options

The rectifiers discussed in this manual can be wired to allow brake switching at either the AC power source (input) or the DC power source (output).

- AC switching allows the brake rectifier to be powered directly from the motor's terminal block with no additional wiring. However, this provides a slower brake stopping time due to the additional time needed to de-energize or collapse the motor's magnetic field.
- DC switching directly interrupts the current flow in the DC circuit of the brake rectifier. This method of brake switching guarantees faster brake stopping or brake engagement times.

WARNING

When the moving system undergoes a change in height (such as in a lift or incline conveyor application) or if the system tends to speed up or overhaul during normal operation, then DC-switching of the brake is required in order to prevent excessive load movement, drift or falling loads during stopping.

Figure 2.1: GVE/GHE Dimensions

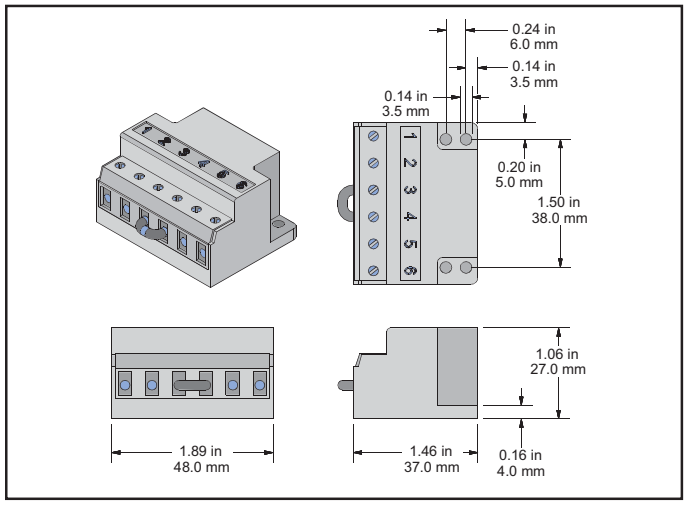

Figure 3.1: GUE Dimensions

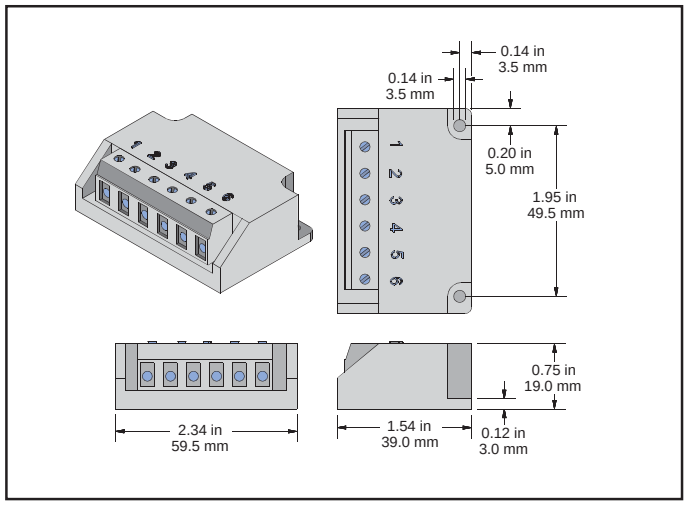

Figure 2.2: GVE/GHE Braking Methods

STANDARD STOPPING AC-SWITCHING

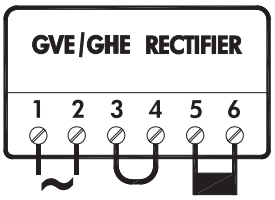

BRAKING METHOD 10 or 20

1 & 2	3 & 4	5 & 6
AC BRAKE VOLTAGE	JUMPER	DC BRAKE

FAST STOPPING DC-SWITCHING

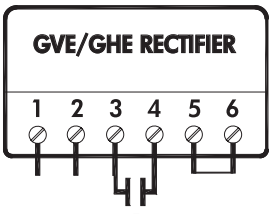

BRAKING METHOD 15 or 25

1 & 2	3 & 4	5 & 6
AC BRAKE VOLTAGE	NORMALLY OPEN CONTACT	DC BRAKE

* The normally open contact/s (NO) is not supplied by NORD it must close at the same time power is supplied to the brake. The contact must be capable of switching inductive loads and/or be rated at IEC AC3.

Braking Method	Break Release (Start)	Brake Engage (Stop)	Power Source
10	Standard	Standard (AC-Switching)	Motor terminals
15	Standard	Fast (DC-switching)	Motor terminals
20	Standard	Standard (AC-Switching)	Separate power
25	Standard	Fast (DC-switching)	Separate power

Figure 3.2: GVE/GHE Braking Methods

STANDARD STOPPING AC-SWITCHING

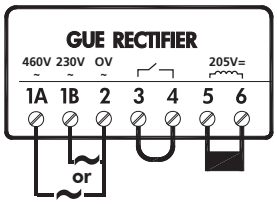

BRAKING METHOD 10 or 20

1B & 2	3 & 4	5 & 6
AC BRAKE VOLTAGE	JUMPER	DC BRAKE

FAST STOPPING DC-SWITCHING

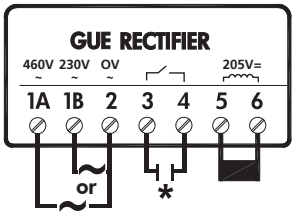

BRAKING METHOD 15 or 25

1 & 2	3 & 4	5 & 6
AC BRAKE VOLTAGE	NORMALLY OPEN CONTACT	DC BRAKE

* The normally open contact/s (NO) is not supplied by NORD it must close at the same time power is supplied to the brake. The contact must be capable of switching inductive loads and/or be rated at IEC AC3.

Braking Method	Break Release (Start)	Brake Engage (Stop)	Power Source
10	Standard	Standard (AC-Switching)	Motor terminals
15	Standard	Fast (DC-switching)	Motor terminals
20	Standard	Standard (AC-Switching)	Separate power
25	Standard	Fast (DC-switching)	Separate power

Figure 4.1: PMG 500 Dimensions

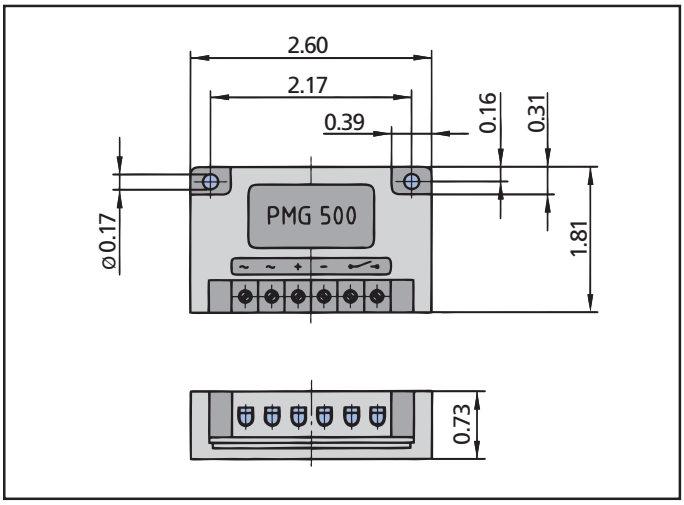

PMG 500 Push-Hybrid Rectifier

The PMG 500 rectifier provides an initial "push" the form of a timed full-wave brake-release function, which is then followed by a continuous half-wave brake-holding function.

- In order to prevent rapid wear, the PMG 500 rectifier is required when utilizing the larger 800 Nm (590 lb-ft) - and 1200 Nm (885 lb-ft) twin-rotor brakes.
- The PMG 500 rectifier is wired to "overexcite" the brake during its initial release. The DC voltage of the brake coil is determined based upon using a half-wave rectifier.

In some applications the PMG rectifier may be used for "Reduced Power Holding" or very fast brake engagement (See user manual U35100 for details).

IMPORTANT NOTE

If the motor is connected to an AC drive, soft start, or is a two-speed motor, the AC power must be supplied to the brake rectifier seperately from the motor power.

Figure 4.2: PMG 500 Braking Methods

STANDARD STOPPING (AC-SWITCHING)

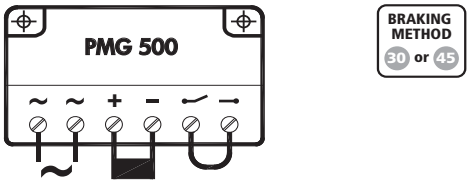

~ & ~	+ & -	⊸ & ⊸
AC BRAKE VOLTAGE	DC BRAKE	JUMPER

FAST & VERY FAST STOPPING (DC-SWITCHING)

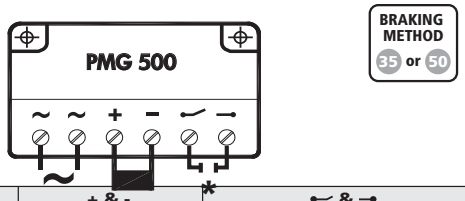

~ & ~	+ & -	* ⊸ & ⊸
AC BRAKE VOLTAGE	DC BRAKE	NORMALLY OPEN CONTACT

* The normally open contact/s (NO) is not supplied by NORD it must close at the same time power is supplied to the brake. The contact must be capable of switching inductive loads and/or be rated at IEC AC3.

Braking Method	Break Release (Start)	Brake Engage (Stop)	Power Source
30	Fast (Overecitation)	Standard (AC Switching)	Motor terminals
35	Fast (Overecitation)	Fast (DC Switching)	Motor terminals
45	Fast (Overecitation)	Standard (AC Switching)	Seperate power
50	Fast (Overecitation)	Fast (DC Switching)	Seperate power

BRAKE SIZE: BRE 5 **BRAKE TORQUE: 5 Nm (3.7 lb-ft) max.**

NORD Brake P/N	Half-Wave [V_{AC}]	Half-Wave [A_{AC}]	Full-Wave [V_{AC}]	Full-Wave [A_{AC}]	P_C [W]	V_C [V_{DC}]	I_C [A_{DC}]	R_C [Ω]
19010212	-	-	-	-	22	24	0.92	26.0
19010912	230	0.09	115	0.19	22	105	0.21	500
19011902	400	0.05	200	0.11	22	180	0.12	1475
19011912	460	0.05	230	0.10	22	205	0.11	1900
19012212	500	0.04	250	0.08	21	225	0.09	2450
19012512	575	0.04	-	-	22	250	0.09	2850

BRAKE SIZE: BRE 10 **BRAKE TORQUE: 10 Nm (7.4 lb-ft) max.**

NORD Brake P/N	Half-Wave [V_{AC}]	Half-Wave [A_{AC}]	Full-Wave [V_{AC}]	Full-Wave [A_{AC}]	P_C [W]	V_C [V_{DC}]	I_C [A_{DC}]	R_C [Ω]
19020222	-	-	-	-	28	24	1.17	20.6
19020922	230	0.14	115	0.28	33	105	0.32	332
19021902	400	0.07	200	0.15	29	180	0.16	1100
19021922	460	0.06	230	0.11	26	205	0.13	1620
19022222	500	0.06	250	0.12	30	225	0.13	1700
19022522	575	0.05	-	-	27	250	0.11	2323

BRAKE SIZE: BRE20 **BRAKE TORQUE: 20 Nm (15 lb-ft) max.**

NORD Brake P/N	Half-Wave [V_{AC}]	Half-Wave [A_{AC}]	Full-Wave [V_{AC}]	Full-Wave [A_{AC}]	P_C [W]	V_C [V_{DC}]	I_C [A_{DC}]	R_C [Ω]
19030222	-	-	-	-	34	24	1.42	16.9
19030922	230	0.18	115	0.35	41	105	0.39	270
19031922	400	0.09	200	0.17	34	180	0.19	950
19031932	460	0.07	230	0.13	30	205	0.15	1391
19032222	500	0.07	250	0.15	36	225	0.16	1391
19032522	575	0.06	-	-	35	250	0.14	1780

BRAKE SIZE: BRE40 **BRAKE TORQUE: 40 Nm (30 lb-ft) max.**

NORD Brake P/N	Half-Wave [V_{AC}]	Half-Wave [A_{AC}]	Full-Wave [V_{AC}]	Full-Wave [A_{AC}]	P_C [W]	V_C [V_{DC}]	I_C [A_{DC}]	R_C [Ω]
19040232	-	-	-	-	41	24	1.69	14.2
19040932	230	0.21	115	0.42	49	105	0.46	226
19041902	400	0.11	200	0.22	45	180	0.25	723
19041922	460	0.11	230	0.22	50	205	0.24	840
19042232	500	0.09	250	0.18	44	225	0.20	1150
19042532	575	0.08	-	-	44	250	0.18	1425

BRAKE SIZE: BRE 60 **BRAKE TORQUE: 60 Nm (44 lb-ft) max.**

NORD Brake P/N	Half-Wave [V_{AC}]	Half-Wave [A_{AC}]	Full-Wave [V_{AC}]	Full-Wave [A_{AC}]	P_C [W]	V_C [V_{DC}]	I_C [A_{DC}]	R_C [Ω]
19050252	-	-	-	-	52	24	2.18	11.0
19050952	230	0.27	115	0.54	63	105	0.60	174
19051902	400	0.13	200	0.27	54	180	0.30	602
19051952	460	0.12	230	0.25	57	205	0.28	740
19052252	500	0.10	250	0.20	50	225	0.22	1004
19052552	575	0.09	-	-	48	250	0.19	1300

BRAKE SIZE: BRE 100 **BRAKE TORQUE: 100 Nm (74 lb-ft) max.**

NORD Brake P/N	Half-Wave [V_{AC}]	Half-Wave [A_{AC}]	Full-Wave [V_{AC}]	Full-Wave [A_{AC}]	P_C [W]	V_C [V_{DC}]	I_C [A_{DC}]	R_C [Ω]
19060252	-	-	-	-	80	24	3.33	7.2
19060952	230	0.39	115	0.79	92	105	0.88	120
19061902	400	0.21	200	0.42	83	180	0.46	390
19061952	460	0.20	230	0.40	91	205	0.44	464
19062252	500	0.16	250	0.32	79	225	0.35	643
19062552	575	0.14	-	-	79	250	0.31	795

BRAKE SIZE: BRE 150 **BRAKE TORQUE: 150 Nm (110 lb-ft) max.**

NORD Brake P/N	Half-Wave [V_{AC}]	Half-Wave [A_{AC}]	Full-Wave [V_{AC}]	Full-Wave [A_{AC}]	P_C [W]	V_C [V_{DC}]	I_C [A_{DC}]	R_C [Ω]
19070252	-	-	-	-	77	24	3.20	7.5
19070952	230	0.39	115	0.79	92	105	0.88	120
19071902	400	0.18	200	0.36	73	180	0.40	445
19071952	460	0.15	230	0.31	70	205	0.34	600
19072252	500	0.15	250	0.30	76	225	0.34	670
19072552	575	0.14	-	-	76	250	0.30	825

BRAKE SIZE: BRE 250 **BRAKE TORQUE: 250 Nm (185 lb-ft) max.**

NORD Brake P/N	Half-Wave [V_{AC}]	Half-Wave [A_{AC}]	Full-Wave [V_{AC}]	Full-Wave [A_{AC}]	P_C [W]	V_C [V_{DC}]	I_C [A_{DC}]	R_C [Ω]
19080252	-	-	-	-	99	24	4.14	5.8
19080952	230	0.51	115	1.03	120	105	1.14	92
19081902	400	0.27	200	0.54	108	180	0.60	300
19081952	460	0.24	230	0.49	111	205	0.54	380
19082252	500	0.20	250	0.40	100	225	0.44	507
19081962	575	0.17	-	-	95	250	0.38	655

BRAKE SIZE: BRE 400 **BRAKE TORQUE: 400 Nm (295 lb-ft) max.**

NORD Brake P/N	Half-Wave [V_{AC}]	Half-Wave [A_{AC}]	Full-Wave [V_{AC}]	Full-Wave [A_{AC}]	P_C [W]	V_C [V_{DC}]	I_C [A_{DC}]	R_C [Ω]
19092252	-	-	-	-	144	24	6.00	4.0
19092952	230	0.62	115	1.24	145	105	1.38	76
19093902	400	0.35	200	0.70	141	180	0.78	230
19093952	460	0.31	230	0.62	140	205	0.68	300
19093962	500	0.29	250	0.57	143	225	0.63	355
19093972	575	0.26	-	-	142	250	0.57	440

BRAKE SIZE: BRE 800 **BRAKE TORQUE: 800 Nm (590 lb-ft) max. ❶**

NORD Brake P/N	Half-Wave [V_{AC}]	Half-Wave [A_{AC}]	Full-Wave [V_{AC}]	Full-Wave [A_{AC}]	P_C [W]	V_C [V_{DC}]	I_C [A_{DC}]	R_C [Ω]
19094252	-	-	-	-	144	24	6.00	4.0
19094952	230	0.62	-	-	145	105	1.38	76
19095902	400	0.27	-	-	108	180	0.60	300
19095902	460	0.31	-	-	140	205	0.68	300
19095962	500	0.29	-	-	143	225	0.63	355

BRAKE SIZE: BRE 1200 **BRAKE TORQUE: 1200 Nm (885 lb-ft) max. ❷**

NORD Brake P/N	Half-Wave [V_{AC}]	Half-Wave [A_{AC}]	Full-Wave [V_{AC}]	Full-Wave [A_{AC}]	P_C [W]	V_C [V_{DC}]	I_C [A_{DC}]	R_C [Ω]
19099802	230	0.62	-	-	145	105	1.38	76
19099902	400	0.27	-	-	108	180	0.60	300
19099902	460	0.31	-	-	140	205	0.68	300

IMPORTANT NOTE

The PMG500 rectifier is required when utilizing the larger 800 Nm (590 lb-ft) - and 1200 Nm (885 lb-ft) twin-rotor brakes. In order to prevent rapid wear, NORD recommends using the PMG500 rectifier to "overexcite" the brake during its release. The brake coil should be sized utilizing the PMG rectifier like a half-wave rectifier.

Half-Wave [V_{AC}] = AC supply voltage with half-wave rectifier
Half-Wave [A_{AC}] = AC supply current to half-wave rectifier
Full-Wave [V_{AC}] = DC supply voltage with full-wave rectifier
Full-Wave [A_{AC}] = AC supply current to full-wave rectifier

Pc [W] = Power to brake coil
Vc [V_{DC}] = DC brake coil voltage (range -30% to +10%)
Ic [A_{DC}] = DC current top brake coil
Rc [V] = Brake coil resistance (±5%)

❶ When used as a stopping brake, evaluation of brake work is essential.
❷ Designed as a holding brake or emergency stop brake only.

Brake coil data based upon ambient conditions of 20°C (68°F).

General Maintenance

Brake Air Gap

In order to obtain optimal brake performance and maximum brake life, it is necessary to periodically check and reset the brake air gap. As the brake rotor wears and decreases in thickness, the air gap will increase. If the air gap is too large, the brake coil may not have enough magnetic force to pull the metal armature disc across the gap and the brake will drag.

IMPORTANT NOTE

When a complete brake motor is supplied by NORD, the air gap is already set at the factory. If the brake is ordered as a part, the air gap must be set in the field. All brake air gap adjustments must be made with the brake assembled onto the motor and power off (brake engaged).

Hand Release Lever (HL)

It is common to supply the NORD brake with a hand release lever assembly. The hand release lever allows the brake to be manually released without requiring that the brake be energized with voltage. The lever has a spring return that allows the brake to be hand released and returned automatically to its set position. The handle of the hand release lever can be unscrewed for easy removal.

Figure 5

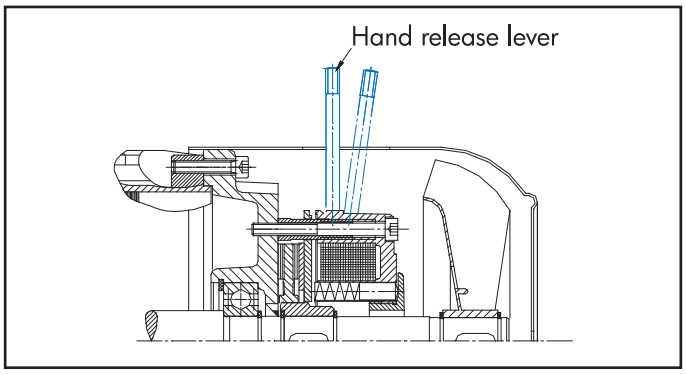

IMPORTANT NOTE

When a brake motor with hand-lever is supplied by NORD, both the hand lever air gap and brake air gap are set at the factory. When ordered as parts, proper hand-lever and air gap adjustments must be made in the field. Hand-lever adjustments must always be made prior to assembling the brake to the motor. All brake air gap adjustments must be made with the brake assembled to the motor and the power off (brake engaged).

Brake Hand-Lever Installation and Adjustment

Figure 6

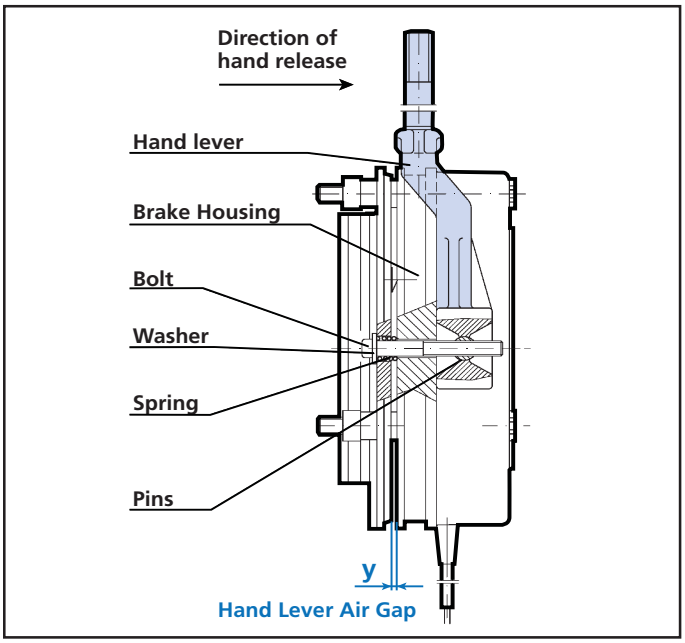

1. Place the hand-lever over the brake housing (as shown) and align the pins.
2. Screw the bolts with washer and spring into the pins.
3. Using a feeler gage, adjust the hand-lever air gap per Table 5.

Table 5: Hand-Lever Air Gap Setting

Brake Size	Dimension "y" ❶ [mm]	[in]	Brake Size	Dimension "y" ❶ [mm]	[in]
BRE 5	1	0.040	BRE 100	1.2	0.047
BRE 10	1	0.040	BRE 150	1.2	0.047
BRE 20	1	0.040	BRE 250	1.5	0.059
BRE 40	1	0.040	BRE 400	1.5	0.059
BRE 60	1	0.040	BRE 800	1.5	0.059
			BRE 1200	1.5	0.059

❶ Tolerance: + 0.008 in [+ 0.2 mm]

IMPORTANT NOTE

When setting the hand-lever gap or dimension "y" the magnetic brake coil housing and the anchor plate must be kept uniform all around.

WARNING

- To assure proper assembly and proper functioning of the brake, the hand-lever must be assembled to the brake, and the hand-lever air gap must be adjusted, before the brake is assembled to the motor.
- Once adjusted properly, the hand-lever air gap setting should not be altered, even when readjusting the air gap setting.

Setting the Brake Air Gap

NORD spring-loaded brakes are virtually maintenance free. However, the air-gap of the brake rotor or brake disc must be periodically checked and adjusted. If necessary, the worn brake rotor must be replaced. Table 6 serves as guide to check and set the brake air gap as needed.

IMPORTANT NOTE

When a complete brake motor is supplied by NORD, the air gap is already set at the factory. If the brake is ordered as a part, the air gap must be set in the field. All brake air gap adjustments must be made with the brake assembled to the motor and the power off (brake engaged).

The brake air gap is checked by placing a feeler gage between metal anchor plate and the brake coil housing as shown in Figure 6. This procedure is identical even for the larger BRE800 and BRE1200 twin rotor brakes.

Figure 7 – Setting the Brake Air Gap

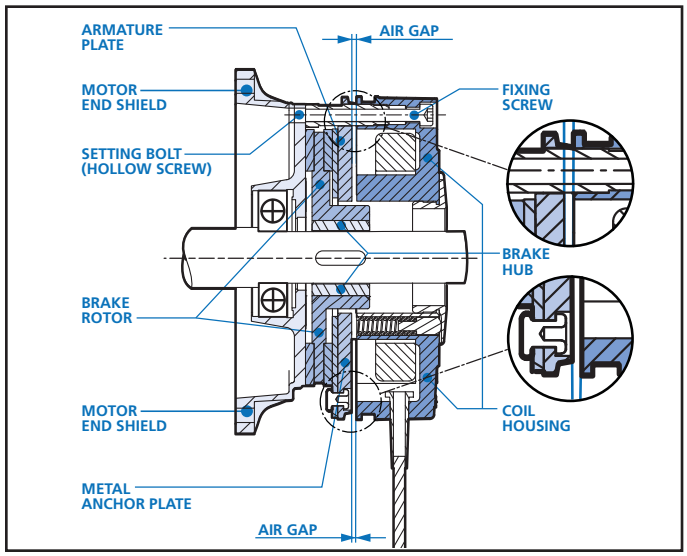

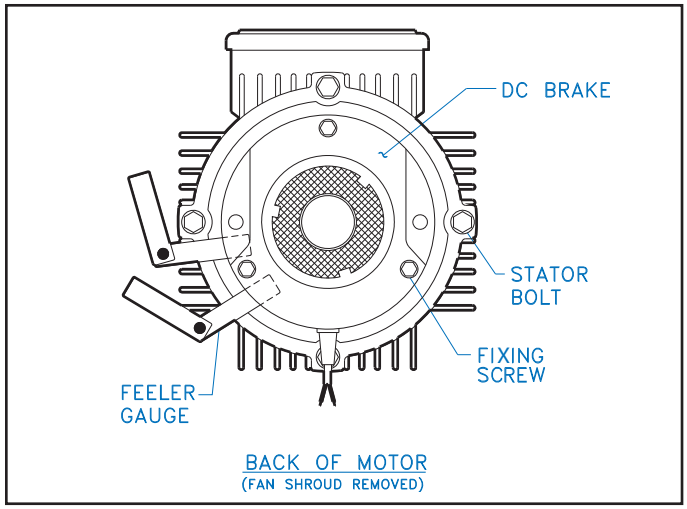

Procedure

1. Loosen the fixing screws that attach the brake to the motor's end-shield by approximately half a turn.
2. If required, the brake assembly may be loosened slightly from the motor's end shield by turning the threaded setting bolts (hollow screws) that surround the fixing screws, counter clockwise, into the brake coil housing.
3. Depending upon whether or not the air gap needs to be decreased or increased, turn the fixing screws accordingly until the desired nominal air gap (Table 6) is reached, as measured using the appropriate feeler gauge.
   - Turning the fixing screws clockwise allows the brake coil housing to be moved towards the anchor plate and reduces the air gap.
   - Turning the fixing screws counter-clockwise allows the brake coil housing to be moved away from the anchor plate and increases the air gap.
4. If the setting bolts (hollow screws) were adjusted as suggested in Step 2, re-secure the brake coil housing firmly against the motor's end shield by turning the setting bolts (hollow screws) clockwise, out of the brake coil housing.
5. Tighten the fixing screws to the appropriate torque.
6. Re-check and measure the air gap in multiple locations to check for appropriate spacing. Repeat the steps as needed until the desired air gap spacing is uniform and consistent all the way around the brake.

Table 6: Brake Air Gap Settings

Brake Size	Fixing Screw Tightening Torque		Nominal Air Gap Setting ❶		Maximum Air Gap ❷	
	[lb-ft]	[Nm]	[in]	[mm]	[in]	[mm]
BRE 5	2.2	3	0.008	0.2	0.024	0.6
BRE10	4.4	6	0.008	0.2	0.028	0.7
BRE20	7.4	10	0.012	0.3	0.031	0.8
BRE40	7.4	10	0.012	0.3	0.035	0.9
BRE60	18	25	0.012	0.3	0.039	1.0
BRE100 ❸	18	25	0.016	0.4	0.043	1.1
BRE150 ❸	18	25	0.016	0.4	0.043	1.1
BRE250	37	50	0.020	0.5	0.047	1.2
BRE400	37	50	0.020	0.5	0.047	1.2
BRE800	37	50	0.028	0.7	0.047	1.2
BRE1200	37	50	0.028	0.7	0.047	1.2

❶ Tolerance: + 0.004 in [+ 0.1 mm]

❷ Brake air gap must be re-adjusted before the stated value.

❸ When using the stainless steel friction plate (RG) increase the nominal air gap to 0.6 mm (0.024 in.).

Brake Rotor (Brake Disc) Wear Assessment

Periodically the brake rotor or brake disc must also be checked for wear. If the brake rotors wear approaches the minimum allowed thickness, then the part should be replaced. Use Table 7 to determine whether or not the brake rotor requires replacement.

Table 7: Brake Rotor Thickness

Brake Size	Nominal Brake Rotor Thickness ❶		Minimum Brake Rotor Thickness ❷	
	[in]	[mm]	[in]	[mm]
BRE 5	0.295	7.5	0.177	4.5
BRE10	0.335	8.5	0.217	5.5
BRE20	0.406	10.3	0.295	7.5
BRE40	0.492	12.5	0.374	9.5
BRE60	0.571	14.5	0.453	11.5
BRE100	0.630	16	0.492	12.5
BRE150	0.709	18	0.571	14.5
BRE250	0.787	20	0.650	16.5
BRE400	0.787	20	0.650	16.5
BRE800	0.787	20	0.650	16.5
BRE1200	0.866	22	0.689	17.5

❶ As new condition.

❷ Worn condition - brake rotor replacement is required!

Brake Pad Replacement (reference to parts list on page 8)

When the brake pad is worn the pad should be replaced to maintain proper brake operation and ensure safety.

Required Tools

- Phillips head screw drivers (fan shroud removal)
- External snap ring pliers (fan and brake hub removal).
- Large flat head screw driver or small pry bar (fan removal)
- Metric T-handle wrenches and open-end wrenches.

Procedure

1. Remove the fixing screws (946) securing the fan cover (940) to the motor end-shield (932). If the brake has a hand release (937), the lever arm should be removed by unscrewing it.
2. Remove the fan cover (940) and note the position of the hand release slot if applicable.
3. Remove the snap ring holding the cooling fan (939) and carefully remove the cooling fan (939), key and second snap ring (997).
4. If the brake is equipped with a dust boot (992), remove it.
5. Remove the socket head cap screws holding the brake coil (936) to the motor end-shield (932).
6. Remove the brake coil (936), noting the hand release (937) and power cable locations.
7. Slide the brake rotor (993) off the brake hub (938) which is secured to the motor shaft.
8. Clean the brake, install the new brake rotor pad and reassemble the brake in reverse order of the steps outlined.

Optional Brake Accessories

NORD can supply a variety of brake options and accessories, of which some of the most common are noted below.

Hand Release Lever (HL)

The hand release lever allows the brake to be manually released without requiring that the brake be energized with voltage. The lever has a spring return that allows the brake to be hand released and returned automatically to its set position. The handle of the hand release lever can be unscrewed for easy removal.

Figure 8

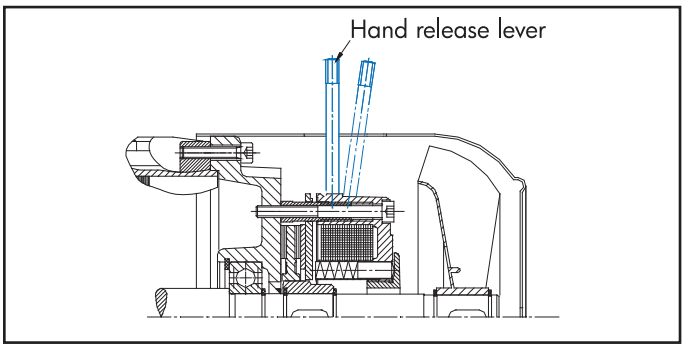

Locking Hand Release Lever (FHL)

This option allows the brake to be manually released and locked off without requiring voltage to the brake. The lock mechanism prevents the spring from returning the brake to a closed state without manual action by the user. The hand release lever can be unscrewed for easy removal.

Figure 9

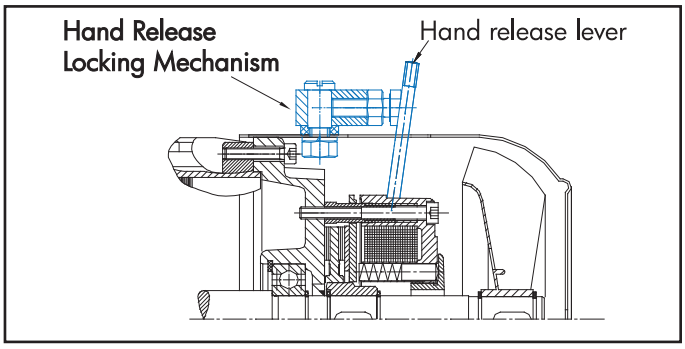

Corrosion Protected Brake (RG)

The brake is fitted with a stainless steel brake plate to provide additional corrosion protection in severe and wet environments.

Dust & Corrosion Protected Brake (SR)

A rubber-sealing boot is installed on the brake to provide additional protection in dusty environments. This feature includes the stainless steel brake plate (RG).

IP66 Brake (IP66)

NORD can also provide an IP66 brake option designed for a bigger degree of protection against severe environments.

Parts List - Precima Brakes

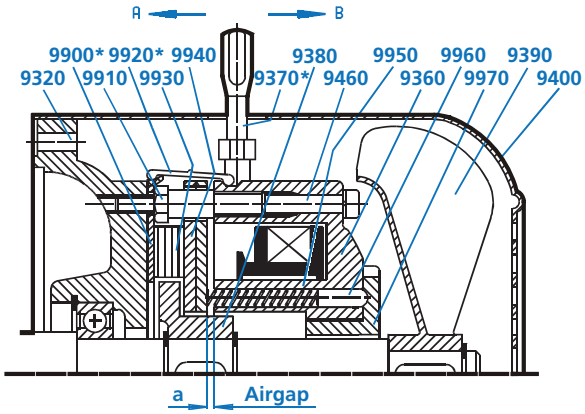

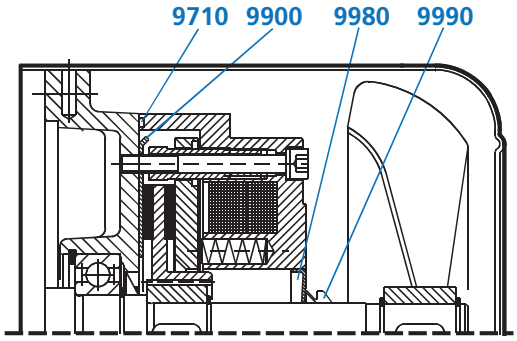

Normal Design, Enclosure IP55 with following options:

RG – Stainless Steel Disc (Item 9900)
SR – Dust Boot-includes Option RG (Item 9920)
HL – Hand Release (Item 9370)

Optional Brake with optional IP66 enclosure

9320	Non-drive end shield	9710	O-ring - optional	9960	Pressure plate adjustment**
9360	Brake coil	9900	Friction plate - optional	9970	Adjustable ring **
9370	Manual brake lever – optional	9910	Setting bolt	9980	Bushing/seal - optional
9380	Brake hub	9920	Dust protection ring	9990	V-ring - optional
9390	Fan	9930	Brake rotor		
9400	Fan cover	9940	Armature plate		
9460	Fixing screw	9950	Spring		

***** Only for brakes that are 5 Nm to 40 Nm***

Table 8: Spare Parts

Brake Size	NORD Motor Frame	Brake Rotor [Item 9930]	Brake Hub [Item 9380]	Brake Hub Bore / (Style)	Hand Release (HL) [Item 9370]	Stainless Disc (RG) [Item 9900]	Dust Boot (SR) [Item 9920]
BRE5	63/71/80	19120042	19100112	15 mm (hex)	19150042	19130042	19110042
BRE10	63/71	19120082	19100212	15 mm (hex)	19150082	19130082	19110082
BRE10	80/90	19120082	19100222	20 mm (hex)	19150082	19130082	19110082
BRE20	80/90/112	19120162	19100322	20 mm (hex)	19150162	19130162	19110162
BRE20	100	19120162	19100332	25 mm (hex)	19150162	19130162	19110162
BRE40	90/100	19120322	19100452	25 mm (spline)	19150322	19130322	19110402
BRE40	112	19120402	19100442	30 mm (hex)	19150322	19130322	19110402
BRE60	100	19120602	19100532	25 mm (spline)	19150602	19130602	19110602
BRE60	112	19120602	19100542	30 mm (spline)	19150602	19130602	19110602
BRE60	132	19120602	19100552	35 mm (spline)	19150602	19130602	19110602
BRE100	132/160	19120802	19100652	35 mm (spline)	19150802	19130802	19110802
BRE150	132	19121502	19100752	35 mm (spline)	19151502	19131502	19111502
BRE150	160/180	19121502	19100772	45 mm (spline)	19151502	19131502	19111502
BRE250	160/180	19122402	19100872	45 mm (spline)	19152402	19132500	19112502
BRE250	200	19122402	19100882	50 mm (spline)	19152402	19132500	19112502
BRE400	200/225	19124002	19100912	60 mm (spline)	19154003	10114020	19114002

IMPORTANT NOTES

- For brake coil part numbers, listed by brake size and coil voltage, please see page 4.
- The large BRE 800 and BRE 1200 twin rotor brakes are supplied to NORD pre-assembled and complete. For parts list details and spare parts information please contact NORD.

Brake Times & Electrical Selection

Brake timing performance is critical in selecting the optimal brake system. NORD brakes can provide exceptional performance in terms of the release (start) times and engagement (stop) times. Use the following guidelines in order to select the correct brake control components and connections.

1) Determine if the brake needs to be wired directly from the motor terminal block or powered by a separate power source.

- If you are using a frequency inverter, soft-start or a two speed motor you will need to supply the rectifier from a separate power source.

- If the motor is powered direct across-the-line the rectifier power can be supplied from the motor's terminal block.

2) What type of performance do I need?

- Is the standard brake performance OK?

- Is a higher performance required for fast brake release or very fast brake stopping?

3) Determine the brake supply voltage and check the rectifier compatability using the table on page 10?

Selection Suggestions

When Fast Stopping is Recommended

Any applications that require quick stops and positive action at stand-still

Recommended Applications

- conveyors and inclined conveyors
- hoists and lifts
- bulk material handling equipment (bucket elevators, idler conveyor's).

CAUTION

- **Hoisting (lifting/lowering) applications** - must have the brake wired for fast response.

When Fast-Release is Recommended (Overexcitation)

Fast Release is recommended in any application that is very high-cycling with frequent starts and stops. These applications require the brake to release very-quickly in order to avoid excessive heat build-up in the AC motor and brake coil.

Recommended Applications

- Index conveyors
- Diverters
- Storage and retrieval crane systems

Power Source	Brake Release (start)	Brake engagement (stop)	Braking Method *	Rectifier
Motor Terminal Block	Standard	Standard (AC switching)	10	GVE/GHE/GUE
	Standard	Fast (DC switching)	15	GVE/GHE/GUE
	❶ Fast (Overexcitation)	Standard (AC switching)	30	PMG 500
	❶ Fast (Overexcitation)	Fast (DC switching)	35	PMG 500
Separate Power Source	Standard	Standard (AC switching)	20	GVE/GHE/GUE
	Standard	Fast (DC switching)	25	GVE/GHE/GUE
	❶ Fast (Overexcitation)	Standard (AC switching)	45	PMG 500
	❶ Fast (Overexcitation)	Fast (DC switching)	50	PMG 500

* **Braking methods referenced in connection diagrams on pages 11-15.**

❶ **Please see important note below:**

IMPORTANT NOTE

The PMG500 rectifier is required when utilizing the larger 800 Nm (590 lb-ft) - and 1200 Nm (885 lb-ft) twin-rotor brakes. In order to prevent rapid wear, NORD recommends using the PMG500 rectifier to "overexcite" the brake during its release. The brake coil should be sized utilizing the PMG rectifier like a half-wave rectifier.

The table below determines the rectifier and DC brake voltage required, based on the AC supply voltage & braking method.

Rectifier Supply Voltage (VAC)	Brake Coil Voltage (VDC)	Braking Method	Rectifier Type	Rectifier P/N	BRE 5	BRE 10	BRE 20	BRE 40	BRE 60	BRE 100	BRE 150	BRE 250	BRE 400	BRE 800	BRE 1200
115 (105-120)	105	20	GVE20L	19141000	X	X	X	X	X	X	X				
	105	25	GVE20L	19141000	X	X	X	X	X	X	X				
208 (200-208)	180	10	GVE20L	19141000	X	X	X	X	X	X	X	X	X		
	180	15	GVE20L	19141000	X	X	X	X	X	X	X	X	X		
	180	20	GVE20L	19141000	X	X	X	X	X	X	X	X	X		
	105	25	GHE40L	19141010	X	X	X	X	X	X	X				
	105	25	GHE50L	19141020	X	X	X	X	X	X	X				
	180	25	GVE20L	19141000	X	X	X	X	X	X	X	X	X		
	105	30	PMG500	19140200										X	X
	105	35	PMG500	19140200										X	X
	105	45	PMG500	19140200										X	X
	105	50	PMG500	19140200										X	X
	180	55	PMG500	19140200										X	X
230 (220-240)	105	10	GHE40L	19141010	X	X	X	X	X	X	X				
	205	10	GVE20L	19141000	X	X	X	X	X	X	X	X	X		
	105	15	GHE40L	19141010	X	X	X	X	X	X	X				
	205	15	GVE20L	19141000	X	X	X	X	X	X	X	X	X		
	105	20	GHE40L	19141010	X	X	X	X	X	X	X				
	205	20	GUE40V	19140300	X	X	X	X	X	X	X				
	205	20	GVE20L	19141000	X	X	X	X	X	X	X	X	X		
	105	25	GHE40L	19141010	X	X	X	X	X	X	X				
	205	25	GUE40V	19140300	X	X	X	X	X	X	X				
	205	25	GVE20L	19141000	X	X	X	X	X	X	X	X	X		
	105	30	PMG500	19140200										X	X
	105	35	PMG500	19140200										X	X
	105	45	PMG500	19140200										X	X
	105	50	PMG500	19140200										X	X
332	180	30	PMG500	19140200										X	X
	180	35	PMG500	19140200										X	X
400 (380-415)	180	10	GHE40L	19141010	X	X	X	X	X	X	X	X	X		
	180	15	GHE40L	19141010	X	X	X	X	X	X	X	X	X		
	180	20	GHE40L	19141010	X	X	X	X	X	X	X	X	X		
	180	25	GHE40L	19141010	X	X	X	X	X	X	X	X	X		
	180	30	PMG500	19140200										X	X
	180	35	PMG500	19140200										X	X
	180	45	PMG500	19140200										X	X
	180	50	PMG500	19140200										X	X
460 (440-480)	205	10	GHE40L	19141010	X	X	X	X	X	X	X	X	X		
	205	15	GHE40L	19141010	X	X	X	X	X	X	X	X	X		
	205	20	GHE40L	19141010	X	X	X	X	X	X	X	X	X		
	205	20	GUE40V	19140300	X	X	X	X	X	X	X				
	205	25	GHE40L	19141010	X	X	X	X	X	X	X	X	X		
	205	25	GUE40V	19140300	X	X	X	X	X	X	X				
	205	30	PMG500	19140200										X	X
	205	35	PMG500	19140200										X	X
	205	45	PMG500	19140200										X	X
	205	50	PMG500	19140200										X	X
575 (550-600)	250	10	GHE50L	19141020	X	X	X	X	X	X	X	X	X		
	250	15	GHE50L	19141020	X	X	X	X	X	X	X	X	X		
	250	20	GHE50L	19141020	X	X	X	X	X	X	X	X	X		
	250	25	GHE50L	19141020	X	X	X	X	X	X	X	X	X		

Specify Rectifier Model Type _____ And DC Brake Voltage _____

Typical Connection Diagrams

BR101A — 10
POWERED FROM MOTOR TERMINAL BLOCK
STANDARD RELEASE
NORMAL STOPPING (AC-SWITCHING)

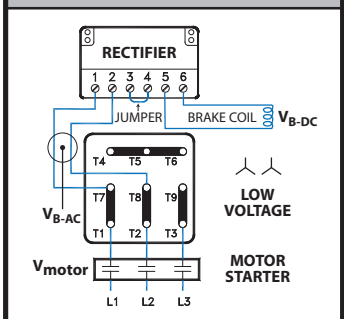

MOTOR	RECTIFIER	V_{motor}	V_{B-AC}	V_{B-DC}
208-230YY/460Y	GVE20	208 VAC	230 VAC	205 VDC
230YY/460Y	GVE20	230 VAC	230 VAC	205 VDC
230YY/460Y	GHE40	230 VAC	230 VAC	105 VDC

BR101B — 10
POWERED FROM MOTOR TERMINAL BLOCK
STANDARD RELEASE
NORMAL STOPPING (AC-SWITCHING)

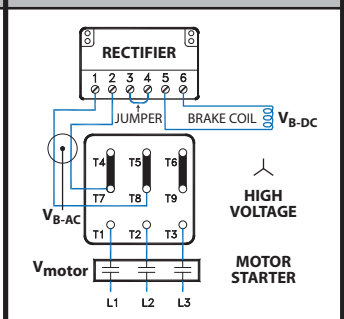

MOTOR	RECTIFIER	V_{motor}	V_{B-AC}	V_{B-DC}
230YY/460Y	GVE20	460 VAC	230 VAC	205 VDC

GP101C — 10
POWERED FROM MOTOR TERMINAL BLOCK
STANDARD RELEASE
NORMAL STOPPING (AC-SWITCHING)

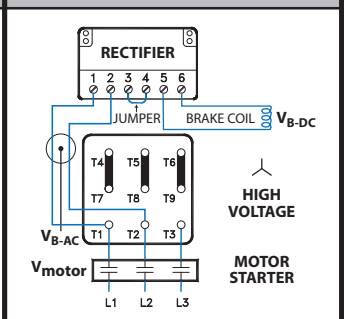

MOTOR	RECTIFIER	V_{motor}	V_{B-AC}	V_{B-DC}
230YY/460Y	GHE40	460 VAC	460 VAC	205 VDC

BR601A — 10
POWERED FROM MOTOR TERMINAL BLOCK
STANDARD RELEASE
NORMAL STOPPING (AC-SWITCHING)

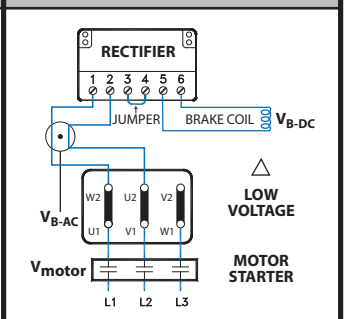

MOTOR	RECTIFIER	V_{motor}	V_{B-AC}	V_{B-DC}
208Δ/360Y	GVE20	208 VAC	208 VAC	180 VDC
230Δ/400Y	GVE20	230 VAC	230 VAC	205 VDC
400Δ/690Y	GHE40	400 VAC	400 VAC	180 VDC
460Δ/Y	GHE40	460 VAC	460 VAC	205 VDC

BR601B — 10
POWERED FROM MOTOR TERMINAL BLOCK
STANDARD RELEASE
NORMAL STOPPING (AC-SWITCHING)

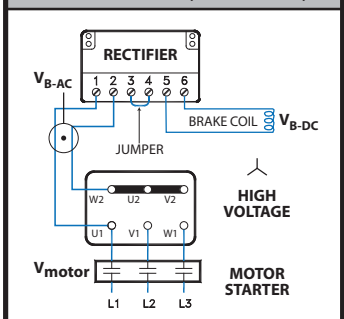

MOTOR	RECTIFIER	V_{motor}	V_{B-AC}	V_{B-DC}
230Δ/400Y	GVE20	400 VAC	230 VAC	205 VDC

BR601C — 10
POWERED FROM MOTOR TERMINAL BLOCK
STANDARD RELEASE
NORMAL STOPPING (AC-SWITCHING)

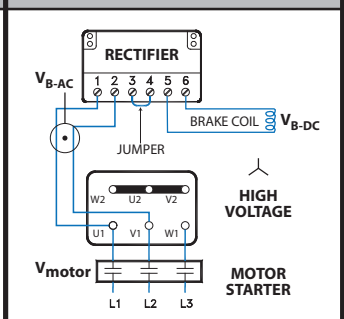

MOTOR	RECTIFIER	V_{motor}	V_{B-AC}	V_{B-DC}
332Δ/575Y	GHE50	575 VAC	575 VAC	250 VDC

BR603A — 15
POWERED FROM MOTOR TERMINAL BLOCK
STANDARD RELEASE
FAST STOPPING (DC-SWITCHING)

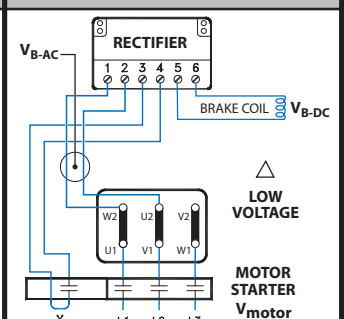

MOTOR	RECTIFIER	V_{motor}	V_{B-AC}	V_{B-DC}
208Δ/360Y	GVE20	208 VAC	208 VAC	180 VDC
230Δ/400Y	GVE20	230 VAC	230 VAC	205 VDC
400Δ/690Y	GHE40	400 VAC	400 VAC	180 VDC
460Δ/Y	GHE40	460 VAC	460 VAC	205 VDC

BR603B — 15
POWERED FROM MOTOR TERMINAL BLOCK
STANDARD RELEASE
FAST STOPPING (DC-SWITCHING)

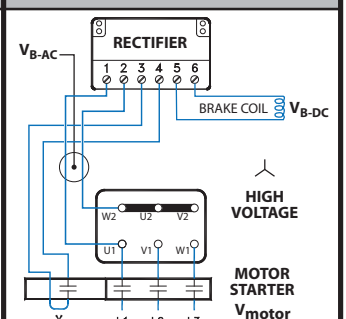

MOTOR	RECTIFIER	V_{motor}	V_{B-AC}	V_{B-DC}
230Δ/400Y	GVE20	400 VAC	230 VAC	105 VDC

BR603C — 15
POWERED FROM MOTOR TERMINAL BLOCK
STANDARD RELEASE
FAST STOPPING (DC-SWITCHING)

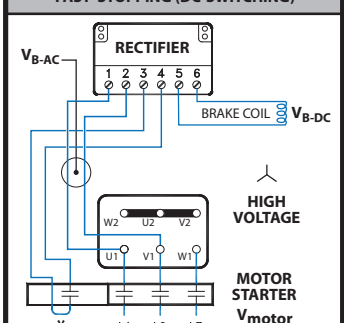

MOTOR	RECTIFIER	V_{motor}	V_{B-AC}	V_{B-DC}
332Δ/575Y	GHE50	575 VAC	575 VAC	250 VDC

BR103A — 15
POWERED FROM MOTOR TERMINAL BLOCK
STANDARD RELEASE
FAST STOPPING (DC-SWITCHING)

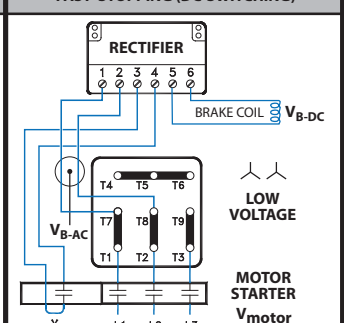

MOTOR	RECTIFIER	V_{motor}	V_{B-AC}	V_{B-DC}
208-230YY/460Y	GVE20	208 VAC	230 VAC	205 VDC
230YY/460Y	GVE20	230 VAC	230 VAC	205 VDC
230YY/460Y	GHE40	230 VAC	230 VAC	105 VDC

BR103B — 15
POWERED FROM MOTOR TERMINAL BLOCK
STANDARD RELEASE
FAST STOPPING (DC-SWITCHING)

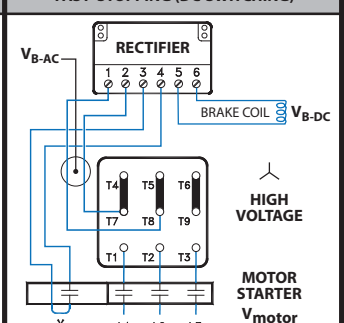

MOTOR	RECTIFIER	V_{motor}	V_{B-AC}	V_{B-DC}
230YY/460Y	GVE20	460 VAC	230 VAC	205 VDC

BR103C — 15
POWERED FROM MOTOR TERMINAL BLOCK
STANDARD RELEASE
FAST STOPPING (DC-SWITCHING)

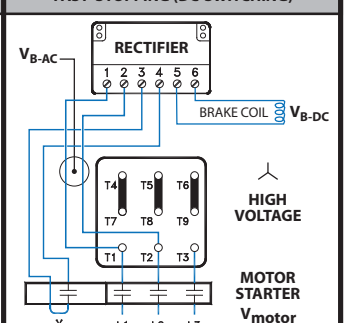

MOTOR	RECTIFIER	V_{motor}	V_{B-AC}	V_{B-DC}
230YY/460Y	GHE40	460 VAC	460 VAC	205 VDC

* The normally open contact/s (NO) is not supplied by NORD. It must close at the same time power is supplied to the brake. The contact must be capable of switching inductive loads and/or be rated IEC AC3.

= Braking Method

Typical Connection Diagrams

BR102A — 20

SEPERATE POWER SOURCE
STANDARD RELEASE
NORMAL STOPPING (AC-SWITCHING)

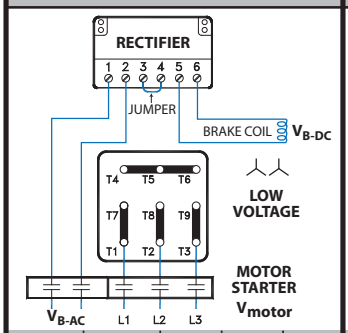

MOTOR	RECTIFIER	V_{motor}	V_{B-AC}	V_{B-DC}
208-230YY/460Y	GVE20	208 VAC	230 VAC	205 VDC
230YY/460Y	GVE20	230 VAC	105 VAC	115 VDC
230YY/460Y	GVE20	230 VAC	230 VAC	205 VDC
230YY/460Y	GHE40	230 VAC	230 VAC	105 VDC

BR102B — 20

SEPERATE POWER SOURCE
STANDARD RELEASE
NORMAL STOPPING (AC-SWITCHING)

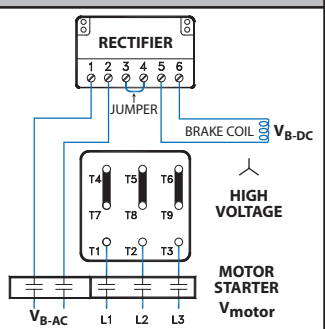

MOTOR	RECTIFIER	V_{motor}	V_{B-AC}	V_{B-DC}
230YY/460Y	GVE20	460 VAC	115 VAC	105 VDC
230YY/460Y	GHE40	460 VAC	460 VAC	205 VDC

BR602A — 20

SEPERATE POWER SOURCE
STANDARD RELEASE
NORMAL STOPPING (AC-SWITCHING)

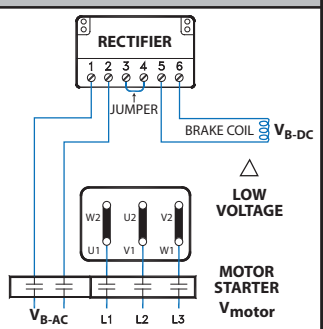

MOTOR	RECTIFIER	V_{motor}	V_{B-AC}	V_{B-DC}
208Δ/360Y	GVE20	208 VAC	208 VAC	180 VDC
230Δ/400Y	GVE20	230 VAC	230 VAC	205 VDC
400Δ/690Y	GHE40	400 VAC	400 VAC	180 VDC
460Δ/Y	GHE40	460 VAC	460 VAC	205 VDC

BR602B — 20

SEPERATE POWER SOURCE
STANDARD RELEASE
NORMAL STOPPING (AC-SWITCHING)

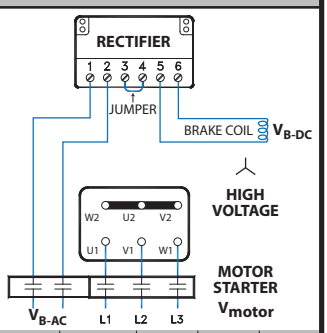

MOTOR	RECTIFIER	V_{motor}	V_{B-AC}	V_{B-DC}
230Δ/400Y	GHE40	400 VAC	400 VAC	180 VDC
332Δ/575Y	GHE50	575 VAC	575 VAC	250 VDC

BR104A — 25

SEPERATE POWER SOURCE
STANDARD RELEASE
FAST STOPPING (DC-SWITCHING)

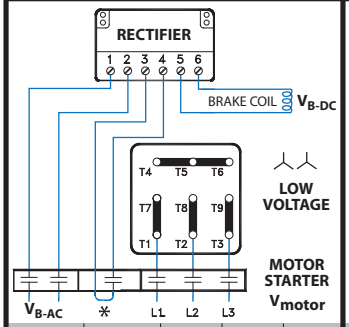

MOTOR	RECTIFIER	V_{motor}	V_{B-AC}	V_{B-DC}
208-230YY/460Y	GVE20	208 VAC	230 VAC	205 VDC
230YY/460Y	GVE20	230 VAC	115 VAC	105 VDC
230YY/460Y	GVE20	230 VAC	230 VAC	205 VDC
230YY/460Y	GHE40	230 VAC	230 VAC	105 VDC

BR104B — 25

SEPERATE POWER SOURCE
STANDARD RELEASE
FAST STOPPING (DC-SWITCHING)

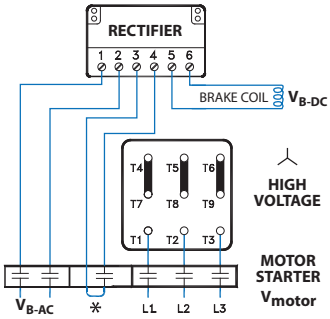

MOTOR	RECTIFIER	V_{motor}	V_{B-AC}	V_{B-DC}
230YY/460Y	GVE20	460 VAC	115 VAC	105 VDC
230YY/460Y	GHE40	460 VAC	460 VAC	205 VDC

BR604A — 25

SEPERATE POWER SOURCE
STANDARD RELEASE
FAST STOPPING (DC-SWITCHING)

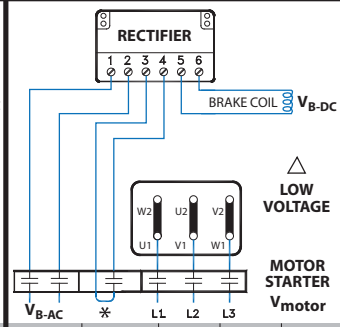

MOTOR	RECTIFIER	V_{motor}	V_{B-AC}	V_{B-DC}
208Δ/360Y	GHE20	208 VAC	208 VAC	105 VDC
230Δ/400Y	GHE20	230 VAC	230 VAC	105 VDC
400Δ/690Y	GHE40	400 VAC	400 VAC	180 VDC
460Δ/Y	GHE40	460 VAC	460 VAC	205 VDC

BR604B — 25

SEPERATE POWER SOURCE
STANDARD RELEASE
FAST STOPPING (DC-SWITCHING)

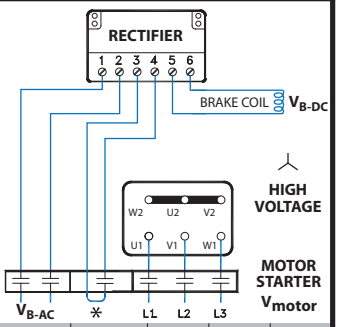

MOTOR	RECTIFIER	V_{motor}	V_{B-AC}	V_{B-DC}
230Δ/400Y	GHE20	400 VAC	230 VAC	105 VDC
332Δ/575Y	GHE40	575 VAC	332 VAC	180 VDC

* The normally open contact/s (NO) is not supplied by NORD. It must close at the same time power is supplied to the brake. The contact must be capable of switching inductive loads and/or be rated IEC AC3.

= Braking Method

Typical Connection Diagrams

PMG101A — POWERED FROM MOTOR TERMINAL BLOCK — FAST-RELEASE (OVER EXCITATION) — NORMAL STOPPING (AC-SWITCHING) — 30

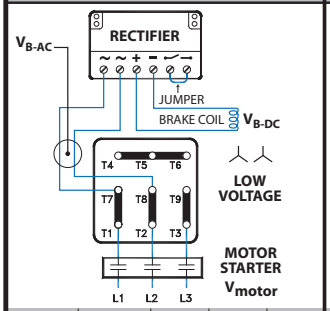

MOTOR	RECTIFIER	V_{motor}	$V_{B\text{-}AC}$	$V_{B\text{-}DC}$
230YY/460Y	PMG500	230 VAC	230 VAC	105 VDC

PMG101B — POWERED FROM MOTOR TERMINAL BLOCK — FAST-RELEASE (OVER EXCITATION) — NORMAL STOPPING (AC-SWITCHING) — 30

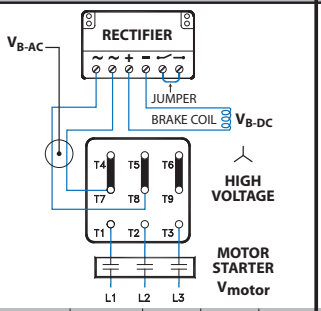

MOTOR	RECTIFIER	V_{motor}	$V_{B\text{-}AC}$	$V_{B\text{-}DC}$
230YY/460Y	PMG500	460 VAC	230 VAC	105 VDC

PMG101C — POWERED FROM MOTOR TERMINAL BLOCK — FAST-RELEASE (OVER EXCITATION) — NORMAL STOPPING (AC-SWITCHING) — 30

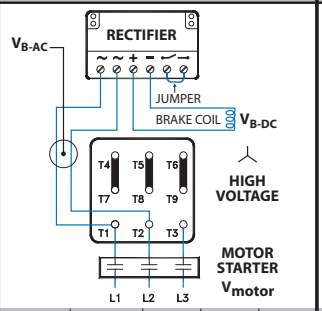

MOTOR	RECTIFIER	V_{motor}	$V_{B\text{-}AC}$	$V_{B\text{-}DC}$
230YY/460Y	PMG500	460 VAC	460 VAC	205 VDC

PMG101D — POWERED FROM MOTOR TERMINAL BLOCK — FAST-RELEASE (OVER EXCITATION) — NORMAL STOPPING (AC-SWITCHING) — 30

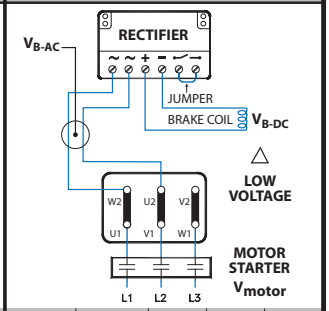

MOTOR	RECTIFIER	V_{motor}	$V_{B\text{-}AC}$	$V_{B\text{-}DC}$
208Δ/360Y	PMG500	208 VAC	208 VAC	105 VDC
230Δ/400Y	PMG500	230 VAC	230 VAC	105 VDC
400Δ/690Y	PMG500	400 VAC	400 VAC	180 VDC
460Δ/Y	PMG500	460 VAC	460 VAC	205 VDC

PMG101E — POWERED FROM MOTOR TERMINAL BLOCK — FAST-RELEASE (OVER EXCITATION) — NORMAL STOPPING (AC-SWITCHING) — 30

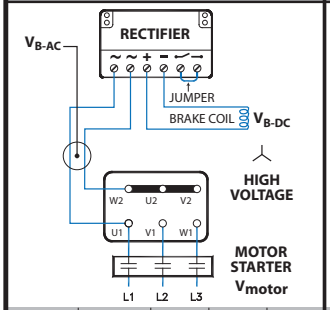

MOTOR	RECTIFIER	V_{motor}	$V_{B\text{-}AC}$	$V_{B\text{-}DC}$
230Δ/400Y	PMG500	400 VAC	230 VAC	105 VDC

PMG102A — POWERED FROM MOTOR TERMINAL BLOCK — FAST-RELEASE (OVER EXCITATION) — FAST STOPPING (DC-SWITCHING) — 35

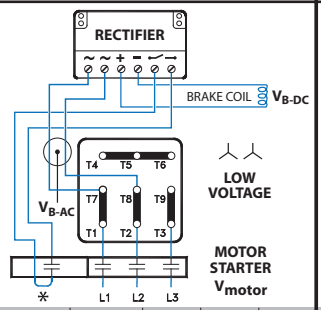

MOTOR	RECTIFIER	V_{motor}	$V_{B\text{-}AC}$	$V_{B\text{-}DC}$
230YY/460Y	PMG500	230 VAC	230 VAC	105 VDC

PMG102B — POWERED FROM MOTOR TERMINAL BLOCK — FAST-RELEASE (OVER EXCITATION) — FAST STOPPING (DC-SWITCHING) — 35

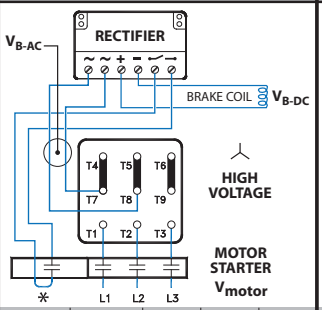

MOTOR	RECTIFIER	V_{motor}	$V_{B\text{-}AC}$	$V_{B\text{-}DC}$
230YY/460Y	PMG500	460 VAC	230 VAC	105 VDC

PMG102C — POWERED FROM MOTOR TERMINAL BLOCK — FAST-RELEASE (OVER EXCITATION) — FAST STOPPING (DC-SWITCHING) — 35

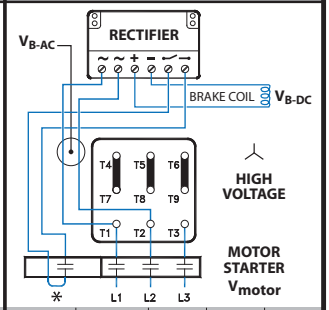

MOTOR	RECTIFIER	V_{motor}	$V_{B\text{-}AC}$	$V_{B\text{-}DC}$
230YY/460Y	PMG500	460 VAC	460 VAC	205 VDC

PMG102D — POWERED FROM MOTOR TERMINAL BLOCK — FAST-RELEASE (OVER EXCITATION) — FAST STOPPING (DC-SWITCHING) — 35

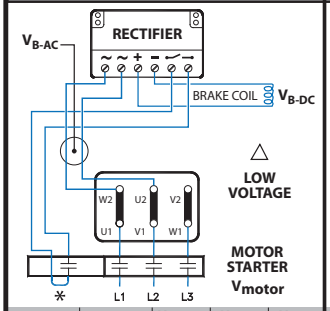

MOTOR	RECTIFIER	V_{motor}	$V_{B\text{-}AC}$	$V_{B\text{-}DC}$
208Δ/360Y	PMG500	208 VAC	208 VAC	105 VDC
230Δ/400Y	PMG500	230 VAC	230 VAC	105 VDC
400Δ/690Y	PMG500	400 VAC	400 VAC	180 VDC
460Δ/Y	PMG500	460 VAC	460 VAC	205 VDC

PMG102E — POWERED FROM MOTOR TERMINAL BLOCK — FAST-RELEASE (OVER EXCITATION) — FAST STOPPING (DC-SWITCHING) — 35

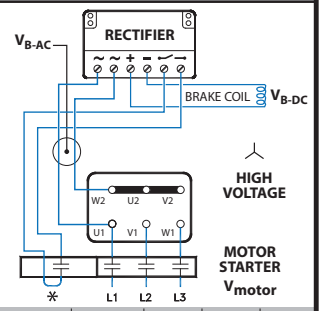

MOTOR	RECTIFIER	V_{motor}	$V_{B\text{-}AC}$	$V_{B\text{-}DC}$
230Δ/400Y	PMG500	400 VAC	230 VAC	105 VDC

✱ The normally open contact/s (NO) is not supplied by NORD. It must close at the same time power is supplied to the brake. The contact must be capable of switching inductive loads and/or be rated IEC AC3.

● = Braking Method

Typical Connection Diagrams

PMG104A

45 SEPERATE POWER SOURCE
FAST-RELEASE (OVER EXCITATION)
NORMAL STOPPING (AC-SWITCHING)

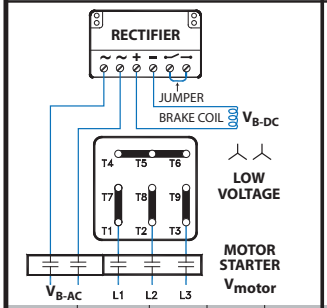

MOTOR	RECTIFIER	V_{motor}	V_{B-AC}	V_{B-DC}
230YY/460Y	PMG500	230 VAC	230 VAC	105 VDC

PMG104B

45 SEPERATE POWER SOURCE
FAST-RELEASE (OVER EXCITATION)
NORMAL STOPPING (AC-SWITCHING)

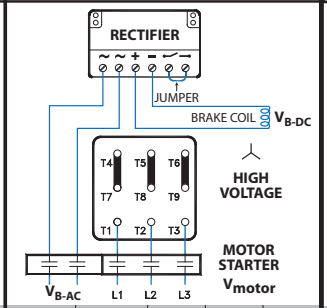

MOTOR	RECTIFIER	V_{motor}	V_{B-AC}	V_{B-DC}
230YY/460Y	PMG500	460 VAC	230 VAC	105 VDC

PMG104C

45 SEPERATE POWER SOURCE
FAST-RELEASE (OVER EXCITATION)
NORMAL STOPPING (AC-SWITCHING)

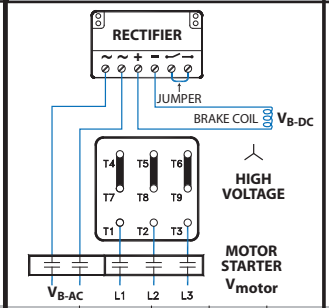

MOTOR	RECTIFIER	V_{motor}	V_{B-AC}	V_{B-DC}
230YY/460Y	PMG500	460 VAC	460 VAC	205 VDC

PMG104D

45 SEPERATE POWER SOURCE
FAST-RELEASE (OVER EXCITATION)
NORMAL STOPPING (AC-SWITCHING)

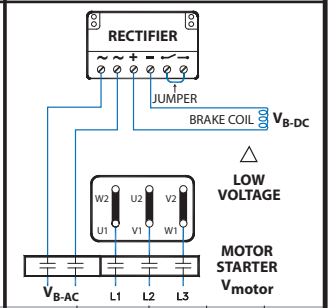

MOTOR	RECTIFIER	V_{motor}	V_{B-AC}	V_{B-DC}
208Δ/360Y	PMG500	208 VAC	208 VAC	105 VDC
230Δ/400Y	PMG500	230 VAC	230 VAC	105 VDC
400Δ/690Y	PMG500	400 VAC	400 VAC	180 VDC
460Δ/Y	PMG500	460 VAC	460 VAC	205 VDC

PMG104E

45 SEPERATE POWER SOURCE
FAST-RELEASE (OVER EXCITATION)
NORMAL STOPPING (AC-SWITCHING)

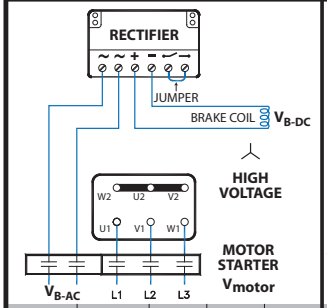

MOTOR	RECTIFIER	V_{motor}	V_{B-AC}	V_{B-DC}
230Δ/400Y	PMG500	400 VAC	230 VAC	105 VDC

PMG105A

50 SEPERATE POWER SOURCE
FAST-RELEASE (OVER EXCITATION)
FAST STOPPING (DC-SWITCHING)

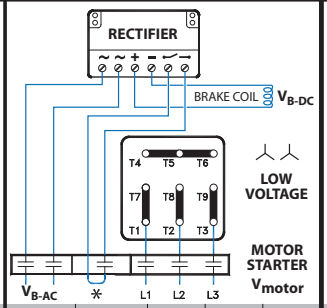

MOTOR	RECTIFIER	V_{motor}	V_{B-AC}	V_{B-DC}
230YY/460Y	PMG500	230 VAC	230 VAC	105 VDC

PMG105B

50 SEPERATE POWER SOURCE
FAST-RELEASE (OVER EXCITATION)
FAST STOPPING (DC-SWITCHING)

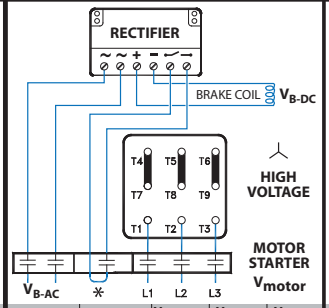

MOTOR	RECTIFIER	V_{motor}	V_{B-AC}	V_{B-DC}
230YY/460Y	PMG500	460 VAC	230 VAC	105 VDC

PMG105C

50 SEPERATE POWER SOURCE
FAST-RELEASE (OVER EXCITATION)
FAST STOPPING (DC-SWITCHING)

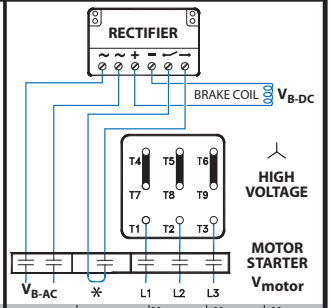

MOTOR	RECTIFIER	V_{motor}	V_{B-AC}	V_{B-DC}
230YY/460Y	PMG500	460 VAC	460 VAC	205 VDC

PMG105D

50 SEPERATE POWER SOURCE
FAST-RELEASE (OVER EXCITATION)
FAST STOPPING (DC-SWITCHING)

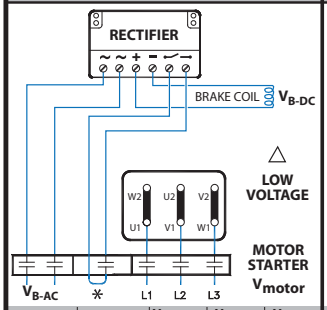

MOTOR	RECTIFIER	V_{motor}	V_{B-AC}	V_{B-DC}
208Δ/360Y	PMG500	208 VAC	208 VAC	105 VDC
230Δ/400Y	PMG500	230 VAC	230 VAC	105 VDC
400Δ/690Y	PMG500	400 VAC	400 VAC	180 VDC
460Δ/Y	PMG500	460 VAC	460 VAC	205 VDC

PMG105E

50 SEPERATE POWER SOURCE
FAST-RELEASE (OVER EXCITATION)
FAST STOPPING (DC-SWITCHING)

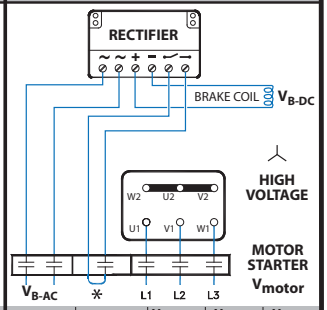

MOTOR	RECTIFIER	V_{motor}	V_{B-AC}	V_{B-DC}
230Δ/400Y	PMG500	400 VAC	230 VAC	105 VDC

* The normally open contact/s (NO) is not supplied by NORD. It must close at the same time power is supplied to the brake. The contact must be capable of switching inductive loads and/or be rated IEC AC3.

= Braking Method

Typical Connection Diagrams - Single Phase Motors

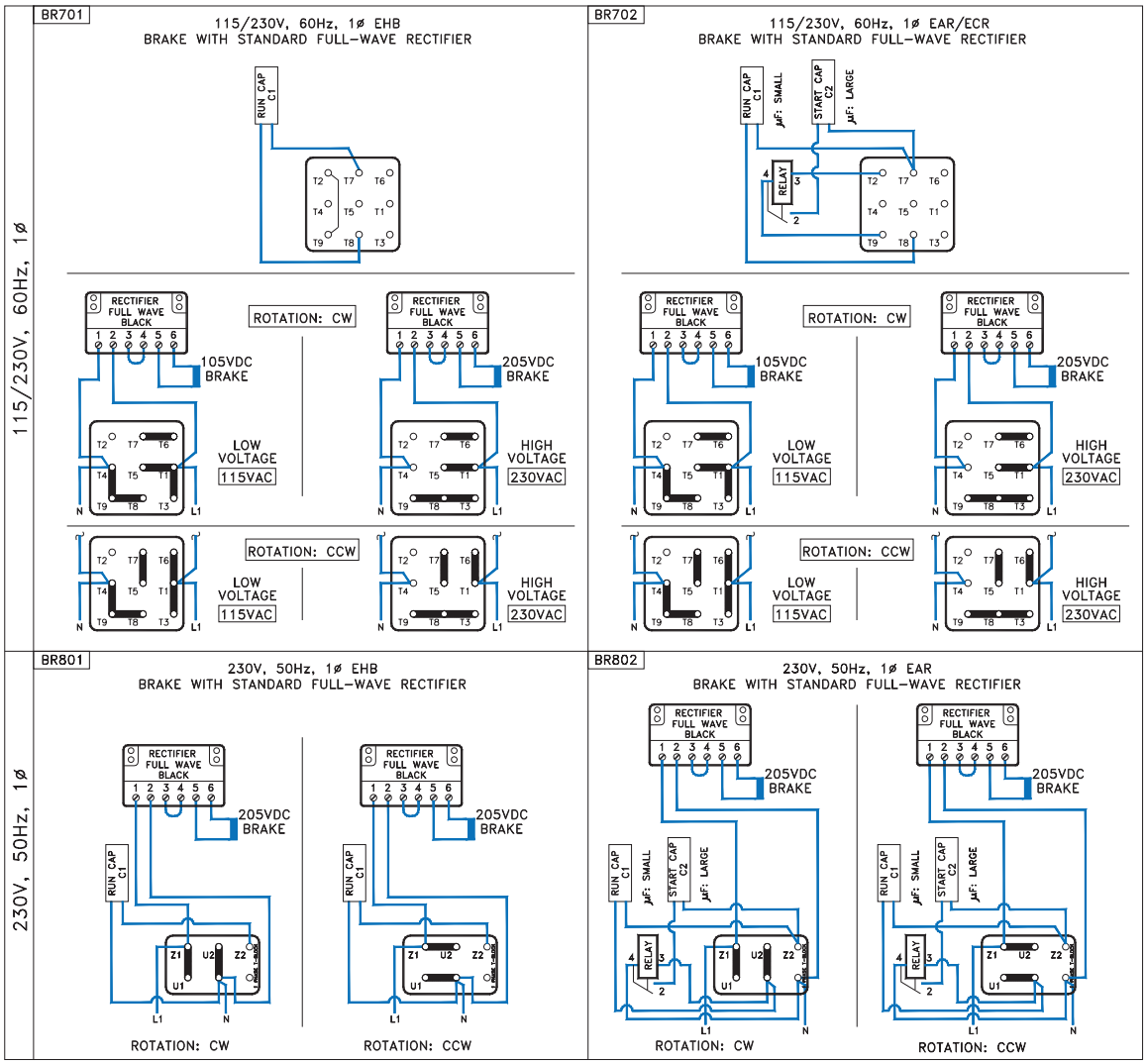

Troubleshooting Information

Troubleshooting	Cause	Remedy
Brake doesn't release	Air gap too large	Check air gap and adjust
	Brake not recieving electrical power	Check electrical connection
	Failed rectifier	Replace rectifier
	Brake is getting too warm	Use fast response (FR) rectifier
	Voltage to brake coil too small	Check connection voltageof brake coil
	Rectifier supply voltage from inverter	Rectifier voltage must be from seperate source. (Inverter output voltage varies)
Brake release is delayed	Air gap too large	Check air gap and adjust
	Voltage to brake coil too small	Check connection voltage of brake coil
Brake does not engage	Voltage to coil too large	Check connection voltages of brake windings
	Hand release is adjusted incorrectly	Adjust to correct air gap
	Anchor plate mechanically blocked	Remove mechanical blockage
Brake engagement is delayed	Voltage to coil too large	Check connection voltage of brake windings
	Brake is switched to AC side	Use DC switching

FAST ACTING BRAKE RECTIFIERS (GPE, GPU & PMG)

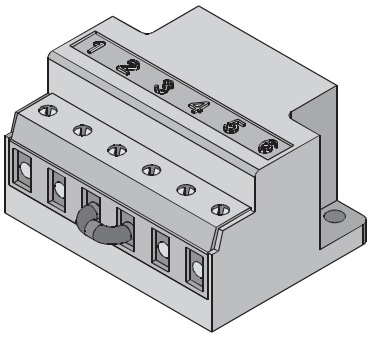

General Instructions

This manual provides general operating instructions for the "Fast Acting Brake Rectifiers type "GPE, GPU, and PMG" that are commonly offered by NORD in addition to the standard brake control rectifiers. Please feel free to contact NORD with any questions concerning the supplied brake rectifiers and brake components.

Safety Notice

Only qualified personnel should attempt installation, operation and maintenance of NORD brakes and brake rectifiers. If you have a question about a procedure or are uncertain about any detail, seek clarification and DO NOT PROCEED.

WARNING

- This equipment contains high electrical voltage. Remove and lockout all power from the electric motor and brake before any work is completed on the brake.
- The user is responsible for conforming to all national and local electrical and safety codes. Wiring practices, proper grounding, disconnects, and over current protection, are of particular importance.
- Make certain the load is supported when servicing the brake. Removing power from the brake or removing the brake from the motor will release the load, which may cause severe injury or death.
- Failure to follow proper procedures and precautions may result in severe bodily injury or death.

Brake Control Rectifiers

NORD brake control rectifiers convert AC voltage to DC voltage. Rectifiers are used because most applications require AC voltage to power the motor, but DC power is required to power the brake and DC power is not typically available. NORD brakemotors typically include the rectifier located inside the terminal box.

Rectifier Advantages

- Individual power source for each brake.
- Compact size, mounted inside the terminal box.
- Multiple types, voltage options and release/engagement modes available.
- Mountable in a separate control cabinet.
- Integral protection against voltage spikes.

Standard Rectifier Types

Full-Wave Rectifier

A rectifier in which both the positive and negative half-cycles of the AC input signal are rectified to produce a uni-directional DC current supply to the load or the brake. The output voltage is 90% of the input voltage ($V_{DC} = 0.90 \times V_{AC}$).

Half-Wave Rectifier

A rectifier in which only alternate half-cycles of the AC input signal are rectified to produce a uni-directional DC current supply to the load or the brake. The output voltage is 45% of the input voltage ($V_{DC} = 0.45 \times V_{AC}$).

Dual-Wave Rectifier

A rectifier that can be wired as either a full-wave rectifier or a half-wave rectifier depending upon how it is connected to the AC input signal.

IMPORTANT NOTE

This manual provides general operating instructions for NORD brakes with Fast-Acting brake Rectifiers. For additional brake and brake rectifier information please reference User Manual U35000.

Fast-Acting or Push-Hybrid Rectifiers [GPE, GPU & PMG]

A push-hybrid rectifier or fast-acting brake rectifier provides an initial "push" in the form of a timed full-wave brake-release function, which is then followed by a continuous half-wave brake-holding function. There are two ways to apply these rectifiers as follows:

- "Overexcitation" of the brake coil provides faster brake release or improved cycling capacity. The DC voltage of the brake coil is determined based upon using a half-wave rectifier. The output voltage is 45% of the input voltage ($V_{DC} = 0.45 \times V_{AC}$).
- "Reducer-Power Holding" of the brake coil maintains the brake in a released state by using only 25% of the power needed for the initial brake release. This results in very fast brake stopping. The DC voltage of the brake coil is determined based upon using a full-wave rectifier. The output voltage is 90% of the input voltage. ($V_{DC} = 0.90 \times V_{AC}$).

IMPORTANT NOTE

In order to prevent rapid wear, the PMG 500 rectifier is required when utilizing the larger 800 Nm (590 lb-ft) and 1200 Nm (885 lb-ft) twin-rotor brakes. The PMG500 rectifier is wired to "overexcite" the brake during its initial release.

FAST ACTING BRAKE RECTIFIERS (GPE, GPU & PMG)

Push-Hybrid Rectifiers External DC Switching (GPE)

Like the standard NORD brake control rectifiers, NORD's fast acting brake control rectifiers convert AC voltage to DC voltage. The "Fast Acting Brake Rectifiers"are utilized to improve brake performance and are often recommended in order to provide shorter brake release times or to provide faster stopping times.

The fast acting rectifiers are a two-stage "push" design, when power is first applied these rectifiers operate like a full-wave rectifier and then after a relatively short period of time they act like a half-wave rectifier. The GPE type rectifiers start out in full-wave mode when power is first applied and then after approximately 250 ms they switch to half-wave mode.

GPE rectifiers were designed for external control of the brake's DC-switching. GPE rectifiers are primarily used in across-the-line applications where the brake power is supplied by the motor terminals but they may also be used in situations where the brake power is supplied separately to the brake rectifier.

There are two ways to apply the fast acting rectifiers:

- The first method, known as "Overexcitation," provides fast brake release. The brake coil is selected like a half-wave system (45% of the AC supply voltage).
- The second method, known as "Reduced Power Holding," provides very fast brake stopping. The brake coil is selected like a full-wave system (90% of the AC supply voltage).

IMPORTANT NOTE

If the motor is connected to a frequency inverter, soft start, or is a two-speed motor, then seperate AC power must be supplied to the brake rectifier.

GPE Rectifier Dimensions

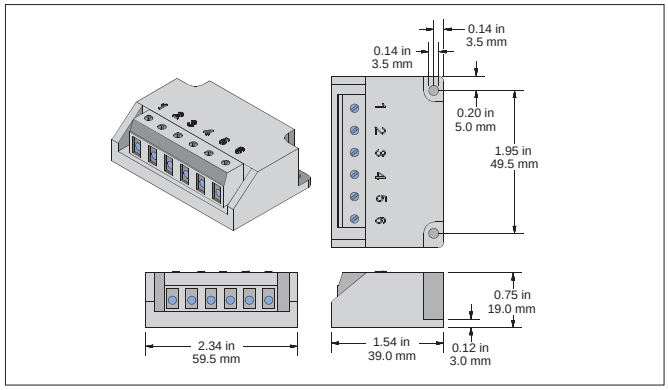

Ratings & Part Numbers

Model Type	GPE20L	GPE40L
Part Number	19140230	19140240
Protection (electronics)	Coated	Coated
Color	Black	
Input Voltage (V_{AC})	200V-275V	380V-480V
Output Voltage (V_{DC})	(V_{DC}=0.45 x V_{AC}) - As Half-Wave (V_{DC}=0.90 x V_{AC}) - As Full-Wave	
Rated Current @ 40°C	0.7 A	0.7A
Rated Current @ 75°C	0.5 A	0.5A
Temperature Range	-20°C to 75°C	
DC-Switching via	External Contact or IR Relay	

Braking Method

Braking Method	Break Release (Start)	Brake Engage (Stop)	Power Source
40	Standard	Very Fast (Reduced Power Holding)	Motor terminals
30	Fast (Overecitation)	Standard (AC Switching)	Motor terminals
35	Fast (Overecitation)	Fast (DC Switching)	Motor terminals

Basic Connection (AC & DC Switching)

The GPE brake system can be connected for standard stopping (AC-Switching), fast stopping (DC-Switching) and very fast stopping (Reduced power holding & DC-Switching). Fast brake release can also be achieved by selecting a different brake coil combination.

STANDARD STOPPING (AC-SWITCHING)

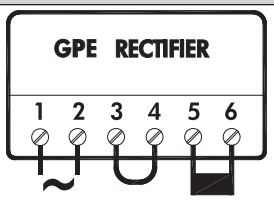

1 & 2	3 & 4	5 & 6
AC BRAKE VOLTAGE	JUMPER	DC BRAKE

FAST & VERY FAST STOPPING (DC-SWITCHING)

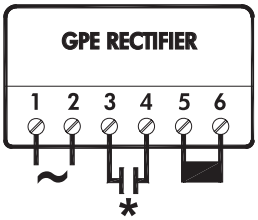

1 & 2	3 & 4	5 & 6
AC BRAKE VOLTAGE	NORMALLY OPEN CONTACT	DC BRAKE

* The normally open contact/s (NO) is not supplied by NORD it must close at the same time power is supplied to the brake. The contact must be capable of switching inductive loads and/or be rated at IEC AC3.

FAST ACTING BRAKE RECTIFIERS (GPE, GPU & PMG)

Push-Hybrid Rectifiers Integrated DC Switching (GPU)

Like the standard NORD brake control rectifiers, NORD's fast acting brake control rectifiers convert AC voltage to DC voltage. The "Fast Acting Brake Rectifiers"are utilized to improve brake performance and are often recommended in order to provide shorter brake release times or to provide faster stopping times.

The fast acting rectifiers are a two-stage "push" design. When power is first applied these rectifiers operate like a full-wave rectifier and then after a relatively short period of time they act like a half-wave rectifier. The GPU rectifiers start out in full-wave mode when power is first applied and then after approximately 250 ms they switch to half-wave mode.

GPU rectifiers were designed for integrated control of the brake's DC-switching and are voltage sensing. GPU rectifiers are primarily used in applications where there is a frequency inverter, soft start, or two-speed motor. Seperate AC power must be supplied to the brake rectifier.

There are two ways to apply the fast acting rectifiers:

- The first method, known as "Overexcitation," provides fast brake release. The brake coil is selected like a half-wave system (45% of the AC supply voltage).
- The second method, known as "Reduced Power Holding," provides very fast brake stopping. The brake coil is selected like a full-wave system (90% of the AC supply voltage).

IMPORTANT NOTE

The GPU rectifier may also be utilized for across-the-line applications; however it must always be powered separate from the motor and have its own pair of contactors or starters. It is unadvisable to use the motor terminal block to supply the GPU rectifier's AC power due to the motor's slow energy dissipation when switched off.

IMPORTANT NOTE

If the motor is connected to a frequency inverter, soft start, or is a two-speed motor, then seperate AC power must be supplied to the brake rectifier.

Braking Method

Braking Method	Break Release (Start)	Brake Engage (Stop)	Power Source
55	Standard	Very Fast (Reduced Power Holding)	Seperate power
45	Fast (Overecitation)	Standard (AC Switching)	Seperate power
50	Fast (Overecitation)	Fast (DC Switching)	Seperate power

GPU Rectifier Dimensions

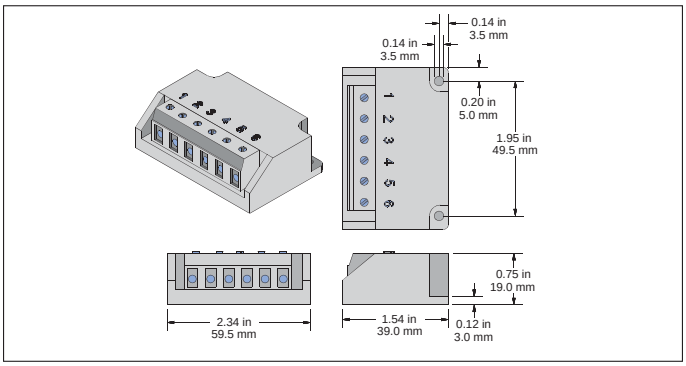

Ratings & Part Numbers

Model Type	GPU20L	GPU40L
Part Number	19140090	19140170
Protection (electronics)	Coated	Coated
Color	Black	
Input Voltage (V_{AC})	200V-275V	380V-480V
Output Voltage (V_{DC})	(V_{DC}=0.45 x V_{AC}) - As Half-Wave (V_{DC}=0.90 x V_{AC}) - As Full-Wave	
Rated Current @ 40°C	0.7A	0.7A
Rated Current @ 75°C	0.5A	0.5A
Temperature Range	-20°C to 75°C	
DC-Switching via	Internal Activation	

Basic Connection (AC & DC Switching)

The GPU brake system can be connected for standard stopping (AC-Switching), fast stopping (DC-Switching) and very fast stopping (Reduced power holding & DC-Switching). Fast brake release can also be achieved by selecting a different brake coil combination.

STANDARD STOPPING AC-SWITCHING

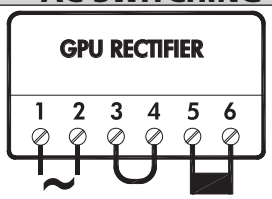

1 & 2	3 & 4	5 & 6
AC BRAKE VOLTAGE	JUMPER	DC BRAKE

FAST & VERY FAST STOPPING DC-SWITCHING

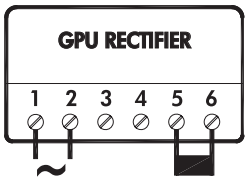

1 & 2	3 & 4	5 & 6
AC BRAKE VOLTAGE	-	DC BRAKE

Push-Hybrid Rectifiers External DC Switching (PMG)

Like the standard NORD brake control rectifiers, NORD's fast acting brake control rectifiers convert AC voltage to DC voltage. The "Fast Acting Brake Rectifiers"are utilized to improve brake performance and are often recommended in order to provide shorter brake release times or to provide faster stopping times.

The fast acting rectifiers are a two-stage "push" design. When power is first applied these rectifiers operate like a full-wave rectifier and then after a relatively short period of time they act like a half-wave rectifier. The PMG type rectifiers start out in full-wave mode when power is first applied and then after approximately 250 ms they switch to half-wave mode.

PMG rectifiers were designed for external control of the brake's DC-switching. PMG rectifiers are primarily used in across-the-line applications where the brake power is supplied by the motor terminals, but they may also be used in situations where the brake power is supplied separately from the brake rectifier.

There are two ways to apply the fast acting rectifiers:

- The first method, known as "Overexcitation," provides fast brake release. The brake coil is selected like a half-wave system (45% of the AC supply voltage).
- The second method, known as "Reduced Power Holding," provides very fast brake stopping. The brake coil is selected like a full-wave system (90% of the AC supply voltage).

IMPORTANT NOTE

If the motor is connected to a frequency inverter, soft start, or is a two-speed motor, then seperate AC power must be supplied to the brake rectifier.

PMG Rectifier Dimensions

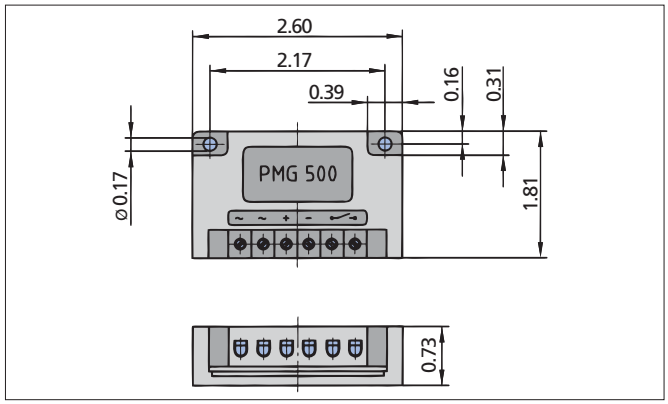

Ratings & Part Numbers

Model Type	PMG 500
Part Number	19140200
Protection (electronics)	Coated
Color	Black
Input Voltage (V_{AC})	200-500V_{AC} +/- 10%
Output Voltage (V_{DC})	(V_{DC}=0.45 x V_{AC}) - As Half-Wave (V_{DC}=0.90 x V_{AC}) - As Full-Wave
Rated Current @ 40°C	4.0 A
Rated Current @ 75°C	2.8 A
Temperature Range	-15°C to 80°C
DC-Switching via	External Contact

Braking Method

Braking Method	Break Release (Start)	Brake Engage (Stop)	Power Source
40	Standard	Very Fast (Reduced Power Holding)	Motor terminals
30	Fast (Overecitation)	Standard (AC Switching)	Motor terminals
35	Fast (Overecitation)	Fast (DC Switching)	Motor terminals
55	Standard	Very Fast (Reduced Power Holding)	Seperate power
45	Fast (Overecitation)	Standard (AC Switching)	Seperate power
50	Fast (Overecitation)	Fast (DC Switching)	Seperate power

Basic Connection (AC & DC Switching)

The PMG brake system can be connected for standard stopping (AC-Switching), fast stopping (DC-Switching) and very fast stopping (Reduced power holding & DC-Switching). Fast brake release can also be achieved by selecting a different brake coil combination.

STANDARD STOPPING (AC-SWITCHING)

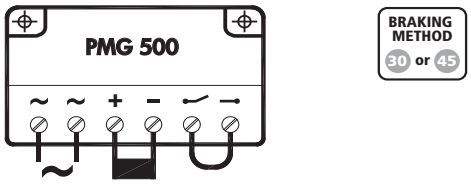

~ & ~	+ & -	⊸ & ⊸
AC BRAKE VOLTAGE	DC BRAKE	JUMPER

FAST & VERY FAST STOPPING (DC-SWITCHING)

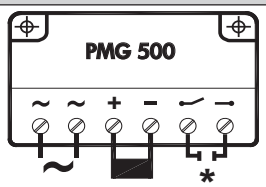

~ & ~	+ & -	⊸ & ⊸
AC BRAKE VOLTAGE	DC BRAKE	NORMALLY OPEN CONTACT

* The normally open contact/s (NO) is not supplied by NORD it must close at the same time power is supplied to the brake. The contact must be capable of switching inductive loads and/or be rated at IEC AC3.

Brake Times & Electrical Selection

Brake timing performance is critical in selecting the optimal brake system. NORD brakes can provide exceptional performance in terms of the release (start) times and engagement (stop) times. Use the following guidelines in order to select the correct brake control components and connections.

1) Determine if the brake needs to be wired directly from the motor terminal block or powered by a separate source.

- If you are using a frequency inverter, soft-start or a two speed motor you will need to supply the rectifier from a separate power source.

- If the motor is powered direct across-the-line the rectifier power can be supplied from the motor's terminal block.

2) What type of performance do I need?

- Is the standard brake performance OK?

- Is a higher performance required for fast brake release or very fast brake stopping?

3) Determine the brake supply voltage and check the rectifier compatability using the table on the page 6.

Selection Suggestions

When Fast or Very Fast Stopping is Recommended

Any applications that require quick stops and positive action at stand-still

Recommended Applications

- conveyors and inclined conveyors
- hoists and lifts
- bulk material handling equipment (bucket elevators, idler conveyor's).

⚠ *WARNING* ⚠

Hoisting (lifting/lowering) applications - must have the brake wired for fast response (DC-switching)

When Fast-Release is Recommended (Overexcitation)

Any application that is very high-cycling with frequent starts and stops. These applications require the brake to release very-quickly in order to avoid excessive heat build-up in the AC motor and brake coil.

Recommended Applications

- Index conveyors
- Diverters

Power Source	Brake Release (start)	Brake engagement (stop)	Braking Method *	Rectifier
Motor Terminal Block	Standard	Very Fast (Reduced power holding)	40	GPE or PMG 500
	Fast (Overexcitation)	Standard (AC switching)	30	GPE or PMG 500
	Fast (Overexcitation)	Fast (DC switching)	35	GPE or PMG 500
Seperate Power Source	Standard	Very Fast (Reduced power holding)	55	GPU or PMG 500
	Fast (Overexcitation)	Standard (AC switching)	45	GPU or PMG 500
	Fast (Overexcitation)	Fast (DC switching)	50	GPU or PMG 500

*** Braking methods referenced in connection diagrams on pages 7-11.**

FAST ACTING BRAKE RECTIFIERS (GPE, GPU & PMG)

Rectifier Supply Voltage (VAC)	Brake Coil Voltage (VDC)	Braking Method	Rectifier Type	Rectifier P/N	BRE 5	BRE 10	BRE 20	BRE 40	BRE 60	BRE 100	BRE 150	BRE 250	BRE 400	BRE 800	BRE 1200
208 (200-208)	105	30	GPE20L	19140230	X	X	X	X							
	105	30	PMG500	19140200					X	X	X	X	X	X	X
	105	35	GPE20L	19140230	X	X	X	X							
	105	35	PMG500	19140200					X	X	X	X	X	X	X
	180	40	GPE20L	19140230	X	X	X	X	X	X	X				
	180	40	PMG500	19140200								X	X	X	X
	105	45	GPU20L	19140090	X	X	X	X							
	105	45	PMG500	19140200					X	X	X	X	X	X	X
	105	50	GPU20L	19140090	X	X	X	X							
	105	50	PMG500	19140200					X	X	X	X	X	X	X
	180	55	GPU20L	19140090	X	X	X	X	X	X	X				
	180	55	PMG500	19140200								X	X	X	X
230 (220-240)	105	30	GPE20L	19140230	X	X	X	X							
	105	30	PMG500	19140200					X	X	X	X	X	X	X
	105	35	GPE20L	19140230	X	X	X	X	X	X	X				
	105	35	PMG500	19140200								X	X	X	X
	205	40	GPE20L	19140230	X	X	X	X	X	X	X				
	205	40	PMG500	19140200								X	X	X	X
	105	45	GPU20L	19140090	X	X	X	X							
	105	45	PMG500	19140200					X	X	X	X	X	X	X
	105	50	GPU20L	19140090	X	X	X	X							
	105	50	PMG500	19140200					X	X	X	X	X	X	X
	205	55	GPU20L	19140090	X	X	X	X	X	X	X				
	205	55	PMG500	19140200								X	X	X	X
332	180	30	GPE40L	19140240	X	X	X	X	X	X	X				
	180	30	PMG500	19140200								X	X	X	X
	180	35	GPE40L	19140240	X	X	X	X	X	X	X				
	180	35	PMG500	19140200								X	X	X	X
	180	45	GPU40L	19140170	X	X	X	X	X	X	X				
	180	50	GPU40L	19140170	X	X	X	X	X	X	X				
400 (380-415)	180	30	GPE40L	19140240	X	X	X	X	X	X	X				
	180	30	PMG500	19140200								X	X	X	X
	180	35	GPE40L	19140240	X	X	X	X	X	X	X				
	180	35	PMG500	19140200								X	X	X	X
	180	45	GPU20L	19140090	X	X	X	X	X	X	X				
	180	45	PMG500	19140200								X	X	X	X
	180	50	GPU20L	19140090	X	X	X	X	X	X	X				
	180	50	PMG500	19140200								X	X	X	X
460 (440-480)	205	30	GPE40L	19140240	X	X	X	X	X	X	X				
	205	30	PMG500	19140200								X	X	X	X
	205	35	GPE40L	19140240	X	X	X	X	X	X	X				
	205	35	PMG500	19140200								X	X	X	X
	205	45	GPU40L	19140170	X	X	X	X	X	X	X				
	205	45	PMG500	19140200								X	X	X	X
	205	50	GPU40L	19140170	X	X	X	X	X	X	X				
	205	50	PMG500	19140200								X	X	X	X

GP101A

POWERED FROM MOTOR TERMINAL BLOCK
FAST-RELEASE (OVER EXCITATION)
NORMAL STOPPING (AC-SWITCHING)
30

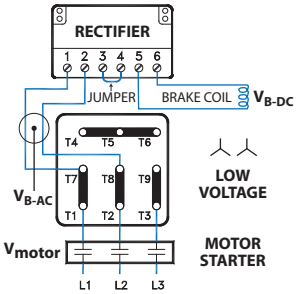

MOTOR	RECTIFIER	Vmotor	VB-AC	VB-DC
230YY/460Y	GPE20L	230 VAC	230 VAC	105 VDC

GP101B

POWERED FROM MOTOR TERMINAL BLOCK
FAST-RELEASE (OVER EXCITATION)
NORMAL STOPPING (AC-SWITCHING)
30

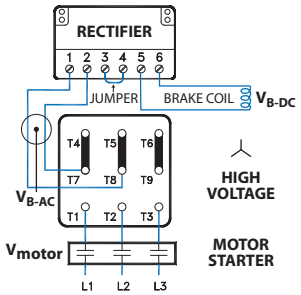

MOTOR	RECTIFIER	Vmotor	VB-AC	VB-DC
230YY/460Y	GPE20L	460 VAC	230 VAC	105 VDC

GP101C

POWERED FROM MOTOR TERMINAL BLOCK
FAST-RELEASE (OVER EXCITATION)
NORMAL STOPPING (AC-SWITCHING)
30

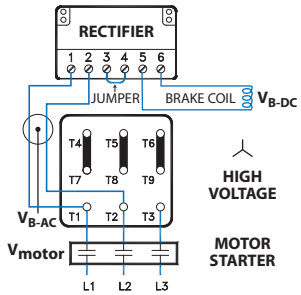

MOTOR	RECTIFIER	Vmotor	VB-AC	VB-DC
230YY/460Y	GPE40L	460 VAC	460 VAC	205 VDC

GP101D

POWERED FROM MOTOR TERMINAL BLOCK
FAST-RELEASE (OVER EXCITATION)
NORMAL STOPPING (AC-SWITCHING)
30

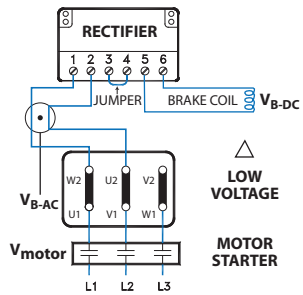

MOTOR	RECTIFIER	Vmotor	VB-AC	VB-DC
208Δ/360Y	GPE20L	208 VAC	208 VAC	105 VDC
230Δ/400Y	GPE20L	230 VAC	230 VAC	105 VDC
400Δ/690Y	GPE40L	400 VAC	400 VAC	180 VDC
460Δ/Y	GPE40L	460 VAC	460 VAC	205 VDC

GP101E

POWERED FROM MOTOR TERMINAL BLOCK
FAST-RELEASE (OVER EXCITATION)
NORMAL STOPPING (AC-SWITCHING)
30

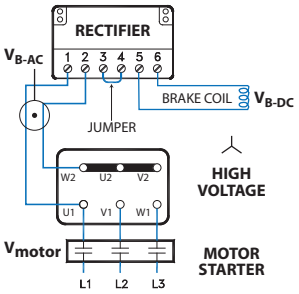

MOTOR	RECTIFIER	Vmotor	VB-AC	VB-DC
230Δ/400Y	GPE20L	400 VAC	230 VAC	105 VDC
332Δ/575Y	GPE40L	575 VAC	332 VAC	180 VDC

GP102A

POWERED FROM MOTOR TERMINAL BLOCK
FAST-RELEASE (OVER EXCITATION)
FAST STOPPING (DC-SWITCHING)
35

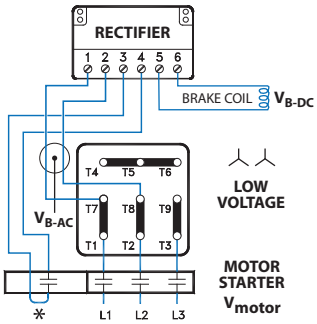

MOTOR	RECTIFIER	Vmotor	VB-AC	VB-DC
230YY/460Y	GPE20L	230 VAC	230 VAC	105 VDC

GP102B

POWERED FROM MOTOR TERMINAL BLOCK
FAST-RELEASE (OVER EXCITATION)
FAST STOPPING (DC-SWITCHING)
35

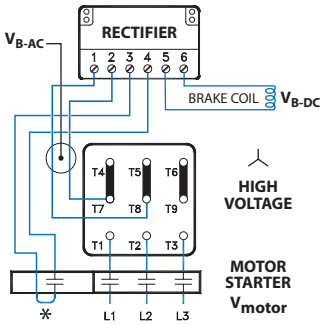

MOTOR	RECTIFIER	Vmotor	VB-AC	VB-DC
230YY/460Y	GPE20L	460 VAC	230 VAC	105 VDC

GP102C

POWERED FROM MOTOR TERMINAL BLOCK
FAST-RELEASE (OVER EXCITATION)
FAST STOPPING (DC-SWITCHING)
35

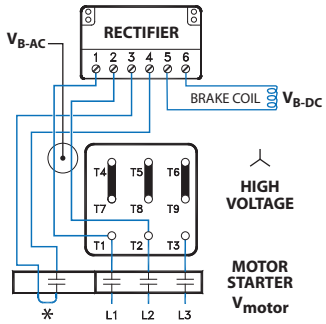

MOTOR	RECTIFIER	Vmotor	VB-AC	VB-DC
230YY/460Y	GPE40L	460 VAC	460 VAC	205 VDC

GP102D

POWERED FROM MOTOR TERMINAL BLOCK
FAST-RELEASE (OVER EXCITATION)
FAST STOPPING (DC-SWITCHING)
35

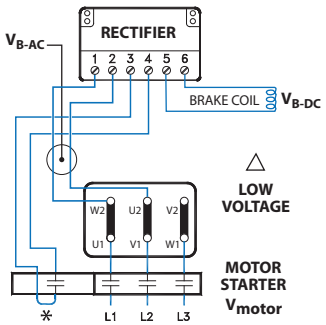

MOTOR	RECTIFIER	Vmotor	VB-AC	VB-DC
208Δ/360Y	GPE20L	208 VAC	208 VAC	105 VDC
230Δ/400Y	GPE20L	230 VAC	230 VAC	105 VDC
400Δ/690Y	GPE40L	400 VAC	400 VAC	180 VDC
460Δ/Y	GPE40L	460 VAC	460 VAC	205 VDC

GP102E

POWERED FROM MOTOR TERMINAL BLOCK
FAST-RELEASE (OVER EXCITATION)
FAST STOPPING (DC-SWITCHING)
35

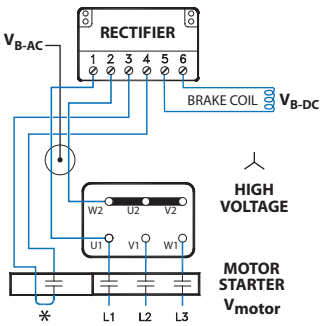

MOTOR	RECTIFIER	Vmotor	VB-AC	VB-DC
230Δ/400Y	GPE20L	400 VAC	230 VAC	105 VDC
332Δ/575Y	GPE40L	575 VAC	332 VAC	180 VDC

GP103A

POWERED FROM MOTOR TERMINAL BLOCK
STANDARD RELEASE
VERY FAST STOPPING
(DC-SWITCHING + REDUCED POWER HOLDING)
40

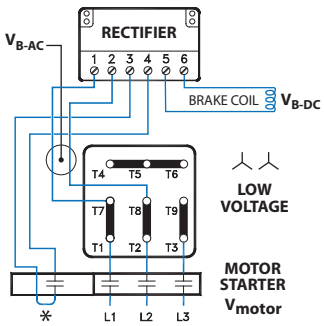

MOTOR	RECTIFIER	Vmotor	VB-AC	VB-DC
230YY/460Y	GPE20L	230 VAC	230 VAC	205 VDC

GP103B

POWERED FROM MOTOR TERMINAL BLOCK
STANDARD RELEASE
VERY FAST STOPPING
(DC-SWITCHING + REDUCED POWER HOLDING)
40

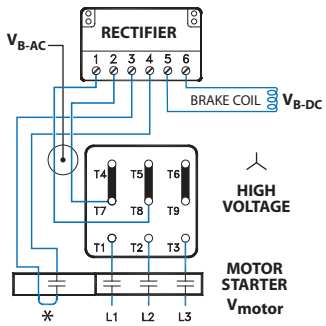

MOTOR	RECTIFIER	Vmotor	VB-AC	VB-DC
230YY/460Y	GPE20L	460 VAC	230 VAC	205 VDC

✱ The normally open contact/s (NO) is not supplied by NORD. It must close at the same time power is supplied to the brake. The contact must be capable of switching inductive loads and/or be rated IEC AC3.

= Braking Method

GP103C — 40
POWERED FROM MOTOR TERMINAL BLOCK
STANDARD RELEASE
VERY FAST STOPPING
(DC-SWITCHING + REDUCED POWER HOLDING)

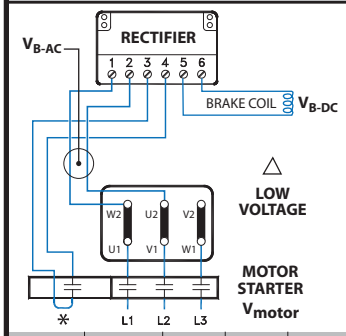

MOTOR	RECTIFIER	V_{motor}	V_{B-AC}	V_{B-DC}
208Δ/360Y	GPE20L	208 VAC	208 VAC	180 VDC
230Δ/400Y	GPE20L	230 VAC	230 VAC	205 VDC

GP103D — 40
POWERED FROM MOTOR TERMINAL BLOCK
STANDARD RELEASE
VERY FAST STOPPING
(DC-SWITCHING + REDUCED POWER HOLDING)

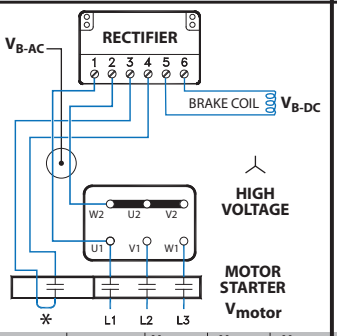

MOTOR	RECTIFIER	V_{motor}	V_{B-AC}	V_{B-DC}
230Δ/400Y	GPE20L	400 VAC	230 VAC	205 VDC

GP104A — 45
SEPERATE POWER SOURCE
FAST-RELEASE (OVER EXCITATION)
NORMAL STOPPING (AC-SWITCHING)

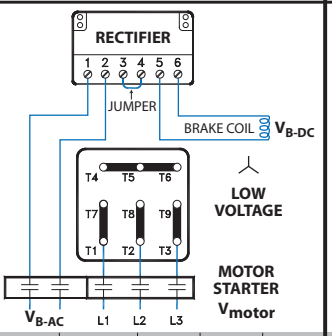

MOTOR	RECTIFIER	V_{motor}	V_{B-AC}	V_{B-DC}
230YY/460Y	GPU20L	230 VAC	230 VAC	105 VDC

GP104B — 45
SEPERATE POWER SOURCE
FAST-RELEASE (OVER EXCITATION)
NORMAL STOPPING (AC-SWITCHING)

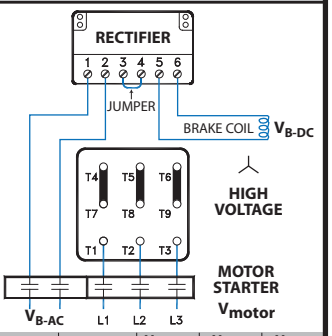

MOTOR	RECTIFIER	V_{motor}	V_{B-AC}	V_{B-DC}
230YY/460Y	GPU20L	460 VAC	230 VAC	105 VDC

GP104C — 45
SEPERATE POWER SOURCE
FAST-RELEASE (OVER EXCITATION)
NORMAL STOPPING (AC-SWITCHING)

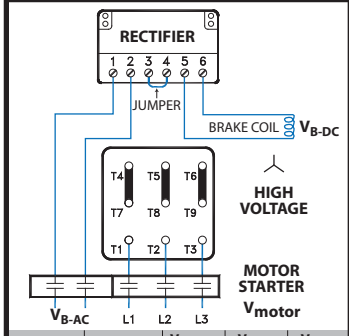

MOTOR	RECTIFIER	V_{motor}	V_{B-AC}	V_{B-DC}
230YY/460Y	GPU40L	460 VAC	460 VAC	205 VDC

GP104D — 45
SEPERATE POWER SOURCE
FAST-RELEASE (OVER EXCITATION)
NORMAL STOPPING (AC-SWITCHING)

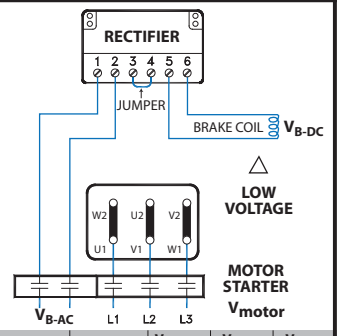

MOTOR	RECTIFIER	V_{motor}	V_{B-AC}	V_{B-DC}
208Δ/360Y	GPU20L	208 VAC	208 VAC	105 VDC
230Δ/400Y	GPU20L	230 VAC	230 VAC	105 VDC
400Δ/690Y	GPU40L	400 VAC	400 VAC	180 VDC
460Δ/Y	GPU40L	460 VAC	460 VAC	205 VDC

GP104E — 45
SEPERATE POWER SOURCE
FAST-RELEASE (OVER EXCITATION)
NORMAL STOPPING (AC-SWITCHING)

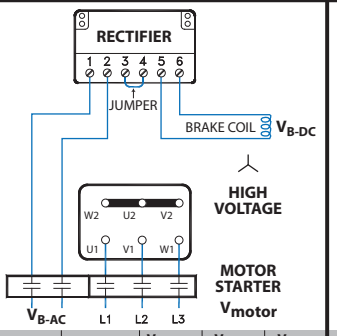

MOTOR	RECTIFIER	V_{motor}	V_{B-AC}	V_{B-DC}
230Δ/400Y	GPU20L	400 VAC	230 VAC	105 VDC
332Δ/575Y	GPU40L	575 VAC	332 VAC	180 VDC

GP105A — 50
SEPERATE POWER SOURCE
FAST-RELEASE (OVER EXCITATION)
FAST STOPPING (DC-SWITCHING)

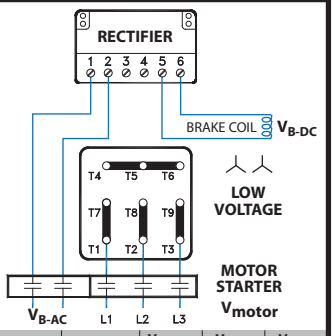

MOTOR	RECTIFIER	V_{motor}	V_{B-AC}	V_{B-DC}
230YY/460Y	GPU20L	230 VAC	230 VAC	105 VDC

GP105B — 50
SEPERATE POWER SOURCE
FAST-RELEASE (OVER EXCITATION)
FAST STOPPING (DC-SWITCHING)

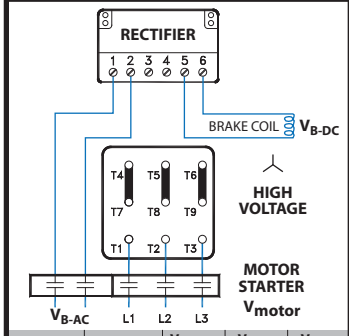

MOTOR	RECTIFIER	V_{motor}	V_{B-AC}	V_{B-DC}
230YY/460Y	GPU20L	460 VAC	230 VAC	105 VDC

GP105C — 50
SEPERATE POWER SOURCE
FAST-RELEASE (OVER EXCITATION)
FAST STOPPING (DC-SWITCHING)

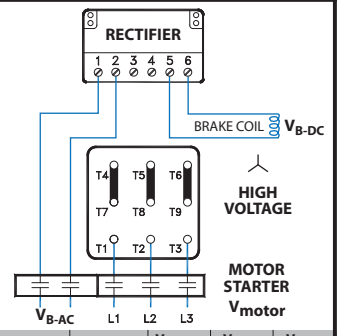

MOTOR	RECTIFIER	V_{motor}	V_{B-AC}	V_{B-DC}
230YY/460Y	GPU40L	460 VAC	460 VAC	205 VDC

GP105D — 50
SEPERATE POWER SOURCE
FAST-RELEASE (OVER EXCITATION)
FAST STOPPING (DC-SWITCHING)

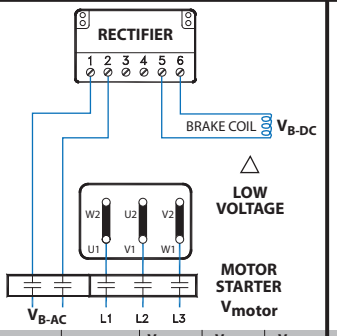

MOTOR	RECTIFIER	V_{motor}	V_{B-AC}	V_{B-DC}
208Δ/360Y	GPU20L	208 VAC	208 VAC	105 VDC
230Δ/400Y	GPU20L	230 VAC	230 VAC	105 VDC
400Δ/690Y	GPU40L	400 VAC	400 VAC	180 VDC
460Δ/Y	GPU40L	460 VAC	460 VAC	205 VDC

GP105E — 50
SEPERATE POWER SOURCE
FAST-RELEASE (OVER EXCITATION)
FAST STOPPING (DC-SWITCHING)

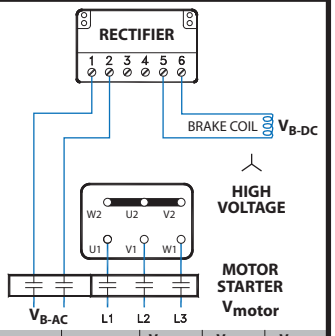

MOTOR	RECTIFIER	V_{motor}	V_{B-AC}	V_{B-DC}
230Δ/400Y	GPU20L	400 VAC	230 VAC	105 VDC
332Δ/575Y	GPU40L	575 VAC	332 VAC	180 VDC

✱ The normally open contact/s (NO) is not supplied by NORD. It must close at the same time power is supplied to the brake. The contact must be capable of switching inductive loads and/or be rated IEC AC3.

= Braking Method

FAST ACTING BRAKE RECTIFIERS (GPE, GPU & PMG)

GP106A

SEPERATE POWER SOURCE
STANDARD RELEASE
VERY FAST STOPPING
(DC-SWITCHING + REDUCED POWER HOLDING)
55

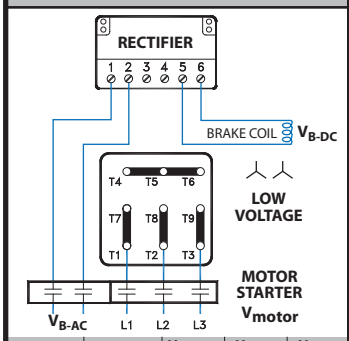

MOTOR	RECTIFIER	V_{motor}	V_{B-AC}	V_{B-DC}
230YY/460Y	GPU20L	230 VAC	230 VAC	205 VDC

GP106B

SEPERATE POWER SOURCE
STANDARD RELEASE
VERY FAST STOPPING
(DC-SWITCHING + REDUCED POWER HOLDING)
55

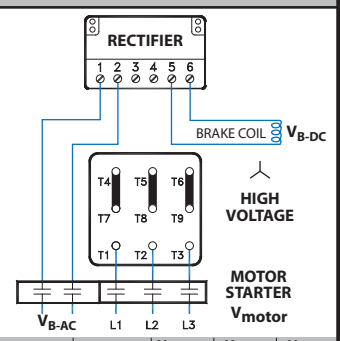

MOTOR	RECTIFIER	V_{motor}	V_{B-AC}	V_{B-DC}
230YY/460Y	GPU20L	460 VAC	230 VAC	205 VDC

GP106C

SEPERATE POWER SOURCE
STANDARD RELEASE
VERY FAST STOPPING
(DC-SWITCHING + REDUCED POWER HOLDING)
55

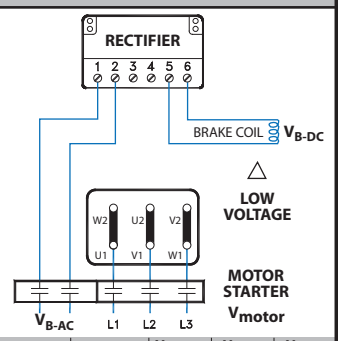

MOTOR	RECTIFIER	V_{motor}	V_{B-AC}	V_{B-DC}
208Δ/360Y	GPU20L	208 VAC	208 VAC	180 VDC
230Δ/400Y	GPU20L	230 VAC	230 VAC	205 VDC

GP106D

SEPERATE POWER SOURCE
STANDARD RELEASE
VERY FAST STOPPING
(DC-SWITCHING + REDUCED POWER HOLDING)
55

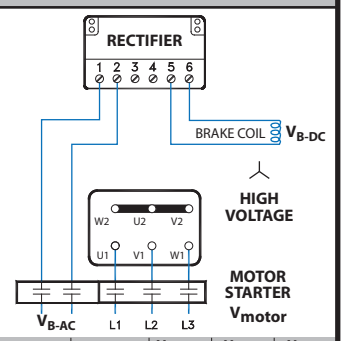

MOTOR	RECTIFIER	V_{motor}	V_{B-AC}	V_{B-DC}
230Δ/400Y	GPU20L	400 VAC	230 VAC	205 VDC

PMG101A

POWERED FROM
MOTOR TERMINAL BLOCK
FAST-RELEASE (OVER EXCITATION)
NORMAL STOPPING (AC-SWITCHING)
30

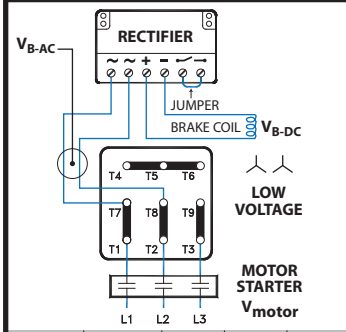

MOTOR	RECTIFIER	V_{motor}	V_{B-AC}	V_{B-DC}
230YY/460Y	PMG500	230 VAC	230 VAC	105 VDC

PMG101B

POWERED FROM
MOTOR TERMINAL BLOCK
FAST-RELEASE (OVER EXCITATION)
NORMAL STOPPING (AC-SWITCHING)
30

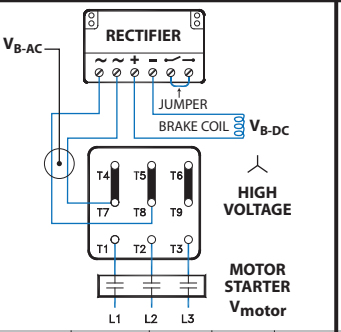

MOTOR	RECTIFIER	V_{motor}	V_{B-AC}	V_{B-DC}
230YY/460Y	PMG500	460 VAC	230 VAC	105 VDC

PMG101C

POWERED FROM
MOTOR TERMINAL BLOCK
FAST-RELEASE (OVER EXCITATION)
NORMAL STOPPING (AC-SWITCHING)
30

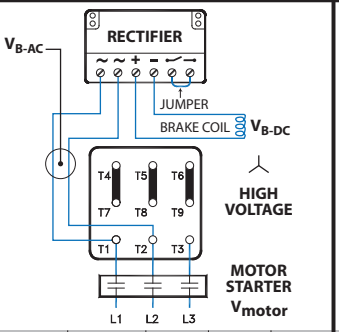

MOTOR	RECTIFIER	V_{motor}	V_{B-AC}	V_{B-DC}
230YY/460Y	PMG500	460 VAC	460 VAC	205 VDC

PMG101D

POWERED FROM
MOTOR TERMINAL BLOCK
FAST-RELEASE (OVER EXCITATION)
NORMAL STOPPING (AC-SWITCHING)
30

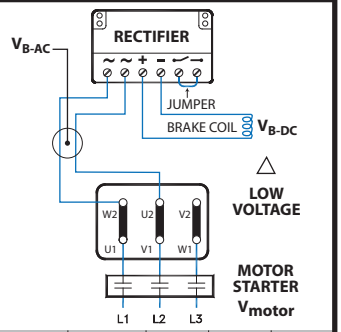

MOTOR	RECTIFIER	V_{motor}	V_{B-AC}	V_{B-DC}
208Δ/360Y	PMG500	208 VAC	208 VAC	105 VDC
230Δ/400Y	PMG500	230 VAC	230 VAC	105 VDC
400Δ/690Y	PMG500	400 VAC	400 VAC	180 VDC
460Δ/Y	PMG500	460 VAC	460 VAC	205 VDC

PMG101E

POWERED FROM
MOTOR TERMINAL BLOCK
FAST-RELEASE (OVER EXCITATION)
NORMAL STOPPING (AC-SWITCHING)
30

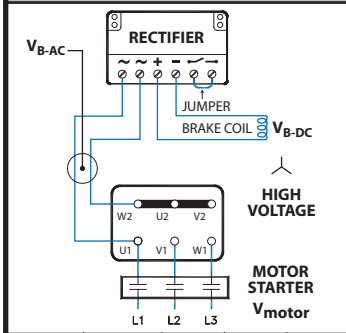

MOTOR	RECTIFIER	V_{motor}	V_{B-AC}	V_{B-DC}
230Δ/400Y	PMG500	400 VAC	230 VAC	105 VDC

PMG102A

POWERED FROM
MOTOR TERMINAL BLOCK
FAST-RELEASE (OVER EXCITATION)
FAST STOPPING (DC-SWITCHING)
35

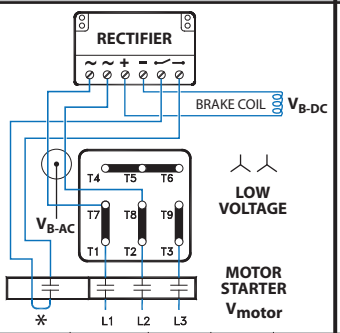

MOTOR	RECTIFIER	V_{motor}	V_{B-AC}	V_{B-DC}
230YY/460Y	PMG500	230 VAC	230 VAC	105 VDC

PMG102B

POWERED FROM
MOTOR TERMINAL BLOCK
FAST-RELEASE (OVER EXCITATION)
FAST STOPPING (DC-SWITCHING)
35

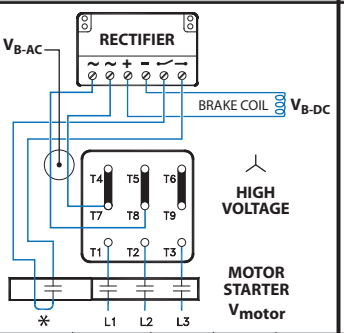

MOTOR	RECTIFIER	V_{motor}	V_{B-AC}	V_{B-DC}
230YY/460Y	PMG500	460 VAC	230 VAC	105 VDC

PMG102C

POWERED FROM
MOTOR TERMINAL BLOCK
FAST-RELEASE (OVER EXCITATION)
FAST STOPPING (DC-SWITCHING)
35

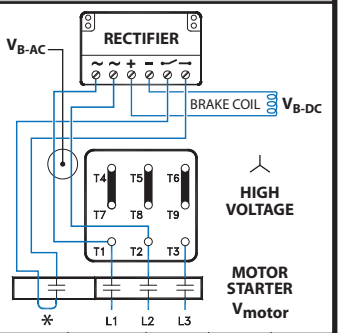

MOTOR	RECTIFIER	V_{motor}	V_{B-AC}	V_{B-DC}
230YY/460Y	PMG500	460 VAC	460 VAC	205 VDC

* The normally open contact/s (NO) is not supplied by NORD. It must close at the same time power is supplied to the brake. The contact must be capable of switching inductive loads and/or be rated IEC AC3.

= Braking Method

PMG102D — 35

POWERED FROM MOTOR TERMINAL BLOCK
FAST-RELEASE (OVER EXCITATION)
FAST STOPPING (DC-SWITCHING)

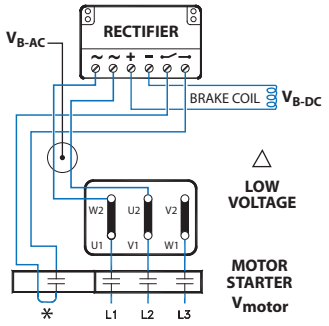

MOTOR	RECTIFIER	V_{motor}	V_{B-AC}	V_{B-DC}
208Δ/360Y	PMG500	208 VAC	208 VAC	105 VDC
230Δ/400Y	PMG500	230 VAC	230 VAC	105 VDC
400Δ/690Y	PMG500	400 VAC	400 VAC	180 VDC
460Δ/Y	PMG500	460 VAC	460 VAC	205 VDC

PMG102E — 35

POWERED FROM MOTOR TERMINAL BLOCK
FAST-RELEASE (OVER EXCITATION)
FAST STOPPING (DC-SWITCHING)

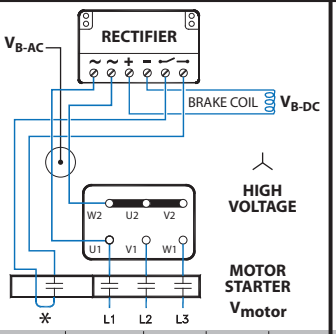

MOTOR	RECTIFIER	V_{motor}	V_{B-AC}	V_{B-DC}
230Δ/400Y	PMG500	400 VAC	230 VAC	105 VDC

PMG103A — 40

POWERED FROM MOTOR TERMINAL BLOCK
STANDARD RELEASE
VERY FAST STOPPING
(DC-SWITCHING + REDUCED POWER HOLDING)

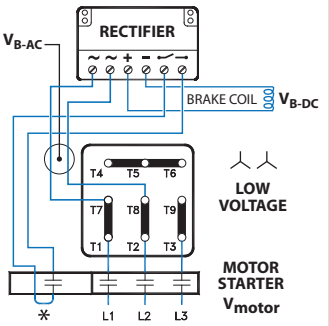

MOTOR	RECTIFIER	V_{motor}	V_{B-AC}	V_{B-DC}
230YY/460Y	PMG500	230 VAC	230 VAC	205 VDC

PMG103B — 40

POWERED FROM MOTOR TERMINAL BLOCK
STANDARD RELEASE
VERY FAST STOPPING
(DC-SWITCHING + REDUCED POWER HOLDING)

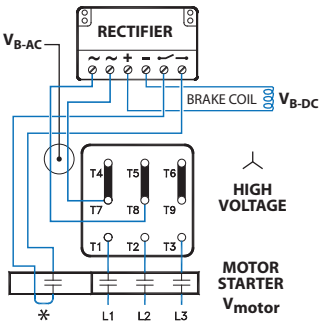

MOTOR	RECTIFIER	V_{motor}	V_{B-AC}	V_{B-DC}
230YY/460Y	PMG500	460 VAC	230 VAC	205 VDC

PMG103C — 40

POWERED FROM MOTOR TERMINAL BLOCK
STANDARD RELEASE
VERY FAST STOPPING
(DC-SWITCHING + REDUCED POWER HOLDING)

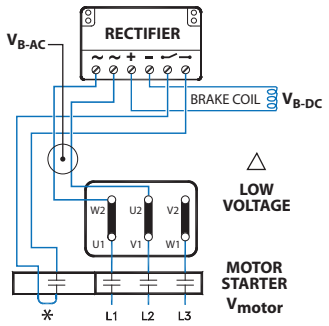

MOTOR	RECTIFIER	V_{motor}	V_{B-AC}	V_{B-DC}
208Δ/360Y	PMG500	208 VAC	208 VAC	180 VDC
230Δ/400Y	PMG500	230 VAC	230 VAC	205 VDC

PMG103D — 40

POWERED FROM MOTOR TERMINAL BLOCK
STANDARD RELEASE
VERY FAST STOPPING
(DC-SWITCHING + REDUCED POWER HOLDING)

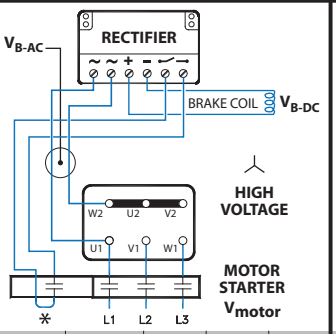

MOTOR	RECTIFIER	V_{motor}	V_{B-AC}	V_{B-DC}
230Δ/400Y	PMG500	400 VAC	230 VAC	205 VDC

PMG104A — 45

SEPERATE POWER SOURCE
FAST-RELEASE (OVER EXCITATION)
NORMAL STOPPING (AC-SWITCHING)

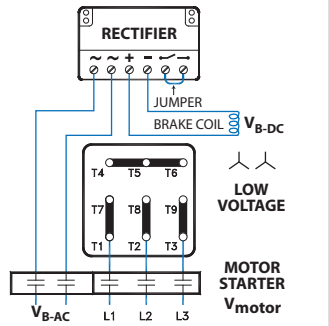

MOTOR	RECTIFIER	V_{motor}	V_{B-AC}	V_{B-DC}
230YY/460Y	PMG500	230 VAC	230 VAC	105 VDC

PMG104B — 45

SEPERATE POWER SOURCE
FAST-RELEASE (OVER EXCITATION)
NORMAL STOPPING (AC-SWITCHING)

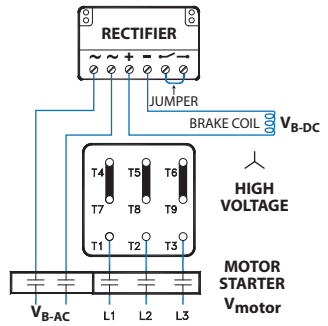

MOTOR	RECTIFIER	V_{motor}	V_{B-AC}	V_{B-DC}
230YY/460Y	PMG500	460 VAC	230 VAC	105 VDC

PMG104C — 45

SEPERATE POWER SOURCE
FAST-RELEASE (OVER EXCITATION)
NORMAL STOPPING (AC-SWITCHING)

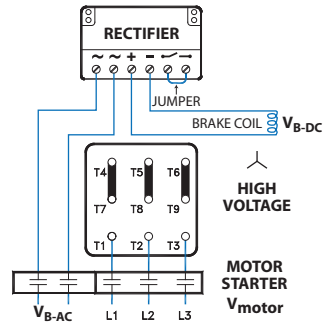

MOTOR	RECTIFIER	V_{motor}	V_{B-AC}	V_{B-DC}
230YY/460Y	PMG500	460 VAC	460 VAC	205 VDC

PMG104D — 45

SEPERATE POWER SOURCE
FAST-RELEASE (OVER EXCITATION)
NORMAL STOPPING (AC-SWITCHING)

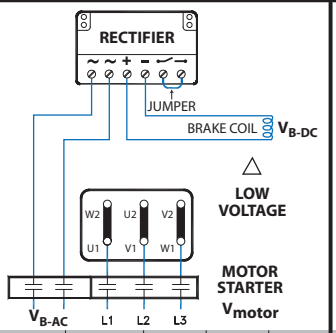

MOTOR	RECTIFIER	V_{motor}	V_{B-AC}	V_{B-DC}
208Δ/360Y	PMG500	208 VAC	208 VAC	105 VDC
230Δ/400Y	PMG500	230 VAC	230 VAC	105 VDC
400Δ/690Y	PMG500	400 VAC	400 VAC	180 VDC
460Δ/Y	PMG500	460 VAC	460 VAC	205 VDC

PMG104E — 45

SEPERATE POWER SOURCE
FAST-RELEASE (OVER EXCITATION)
NORMAL STOPPING (AC-SWITCHING)

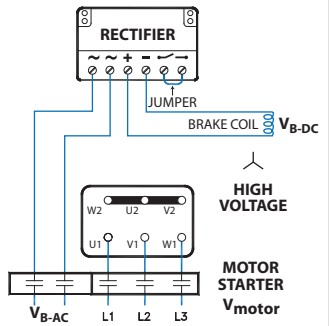

MOTOR	RECTIFIER	V_{motor}	V_{B-AC}	V_{B-DC}
230Δ/400Y	PMG500	400 VAC	230 VAC	105 VDC

PMG105A — 50

SEPERATE POWER SOURCE
FAST-RELEASE (OVER EXCITATION)
FAST STOPPING (DC-SWITCHING)

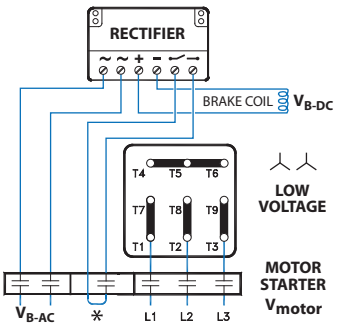

MOTOR	RECTIFIER	V_{motor}	V_{B-AC}	V_{B-DC}
230YY/460Y	PMG500	230 VAC	230 VAC	105 VDC

✱ The normally open contact/s (NO) is not supplied by NORD. It must close at the same time power is supplied to the brake. The contact must be capable of switching inductive loads and/or be rated IEC AC3.

= Braking Method

PMG105B

SEPERATE POWER SOURCE
FAST-RELEASE (OVER EXCITATION)
FAST STOPPING (DC-SWITCHING)

50

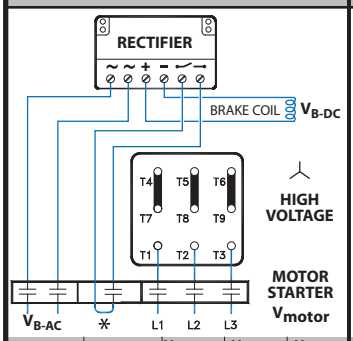

MOTOR	RECTIFIER	V_{motor}	V_{B-AC}	V_{B-DC}
230YY/460Y	PMG500	460 VAC	230 VAC	105 VDC

PMG105C

SEPERATE POWER SOURCE
FAST-RELEASE (OVER EXCITATION)
FAST STOPPING (DC-SWITCHING)

50

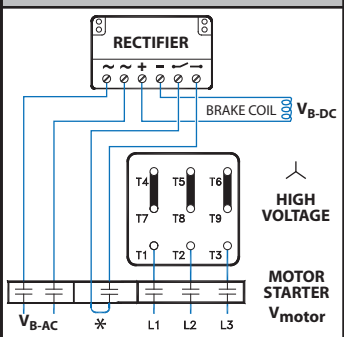

MOTOR	RECTIFIER	V_{motor}	V_{B-AC}	V_{B-DC}
230YY/460Y	PMG500	460 VAC	460 VAC	205 VDC

PMG105D

SEPERATE POWER SOURCE
FAST-RELEASE (OVER EXCITATION)
FAST STOPPING (DC-SWITCHING)

50

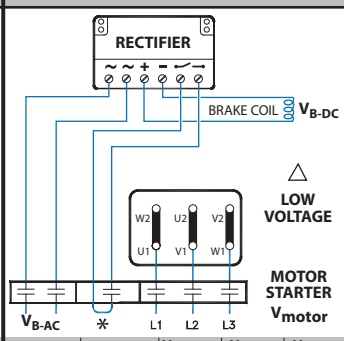

MOTOR	RECTIFIER	V_{motor}	V_{B-AC}	V_{B-DC}
208Δ/360Y	PMG500	208 VAC	208 VAC	105 VDC
230Δ/400Y	PMG500	230 VAC	230 VAC	105 VDC
400Δ/690Y	PMG500	400 VAC	400 VAC	180 VDC
460Δ/Y	PMG500	460 VAC	460 VAC	205 VDC

PMG105E

SEPERATE POWER SOURCE
FAST-RELEASE (OVER EXCITATION)
FAST STOPPING (DC-SWITCHING)

50

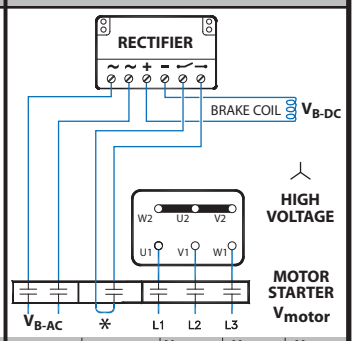

MOTOR	RECTIFIER	V_{motor}	V_{B-AC}	V_{B-DC}
230Δ/400Y	PMG500	400 VAC	230 VAC	105 VDC

PMG106A

SEPERATE POWER SOURCE
STANDARD RELEASE
VERY FAST STOPPING
(DC-SWITCHING + REDUCED POWER HOLDING)

55

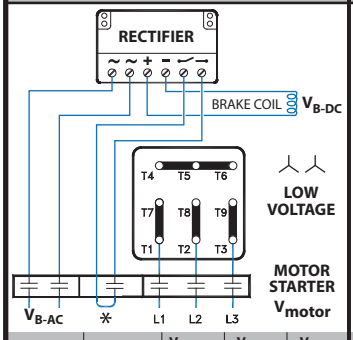

MOTOR	RECTIFIER	V_{motor}	V_{B-AC}	V_{B-DC}
230YY/460Y	PMG500	230 VAC	230 VAC	205 VDC

PMG106B

SEPERATE POWER SOURCE
STANDARD RELEASE
VERY FAST STOPPING
(DC-SWITCHING + REDUCED POWER HOLDING)

55

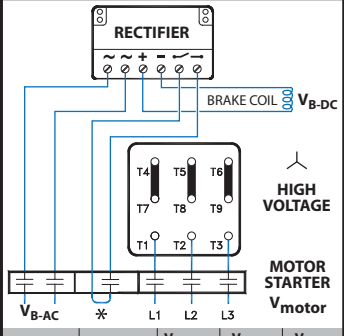

MOTOR	RECTIFIER	V_{motor}	V_{B-AC}	V_{B-DC}
230YY/460Y	PMG500	460 VAC	230 VAC	205 VDC

PMG106C

SEPERATE POWER SOURCE
STANDARD RELEASE
VERY FAST STOPPING
(DC-SWITCHING + REDUCED POWER HOLDING)

55

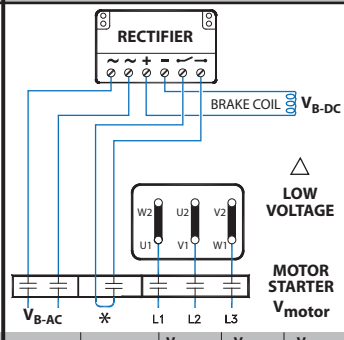

MOTOR	RECTIFIER	V_{motor}	V_{B-AC}	V_{B-DC}
208Δ/360Y	PMG500	208 VAC	208 VAC	180 VDC
230Δ/400Y	PMG500	230 VAC	230 VAC	205 VDC

PMG106D

SEPERATE POWER SOURCE
STANDARD RELEASE
VERY FAST STOPPING
(DC-SWITCHING + REDUCED POWER HOLDING)

55

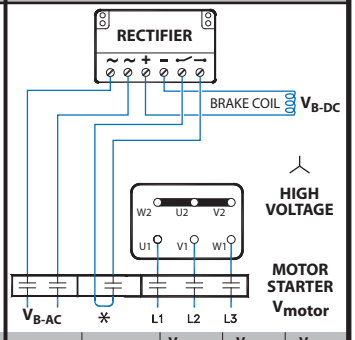

MOTOR	RECTIFIER	V_{motor}	V_{B-AC}	V_{B-DC}
230Δ/400Y	PMG500	400 VAC	230 VAC	205 VDC

✱ **The normally open contact/s (NO) is not supplied by NORD. It must close at the same time power is supplied to the brake. The contact must be capable of switching inductive loads and/or be rated IEC AC3.**

= Braking Method

CURRENT SENSING BRAKE RELAY (IR) INSTALLATION & MAINTENANCE

Motor Current Sensing Brake Relay (IR)

The current sensing relay, normally called the IR option, is used to achieve improved brake engagement or stopping time without the use of external control equipment or additional wiring. The relay is mounted directly onto the motor terminal box. The relay switch leads are connected to terminals 3 and 4 of the rectifier. When the power to the motor is shut off, the IR relay opens the brake circuit on the DC side; this allows the brake to demagnetize quickly.

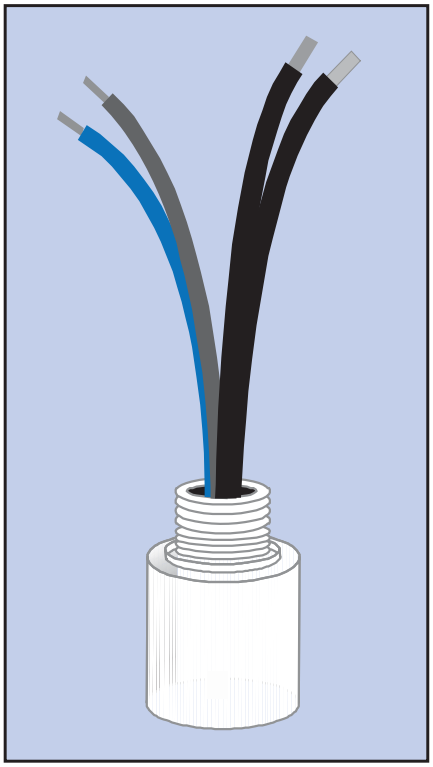

WARNING

- Motor must be powered across-the-line (not inverter powered or controlled with a soft-start)
- The brake power must be provided from the motor's terminal block (not separately powered)
- Motor must be a single-speed (not possible with two-speed motors)

Ratings

Part Number	18556010	18556020
Motor Frame Sizes	63S – 180M*	180L – 225M
Maximum Cycles per hour	500	500
Switching Voltage	42-550V_{DC}	42-550V_{DC}
AC input current – black/white wires	25 A_{AC} -75A_{AC} – 0.2 s	50 A_{AC} - 75A_{AC} – 0.2s
DC brake current – red and blue wires	1.0 A_{DC}	1.0 A_{DC}
Holding Current	0.7 A_{AC}	0.7 A_{AC}
Additional brake setting delay	18 ms	18 ms
Ambient temperature	- 25 to 90 °C - 40 to 167 °F	- 25 to 90 °C - 40 to 167 °F
Enclosure with o-ring mounted to a terminal box	IP65	IP65

* For the 180MX/4, 230/460V motor use part number 18556020

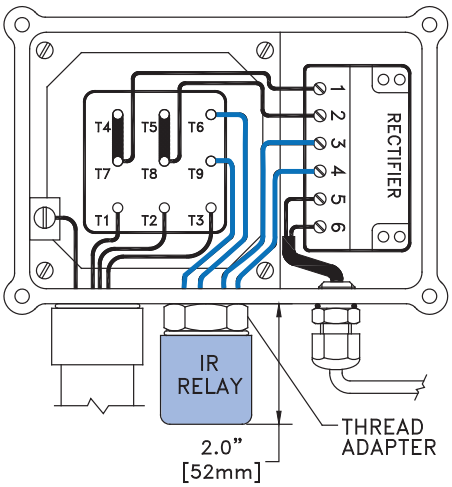

Connection Notes

Rectifier			IR Relay Wires To Rectifiers	
Type	Part Number	Design	Red	Blue
GVE20L	19141000	Full-Wave	3	4
GHE40L	19141010	Half-Wave	4	3
GHE50L	19141020	Half Wave	4	3
GPE20L	19140230	Push-Hybrid	4	3
GPE40L	19140240	Push-Hybrid	4	3

Conduit Box Thread Adapter

Thread	Motor Frame	Part number
M20	63-71	18542006*
M25	80-90	18522253
M32	100-132	18522320
M40	160-180	18522400 + 18522253

* Spacer

CURRENT SENSING BRAKE RELAY (IR) INSTALLATION & MAINTENANCE

Connection Diagrams

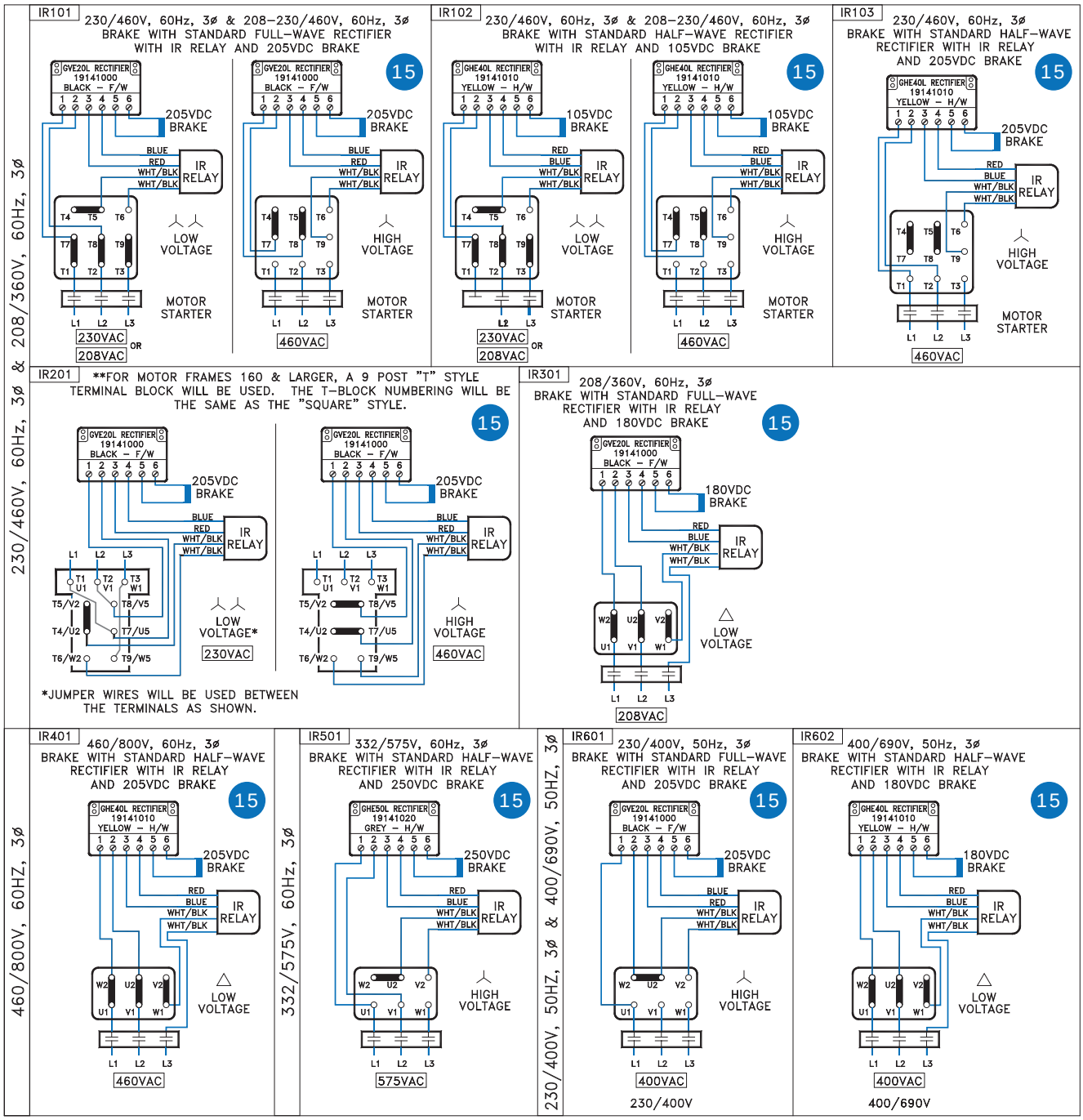

Connection Diagrams
GPE Rectifier with IR Relay used for External DC-Switching

Method Operation

Start - Fast release (Overexcitation)
Stop - Fast stop (DC-Switching)

GPE type - External DC-Switching
Terminal 3 & 4 - Contact or IR-relay

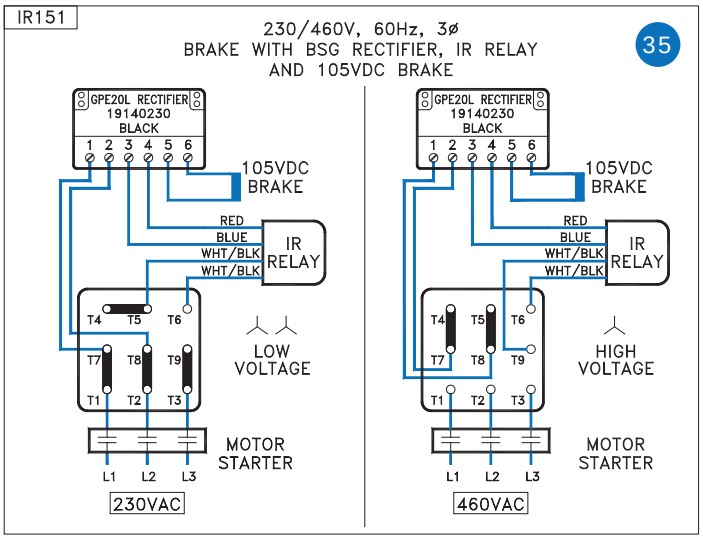

= Braking Method

Method Operation

Start - Standard Release
Stop - Very Fast stop (Reduced power Hold)

GPE type - External DC-Switching
Terminal 3 & 4 - Contact or IR-relay

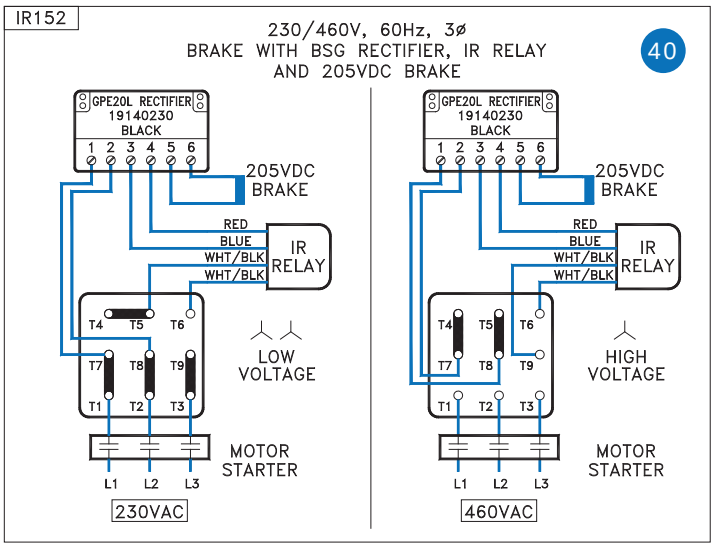

= Braking Method

Additional Reference - U_____ GP Brake Rectifier Installation and Maintenence

NEMA/IEC INPUT ADAPTERS & THEIR COUPLINGS

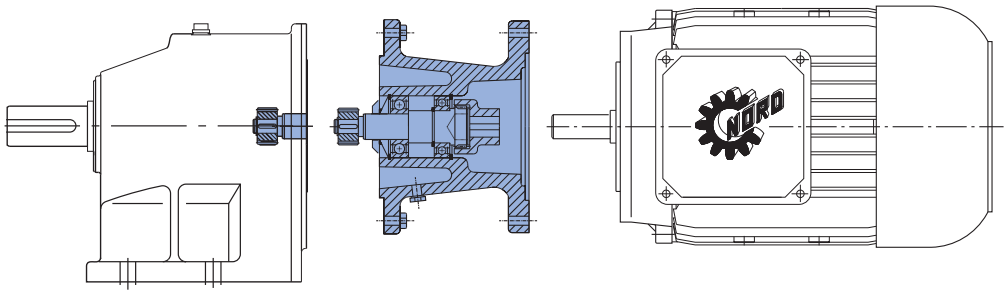

WARNING

LOCK OUT POWER before any maintenance is performed. Make absolutely sure that no voltage is applied while work is being done on the gearbox or input.

NEMA/ IEC Motor Adapters

Motor adapters allow for easy installation and removal of industry standard motors. Motor adapters consist of a coupling and an adapter housing that connects the motor to the gear reducer.

NORD Gear supplies a coupling that is to be mounted on the motor shaft. It is important that the coupling is properly positioned.

- For NEMA Input Adapters, follow the Motor Installation Instructions on pages 3-4.
- For IEC Input Adapters, the supplied coupling will mount directly against the motor shaft shoulder. No locating measurements need to be taken.

NOTE

Some of the larger IEC inputs will have a coupling spacer included to help locate the coupling. Slide the spacer against the motor shaft shoulder, slide the coupling against the spacer and tighten set screw(s).

NOTE

For the larger motor adapters (IEC160 / N250TC and larger), an Automatic Lubricator is supplied. This will need to be activated at the time of startup. For operation and activation instructions, refer to user manual U45200.

NEMA/IEC Motor Weight Limits

When mounting a motor to a NORD NEMA C-face motor adapter it is important to consider the motor's weight. Following is a table that includes the maximum motor weight the NEMA adapter can support. If the motor exceeds the listed weight is must be externally supported. When a C-face mounted motor is externally supported care must be taken to ensure that the support system does not impose additional pre-loads on the NEMA motor adapter.

NEMA Motor Weight Limit

Motor FRAME	56C	143TC	145TC	182TC	184TC	210TC
Max Weight [lb]	66	88	110	130	175	220
Motor FRAME	250TC	280TC	324TC	326TC	365TC	
Max Weight [lb]	440	550	770	1100	1540	

IEC Motor Weight Limit

Motor FRAME	63	71	80	90	100	112
Max Weight [lb]	55	66	88	110	130	175
Motor FRAME	132	160	180	200	225	250
Max Weight [lb]	220	440	550	770	1100	1540

Couplings

Couplings are made with tough abrasion resistant materials, which resist most chemicals and petroleum products. They are electrically isolated (prevent metal to metal contact) and require no lubrication or maintenance. Depending upon the size of the C-face input, NORD provides either a gear or a jaw type coupling.

NORD supplies three different types of couplings depending on the size of input: "J" style, "M" style and "Jaw" style coupling. Following are instructions on how to properly mount each type of coupling onto the motor.

NEMA/IEC INPUT ADAPTERS & THEIR COUPLINGS

Couplings for the NEMA and IEC Adapters

Depending on the size of the input adapter to the gearbox, NORD Gear supplies two styles of couplings - BoWex® (gear tooth) and Rotex® (jaw) couplings.

BoWex® Couplings

NORD C-face adapter input shafts have a machined spline on the end. NORD incorporates two styles of BoWex® couplings, the "J" and "M" styles. The "J" style is a one-piece coupling with a metal hub and nylon spline. The "M" style is a two-piece coupling – the metal hub and a nylon sleeve. Nylon and steel components allow them to operate in high ambient temperatures without lubrication or maintenance.

- Nylon sleeves resist dirt, moisture, most chemicals and petroleum products
- No lubrication required
- Operating Conditions: -22°F - 212°F (-30°C - 100°C)
- Higher temperature coupling sleeve available up to 250°F (120°C)
- Special bore available

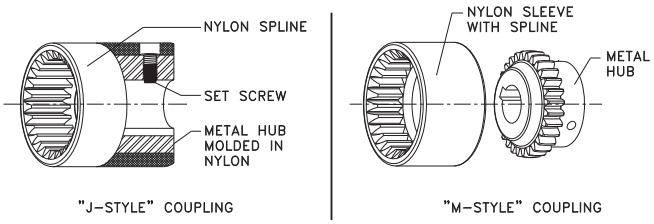

BoWex® Couplings Mechanical Ratings "J" Style

Coupling Type	Available Bore Sizes	Cont. / Peak Torque	Input
J14	11 mm,14 mm 5/8 in	10/20 Nm 89/117 lb-in	IEC 63, 71 NEMA 56C
J24	19 mm, 24 mm 5/8 in, 7/8 in	20/40 Nm 117/354 lb-in	IEC 80, 90 NEMA 56C, 140TC
J28	28 mm 1-1/8 in	45-90 Nm 399/797 lb-in	IEC 100-112 NEMA 180TC

BoWex® Couplings Mechanical Ratings "M" Style

Coupling Type	Available Bore Sizes	Cont. / Peak Torque	Input
M14, M24, M28	Same as "J" Style	Same as "J" Style	Same as "J" Style
M38	38 mm 1-1/8 in, 1-3/8 in	80/160 Nm 708/1,416 lb-in	IEC 132 NEMA 180TC, 210TC
M42	42 mm 1-5/8 in	100/200 Nm 885/1,770 lb-in	IEC 160 NEMA 250TC
M48	48 mm 1-7/8 in	140/280 Nm 1,240/2,478 lb-in	IEC 180 NEMA 280TC

Rotex® Couplings

The cast iron jaw type couplings have an integral urethane "spider" that provides smooth transmission of the motor torque. A set screw on the coupling prohibits axial movement along the motor shaft.

- Excellent shock and vibration dampening
- Excellent resistance to oils and most chemicals
- No metal-to-metal contact
- Operating Conditions: -22°F - 195°F (-30°C - 90°C)
- Higher temperature material (Hytrel) spider available up to 230°F (110°C)
- Low temperature materials available upon request
- Special bores available

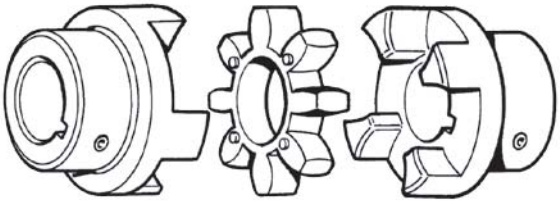

Rotex® Couplings Mechanical Ratings

Coupling Type	Available Bore Sizes	Cont. / Peak Torque	Input	Spider
R19	14 mm 19 mm	17/34 NM 150/300 lb-in	SEK/SEP 100	Urethane 98 Shore A Hardness Color: Red
R24	19 mm 24 mm	60/120 Nm 530/1,060 lb-in	SEK/SEP 100 SEK/SEP 130	
R28	32 mm 38 mm	95/190 Nm 840/1,680 lb-in	SEK/SEP 65 SEK/SEP 215	Urethane 92 Shore A Hardness Color: Yellow
R38	1.89" (48 mm) Max Bore	190/382 Nm 1,680/3,380 lb-in	-	
R42	2.44" (62 mm) Max Bore	310/620 Nm 2,740/5,480 lb-in	-	
R48	42, 48 mm 1-5/8, 1 7/8 in	310/620 Nm 2,740/5,480 lb-in	IEC 160, 180 NEMA 250T NEMA 280T SEK/SEP 300 SEK/SEP 215	
R65	60 mm 2-1/8, 2-3/8 in	625/1,250 Nm 5,530/11,060 lb-in	IEC 225 NEMA 320T NEMA 360T	
R90	65, 75, 80 mm 2-1/8, 2-3/8 in	2,400/4,800 Nm 24,240/42,480 lb-in	IEC 250, 280 IEC 315 NEMA 360TC NEMA 400TS NEMA 440TS	

"J" Style Coupling NEMA C-face Motor Installation

1. Measure the distance from the face of the input adapter to the face of the splined shaft and record that measurement as A in the equation below.
2. Measure depth of coupling engagement zone and record the measurement as "B" in the equation below.
3. Add "A" + "B" and subtract 0.08" (~2mm) from the distance. This needs to be done so that the coupling will not be preloaded after installation!
4. Use that measurement to locate the coupling from the face of the motor onto the shaft.
5. Once in place, tighten the set screw to lock the coupling in place. It is recommended that the key is staked or bonded (Loctite) in place to prohibit the key from vibrating out.
6. Mount the motor onto the input adapter with customer supplied bolts. Make sure that the coupling from the adapter and the motor engage securely. Use lock washers or Loctite to prohibit bolts from becoming loose from vibration.

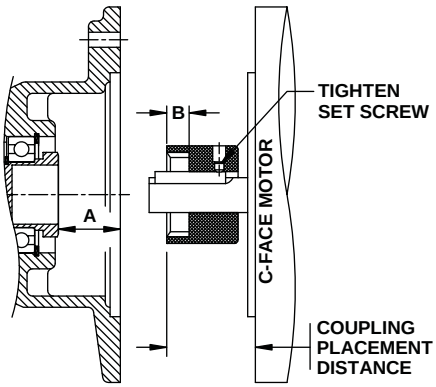

MEASURED DISTANCES A + B	SUBTRACT DISTANCE	COUPLING PLACEMENT DISTANCE
___ + ___	- 0.080" (2mm) =	_____

"M" Style Coupling NEMA C-face Motor Installation

1 Measure the distance from the face of the input adapter to the face of the splined shaft & record that measurement.
2. Subtract 0.31" (~8mm) from the distance. This needs to be done so that the coupling will not be preloaded after installation!
3. Use that measurement to locate the coupling from the face of the motor onto the shaft.
4. Once in place, tighten the set screw to lock the coupling in place. It is recommended that the key is staked or bonded (Loctite) in place to prohibit the key from vibrating out.
5. Mount the motor onto the input adapter with customer supplied bolts. Make sure that the coupling from the adapter and the motor engage securely. Use lock washers or Loctite to prohibit bolts from becoming loose from vibration.

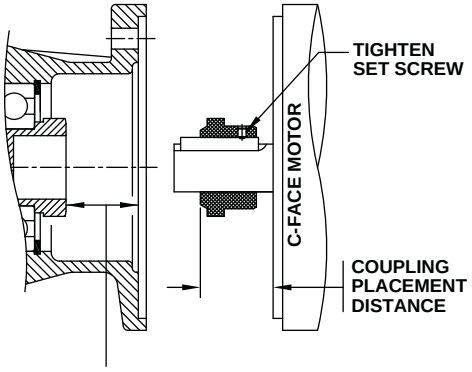

MEASURED DISTANCE	SUBTRACT DISTANCE	COUPLING PLACEMENT DISTANCE
_____	- 0.310" (8mm) =	_____

"Jaw" Style Coupling NEMA C-face Installation

1. Measure the distance from the face of the input adapter to the face of the coupling as shown and record that measurement.

2. Subtract the "X" dimension from the measured distance. This needs to be done so that the coupling will not be preloaded after installation!

3. Use that measurement to locate the coupling from the face of the motor onto the shaft.

4. The metal portion of the coupling should be heated up prior to assembly, generally 250°F to 300°F (120°C to 150°C).

⚠ WARNING ⚠
DO NOT HEAT THE URETHANE SPIDER.

5. Once in place, tighten the setscrew to lock coupling in place. Let the coupling cool down before placing the spider into the jaws. It is recommended that the key is staked or bonded (Loctite) in place to prohibit the key from vibrating out.

6. Mount the motor onto the input adapter with customer supplied bolts. Make sure that the coupling from the adapter and the motor engage securely. Use lock washers or Loctite to prohibit bolts from becoming loose from vibration.

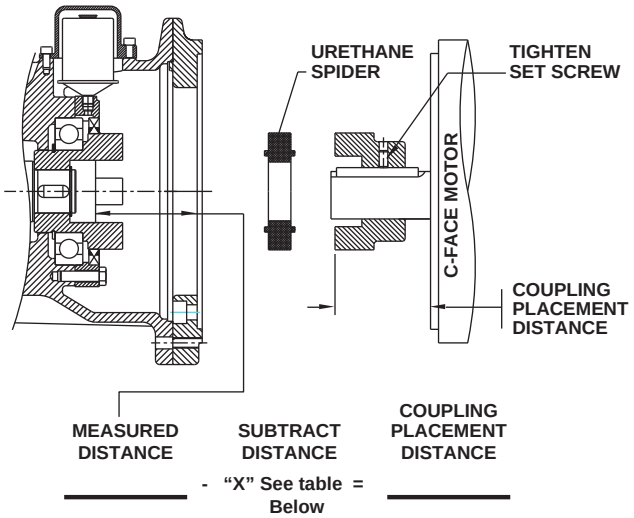

Coupling Size	"X" (Subtract this value from measured distance)
R14	0.06" (1.5 mm)
R19 & R24	0.08" (2.0 mm)
R28	0.10" (2.5 mm)
R38 & 42	0.12" (3.0 mm)
R48	0.14" (3.5 mm)
R65	0.18" (4.5 mm)
R90	0.22" (5.5 mm)

NEMA/IEC INPUT ADAPTERS & THEIR COUPLINGS

NEMA/IEC Parts List for UNICASE Gearboxes

NEMA 56C - 180TC

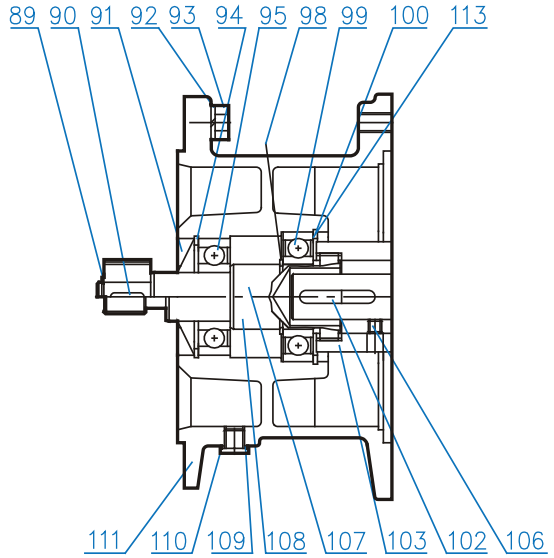

NEMA 180TC - 280TC

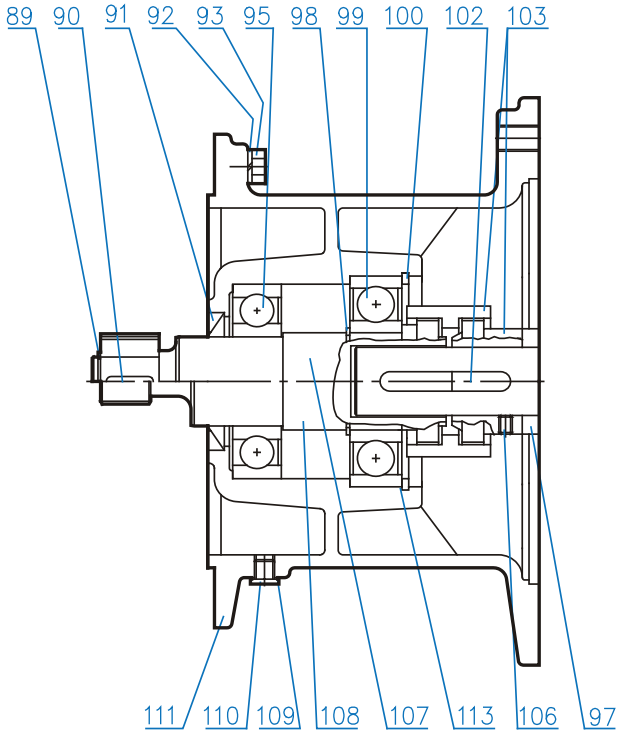

89	Circlip
90	Key
91	Shaft Seal
92	Washer
93	Hexagon Screw
94	Circlip
95	Clutch Shaft Bearing
97	Space
98	Circlip
99	Clutch Shaft Bearing
100	Circlip
101	Key
102	Key
103	Coupling
104	Coupling
105	Coupling
106	Set Screw
107	Clutch Shaft
108	Clutch Pinion Shaft
109	Seal
110	Oil-Plug
111	NEMA / IEC Adapter
112	Oil Flinger
113	Shim
140	Shim
141	Shim
142	Shim
143	Socket Head Screw
144	Cover
145	Automatic Lubricator*
146	Adapter
147	Bearing Cover
148	Hexagon Screw
149	Washer
150	Shaft Seal

* Please see U45250 for automatic lubricator Instructions.

NEMA 250TC - 400TC
IEC 160 - IEC 315

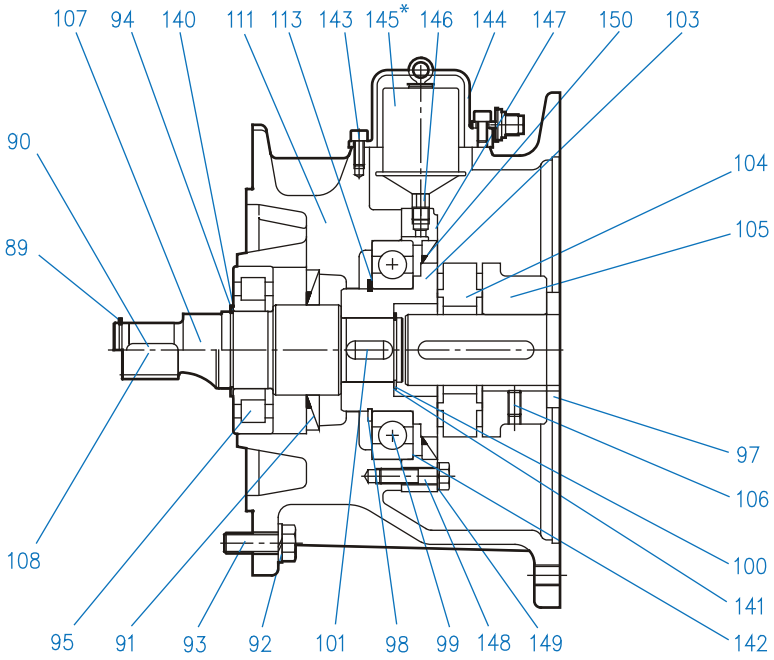

NEMA/IEC INPUT ADAPTERS & THEIR COUPLINGS

NEMA/IEC Parts List for Nordbloc Gearboxes

NEMA 56C - 180TC
IEC 63 - IEC 112

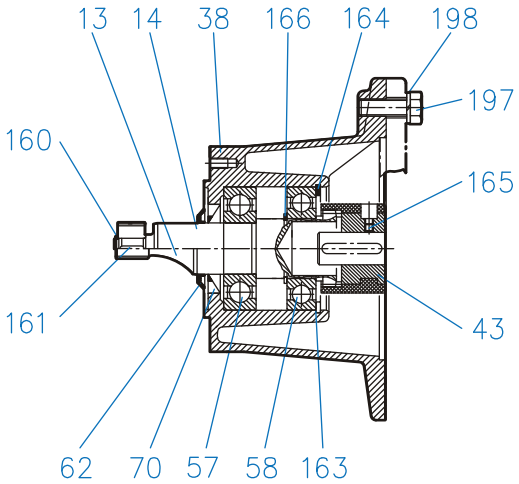

NEMA 210TC - 280TC
IEC 132-IEC 180

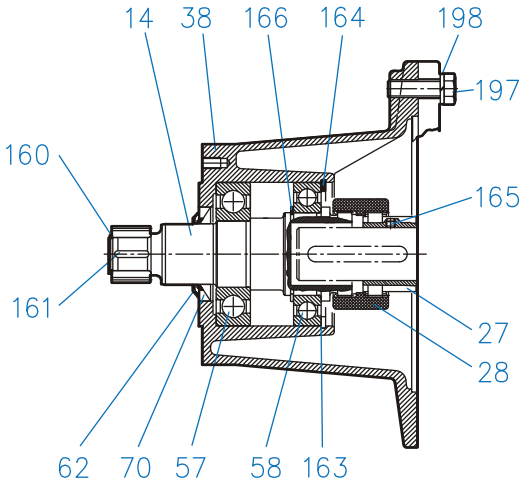

IEC 200

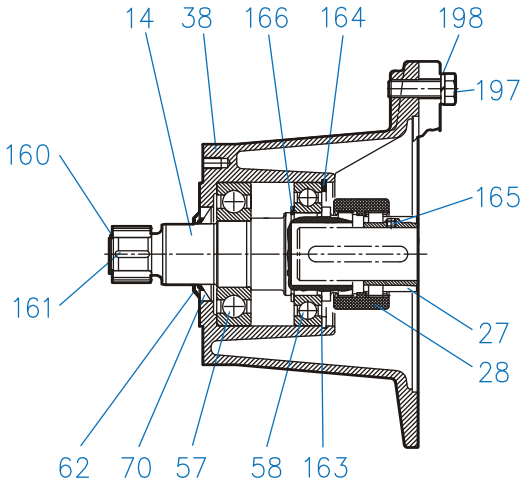

13	Clutch Pinion Shaft
14	Clutch Shaft
26	Coupling
27	Coupling
28	Coupling
38	IEC Adapter
43	Coupling
57	Clutch Shaft Bearing
58	Clutch Shaft Bearing
62	Oil Flinger
70	Shaft Seal
101	Key
160	Snap Ring
161	Key
163	Shim
164	Snap Ring
165	Set Screw
166	Snap Ring
197	Bolt
198	Spring Washer

AUTOMATIC LUBRICATOR

Automatic Lubricator

Some NORD gear units with NEMA 250TC or IEC 160 and larger input adapters, have a PERMA® Classic automatic lubricator supplied to help dispense grease to the outboard bearing.

Helical Inline	SK62, SK72, SK73, SK82, SK83, SK92, SK93, SK102 and SK103
Parallel-Shaft Clincher™	SK6282, SK7282, SK7382 SK8282, SK8382, SK9282, SK9382, SK10282, SK10382, SK11282, SK11382, and SK12382
90.1 Series Helical-Bevel	SK9072.1, SK9082.1, SK9086.1, SK9092.1, and SK9096.1

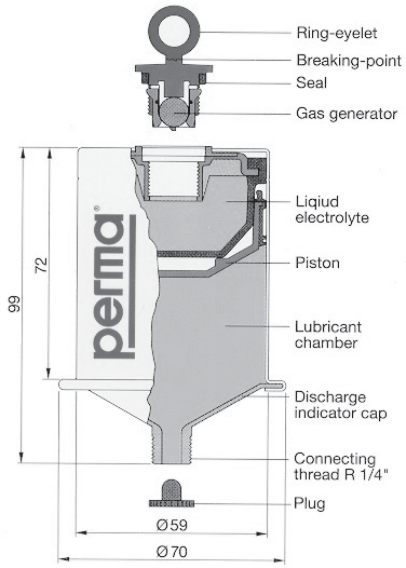

Principle of Operation

The activation screw is secured into the top of the lubrication canister and tightened until the ring-eyelet reaches its breaking point. A zinc-molybdenum gas generator drops into a citric acid liquid electrolyte, that is contained within an elastic bladder. The gas generator starts an electrochemical reaction which gradually pressurizes the bladder by releasing hydrogen gas in very small amounts. The gas creates enough pressure (up to 4 bar or 58 psi) to expand the bladder and push the piston and the lubricant forward.

Lubricant is continuously injected into the lubrication point until the bearing cavity is full. Any back pressure from the bearing will cause the system to neutralize. The bladder inside the canister will continue to slowly build pressure so that once the equipment resumes normal operation, the lubricator will also resume its normal function. After 12 months of operation the PERMA® canister must be replaced.

The lubricator contains approximately 120 cm^3 or 120 ml (4.8 oz) of grease. For reference, a single stroke of a typical grease gun delivers approximately 1.0-1.2 cm^3 (0.03–0.04 oz) of grease. This means the canister contains approximately 100 strokes of grease. At the end of the lubrication period, the discharge indicator cap or piston becomes clearly visible through the clear nylon discharge indicator cap which is located at the bottom of the PERMA® canister; this helps indicate that the lubricant has been fully discharged.

HARMFUL SITUATION

- To prevent premature bearing failure, the lubrication dispenser must be activated prior to commissioning the gear reducer.
- The lubricator must only be used once and should never be opened or taken apart or permanent damage will result.
- Never unscrew the PERMA® canister from the lubrication point after activation or during the discharge period. This would cause a permanent pressure loss in the lubricator and would justify replacing the lubricator.

WARNING

- Avoid swallowing the gas generator, the liquid electrolyte, and the lubricant.
- Avoid contact of, the liquid electrolyte, and the lubricant with the eyes, skin or clothing.
- Observe all applicable MSDS sheets.
- Follow applicable local laws and regulations concerning waste disposal.

PERMA® Classic – Options Supplied by NORD

NORD Part Number	28301000	28301010
Lubrication Option	Synthetic (standard)	Food Grade (optional)
PERMA® Classic Temperature Range ♦	0 to 40 °C (32 to 104 °F)	0 to 40 °C (32 to 104 °F)
Lubrication Volume	120 cm3 or 120 ml (4.8 oz)	120 cm3 or 120 ml (4.8 oz)
Grease Lubrication Mfg. / Type	Klüber / Petamo GHY 133	Lubriplate / FGL1
Lubrication Temperature Range ♦	-30 to 120 °C (-22 to 248 °F)	-18 to 120 °C (0 to 248 °F)

♦ The temperature range values shown do not apply to other components and/or lubricants within the gear reducer.

The lubricator contents will dispense for a 12 month period when the average temperature is 20 °C (68 °F).

Temperature Influences Discharge Rate

Discharge rate is based upon an ambient temperature of 20 °C (68 °F). The gray activating screw supplied by PERMA indicates that the lubricator contents will dispense for a 12 month period when the average temperature is 20 °C (68 °F).

- Lower ambient temperatures will lead to slower dispensing rates and higher ambient temperatures will lead to faster dispensing rates.
- Dispensing rates depend primarily on average ambient conditions and not extreme highs and lows.
- Discharge can also be influenced by type of lubricant, vibration, and the connecting parts and values shown are approximate, based upon supplier testing completed.

Average Ambient Temperature	Discharge Period Months ♦
0 °C (32 °F)	>18
10 °C (50 °F)	18
20 °C (68 °F)	12
30 °C (86 °F)	6
40 °C (104 °F)	3

♦ Values are approximate.

Attention!

Screw in the activation screw until the lug breaks off before commissioning the gear unit.

Dispensing time: 12 Months

Activation Date

Month 1 2 3 4 5 6 7 8 9 10 11 12

Year 11 12 13 14 15

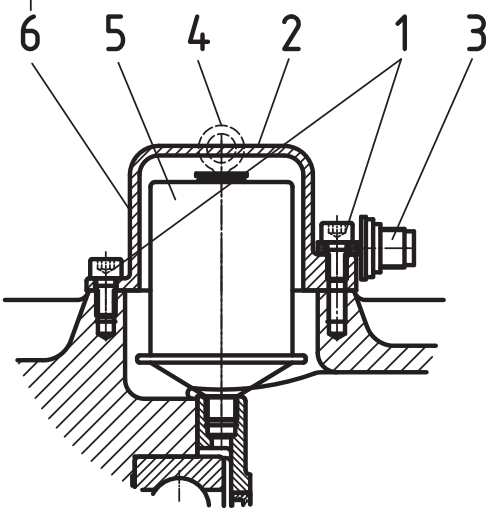

Initial Assembly Instructions

When first receiving the gear unit with motor adapter, the automatic lubricator is installed as shown in the figure below.

1. Loosen and remove the M8 x 16 socket head cap screws (1) and the protective cartridge case cover (2).
2. Insert the gray colored activation screw (3) into the lubrication dispenser (5) and tighten securely by hand.
3. Put a suitable tool through the ring-eyelet (4) and use it to turn the activator screw until the eyelet breaks off. The lubricator is now activated.
4. Refit the protective cartridge case cover (2) and tighten the M18 x 16 socket head screws.
5. Mark the activation date indicating on the reddish-orange adhesive label (6) by indicating the month and year.
6. Take note of the activation date and replace the canister again in twelve months.

Replacement Assembly Instructions

1. Loosen and remove the M8 x 16 socket head cap screws (1) and the protective cartridge case cover (2).
2. Remove the expired or old PERMA® canister from the bearing housing.
3. Remove the protective shipping plug from the thread-end of the New PERMA® canister.
4. Screw the canister into the reducer bearing housing by hand until it is snug and secure. Do not over tighten or the plastic threads on the canister can become damaged!
5. Put a suitable tool through the ring-eyelet (4) and use it to turn the activator screw until the eyelet breaks off. The lubricator is now activated.
6. Refit the protective cartridge case cover (2), tighten the M18 x 16 socket head screws (1)
7. Take note of the activation date and replace the canister again in twelve months.

NEMA OR IEC INPUT ADAPTER WITH GREASE FITTING

Application

NORD gear units listed in the table below that are supplied with a NEMA 250TC or IEC 160 and larger input adapter, may be supplied with an external grease fitting. The grease fitting allows the user to service the outboard bearing of the reducer's input assembly

Helical Inline	SK62, SK72, SK73, SK82, SK83, SK92, SK93, SK102 and SK103
Parallel-Shaft CLINCHER™	SK6282, SK7282, SK7382, SK8282, SK8382, SK9282, SK9382, SK10282, SK10382, SK11282, SK11382 & SK12382
90.1 Series Helical-Bevel	SK9072.1, SK9082.1, SK9086.1, SK9092.1 & SK9096.1

The grease fitting is an option which must be specified upon ordering, otherwise NORD will normally supply a PERMA Automatic Lubricator (See User Manual U45250).

Factory Supplied Grease

The bearing grease applied at the factory is as follows:

Brand	Mobil Polyrex EP 2
Thickener	Polyurea
NLGI Grade	2
Temperature Range	40°C to 120°C (-40°F to 250°F

IMPORTANT NOTE

It is the user's responsibility to ensure that if replacement grease is used, that it is fully compatible with the factory supplied grease.

Service Instructions

WARNING

- While working on the gear drive system, make sure the power from the prime mover is isolated or secured on "lock-out" to prevent accidental start-up and to safeguard against injury!
- Surfaces of motors and gear units may become hot during operation or shortly after start-up. In some instances additional protection against accidental contact may be necessary. Use caution to avoid burns or serious injury!

1. It is best to re-grease the bearing within a short period after the gear unit was operational because the old grease will be more viscous and will flow easier.
2. Ensure that the grease gun contains the right lubricant for the bearing to be re-greased.
3. Open the protective flip cover and clean the areas around the grease fitting to ensure that contaminants are not introduced into the bearing cavity.
4. Using a grease gun, apply 0.75 ounces (20-25 grams) of compatible bearing grease every 1,000 service hours.

IMPORTANT NOTE

Re-greasing should be carried out while the bearing is still warm from operation and/or while rotating (if it is safe).

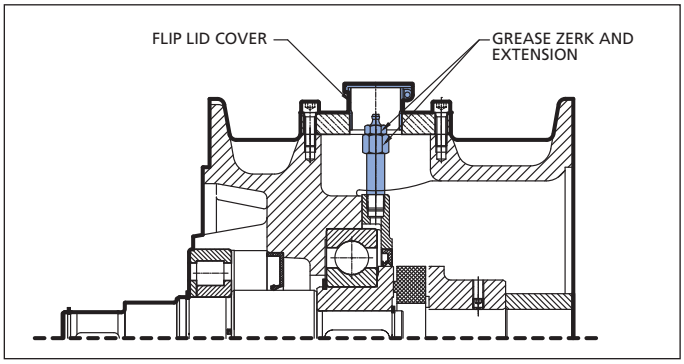

SOLID INPUT SHAFT (W)

1. Solid Input Shaft (W)

The shaft will be inch or metric, depending on how the unit was ordered. Measure and verify the shaft before mounting anything on the shaft. Below are the tolerances used for the solid shafts.

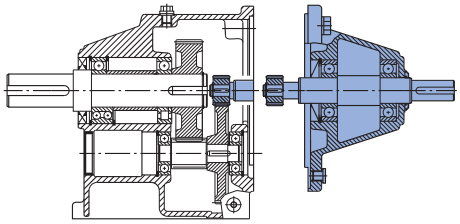

2. Solid shaft diameter tolerance

Reducer input shaft extensions have a diameter tolerance as specified in **Table 1**.

Table 1: Solid Shaft Diameter Tolerance

Above ø (in)	To & Including ø (in)	Tolerance (in)
0.375	1.750	+0.0000 / -0.0005
1.750	2.750	+0.0000 / -0.0010

Above ø (mm)	To & Including ø (mm)	Tolerance (mm)	ISO 286-2 Fit Class
10	18	+0.012 / +0.001	k6
18	30	+0.015 / +0.002	k6
30	50	+0.018 / +0.002	k6
50	70	+0.030 / +0.011	m6

3. Fitting drive elements onto the reducer solid shaft

Solid input shaft extensions are provided with a drill and tap feature as indicated in Table 2. When installing drive elements such as coupling hubs, pulleys, sprockets, or gears, NORD recommends using the threaded hole in the end of the shaft, along with a suitable assembly device fitted into the threaded hole.

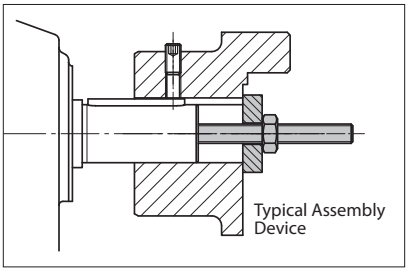

Table 2: Solid Input Shaft End - Threaded Holes

Above ø (in)	To & Including ø (in)	Tap size & Depth (in)
0.375	0.500	10-24 x 0.43 in
0.500	0.875	1/4-20 x 0.59 in
0.875	0.938	5/16-18 x 0.71 in
0.938	1.100	3/8-16 x 0.87 in
1.100	1.300	1/2-13 x 1.10 in
1.300	1.875	5/8-11 x 1.42 in
1.875	2.750	3/4-10 x 1.73 in

Above ø (mm)	To & Including ø (mm)	Tap Size & Depth (mm)
10	13	M4 x 10 mm
13	16	M5 x 12.5 mm
16	21	M6 x 16 mm
21	24	M8 x 19 mm
24	30	M10 x 22 mm
30	38	M12 x 28 mm
38	50	M16 x 36 mm
50	70	M20 x 42 mm

HARMFUL SITUATION

DO NOT DRIVE or **HAMMER** the coupling hub, pulley, sprocket, or gear into place. An endwise blow to the reducer shaft can generate damaging axial forces and cause damage to the reducer housing, bearings or internal components.

WARNING

To avoid serious injury the user must provide suitable safety guards for all rotating shafts and shaft components such as couplings, chain drives, belt drives, etc. All guarding must adhere to local regulations and safety standards.

4. Installing interference-fit hubs to the reducer shaft

Prior to installing any interference-fit hubs to the reducer shaft, consult with the manufacturer to determine proper assembly and fit. Interference-fits usually require heating the coupling, sprocket or gear hub, per the manufacturer's recommendations. Coupling hub installation typically follows ANSI/AGMA 9002-A86. Always make sure the reducer shaft seals are protected from the heat source. Apply uniform heat to the drive element hub to prevent distortion. NORD does not recommend heating the drive element hub beyond 212°F to 275°F (100°C to 135° C).

WARNING

When using heat to mount a drive element hub, do not use open flame in a combustible atmosphere or near flammable materials. Use suitable protection to avoid burns or serious injury.

HARMFUL SITUATION

When using external chain or belt drives, make sure the reducer is sized so that the shaft and bearings have adequate capacity. To avoid unnecessary bearing loads and additional shaft deflection, mount all power take-off devices (sprockets, pulleys, etc.) so that the applied load center is as close to the gear housing as possible and check component alignment and tension of any belts or chains per the manufacturer's recommendation. Do not over tighten the belts or chains.

5. Coupling installation

The performance and life of any coupling depends upon how well it is installed. Coupling hubs are typically mounted flush with the shaft ends, unless specifically ordered for overhung mounting. Shaft couplings should be installed according to the coupling manufacturer's recommendations for gap, angular and parallel alignment. To help obtain critical shaft alignment coupling hubs may be installed to the machine shafts prior to final shimming or tightening of the foundation bolts. Proper coupling alignment allows for thermal and mechanical shaft movement during operation and ensures that only torque (no radial load) is transmitted between the mating shafts.

Coupling gap and angular alignment

The shaft gap must be sufficient to accommodate any anticipated thermal or mechanical axial movement. When setting the coupling gap, insert a spacer or shim stock equal to the required spacing or gap between the coupling hub faces. Measure the clearance using feeler gauges at 90-degree intervals, to verify the angular alignment.

Parallel (or offset) alignment

Mount a dial indicator to one coupling hub, and rotate this hub, sweeping the outside diameter of the other hub. The parallel or offset misalignment is equal to one-half of the total indicator reading. Another method is to rest a straight edge squarely on the outside diameter of the hubs at 90° intervals and measure any gaps with feeler gauges. The maximum gap measurement is the parallel or offset misalignment.

Check alignment

After both angular and parallel alignments are within specified limits, tighten all foundation bolts securely and re-check critical alignment. If any of the specified limits for alignment are exceeded, realign the coupling.

6. Installing sheaves (pulleys), sprockets and gears

To avoid unnecessary bearing loads and additional shaft deflection, mount all power take-off devices (sprockets, pulleys, gears, etc.) so that the applied load center is as close to the gear housing as possible, as shown in **Figure 2**.

Figure 2: Pully or Sprocket Mounting

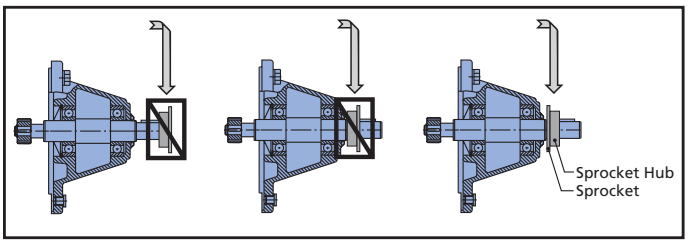

Align the driver sheave or sprocket with the driven sheave or sprocket by placing a straight-edge length-wise across the face of the sheaves or sprockets. Alignment of bushed sheaves and sprockets should be checked only after bushings have been tightened. Check horizontal shaft alignment by placing one leg of a square or a level vertically against the face of the sheave or sprocket.

Always check component alignment and tension any belts or chains per the manufacturer's recommendation. The ideal belt or chain tension allows proper wrap of the driver and driven wheels, while maintaining the lowest possible tension of the belts or chain, so that no slipping occurs under load conditions. Check belt or chain tension frequently over the first 24 to 48 hours of operation.

HARMFUL SITUATION

When using external chain or belt drives, make sure the reducer is sized so that the shaft and bearings have adequate capacity. To avoid unnecessary bearing loads and additional shaft deflection, mount all power take-off devices (sprockets, pulleys, etc.) so that the applied load center is as close the gear housing as possible and check component alignment and tension of any belts or chains per the manufacturer's recommendation. Do not over tension the belts or chains.

7. Service Guidelines for W-Shaft Input with Grease Fitting

On some solid shaft input (Type W) gear units, the outer roller bearing needs to be re-greased at regular service intervals. This is necessary for double-stage gearboxes sizes SK62 or SK6282 and larger, and triple-stage gearboxes from size SK73, SK7382 or SK9072.1 and larger.

To lubricate the bearing of the input shaft, approximately 0.75 to 1.0 ounces (20-25 grams) grease should be added by the grease fitting approximately after every 2,500 hours of service or at least every 6 months. The W-shaft input is factory assembled with the proper amount and type of grease. The type of grease supplied depends upon the type of oil specified at time of order.

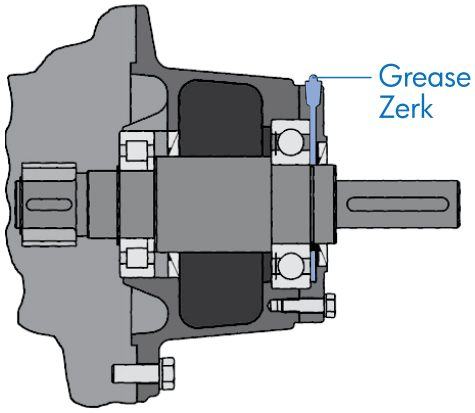

Reducer Oil Type	Grease Type/Thickener	NLGI Grade	Ambient Temperature Range	Manufacturer Brand/Type
Mineral	Standard (Li-Complex)	NLGI 2	-30 to 60°C (-22 to 140°F)	Mobil Grease XHP222
Synthetic	High Temp (Polyurea)	NLGI 2	-40 to 80°C (-40 to 176°F)	Mobil / Polyrex EP 2
Food-Grade	Food-Grade (Polyurea)	NLGI 2	-30 to 40°C (-22 to 104°F)	Mobil SHC Polyrex 222

HARMFUL SITUATION

Grease compatibility depends upon the type of thickener or soap complex used, the base oil type suspended within the thickener, and the type of additives used. The user should check with the lubrication supplier before making substitutions in brand and type in order to assure compatibility and to avoid causing damage to the extended bearing.

W-Type Input Parts List for UNICASE Gearboxes

SK 02 - SK 52
SK 03 - SK 63

SK 0182NB - SK 6382

SK 02040 - SK 42125
SK 13050 - SK 43125

SK 9012.1 - SK 9052.1
SK 9013.1 - SK 9053.1

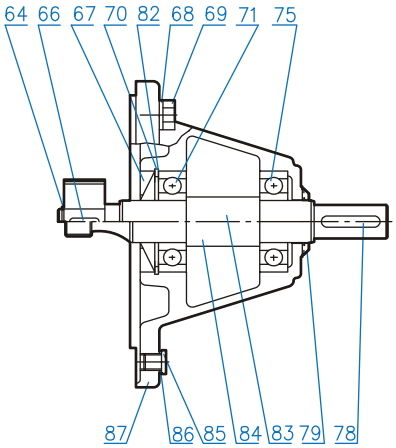

SK 62 - SK 72
SK 73 - SK 93

SK 6282 - SK 7282
SK 7382 - SK 9382

SK 9072.1

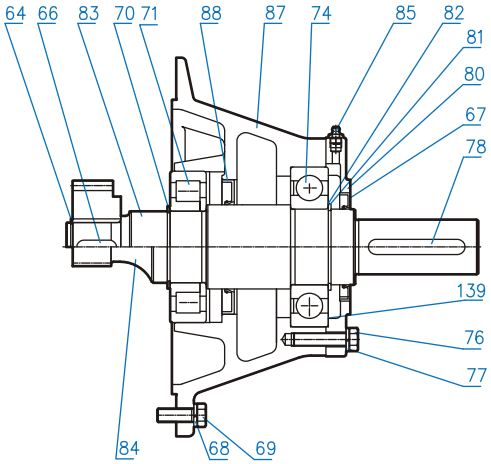

64	Circlip
66	Key
67	Shaft Seal
68	Washer
69	Hexagon Screw
70	Circlip
71	Input Shaft Bearing
74	Ball Bearing
75	Input Shaft Bearing
76	Washer
77	Hexagon Screw
78	Key
79	Oil Flinger
80	Bearing Cover
81	Circlip
82	Shim
83	Input Shaft, Plain
84	Input Shaft, Gearcut
85	Drain Plug
86	Seal
87	Input Bearing Housing
88	Shaft Seal (Oil Flinger)
139	Shim

SK 82 - SK 102
SK 103

SK 8282 - SK 9282

SK 9082.1 - SK 9092.1

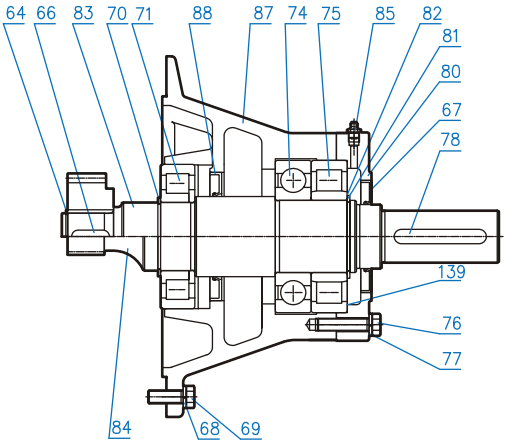

SK 10282 - SK 12382

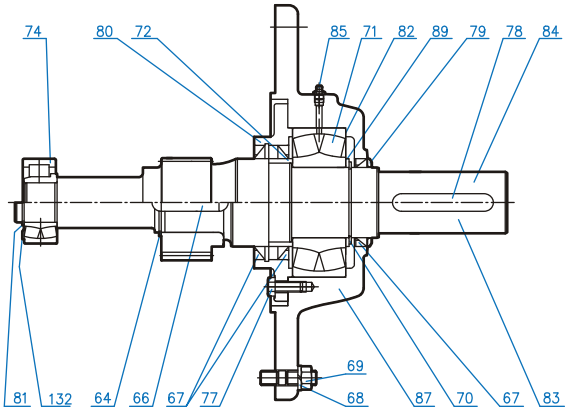

SOLID INPUT SHAFT (W)

W-Type Inputs for Parts List for Nordbloc / 92 Bevel Gearboxes

SK172 - SK673
SK92072 - SK92372

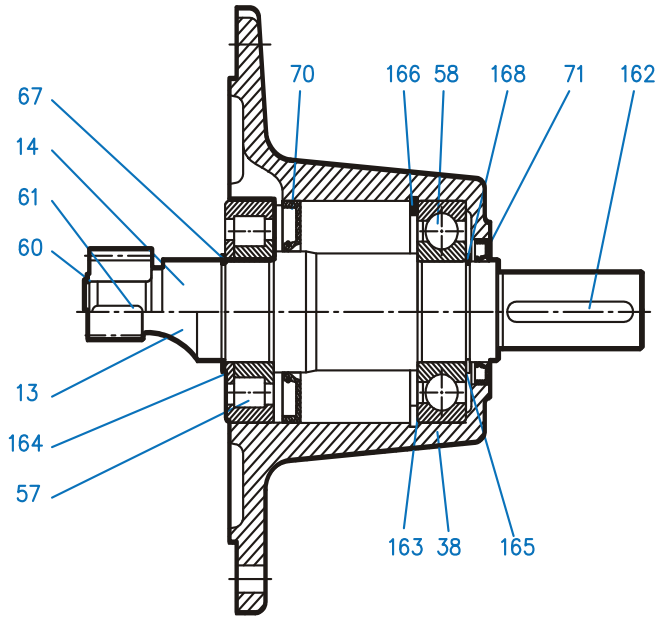

13	Pinion Shaft
14	InputShaft
38	IEC Adapter
57	Bearing
58	Bearing
62	Oil Flinger
70	Shaft Seal
71	Shaft Seal
160	Snap Ring
161	Key
162	Key
163	Shim
164	Snap Ring
165	Set Screw
166	Snap Ring
167	Snap Ring
168	Snap Ring

SK772 - SK973
SK92672 - SK92772

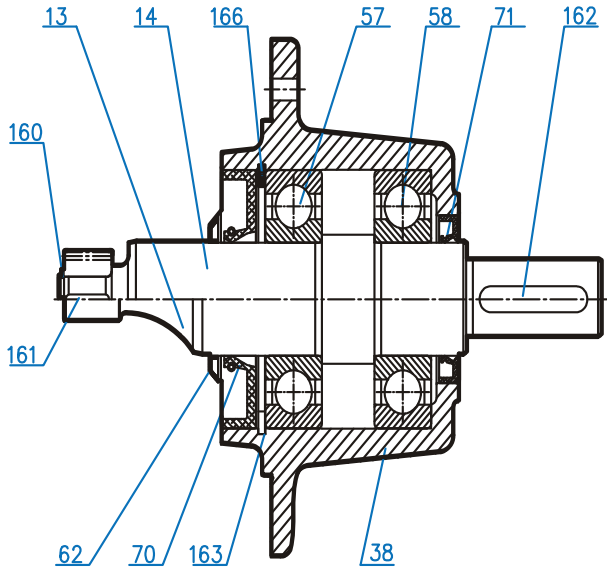

MOTOR MOUNT PLATFORM (MK)

Motor Mount Platform (MK)

For proper installation of the belt drive, consult the manufacturer. NORD MK motor mounts are adjustable in two ways. Slotted holes are provided at the input cylinder for the initial height adjustment. There are two fine adjustments at the yoke to increase/decrease tension. Two spanner head wrenches will be needed to tighten/loosen the fine adjustments. The four bolts holding the motor platform to the input cylinder must be loosened in order to use the fine adjustments.

The motor mounting platform has tapped holes to accept the foot pattern of the standard footed NEMA or IEC motor. All MK mounting input shaft diameters are metric.

Align the sheaves or sprockets square and parallel by placing a straight edge across their faces. Alignment of bushed sheaves and sprockets should be checked after bushings have been tightened. Check horizontal shaft alignment by placing a level vertically against the face of the sheave or sprocket. Adjust belt or chain tension per the manufacturer's specified procedure. After a period of operation, recheck alignment and adjust as required.

HARMFUL SITUATION

When using external chain or belt drives, make sure the reducer is sized so that the shaft and bearings have adequate capacity. To avoid unnecessary bearing loads and additional shaft deflection, mount all power take-off devices (sprockets, pulleys, etc.) so that the applied load center is as close to the gear housing as possible and check component alignment and tension of any belts or chains per the manufacturer's recommendation. Do not over tighten the belts or chains.

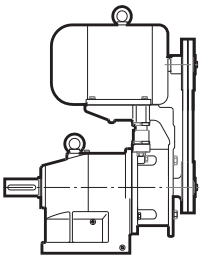

In-Line Unit

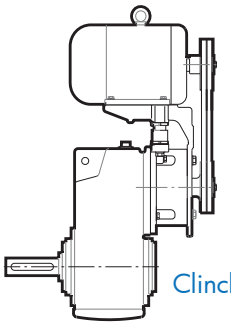

Clincher™ Unit

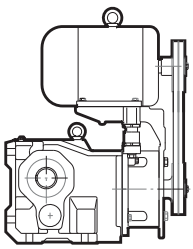

Bevel Unit

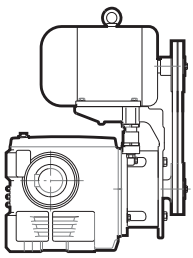

Worm Unit

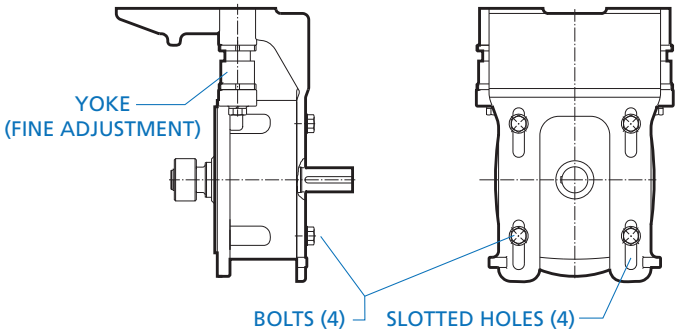

WARNING

NORD Gear does not furnish the safety guards for the belt drive. It is the responsibility of the customer to install a safety guard to conform to OSHA standards.

Sugar Scoop

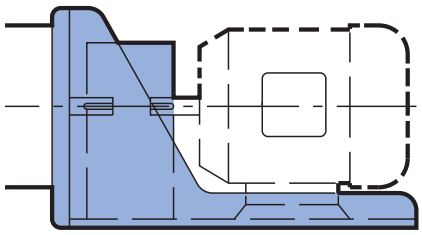

Each scoop bracket includes the coupling for the motor and the coupling guard.

- NORD's standard supplied coupling is the jaw-type coupling with elastomeric spider element.
- The reducer-side (driven) coupling hub is mounted by NORD.
- The motor-side (driver) coupling hub must be mounted by the party responsible for supplying or mounting the motor.
- The supplied coupling guard must be mounted after coupling installation.

Coupling Mounting Instructions

1. Make sure that the motor shaft is clean and free of burrs or defects.
2. Check the motor shaft, coupling hub bores, key and key seat dimensions to make sure they are the proper dimensions.
3. Mount the coupling onto the motor by placing the coupling so that the inside face is flush with the end of the motor shaft and tightening the set screws to hold it in place (Figure 1).

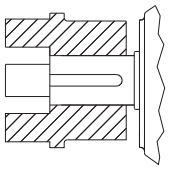

Figure 1. Place coupling flush with end of motor shaft and tighten setscrew.

IMPORTANT NOTE

Heating the coupling hub slightly, up to 176°F (80°C) will help facilitate installation onto the motor shaft.

WARNING

Wear appropriate safety gloves to handle the heated coupling hubs to avoid serious burns or injury.

HARMFUL SITUATION

DO NOT DRIVE or HAMMER coupling hubs into place. An endwise blow to the reducer or motor shaft can generate damaging axial forces and cause damage to the reducer or motor housing, bearings, or internal components.

4. Let the coupling cool down before mounting the spider into the jaws. The spider should not be under axial compression when installed.
5. Place the motor onto the scoop and engage the couplings together. The scoop has slotted holes to help accommodate axial alignment. Secure the motor to the scoop bracket but do not completely tighten the fasteners.

IMPORTANT NOTE

Before tightening the motor to the scoop bracket, the alignment of the coupling must be checked. Shimming of the motor feet may be needed to properly align the couplings. Careful coupling alignment extends the life of not only the coupling but all the components of the drive train.

6. Check the parallel alignment by placing a straight edge or level across the two coupling hubs, and measure the maximum offset at various points around the circumference of the coupling, without rotating the coupling. The maximum parallel alignment should not exceed 0.015 inches (4 mm).
7. Check the angular alignment of the coupling without rotating the hubs. The maximum angular displacement should not exceed 1.0°.
8. After both angular and parallel alignment is within specified limits, tighten all motor mounting hardware to the appropriate torque specification.
9. Re-check the critical alignment and repeat steps 6 and 7 if needed.
10. Mount the coupling guard to the scoop.

WARNING

It is the customer responsibility to properly guard the rotating shaft and coupling connection and make sure the system meets all local safety regulations.

IMPORTANT NOTE

After a period of operation, it is suggested that the system be checked to make sure coupling alignment is being maintained.

nsd tuph TOUCH-UP KIT

Items included in the touch-up kit

I. No Rinse Alodine® Touch-N-Prep pen.

II. Color matched sealer pen

WARNING

- Always wear Personal Protective Equipment (PPE), including gloves and safety glasses with side shields.
- When opening individual pens, pull safety caps straight out from pen. Do not twist or torque the cap to avoid damaging the applicator assembly.
- Do not use fingers to prime the applicator tip. Priming takes 15-30 seconds.
- Make sure the surface is clean and dry.

IMPORTANT NOTE

I. Metal temperature must be above 50° F

II. Do not excessively use abrasive pad while removing surface oxidation. Oxidation only needs to be removed from areas with exposed aluminum.

III. Use enough product to wet surface but avoid pooling.

IV. Do not rinse or wipe Alodine coating before the product is allowed to dry.

V. Allow to air dry or use a blow dryer. Do not use a heat gun. Maximum drying temperature is 140°F.

VI. Dry color will appear opaque.

Part I: Allodine® 871 Touch-N-Prep® Pen Instructions

Touch-N-Prep® pens are designed for easy and safe repair of clean, bare, or previously painted aluminum surfaces. It is a non-rinse, dry-in-place application that can be applied using the following steps:

1. Surface Preperation

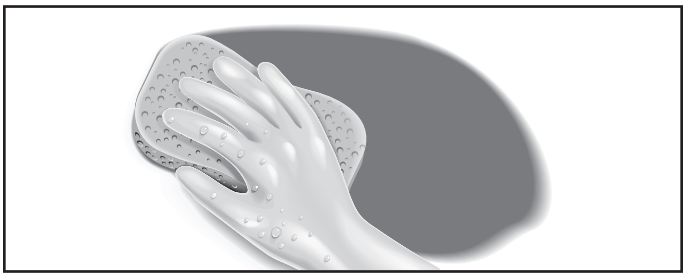

Before applying the coating, the treated surface must be cleaned using the following process:

- If the scratch is more than 24 hours old use a moistened abrasive pad to remove oxides from the surface of the metal.
- Wipe substrate with a damp lint-free cloth to ensure complete removal of soils and dislodged oxides generated from the previous step.
- Allow Surface to dry before Touch-N-Prep® application.

2. Prime Applicator Tip

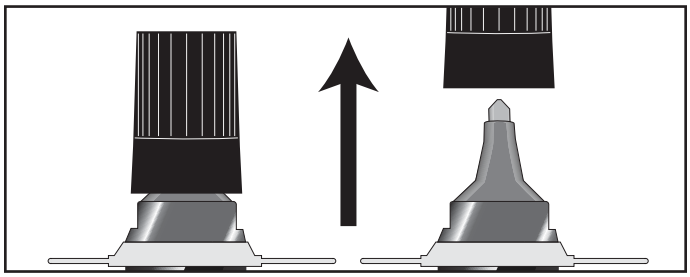

To activate, hold the Touch-N-Prep® pen upright and pop off the cap. Do not twist or turn to remove the cap, since this may result in the pen leaking. Hold the pen tip down onto a clean surface to begin the flow of solution to the tip.

3. Application

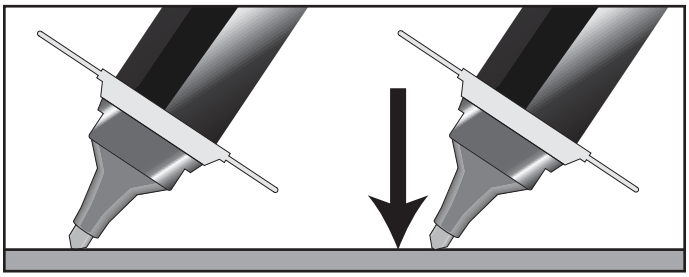

Press the pen tip down on the surface until solution fills the pen tip. Apply the Alodine® 871™ solution to the metal surface with firm, smooth, even strokes, covering all of the edges. Overlap each stroke and allow to dry.

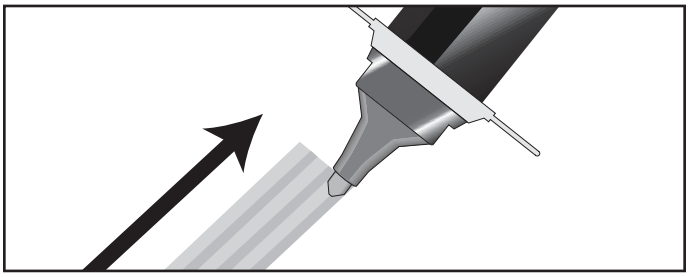

Frequent short jabs to re wet the application rip are preferred to maintain constant coating weights and avoid over-wetting the felt tip.

4. Re-Application

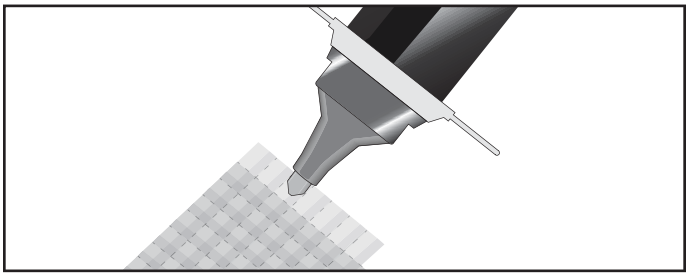

Within 5 minutes of the first coat, apply a second coat at a 90° angle to the first coat with the same smooth, firm stroke.

5. Prepare the Pen for Storage

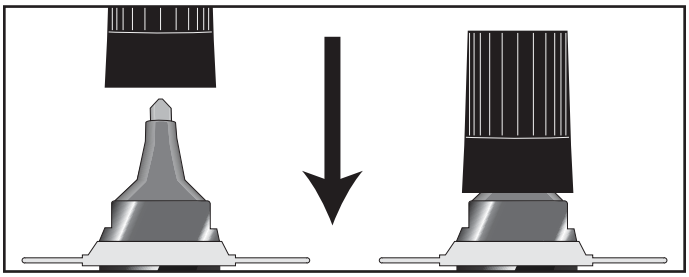

Always immediately replace the cap when not in use to avoid evaporation and contamination.

6. Drying

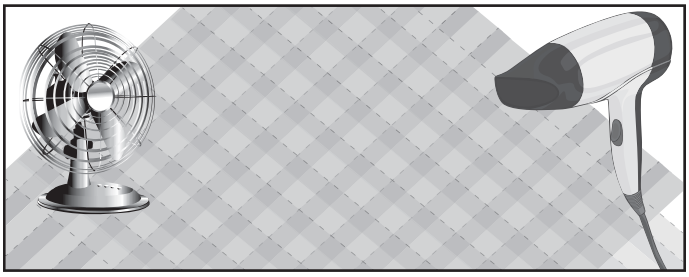

Allow the Alodine Touch-N-Prep® coating to air dry thoroughly.

Part II: Sealer Application

1. Prime Applicator Tip

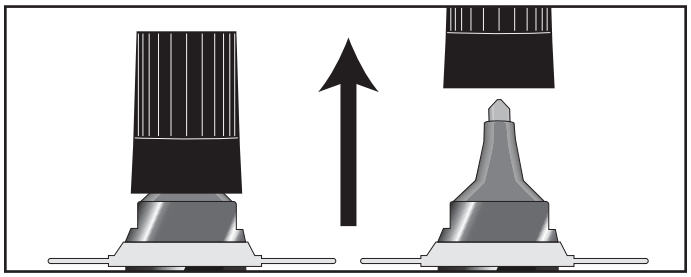

To activate, hold the pen upright and pop off the cap. Do not twist or turn to remove the cap, since this may result in the pen leaking. Hold the pen tip down onto a clean surface to begin the flow of solution to the tip.

2. Application

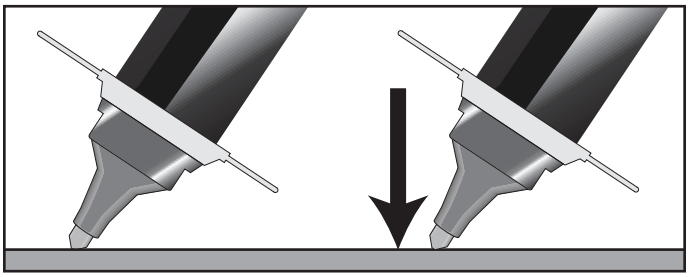

Press the pen tip down on the surface until solution fills the pen tip. Apply the sealer pen solution to the metal surface with firm, smooth, even strokes, covering all of the edges. Overlap each stroke and allow to dry.

3. Prepare the Pen for Storage

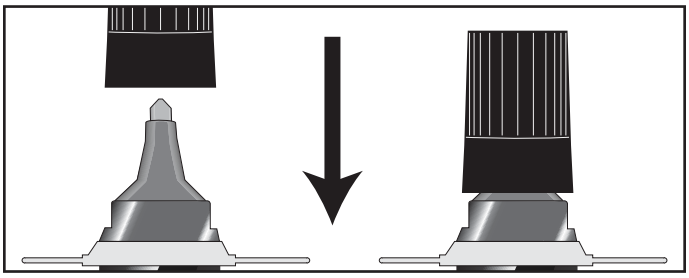

Always immediately replace the cap when not in use to avoid evaporation and contamination.

4. Drying

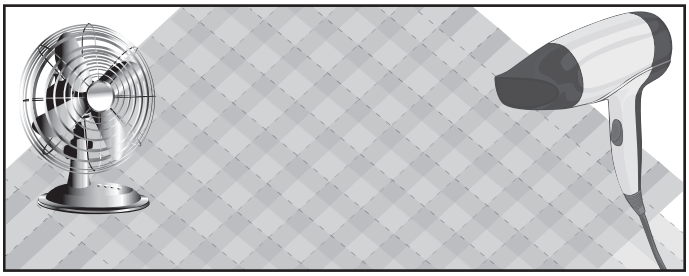

Allow the sealer pen coating to air dry thoroughly.

NORD GEAR CORPORATION

DRIVESYSTEMS — CONDITIONS OF SALE — WWW.NORD.COM

1. CONTRACT

Any contract between Nord Gear Corporation, hereinafter designated as Seller, and the Buyer is subject to the terms and conditions of sale hereinafter set forth. Any deviation from such terms and conditions must be specifically set forth in writing and consented to by Seller. Accordingly, the Buyer and Seller acknowledge and agree that the terms and conditions set forth below and on the face hereof shall govern Buyer's purchase of the goods described on the face hereof and shall take precedence over and represents the final agreement between Buyer and Seller, notwithstanding any inconsistent, contradictory or other prior or further conditions contained in any oral or written request or purchase order issued by Buyer or any other document furnished by Buyer in connection with its purchase of the Goods, regardless of whether such document or documents are exchanged simultaneously with this Invoice or prior or subsequent thereto. Any additional or different terms or conditions which may appear in any communicaiton, oral or written, from Seller, its officers, employees, agents or representatives, are hereby expressly rejected and shall not be effective or binding upon the Seller, unless specifically hereafter agreed to in writing by Seller and no such additional or different terms or conditions in any document submitted to Seller by Buyer shall become part of the contract between Buyer and Seller, unless such written acceptance by Seller specifically recognizes and assents to their inclusion. Any objection by Buyer to the terms and conditions hereof shall be ineffective unless Seller is advised in writing thereof within two (2) days of the date of this Invoice.

2. CONFIRMATION

An order shall be deemed accepted only when duly confirmed by Seller, at Nord Gear Corporation's home office in Waunakee, Wisconsin, and upon such confirmation the order shall become a contract binding upon the parties hereto, their successors and assigns.

3. PRICES

Prices shown are list prices and may be subject to applicable discounts. Unless otherwise agreed upon in writing, prices are FOB factory Waunakee, Wisconsin. Prices and discounts are subject to change without notice until order is accepted. Seller's prices do not include cost of any inspection permits required.

4. LIMITED WARRANTY

Seller hereby warrants that the goods sold hereunder shall be free from material defects in material and workmanship, if properly installed and used under normal operating conditions, for a period of twelve (12) months from the date of installation or eighteen (18) months from date of shipment, whichever comes first (the "Warranty Period"). With respect to gears and housings only, the Warranty Period is extended to thirty-six (36) months from the date of invoice or twenty-four (24) months from the date of installation, whichever comes first. The limited warranty shall not apply to any components or parts which are subject to normal operational wear and tear, including, but not limited to, belts and traction discs. Should any goods fail to comply with the foregoing limited warranty, Buyer shall provide written notice to Seller of the claimed defect and all relevant details within thirty (30) days of Buyer's discovery of the claimed defect. Buyer shall return the allegedly defective goods to Seller at its facilities in Waunakee, Wisconsin or to such other location within the USA as may be designated by Seller in its sole discretion, with all shipping and transportation charges prepaid by Buyer. Seller shall then examine the returned goods to determine if the claimed defect is covered by the limited warranty. If the claimed defect is covered by the limited warranty, Buyer's sole and exclusive remedy shall be to have Seller repair or replace, at Seller's option, the defective goods or components in accordance with the terms of this limited warranty. Seller shall have a commercially reasonable time to make such repairs or replacements and may use new or reconditioned components. Any repair or replacement shall not extend the Warranty Period unless otherwise agreed by Seller. Buyer shall pay all shipping costs and any costs of removal and re-installation of goods or components.

The foregoing limited warranty shall not apply with respect to any goods or components (i) which are not installed, used, operated, serviced or maintained in accordance with manufacturer's instructions or which are otherwise not properly installed, used, operated, serviced or maintained, or (ii) which are misused, neglected, damaged, altered, repaired, reconfigured or incorrectly wired. Seller makes no representations as to the specifications, capacity or performance of the goods sold hereunder, except as may be specifically set forth in the invoice's written specifications, and any such representations are expressly conditioned upon the accuracy and completeness of the data and information furnished by the buyer and upon the goods being properly installed, used, serviced and maintained by Buyer. Any description or model of the goods is for identification or illustrative purposes only and shall not be deemed to create any warranty, express or implied.

THE FOREGOING LIMITED WARRANTY SHALL EXTEND SOLELY TO BUYER AND NOT TO ANY OTHER PARTY. THE FOREGOING LIMITED WARRANTY IS IN LIEU OF ANY AND ALL OTHER WARRANTIES, WHETHER EXPRESS OR IMPLIED. SELLER HEREBY EXCLUDES AND DISCLAIMS ANY AND ALL OTHER WARRANTIES, WHETHER EXPRESS OR IMPLIED, INCLUDING, WITHOUT LIMITATION, ANY IMPLIED WARRANTIES OF MERCHANTABILITY OR FITNESS FOR A PARTICULAR PURPOSE. IF BUYER SHALL FAIL TO PAY WHEN DUE ANY PORTION OF THE PURCHASE PRICE OR ANY OTHER PAYMENT REQUIRED FROM BUYER TO SELLER UNDER THIS CONTRACT, ALL WARRANTIES AND REMEDIES SET FORTH HEREIN SHALL BE DEEMED NULL AND VOID, AB INITIO. THE PARTIES ACKNOWLEDGE AND AGREE THAT THE EXCLUSIVE REMEDY UNDER THE FOREGOING LIMITED WARRANTY SHALL NOT HAVE FAILED OF ITS ESSENTIAL PURPOSE (AS THAT TERM IS USED IN THE UNIFORM COMMERCIAL CODE) PROVIDED THAT SELLER REMAINS WILLING TO REPAIR OR REPLACE DEFECTIVE GOODS WITHIN A COMMERCIALLY REASONABLE TIME. BUYER SPECIFICALLY ACKNOWLEDGES AND AGREES THAT THE PRICE CHARGED BY SELLER FOR THE GOODS IS BASED UPON THE LIMITATIONS OF SELLER'S WARRANTY OBLIGATIONS AND OTHER LIABILITIES AS SET FORTH HEREIN.

LIMITATION OF LIABILITY. NOTWITHSTANDING ANY OTHER PROVISION HEREOF, IN NO EVENT SHALL SELLER BE LIABLE TO BUYER OR TO ANY OTHER PARTY FOR ANY INCIDENTAL, SPECIAL, INDIRECT OR CONSEQUENTIAL DAMAGES, LOST PROFITS, OR FOR ANY LOSSES, CLAIMS OR DAMAGES RELATING TO OR ARISING FROM THE USE OR OPERATION OF THE GOODS, AND IN NO EVENT SHALL ANY CLAIM OR RECOVERY OF ANY KIND EXCEED THE PURCHASE PRICE OF THE GOODS IDENTIFIED IN THE RELATED INVOICE.

5. SHORTAGE AND NONCONFORMITY

Any claim of shortage or that the goods do not conform with the specifications of the order or model must be made in writing within ten (10) days after delivery of the goods (as to which such claim is made) to Buyer or its nominees, but in no event shall the claim be later than within the time limit provided by the carrier or insurance company, otherwise such claim shall be deemed waived. Buyer may not return any goods claimed to be in non-conformity without Seller's prior written authorization. Goods returned without permission will not be accepted, including for credit, and will be returned to Buyer, F.O.B. Sellter's plant. Any claim based on the receipt of damaged Goods must be filed with the carrier which delivered the goods. The samples, measurements, dimensions and weights contained in the Seller's catalogs, sales manuals, photographs and drawings constitute only an approximate guide. The Seller reserves the right to make any change which the Seller, in its absolute discretion, considers necessary. While the goods will be delivered principally according to specifications or standards or quantities agreed upon, insignificant deviations or insignificant changes in construction are permissible. The same applies to partial deliveries, In the event that Buyer has a verified claim of shortage or nonconformity of the goods to the specifications of the order or the model, and if such claim has been submitted within the required time limit as set forth above, the Seller shall, at its own expense, make up for the shortage of the goods, or replace or repair the goods, as the case may be, but in no event shall Seller be or become liable to Buyer or to any other person or persons for any loss in damage, direct or indirect, arising out of or caused by such incidents or for the loss of profits, business or good will. The liability of the Seller to Buyer, if any hereunder, for breach of warranty, contract, negligence or otherwise, shall in no event exceed the amount of the purchase price of the goods sold with respect to which any damages are claimed. Shipping dates are estimates unless parties expressly agree on time of the essence.

6. FORCE MAJEURE

The obligation of the Seller shall be modified or excused, as the case may be, for reasons of Acts of God, war, governmental law regulations, strikes or lock-outs, fire, breakdown of machinery, whether in its own business enterprise, or if for any other cause beyond Seller's control, the goods cannot be delivered or their delivery becomes delayed in whole or in part. In the above instances time for delivery shall be extended for the period of the delay caused, with the proviso, however, that either party may cancel in writing the undelivered portion of the order or contract if the delay exceeds six (6) months from the delivery date originally confirmed by Seller. In no event shall Seller become liable in the aforesaid instances to Buyer or any third party for consequential damages or business loss.

7. SHIPMENT AS UNIT

Each shipment by Seller shall be treated as a separate and distinct unit with respect, but only with respect to forwarding, terms of payment, and the making of claims by the Buyer: provided, however, that if the Buyer defaults in the payment of any obligation to Seller or any installments thereof, under any agreement between Buyer and Seller, or if Buyer refuses to accept any goods when tendered for delivery, the Seller may, on fifteen (15) days written notice to the Buyer, without prejudice to Seller's other lawful remedies, either defer further performance until the defaulted payments are made in full, or make future deliveries for cash in advance only, or treat the entire contract or contracts with Buyer as breached by the Buyer and pursue its remedies for breach.

8. BUYER'S REFUSAL OF DELIVERY

If Buyer refuses to accept delivery of any goods tendered for delivery, then Seller, without prejudice to Seller's other lawful remedies, may either store or cause such goods to be stored in a warehouse, for buyer's account and at Buyer's cost, risk and expense, or sell such goods (without notice) to any purchases at public or private sale, and hold the Buyer liable for any difference between (a) the contract price of the goods, and (b) the price at which goods are resold less the costs and expense of such resale including brokerage commissions, or restocking charges.

9. GOODS IN TRANSIT

If prior to delivery or while the goods are in transit, Buyer or Seller becomes bankrupt or insolvent, or any petition in bankruptcy or for the reorganization or for a state court receivership is filed against Buyer or Seller, as the case may be, then the other party hereto may forthwith terminate this contract by giving written notice of such termination. Such termination shall not affect any claim for damages available to the Buyer, provided that if Buyer is then indebted to Seller, the amount of any such damage claim shall be abated to the extent that the indebtedness of Buyer to Seller, as actually paid in money, is abated by any order of judgement entered or any plan adopted in any bankruptcy, reorganization, receivership, or similar proceeding. Such termination shall not prejudice the Seller's rights to any amounts then due under the contract. If Buyer becomes bankrupt or insolvent or any petition in bankruptcy or for reorganizing or if a state court receivership is filed against Buyer, then, at its option Seller may take possession of any goods theretofore sold to Buyer, in connection with which the full purchase price has not been paid, analogous to the terms and provisions set forth in Paragraphs 11 and 12 hereinafter.

10. DELIVERY

(a) Any indicated dates of delivery are approximate only, but NORD Gear will attempt to meet them whenever possible. (b) NORD Gear will not be liable for any penalty clausess contained in any specifications or order submitted unless agreed to in writing by an authorized officer of NORD Gear Corporation. (c) Unless otherwise agreed, delivery of the goods to any carrier shall constitute delivery to the Buyer, and thereafter the risk of loss or damage to the goods shall be upon the Buyer. (d) If the Buyer does not give delivery instructions to the Seller at least (10) days prior to the delivery date ex factory confirmed by the Seller, the Seller may deliver the goods to a carrier of its own choosing, at Buyer's cost and risk, or, at Seller's option, may store the goods on the pier or any warehouse, at Buyer's cost and risk. Any purchase price in such event becomes due and payable within ten (10) days of such storage.

11. PAYMENT OF PURCHASE PRICE

Time of payment is of the essence under the contract. Unless otherwise provided, terms of payment are 30 days net from the date of invoice with a 1% discount if paid within 10 days of date of invoice. Upon default in any of the terms of the contract, or failure to comply with any of the conditions thereof, or upon seizure of the property under execution or other legal process, or if the Buyer becomes bankrupt or insolvent, or any petition for reorganization or for a state court receivership is filed against Buyer, or if the Buyer makes any assignment for the benefit of it's creditors or otherwise sells, encumbers or disposes of the goods, or if for any other reason the Seller should deem itself insecure, the full amount of the purchase price then remaining unpaid shall at once become due and payable at the option of the Seller.

12. BUYER'S DEFAULT

Upon the Buyer's default, the Seller may dispose of the merchandise in any manner that it deems fit and, if it desires to resell same, may do so at private or public sale, with or without notice, and with or without the property being at the place of sale, subject, however, to applicable laws. The Seller or its assigns shall have the right to bid at such sale and may become the purchaser of the property. The proceeds of the sale shall first be applied to the expenses incurred in retaking, repairing, storing and selling the goods, reasonable attorney's fees included, and then shall be applied to the payment of the balance due under the contract. Any surplus amount shall be paid to the Buyer. If a deficiency results after the resale, the Buyer agrees to pay such forthwith, together with reasonable attorney's fees, for the recovery of the goods incurred by the Seller. If upon the Buyer's default, the Seller elects not to resell any goods which it may repossess, then the cost of repossession, including reasonable attorney's fees, shall forthwith be due and payable from Buyer to Seller. Buyer agrees to pay all reasonable costs and reasonable attorneys' fees incurred by Seller in enforcing Seller's rights against Buyer, including Seller's right to payment of the purchase price of the goods and Buyer's payment of all other amounts owing to Seller required under this Invoice and Conditions of Sale.

13. SECURITY INTEREST AND TITLE

In states and localities which are governed by the Uniform Commercial Code, this contract shall serve as security agreement, reserving in Seller a security interest until full payment of purchase price. The provisions of the Uniform Commercial Code regarding security interest shall have preference and apply if inconsistent with other terms of the conditions of sale. In states and localities where the Uniform Commercial Code does not apply, title to the goods shall remain in the Seller or its assigns until full payment of the purchase price. Buyer agrees to execute forthwith any and all documents in such a way and form as Seller may need for filing or recording the security interest under the Uniform Commercial Code with the proper registers or offices, or for filing or recording the conditional sales contract.

14. SALES AND USE TAX

Buyer agrees to bear and pay any sales or use tax in connection with the purchase herein, and to hold the Seller harmless from payment. At the option the Seller, Buyer shall give evidence of payment or of exemption certificate.

15. INSURANCE

The Buyer shall keep the goods insured against damage by fire, water or other casualty as required by Seller, with a company acceptable to Seller, with loss payable to Seller for the total purchase price until the Seller is fully paid. Seller, if it so elects, may place said insurance at Buyer's expense; Seller may cancel such insurance at any time and without notice and may receive the return premium, if any.

16. MODIFICATION BY SELLER

Any contract may be assigned or transferred by the Seller, or the time for the making of any payment due by Buyer may be extended by Seller without derogation of any of the rights of the Seller or its assigns. Waiver by any party of any default shall not be deemed a waiver of any subsequent default.

17. RETURNED GOODS

No goods will be accepted for return unless authorized in writing by Seller. In all cases, transportation and restocking charges will be borne by Buyer.

18. PACKING

The Buyer will be charged for export packaging or other special packing desired. Cost for cartage to ship or transfer express will be added to the invoice. No credit will be allowed if no packing is required.

19. CHANGES/CANCELLATION

NORD Gear will not accept changes in specifications to a confirmed order unless such changes are requested in writing and confirmed back in writing. In addition, the purchaser must to agree to any additional charges that may arise from the change. Placing orders on hold or cancellation of orders require Seller's written approval, and are subject to cancellation and/or restocking charges.

20. BUYER'S RESPONSIBILITY AS TO MAINTENANCE

Buyer shall use and shall require its employees and agents to use all safety devices and guards and shall maintain the same in proper working order. Buyer shall use and require its employees and agents to use safe operation procedures in operating the equipment and shall further obey and have its employees and agents obey safety instructions given by Seller. If Buyer fails to meet the obligations herein, Buyer agrees to defend, indemnify and save Seller harmless from any liability or obligation with regard to any personal injuries or property damages directly or indirectly connected with the operation of the equipment. Buyer further agrees to notify Seller promptly and in any event not later than ten (10) days after notice or knowledge of any accident or malfunction involving Seller's equipment which has caused personal injury or property damages and to cooperate fully with Seller in investigating and determining the causes of such accident and malfunction. In the event that Buyer fails to give such notice to Seller or to cooperate with Seller, Buyer shall be obligated to defend, indemnify and save Seller harmless from any such claims arising from such accident.

21. MISCELLANEOUS PROVISIONS

(a) If for any reason a provision of a contract is legally invalid, then in such event the rest of the contract shall remain in full force and affect, except that the parties shall try to replace such invalid provision closest to their original mutual intentions. (b) This Invoice and these Conditions of Sale constitute the entire agreement between the parties regarding the subject matter hereof and supercedes all prior agreements, understandings and statements, whether oral or written, regarding such subject matter. No modification to, change in or departure from, the provisions of this Invoice and Conditions of Sale shall be valid or binding on Seller, unless approved in writing by Seller. No course of dealing or usage of trade shall be applicable unless expressly incorporated into this Invoice and Conditions of Sale. Any amendments to any contract or contracts between the parties shall be valid only upon the written consent of both parties.

22. NON ASSIGNMENT BY BUYER

Contract or contracts may not be assigned by the Buyer without prior written consent of the Seller.

23. APPLICABLE LAW AND VENUE

All contracts and their interpretation are governed by the applicable, substantive laws of the State of Wisconsin. Any litigation brought by the Buyer regarding this Invoice or goods purchased hereunder may only be brought in the Circuit Court for Dane County, Wisconsin.

NORD GEAR LIMITED

DRIVESYSTEMS — TERMS & CONDITIONS OF SALE — WWW.NORD.COM

1. CONTRACT
Any contract between Nord Gear Limited, hereinafter designated as "Seller", and the party or parties accepting these terms and conditions of sale and any agent, officer, servant, employee or subcontractor of such party or parties, hereinafter designated as "Buyer", is subject to the terms and conditions of sale hereinafter set forth. Any deviation from such terms and conditions must be specifically set forth in writing and consented to by Seller.

2. CONFIRMATION
An order shall be deemed accepted only when duly confirmed by Seller, at Nord Gear Limited's home office in Brampton, Ontario, and upon such confirmation the orders shall become a contract binding upon the parties hereto, their successors and assigns.

3. PRICES
Prices shown are list prices and may be subject to applicable discounts. Unless otherwise agreed upon in writing, prices are FOB factory Brampton, Ontario. Prices and discounts are subject to change without notice until the order is accepted. Seller's prices do not include cost of any inspection permits required.

4. LIMITED WARRANTY
Seller warrants the goods sold hereunder to be free from defects in material and workmanship under normal use and service not arising from misuse, negligence, or accident, including but not limited to the use, installation, and transportation of the goods by Buyer, its agents, servants, employees, or by carriers. This warranty shall pertain to any part or parts of any goods to which Buyer or its assigns has within one year from date of delivery given written notice of claimed defects to Seller. Buyer shall be required to furnish Seller with details of such defects and this warranty shall be effective as to such goods which Seller's examination shall disclose to its satisfaction to have been defective and which at Seller's option shall promptly thereafter be returned to Seller or its nominees. EXCEPT FOR THE EXPRESS WARRANTIES SET FORTH ABOVE, SELLER HAS MADE NO WARRANTIES, EXPRESS, IMPLIED OR STATUTORY, AS TO THE GOODS SOLD HEREUNDER, INCLUDING, BUT NOT LIMITED TO THEIR MERCHANTABILITY OR FITNESS FOR ANY PARTICULAR PURPOSE. ANY DESCRIPTION OR MODEL OF THE GOODS IS FOR IDENTIFICATION OR ILLUSTRATIVE PURPOSES ONLY AND SHALL NOT BE DEEMED TO CREATE AN EXPRESS WARRANTY. The Buyer's exclusive remedy for claims arising from defective or nonconforming goods shall be limited to the repair or replacement thereof at the Seller's sole option. THE SELLER SHALL NOT BE RESPONSIBLE OR LIABLE FOR CONSEQUENTIAL DAMAGES ARISING OUT OF OR IN CONNECTION WITH THE SALE, DELIVERY, USE, PERFORMANCE, OR SERVICE OF THE GOODS SOLD UNDER THIS AGREEMENT. SELLER SHALL NOT BE LIABLE FOR ANY LOST PROFITS OR FOR ANY CLAIM OR DEMAND AGAINST SELLER BY ANY PARTY. IN NO EVENT WILL SELLER BE LIABLE FOR SPECIAL, INDIRECT OR CONSEQUENTIAL DAMAGES, EVEN IF SELLER HAS BEEN ADVISED OF THE POSSIBILITY OF SUCH DAMAGES. SELLER'S AGGREGATE LIABILITY FOR DAMAGES UNDER THIS AGREEMENT, WHETHER ARISING FROM OR BASED UPON BREACH OF WARRANTY, BREACH OF CONTRACT, TORT OR OTHER CAUSE OF ACTION, SHALL IN NO CASE EXCEED THE PURCHASE PRICE THAT BUYER PAYS FOR THE PARTICULAR GOODS INVOLVED. Seller shall in no event be liable to any person or firm (including any assignee or Buyer) except Buyer and its successors. Unless specifically authorized by Seller in writing, Seller shall not become responsible for any repair work done by Buyer or any other party on any goods sold. Any costs of the return of such goods to Seller shall be borne by Buyer. Goods sold but not manufactured by Seller are being warranted as to defects in material and workmanship consistent with the limited warranty policy of the original manufacturer of the goods and if there is not such a limited warranty policy, the warranty shall be limited to the provisions of Article 4 herein. Standards for the operating characteristics of the gearboxes and the gear motors are in conformity with Seller's tests. THIS WARRANTY IS IN LIEU OF ALL OTHER EXPRESS OR IMPLIED WARRANTIES, INCLUDING ANY IMPLIED WARRANTY OF MERCHANTABILITY OR FITNESS FOR ANY PARTICULAR PURPOSE SELLER DOES NOT ASSUME, NOR DOES IT AUTHORIZE ANY PERSON TO ASSUME, ON ITS BEHALF, ANY OTHER OBLIGATION OR LIABILITY.

5. SHORTAGE AND NONCONFORMITY
Any claim of shortage or that the goods do not conform with the specifications of the order or model must be made in writing within ten (10) days after delivery of the goods (as to which such claim is made) to Buyer or its nominees, but in no event shall the claim be later than within the time limit provided by the carrier or insurance company, otherwise such claim shall be deemed waived. The samples, measurements, dimensions and weights contained in Seller's catalogs, sales manuals, photographs and drawings constitute only an approximate guide. Seller reserves the right to make any changes which Seller, in its absolute discretion, considers necessary. While the goods will be delivered principally according to specifications of standards or quantities agreed upon, insignificant deviations or insignificant changes in construction are permissible. The same applies to partial deliveries. In the event that Buyer has a verified claim of shortage or nonconformity of the goods to the specifications of the order or the model, and if such claim has been submitted within the required time limit as set forth above, Seller shall, at its own expense, make up for the shortage of the goods, or replace or repair the goods, as the cause may be, but in no event shall Seller be or become liable to Buyer or to any other person or persons for any loss in damage, direct or indirect, arising out of or caused by such incidents or for the loss of profits, business of good will. Shipping dates are estimates unless parties expressly agree on time of the essence.

6. FORCE MAJEURE
The obligation of Seller shall be modified or excused, as the case may be, for reasons of Acts of God, war, governmental law regulations, strikes or lock-outs, fire, breakdown of machinery, whether in its own business enterprise, or if for any other cause beyond Seller's control, the goods cannot be delivered or their delivery becomes delayed in whole or in part. In the above instances time for delivery shall be extended for the period of the delay caused, with the proviso, however, that either party may cancel in writing the undelivered portion of the order of contract if the delay exceeds six (6) months from the delivery date originally confirmed by Seller. In no event shall Seller become liable in the aforesaid instances to Buyer or any third party for consequential damages or business loss.

7. SHIPMENT AS UNIT
Each shipment by Seller shall be treated as a separate and distinct unit with respect, but only with respect to forwarding, terms of payment, and the making of claims by Buyer; provided, however, that if Buyer defaults in the payment of any obligation to Seller or any installments thereof, under any agreement between Buyer and Seller, or if Buyer refuses to accept any goods when tendered for delivery, Seller may, on fifteen (15) days written notice to Buyer, without prejudice to Seller's other lawful remedies, either defer further performance until the defaulted payments are made in full, or make future deliveries for cash in advance only, or to treat the entire contract or contracts with Buyer as breached by Buyer and pursue its remedies for breach.

8. BUYER'S REFUSAL OF D ELIVERY
If Buyer refuses to accept delivery of any goods tendered for delivery, then Seller, without prejudice to Seller's other lawful remedies, may either store or cause such goods to be stored in a warehouse, for Buyer's account and at Buyer's cost, risk and expense, or sell such goods (without notice) to any purchaser at public or private sale, and hold Buyer liable for any difference between (A) the contract price of the goods, and (B) the price at which goods are resold less the costs and expense of such resale including brokerage commissions, or restocking charges.

9. GOODS IN TRANSIT
If prior to delivery or while the goods are in transit, Buyer or Seller becomes bankrupt or insolvent, or any petition in bankruptcy or for the reorganization or for appointment of a receiver is filed against Buyer or Seller, as the case may be, then the other party hereto may forthwith terminate this contract by giving written notice of such termination. Such termination shall not affect any claim for damages available to Buyer, to Seller, as actually paid in money, is abated by any order of judgment entered or any plan adopted in any bankruptcy, reorganization, receivership, or similar proceeding. Such termination shall not prejudice Seller's rights to any amounts then due under the contract. If Buyer becomes bankrupt or insolvent or any petition in bankruptcy or for reorganization or if a state court receivership is filed against Buyer, then, at its option, Seller may take possession of any goods theretofore sold to Buyer, in connection with which the full purchase price has not been paid, analogous to the terms and provisions set forth in Paragraphs 11 and 12 hereinafter.

10.DELIVERY
(A)Unless otherwise agreed, delivery of the goods to any carrier shall constitute delivery to Buyer, and thereafter the risk of loss or damage to the goods shall be upon Buyer. (B) If Buyer does not give delivery instructions to Seller at least ten (10) days prior to the delivery date ex factory confirmed by Seller, Seller may deliver the goods to a carrier of its own choosing, at Buyer's cost and risk, or, at Seller's option may store the goods on the pier or on any warehouse at Buyer's cost and risk. Any purchase price in such event becomes due and payable within ten (10) days of such storage.

11. PAYMENT OF PURCHASE PRICE
Time of payment is of the essence under the contract. Upon default in any of the terms of the contract, or failure to comply with any of the conditions thereof, or upon seizure of the property under execution or other legal process, or if Buyer becomes bankrupt or insolvent, or any petitions for reorganization or for appointment of a receiver is filed against Buyer, or if Buyer makes any assignment for the benefit of its creditors or otherwise sells, encumbers or disposes of the goods, or if for any other reason Seller should deem itself insecure, the full amount of the purchase price then remaining unpaid shall at once become due and payable at the option of Seller. Interest on the delinquent payment from the due date thereof until paid shall be at a rate of two (2%) percent per month.

12. BUYER'S DEFAULT
Upon Buyer's default, Seller may dispose of the merchandise in any manner that it deems fit and, if it desires to resell same, may do so at private or public sale, with or without notice, and with or without the property being at the place of sale, subject, however, to applicable laws. Seller or its assigns shall have the right to bid at such sale and may become the purchaser of the property. The proceeds of the sale shall first be applied to the expenses incurred in retaking, repairing, storing and selling the goods; reasonable solicitor's fees included, and then shall be applied to the payment of the balance due under the contract. Any surplus amount shall be paid to Buyer. If a deficiency results after the sale, Buyer agrees to pay such forthwith, together with reasonable solicitor's fees, for the recovery of the goods incurred by Seller. If upon Buyer's default, Seller elects not to resell any goods which it may repossess, then the cost of repossession, including reasonable solicitor's fees, shall forthwith be due and payable from Buyer to Seller.

13. SECURITY INTEREST AND TITLE
In provinces which are governed by a Personal Property Security Act, this contract shall serve as a security agreement, reserving in Seller a security interest until full payment of the purchase price. The provisions of the Personal Property Security Act regarding security interest shall have preference and apply if inconsistent with other terms of the conditions of sale herein. In provinces where a Personal Property Security Act does not apply, title to the goods shall remain in the Seller or its assigns until full payment of the purchase price. Buyer agrees to execute forthwith any and all documents in such a way and form as Seller may need for filing or recording the security interest under a Personal Property Security Act with the proper registers or offices, or for filing or recording the Conditional Sales Contract herein.

14. SALES AND USE TAX
Seller's prices do not include sales, use, excise or other taxes payable to any governmental authority in respect of the sale of Seller's goods. Buyer shall pay, in addition to Seller's price, the amount of any such taxes or shall reimburse Seller for the amount thereof that Seller may be required to pay. At the option of Seller, Buyer shall give evidence of payment or of exemption certificate.

15. INSURANCE
Buyer shall keep the goods insured against damage by fire, water or other casualty as required by Seller, with a company acceptable to Seller, with loss payable to Seller for the total purchase price until Seller is fully paid. Seller, if it so elects, may place said insurance at Buyer's expense; Seller may cancel such insurance at any time and without notice and may receive the return premium, if any.

16. MODIFICATION BY SELLER
Any contract may be assigned or transferred by Seller, or the time for the making of any payment due by Buyer may be extended by Seller without derogation of any of the rights of Seller or its assigns. Waiver by any party of any default shall not be deemed a waiver of any subsequent default.

17. RETURNED GOODS
No goods will be accepted for return unless authorized in writing by Seller. In all cases, transportation and restocking charges will be borne by Buyer.

18. PACKING
Seller does not charge for standard packaging for domestic shipment. Buyer will be charged, however, for export packaging or other special packing desired. Cost for cartage to ship or transfer express will be added to the invoice. No credit will be allowed if no packing is required.

19. EXPORT ORDER
Export orders are to be accompanied by a confirmed irrevocable Letter of Credit in Seller's favor, in Canadian currency, with an accredited Canadian bank, subject to Seller's draft, with shipping documents attached.

20. CANCELLATION
Placing orders on hold or cancellation of orders require Seller's written approval, and are subject to cancellation and/or restocking charges.

21. BUYER'S RESPONSIBILITY AS TO MAINTENANCE
Buyer shall use and shall require its employees and agents to use all safety devices and guards and shall maintain the same in proper working order. Buyer shall use and require its employees and agents to use safe operating procedures in operating the equipment and shall further obey and have its employees and agents obey safety instructions given by Seller. If Buyer fails to meet the obligations herein, Buyer agrees to indemnify and save Seller harmless from any liability or obligation with regard to any personal injuries or property damages directly or indirectly connected with the operation of the equipment. Buyer further agrees to notify Seller promptly and in any event not later than ten (10) days after notice or knowledge of any accident or malfunction involving Seller's equipment which has caused personal injury or property damages and to cooperate fully with Seller in investigating and determining the causes of such accident and malfunction. In the event that Buyer fails to give such notice to Seller or to cooperate with Seller, Buyer shall be obligated to indemnify and save Seller harmless from any such claims arising from such accident.

22. MISCELLANOUS PROVISIONS
(A)If for any reason a provision of a contract is legally invalid, then in such event the rest of the contract shall remain in full force and affect, except that the parties shall try to replace such invalid provision with a provision closest to their original mutual intentions. (B) Any amendments to any contract or contracts require the consent in writing by both parties. Headings in this document are for ease of reference only.

23. NON ASSIGNMENT BY BUYER
Contract or contracts may not be assigned by Buyer without prior written consent of Seller.

24. APPLICABLE LAW
This agreement shall be governed by the laws of the Province of Ontario and the applicable laws of Canada. Buyer and Seller agree that any judicial proceeding with respect to this agreement must be brought and maintained in the City of Toronto, In the Province of Ontario.

25.
This instrument sets forth the entire understanding and agreement of the parties hereto in respect of the subject matter hereof, and all prior undertaking between the parties hereto, together with all representations and obligations of such parties in respect of such subject matter, shall be superseded by and merged into this instrument.

26.
The provisions of this agreement shall bind and ensure to the benefit of the parties hereto and their respective heirs, executors, administrators, successors and (subject to any restrictions or assignment herein above set forth) assigns, as the case may be.

27.
The parties acknowledge that they have requested this document and all notices or other documents relating thereto be drafted in the English language.

Les parties reconnaissent qu'ils ont requis que ce contrat et tous les avis ou autres documents qui s'y rapportent soient rédiges en langue anglaise.

"Terms and Conditions in French available upon request."

Product Overview

We can match our NORDAC AC vector drives with our Inverter/Vector Duty Motors and UNICASE™ Speed Reducers to provide a total AC Motor Drive solution from one trusted source.

UNICASE™ SPEED REDUCERS

HELICAL IN-LINE
- Foot or Flange Mount
- Torque up to 205,000 lb-in
- Gear ratios – 1.82:1 to over 300,000:1

NORDBLOC® HELICAL IN-LINE
- Foot or Flange Mount
- Torque up to 26,550 lb-in
- Gear ratios – 1.88:1 to over 370:1

PARALLEL HELICAL CLINCHER™
- Shaft, Flange or Foot Mount
- Torque up to 797,000 lb-in
- Gear ratios – 4.26:1 to over 300,000:1

RIGHT ANGLE HELICAL-BEVEL 2-STAGE
- Foot, Flange or Shaft Mount
- Torque up to 5,840 lb-in
- Gear ratios – 4.1:1 to 72:1

RIGHT ANGLE HELICAL-BEVEL
- Foot, Flange or Shaft Mount
- Torque up to 283,000 lb-in
- Gear ratios – 8.04:1 to over 300,000:1

RIGHT ANGLE HELICAL-WORM
- Foot, Flange or Shaft Mount
- Torque up to 27,585 lb-in
- Gear ratios – 4.40:1 to over 300,000:1

MINICASE™ RIGHT ANGLE WORM
- Foot, Flange or Shaft Mount
- Torque up to 3,540 lb-in
- Gear ratios – 5:1 to 500:1

FLEXBLOC™ WORM
- Modular bolt-on options
- Torque up to 4,683 lb-in
- Gear ratios – 5:1 to 3,000:1

HIGH PERFORMANCE MOTORS & BRAKEMOTORS

INVERTER/VECTOR DUTY
- Standard or Energy Efficient
- Integral, NEMA or Metric IEC
- 1/6 to 250 hp

NORDAC AC VECTOR DRIVES

TRIO SK300E
- Motor or remote mounted
- IP55 – washdown
- 380-460V, 3-phase, to 5hp
- 200-240V, 3-phase, to 3hp

SK500/520/530E
- Compact, high performance
- 380-480V, 3-phase, to 10hp
- 200-240V, 3-phase, to 5hp
- 200-240V, 1-phase, to 3hp
- 110-120V, 1-phase, to 1.5hp

SK700E
- Flexible high performance
- 380-460V, 3-phase, to 200hp

DRIVESYSTEMS

www.nord.com

NORD Gear Corporation
National Customer Service Toll-Free: 888.314.6673
info.us@nord.com

NORD Gear Limited
Toll-Free in Canada: 800.668.4378
info.ca@nord.com

WEST
Corona, CA (Los Angeles)
Phone: 608.849.0190

MIDWEST
Waunakee, WI (Madison)
Phone: 608.849.7300

EAST
Charlotte, NC
Phone: 608.849.0140

CANADA
Brampton, ON (Toronto)
Phone: 905.796.3606

100200104/0909

Installation, Operation and Maintenance Instructions

for AC Induction Motors
56- 6800 Frames (NEMA)
63 – 280 Frames (IEC)

MARATHON ELECTRIC
Contact Motor Customer Service at:
Phone: (715) 675-3311
www.marathonelectric.com

Form 5554E

INSTALLER: PLEASE LEAVE THIS MANUAL FOR THE OWNER'S USE
OWNER: READ AND SAVE THESE INSTRUCTIONS

SAFETY INSTRUCTIONS

⚠ This is the safety alert symbol. It is used to alert you to potential personal injury hazards. Obey all safety messages that follow this symbol to avoid possible injury or death.

⚠ WARNING
Before installing, using, or servicing this product, carefully read and fully understand the instructions including all warnings, cautions, & safety notice statements. To reduce risk of personal injury, death and/or property damage, follow all instructions for proper motor installation, operation and maintenance.

These instructions are not intended as a complete listing of all details for installation, operation, and maintenance. If you have any questions concerning any of the procedures, STOP, and call the appropriate Regal-Beloit motor company.

Table of Contents

1.0 INSTALLER / OWNER / OPERATOR RESPONSIBILITY
1.1 Electrical Safety
1.2 Mechanical Safety
1.3 Environmental Safety
2.0 RECEIVING & INSPECTION
2.1 Initial Inspection
2.1.1 Packing List & Inspect
2.1.2 Turn Motor Shaft
2.1.3 Check Nameplate
2.2 Handling
2.2.1 Correct Lifting Angles
2.3 Storage
2.3.1 Bearing Lubrication
2.3.2 Shaft Rotation
2.3.3 Damp or Humid Storage Locations
3.0 INSTALLATION AND OPERATION
3.1 Location
3.1.1 Selecting a Location
3.1.2 Ambient Temperature Limits
3.1.3 Construction Selection per Location
3.1.3.1 Dripproof
3.1.3.2 Totally Enclosed
3.1.3.3 Hazardous Locations Motors
3.2 Mounting Motor
3.2.1 Rigid Base (Footed)
3.2.2 Rigid Base Hole Selection -6 or 8 Hole Bases
3.2.3 Vertical
3.3 Application Assembly to Motor
3.3.1 General: Proper Alignment
3.3.2 Direct Coupling
3.3.3 Direct Connected
3.3.4 Belted
3.3.5 VFD Operation
3.3.6 Accessories
3.3.6.1 General
3.3.6.2 Brake Motors
3.3.6.3 Space Heaters
3.3.6.4 Thermal Protection General, Thermostats, Thermisters & RTDs
3.3.6.5 RTD Alarm & Trip Settings
3.3.7 Guards
3.4 Electrical Connections
3.4.1 Power Supply / Branch Circuit
3.4.1.1 Branch Circuit Supply
3.4.1.2 Fuses, Breakers, Overload Relays
3.4.1.3 AC Power Supply Limits
3.4.2 Terminal Box
3.4.2.1 Conduit opening
3.4.2.2 Hazardous Locations
3.4.3 Lead Connections
3.4.3.1 Wire Size Requirements (Single Phase)
3.4.3.2 Extension Cords (Single Phase)
3.4.4 Ground Connections
3.4.5 Start Up
3.4.5.1 Start Up – No Load Procedure
3.4.5.2 Start Up – Load Connected Procedure
3.4.5.3 Jogging and/or repeated starts
4.0 MAINTENANCE
4.1 General Inspection

4.1.1 Ventilation
4.1.2 Insulation
4.1.3 Electrical Connections
4.2 Lubrication and Bearings
4.2.1 Grease Type
4.2.2 Bearing Operating Temperature
4.2.3 Lubrication Interval
4.2.4 Lubrication Procedure
4.2.5 Lubrication Example
4.3 Trouble Shooting
4.3.1 General Trouble-Shooting Warnings
4.3.2 Trouble-Shooting Cause / Corrective Action

1.0 INSTALLER/OWNER/OPERATOR RESPONSIBILITY:

1.1 ELECTRICAL SAFETY

WARNING: ELECTRICAL SHOCK HAZARD
Electrical connections shall be made by a qualified electrical personnel in accordance with all applicable codes, ordinances and sound practices. Failure to follow these instructions could result in serious personal injury, death and/or property damage. Only qualified personnel who are familiar with the applicable National Code (USA = NEC) and local codes should install or repair electrical motors and their accessories.

WARNING: ELECTRICAL LIVE CIRCUIT HAZARD
Do not touch electrically live parts. Disconnect, lockout and tag input power supply before installing or servicing motor (includes accessory devices). Use a voltmeter to verify that power is off before contacting conductors.

WARNING: ELECTRICAL GROUNDING HAZARD
Failure to properly ground motors, per the National Electrical Code (NEC) Article 430 and local codes may cause serious injury or death to personnel. For general information on grounding refer to NEC Article 250. (Also see "Ground Connections section 3.4.4").

WARNING: AUTOMATIC RESET PROTECTOR HAZARD
Do not use automatic reset protectors if automatically restarting the motor will place personnel or equipment at risk. . Failure to follow this instruction could result in serious personal injury, death and/or property damage

WARNING: MANUAL RESET PROTECTOR HAZARD
If a tripped manual reset thermal protector is exposed to a temperature less than –7°C (20°F) it may reset and restart the motor automatically. If an application requires a motor with a manual reset thermal protector that will be operated at temperatures less than –7°C (20°F) contact the manufacturer to review the application / motor requirements. Failure to follow this instruction could result in serious personal injury, death and/or property damage

1.2 MECHANICAL SAFETY

WARNING: LOOSE PARTS HAZARD
Before starting the motor, remove all unused shaft keys and loose rotating parts to prevent them from flying off. Failure to follow these instructions could result in serious personal injury, death and/or property damage.

WARNING: ROTATING PARTS HAZARD
Keep extremities, hair, jewelry and clothing away from moving parts. Failure to follow these instructions could result in serious personal injury, death and/or property damage.

1.3 ENVIRONMENTAL SAFETY

WARNING: HAZARDOUS LOCATIONS
(1) The NEC and the local authority having jurisdiction must be consulted concerning the installation and suitability of motors for use in Hazardous Locations. The local authority having jurisdiction must make the final determination of what type of motor is required. The application and operation is beyond the control of the motor manufacturer.
(2) Division 1 Hazardous Locations motors can only be modified or reworked by the manufacturer or a facility that is Listed under UL's category "Motors and Generators, Rebuilt for use in Hazardous Locations". Failure to follow these instructions could result in serious personal injury, death and/or property damage.
(3) Do not use a Hazardous Locations motor with a Variable Frequency Drive (VFD) unless the motor nameplate specifically states that the motor is suitable for use on Pulse Width Modulated (PWM) type VFD power. In addition, the nameplate must be marked with the inverter rating; for example, "2:1 CT", "2 to 1 Constant Torque", etc.

2.0 RECEIVING AND INSPECTION

2.1 INITIAL INSPECTIONS

2.1.1 CHECK PACKING LIST AND INSPECT the packaging to make certain no damage has occurred in shipment. If there is visible damage to the packaging, unpack and inspect the motor immediately. Claims for any damage done in shipment must be made by the purchaser against the transportation company.

2.1.2 TURN MOTOR SHAFT by hand to be certain that it rotates freely. Note: Shaft seals and bearing seals may add drag.

2.1.3 CHECK NAMEPLATE for conformance with purchase order requirements and compliance with power supply and control equipment requirements.

2.2 HANDLING:

WARNING: FALLING OBJECT HAZARD
Eyebolts or lifting lugs, where provided, are intended for lifting only the motor and accessories mounted by the motor manufacturer (unless specifically stated otherwise on the motor). Utilizing the motor lifting provision to lift other components such as pumps and gear boxes could result in serious personal injury, death and/or property damage.

WARNING: FALLING OBJECT HAZARD
Before using the lifting provision, check the eyebolts and/or other lifting means to assure they are not bent or damaged and are completely threaded, seated & secured to the motor. Equipment to lift motor must have adequate lifting capacity. While lifting the motor DO NOT stand under or in the vicinity of the motor. Failure to follow these instructions could result in serious personal injury, death and/or property damage.

2.2.1 LIFTING ANGLE LIMITATIONS

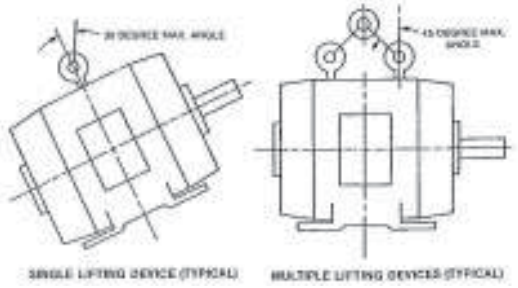

2.3 STORAGE: Motors, not put into service immediately, must be stored indoors in a clean, dry location. Avoid locations with large temperature swings that will result in condensation. Motors must be covered to eliminate airborne dust and dirt. If the storage location exhibits high vibration, place isolation pads under motor to minimize damage to motor bearings.

2.3.1 BEARING LUBRICATION: Bearings are grease packed at the factory; relubrication upon receipt of motor or while in storage is not necessary. If stored more than one year, add grease per lubrication instructions (Table 4-4) before start-up.

2.3.2 SHAFT ROTATION: It is recommended that the motor shaft be rotated 5 to 10 rotations every three months to distribute the grease in the bearings. This will reduce the chance for corrosion to form on the bearing rolling elements and raceways. Note: Shaft seals and bearing seals may add drag.

2.3.3 DAMP OR HUMID STORAGE LOCATIONS: Treat unpainted flanges, shafts, and fittings with a rust inhibitor. Apply appropriate power to the motor's space heaters (if so equipped)

3.0 INSTALLATION AND OPERATION

⚠ **WARNING:** Only qualified personnel who are familiar with the appropriate national code, local codes and sound practices should install or repair electrical motors and their accessories. Installation should conform to the appropriate national code as well as local codes and sound practices. Failure to follow these instructions could result in serious personal injury, death and/or property damage.

⚠ **WARNING: ELECTRICAL LIVE CIRCUIT HAZARD**
Do not touch electrically live parts. Disconnect, Lockout and Tag input power supply before installing or servicing motor (includes accessory devices). Use a voltmeter to verify that power is off before contacting conductors.

3.1 LOCATION

3.1.1 SELECTING A LOCATION: Consideration should be given to environment and ventilation. Motors should be installed in an area that is protected from direct sunlight, corrosives, harmful gases or liquids, dust, metallic particles, and vibration. A motor with the proper enclosure for the expected operating condition should be selected. Provide accessible clearance for cleaning, repair, service, and inspections (See section 3.1.3 for construction clearances). The location should be considered for possible future motor removal / handling. The free flow of air around the motor should not be obstructed.

3.1.2 AMBIENT TEMPERATURE LIMITS: The ambient temperatures of the air inlet to the motor should not exceed 40°C (104°F) or be less than -30°C (-22°F) unless the motor nameplate specifically states an ambient temperature outside of these limits. The ambient inside an enclosure built around the motor shall not exceed the nameplate ambient. For ambient temperatures outside of these limits consult the motor manufacturer.

⚠ **CAUTION: INSULATION DEGRADATION WARNING**
Insulation at high temperatures ages at an accelerated rate. Each 10°C increase in temperature reduces the insulation life by one half.

⚠ **WARNING: HAZARDOUS LOCATIONS AMBIENT LIMIT:** Division 1 Hazardous Locations motors shall **NOT** be operated below –25°C (-13°F) ambient. (Low temperatures reduce the component mechanical properties.)

3.1.3 CONSTRUCTION SELECTION per LOCATION:

3.1.3.1 DRIPPROOF (OPEN) MOTORS are intended for use indoors where the atmosphere is relatively clean, dry, and non-corrosive. Recommended a minimum clearance of ½ the shaft height between vent openings and the nearest obstruction.

3.1.3.2 TOTALLY ENCLOSED MOTORS are suitable for indoor or outdoor standard service applications.

TEAO or AOM (Totally Enclosed Air Over) motors must be mounted in the air stream. When the motor nameplate states a minimum airflow the motor must be mounted in an air stream meeting this minimum value.

TEFC (Totally Enclosed Fan Cooled) motors must meet a minimum distance of ½ the shaft height between the fan guard grill openings and the nearest obstruction.

3.1.3.3 HAZARDOUS LOCATIONS MOTORS: Hazardous Locations motors are intended for installations in accordance with NEC Article 500. For all installations involving Hazardous Locations motors, consult the applicable national codes, local codes, and the authority having jurisdiction.

Division 1 Installations – includes Class I & II: Use only motors that are UL Listed and CSA Certified or UL Listed and UL Certified for Canada. These motors bear a separate nameplate that includes the UL Listing Mark and CSA Certification Mark or includes the UL Listing Mark and the UL Mark for Canada. This plate also bears the phrase: " Electric motor for Hazardous Locations" and is marked with the Class, Group and Operating Temperature Code.

Division 2 Installations – Class I only: Use only motors that are CSA Certified and bear the CSA Certification Mark. These motors include a phrase on the main motor nameplate that indicates the motor is CSA Certified for Class I, Division 2 / Zone 2 locations.

Division 2 Installation – Class II only: Use only Class II motors as described above under "Division I Installations".

⚠ **WARNING: EXPLOSION HAZARD**
A motor should never be placed in an area with a hazardous process or where flammable gases or combustible materials may be present unless it is specifically designed and nameplated for this type of service. Hazardous Locations motors are intended for installations in accordance with NEC Article 500. For all installations involving Hazardous Locations motors, consult the NEC, local codes, and the authority having jurisdiction. Failure to follow these instructions could result in serious personal injury, death and/or property damage. (For other limitations see section 1.3)

3.2 MOUNTING MOTOR:

3.2.1 RIGID BASE (FOOTED): The motor must be securely installed to a rigid foundation or a mounting surface to minimize vibration and maintain alignment between the motor shaft and the load's shaft. The mounting surfaces of the four mounting pads must be flat within 0.01 inches for 210 frame & smaller; 0.015 inches for 250 frame & larger. [IEC 0.25 mm for 130 frame & smaller, 0.38 mm for 160 frame & larger]. This may be accomplished by shims under the motor feet. For special isolation mounting, contact manufacturer for assistance

3.2.2 RIGID BASE HOLE SELECTION -6 OR 8 HOLES

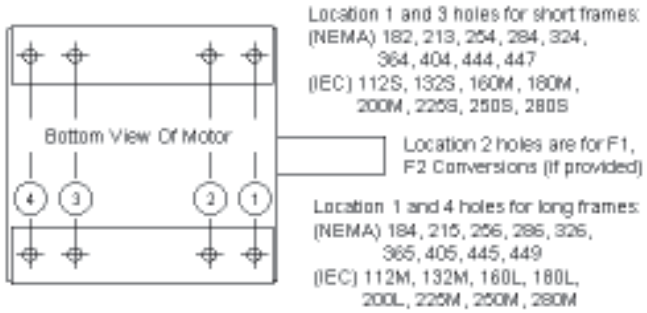

3.2.3 VERTICAL MOUNTING:

CAUTION: ENCLOSURE PROTECTION CAUTION: Most Dripproof rigid base (footed) motors do **NOT** meet "Dripproof" requirements when mounted vertically. If the motor is located in unprotected environments, the addition of a drip cover may be available. Drip covers not available for cast iron rigid base motors.

⚠ **WARNING: FALLING OBJECT HAZARD**
The lifting provision on standard horizontal footed motors is not designed for lifting the motor in a vertical shaft up or shaft down position. (see 2.2.1 lifting angles). Lifting method / provisions for

mounting a rigid base (footed) motor vertically is the responsibility of the installer.

VERTICAL SHAFT DOWN: Most standard horizontal motors thru 449 Fr. (excluding brake motors) can be mounted in a vertical shaft down orientation. For vertical brake motors see section 3.3.6.2.

VERTICAL SHAFT UP:

WARNING: HAZARDOUS LOCATIONS VERTICAL MOUNT: Hazardous locations motors must **NOT** be mounted vertically shaft up without approval by the motor manufacturer. Without proper retaining provisions the rotor may move axially and contact components, creating a spark hazard.

Belted or Radial Load when mounted vertically: The following frame sizes / constructions with applied (axial) down loads within the limit stated are acceptable when mounted vertical shaft up.

Table 3-1 Belted or Radial Load Applications (All speeds)

Frame Size	Enclosure	Construction	Shaft Up OK	Max Applied Down Load[3]
56	TEFC & ODP	Steel	Yes	25 lbs
140	TEFC	Steel & Cast Iron	Yes	25 lbs
	ODP	Steel	Yes	25 lbs
180	TEFC	All	Yes	35 lbs
	ODP	Steel	Yes	35 lbs
210	TEFC	All	Yes	40 lbs
	ODP	Steel	Yes	40 lbs
250	TEFC	All	Yes	40 lbs
	ODP	Steel	Yes	40 lbs
		Cast Iron	No[2]	N/A
280-320	320 TTFC models	Cast Iron	Eng[1]	N/A
	All Other TEFC	Cast Iron & Aluminum	Yes	30 lbs
	ODP	Cast Iron	No[2]	N/A
	TEFC & ODP	Steel	Build Up Only[4]	N/A
360 & Up	TEFC	Cast Iron	Build Up Only[4]	N/A
	ODP	Cast Iron	No[2]	N/A
	TEFC & ODP	Steel	Build Up Only[4]	N/A

Notes:

1 For TEFC model numbers beginning with 324TTFC or 326TTFC consult the motor manufacturer to determine if a build up motor is required.

2 The max applied down load is any applied load external to the motor, including such things as sheave weight, fan loads, axial belt force, pump load, etc. If the application is direct drive with no applied radial load, consult the motor manufacturer.

3 "Build-up only", refers to motors that are specifically ordered and built for shaft up applications. It does not imply that all build-up motors are suitable for shaft up applications.

3.3 APPLICATION ASSEMBLY TO MOTOR:

CAUTION: EQUIPMENT DAMAGE:
Do not connect or couple motor to load until correct rotational direction is established.

3.3.1 GENERAL: PROPER ALIGNMENT of the motor and driven equipment minimizes vibration levels, maximizes bearing life, and extends the overall life of the machinery. Consult the drive or equipment manufacturer for more information.

CAUTION: BEARING FAILURE
During assembly do NOT force components onto the shaft. Striking or hammering the component may result in bearing damage.

3.3.2 DIRECT COUPLING: Use flexible couplings if possible. For applications that apply radial, axial or moment loading on the motor shaft see section 3.3.3.

CAUTION: BEARING FAILURE
Unless approved by the motor manufacturer do **NOT** direct couple a vertical shaft up or roller bearing motor. Direct coupling a vertical shaft up motor or a motor with a roller bearing may result in bearing damage.

3.3.3 DIRECT CONNECTED: Radial loading for direct connected equipment (gears, fans etc.) must be approved by the motor manufacturer unless within the maximum overhung load limits (Table 3-2). Combined loading (axial, radial and/or moments) must be approved by motor manufacturer. For belted loads see section 3.3.4.

Table 3-2 Maximum Radial Load (lbf) @ Middle of the Shaft Extension Length

Frame Number	Motor Rated RPM			
	3600	1800	1200	900
143T	106	166	193	210
145T	109	170	199	218
182T	187	230	261	287
184T	193	237	273	301
213T	319	317	470	510
215T	327	320	480	533
254T	500	631	729	793
256T	510	631	736	820
284T	-	866	990	1100
286T	-	871	1005	1107
324T	-	950	1100	1215
326T	-	950	1113	1230
364T	-	1078	1365	1515
365T	-	1078	1380	1540
404T	-	1388	1590	1762
405T	-	1400	1610	1780
444T	-	1580	1795	2005
445T	-	1520	1795	1985
447T	-	1455	1765	1985
449T	-	1640	1885	2130

Values based on 26,280 hrs B-10 Life
For "End of Shaft" Load multiply value by 0.88
To convert from lbf to N multiply value by 4.4482.

3.3.4 BELTED:

The goal of any belted system is to efficiently transmit the required torque while minimizing the loads on the bearings and shafts of the motor and driven equipment. This can be accomplished by following four basic guidelines:

1. Use the largest practical sheave diameter.
2. Use the fewest number of belts possible.
3. Keep sheaves as close as possible to support bearings.
4. Tension the belts to the lowest tension that will still transmit the required torque without slipping. It is normal for V-belts to squeal initially when line starting a motor

3.3.4.1 Sheave Diameter Guidelines:

In general, smaller sheaves produce greater shaft stress and shaft deflection due to increased belt tension. See Table 3-3 for recommended minimum sheave diameters. Using larger sheaves increases the contact with belts which reduces the number of belts required. It also increases the belt speed, resulting in higher system efficiencies. When selecting sheaves, do not exceed the manufacturer's recommended maximum belt speed, typically 6,500 feet per minute for cast iron sheaves. Determine belt speed by the following formula:

Figure 1

BELT SPEED (Ft/min) = $\dfrac{Shaft\ RPM\ x\ 3.14\ x\ Sheave\ Dia\ (inches)}{12}$

3.3.4.2 Number of Belts

In general, use the fewest number of belts that will transmit the required torque without slipping. See Table 3-3 for recommended maximum number of belts. Each belt adds to the tension in the system, which increases load on the shafts and bearings. Belts are most efficient when operated at or near their rated horsepower.
If the sheaves have more grooves than the number of belts required, use the grooves closest to the motor.

3.3.4.3 Sheave Location

Install sheaves as close to the housing as possible to increase the bearing life of the motor and driven equipment

Figure 2

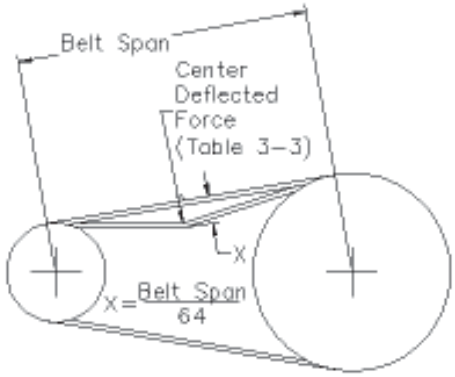

3.3.4.4 Belt Tension

CAUTION: Equipment Failure Caution

Belt tensioning by feel is **NOT** acceptable. Tensioning by "feel" can be very misleading, and can damage motor and equipment.
It is normal for V-belts to squeal initially when line starting a motor.

In general, belt tensions should be kept as loose as possible while still transmitting the required torque without slipping. Belt tensions must be measured with a belt tension gage. These inexpensive gages may be obtained through belt manufacturers, or distributors.

Proper belt tension is determined by measuring the force required to deflect the center of the belt a given distance. The proper deflection (in inches) is determined by dividing the belt span in inches by 64. Calculate the proper deflection and then see Table 3-3 for the required “Deflected Force” to achieve that deflection.
After tensioning the belt, rotate the sheaves for several rotations or operate the system for a few minutes to seat belts into the grooves, then re-tension the belts. New belts will stretch during use, and should be retensioned after the first eight hours of use.

Table 3-3 Recommended Minimum Sheave Diameters, Belt Type, Number of Belts and Deflected Force

Motor Hp	1200 rpm				1800 rpm				3600 rpm			
	Min Sheave Dia (in)	Belt Type	Max # of Belts	Avg. Deflected Force (lbs)	Min Sheave Dia (in)	Belt Type	Max # of Belts	Avg. Deflected Force (lbs)	Min Sheave Dia (in)	Belt Type	Max # of Belts	Avg. Deflected Force (lbs)
0.75	2.2	3VX	1	3.4	2.2	3VX	1	2.2	2.2	3VX	1	1.2
1	2.4	3VX	1	4.0	2.2	3VX	1	3.1	2.2	3VX	1	1.6
1.5	2.4	3VX	2	3.1	2.4	3VX	2	2.1	2.2	3VX	1	2.5
2	2.4	3VX	3	2.8	2.4	3VX	2	2.9	2.4	3VX	1	2.7
3	3.0	3VX	2	3.3	2.4	3VX	3	2.9	2.4	3VX	2	2.3
5	3.0	3VX	3	4.0	3.0	3VX	3	3.7	2.4	3VX	3	2.5
7.5	3.8	3VX	4	4.7	3.0	3VX	4	4.1	3.0	3VX	2	4.2
10	4.4	3VX	4	5.4	3.8	3VX	4	4.3	3.0	3VX	3	3.8
15	4.4	3VX	5	5.4	4.4	3VX	4	5.4	3.8	3VX	3	4.4
20	5.2	3VX	6	6.0	4.4	3VX	6	4.8	4.4	3VX	3	5.0
25	6.0	3VX	7	5.6	4.4	3VX	7	5.2	4.4	3VX	4	4.7
30	6.8	3VX	7	5.9	5.2	3VX	7	5.3				
40	6.8	5VX	4	11.6	6.0	3VX	7	6.0				
50	8.2	5VX	4	14.6	6.8	3VX	8	5.9				
60	8.2	5VX	5	14.1	7.4	5VX	4	13.3				
75	10.0	5VX	5	14.5	8.6	5VX	4	14.3				
100	10.0	5VX	6	16.0	8.6	5VX	6	13				
125	12.0	5V	7	14.1	10.5	5V	6	13.1				
150	13.2	5V	7	15.4	10.5	5V	7	13.4				
200	15.0	5V	8	16.0	13.2	5V	8	13.1				
250	15.0	8V	6	27.6	14.0	5V	9	13.8				
300	16.0	8V	7	27.1	14.0	5V/**8V**	11 / **7**	23.4				
350	16.5	8V	7	30.3	14.5	5V/**8V**	12 / **7**	26.0				
400	17.5	8V	8	29.1	15.0	5V/**8V**	13 / **8**	25.7				
450	18	8V	8	31.6	16.0	5V/**8V**	14 / **9**	25.2				
500	18.5	8V	9	30.7	16.5	5V/**8V**	15 / **9**	26.9				
600					17.5	8V	11	26.3				
700					19.0	8V	12	27.3				
800					20.0	8V	13	28.2				

Contact Motor Manufacturer when Belting 3600 rpm Motors Greater than 25 HP

Notes:

1. Horsepower is the nameplate motor horsepower, and RPM is the motor (driver) speed.
2. Minimum sheave diameters are from NEMA standards where applicable.
3. **For variable speed applications or values outside these recommendations, consult motor manufacturer.**
4. Selections are based on a 1.4 service factor, 5 to 1 speed ratio and various Power Transmission Manufacturers' catalogs.
5. These selections are for Narrow V-belt sections only. Consult manufacturer for details on conventional V-belt sections (A, B, C, D and E), or other belt types.
6. "Average Deflected Force is per section 3.3.4.4 of this document and is the force required to deflect the center of a belt 1/64 of the belt span distance. Tolerance on this force is ±1 lbf for forces ≤10 lbs, and ±2 lbs for forces >10 lbs as measured utilizing a belt tension gage.
7. When more than one belt is required the belts must be a matched set (matched for length).
8. If possible, the lower side of the belt should be the driving side to increase the length of wrap on the sheave).
9. For belted loads do not exceed 125% of 60 Hz operating RPM.

3.3.5 VFD (Variable Frequency Drives) OPERATION:

WARNING: VFD Motors with Reset Thermal Protectors

UL Recognition, UL Listing, or CSA certification does not apply to motors that are equipped with a manual or automatic reset thermal protector when the motor is operated on VFD power.

WARNING: Power Factor Correction Capacitors:

Power factor correction capacitors should never be installed between the drive and the motor.

CAUTION: VFD / Motor Setup:

It is the responsibility of the startup personnel during set up of the VFD / motor system to properly tune the drive to the motor for the specific application per the VFD user manual. The correct voltage boost and volts per hertz settings are application dependent and unique to each motor design. Failure to connect over temperature devices (when provided) will void the warranty.

3.3.5.1 Overspeed Capability:

Belted loads: Do not exceed 125% of 60 Hz operating RPM.

Table 3-4 Maximum Safe Continuous Speed (RPM) For Coupled and Direct Connected Loads

NEMA / [IEC] Frame Size	2-Pole	4, 6, or 8 Pole
56-180 [80-110]	7200 *	5400 *
210-250 [130-160]	5400 *	4200*
280 [180]	5400 *	3600
320 [200]	4500 *	3600
360 [225]	4500 *	2700
400-440 [250-280]	3600	2700
>440 [>280]	3600	1800

* = Fan cooled motors (Totally Enclosed & Hazardous Locations Motors) are limited to a maximum safe continuous speed of 4000 RPM **For higher speeds or shortened duty cycle contact motor manufacturer**

3.3.5.2 Cable Lengths: For optimum insulation life, limit VFD to motor cable lengths of general purpose motors

to Table 3-5 values. Definite purpose VFD motors may accommodate longer cable lengths. For additional information contact motor manufacturer.

Table 3-5 Max Cable Lengths General Purpose Motors

These values are based on 3 kHz carrier frequency. Add suitable VFD output-side filters when exceeding the listed values.

Frame Size	230V	460 V	575 V
NEMA 56-320	600 ft.	125 ft.	40 ft.
NEMA 360-5011	1000 ft.	225 ft.	60 ft.
IEC 80-200	180 m.	40 m.	12 m.
IEC 225-280.	300 m.	70 m.	18 m.

3.3.5.3 VFD Grounding: Equipment grounding conductors may be run in the same conduit as the AC motor power leads. This wire must be used as the equipment ground for the motor and not as the fourth current carrying wire of a "WYE" motor circuit. The grounded metal conduit carrying the output power conductors can provide EMI shielding, but the conduit does not provide an adequate ground for the motor; a separate grounding conductor must be used. Grounding the motor neutral (WYE) of a VFD powered motor may result in a VFD ground fault trip. Improper grounding of an inverter fed motor may result in frame voltages in excess of 500 Volts. Refer to Grounding section 3.4.4

3.3.5.4 VFD – Single Phase:

CAUTION: SINGLE PHASE MOTOR FAILURE:

Single Phase motors are **NOT** suitable for use on VFD power. Connecting a Single Phase Motor to a VFD voids the warranty.

3.3.5.5 Stray Voltage on Accessory Leads:

VFD's will couple stray (common-mode) voltage to motor-mounted RTDs, thermistors, thermostats and space heaters. The leads of these elements must be properly insulated and control input circuits must be designed to withstand this common-mode voltage.

3.3.6 ACCESSORIES / PROVISIONS:

3.3.6.1 General: Carefully read and understand the accessory manufacturer's instructions, supplied with motor. Contact the manufacturer for additional information.

3.3.6.2 Brake Motors:

CAUTION: Vertical Motor Premature Brake Failure

Motors with brakes that are designed for vertical applications are equipped with springs to support the brake pressure plate. Mounting a horizontal brake motor vertically shaft up or down may require a pressure plate spring modification. Failure to modify the brake for the vertical application may result in premature brake failure. If in question, consult brake literature or brake manufacturer.

Brake Solenoid Wiring: Do NOT connect the brake solenoid to the output of a VFD. The brake solenoids must be wired to 50/60 Hz line power

3.3.6.3 Space Heaters:

Motors provided with space heaters have two leads that are brought into the conduit box or into an auxiliary box. These leads are marked "H1", "H2" ("H3", "H4" if a second space heater is supplied). See the space heater nameplate on motor for heater rating.

WARNING: DIVISION 2 EXPLOSION HAZARD

The space heater temperature rating when used in Class I, Division 2 motors shall **NOT** exceed 80% of the auto ignition temperature of the hazardous gas or vapor. See the space heater nameplate on motor for heater Temperature Code and heater rating. Failure to follow this instruction could result in serious personal injury, death and/or property damage

3.3.6.4 Thermal Protection:

General Information: When thermal protection is provided, one of the following will be stamped on the nameplate:

1. **"THERMALLY PROTECTED**" This motor has built in thermal protection. Thermal protectors open the motor circuit electrically when the motor overheats or is overloaded. The protector cannot be reset until the motor cools. If the protector is automatic, it will reset itself. If the protector is manual, disconnect motor from power supply. After protector cools (five minutes or more) press the reset button and reapply power to the motor. In some cases a motor is marked "Auto" and the connection diagram on the motor will identify T'Stat leads – see "2 " below. (See warnings on Manual and Automatic reset protectors - section 1.1)

2. **"WITH OVERHEAT PROTECTIVE DEVICE**": This motor is provided with an overheat protective device that does not directly open the motor circuit. Motors nameplated with this phrase have either thermostats, thermisters or RTD's. The leads to these devices are routed into the motor conduit box or into an auxiliary box. The lead markings are defined on the nameplate (normally "P1", "P2") . The circuit controlled by the overheat protection device must be limited to a maximum of 600 volts and 360 volt-amps. See connection decal provided inside the terminal box cover. Failure to connect these over temperature devices (when provided) will void the warranty.

   WARNING: EXPLOSION HAZARD

   For Hazardous Locations motors provided with thermostats UL and the NEC require connection of thermostat leads into the control portion of a manual reset start circuit. Failure to follow this instruction could result in serious personal injury, death and/or property damage

Resistance Temperature Detectors (RTD): When winding and/or bearing RTDs are provided the RTD lead markings are defined on the nameplate. (Normally "R1", "R2", "R3" etc.)

3.3.6.5 RTD Alarm & Trip Settings:

Tables 3-6 & 3-7 are suggested initial RTD alarm and trip settings. For motors found to operate significantly below these values the settings may be reduced accordingly.

Table 3-6 Winding RTD – Temperature Limit (ºC) 40 ºC Max Ambient

Motor Load	Class B Temp Rise≤ 80ºC		Class F Temp Rise≤ 105ºC	
	Alarm	Trip	Alarm	Trip
Up to 1.0 SF	130	140	155	165
>1.0 to 1.15 SF	140	150	160	165

Table 3-7 Bearing RTD – Temperature Limit (ºC) 40 ºC Max Ambient

Ambient	Alarm	Trip
Up to 40ºC	95	100
> 40ºC	110	115
Bearings that are Heat Stabilized to 150 ºC	130	135

3.3.7 GUARDS:

WARNING: ROTATING PARTS HAZARD

When devices are assembled to the motor shaft, be sure to install protective devices such as belt guards, chain guards, and shaft covers. These devices must protect against accidental contact with extremities, hair, and clothing. Consider the application and provide guarding to protect personnel. Remove all unused shaft keys and loose rotating parts to prevent them from flying off and causing bodily injury. Failure to follow this warning could result in serious personal injury, death and/or property damage.

3.4 ELECTRICAL CONNECTIONS:

WARNING: ELECTRICAL HAZARDS

Before proceeding read Section 1-1 on Electrical Safety. Failure to follow the instructions in Section 1-1 could result in serious personal injury, death and/or property damage

3.4.1 POWER SUPPLY / BRANCH CIRCUIT

WARNING: POWER SUPPLY INCOMPATIBILITY HAZARD

Check power supply to make certain that voltage, frequency and current carrying capacity are in accordance with the motor nameplate. Failure to match motor nameplate values could result in serious personal injury, death and/or property damage

WARNING: BRANCH CIRCUIT SUPPLY HAZARD

Motor and control wiring, fusing, overload protection, disconnects, accessories and grounding must always conform to the applicable electrical codes as well as local codes and sound practices.

3.4.1.1 Branch Circuit Supply to a motor should include a disconnect switch, short circuit current fuse or breaker protection, motor starter (controller) and correctly sized thermal elements or overload relay protection.

3.4.1.2 Fuses, Breakers, Overload Relays

Short Circuit Current Fuses or Breakers are for the protection of the branch circuit. Starter or motor controller overload relays are for the protection of the motor. Each of these should be properly sized and installed per the applicable electrical codes as well as local codes and practices.

WARNING: PROTECTIVE DEVICE DISABLED HAZARD

DO NOT bypass or disable protective devices. Protection removal could result in serious personal injury, death and/or property damage

3.4.1.3 AC Power Supply Limits

Motors are designed to operate within the following limits at the motor terminals:

1- AC power is within +/- 10 % of rated voltage with rated frequency applied. (Verify with nameplate ratings) **OR**

2- AC power is within +/- 5% of rated frequency with rated voltage **OR**

3- A combined variation in voltage and frequency of +/- 10% (sum of absolute values) of rated values, provided the frequency variation does not exceed +/-5% of rated frequency.

4- For 3 phase motors the line to line full load voltage must be balanced within 1%.

5- If the motor is rated 208-230V, the voltage deviations must be calculated from 230V.

CAUTION: Reduced Motor Performance

Operation outside of these limits will degrade motor performance and increase operating temperature.

3.4.2 TERMINAL BOX:

3.4.2.1 Conduit Opening: For ease of connections, motors are typically provided with large terminal boxes. Most motors have conduit access in 90 degree increments, the terminal box conduit opening is typically provided via knockouts, holes with covers, or the terminal box is rotate-able. Fabricated conduit boxes may have a removable plate for the installer to provide correctly sized hole(s).

3.4.2.2 Hazardous Locations Motors:

WARNING: EXPLOSION HAZARDS

(1) Terminal Boxes mounted to motor with a pipe nipple: If a pipe nipple mounted terminal box is removed or rotated it must be reassembled with a minimum of five full threads of engagement.

(2) Component Removal: Do not set a terminal box component on its machined surfaces. Prior to component reassembly wipe clean all machined surfaces.

(3) Machined Surface Gap (Hazardous Locations Terminal Boxes): The gap between mating surfaces with the machined terminal box MUST BE LESS THAN 0.002 inches. This gap must be checked with a feeler gage along the entire perimeter. If there is visible damage to the mating surfaces, or if the gap between these surfaces exceeds 0.002 inches, DO NOT complete the installation and contact the motor manufacturer. Failure to follow these instructions could result in serious personal injury, death and/or property damage

3.4.3 LEAD CONNECTIONS

Electrical connections to be made per nameplate connection diagram or separate connection plate. In making connections follow the applicable electrical code as well as local codes and practices.

WARNING: ELECTRICAL CONNECTION HAZARD

Failure to correctly connect the motor leads and grounding conductor can result in injury or death. Motor lead connections can short and cause damage or injury if not well secured and insulated.

3.4.3.1 Wire Size (Single Phase) Requirements

The minimum wire size for Single Phase, 115 & 230 Volt Circuits must meet table 3-8 for a given distance between motor and either Fuse or Meter Box.

Table 3-8 Minimum Wire Gage Size Single Phase 115 & 230 Volt Circuits

	Distance (Feet) - Motor to Fuse or Meter Box							
Motor	100 Ft.		200 Ft.		300 Ft.		500 Ft.	
HP	115	230	115	230	115	230	115	230
1/4	14	14	10	12	8	10	6	8
1/3	12	14	10	12	6	10	4	8
1/2	10	12	8	10	6	8	4	6
3/4	10	12	6	10	4	8	2	6
1	8	10	6	8	4	6		4
1 1/2	4	10	0	8		6		4
2		8		6		4		2
3		8		6		4		2
5		6		4		2		0

3.4.3.2 Extension Cords (Single Phase Motors):

Where an extension cord(s) is utilized to provide power to the motor the extension cord(s) must be…(1) the proper gauge size per table 3-8, (2) in good working condition (3) properly grounded.

3.4.4 GROUND CONNECTION(S):

WARNING: ELECTRICAL GROUNDING HAZARD

For general information on grounding (USA) refer to NEC Article 250. Improper grounding of an inverter fed motor may result in frame voltages in excess of 500 Volts. In making the ground connection, the installer must make certain that a good electrical connection is obtained between motor and grounding lead. Failure to properly ground motors, per the applicable national code (such as NEC Article 430) and local codes may cause serious injury or death to personnel.

Primary "Internal" Ground: A grounding conductor must be connected to the grounding terminal provided in the terminal housing. This grounding terminal is either a ground screw, ground lug, or a tapped hole to be used with a separately provided ground screw. The internal grounding feature is accessible inside the terminal housing and must be used as the primary grounding connection.

Secondary "External" Ground: Some motors are provided with a supplemental grounding terminal located on the external surface of the motor frame or feet. This external terminal is for supplemental bonding connections where local codes permit or require such connection

3.4.5 START UP:

WARNING: ELECTRICAL SHOCK HAZARD:

Be certain that all connections are secure and the conduit box cover is fastened in place before electrical power is connected. Failure to follow these instructions could result in serious personal injury, death, and/or property damage.

WARNING: LOOSE & ROTATING PARTS HAZARD
Before proceeding read Section 1-2 on Mechanical Safety. Failure to follow the instructions in Section 1-2 could result in serious personal injury, death and/or property damage

WARNING: EXCESSIVE SURFACE TEMPERATURE HAZARD
Motors with the temperature code stated on the nameplate are designed to operate within this limit. Improper application or operation can cause the maximum surface temperature to be exceeded. A motor operated in a Hazardous Location that exceeds this surface temperature limit increases the potential of igniting hazardous materials. *Therefore, motor selection, installation, operation, and maintenance must be carefully considered to ensure against the following conditions:* (1) Motor load exceeds service factor value, (2) Ambient temperature above nameplate value, (3) Voltages outside of limits (3.4.1.3), (4) Loss of proper ventilation, (5) VFD operation exceeding motor nameplate rating, (6) Altitude above 3300 feet / 1000 meters, (7) Severe duty cycles, (8) Repeated starts, (9) Motor stall, (10) Motor reversing, and (10) Single phase operation. Failure to follow these instructions could result in serious personal injury, death and/or property damage.

CAUTION: HOT SURFACE
Normal motor surface temperatures may exceed 90 ° C (194° F). Touching the motor frame may cause discomfort or injury. Surface temperatures should only be measured with suitable instruments and not estimated by hand touch.

3.4.5.1 Start Up - No Load Procedure

1. **Check Instructions:** Before startup carefully read and fully understand these instructions including all warnings, cautions, and safety notice statements.
2. **Motor out of storage after more than three months:** Check winding insulation integrity with a Megger. If winding resistance to ground is less than 1.5 Meg-ohms consult the local authorized service shop before energizing the motor.
3. **Check Installation: Mechanical** - Check tightness of all bolts and nuts. Manually rotate the motor shaft to ensure motor shaft rotates freely. Note: Shaft & bearing seals will add drag.
   Electrical - Inspect all electrical connections for proper terminations, clearance, mechanical tightness and electrical continuity. Be sure to verify connections are made per the nameplate connection diagram or separate connection plate. Replace all panels and covers that were removed during installation before energizing the motor.
4. **Energize Motor: Check Rotation**
   If practical check motor rotation before coupling to the load. Unlock the electrical system. Momentarily provide power to motor to verify direction of rotation. If opposite rotation is required, lock out power before reconnecting motor. If motor has a rotational arrow only operate the motor in the rotation identified. Reapply power to ensure proper operation.
5. **Record No Load Amps, Watts & Voltage:**
   Recommend - To establish a baseline value check and record the no load amps, watts, and voltage.

3.4.5.2 Start Up – Load Connected Procedure

1. **Check Instructions:** Before startup carefully read and fully understand these instructions including all warnings, cautions, & safety notice statements.
2. **Coupling Installation:** Check that the connected equipment is properly aligned and not binding. Check that all guards and protective devices are properly installed.
3. **Energize Motor:** When all personnel are clear of the machine, apply power and verify that the load is not transmitting excessive vibration back to the motor though the shaft or the foundation. Verify that motor amps are within nameplate rating. For repeated starts see 3.4.5.3. The equipment can now be fully loaded and operated within specified limits as stated on the nameplate.

3.4.5.3 Jogging and/or Repeated Starts

Do not start more than twice in succession under full load. Repeated starts and/or jogs of induction motors can cause overheating and immediate failure. Contact the motor manufacturer if it is necessary to repeatedly start or jog the motor.

4.0 MAINTENANCE:

WARNING: Hazardous Locations Motor Repair HAZARD:
Division 1 Hazardous Locations motors can only be modified or repaired by the manufacturer or a facility that is Listed under UL's category "Motors and Generators, Rebuilt for use in Hazardous Locations". Failure to follow these instructions could result in serious personal injury, death and/or property damage.

WARNING: ELECTRICAL SHOCK HAZARD
Electrical connections are to be made by qualified electrical personnel in accordance with all applicable codes, ordinances and sound practices. Failure to follow these instructions could result in serious personal injury, death and/or property damage. Only qualified personnel who are familiar with the applicable national codes, local codes and sound practices should install or repair electric motors and their accessories.

WARNING: ELECTRICAL LIVE CIRCUIT HAZARD
Do not touch electrically live parts. Disconnect, lockout and tag input power supply before installing or servicing motor (includes accessory devices).

4.1 GENERAL INSPECTION

Inspect the motor approximately every 500 hours of operation or every three months, whichever occurs first. Keep the motor clean and the ventilation and fin openings clear. The following steps should be performed at each inspection:

4.1.1 VENTILATION: Check that the ventilation openings and/or exterior of the motor is free of dirt, oil, grease, water, etc, which can accumulate and block motor ventilation. If the motor is not properly ventilated, overheating can occur and cause early motor failure.

4.1.2 INSULATION: Use a "Megger" periodically to ensure that the integrity of the winding insulation has been maintained. Record the Megger readings. If winding resistance to ground is less than 1.5 Meg-ohms consult the local authorized service shop before re-energizing the motor.

4.1.3 ELECTRICAL CONNECTIONS: Check all electrical connectors to be sure that they are tight.

4.2 LUBRICATION & BEARINGS:

The lubricating ability of grease (over time) depends primarily on the type of grease, the size of the bearing, the speed at which the bearing operates and the severity of the operating conditions. Longer bearing life can be obtained if the listed recommendations are followed:

NOTE: If lubrication instructions are provided on the motor nameplate, the nameplate instructions will supersede these instructions. Motors marked "Permanently Lubricated" do not require additional service.

CAUTION: BEARING / MOTOR DAMAGE WARNING
Lubricant should be added at a steady moderate pressure. If added under heavy pressure bearing shield(s) may collapse. Over greasing bearings greatly increases bearing friction and can cause premature bearing and/or motor failure.

4.2.1 GREASE TYPE (unless nameplate states otherwise):
Nameplate Ambient Temperature between -30°C (-22°F) to 65°C (150°F) inclusive: Recommended grease for standard service conditions is Mobil Polyrex ® EM. Equivalent and compatible greases include: Texaco Polystar RB, Rykon Premium #2, Pennzoil Pen 2 Lube, Chevron SRI & Mobil SHC 100.

Nameplate Ambient Temperature below -30°C (-22°F): Special low temperature grease is recommended, such as Aeroshell 7 or Beacon 325 for ball bearings and Mobil SHC 100 for roller bearings.

Nameplate Ambient Temperature above 65°C (150°F): Dow Corning DC44 or equivalent, a special high temperature grease is required. Note that Dow Corning DC44 grease does not mix with other grease types.

4.2.2 BEARING OPERATING TEMPERATURE:

CAUTION: HOT SURFACE

The external surface temperature of the end shield (bracket) bearing hub may reach 100° C (212° F) during normal operation. Touching this surface may cause discomfort or injury. Surface temperatures should only be measured with suitable instruments and not estimated by hand touch.

For RTD settings see Table 3-7.

4.2.3 LUBRICATION INTERVALS: (For motors with regreasing provisions)

Eq. 4.2 Lubrication Interval = [(Table 4-1) hrs] x [Interval Multiplier (Table 4-2)] x [Construction Multiplier (Table 4-3)]

Table 4-1 Lubrication Intervals (Hours) These values are based on average use.

NEMA / [IEC] Frame Size	Operating Speed – RPM (See Table 3.4 for Maximum Operating Speed)					
	<7200	<5400	<4500	<3600	<1800	<1200
56-180 [80-110]	2500 Hrs.	4000 Hrs	5000 Hrs	6000 Hrs.	17000 Hrs.	20000 Hrs.
210-250 [130-160]		2500 Hrs	4000 Hrs	5000 Hrs.	12000 Hrs.	16000 Hrs.
280 [180]		2000 Hrs	3000 Hrs	4000 Hrs.	10000 Hrs.	14000 Hrs.
320 [200]			2000 Hrs	3000 Hrs.	9000 Hrs.	12000 Hrs.
360 [225]			1500 Hrs	2000 Hrs.	8000 Hrs.	10000 Hrs.
400-440 [250 – 280]				1500 Hrs.	4000 Hrs.	7000 Hrs.
>440 [>280]				1000 Hrs.	3000 Hrs.	5000 Hrs.

Seasonal Service: If motor remains idle for more than six months, Lubricate at the beginning of the season, then follow lubrication interval.

Do not exceed maximum safe operating speed Table 3-4 without manufacturer's approval

Table 4-2 Service Conditions

Use highest level Multiplier: Maximum Ambient Temperature and Contamination are independent factors

Severity of Service	Maximum Ambient Temperature	Atmospheric Contamination	Multiplier
Standard	Less than 40° C (104° F)	Clean, Slight Corrosion, indoors, less than 16 hrs per day	1.0
Severe	Above 40° C (104° F) to 50° C	Moderate dirt or Corrosion or outdoors or more than 16 hrs per day	0.5
Extreme	Greater than 50° C or Class H Insulation	Severe dirt or Abrasive dust or Corrosion	0.2

Table 4-3 Construction Multiplier

Construction	Multiplier
Angular Contact or Roller Bearing	0.5
Vertical Motor	0.5
All others	1.0

Table 4-4 Relubrication Amounts

Frame Size		Volume		
NEMA	IEC	Cu. In.	Fluid oz	ml
48-56	80	0.25	0.14	4.0
143-145	90	0.25	0.14	4.0
182-184	110	0.50	0.28	8.0
213-215	130	0.75	0.42	12.5
254-256	160	1.00	0.55	16.0
284-286	180	1.50	0.83	25.0
324-326	200	2.00	1.11	33.0
364-365	225	3.00	1.66	50.0
404-405	250	3.80	2.11	62.0
444-449	280	4.10	2.27	67.0
>449	>280	4.50	2.50	74.0

For regreasing while operating multiply volume by 125%.

4.2.4 LUBRICATION PROCEDURE: (For Motors with Regreasing Provisions)

CAUTION: BEARING DAMAGE WARNING
Added grease must be compatible with the original equipment's grease. If a grease other than those stated in 4.2.1 is to be utilized contact the motor manufacturer. Nameplate information supersedes section 4.2.1 (GREASE TYPE). New grease must be free of dirt. Failure to follow these instructions and procedure below may result in bearing and/or motor damage.

For an extremely dirty environment, contact the motor manufacturer for additional information.

LUBRICATION PROCEDURE:

1. Clean the grease inlet plug or zerk fittings prior to regreasing.
2. (If present) Remove grease drain plug and clear outlet hole blockage.

CAUTION: GREASE DRAIN PLUGGED:
Old grease may completely block the drain opening and must be mechanically removed prior to regreasing. Forcing a blocked drain open by increased greasing pressure may collapse bearing shields and / or force excess grease through the bearings and into the motor.

3. Add grease per Table 4-4
4. Re-install grease inlet and drain plugs (if removed).

WARNING: EXPLOSION HAZARD
Do NOT energize a Hazardous Locations motor without all grease fittings properly installed.

4.2.5 EXAMPLE: LUBRICATION

Assume - NEMA 286T (IEC 180), 1750 RPM Vertical motor driving an exhaust fan in an ambient temperature of 43° C and the atmosphere is moderately corrosive.

1. Table 4-1 list 10,000 hours for standard conditions.
2. Table 4-2 classifies severity of service as "Severe" with a multiplier of 0.5.
3. Table 4-3 lists a multiplier value of 0.5 for "Vertical"
4. (Eq. 4.2) Interval = 10,000 hrs x 0.5 x 0.5 = 2500 hrs

Table 4-4 shows that 1.5 in^3 of grease is to be added.

Relubricate every 2,500 hrs of service with 1.5 in^3 of recommended grease.

4.3 TROUBLE-SHOOTING

WARNING: READ INSTRUCTIONS:
Before trouble-shooting a motor, carefully read and fully understand the warnings, cautions, & safety notice statements in this manual.

WARNING: Hazardous Locations Motor Repair:
Motors nameplated for use in Division 1 Hazardous Locations can only be disassembled, modified or repaired by the plant of manufacturer or a facility that is Listed under UL's category "Motors and Generators, Rebuilt for use in Hazardous Locations". Failure to follow these instructions could result in serious personal injury, death and/or property damage

CAUTION: DISASSEMBLY APPROVAL REQUIRED:
Motor disassembly must be performed by a party approved by the motor manufacturer. To disassemble the motor without approval voids the warranty.

4.3.1 GENERAL TROUBLE-SHOOTING WARNINGS

1. **DISCONNECT POWER TO THE MOTOR BEFORE PERFORMING SERVICE OR MAINTENANCE.**
2. **Discharge all capacitors before servicing motor.**
3. **Always keep hands and clothing away from moving parts.**
4. **Be sure required safety guards are in place before starting equipment.**
5. **If the problem persists contact the manufacturer.**

4.3.2 Motor Trouble-shooting Cause / Corrective Action - Table 4-5

Issue:		Likely Cause:	Corrective Action:
Motor fails to start upon initial installation:			
	A.)	Supply voltage is too low or is severely unbalanced (one phase is low or missing).	(1) Check power supply fuses (2) Match motor lead wiring to nameplate connection diagram and supply voltage (3) Ensure that steady state supply voltage at motor terminals is within limits (see section 3.4.1.3). Correct as needed (4) Obtain correct motor to match actual supply voltage.
	B.)	Motor leads are miswired at conduit box.	
	C.)	Driven load exceeds motor capacity	(1) Verify that motor & load turn freely (2) Disconnect motor from load & ensure motor turns freely. Note: Roller bearings make noise when motor is uncoupled and shaft is rotated (3) Verify that motor starts when disconnected from load (4) Remove excessive / binding load if present.
	D.)	Load is jammed.	
	E.)	Fan guard is bent and making contact with fan	Replace fan guard & fan (if blades are damaged)
	F.)	VFD with power factor capacitors installed	Remove power factor correction capacitors if equipped
	G.)	VFD with motor neutral lead grounded	Ensure that motor neutral lead is ungrounded
	H.)	VFD programmed incorrectly	(1) Repeat checks listed above (2) Verify that VFD current limit and starting boost are set correctly (5) Double-check motor and feedback parameter settings and VFD permissives (6) Repeat autotune (for vector drives) procedure (7) Consult VFD supplier.
Motor has been running, then slow down, stalls, or fails to restart:			
	A.)	Supply voltage has drooped or has become severely unbalanced	(1) Replace fuse or reset circuit breaker. Allow motor to cool down before resetting manual protector on motor. **Warnings** - See section 1.1 for automatic and manual reset protector warnings (2) Verify that rated and balanced supply voltage has been restored before restarting motor. Measure voltage during restart. Ensure that steady state supply voltage at motor terminals is within limits (see section 3.4.1.3).
	B.)	Motor is overloaded	(1) Verify that motor & load turn freely. Repair binding components as needed (2) Reduce driven load to match motor capacity or increase motor size to match load requirements.
	C.)	Motor bearings are seized	
	D.)	Load Is jammed.	
	E.)	VFD will not restart motor after tripping	(1) Check fault codes on VFD and follow VFD troubleshooting procedures (2) Verify that VFD input voltage is balanced and within limits (3) Remove excessive mechanical load if present.
	F.)	Capacitor failure on single phase motor (if equipped)	**Warning: Potential Shock Hazard**: Contact service shop to check capacitor.
Motor takes too long to accelerate:			
	A.)	Motor leads are not connected correctly	Match motor lead wiring to nameplate diagram.
	B.)	Supply voltage has drooped or become severely unbalanced.	(1) Ensure that steady state supply voltage at motor terminals is within limits (see section 3.4.1.3). Correct as needed (2) Obtain correct motor to match actual supply voltage.
	C.)	Load exceeds motor capability	Determine correct motor size and contact motor representative to obtain replacement motor.
	D.)	Faulty start capacitor (Single Phase)	Motor may be too small for load. Record acceleration time. Start capacitors may fail if acceleration time exceeds 3 seconds.
	E.)	Mechanical Failure	(1) Check to make sure motor & load turn freely (2) Disconnect motor from load & ensure motor turns freely
Motor rotates in the wrong direction:			
	A.)	Incorrect wiring connection at motor	[Single Phase] Reconnect motor according to wiring schematic provided. Note: Some motors are non-reversible
			[Three Phase] Interchange any two power supply (phase) leads.
Motor overheats or overload protector repeatedly trips			
	A.)	Driven Load is excessive	(1) If motor current exceeds nameplate value, ensure that driven load has not increased. Correct as needed. (2) If new motor is a replacement, verify that the rating is the same as the old motor. If previous motor was a special design, a general purpose motor may not have the correct performance.
	B.)	Ambient temperature too high	Most motors are designed to operate in an ambient up to 40 °C. (See section 4.2.2 Hot Surface Caution)
	C.)	Motor cooling fins and/or vent openings blocked	Remove foreign materials – clear vent openings, fan guard air inlets and frame fins (TEFC motors)
	D.)	Insufficient Air Flow	TEAO (Totally Enclosed Air Over) motors: Measure airflow next to motor surface and obtain minimum requirements from motor manufacturer.

	E.)	Motor is started too frequently	See section 3.4.5.3
	F.)	Supply voltage too low, too high, or unbalanced	(1) Ensure that steady state supply voltage at motor terminals is within limits (see section 3.4.1.3) Correct as needed (2) Reconnect motor per input voltage (3) Obtain correct motor to match power supply.

Motor Vibrates

	A.)	Motor misaligned to load.	Realign load
	B.)	Load out of balance (Direct drive application)	(1) Ensure that load is dynamically balanced: (2) Remove motor from load and inspect motor by itself. Verify that motor shaft is not bent. Rule of thumb is 0.002" runout for shafts extension lengths up to 3.00". Add 0.0005" per every additional inch of shaft length beyond 3.00".
	C.)	Uneven tension on multiple belts	Mixing new with used belts. Replace multiple belt applications with a complete set of matched belts.
	D.)	Driven load operating at resonant point / natural frequency.	(1) De-energize motor and record vibration as load coasts from 100% speed to 0 RPM. If vibration drops immediately, vibration source is electrical. If levels do not drop immediately, source is mechanical (2) Redesign system to operate below the resonant point (3) On VFD-driven loads, program skip frequencies to bypass resonant points (4) Increase carrier frequency to obtain <3% THD current (5) On variable torque loads reduce volts/hertz below base speed.
	E.)	VFD torque pulsations	(1) Adjust VFD to obtain <3% THD current @ rated motor current (2) Adjust VFD stability for smooth operation. Vector drives may be unstable at light load.
	F.)	Motor miswired at terminal box	Match motor lead wiring to nameplate connection diagram.
	G.)	Uneven, weak or loose mounting support.	Shim, strengthen or tighten where required.
	H.)	Motor bearings defective	Test motor by itself. If bearings are bad, you will hear noise or feel roughness. Roller bearings are normally noisy when operated without load. If sleeve bearing, add oil per nameplate instructions. For motors with regreasing provisions, add grease per relubricating instructions (see section 4.2.3). If noise persists contact warranty service.
	I.)	Motor out of balance	Disconnect from load. Set motor on rubber pads on solid floor. Secure a ½ height key in shaft keyway and energize from balanced power supply @ rated voltage. Record vibration levels and compare with appropriate standards. If excessive vibration persists contact motor manufacturer.

Bearings repeatedly fail.

	A.)	Load to motor may be excessive or unbalanced	(1) If belt drive check system per section 3.3.4. (2) Other than belting, check loading on motor shaft. An unbalanced load will also cause the bearings to fail. (3) Check runouts of mating components, such as a C-face and pump flange.
	B.)	Bearings contaminated.	Motor enclosure not suitable for environment. Replace with correct enclosure construction
	C.)	Incorrect grease or bearings for ambient extremes.	See section 4.2.1
	D.)	VFD bearing damage	Ground brush, common mode filter, or insulated bearings must be added. Contact motor manufacturer.

Motor, at start up, makes a loud rubbing, grinding, or squealing noise.

	A.)	Contact between rotating and stationary components	Belt squeal during across the line starting is normal: (1) Verify that supply voltage is within limits (see section 3.4.1.3). (2) Ensure that motor lead wiring matches nameplate connection diagram: (3) Isolate motor from load. (4) To locate point of contact turn motor shaft by hand. (5) If point of contact is not located contact motor service shop.

Start capacitors repeatedly fail.

	A.)	The motor acceleration time is too long	Motor may be too small for load. Record acceleration time. Start capacitors may fail if acceleration time exceeds 3 seconds.
	B.)	Motor is being started too frequently	Excessive starting will damage motor capacitors. Contact motor manufacturer if motor is started more than 20 times/hour or if acceleration time exceeds 3 seconds.
	C.)	Motor voltage low	Verify that voltage at the motor terminals is within limits (see section 3.4.1.3).
	D.)	Defective start switch inside motor	Motor internal switch failure overheats start capacitor. Contact service shop or motor manufacturer.

Run capacitor fails.

	A.)	High ambient temperature	Verify that the ambient does not exceed motor's nameplate value

	B.)	Input voltage exceeds limit	Verify that voltage to the motor terminals is within limits (see section 3.4.1.3).
	C.)	Power surge to motor (caused by lightning strike or other high transient voltage).	If a common problem, install surge protector.

SEEPEX.
ALL THINGS FLOW

SEEPEX GmbH
Scharnhölzstraße 344
46240 Bottrop
Postfach 10 15 64
46215 Bottrop
Germany

Tel +49.2041.996-0
Fax +49.2041.996-400
info@seepex.com
www.seepex.com

Great Britain

SEEPEX UK Ltd.
3 Armtech Row
Houndstone Business Park
Yeovil Somerset BA22 8RW
Tel +44.1935.472376
Fax +44.1935.479836
sales@seepex.co.uk

Austria

SEEPEX GmbH
Vertriebsbüro Österreich
Obermüllergasse 18
3003 Gablitz
Tel +43.2231.61085
Fax +43.2231.6108520
hfriedl@seepex.com

Belgium

SEEPEX GmbH
Bureau België
Industriezone Klein Gent-Link 21
Welvaartstraat 14-1 bus 15
2200 Herentals
Tel +32.14.501471
Fax +32.14.501461
seepex.be@seepex.com

Denmark

SEEPEX Nordic A/S
Krakasvej 7C
3400 Hillerød
Tel +45.49.192200
Fax + 45.49.193200
info.nordic@seepex.com

France

SEEPEX France SARL
1, Rue Pelloutier
77183 Croissy Beaubourg
Tel +33.1.64114450
Fax + 33.1.64114489
info.fr@seepex.com

Hungary

SEEPEX GmbH
Magyarországi iroda
Hecskó Tamás okl.vill.mérn.
Éva utca 5.
7632 Pécs
Tel +36.205806134
Fax +36.72952587
thecsko@seepex.com

Irland

SEEPEX UK Ltd.
Branch Office Ireland
29 Lackenfune
Dungarvan
Co. Waterford
Tel +353.860450439
sales@seepex.co.uk

Italy

SEEPEX Italia S.r.l.
Via Alberto da Giussano 23
20145 Milano (MI)
Tel +39.02.36569360
Fax +39.02.92877855
info.it@seepex.com

Poland

SEEPEX GmbH
Przedstawicielstwo w Polsce
ul. Romana Maya 1
61-371 Poznan
Tel +48.61.6469270
Fax +48.61.6469271
info.pl@seepex.com

Sweden

SEEPEX Nordic A/S
Hamndalsvägen 58
61633 Åby
Tel +46.1166940
Fax +46.1166941
info.nordic@seepex.com

Spain

SEEPEX GmbH
Officina de Representación en España
C/Copenhague, 12
Edif. Tifan Oficina 207
28232 La Rozas
Madrid
Tel +34.91.6361353
Fax +34.91.6409371
info.es@seepex.com

The Netherlands

SEEPEX GmbH
Bureau Nederland
Visbystraat 13
7418 BE Deventer
Tel +31.570.516644
Fax +31.570.516077
seepex.nl@seepex.com

Russia

SEEPEX Ltd. Ugreshskaya
Str. 2 Bldg. 23
115088 Moscow
Tel +7.495.2874830
Fax +7.495.2874830
info.cis@seepex.com

USA

SEEPEX Inc.
511 Speedway Drive
Enon
Ohio 45323
Tel +1.937.8647150
Fax + 1.937.8647157
sales.us@seepex.com

China

SEEPEX Pumps (Shanghai) Co., Ltd.
Xuanzhong Rd. 399, Building 13
Nanhui Industrial Area
201300 Shanghai
Tel +86.21.38108888
Fax +86.21.38108899
info.cn@seepex.com

India

SEEPEX India Pvt. Ltd.
Office No. 305.
Raheja Arcade Building
Sector 11, C.B.D. Belapur
Navi Mumbai 400614
Tel +91.22.40240434/35
Fax +91.22.40240436
info.ind@seepex.com

Japan

日本シーペックス株式会社
German Industry Park
1-18-2 Hakusan, Midori-ku
Yokohama 226-0006
Tel +81.46.2595931
Fax +81.46.2595941
info.jp@seepex.com

Malaysia

SEEPEX (M) Sdn. Bhd.
No. 2, Jalan 51/203A
Kaw. Perindustrian Tiong
Nam Seksyen 51
46050 Petaling Jaya Selengor
Darul Ehsan
Tel +60.3.88009988
seepex.m@seepex.com

Australia

SEEPEX Australia Pty. Ltd.
Unit 3, 4 Bounty Close
Tuggerah Business Park
NSW 2259
Tel +61.2.43554500
Fax +61.2.43554022
info.au@seepex.com

More SEEPEX sales partnes in Europe, America, Asia, Africa and Oceania you willl find on our website.

868809

LEFT BLANK

SEEPEX

SERIES BN 17-06, PROGRESSIVE CAVITY PUMP (SLUDGE TREATMENT) (P5-011/012)

LEFT BLANK

SEEPEX.
ALL THINGS FLOW

Operating and Assembly Instruction
Progressive Cavity Pump

Commission-no.
868812 - 868813

Type
BN 17-6L

Read instructions before beginning any work!

Always keep instructions handy on the worksite.

Original Instructions

Issue 04.06.2018

1 Safety 1
- 1.1 General notes
- 1.2 Safety and warning notes
  - 1.2.1 Warning notes
  - 1.2.2 Danger symbols
  - 1.2.3 Information symbols
- 1.3 Dangers that can be caused by the machine
- 1.4 Qualification of the personnel
- 1.5 Authorized people
  - 1.5.1 Tasks and information for the owner/operators
  - 1.5.2 Safety notes for maintenance, inspection and assembly work
- 1.6 Personal protective equipment
- 1.7 Safety and protective devices
- 1.8 Foreseeable misuse
- 1.9 Designated use
- 1.10 Warranty

2 Description of the pump 5
- 2.1 General description
- 2.2 Mode of action and pumping principle of the pump
- 2.3 Constructive design

3 Technical Data 6
- 3.1 Data sheet 8
- 3.2 Characteristic Curves 11

4 Transport, Intermediate storage, Disposal 12
- 4.1 Safety
- 4.2 Transport
  - 4.2.1 Dimensions, weight and center of gravity
  - 4.2.2 Symbol
  - 4.2.3 Lashing points (AP) for lifting devices
  - 4.2.4 Unpacking the machine
- 4.3 Temporary storage/corrosion protection
- 4.4 Disposal

5 Assembly / Installation 15
5.1 Mounting tools / lifting gear
5.2 Space requirement
5.2.1 Dimension for stator replacement
5.3 Assembly of the complete mounted pump
5.4 Power supply of the pump
5.5 Pipelines
5.5.1 Suction and pressure connection
5.5.2 Pipeline dimensions
5.5.3 Residue-free pipelines
5.5.4 Tension-free assembly
5.6 Dimensional Drawing 17

6 Commissioning / De-Commissioning 18
6.1 Commissioning report 18
6.2 Measures before commissioning 20
6.2.1 Checking pipelines
6.2.2 Protective devices on the pump
6.2.3 Electrical / hydraulic connections
6.2.4 Direction of rotation check
6.2.5 Additional devices - optional
6.3 Initial commissioning/repeated commissioning
6.3.1 Avoiding dry running of the pump
6.3.2 Pressure in the suction and pressure connection
6.4 De-commissioning
6.4.1 Switching off the pump
6.4.2 Emptying the pump
6.4.3 Dismantling the pump
6.4.4 Preservation/storage of the pump

7 Maintenance 25
7.1 Preventative measures
7.1.1 Pump down-time
7.2 Lubrication
7.2.1 Joint grease
7.3 Inspection

8 Malfunctions, causes, rectification 27

9 Pump Dismantling / Reassembly 29
9.1 Pump Dismantling / Reassembly 29
9.1.1 Prepare the pump for dismantling
9.1.2 Dismantling
9.1.3 Reassembly

9.2 Rotating unit – individual parts 35
9.2.1 Dismantling
9.2.2 Rotating unit (RTE) - prepare individual parts for reassembly
9.2.3 Rotating unit (RTE) - individual parts - reassembly
9.3 Holding band - assembly 39
9.3.1 Prepare the holding band
9.3.2 Check the holding band
9.3.3 Assembling the holding band
9.3.4 Correct tension for the holding band (HBD)
9.3.5 Cant up the holding band
9.3.6 Shear the holding band
9.3.7 Check the holding band after assembly
9.4 Single acting mechanical seal 41
9.4.1 Safety
9.4.2 Application conditions and material version
9.4.3 Design
9.4.4 Commissioning
9.4.5 Monitoring during operation
9.4.6 Dismantling of mechanical seal
9.4.7 Reassembly of mechanical seal
9.6 Sectional drawing shaft sealing 44

10 Spare parts 46
10.1 Order template for spare parts 48
10.2 Sectional drawing 51
10.2.1 Parts list 52

11 Special tools 54

12 Related documents 56
12.1 Accessories 58
12.1.1 Accessorie TSE 58
12.1.2 Drawing TSE
12.1.3 Part list TSE
12.2 Technical Information 72
12.4 Warranty Card 74
12.5 Terms and Conditions 76

13 Appendix 79
13.1 Manufacturer's documents / suppliers
13.1.1 Gearbox 80

Subsidiaries

1.1 General notes

➢ Always keep the operating and maintenance instructions close by the machine.

➢ If problems cannot be solved with reference to the operating and maintenance instructions, please contact the manufacturer.

Observe the following points in addition to these operating and maintenance instructions:

- Prohibition, warning and mandatory signs, warning notes on the machine
- Relevant laws and ordinances
- Statutory provisions on accident prevention
- Corresponding harmonized standards and regulations

1.2 Safety and warning notes

➢ Comply with safety and warning notes for safe and efficient use of the product.

Signal words for specific dangers and (possible) consequences are explained below. These are supplemented by symbols (pictograms) if necessary.

1.2.1 Warning notes

NOTICE
Caution for machine! Possible danger. Material damage can occur.

⚠ **CAUTION**
Caution for people and machine! Possible danger. Minor injury or damage to property can occur.

⚠ **WARNING**
Warning for people! Possible danger. Death or serious injury can occur.

⚠ **DANGER**
Danger for people! Possible danger. Immediate risk of sever or fatal injury.

1.2.2 Danger symbols

**Warning:
Suspended load.**

**Warning:
Tipping over.**

**Warning:
Hand injuries.**

**Warning:
Dangerous electrical voltage.**

**Warning:
Pull-in hazard.**

**Warning:
Excess pressure.**

**Warning:
Risk to the environment.**

**Warning:
Hot surfaces.**

1.2.3 Information symbols

NOTICE

Observe operating and maintenance instructions.

Ensure environmental protection.

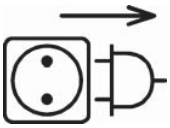

Disconnect power plug before opening.

Wear eye protection.

Wear gloves.

➢ Instruction to act/take measures

- List item

1.3 Dangers that can be caused by the machine

SEEPEX machines are built in accordance with the state of the art.

Nevertheless, there is a residual risk, because the machine works with:

- Mechanical movements that pose a danger
- Electrical voltages and currents

We have used design measures and applied safety technology to minimize the risk to the health of people posed by this danger.

1.4 Qualification of the personnel

This handbook is intended for:

- Owner
- Operators
- Setters
- Maintenance personnel

1.5 Authorized people

People authorized to undertake operation, set up and maintenance are instructed and trained specialists employed by the owner/manufacturer.

Detailed technical knowledge is essential for performing any work on the machine.

The owner is responsible for:

- Personnel training
- Compliance with safety regulations
- Compliance with operating and maintenance instructions

The operator must:

- Have received instruction
- Read and understood the relevant parts of the operating instructions before starting work
- Know the safety devices and regulations

1.5.1 Tasks and information for the owner/operators

- ➢ Regularly check and maintain the machine, replacing all parts in good time which no longer guarantee safe operation.
- ➢ It is essential to comply with the procedure described in the operating instructions for shutting down the machine.
- On completion of work, attach all safety and protective devices and make sure they are functioning.

1.5.2 Safety notes for maintenance, inspection and assembly work

- ➢ Do not work on the machine or system unless it is stationary and depressurised.
- ➢ Switch off the master switch and pull out the power plug before starting work on live components.
- ➢ Comply with the procedure for shutting down the machine as described in the Shut-down chapter.
- ➢ Decontaminate (de-toxify) machines that are used for pumping media that can be harmful to health.
- ➢ Refer to the Initial start-up chapter before repeated start-up of the machine.

1.6 Personal protective equipment

- ➢ Wear personal protective equipment and/or additional equipment for your own safety.
- ➢ Avoid/limit risks by the use of collective technical protective equipment or by organisational measures at work.

1.7 Safety and protective devices

- ➢ Prior to start-up, bolt SEEPEX machines onto a concrete foundation so as to ensure stability.
- ➢ Starting and stopping devices must be clearly recognisable. Take appropriate measures to avoid defects.
- No protective device is necessary for checking and/or setting the shaft seal.
- Hot surfaces are identified with a danger symbol on the machine.

1.8 Foreseeable misuse

Serious personal injury and damage to property can be caused by:

- Incorrect use
- Incorrect installation or operation of the machine
- Impermissible removal of necessary protective equipment

1.9 Designated use

- Only use SEEPEX machines if they are in perfect condition and in compliance with the oper-ating and maintenance instructions.
- Do not start up the machine unless the system in which the machine is installed is in accor-dance with the provisions of the applicable guidelines and statutory regulations.
- Equivalent sustained sound pressure level at workplaces of operating personnel C75 dB (A). Cavitation-free operation of the machine and screwed connection to concrete founda-tion are essential.
- SEEPEX machines are components that are exclusively intended for pumping media in accordance with the technical data (chapter 3.0). Written approval must be obtained from the manufacturer before other media are pumped.
- Refer to the information on the type plate and the operating instructions for technical data (chapter 3.0), and comply with them.
- The operating instructions are assigned to the SEEPEX machine based on the commission number.

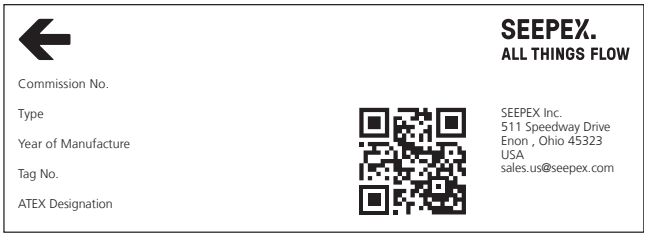

Similar illustration

1.10 Warranty

- Warranty in accordance with our terms and conditions of delivery and order confirmation.
- It is a condition of the machine warranty that the machine must correspond to the listed operating instructions in accordance with the type plate/data sheet.
- All wearing parts are excluded from the warranty.
- These operating instructions are subject to copyright. Reproduction is not permitted and will be punished. Contravention will be pursued through the courts.

2.1 General description

seepex pumps are members of the group of rotating displacement pumps.

- Characteristic features
  - Special configuration/arrangement of the rotor and stator pumping elements.
  - Motion sequence

2.2 Mode of action and pumping principle of the seepex pump

- Seal lines are created by the geometrical configuration/contact between both pumping elements.
- Seal lines provide total separation between the suction and pressure sides.
  Result:
  - Increased suction lift capability of the pump
  - High pressure build-up irrespective of the rotation speed

2.3 Constructive design

No.	Designation
ANT	Drive
200	Lantern
307	Plug-in shaft
400	Coupling rod
SEA	Shaft seal
500	Suction casing
600	Rotor
RTE	Rotating unit
601	Stator
700	Pressure branch

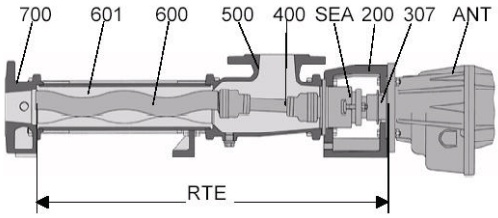

3.1 Data sheet

3.2 Characteristic Curves

Progressive cavity pump

BN 17-6L / A1-J0-L8-F0-GA

Application data

U 495 XXX001

Conveyed product	sludge
Flowability	flowable
Viscosity	low viscosity (<500 cP/mPas)
Solids content	not specified
Size of solids	not specified
Specific gravity	unknown, 1 kg/dm³ assumed
Product temperature	32°F - 113°F
pH value	5-9
Kind of operation	continuous
Operating hours	8h/day
Location	indoor, dry atmosphere
Altitude of installation	up to 1000 m assumed
Surrounding temperature	normal (32-113°F)

Performance data

	Capacity	**Pressure**	**Speed**	
	88 USGPM	50 psi	369 rpm	norm
Starting torque	160 lb.ft			
Req. power at pump shaft	4.8 HP			
Inlet pressure	flooded suction (up to 0,5bar)			
NPSHr	10.58 ft			

Tolerances according to SEEPEX standards.

Materials and executions

Installation	horizontal
Direction of rotation	counter clockwise (left)
Lantern - Design	with cover plates
Lantern - Material	EN-JL 1040 (gci-25)
Lantern - Flange diameter	250 mm
Suction casing - Design	standard
Suction casing - Material	EN-JL 1040 (gci-25)
Pressure branch - Design	standard
Pressure branch - Material	EN-JL 1040 (gci-25)
Position of branch	position 1
Suction connection	DN 4" ANSI B16.5 Class 150
Pressure connection	DN 3" ANSI B16.5 Class 150
Joint - Design	pin joint with joint sleeve, grease filled
Joint - Material	standard
Joint - Universal joint sleeve: material	NBR - Perbunan
Joint - Joint Grease	joint grease SEEPEX 30321
Coupling rod - Design	standard
Coupling rod - Material	1.4404 / AISI 316L
Rotor - Design	standard
Rotor - Material	1.0503 (C45) / AISI 1045
Rotor - Coating	ductile chromium coating
Stator - Design	standard with TSE, sensor sleeve 1.4404
Stator - Material	NBR - Perbunan
Shaft sealing	mechanical seal
Code	single acting mech. seal - GA
Shaft diameter	55 mm
Make	Burgmann
Type	MG1-G60 Q1Q1 VGG
Casing - material	1.4408 / ASTM A351 grade CF8M
Casing - connection standard	NPT
Plug-in Shaft - Design	standard
Plug-in Shaft - Material	1.4404 / AISI 316L
Plug-in Shaft - Drilling diameter	40
Plug-in Shaft - Drilling depth	75
Bolting - Design	standard
Painting - Number of colors	single-colored standard
Painting - Painted components	1 complete combination
Painting - Color	Standard Enamel (SEEPEX Blue)

Drive

Drive Type	Gear & Motor
Type	Gear
Make	Nord
Model	SK32ALF-210TC
Mounting position	B5
Ratio (i)	4.43
Flange diameter	250 mm
Shaft diameter	40 mm
Shaft length	80 mm
Shaft drawing	716/0100-003B4
	Norm
Speed	406 rpm
Frequency	60 Hz
Type	Motor
Make	Marathon Motors
Model	213THTL7736
Rated output	7.5 HP
Rated speed	1800 rpm
Mounting position	B3/B5
Starting	DOL (direct on line)
Explosion proof	Weatherproof
Efficiency class	IE1
Winding protection	Thermostats
Voltage	rated voltage 575V
Frequency	60Hz
Thermal class	F
Enclosure	TENV

Baseplate

Design	baseplate for block pump, design with side feet
Material	steel, painted
GPU Type Code	B-ST-LS

TSE

Design	standard design, complete - sensor sleeve fitted to the stator of the pump with integrated temperature sensor - connection head (IP55) - separate TSE control device suitable for mounting inside a control panel
Voltage	110-115V/50-60Hz
Temperature coefficient	NTC
Material sensor sleeve	1.4404
Material connection head	aluminium

Packing

Type of packing	crate (US)

Miscellaneous

Design	Tag each: P5-011, P5-012 Tag both: PI005

Documentation

Characteristic Curves
Size
17–6L

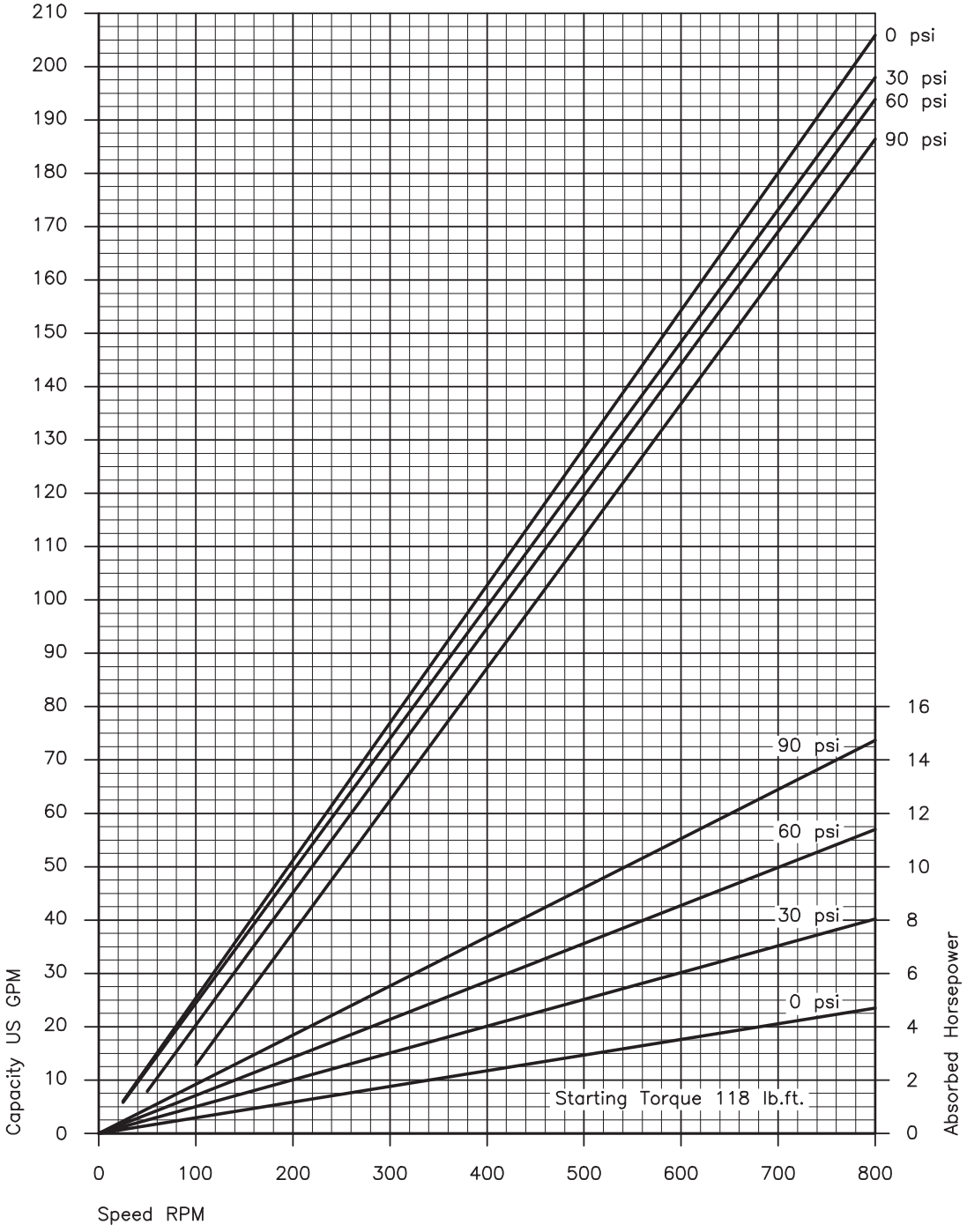

Values based upon water 68°F ; For notes on drive selection refer to PER

CHA.17–6L_6, B 12.02us

4.1 Safety

CAUTION

Damage to property/injuries due to incorrect transport.
Slight injury or damage to property can occur.

- Comply with the safety notes and transport notes on the packaging.
- Use suitable means of transport, lifting devices and tools.
- Use protective equipment.

4.2 Transport

4.2.1 Dimensions, weight and centre of gravity

- Note the dimensional drawing (chapter 5.6).

4.2.2 Symbol

- Meaning of symbol

Top | Fragile item | Against moisture protect | Centre of gravity | Lashing points

4.2.3 Lashing points (AP) for lifting devices

WARNING

Warning of suspended load.
Death or serious injury can occur.

- Use the lashing points (AP) for lifting devices.
- Note the centre of gravity (dimensional drawing chapter 5.6).

Lifting machine

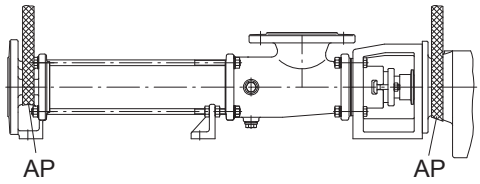

Industrial trucks

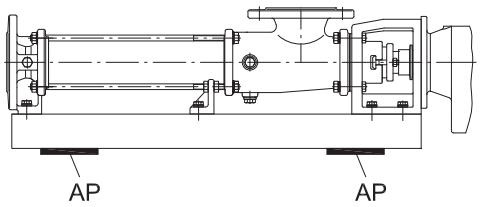

4.2.4 Unpacking the machine

- Comply with the symbols and notices on the packaging.
- Remove the screwed connection between the machine and packaging.
- Remove the machine with a lifting machine/industrial truck.

4.3 Temporary storage/corrosion protection

- All SEEPEX machines have corrosion protection applied as standard prior to transport.

NOTICE
Damage to property if corrosion protection is missing. Property damage can occur due to corrosion. ➢ Temporary storage must be in a dry, enclosed, frost-free room in order to provide protection against ambient influences. ➢ Contact SEEPEX regarding the necessary corrosion protection for temporary storage.

4.4 Disposal

	NOTICE
	Environmental protection. Material damage can occur. ➢ Drain the pumping medium and dispose of it in accordance with the regulations. ➢ Dispose of the machine with regard to its composition and existing regulations.

5.1 Mounting tools / lifting gear

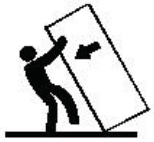

CAUTION

Pump falling over.
Slight injury or damage to property can occur.

- ➢ Adhere to the lifting tool's starting point.
- ➢ Pay attention to the dimensions, weight and centre of gravity of the pump.
- ➢ Use suitable mounting tools/lifting gear.

5.2 Space requirement

The required space should be determined by considering the following factors:

- Dimensions and weight.
- Requisite transport and lifting equipment.
- Pipe routing – dismantling (dimension for stator replacement).

5.2.1 Dimension for stator replacement (P)

➢ Refer to the dimensional drawing.

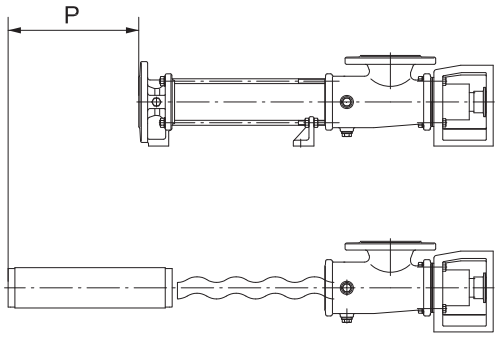

5.3 Assembly of the complete mounted pump

- ➢ Assemble according to technical data (chapter 3.).
- ➢ Note dimensional drawing.

Tension-free mounting of the pump

- ➢ Balance unevenness with suitable supports.
- Applies to mounting on foundations/load-bearing elements.
- Total areas of all pump bearing areas are resting on the surface.

Correct position of the drives

- All drives are set up ready for operation and mounted.
- Correct displacements of the drive during transport/installation of the pump by adjusting/fixing the drive.

CAUTION

Safety protection devices.
Slight injury or damage to property may result.

- ➢ Connect safety protection devices and activate.

5.4 Power supply of the SEEPEX pump

DANGER

Line voltage and line frequency.
Death or serious injury can occur.

- ➢ Note type plate on the pump.
- ➢ Pay attention to manufacturer's directions (chapter 13.).
- ➢ Pay attention to safety regulations.

5.5 Pipelines

5.5.1 Suction and pressure connection

- Refer to the dimensional drawing for the position, nominal width and standard.
- Note direction of rotation/flow direction.

5.5.2 Pipeline dimensions

- Adhere to specifications regarding pressure in the pressure respectively suction connection.
- Note technical data (chapter 3.).
- Nominal width of suction pipe = nominal width of suction connection of pumps.

5.5.3 Residue-free pipelines

NOTICE

Damage to property through assembly residue.
No claims under guarantee if violated.

- ➢ Keep all pipelines free of foreign objects.
- ➢ Remove weld spatters, screws, steel chips etc.

5.5.4 Tension-free assembly

- ➢ Assemble pipelines and other components in a tension-free manner on the pump.

Copyright: This drawing is our property and patented for us according to the law of copyright and associated rights !

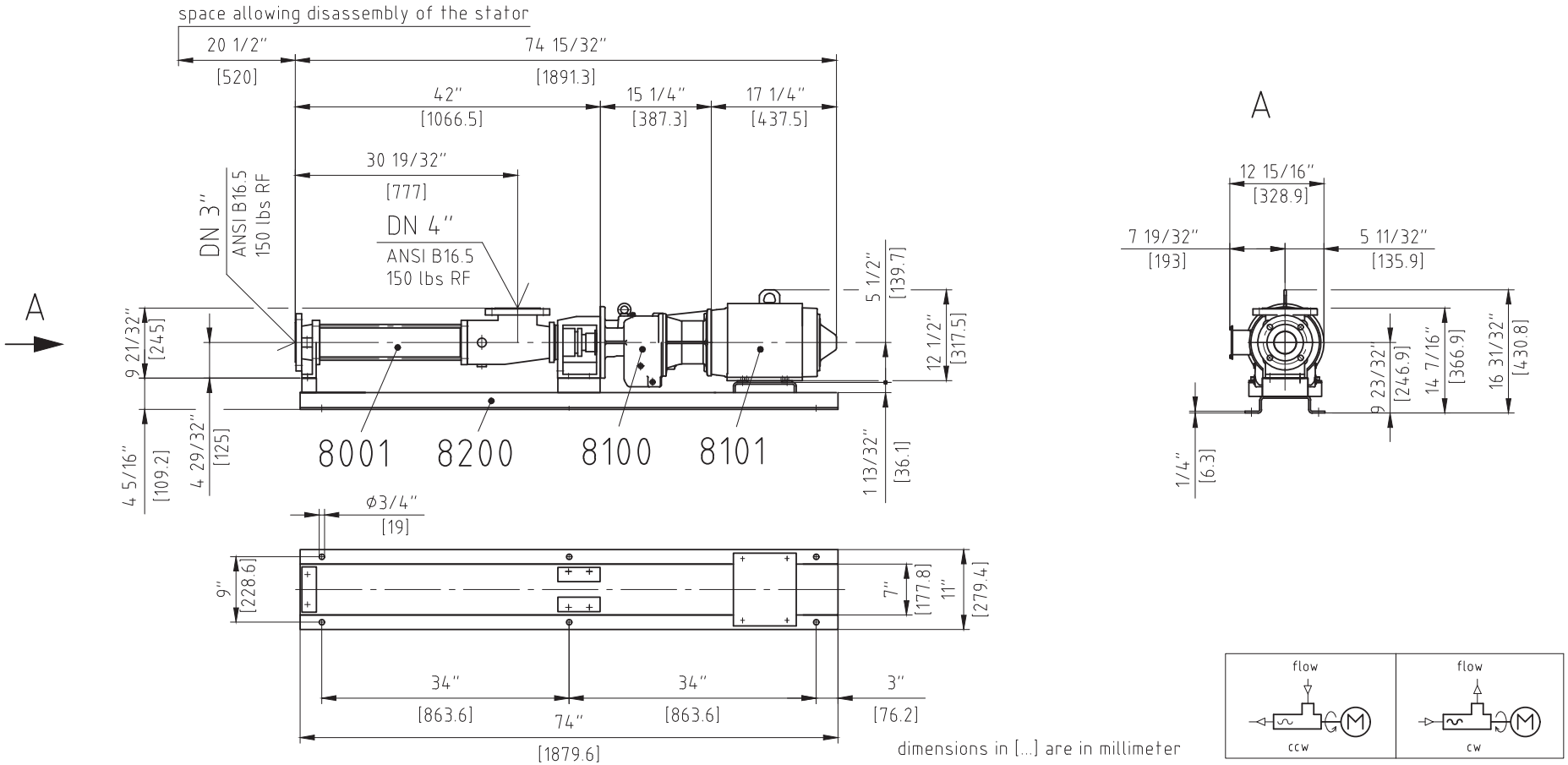

dimensions in [...] are in millimeter

Quant.	Denomination	Item	Material	Note	Weight / kg
1	baseplate:	8200		Var.: 801-200/0100-C-753	52
1	motor: Marathon 213THTL7736	8101			67
1	gear: Nord SK32F-210TC	8100			46
1	pump: BN 10-12 / 17-6L / 30-6LT / 15-12T	8001			57

SEEPEX.
ALL THINGS FLOW

2018	Name	Day	Scale	Weight	Denomination
Drawn	cbo	30.04.	1:20	222 kg	dimensional drawing
Checked	lsh	01.05.	EDP-No. 172018.dwg		Drawing-no. 262-C65/0100-C-746A4

General tolerances for dimensions without specified tolerances acc. to DIN ISO 2768-v

Master Copy

6.1 Commissioning report

Send commissioning report online to www.seepex.com\ **Must be specified with every order!**		**From:**
Commission: _____	**Model:** _____	Contact person: ..... Tel.: ..... Fax: ..... E-mail: .....

Customer Service: SEEPEX Inc. 511 Speedway Drive Enon, Ohio 45323 service@seepex.com			**Address of plant:** ....

Delivery date:		
Date of installation:		
Assembly check carried out on:		
Please enter operational data:		
Conveying liquid:		
Temperature:		
Fuse level/motor protection or power consumption		
Frequency control	☐ no	
	☐ yes	If yes:
		☐ Supplied by SEEPEX
		☐ Supplied by customer
		Frequency:
		Speed:
		Power consumption:

_____ Place, date

_____ Signature / company stamp

6.2 Measures before commissioning

➢ Note the technical data (chapter 3.).

6.2.1 Checking pipelines

➢ Check flange screwed connections (SCH).

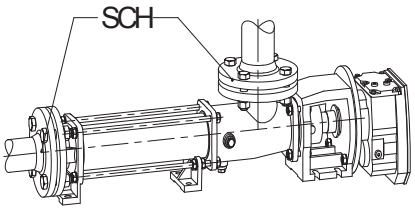

➢ Check threaded connections (G).

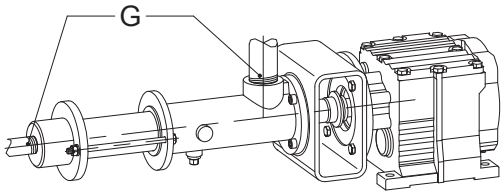

NOTICE

Ensure the liquid can flow through without obstruction.
Malfunction and/or irreparable damage to the pump.

➢ Open all shut-off elements before switching on the pump.

6.2.2 Protective devices on the pump

DANGER

Missing protective device.
Danger of pulling in and crushing.

➢ Equip the pump with a protective device. Protective devices provided for preventing contact with surfaces or moving parts must be regarded as suitable if contact is not possible in a test involving a test finger, with regard to the penetration possibility, strength and shock resistance.

➢ Comply with national protection regulations.

➢ In pumps with an open suction flange/feed hopper, attach touch protection. These safety clearances protect those persons who are attempting to reach danger areas without additional help and under the conditions defined for various situations of reaching up, reaching under or reaching through

In shaft seals, touch protection is only necessary if there are components on the rotating shaft.

6.2.3 Electrical/hydraulic connections

DANGER

Dangerous voltage.
Death or serious injury can occur.

➢ Observe safety regulations.

➢ Disconnect the pump from all sources of energy.

➢ Prevent electrical connections from being switched on again.

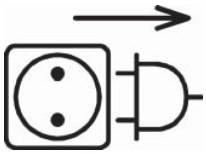

6.2.4 Direction of rotation check

- The pump direction of rotation determines the flow direction of the pumping medium.
- Note the direction of rotation arrow on the type plate.

flow direction

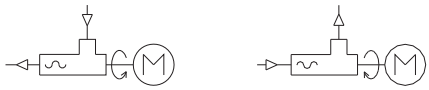

counter clockwise clockwise

6.2.5 Additional devices - optional

- Refer to additional devices (chapter 12.1).

6.3 Initial commissioning/repeated commissioning

- Start up the pump.

NOTICE
Dry running of the pump. Malfunction and/or irreparable damage to the pump. ➢ Fill the suction casing with liquid in order to lubricate the pumping elements.

6.3.1 Avoid dry running of the pump

NOTICE
High temperature between rotor and stator. Stator material burned. Complete failure of the pump ➢ Make sure that the suction-side conveying capacity does not cavitate. ➢ If this cannot be guaranteed on the machine side, assemble a SEEPEX dry running protection (DRP).

6.3.2 Pressure in the suction and pressure connection

	⚠ CAUTION
	High pressure. Malfunction and/or irreparable damage to the shaft seal or pump. ➢ Maintain pressure in the suction connection in accordance with the technical data (chapter 3.). ➢ Assemble an oil-filled contact pressure gauge to monitor and deactivate the pump.

6.4 De-commissioning

Protect the pump and additional devices against the following:

- Frost
- Deposit of solids
- Sedimentation from the liquid
- Corrosion of parts that come into contact with the medium

6.4.1 Switching off the pump

DANGER

Dangerous voltage.
Death or serious injury can occur.

- Observe safety regulations.
- Disconnect the pump from all sources of energy.
- Prevent electrical connections from being switched on again.

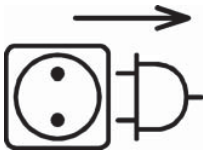

6.4.2 Emptying the pump

CAUTION

Liquid draining out.
Minor injury or damage to property can occur.

- Wear suitable protective clothing.
- Refer to the technical data (chapter 3.) for the corresponding configuration of the pump housing.

To drain the pump:

- If the pump housing has screwed plugs, remove the screwed plugs.
- Drain using a connection branch (suction casing, pressure branch) if the pump housing is coated or the housing does not have screwed plugs.
- Drain the residual liquid from the pump housing.
- Drain the pipelines on the suction and pressure sides, or shut off behind the pump connections.

6.4.3 Removing the pump

WARNING

Risk of pump tipping or falling.
Death or serious injury can occur.

- Support the drive unit to guarantee stability.

Pipeline dismantling

- Remove flange bolts (SCH) and flange seals (DFL).

with/without base plate

- Remove bolts (SCH) from the pump feet.

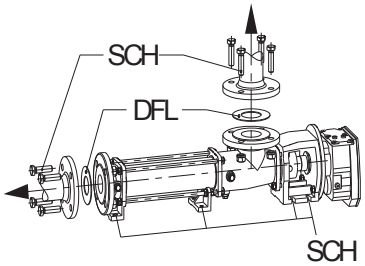

Pipeline dismantling

➢ Remove threaded connections (G).

with/without base plate

➢ Remove bolts (SCH) from the pump feet.

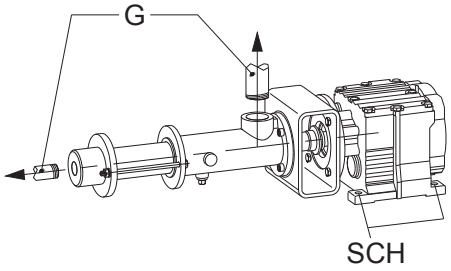

6.4.4 Preservation/storage of the pump

NOTICE
Damage to property due to lack of corrosion protection. Property damage can occur due to corrosion. ➢ Contact SEEPEX to discuss suitable preservation measures. – State the commission number of the pump.

7.1 Preventive measures

The maintenance personnel must have these operating instructions, follow them and also require corresponding qualifications.

DANGER

Dangerous voltage.
Death or serious injury can occur.

- Observe safety regulations.
- Disconnect the pump from all sources of energy.
- Prevent electrical connections from being switched on again.

7.1.1 Pump down-time

NOTICE

Pump down-time.
Production failure due to wear.

- Acquisition of a set of wearing parts and a set of gaskets.

7.2 Lubrication

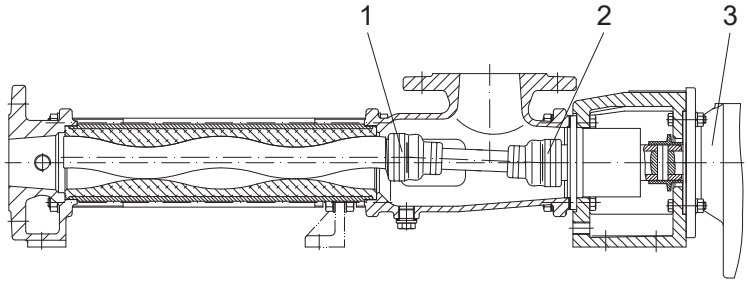

No.	Denomination	Lubricant	Lubricant change in operating hours	Fill volume
1	Pin joint	SEEPEX special grease (30321)	10,000 h	32 cm^3
2	Pin joint	SEEPEX special grease (30321)	10,000 h	32 cm^3
3	Drive	Refer to manufacturer's documentation (chapter 13._)		
Rotor/stator		Conveying medium	---	---
Shaft seal		Conveying medium	---	---

7.2.1 Joint grease

NOTICE

Other grease types.
Malfunction and/or irreparable damage to the joints or the pump.

- Exclusively use SEEPEX special grease.

7.3 Inspection

Component	Interval	Action
Joints	Every 10,000 operating hours	Renew joint grease
Shaft seal	Every week	Visual check for leaks
Drive unit	Every 3,000 operating hours, at least every 6 months	Comply with manufacturer's documentation

Refer to technical data (chapter 3.) for application range of the pump.

Malfunction										Causes	Rectification
Pump is not sucking	Pump pumping unevenly	Conveying capacity is not achieved	Pressure head is not reached	Pump does not start up	Pump seized / pump does not pump	Pump is loud when running	Motor gets too hot	Premature stator wear	Shaft seal is leaky		
				X			X		X	Static friction between stator/rotor too great.	Apply lubricant (liquid soap) between stator and rotor.
X										Incorrect direction of rotation.	Check direction of rotation and swap over motor connections if necessary.
X	X	X			X	X				Suction pipe or shaft seal leaking.	Eliminate leaks.
X	X	X				X				Suction head too great.	Check the suction head, if necessary increase pipe cross section on suction pipe and use a larger filter, open suction-side valve fully.
X	X	X								Viscosity of conveying product too great.	Check/adapt (data sheet).
		X		X			X			Pump rotation speed incorrect.	Correct rotation speed (data sheet).
	X	X									Avoid air bubbles in the conveying product.
		X		X	X		X	X		Pressure head too great.	Check pressure head with pressure gauge, reduce pressure head by using larger pressure pipe crossed section or shortening the pressure pipe.
X	X	X			X			X		Pump running partially/ completely dry.	Check there is adequate conveying product available on the suction side. Dry running protection DRP.
						X	X			Check coupling.	If necessary, move pump in relation to drive, check wear on coupling gear, re-adjust coupling if necessary.
X		X								Rotation speed too low.	Increase rotation speed for low-viscosity media/large suction volume.

Malfunction										Causes	Rectification
Pump is not sucking	Pump pumping unevenly	Conveying capacity is not achieved	Pressure head is not reached	Pump does not start up	Pump seized / pump does not pump	Pump is loud when running	Motor gets too hot	Premature stator wear	Shaft seal is leaky		
X	X					X				Rotation speed too high.	Reduce rotation speed for high-viscosity media, risk of cavitation.
						X				Joint play too large.	Check mounting of coupling rod bushing.
X		X		X	X			X		Foreign objects in pump.	Dismantle pump, remove foreign bodies, replace defective parts.
X		X	X		X					Stator/rotor worn.	Dismantle pump and renew defective parts.
X		X			X	X				Joint parts worn.	Renew joint parts, use SEEPEX pin joint grease.
X		X			X			X		Suction pipe blocked.	Clean the suction pipe.
X				X	X		X	X		Temperature of pumping liquid too high.	Check temperature, use an undersize rotor.
X		X		X			X		X	Gland packing too firm/ worn.	Loosen packing gland or tighten. Renew unusable packing rings.
X				X	X			X		Solid content and/or grain size too great.	Reduce pump speed, install screen with permitted mesh width. Increase liquid proportion.
X				X				X	X	Sedimentation/gumming of solids when pump stationary.	Rinse through and clean the pump immediately.
X				X	X			X	X	Conveying product hardens when the temperature drops below a certain limit.	Heat the pump.
				X	X		X	X		Stator swollen and unable to withstand conveying product.	Select a suitable stator material, use an undersize rotor.
						X			X	Bearings in pump drive housing or drive unit defective.	Renew bearings.
									X	Mechanical seal defective.	Check sliprings and O-rings for wear/resistance, renew if necessary.

9.1 Pump Dismantling/Reassembly

Range: BN

Size: 05-24 up to 300-6L

9.1.1 Preparing the pump for dismantling

DANGER

Dangerous voltage.
Death or serious injury can occur.

- Note safety regulations.
- Disconnect motor from all sources of energy.
- Secure electrical connections against restarting.

- Empty pipelines.
- Allow pipelines to cool down.
- Remove pipeline connections (suction side/pressure side).
- Note decommissioning (→ chapter 6.4).

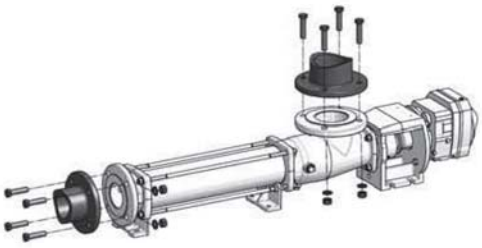

9.1.2 Dismantling

WARNING

Risk of pump tipping or falling.
Death or serious injury can occur.

- Fasten the lantern **(200)** to secure the pump.

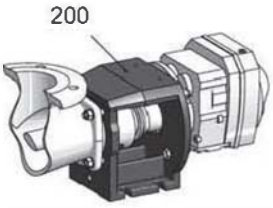

9.1.2.1 Pressure branch (700) - Dismantling

- Prop up stator **(601)** with a support **(S)**.
- Remove screw fitting **(604, 606)**.
- Remove pressure branch **(700)**.
- Remove tie bolt **(602)**.

9.1.2.2 Stator (601) - Dismantling

- Raise/move splash ring **(310)**.
- Remove the plug-in shaft pins **(309)**.
- Insert tool **(WS)**.
- Turn tool **(WS)** upwards.

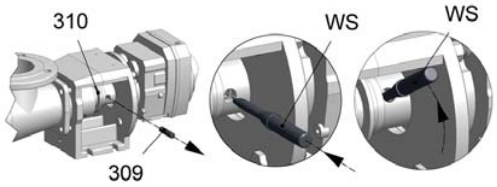

Tool (**W2**/chain wrench)

- Add lubricant **(GM)** to the opening on pressure branch side between the rotor **(600)** and the stator **(601)**.
- Turn the stator **(601)** in the “left” rotating direction and remove.
  - Use tool **(W2)**.
- Prop up the rotor **(600)** with support **(S)**.

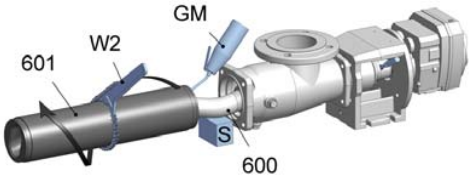

9.1.2.3 Suction casing (500) - Dismantling

- Put a protective cover **(SH)** on the rotor **(600)**.
- Prop up rotor **(600)** with a support **(S)**.
- Remove screw fitting **(506, 507, 509)**.
- Remove suction casing **(500)** and casing gasket **(501)**.
- Remove tool **(WS)**.

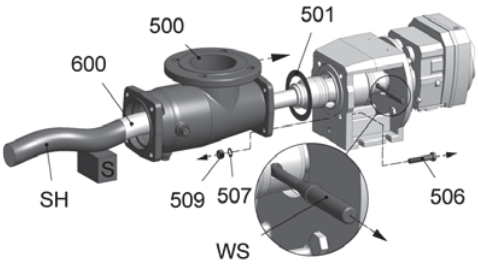

9.1.2.4 Rotating unit (RTE) - Dismantling

Tool (**W10**/dismantling tool)

Tool (**W9**/mounting lever)

with flush connection

- Remove the flush connection **(SSÜ)** on the shaft seal casing **(SEA)**.

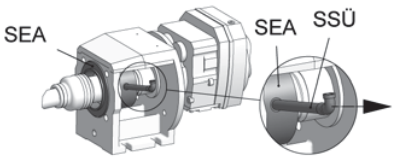

- Assemble tool (**W10**/dismantling tool).

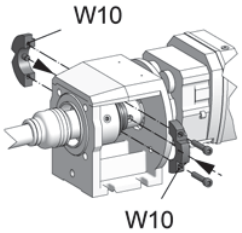

- Pull the rotating unit **(RTE)** with shaft seal **(SEA)** off from the output shaft of the drive **(ANT)**.
  - Use tool (**W9**/mounting lever).

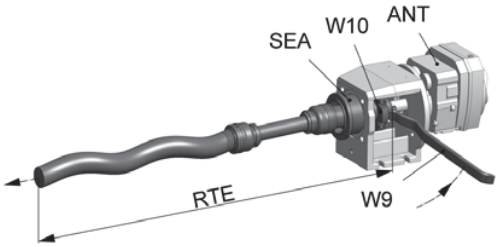

- Dismantle tool (**W10**/dismantling tool).

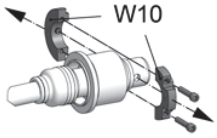

- Pull off the splash ring **(310)**.
- Pull off the shaft seal casing **(SEA)**.
  - Note dismantling shaft seal (→ chapter 9.4).

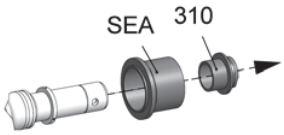

without flush connection

- Assemble tool (**W10**/dismantling tool).

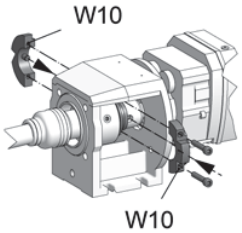

- Pull the rotating unit **(RTE)** with shaft seal **(SEA)** off from the output shaft of the drive **(ANT)**.
  - Use tool (**W9**/mounting lever).

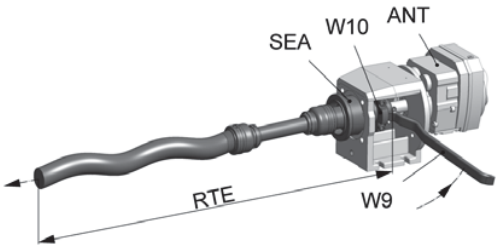

- Dismantle tool (**W10**/dismantling tool).

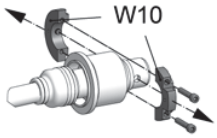

- Pull off the splash ring **(310)**.
- Pull off the shaft seal casing **(SEA)**.
  - Note dismantling shaft seal (→ chapter 9.4).

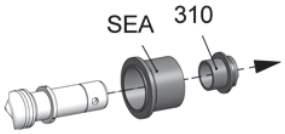

9.1.2.5 Rotor (600), coupling rod (400), plug-in shaft (307) - Dismantling

- Joint **(G)** dismantling note rotating unit - individual parts (→ chapter 9.2).

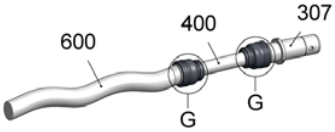

9.1.2.6 Lantern (200)/drive (ANT) - Dismantling

CAUTION

Falling or tilting drive.
Slight injury can occur.

- Secure the drive **(ANT)**.

- Remove the screw fitting **(210, 212, 213)**.
- Remove the drive **(ANT)**.

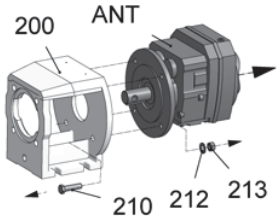

9.1.3 Reassembly

WARNING

Risk of pump tipping or falling.
Death or serious injury can occur.

- Fasten the lantern **(200)** to secure the pump.

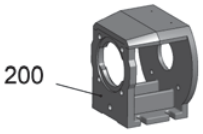

9.1.3.1 Lantern (200)/drive (ANT) - Reassembly

- Clean the flange bearing surfaces **(FLS)**, bolt circle **(ZD)** and the output shaft of the drive unit **(ANT)**.
- Mount the drive **(ANT)** to the lantern **(200)** with screw fittings **(210, 212, 213)**.

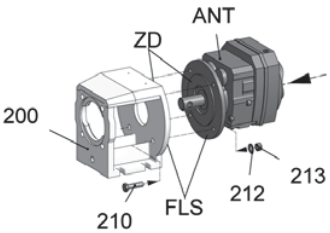

9.1.3.2 Rotor (600), coupling rod (400), plug-in shaft (307) - Reassembly

- Joint **(G)** reassembly note rotating unit - individual parts (→ chapter 9.2).

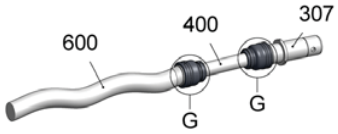

9.1.3.3 Rotating unit (RTE) - Reassembly

- Slide on shaft seal casing **(SEA)**.
  - Note reassembly shaft seal (→ chapter 9.4).
- Moisten splash ring **(310)** and plug-in shaft **(307)** with antiseize graphite petroleum.
- Slide splash ring **(310)** onto plug-in shaft **(307)**.
  - Observe fitting position of splash ring (see lettering).

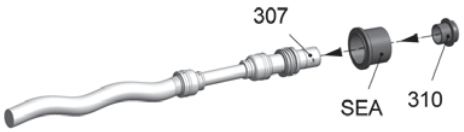

- Apply antiseize graphite petroleum to the output shaft of drive **(ANT)**.
- Slide on rotating unit **(RTE)**.

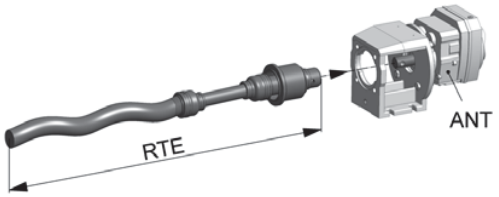

with flush connection

- Mount the flush connection **(SSÜ)**.

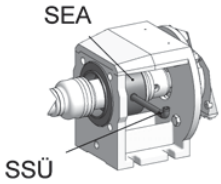

9.1.3.4 Suction casing (500) - Reassembly

- Put a protective cover **(SH)** on the rotor **(600)**.
- Prop up rotor **(600)** with a support **(S)**.
- Push on the casing gasket **(501)**.
- Mount and align the suction casing **(500)** with screw fitting **(506, 507, 509)**.
  - Use spirit level **(W)**.
- Remove the protective cover **(SH)**.

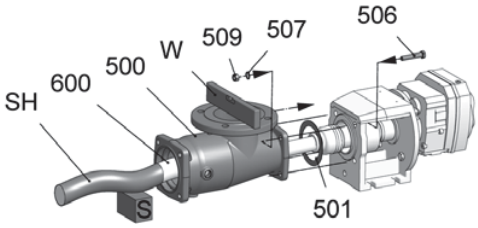

9.1.3.5 Stator (601) - Reassembly

- Insert tool **(WS)**.
- Turn tool **(WS)** down.

Tool (**W2**/chain wrench)

- Moisten outer surface of the rotor **(600)** with lubricant **(GM)**.
- Moisten inner surface of the stator **(601)** with lubricant **(GM)**.
- Prop up stator **(601)** with support **(S)**.
- Turn stator **(601)** in the “right” rotating direction and slide onto rotor **(600)**.
  - Use tool **(W2)**.

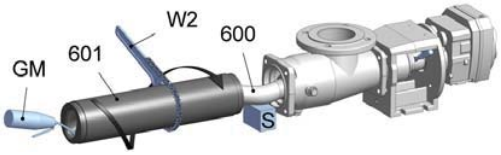

- Remove tool **(WS)**.
- Slide in plug-in shaft pin **(309)**.

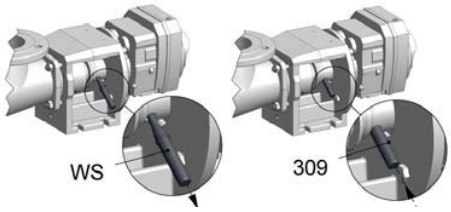

- Pay attention to the position of the splash ring **(310)**.
- Insert the splash ring collar at a distance of 0.5 mm from the lantern **(200)**.

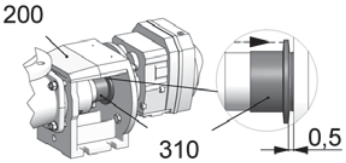

9.1.3.6 Pressure branch (700) - Reassembly

- Prop up stator **(601)** with a support **(S)**.
- Insert tie bolts **(602)** loosely into the suction casing **(500)**.

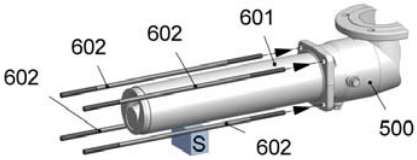

- Push pressure branch **(700)** on to the stator **(601)**.
- Insert tie bolts **(602)** loosely in the pressure branch **(700)**.
- Remove the support **(S)**.

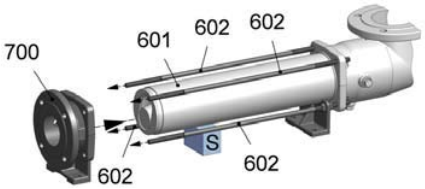

- Mount screw fitting **(604, 606)**.
- Tighten tie bolts **(602)** equally.

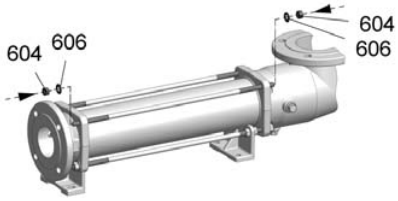

9.2 Rotating unit individual parts

9.2.1 Dismantling

9.2.1.1 Holding band (406, 407) - dismantling

CAUTION

Risk of injury.
Possibility of parts spinning out.

- Wear protective goggles.

- Detach holding band loop (SCL).
  - Use suitable tool (WM).
- Push out parts of holding band loop (SCL).
- Remove holding band (406, 407).
- Pull back universal joint sleeve (405).

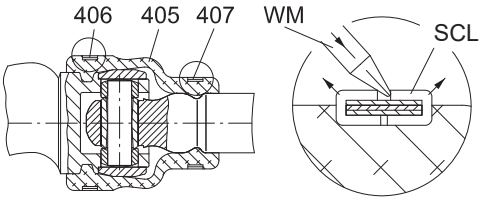

9.2.1.2 Retaining sleeve (401) - dismantling

- Knock back retaining sleeve (401).
  - Use suitable tool (WM).

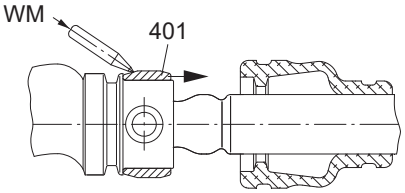

9.2.1.3 Detach joint

Tool (W5/drift)

- Eject coupling rod pins (402).
- Bend (A) the coupling rod (400). Knock guide bushing (403) out with tool (W5).
- Remove coupling rod (400).

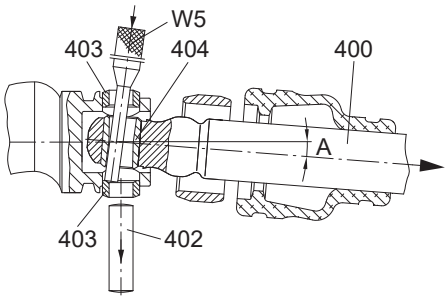

9.2.2 Rotating unit (RTE) - prepare individual parts for reassembly

9.2.2.1 Rotor (600)

- Remove any damage.
- Clean the rotor (600).

Tool (W4/assembly mandrel)

- Press in the guide bushing (403) (depth = 2/3).
  - Use tool (W4).

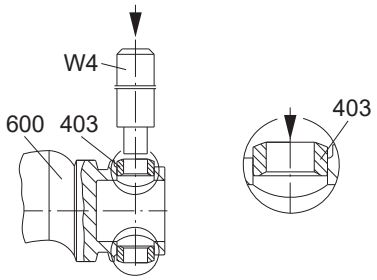

9.2.2.2 Coupling rod (400)

- Clean the coupling rod (400).
- Examine bore head for wear.
  - If wearing is detected on the bore head, replace the coupling rod (400).

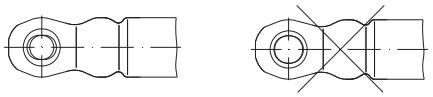

9.2.2.3 Plug-in shaft (307)

- Remove any damage.
- Clean the plug-in shaft (307).

Tool (W4/assembly mandrel)

- Press in the guide bushing (403) (depth = 2/3).
  - Use tool (W4).

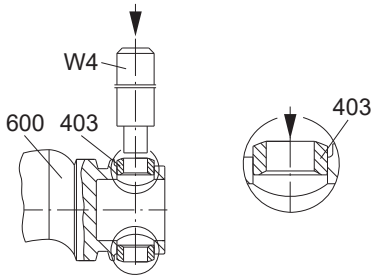

9.2.3 Rotating unit (RTE) - individual parts - reassembly

NOTICE

Malfunction of the joints.
Malfunction and/or destruction of joints.

- Replace the coupling rod pins (402) and guide bushings (403) jointly.

9.2.3.4 Coupling rod (400) – reassembly

- Slide the universal joint sleeve (405) and holding bands (406, 407) onto coupling rod (400).
- Fit the diameter and width of the holding band of the universal joint sleeve.
- Fill the joint head with SEEPEX joint grease.

Rotor (600)

- Insert coupling rod pins (402).
- Slide on retaining sleeve (401).
- Connect the rotor/coupling rod.

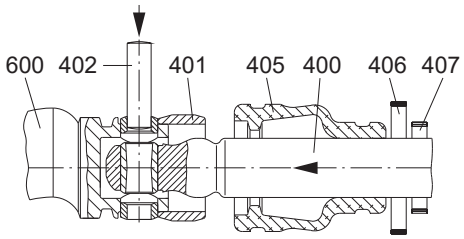

Tool (W5/drift)

- Slide in the coupling rod pins (402).
- Knock the guide bushings (403) in.

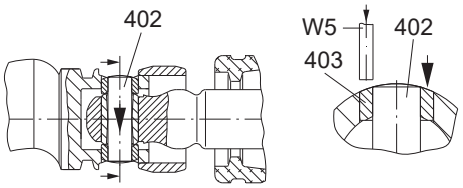

Plug-in shaft (307)

- Insert coupling rod pins (402).
- Slide on retaining sleeve (401).
- Connect the plug-in shaft/coupling rod.

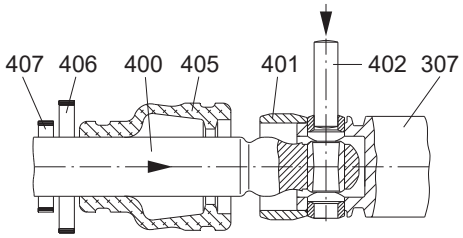

Tool (W5/drift)

- Slide in the coupling rod pins (402).
- Knock the guide bushings (403) in.

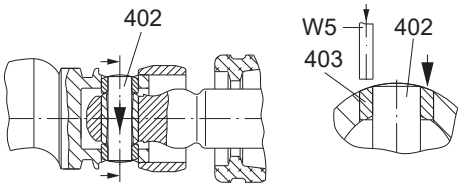

9.2.3.5 Retaining sleeve (401) - reassembly

Tool (W4/assembly mandrel)

- Knock back retaining sleeve (401).
  - Use tool (W4).

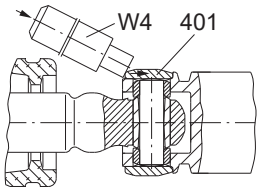

Rotor (600) unhardened material

- Secure retaining sleeve (401) in a displaced manner (2x180°).
  - Use suitable tool (WK).

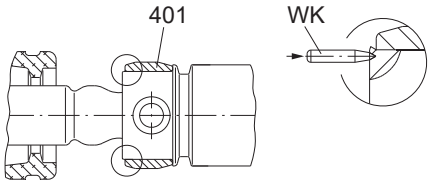

Rotor (600) hardened material

- Secure retaining sleeve (401) in a displaced manner (2x180°).
  - Use suitable tool (WK).

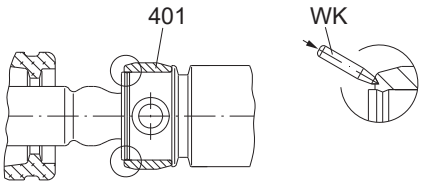

9.2.3.6 Universal joint sleeve (405) - reassembly

- Moisten the surface of the coupling rod (400)/ inner surface of the universal joint sleeve (405) with joint grease (maintenance, chapter 7.0).
- Slide on the universal joint sleeve (405).

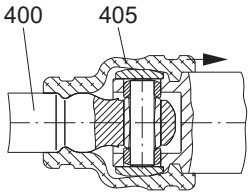

- Vent the interior of the joint.
  - Use suitable tool (WS).

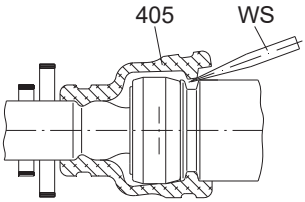

- Assemble holding band.
  - Holding band assembly (chapter 9._).

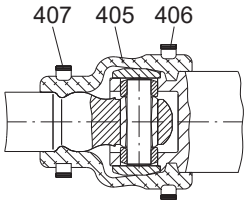

9.3 Holding band - assembly

9.3.1 Prepare the holding band

➢ Only use prefabricated double-band holding bands.

9.3.2 Check the holding band

- Bent-over holding band (HBD) is in contact with holding band loop (SCL) to avoid damaging universal joint sleeve.

➢ Press on holding band (HBD) using tool (WZ) if necessary.

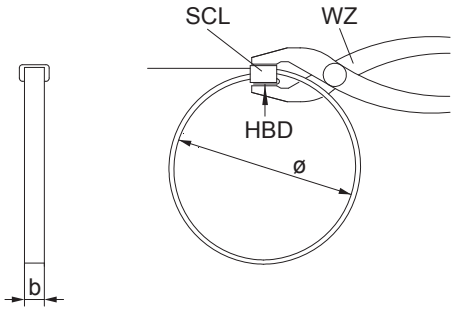

9.3.3 Assemble the holding band

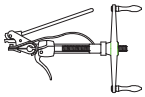

➢ Use tool (W3/mounting tool)

➢ Feed holding band into tool (W3).

➢ Hold ends of holding band with the eccentric lever (EX).

➢ Turn the crank (KU) until the holding band is strained and lies against the holding band loop (SCL).

➢ Carefully pull the holing band together until it is in contact with the circular groove of universal joint sleeve.

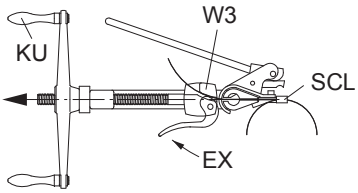

9.3.4 Correct tension of the holding band (HBD)

Correct

The holding band (HBD) has drawn in the out shape of the universal joint sleeve and is firmly seated.

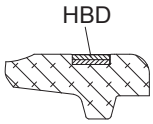

Incorrect

The holding band (HBD) is too loose, can slip off.

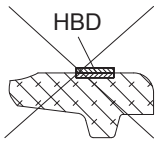

Incorrect

The holding band (HBD) is too tight, universal joint sleeve will be damaged/sheared off.

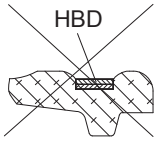

9.3.5 Cant up the holding band

- Swivel mounting tool (W3) approx. 60° upwards.
- Loosen crank (KU) by a half turn.
- Swivel cutting lever (SH) forward until the pressure piece is lying behind the holding band loop (SCL).

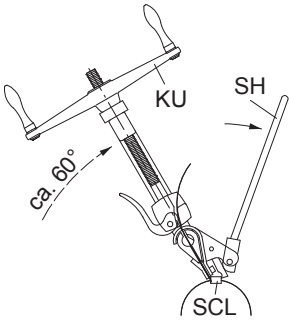

9.3.6 Shear the holding band (material: 1.4301; 1.4571)

- Hit the cutting lever (SH) with the inside of your hand.
  - Cant up and shear the end of the holding band behind the loop (SCL).
  - Carefully straighten up the holding band if it rises up on the sheared side.

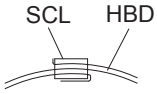

NOTICE
Universal joint sleeve damage. Pin joint grease can emerge. ➢ Avoid hammering or knocking.

9.3.7 Check the holding band after assembly

- The holding band must lie in the groove of the universal joint sleeve.
- Replace the holding band if the holding band slips back through the loop.

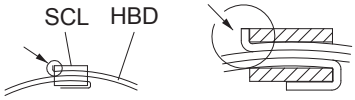

9.4 Single acting mechanical seal

9.4.1 Safety

WARNING

Shaft seal is leaky.
Leakage may escape into the atmosphere.

- ➢ Take safety measures to protect persons and the environment.
- ➢ Wear suitable protective clothing.
- ➢ Dispose of leakage appropriately.
- ➢ Note applicable regulations when handling hazardous substances.

9.4.2 Operating conditions and material combination

- Adjust to the relevant application
  - Refer to technical data (chapter 3).

9.4.3 Design

- Single acting mechanical seal

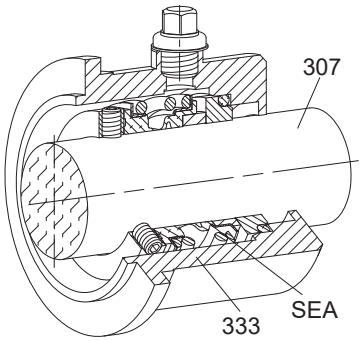

9.4.4 Commissioning

NOTICE

Dry running of the mechanical seal.
Damage to property may result.

- ➢ The mechanical seal must be laid in liquid medium before being commissioned.

Circulation, flushing and/or flushing pipe

- Additional flushing or circulation pipes are not required where shaft sealing lies in medium.
- Flushing pipes may be possible under special circumstances and after speaking to SEEPEX.

NOTICE

Shaft seal is not leakage free.
Damage to property through leakage.

- ➢ Components which come into contact with leakage must be corrosion-resistant or otherwise suitably protected.

Adjust shaft seal

- ➢ It is absolutely vital to adjust at the application site in a manner appropriate for the operating conditions.
- ➢ Refer to the sectional drawing of the shaft seal for setting measurements.
- ➢ Set the setting measurements of the shaft seal to the plug-in shaft (307).

9.4.5 Monitoring during operation

NOTICE

Shaft wear.
Damage to property may result.

- Conduct a daily visual inspection.
- Install a new shaft seal (SEA).
- Possibly replace the plug-in shaft (307).

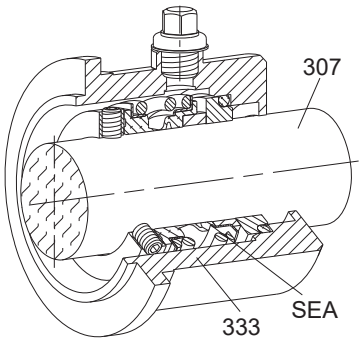

9.4.6 Dismantling of the mechanical seal

Refer to data sheet (chapter 3.1) and sectional drawing of the shaft seal (chapter 9._) for design.

With axial locking device

- Clean plug-in shaft (307), remove edges/ burrs.
- Moisten plug-in shaft (307) with lubricant (thinned liquid soap).
- Pull mechanical seal casing (333) from the plug-in shaft (307).
- Loosen the axial locking device of the mechanical seal (330/372); pull mechanical seal (330) from the plug-in shaft (307).

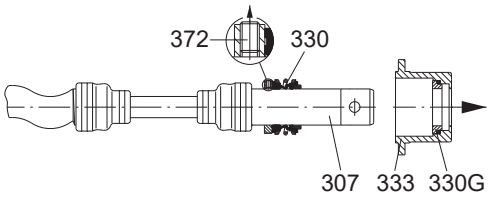

- Push counter ring of the mechanical seal (330G) with seal out of the mechanical seal casing (333).

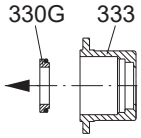

Without axial locking device

- Clean plug-in shaft (307), remove edges/ burrs.
- Moisten plug-in shaft (307) with lubricant (thinned liquid soap).
- Pull mechanical seal casing (333) from the plug-in shaft (307).
- Pull the mechanical seal (330) from the plug-in shaft (307).

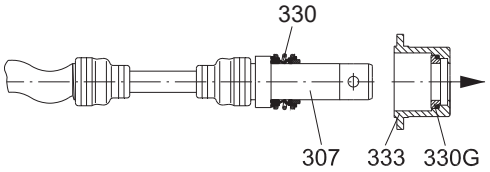

- Push counter ring of the mechanical seal (330G) with seal out of the mechanical seal casing (333).

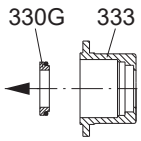

9.4.7 Reassembly of mechanical seal

Shaft sealings are high-quality precision parts.
Their installation is therefore to be undertaken with care.
Careful handling and the utmost of cleanliness are prerequisites.

➢ Assembly aids such as oil/grease are not permitted.

With axial locking device

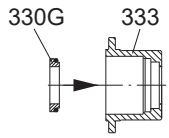

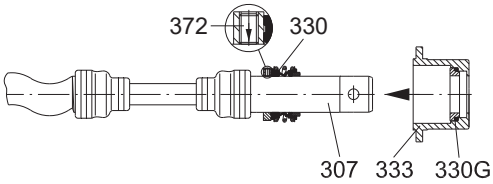

- ➢ Clean the mechanical seal casing (333).
- ➢ Moisten the seal with lubricant (thinned liquid soap).
- ➢ Attach the counter ring and seal using even pressure into the mechanical seal casing (333).
- ➢ Clean the plug-in shaft (307), remove edges/burrs.
- ➢ Adjust the set collar (372) in accordance with sectional drawing of shaft seal (chapter 9._).
- ➢ Stick the set screw in and determine.
  - – Use "medium-strength" adhesive.
- ➢ Moisten plug-in shaft (307) and elastomer parts of the mechanical seal (330) with lubricant (thinned liquid soap).
- ➢ Slide mechanical seal (330) onto the plug-in shaft (307) until the installation edge has been reached.

Without axial locking device

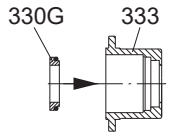

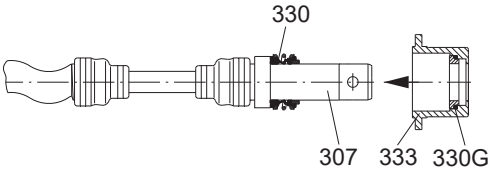

- ➢ Clean the mechanical seal casing (333).
- ➢ Moisten the seal with lubricant (thinned liquid soap).
- ➢ Attach the counter ring and seal using even pressure into the mechanical seal casing (333).
- ➢ Clean the plug-in shaft (307), remove edges/burrs.
- ➢ Adjust mechanical seal (330).
  - – Note sectional drawing of shaft seal (chapter 9._).
- ➢ Moisten plug-in shaft (307) and elastomer parts of the mechanical seal (330) with lubricant (thinned liquid soap).
- ➢ Slide mechanical seal (330) onto the plug-in shaft (307) until the installation edge has been reached.

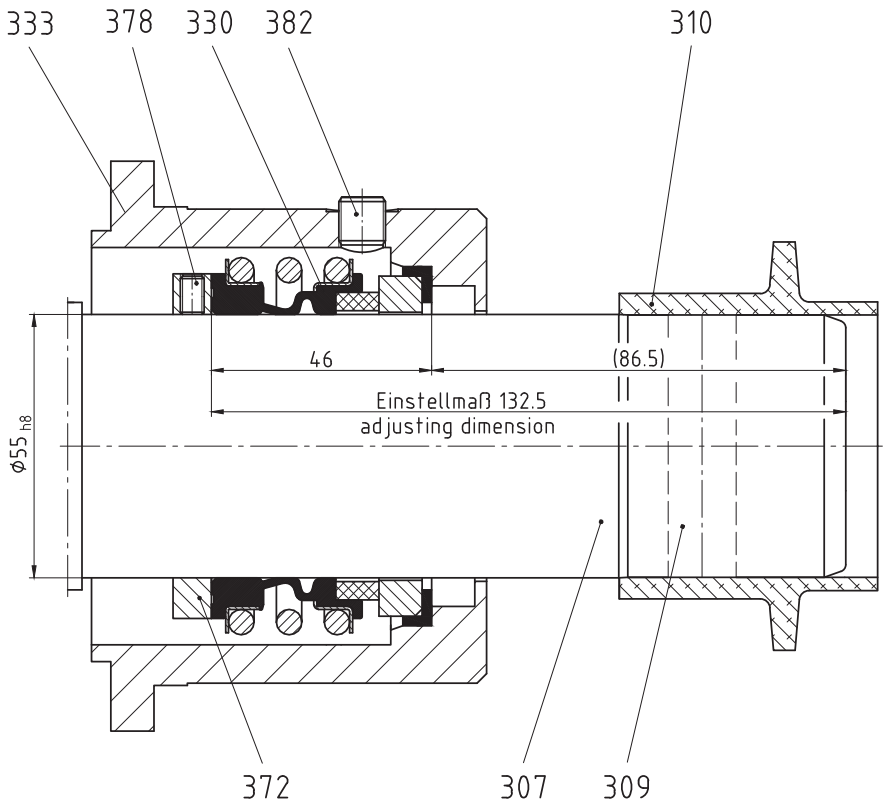

Stück Unit	Norm Standard	Pos./Item	Benennung/Denomination Zeichnungs-Nummer/Drawing-Number	Werkstoff/Material	Bemerkung/Remark	Gewicht Weight kg
1		382	Verschlußschraube / screwed plug		G 1/8"	
3		378	Gewindestift / set screw		M5 x 8	
1		372	Stellring / set collar 062-372/0100-0-001A4			
1		333	GLRD-Gehäuse / mechanical seal casing 262-333/0100-0-043C4			
1		330	GLRD / mechanical seal MG1-Ø55-G60		Fabrikat / make : Burgmann	
1		310	Spritzring / splash ring 062-310/0100-0-001A3			
1		309	Steckwellenbolzen / plug-in shaft pin 062-309/0100-0-001A4			
1		307	Steckwelle / plug-in shaft 262-307/0100-0-001F3			

SEEPEX.
ALL THINGS FLOW

Allgemeintoleranzen für Maße ohne einzelne Toleranzeintragung DIN ISO 2768-mittel General tolerances for mass without individual tolerance entry DIN ISO 2768-average	Aus-gabe Issue	Änderung Modification	Name Name	Datum Date	Maßstab/Scale 1:1	Werkstoff/Material / Gewicht/Weight
					Bezeichnung/Denomination GLRD-Schnittzeichnung mechanical seal sectional drawing Burgmann MG1-Ø55-G60 spülanschluss / flushing connection 1/8"NPT	
Rauheit für Oberflächenzeichen DIN ISO 1302 Reihe 2 Roughness for surface finish indication DIN ISO 1302 Reihe 2			Name Name	Datum Date	Zeichnungs-Nummer/Drawing-Number 262-0GB/0100-0-084A3	
		Bearbeitet/Drawn	hgg	27.03.2000		
		Geprüft/Checked	kno	27.03.2000	EDV-Nr./EDP-No. 38257.dwg	
		Normiert/Standard			Ersatz für/Replacement for:	Ersetzt durch/Replacement by:
		Gedruckt/Printed				

Urheberrechtsschutz: Diese Zeichnung ist unser Eigentum und uns nach dem Gesetz über Urheberrecht und verwandte Schutzrechte geschützt.
Protection of Copyright: This drawing is our property and is protected acc. to the law referring to copyright and related protective laws.

10.1 Spare parts list

10.2 Sectional drawing and parts list

Version for copying

10.1 Spare parts list

Spare parts can be ordered online or requested from
www.seepex.com\

Type: BN 05-24 to 300-6L

☐ Request ☐ Order

Must be included in every order or enquiry!

Commission: _____

Type: _____

Sender:

Contact: .....
Tel.: .....
Fax: .....
E-mail: .....

Customer Service:
SEEPEX Inc.
511 Speedway Drive
Enon, Ohio 45323
service.us@seepex.com

Delivery address:
.....
.....
.....
.....
.....

No.	Quantity	Component	Material	Comment
Minor set of wearing parts			☐	
301	1	Set of packing rings		according to data sheet (chapter 3.1)
311	1	Rinse ring		
330	1	Mechanical seal		according to data sheet (chapter 3.1)
601	1	Stator		
Major set of wearing parts			☐	
301	1	Set of packing rings		according to data sheet (chapter 3.1)
307	1	Plug-in shaft		
330	1	Mechanical seal		according to data sheet (chapter 3.1)
400	1	Coupling rod with coupling rod bushings		
402	2	Coupling rod pin		
403	4	Guide bushing		
405	2	Universal joint sleeve		
406	2	Holding band, large		
407	2	Holding band, small		
600	1	Rotor		
601	1	Stator		

_____ _____

Place, date Signature / company stamp

Version for copying

No.	Quantity	Component	Material	Comment
Set of gaskets			☐	
301	1	Set of packing rings		according to data sheet (chapter 3.1)
310	1	Splash ring		according to data sheet (chapter 3.1)
330	1	Mechanical seal		
501	1	Casing gasket		
503	3	Sealing ring		
511	2	O-ring/cleaning cover		
517	2	Sealing ring		
706	1	Sealing ring		
Plug-in shaft & shaft seal			☐	
301		Set of packing rings		according to data sheet (chapter 3.1)
307		Plug-in shaft		
309		Plug-in shaft pin		
310		Splash ring		according to data sheet (chapter 3.1)
330		Mechanical seal		according to data sheet (chapter 3.1)
Coupling rod & joint parts			☐	
400		Coupling rod with coupling rod bushings		
401		Retaining sleeve		
402		Coupling rod pin		
403		Guide bushing		
405		Universal joint sleeve		
406		Holding band, large		
407		Holding band, small		
401-407		Complete set of joint parts		
Conveying elements			☐	
600		Rotor		
601		Stator		
Miscellaneous parts			☐	
501		Casing gasket		
098		Pin joint grease		1 cartridge = 300 g (approx. 315 cm³) Grease quantity according to maintenance (chapter 7._)

Place, date

Signature / company stamp