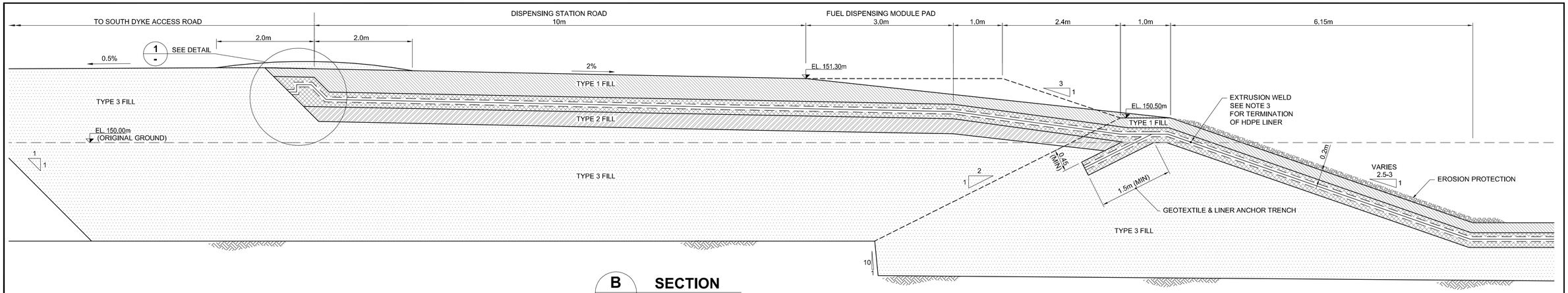

B
207
SECTION
0 0.4 0.8 1.2 1.6 2
Scale in Meters

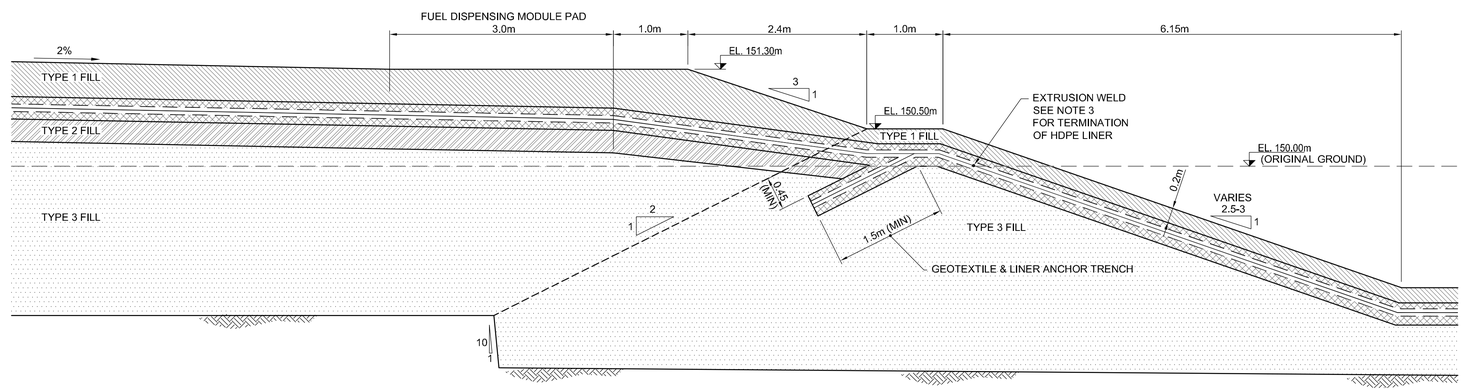

C
207
SECTION
0 0.4 0.8 1.2 1.6 2
Scale in Meters

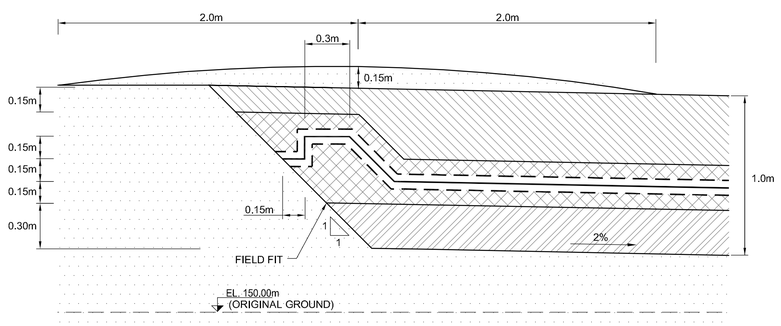

1
-
DETAIL
0 0.2 0.4 0.6 0.8 1
Scale in Meters

LEGEND

- TYPE 1 FILL; MINUS 19mm GRANULAR BASE
- TYPE 2 FILL; MINUS 75mm GRANULAR SUB-BASE
- TYPE 3 FILL; MINUS 150mm GRANULAR OR COMMON FILL
- TYPE 4 FILL; MINUS 9.5mm SAND BEDDING AND COVER
- BEDROCK
- 540g/m² NON-WOVEN GEOTEXTILE
- 60mil HDPE LINER

NOTES

1) GEOTECHNICAL ENGINEER TO INSPECT AND APPROVE EXPOSED BEDROCK SUBGRADE SURFACE PRIOR TO PLACEMENT OF GRANULAR FILL MATERIALS.

2) GRANULAR FILL PROVIDED FROM CRUSHING AND SCREENING OPERATIONS AT MINE SITE QUARRY.

3) LIMIT OF HDPE LINER FROM DISPENSING STATION TO BE TERMINATED 0.5m BEYOND THE CREST OF ANCHOR TRENCH ON TOP OF CONTAINMENT BERM AND EXTRUSION WELDED TO CONTAINMENT BERM HDPE.

4) HDPE LINER SYSTEM BENEATH DISPENSING STATION RUNS FULL LENGTH OF STATION AND DRAPES OVER HDPE OF TANK FARM BERM.

PROJECT

CUMBERLAND RESOURCES LTD.

REV	D/M/Y	REVISION	DR	CHK	CHK	APP	APP	APP	APP

ISS	D/M/Y	APP	ISSUED FOR
0	28APR06	–	CONSTRUCTION
B	20APR06	–	FIRE MARSHALL REVIEW
A	10APR06	–	CLIENT REVIEW

REF	NUMBER	TITLE
	–	

REFERENCES

STAMP/SEAL

THIS DRAWING IS THE PROPERTY OF GOLDER ASSOCIATES LTD. AND IS NOT TO BE LOANED OR REPRODUCED IN ANY WAY WITHOUT THE PERMISSION OF GOLDER ASSOCIATES LTD.

APPROVED FOR CONSTRUCTION

CLIENT PROJECT MGR.	ENGINEERING MGR.	PROJECT MGR.
–	–	–

PROJECT NO.	ACTIVITY NO.	PACKAGE CODE
–		

PROJECT PHASE

SCALE		BY	DD/MMM/YY
AS SHOWN	DSN.	WJP	28 APR 06
	DRN.	JK	28 APR 06

TITLE

DISPENSING STATION SECTIONS AND DETAILS
MEADOWBANK FUEL TANK FARM

Golder Associates

PROJECT No.	FILE No.
– 06-1413-009	061413009_SK-213

DRAWING NO.	REV.
3000-C-208	0

REVISION DATE: 06/04/29 12:50PM By: jkownacki CADD FILE: N:\Bur-Graphics\Projects\2006\1413\06-1413-009\Drafting\cad\06-1413-009_SK-213.dwg