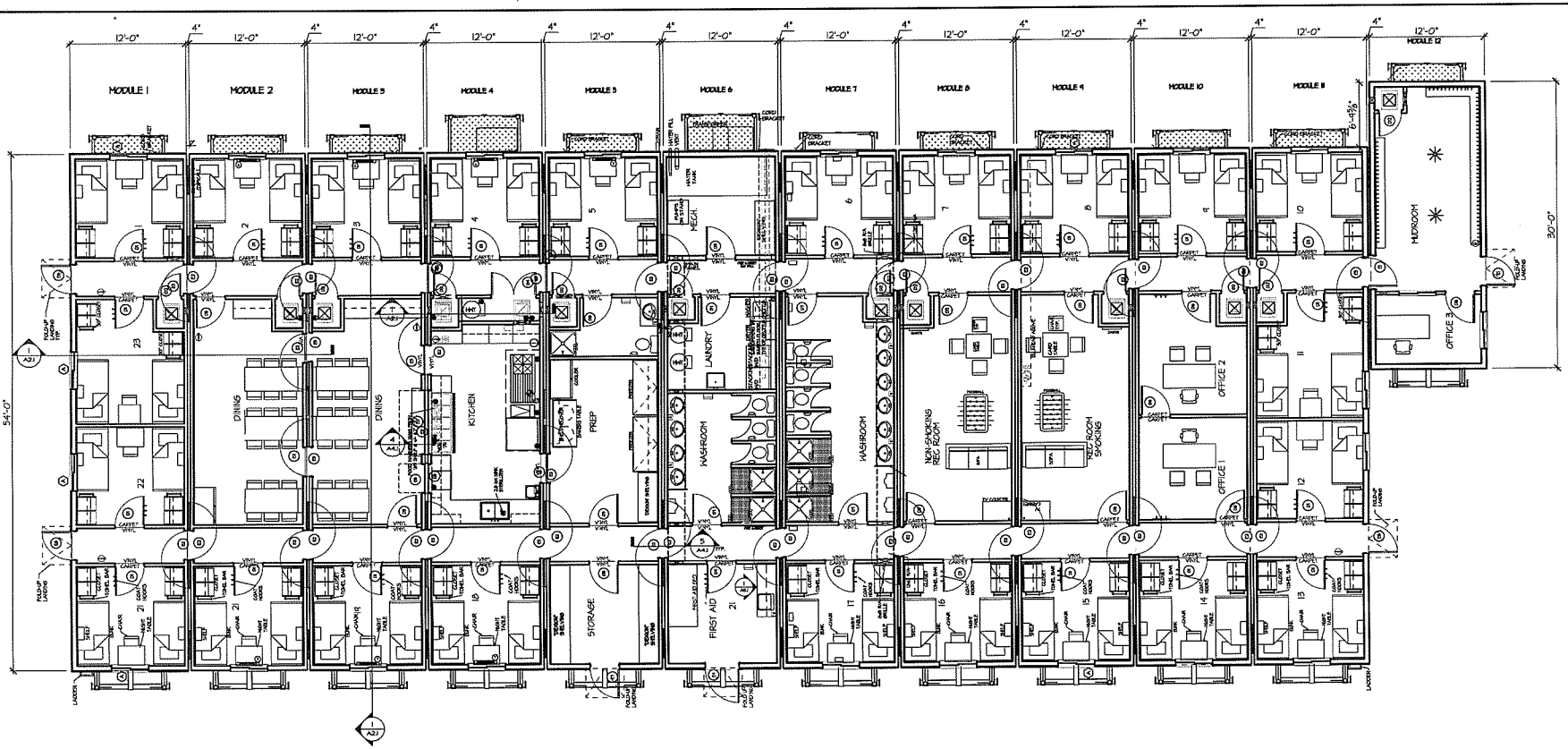

FLOOR PLAN

SCALE: 3/16"=1'-0"

ELECTRICAL LEGEND

SYMBOL	DESCRIPTION	SYMBOL	DESCRIPTION
	SINGLE POLE SWITCH		500 WATT ELECTRIC BASEBOARD HEATER MOUNT 6" F.F.F.
	THREE WAY SWITCH		1000 WATT ELECTRIC BASEBOARD HEATER
	DISCONNECT SWITCH		THERMOSTAT
	SINGLE RECEPTACLE @ 12" TO BOTTOM U.N.O.		CEILING MOUNTED EXHAUST FAN
	DUPLEX RECEPTACLE @ 12" TO BOTTOM U.N.O.		WALL MOUNTED EXHAUST FAN
42"	DUPLEX RECEPTACLE @ SPECIFIED HEIGHT		FIRE ALARM PULL STATION
SC	SEPARATE CIRCUIT DUPLEX RECEPTACLE		FIRE ALARM PULL STATION
WP	WEATHER-PROOF RECEPTACLE		ALARM BELL, LOW VOLTAGE
GFI	GROUND FAULT INTERRUPTER RECEPTACLE		HEAT DETECTOR, LOW VOLTAGE
	240V RECEPTACLE		SMOKE DETECTOR, LOW VOLTAGE
	UNDERFLOOR HEAT TRACE RECEPTACLE		SMOKE ALARM, 120 V.
	EQUIPMENT CONNECTION (HARDWIRED)		FIRE ALARM PANEL
46"	EXIT LIGHT @ 46" TO CENTER U.N.O.		ELECTRICAL PANEL
	INTERIOR WALL MOUNT LIGHT FIXTURE		EMERGENCY LIGHT C/W BATTERY PACK
	CEILING MOUNT LIGHT FIXTURE		EMERGENCY LIGHT REMOTE HEAD
	H.P.S. LIGHT FIXTURE	EXIT	ILLUMINATED EXIT SIGN
	FLUORESCENT FIXTURE (1X 4')		TELEVISION OUTLET, CONDUIT THRU FLOOR
	48" SINGLE TUBE FLUORESCENT STRIP LIGHT FIXTURE		

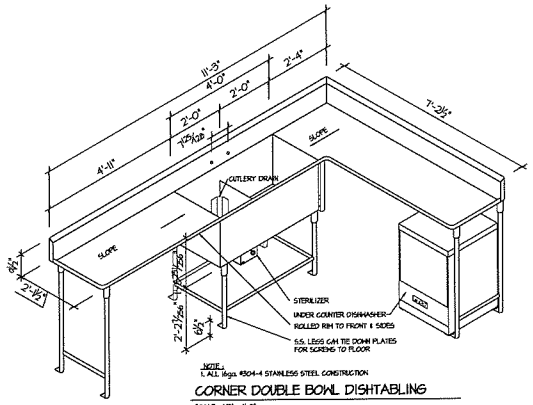

CORNER DOUBLE BOWL DISHTABLING

SCALE: 1/2" = 1'-0"

ISSUED FOR PRODUCTION
JOB NO: 05117
DATE: 15/09/05
DESIGNER: CJJ
CHECKED: CJD

REVISIONS			BY	DATE
A	ISSUED FOR REVIEW		C.J.J	11/10/05
B	ISSUED FOR PROJECTION		C.J.J	11/16/05
C	REVISED & REISSUED		C.J.J	11/22/05
D	ISSUED FOR FIRE MARSHALL REVIEW		C.J.J	11/30/05
E				

DATE: NOV 4, 2005
SCALE: AS NOTED
DRAWN BY: C.J.J
CHECKED
P.
J. JOSLIN

PROJECT TITLE: TERROZA 12 UNIT 5X5 CAMP
DRAWING TITLE: FLOOR PLAN
SHT. NO. A1.1

brilco
FACTORY BUILT BUILDINGS

© BRILCO SYSTEMS, 2005
THIS DRAWING IS SOLELY THE PROPERTY OF BRILCO SYSTEMS AND PROTECTED BY COPYRIGHT LAW (R.S.C. 1985, C. C-42). THIS DRAWING SHALL NOT:
(a) BE COPIED IN WHOLE OR IN PART AS A WHOLE;
(b) MODIFY OR AMEND ITS CONTENTS; OR
(c) BE USED FOR ANY PURPOSE OTHER THAN THE PURPOSES AS HEREIN INTENDED FOR WHICH IT WAS PREPARED WITHOUT THE EXPRESS WRITTEN CONSENT OF BRILCO SYSTEMS.
BRILCO SYSTEMS INC. 5 BOSTON PLACE, TORONTO, ONTARIO M5T 1A1
(604) 688-2000

E337697-7000-10-233-0001-AP0A1