DWG. NO. H337697-4610-05-030-0001

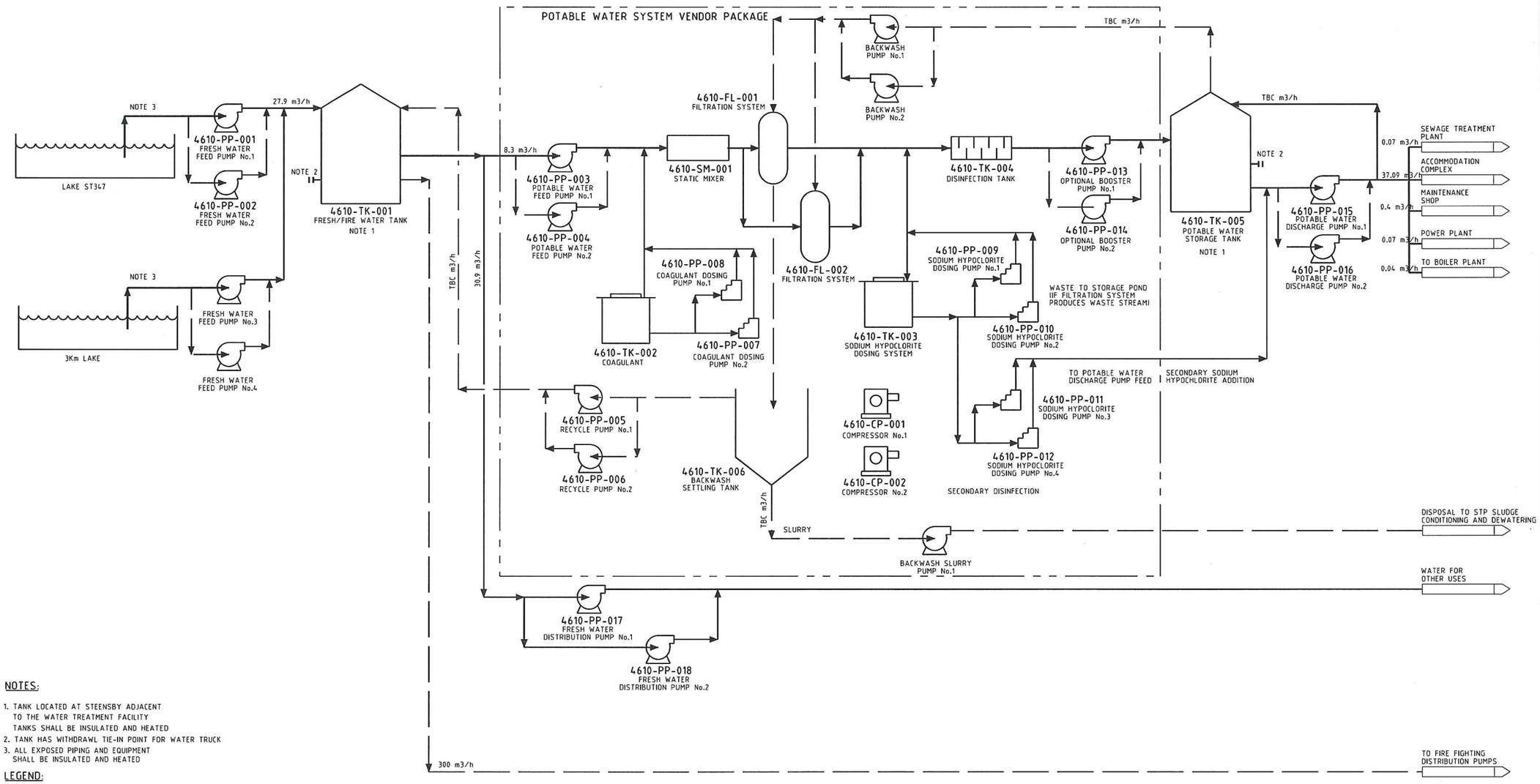

NOTES:

1. TANK LOCATED AT STEENSBY ADJACENT TO THE WATER TREATMENT FACILITY TANKS SHALL BE INSULATED AND HEATED
2. TANK HAS WITHDRAWL TIE-IN POINT FOR WATER TRUCK
3. ALL EXPOSED PIPING AND EQUIPMENT SHALL BE INSULATED AND HEATED

LEGEND:

- PRIMARY FLOW
- SECONDARY FLOW
- INTERMITTENT OR ALTERNATE FLOW
- MATERIAL FLOW
- VENDOR PACKAGE LIMIT

DRAWING NO.	DRAWING TITLE

REFERENCE DRAWINGS

REGISTERED PROFESSIONAL ENGINEER J.W. CASSON LICENSEE Sept 26/11 NT/NU

NO.	DESCRIPTION	BY	CHK'D	APP'D	DATE
B	CHANGES FROM INTERNAL REVIEW	RR	RK	AZ	9/6/2011
A	INTERNAL REVIEW	JF	RK	AZ	8/24/2011

REVISIONS

REV.	ISSUE FOR	AUTH. BY		DATE
B	ENVIRONMENTAL PERMIT	RK	AZ	9/6/2011
A	INTERNAL REVIEW	RK	AZ	8/24/2011

ISSUE AUTHORIZATION

HATCH™

DESIGNED BY R.KAPADIA DATE 2011-08-03	DRAWN BY J.FESAR DATE 2011-08-03
CHECKED BY R.KAPADIA DATE 2011-08-24	DISCIP. ENGR. A.ZLATIC DATE 2011-08-03
PROJ. DES. COORD. DATE	PROJ. ENGR. J. CASSON DATE
PROJ. MGR. H. CHARALAMBU DATE	

Baffinland IRON MINES CORPORATION

PROCESS FLOW DIAGRAM

STEENSBY (PORT) POTABLE WATER SYSTEM

SCALE OR AS NOTED

DWG. NO. H337697-4610-05-030-0001

REV. B

$$DATAENTRY$$