DWG. NO. H337697-7000-05-030-0007

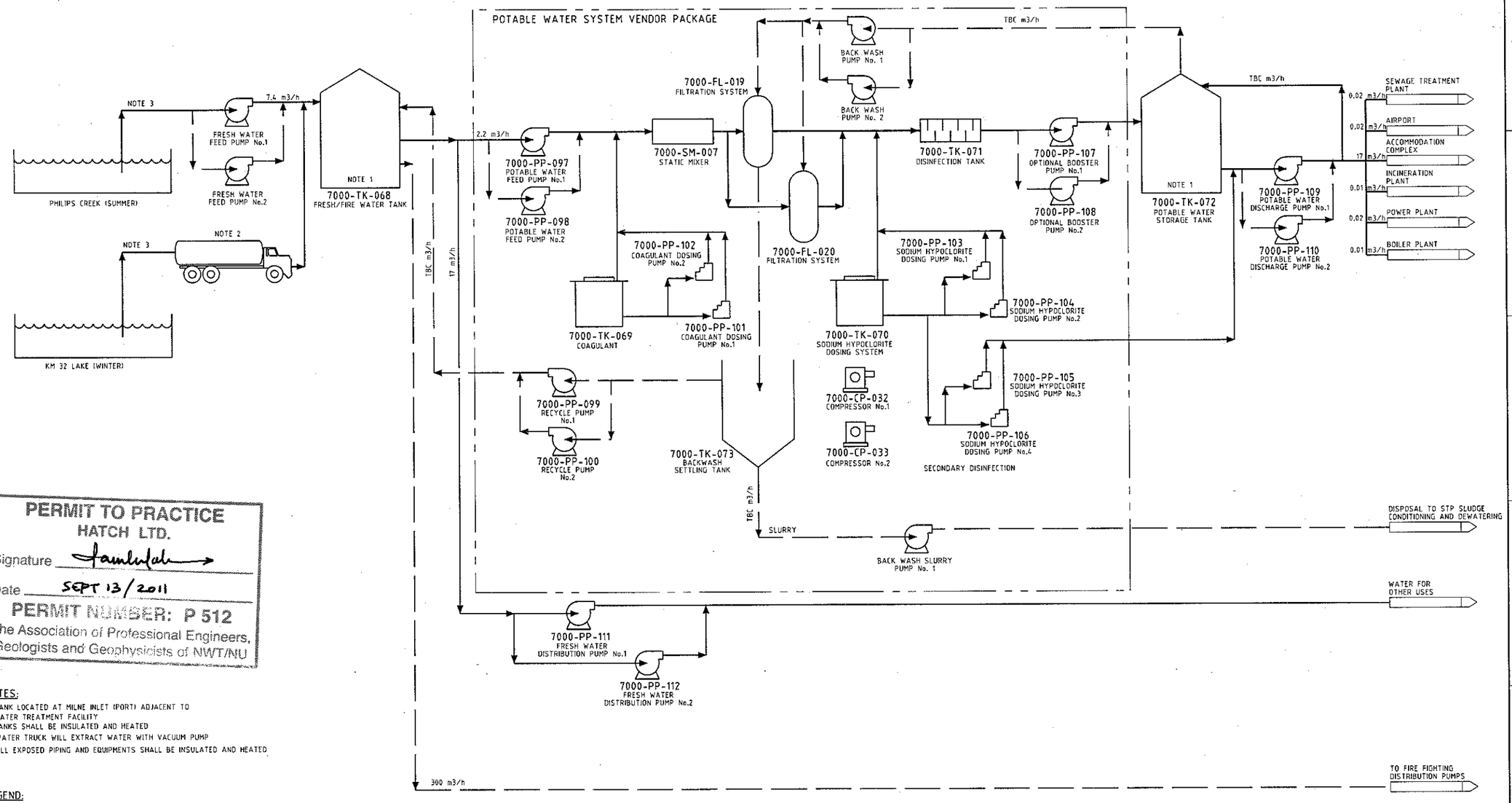

PERMIT TO PRACTICE
HATCH LTD.
Signature
Date SEPT 13/2011
PERMIT NUMBER: P 512
The Association of Professional Engineers, Geologists and Geophysicists of NWT/NU

NOTES:
1. TANK LOCATED AT MILNE INLET (PORT) ADJACENT TO WATER TREATMENT FACILITY
   TANKS SHALL BE INSULATED AND HEATED
2. WATER TRUCK WILL EXTRACT WATER WITH VACUUM PUMP
3. ALL EXPOSED PIPING AND EQUIPMENTS SHALL BE INSULATED AND HEATED

LEGEND:
- PRIMARY FLOW
- SECONDARY FLOW
- INTERMITTENT OR ALTERNATE FLOW
- MATERIAL FLOW
- VENDOR PACKAGE LIMIT

DRAWING NO.	DRAWING TITLE

REFERENCE DRAWINGS

REGISTERED PROFESSIONAL ENGINEER
L1247
RAH
R. A. HALIM
LICENSEE
13 SEPT, 2011
NWT/NU

NO.	DESCRIPTION	BY	CHK'D	APP'D	DATE
B	CHANGES FROM INTERNAL REVIEW	RR	RK	AZ	9/6/2011
A	INTERNAL REVIEW	JF	RK	AZ	8/24/2011

REVISIONS

REV.	ISSUE FOR	AUTH. BY	DATE
B	ENVIRONMENTAL PERMIT	RK	AZ	9/6/2011
A	INTERNAL REVIEW	RK	AZ	8/24/2011

ISSUE AUTHORIZATION

HATCH

DESIGNED BY R.KAPADIA DATE 2011-08-03	DRAWN BY J.FESAR DATE 2011-08-03
CHECKED BY R.KAPADIA DATE 2011-08-24	DISCIP. ENGR. A.ZLATIC DATE 2011-08-03
PROJ. DES. COORD. DATE	PROJ. ENGR. J. CASSON DATE
PROC. MGR. H. CHARALAMBU DATE	

Baffinland

PROCESS FLOW DIAGRAM

MILNE INLET (PORT)
POTABLE WATER SYSTEM

SCALE OR AS NOTED

DWG. NO. H337697-7000-05-030-0007

REV. B

$$DATAENTRY$$