NOTES:

1) 240VAC, 1ø, 10 AMP, 2 CONDUCTOR, 1 NEUTRAL
   1 GROUND

FUSES:

TIME DELAY FUSES 600VAC

1) 5 AMPS PUMP 2
2) 5 AMPS PUMP 2

FAST ACTING FUSES 240 VAC:

1) 5 AMPS CONTROL POWER

LEDGEND:

- CONTROL RELAY OR MOTOR CONTACT COIL
- FLOAT SWITCH
- FUSE
- GENERAL APPLIANCE
- GROUND
- INDICATOR LIGHT
- MOTOR
- RELAY CONTACT
- SWITCH
- TERMINAL BLOCK
- WIRE NUMBER

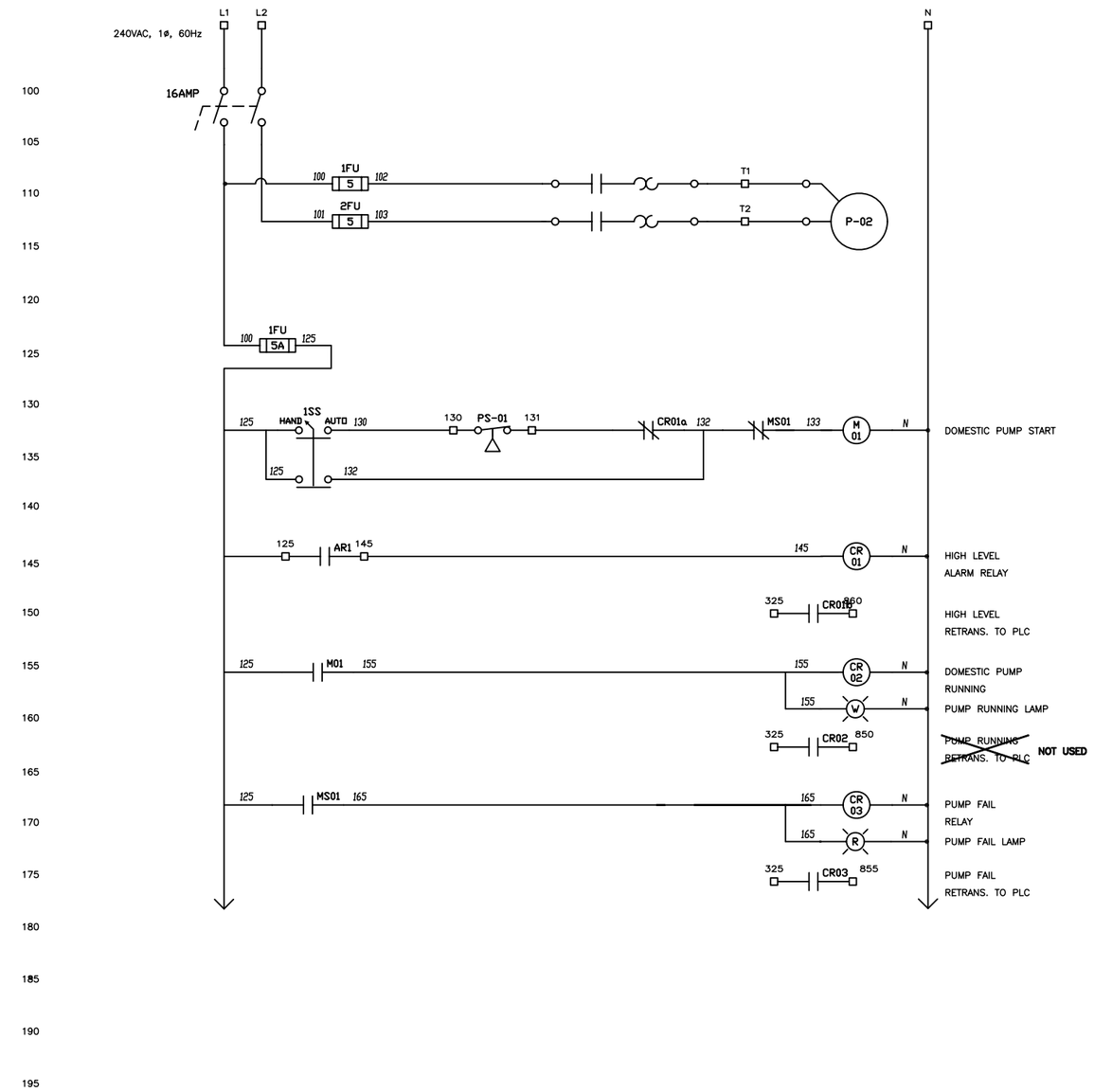

BI Pure Water (Canada) Inc.

#2, 9790 - 190th Street
Surrey, BC V4N 3M9
Phone: (604) 882-6650
Fax: (604) 882-6659
http://www.bipurewater.ca

THE INFORMATION CONTAINED IN THIS DRAWING IS THE SOLE PROPERTY OF **BI PURE WATER (CANADA) INC.** ANY REPRODUCTION IN PART OR WHOLE OF THE INFORMATION HEREIN, WITHOUT THE WRITTEN PERMISSION OF BI PUREWATER (CANADA) INC., IS STRICTLY PROHIBITED.

Status: AS BUILT

Issue	Date	Appd	Revision Description
02	JUN 7, 12		AS BUILT
A	FEB 22, 10	JT	ISSUED FOR REVIEW

Design By: GT
Drawn By: KD
Checked By:
Submitted
Approved

Client: GOVERNMENT OF NUNAVUT

Title: CONTROLS SCHEMATIC DOMESTIC BOOST PUMP

Project: POTABLE WATER TREATMENT PLANT CHESTERFIELD INLET

Drawing #: 1472-EL-101

Scale: NTS
Date: FEB 22, 2010
Sheet 1 of 1
Job#: 1472
Rev: 02