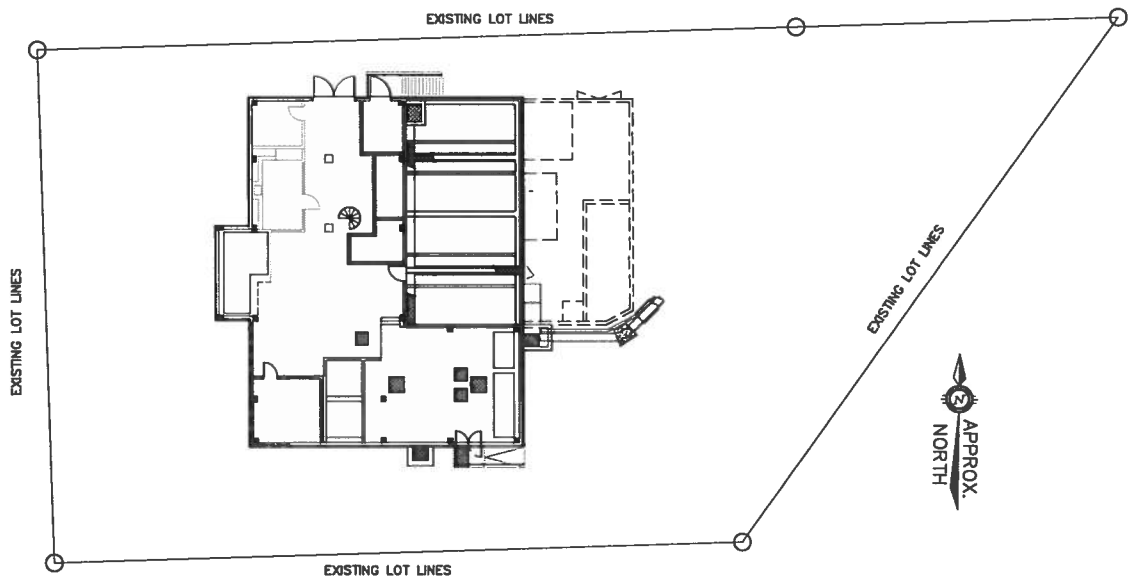

1 A1 SITEPLAN
SCALE: 1:200

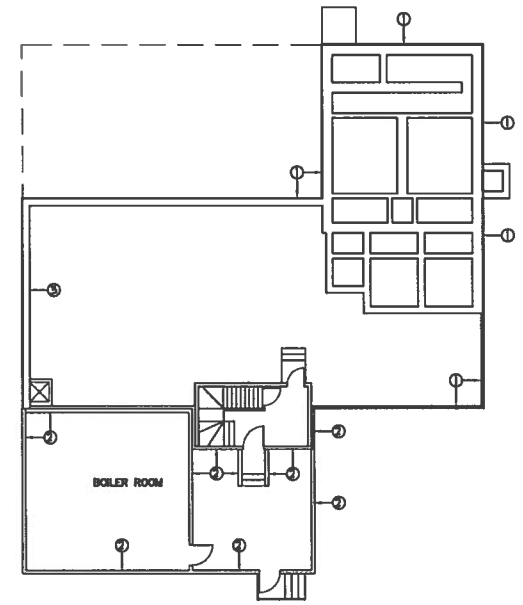

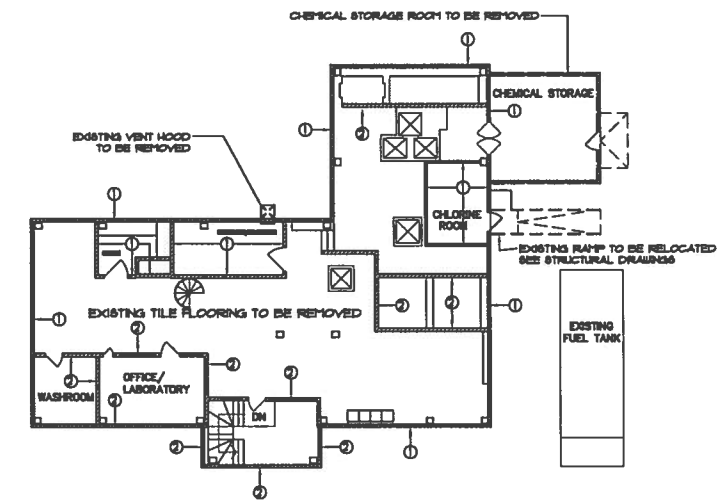

NOTES:
1. EXISTING CONSTRUCTION TO BE REMOVED.
2. EXISTING CONSTRUCTION TO REMAIN.
3. REMOVE EXTERIOR WALL CONSTRUCTION TO OUTSIDE FACE OF CONCRETE WALL. EXISTING CONCRETE WALL TO REMAIN.

2 A1 DEMOLITION PLANS
SCALE: 1:150

NOTES:
PAINT ALL EXISTING INTERIOR WALLS, CEILINGS, DOORS AND FRAMES AND CONCRETE FLOORS.

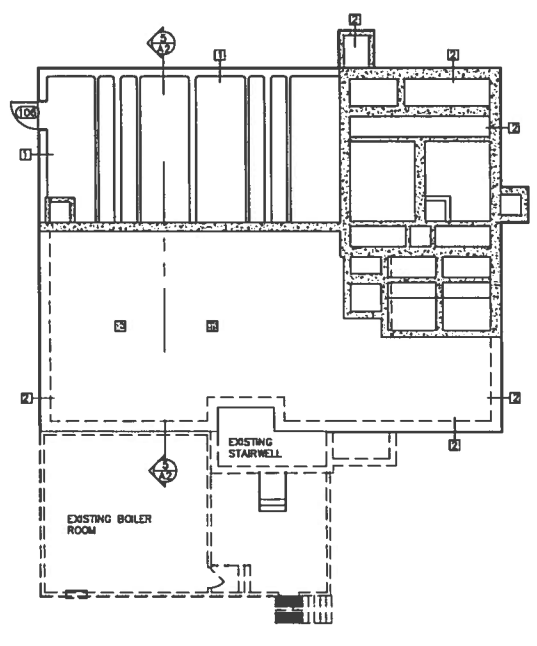

3 A1 FLOOR PLAN – PUMPS LEVEL
SCALE: 1:150

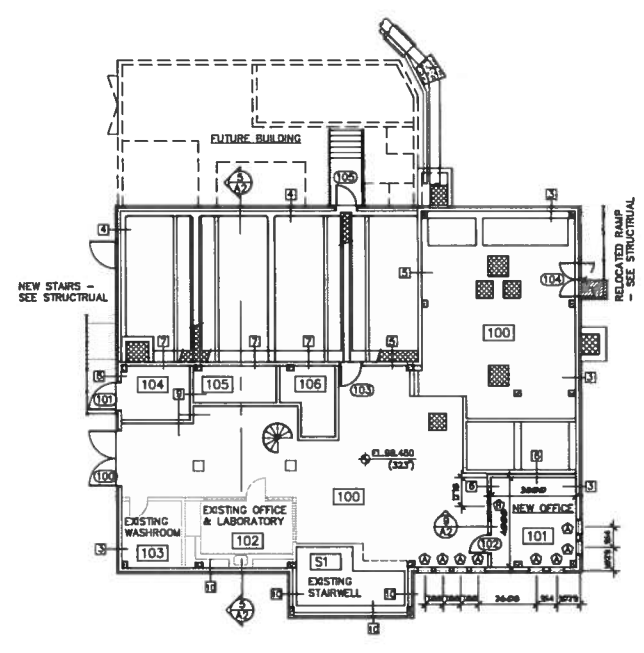

4 A1 FLOOR PLAN – FILTER LEVEL
SCALE: 1:150

WALL TYPES

1 15.9mm EXTERIOR GRADE PLYWOOD (PAINTED)(EXTEND TO FINIHSED GRADE)
38mm RIGID INSULATION B/T 38mm HORZ. WOOD STRAPPING 400mm O.C. (EXTEND TO FINISHED GRADE)
NEW CONCRETE WALL – SEE STRUCTURAL

2 15.9mm EXTERIOR GRADE PLYWOOD (PAINTED)(EXTEND TO FINISHED GRADE)
38mm RIGID INSULATION B/T 38mm HORZ. WOOD STRAPPING 400mm O.C.(EXTEND TO FINISHED GRADE)
EXISTING CONCRETE WALL

3 PREFINISHED VERT. METAL SIDING
WEATHER BARRIER
38x64mm HORZ. WOOD STRAPPING @ 609mm O.C. W/ 38mm RIGID INSULATION IN BETWEEN
12.7mm PLYWOOD SHEATHING
38x140mm WOOD STUDS @ 600mm O.C. FILL STUD CAVITY W/ BATT INSULATION
9.5mm PLYWOOD SHEATHING
0.25mm POLY VAPOUR BARRIER
12.7mm GWB (PAINTED)

4 PREFINISHED VERT. METAL SIDING
WEATHER BARRIER
38x64mm HORZ. WOOD STRAPPING @ 609mm O.C. W/ 38mm RIGID INSULATION IN BETWEEN
12.7mm PLYWOOD SHEATHING
38x140mm WOOD STUDS @ 600mm O.C. FILL STUD CAVITY W/ BATT INSULATION
9.5mm PLYWOOD SHEATHING
0.25mm POLY VAPOUR BARRIER
12.7mm MOISTURE RESISTANT GWB (PAINTED)

5 12.7mm MOISTURE RESISTANT GWB (FILTER SIDE)
38x140mm WOOD STUDS @ 610mm O.C.
12.7mm GWB

6 12.7mm GWB
38x89mm WOOD STUDS @ 610mm O.C.
12.7mm GWB

7 12.7mm MOISTURE RESISTANT GWB (FILTER ROOM SIDE)
38x140mm WOOD STUDS @ 610mm O.C.
12.7mm PLYWOOD (PAINTED)

8 PREFINISHED VERT. METAL SIDING
WEATHER BARRIER
38x64mm HORZ. WOOD STRAPPING @ 609mm O.C. W/ 38mm RIGID INSULATION IN BETWEEN
12.7mm PLYWOOD SHEATHING
38x140mm WOOD STUDS @ 600mm O.C.
9.5mm PLYWOOD SHEATHING
0.25mm POLY VAPOUR BARRIER
12.7mm PLYWOOD (PAINTED)

9 12.7mm MOISTURE RESISTANT GWB (PTD)
0.25mm SEALED POLY VAPOUR BARRIER
9.5mm PLYWOOD BACKING
38x89 WOOD STUDS @ 609mm O.C.
9.5mm PLYWOOD SIDING
0.25mm SEALED POLY VAPOUR BARRIER
12.7mm MOISTURE RESISTANT GWB (PTD)

10 EXISTING WALL CONSTRUCTION
38x64 HORZ. WOOD STRAPPING @ 609mm O.C. W/ 38mm RIGID INSULATION BETWEEN
WEATHER BARRIER
NEW PREFINISHED VERTICAL METAL SIDING

NOTE:
VAPOUR BARRIER MUST BE CAULKED AT ALL SEAMS AND JOINTS AS WELL AS AT EACH STAPLE INTO THE PLYWOOD BACKING TO MAKE WATER TIGHT.

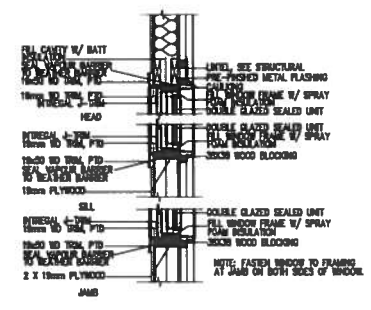

5 A1 WINDOW DETAILS
SCALE: 1:20

LIVINGSTONE Architects

NO.	REVISION	DATE	INITIAL
2	RECORD DRAWING	23/04/04	
1	ISSUED FOR CONSTRUCTION	22/04/03	
A	ISSUED FOIR FINAL REVIEW	FEB.3/03	

Company Permit Engineer Seal

RECORD DRAWING
INFORMATION CONTAINED IN THESE DRAWINGS IS AS SUPPLIED BY: NINETY NORTH CONSTRUCTION & DEVELOPMENT LTD.
THE COMPLETENESS AND ACCURACY OF THIS RECORD DRAWING IS NOT GUARANTEED. INFORMATION SHOULD BE VERIFIED AT THE ACTUAL LOCATION BEFORE USE.

DISCIPLINE
SITE PLAN & FLOOR PLANS

CITY of IQALUIT, Nunavut

CITY OF IQALUIT
IQALUIT WATER TREATMENT PLANT

EARTH TECH
Earth Tech (Canada) Inc. BRANCH

DRAWN BY: G.R. CHECKED BY: A.L.	SCALE: AS NOTED	DATE: FEB. 03, 2003	SHEET NO. A1
CADD SYSTEM AutoCAD	DWG NO. 55524–A1	REV. 1	CONTRACT 55524

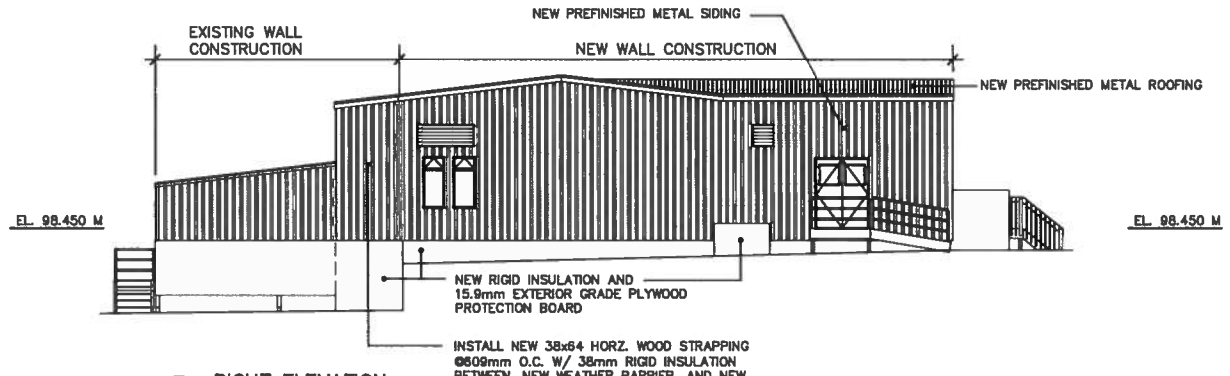

1 A2 RIGHT ELEVATION
SCALE: 1:100

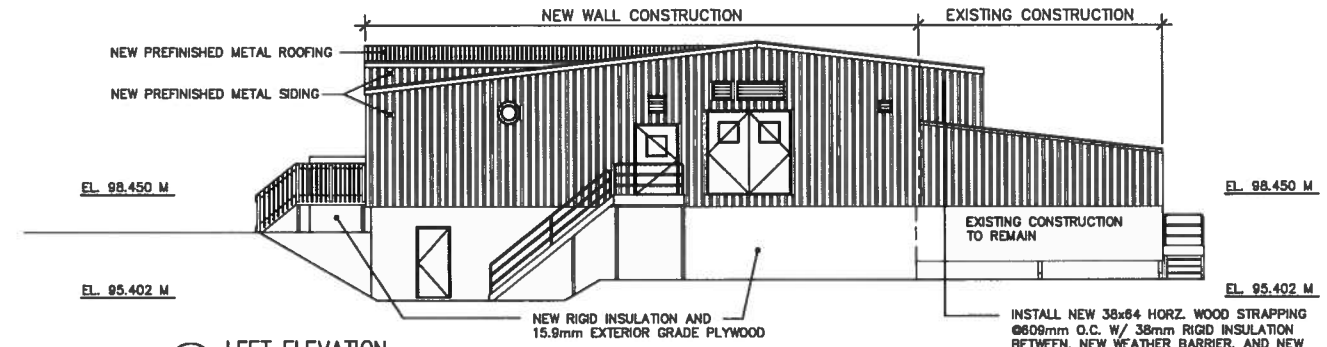

2 A2 LEFT ELEVATION
SCALE: 1:100

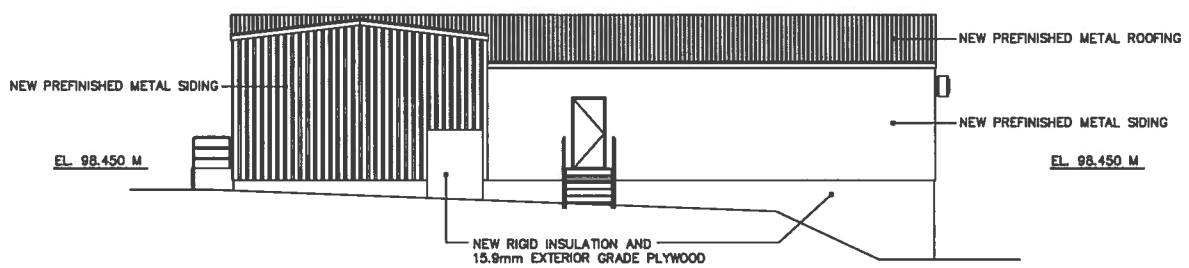

3 A2 REAR ELEVATION
SCALE: 1:100

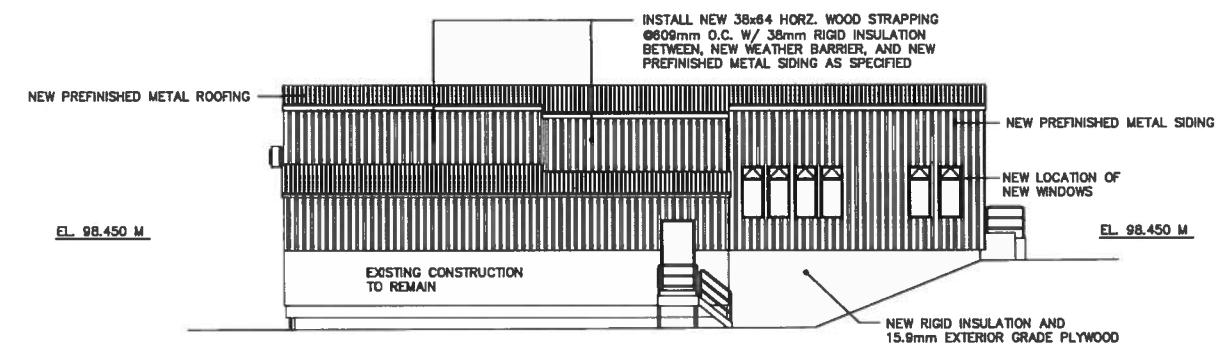

4 A2 FRONT ELEVATION
SCALE: 1:100

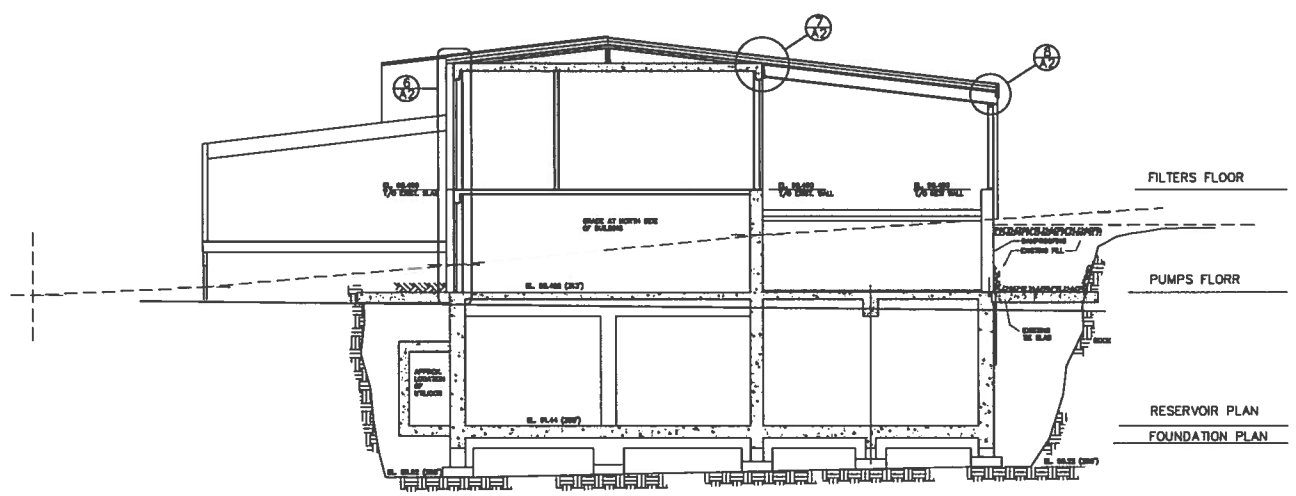

5 A2 BUILDING SECTION
SCALE: 1:100

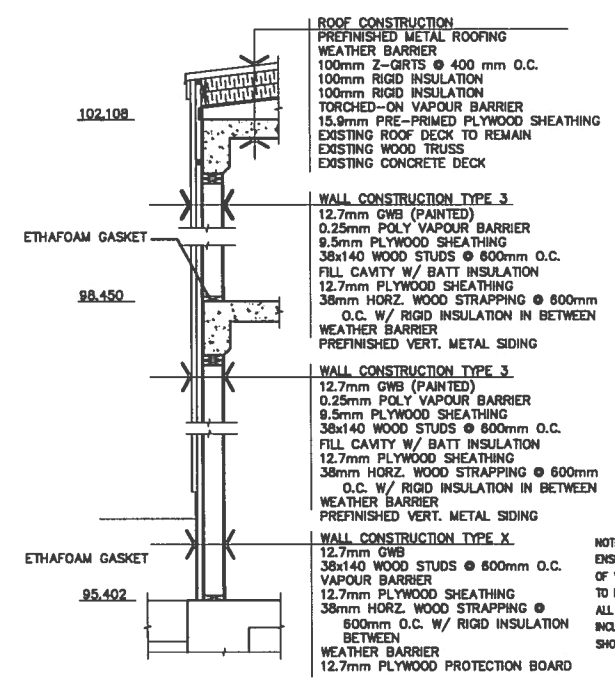

NOTE:
ENSURE ALL JOINTS AND SEAMS OF VAPOR BARRIER ARE CAULKED TO ENSURE WATER TIGHTNESS.
ALL PENETRATIONS OF VAPOR BARRIER INCLUDING HOLES CAUSED BY STAPLES SHOULD ALSO BE CAULKED.

6 A2 WALL SECTION
SCALE: 1:25

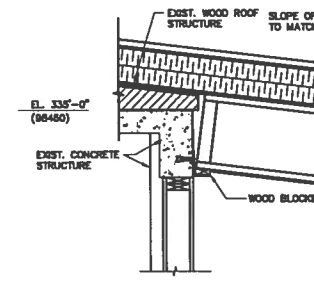

7 A2 DETAIL
SCALE: 1:20

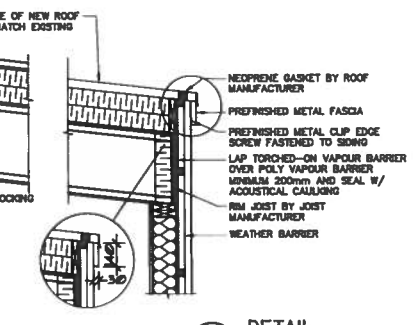

8 A2 DETAIL
SCALE: 1:20

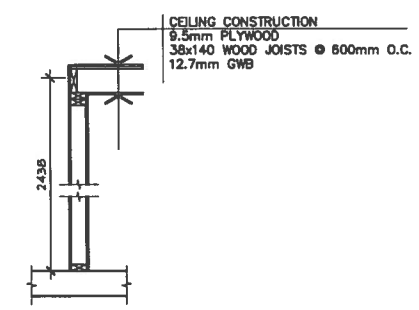

9 A2 DETAIL
SCALE: 1:20

LIVINGSTONE Architect

NO.	REVISION	DATE	INITIAL
2	RECORD DRAWING	23/04/04	
1	ISSUED FOR CONSTRUCTION	22/04/03	
A	ISSUED FOIR FINAL REVIEW	FEB.3/03	

Company Permit

RECORD DRAWING
INFORMATION CONTAINED IN THESE DRAWINGS IS AS SUPPLIED BY: NINETY NORTH CONSTRUCTION & DEVELOPMENT LTD.
THE COMPLETENESS AND ACCURACY OF THIS RECORD DRAWING IS NOT GUARANTEED. INFORMATION SHOULD BE VERIFIED AT THE ACTUAL LOCATION BEFORE USE.

Engineer Seal

DISCIPLINE
SECTIONS AND DETAILS

Iqaluit
CITY of IQALUIT, Nunavut

CITY OF IQALUIT
IQALUIT WATER TREATMENT PLANT

EARTH TECH
Earth Tech (Canada) Inc. BRANCH

DRAWN BY: G.R. CHECKED BY: A.L.	SCALE: AS NOTED	DATE: FEB. 03, 2003	SHEET NO. A2
CADD SYSTEM AutoCAD	DWG NO. 55524-A2	REV. 1	CONTRACT 55524

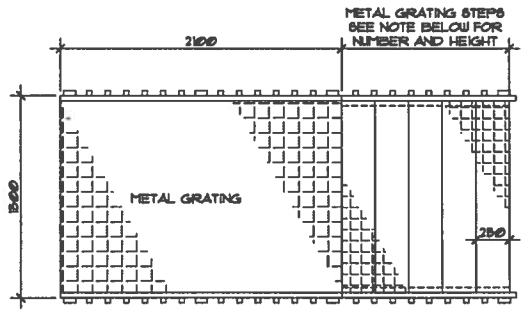

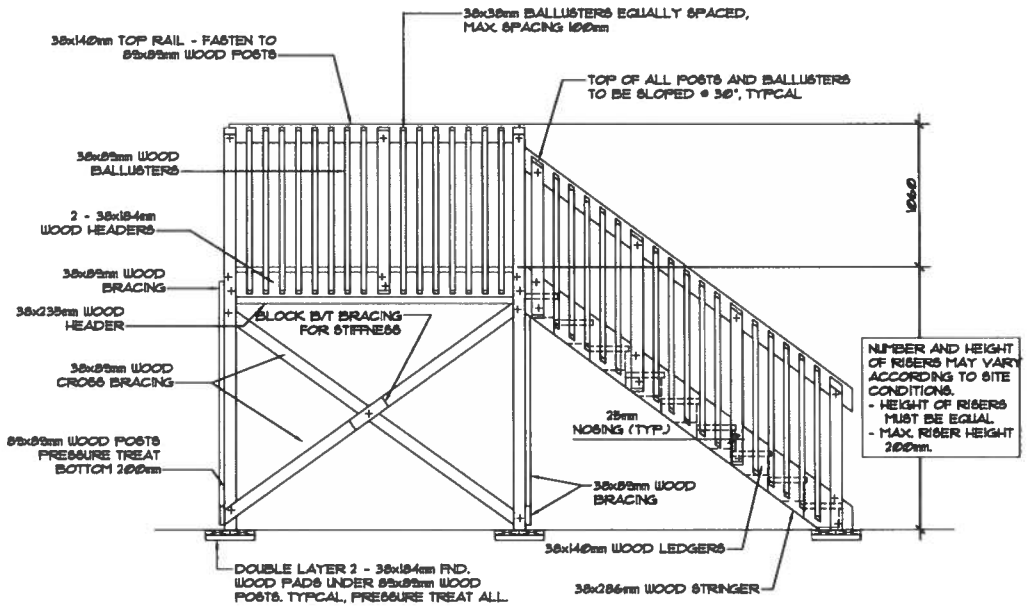

1 / A3 EXTERIOR WOOD STAIRS
SCALE: 1:25

ROOM FINISH SCHEDULE

		FLOOR	BASE	WALLS		CEILING			REMARKS
ROOM NAME	RM.NO.	MATERIAL	MATERIAL	MATERIAL	FINISH	MATERIAL	FINISH	HEIGHT	
OPEN FLOOR AREA	100	NSRF	VINYL COVE	GYPSUM	PTD	EXISTING	–	EXISTING	PAINT EXISTING WALLS & CEILING TO MATCH NEW
NEW OFFICE	101	RF	VINYL COVE	GYPSUM	PTD	GYPSUM	PTD	2438	
EXISTING OFFICE & LAB.	102	NSRF	VINYL COVE	GYPSUM	PTD	EXISTING	–	EXISTING	PAINT EXISTING WALLS & CEILING TO MATCH NEW
EXISTING WASHROOM	103	NSRF	VINYL COVE	GYPSUM	PTD	EXISTING	–	EXISTING	PAINT EXISTING WALLS & CEILING TO MATCH NEW
NEW CHLORINE ROOM	104	NSRF	VINYL COVE	PLYWOOD/CONCRETE	PTD	EXISTING	–	EXISTING	PAINT EXISTING WALLS & CEILING TO MATCH NEW
NEW CHEMICAL ROOM	105	RF	VINYL COVE	PLYWOOD	PTD	EXISTING	–	EXISTING	PAINT EXISTING WALLS & CEILING TO MATCH NEW
NEW CHEMICAL ROOM	106	RF	VINYL COVE	PLYWOOD	PTD	EXISTING	–	EXISTING	PAINT EXISTING WALLS & CEILING TO MATCH NEW
NEW FILTER AREA	107	CONC. PTD	VINYL COVE	MRGWB	PTD	MRGWB	PTD	VARIES	
EXISTING PUMP FLOOR AREA	108	SEE NOTE 1	VINYL COVE	SEE NOTE 1	PTD	EXISTING	PTD	EXISTING	PAINT EXISTING WALLS & CEILING TO MATCH NEW

DOOR SCHEDULE

DOOR			DOOR SIZE								FRAME			FIRE		HARD WARE
ROOM NAME	RM.NO.	MARK	WIDTH	HEIGHT	NO. PCS.	CONST.	FACE MAT.	FINISH	TYPE NUMBER	GLASS	MAT.	FINISH	TYPE NUMBER	RAT'S LABLE	REMARKS	GROUP
EXTERIOR/OPEN FLOOR AREA	----	100	2440	2438	2	HMI	M	PTD	1	GWG	HMI	PTD	1		6mm TEMPERED GLASS	
EXTERIOR/CHLORINE ROOM	----	101	1220	2032	1	HMI	M	PTD	2	GWG	HMI	PTD	2			
NEW OFFICE	101	102	812	2032	1	SCW	M	S&V	3		HM	PTD	3		6mm TEMPERED GLASS	
OPEN FLOOR AREA/FILTER AREA	100	103	914	2032	1	HM	M	PTD	4	GWG	HM	PTD	4			
EXTERIOR/OPEN FLOOR AREA	----	104	1525	2032	2	HMI	M	PTD	5	GWG	HMI	PTD	5		6mm TEMPERED GLASS	
EXTERIOR	----	105	914	2032	1	HMI	M	PTD	6	–	HMI	PTD	6			
EXTERIOR	----	106	914	2032	1	HMI	M	PTD	6	–	HMI	PTD	6			

NOTES:
1. PATCH AND REPAIR FLOOR TO RECEIVE EPOXY PAINT. PATCH AND REPAIR CONCRETE WALLS TO RECEIVE PAINT.

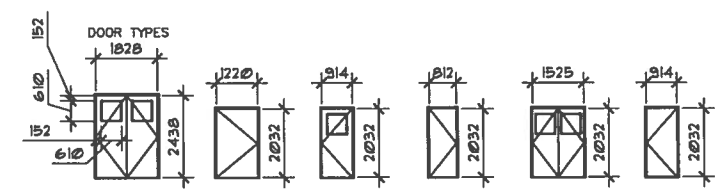

WINDOW IS TYPICAL FOR EACH DOOR TYPE

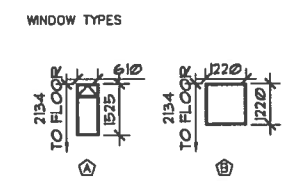

LIST OF FINISHES;

STEEL DOORS AND FRAMES: TO MATCH SICO 4145–63

WALLS AND CEILINGS: TO MATCH SICO 4151–11

EXTERIOR GRADE PLYWOOD: TO MATCH SICO 4151–11

FLOORING:

RESLIENT FLOORING: FORBO MARMOLEUM REAL 3160

NON–SLIP RESILIENT FLOORING: ALTRO DESIGNER SERIES DESERT D25522

RESILEINT BASE: JOHNSONITE #85 BURGENDY

LIVINGSTONE Architect

NO.	REVISION	DATE	INITIAL
2	RECORD DRAWING	23/04/04	
1	ISSUED FOR CONSTRUCTION	22/04/03	
A	ISSUED FOIR FINAL REVIEW	FEB.3/03	

Company Permit — Engineer Seal

RECORD DRAWING
INFORMATION CONTAINED IN THESE DRAWINGS IS AS SUPPLIED BY: NINETY NORTH CONSTRUCTION & DEVELOPMENT LTD.
THE COMPLETENESS AND ACCURACY OF THIS RECORD DRAWING IS NOT GUARANTEED. INFORMATION SHOULD BE VERIFIED AT THE ACTUAL LOCATION BEFORE USE.

DISCIPLINE: ROOM & DOOR SCHEDULES

CITY of IQALUIT, Nunavut

CITY OF IQALUIT — IQALUIT WATER TREATMENT PLANT

EARTH TECH
Earth Tech (Canada) Inc. — BRANCH

DRAWN BY: G.R. / CHECKED BY: A.L.	SCALE: AS NOTED	DATE: FEB. 03, 2003	SHEET NO. A3
CADD SYSTEM AutoCAD	DWG NO. 55524–A3	REV. 1	CONTRACT 55524

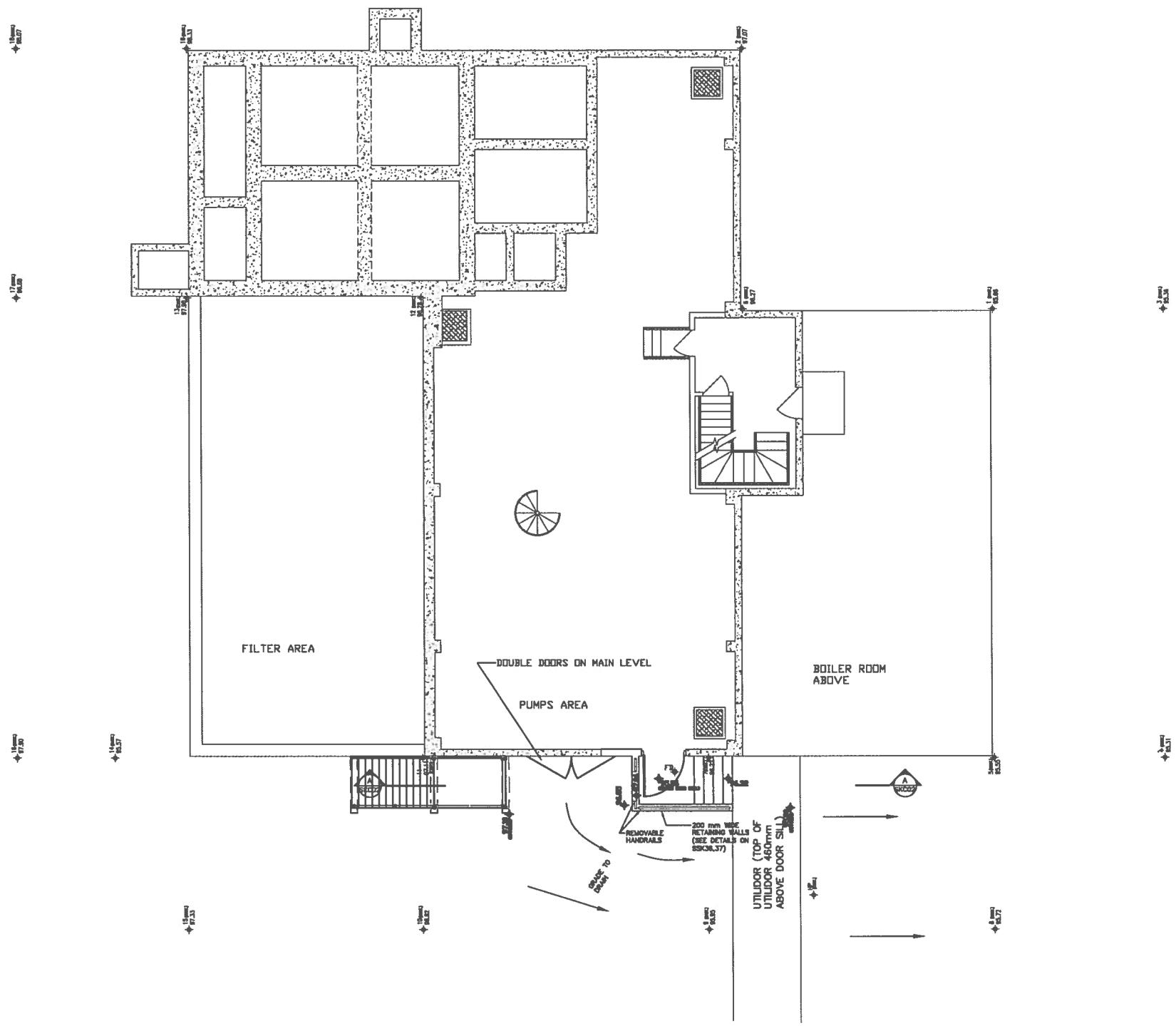

NO.	REVISION	DATE	INITIAL
0			

Company Permit

Engineer Seal

RECORD DRAWING
INFORMATION CONTAINED IN THESE DRAWINGS IS AS SUPPLIED BY: CONTRACTOR
THE COMPLETENESS AND ACCURACY OF THIS RECORD DRAWING IS NOT GUARANTEED. INFORMATION SHOULD BE VERIFIED AT THE ACTUAL LOCATION BEFORE USE.

CIVIL

SITE GRADING
SHOWING PUMPS FLOOR

Iqaluit
CITY of IQALUIT, Nunavut

CITY OF IQALUIT

IQALUIT WATER TREATMENT PLANT

EARTH TECH
Earth Tech (Canada) Inc.

DRAWN BY: DKB CHECKED BY: GAP	SCALE: 1:30	DATE: MAY 2004	SHEET NO.
CADD SYSTEM AutoCAD	DWG NO. C-1	REV. 0	CONTRACT 55524

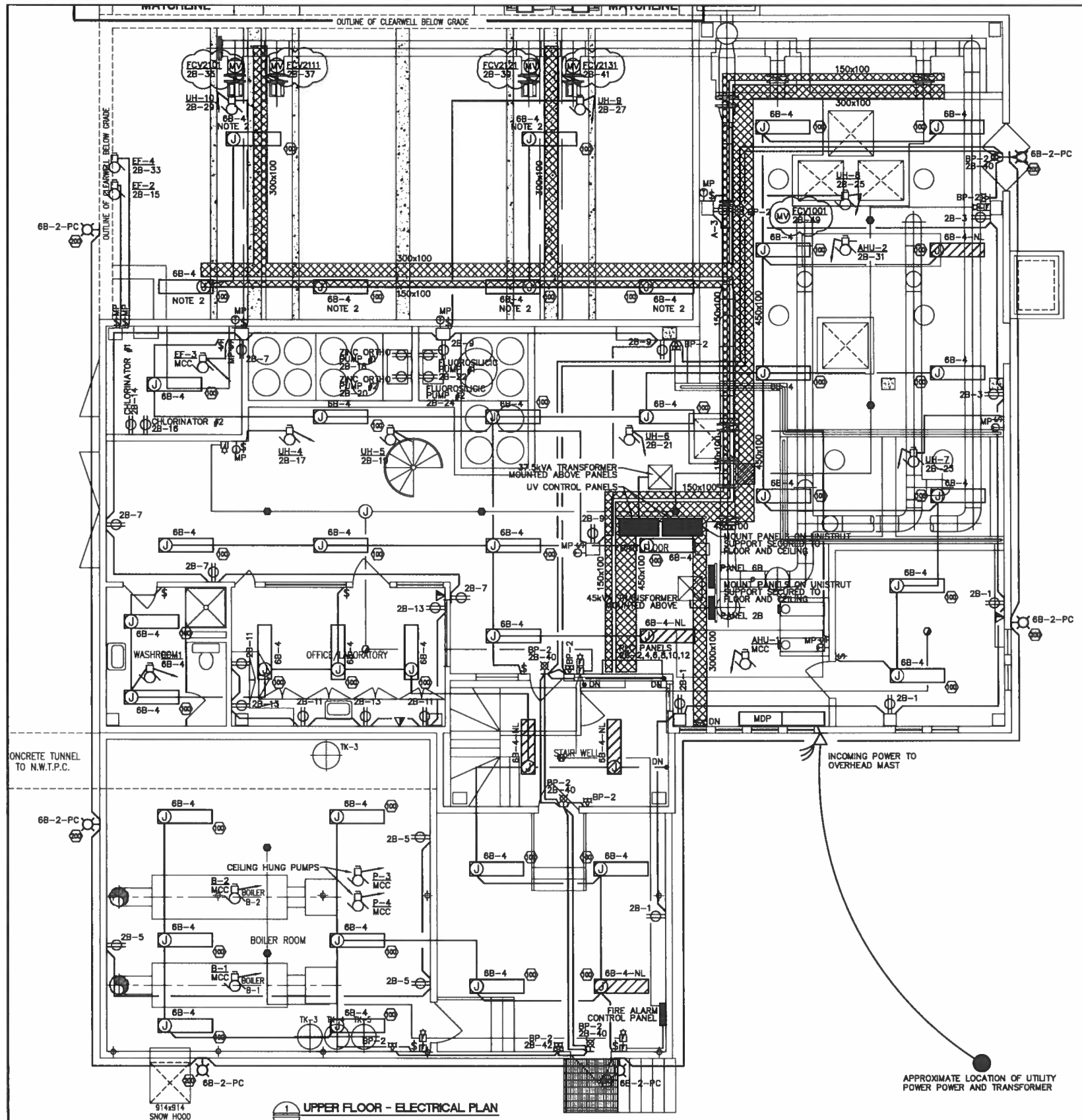

1 UPPER FLOOR - ELECTRICAL PLAN
SCALE : 1:50

ELECTRICAL LEGEND

- COMPACT FLUORESCENT OR H.I.D. LUMINAIRE – WALL MOUNTED
- WALL MOUNTED EXIT LIGHT – DIRECTIONAL ARROWS AS INDICATED
- FLUORESCENT LUMINAIRE – SURFACE MOUNTED OR SUSPENDED
- NL – INDICATES NIGHT LIGHT
- PHOTO ELECTRIC CELL
- BATTERY PACK C/W HEADS AS INDICATED
- EMERGENCY REMOTE HEADS
- SINGLE POLE SWITCH
- LUMINAIRE TYPE
- DUPLEX RECEPTACLE
- MOTOR
- MV – MOTORIZED VALVE
- DISCONNECT SWITCH
- M – MANUAL MOTOR STARTER C/W PILOT LIGHT
- MAGNETIC MOTOR STARTER
- THERMOSTAT
- PANELBOARD
- F – MANUAL BREAKGLASS STATION
- FIRE ALARM HORN C/W VISUAL ALARM STROBE
- SMOKE DETECTOR
- THERMAL DETECTOR – RATE OF RISE
- THERMAL DETECTOR – HIGH TEMPERATURE FIXED
- COMBINATION VOICE/DATA OUTLET BOX AND JACKS

NOTES

1. REFER TO MOTOR SCHEDULE FOR CONDUIT AND WIRE SIZES
2. CENTER LIGHT FIXTURE OVER CATWALK

PANEL 2B

DESCRIPTION	KW	BKR.	CIRCUIT NO.	BKR.	KW	DESCRIPTION
RECEPTACLES PLANT/FOYER		1P15A	1 – 2	1P15A		PLC PANELS
RECEPTACLES PLANT		1P15A	3 – 4	1P15A		PLC PANELS
RECEPTACLES MECH ROOM		1P15A	5 – 6	1P15A		PLC PANELS
RECEPTACLES PLANT		1P15A	7 – 8	1P15A		PLC PANELS
RECEPTACLES PLANT		1P15A	9 – 10	1P15A		PLC PANELS
RECEPTACLES OFFICE/LAB		1P15A	11 – 12	1P15A		PLC PANELS
RECEPTACLES OFFICE/LAB		1P15A	13 – 14	1P15A		CHLORINATOR #1
EXHAUST FAN EF-2		1P15A	15 – 16	1P15A		CHLORINATOR #2
UNIT HEATER UH-4		1P15A	17 – 18	1P15A		ZINC ORTHO PUMP #1
UNIT HEATER UH-5		1P15A	19 – 20	1P15A		ZINC ORTHO PUMP #2
UNIT HEATER UH-6		1P15A	21 – 22	1P15A		FLUOROSILICIC PUMP #1
UNIT HEATER UH-7		1P20A	23 – 24	1P15A		FLUOROSILICIC PUMP #2
UNIT HEATER UH-8		1P15A	25 – 26	1P15A		FIRE ALARM PANEL
UNIT HEATER UH-9		1P15A	27 – 28	1P15A		LIGHTING CONTACTOR
UNIT HEATER UH-10		1P15A	29 – 30	1P15A		SPARE
HVAC CONTROL		1P15A	31 – 32	1P15A		SPARE
EXHAUST FAN EF-4		1P15A	33 – 34	1P15A		SPARE
MOTORIZED VALVE FCV 2101		1P15A	35 – 36	1P15A		SPARE
MOTORIZED VALVE FCV 2111		1P15A	37 – 38	1P15A		SPARE
MOTORIZED VALVE FCV 2121		1P15A	39 – 40	1P15A		EXIT LIGHTING
MOTORIZED VALVE FCV 2131		1P15A	41 – 42	1P15A		BATTERY PACK BP-2
MOTORIZED VALVE FCV 4011		1P15A	43 – 44	1P15A		SPARE
MOTORIZED VALVE FCV 4001		1P15A	45 – 46	1P15A		SPARE
MOTORIZED VALVE FCV 2501		1P15A	47 – 48	1P15A		SPARE
MOTORIZED VALVE FCV 1001		1P15A	49 – 50	1P15A		SPARE
			51 – 52			
			53 – 54			
			55 – 56			
			57 – 58			
			59 – 60			
TOTAL						TOTAL

MAINS: 225A
MOUNTING: SURFACE
ENCLOSURE TO BE SINGLE TUB
VOLTS: 120/208 VOLTS
LOCATION: UPPER FLOOR
FED FROM: MDP
ENTER AT: TOP

PANEL 6B

DESCRIPTION	KW	BKR.	CIRCUIT NO.	BKR.	KW	DESCRIPTION
AIR HANDLING UNIT AHU-2		1P15A	1 – 2	1P15A		LIGHTING EXTERIOR/BASEMENT
AIR HANDLING UNIT AHU-2		1P15A	3 – 4	1P15A		LIGHTING UPPER FLOOR
AIR HANDLING UNIT AHU-3		1P15A	5 – 6	1P15A		SPARE
SPARE		1P15A	7 – 8	1P15A		SPARE
SPARE		1P15A	9 – 10			
			11 – 12			
			13 – 14			
			15 – 16			
			17 – 18			
			19 – 20			
			21 – 22			
			23 – 24			
TOTAL						TOTAL

MAINS: 225A
MOUNTING: SURFACE
VOLTS: 347/600 VOLTS
LOCATION: UPPER FLOOR
FED FROM: MDP
ENTER AT: TOP

NO.	REVISION	DATE	INITIAL
2	RECORD DRAWING	23/04/04	
1	ISSUED FOR CONSTRUCTION	22/04/03	
0	ISSUED FOR TENDER	19/02/03	

Company Permit

Engineer Seal

RECORD DRAWING
INFORMATION CONTAINED IN THESE DRAWINGS IS AS SUPPLIED BY:
KRT ELECTRIC
THE COMPLETENESS AND ACCURACY OF THIS RECORD DRAWING IS NOT GUARANTEED. INFORMATION SHOULD BE VERIFIED AT THE ACTUAL LOCATION BEFORE USE.

ELECTRICAL

UPPER FLOOR ELECTRICAL PLAN AND SCHEDULES

Iqaluit
CITY of IQALUIT, Nunavut

CITY OF IQALUIT

IQALUIT WATER TREATMENT PLANT

EARTH TECH
Earth Tech (Canada) Inc.

DRAWN BY: FF CHECKED BY: WA	SCALE: AS NOTED	DATE: FEB. 03, 2003	SHEET NO.
CADD SYSTEM AutoCAD	DWG NO. E-1	REV. 1	CONTRACT 55524

NOTES

1. REFER TO MOTOR SCHEDULE FOR CONDUIT AND WIRE SIZES FOR ALL MOTORS.
2. MOTORIZED VALVE LOCATED ON CLEARWELL FLOOR LEVEL. CONFIRM EXACT LOCATION PRIOR TO ROUGHIN.
3. PUMPS LOCATED ON CLEARWELL FLOOR LEVEL. CONFIRM EXACT LOCATION PRIOR TO ROUGHIN.
4. SUPPLY CIRCUIT (2A-13 FOR LIGHTING AND 2A-15 FOR POWER AND FRACTIONAL MOTORS) TO EXISTING LIGHTING LOCATED ON CLEARWELL LEVEL. PROVIDE ALL REQUIREMENTS ASSOCIATED WITH MAKING POWER AND LIGHTING CONNECTIONS.

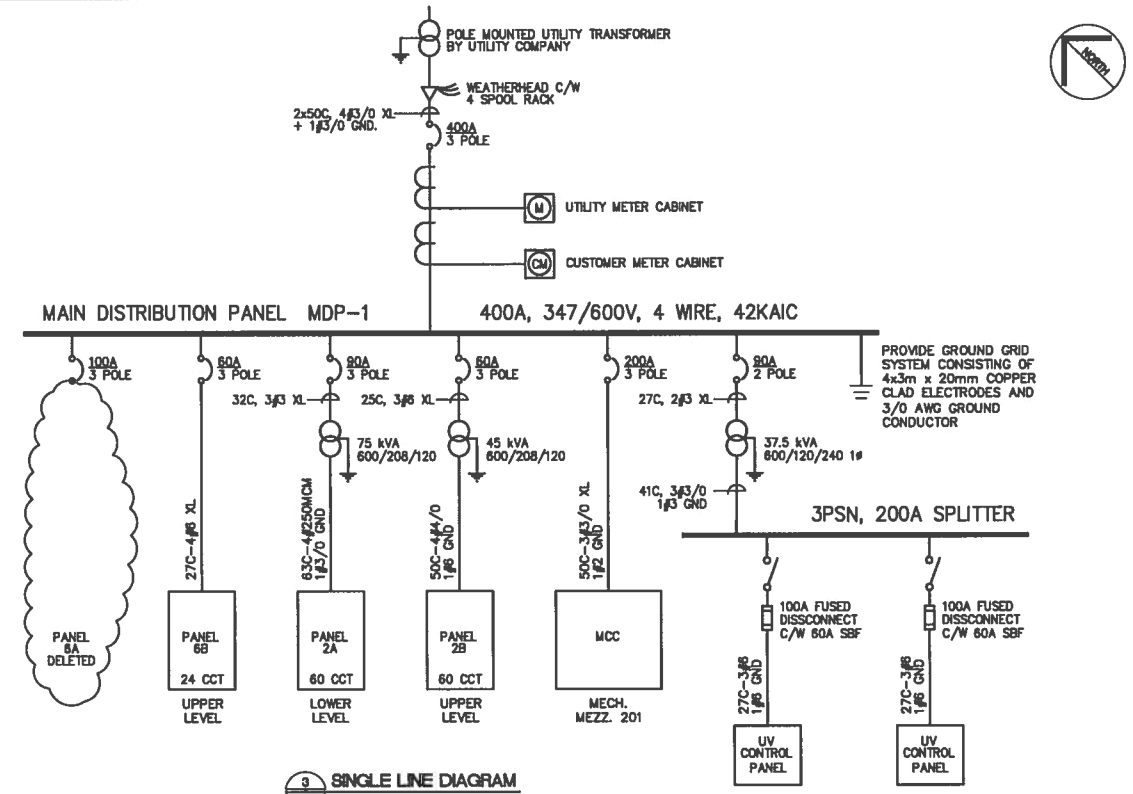

9 SINGLE LINE DIAGRAM
SCALE : NTS

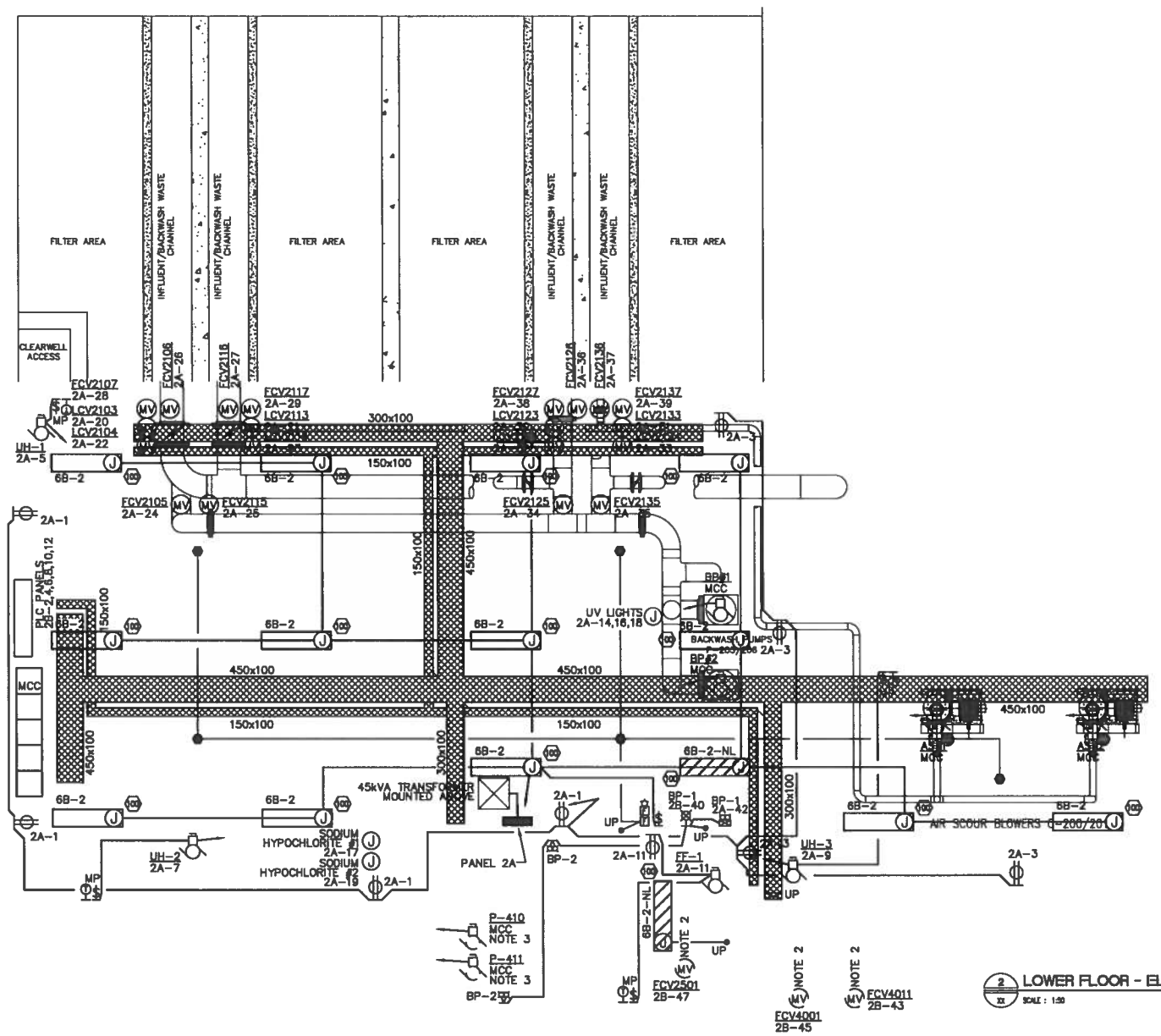

2 LOWER FLOOR - ELECTRICAL PLAN
SCALE : 1:50

PANEL 2A

DESCRIPTION	KW	BKR.	CIRCUIT NO.		BKR.	KW	DESCRIPTION
RECEPTACLES LOWER LEVEL		1P15A	1	2	1P15A		PLC PANELS
RECEPTACLES LOWER LEVEL		1P15A	3	4	1P15A		PLC PANELS
UNIT HEATER UH-1		1P15A	5	6	1P15A		PLC PANELS
UNIT HEATER UH-2		1P15A	7	8	1P15A		PLC PANELS
UNIT HEATER UH-3		1P15A	9	10	1P15A		PLC PANELS
FORCE FLOW FF-1 RECEPTACLES-STAIRS		1P15A	11	12	1P15A		PLC PANELS
LIGHTING CLEARWELL LEVEL		1P15A	13	14	1P60A	14	PANEL
BEDEPT/VRAC MOTORS CLEARWELL LEVEL		1P15A	15	16	1P60A	18	MECHANICAL ROOM
SODIUM HYPOCHLORITE #1		1P15A	17	18	1P15A		SPARE
SODIUM HYPOCHLORITE #2		1P15A	19	20	1P15A		MOTORIZED VALVE LCV 2103
MOTORIZED VALVE LCV 2113		1P15A	21	22	1P15A		MOTORIZED VALVE LCV 2104
MOTORIZED VALVE LCV 2114		1P15A	23	24	1P15A		MOTORIZED VALVE FCV 2105
MOTORIZED VALVE FCV 2115		1P15A	25	26	1P15A		MOTORIZED VALVE FCV 2108
MOTORIZED VALVE FCV 2116		1P15A	27	28	1P15A		MOTORIZED VALVE FCV 2107
MOTORIZED VALVE FCV 2117		1P15A	29	30	1P15A		MOTORIZED VALVE FCV 2123
MOTORIZED VALVE FCV 2133		1P15A	31	32	1P15A		MOTORIZED VALVE FCV 2124
MOTORIZED VALVE FCV 2134		1P15A	33	34	1P15A		MOTORIZED VALVE FCV 2125
MOTORIZED VALVE FCV 2135		1P15A	35	36	1P15A		MOTORIZED VALVE FCV 2128
MOTORIZED VALVE FCV 2136		1P15A	37	38	1P15A		MOTORIZED VALVE FCV 2127
MOTORIZED VALVE FCV 2137		1P15A	39	40	1P15A		SPARE
EXISTING CCT 1 TUNNEL LIGHTS		1P15A	41	42	1P15A		BATTERY PACK BP-1
EXISTING CCT 8 TUNNEL LIGHTS		1P15A	43	44	2P		RECIRC PUMPS TO DAM
EXISTING CCT 6 TUNNEL RECEPTACLES		1P15A	45	46			
EXISTING CCT 10 EXT. LIGHTS RESERVOIR		1P15A	47	48	1P15A		SPARE
TEMPORARY BSMT. HEATER		2P	49	50			
			51	52	2P		TUNNEL HEATER
EXISTING CCT 2 TUNNEL LIGHTS		1P15A	53	54	30A		
			56	56			DAMPER MOTORS EF3
			57	58			
			59	60			
TOTAL							TOTAL

MAINS: 225A
MOUNTING: SURFACE
ENCLOSURE TO BE SINGLE TUB

VOLTS: 120/208 VOLTS
LOCATION: LOWER LEVEL
FED FROM: MDP
ENTER AT: TOP

NO.	REVISION	DATE	INITIAL
2	RECORD DRAWING	23/04/04	
1	ISSUED FOR CONSTRUCTION	22/04/03	
0	ISSUED FOR TENDER	19/02/03	

Company Permit

Engineer Seal

RECORD DRAWING
INFORMATION CONTAINED IN THESE DRAWINGS IS AS SUPPLIED BY:
KRT ELECTRIC
THE COMPLETENESS AND ACCURACY OF THIS RECORD DRAWING IS NOT GUARANTEED. INFORMATION SHOULD BE VERIFIED AT THE ACTUAL LOCATION BEFORE USE.

ELECTRICAL

LOWER FLOOR ELECTRICAL PLAN AND SCHEDULES

Iqaluit
CITY of IQALUIT, Nunavut

CITY OF IQALUIT

IQALUIT WATER TREATMENT PLANT

EARTH TECH
Earth Tech (Canada) Inc.

DRAWN BY: FF CHECKED BY: WA	SCALE: AS NOTED	DATE: FEB. 03, 2003	SHEET NO.
CADD SYSTEM AutoCAD	DWG NO. E-2	REV. 1	CONTRACT 55524

MOTOR STARTER AND CONTROL SCHEDULE

E – DIVISION 16 · M – DIVISION 15 · U – USERS EQUIPMENT · X – PROVIDE

1 - STOP-START · 2 - ON-OFF · 3 - HAND-OFF-AUTO · 4 - PILOT LIGHT · 5 - CONTROL RELAY · 6 - TIMING RELAY · 7 - DOUBLE VOLTAGE RELAY · 8 - THERMISTORS · 9 - ELECTRO PNEUMATIC SWITCH · 10 - PNEUMATIC ELECTRO SWITCH · 11 - SOLENOID · 12 - MOTORIZED DAMPER · 13 - FLOAT SWITCH · 14 - PRESSURE SWITCH · 15 - FLOW SWITCH · 16 - SAIL SWITCH · 17 - CONTROL TRANSFORMER · 18 - THERMOSTAT · 19 - INTEGRAL CONTROL PANEL · 20 - FIRE ALARM SHUT DOWN · 21 - FREEZE PROTECTION · 22 - FIRE PROTECTION · 23 - HIGH LIMIT · 24 - LOW LIMIT · 25 - CURRENT TRANSFORMER · 26 - L.V. THERMOSTAT · 27 - C.O. DETECTOR · 28 - VARIABLE SPEED SW. · 29 - LOW LIMIT · 30 - CURRENT TRANSFORMER

EQUIPMENT No.	LOCATION	EQUIPMENT	SUPPLIED UNDER	INSTALLED UNDER	WIRED UNDER	kW	HP	VOLTAGE	PHASE	PANEL AND CIRCUIT No.	MANUAL	TOGGLE (IN COVER)	KEY (IN COVER)	PUSH BUTTON (IN COVER)	PILOT LIGHT (IN COVER)	MAGNETIC	COMBINATION	REDUCED VOLTAGE	TWO SPEED	BREAKER TYPE	FUSE TYPE	CONTROL TRANS.	AUXILIARY CONTACT	STOP-START (IN COVER)	ON-OFF (IN COVER)	HAND-OFF-AUTO (IN COVER)	ON LIGHT - RED (IN COVER)	CSA ENCLOSURE TYPE	LEGEND ABOVE	NOTES	SUPPLIED UNDER	INSTALLED UNDER	WIRED UNDER
AS#1	LOWER LEVEL	AIR SCOURER #1	U	U	E	14.9	20	600	3	MCC						x	x			x		x	x			x	x				E	E	E
AS#2	LOWER LEVEL	AIR SCOURER #2	U	U	E	14.9	20	600	3	MCC						x	x			x		x	x			x	x				E	E	E
BP#1	LOWER LEVEL	BACHWASH PUMP #1	U	U	E	18.6	25	600	3	MCC						x	x			x		x	x			x	x				E	E	E
BP#2	LOWER LEVEL	BACKWASH PUMP #2	U	U	E	18.6	25	600	3	MCC						x	x			x		x	x			x	x				E	E	E
P-330	UPPER LEVEL	ZINC ORTHO PUMP #1	U	U	E		.05	120	1	2B-18	x	x																					
P-331	UPPER LEVEL	ZINC ORTHO PUMP #2	U	U	E		.05	120	1	2B-20	x	x																					
	UPPER LEVEL	CHLORINATOR #1	U	U	E			120	1	2B-14	x	x																					
	UPPER LEVEL	CHLORINATOR #2	U	U	E			120	1	2B-16	x	x																					
P-380	UPPER LEVEL	FLOUROSILICIC METERING PUMP #1	U	U	E		.05	120	1	2B-22	x	x																					
P-381	UPPER LEVEL	FLOUROSILICIC METERING PUMP #2	U	U	E		.05	120	1	2B-24	x	x																					
P-382	UPPER LEVEL	SODIUM HYPOCLORITE #1	U	U	E			120	1	2A-17	x	x																					
P-383	UPPER LEVEL	SODIUM HYPOCLORITE #1	U	U	E		.05	120	1	2A-19	x	x																					
	LOWER LEVEL	UV LIGHTS	U	U	E	28		208	3	NOTE #1	x	x																					
*	NOTE #1	REFER TO SINGLE LINE DIAGRAM AND DETAIL THIS DRAWING.																															

EQUIPMENT No.	DISCONNECT SWITCH	TOGGLE SWITCH	JUNCTION BOX	RECEPTACLE	WEATHER PROOF	LEGEND ABOVE	LEGEND ABOVE	NOTES	SUPPLIED UNDER	INSTALLED UNDER	WIRED UNDER	LEGEND ABOVE	LEGEND ABOVE	LEGEND ABOVE	NOTES	SUPPLIED UNDER	INSTALLED UNDER	WIRED UNDER	LEGEND ABOVE	LEGEND ABOVE	LEGEND ABOVE	NOTES	SUPPLIED UNDER	INSTALLED UNDER	WIRED UNDER	LINE DIAGRAM No.	INTERLOCK WITH EQUIP. NO.	FEEDER DETAILS
AS#1	x																											19C, 3#8 +1#10 GND
AS#2	x																											19C, 3#8 +1#10 GND
BP#1	x																											19C, 3#8 +1#10 GND
BP#2	x																											19C, 3#8 +1#10 GND
P-330																												19C, 2#12 +1#12 GND
P-331																												19C, 2#12 +1#12 GND
(CHLORINATOR #1)																												19C, 2#12 +1#12 GND
(CHLORINATOR #2)																												19C, 2#12 +1#12 GND
P-380																												19C, 2#12 +1#12 GND
P-381																												19C, 2#12 +1#12 GND
P-382																												19C, 2#12 +1#12 GND
P-383																												19C, 2#12 +1#12 GND
(UV LIGHTS)																												19C, 3#8 +1#10 GND

MOTOR STARTER AND CONTROL SCHEDULE

E – DIVISION 16 · M – DIVISION 15 · U – USERS EQUIPMENT · X – PROVIDE

1 - STOP-START · 2 - ON-OFF · 3 - HAND-OFF-AUTO · 4 - PILOT LIGHT · 5 - CONTROL RELAY · 6 - TIMING RELAY · 7 - DOUBLE VOLTAGE RELAY · 8 - THERMISTORS · 9 - ELECTRO PNEUMATIC SWITCH · 10 - PNEUMATIC ELECTRO SWITCH · 11 - SOLENOID · 12 - MOTORIZED DAMPER · 13 - FLOAT SWITCH · 14 - PRESSURE SWITCH · 15 - FLOW SWITCH · 16 - SAIL SWITCH · 17 - CONTROL TRANSFORMER · 18 - THERMOSTAT · 19 - INTEGRAL CONTROL PANEL · 20 - FIRE ALARM SHUT DOWN · 21 - FREEZE PROTECTION · 22 - FIRE PROTECTION · 23 - HIGH LIMIT · 24 - LOW LIMIT · 25 - CURRENT TRANSFORMER · 26 - L.V. THERMOSTAT · 27 - C.O. DETECTOR · 28 - VARIABLE SPEED SW. · 29 - LOW LIMIT · 30 - CURRENT TRANSFORMER

EQUIPMENT No.	LOCATION	EQUIPMENT	SUPPLIED UNDER	INSTALLED UNDER	WIRED UNDER	kW	HP	VOLTAGE	PHASE	PANEL AND CIRCUIT No.	MANUAL	TOGGLE (IN COVER)	KEY (IN COVER)	PUSH BUTTON (IN COVER)	PILOT LIGHT (IN COVER)	MAGNETIC	COMBINATION	REDUCED VOLTAGE	TWO SPEED	BREAKER TYPE	FUSE TYPE	CONTROL TRANS.	AUXILIARY CONTACT	STOP-START (IN COVER)	ON-OFF (IN COVER)	HAND-OFF-AUTO (IN COVER)	ON LIGHT - RED (IN COVER)	CSA ENCLOSURE TYPE	LEGEND ABOVE	NOTES	SUPPLIED UNDER	INSTALLED UNDER	WIRED UNDER
AHU-1	PUMP ROOM	AIR HANDLING UNIT	M	M	E	1.5	2	600	3	MCC						x										x	x				E	E	E
AHU-2	FILTER ROOM	AIR HANDLING UNIT	M	M	E	.37		120	1	2B-31	x	x							x														
EF-1	WASHROOM	EXHAUST FAN	M	M	E	.083		120	1	2B-6	x	x																					
EF-2	FILTER ROOM	EXHAUST FAN	M	M	E	.25		120	1	2B-13	x	x							x														
EF-3	CHLORINE ROOM	EXHAUST FAN	M	M	E	1.5	2	600	3	MCC						x								x		x					E	E	E
EF-4	FILTER ROOM	EXHAUST FAN	M	M	E	.25		120	1	2B-15	x	x							x														
P-110	CLEARWELL FLOOR LEVEL	NEW POTABLE WATER PUMP			E	3.37	5	600	3	MCC						x								x		x					E	E	E
P-111	CLEARWELL FLOOR LEVEL	NEW POTABLE WATER PUMP			E	3.37	5	600	3	MCC						x								x		x					E	E	E
P-3	BOILER ROOM	GLYCOL HEATING PUMP	M	M	E	2.23	3	600	3	MCC						x								x		x					E	E	E
P-4	BOILER ROOM	GLYCOL HEATING PUMP	M	M	E	2.23	3	600	3	MCC						x								x		x					E	E	E
UH-1	EAST ROOM	UNIT HEATER	M	M	E	.187		120	1	2A-5	x	x																					
UH-2	FILTER ROOM	UNIT HEATER	M	M	E	.187		120	1	2A-7	x	x																					
UH-3	PUMP ROOM	UNIT HEATER	M	M	E	.187		120	1	2A-9	x	x																					
UH-4	PUMP ROOM	UNIT HEATER	M	M	E	.187		120	1	2B-17	x	x																					
UH-5	PUMP ROOM	UNIT HEATER	M	M	E	.187		120	1	2B-19	x	x																					
UH-6	PUMP ROOM	UNIT HEATER	M	M	E	.187		120	1	2B-21	x	x																					
UH-7	PUMP ROOM	UNIT HEATER	M	M	E	.187		120	1	2B-23	x	x																					
UH-8	LOWER FLOOR	UNIT HEATER	M	M	E	.187		120	1	2B-25	x	x																					
UH-9	LOWER FLOOR	UNIT HEATER	M	M	E	.187		120	1	2B-27	x	x																					
UH-10	LOWER FLOOR	UNIT HEATER	M	M	E	.187		120	1	2B-29	x	x																					
FF-1	LOWER FLOOR	FORCE FLOW HEATER	M	M	E	FRAC		120	1	2A-11	x	x																					
B-1	BOILER ROOM	BOILER (EXISTING)	U	U	E			600	3	MCC																							
B-2	BOILER ROOM	BOILER (EXISTING)	U	U	E			600	3	MCC																							

EQUIPMENT No.	DISCONNECT SWITCH	TOGGLE SWITCH	JUNCTION BOX	RECEPTACLE	WEATHER PROOF	LEGEND ABOVE	LEGEND ABOVE	NOTES	SUPPLIED UNDER	INSTALLED UNDER	WIRED UNDER	LEGEND ABOVE	LEGEND ABOVE	LEGEND ABOVE	NOTES	SUPPLIED UNDER	INSTALLED UNDER	WIRED UNDER	LEGEND ABOVE	LEGEND ABOVE	LEGEND ABOVE	NOTES	SUPPLIED UNDER	INSTALLED UNDER	WIRED UNDER	LINE DIAGRAM No.	INTERLOCK WITH EQUIP. NO.	FEEDER DETAILS
AHU-1																												19C, 3#12 +1#12 GND
AHU-2																												19C, 2#12 +1#12 GND
EF-1																												19C, 2#12 +1#12 GND
EF-2																												19C, 2#12 +1#12 GND
EF-3																												19C, 3#12 +1#12 GND
EF-4																												19C, 2#12 +1#12 GND
P-110																												19C, 3#12 +1#12 GND
P-111																												19C, 3#12 +1#12 GND
P-3																												19C, 3#12 +1#12 GND
P-4																												19C, 3#12 +1#12 GND
UH-1																												19C, 2#12 +1#12 GND
UH-2																												19C, 2#12 +1#12 GND
UH-3																												19C, 2#12 +1#12 GND
UH-4																												19C, 2#12 +1#12 GND
UH-5																												19C, 2#12 +1#12 GND
UH-6																												19C, 2#12 +1#12 GND
UH-7																												19C, 2#12 +1#12 GND
UH-8																												19C, 2#12 +1#12 GND
UH-9																												19C, 2#12 +1#12 GND
UH-10																												19C, 2#12 +1#12 GND
FF-1																												19C, 2#12 +1#12 GND
B-1																												19C, 3#12 +1#12 GND
B-2																												19C, 3#12 +1#12 GND

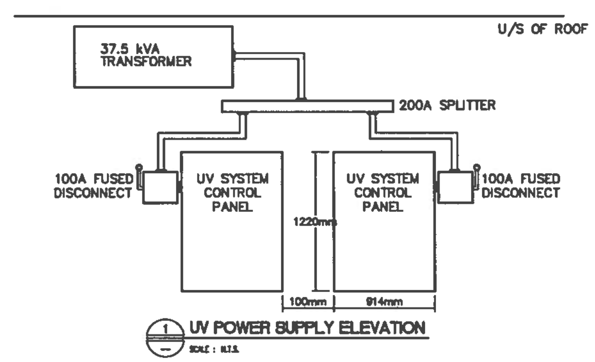

1 UV POWER SUPPLY ELEVATION
SCALE : N.T.S.

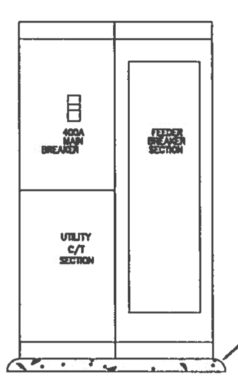

4 MDP ELEVATION
SCALE : NTS

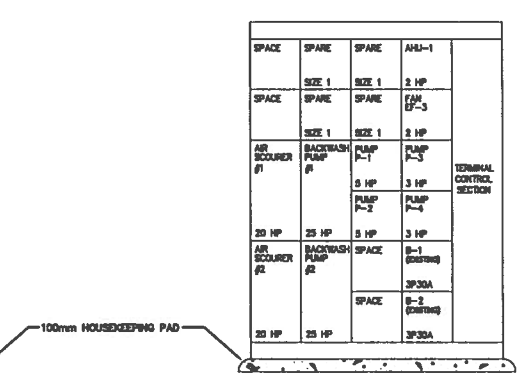

5 MCC ELEVATION
SCALE : NTS

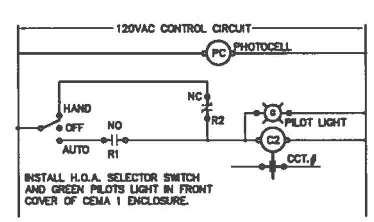

6 PEC LIGHTING CONTROL SCHEMATIC
SCALE : NTS

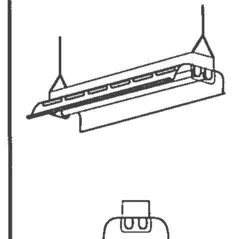

LAMP TYPE: 32 WATT, T-8, FLUORESCENT
LAMP QTY: 2
MOUNTING: SUSPENDED CEILING
HOUSING: COLD ROLLED STEEL
REFLECTOR: SLOTTED – WHITE POWDER PAINT
LENS: NONE
SPECIAL REQUIREMENT:

Products are listed to establish minimum standards. For approval of equivalents refer to General Conditions of specification.

ACCEPTABLE PRODUCTS:
MANUFACTURER — PART No.
CFI
METALUX
LITHONIA

LUMINAIRE SCHEDULE — TYPE No. 100

File: FLST4-2C

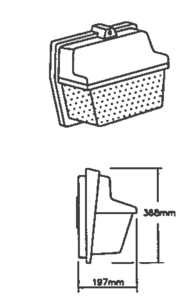

LAMP TYPE: 150 WATT, HIGH PRESSURE SODIUM
LAMP QTY: 1
MOUNTING: SURFACE, WALL
HOUSING: WEATHER RESISTANT DIE CAST ALUMINUM
REFLECTOR: SPECULAR ALZAK ALUMINUM
LENS: MOLDED PRISMATIC SHOCK RESISTANT GLASS
SPECIAL REQUIREMENT:

Products are listed to establish minimum standards. For approval of equivalents refer to General Conditions of specification.

ACCEPTABLE PRODUCTS:
MANUFACTURER — PART No.
COOPER
HOLOPHANE
LITHONIA
KEENE

LUMINAIRE SCHEDULE — TYPE No. 200

File: HPSWP-1A

NO.	REVISION	DATE	INITIAL
2	RECORD DRAWING	23/04/04	
1	ISSUED FOR CONSTRUCTION	22/04/03	
0	ISSUED FOR TENDER	19/02/03	

Company Permit — Engineer Seal

RECORD DRAWING
INFORMATION CONTAINED IN THESE DRAWINGS IS AS SUPPLIED BY: KRT ELECTRIC
THE COMPLETENESS AND ACCURACY OF THIS RECORD DRAWING IS NOT GUARANTEED. INFORMATION SHOULD BE VERIFIED AT THE ACTUAL LOCATION BEFORE USE.

ELECTRICAL

MCC SCHEDULE AND DETAILS

Iqaluit
ᐃᖃᓗᐃᑦ
CITY of IQALUIT, Nunavut

CITY OF IQALUIT

IQALUIT WATER TREATMENT PLANT

EARTH TECH
Earth Tech (Canada) Inc.

DRAWN BY: FF CHECKED BY: WA	SCALE: AS NOTED	DATE: FEB. 03, 2003	SHEET NO.
CADD SYSTEM AutoCAD	DWG NO. E-3	REV. 1	CONTRACT 55524

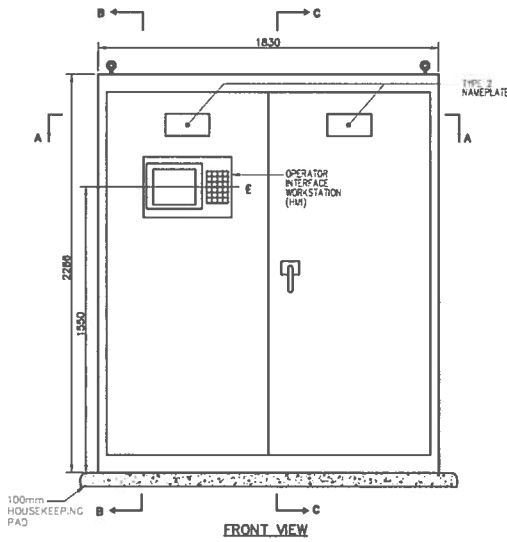

FRONT VIEW

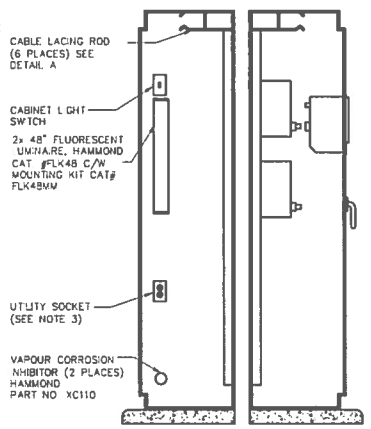

SECTION B–B SECTION C–C

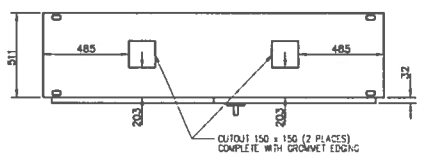

TOP VIEW

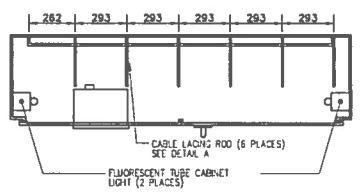

SECTION A–A

NOTES:

1) CABINET HAMMOND CAT# 1418BY20: CEMA 12 10 GA STEEL COMPLETE WITH CAT# 909YW PANEL
2) CONTRACTOR TO SUBMIT SHOP DRAWING OF TERMINAL BLOCK ARRANGEMENT FOR ANALOG AND DIGITAL WIRING, FOR REVIEW AND APPROVAL BY ENGINEER PRIOR TO COSTRUCTION
3) UTILITY SOCKET TO BE ISOLATED GROUND (ORANGE) HUBBEL G-5262 OR EQUIVALENT
4) NAMEPLATES TO SPECIFICATION SECTION 01080

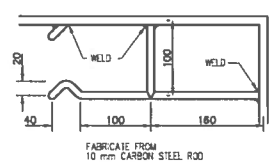

DETAIL A – CABLE LACING ROD

1 UPPER PLC CABINET ELEVATION

I-1 SCALE : N.T.S.

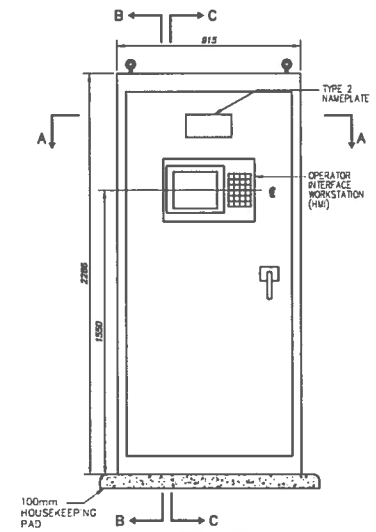

FRONT VIEW

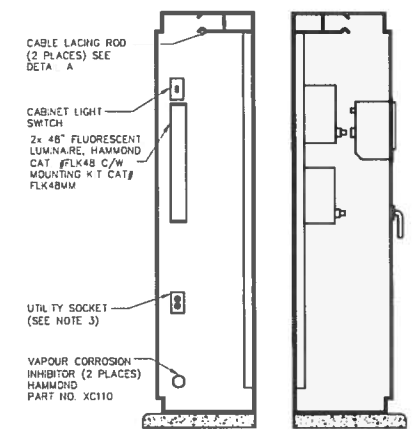

SECTION B–B SECTION C–C

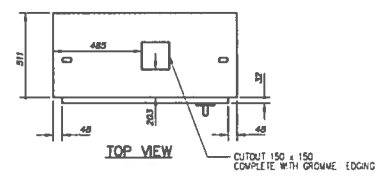

TOP VIEW

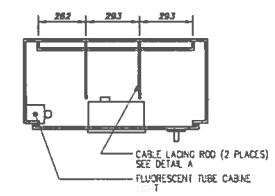

SECTION A–A

NOTES:

1 CABINET HAMMOND CAT# 141BYY20 CEMA 12 10 GA STEEL COMPLETE WITH CAT# 909YW PANEL
2 CONTRACTOR TO SUBMIT SHOP DRAWING OF TERMINAL BLOCK ARRANGEMENT FOR ANALOG AND DIGITAL WIRING, FOR REVIEW AND APPROVAL BY ENGINEER PRIOR TO COSTRUCTION
3 UTILITY SOCKET TO BE ISOLATED GROUND (ORANGE) HUBBEL G-5262 OR EQUIVALENT
4 NAMEPLATES TO SPECIFICATION SECTION 01080

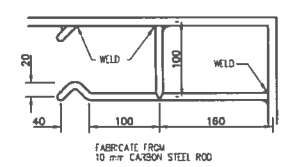

DETAIL A – CABLE LACING ROD

2 LOWER PLC CABINET ELEVATION

I-1 SCALE : N.T.S.

TERMINAL BLOCK ASSEMBLY CABINET DRAWING REPRESENTATION

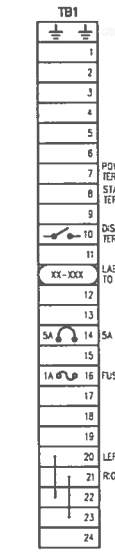

NOTES:

1 ENGINEERING APPROVAL REQUIRED FOR SUBMISSION OF ADDITIONS.
2 ALL MATERIAL (WIRING, ETC.) TO BE SUPPLIED BY CONTRACTOR.
3. TOP MOST TERMINAL IN TERMINAL BLOCK TO BE GROUND BLOCK. END BRACKET NOT REQUIRED AT TOP
4 BOTTOM MOST TERMINAL IN TERMINAL BLOCK TO BE END BRACKET
5 EACH TERMINAL BLOCK MUST HAVE A CABINET UNIQUE TERMINAL NUMBER TYPICALLY TERMINALS ON THE FIRST LINE OF BLOCKS START A NUMBER 1.
6 LIVE SIDE OF FUSED TERMINAL BLOCK ON RIGHT SIDE ONLY
7 FUSE 6 x 3

TERMINAL BLOCK ASSEMBLY PHYSICAL ARRANGEMENT

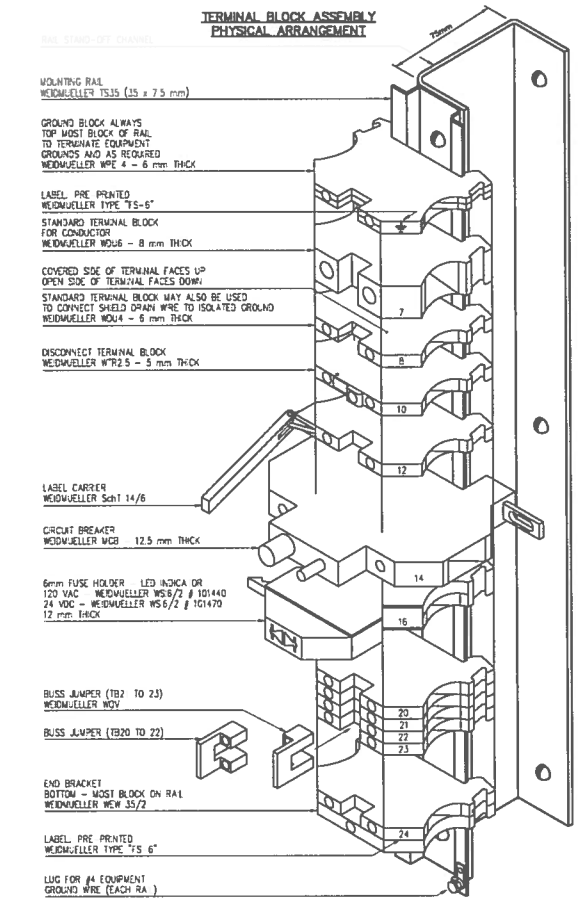

3 MARSHALLING TERMINAL COMPONENTS

I-1 SCALE : N.T.S.

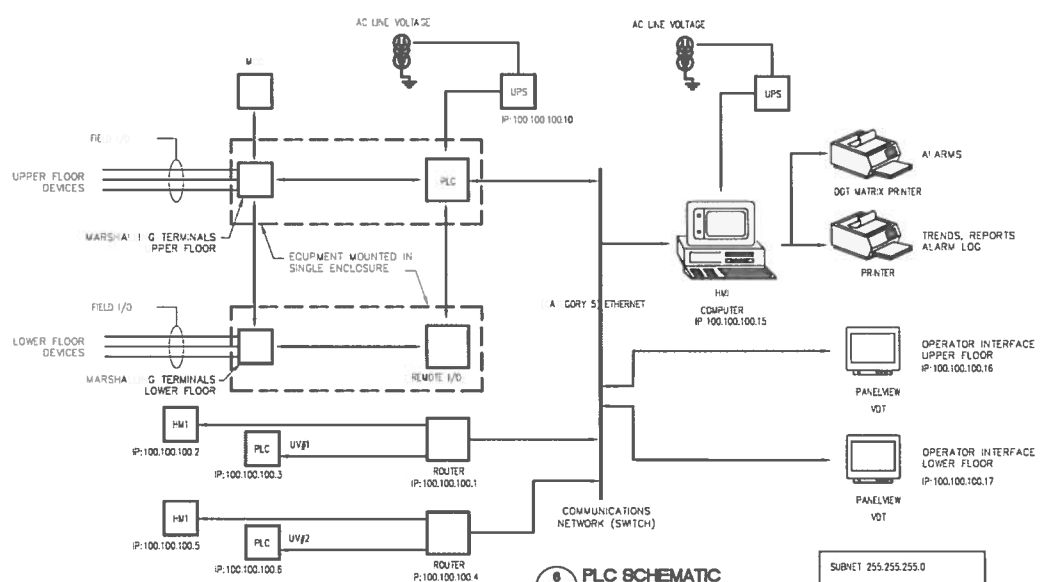

6 PLC SCHEMATIC

I-1 SCALE : N.T.S.

NOTES:

1) UPPER PLC CABINET TO INCLUDE THE NETWORK SWITCH, PLC UPS, 24 VOLT POWER SUPPLY, PLC, ALARM DIALER, AND INTERPOSING RELAYS AS REQUIRED
2) LOWER PLC CABINET TO INCLUDE REMOTE I/O RACKS, 24 VOLT POWER SUPPLY, AND INTERPOSING RELAYS AS REQUIRED
3) REFER TO PROJECT SPECIFICATION FOR PLC INSTALLATION TIMING REQUIREMENTS, AS THE PLC EQUIPMENT IS REQUIRED TO OPERATE THE TEMPORARY PLANT
4) DIVISION 17 RESPONSIBLE FOR THE SUPPLY, WIRING, INSTALLATION, PROGRAMMING, AND COMMISSIONING OF ALL COMPONENTS INDICATED ON THE DRAWINGS AND AS DETAILED IN THE PROJECT SPECIFICATIONS

NO.	REVISION	DATE	INITIAL
2	RECORD DRAWING	19/07/04	
1	ISSUED FOR CONSTRUCTION	22/04/03	
0	ISSUED FOR TENDER	19/02/03	

Company Permit Engineer Seal

RECORD DRAWING
INFORMATION CONTAINED IN THESE DRAWINGS IS AS SUPPLIED BY: SCHENDEL MECHANICAL CONTRACTING LTD. & VECTOR ELECTRIC & CONTROLS. THE COMPLETENESS AND ACCURACY OF THIS RECORD DRAWING IS NOT GUARANTEED. INFORMATION SHOULD BE VERIFIED ON LOCATION BEFORE USE.

INSTRUMENTATION

PLC SYSTEM

Iqaluit
CITY of IQALUIT, Nunavut

CITY OF IQALUIT

IQALUIT WATER TREATMENT PLANT

EARTH TECH
Earth Tech (Canada) Inc.

DRAWN BY: TDC / CHECKED BY: MES	SCALE: AS NOTED	DATE: FEB. 03, 2003	SHEET NO.
CADD SYSTEM AutoCAD	DWG NO. I–1	REV.	CONTRACT 55524

L:\WORK\55000\55524\02A-CAD\WAT\DWGS\DESIGN\INSTRU\I-1

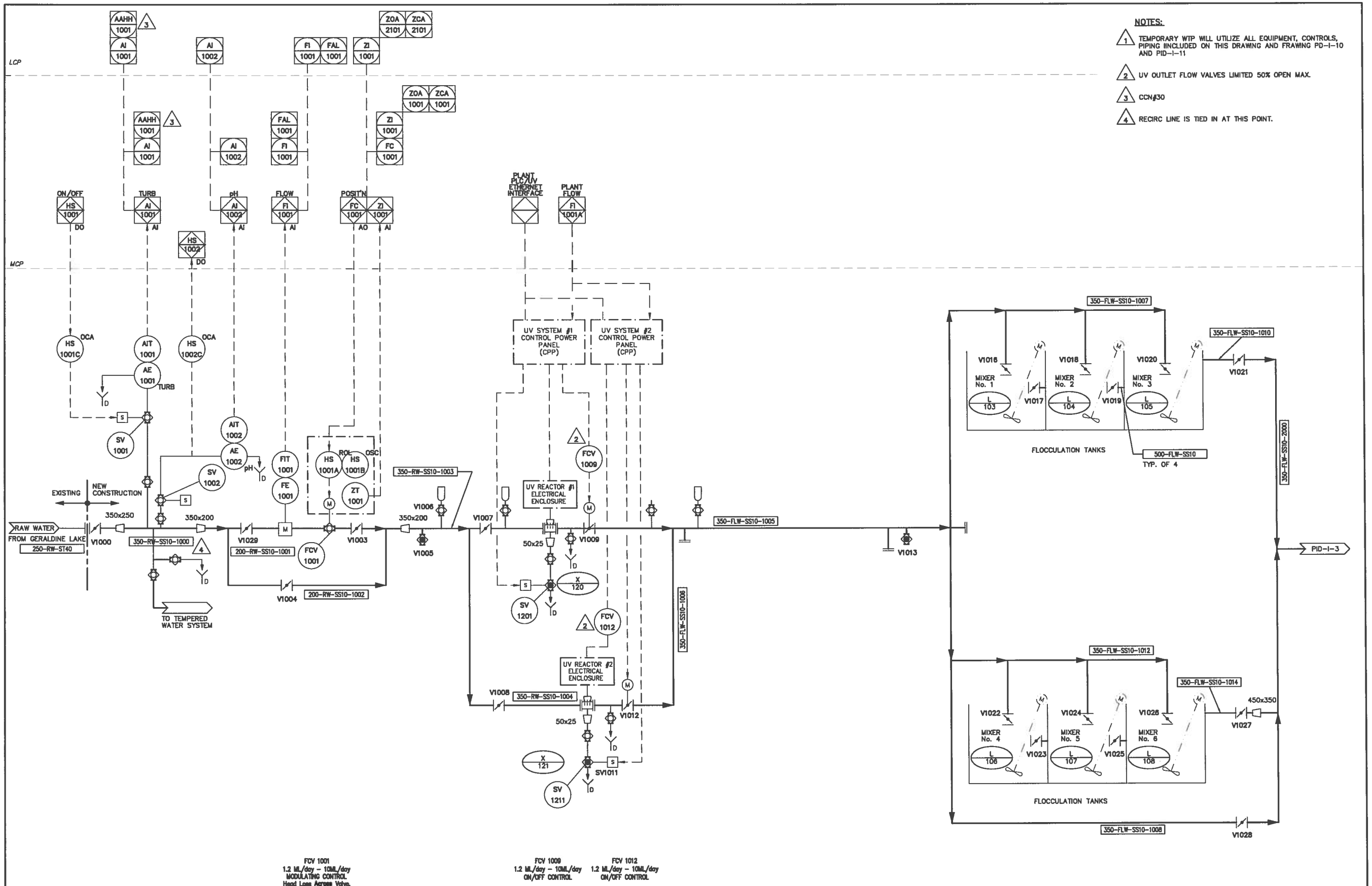

NO.	REVISION	DATE	INITIAL
2	RECORD DRAWING	19/07/04	
1	ISSUED FOR CONSTRUCTION	22/04/03	
0	ISSUED FOR TENDER	19/02/03	

Company Permit

Engineer Seal

RECORD DRAWING

INFORMATION CONTAINED IN THESE DRAWINGS IS AS SUPPLIED BY: SCHENDEL MECHANICAL CONTRACTING LTD. & VECTOR ELECTRIC & CONTROLS. THE COMPLETENESS AND ACCURACY OF THIS RECORD DRAWING IS NOT GUARANTEED. INFORMATION SHOULD BE VERIFIED ON LOCATION BEFORE USE.

PROCESS & INSTRUMENTATION

P & ID – PRE-TREATMENT

Iqaluit

CITY of IQALUIT, Nunavut

CITY OF IQALUIT

IQALUIT WATER TREATMENT PLANT

EARTH TECH

Earth Tech (Canada) Inc. Edmonton, Alberta 780.488.6800

DRAWN BY: CKW / CHECKED BY: CKW/JVH	SCALE: NOT SCALED	DATE: FEBRUARY 02/02/2003	SHEET NO.
CADD SYSTEM AutoCAD	DWG NO. I-2	REV. 2	CONTRACT 55524

10/19/04 01:11pm richard.henderson L:\work\55000\55524\03-Report\O&M DISC\PROJECT RECORD DRAWINGS\55524-I 2 Record-July 2004.dwg Layout:I-2

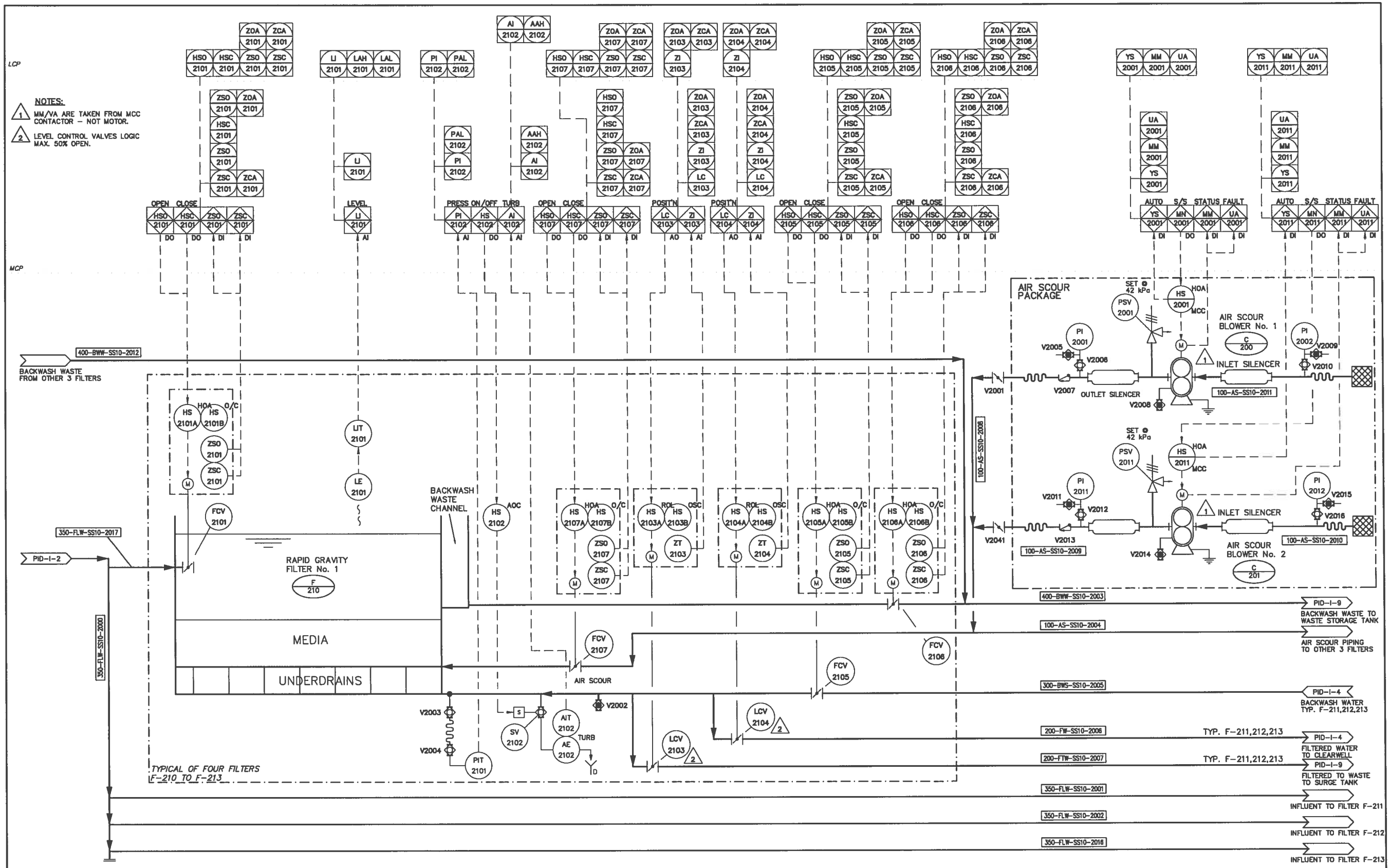

TYPICAL OF FOUR FILTERS F-210 TO F-213

FCV 2101 0.0 ML/day – 2.5ML/day ON/OFF CONTROL

FCV 2107 0.0 – 840 M^3/hour (nominal) ON/OFF CONTROL

LCV 2103 0.0 – 2.5ML/day MODULATING CONTROL Head Loss Across Valve, 0.3m to 3.0m

LCV 2104 0.0 – 2.5ML/day MODULATING CONTROL Head Loss Across Valve, 0.3m to 3.0m

FCV 2105 0.0 – 167.0 L/s ON/OFF CONTROL

FCV 2106 0.0 – 167.0 L/s ON/OFF CONTROL

NO.	REVISION	DATE	INITIAL
2	RECORD DRAWING	19/07/04	LL/YLC
1	ISSUED FOR CONSTRUCTION	22/04/03	CKW
0	ISSUED FOR TENDER	19/02/03	CKW

Company Permit

Engineer Seal

RECORD DRAWING

INFORMATION CONTAINED IN THESE DRAWINGS IS AS SUPPLIED BY: SCHENDEL MECHANICAL CONTRACTING LTD. & VECTOR ELECTRIC & CONTROLS. THE COMPLETENESS AND ACCURACY OF THIS RECORD DRAWING IS NOT GUARANTEED. INFORMATION SHOULD BE VERIFIED ON LOCATION BEFORE USE.

PROCESS & INSTRUMENTATION

P & ID – FILTRATION

iqaluit

CITY of IQALUIT, Nunavut

CITY OF IQALUIT

IQALUIT WATER TREATMENT PLANT

EARTH TECH

Earth Tech (Canada) Inc.

DRAWN BY: CKW
CHECKED BY: CKW/JVH

SCALE: NOT SCALED

DATE: FEBRUARY 2003

SHEET NO. 1-3

CADD SYSTEM AutoCAD

DWG NO. 1-3

REV. 2

CONTRACT 55524

10/19/04 01:19pm richard.henderson L:\work\55000\55524\03-Report\O&M DISC\PROJECT RECORD DRAWINGS\55524-I 3 Record-July 2004.dwg Layout:I-3

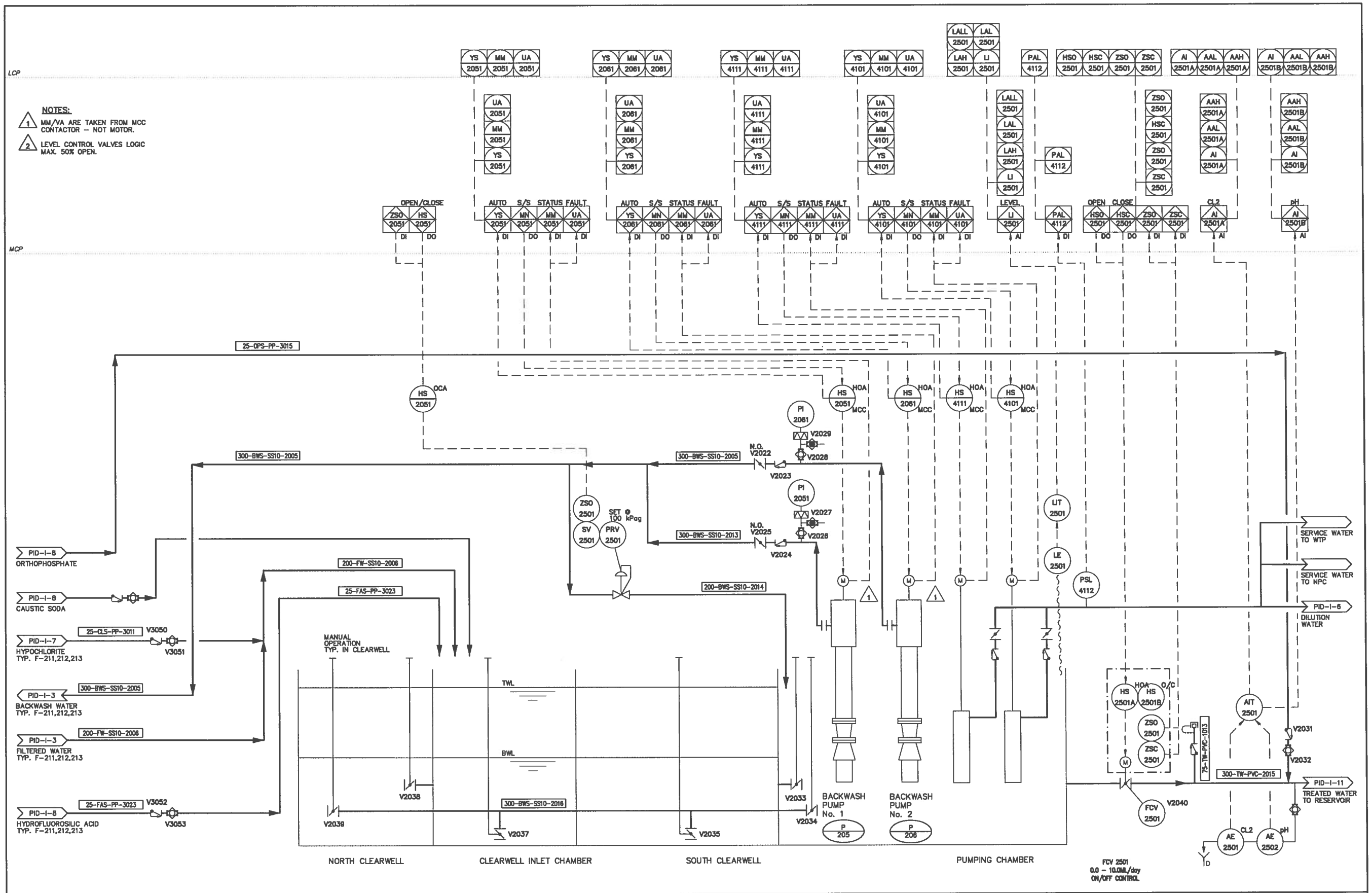

NO.	REVISION	DATE	INITIAL
2	RECORD DRAWING	19/07/04	LL
1	ISSUED FOR CONSTRUCTION	22/04/03	CKW
0	ISSUED FOR TENDER	19/02/03	CKW

Company Permit

Engineer Seal

RECORD DRAWING

INFORMATION CONTAINED IN THESE DRAWINGS IS AS SUPPLIED BY: SCHENDEL MECHANICAL CONTRACTING LTD. & VECTOR ELECTRIC & CONTROLS. THE COMPLETENESS AND ACCURACY OF THIS RECORD DRAWING IS NOT GUARANTEED. INFORMATION SHOULD BE VERIFIED ON LOCATION BEFORE USE.

PROCESS & INSTRUMENTATION

P & ID – CLEARWELL & BACKWASH SUPPLY

iqaluit

CITY of IQALUIT, Nunavut

CITY OF IQALUIT

IQALUIT WATER TREATMENT PLANT

EARTH TECH

Earth Tech (Canada) Inc.

DRAWN BY: CKW CHECKED BY: CKW/JVH	SCALE: NOT SCALED	DATE: FEBRUARY 02/03	SHEET NO.
CADD SYSTEM AutoCAD	DWG NO. I-4	REV. 2	CONTRACT 55524

10/19/04 01:21pm richard.henderson L:\work\55000\55524\03-Report\O&M DISC\PROJECT RECORD DRAWINGS\55524-I 4 Record-July 2004.dwg Layout:I-4

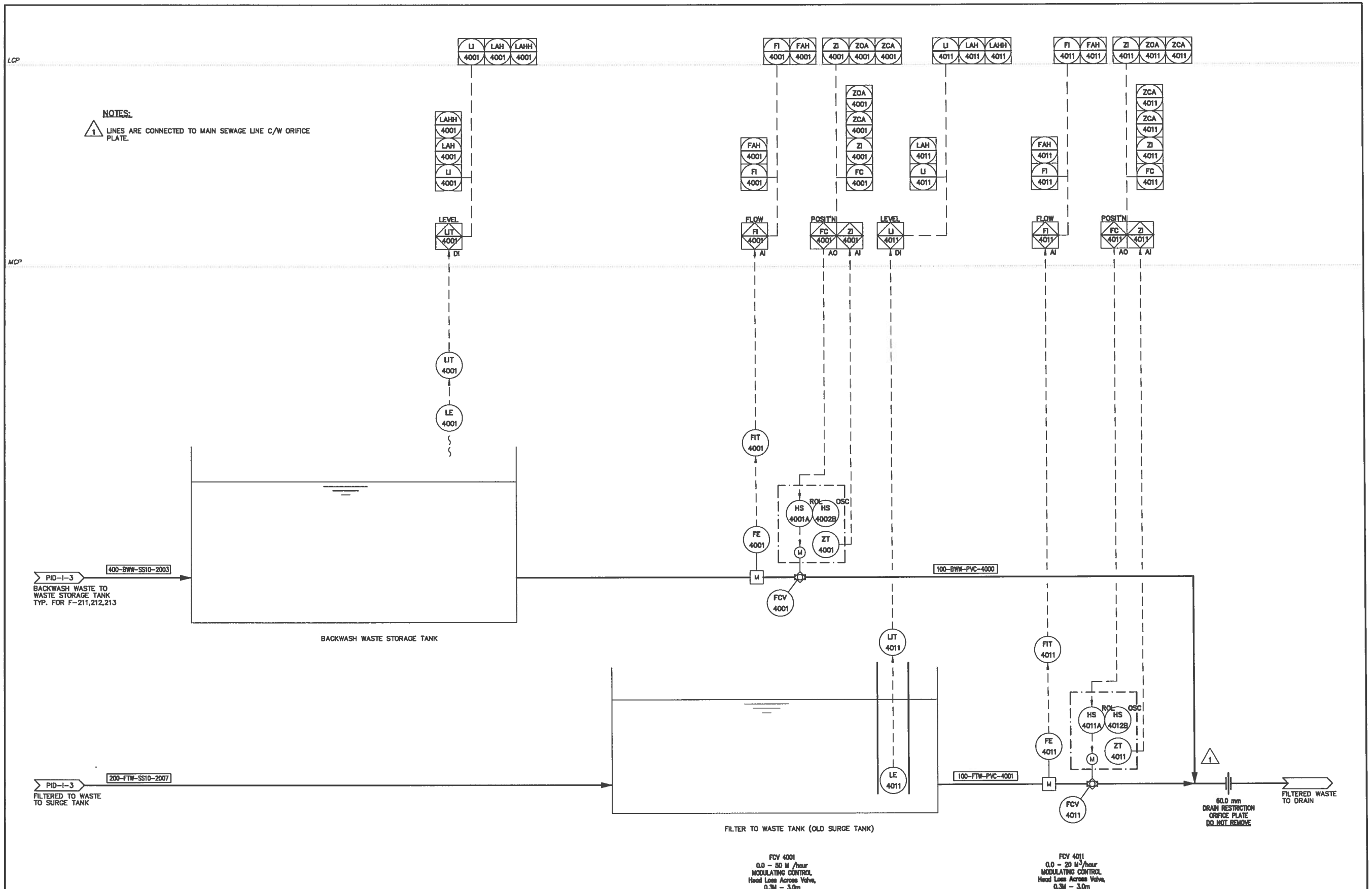

NO.	REVISION	DATE	INITIAL
2	RECORD DRAWING	19/07/04	LL
1	ISSUED FOR CONSTRUCTION	22/04/03	CKW
0	ISSUED FOR TENDER	19/02/03	CKW

Company Permit

Engineer Seal

RECORD DRAWING

INFORMATION CONTAINED IN THESE DRAWINGS IS AS SUPPLIED BY: SCHENDEL MECHANICAL CONTRACTING LTD. & VECTOR ELECTRIC & CONTROLS. THE COMPLETENESS AND ACCURACY OF THIS RECORD DRAWING IS NOT GUARANTEED. INFORMATION SHOULD BE VERIFIED ON LOCATION BEFORE USE.

PROCESS & INSTRUMENTATION

P & ID – FLUORIDE & ORTHOPHOSPHATE SUPPLY

Iqaluit

CITY of IQALUIT, Nunavut

CITY OF IQALUIT

IQALUIT WATER TREATMENT PLANT

EARTH TECH

Earth Tech (Canada) Inc.

DRAWN BY: CKW / CHECKED BY: CKW/JVH	SCALE: NOT SCALED	DATE: FEBRUARY 2003	SHEET NO.
CADD SYSTEM AutoCAD	DWG NO. I-5	REV. 2	CONTRACT 55524

10/19/04 01:22pm richard.henderson L:\work\55000\55524\03-Report\O&M DISC\PROJECT RECORD DRAWINGS\55524-I 5 Record-July 2004.dwg Layout:I-5

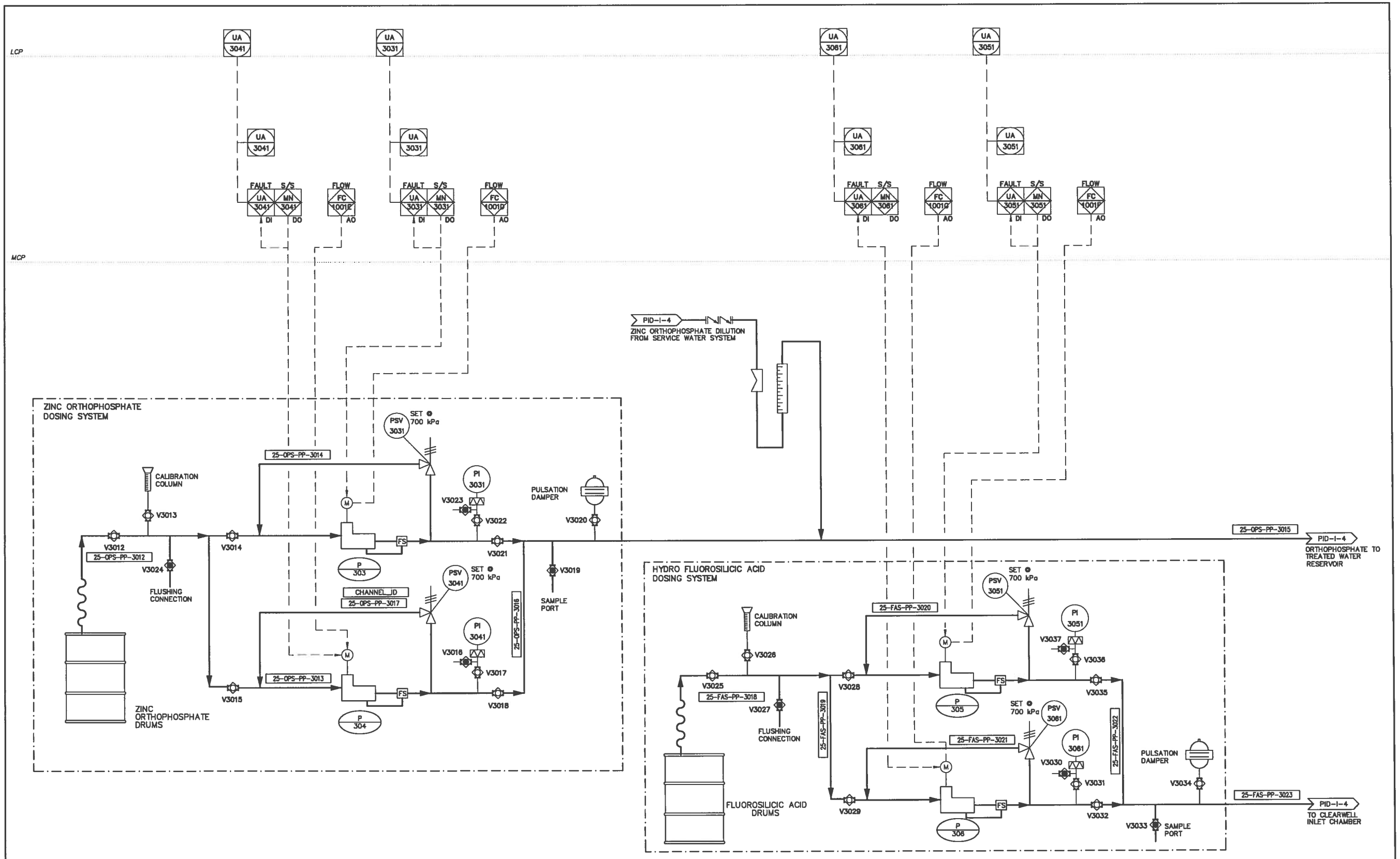

NO.	REVISION	DATE	INITIAL
2	RECORD DRAWING	19/07/04	LL
1	ISSUED FOR CONSTRUCTION	22/04/03	CKW
0	ISSUED FOR TENDER	19/02/03	CKW

Company Permit

Engineer Seal

RECORD DRAWING

INFORMATION CONTAINED IN THESE DRAWINGS IS AS SUPPLIED BY: SCHENDEL MECHANICAL CONTRACTING LTD. & VECTOR ELECTRIC & CONTROLS. THE COMPLETENESS AND ACCURACY OF THIS RECORD DRAWING IS NOT GUARANTEED. INFORMATION SHOULD BE VERIFIED ON LOCATION BEFORE USE.

PROCESS & INSTRUMENTATION

P & ID – FLUORIDE & ORTHOPHOSPHATE AND FLUOROSILICIC ACID SUPPLY

iqaluit

CITY of IQALUIT, Nunavut

CITY OF IQALUIT

IQALUIT WATER TREATMENT PLANT

EARTH TECH

Earth Tech (Canada) Inc.

DRAWN BY: CKW CHECKED BY: CKW/JVH	SCALE: NOT SCALED	DATE: FEBRUARY 02 2003	SHEET NO.
CADD SYSTEM AutoCAD	DWG NO. I-6	REV. 2	CONTRACT 55524

10/19/04 01:24pm richard.henderson L:\work\55000\55524\03-Report\O&M DISC\PROJECT RECORD DRAWINGS\55524-I 6 Record-July 2004.dwg Layout:I-6

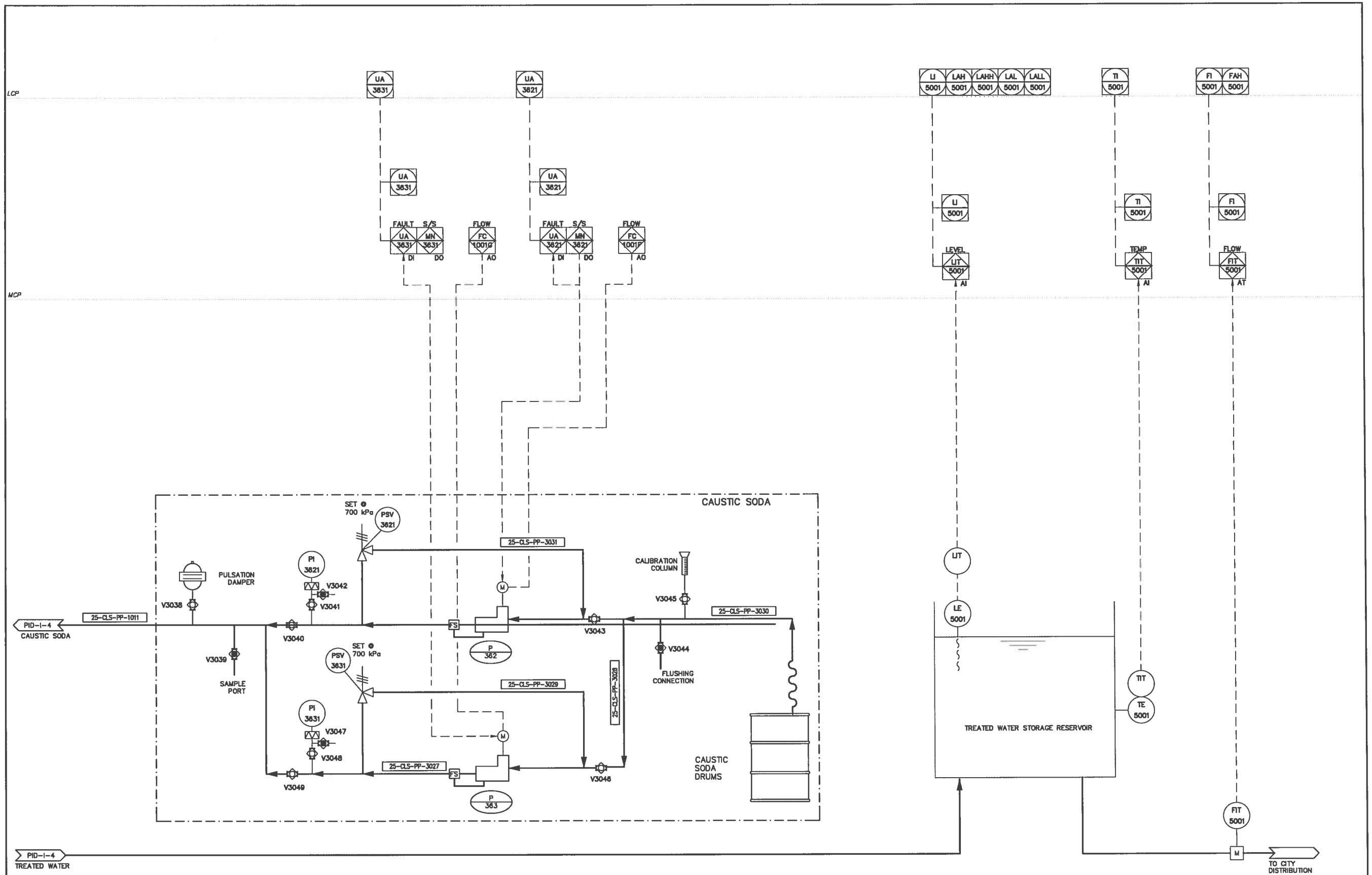

NO.	REVISION	DATE	INITIAL
2	RECORD DRAWINGS	11/05/04	LL
1	ISSUED FOR CONSTRUCTION	22/04/03	CKW
0	ISSUED FOR TENDER	19/02/03	CKW

Company Permit

Engineer Seal

RECORD DRAWING
INFORMATION CONTAINED IN THESE DRAWINGS IS AS SUPPLIED BY: SCHENDEL MECHANICAL CONTRACTING LTD. THE COMPLETENESS AND ACCURACY OF THIS RECORD DRAWING IS NOT GUARANTEED. INFORMATION SHOULD BE VERIFIED AT THE ACTUAL LOCATION BEFORE USE.

PROCESS & INSTRUMENTATION

P & ID – TEMPORARY CHLORINATION PLANT

Iqaluit

CITY of IQALUIT, Nunavut

CITY OF IQALUIT

IQALUIT WATER TREATMENT PLANT

EARTH TECH

Earth Tech (Canada) Inc.

DRAWN BY: KWM / CHECKED BY: CKW/JVH	SCALE: N.T.S.	DATE: OCT. 2002	SHEET NO.
CADD SYSTEM AutoCAD	DWG NO. I–7	REV. 2	CONTRACT 55524

10/19/04 01:25pm richard.henderson L:\work\55000\55524\03-Report\O&M DISC\PROJECT RECORD DRAWINGS\55524-I 7 Record-July 2004.dwg Layout:I-7

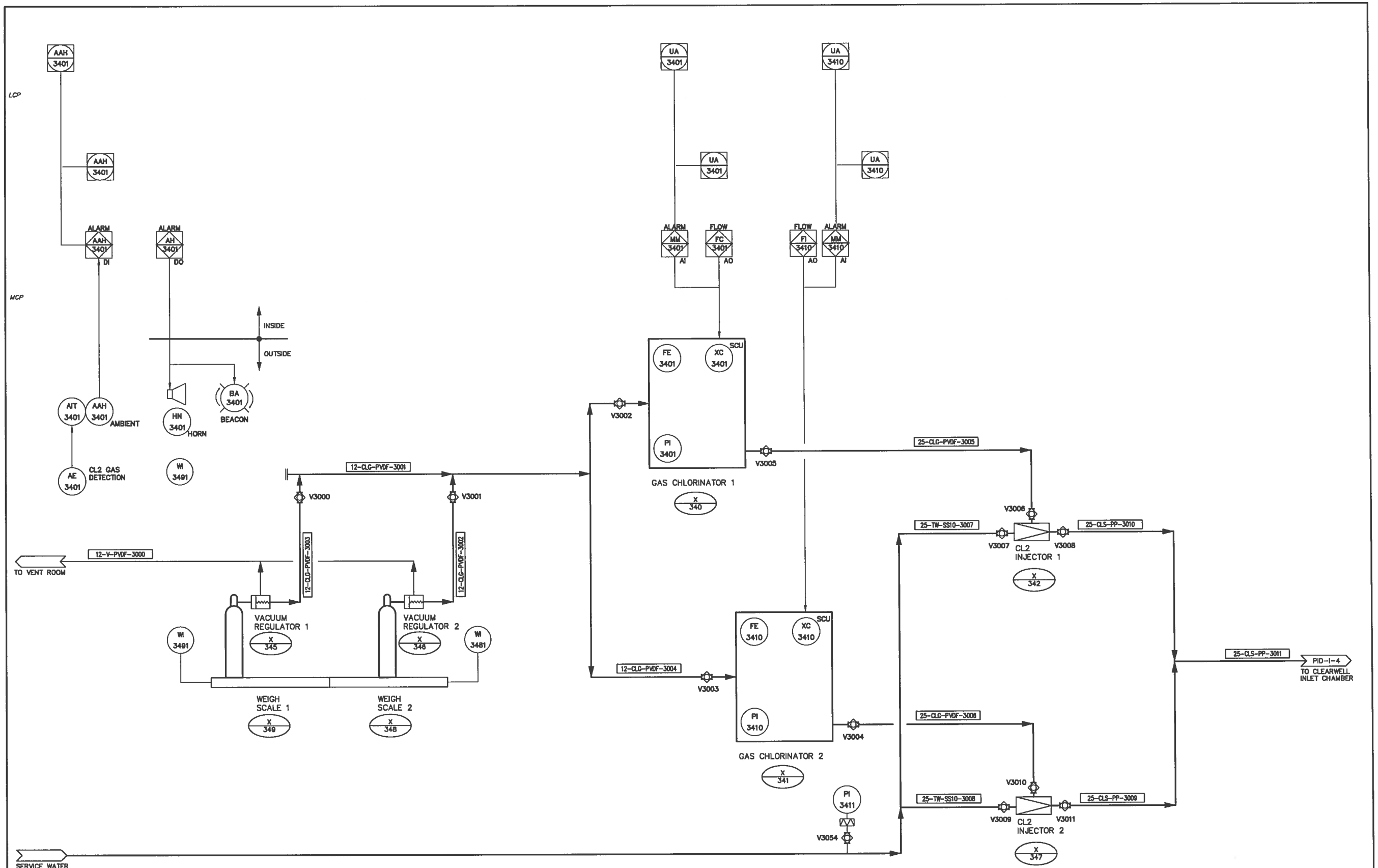

NO.	REVISION	DATE	INITIAL
2	RECORD DRAWING	19/07/04	LL
1	ISSUED FOR CONSTRUCTION	22/04/03	CKW
0	ISSUED FOR TENDER	19/02/03	CKW

Company Permit

Engineer Seal

RECORD DRAWING

INFORMATION CONTAINED IN THESE DRAWINGS IS AS SUPPLIED BY: SCHENDEL MECHANICAL CONTRACTING LTD. & VECTOR ELECTRIC & CONTROLS. THE COMPLETENESS AND ACCURACY OF THIS RECORD DRAWING IS NOT GUARANTEED. INFORMATION SHOULD BE VERIFIED ON LOCATION BEFORE USE.

PROCESS & INSTRUMENTATION

P & ID
CHLORINE SUPPLY

iqaluit
CITY of IQALUIT, Nunavut

CITY OF IQALUIT

IQALUIT WATER TREATMENT PLANT

EARTH TECH
Earth Tech (Canada) Inc.

DRAWN BY: CKW	SCALE:	DATE:	SHEET NO.
CHECKED BY: CKW/JVH	NOT SCALED	FEBRUARY 02/03	
CADD SYSTEM AutoCAD	DWG NO. 1-8	REV. 2	CONTRACT 55524

10/19/04 01:26pm richard.henderson L:\work\55000\55524\03-Report\O&M DISC\PROJECT RECORD DRAWINGS\55524-1 8 Record-July 2004.dwg Layout:1-8

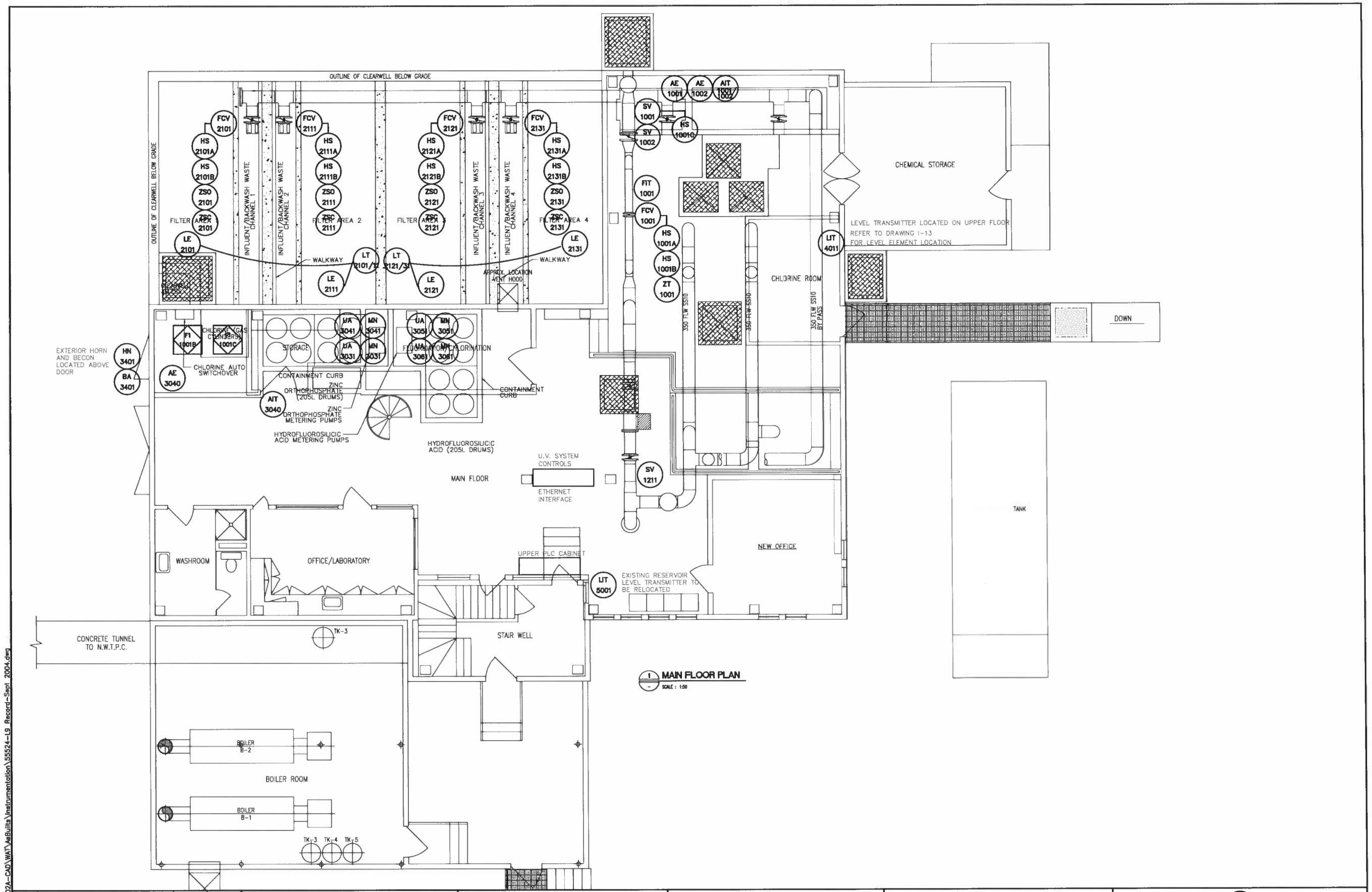

NO.	REVISION	DATE	INITIAL
2	RECORD DRAWING	14/09/04	YLC
1	ISSUED FOR CONSTRUCTION	22/04/03	CKW
0	ISSUED FOR TENDER	19/02/03	CKW

Company Permit

Engineer Seal

RECORD DRAWING

INFORMATION CONTAINED IN THESE DRAWINGS IS AS SUPPLIED BY: SCHENDEL MECHANICAL CONTRACTING LTD. & VECTOR ELECTRIC & CONTROLS. THE COMPLETENESS AND ACCURACY OF THIS RECORD DRAWING IS NOT GUARANTEED. INFORMATION SHOULD BE VERIFIED ON LOCATION BEFORE USE.

INSTRUMENTATION

FILTERS FLOOR DEVICE LOCATIONS

Iqaluit

CITY of IQALUIT, Nunavut

CITY OF IQALUIT

IQALUIT WATER TREATMENT PLANT

EARTH TECH

Earth Tech (Canada) Inc.

DRAWN BY: TDC CHECKED BY: CKW	SCALE: AS NOTED	DATE: OCT. 2002	SHEET NO.
CADD SYSTEM AutoCAD	DWG NO. I-9	REV. 1	CONTRACT 55524

L:\WORK\55000\55524\02A-CAD\WAT\AsBuilts\Instrumentation\55524-I9 Record-Sept 2004.dwg

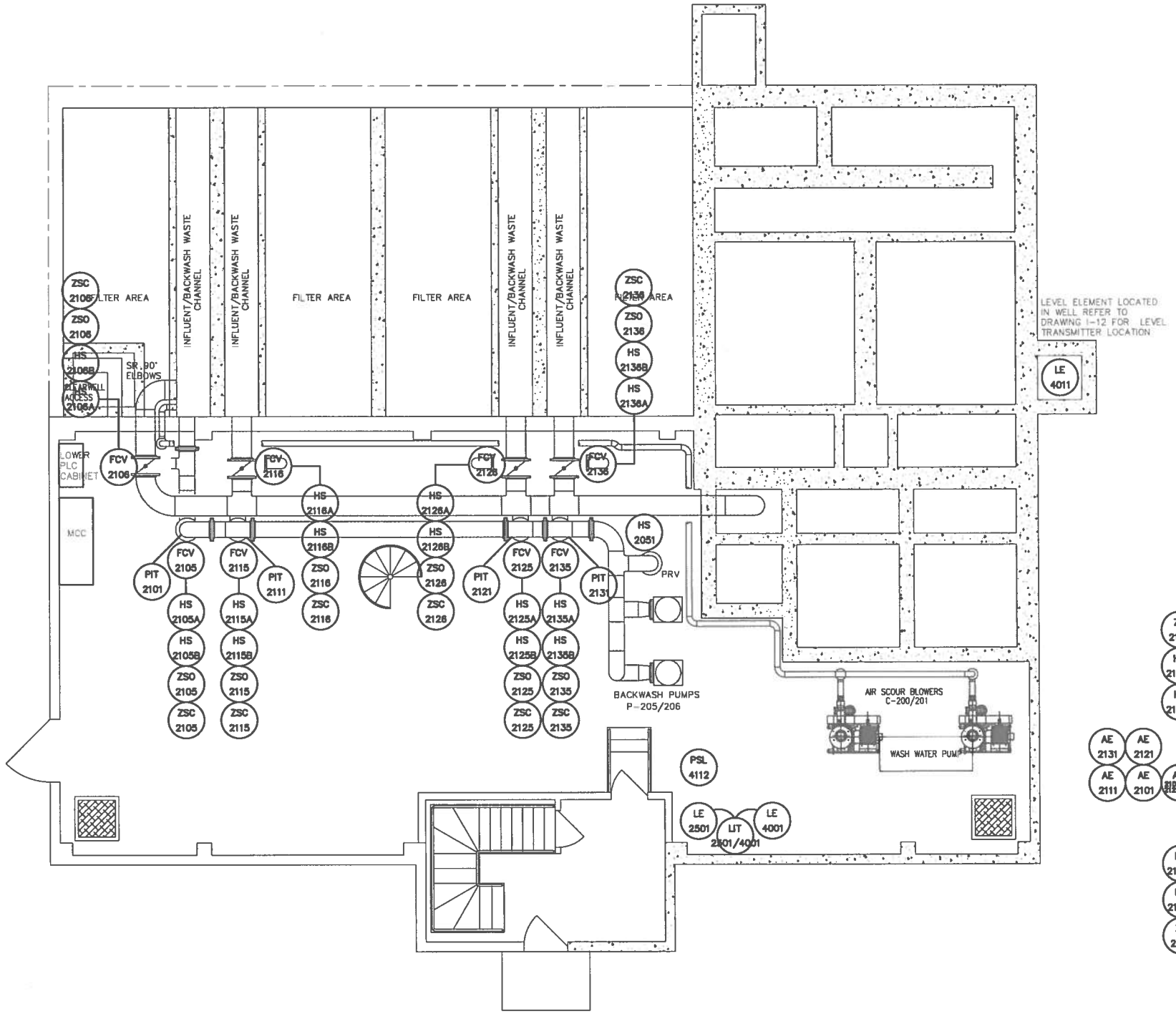

1 PUMPS FLOOR PLAN
SCALE : 1:50

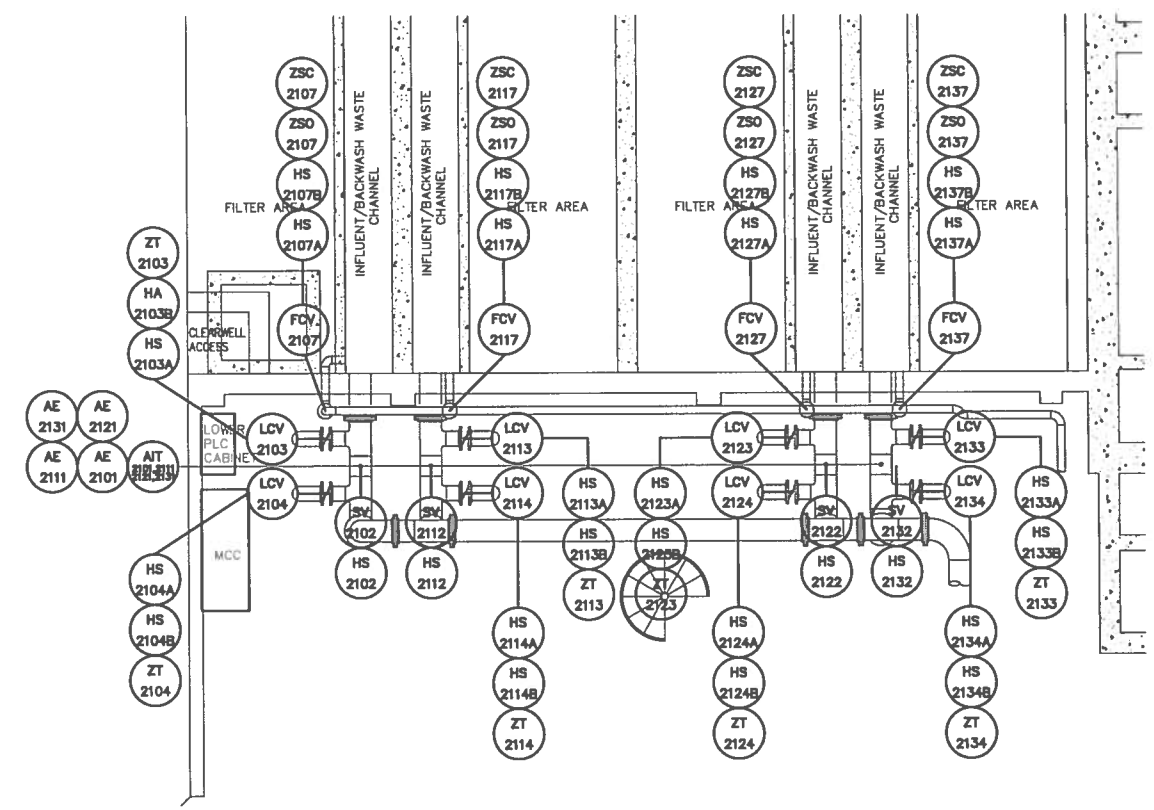

2 PARTIAL PUMPS FLOOR PLAN
SCALE : 1:50

NO.	REVISION	DATE	INITIAL
1	ISSUED FOR CONSTRUCTION	22/04/03	CKW
0	ISSUED FOR TENDER	19/02/03	CKW

Company Permit

Engineer Seal

RECORD DRAWING

INFORMATION CONTAINED IN THESE DRAWINGS IS AS SUPPLIED BY: SCHENDEL MECHANICAL CONTRACTING LTD. & VECTOR ELECTRIC & CONTROLS. THE COMPLETENESS AND ACCURACY OF THIS RECORD DRAWING IS NOT GUARANTEED. INFORMATION SHOULD BE VERIFIED ON LOCATION BEFORE USE.

INSTRUMENTATION

PUMPS FLOOR DEVICE LOCATIONS

Iqaluit
CITY of IQALUIT, Nunavut

CITY OF IQALUIT

IQALUIT WATER TREATMENT PLANT

EARTH TECH
Earth Tech (Canada) Inc.

DRAWN BY: TDC	SCALE: AS NOTED	DATE: OCT. 2002	SHEET NO.
CHECKED BY: CKW			
CADD SYSTEM AutoCAD	DWG NO. I-10	REV. 1	CONTRACT 55524

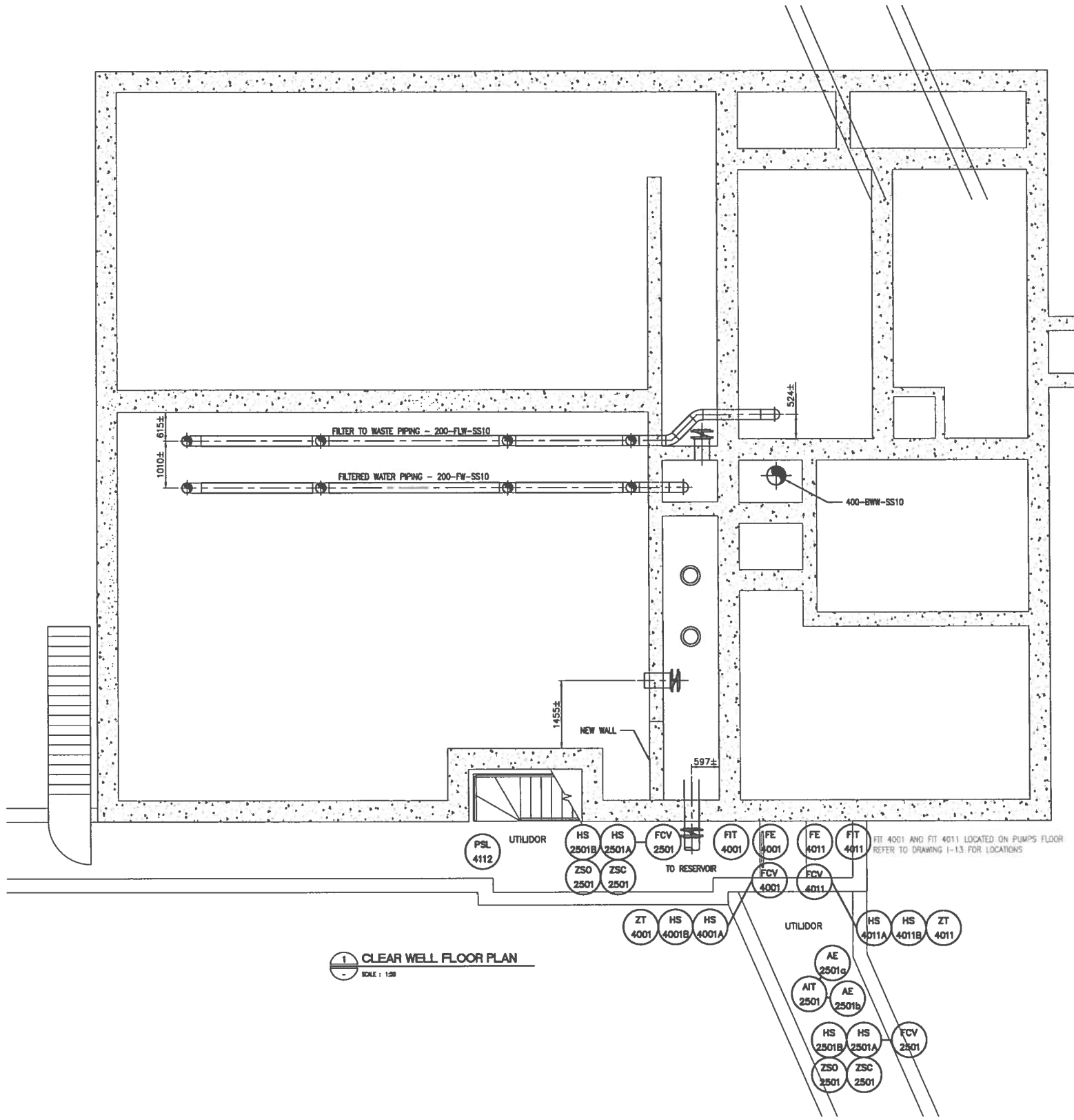

1 CLEAR WELL FLOOR PLAN
SCALE : 1:50

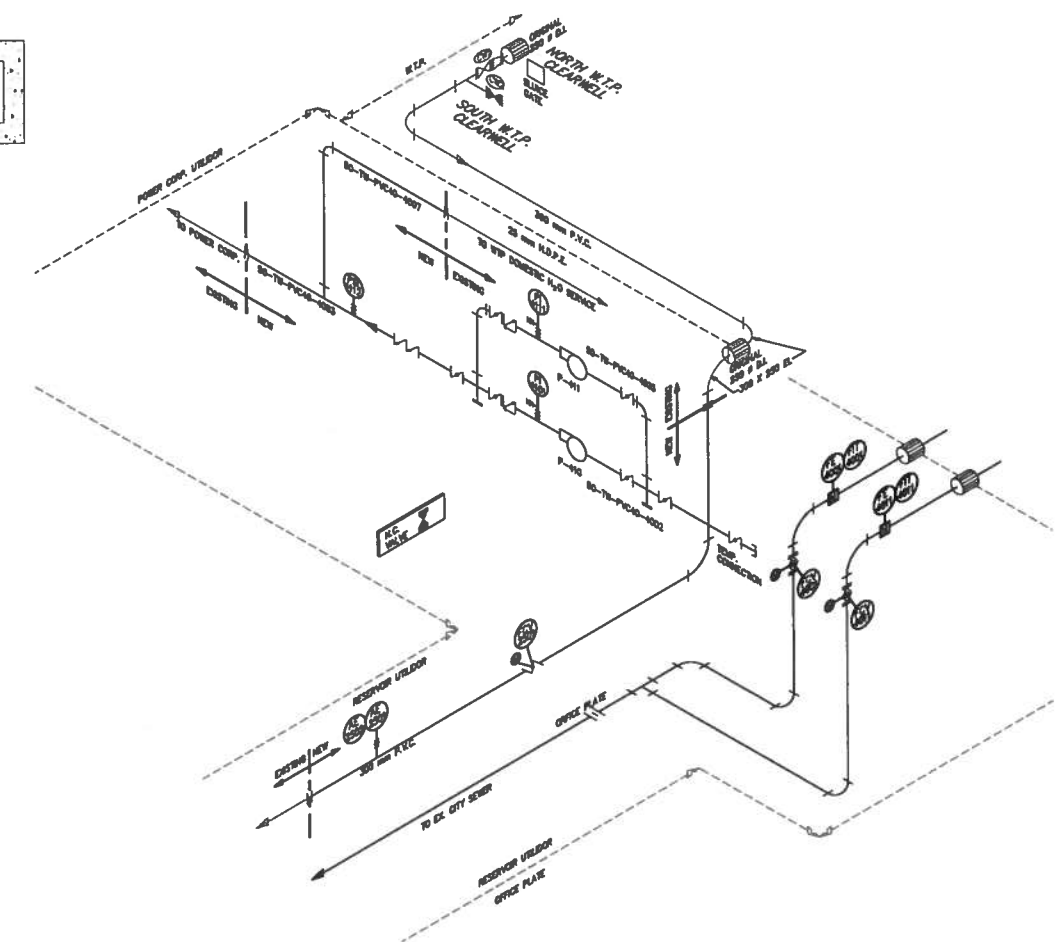

2 SCHEM. SHOWING SERVICE WATER
SCALE : N.T.S.

L:\WORK\55000\55524\02A-CAD\WAT\DWGS\DESIGN\55524-I-14.dwg

NO.	REVISION	DATE	INITIAL
1	ISSUED FOR CONSTRUCTION	22/04/03	CKW
0	ISSUED FOR TENDER	19/02/03	CKW

Company Permit

Engineer Seal

RECORD DRAWING

INFORMATION CONTAINED IN THESE DRAWINGS IS AS SUPPLIED BY: SCHENDEL MECHANICAL CONTRACTING LTD. & VECTOR ELECTRIC & CONTROLS. THE COMPLETENESS AND ACCURACY OF THIS RECORD DRAWING IS NOT GUARANTEED. INFORMATION SHOULD BE VERIFIED ON LOCATION BEFORE USE.

INSTRUMENTATION

CLEARWELL FLOOR DEVICE LOCATIONS

Iqaluit

CITY of IQALUIT, Nunavut

CITY OF IQALUIT

IQALUIT WATER TREATMENT PLANT

EARTH TECH

Earth Tech (Canada) Inc.

DRAWN BY: TDC CHECKED BY: CKW	SCALE: AS NOTED	DATE: OCT. 2002	SHEET NO.
CADD SYSTEM AutoCAD	DWG NO. I-11	REV. 1	CONTRACT 55524

PLUMBING

DIRECTION OF FLOW		
SANITARY	ABOVE SLAB	SAN
	BELOW SLAB	SAN
STORM	ABOVE SLAB	ST
	BELOW SLAB	ST
VENT		V
DOMESTIC COLD WATER		
DOMESTIC HOT WATER		
DOMESTIC HOT WATER RECIRC.		
LOW PRESSURE NATURAL GAS		G
MEDIUM PRESSURE NATURAL GAS		MG
OIL VENT		OV
HOSE BIBB		HB
CLEANOUT	PLUG	CO
	FLOOR	CO
RUNNING TRAP		
FLOOR DRAIN		FD
FUNNEL FLOOR DRAIN		FFD
HUB DRAIN		HD
ROOF/AREA DRAIN		RD/AD
RAIN WATER LEADER		RWL
FUEL OIL FILL		FO
FUEL OIL	SUPPLY	FOS
	RETURN	FOR
SPRINKLER LINE		SP
SPRINKLER HEAD	UPRIGHT	
	PENDANT	
	SIDEWALL	
	DRY	
	FLUSH	
FIRE LINE		F
FIRE HOSE CABINET		FHC
FIRE EXTINGUISHER		FE
GLYCOL	SUPPLY	GLYS
	RETURN	GLYR

PLUMBING FIXTURE TAG

WATER CLOSET	WC	TYPE
LAVATORY	L	
URINAL	U	
SINK	SK	NUMBER
MOP/JANITOR SINK	MS	

EQUIPMENT FIXTURE TAG

FANS	SUPPLY	SF
	RETURN	RF
	EXHAUST	EF
PREHEAT COILS		PHC
REHEAT COILS		RHC
COOLING COILS		CC
HEATING COILS		HC
UNIT HEATER		UH
PUMP		P
TANK		TK
HEAT EXCHANGER		HE
DOMESTIC WATER HEATER		DWH
BOILER		B
AIR CONDITIONER UNIT		ACU
AIR HANDLING UNIT		AHU
CABINET UNIT HEATER		CUH

TYPE — NUMBER

PIPE FITTINGS

PIPE ANCHOR & GUIDES
EXPANSION JOINT
AIR VENT MANUAL
AUTOMATIC
AQUA-STAT
FLOW SWITCH
PRESSURE SWITCH
THERMOMETER & WELL
PRESSURE GUAGE & TAP
FLOW METER
PIPE RISE
PIPE DROP
PIPE TOP TAKE-OFF
PIPE BOTTOM TAKE-OFF
SIMPLE CONNECTION
PIPE CAP
PIPE CONTINUATION
GATE VALVE
GLOBE VALVE
BALANCING VALVE
CHECK VALVE
PRESSURE REDUCING VALVE
3-WAY CONTROL VALVE
2-WAY CONTROL VALVE
BALL VALVE
GAS COCK
SOLENOID VALVE
STRAINER (IN-LINE)
STRAINER (BLOW-OFF)
BUCKET STRAINER
UNION
BUTTERFLY VALVE
FLOAT & THERMOSTATIC TRAP
BUCKET TRAP
THERMODYNAMIC TRAP
SUPERVISED ISOLATION VALVE
SUPERVISED ZONE VALVE
COMBINATION STRAINER/
SUCTION GUIDE
FLOTREX CHECK/SHUT-OFF VALVE
FLOW CONTROL REGULATOR
RELIEF VALVE
O.S. & Y VALVE
NEEDLE VALVE
BACKWATER VALVE
VACUUM BREAKER
CONCENTRIC REDUCER
ECCENTRIC REDUCER
DOUBLE CHECK BACKFLOW PREVENTOR
REDUCED PRESSURE BFP
LOCKSHIELD VALVE
SUCTION DIFFUSER
CIRCUIT BALANCING VALVE
ALARM CHECK VALVE
ECCENTRIC PLUG VALVE (BALANCING VALVE)
PUMP (SCHEMATIC)

AIR DISTRIBUTION

SUPPLY AIR (S/A)
RETURN AIR (R/A)
EXHAUST AIR (E/A)
OUTSIDE AIR (O/A)
BALANCING DAMPER
BACKDRAFT DAMPER
FIRE DAMPER
SMOKE DAMPER
FIRE/SMOKE DAMPER
MOTORIZED DAMPER
TURNING VANES
ACCOUSTIC LINED DUCTWORK
EXTERNAL INSULATION
FLEXIBLE DUCTWORK
THERMOSTAT
HUMIDISTAT
CARBON DIOXIDE DETECTOR
DIFFERENTIAL PRESSURE SENSOR
FREEZE STAT
DOOR UNDERCUT — U/C
DOOR GRILLE c/w SIZE — x

DUCT DIMENSIONING

ROUND DUCT — 300
RECTANGULAR DUCT — 300x200
SINGLE LINE DUCT REPRESENTATION — 300x200
DUCTWORK TO BE REMOVED

NOTE: WHERE '300' IS THE VISIBLE DIMENSION

AIR OUTLET TAG

SUPPLY	S	TYPE
RETURN	R	SIZE (mm)
EXHAUST	E	FLOW (L/s)
TRANSFER	T	
LOUVRE	L	

RADIATION / RADIANT PANEL TAG

TYPE
LENGTH (mm)
OUTPUT (WATTS)

REVISION TAG

REVISION NUMBER

1 MECHANICAL LEGEND
SCALE : N.T.S.

NO.	REVISION	DATE	INITIAL
2	RECORD DRAWING	23/04/04	IV
1	ISSUED FOR CONSTRUCTION	22/04/03	DBF
0	ISSUED FOR TENDER	19/02/03	DBF

Company Permit — Engineer Seal

RECORD DRAWING
INFORMATION CONTAINED IN THESE DRAWINGS IS AS SUPPLIED BY SHENDEL MECHANICAL CONTRACTING LTD.
DATE: MAY 03, 2004

MECHANICAL

LEGEND

Iqaluit
CITY of IQALUIT, Nunavut

CITY OF IQALUIT

IQALUIT WATER TREATMENT PLANT

EARTH TECH
Earth Tech (Canada) Inc.

DRAWN BY: CWN CHECKED BY: DBF	SCALE: AS NOTED	DATE: FEB. 03, 2003	SHEET NO.
CADD SYSTEM AutoCAD	DWG NO. M-1	REV. 1	CONTRACT 55524

ET:55524/Cadd FileA1-PROJ-SHT.dwg/Last Edit: 2004-04-08 (17:00)/Plot Scale: 1:1 (A1)

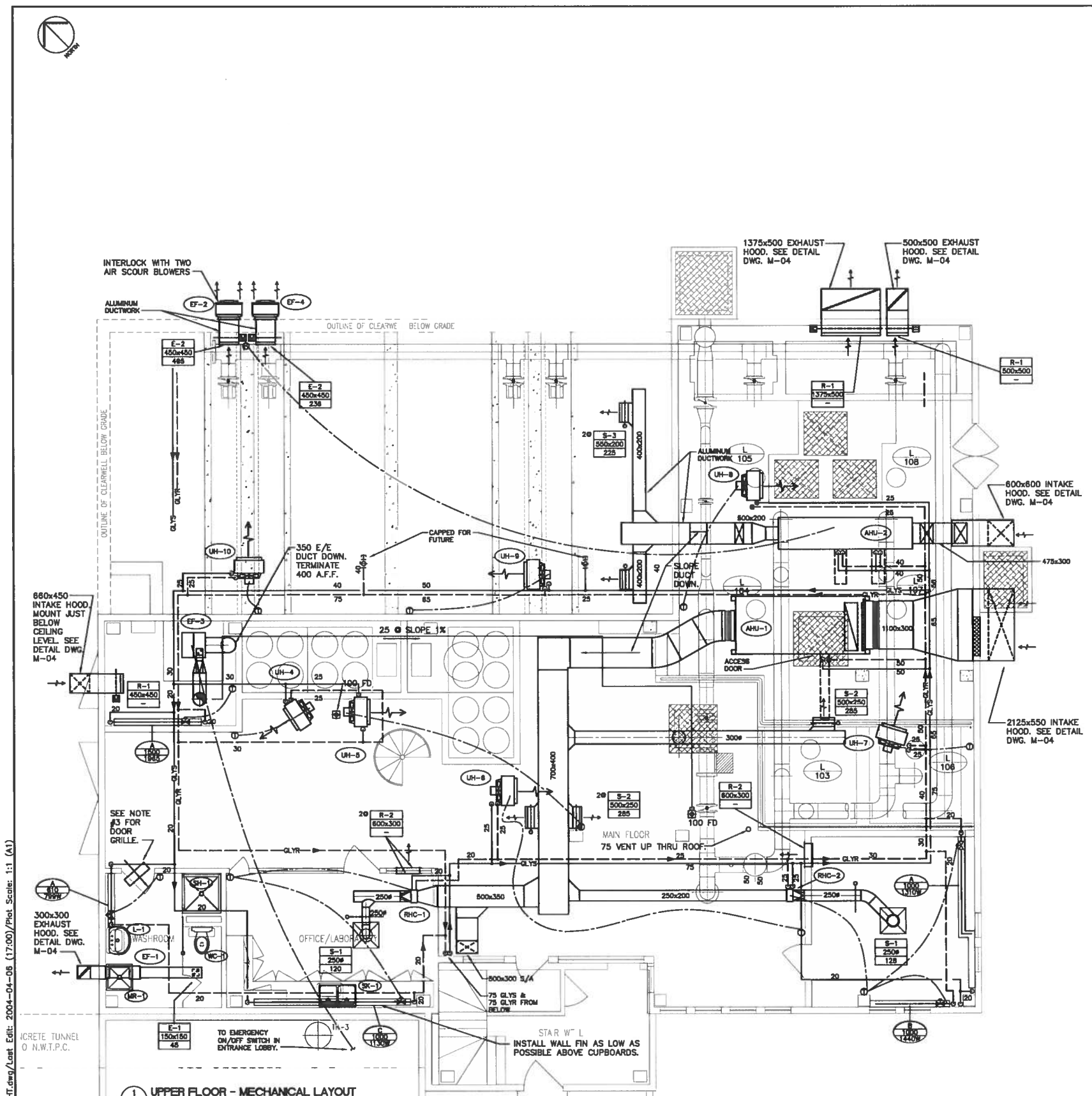

1 UPPER FLOOR - MECHANICAL LAYOUT
SCALE : 1:50

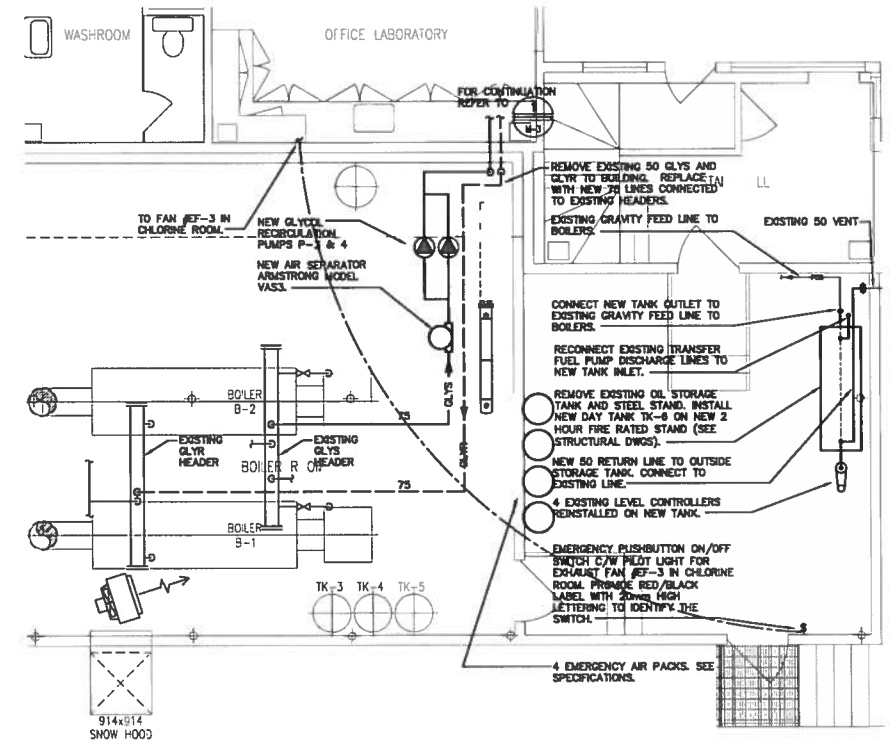

2 BOILER ROOM - MECHANICAL
SCALE : 1:50

NOTE:
1. FIELD RUN NEW HEATING PIPES TO PREVENT INTERFERENCE WITH NEW PROCESS PIPING.
2. INSTALL ALL THERMOSTATS ON BRACKETS MIN. 50 CLEAR OF THE WALL.
3. 400x250 DOOR GRILLE. E.H. PRICE SERIES "ATGH", BORDER STYLE "BF", FINISH "B15".

NO.	REVISION	DATE	INITIAL
2	RECORD DRAWING	23/04/04	IV
1	ISSUED FOR CONSTRUCTION	22/04/03	DBF
0	ISSUED FOR TENDER	19/02/03	DBF

Company Permit

Engineer Seal

RECORD DRAWING
INFORMATION CONTAINED IN THESE DRAWINGS IS AS SUPPLIED BY SHENDEL MECHANICAL CONTRACTING LTD.
DATE: MAY 03, 2004

MECHANICAL
UPPER FLOOR
MECHANICAL LAYOUT

Iqaluit
CITY of IQALUIT, Nunavut

CITY OF IQALUIT
IQALUIT WATER TREATMENT PLANT

EARTH TECH
Earth Tech (Canada) Inc.

DRAWN BY: EJL / CHECKED BY: DBF	SCALE: AS NOTED	DATE: FEB. 03, 2003	SHEET NO.
CADD SYSTEM AutoCAD	DWG NO. M-2	REV. 1	CONTRACT 55524

ET:55524/Cadd Files\1-PROJ-SHT.dwg/Last Edit: 2004-04-05 (17:00)/Plot Scale: 1:1 (A1)

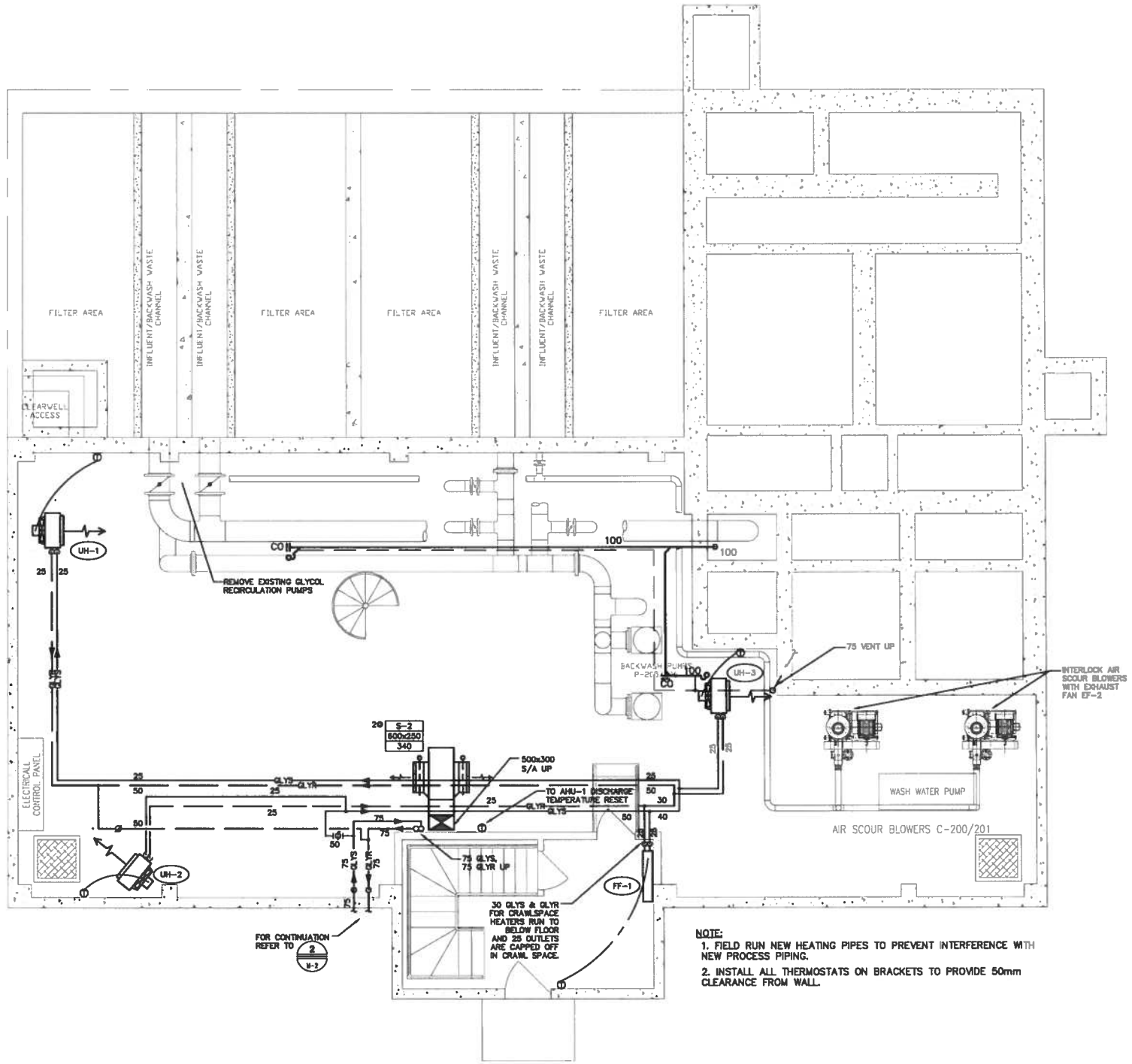

NOTE:
1. FIELD RUN NEW HEATING PIPES TO PREVENT INTERFERENCE WITH NEW PROCESS PIPING.
2. INSTALL ALL THERMOSTATS ON BRACKETS TO PROVIDE 50mm CLEARANCE FROM WALL.

1 LOWER FLOOR - MECHANICAL PLAN
SCALE : 1:50

NO.	REVISION	DATE	INITIAL
2	RECORD DRAWING	23/04/04	IV
1	ISSUED FOR CONSTRUCTION	22/04/03	DBF
0	ISSUED FOR TENDER	19/02/03	DBF

Company Permit

Engineer Seal

RECORD DRAWING
INFORMATION CONTAINED IN THESE DRAWINGS IS AS SUPPLIED BY SHENDEL MECHANICAL CONTRACTING LTD.
DATE: MAY 03, 2004

MECHANICAL
LOWER FLOOR MECHANICAL LAYOUT

Iqaluit
CITY of IQALUIT, Nunavut

CITY OF IQALUIT
IQALUIT WATER TREATMENT PLANT

EARTH TECH
Earth Tech (Canada) Inc.

DRAWN BY: EJL CHECKED BY: DBF	SCALE: AS NOTED	DATE: FEB. 03, 2003	SHEET NO.
CADD SYSTEM AutoCAD	DWG NO. M-3	REV. 1	CONTRACT 55524

ET:55524/Cadd File:A1-PROJ-SHT.dwg/Last Edit: 2004-04-06 (17:00)/Plot Scale: 1:1 (A1)

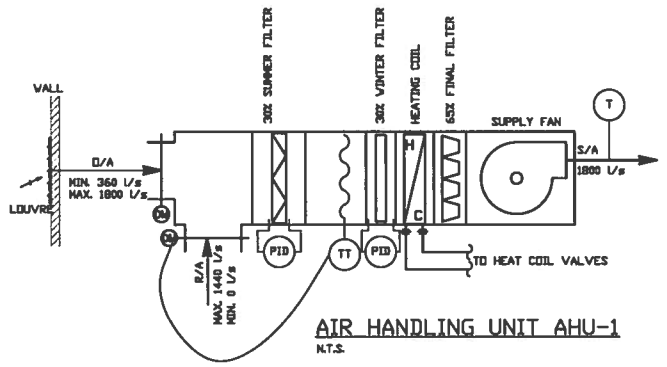

AIR HANDLING UNIT AHU-1
N.T.S.

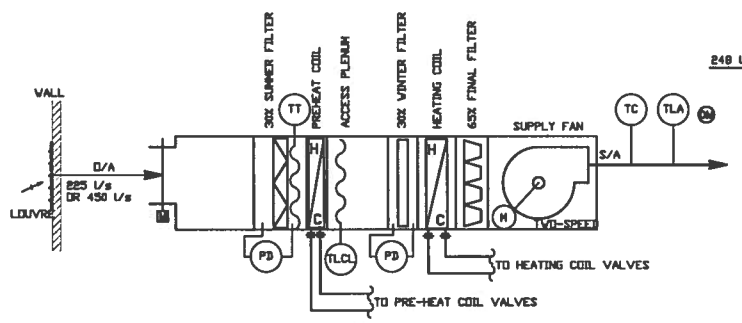

AIR HANDLING UNIT AHU-2
N.T.S.

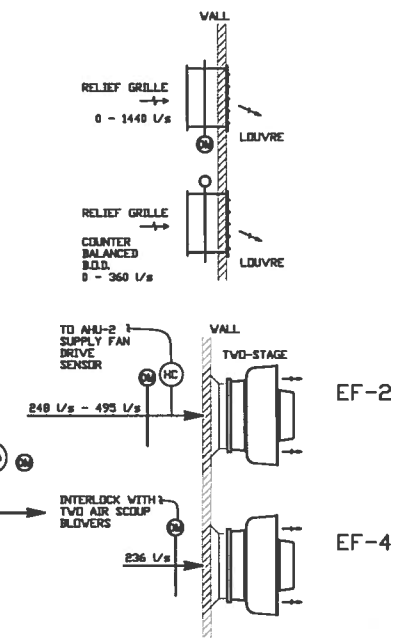

EXHAUST FANS EF-2/4
N.T.S.

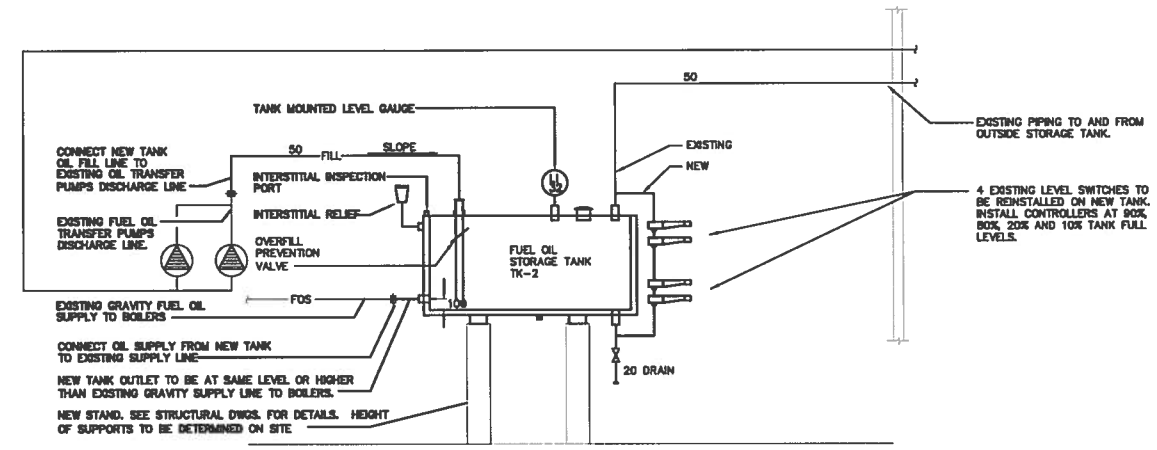

NEW FUEL OIL DAY TANK
N.T.S.

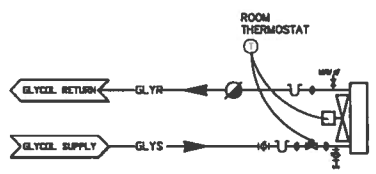

TYPICAL UNIT HEATER
& FORCE FLOW SCHEMATIC
N.T.S.

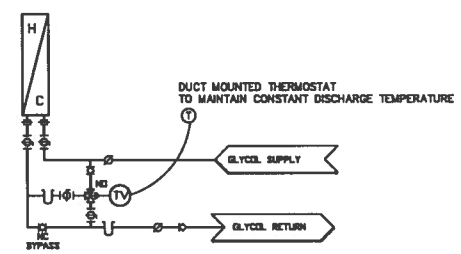

TYPICAL AHU HEATING AND
PREHEAT COILS SCHEMATIC
N.T.S.

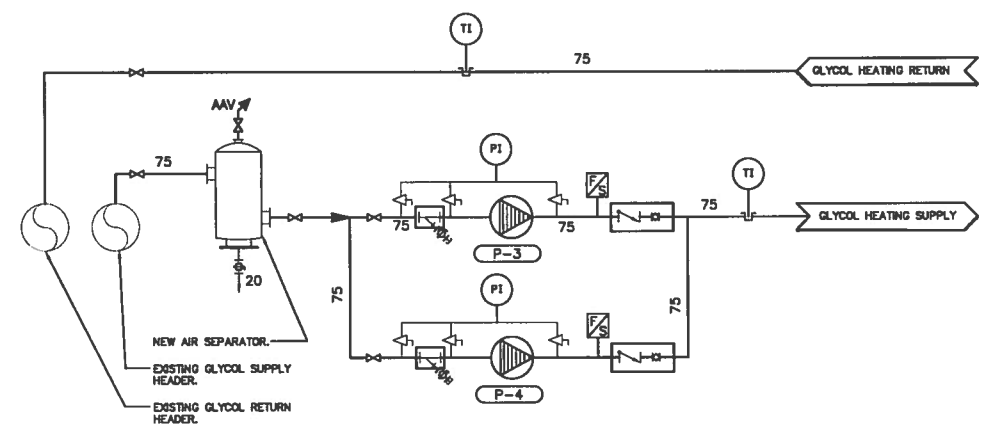

NEW HEATING PUMPS SCHEMATIC
N.T.S.

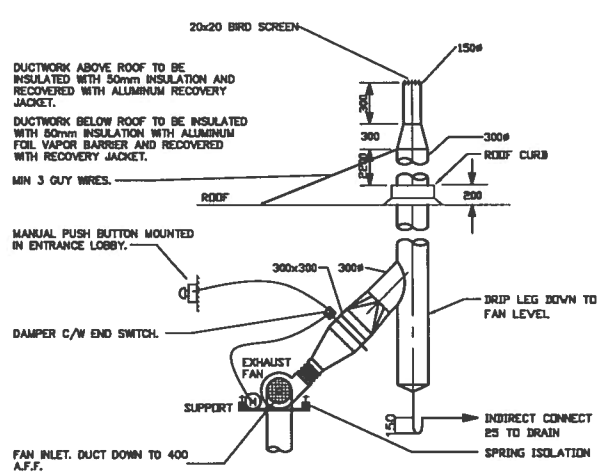

EXHAUST FAN EF-3
N.T.S.

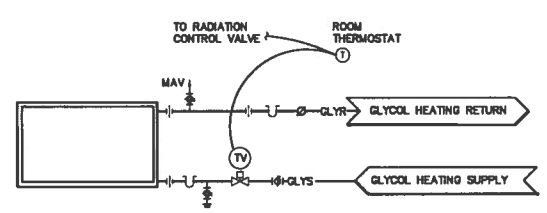

REHEAT COIL

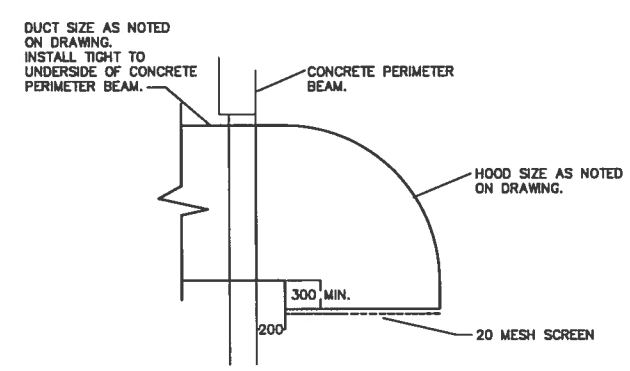

TYPICAL INLET HOOD
N.T.S.

NO.	REVISION	DATE	INITIAL
2	RECORD DRAWING	23/04/04	IV
1	ISSUED FOR CONSTRUCTION	22/04/03	DBF
0	ISSUED FOR TENDER	19/02/03	DBF

Company Permit

Engineer Seal

RECORD DRAWING
INFORMATION CONTAINED IN THESE DRAWINGS IS AS SUPPLIED BY SHENDEL MECHANICAL CONTRACTING LTD.
DATE: MAY 03, 2004

MECHANICAL

SCHEMATICS AND DETAILS

Iqaluit
CITY of IQALUIT, Nunavut

CITY OF IQALUIT

IQALUIT WATER TREATMENT PLANT

EARTH TECH
Earth Tech (Canada) Inc.

DRAWN BY: EJL CHECKED BY: DBF	SCALE: AS NOTED	DATE: FEB. 03, 2003	SHEET NO.
CADD SYSTEM AutoCAD	DWG NO. M-4	REV. 1	CONTRACT 55524

ET:55524/Cadd Files\1-PROJ-SHT.dwg/Last Edit: 2004-04-06 (17:00)/Plot Scale: 1:1 (A1)

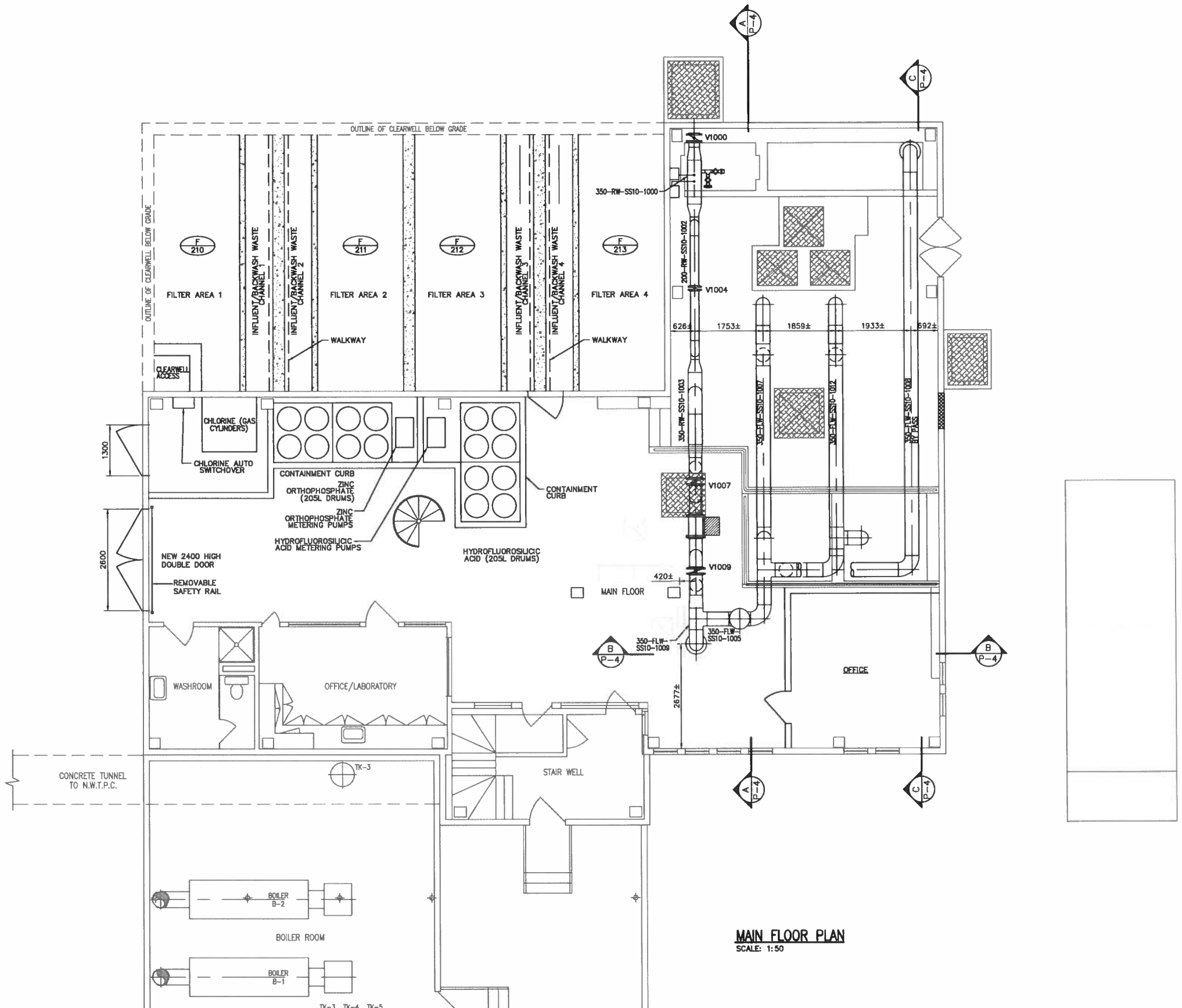

MAIN FLOOR PLAN

SCALE: 1:50

NOTES:

1. ALL ELEVATIONS AND DIMENSIONS ARE APPROXIMATE.

NO.	REVISION	DATE	INITIAL
2	RECORD DRAWING	23/04/04	DKB
1	ISSUED FOR CONSTRUCTION	22/04/03	CKW
0	ISSUED FOR TENDER	19/02/03	CKW

Company Permit

Engineer Seal

RECORD DRAWING
INFORMATION CONTAINED IN THESE DRAWINGS IS AS SUPPLIED BY: SCHENDEL MECHANICAL CONTRACTING LTD. THE COMPLETENESS AND ACCURACY OF THIS RECORD DRAWING IS NOT GUARANTEED. INFORMATION SHOULD BE VERIFIED AT THE ACTUAL LOCATION BEFORE USE.

PROCESS

UPPER FLOOR LAYOUT

Iqaluit
CITY of IQALUIT, Nunavut

CITY OF IQALUIT

IQALUIT WATER TREATMENT PLANT

EARTH TECH

Earth Tech (Canada) Inc.

DRAWN BY: CKW/KWM CHECKED BY: CKW	SCALE: 1:50	DATE: OCT. 2002	SHEET NO.
CADD SYSTEM AutoCAD	DWG NO. P-1	REV. 1	CONTRACT 55524

10/19/04 01:47pm richard.henderson L:\work\55000\55524\03-Report\O&M DISC\PROJECT RECORD DRAWINGS\55524-P1-RECORD.dwg Layout:P-1

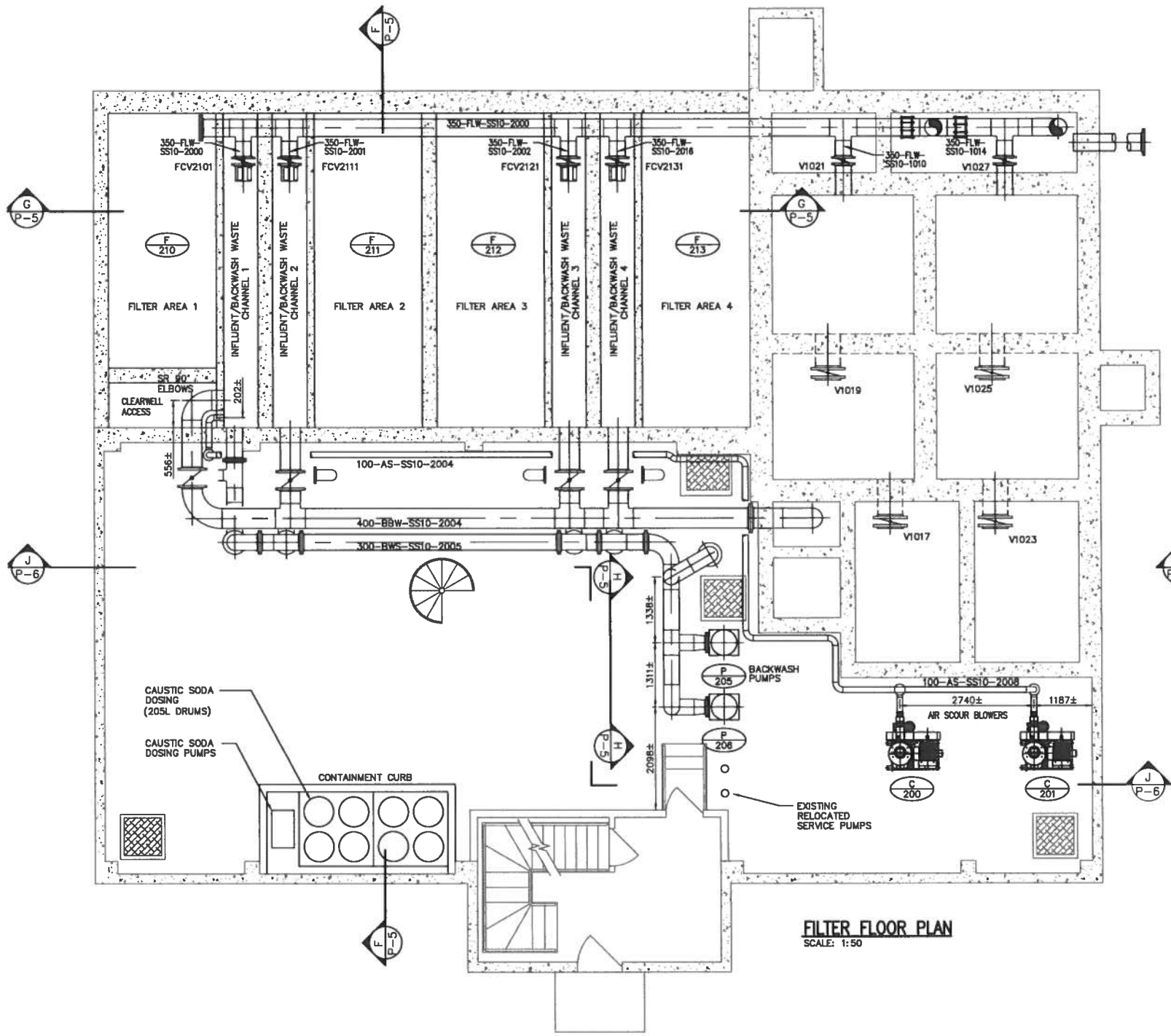

FILTER FLOOR PLAN
SCALE: 1:50

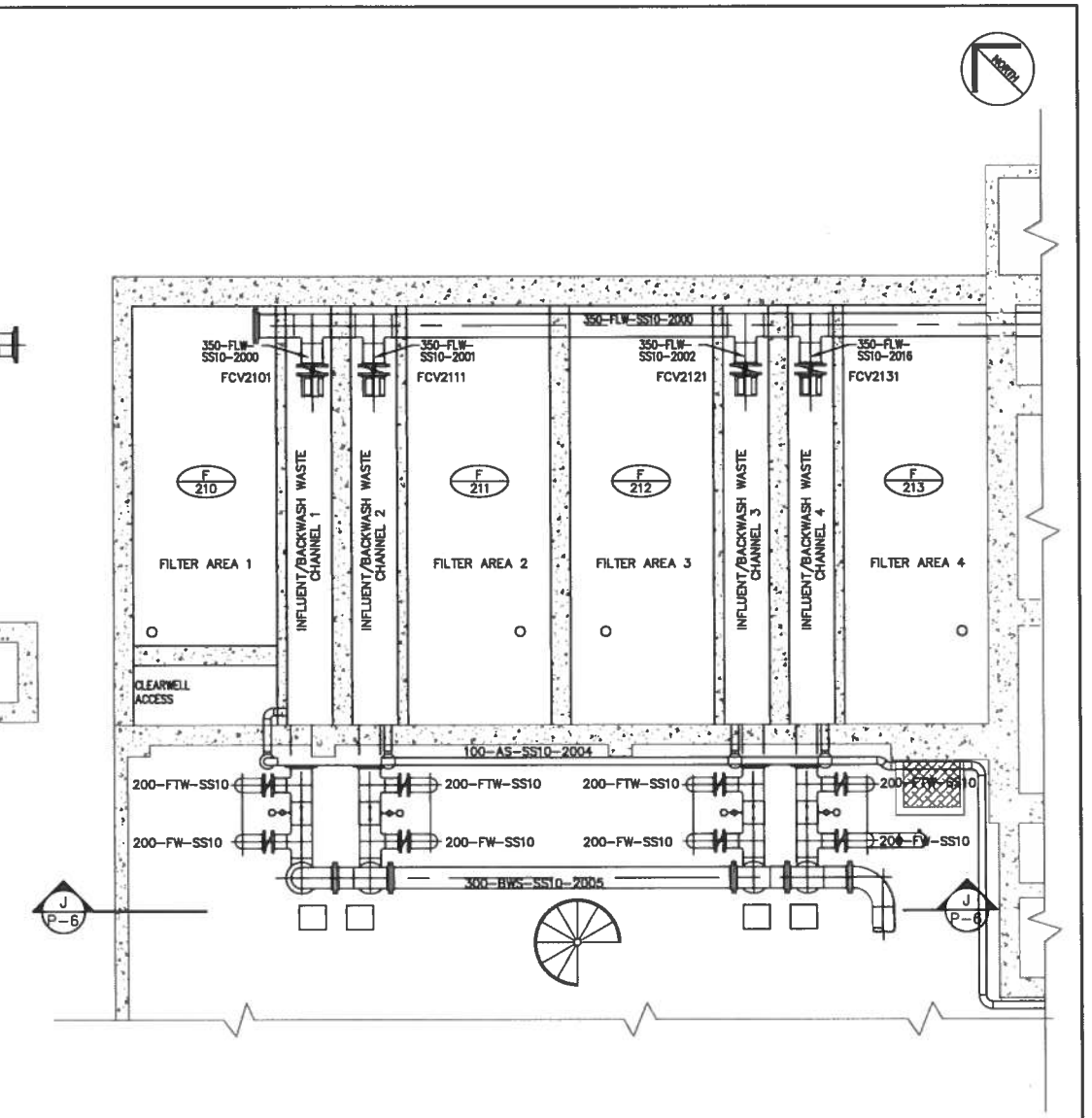

LOWER FILTER FLOOR PLAN
SCALE: 1:50

NOTES:

1. ALL ELEVATIONS AND DIMENSIONS ARE APPROXIMATE.

NO.	REVISION	DATE	INITIAL
2	RECORD DRAWING	23/04/04	DKB
1	ISSUED FOR CONSTRUCTION	22/04/03	CKW
0	ISSUED FOR TENDER	19/02/03	CKW

Company Permit

Engineer Seal

RECORD DRAWING
INFORMATION CONTAINED IN THESE DRAWINGS IS AS SUPPLIED BY: SCHENDEL MECHANICAL CONTRACTING LTD. THE COMPLETENESS AND ACCURACY OF THIS RECORD DRAWING IS NOT GUARANTEED. INFORMATION SHOULD BE VERIFIED AT THE ACTUAL LOCATION BEFORE USE.

PROCESS

FILTER FLOOR LAYOUT

Iqaluit
CITY of IQALUIT, Nunavut

CITY OF IQALUIT

IQALUIT WATER TREATMENT PLANT

EARTH TECH
Earth Tech (Canada) Inc.

DRAWN BY: CKW/KWM	SCALE:	DATE:	SHEET NO.
CHECKED BY: CKW	AS NOTED	OCT. 2002	
CADD SYSTEM AutoCAD	DWG NO. P-2	REV. 1	CONTRACT 55524

10/19/04 01:48pm richard.henderson L:\work\55000\55524\03-Report\O&M DISC\PROJECT RECORD DRAWINGS\55524-P2-RECORD.dwg Layout:P-2

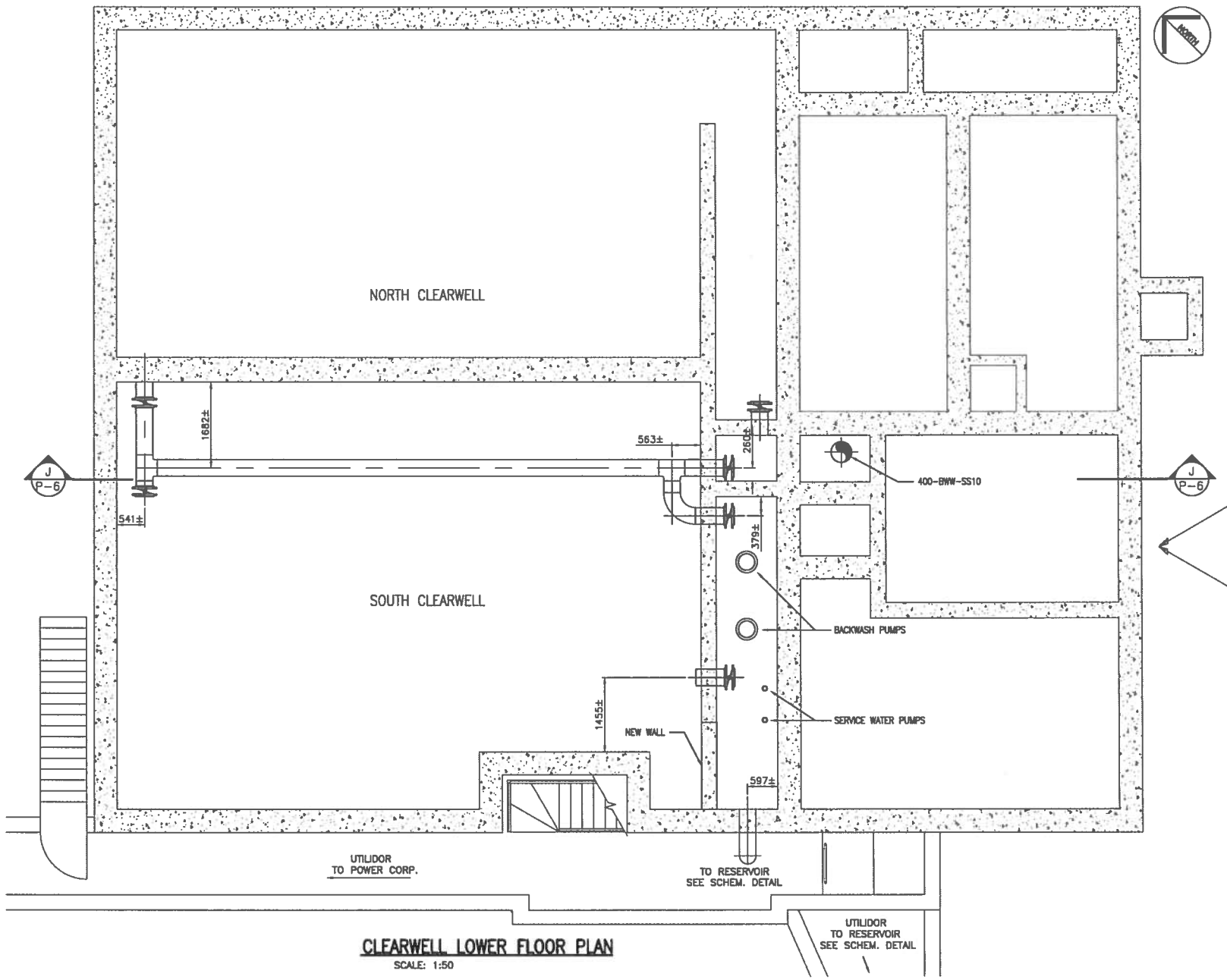

CLEARWELL LOWER FLOOR PLAN

SCALE: 1:50

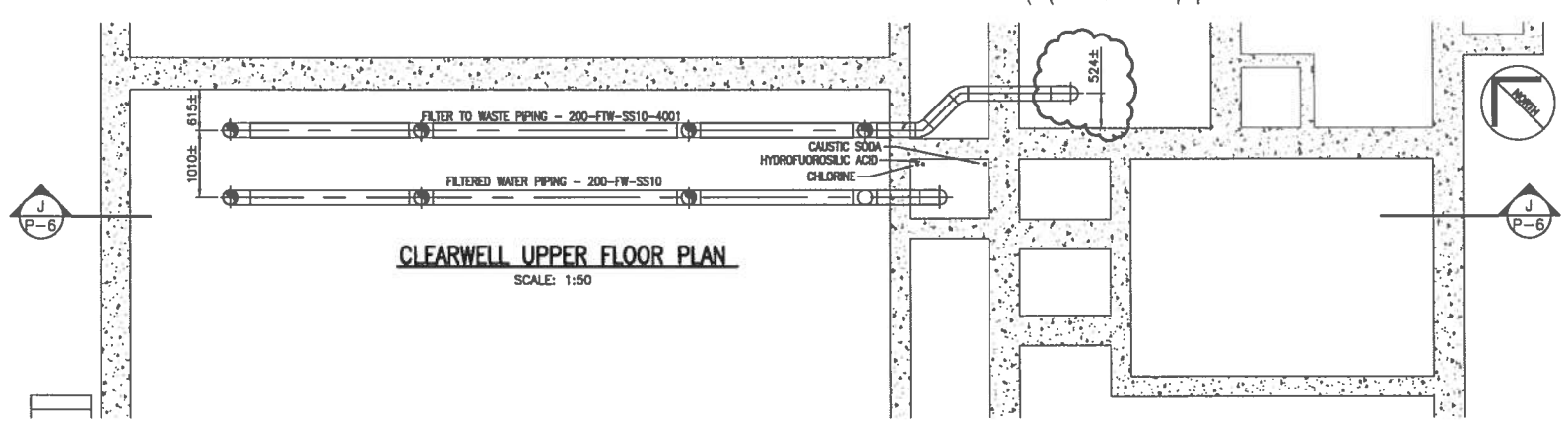

CLEARWELL UPPER FLOOR PLAN

SCALE: 1:50

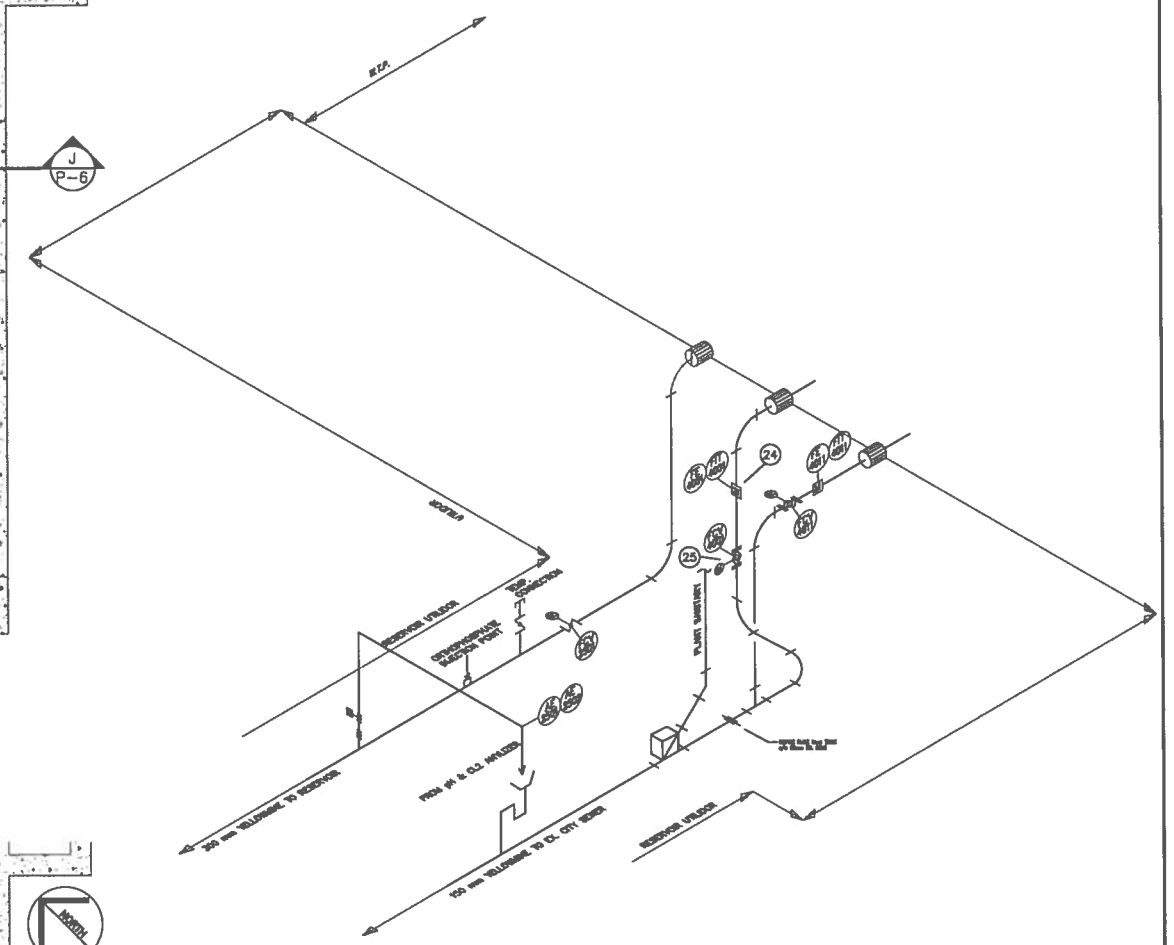

SCHEM. SHOWING WASTE & FILTERED WATER

SCALE: N.T.S.

NOTES:

1. ALL ELEVATIONS AND DIMENSIONS ARE APPROXIMATE.

NO.	REVISION	DATE	INITIAL
2	RECORD DRAWING	23/04/04	DKB
1	ISSUED FOR CONSTRUCTION	22/04/03	CKW
0	ISSUED FOR TENDER	19/02/03	CKW

Company Permit

Engineer Seal

RECORD DRAWING
INFORMATION CONTAINED IN THESE DRAWINGS IS AS SUPPLIED BY: SCHENDEL MECHANICAL CONTRACTING LTD. THE COMPLETENESS AND ACCURACY OF THIS RECORD DRAWING IS NOT GUARANTEED. INFORMATION SHOULD BE VERIFIED AT THE ACTUAL LOCATION BEFORE USE.

PROCESS

CLEARWELL LEVEL LAYOUT

Iqaluit
CITY of IQALUIT, Nunavut

CITY OF IQALUIT

IQALUIT WATER TREATMENT PLANT

EARTH TECH

Earth Tech (Canada) Inc.

DRAWN BY: CKW/KWM	SCALE: AS NOTED	DATE: OCT. 2002	SHEET NO.
CHECKED BY: CKW			
CADD SYSTEM AutoCAD	DWG NO. P-3	REV. 1	CONTRACT 55524

10/19/04 01:50pm richard.henderson L:\work\55000\55524\03-Report\O&M DISC\PROJECT RECORD DRAWINGS\55524-P3-RECORD.dwg Layout:P-3

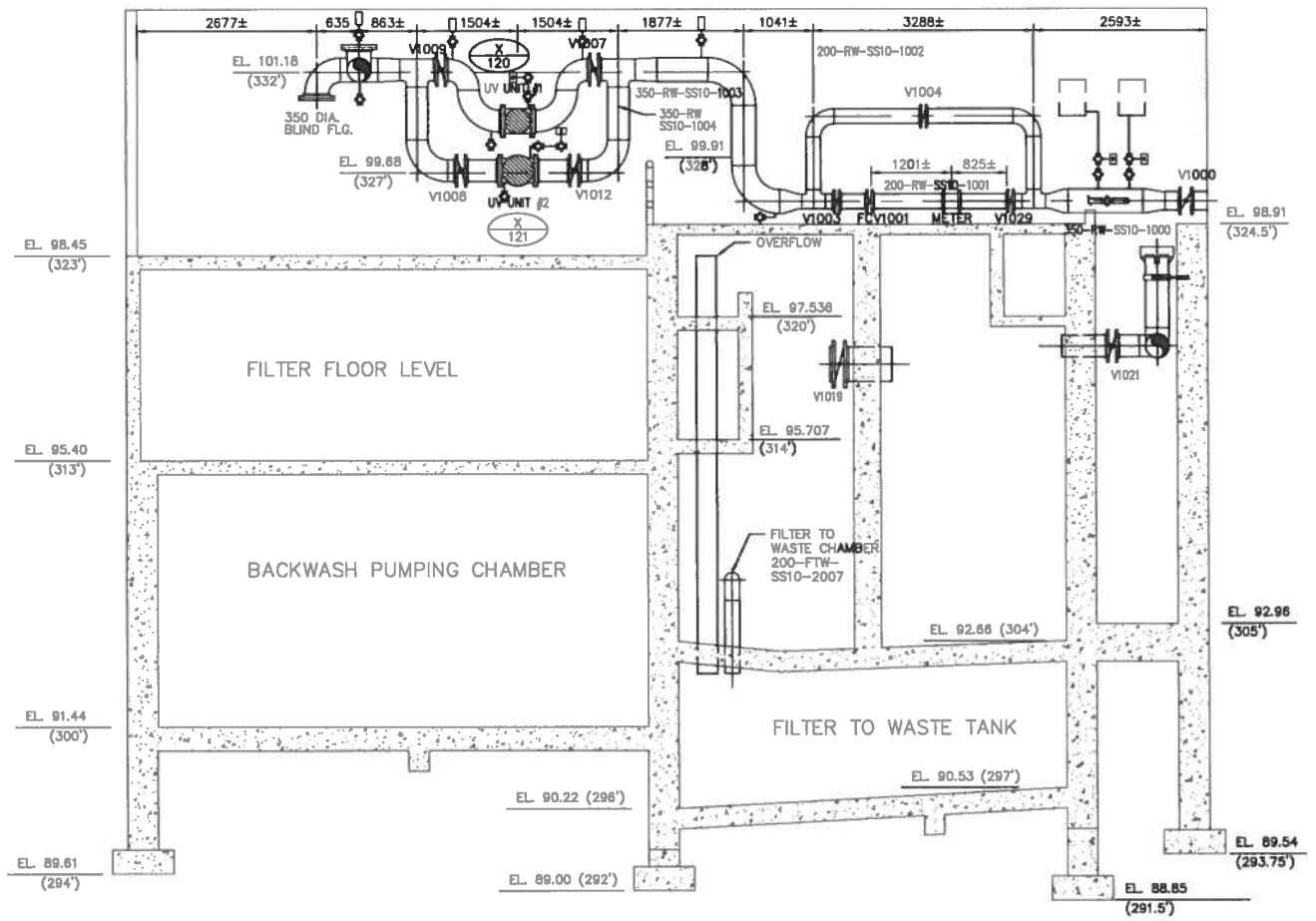

SECTION A
SCALE: 1:50
P-1

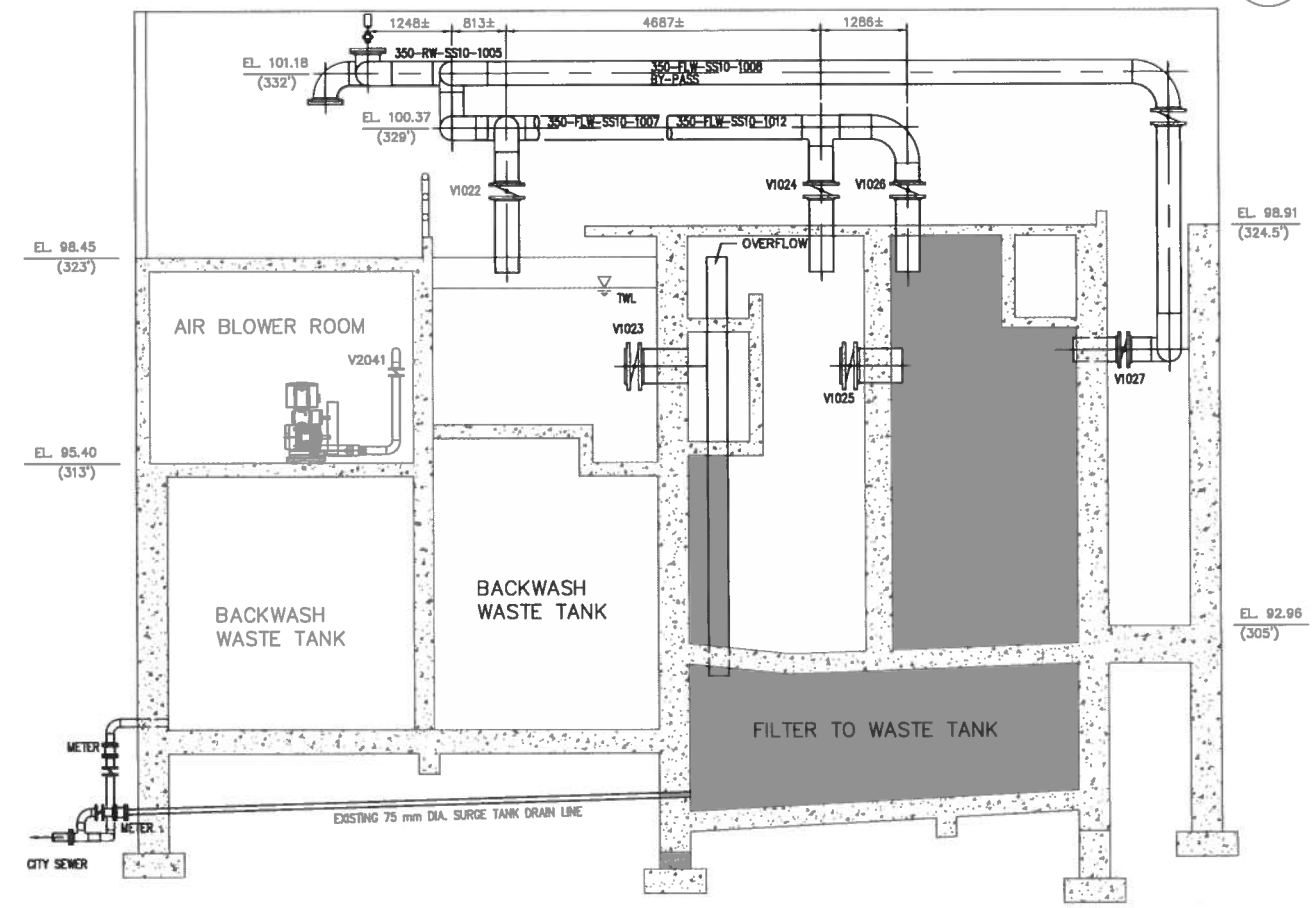

SECTION C
SCALE: 1:50
P-1

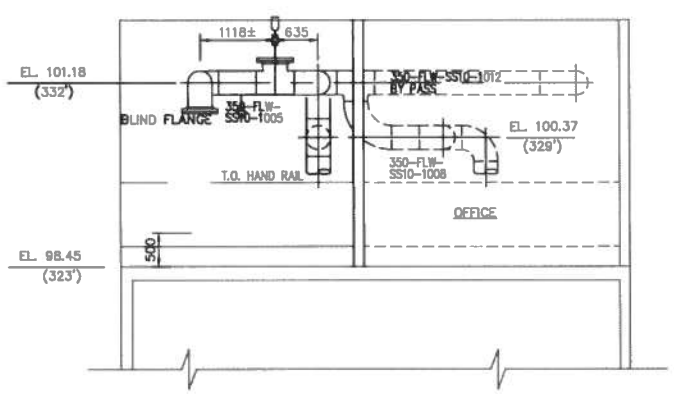

SECTION B
SCALE: 1:50
P-1

NOTES:

1. ALL ELEVATIONS AND DIMENSIONS ARE APPROXIMATE.

NO.	REVISION	DATE	INITIAL
2	RECORD DRAWING	23/04/04	DKB
1	ISSUED FOR CONSTRUCTION	22/04/03	CKW
0	ISSUED FOR TENDER	19/02/03	CKW

Company Permit

Engineer Seal

RECORD DRAWING
INFORMATION CONTAINED IN THESE DRAWINGS IS AS SUPPLIED BY: SCHENDEL MECHANICAL CONTRACTING LTD. THE COMPLETENESS AND ACCURACY OF THIS RECORD DRAWING IS NOT GUARANTEED. INFORMATION SHOULD BE VERIFIED AT THE ACTUAL LOCATION BEFORE USE.

PROCESS

UPPER FLOOR
SECTIONS A,B & C

Iqaluit
CITY of IQALUIT,
Nunavut

CITY OF IQALUIT

IQALUIT WATER TREATMENT PLANT

EARTH TECH
Earth Tech (Canada) Inc.

DRAWN BY: CKW/KWM	SCALE:	DATE:	SHEET NO.
CHECKED BY: CKW	AS NOTED	OCT. 2002	
CADD SYSTEM AutoCAD	DWG NO. P-4	REV. 1	CONTRACT 55524

10/19/04 01:51pm richard.henderson L:\work\55000\55524\03-Report\O&M DISC\PROJECT RECORD DRAWINGS\55524-P4-RECORD.dwg Layout:P-4 (Section A-C)

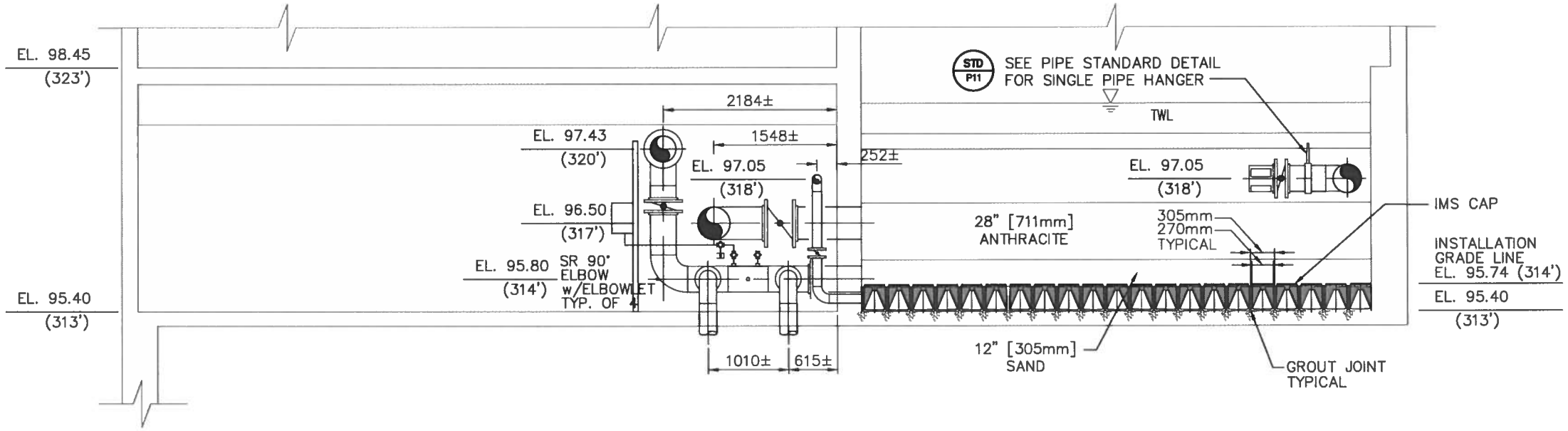

SECTION F P-2
SCALE: 1:30

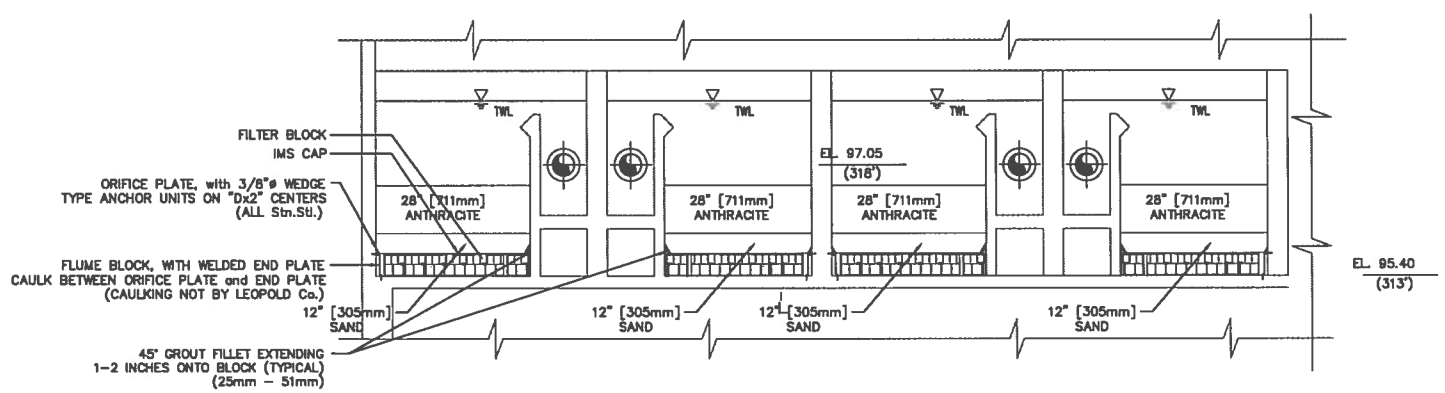

SECTION G P-2
SCALE: 1:50

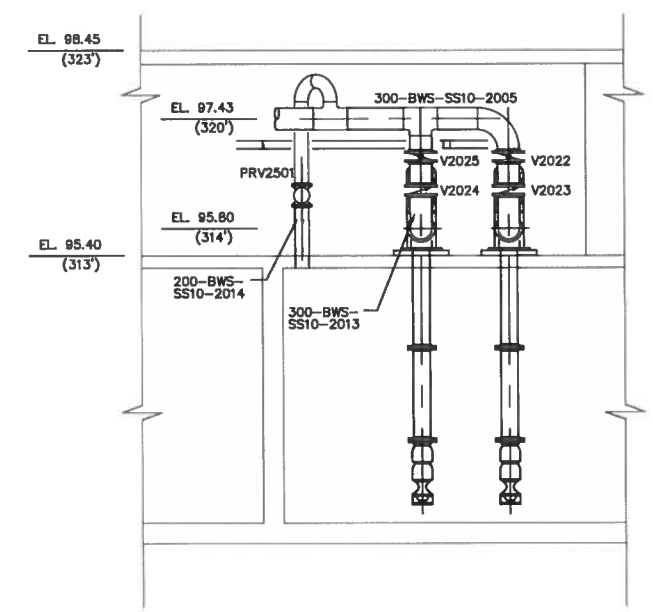

SECTION H P-2
SCALE: 1:50

NOTES:

1. ALL ELEVATIONS AND DIMENSIONS ARE APPROXIMATE.

NO.	REVISION	DATE	INITIAL
2	RECORD DRAWING	23/04/04	DKB
1	ISSUED FOR CONSTRUCTION	22/04/03	CKW
0	ISSUED FOR TENDER	19/02/03	CKW

Company Permit | Engineer Seal

RECORD DRAWING
INFORMATION CONTAINED IN THESE DRAWINGS IS AS SUPPLIED BY: SCHENDEL MECHANICAL CONTRACTING LTD. THE COMPLETENESS AND ACCURACY OF THIS RECORD DRAWING IS NOT GUARANTEED. INFORMATION SHOULD BE VERIFIED AT THE ACTUAL LOCATION BEFORE USE.

PROCESS

FILTER FLOOR
SECTION F TO H

Iqaluit
CITY of IQALUIT, Nunavut

CITY OF IQALUIT

IQALUIT WATER TREATMENT PLANT

EARTH TECH
Earth Tech (Canada) Inc.

DRAWN BY: CKW/KWM	SCALE: AS NOTED	DATE: OCT. 2002	SHEET NO.
CHECKED BY: CKW			
CADD SYSTEM AutoCAD	DWG NO. P-5	REV. 1	CONTRACT 55524

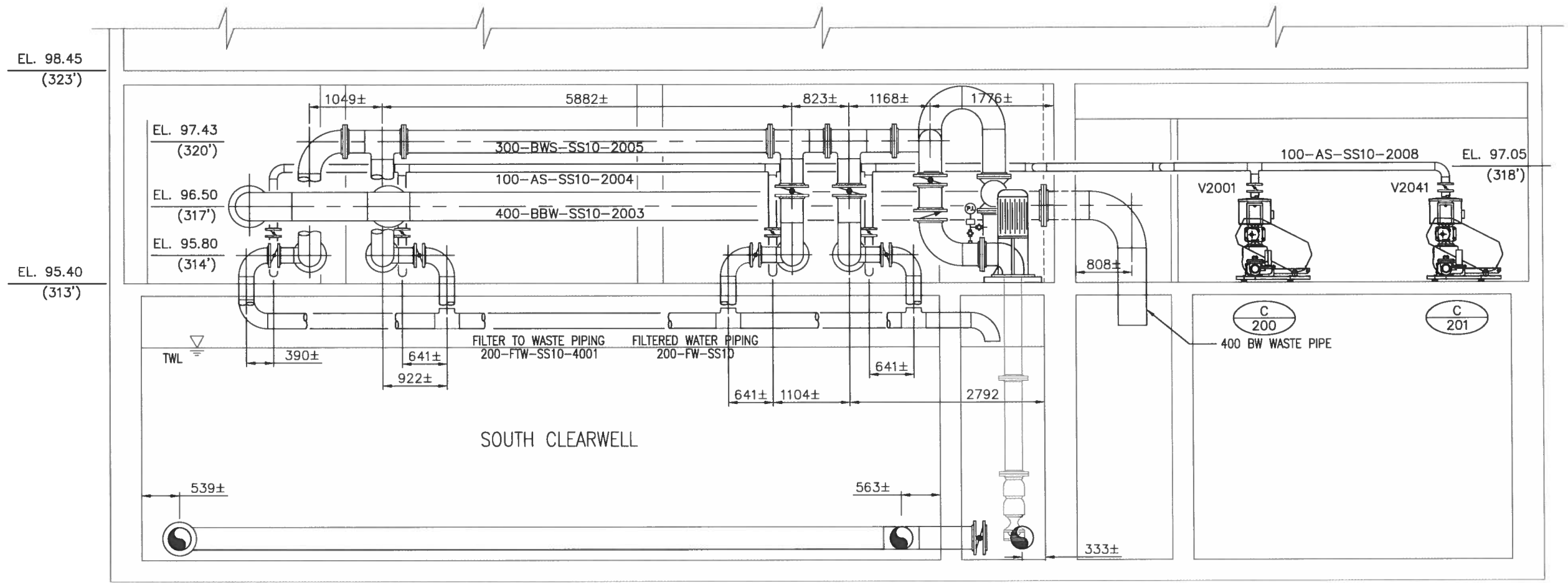

SECTION J/P-2 J/P-3
SCALE: 1:30

NOTES:
1. ALL ELEVATIONS AND DIMENSIONS ARE APPROXIMATE.

NO.	REVISION	DATE	INITIAL
2	RECORD DRAWING	23/04/04	DKB
1	ISSUED FOR CONSTRUCTION	22/04/03	CKW
0	ISSUED FOR TENDER	19/02/03	CKW

Company Permit

Engineer Seal

RECORD DRAWING
INFORMATION CONTAINED IN THESE DRAWINGS IS AS SUPPLIED BY: SCHENDEL MECHANICAL CONTRACTING LTD. THE COMPLETENESS AND ACCURACY OF THIS RECORD DRAWING IS NOT GUARANTEED. INFORMATION SHOULD BE VERIFIED AT THE ACTUAL LOCATION BEFORE USE.

PROCESS
FILTER FLOOR
SECTION J

Iqaluit
CITY of IQALUIT, Nunavut

CITY OF IQALUIT
IQALUIT WATER TREATMENT PLANT

EARTH TECH
Earth Tech (Canada) Inc.

DRAWN BY: CKW/KWM	SCALE: AS NOTED	DATE: OCT. 2002	SHEET NO.
CHECKED BY: CKW			
CADD SYSTEM AutoCAD	DWG NO. P-6	REV. 1	CONTRACT 55524

10/19/04 01:53pm richard.henderson L:\work\55000\55524\03-Report\O&M DISC\PROJECT RECORD DRAWINGS\55524-P6-RECORD.dwg Layout:P-6 (Sections J)

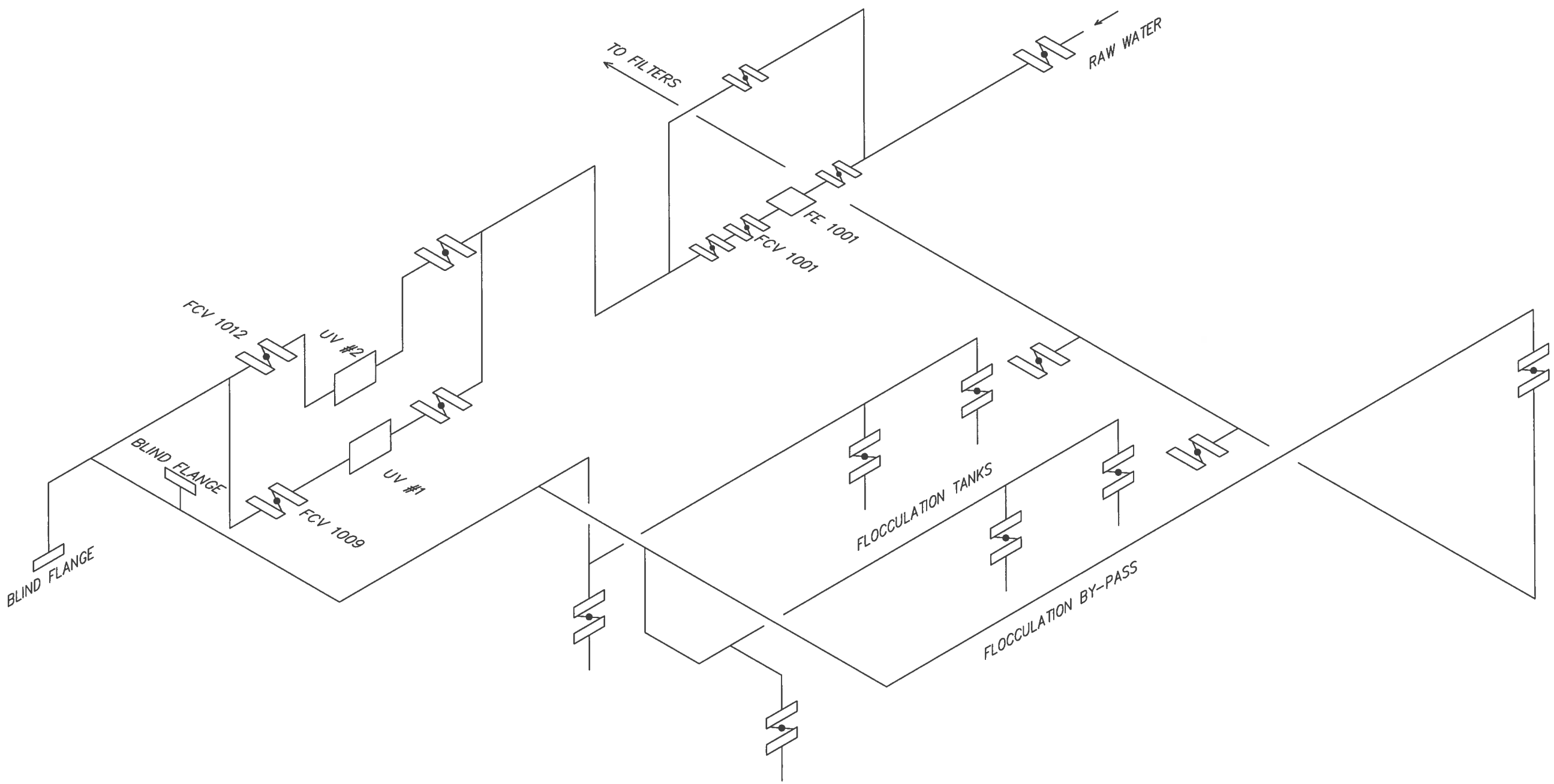

NOTES:

1. ALL ELEVATIONS AND DIMENSIONS ARE APPROXIMATE.

NO.	REVISION	DATE	INITIAL
2	RECORD DRAWING	23/04/04	DKB
1	ISSUED FOR CONSTRUCTION	22/04/03	CKW
0	ISSUED FOR TENDER	19/02/03	CKW

Company Permit

Engineer Seal

RECORD DRAWING
INFORMATION CONTAINED IN THESE DRAWINGS IS AS SUPPLIED BY: SCHENDEL MECHANICAL CONTRACTING LTD. THE COMPLETENESS AND ACCURACY OF THIS RECORD DRAWING IS NOT GUARANTEED. INFORMATION SHOULD BE VERIFIED AT THE ACTUAL LOCATION BEFORE USE.

PROCESS

UPPER FLOOR
PIPING SCHEMATIC

Iqaluit
CITY of IQALUIT, Nunavut

CITY OF IQALUIT

IQALUIT WATER TREATMENT PLANT

EARTH TECH
Earth Tech (Canada) Inc.

DRAWN BY: DKB	SCALE: N.T.S.	DATE: APR. 29 2004	SHEET NO.
CHECKED BY: DAT			
CADD SYSTEM AutoCAD	DWG NO. P-7	REV. 1	CONTRACT 55524

10/19/04 01:55pm richard.henderson L:\work\55000\55524\03-Report\O&M DISC\PROJECT RECORD DRAWINGS\55524-P7-RECORD.dwg Layout:P-7 (PIPING SCHEMATIC)

GENERAL NOTES

GENERAL

1. READ THE STRUCTURAL DRAWINGS IN CONJUNCTION WITH THE SPECIFICATIONS AND OTHER CONTRACT DRAWINGS AND DOCUMENTS.
2. ALL DIMENSIONS ON THE DRAWINGS ARE IN MILLIMETRES (mm), UNLESS NOTED OTHERWISE.
3. BEFORE PROCEEDING WITH THE WORK, CHECK ALL DIMENSIONS SHOWN ON THE STRUCTURAL DRAWINGS WITH ALL OTHER CONTRACT DRAWINGS INCLUDING THE PROCESS, PROCESS & INSTRUMENTATION, ARCHITECTURAL, MECHANICAL AND ELECTRICAL DRAWINGS. REPORT ANY DISCREPANCIES TO THE CONSULTANT AND AWAIT INSTRUCTIONS PRIOR TO PROCEEDING WITH THE WORK.
4. REFER TO THE PROCESS, PROCESS & INSTRUMENTATION, MECHANICAL, ELECTRICAL AND ARCHITECTURAL DRAWINGS FOR LOCATIONS AND DIMENSIONS OF PIPES, OPENINGS, SLEEVES, PITS, EQUIPMENT BASES, SUMPS, TRENCHES, DEPRESSIONS, GROOVES, CURBS, CHAMFERS AND SLABS NOT SHOWN ON THE STRUCTURAL DRAWINGS. REPORT ANY DISCREPANCIES TO THE CONSULTANT AND AWAIT INSTRUCTIONS PRIOR TO PROCEEDING WITH THE WORK.
5. CONTRACTOR TO CONFIRM WITH ALL EQUIPMENT SUPPLIERS, PIT LOCATIONS, SHAFT SIZES, OPENING SIZES, CURB SIZES, AND ALL OTHER CRITICAL DETAILS PRIOR TO CONSTRUCTION. REPORT TO THE CONSULTANT ANY DIFFERENCES BETWEEN DETAILS OR SUPPLIED EQUIPMENT COMPARED TO INFORMATION SPECIFIED AND OBTAIN APPROVAL PRIOR TO PROCEEDING.
6. THE STRUCTURAL DRAWINGS ARE FOR THE COMPLETED PROJECT. THE CONTRACTOR IS RESPONSIBLE FOR THE SAFETY OF WORKERS AND THE STABILITY OF THE STRUCTURE DURING CONSTRUCTION. CONSTRUCTION LOADS SHALL NOT EXCEED THE LOADS TABULATED IN THE DESIGN NOTES.
7. MATERIALS AND WORKMANSHIP SHALL CONFORM TO THE LATEST EDITION OF THE NATIONAL BUILDING CODE (NBC) AND THE SPECIFIED MATERIALS STANDARDS UNLESS OTHERWISE NOTED.

DESIGN NOTES

1. CODES, STANDARDS & REFERENCES
   - .1 NATIONAL BUILDING CODE OF CANADA (NBC) (LATEST EDITION).
   - .2 CSA CAN3-A23.3 (LATEST EDITION).
   - .3 CSA CAN3-S16.1 (LATEST EDITION).
   - .4 CSA CAN3-S157 (LATEST EDITION)
   - .5 CAN/CSA-086.1 (LATEST EDITION).
   - .6 PCA 'RECTANGULAR CONCRETE TANKS' 5th EDITION
   - .7 ACI 350 'ENVIRONMENTAL ENGINEERING CONCRETE STRUCTURES' (LATEST EDITION)
2. DESIGN LOADS

   THE FOLLOWING UNIFORM SERVICE LEVEL LOADS APPLY. ADDITIONAL LOADS HAVE BEEN CONSIDERED IN LOCATIONS WHERE HEAVY BUILDING COMPONENTS SUCH AS BRICK PANELS, BLOCK WALLS, EQUIPMENT, ETC., ARE SUSPENDED FROM OR SUPPORTED ON THE STRUCTURE.

2.1 ROOF

UNIFORM DEAD LOAD (BASIC) (NOT INCLUDING STRUCTURE SELF WT)		1.0 kPa
STRUCTURE SELF WEIGHT		AS PER DRAWINGS
GROUND SNOW (LIVE) LOAD	Ss	2.7 kPa
ASSOCIATED RAIN (LIVE) LOAD	Sr	0.2 kPa
BASIC SNOW LOAD COEFFICIENT (SNOW LOAD DRIFT AND SLIDING COEFFICIENTS AS PER NATIONAL BUILDING CODE SUPPLEMENT (NBCS – LATEST EDITION)		0.8
ROOF WIND COEFFICIENT		0.75
MINIMUM ROOF SNOW & RAIN(LIVE LOAD)		1.82 kPa
q_{30} WIND (AS PER NBC COMMENTARY)		0.55 kPa

2.2 FLOOR

USE AND OCCUPANCY – LIVE LOADS

GENERAL (INCL. FLOOR GRATINGS)	4.8 kN/m²
EQUIPMENT	8.0 kN/m² OR EQUIPMENT WEIGHT
STRUCTURE SELF WEIGHT	AS PER DRAWINGS
WATER LOAD	DEPTH OF WATER x 9.8 kN/m³

2.3 TANK WALLS – LATERAL LOADS

WATER PRESSURE	9.8 x h	(h=WATER DEPTH)
FILTER SAND	16.8 x h	(h=DEPTH OF SAND)
FILTER COAL	3.0 x h	(h=DEPTH OF COAL)
BACKFILL PRESSURE	p = 20 x h	

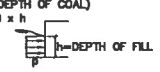

2.4 SEISMIC LOAD CONSIDERATIONS

Za = 1
Zv = 0
v = 0.05

FOUNDATION NOTES

1. GENERAL

   THE FOUNDATION HAS BEEN DESIGNED BASED ON KNOWLEDGE OF EXISTING SITE CONDITIONS. REFER TO PLANS.

2. COMPACTION DENSITIES AND FILL MATERIALS (U.N.O.)

LOCATION	FILL MATERIAL	*STANDARD PROCTOR DENSITY
BENEATH STRUCTURAL SLAB-ON-GRADE	150 mm (MIN.) THICK CRUSHED OR PIT RUN GRAVEL.	100%
AGAINST FOUNDATION WALLS AND GRADE BEAMS	SAND, PIT RUN GRAVEL OR CRUSHED GRAVEL FULL DEPTH EXCEPT FOR UPPERMOST 300 mm OF FILL AGAINST WALLS AND BEAMS WHICH EXTEND TO SURFACE, THIS 300 mm LAYER OF MATERIAL SHALL CONSIST OF CLAY.	97%
WITHIN UTILITY TRENCHES LOCATED BENEATH ROADWAYS, SIDEWALKS OR OTHER CONCRETE SLABS	CRUSHED GRAVEL, PIT RUN GRAVEL OR SAND.	100%
WITHIN UTILITY TRENCHES LOCATED BENEATH LANDSCAPED AREAS	CLAY, NATIVE OR IMPORTED.	97%

* NOTE: LISTED STANDARD PROCTOR DENSITIES ARE REQUIRED FOR BOTH THE SUB-GRADE AND THE FILL MATERIAL TO BE PLACED OVER THE SUB-GRADE.

CAST-IN-PLACE CONCRETE NOTES

1. CONCRETE SHALL CONFORM TO CSA CAN3-A23.1-(LATEST EDITION), UNLESS NOTED OTHERWISE.
2. CONCRETE SHALL BE NORMAL WEIGHT AND MEET THE FOLLOWING REQUIREMENTS, UNLESS NOTED OTHERWISE:

CONCRETE CLASS	MINIMUM COMPRESSIVE STRENGTH @ 28 DAYS (MPa)	MAXIMUM WATER/ CEMENTING MATERIALS RATIO	MINIMUM CEMENT CONTENT (kg)	NOMINAL SIZE OF COARSE AGG. (mm)	AIR CONTENT (%)	SLUMP[1] (mm)
ALL LOCATIONS	30	0.43	280	20	5-7	70±20

[1] SLUMP PRIOR TO THE ADDITION OF ANY SUPERPLASTICIZER.

3. TYPE 50 CEMENT SHALL BE USED FOR ALL CONCRETE.
4. CALCIUM CHLORIDE IN ANY FORM IS NOT PERMITTED IN ANY CONCRETE.

REINFORCING STEEL NOTES

1. ALL REINFORCING BARS SHALL CONFORM TO CSA G30.18-M92, GRADE 400. WELDING OF REINFORCING BARS TO CONFORM TO CSA STANDARD W186-(LATEST EDITION), "WELDING OF REINFORCING BARS IN REINFORCED CONCRETE CONSTRUCTION". NOTIFY CONSULTANT IF WELDING OF REINFORCING IS REQUIRED AND RECEIVE APPROVAL PRIOR TO PROCEEDING.
2. REINFORCING WORK SHALL BE IN ACCORDANCE WITH CAN/CSA3-A23.1- LATEST EDITION.
3. REINFORCING STEEL SHALL BE DETAILED IN ACCORDANCE WITH THE LATEST EDITION OF THE ACI DETAILING MANUAL OR THE REINFORCING STEEL INSTITUTE OF CANADA DETAILING MANUAL.
4. MECHANICAL COUPLERS ARE PERMITTED IF REQUIRED AND WHERE SPECIFIED. SUBMIT PROPOSED COUPLER TYPE TO CONSULTANT FOR REVIEW AND APPROVAL PRIOR TO USE. COUPLERS SHALL BE CAPABLE OF DEVELOPING 125% OF THE SPECIFIED YIELD CAPACITY OF THE BARS BEING COUPLED.
5. 90° HOOKS AND 180° HOOKS WHERE SHOWN SHALL BE DETAILED AS STANDARD HOOKS UNLESS NOTED OTHERWISE.
6. WHERE REINFORCEMENT LAPS ARE REQUIRED IN ADJACENT BARS, STAGGER LAPS MINIMUM 1200 UNLESS NOTED OTHERWISE.
7. REINFORCEMENT THAT IS IN CONFLICT WITH PIPE SLEEVE LOCATIONS, OPENINGS, ETC. SHALL BE CUT AND SUPPLEMENTED WITH CLASS 'C' LAP BARS OF SAME SIZE ADJACENT TO THE CUT BAR AS INDICATED IN THE FOLLOWING DETAIL :

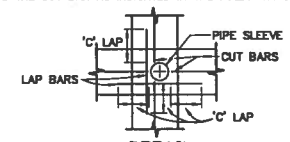

DETAIL

SITE CAST-IN-PLACE REINFORCED CONCRETE WORK

1. REINFORCED CONCRETE WORK SHALL CONFORM TO THE REQUIREMENTS OF CAN/CSA-A23.1-LATEST EDITION, CAN/CSA-A23.2-LATEST EDITION, CAN/CSA-A23.3-LATEST EDITION. THE CONTRACTOR SHALL HAVE COPIES OF THESE STANDARDS ON SITE AT ALL TIMES FOR REFERENCE.
2. CONCRETE COVER TO REINFORCING STEEL SHALL CONFORM TO THE MOST STRINGENT REQUIREMENT LISTED BELOW, UNLESS NOTED OTHERWISE:

CONCRETE CAST AGAINST EARTH OR ROCK	75 mm
CONCRETE CAST IN FORMS BUT EXPOSED TO EARTH, WEATHER, OR CONTAINED WATER	50 mm
CONCRETE NOT EXPOSED TO WEATHER OR NOT IN CONTACT WITH GROUND OR CONTAINED WATER	
WALLS	40 mm
SLABS	40 mm
BEAMS – TO STIRRUPS	40 mm
COLUMNS – TO TIES	40 mm

3. UNLESS NOTED OTHERWISE, REINFORCING BAR LAPS SHALL BE CLASS C TENSION SPLICES.
4. DOWELS AND ANCHOR BOLTS SHALL BE SECURED IN POSITION BY MEANS OF TEMPLATES BEFORE CONCRETE IS PLACED.
5. REINFORCING STEEL IN SLABS AND BEAMS SHALL BE ADEQUATELY SUPPORTED TO ENSURE THAT IT REMAINS IN POSITION DURING CONCRETE PLACEMENT. REINFORCING STEEL SHALL NOT BE LIFTED INTO POSITION DURING CASTING.
6. CONTRACTOR SHALL SUBMIT TO THE CONSULTANT FOR APPROVAL WELL IN ADVANCE OF CONCRETE PLACEMENT DATE, THE LOCATIONS AND DETAILS OF ALL CONSTRUCTION JOINTS NOT SHOWN ON THE DRAWINGS.
7. CONTRACTOR SHALL SUBMIT TO THE CONSULTANT FOR APPROVAL WELL IN ADVANCE OF CONCRETE PLACEMENT DATE, THE LOCATIONS OF ALL SLEEVES AND OPENINGS NOT SHOWN ON THE DRAWINGS. REVIEW ALL DRAWINGS FOR DETAILS OF FIXTURES, INSERTS, ETC., WHICH ARE REQUIRED TO BE CAST INTO CONCRETE ELEMENTS. THE CONSULTANT WILL PROVIDE STRUCTURAL DETAILS AS REQUIRED FOR SLEEVES AND OPENINGS.
8. PROVIDE RECESSES IN THE TOP OF FOUNDATION WALLS AND GRADE BEAMS AT ALL DOOR OPENINGS, TO ALLOW SLAB-ON-GRADE TO CONTINUE OVER.
9. REVIEW ALL DRAWINGS FOR FLOOR RECESS AND SLOPE REQUIREMENTS FOR CONCRETE SLABS AND COORDINATE AND PERFORM THIS WORK.
10. TOOLED OR SAW CUT CONTROL JOINTS IN SLAB-ON-GRADE CONSTRUCTION TO BE AS PER CSA CAN3-A23.1. LOCATIONS AS PER DRAWINGS EXCEPT THAT WHEN LOCATIONS ARE NOT INDICATED, JOINTS SHALL BE SPACED AT 4500 mm ON CENTRE MAXIMUM. OBTAIN CONSULTANT'S APPROVAL OF LOCATIONS PRIOR TO PROCEEDING. FILL ALL JOINTS WITH DUOFLEX 2 SEALANT BY STERNSON.
11. UNLESS INDICATED OTHERWISE, ALL SLABS-ON-GRADE SHALL BE 125 mm THICK PLACED ON AN APPROVED COMPACTED PIT RUN GRANULAR MATERIAL 150 mm MINIMUM THICKNESS. COMPACTION OF GRANULAR MATERIAL TO EQUAL 100% STANDARD PROCTOR DENSITY EXCEPT WHERE INDICATED OTHERWISE. REINFORCE WITH 10M AT 300 O.C. EACH WAY, CHAIR REINFORCEMENT TO ENSURE IT IS LOCATED IN TOP ONE THIRD THICKNESS OF SLAB.
12. REFER TO SITE DRAWINGS FOR EXACT SIZE, EXTENT, AND LOCATIONS OF EXTERIOR WALKS AND PADS.
13. PROVIDE 20 CHAMFER AT CORNERS/EDGES OF ALL WALLS, SLABS & BEAMS UNLESS NOTED OTHERWISE.
14. SPECIFIED DRILLED & EPOXIED DOWEL LOCATIONS/SPACING MAY BE SLIGHTLY MODIFIED IN ORDER TO AVOID HITTING OR DAMAGING EXISTING REINFORCEMENT. CONTRACTOR TO USE REBAR LOCATING DEVICE TO AVOID CONFLICTS. REVIEW ALL CONFLICTS WITH ENGINEER AND RELOCATE CONFLICTING DOWELS TO AN APPROVED POSITION.
15. DOWEL EPOXY: HILTI HIT HY150 INJECTION ADHESIVE OR CONSULTANT APPROVED ALTERNATE.

STRUCTURAL STEEL NOTES

1. ALL STRUCTURAL STEEL SHALL BE FABRICATED AND ERECTED IN ACCORDANCE WITH CSA CAN3-S16.1-(LATEST EDITION) AND THE CISC CODE OF STANDARD PRACTICE FOR BUILDINGS (LATEST EDITION) UNLESS NOTED OTHERWISE.
2. MATERIAL REQUIREMENTS
   - A) STRUCTURAL SHAPES AND PLATE (EXCLUDING HSS): IN ACCORDANCE WITH CAN/CSA G40.20-(LATEST EDITION) AND CAN/CSA G40.21-(LATEST EDITION), GRADE 300W.
   - B) HSS SECTIONS: IN ACCORDANCE WITH CAN/CSA G40.20-(LATEST EDITION) AND CAN/CSA G40.21-(LATEST EDITION), 350W.
   - C) ROUND PIPE SECTIONS: IN ACCORDANCE WITH ASTM STANDARD A53, MIN. YIELD STR. 240 MPa.
   - D) ANCHOR BOLTS: THREADED ROD: GRADE 300W.
   - E) ALL OTHER BOLTS: IN ACCORDANCE WITH ASTM A325 OR A325M.
   - F) SHEAR STUD CONNECTORS: TO CSA W59-(LATEST EDITION).
   - G) HOT DIP GALVANIZING: TO CSA G164-(LATEST EDITION).
   - H) SHOP PAINT PROTECTIVE COATINGS – ALL EXTERIOR STRUCTURAL STEEL TO BE GALVANIZED U.N.O. – REFER TO SPECIFICATIONS.
   - I) SHOP EPOXY PRIMER (FIRST COAT) AND FIELD TOUCH-UP PRIMER: IN ACCORDANCE WITH CGSB 1-GP-153.
3. ALL WELDING SHALL BE DONE WITH E480xx ELECTRODES AND SHALL CONFORM TO CSA W59-(LATEST EDITION). ALL WELDING TO BE PERFORMED BY CERTIFIED COMPANY APPROVED BY CANADIAN WELDING BUREAU UNDER REQUIREMENTS OF CSA W47.1-(LATEST EDITION).
4. ALL GROUT UNDER BEARING PLATES AND BASEPLATES SHALL BE NON-METALLIC, NON-SHRINK TYPE WITH MINIMUM 28 DAY COMPRESSIVE STRENGTH OF 40 MPa, INSTALLED IN ACCORDANCE WITH SPECIFICATIONS AND MANUFACTURER'S RECOMMENDATIONS.
5. CONNECTIONS, IF NOT SPECIFICALLY DETAILED, SHALL BE DESIGNED BY THE CONTRACTOR IN ACCORDANCE WITH CSA CAN3-S16.1-(LATEST EDITION) TO RESIST FORCES, MOMENTS AND SHEARS INDICATED ON DRAWINGS; ALTERNATIVELY WHERE THIS INFORMATION IS NOT GIVEN DESIGN CONNECTIONS TO RESIST THE SPECIFIED DEAD LOAD OF ALL MATERIALS AND THE SPECIFIED LIVE LOADS. ALL CONNECTION DESIGN AND DETAILING TO BE PERFORMED BY OR UNDER THE DIRECT SUPERVISION OF A PROFESSIONAL ENGINEER REGISTERED TO PRACTICE IN THE PROVINCE OF ALBERTA.
6. CONNECTIONS TO SIDE FACES OF HSS MEMBERS SHALL BE REINFORCED AS REQUIRED AND SHALL BE DESIGNED FOLLOWING GUIDELINES SET OUT IN THE STELCO PUBLICATION "HOLLOW STRUCTURAL SECTIONS – DESIGN MANUAL FOR CONNECTIONS" OR FOLLOWING OTHER SOUND ENGINEERING PRINCIPLES.
7. PROVIDE BOLT HOLES IN STRUCTURAL STEEL WHERE SHOWN AND WHERE REQUIRED FOR THE ATTACHMENT OF BOLTED BLOCKING OR FASTENINGS BY OTHER TRADES.
8. PROVIDE STIFFENER/BEARING PLATES ON BOTH SIDES OF W-SHAPE AND ON ONE SIDE OF C-SHAPE BEAMS AT ALL LOCATIONS WHERE CONCENTRATED LOADS OCCUR AND AT BEARING SUPPORTS. UNLESS INDICATED OTHERWISE, EACH STIFFENER SHALL EQUAL HALF THE BEAM WIDTH, BE FULL HEIGHT BETWEEN FLANGES, AND HAVE A MINIMUM THICKNESS OF 8 mm BUT SHALL NOT BE THINNER THAN THE WEB OF THE BEAM.
9. PROVIDE CLOSURE PLATES AT ALL OPEN ENDS OF ALL HSS MEMBERS. PLATE THICKNESS TO EQUAL WALL THICKNESS OF HSS MEMBER UNLESS NOTED OTHERWISE.
10. FRAME ALL OPENINGS IN ROOF AND FLOOR SYSTEMS, ROUND AND RECTANGULAR, THAT ARE LARGER IN AREA THAN A 400 mm DIAMETER HOLE. COORDINATE WITH MECHANICAL DRAWINGS, ARCHITECTURAL DRAWINGS AND OTHER CONTRACT DOCUMENTS AND PROVIDE FRAMES IN ALL SUCH LOCATIONS. IF FRAMES ARE NOT SPECIFICALLY DETAILED, DESIGN FRAMES TO SUPPORT SPECIFIED LOADS INCLUDING EQUIPMENT WHERE APPLICABLE.
11. SHOP DRAWINGS SHALL BE SUBMITTED FOR CONSULTANT REVIEW PRIOR TO ANY FABRICATION.
12. THE STRUCTURAL STEEL FRAMING IS BRACED FOR PERMANENT LATERAL STABILITY. ROOF DECKS ARE DESIGNED TO ACT AS HORIZONTAL DIAPHRAGMS TO CARRY LATERAL LOADS TO STRUCTURAL BRACING SYSTEMS. PROVIDE TEMPORARY BRACING AS REQUIRED DURING CONSTRUCTION. ERECTION BRACING TO BE REMOVED ONLY AFTER ROOF DECK, FLOOR DECK AND ALL PERMANENT STRUCTURAL FRAMING IS IN PLACE.

    ALL PERIMETER DECK ANGLES ARE REQUIRED TO BE CONTINUOUS TO FUNCTION AS PART OF THE DIAPHRAGM. ANGLE CONTINUITY SHALL BE MAINTAINED BY APPROVED SPLICES. SPLICES TO BE LOCATED AT SUPPORT POINTS ONLY.
13. CLEAN ALL STEEL PRIOR TO PAINTING TO SSPC SURFACE PREPARATION SPECIFICATION NO. 7 "BRUSH-OFF BLAST CLEANING" EXCEPT STRUCTURAL STEEL MEMBERS WHICH ARE EXPOSED IN THE COMPLETED STRUCTURE IN WHICH CASE CLEANING SHALL CONFORM TO SSPC SURFACE PREPARATION SPECIFICATION NO. 6 "COMMERCIAL BLAST CLEANING".
14. FIELD WELDING AND FIELD MODIFICATION OF STRUCTURAL STEEL SHALL NOT BE ALLOWED WITHOUT PRIOR REVIEW AND APPROVAL BY CONSULTANT.
15. AT THE COMPLETION OF ERECTION, ALL FIELD JOINTS, BOLTS, WELDS, BURNED AND ABRADED SURFACES SHALL BE THOROUGHLY CLEANED AND PAINTED WITH SPECIFIED PRIME AND FINISH COATS. IN THE CASE OF GALVANIZED SURFACES, APPLY MULTIPLE COATS OF ORGANIC ZINC RICH PAINT (DOD-P-21035) TO FORM A DRY FILM THICKNESS OF .8 MILS (IN ACCORDANCE WITH ASTM-A780).
16. APPLY TWO COATS OF AN APPROVED ASPHALTIC BASED PAINT TO ALL STEEL EXPOSED TO SOIL.

TIMBER NOTES

1. GENERAL
   - .1 TIMBER CONSTRUCTION SHALL CONFORM TO CAN/CSA 086.1 (LATEST) UNLESS NOTED OTHERWISE
2. WOOD FRAMING MATERIAL (UNLESS SPECIFIED OTHERWISE) :
   - .1 LINTELS, BUILT-UP BEAMS : S-P-F NO. 1/NO. 2
   - .2 WALL STUDS : KILN DRIED S-P-F NO. 1/NO. 2 (S-DRY)
   - .3 JOISTS : PREFABRICATED WOOD I-JOISTS TO DEPTHS AND/OR CAPACITIES SHOWN ON PLANS. REFER ALSO TO SPECIFICATIONS.
   - .4 STRUCTURAL COMPOSITE LUMBER BEAMS & COLUMNS: PROPRIETARY MANUFACTURED MEMBERS TO SIZES AS NOTED ON DRAWINGS.
   - .5 PLYWOOD : CAN/CSA 0121 DOUGLAS FIR PLYWOOD
     CAN/CSA 0151 CANADIAN SOFTWOOD PLYWOOD
     CAN/CSA 0325.0 CONSTRUCTION SHEATHING
     CAN/CSA 0437.0 WAFERBOARD & STRANDBOARD
   - .6 EXTERIOR SHEATHING TO BE PLYWOOD NOT O.S.B.
3. ALL LUMBER IN DIRECT CONTACT WITH MASONRY, CONCRETE, SOIL OR MOISTURE SHALL BE TREATED. REFER TO SPECIFICATIONS.
4. PLYWOOD FOR WALLS AND ROOF TO BE AS NOTED ON DRAWINGS.

   PLYWOOD FASTENING REQUIREMENTS (U.N.O.)

   – WALL & ROOF SHEATHING:
   @ PANEL EDGES 150mm.c. (U.N.O.)
   @ INTERMEDIATE FRAMING MEMBERS 300mm.c.
   USE 85mm NAILS U.N.O.
5. ALL TIMBER BEAM CONNECTIONS MAY BE STANDARD EXPOSED CONNECTIONS WITH SIDE PLATES OR SHOES AND NO COUNTER SUNK BOLTS
6. PROVIDE TJI PURPOSE MADE X-BRACING @ SUPPORT LINES BETWEEN ALL JOISTS AND ADDITIONALLY AT MANUFACTURER'S RECOMMENDED SPACING ALONG SPAN LENGTH
7. PROVIDE LINTELS OVER ALL OPENINGS OR RECESSES IN TIMBER WALLS, INCLUDING THOSE FOR MECHANICAL OR ELECTRICAL SERVICES AND EQUIPMENT.

   PROVIDE LINTELS AS FOLLOWS, UNLESS NOTED OTHERWISE:

LINTEL* (mm)	SPAN (mm)	CRIPLE STUDS EACH SIDE	FULL HEIGHT STUDS EACH SIDE
2 @ 38x184	0 – 1200	1	1
2 @ 38x286	1201 – 1800	1	2
3 @ 38x286	1801 – 2400	2	2
4 @ 38x286	2401 – 3000	2	3

* FILL LINTEL THICKNESS WITH RIGID INSULATION TO MAKE UP TOTAL THICKNESS OF WALL

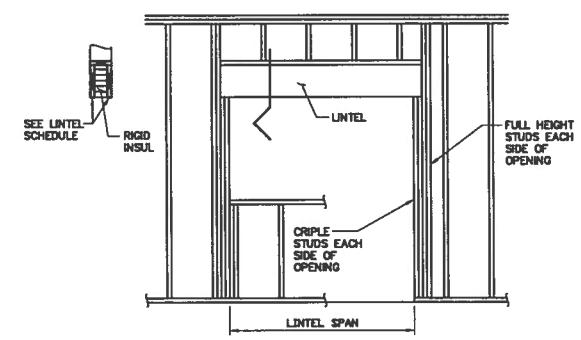

FILTER TANK FLOOR POST-TENSIONING NOTES

1. PROCEDURE:

1.1 ALL NEW CONCRETE WALL CONSTRUCTION AND FLOOR TOPPING CONCRETE SHALL BE COMPLETE AND CURED TO AT LEAST 80% f'c PRIOR TO PROCEEDING WITH THREADBAR STRESSING.

1.2 EACH 25mm DIAMETER THREADBAR SHALL BE STRESSED WITH A HYDRAULIC JACK TO PROVIDE A 250kN FORCE AFTER ALL SEATING LOSSES.

DO NOT OVERSTRESS ANCHORS

1.3 STRESSING SHALL OCCUR IN THE SEQUENCE INDICATED ON THE PLAN, OR WHERE NOT INDICATED IN AN ENGINEER PRE-APPROVED SEQUENCE.

1.4 A CERTIFIED CALIBRATION CURVE SHALL ACCOMPANY EACH HYDRAULIC JACK USED, SHOWING THE RELATIONSHIP BETWEEN GAUGE READINGS AND STRESS IN THE RAM. LOSSES IN STRESS DUE TO ANCHOR SET, STEEL RELAXATION, PLASTIC FLOW, ETC. SHALL BE CONSIDERED. SUBMIT ALL TO ENGINEER IN ADVANCE OF STRESSING OPERATIONS.

1.5 STRESS IN THE THREADBARS SHALL BE MEASURED BY MEANS OF BAR EXTENSION AND SHALL BE CHECKED CONTINUOUSLY BE MEANS OF THE JACK GAUGE. WHEN DISCREPANCIES BETWEEN EXTENSION AND GAUGE PRESSURE EXCEEDS 6% STRESSING SHALL STOP AND NOT PROCEED AGAIN UNTIL THE SITUATION IS RECTIFIED.

1.6 RECORDS SHALL BE MAINTAINED FOR ALL STRESSING OPERATIONS INCLUDING GAUGE PRESSURE, ELONGATIONS AND OTHER PERTINENT INFORMATION FOR EVERY STRESSING LOCATION. SUBMIT ONE COPY TO THE ENGINEER UPON PROJECT COMPLETION.

1.7 UNLESS OTHERWISE INDICATED POST TENSIONING PROCEDURES SHALL CONFORM TO CSA A23.1-00, AND TO GOOD PRACTICE FOR POST-TENSIONING OPERATIONS. IT SHALL BE EXECUTED BY QUALIFIED EXPERIENCED OPERATORS AND IN CONFORMANCE WITH ANY REQUIREMENTS OF THE SUPPLIER/MANUFACTURER.

2. MATERIALS:

2.1 P-T THREADBAR – TO BE DYWIDAG THREADBAR OR ENGINEER APPROVED EQUAL TO CSA G279-M82 Fpu =1030 MPa. TO BE HOT DIPPED GALVANIZED AFTER FABRICATION.

2.2 P-T ANCHOR PLATES, NUTS, COUPLERS – AS MANUFACTURED BY DYWIDAG OR ENGINEER APPROVED MANUFACTURER FOR SPECIFIED USE WITH THE SPECIFIED THREADBAR. TO BE HOT DIPPED GALVANIZED AFTER FABRICATION, UNLESS NOTED OTHERWISE

NO.	REVISION	DATE	INITIAL
2	RECORD DRAWING	23/04/04	
1	ISSUED FOR CONSTRUCTION	22/04/03	
0	ISSUED FOR TENDER	19/02/03	
A	ISSUED FOR FINAL REVIEW	03/02/03	

Company Permit

RECORD DRAWING
INFORMATION CONTAINED IN THESE DRAWINGS IS AS SUPPLIED BY: NINETY NORTH CONSTRUCTION & DEVELOPMENT LTD.
THE COMPLETENESS AND ACCURACY OF THIS RECORD DRAWING IS NOT GUARANTEED. INFORMATION SHOULD BE VERIFIED AT THE ACTUAL LOCATION BEFORE USE.

Engineer Seal

STRUCTURAL

GENERAL AND DESIGN NOTES

Iqaluit
CITY of IQALUIT, Nunavut

CITY OF IQALUIT

IQALUIT WATER TREATMENT PLANT

EARTH TECH
Earth Tech (Canada) Inc.

DRAWN BY: BL CHECKED BY: GJK	SCALE: AS NOTED	DATE: FEB. 19, 2003	SHEET NO.
CADD SYSTEM AutoCAD	DWG NO. S-1	REV. 1	CONTRACT 55524

ET:55524/Cadd File: 55524-S01.dwg/Last Edit: 2003-04-22 (17:00)/Plot Scale: 1:1 (A1)

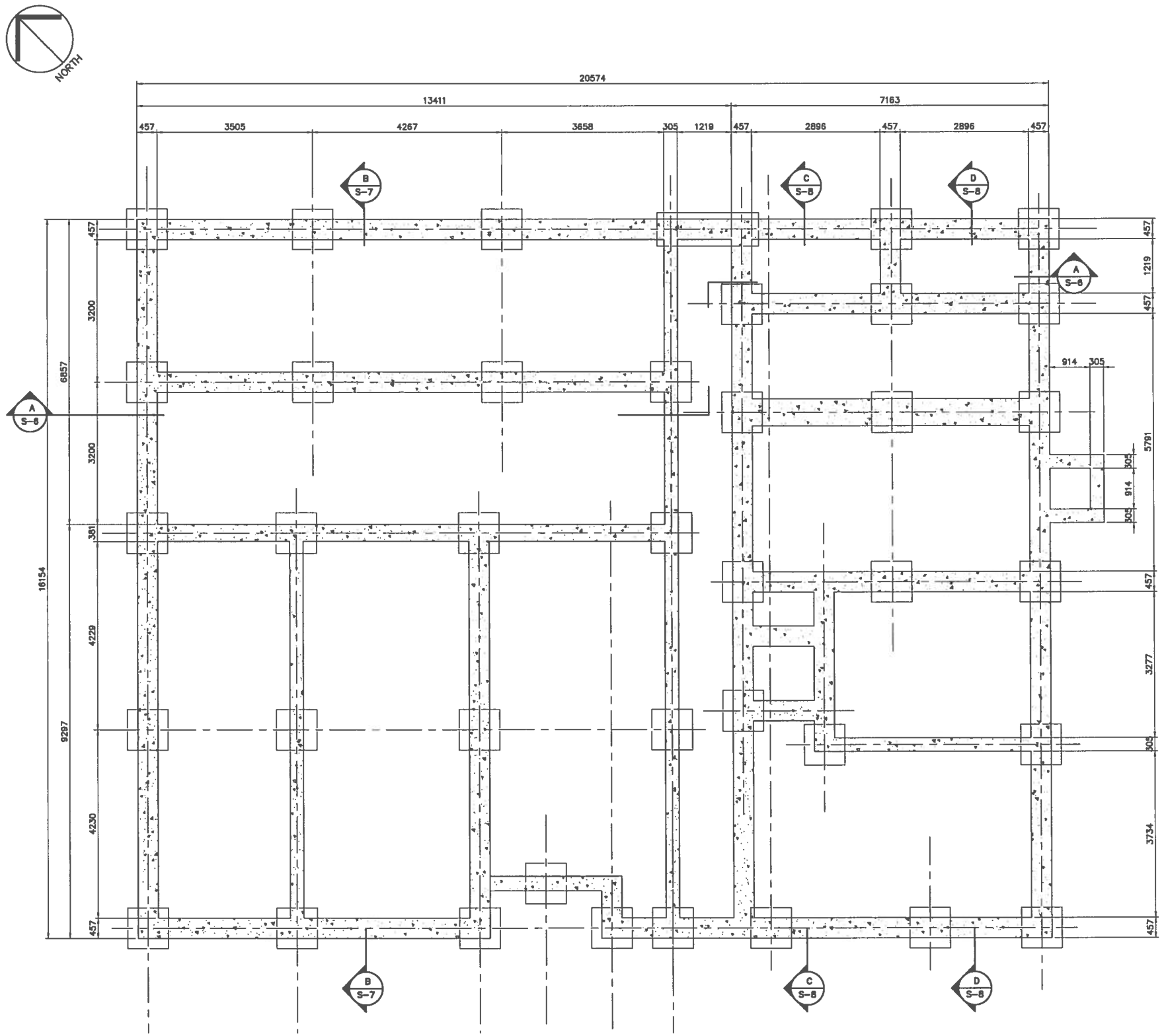

PLAN BELOW ELEVATION 91.440 (300')

SCALE: 1:50

NOTES:

1. REFERENCE : INFORMATION PRESENTED ON THIS DRAWING DESCRIBING EXISTING STRUCTURE FROM CONTRACT NO. CA-62-1-28 DRAWINGS.
2. ALL EXISTING WALLS AND SLABS ARE REINFORCED CONCRETE. REINFORCEMENT NOT INDICATED.
3. REFER TO DEPARTMENT OF PUBLIC WORKS CANADA – WATER TREATMENT AND WATER SUPPLY DRAWINGS FOR FROBISHER BAY N.W.T. CONTRACT NO. CA-62-1-28 FOR DETAILS DESCRIBING EXISTING STRUCTURE.

NO.	REVISION	DATE	INITIAL
2	RECORD DRAWING	23/04/04	
1	ISSUED FOR CONSTRUCTION	22/04/03	
0	ISSUED FOR TENDER	19/02/03	
A	ISSUED FOR FINAL REVIEW	02/02/03	

Company Permit

Engineer Seal

RECORD DRAWING
INFORMATION CONTAINED IN THESE DRAWINGS IS AS SUPPLIED BY: NINETY NORTH CONSTRUCTION & DEVELOPMENT LTD.
THE COMPLETENESS AND ACCURACY OF THIS RECORD DRAWING IS NOT GUARANTEED. INFORMATION SHOULD BE VERIFIED AT THE ACTUAL LOCATION BEFORE USE.

STRUCTURAL

EXISTING FOUNDATION LAYOUT

Iqaluit
CITY of IQALUIT, Nunavut

CITY OF IQALUIT

IQALUIT WATER TREATMENT PLANT

EARTH TECH
Earth Tech (Canada) Inc.

DRAWN BY: BL / CHECKED BY: GJK	SCALE: AS NOTED	DATE: FEB. 19, 2003	SHEET NO.
CADD SYSTEM AutoCAD	DWG NO. S-2	REV. 1	CONTRACT 55524

ET:55524/Cadd File: 55524-S02 to S05_S08_S09.dwg/Last Edit: 2003-04-22 (12:00)/Plot Scale: 1:1 (A1)

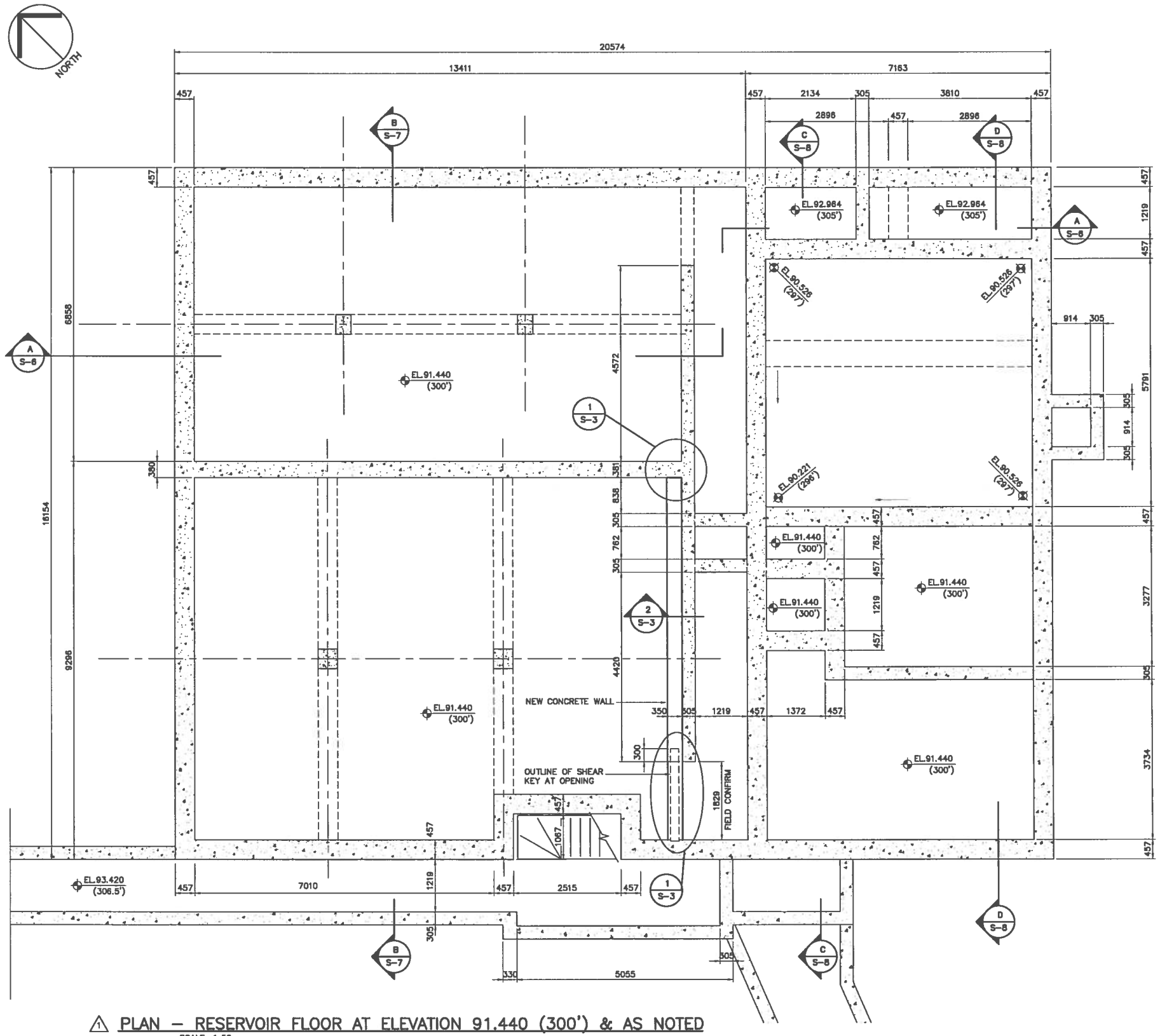

PLAN – RESERVOIR FLOOR AT ELEVATION 91.440 (300') & AS NOTED

SCALE: 1:50

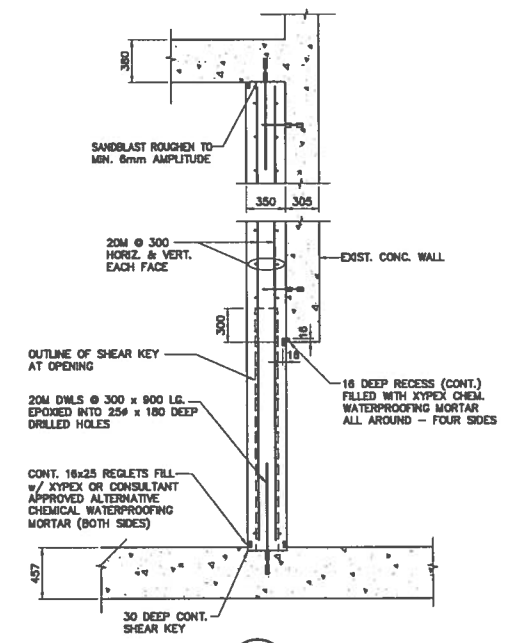

1 S-3 PLAN DETAIL
SCALE 1:30

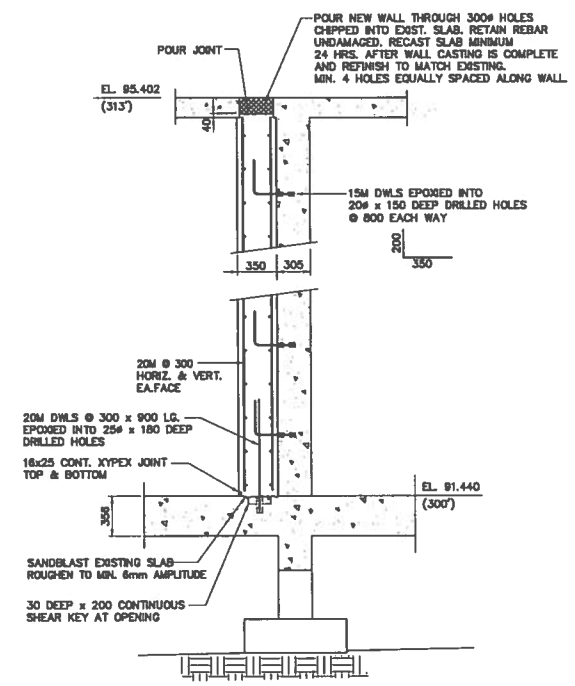

2 S-3 DETAIL
SCALE 1:30

NOTES:

1. REFERENCE : INFORMATION PRESENTED ON THIS DRAWING DESCRIBING EXISTING STRUCTURE FROM CONTRACT NO. CA-62-1-28 DRAWINGS.
2. ALL EXISTING WALLS AND SLABS ARE REINFORCED CONCRETE. REINFORCEMENT NOT INDICATED.
3. REFER TO DEPARTMENT OF PUBLIC WORKS CANADA – WATER TREATMENT AND WATER SUPPLY DRAWINGS FOR FROBISHER BAY N.W.T. CONTRACT NO. CA-62-1-28 FOR DETAILS DESCRIBING EXISTING STRUCTURE.

NO.	REVISION	DATE	INITIAL
2	RECORD DRAWING	23/04/04	
1	ISSUED FOR CONSTRUCTION	22/04/03	
0	ISSUED FOR TENDER	19/02/03	
A	ISSUED FOR FINAL REVIEW	03/02/03	

Company Permit — Engineer Seal

RECORD DRAWING
INFORMATION CONTAINED IN THESE DRAWINGS IS AS SUPPLIED BY: NINETY NORTH CONSTRUCTION & DEVELOPMENT LTD.
THE COMPLETENESS AND ACCURACY OF THIS RECORD DRAWING IS NOT GUARANTEED. INFORMATION SHOULD BE VERIFIED AT THE ACTUAL LOCATION BEFORE USE.

STRUCTURAL

EXISTING RESERVOIR FLOOR PLAN

Iqaluit — CITY of IQALUIT, Nunavut

CITY OF IQALUIT

IQALUIT WATER TREATMENT PLANT

EARTH TECH
Earth Tech (Canada) Inc.

DRAWN BY: BL / CHECKED BY: CJK	SCALE: AS NOTED	DATE: FEB. 19, 2003	SHEET NO.
CADD SYSTEM AutoCAD	DWG NO. S-3	REV. 1	CONTRACT 55524

ET:55524/Cadd File: 55524-S02 to S05_S08_S09.dwg/Last Edit: 2003-04-22 (12:00)/Plot Scale: 1:1 (A1)

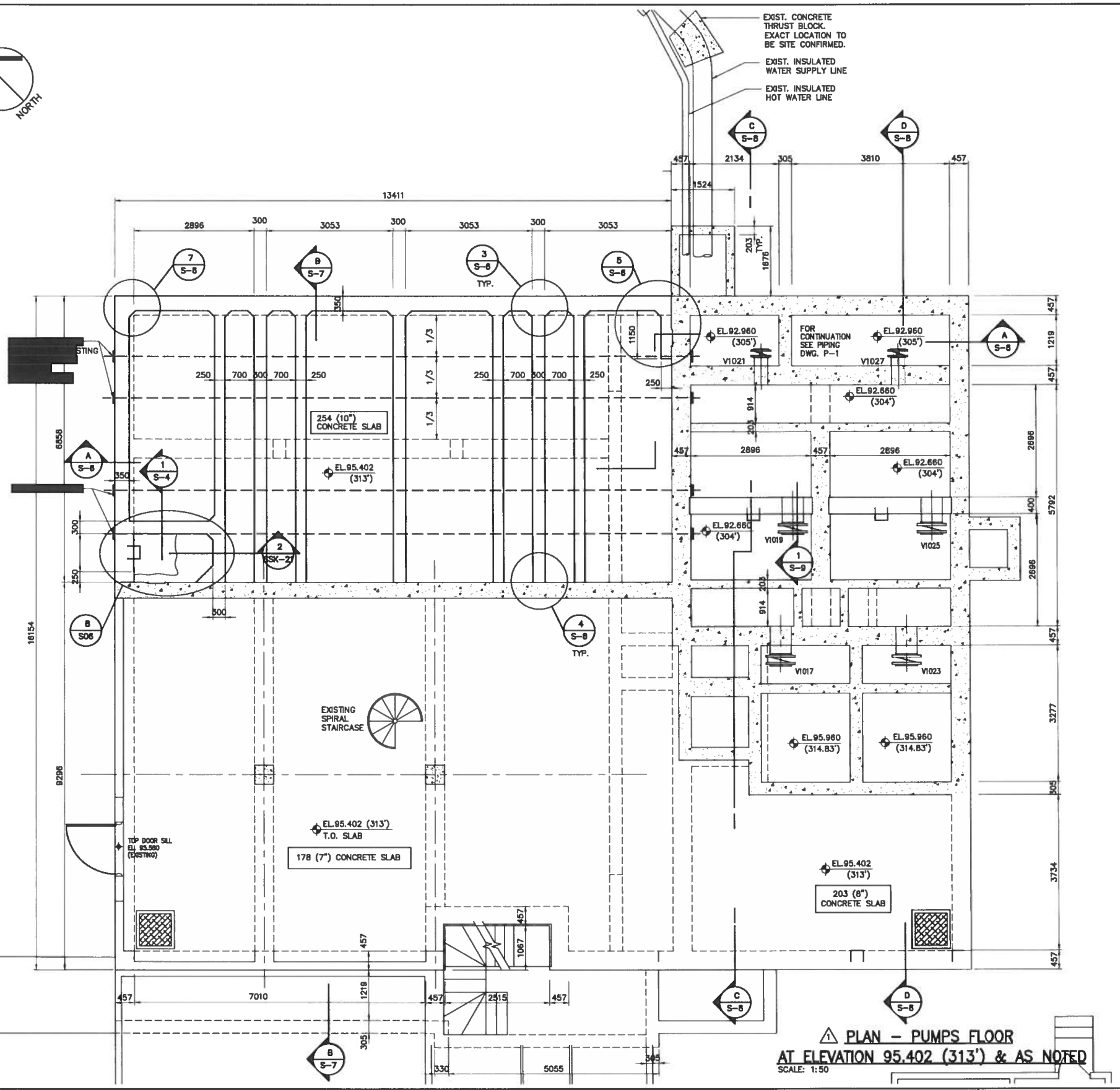

1 PLAN – PUMPS FLOOR AT ELEVATION 95.402 (313') & AS NOTED

SCALE: 1:50

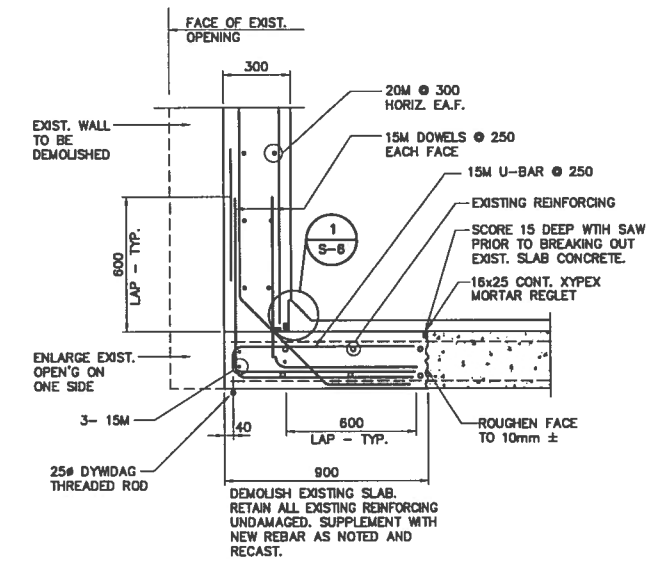

1 / S-4 SECTION

SCALE 1:15

NOTES:

1. REFERENCE : INFORMATION PRESENTED ON THIS DRAWING DESCRIBING EXISTING STRUCTURE FROM CONTRACT NO. CA-62-1-28 DRAWINGS.
2. ALL EXISTING WALLS AND SLABS ARE REINFORCED CONCRETE. REINFORCEMENT NOT INDICATED.
3. REFER TO DEPARTMENT OF PUBLIC WORKS CANADA – WATER TREATMENT AND WATER SUPPLY DRAWINGS FOR FROBISHER BAY N.W.T. CONTRACT NO. CA-62-1-28 FOR DETAILS DESCRIBING EXISTING STRUCTURE.

NO.	REVISION	DATE	INITIAL
	RECORD DRAWING	23/04/04	
1	ISSUED FOR CONSTRUCTION	22/04/03	
0	ISSUED FOR TENDER	19/02/03	
A	ISSUED FOR FINAL REVIEW	03/02/03	

Company Permit

Engineer Seal

RECORD DRAWING
INFORMATION CONTAINED IN THESE DRAWINGS IS AS SUPPLIED BY: NINETY NORTH CONSTRUCTION & DEVELOPMENT LTD.
THE COMPLETENESS AND ACCURACY OF THIS RECORD DRAWING IS NOT GUARANTEED. INFORMATION SHOULD BE VERIFIED AT THE ACTUAL LOCATION BEFORE USE.

STRUCTURAL

PUMPS FLOOR PLAN

Iqaluit
CITY of IQALUIT, Nunavut

CITY OF IQALUIT

IQALUIT WATER TREATMENT PLANT

EARTH TECH
Earth Tech (Canada) Inc.

DRAWN BY: BL CHECKED BY: GJK	SCALE: AS NOTED	DATE: FEB. 19, 2003	SHEET NO.
CADD SYSTEM AutoCAD	DWG NO. S-4	REV. 1	CONTRACT 55524

ET:55524/Cadd File: 55524-S02 to S05_S08_S09.dwg/Last Edit: 2003-04-22 (12:00)/Plot Scale: 1:1 (A1)

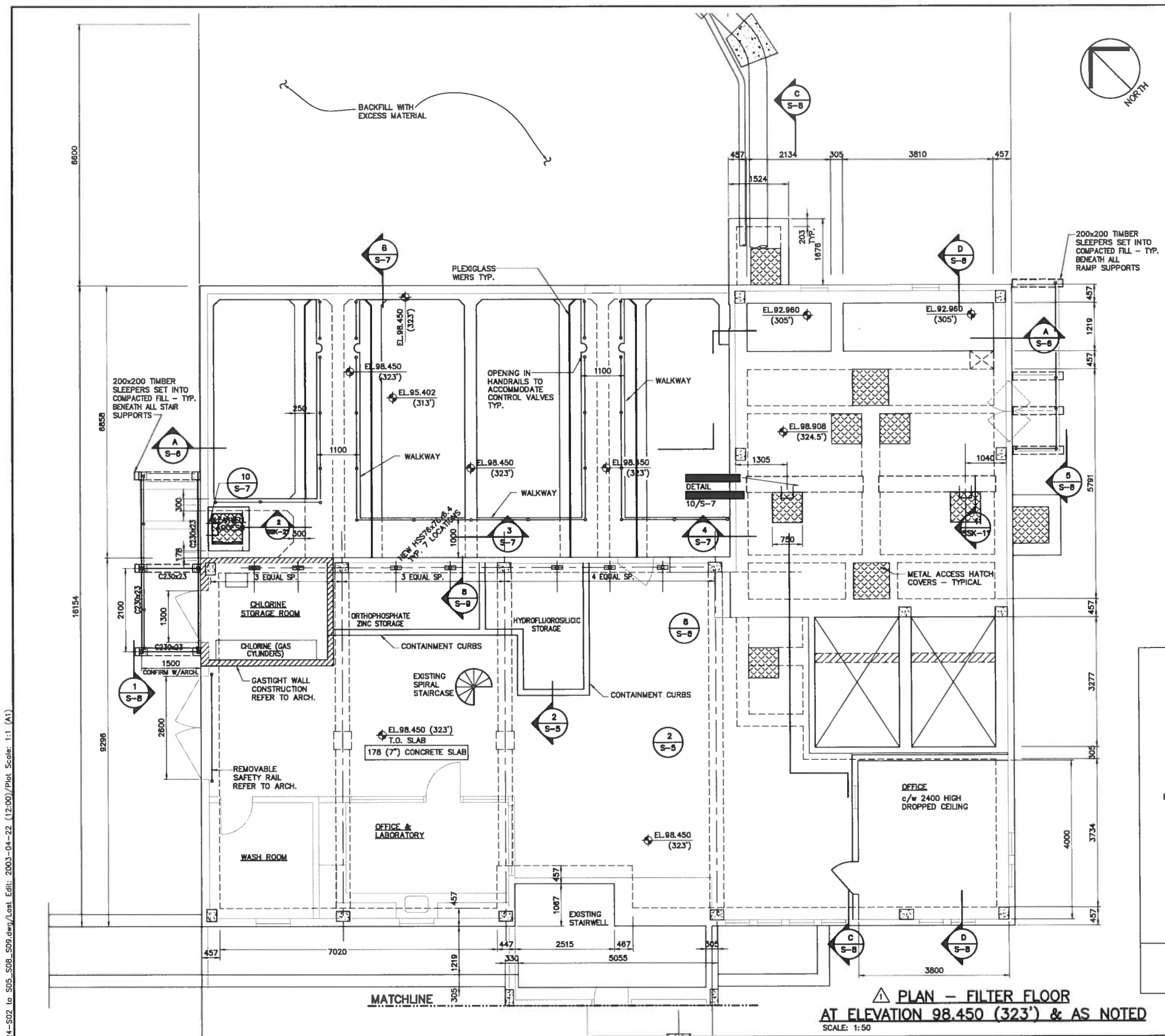

1 PLAN – FILTER FLOOR AT ELEVATION 98.450 (323') & AS NOTED
SCALE: 1:50

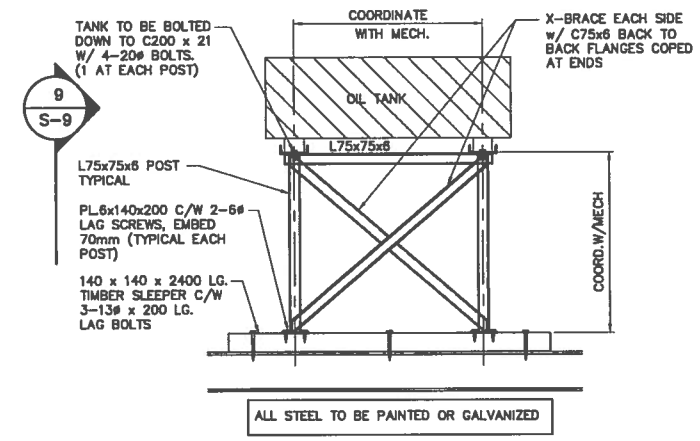

1 SECTION
S-5 SCALE NTS

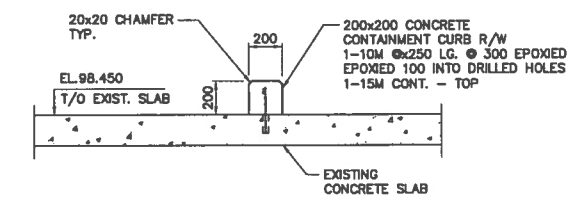

2 SECTION
S-5 SCALE 1:20

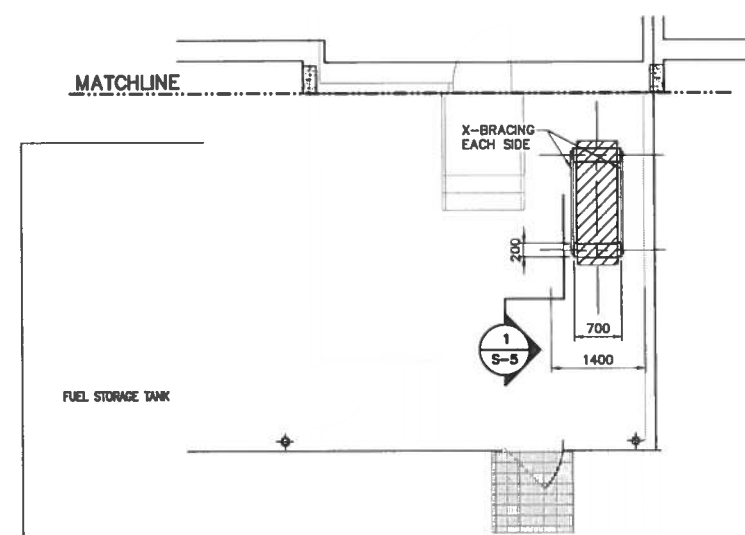

NOTES:

1. REFERENCE : INFORMATION PRESENTED ON THIS DRAWING DESCRIBING EXISTING STRUCTURE FROM CONTRACT NO. CA-62-1-28 DRAWINGS.
2. ALL EXISTING WALLS AND SLABS ARE REINFORCED CONCRETE. REINFORCEMENT NOT INDICATED.
3. REFER TO DEPARTMENT OF PUBLIC WORKS CANADA – WATER TREATMENT AND WATER SUPPLY DRAWINGS FOR FROBISHER BAY N.W.T. CONTRACT NO. CA-62-1-28 FOR DETAILS DESCRIBING EXISTING STRUCTURE.

NO.	REVISION	DATE	INITIAL
2	RECORD DRAWING	23/04/04	
1	ISSUED FOR CONSTRUCTION	22/04/03	
0	ISSUED FOR TENDER	19/02/03	
A	ISSUED FOR FINAL REVIEW	03/02/03	

Company Permit

Engineer Seal

RECORD DRAWING
INFORMATION CONTAINED IN THESE DRAWINGS IS AS SUPPLIED BY: NINETY NORTH CONSTRUCTION & DEVELOPMENT LTD.
THE COMPLETENESS AND ACCURACY OF THIS RECORD DRAWING IS NOT GUARANTEED. INFORMATION SHOULD BE VERIFIED AT THE ACTUAL LOCATION BEFORE USE.

STRUCTURAL

FILTERS FLOOR PLAN

Iqaluit
CITY of IQALUIT, Nunavut

CITY OF IQALUIT

IQALUIT WATER TREATMENT PLANT

EARTH TECH
Earth Tech (Canada) Inc.

DRAWN BY: BL CHECKED BY: GJK	SCALE: AS NOTED	DATE: FEB. 19, 2003	SHEET NO.
CADD SYSTEM AutoCAD	DWG NO. S-5	REV. 1	CONTRACT 55524

ET:55524/Cadd File: 55524-S02 to S05_S08_S09.dwg/Last Edit: 2003-04-22 (12:00)/Plot Scale: 1:1 (A1)

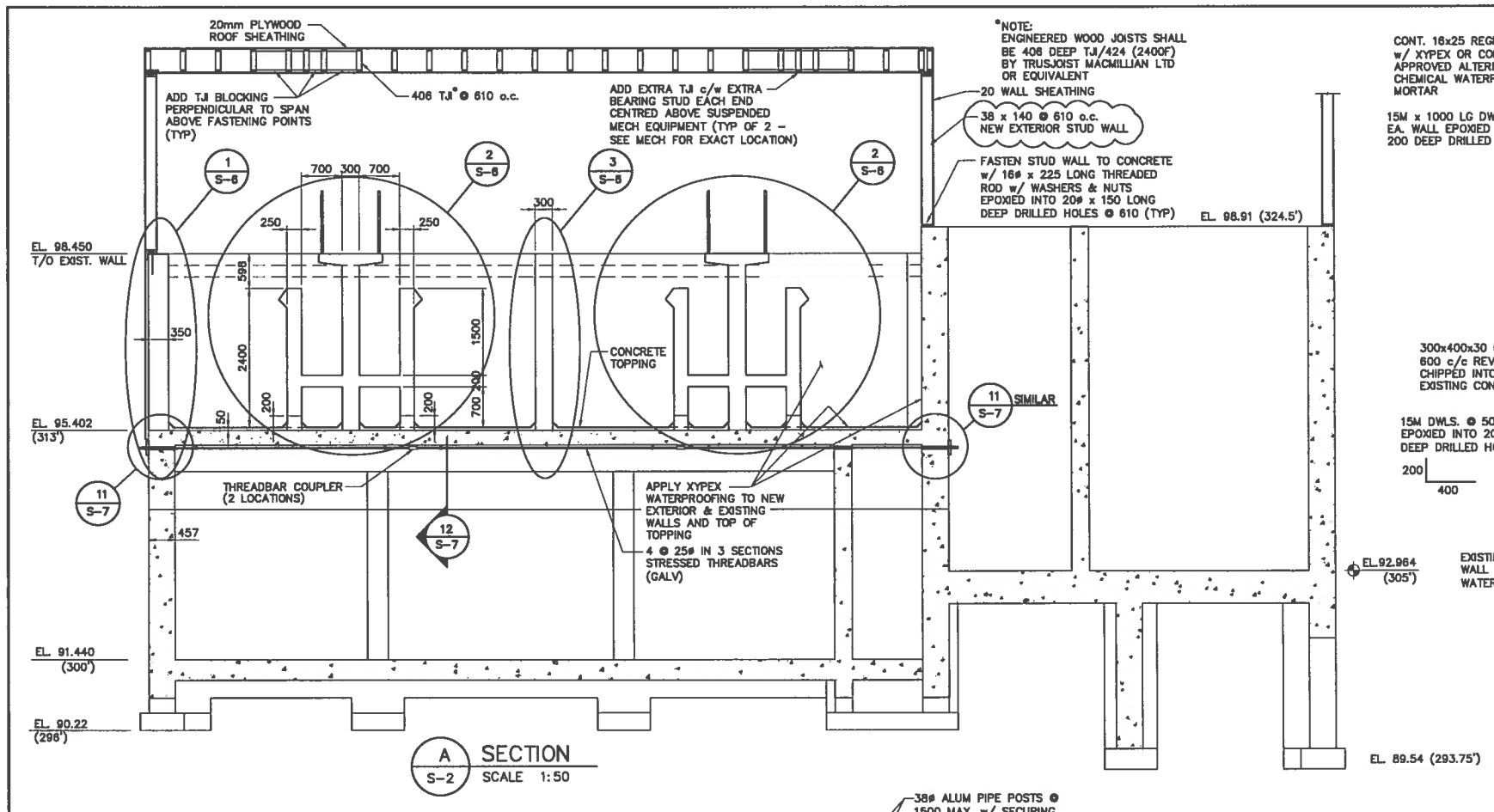

A S-2 SECTION SCALE 1:50

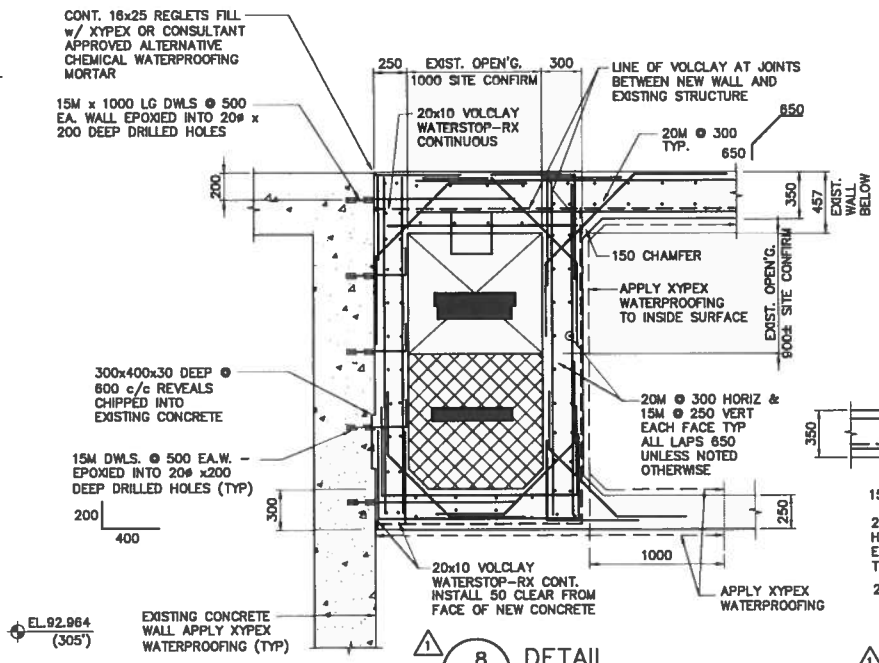

8 S-4 DETAIL SCALE 1:25

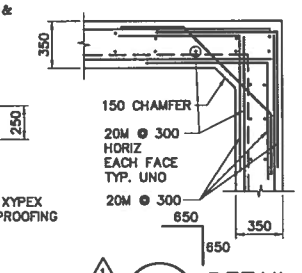

7 S-4 DETAIL SCALE 1:25

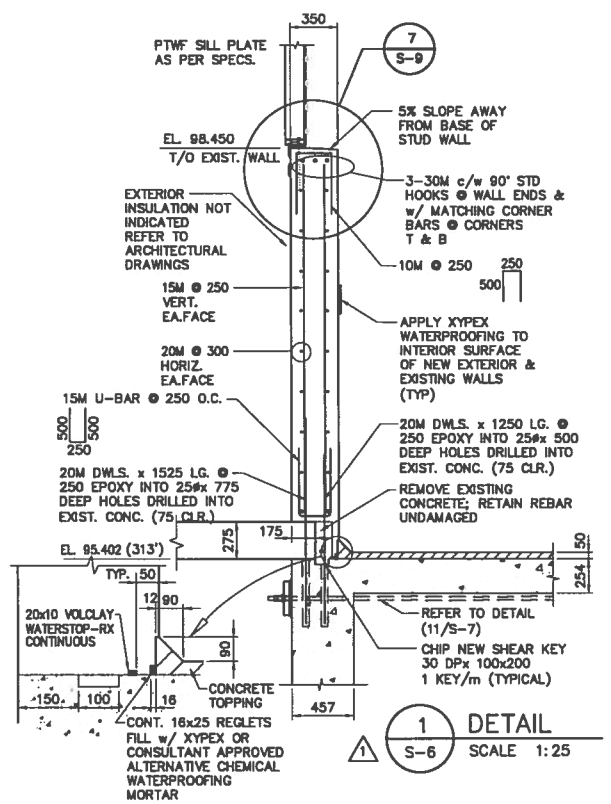

1 S-6 DETAIL SCALE 1:25

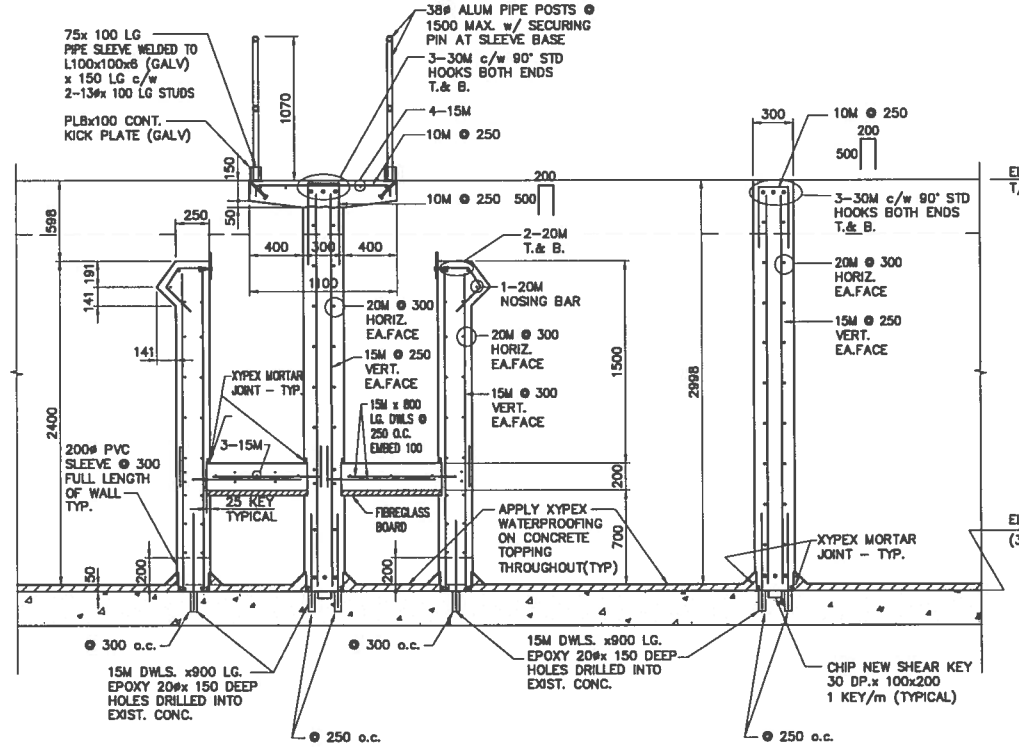

2 S-6 DETAIL SCALE 1:25

3 S-6 DETAIL SCALE 1:25

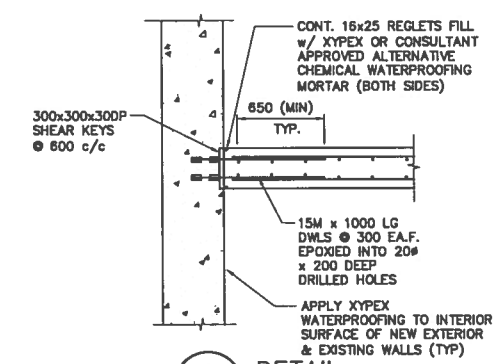

4 S-4 DETAIL SCALE 1:25

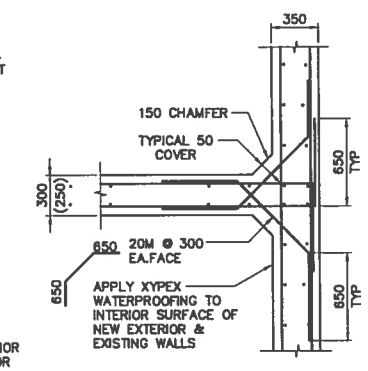

3 S-4 DETAIL SCALE 1:25

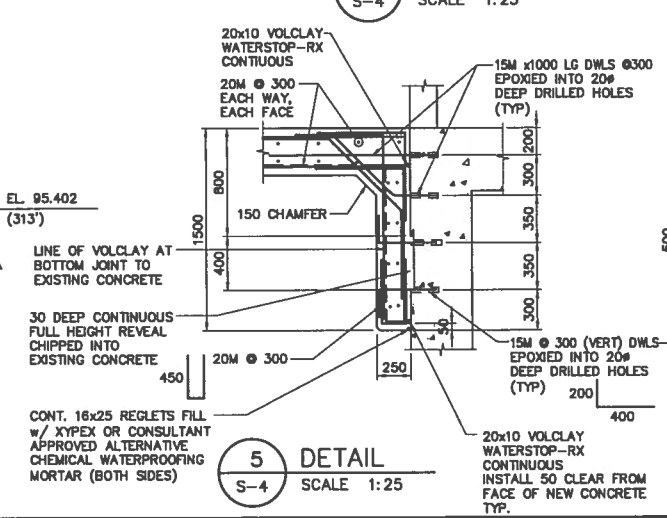

5 S-4 DETAIL SCALE 1:25

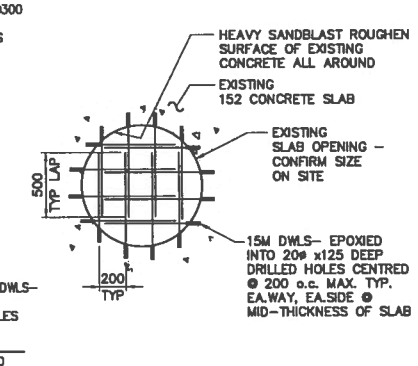

6 S-5 DETAIL SCALE 1:25

NO.	REVISION	DATE	INITIAL
2	RECORD DRAWING	23/04/04	
1	ISSUED FOR CONSTRUCTION	22/04/03	
0	ISSUED FOR TENDER	19/02/03	
A	ISSUED FOR FINAL REVIEW	03/02/03	

Company Permit

Engineer Seal

RECORD DRAWING
INFORMATION CONTAINED IN THESE DRAWINGS IS AS SUPPLIED BY: NINETY NORTH CONSTRUCTION & DEVELOPMENT LTD.
THE COMPLETENESS AND ACCURACY OF THIS RECORD DRAWING IS NOT GUARANTEED. INFORMATION SHOULD BE VERIFIED AT THE ACTUAL LOCATION BEFORE USE.

STRUCTURAL

SECTIONS AND DETAILS

Iqaluit
CITY of IQALUIT, Nunavut

CITY OF IQALUIT

IQALUIT WATER TREATMENT PLANT

EARTH TECH

Earth Tech (Canada) Inc. Edmonton, Alta.

DRAWN BY: BL / CHECKED BY: GJK	SCALE: AS NOTED	DATE: FEB. 19, 2003	SHEET NO.
CADD SYSTEM AutoCAD	DWG NO. S-6	REV. 1	CONTRACT 55524

ET:55524/Cadd File: 55524-S06 to S07.dwg/Last Edit: 2003-04-22 (12:00)/Plot Scale: 1:1 (A1)

NOTES:

1. REFERENCE : INFORMATION PRESENTED ON THIS DRAWING DESCRIBING EXISTING STRUCTURE FROM CONTRACT NO. CA-62-1-28 DRAWINGS.
2. ALL EXISTING WALLS AND SLABS ARE REINFORCED CONCRETE. REINFORCEMENT NOT INDICATED.
3. REFER TO DEPARTMENT OF PUBLIC WORKS CANADA – WATER TREATMENT AND WATER SUPPLY DRAWINGS FOR FROBISHER BAY N.W.T. CONTRACT NO. CA-62-1-28 FOR DETAILS DESCRIBING EXISTING STRUCTURE.

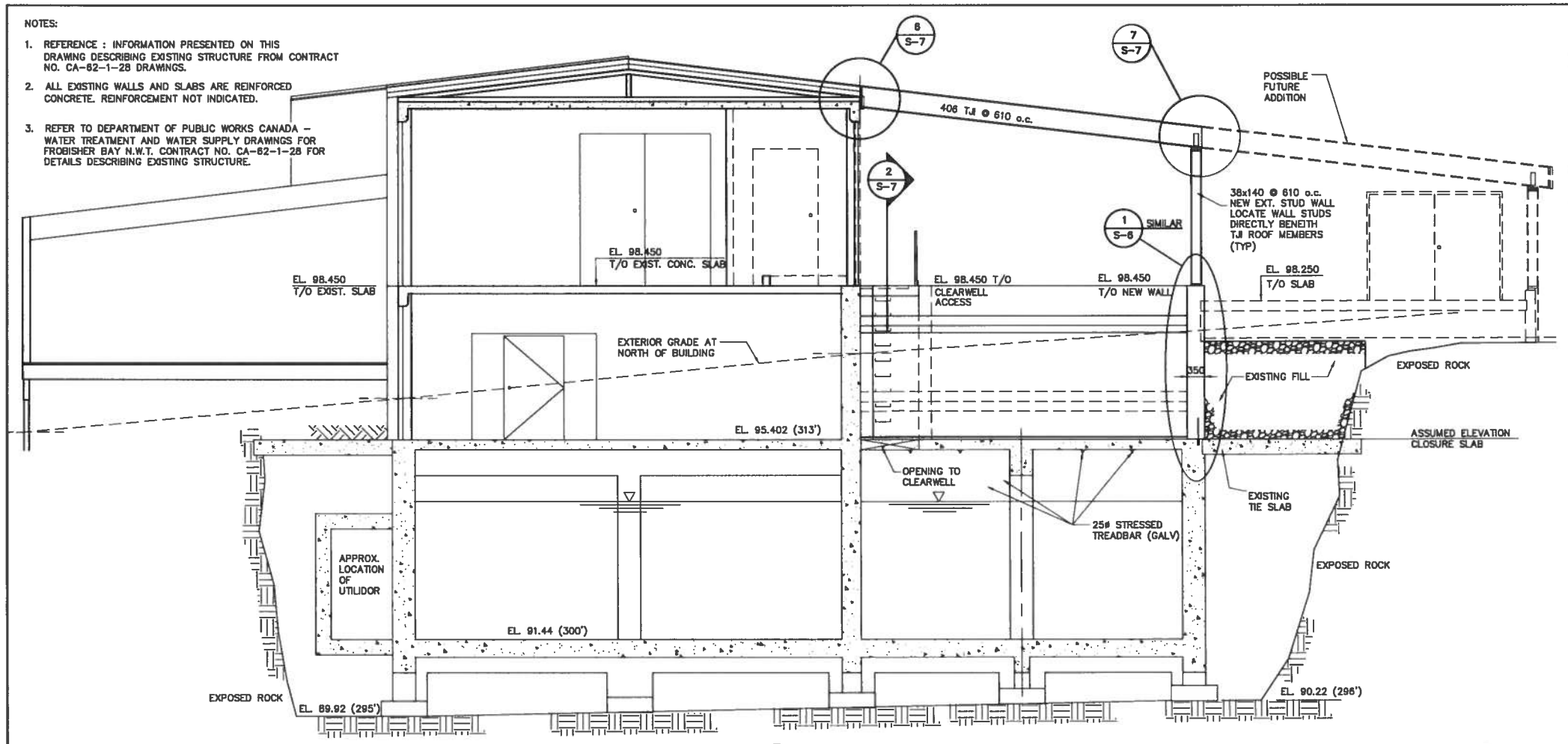

B SECTION
S-2 SCALE 1:50

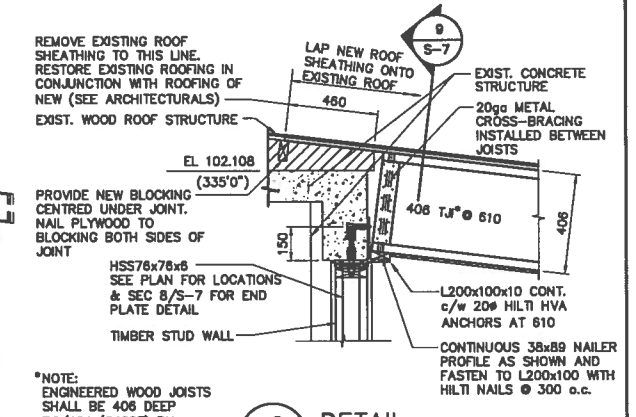

*NOTE:
ENGINEERED WOOD JOISTS SHALL BE 406 DEEP TJI/424 (2400F) BY TRUSJOIST MACMILLIAN LTD OR EQUIVALENT

6 DETAIL
S-7 SCALE 1:15

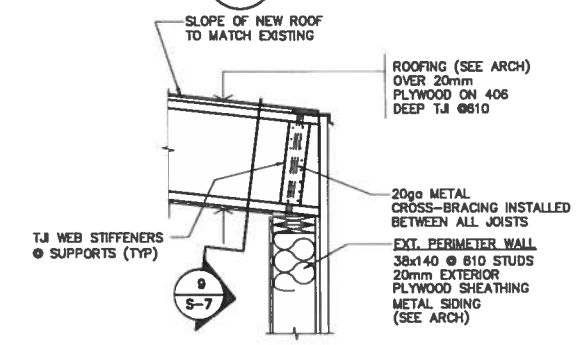

7 DETAIL
S-7 SCALE 1:15

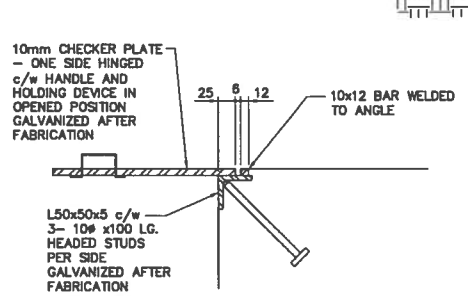

1 DETAIL
S-7 SCALE 1:5

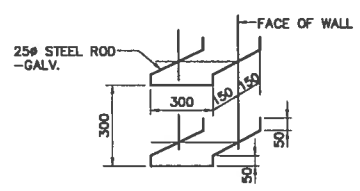

TYP. LADDER RUNG DETAIL

10 DETAIL
S-7 SCALE 1:25

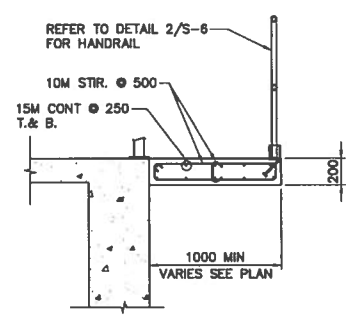

5 SECTION
S-7 SCALE 1:25

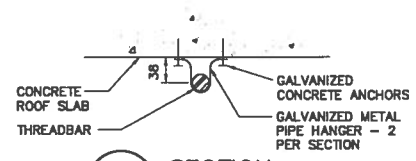

12 SECTION
S-6 SCALE 1:5

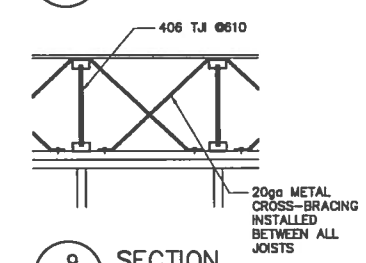

9 SECTION
S-7 SCALE 1:15

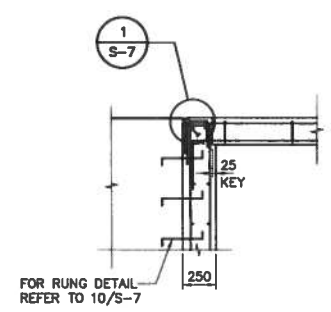

2 SECTION
S-5 SCALE 1:25

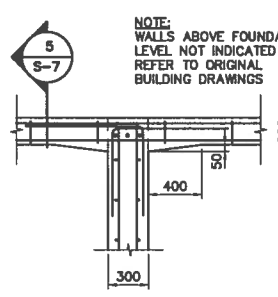

3 SECTION
S-5 SCALE 1:25

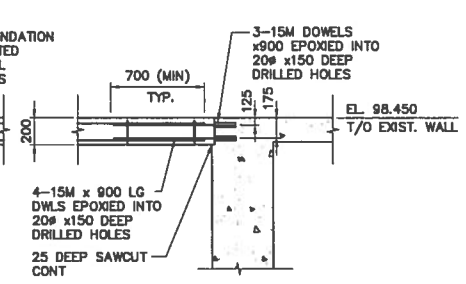

4 SECTION
S-5 SCALE 1:25

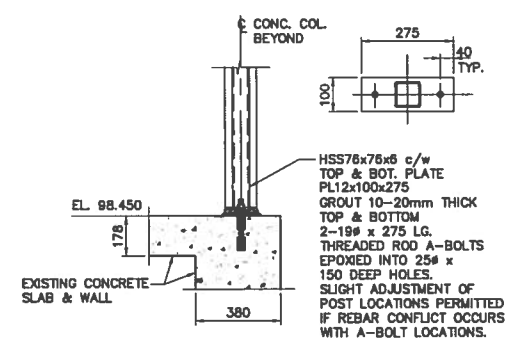

8 SECTION
S-4 SCALE 1:15

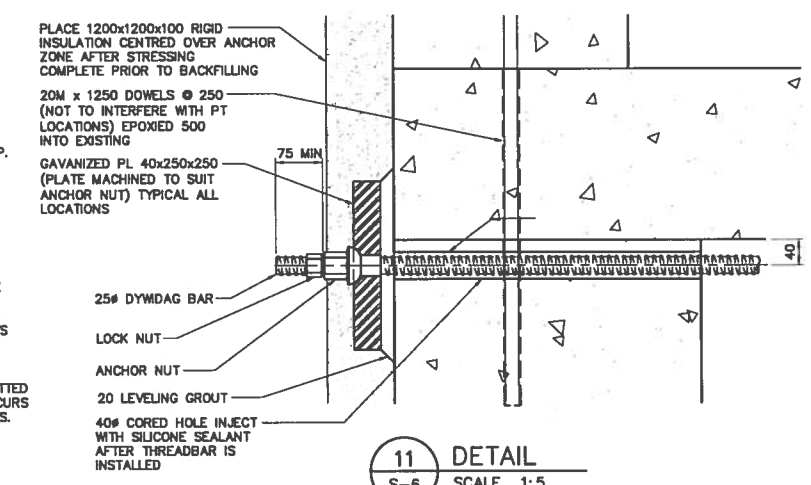

11 DETAIL
S-6 SCALE 1:5

NO.	REVISION	DATE	INITIAL
2	RECORD DRAWING	23/04/04	
1	ISSUED FOR CONSTRUCTION	22/04/03	
0	ISSUED FOR TENDER	19/02/03	
A	ISSUED FOR FINAL REVIEW	03/02/03	

Company Permit — Engineer Seal

RECORD DRAWING
INFORMATION CONTAINED IN THESE DRAWINGS IS AS SUPPLIED BY: NINETY NORTH CONSTRUCTION & DEVELOPMENT LTD.
THE COMPLETENESS AND ACCURACY OF THIS RECORD DRAWING IS NOT GUARANTEED. INFORMATION SHOULD BE VERIFIED AT THE ACTUAL LOCATION BEFORE USE.

STRUCTURAL

SECTIONS AND DETAILS

Iqaluit
CITY of IQALUIT, Nunavut

CITY OF IQALUIT

IQALUIT WATER TREATMENT PLANT

EARTH TECH
Earth Tech (Canada) Inc.

DRAWN BY: BL / CHECKED BY: GJK	SCALE: AS NOTED	DATE: FEB. 19, 2003	SHEET NO.
CADD SYSTEM AutoCAD	DWG NO. S-7	REV. 1	CONTRACT 55524

ET:55524/Cadd File: 55524-S06 to S07.dwg/Last Edit: 2003-04-22 (12:00)/Plot Scale: 1:1 (A1)

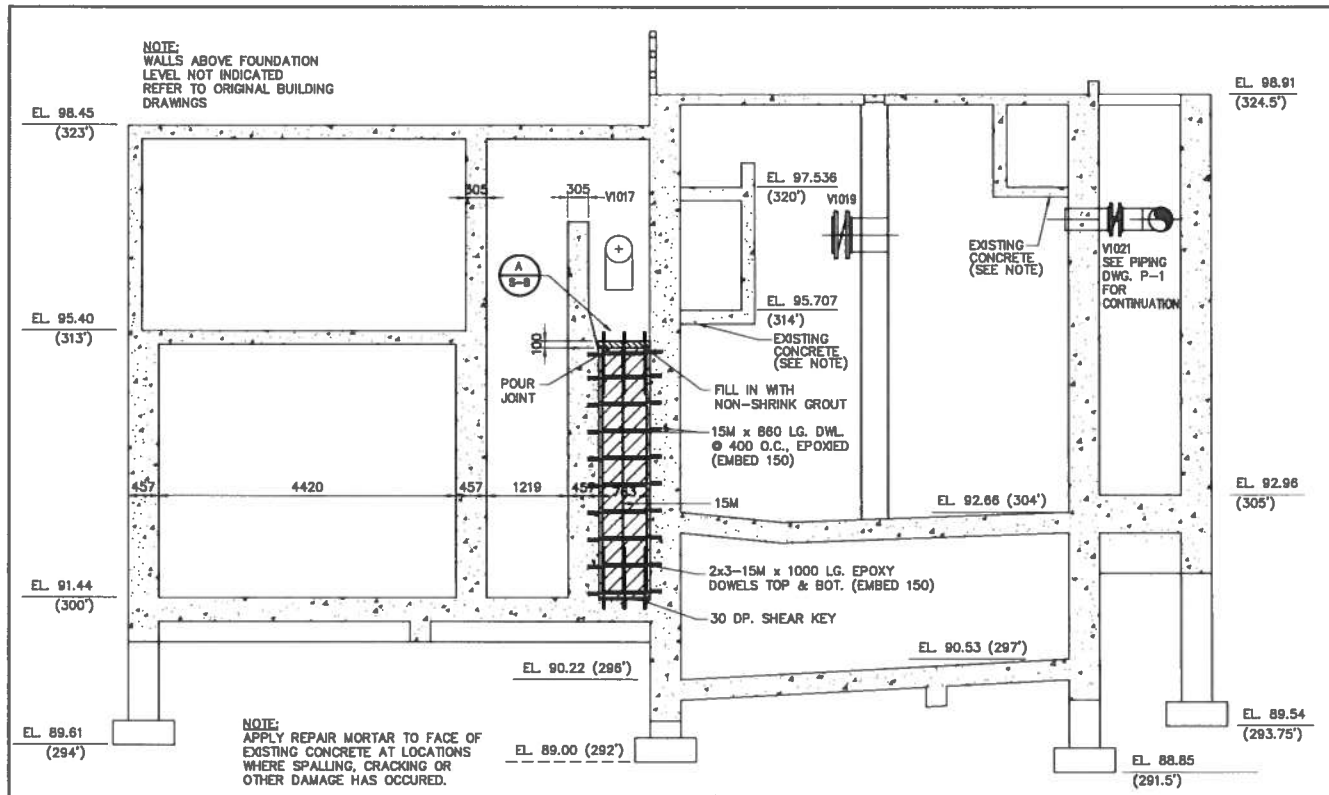

1 C S-2 SECTION
SCALE 1:50

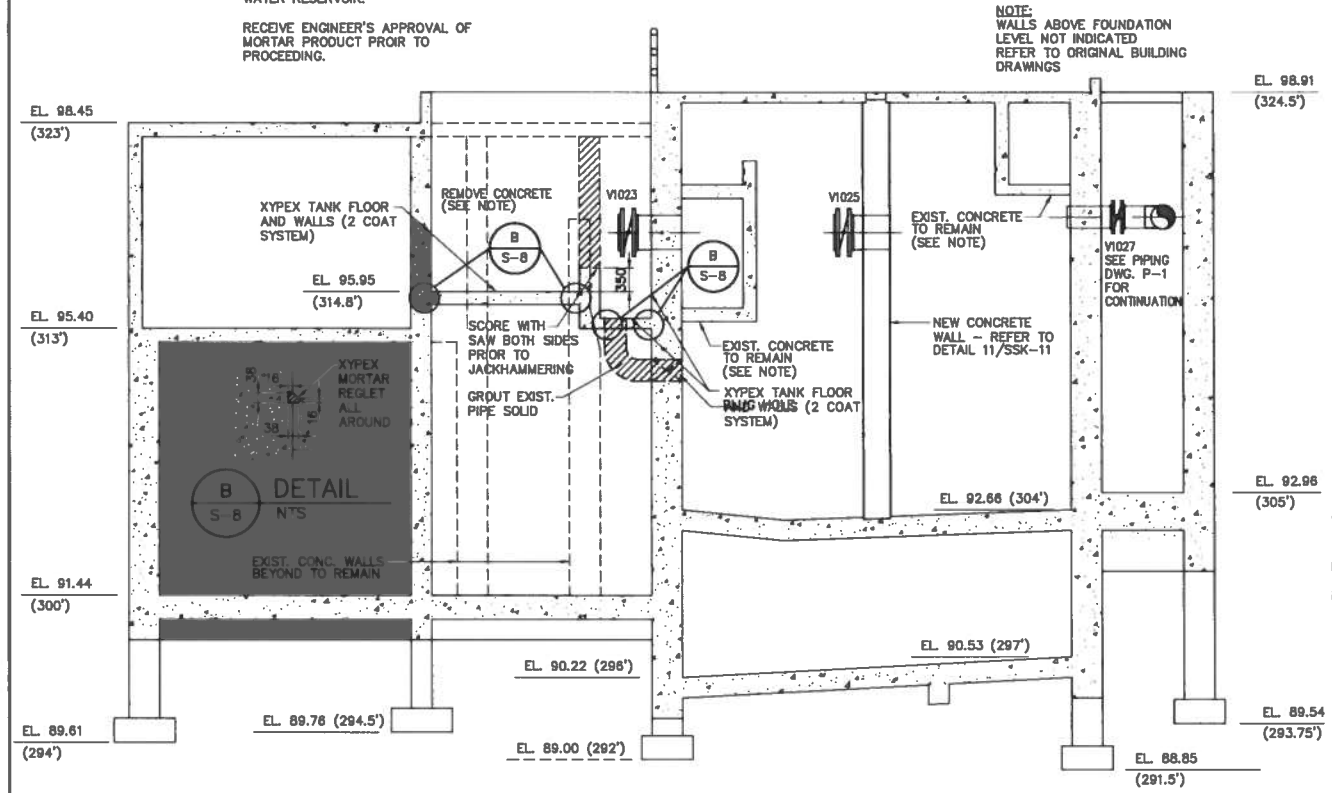

1 D S-2 SECTION
SCALE 1:50

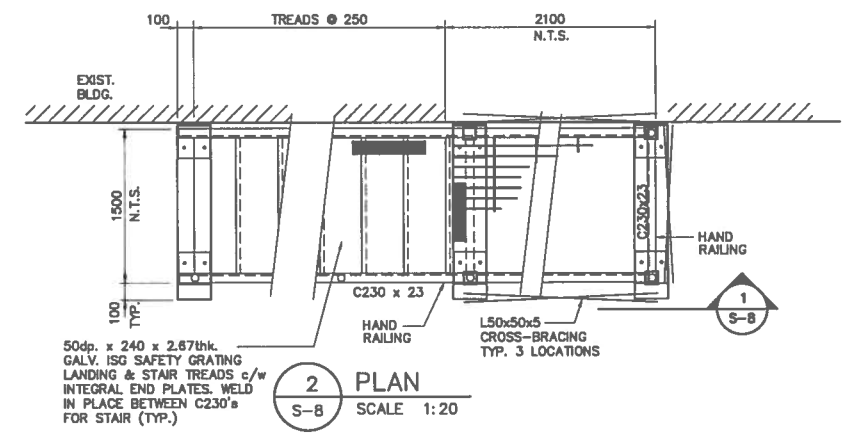

2 S-8 PLAN
SCALE 1:20

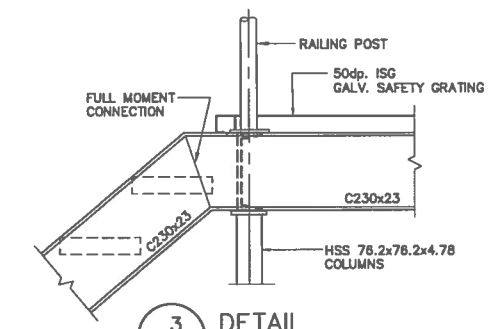

3 S-8 DETAIL
SCALE 1:10

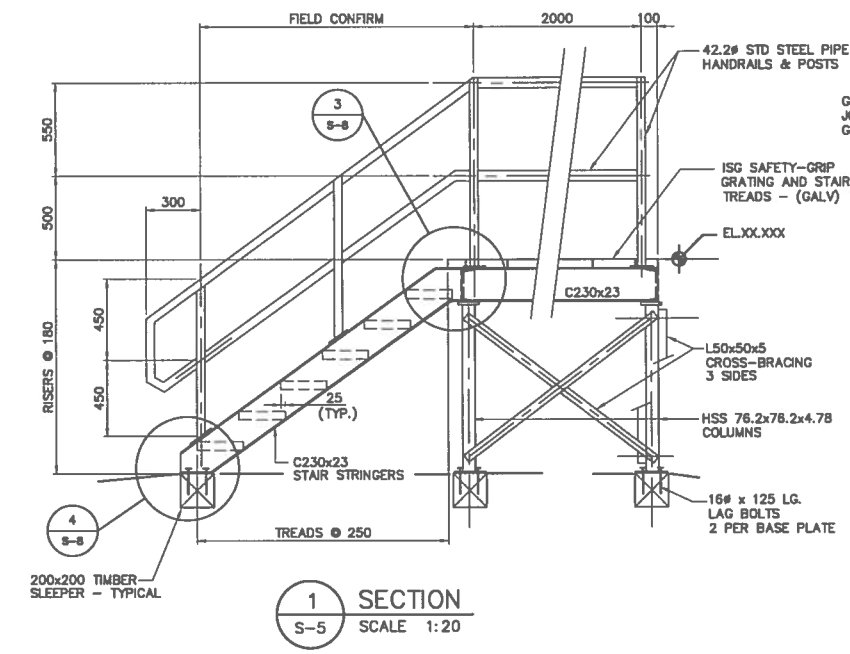

1 S-5 SECTION
SCALE 1:20

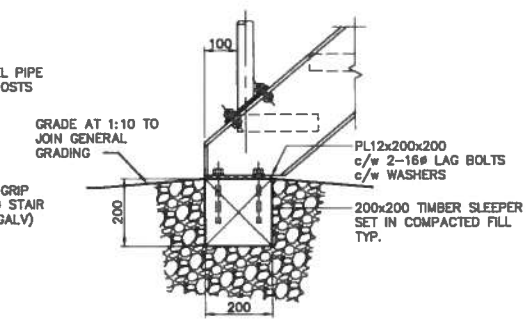

4 S-8 DETAIL
SCALE 1:10

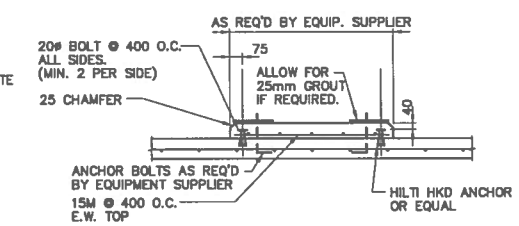

TYPICAL HOUSEKEEPING PADS
1:20

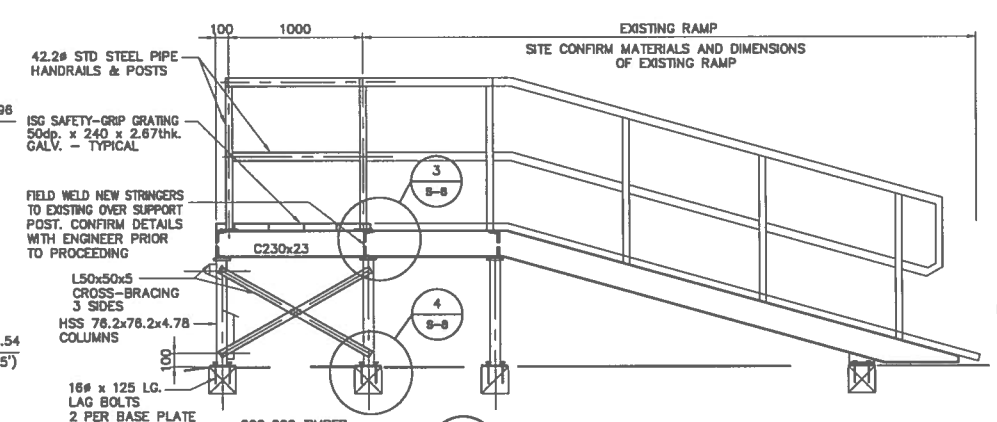

5 S-5 SECTION
SCALE 1:25

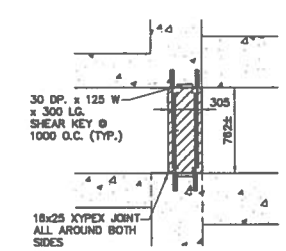

A S-8 DETAIL
SCALE NTS

NOTES:

1. REFERENCE : INFORMATION PRESENTED ON THIS DRAWING DESCRIBING EXISTING STRUCTURE FROM CONTRACT NO. CA-62-1-28 DRAWINGS.
2. ALL EXISTING WALLS AND SLABS ARE REINFORCED CONCRETE. REINFORCEMENT NOT INDICATED.
3. REFER TO DEPARTMENT OF PUBLIC WORKS CANADA - WATER TREATMENT AND WATER SUPPLY DRAWINGS FOR FROBISHER BAY N.W.T. CONTRACT NO. CA-62-1-28 FOR DETAILS DESCRIBING EXISTING STRUCTURE.

NO.	REVISION	DATE	INITIAL
2	RECORD DRAWING	23/04/04	
1	ISSUED FOR CONSTRUCTION	22/04/03	
0	ISSUED FOR TENDER	19/02/03	
A	ISSUED FOR FINAL REVIEW	03/02/03	

Company Permit — Engineer Seal

RECORD DRAWING
INFORMATION CONTAINED IN THESE DRAWINGS IS AS SUPPLIED BY: NINETY NORTH CONSTRUCTION & DEVELOPMENT LTD.
THE COMPLETENESS AND ACCURACY OF THIS RECORD DRAWING IS NOT GUARANTEED. INFORMATION SHOULD BE VERIFIED AT THE ACTUAL LOCATION BEFORE USE.

STRUCTURAL

SECTIONS AND DETAILS

Iqaluit
CITY of IQALUIT, Nunavut

CITY OF IQALUIT

IQALUIT WATER TREATMENT PLANT

EARTH TECH
Earth Tech (Canada) Inc.

DRAWN BY: BL / CHECKED BY: GJK	SCALE: AS NOTED	DATE: FEB. 19, 2003	SHEET NO.
CADD SYSTEM AutoCAD	DWG NO. S-8	REV. 1	CONTRACT 55524

ET:55524/Cadd File: 55524-S02 to S05_S08_S09.dwg/Last Edit: 2003-04-22 (12:00)/Plot Scale: 1:1 (A1)

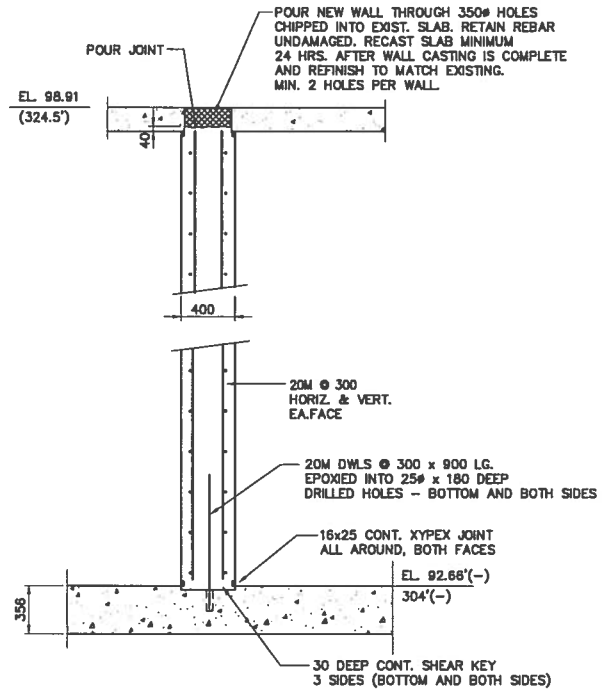

1 S-4 DETAIL
SCALE 1:25

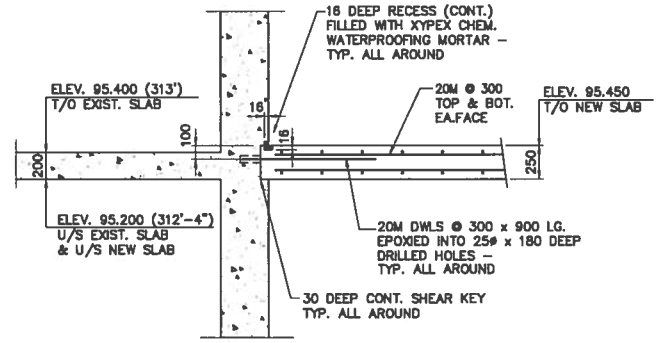

2 S-8 DETAIL
SCALE 1:25

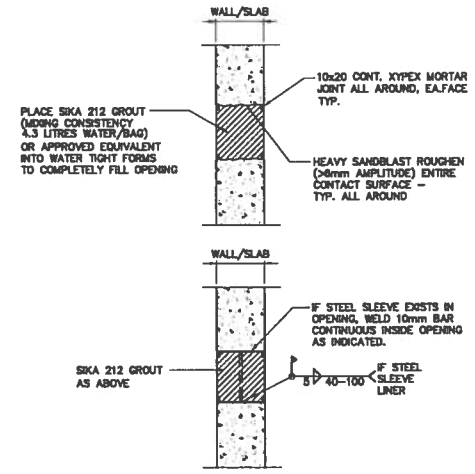

3 S-5 WALL/SLAB CLOSURE DETAIL
SCALE 1:20 FOR HOLES <410mmø

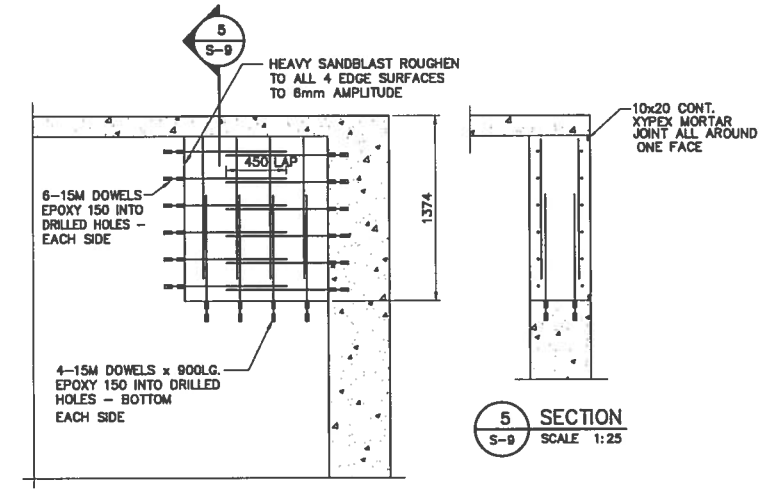

4 S-5 WALL CLOSURE DETAIL
SCALE 1:25

5 S-9 SECTION
SCALE 1:25

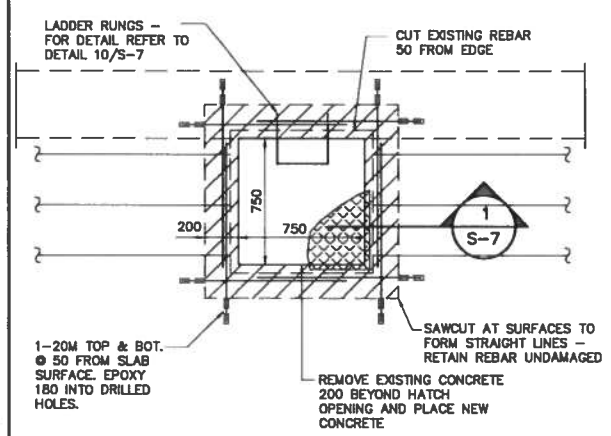

6 S-5 NEW ACCESS DETAIL
SCALE 1:20

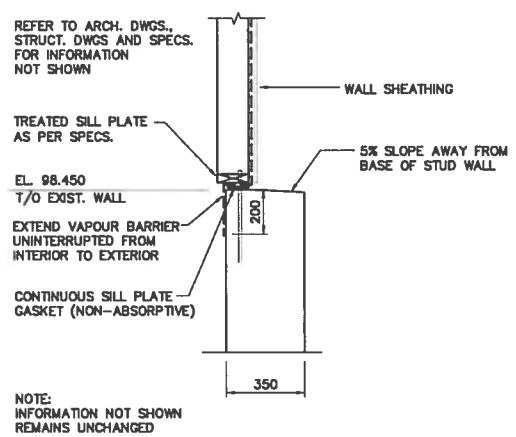

7 S-6 DETAIL
SCALE 1:15

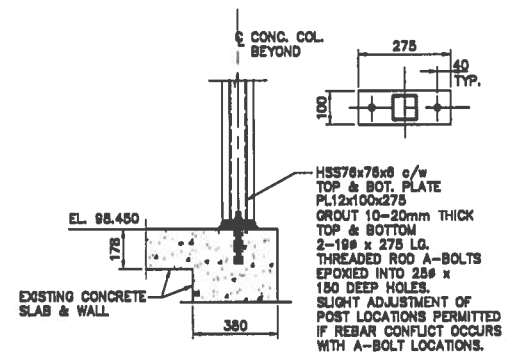

8 S-5 SECTION
SCALE 1:15

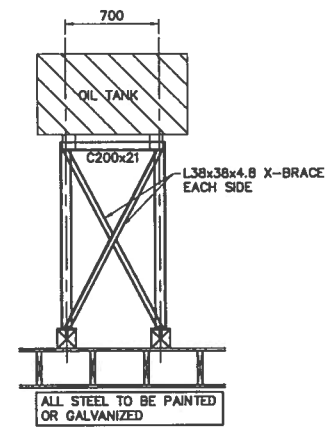

9 S-5 SECTION
SCALE 1:25

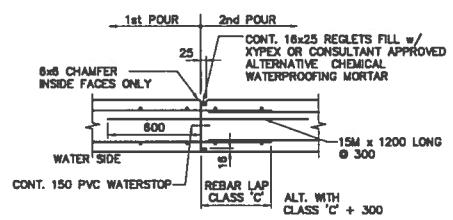

WALL CONSTR. JOINT DETAIL

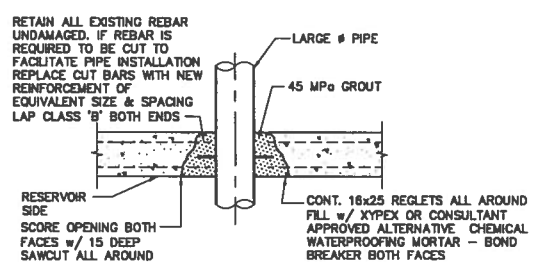

LARGE ø PIPE THROUGH EXISTING CONCRETE WALL DETAIL

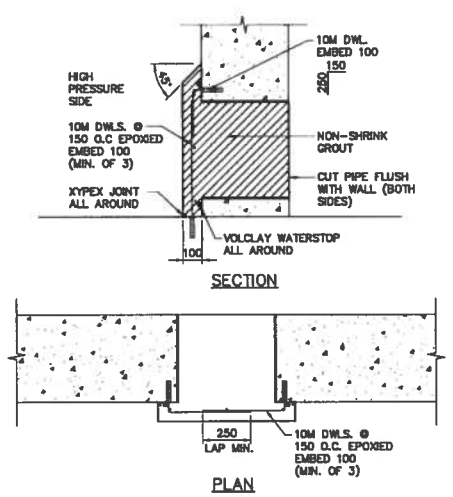

PLUG DETAIL FOR EXISTING PIPE
NTS

NOTES:

1. REFERENCE : INFORMATION PRESENTED ON THIS DRAWING DESCRIBING EXISTING STRUCTURE FROM CONTRACT NO. CA-62-1-28 DRAWINGS.
2. ALL EXISTING WALLS AND SLABS ARE REINFORCED CONCRETE. REINFORCEMENT NOT INDICATED.
3. REFER TO DEPARTMENT OF PUBLIC WORKS CANADA – WATER TREATMENT AND WATER SUPPLY DRAWINGS FOR FROBISHER BAY N.W.T. CONTRACT NO. CA-62-1-28 FOR DETAILS DESCRIBING EXISTING STRUCTURE.

NO.	REVISION	DATE	INITIAL
2	RECORD DRAWING	23/04/04	
1	ISSUED FOR CONSTRUCTION	22/04/03	

Company Permit

Engineer Seal

RECORD DRAWING
INFORMATION CONTAINED IN THESE DRAWINGS IS AS SUPPLIED BY: NINETY NORTH CONSTRUCTION & DEVELOPMENT LTD. THE COMPLETENESS AND ACCURACY OF THIS RECORD DRAWING IS NOT GUARANTEED. INFORMATION SHOULD BE VERIFIED AT THE ACTUAL LOCATION BEFORE USE.

STRUCTURAL

SECTIONS AND DETAILS

Iqaluit
CITY of IQALUIT, Nunavut

CITY OF IQALUIT

IQALUIT WATER TREATMENT PLANT

EARTH TECH
Earth Tech (Canada) Inc.

DRAWN BY: BL / CHECKED BY: GJK	SCALE: AS NOTED	DATE: APRIL 22, 2003	SHEET NO.
CADD SYSTEM AutoCAD	DWG NO. S-9	REV. 1	CONTRACT 55524

ET:55524/Cadd File: 55524-S02 to S05_S08_S09.dwg/Last Edit: 2003-04-22 (12:00)/Plot Scale: 1:1 (A1)