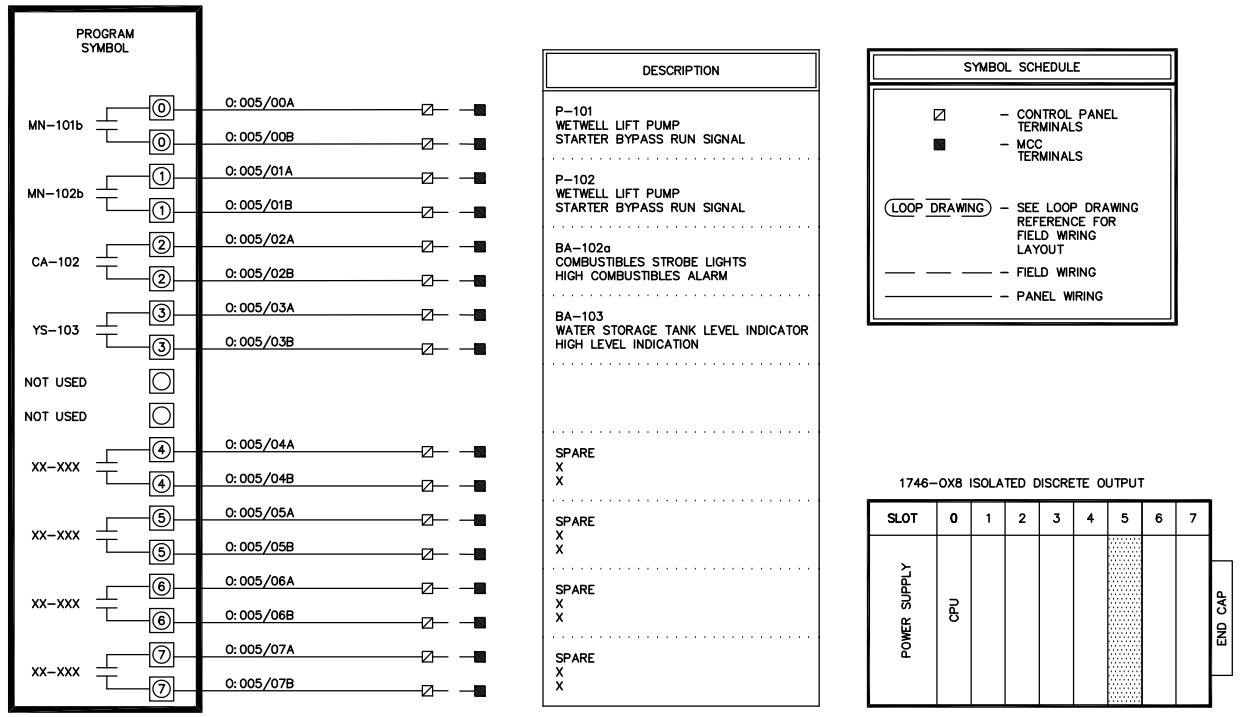

DESCRIPTION
P-101 WETWELL LIFT PUMP STARTER BYPASS RUN SIGNAL
P-102 WETWELL LIFT PUMP STARTER BYPASS RUN SIGNAL
BA-102a COMBUSTIBLES STROBE LIGHTS HIGH COMBUSTIBLES ALARM
BA-103 WATER STORAGE TANK LEVEL INDICATOR HIGH LEVEL INDICATION
SPARE X X
SPARE X X
SPARE X X
SPARE X X

SYMBOL SCHEDULE	
☐	– CONTROL PANEL TERMINALS
■	– MCC TERMINALS
(LOOP DRAWING)	– SEE LOOP DRAWING REFERENCE FOR FIELD WIRING LAYOUT
— — —	– FIELD WIRING
———	– PANEL WIRING

1746-OX8 ISOLATED DISCRETE OUTPUT

SLOT	0	1	2	3	4	5	6	7	
POWER SUPPLY	CPU								END CAP

1 / 16 PLC DISCRETE OUTPUT MODULE WIRING DIAGRAM
N.T.S.

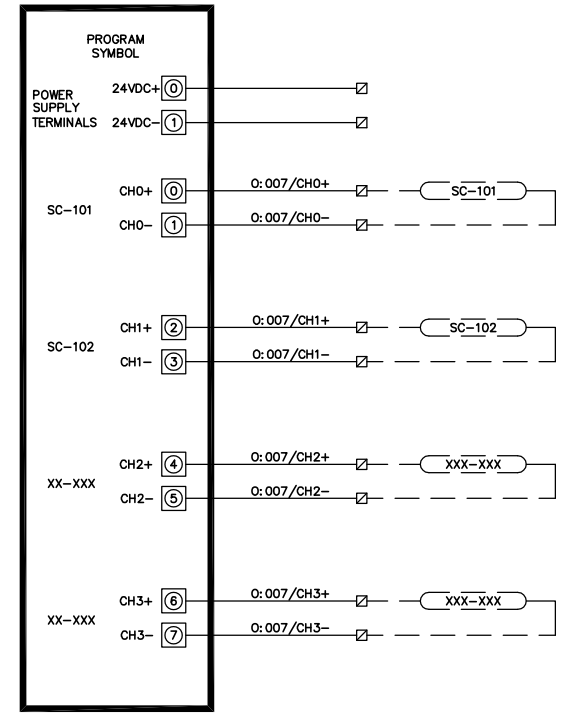

DESCRIPTION
P-101 VFD SPEED SETOINT PERCENT (%)
P-102 VFD SPEED SETPOINT PERCENT (%)
SPARE X X
SPARE X X

SYMBOL SCHEDULE	
☐	– CONTROL PANEL TERMINALS
■	– MCC TERMINALS
(LOOP DRAWING)	– SEE LOOP DRAWING REFERENCE FOR FIELD WIRING LAYOUT
— — —	– FIELD WIRING
———	– PANEL WIRING

1746-NO4I ANALOG OUTPUT

SLOT	0	1	2	3	4	5	6	7	
POWER SUPPLY	CPU								END CAP

3 / 16 PLC ANALOG OUTPUT MODULE WIRING DIAGRAM
N.T.S.

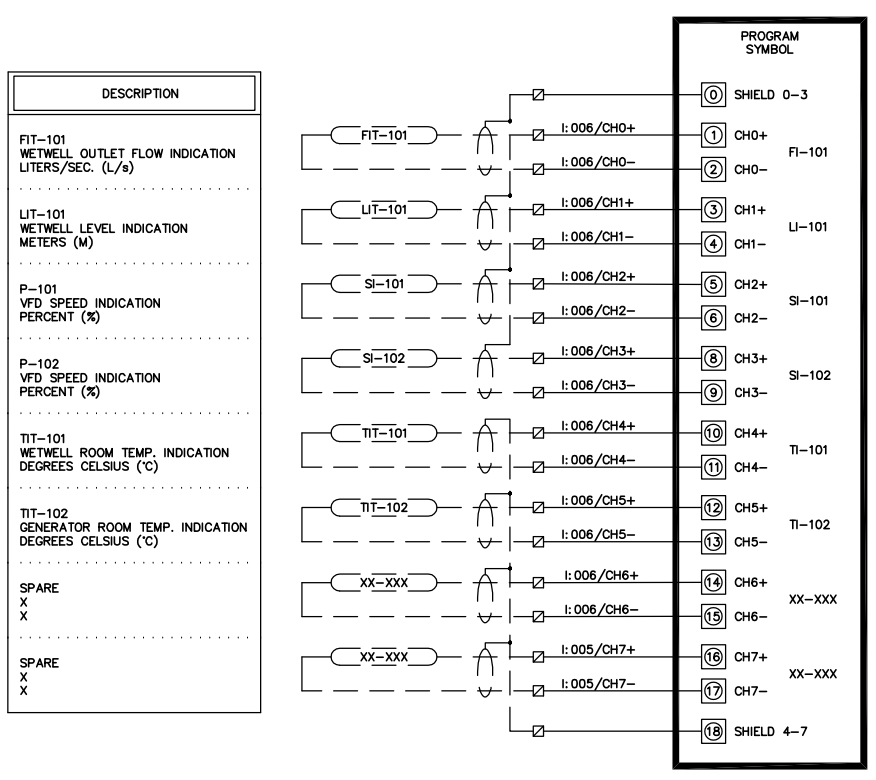

DESCRIPTION
FIT-101 WETWELL OUTLET FLOW INDICATION LITERS/SEC. (L/s)
LIT-101 WETWELL LEVEL INDICATION METERS (M)
P-101 VFD SPEED INDICATION PERCENT (%)
P-102 VFD SPEED INDICATION PERCENT (%)
TIT-101 WETWELL ROOM TEMP. INDICATION DEGREES CELSIUS (°C)
TIT-102 GENERATOR ROOM TEMP. INDICATION DEGREES CELSIUS (°C)
SPARE X X
SPARE X X

SYMBOL SCHEDULE	
☐	– CONTROL PANEL TERMINALS
■	– MCC TERMINALS
(LOOP DRAWING)	– SEE LOOP DRAWING REFERENCE FOR FIELD WIRING LAYOUT
— — —	– FIELD WIRING
———	– PANEL WIRING

1746-NI8 ANALOG INPUT

SLOT	0	1	2	3	4	5	6	7	
POWER SUPPLY	CPU								END CAP

2 / 16 PLC ANALOG INPUT MODULE WIRING DIAGRAM
N.T.S.

EarthTech
A Tyco International Ltd. Company
17203-103rd Avenue
EDMONTON, ALBERTA
T5S 1J4 CANADA
Tel. 780-486-6800
Fax. 780-486-2121
www.earthtech.ca

Stamp

RECORD DRAWING
INFORMATION CONTAINED IN THESE DRAWINGS IS AS SUPPLIED BY: KUDLIK CONSTRUCTION LTD. THE COMPLETENESS AND ACCURACY OF THIS RECORD DRAWING IS NOT GUARANTEED. INFORMATION SHOULD BE VERIFIED AT THE ACTUAL LOCATION BEFORE USE.

No.	Date	Description
2	2007 05/20	RECORD DRAWING
1	2006 05/12	ISSUED FOR CONSTRUCTION
0	2005 15/06	ISSUED FOR TENDER
A	2005 05/27	ISSUED FOR REVIEW

REVISIONS

Iqaluit
ᐃᒡᓗᓇᕆ
CITY of IQALUIT, Nunavut

Design: CFC
Drawn: CFC
Approved:
Checked:

Project Title
LIFT STATION No. 1 UPGRADE

Drawing Title
PLC I/O SCHEMATICS

Scale: NOT TO SCALE
Project No.: 84454
Date: 15/06/05
Drawing No.: 16
Revision: 2

LAST SAVED: 5/7/2007 2:35 PM L:\work\84000\84454\02a-CAD\DFT\issued\Record_Drawings\Instrumentation\16.dwg PLOT DATE: 5 July 2007 PLOT BY: LADOUCEUR, FALLON