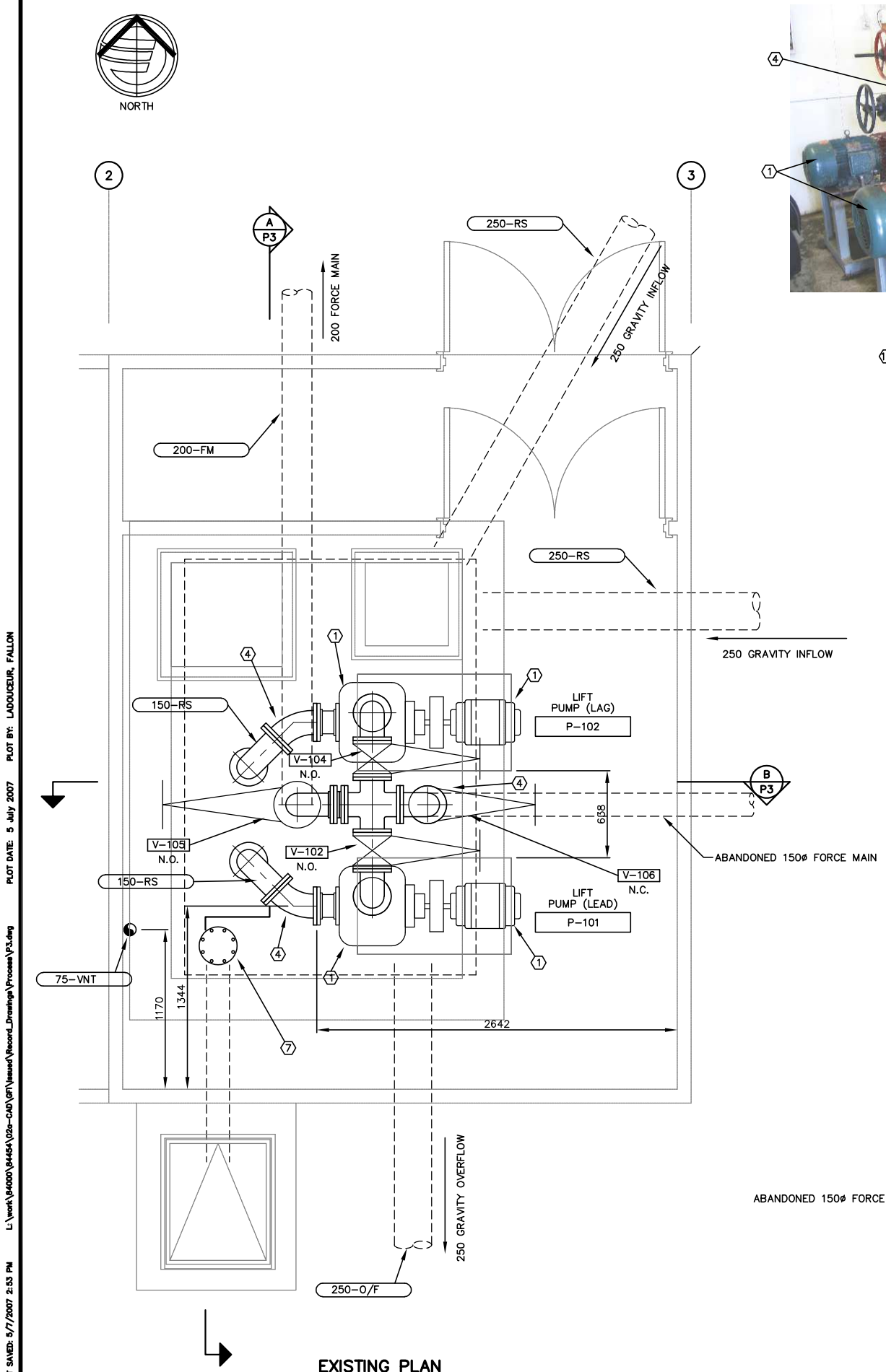

EXISTING PLAN
1:20

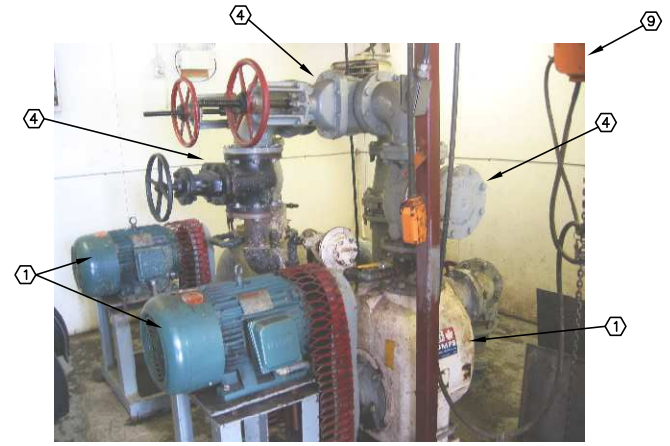

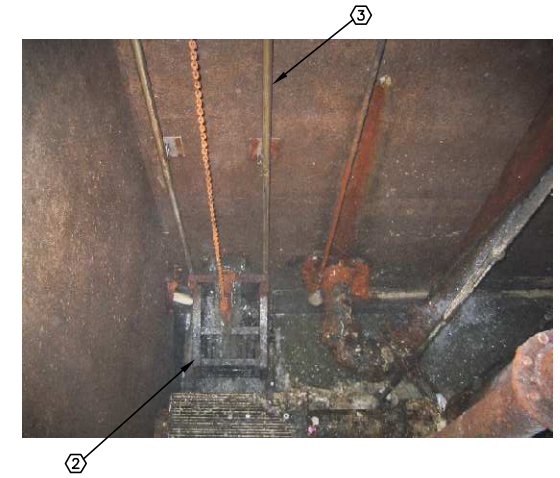

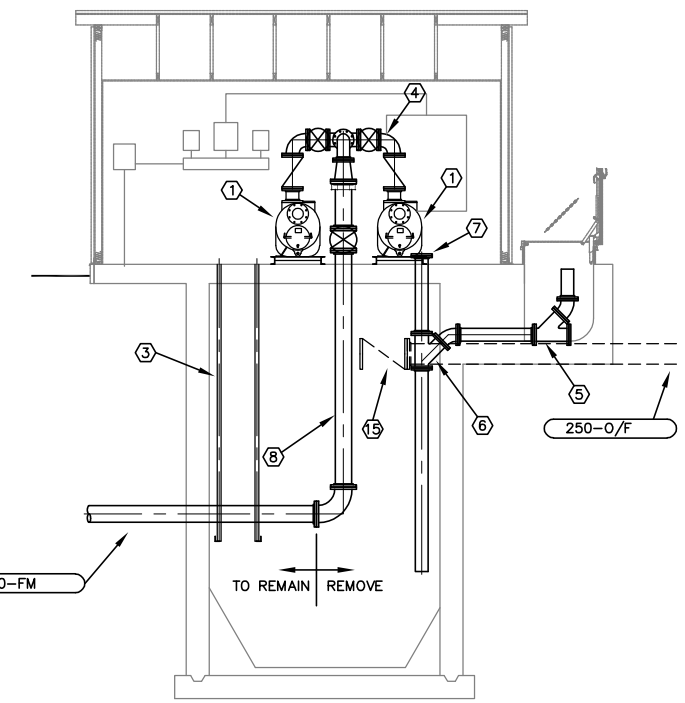

A P3 SECTION
1:50

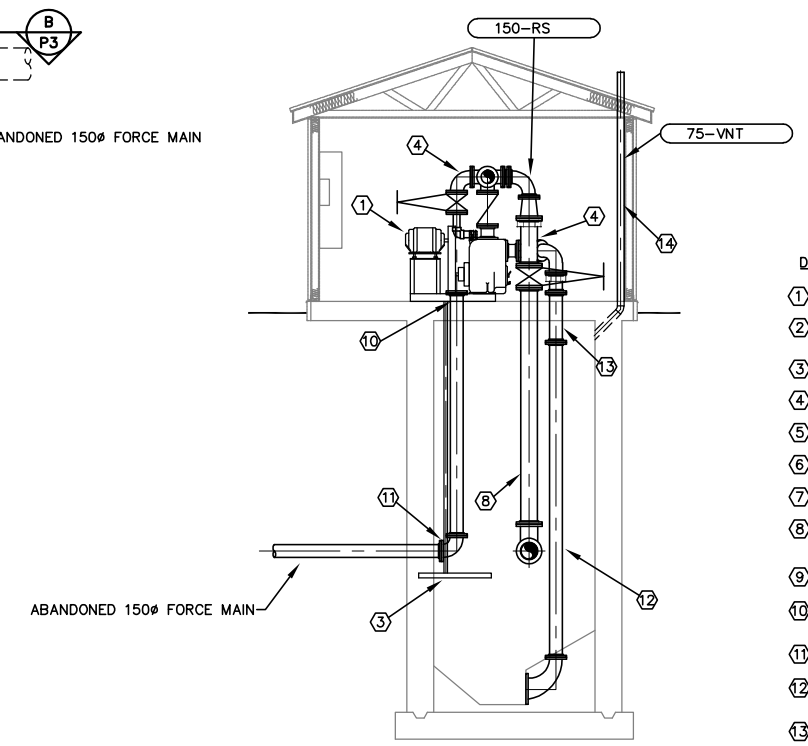

B P3 SECTION
1:50

DEMOLITION NOTES:

1. REMOVE PUMPS AND MOTORS, TURN OVER TO CITY.
2. BASKET SCREEN TO BE REMOVED AND TURNED OVER TO CITY, ENSURE PROPER OPERATION OF GRINDER PRIOR TO REMOVAL.
3. RAILS ARE TO REMAIN IN PLACE.
4. PIPING FITTINGS AND VALVES ARE TO BE REMOVED.
5. REMOVE PIPING IN EXISTING TRUCK DUMP, PLUG PIPE ENTERING THE LIFT STATION.
6. REMOVE EXISTING WYE AND DROP PIPE.
7. REMOVE EXISTING BLIND FLANGE, NEW VENT PIPE TO TIE IN TO EXISTING FLANGE.
8. PIPING IN WETWELL TO BE REMOVED TO THE LAST FLANGE, EXISTING PIPE BEYOND THE LAST FLANGE IS TO REMAIN AND THE NEW PIPING IS TO TIE INTO LAST FLANGE.
9. SALVAGE THE EXISTING ELECTRIC HOIST FOR REUSE IN THE NEW BUILDING.
10. CUT PIPE FLUSH WITH FLOOR AND UNDERSIDE OF SLAB, WELD IN CROSSBARS AND FILL WITH NON SHRINK GROUT.
11. REMOVE PIPING AND INSTALL BLIND FLANGE ON ABANDONED SEWER FORCE MAIN.
12. REMOVE PIPING AS LOW AS POSSIBLE AND INSTALL A NEW EPOXY COATED UNI FLANGE OR WELD FLANGE FOR THE NEW PIPING TO TIE IN TO.
13. PIPING TO REMAIN IN PLACE AND TO BE SAND BLASTED CLEAN AND EPOXY COATED IN AND OUT.
14. VENT PIPING TO REMAIN IN PLACE AND EXTENDED UP THROUGH THE NEW ROOF, RECOAT AS REQUIRED.
15. EXISTING CHECK VALVE TO BE REMOVED AND REPLACED WITH A RUBBER FLAP BOLTED BETWEEN FLANGES.

EarthTech
A Tyco International Ltd. Company
17203-103rd Avenue
EDMONTON, ALBERTA
T5S 1J4 CANADA
Tel. 780-486-6800
Fax. 780-486-2121
www.earthtech.ca

NOTES:

1. LIFT STATION IS TO REMAIN OPERATIONAL DURING CONSTRUCTION.
2. CONTRACTOR IS TO DISPOSE OF EVERYTHING BUT WHAT IS TO BE TURNED OVER TO THE CITY.

Stamp

RECORD DRAWING
INFORMATION CONTAINED IN THESE DRAWINGS IS AS SUPPLIED BY: KUDLIK CONSTRUCTION LTD. THE COMPLETENESS AND ACCURACY OF THIS RECORD DRAWING IS NOT GUARANTEED. INFORMATION SHOULD BE VERIFIED AT THE ACTUAL LOCATION BEFORE USE.

No.	Date	Description
2	2007 05/20	RECORD DRAWING
1	2005 10/13	GENERAL REVISION
0	2005 06/20	ISSUED FOR TENDER

REVISIONS

CITY of IQALUIT, Nunavut

Design: RHB
Drawn: DKB
Approved:
Checked:

Project Title
LIFT STATION No. 1 UPGRADE

Drawing Title
PROCESS DEMOLITION

Scale: AS NOTED
Project No.: 84454
Date: 13/04/05
Drawing No.: P3
Revision: 2

LAST SAVED: 5/7/2007 2:53 PM L:\work\84000\84454\02c-CAD\GF\Issued\Record_Drawings\Process\P3.dwg PLOT DATE: 5 July 2007 PLOT BY: LAQUIDEUR, FALLON